IOWA MOLD TOOLING CO., INC.

P.O. Box 189
Garner, IA 50438
Tel: 641.923.3711
Fax: 641.923.2424
www.imt.com

Manual # 99906562

Refuse Container with Loader Installation Manual (G4)

Generation 4

Revised 05-11-2021

Copyright © 2021 Iowa Mold Tooling Co., Inc.

All rights reserved

No part of this publication may be reproduced, stored in a retrieval system, or transmitted in any form or by any means, electronic, mechanical, photocopying, recording or otherwise without the prior written permission of Iowa Mold Tooling Co., Inc.

Iowa Mold Tooling Co., Inc. is an Oshkosh Corporation Company

WARNING

Operating, servicing and maintaining this vehicle or equipment can expose you to chemicals including engine exhaust, carbon monoxide, phthalates, and lead, which are known to the State of California to cause cancer and birth defects or other reproductive harm. To minimize exposure, avoid breathing exhaust, do not idle the engine except as necessary, service your vehicle or equipment in a well-ventilated area and wear gloves or wash your hands frequently when servicing. For more information go to **www.P65Warnings.ca.gov**.

70490167

Table of Contents

Section - 1 Chassis Assessment 1

Chassis Assessment 2
Hoist Dimensions 3

Section - 2 Parts 5

Upfit Package, Shipout (93727959) 6
Hydraulic Kit, Shipout (91727961) 8
Electrical Kit, Shipout (90727960) 8
Pneumatic Kit, Shipout (93727964) 8

Section - 3 Installation Steps 9

Pressure & Return Lines Installation 10
Chassis Harness Installation 11
Reterminating Cable 13
Strobe Light Installation 14
Crane Mode Switch Installation 16
Hydraulic Valve Panel Installation 17
Hose Installation 18
Pressure & Return Hose Connection To Tubing or Hoses 19
Hose Clamps & Mud Guard 20
Control Box Installation 21
Air Line Connection 22
Fittings On Secondary Air Tank 23
Container Locking Mechanism 24
Hoist Container Brackets 25
Power Connector Bracket 28
Body Container Bracket 29
Tarper Arm Modification 30

Section - 4 Assembly Drawings 31

Installation Drawing (99906528) 32

Section - 5 Hydraulic & Electrical 43

Wiring Diagram (99906530) 44
Hydraulic System (99906531) 45
Pneumatic Layout (99906531) 46
Hydraulic Schematic (99906531) 47

This page left intentionally blank

Chassis Assessment

Section - 1

Chassis Assessment

Before beginning an IMT Refuse Container with Loader installation, assess the chassis for the following:

1. Roll-off hoist must have inside rail / outside rail design, or outside rail design.
2. Hoist must be a recent model year. (2007 or newer to be verified.)
3. The hoist must meet the dimensional requirements shown in Hoist Dimensions on page 3.
4. Use the supplied Bracket Template drawing to locate the hole pattern for the bracket. See Bracket Template (page 27) for reference information. Use the full-size bracket template.

THE HYDRAULIC REQUIREMENTS INCLUDE:

- Hydraulic Flow: Minimum 28 gpm. Most cable hoist systems run at 35 gpm or more.
- Hydraulic Pressure: 2900 psi (Operating system pressure when in crane mode. In hoist mode, the hydraulic pressure is 1850 psi.)
- Pressure line: 1.00”
- Return line: 1.25”
- All fittings JIC

UNAPPROVED CHASSIS

If your chassis will require repairs or equipment modification, contact the IMT Inside Sales Administrator for approval before performing repairs or modifications.

Hoist Dimensions

	DIMENSION A: Outside of rails: 35-1/2” - 36-1/4”
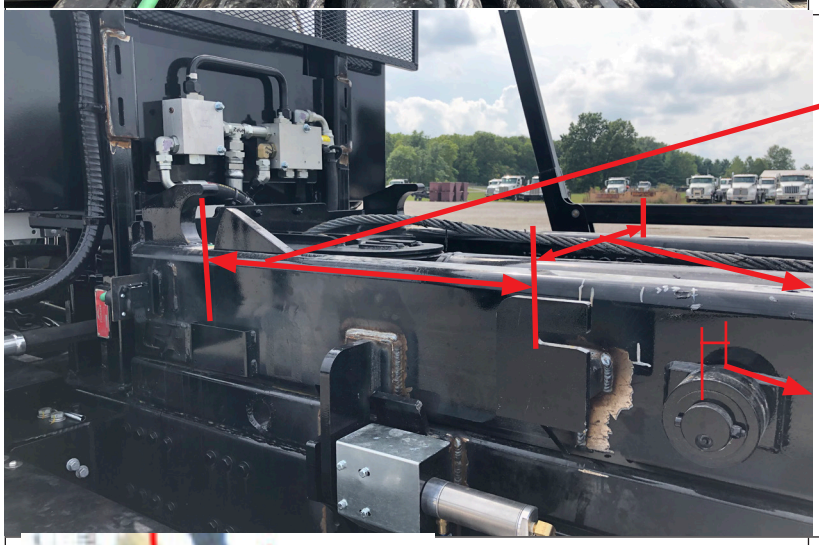	**DIMENSION B:** From centerline of nose wheel stop to centerline of bracket, 33-3/8”. **DIMENSION C:** From outside of bracket to outside of opposite bracket, 46-15/16”. **DIMENSION D:** Roller depth, 3-5/8”.
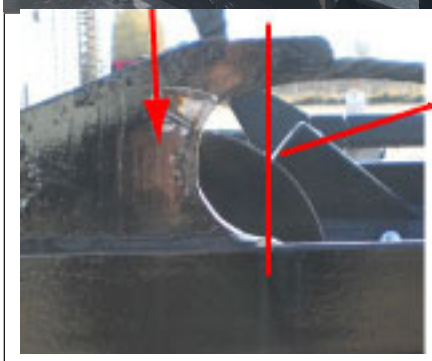	Centerline of nose wheel stop
ADDITIONAL REQUIREMENTS:	Hoist rail length should be sufficient for a 22 ft container.
NOTE: HOIST MUST HAVE A NOSE WHEEL STOP. FLIP-UP STOPS WILL NOT WORK.	

This page left intentionally blank

Parts

Section - 2

Upfit Package, Shipout (93727959)

With your Refuse Container with Loader, you will receive a large upfit package (93727959) which includes several smaller kits. The upfit package and the smaller kits are marked with part numbers. Use the parts lists for the kits, as well as the photos and drawings, to identify the appropriate installation parts prior to beginning the installation steps.

PART NO.	DESCRIPTION	QTY.
60135237	BRACKET-LIGHT 4” RND	2
73540411	CYLINDER-AIR BIMBA 1.06B 1.00S REV SNGL	2
52727867	WLDMT-BRKT LATCH BODY BAGSTER GEN IV	2
52727868	WLDMT-BRKT LATCH CHASSIS BAGSTER G4 STREET SIDE	1
52727919	WLDMT-BRKT LATCH CHASSIS BAGSTER G4 CS	1
60146499	SHIM-BAGSTER CYL. MOUNT 0.50 G4	1
60135716	PLUNGER-LATCH BAGSTER G2	2
72063119	WASHER .62 FLAT ASTM F436	16
72060177	CAP SCR .62-11X 3.00 HH GR8 Z	8
72601859	NUT .62-11 HEX GR8 YZ NYLOCK	8
60146437	GUARD-CYLINDER BAGSTER G4 STREET SIDE	1
60146560	GUARD-CYLINDER BAGSTER G4 CURB SIDE	1
72063049	WASHER .25 LOCK	8
72060000	CAP SCR .25-20X .50 HH GR5 Z	8
51723032	CONTROL BOX-BAGSTER G2	1
60136134	GUARD-FENDER BAGSTER	1
60136135	SHIM-BAGSTER CLAMP MOUNT 10GA	A/R
60136136	SHIM-BAGSTER CLAMP MOUNT .19	A/R
60136137	SHIM-BAGSTER CLAMP MOUNT .25	A/R
60146500	SPACER PLATE-CYLINDER MOUNT BAGSTER G4	A/R
72060055	CAP SCR .38-16X 3.50 HH GR5 Z	16
72063003	WASHER-FLAT .38 W ANSI B27.2 Z	40
72062103	NUT .38-16 HEX GR5 Z NYLOCK	20
72060004	CAP SCR .25-20X 1.00 HH GR5 Z	4
72063001	WASHER .25 FLAT	8
72062104	NUT .25-20 HEX NYLOCK	4
60136142	BRACKET-HARNESS MOUNTING BAGSTER G2	1
52723183	GUIDE-BODY BAGSTER G2 LH	1
52723182	GUIDE-BODY BAGSTER G2 RH	1
60135615	EXTENSION-TARPER ARM BAGSTER	4
70034525	TIE-PLASTIC .50W DBL ENDED-BUTTERFLY	8
73540660	VALVE ASM-DIVERTER W-RELIEF BAGSTER G4	1
72535034	ADPTR-M STR/M JIC 16 16 L	1
72535035	TEE-SWVL BRANCH JIC 16 16 16	1
72532371	ADPTR-M STR/M JIC 20 16	2
73540408	VALVE-ASSY-PRIORITY FLOW CONTROL 28 GPM	1
72532370	ADPTR-M STR/M JIC 16 16	1
72053770	ELBOW-M STR/90/M JIC 16 16	3
71417242	TUBE ASM-HYD 1.00 O.D. X 13.14 X 4.50	1

PART NO.	DESCRIPTION	QTY.
72053392	PLUG-PIPE SOC HD STL .25	1
60146562	BRKT-DIVERTER-FC BAGSTER G4	1
72060057	CAP SCR HH 3/8-16 UNC - 4.50 GR5 Z	2
72060056	CAP SCR HH 3/8-16 UNC - 4.00 GR5 Z	2
90727960	KIT-ELEC BAGSTER INSTALL G4	1
91727961	KIT-HYD BAGSTER SHIPOUT G4	1
93727962	KIT-HRDW BAGSTER CLAMP G4	1
93723177	KIT-HRDW BAGSTER TARPER G2	1
93727963	KIT-HRDW BAGSTER HYD PLATE G4	1
93727964	KIT-PNEUMATICS BAGSTER G4	1
95727965	DECAL KIT-BAGSTER SHIPOUT G4	1
99906528	DWG-BAGSTER INSTALL G4	1
99906530	DWG-BAGSTER CONTROL WIRING DIAGRAMS G4	1
99906531	DWG-BAGSTER HYDRAULIC SYSTEM G4	1
99906552	DWG-BAGSTER DECAL INSTALLATION G4	1

Hydraulic Kit, Shipout (91727961)

PART NO.	DESCRIPTION	QTY.
51399010	HOSE-AAJ 1.00 X 23.00 (16-16) 100R12	1
51399021	HOSE-FF 1.25 X 36.00 (20-20) 100R4	1
51399025	HOSE-FJ 1.25 X 18.5 (20-20) 100R4	1
72534749	ADPTR-M STR/M JIC 20 20	2
72534754	ADPTR-M JIC/F JIC 20 16	2
72534756	TEE-MALE JIC 1.62-12 1.25 TUBE	1

NOTE:

Use 1” R17 rated hose for pressure hoses, and 1-1/4” R4 rated hose for suction hoses.

Electrical Kit, Shipout (90727960)

PART NO.	DESCRIPTION	QTY.
60135237	BRACKET-LIGHT 4” RND	2
76392275	GROMMET-RUBBER TAIL LIGHT 4.00	4
77040553	LIGHT-STROBE SMART AMBER 4in LH #2	1
77040554	LIGHT-STROBE SMART AMBER 4in RH #1	1
77040561	LIGHT-STROBE SMART AMBER 4in LH #4	1
77040562	LIGHT-STROBE SMART AMBER 4in RH #3	1
77044557	CONN-PKRD WEATHERPACK 3 CAV FEMALE/TOWER	1
77044622	CONN-PKRD WEATHERPACK 6 CAV FEMALE/TOWER	1
77044659	CABLE SEAL-PKRD WP/MP 10-12 GA BLUE	1
77044676	PLUG-PKRD WEATHERPACK/METRIPACK PLUG	1
77044927	CABLE SEAL-PKRD WP/MP 14 GA GREY	7
77045883	TERM-PKRD WEATHERPACK 12GA FEMALE	1
77045888	TERM-PKRD WEATHERPACK 14-16GA FEMALE	7
99906530	DWG-BAGSTER CONTROL WIRING DIAGRAMS G4	1

Pneumatic Kit, Shipout (93727964)

PART NO.	DESCRIPTION	QTY.
70396004	TUBE-PUSHLOC .38 AIR (CS)	40
72531569	ADPTR-MPT/HEX/MPT BRS .25 .25	2
72531812	REDUCER BUSH-BRS .50- .25	1
72533700	PUSH LOC- FTG .38 DOT X .25 MPT 90 DEG	2
72533698	PUSH LOC- FTG .38 DOT X .25 MPT STRT	3
72534742	PUSH LOC- UNION TEE .38 DOT	2
73054122	PUSH LOC- UNION TEE .38 DOT	1
73054505	PUSH LOC- UNION TEE .38 DOT	1

Installation Steps

Section - 3

Pressure & Return Lines Installation

With the hoist down, locate a place at the rear of the chassis to place the pressure and return lines on the chassis frame. Avoid locating the large hose under the frame in the area marked as it could get pinched.

Raise the hoist, then position the hoses along the chassis.

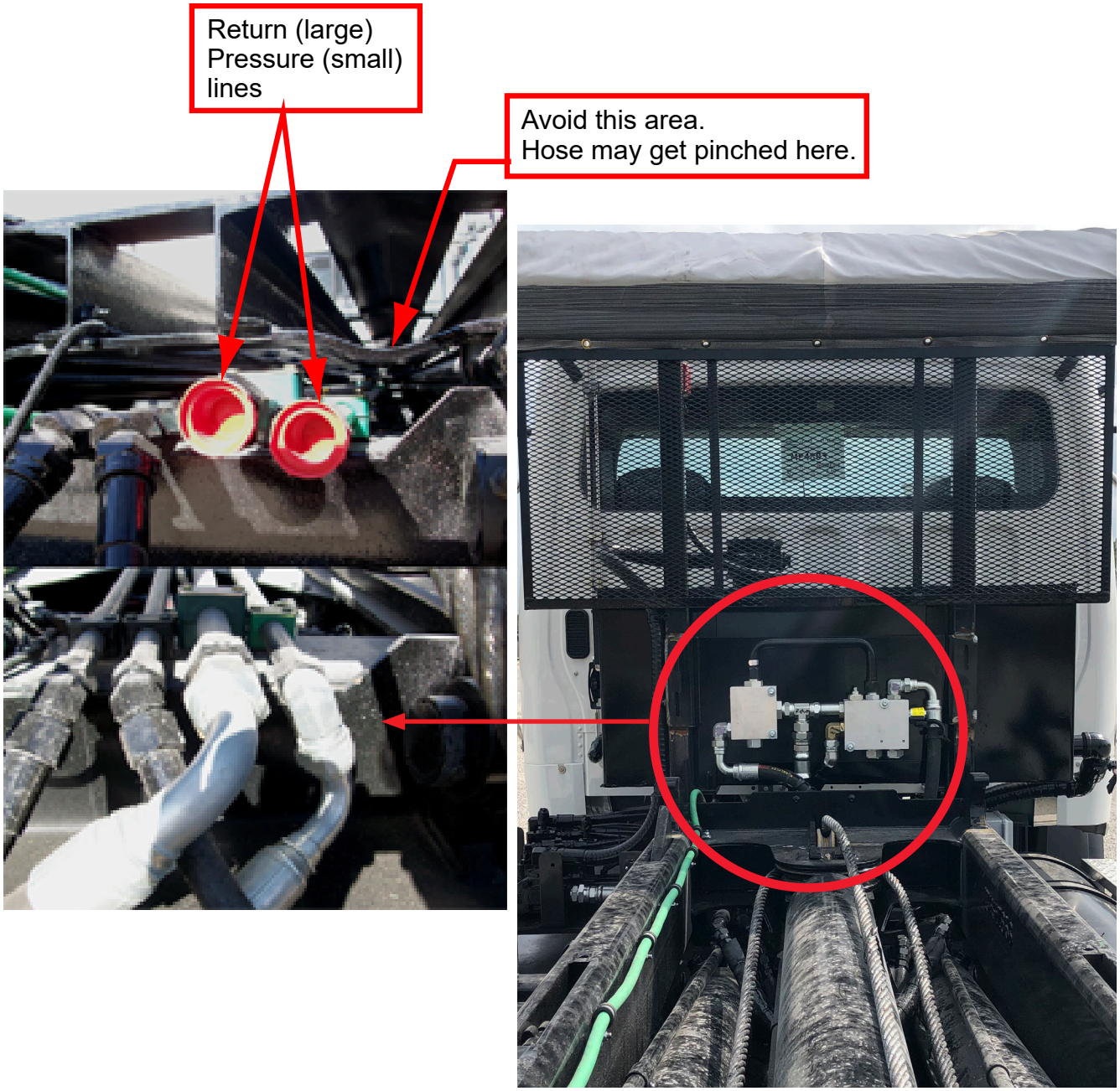

Chassis Harness Installation

In the Upfit Kit 93727959, locate the following:

- 77441421 Harness - green cable which is 40’ long
- 7206023 Cap Screw - 5/16-18 x 3/4” (bag of 30 included with kit)
- 72062109 Nut - 5/16-18 (bag of 30 included with kit)
- 72066580 Clamp - Loop 3/4” cushioned (15 included with kit)
- 72066581 Clamp - Loop 1” cushioned (10 included with kit.

Install green power cable 77441421 through the chassis, then loop at the hoist pivot. Weld on 5/16” x ¾” bolts every 18”. Weld the head of the bolt to the frame with the threaded part sticking up. The clamp will fit over the bolt and the nut will secure it in place. Using rubber coated clamps and 5/16 nuts, fasten the cable all the way to the front of the hoist.

View of (77441421) green electrical cable clamped (72066580 & 72066581) on lower hoist

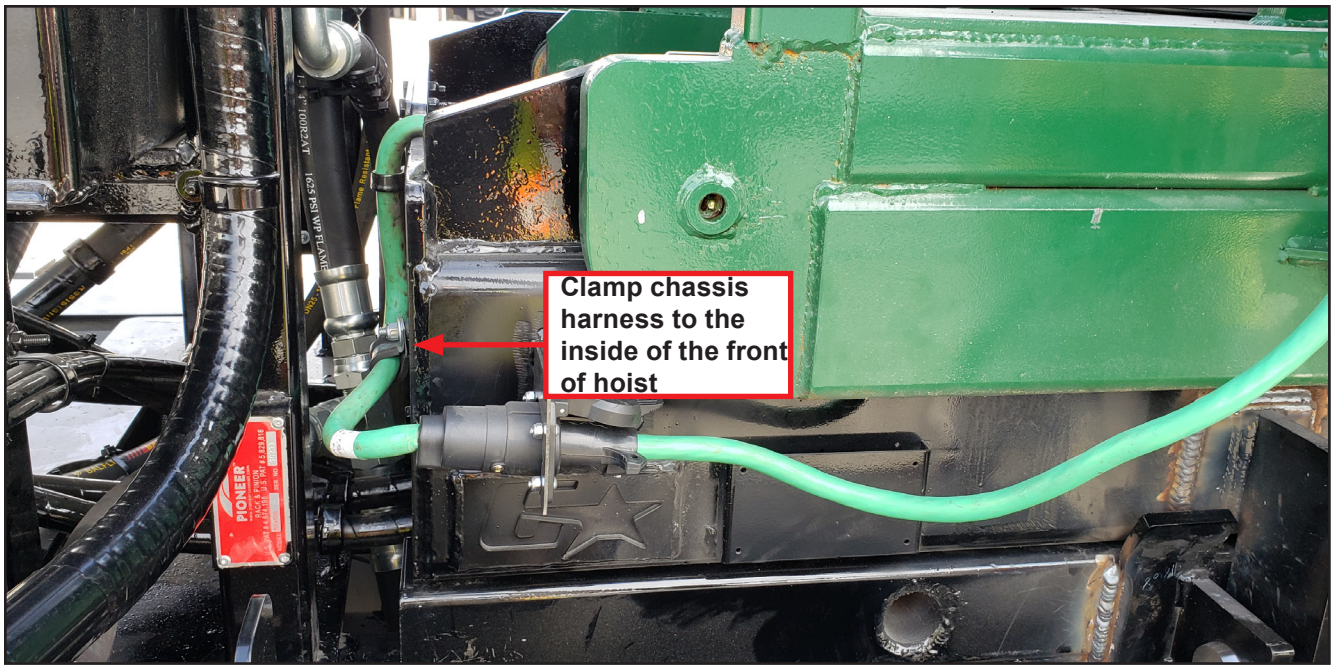

The green electrical cable (77441421) is routed down the lower hoist, then wraps to the upper hoist.

Clamp the wire to the inside of the front of the hoist. The cable may be too long, and may need to be shortened before it is terminated.

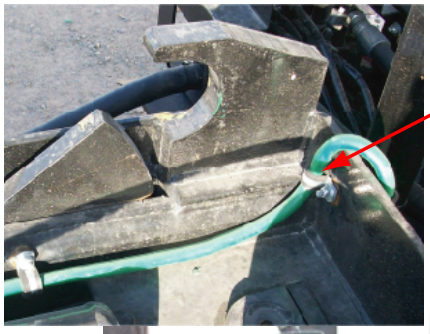

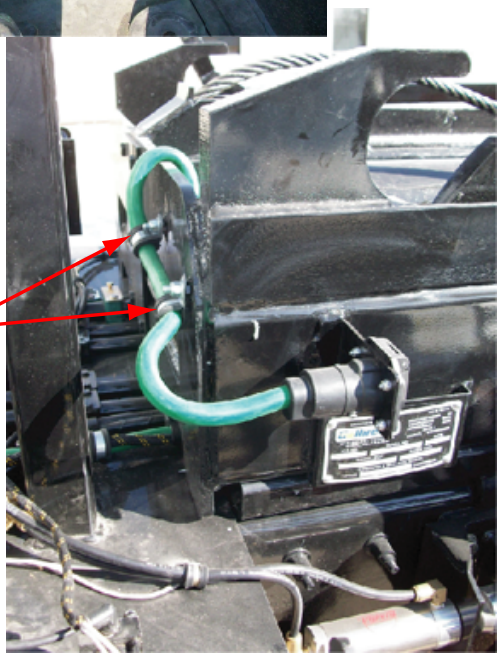

NOTE: This photo shows the green electrical wire connecting to the bracket on the body. This bracket will be installed in the step, Installing Power Connector Bracket, page 28.

See the Wiring Diagram (99906530) page 42 for details on the electrical connections for the 77441421 harness.

Reterminating Cable

The power connector end of the green cable is designed for the longest hoist models (24' long). If the green electrical cable is too long for your hoist, you may shorten the cable and reterminate the end.

1. Loosen the slotted screw on the cable clamp connector near the inlet end.
2. Remove the two Phillips head screws on the sides of the connector cover.
3. Push the cable towards the connector cover.
4. Cut back the green jacket 1-3/8" from the end of the cable.
5. Strip the wire insulation back 3/8".
6. Install wires per the chart. Note that the cavity labels ***will not*** match the wire colors.

CAVITY NUMBER	WIRE COLOR	GAUGE	PRINT LABEL
1 WHITE	RED	10	CRANE POWER
2 BLUE	YELLOW	12	ENGINE STOP
3 GREEN	BROWN	12	CRANE SWITCH
4 BLACK	BLUE	10	CRANE GROUND
5 RED	GREEN	12	SPARE 1
6 BROWN	BLACK	12	SPARE 2
7	WHITE	8	SPARE 3

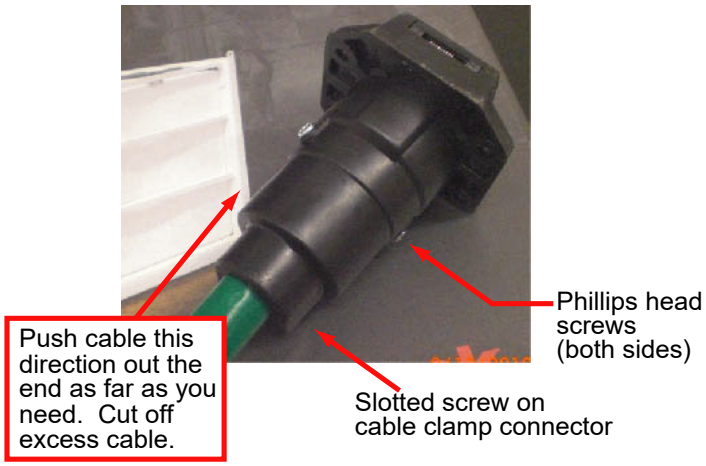

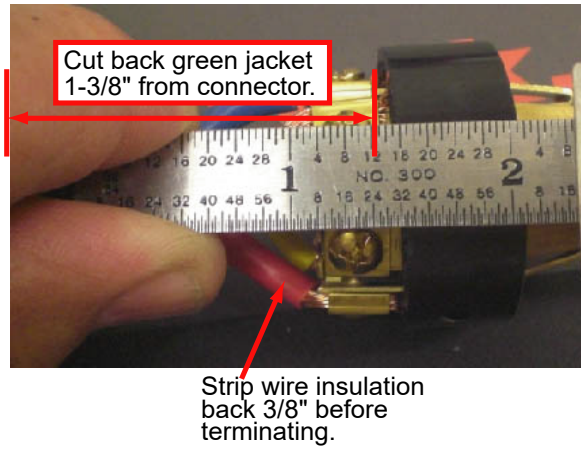

Strobe Light Installation

In the electrical kit 90727960, locate the following:

- 51727998 - Strobe light LH #2
- 51727997 - Strobe light RH #1
- 51728000 - Strobe light LH #4
- 51727999 - Strobe light LH #3
- 60135237 - 4” light bracket (Qty 2)
- 76392275 - 4” round grommets for lights (Qty 4)

To install the rear strobe lights on the chassis, drill 4.5” diameter holes in the rear light boxes on center with the existing lamps.

Rear view of chassis without strobe lights installed.

Rear view of chassis with right rear strobe lights installed.

To install the front strobe lights, position above the bumper or in the guard as shown. The front installation is always “best fit” based on the chassis. Use the 60135237 brackets if needed.

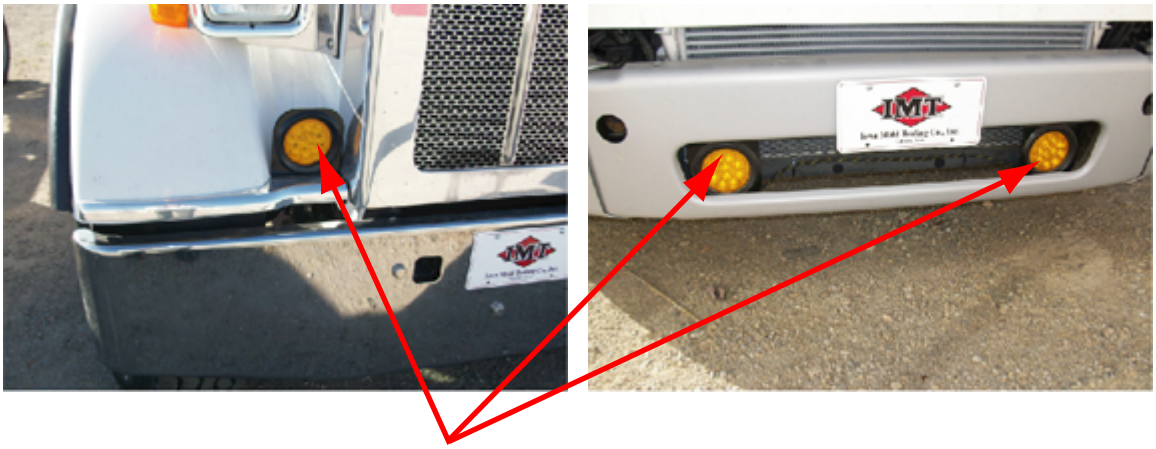

Front Strobe Lights

Connect the green wiring harness to the strobe lights. Use additional parts as needed from the 90727960 electrical kit to wire the harness to the lights. Refer to drawing ***99906530***.

NOTE:

The wiring harness is labeled for each location - left rear, right rear, left front, right front. The strobe lights are labeled 1, 2, 3, and 4. Match up the wires and strobe lights as follows:

WIRING HARNESS LABEL	STROBE LIGHT NUMBER
Right Rear	1
Left Rear	2
Right Front	3
Left Front	4

The master light, located at the right rear of the vehicle, includes a computer which controls the other three lights.

Crane Mode Switch Installation

Locate the green rocker switch and the switch rocker body 12V. Install the switch in the cab on the Power Tower as shown. There may be a capped opening which you can use, or you may need to cut a hole in the Power Tower housing. Connect CP601 on the green wiring harness to the Crane Mode switch.

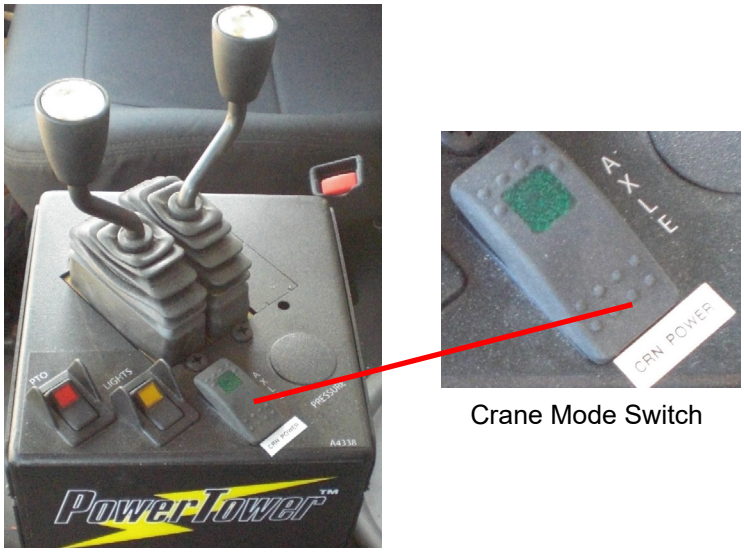

Crane Mode Switch

In the Decal Kit 95727965, locate the following:

- 70398863 - Height Notice Decal (Qty 1)
- 70399054 - PTO Mode Decal (Qty 1)

Install the Height Notice and PTO Mode Decals on the dashboard. Most chassis will be set up to use the cruise control for elevated engine speed for PTO mode. Turn on the cruise control, push the Set control, then push Accelerate to raise the engine speed. The engine speed should go to approximately 1000 rpm. Using a permanent marker, write the PTO set speed on the decal. Do not exceed 1200 RPM.

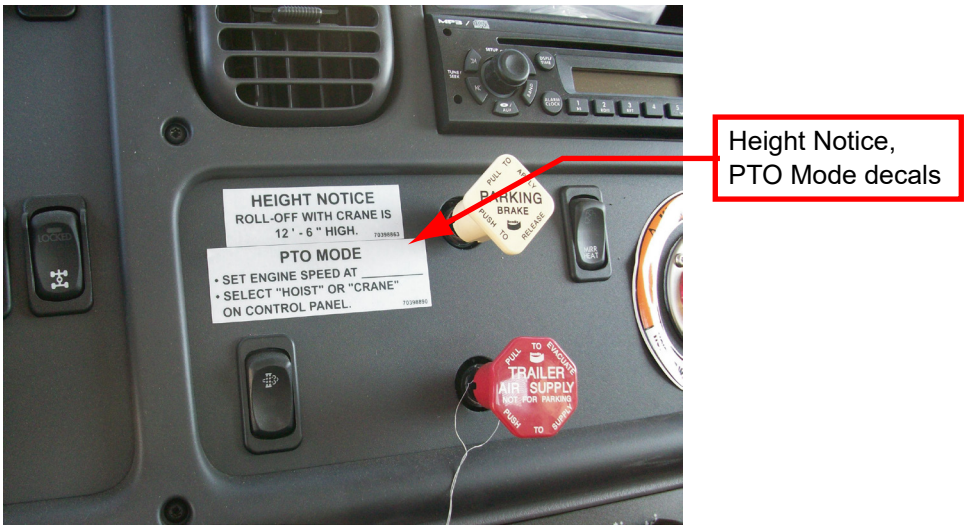

Hydraulic Valve Panel Installation

In the Upfit Kit 93727959, locate the following:

- 60146562 - Hydraulic valve mounting panel (Qty1). This panel comes preassembled with fittings, valves, and hardware.

Install the hydraulic valve panel on the tarper stow legs

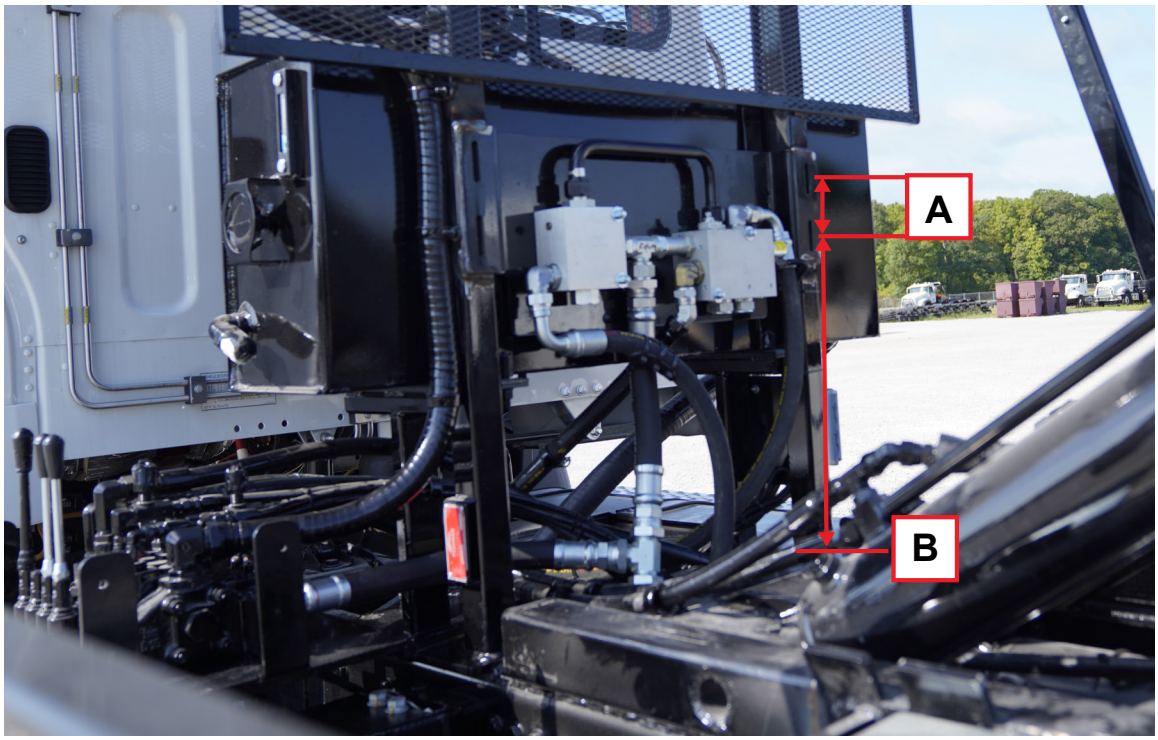

Drill (4) 13/32” diameter holes in the tarper stow legs, in the positions shown by Dimensions A and B, and install the preassembled hydraulic valve panel.

Dimension A - The distance between the upper and lower hole, dimension A, is 4.5” for both sides.

Dimension B - The distance from the bottom of the leg, is 27.50” .See ***Installation Drawing 99904914*** for details.

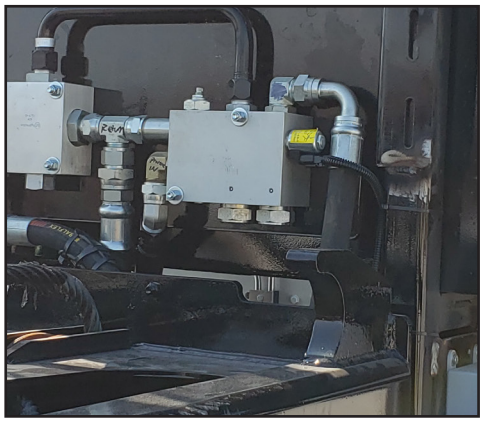

This photo shows the hydraulic panel from the front.

Note: The newer panels have the pneumatic control box mounting formed into the panel on this side

Hose Installation

Locate the following in Hydraulic Kit 91727961:

- 51399010 - 1” x 23” Hose
- 72534756 - Tee

Install hoses and fittings as shown.

PRESSURE HOSES ARE 1"

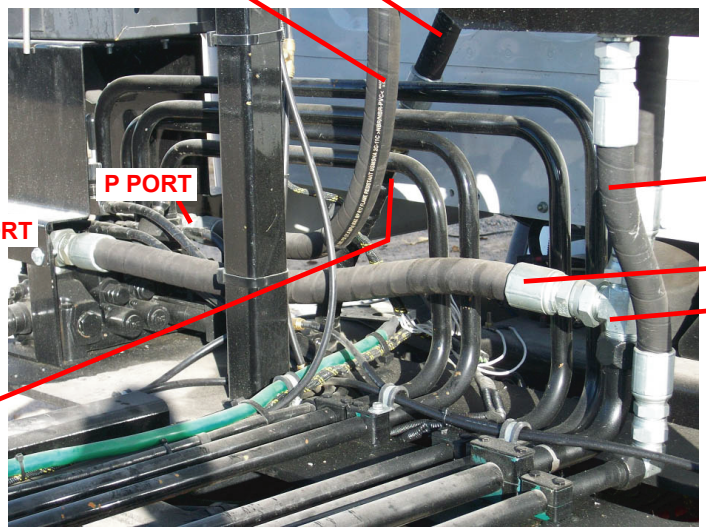

Hoses when viewed looking from rear of chassis toward cab.

Flow divider up close along driver side of cab on the right. Same hoses shown in both views.

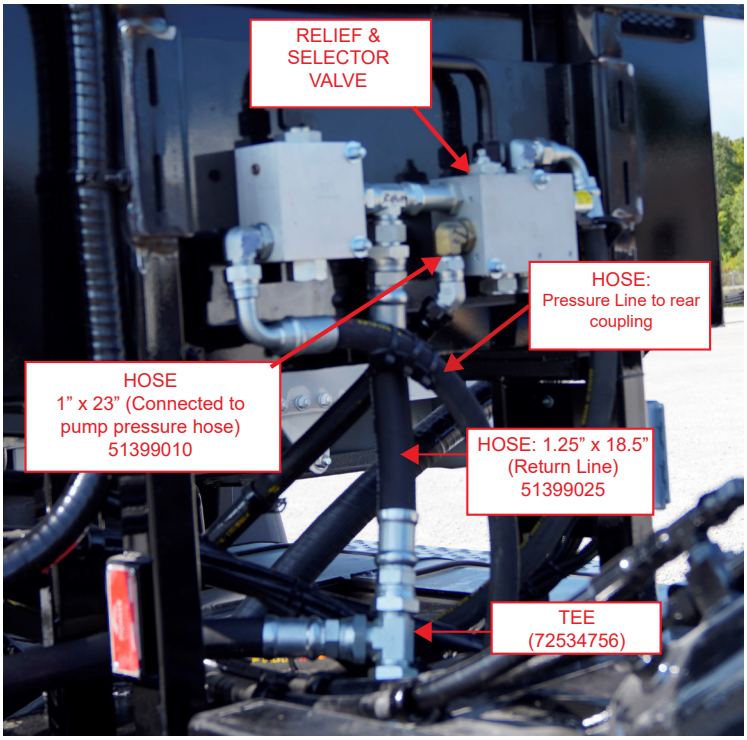

Pressure & Return Hose Connection To Tubing or Hoses

Kit Number: 91727961

NOTE: 1.25” x 24” return hose and 1” x 32.5” pressure hose must be assembled during installation.

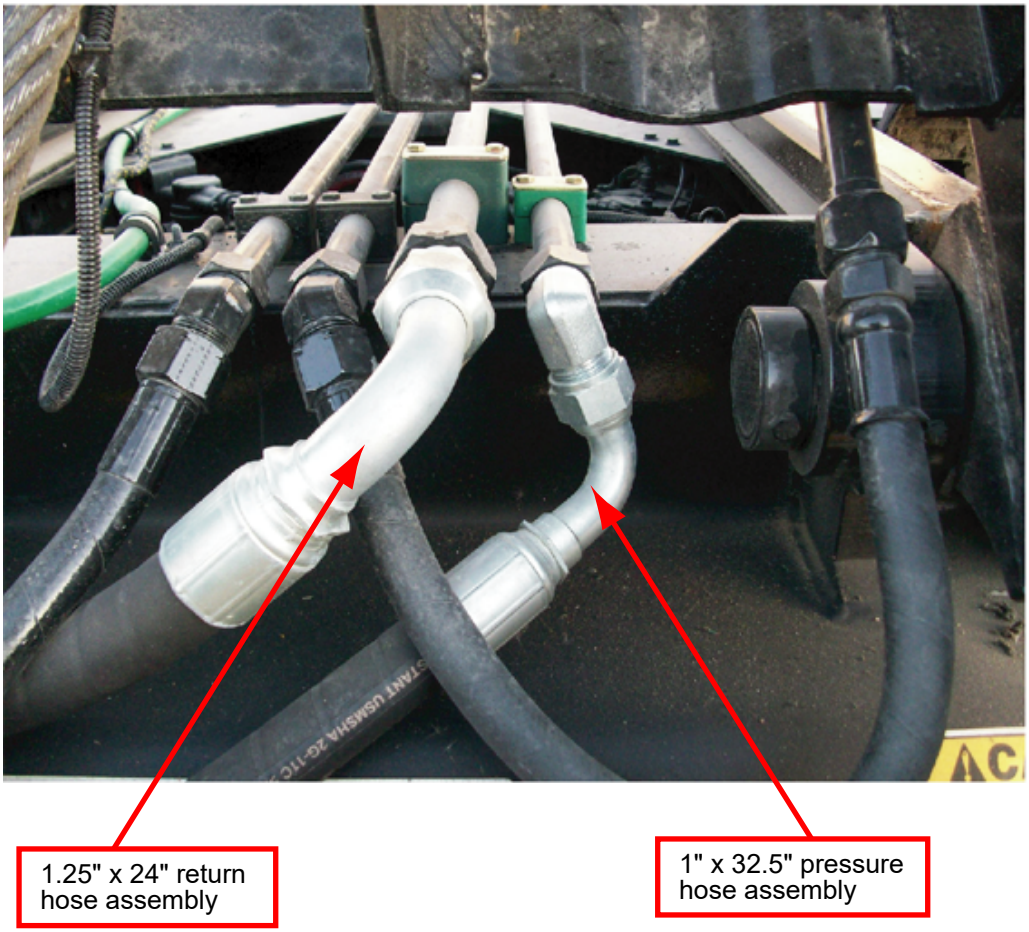

Connect quick coupling hoses to the ends of the pressure and return lines installed earlier. See ***Hydraulic System (99906531)*** for additional details and schematics on the hydraulic installation.

Hose Clamps & Mud Guard

In the 93727959 Upfit Kit, locate:

- 60136134 - mud guard
- 70034511 - 1.5” tube clamp with weld plate (Qty 1)
- 70034512 - 1.75” tube clamp with weld plate (Qty 1)

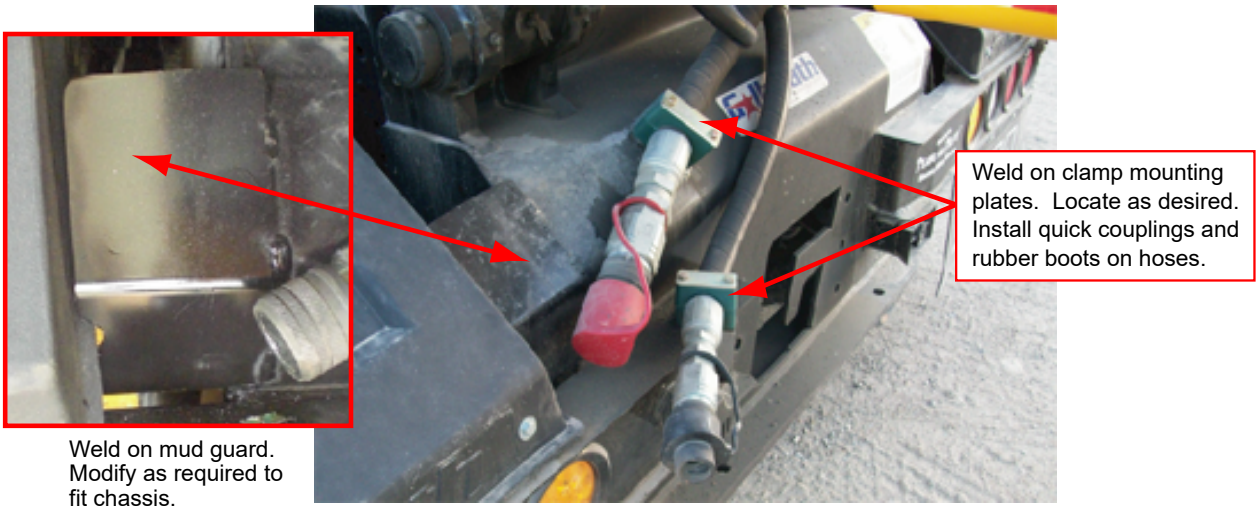

Control Box Installation

In the 93727959 Upfit Kit, locate the 51723032 control box.

In the 93727964 Pneumatic Kit, locate:

- 70396004 - 3/8” air tube
- 72534742 - Push-loc tee

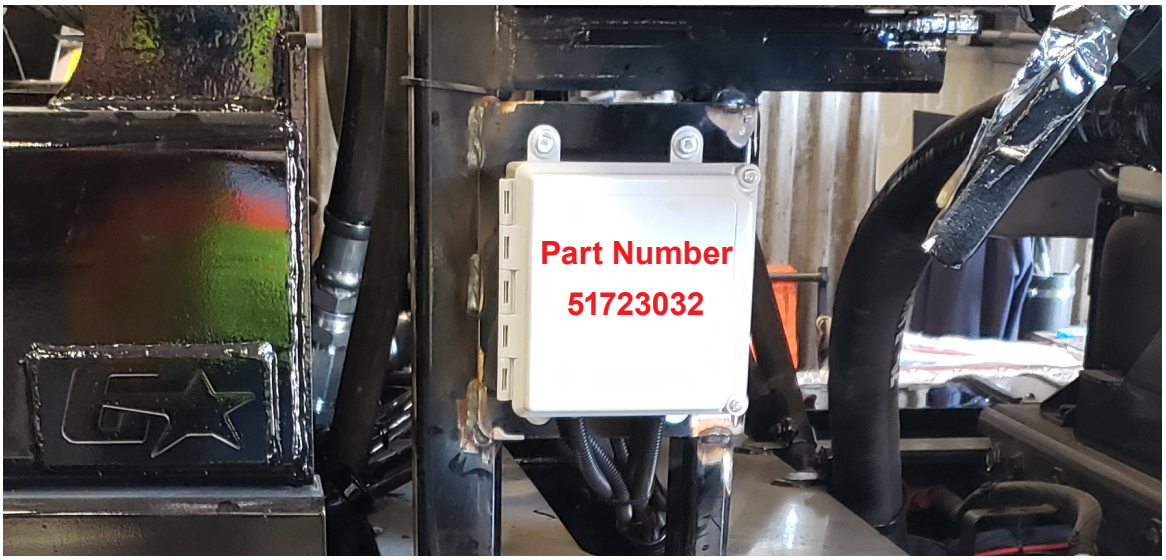

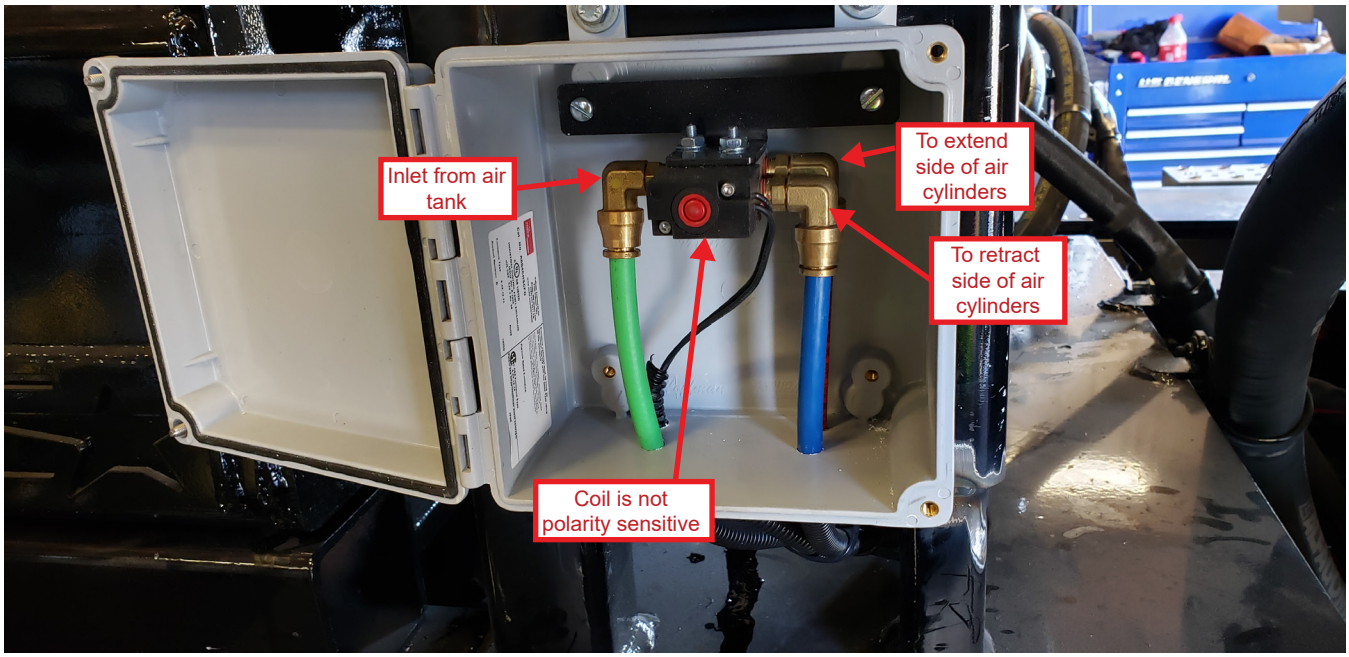

Install the 51723032 control box. Connect the 3/8” air lines from the fittings in the control box to the air tank See ***Fittings on Secondary Air Tank,*** and to the extend and retract sides of the air cylinders. For the cylinders, add the 72534742 push-loc tee to the air line just below the control box, then route the air lines to the extend and retract sides of the air cylinders on both sides of the vehicle.

NOTE: All fittings and air lines must be DOT approved.

Air Line Connection

Route the 3/8” air line across the chassis for the passenger side air cylinder. Use cushioned clamps to secure.

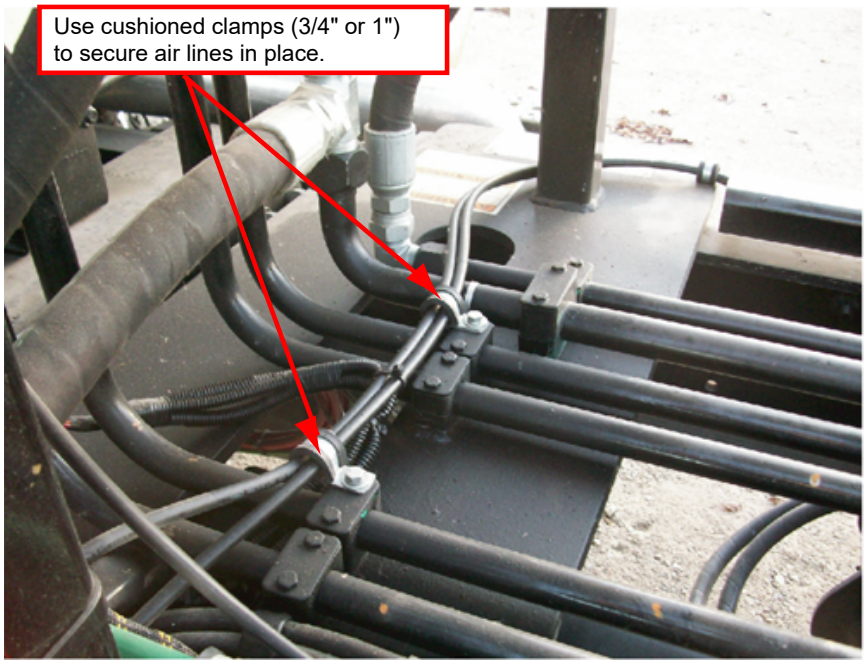

See ***Hydraulic System (99906531)*** for additional details and schematics on the pneumatic installation. Picture is for reference the clamp style only..

Fittings On Secondary Air Tank

In the 93727964 Pneumatic Kit, locate the valves and fittings

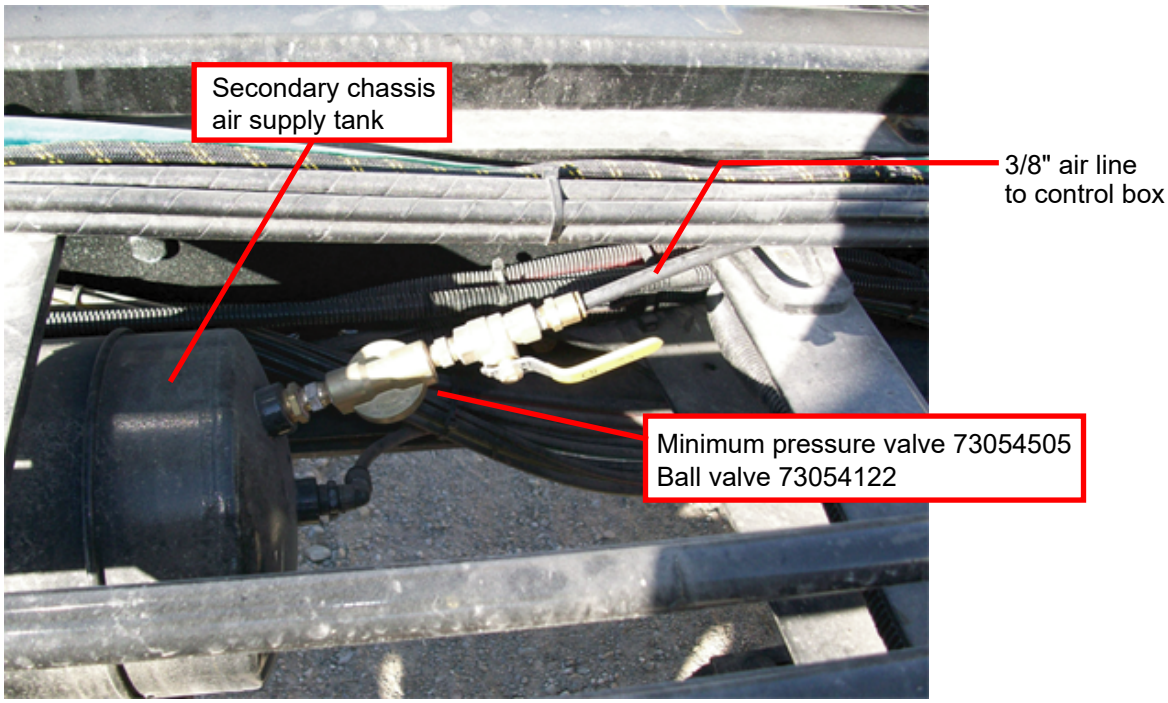

NOTE: Do not install fittings on a bottom port. Locate and use a port near the top of the air tank. All fittings and air lines must be DOT approved.

See ***Hydraulic System (99906531)*** for additional details and schematics on the pneumatic installation.

Container Locking Mechanism

MARKING FRAME FOR THE LIFT CYLINDERS

Raise the hoist to the full extension. Using a white marker, mark the frame side even with the top of the two hoist lift cylinders. This line will be used to locate the locking cylinders. The cylinders and mounting brackets must not extend into the area behind the line.

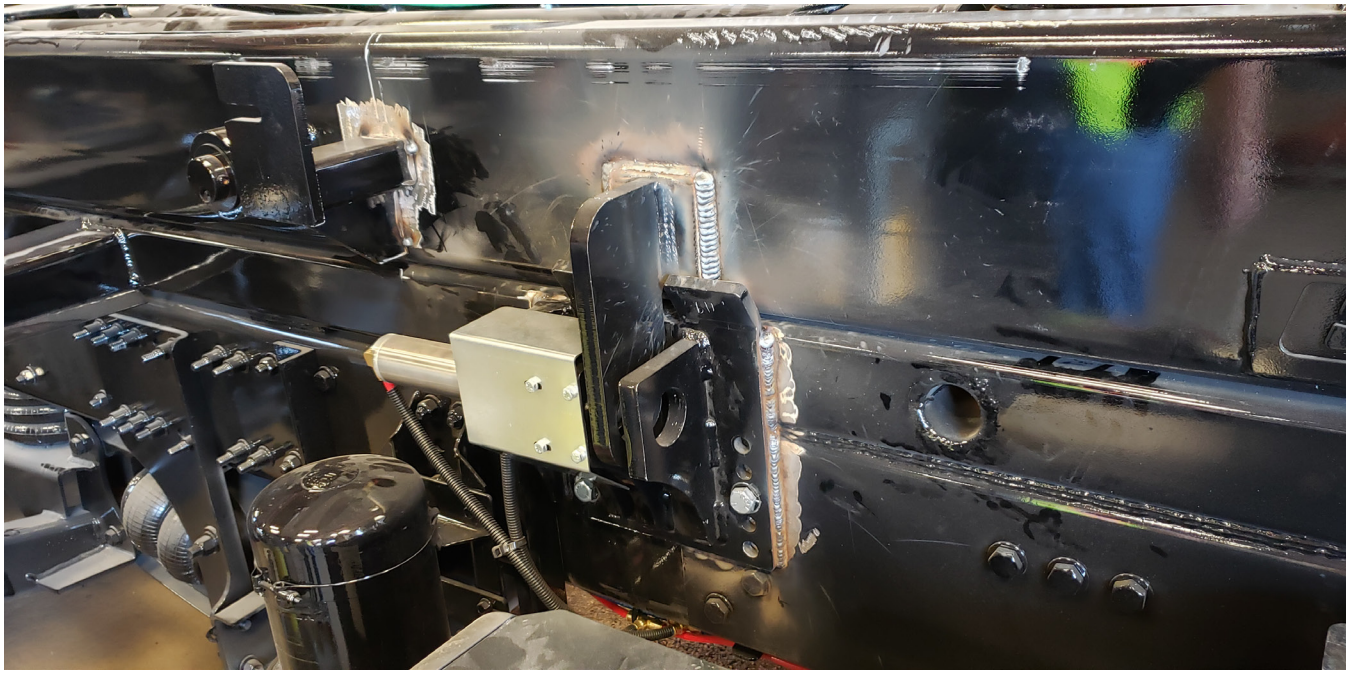

Hoist Container Brackets

Use the cylinder bracket to position the cylinder mounts. Make sure the cylinder will not extend past the white line which indicates the position of the hoist, so there will be no interference between the hoist and the cylinders. See drawing ***99906528 sheet 2 (Installation Drawing, 99906528)*** on the following page for complete details.

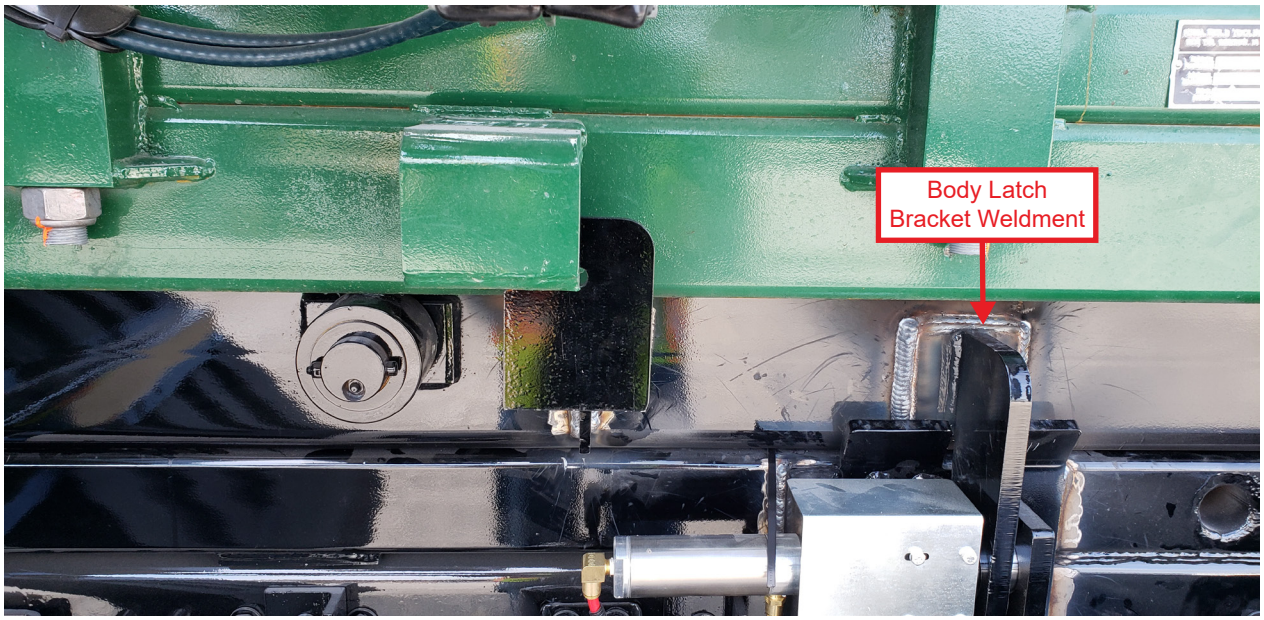

NOTE: One street side bracket and one curb side bracket is included.

99906528-2

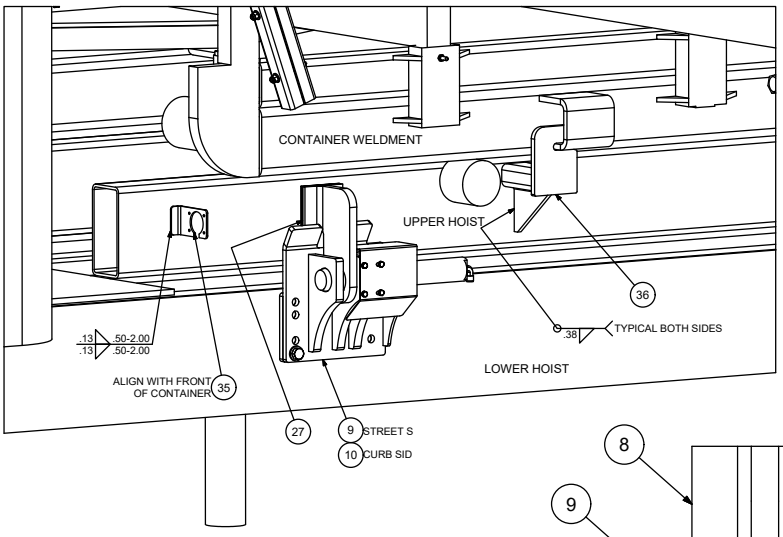

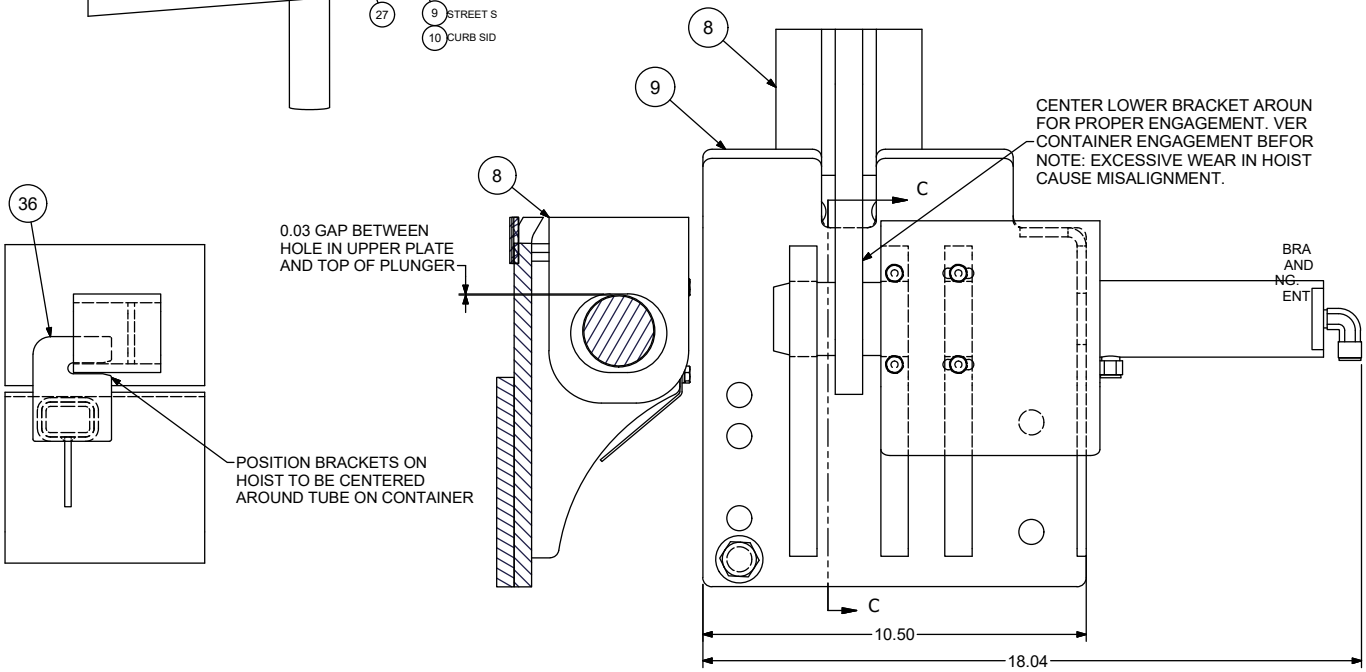

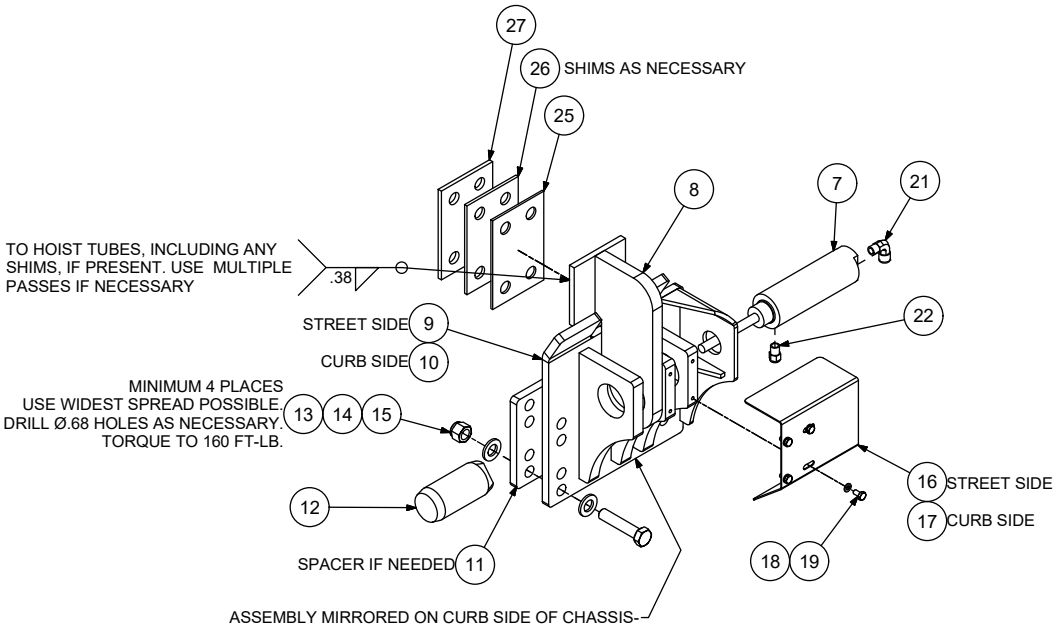

Install pinch point decals, 70398864, on both sides of cylinder mounting and on the container pocket.

This page left intentionally blank

Power Connector Bracket

In the Upfit Kit 93727959, locate:

- 60136142 - Power connector bracket

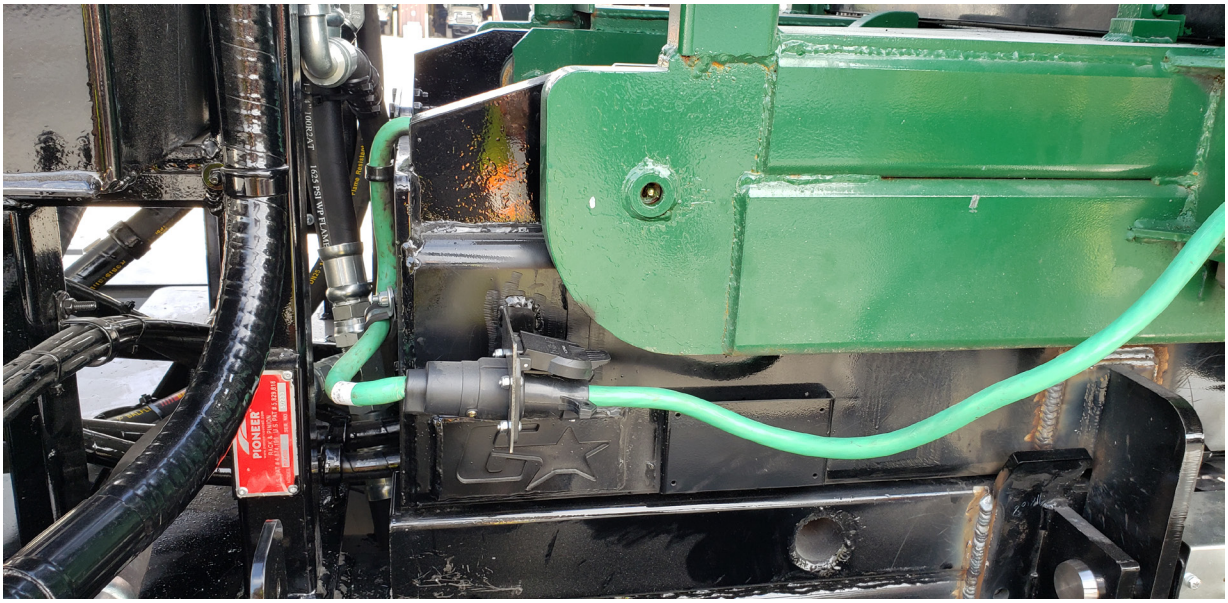

Install the 60136142 bracket at the front of the hoist. See drawing ***99906528 sheet 2 (Installation Drawing 99906528)*** for complete details.

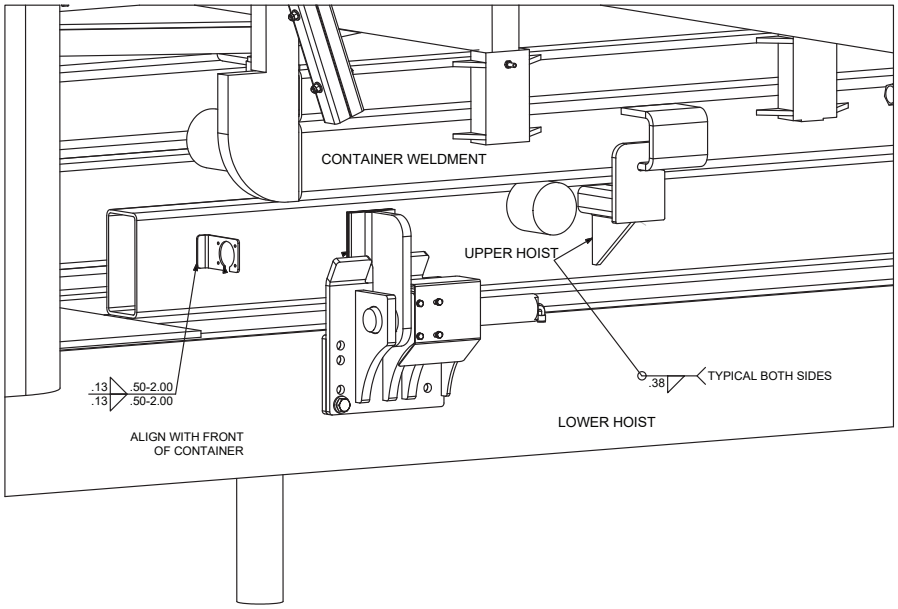

Once installed, attach the end of the green power cable to this bracket. This is where the crane power cable plugs in to power the crane.

Body Container Bracket

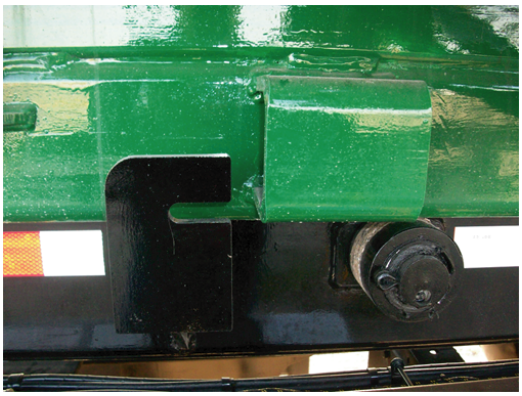

Bracket and pocket shown in the open position.

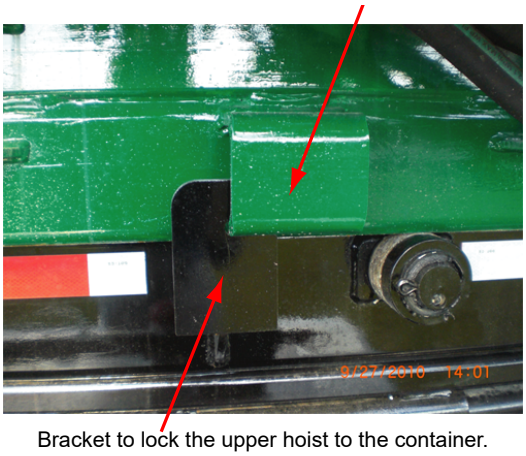

Bracket to lock the upper hoist to the container.
Right side - 52723182; Left side - 52723183

Locate and weld on the body bracket which fits into the pocket on the container using the container for a placement guide. Position the bracket so the slot is centered around the lower edge of the bracket on the container. See ***Installation Drawing 99906528 sheet 2*** for complete details

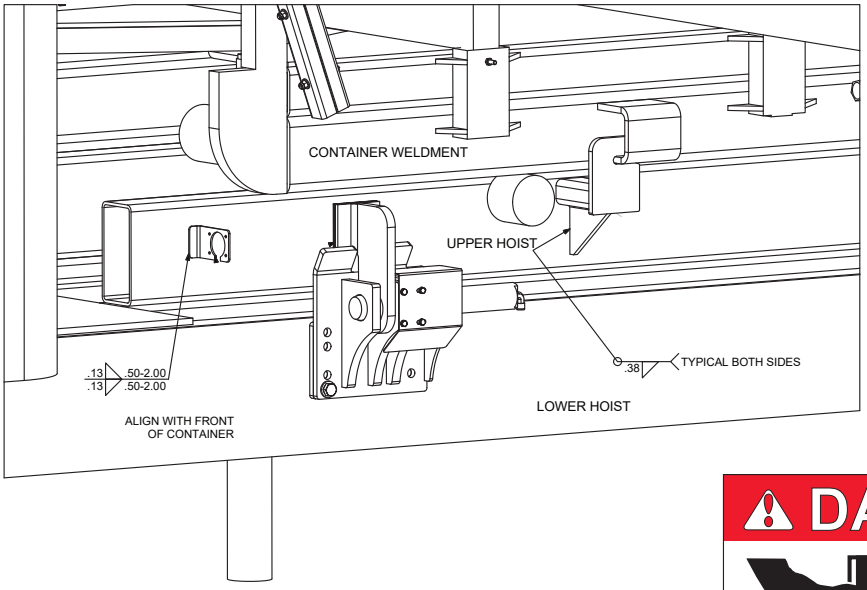

52723183 BRACKET, BODY

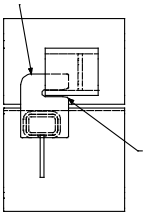

POSITION CONTAINER RESTRAINT BRACKET ON HOIST TO BE CENTERED AROUND POCKET ON CONTAINER.

Tarper Arm Modification

Cut arms approximately 21" from the top of the lower arm. Use the supplied tarper arm extensions (60135615). Locate, clamp, and drill (3) holes through both ends of the upper arms. Extensions may need to be shortened in some applications. Always use (6) bolts per extension assembly.

Tarper arm modification

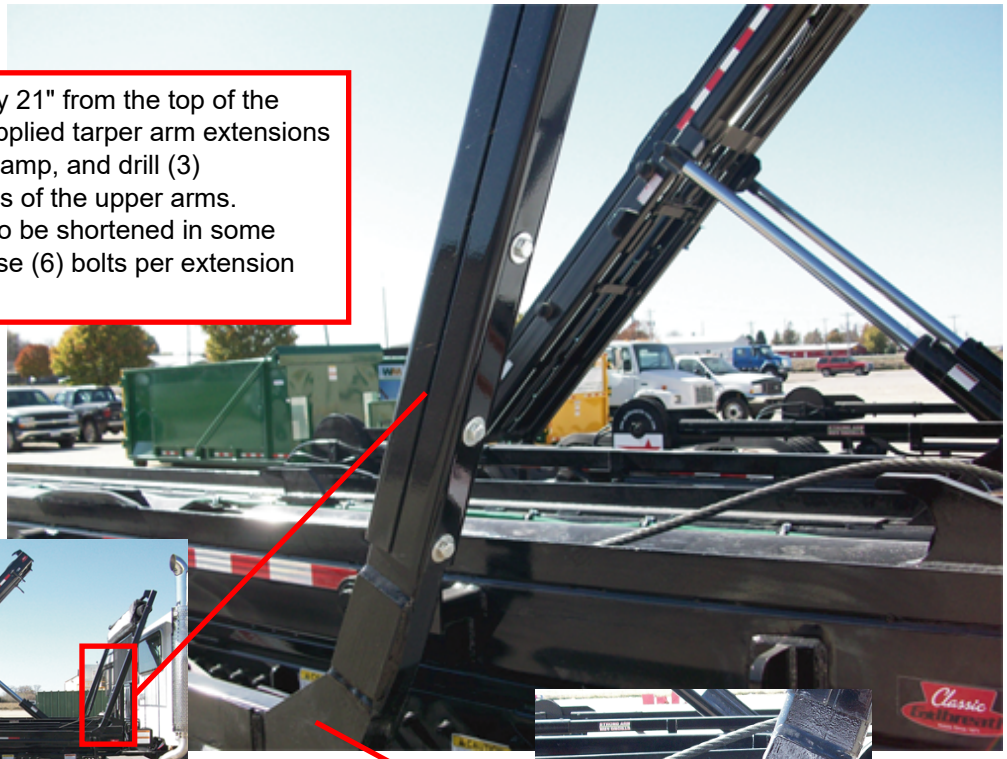

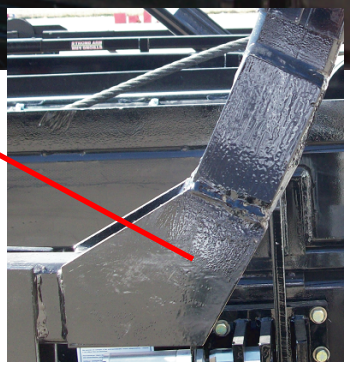

Upper arm angle modification

The tarper arms need to be modified to allow the horizontal arms to be parallel with the ground, thus extending the upper portion of the arms.

When installing the tarper arm extensions, always use 6 bolts at the bottom and top of the extension assembly.

You may have to modify the angle of the upper arm. Add reinforcement plates (shown) if the arm angle is modified. See ***Installation Drawing 99906528 sheet 1*** for complete details.

Assembly Drawings

Section - 4

Installation Drawing (99906528)

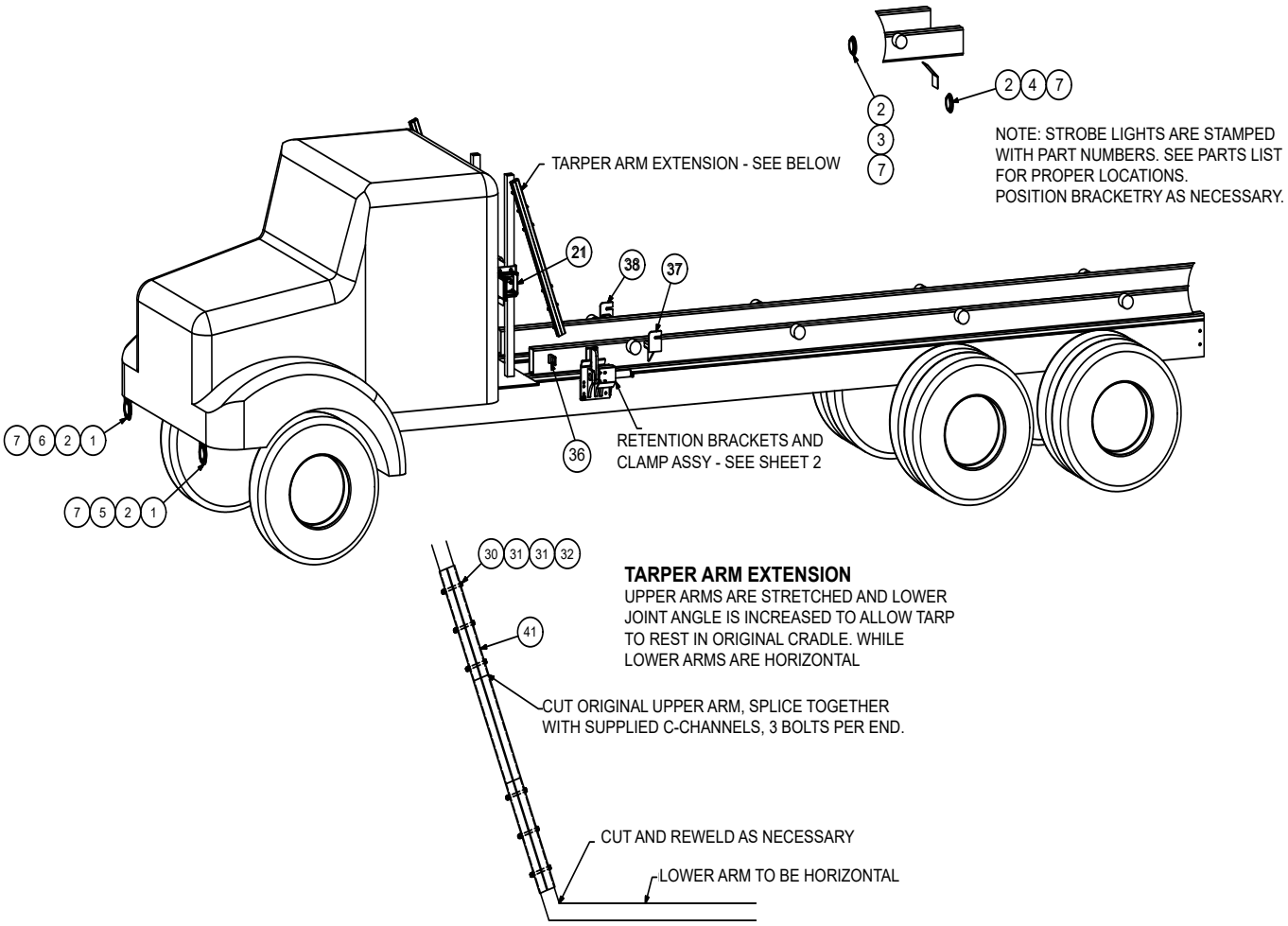

NOTE: Weld structural components in accordance with ANSI/AWS D14.3 & D1.3 Welding Specifications.

99906528-1 PARTS LIST

ITEM NO.	PART NO.	DESCRIPTION	QTY.
1.	60135237	BRACKET-LIGHT 4” RND	2
2.	76392275	GROMMET-RUBBER TAIL LIGHT 4.00	4
3.	77040814	LIGHT-STROBE SMART AMBER 4IN -1	1
4.	77040815	LIGHT-STROBE SMART AMBER 4IN -2	1
5.	77040816	LIGHT-STROBE SMART AMBER 4IN -3	1
6.	77040817	LIGHT-STROBE SMART AMBER 4IN -4	1
7.	77040818	ADAPTER-LIGHT STROBE PETERSON	4
21.	51723032	CONTROL BOX-BAGSTER G2	1
30.	72060055	CAP SCR .38-16X 3.50 HH GR5 Z	16
31.	72063003	WASHER-FLAT .38 W ANSI B27.2 Z	40
32.	72062103	NUT .38-16 HEX GR5 Z NYLOCK	20
36.	60136142	BRACKET-HARNESS MOUNTING BAGSTER G2	1
37.	52723183	GUIDE-BODY BAGSTER G2 LH	1
38.	52723182	GUIDE-BODY BAGSTER G2 RH	1
41.	60135615	EXTENSION-TARPER ARM BAGSTER	4
REV A. CN1147-1			

99906528-2

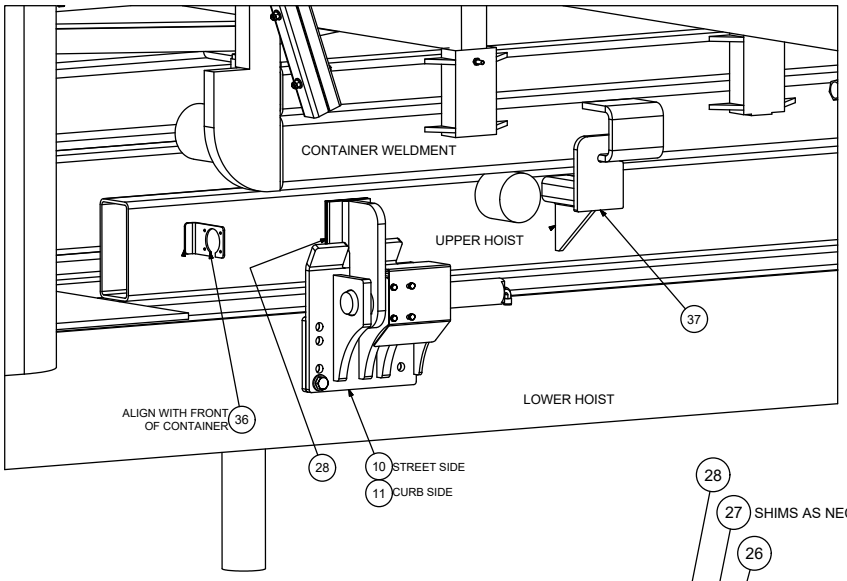
CONTAINER WELDMENT
UPPER HOIST
37
LOWER HOIST
ALIGN WITH FRONT OF CONTAINER
36
28
10
STREET SIDE
11
CURB SIDE

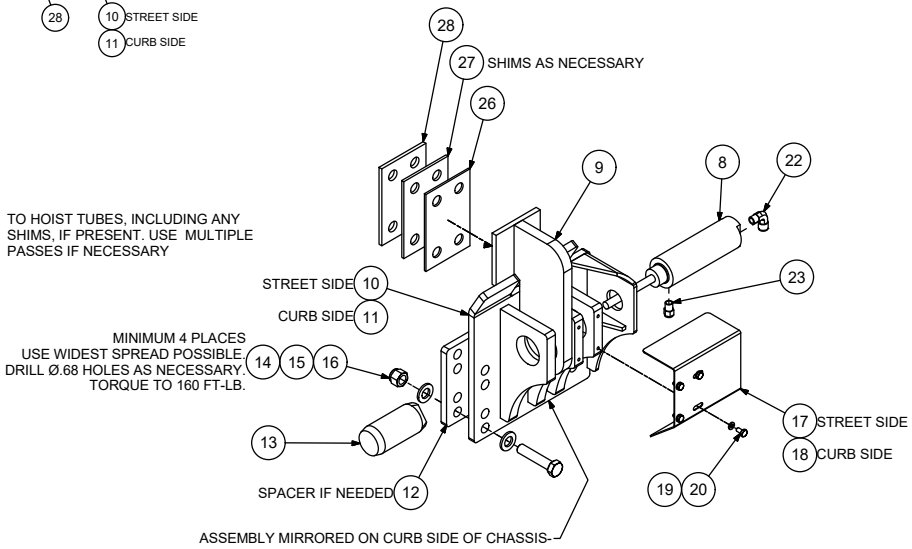
28
27
SHIMS AS NECESSARY
26
9
8
22
TO HOIST TUBES, INCLUDING ANY SHIMS, IF PRESENT. USE MULTIPLE PASSES IF NECESSARY
STREET SIDE
10
23
CURB SIDE
11
MINIMUM 4 PLACES
USE WIDEST SPREAD POSSIBLE.
DRILL Ø.68 HOLES AS NECESSARY.
TORQUE TO 160 FT-LB.
14
15
16
17
STREET SIDE
18
CURB SIDE
13
SPACER IF NEEDED
12
19
20
ASSEMBLY MIRRORED ON CURB SIDE OF CHASSIS

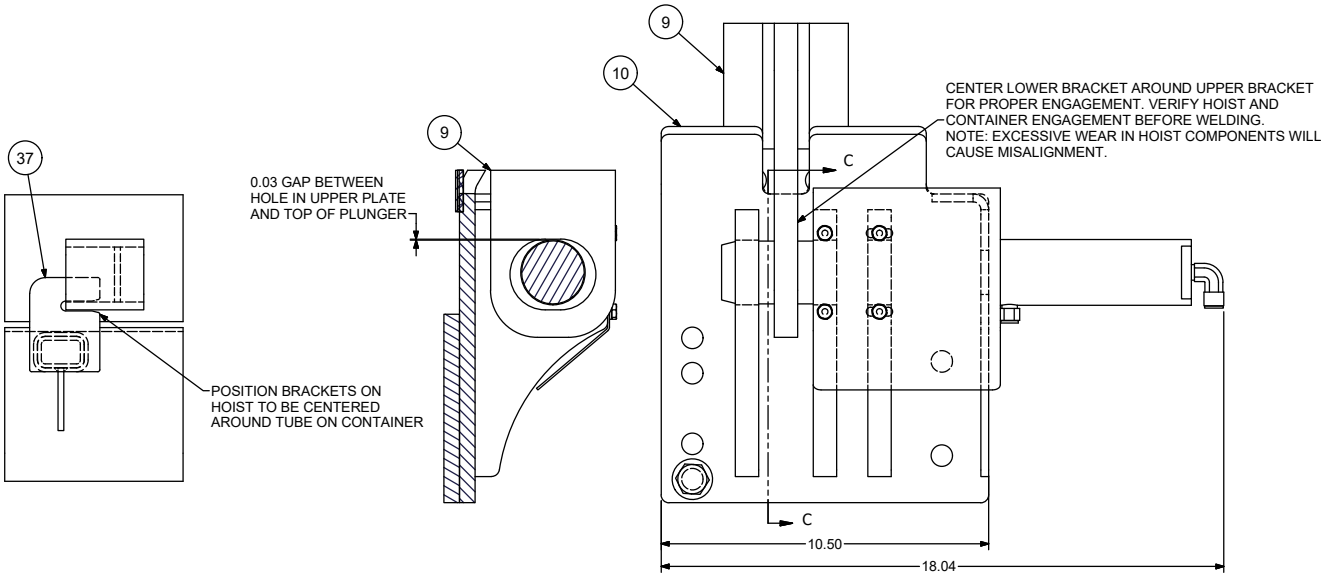
37
POSITION BRACKETS ON HOIST TO BE CENTERED AROUND TUBE ON CONTAINER
9
0.03 GAP BETWEEN HOLE IN UPPER PLATE AND TOP OF PLUNGER
9
10
CENTER LOWER BRACKET AROUND UPPER BRACKET FOR PROPER ENGAGEMENT. VERIFY HOIST AND CONTAINER ENGAGEMENT BEFORE WELDING.
NOTE: EXCESSIVE WEAR IN HOIST COMPONENTS WILL CAUSE MISALIGNMENT.
C
C
10.50
18.04

99906528-PARTS LIST

ITEM NO.	PART NO.	DESCRIPTION	QTY.
8.	73540411	CYLINDER-AIR BIMBA 1.06B 1.00S REV SNGL	2
9.	52727867	WLDMT-BRKT LATCH BODY BAGSTER GEN IV	2
10.	52727868	WLDMT-BRKT LATCH CHASSIS BAGSTER G4 STREET SIDE	1
11.	52727919	WLDMT-BRKT LATCH CHASSIS BAGSTER G4 CS	1
12.	60146499	SHIM-BAGSTER CYL. MOUNT 0.50 G4	1
13.	60135716	PLUNGER-LATCH BAGSTER G2	2
14.	72063119	WASHER .62 FLAT ASTM F436	16
15.	72060177	CAP SCR .62-11X 3.00 HH GR8 Z	8
16.	72601859	NUT .62-11 HEX GR8 YZ NYLOCK	8
17.	60146437	GUARD-CYLINDER BAGSTER G4 STREET SIDE	1
18.	60146560	GUARD-CYLINDER BAGSTER G4 CURB SIDE	1
19.	72063049	WASHER .25 LOCK	8
20.	72060000	CAP SCR .25-20X .50 HH GR5 Z	8
22.	72533700	PUSH LOC- FTG ELBOW .38 DOT X .25 MPT	1
23.	72533698	PUSH LOC- FTG .38 DOT X .25 MPT	1
26.	60136135	SHIM-BAGSTER CLAMP MOUNT 10GA	A/R
27.	60136136	SHIM-BAGSTER CLAMP MOUNT .19	A/R
28.	60136137	SHIM-BAGSTER CLAMP MOUNT .25	A/R
36.	60136142	BRACKET-HARNESS MOUNTING BAGSTER G2	1
37.	52723183	GUIDE-BODY BAGSTER G2 LH	1
REV. A CN1147-1			

99906528-3

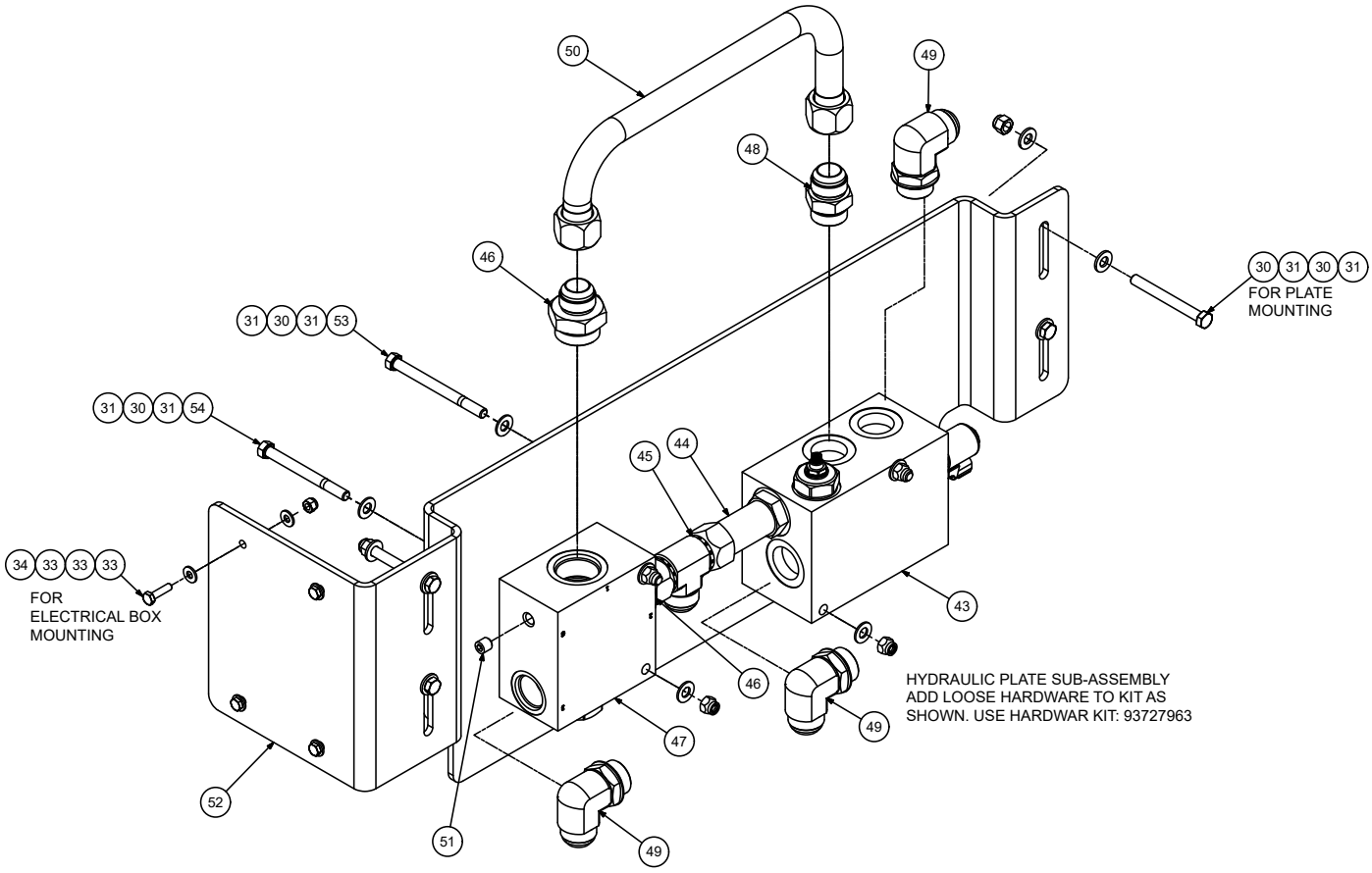
50
49
48
46
30 31 30 31
FOR PLATE
MOUNTING
31 30 31 53
31 30 31 54
45
44
34 33 33 33
FOR
ELECTRICAL BOX
MOUNTING
43
46
HYDRAULIC PLATE SUB-ASSEMBLY
ADD LOOSE HARDWARE TO KIT AS
SHOWN. USE HARDWAR KIT: 93727963
49
47
52
51
49

99906528-3 PARTS LIST

ITEM NO.	PART NO.	DESCRIPTION	QTY.
30.	72060055	CAP SCR .38-16X 3.50 HH GR5 Z	16
31.	72063003	WASHER-FLAT .38 W ANSI B27.2 Z	40
33.	72060004	CAP SCR .25-20X 1.00 HH GR5 Z	4
34.	72063001	WASHER .25 FLAT	8
43.	73540660	VALVE ASM-DIVERTER W-RELIEF BAGSTER G4	1
44.	72535034	ADPTR-M STR/M JIC 16 16 L	1
45.	72535035	TEE-SWVL BRANCH JIC 16 16 16	1
46.	72532371	ADPTR-M STR/M JIC 20 16	2
47.	73540408	VALVE-ASSY-PRIORITY FLOW CONTROL 28 GPM	1
48.	72532370	ADPTR-M STR/M JIC 16 16	1
49.	72053770	ELBOW-M STR/90/M JIC 16 16	3
50.	71417242	TUBE ASM-HYD 1.00 O.D. X 13.14 X 4.50	1
51.	72053392	PLUG-PIPE SOC HD STL .25	1
52.	60146562	BRKT-DIVERTER-FC BAGSTER G4	1
53.	72060057	CAP SCR HH 3/8-16 UNC - 4.50 GR5 Z	2
54.	72060056	CAP SCR HH 3/8-16 UNC - 4.00 GR5 Z	2
REV. A CN1147-1			

99906528-4

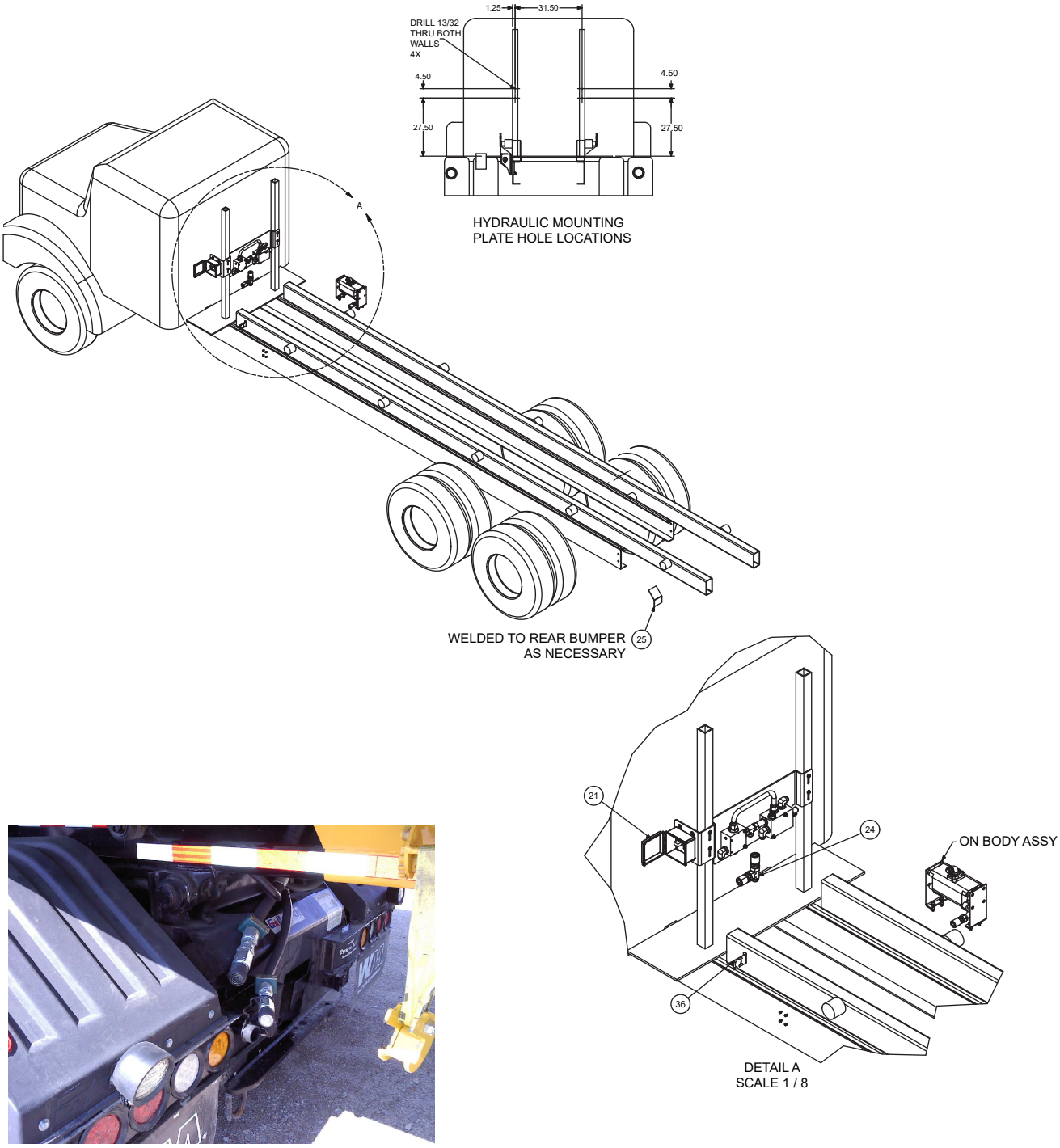
1.25
31.50
DRILL 13/32
THRU BOTH
WALLS
4X
4.50
4.50
27.50
27.50
HYDRAULIC MOUNTING
PLATE HOLE LOCATIONS
A
WELDED TO REAR BUMPER
AS NECESSARY
25
21
24
ON BODY ASSY
36
DETAIL A
SCALE 1 / 8

A COMPLETE PARTS LIST

ITEM NO.	PART NO.	DESCRIPTION	QTY.
21.	51723032	CONTROL BOX-BAGSTER G2	1
24.	72534756	TEE-MALE JIC 1.62-12 1.25 TUBE	1
25.	60136134	GUARD-FENDER BAGSTER	1
36.	60136142	BRACKET-HARNESS MOUNTING BAGSTER G2	1
REV. A CN1147-1			

99906528 COMPLETE PARTS LIST

ITEM NO.	PART NO.	DESCRIPTION	QTY
1.	60135237	BRACKET-LIGHT 4” RND	2
2.	76392275	GROMMET-RUBBER TAIL LIGHT 4.00	4
3.	77040814	LIGHT-STROBE SMART AMBER 4IN -1	1
4.	77040815	LIGHT-STROBE SMART AMBER 4IN -2	1
5.	77040816	LIGHT-STROBE SMART AMBER 4IN -3	1
6.	77040817	LIGHT-STROBE SMART AMBER 4IN -4	1
7.	77040818	ADAPTER-LIGHT STROBE PETERSON	4
8.	73540411	CYLINDER-AIR BIMBA 1.06B 1.00S REV SNGL	2
9.	52727867	WLDMT-BRKT LATCH BODY BAGSTER GEN IV	2
10.	52727868	WLDMT-BRKT LATCH CHASSIS BAGSTER G4 STREET SIDE	1
11.	52727919	WLDMT-BRKT LATCH CHASSIS BAGSTER G4 CS	1
12.	60146499	SHIM-BAGSTER CYL. MOUNT 0.50 G4	1
13.	60135716	PLUNGER-LATCH BAGSTER G2	2
14.	72063119	WASHER .62 FLAT ASTM F436	16
15.	72060177	CAP SCR .62-11X 3.00 HH GR8 Z	8
16.	72601859	NUT .62-11 HEX GR8 YZ NYLOCK	8
17.	60146437	GUARD-CYLINDER BAGSTER G4 STREET SIDE	1
18.	60146560	GUARD-CYLINDER BAGSTER G4 CURB SIDE	1
19.	72063049	WASHER .25 LOCK	8
20.	72060000	CAP SCR .25-20X .50 HH GR5 Z	8
21.	51723032	CONTROL BOX-BAGSTER G2	1
22.	72533700	PUSH LOC- FTG ELBOW .38 DOT X .25 MPT	1
23.	72533698	PUSH LOC- FTG .38 DOT X .25 MPT	1
24.	72534756	TEE-MALE JIC 1.62-12 1.25 TUBE	1
25.	60136134	GUARD-FENDER BAGSTER	1
26.	60136135	SHIM-BAGSTER CLAMP MOUNT 10GA	A/R
27.	60136136	SHIM-BAGSTER CLAMP MOUNT .19	A/R
28.	60136137	SHIM-BAGSTER CLAMP MOUNT .25	A/R
29.	60146500	SPACER PLATE-CYLINDER MOUNT BAGSTER G4	A/R
30.	72060055	CAP SCR .38-16X 3.50 HH GR5 Z	16
31.	72063003	WASHER-FLAT .38 W ANSI B27.2 Z	40
32.	72062103	NUT .38-16 HEX GR5 Z NYLOCK	20
33.	72060004	CAP SCR .25-20X 1.00 HH GR5 Z	4
34.	72063001	WASHER .25 FLAT	8
35.	72062104	NUT .25-20 HEX NYLOCK	4
36.	60136142	BRACKET-HARNESS MOUNTING BAGSTER G2	1
37.	52723183	GUIDE-BODY BAGSTER G2 LH	1
38.	52723182	GUIDE-BODY BAGSTER G2 RH	1
39.	72532287	NIPPLE-DISC .25FPT STL HNV-14-M	1
40.	72534758	CAP-DUST FOR 72532287	1
41.	60135615	EXTENSION-TARPER ARM BAGSTER	4
42.	70034525	TIE-PLASTIC .50W DBL ENDED-BUTTERFLY	8
43.	73540660	VALVE ASM-DIVERTER W-RELIEF BAGSTER G4	1
44.	72535034	ADPTR-M STR/M JIC 16 16 L	1
45.	72535035	TEE-SWVL BRANCH JIC 16 16 16	1

ITEM NO.	PART NO.	DESCRIPTION	QTY
46.	72532371	ADPTR-M STR/M JIC 20 16	2
47.	73540408	VALVE-ASSY-PRIORITY FLOW CONTROL 28 GPM	1
48.	72532370	ADPTR-M STR/M JIC 16 16	1
49.	72053770	ELBOW-M STR/90/M JIC 16 16	3
50.	71417242	TUBE ASM-HYD 1.00 O.D. X 13.14 X 4.50	1
51.	72053392	PLUG-PIPE SOC HD STL .25	1
52.	60146562	BRKT-DIVERTER-FC BAGSTER G4	1
53.	72060057	CAP SCR HH 3/8-16 UNC - 4.50 GR5 Z	2
54.	72060056	CAP SCR HH 3/8-16 UNC - 4.00 GR5 Z	2
REV. A CN1147-1			

Electrical & Hydraulic Systems

Section - 5

Wiring Diagram (99906530)

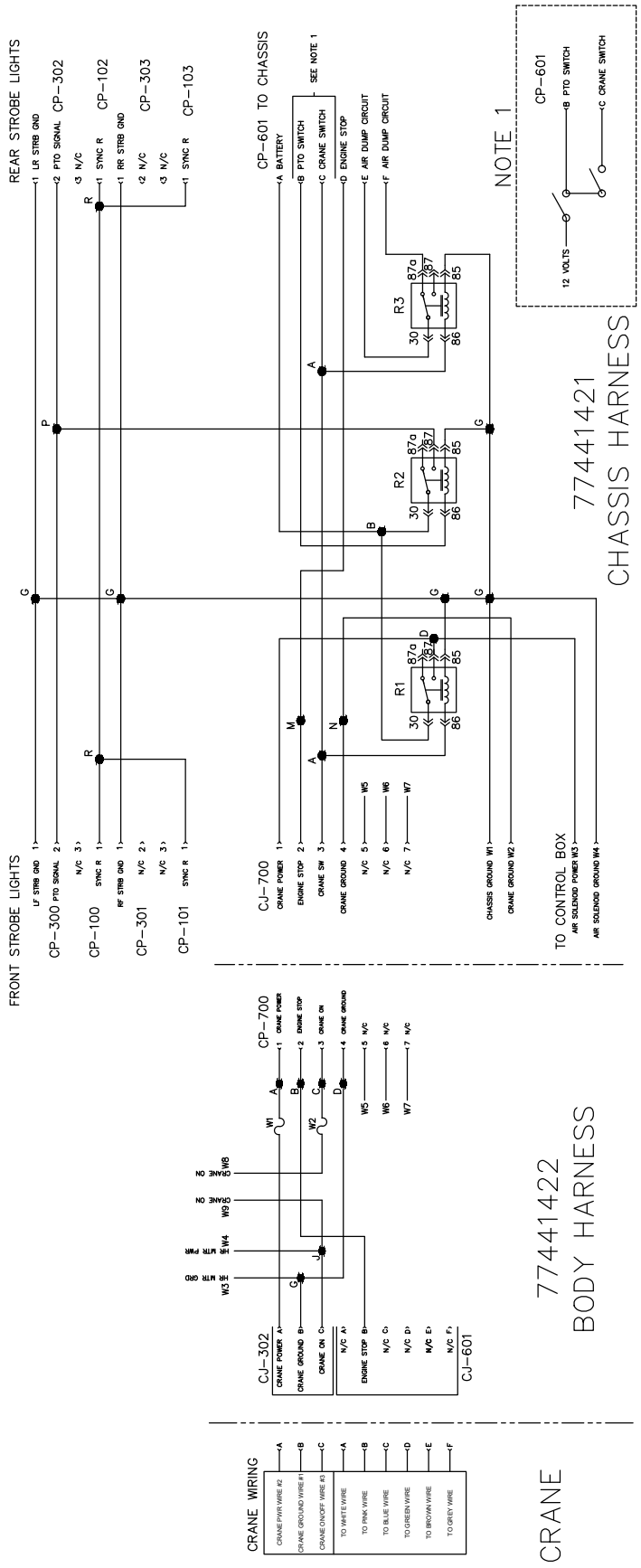

Hydraulic System (99906531)

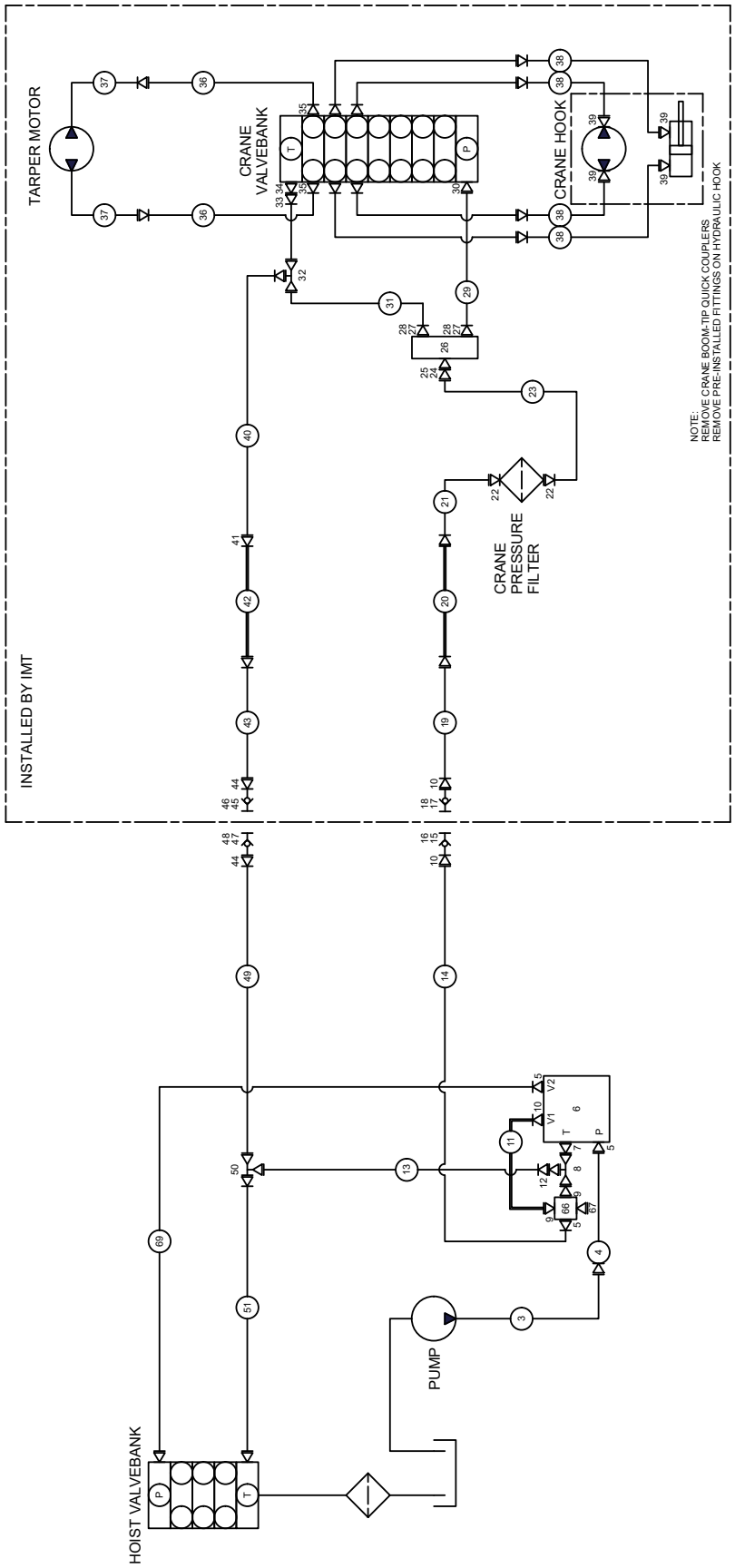

Pneumatic Layout (99906531)

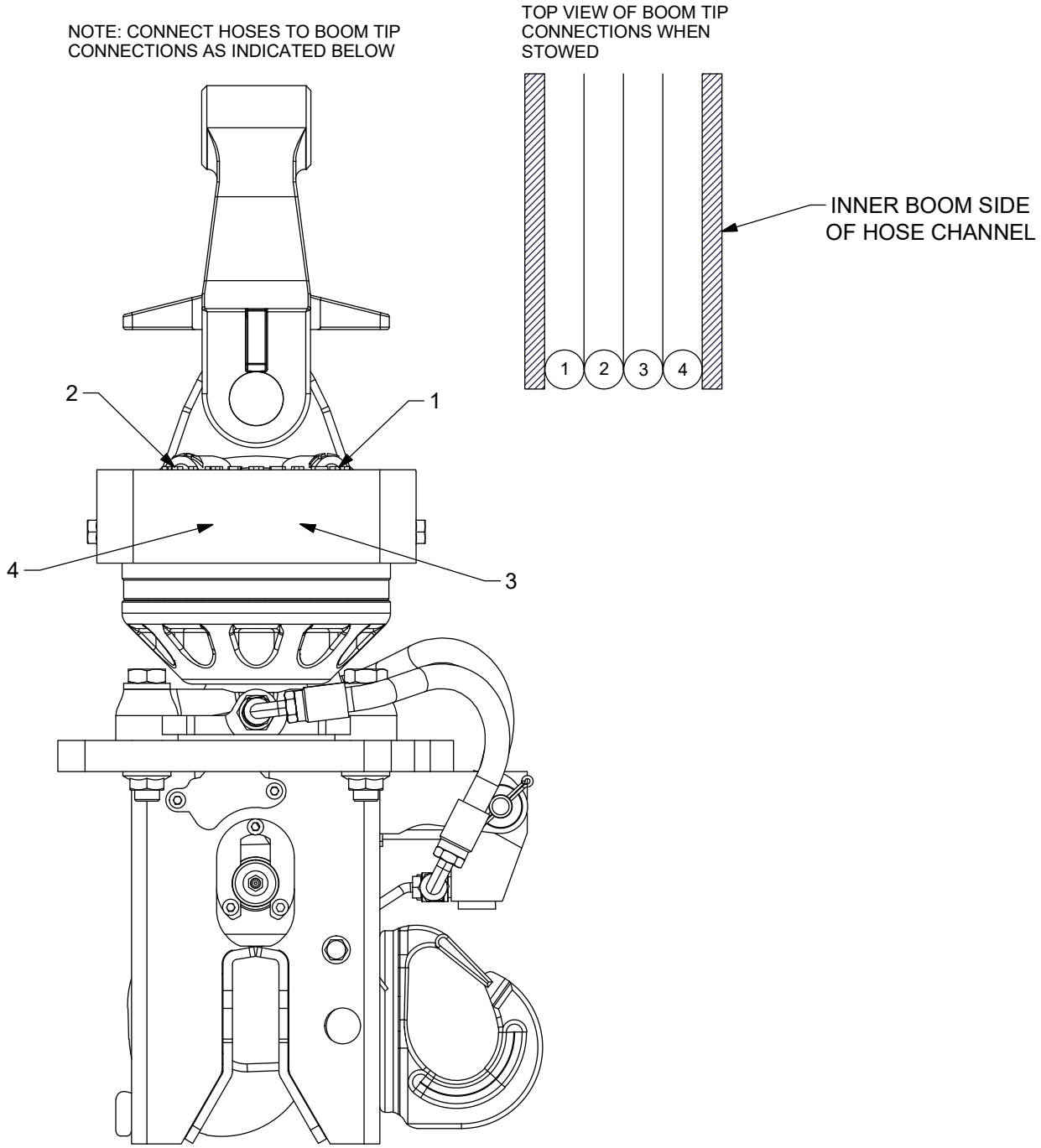

NOTES:

1. Whenever possible, use secondary air system.
2. Use all DOT approved air fittings.

Hydraulic Schematic (99906531)

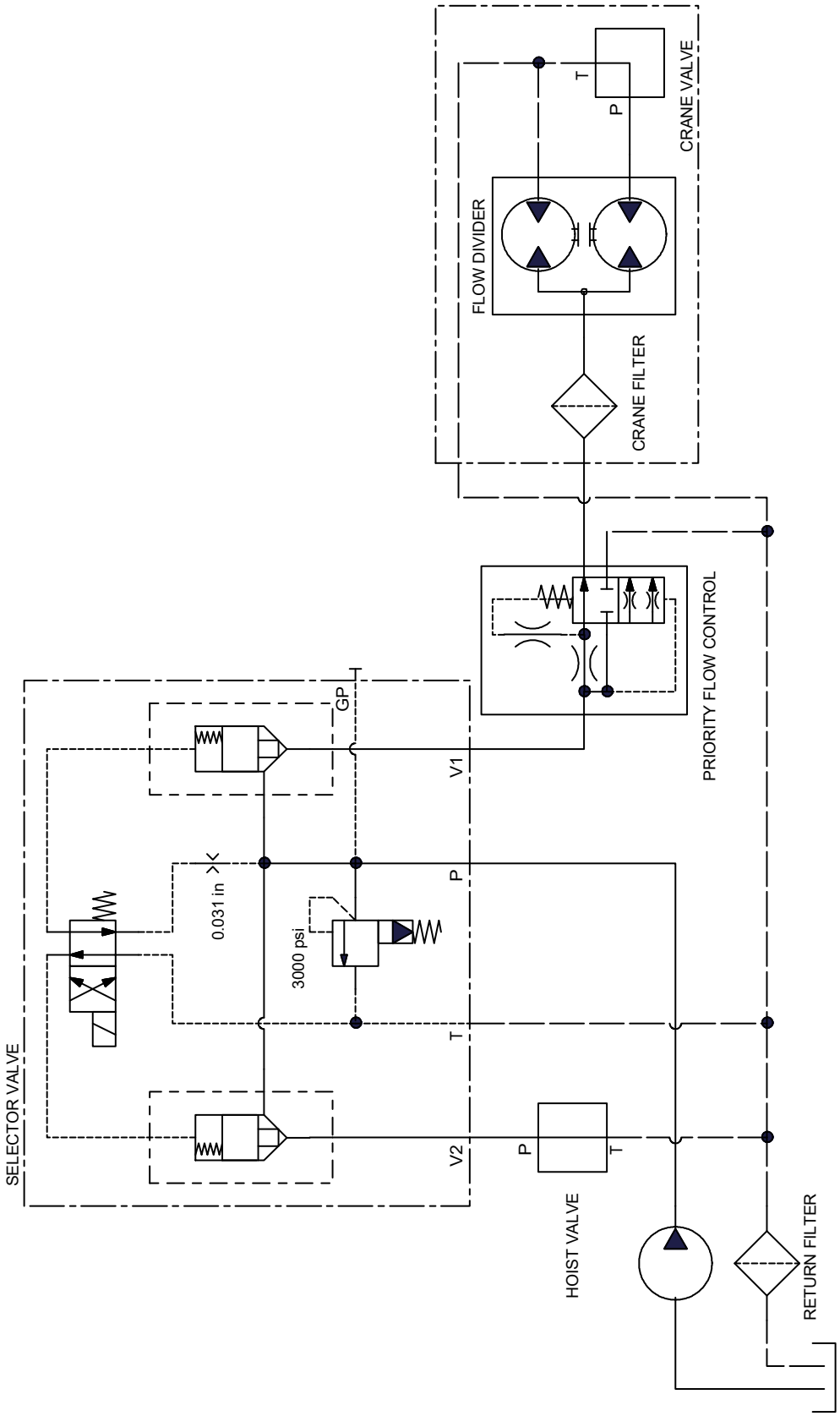

99906531-4

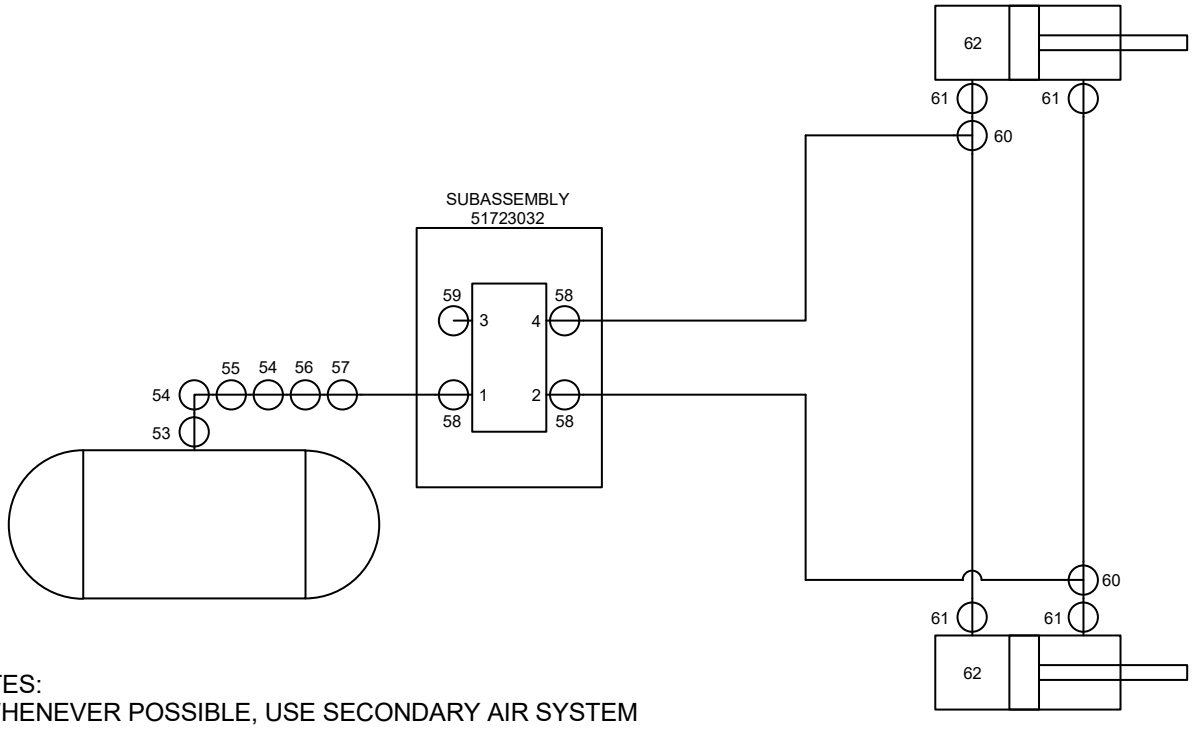

NOTES:
1. WHENEVER POSSIBLE, USE SECONDARY AIR SYSTEM
2. USE ALL DOT APPROVED AIR FITTINGS

99906531 COMPLETE PARTS LIST

ITEM NO.	PART NO.	DESCRIPTION	KIT NO.	QTY.
1.	91727961	KIT-HYD BAGSTER SHIPOUT G4	REF	REF
2.	91727971	KIT-HYD BAGSTER INSTALL G4	REF	REF
3.	N/A	EXISTING HOSE FROM PUMP (1” OR 1 1/4”)	N/A	1
4.	N/A	INST-SUPPLIED -16 PRESSURE HOSE	1	1
5.	72053770	ELBOW-M STR/90/M JIC 16 16	68	3
6.	73540660	VALVE ASM-DIVERTER W-RELIEF BAGSTER G4	68	1
7.	72535034	ADPTR-M STR/M JIC 16 16 L	68	1
8.	72535035	TEE-SWVL BRANCH JIC 16 16 16	68	1
9.	72532371	ADPTR-M STR/M JIC 20 16	68	2
10.	72532370	ADPTR-M STR/M JIC 16 16	68 & 2	3
11.	71417242	TUBE ASM-HYD 1.01 O.D. X 4.00 X 13.14	68	1
12.	72534754	ADPTR-M JIC/F JIC 20 16	68	1
13.	N/A	INST-SUPPLIED -20 RETURN HOSE	68	1
14.	N/A	EXISTING CHASSIS PRESSURE HOSE (1”)	N/A	1
15.	72534647	QUICK DISCONNECT-16 SAE SOCKET-FEMALE	N/A	1
16.	77041835	CAP-QUICK DISCONNECT -16 SOCKET	N/A	1
17.	72534648	QUICK DISCONNECT-16 SAE PLUG-MALE	N/A	1
18.	77041834	CAP-QUICK DISCONNECT -16 PLUG	N/A	1
19.	51399024	HOSE-AAF 1.00 X 52.00 (16-16) 100R17	2	1
20.	71414183	TUBE ASM-HYD 1.00X146.00 CONT PRESS	N/A	1
21.	51399014	HOSE-AAJ 1.00 X 87.50 (16-16) 100R17	2	1
22.	72534762	ADPTR-M BSPP/M JIC 16 16	2	2
23.	51399015	HOSE-FJ 1.00 X 16.00 (16-16) 100R17	2	1
24.	72534752	ELBOW-FLANGE/M JIC 20 16	2	1
25.	N/A	FLANGE KIT-SAE 20 (METRIC BOLTS)	26	1
26.	51723031	FLOW DIV ASY-BAGSTER G2	REF	1
27.	N/A	FLANGE KIT-SAE 16 (METRIC BOLTS)	26	2
28.	72534755	ELBOW-FLANGE/M JIC 16 16	2	2
29.	51399016	HOSE-BBEE 0.75X 56.00 (12-16) 100R13	2	1
30.	72534753	ADPTR-M BSPP/M FACE 12 12	2	1
31.	51399017	HOSE-FJ 1.00 X 41.00 (16-16) 100R4	2	1
32.	72533000	TEE-SWVL NUT RUN JIC 16	2	1
33.	72534449	ADPTR-M JIC/F JIC 16 12	2	1
34.	72534599	ADPTR-M JIC/FM 12 S20 SW	2	1
35.	72534713	ADPTR-M BSPP/M JIC 8 6	2	2
36.	51399022	HOSE-AAJ .38 X 34.00 (06-06) 100R17	2	2
37.	N/A	EXISTING TUBING ON CONTAINER	N/A	1
38.	51490317	HOSE-ADF .38 X 44.00 (16-6) 100R16	2	4
39.	72535036	ELBOW-M JIC/90/MM 6 18	2	4
40.	51399018	HOSE-AAJ 1.00 X 36.50 (16-16) 100R4	2	1
41.	72534754	ADPTR-M JIC/F JIC 20 16	2	1
42.	71414184	TUBE ASM-HYD 1.25X146.00 CONT RETURN	N/A	1
43.	51399019	HOSE-AAF 1.25 X 53.00 (20-20) 100R4	2	1

ITEM NO.	PART NO.	DESCRIPTION	KIT NO.	QTY.
44.	72534749	ADPTR-M STR/M JIC 20 20	1 & 2	2
45.	72534744	QUICK DISCONNECT-20 SAE PLUG-MALE	N/A	1
46.	77041861	CAP-QUICK DISCONNECT -20 PLUG	N/A	1
47.	72534743	QUICK DISCONNECT-20 SAE SOCKET-FEMALE	N/A	1
48.	77041860	CAP-QUICK DISCONNECT -20 SOCKET	N/A	1
49.	N/A	EXISTING CHASSIS RETURN LINE	N/A	1
50.	72534756	TEE-UNION JIC 20	1	1
51.	N/A	INST-SUPPLIED -20 RETURN HOSE	1	1
52.	93727964	KIT-PNEUMATICS BAGSTER G4	REF	1
53.	72531812	REDUCER BUSH-BRS .50- .25	52	1
54.	72053517	ADPTR-MPT/HEX/MPT .25 .25	52	2
55.	73054505	VALVE-PRESS PROTECTION .25in #378414	52	1
56.	73054122	VALVE-BALL .25	52	1
57.	72533698	PUSH LOC- FTG .38 DOT X .25 MPT STRT	52	1
58.	72534739	PUSH LOC- FTG .38 DOT X .12 MPT 90 DEG	N/A	3
59.	71414202	MUFFLER-AIR 1/8” NPT SINTERED BRONZE	N/A	1
60.	72534742	PUSH LOC- UNION TEE .38 DOT	52	2
61.	72533700	PUSH LOC- FTG .38 DOT X .25 MPT 90 DEG	52	4
62.	73540411	CYLINDER-AIR BIMBA 2.00B 3.00S DBL ACT	N/A	2
63.	70396004	TUBE-PUSHLOC .38 AIR (CS)	52	40’
64.	71414185	TUBE ASM-HYD 1.00X 17.00 PRESS EXTEND	N/A	1
65.	71414186	TUBE ASM-HYD 1.25X 17.00 RETURN EXTEND	N/A	1
66.	73540408	VALVE-ASSY-P.FLOW CNTRL 28 GPM	68	1
67.	72053392	PLUG-PIPE SOC HEX STL .25	68	1
68.	93727959	KIT-BAGSTER PACKAGE UPFIT G4	REF	REF
69.	N/A	EXISTING PRESSURE HOSE TO HOIST VALVE	N/A	1
REV B CN1090-4				

Revisions

DATE	LOCATION	DESCRIPTION
5-11-2021	99906531	CN1090-2 & 1090-4

IOWA MOLD TOOLING CO., INC.

P.O. Box 189 Garner, IA 50438

Tel: 641.923.3711

Fax: 641.923.2424

www.imt.com

IMT reserves the right to make changes in engineering, design, specifications, add improvements or discontinue manufacturing at any time without notice or obligation.

IMT and IMT LOGO are registered trademarks of Iowa Mold Tooling Co., Inc., Garner, IA, USA.

© 2021 Iowa Mold Tooling Co., Inc. All Right Reserved.