IOWA MOLD TOOLING CO., INC.

P.O. Box 189
Garner, IA 50438
Tel: 641.923.3711
Fax: 641.923.2424
www.imt.com

Manual # 99906411

9520 OK2-OK6 Spare Parts Manual

99906397 Technical Specifications

Revised: April 30, 2021

Copyright © 2021 Iowa Mold Tooling Co., Inc.
All rights reserved

No part of this publication may be reproduced, stored in a retrieval system, or transmitted in any form or by any means, electronic, mechanical, photocopying, recording or otherwise without the prior written permission of Iowa Mold Tooling Co., Inc.

Iowa Mold Tooling Co., Inc. is an Oshkosh Corporation Company

9520K-RCS, 9520OK-RCS

Description	Page no.	From loader	To loader
Basic loader			
Base and column, complete incl. link arm system	559 01 010	1370001	
Stowing bracket (OK5/OK6)	559 01 070	1370001	
Stowing bracket (K6-K8)	559 01 075	1370001	
Main boom, complete incl. link arm system, jib	559 01 400	1370001	
Boom cylinder, C290 x 816, with LHV	559 01 510	1370001	
Boom cylinder, C290 x 816, with LHV	559 01 510 A		
Jib cylinder C290 x 1094 m. with LHV	559 01 610	1370001	
Jib cylinder C290 x 1094 m. with LHV	559 01 610 A		
Brackets and protection plates	559 01 900	1370001	
Stabilizers			
Stabilizer beam 4210	559 02 010	1370001	
Stabilizer safety lock	559 02 150	1370001	
Safety lock (CE)	559 02 160	1370001	
Stabilizer cylinder C125-600, type R	559 02 230	1370001	
Stabilizer cylinder C125-500, type HR	559 02 250	1370001	
Stabilizer cylinder C125-600, type HR	559 02 255	1370001	
Beam cylinder, C45-1465	559 02 300	1370001	
Beam cylinder, C40-1600	559 02 310	1370001	
Hydraulic system, stabilizersbeam	559 02 700	1370001	
Boom System			
Jib and K1 extension, complete	559 03 010	1370001	
Jib, complete (OK)	559 03 020	1370001	
K2 extension, complete	559 03 110	1370001	1370035
K2 extension, complete	559 03 110 A	1370035	
K3 extension, complete	559 03 120	1370001	
K4 extension, complete	559 03 130	1370001	
K5 extension, complete	559 03 140	1370001	

9520K-RCS, 9520OK-RCS

Description	Page no.	From loader	To loader
K6 extension, complete	559 03 150	1370001	
K7 extension, complete	559 03 160	1370001	
K8 extension, complete	559 03 170	1370001	1370044
K8 extension, complete	559 03 170 A	1370045	
OK1-OK2 extension, complete	559 03 200	1370001	
OK3 extension, complete	559 03 210	1370001	
OK4 extension, complete	559 03 220	1370001	
OK5 extension, complete	559 03 230	1370001	
OK6 extension, complete	559 03 240	1370001	
Hook suspension 22 t	559 03 285	1370001	
Extension cylinder I - C110/Ø80 x 1700h	559 03 300	1370001	
Extension cylinder II, C110/Ø80 x 1767h	559 03 310	1370001	
Extension cylinder III - C100/Ø70 x 1900h	559 03 320	1370001	
Extension cylinder IV, C100/Ø70 x 2000h	559 03 330	1370001	
Extension cylinder V, C90/Ø60 x 2050h	559 03 340	1370001	
Extension cylinder VI - C90/Ø60 x 2150h	559 03 350	1370001	
Extension cylinder VII C70/Ø45 x 2102h	559 03 360	1370001	
Extension cylinder VIII C70/Ø45 x 1972s	559 03 370	1370001	
Extension cylinder I C110/80h x 1850 (OK)	559 03 400	1370001	
Extension cylinderII C110/80h x 1900 (OK)	559 03 410	1370001	
Extension cylinder III C100/70h x2000 (OK)	559 03 420	1370001	
Extension cylinder IV C100/70h x 2100 (OK)	559 03 430	1370001	
Extension cylinder V C90/60 x 2175 - (OK5 max)	559 03 440	1370001	
Extension cylinder V C90/60h x 2175 - (OK6)	559 03 450	1370001	
Extension cylinder VI C90/60s x 2250 (OK)	559 03 460	1370001	
Manual extension, OF6	559 03 750	1370001	
Manual extension, F7	559 03 760	1370001	

9520K-RCS, 9520OK-RCS

Description	Page no.	From loader	To loader
Separate hook suspension, OK2	559 03 880	1370001	
Separate hook suspension, OK3	559 03 890	1370001	
Separate hook suspension, OK4	559 03 900	1370001	
Separate hook suspension, OK5	559 03 910	1370001	
Separate hook suspension, OK6	559 03 920	1370001	
Separate hook suspension, K6	559 03 950	1370001	
Separate hook suspension, K7	559 03 960	1370001	
Separate hook suspension, K8	559 03 970	1370001	
Hydraulic systems, loader functions			
Hose kit, loader functions	559 05 400	1370001	
Hydraulic system, regeneration, K	559 05 420	1370001	1370023
Hydraulic system, regeneration	559 05 420 A	1370024	
Hydraulic system, regeneration, OK	559 05 430	1370001	1370023
Hose kit, extra valves	559 05 500	1370001	
Hydraulic systems, stabilizer beams			
Hydraulic system, stabilizers	559 05 700	1370001	1370030
Hydraulic system, stabilizers	559 05 700 A	1370031	
Hydraulic systems, pump and tank			
Tank, cpl.	559 06 010	1370001	
Tank incl. fittings	559 06 015	1370001	
Oil cooler	559 06 020	1370001	
Hydraulic system, pump 1-circuit	559 06 060	1370001	
Hydraulic system, variable flow pump, dual circuit	559 06 070	1370001	
High-pressure filter	559 06 110	1370001	
Hydraulic systems, valve blocks			
Valve block, 4 sects. fixed/variable	559 06 200	1370001	
Valve block, 5 sects. fixed/variable	559 06 205	1370001	
Valve block, 6 sects. fixed/variable	559 06 210	1370001	

9520K-RCS, 9520OK-RCS

Description	Page no.	From loader	To loader
Valve block, 7 sects. fixed/variable	559 06 220	1370001	
Valve block, 8 sects. fixed/variable	559 06 230	1370001	
Valve block, 4 sects. dual circuit, variable	559 06 240	1370001	
Valve block, 6 sects. dual circuit, EXV., variable	559 06 250	1370001	
Valve block, 5 sects. dual circuit, winch, variable	559 06 260	1370001	
Valve block, 7 sects. dual circuit, EXV. + winch, variable	559 06 270	1370001	
Valve block, 6 sects. dual circuit, FJ, variable	559 06 280	1370001	
Valve block, 8 sects. dual circuit, FJ + winch, variable	559 06 290	1370001	
Control valve	559 06 450	1370001	
Hydraulic systems, miscellaneous			
1 extra funct., stabilizer mode	559 06 500	1370001	1370066
1 extra funct., stabilizer mode	559 06 500 A	1370067	
2 extra funct., stabilizer mode	559 06 510	1370001	1370066
2 extra funct., stabilizer mode	559 06 510 A	1370067	
3 extra funct., stabilizer mode	559 06 520	1370001	1370066
3 extra funct., stabilizer mode	559 06 520 A	1370067	
4 extra funct., stabilizer mode	559 06 530	1370001	1370066
4 extra funct., stabilizer mode	559 06 530 A	1370067	
2 extra funct., crane mode	559 06 550	1370001	1370066
2 extra funct., crane mode	559 06 550 A	1370067	
3 extra funct., crane mode	559 06 560	1370066	
3 extra funct., crane mode	559 06 560 A	1370067	
4 extra funct., crane mode	559 06 570	1370001	1370066
4 extra funct., crane mode	559 06 570 A	1370067	
Front stabilizer leg	559 06 600	1370001	1370066
Front stabilizer leg	559 06 600 A	1370067	
Labels and mounting kits			
Lifting capacity diagrams and various labels	559 07 000	1370001	

9520K-RCS, 9520OK-RCS

Description	Page no.	From loader	To loader
Labels	559 07 010	1370001	
Mounting kit 4 bolt - subframe	559 07 100	1370001	
Mounting kit 8 bolt - subframe	559 07 105	1370001	
Mounting kit 8 bolt - chassis	559 07 110	1370001	
Accessories, extra valves			
Hose reels, K	559 09 250	1370001	1370040
Hose reels, K	559 09 250 A	1370041	
Hose reel, quick-release coupling, OK5/OK6	559 09 310	1370001	
Hose reel, quick-release coupling, OK5/OK6	559 09 310 A	1370001	
Multicouplings, hose reels	559 09 350	1370001	
Quick-release coupling, hose reel, K	559 09 355	1370001	
Hose guides (OK2)	559 09 400	1370001	
Hose guides (OK3)	559 09 410	1370001	
Hose guides (OK4)	559 09 420	1370001	
Hose guides (OK5)	559 09 430	1370001	
Hose guides (OK6)	559 09 440	1370001	
Multi-coupling, hose guides (OK4)	559 09 500	1370001	
Multi-coupling, hose guides (OK5)	559 09 510	1370001	
Multi-coupling, hose guides (OK6)	559 09 520	1370001	
Quick-release coupling, hose reels (OK)	559 09 560	1370001	
Quick-release couplings, guides	559 09 660	1370001	
Accessories, winch			
Winch 3,2T cpl.	559 13 010	1370001	
Hydraulic system, winch	559 13 015	1370001	
Swing-up hoist 3,2T cpl.	559 13 020	1370001	
Swing-up hoist 3,2T cpl.	559 13 020 A		
Hydraulic system, Swing-up hoist	559 13 025	1370001	
Wire sheave guide roller	559 13 030	1370001	

9520K-RCS, 9520OK-RCS

Description	Page no.	From loader	To loader
Slewing cylinder, C50-102	559 13 040	1370001	
Sensor, swing-up hoist	559 13 050	1370001	1370050
Sensor, swing-up hoist	559 13 050 A	1370051	
Wire roller guide	559 13 055	1370001	
Wire roller guide, K3/K6	559 13 060	1370001	
Wire pulley 3.2 t	559 13 120	1370001	
Winch bacis, Power Hoist	559 13 200	1370001	1370028
Winch bacis, Power Hoist	559 13 200 A	1370029	
Wire roller guide, K3/K6, Power Hoist	559 13 210	1370001	
Movable wire guide (OK)	559 13 300	1370001	
Swivel hook, 2.5 t and 3.2 t	559 13 330	1370001	
Counter weight cpl.	559 13 340	1370001	
Accessories, personnel basket			
Basket, PB 800 Hy	559 15 000	1370001	
Basket, PB 800 E	559 15 005	1370001	
Emergency pump, basket loader	559 15 100	1370001	
Parts for emergency pump (1 circuit)	559 15 110	1370001	
Parts for emergency pump (2 circuits)	559 15 120	1370001	
Accessories, miscellaneous			
Brackets	559 16 010	1370001	
Shield at the end of the jib (K)	559 16 020	1370001	
Shield at the end of the jib (K)	559 16 020 A		
Shield at the end of the jib (OK)	559 16 030	1370001	
External hydraulic tank, 320L	559 16 200	1370001	
External hydraulic tank, 420L	559 16 210	1370001	
Electronic parts, in general			
Terminal block for RCL box with RC	559 20 050	1370001	
12 V converter	559 20 160	1370001	

9520K-RCS, 9520OK-RCS

Description	Page no.	From loader	To loader
BEHEW	559 20 300	1370001	
CYL	559 20 310	1370001	
CYBEL	559 20 320	1370001	
PAS	559 20 330	1370001	
CYW	559 20 340	1370001	
Alarm flash	559 20 350	1370001	
Temperature monitoring for oil cooler	559 20 420	1370001	
Spotlight, boom	559 20 430	1370001	
Spotlight, jib	559 20 440	1370001	
Spotlight, radio remote controlled.	559 20 450	1370001	
Electronic parts, RC crane			
Basic electronic parts, base	559 22 130	1370001	
Basic electronic parts, column	559 22 140	1370001	
Terminal block, Box2, column	559 22 145	1370001	
Basic electronic parts, Jib	559 22 150	1370001	
Inclination sensor, base	559 22 290	1370001	
Stabilizer operation via RC	559 22 390	1370001	
Electricity supply, separate traverse	559 22 400	1370001	
Electric/hydraulic parts, separate traverse	559 22 410	1370001	
Electronic parts, swing-up stabilizer leg 3 o'clock	559 22 420	1370001	
Electronic parts, swing-up stabilizer leg 9 o'clock	559 22 430	1370001	
Winch	559 22 450	1370001	
Winch	559 22 450 A	1370001	
Winch	559 22 460	1370001	
Fly-Jib supply Column	559 22 470	1370001	
FJ supply, hose guides	559 22 480	1370001	
MEWP supply Column	559 22 490	1370001	

9520K-RCS, 9520OK-RCS

Description	Page no.	From loader	To loader
Fly-Jib power supply, Cable drum	559 22 500	1370001	
EJB5385, installation	559 22 520	1370001	
Light tower	559 22 530	1370001	
MEWP supply, hose guides	559 22 810	1370001	
MEWP supply, hose reel, multi- and quick-release coupling	559 22 820	1370001	1370013
MEWP supply, hose reel, multi- and quick-release coupling	559 22 820 A	1370001	

9520K-RCS, 9520OK-RCS

Internal ref. 6398000

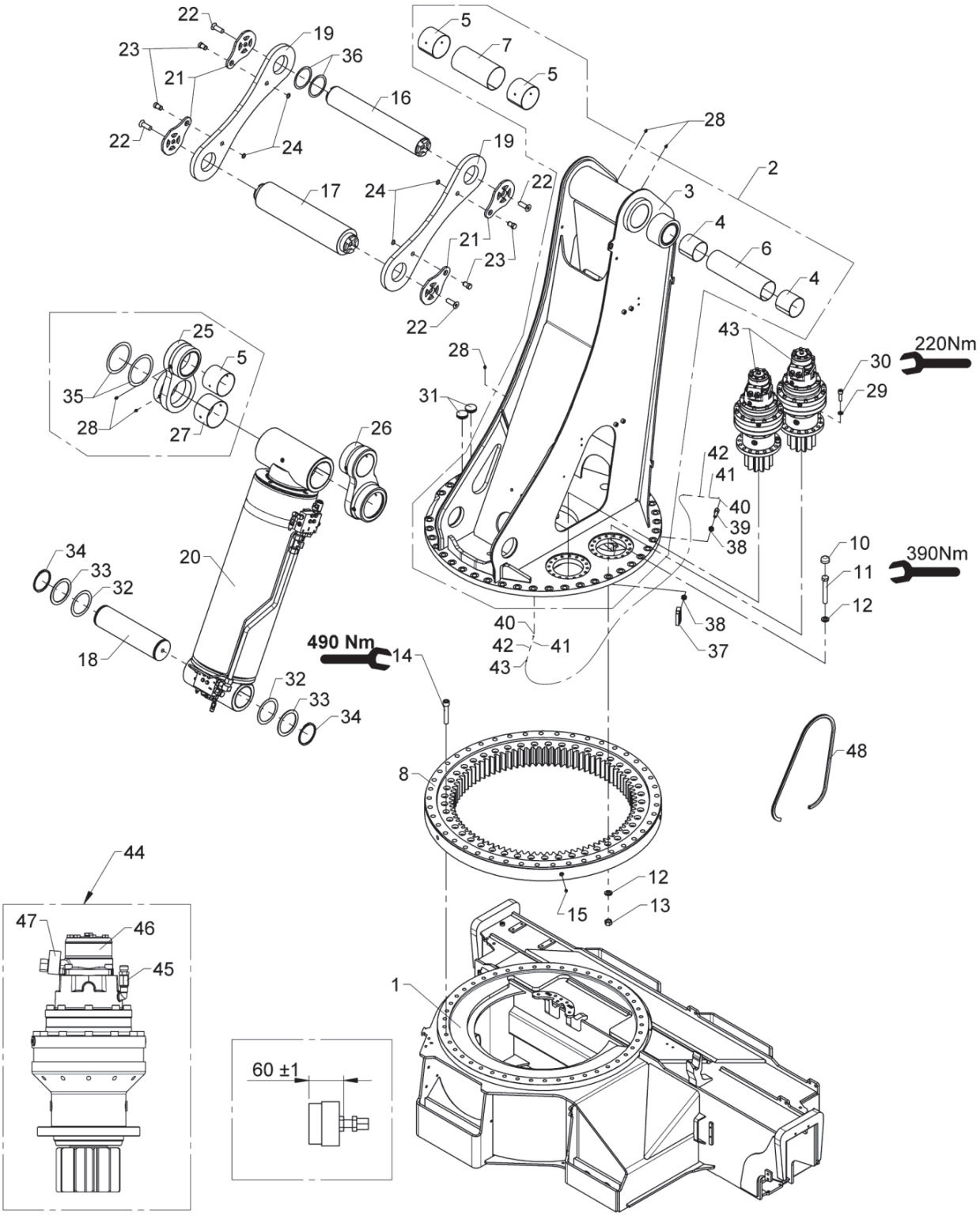

Base and column, complete incl. link arm system

Pos	Qty.	Part no.	Description	Remarks
1	1	6398010	Base, painted	63 98 001
2	1	6398020	Column with bushings	
3	1	6398030	Column, painted	64 00 051
4	2	23927	Bushing	PM 10095 DX
5	4	23924	Bushing	PM 120100 DX
6	1	68047	Plate for spacer	
7	1	63549	Plate	
8	1	50191	Turntable, painted	
9	1	6398350	Kit of bolts	
10	43	63413	Cover for nut	
11	43	2018005	Steel bolt	M20 x 140
12	86	31761	Washer	20 mm
13	43	32333	Nut	M20
14	45	2018004	Cylinder screw	MC20 x 110
15	5	31337	Lubricator	M10 x 1
16	1	6398228	Link arm pin L1	
17	1	6398233	Link arm pin C2	
18	1	6398232	Pin ø110 x 404	
19	2	6398234	Link arm, N	
20	1	6398130	Boom cylinder with LHV	
21	4	6300762	Lock plate	
22	4	32465	Countersunk screw	MK20 x 60
23	4	6302237	Pin	
24	4	33108	Circlip	20U
25	1	6398247	Push rod R	
26	1	6398246	Push rod L	
27	2	23926	Bushing	PM 14090 DX
28	7	31318	Lubricator	1/8" RG
29	32	31099	Washer, 14 mm	14 mm
30	32	32487	Screw	MC14 x 45
31	2	64344	Plastic plug	
32	2	33262	Washer Dacromet	PS 110 x 140 x 1,0
33	2	33260	Back ring	SS 110 x 140 x 3,5
34	2	33158	Circlip	110U
35	4	33269	Washer	PS 140 x 170 x 1,0
36	4	33250	Washer DIN988	PS 100 x 120 x 1,0
37	1	31395	Brush	
38	2	25354	Counter nut	1/4"
39	1	6294614	Nipple	
40	2	26186	Elbow connection	WEV 6 LRK
41	2	26114	Profile ring	P-R 6 L/S

9520K-RCS, 9520OK-RCS

Internal ref. 6398000

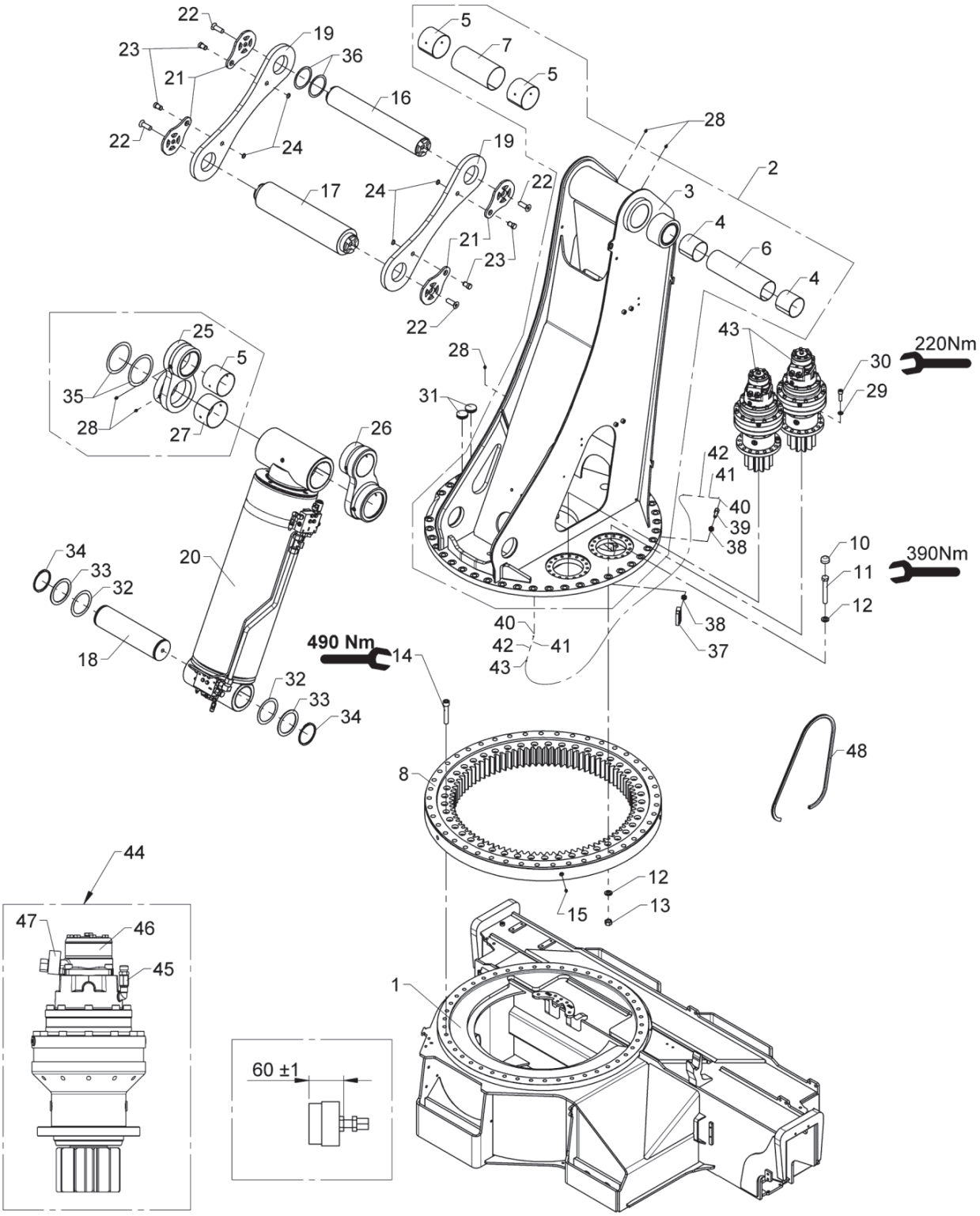

Base and column, complete incl. link arm system

Pos	Qty.	Part no.	Description	Remarks
42	2	26164	Coupling nut	M 6 L
43	1	62821	Nylon pipe	45 cm
44	2	49484	Slewing gear painted	
45	1	49694	Vent plug	4020131800
46	1	49695	Engine	425045500
47	1	49696	Valve	438012400
48	1	46587	Rubber protection	1250mm

9520K-RCS, 9520OK-RCS

Internal ref. 6302070

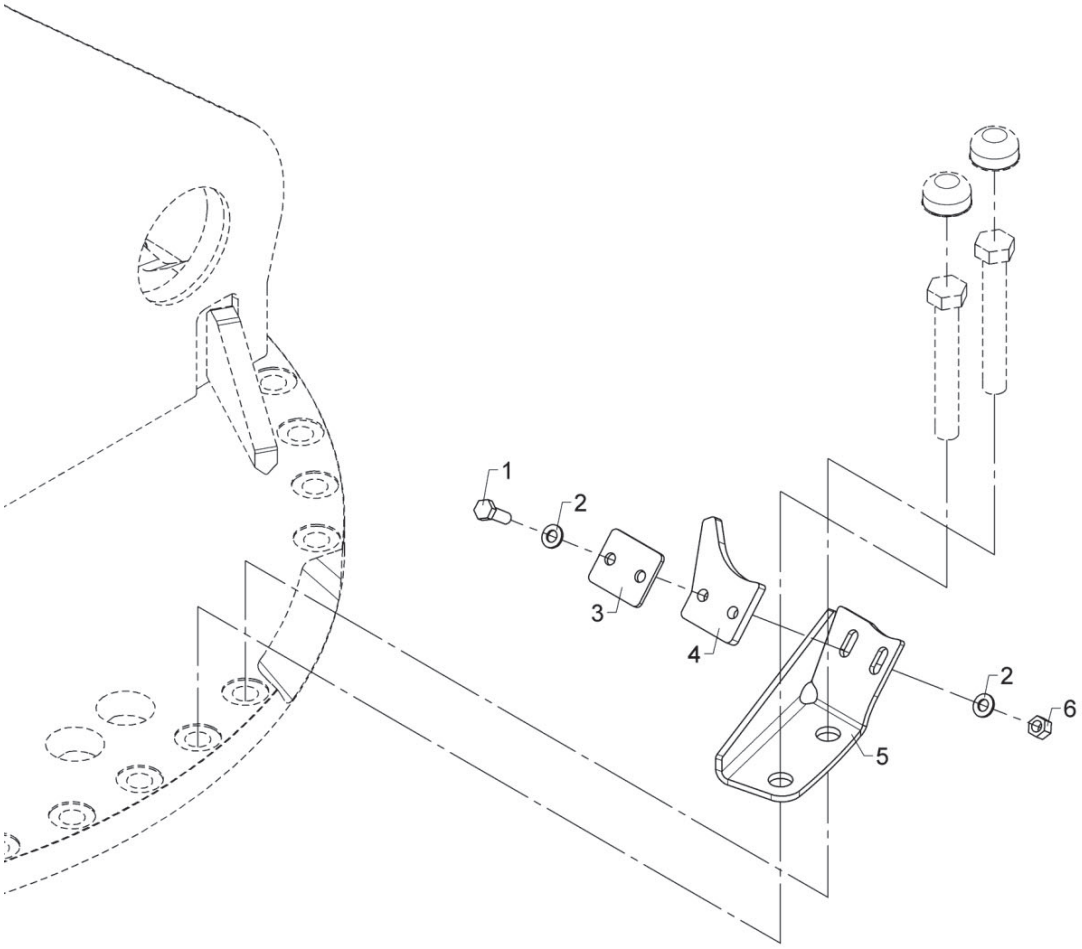

Stowing bracket (OK5/OK6)

Pos	Qty.	Part no.	Description	Remarks
1	2	30156	Set screw, stainless	M10 x 30
2	4	31565	Washer, stainless	10 mm
3	1	6302089	Sheet	
4	1	63417	Cylinder support	
5	1	6302088	Stowing bracket	
6	2	31564	Lock nut, stainless	M10

9520K-RCS, 9520OK-RCS

Internal ref. 6400030

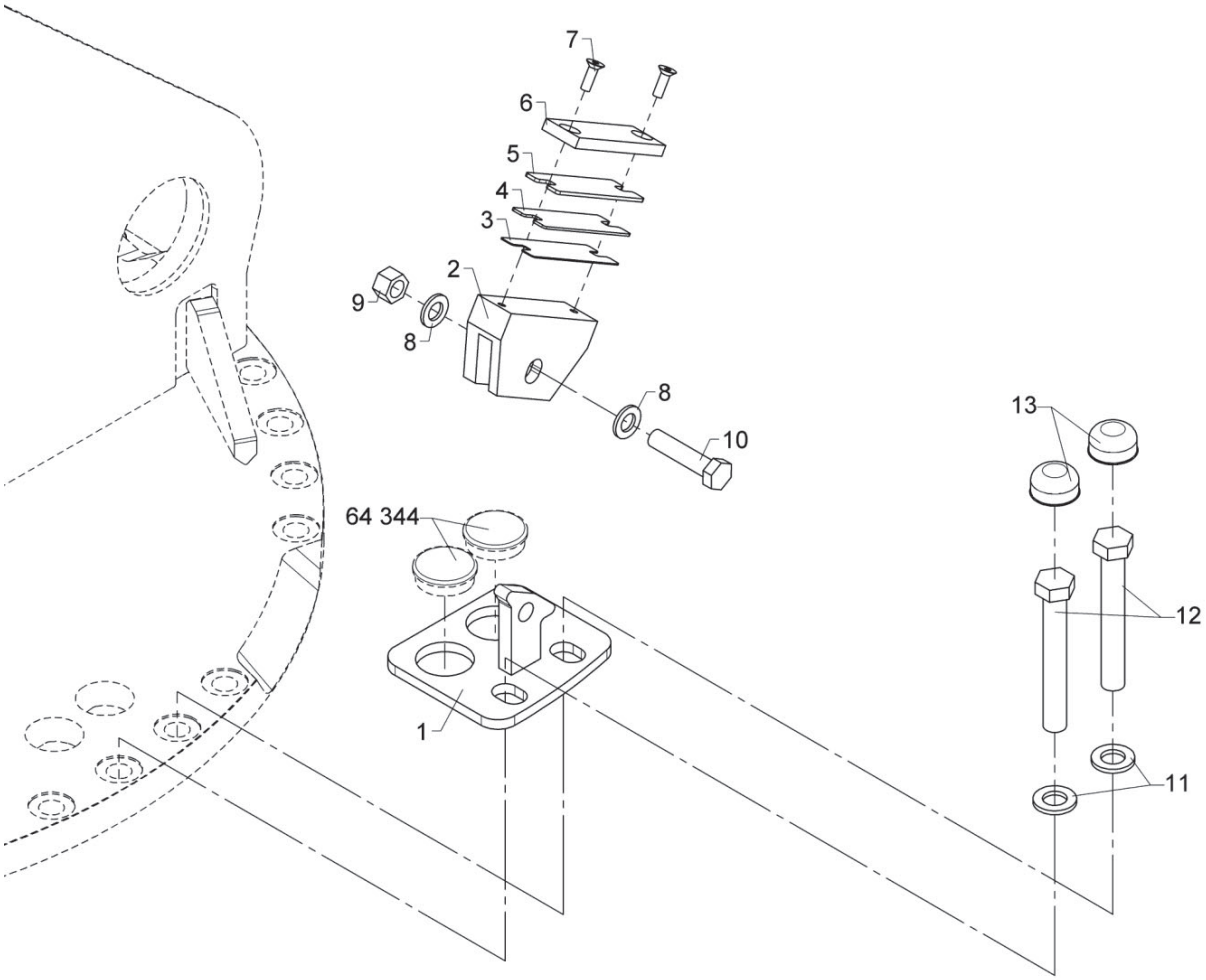

559 01 075

From loader 1370001
To loader

Created 14-02-19
Modified 10-05-19

Stowing bracket (K6-K8)

Pos	Qty.	Part no.	Description	Remarks
1	1	6398831	Stowing bracket, sv.	
2	1	6398837	Parking block	
3	1	6398834	Adjusting plate	1mm.
4	1	6398835	Adjusting plate	2mm.
5	1	6398836	Adjusting plate	3mm.
6	1	68125	Stowing piece	
7	2	31964	Counter sunk screw, stainless	MK8 x 25
8	3	31103	Washer, 16 mm	16 mm
9	1	30892	Lock nut	M16
10	1	30229	Steel bolt	M16 x 70
11	2	31761	Washer	20 mm
12	2	32331	Steel bolt	M20 x 140
13	2	63413	Cover for nut	

9520K-RCS, 9520OK-RCS

Internal ref. 6398060

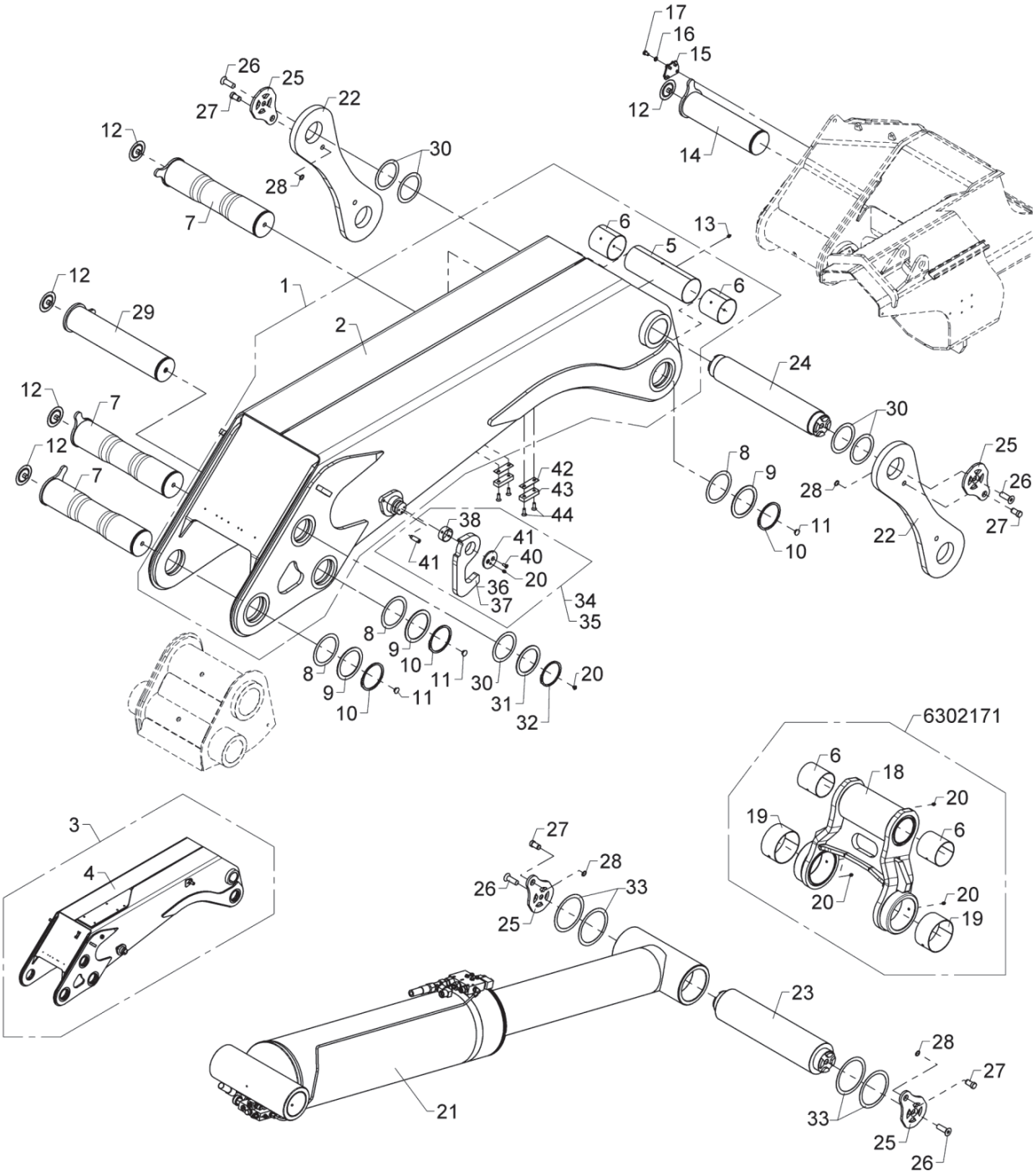

Main boom, complete incl. link arm system, jib

Pos	Qty.	Part no.	Description	Remarks
1	1	6398070	Main boom incl. bushings	
2	1	6398080	Main boom, painted	6398181
3	1	6400070	Main boom incl. bushings	
4	1	6400080	Main boom, painted	6398941
5	1	68048	Plate for spacer	
6	4	23923	Bushing	PM 110110 DX
7	3	6398221	Pin ø120 x 533	Ø100
8	3	33263	Washer Dacromet	PS 120 x 150 x 1,0
9	3	33261	Back ring	SS 120 x 150 x 3,5
10	3	33242	Circlip	120U
11	3	68034	Plug	
12	5	68030	Plug	
13	1	31337	Lubricator	M10 x 1
14	1	6398226	Pin ø110 x 404	Ø90
15	1	6097684	Lock plate	
16	4	31571	Spring washer, stainless	10 mm
17	4	31510	Set screw, stainless	M10 x 16
18	1	6302171	Push rod	
19	2	23925	Bushing	PM 14580 DX
20	5	31318	Lubricator	1/8" RG
21	1	6398160	Jib cylinder C290/200 with LHV	
22	2	6398235	Link arm, K	
23	1	6398231	Link arm pin C4	
24	1	6398229	Link arm pin L2	
25	4	6300762	Lock plate	
26	4	32465	Countersunk screw	MK20 x 60
27	4	6302238	Pin	
28	4	33108	Circlip	20U
29	1	6398224	Pin ø110 x 533	Ø90
30	5	33262	Washer Dacromet	PS 110 x 140 x 1,0
31	1	33260	Back ring	SS 110 x 140 x 3,5
32	1	33158	Circlip	110U
33	4	6302239	Washer	PS 145 x 175 x 1,0
34	1	6300020	Stowing hook incl. bushing	OK2-OK4
35	1	6303020	Stowing hook FJ, complete	OK5-OK6, K6-K8
36	1	6300084	Stowing hook	OK2-OK4
37	1	6300703	Extended stowing hook	OK5-OK6, K6-K8
38	1	23929	Bushing	PM 5520 DX
41	1	6302309	End plate	
40	2	30957	Countersunk screw	MK8 x 20
41	1	6302085	Locking pin	

9520K-RCS, 9520OK-RCS

Internal ref. 6398060

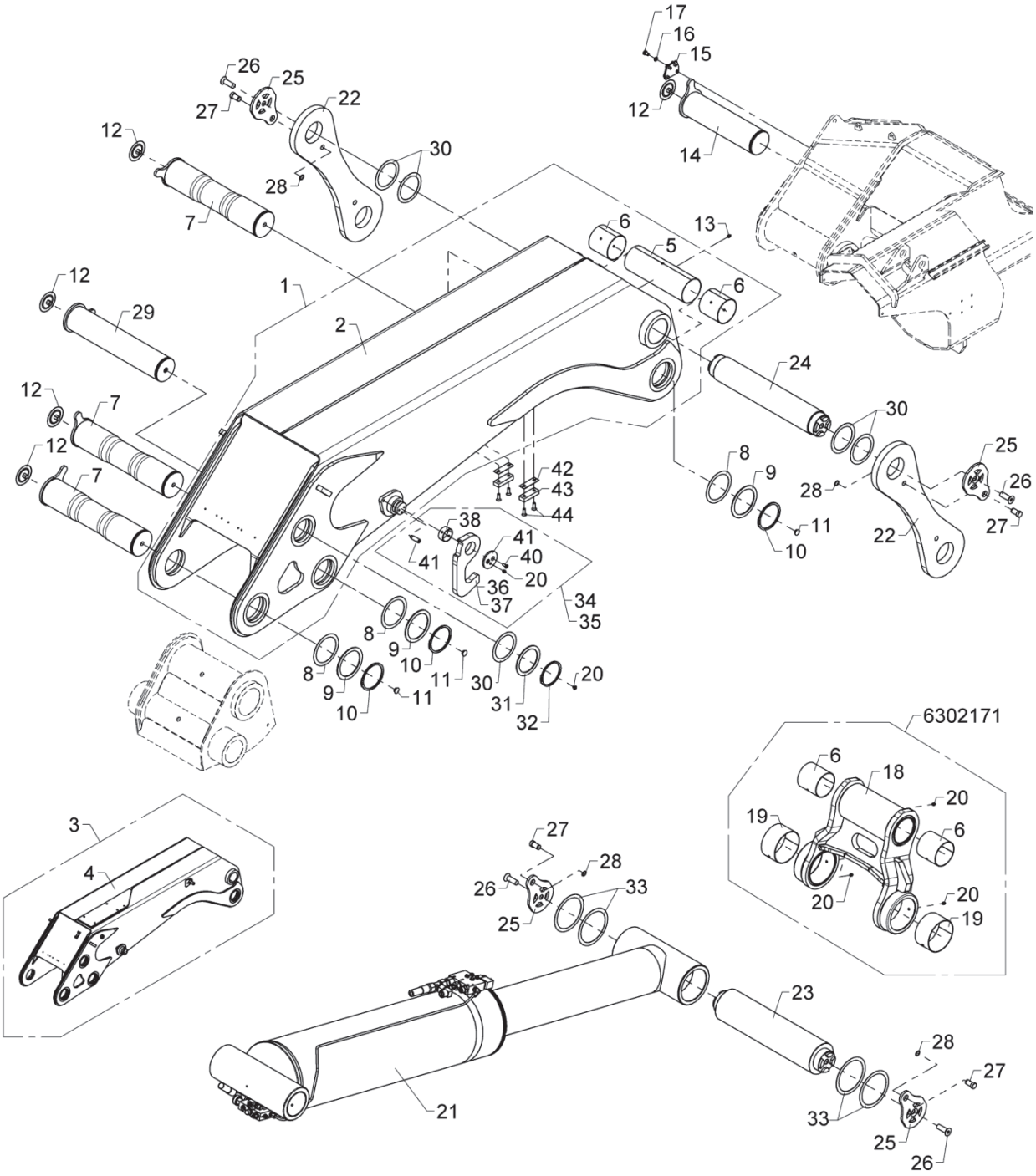

Main boom, complete incl. link arm system, jib

Pos	Qty.	Part no.	Description	Remarks
42	2	6302201	Division plate	
43	2	63530	Stop block	
44	4	30581	Counter-sunk screw	MK10 x 30

9520K-RCS, 9520OK-RCS

Internal ref. 6398130

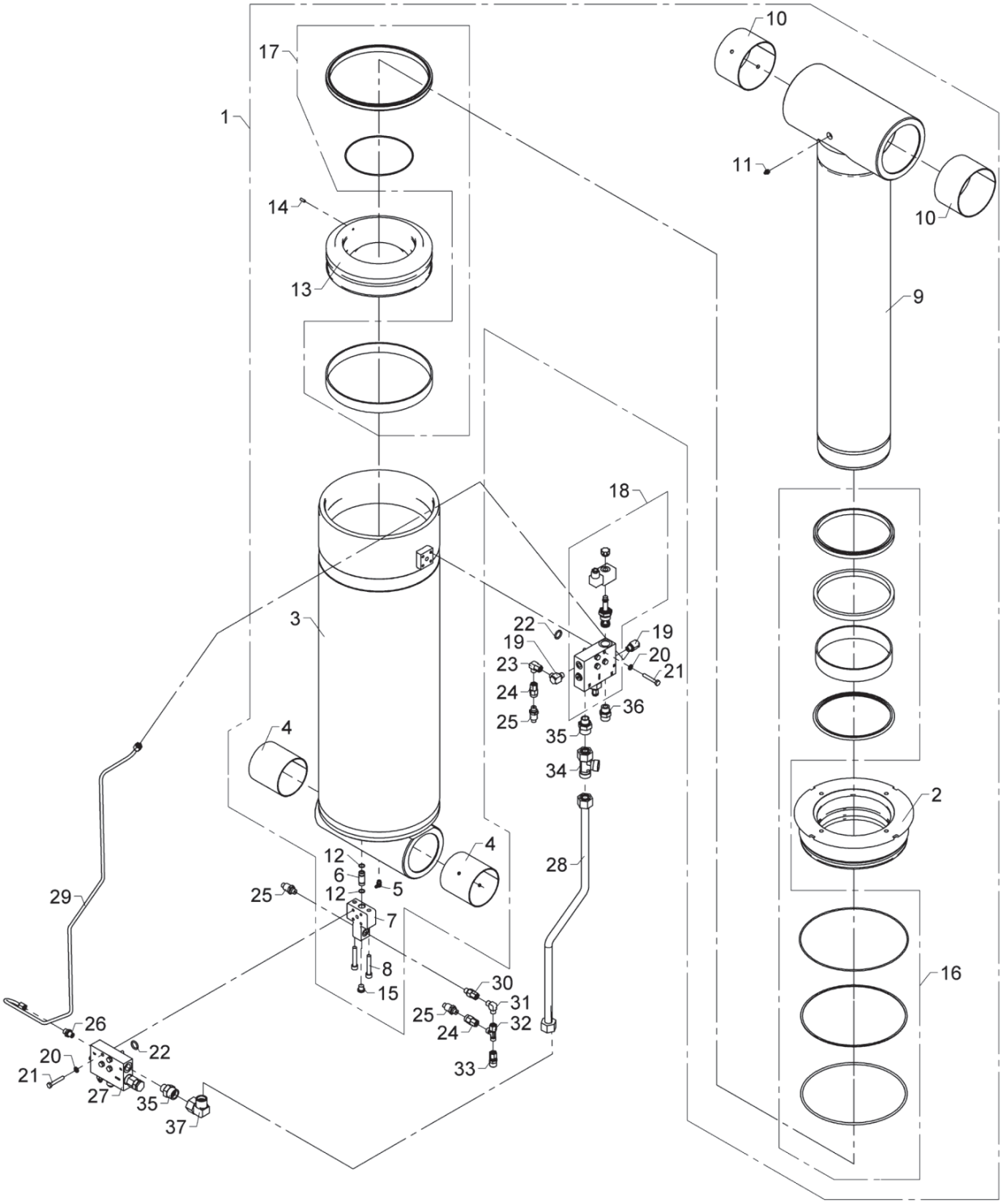

BOM obsolete

559 01 510

From loader 1370001
To loader

Created 26-01-18
Modified

Boom cylinder, C290 x 816, with LHV

Pos	Qty.	Part no.	Description	Remarks
1	1	6398140	Boom cylinder C290/200 x 816	
2	1	6303372	Guide C290/200	
3	1	6303353	Cylinder tube C290	
4	2	23923	Bushing	PM 110110 DX
5	1	31322	Lubricator	1/8 RG - 90
6	2	6292834	Pipe	
7	1	6300165	Block	
8	2	32452	Screw	MC10 x 60
9	1	6398137	Piston rod	
10	2	23926	Bushing	PM 14090 DX
11	1	31318	Lubricator	1/8" RG
12	4	20136	O-ring	OR 13,1 x 1,6
13	1	6303371	Piston C290/200	
14	1	30562	Pointed screw, stainless	MPS6 x 16
15	1	25197	Plug	VS-R-1/4 WD
16	1	6894630	Seal kit for guide, C290/200	
17	1	6894920	Seal kit for piston, C290/200	
18	1	59055	Electric regeneration valve	125 bar
19	2	25113	Banjo connection	RSWV 8 LR
20	8	31155	Spring washer	8 mm
21	8	30139	Steel bolt, stainless	M8 x 50
22	2	20221	O-ring	OR 18,64 x 3,53
23	1	26170	Elbow connection	EWSD 8 L
24	2	26370	Pressure gauge connection	EMASD 8 LR
25	3	28850	Pressure transducer	
26	1	25109	Connection	GES 8 LR-WD
27	1	59054	Load-holding valve	
28	1	6398176	Hydraulic pipe	
29	1	6302177	Pipe	
30	1	26104	Connection	EGESD 8 LR-WD
31	1	25247	Elbow connection	WV 8 L
32	1	25249	Connection	ELSD 8 L
33	1	26148	Connection	
34	1	26362	Connection	ELSD 20 S
35	2	26221	Connection	P-GEV 20 SR 1/2-WD
36	1	26334	Connection	P-GEV 16 SR-WD
37	1	26198	Elbow connection	EWVD 20 S-SV

9520K-RCS, 9520OK-RCS

Internal ref. 6398130

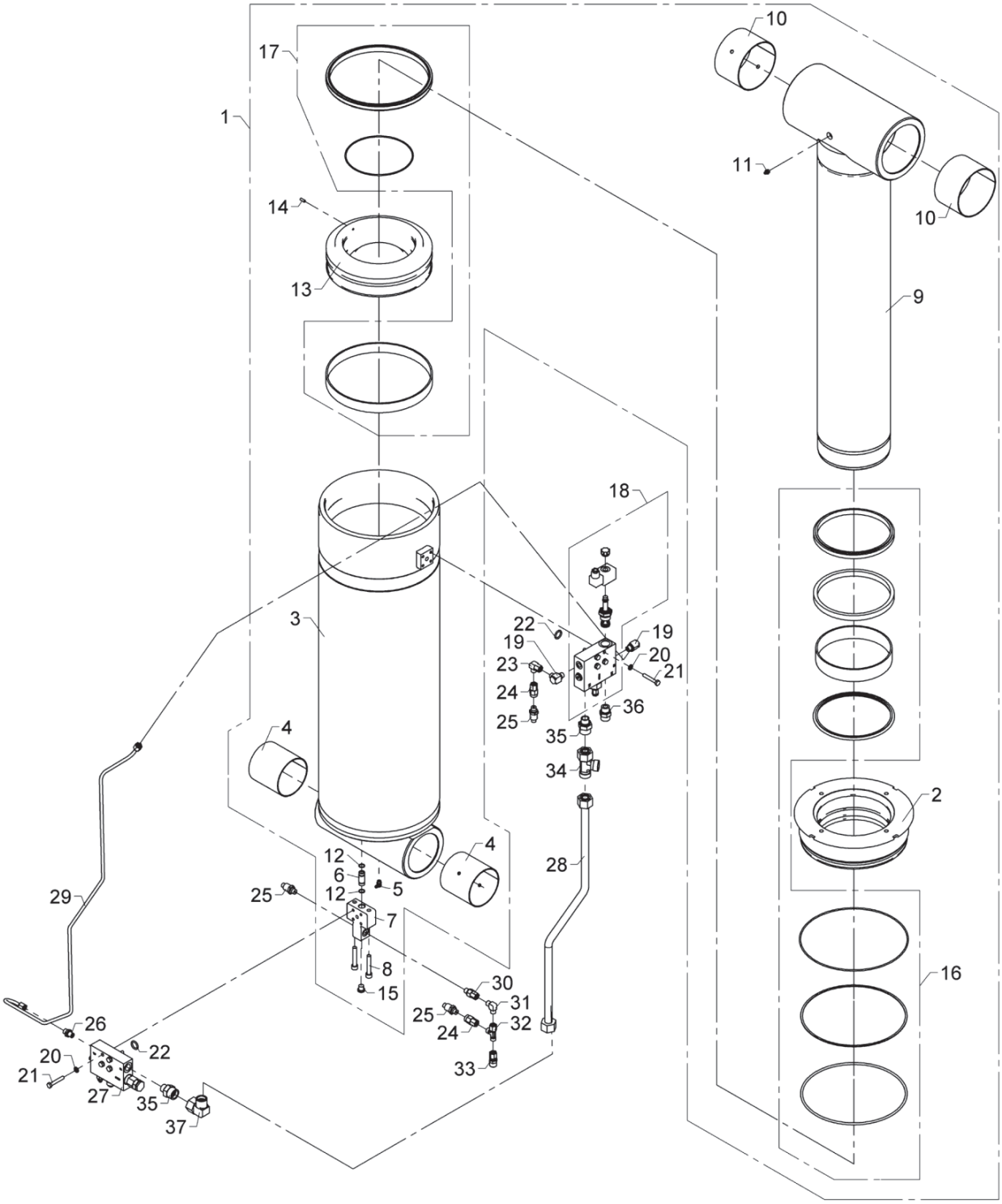

Boom cylinder, C290 x 816, with LHV

Pos	Qty.	Part no.	Description	Remarks
1	1	6398140	Boom cylinder C290/200 x 816	
2	1	6303372	Guide C290/200	
3	1	6303353	Cylinder tube C290	
4	2	23923	Bushing	PM 110110 DX
5	1	31322	Lubricator	1/8 RG - 90
6	2	6292834	Pipe	
7	1	6300165	Block	
8	2	32452	Screw	MC10 x 60
9	1	6398137	Piston rod	
10	2	23926	Bushing	PM 14090 DX
11	1	31318	Lubricator	1/8" RG
12	4	20136	O-ring	OR 13,1 x 1,6
13	1	6303371	Piston C290/200	
14	1	30562	Pointed screw, stainless	MPS6 x 16
15	1	25197	Plug	VS-R-1/4 WD
16	1	6894630	Seal kit for guide, C290/200	
17	1	6894920	Seal kit for piston, C290/200	
18	1	62391	Electric regeneration valve	125 bar
19	2	25113	Banjo connection	RSWV 8 LR
20	8	31155	Spring washer	8 mm
21	8	30139	Steel bolt, stainless	M8 x 50
22	2	20221	O-ring	OR 18,64 x 3,53
23	1	26170	Elbow connection	EWSD 8 L
24	2	26370	Pressure gauge connection	EMASD 8 LR
25	3	28850	Pressure transducer	
26	1	25109	Connection	GES 8 LR-WD
27	1	50529	Load holding valve	405 bar
28	1	6398176	Hydraulic pipe	
29	1	6302177	Pipe	
30	1	26104	Connection	EGESD 8 LR-WD
31	1	25247	Elbow connection	WV 8 L
32	1	25249	Connection	ELSD 8 L
33	1	26148	Connection	
34	1	26362	Connection	ELSD 20 S
35	2	26221	Connection	P-GEV 20 SR 1/2-WD
36	1	26334	Connection	P-GEV 16 SR-WD
37	1	26198	Elbow connection	EWVD 20 S-SV

9520K-RCS, 9520OK-RCS

Internal ref. 6398160

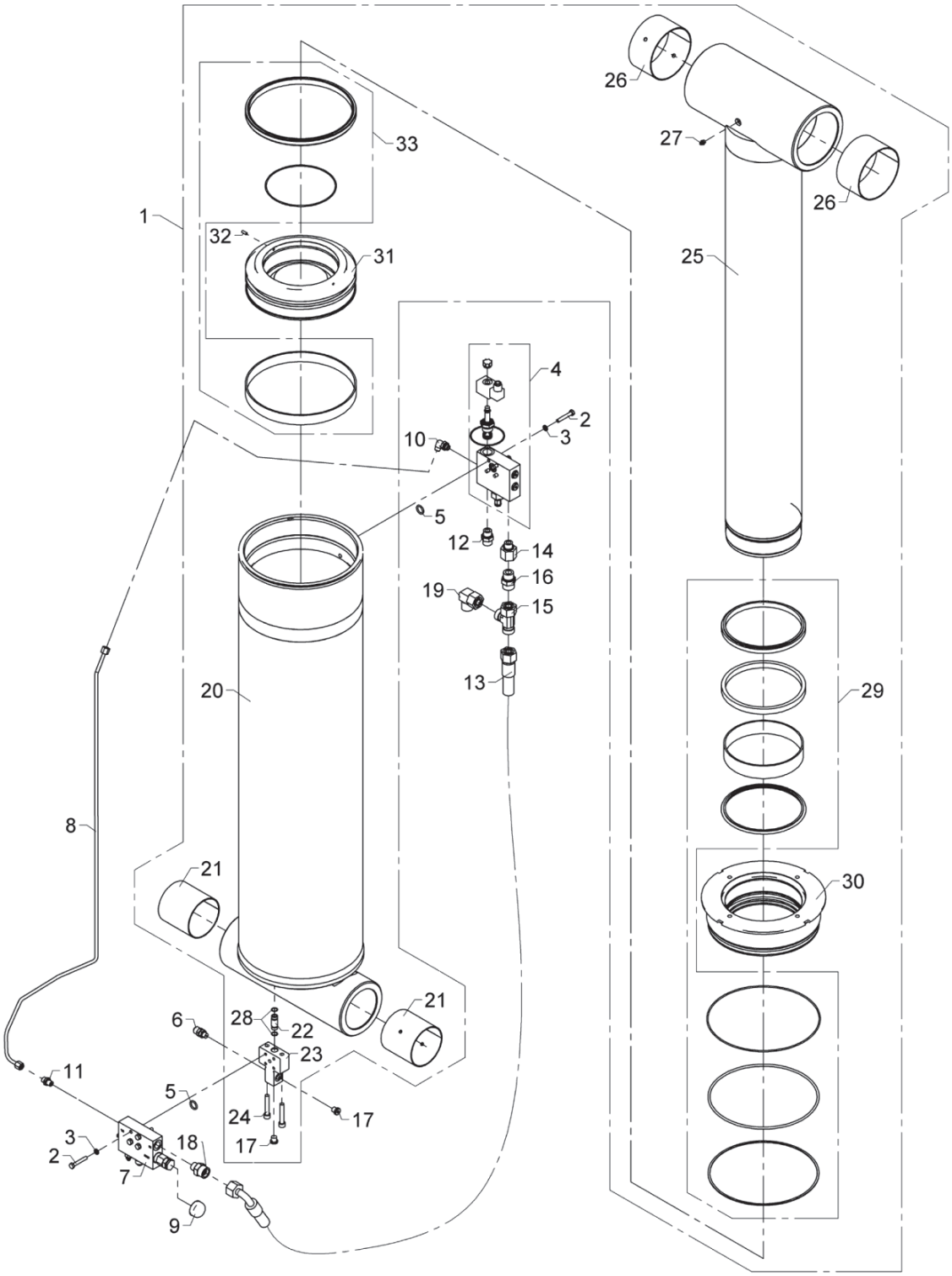

BOM obsolete

559 01 610

From loader 1370001
To loader
Created 26-01-18
Modified

Jib cylinder C290 x 1094 m. with LHV

Pos	Qty.	Part no.	Description	Remarks
1	1	6398150	Jib cylinder C290/200 x 1094s	
2	8	30139	Steel bolt, stainless	M8 x 50
3	8	31155	Spring washer	8 mm
4	1	59055	Electric regeneration valve	
5	2	20221	O-ring	OR 18,64 x 3,53
6	1	26103	Pressure-gauge connect.	
7	1	59054	Load-holding valve	
8	1	6302178	Pipe	
9	1	63413	Cover for nut	
10	1	26898	Elbow connection	8 mm - 1/4"
11	1	25109	Connection	GES 8 LR-WD
12	1	26334	Connection	P-GEV 16 SR-WD
13	1	56000	Hose	5/8 x 1200mm L/90
14	1	26111	Reducing connection	RED-R 1/2-WD/R 3/4
15	1	26362	Connection	ELSD 20 S
16	1	26197	Connection	P-GEV 20 SR-WD
17	2	25197	Plug	VS-R-1/4 WD
18	1	26221	Connection	P-GEV 20 SR 1/2-WD
19	1	26198	Elbow connection	EWVD 20 S-SV
20	1	6398151	Cylinder tube C290	
21	2	23923	Bushing	PM 110110 DX
22	1	6292834	Pipe	
23	1	6300165	Block	
24	2	32452	Screw	MC10 x 60
25	1	6303375	Piston rod ø200	
26	2	23925	Bushing	PM 14580 DX
27	1	31318	Lubricator	1/8" RG
28	2	20136	O-ring	OR 13,1 x 1,6
29	1	6894630	Seal kit for guide, C290/200	
30	1	6303372	Guide C290/200	
31	1	6303371	Piston C290/200	
32	1	30562	Pointed screw, stainless	MPS6 x 16
33	1	6894920	Seal kit for piston, C290/200	

9520K-RCS, 9520OK-RCS

Internal ref. 6398160

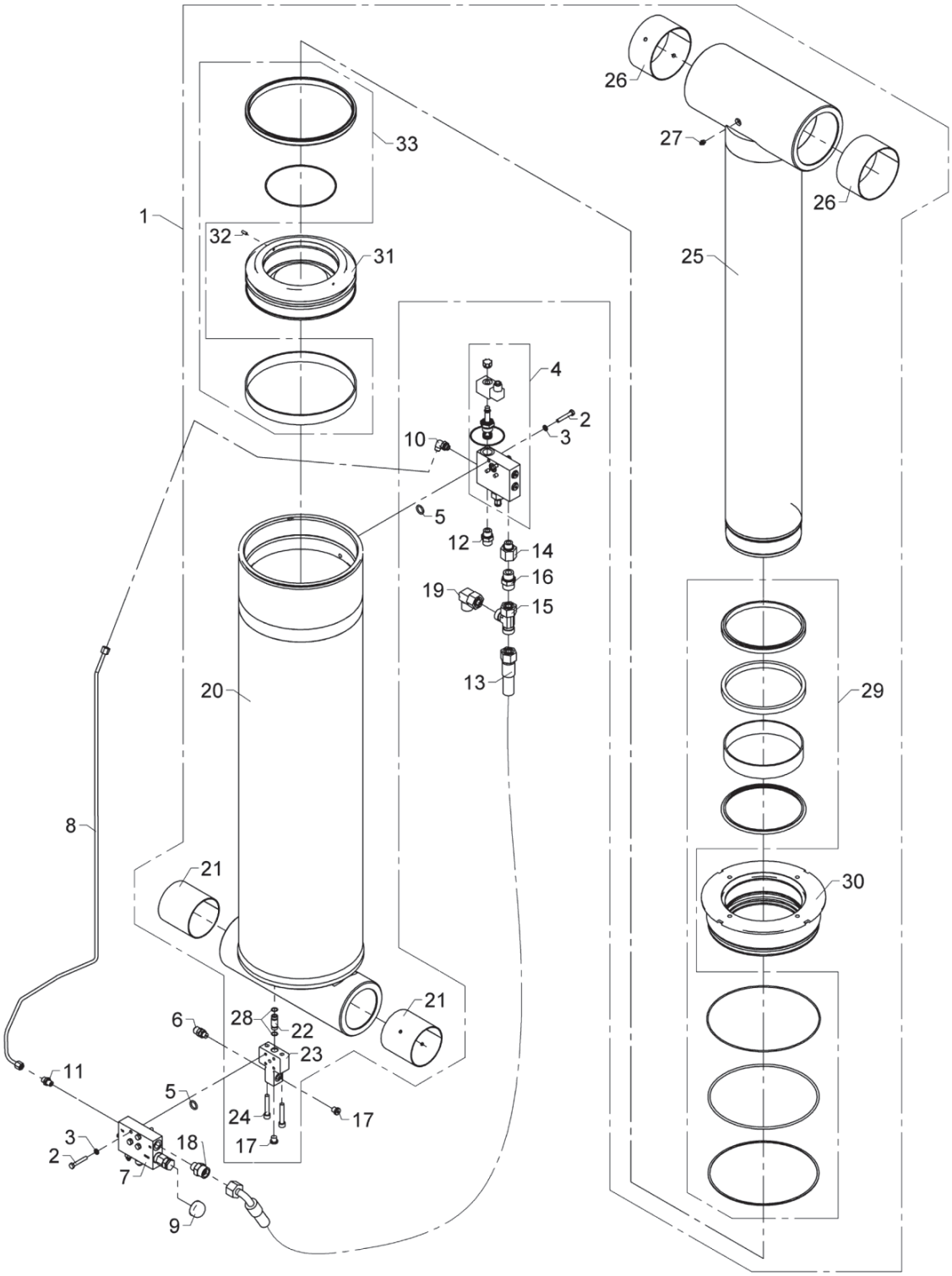

Jib cylinder C290 x 1094 m. with LHV

Pos	Qty.	Part no.	Description	Remarks
1	1	6398150	Jib cylinder C290/200 x 1094s	
2	8	30139	Steel bolt, stainless	M8 x 50
3	8	31155	Spring washer	8 mm
4	1	50549	Electric regeneration valve	210 bar
5	2	20221	O-ring	OR 18,64 x 3,53
6	1	26103	Pressure-gauge connect.	
7	1	50529	Load holding valve	405 bar
8	1	6302178	Pipe	
9	1	63413	Cover for nut	
10	1	26898	Elbow connection	8 mm - 1/4"
11	1	25109	Connection	GES 8 LR-WD
12	1	26334	Connection	P-GEV 16 SR-WD
13	1	56000	Hose	5/8 x 1200mm L/90
14	1	26111	Reducing connection	RED-R 1/2-WD/R 3/4
15	1	26362	Connection	ELSD 20 S
16	1	26197	Connection	P-GEV 20 SR-WD
17	2	25197	Plug	VS-R-1/4 WD
18	1	26221	Connection	P-GEV 20 SR 1/2-WD
19	1	26198	Elbow connection	EWVD 20 S-SV
20	1	6398151	Cylinder tube C290	
21	2	23923	Bushing	PM 110110 DX
22	1	6292834	Pipe	
23	1	6300165	Block	
24	2	32452	Screw	MC10 x 60
25	1	6303375	Piston rod ø200	
26	2	23925	Bushing	PM 14580 DX
27	1	31318	Lubricator	1/8" RG
28	2	20136	O-ring	OR 13,1 x 1,6
29	1	6894630	Seal kit for guide, C290/200	
30	1	6303372	Guide C290/200	
31	1	6303371	Piston C290/200	
32	1	30562	Pointed screw, stainless	MPS6 x 16
33	1	6894920	Seal kit for piston, C290/200	

9520K-RCS, 9520OK-RCS

Internal ref. 6398170

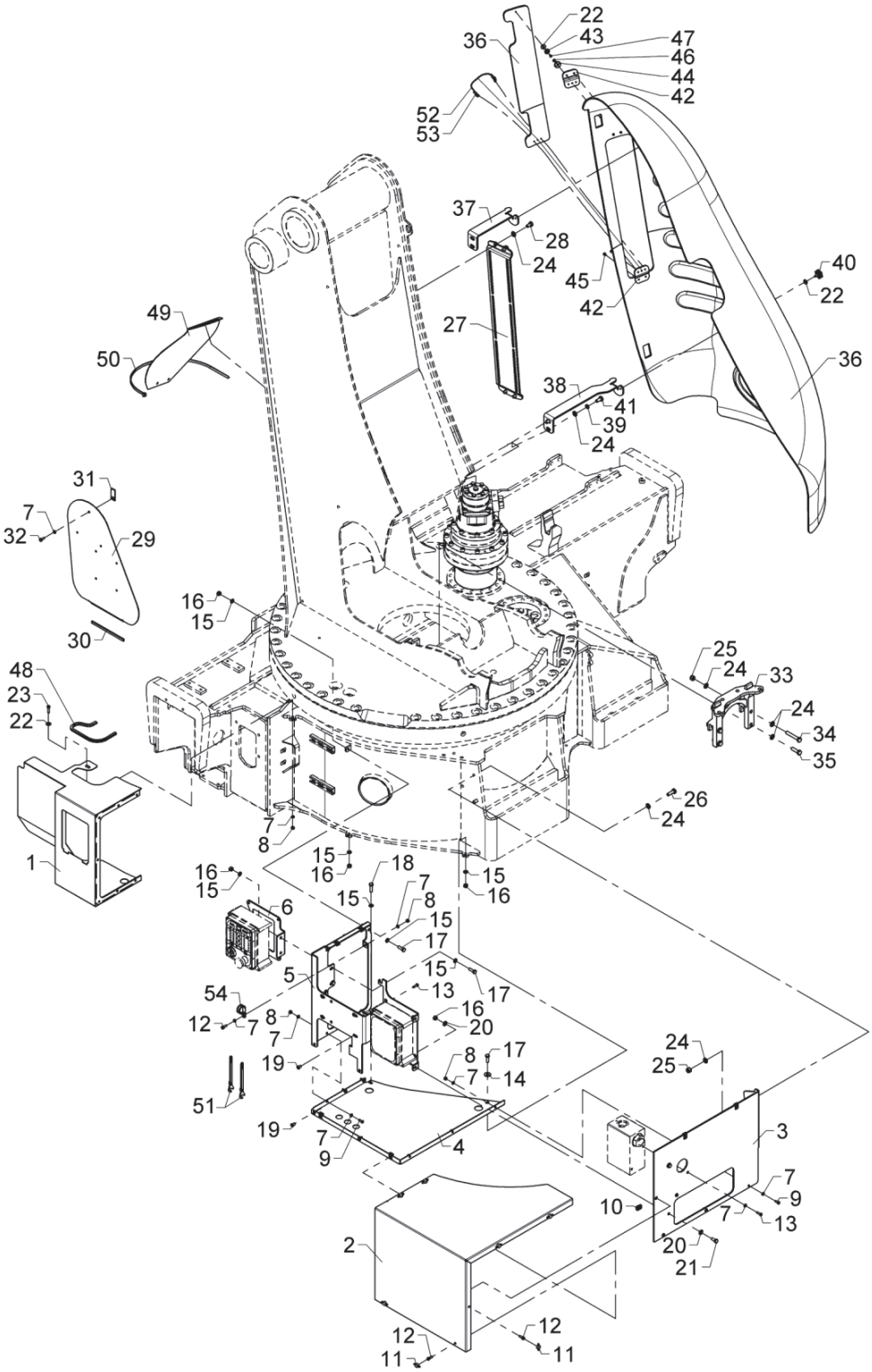

Brackets and protection plates

Pos	Qty.	Part no.	Description	Remarks
1	1	6400791	Shield	
2	1	6400796	Protective plate	
3	1	6400797	Shield, side	
4	1	6400798	Protective plate	
5	1	6400799	Shield, valve bracket	
6	1	6400801	Shield, valve bracket	
7	26	32302	Face washer, stainless	6 mm
8	12	30884	Lock nut, stainless	M6
9	10	32222	Button head screw	M6 x 16
10	7	31068	Clip	M6 0,5 - 4,0 mm.
11	7	64353	Thumb screw	M6
12	8	31539	Screw, stainless	MC6 x 16
13	6	32491	Round-head screw	M6 x 20
14	1	31136	Washer, stainless	8 mm
15	9	31147	Face washer, 8 mm	
16	7	30886	Lock nut, stainless	M8
17	4	30134	Set screw, stainless	M8 x 25
18	1	30135	Set screw, stainless	M8 x 30
19	6	32507	Cylinder screw 8 x 12	MC8 x 12
20	4	31754	Washer	8 mm
21	2	30132	Set screw, stainless	
22	5	31134	Washer, stainless	
23	1	30114	Set screw, stainless	M6 x 25
24	18	31177	Washer	10 mm
25	4	31564	Lock nut, stainless	M10
26	2	30156	Set screw, stainless	M10 x 30
27	1	6301077	Valve bracket	
28	4	30153	Set screw	M10 x 16
29	1	6301378	Protection plate, column	
30	1	46586	Rubber protection	330mm.
31	1	6301377	Plate	
32	1	30112	Set screw, stainless	M6 x 16
33	1	6399661	Adapter for swivel coupling	
34	2	32303	Set screw	M10 x 65
35	2	30157	Set screw	M10 x 35
36	1	66141	Protection - column	
37	1	6398171	Bracket	
38	1	6398172	Bracket	
39	4	31156	Spring washer	10 mm
40	2	32528	Thumb screw	M6x30 FZV PA
41	4	31517	Set screw, stainless	M10 x 20

9520K-RCS, 9520OK-RCS

Internal ref. 6398170

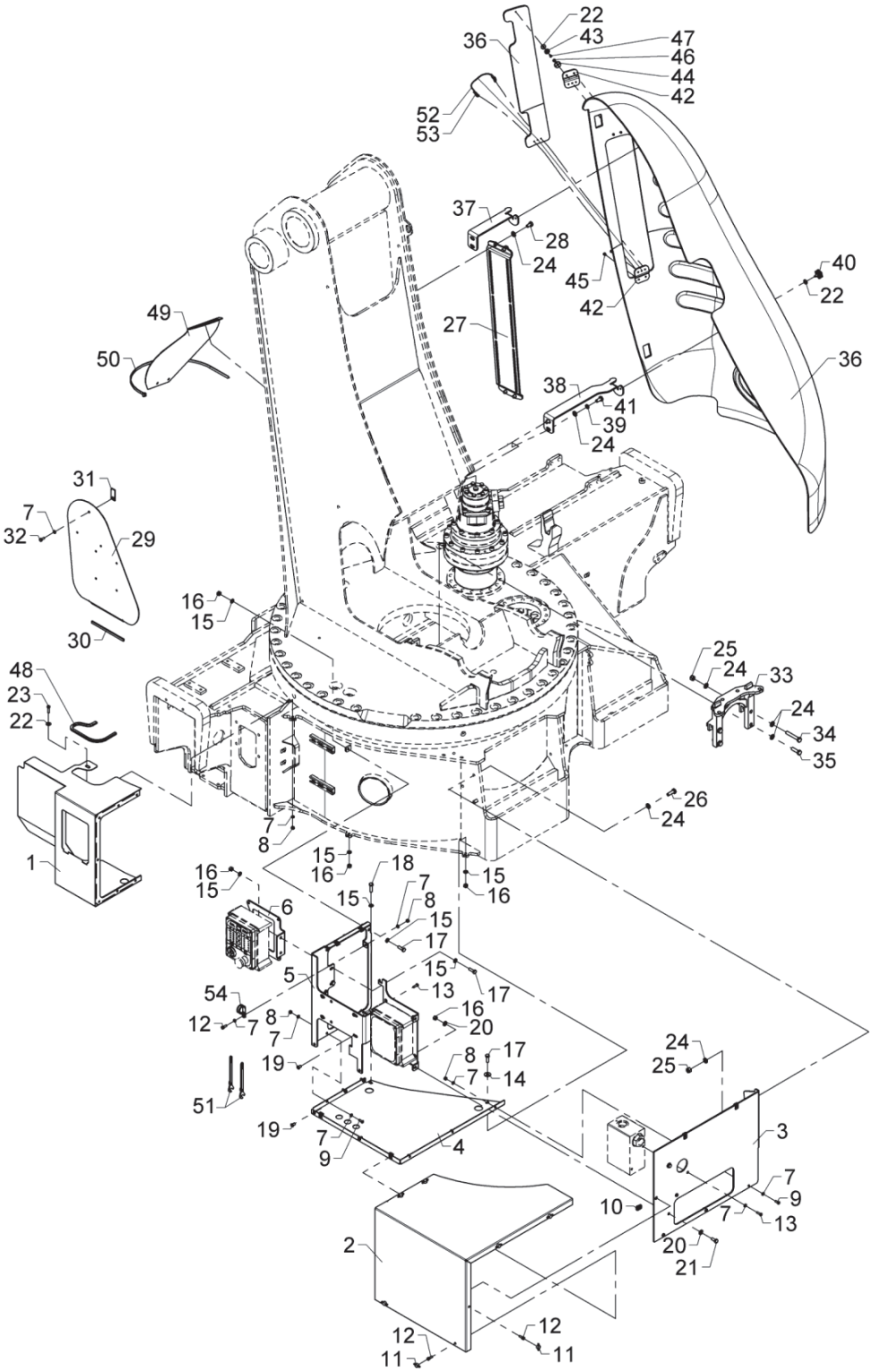

Brackets and protection plates

Pos	Qty.	Part no.	Description	Remarks
42	2	6398173	Fitting	
43	2	32522	Magnet	Ø18 x 4 x M4
44	2	32523	Magnet	Ø24 x 4 x M5
45	4	32527	Cylinder screw	M 5 x 10
46	2	32525	Countersunk screw	MK5 x 8
47	2	32526	Screw	Plast skrue
48	1	46586	Rubber protection	170 mm
49	1	66144	Protective guard	
50	1	27590	Clip	
51	2	6390067	Lever	
52	1	62160	Wire rope, nylon	375 mm
53	2	62161	Wire lock	Ø 2.3 mm
54	1	31886	Clip	

9520K-RCS, 9520OK-RCS

Internal ref. 6398090

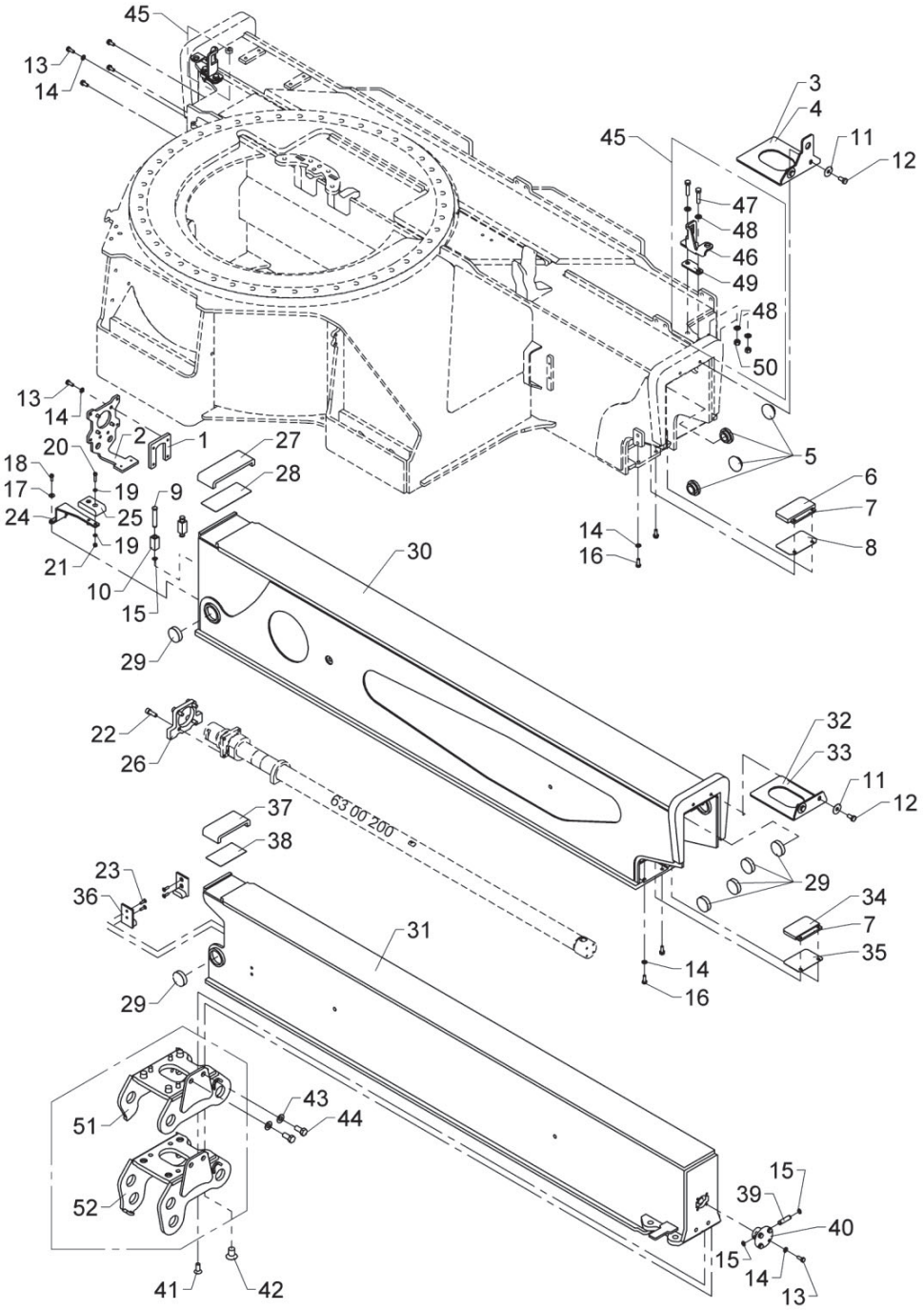

Stabilizer beam 4210

Pos	Qty.	Part no.	Description	Remarks
1	1	6300086	Bracket	
2	1	6301394	End plate	
3	1	6300045	Spacer, 4 mm	
4	1	6300046	Spacer, 5 mm	
5	4	63739	Guide shoe	
6	1	63741	Slide block	
7	2	6300087	Spacer	
8	1	6302041	Division plate	
9	2	6300088	Pin	
10	2	6300089	Block	
11	4	31141	Washer	10 mm
12	4	31517	Set screw, stainless	M10 x 20
13	12	30132	Set screw, stainless	
14	16	31147	Face washer, 8 mm	
15	4	33102	Circlip	12U
16	4	30133	Set screw, stainless	
17	2	31134	Washer, stainless	
18	2	31539	Screw, stainless	MC6 x 16
19	4	32302	Face washer, stainless	6 mm
20	2	30962	Screw	MC6 x 25
21	2	30884	Lock nut, stainless	M6
22	4	31568	Screw, stainless	MC10 x 30
23	4	30579	Countersunk screw	MK6 x 20
24	1	6300081	Bracket for slide block	
25	1	63744	Supporting block	
26	1	6300207	Lock plate	
27	1	63745	Slide block	
28	1	6302045	Division plate	
29	8	63740	Slide block	
30	1	6302091	Stabilizer beam I	
31	1	6398111	Stabilizer beam, 4713 mm	
32	1	6300048	Spacer, 4 mm	
33	1	6300049	Spacer, 5 mm	
34	1	63742	Slide block	
35	1	6302043	Division plate	
36	2	63743	Guide	
37	1	63746	Slide block	
38	1	6302044	Division plate	
39	1	6194264	Pin	
40	1	6194244	Bracket	
41	4	30539	Countersunk screw	MK12 x 30

9520K-RCS, 9520OK-RCS

Internal ref. 6398090

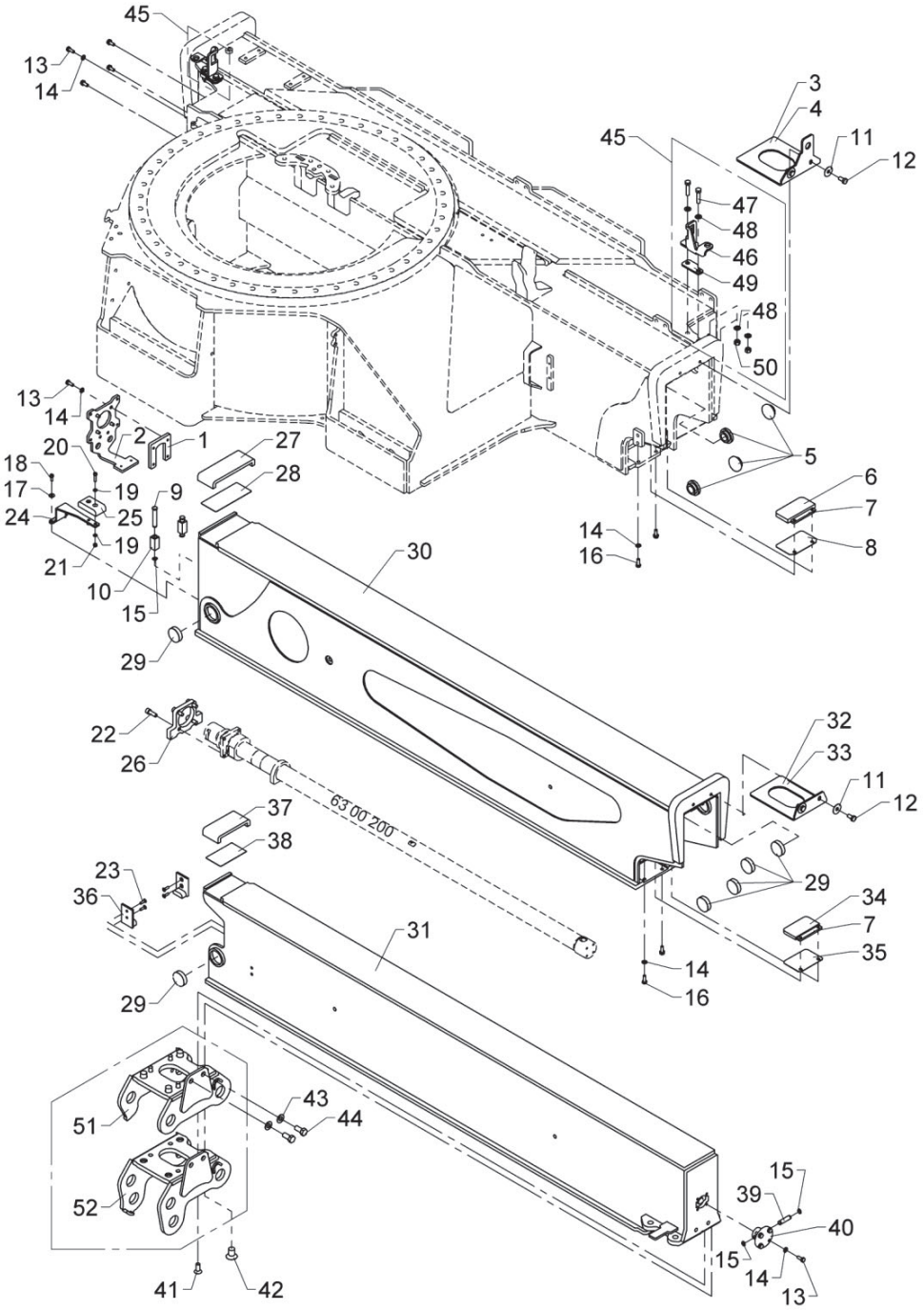

Stabilizer beam 4210

Pos	Qty.	Part no.	Description	Remarks
42	4	32520	Screw	MK20 x 30
43	2	31111	Washer	14 mm
44	2	30206	Set screw	M14 x 30
45	2	6302660	Safety lock, swing-up leg	
46	1	6302104	Bracket	
47	2	30377	Set screw	M10 x 45
48	4	31177	Washer	10 mm
49	1	6302103		
50	2	30888	Lock nut	
51	1	6398093	Bracket HR	
52	1	6398103	Bracket R	

9520K-RCS, 9520OK-RCS

Internal ref. 6300110

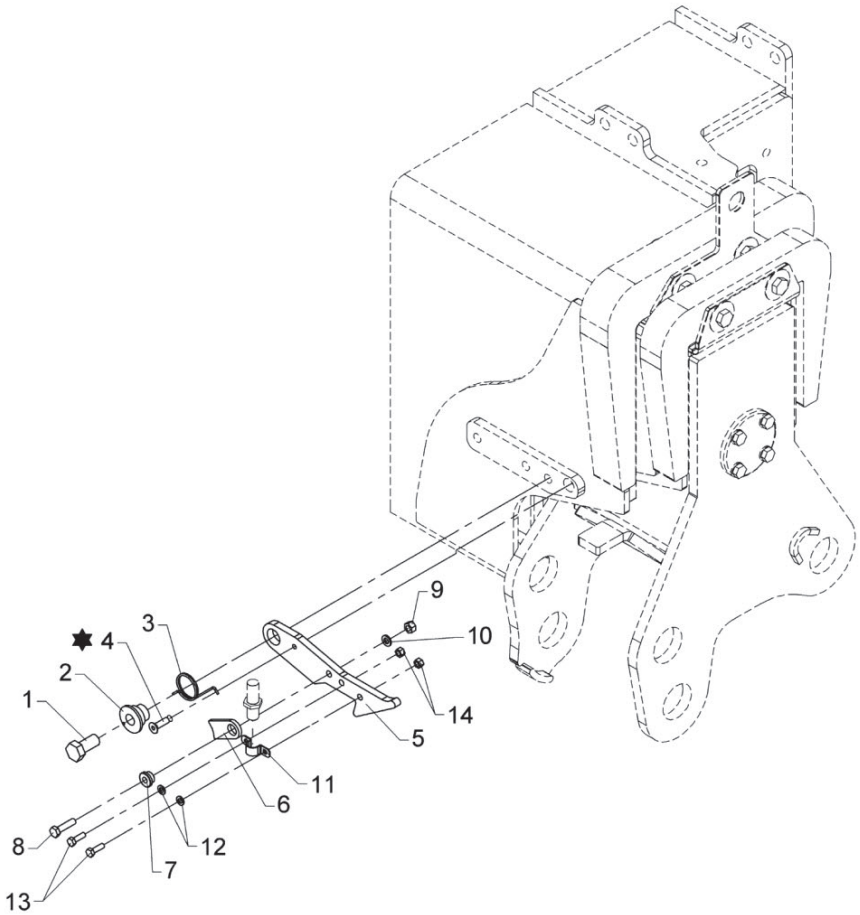

✸ Loctite 243

Stabilizer safety lock

Pos	Qty.	Part no.	Description	Remarks
1	1	30176	Set screw	M12 x 25
2	1	6245264	Bushing	
3	1	33473	Spring	6179044
4	1	30579	Countersunk screw	MK6 x 20
5	1	6300078	Lock pawl	
6	1	6236054	Click	
7	1	63440	Washer	
8	1	30114	Set screw, stainless	M6 x 25
9	1	30884	Lock nut, stainless	M6
10	1	32302	Face washer, stainless	6 mm
11	1	31443	Cable clip	
12	2	32308	Washer	5 mm
13	2	30121	Set screw	M5 x 16
14	2	30859	Lock nut, stainless	

9520K-RCS, 9520OK-RCS

Internal ref. 6400110

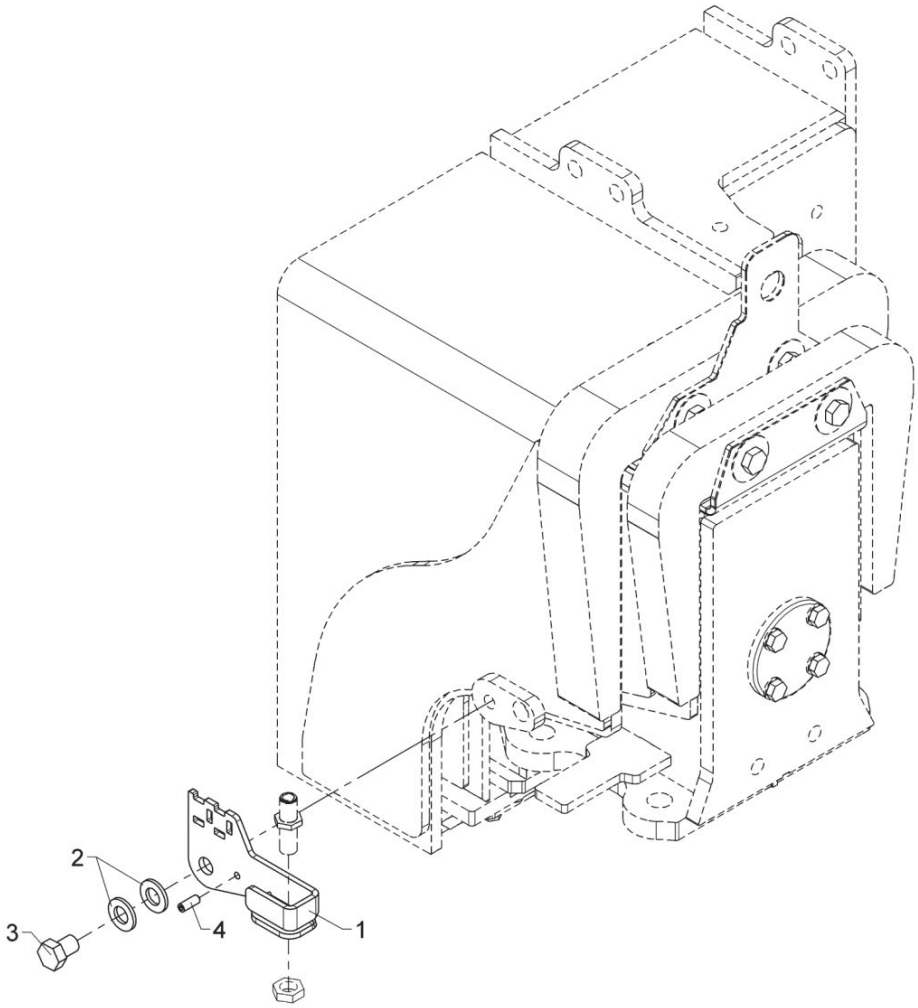

Safety lock (CE)

559 02 160

From loader 1370001
To loader

Created 27-06-18
Modified 05-05-20

Pos	Qty.	Part no.	Description	Remarks
1	1	6400111	Bracket for sensor, BEHEW	
2	2	32338	Washer	12 mm
3	1	31960	Set screw	M12 x 16
4	1	30562	Pointed screw, stainless	MPS6 x 16

9520K-RCS, 9520OK-RCS

Internal ref. 6303570

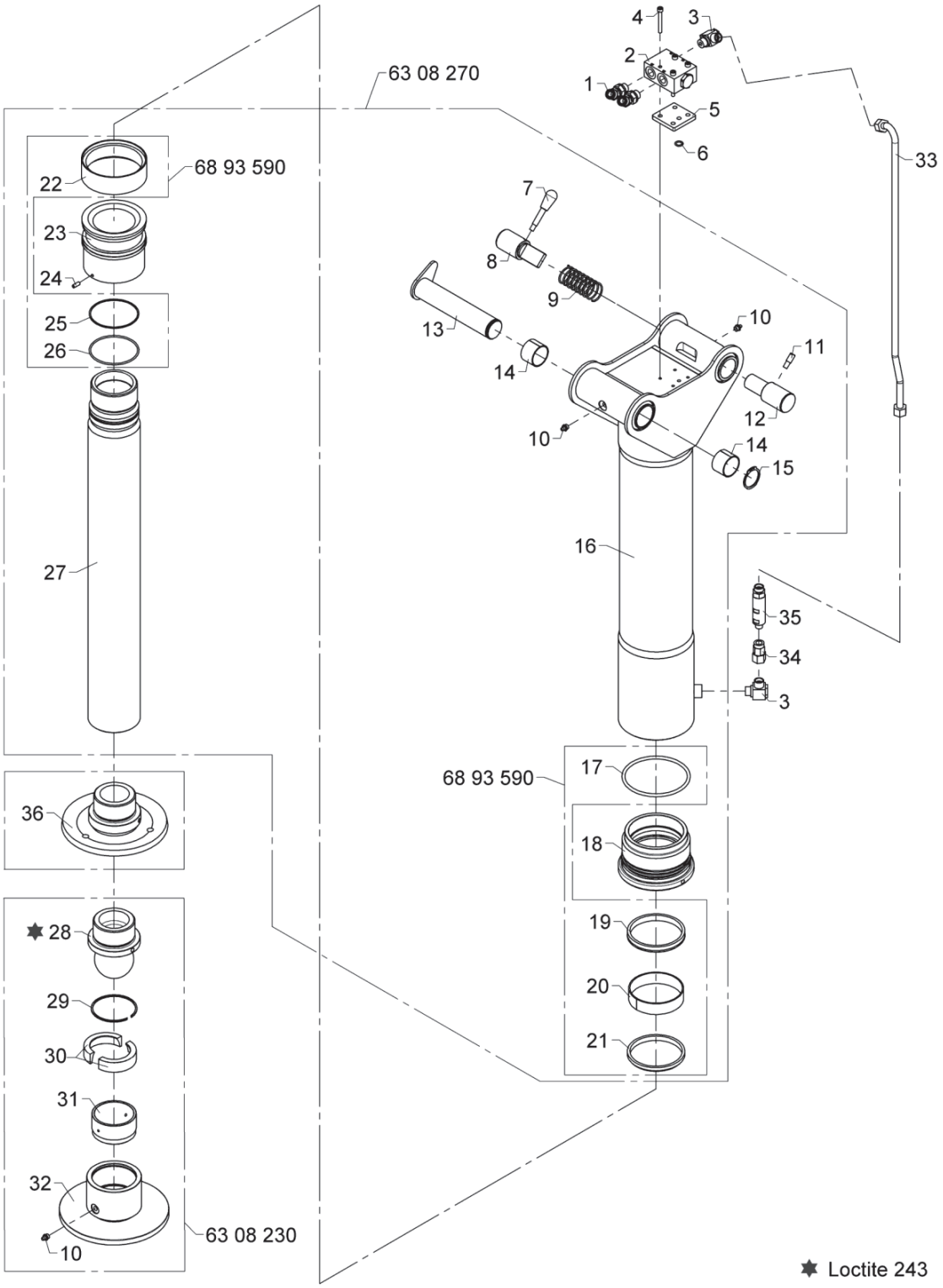

Stabilizer cylinder C125-600, type R

Pos	Qty.	Part no.	Description	Remarks
1	2	26951	Elbow connection L12-3/8	EV L12 - 3/8"
2	1	59924	Piloted check-valve	
3	2	25130	Banjo connection	RSWV 12 LR
4	4	30457	Screw	MC6 x 50
5	1	6301076	Block	
6	1	20126	O-ring	OR 11,3 x 2,4
7	1	64352	Lever with knob	
8	1	6300236	Drift	
9	1	33479	Compression spring	
10	3	31318	Lubricator	1/8" RG
11	1	6300268	Spacer	
12	1	6300237	Drift	
13	1	6300238	Stabilizer bolt	
14	2	23333	Bushing	PM 4030 DX
15	1	33121	Circlip	40U
16	1	6308251	Cylinder tube	C125-600
17	1	20327	O-ring	OR 119,3 x 5,7
18	1	6308254	Guide	
19	1	20929	Seal	SI/L 100/110 x 12,5
20	1	21997	Bearing	HH506 100 x 105 x 25
21	1	20531	Scraper	AUAS 60 x 70 x 7/10
22	1	20791	Seal	MDM 125 x 108 x 26
23	1	6300273	Piston	
24	1	30562	Pointed screw, stainless	MPS6 x 16
25	1	20891	Back ring	89,5 x 3
26	1	20191	O-ring	OR 89,5 x 3
27	1	6300271	Piston rod	C125-600
28	1	6300272	Ball joint	
29	1	33271	Spring ring	SB 85
30	2	6300266	Ball seat catch	
31	1	6300265	Ball seat	
32	1	6300262	Foot plate	
33	1	6303288	Pipe, stabilizer cylinder	C125-600
34	1	26389	Pressure gauge connection	EMASD 12 LR
35	1	55239	Sequence valve	
36	1	6302262	Footplate, fixed	

9520K-RCS, 9520OK-RCS

Internal ref. 6303580

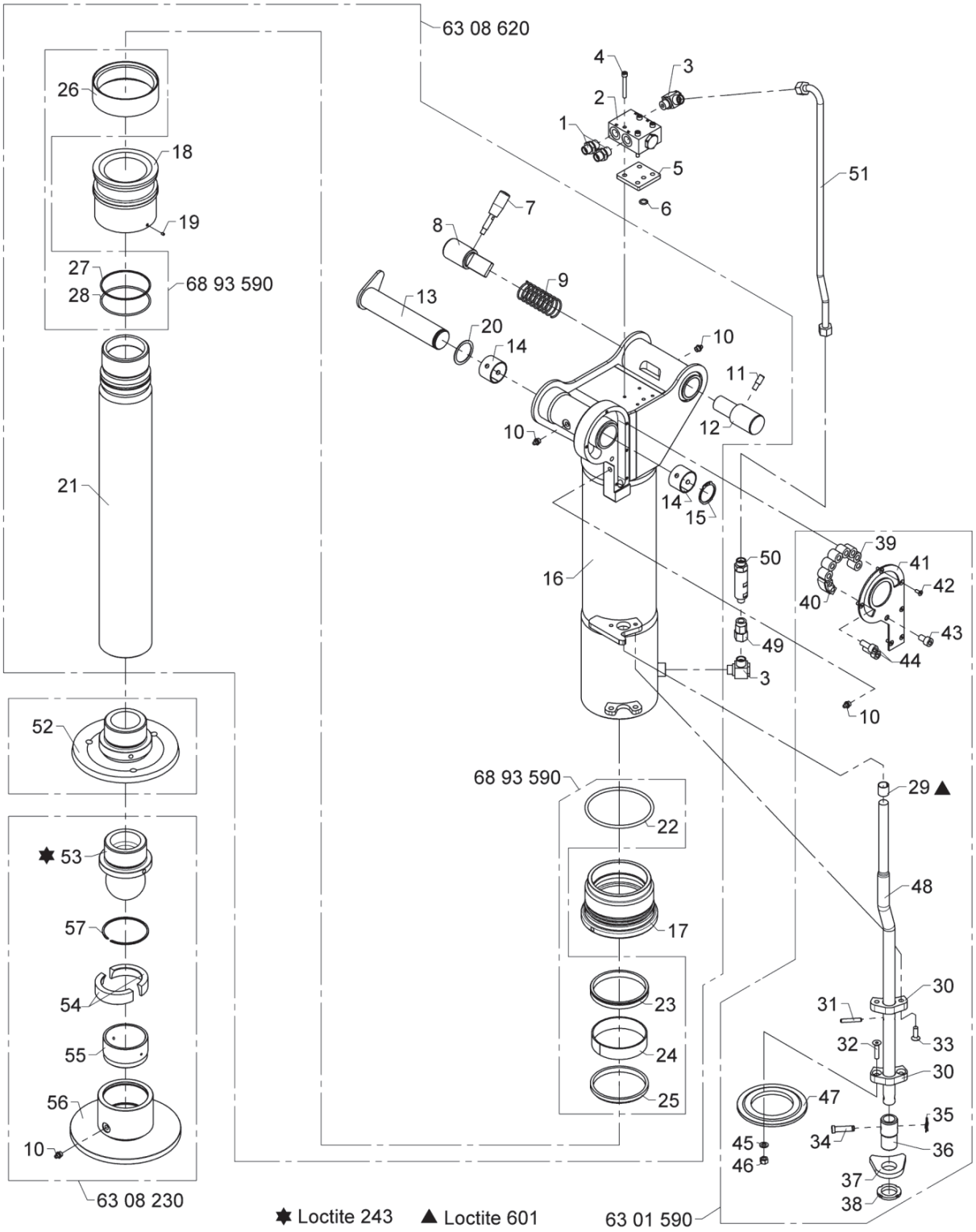

Stabilizer cylinder C125-500, type HR

Pos	Qty.	Part no.	Description	Remarks
1	2	25253	Connection	P-GEV 10 LR 3/8-WD
2	1	59924	Piloted check-valve	
3	2	25130	Banjo connection	RSWV 12 LR
4	4	30457	Screw	MC6 x 50
5	1	6301076	Block	
6	1	20126	O-ring	OR 11,3 x 2,4
7	1	64352	Lever with knob	
8	1	6300236	Drift	
9	1	33479	Compression spring	
10	4	31318	Lubricator	1/8" RG
11	1	6300268	Spacer	
12	1	6300237	Drift	
13	1	6300238	Stabilizer bolt	
14	2	23333	Bushing	PM 4030 DX
15	1	33121	Circlip	40U
16	1	6308621	Stabilizer cylinder, C125-500	C125-500
17	1	6308254	Guide	
18	1	6300273	Piston	
19	1	31050	Pointed screw	MSP5 x 5
20	1	31102	Washer Ø40 x 50x 1,0	ø40 x 50 x 1,0
21	1	6301564	Piston rod	C125-500
22	1	20327	O-ring	OR 119,3 x 5,7
23	1	20929	Seal	SI/L 100/110 x 12,5
24	1	21997	Bearing	HH506 100 x 105 x 25
25	1	20531	Scraper	AUAS 60 x 70 x 7/10
26	1	20791	Seal	MDM 125 x 108 x 26
27	1	20891	Back ring	89,5 x 3
28	1	20191	O-ring	OR 89,5 x 3
29	1	23939	Bushing	MB 1820 DU-B
30	2	63524	Guide	
31	1	31228	Retaining pin, stainless	ø6 x 40
32	2	30584	Countersunk screw	MK8 x 35
33	2	31964	Counter sunk screw, stainless	MK8 x 25
34	1	6302437	Lock pin	
35	1	31905	Clip	
36	1	6302436	Adjusting piece	
37	1	6302435	Compression block	
38	1	23147	Nut	M30 x 1,5
39	7	23146	Cylindrical roller	RC 20 x 20 CD
40	1	6302433	Stop	
41	1	6302432	Cover	

9520K-RCS, 9520OK-RCS

Internal ref. 6303580

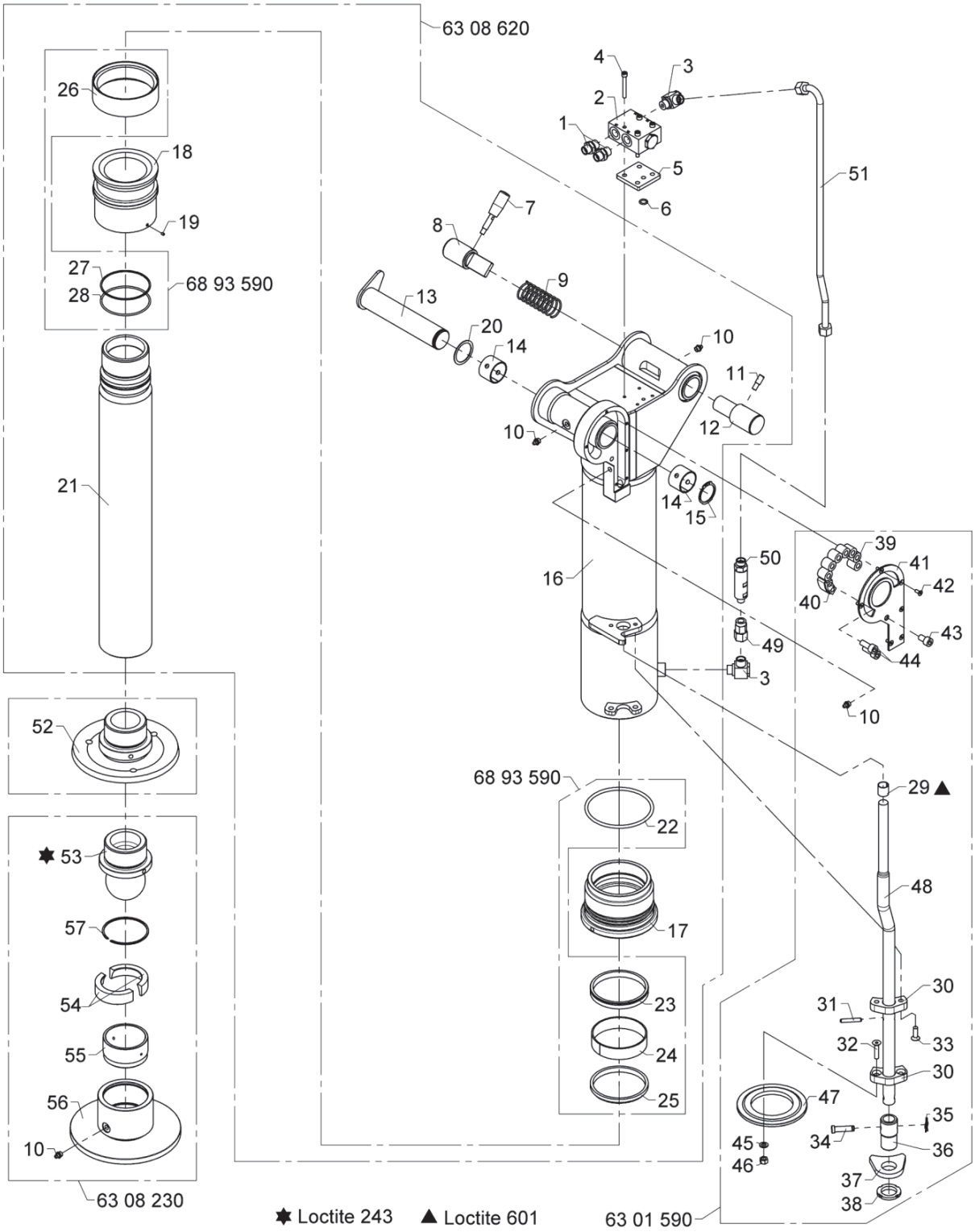

Stabilizer cylinder C125-500, type HR

Pos	Qty.	Part no.	Description	Remarks
42	6	32405	Sockethead screw	MK5 x 12
43	1	30964	Screw	MC10 x 16
44	2	30453	Screw	MC10 x 25
45	2	31147	Face washer, 8 mm	
46	2	30886	Lock nut, stainless	M8
47	1	6302439	Carrier plate	
48	1	6301565	Compression rod	C125-500
49	1	26389	Pressure gauge connection	EMASD 12 LR
50	1	55239	Sequence valve	
51	1	6303289	Pipe, stabilizer cylinder	
52	1	6302262	Footplate, fixed	
53	1	6300272	Ball joint	
54	2	6300266	Ball seat catch	
55	1	6300265	Ball seat	
56	1	6300262	Foot plate	
57	1	33271	Spring ring	SB 85

9520K-RCS, 9520OK-RCS

Internal ref. 6303590

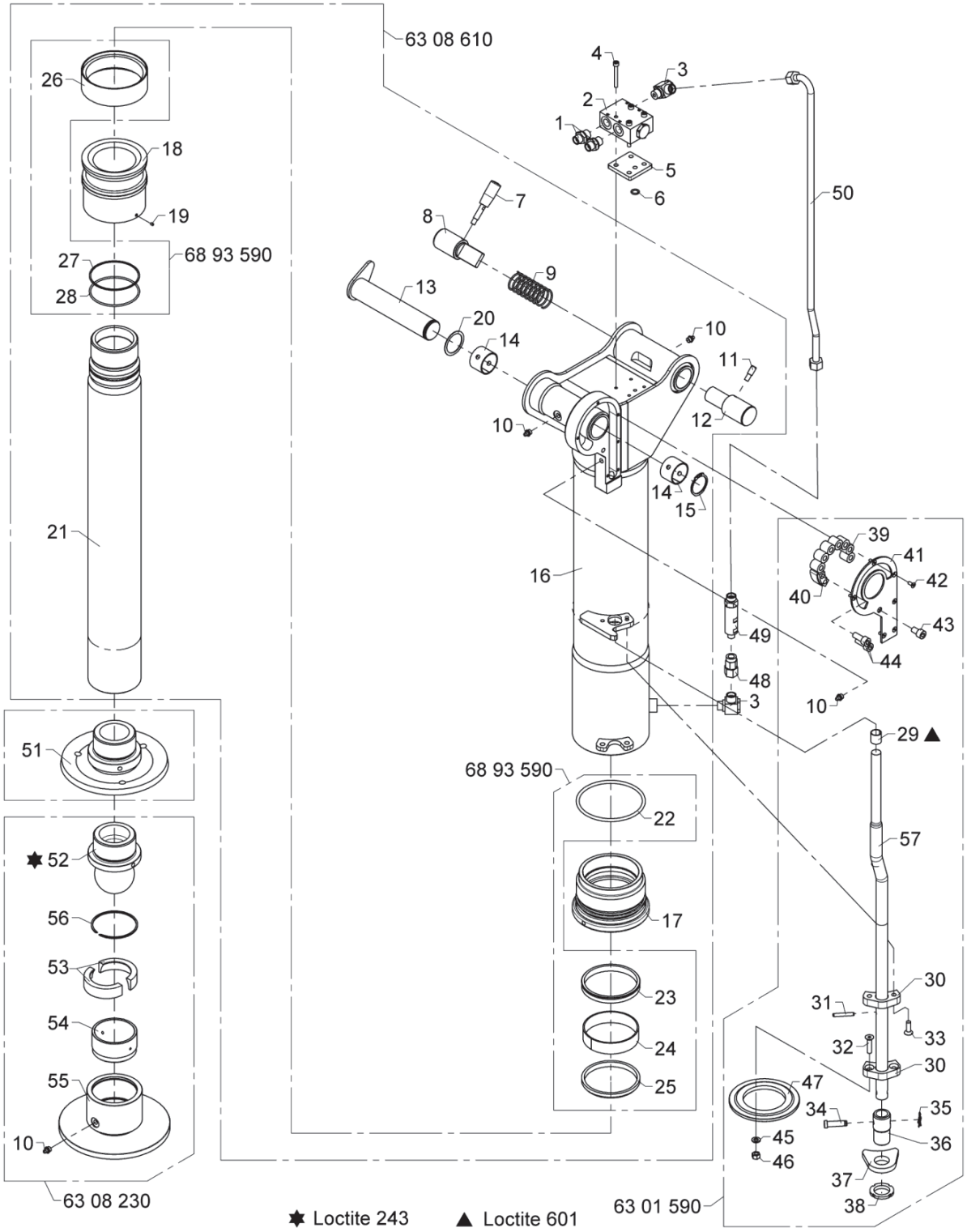

Stabilizer cylinder C125-600, type HR

Pos	Qty.	Part no.	Description	Remarks
1	2	25253	Connection	P-GEV 10 LR 3/8-WD
2	1	59924	Piloted check-valve	
3	2	25130	Banjo connection	RSWV 12 LR
4	4	30457	Screw	MC6 x 50
5	1	6301076	Block	
6	1	20126	O-ring	OR 11,3 x 2,4
7	1	64352	Lever with knob	
8	1	6300236	Drift	
9	1	33479	Compression spring	
10	4	31318	Lubricator	1/8" RG
11	1	6300268	Spacer	
12	1	6300237	Drift	
13	1	6300238	Stabilizer bolt	
14	2	23333	Bushing	PM 4030 DX
15	1	33121	Circlip	40U
16	1	6308611	Stabilizer cylinder, C125-600	C125-600
17	1	6308254	Guide	
18	1	6300273	Piston	
19	1	31050	Pointed screw	MSP5 x 5
20	1	31102	Washer Ø40 x 50x 1,0	ø40 x 50 x 1,0
21	1	6300271	Piston rod	C125-600
22	1	20327	O-ring	OR 119,3 x 5,7
23	1	20929	Seal	SI/L 100/110 x 12,5
24	1	21997	Bearing	HH506 100 x 105 x 25
25	1	20531	Scraper	AUAS 60 x 70 x 7/10
26	1	20791	Seal	MDM 125 x 108 x 26
27	1	20891	Back ring	89,5 x 3
28	1	20191	O-ring	OR 89,5 x 3
29	1	23939	Bushing	MB 1820 DU-B
30	2	63524	Guide	
31	1	31228	Retaining pin, stainless	ø6 x 40
32	2	30584	Countersunk screw	MK8 x 35
33	2	31964	Counter sunk screw, stainless	MK8 x 25
34	1	6302437	Lock pin	
35	1	31905	Clip	
36	1	6302436	Adjusting piece	
37	1	6302435	Compression block	
38	1	23147	Nut	M30 x 1,5
39	7	23146	Cylindrical roller	RC 20 x 20 CD
40	1	6302433	Stop	
41	1	6302432	Cover	

9520K-RCS, 9520OK-RCS

Internal ref. 6303590

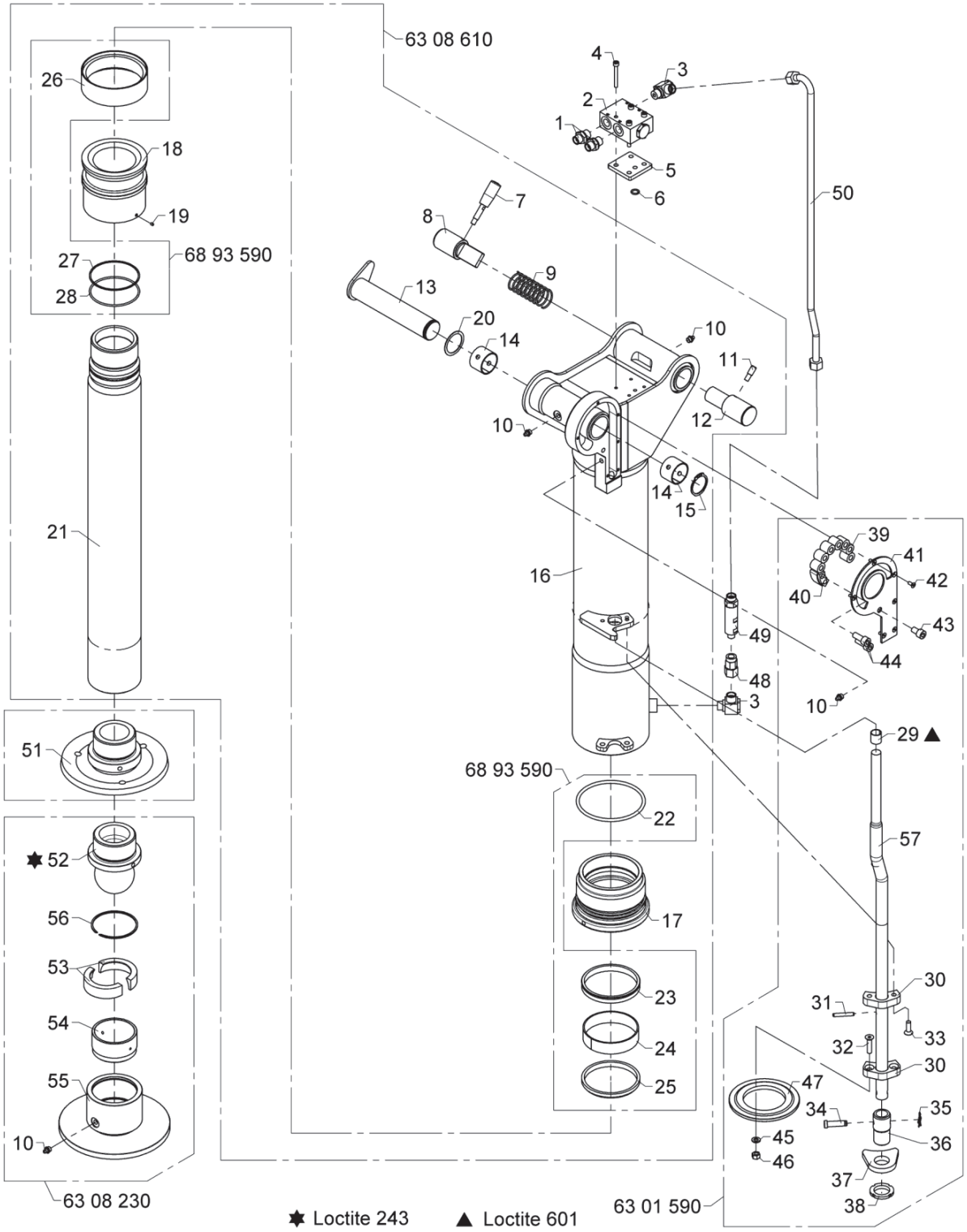

Stabilizer cylinder C125-600, type HR

Pos	Qty.	Part no.	Description	Remarks
42	6	32405	Sockethead screw	MK5 x 12
43	1	30964	Screw	MC10 x 16
44	2	30453	Screw	MC10 x 25
45	2	31147	Face washer, 8 mm	
46	2	30886	Lock nut, stainless	M8
47	1	6302439	Carrier plate	
48	1	26389	Pressure gauge connection	EMASD 12 LR
49	1	55239	Sequence valve	
50	1	6303288	Pipe, stabilizer cylinder	C125-600
51	1	6302262	Footplate, fixed	
52	1	6300272	Ball joint	
53	2	6300266	Ball seat catch	
54	1	6300265	Ball seat	
55	1	6300262	Foot plate	
56	1	33271	Spring ring	SB 85
57	1	6302434	Compression rod	C125-600

9520K-RCS, 9520OK-RCS

Internal ref. 6300200

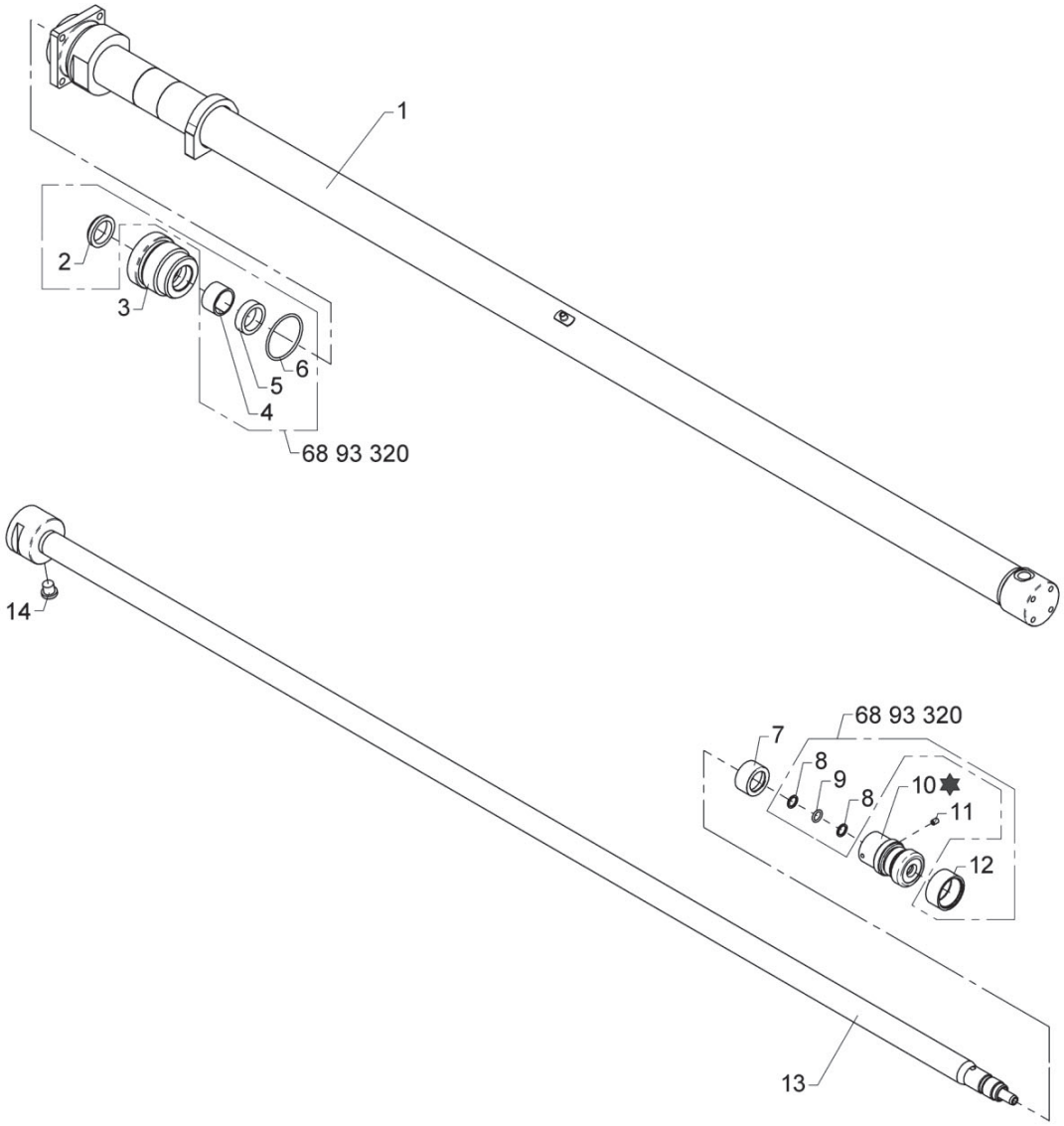

✸ Loctite 243

Beam cylinder, C45-1465

559 02 300

From loader 1370001
To loader

Created 07-06-17
Modified

Pos	Qty.	Part no.	Description	Remarks
1	1	6300201	Cylinder	
2	1	20507	Scraper	AUAS 30 x 40 x 5/8
3	1	1291323	Guide	
4	1	21912	Bearing	HH506 30 x 35 x 20
5	1	20683	Seal	HH605 30 x 40 x 11
6	1	20183	O-ring	OR 54,5 x 3
7	1	6300204	Spacer	
8	2	20879	Back ring	11,3 x 2,4
9	1	20126	O-ring	OR 11,3 x 2,4
10	1	1310733	Piston	
11	1	30903	Screw	MSP6 x 8
12	1	20949	Seal	45 x 37 x 15,5
13	1	6300205	Piston rod	
14	1	25197	Plug	VS-R-1/4 WD

9520K-RCS, 9520OK-RCS

Internal ref. 6300210

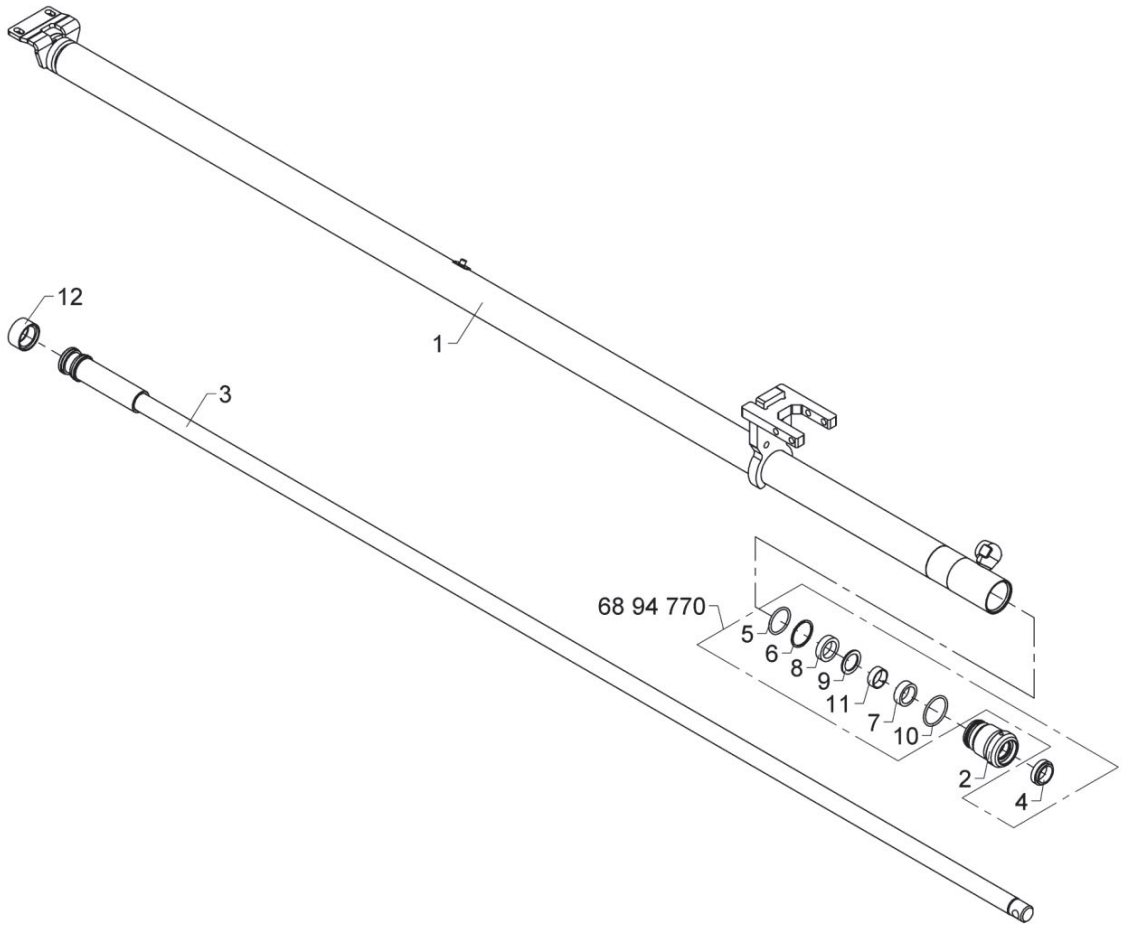

Beam cylinder, C40-1600

559 02 310

From loader 1370001
To loader
Created 07-06-17
Modified

Pos	Qty.	Part no.	Description	Remarks
1	1	6300747	Cylinder tube	
2	1	6390509	Guide (ø 25)	
3	1	6300216	Piston rod	
4	1	20505	Scraper	AU AS 25 X 35 X 7/10
5	1	20177	O-ring	OR 34,2 x 3
6	1	20705	Back ring	STR 35 x 40 x 1,3
7	1	20651	Seal	HH605 25 x 33 x 11
8	1	21825	Seal	HH605 75 x 85 x 13
9	1	21824	Back ring	STR 25 x 35 x 2
10	1	20180	O-ring	OR 39,2 x 3,53
11	1	21826	Bearing	RGR 25x28x10
12	1	20779	Double acting seal	MDM 40 x 30 x 12,3

9520K-RCS, 9520OK-RCS

Internal ref. 6397100

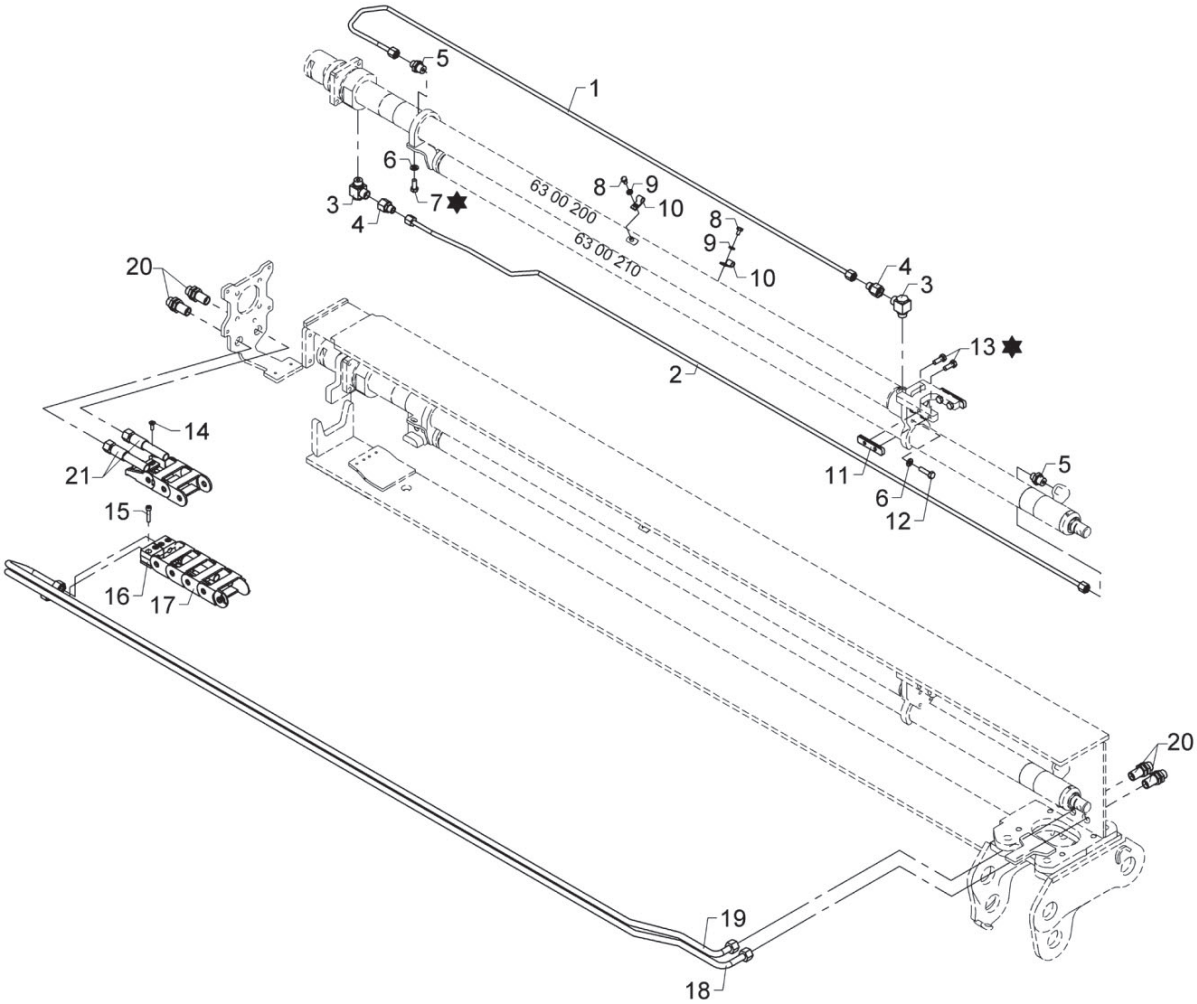

✸ Loctite 243

Hydraulic system, stabilizersbeam

Pos	Qty.	Part no.	Description	Remarks
1	1	6300219	Pipe	
2	1	6300218	Pipe	
3	2	25130	Banjo connection	RSWV 12 LR
4	2	26101	Reducing connection	REDSDN 12/8 L
5	2	25244	Connection	GES 8 LR 3/8-WD
6	6	31147	Face washer, 8 mm	
7	2	30132	Set screw, stainless	
8	2	30110	Set screw, stainless	M6 x 10
9	2	32302	Face washer, stainless	6 mm
10	2	31445	Suspension	6-8 mm
11	2	6302208	Slide block	
12	4	30135	Set screw, stainless	M8 x 30
13	4	30133	Set screw, stainless	
14	2	32201	Countersunk screw	MK6 x 16
15	4	30961	Screw	MC6 x 30
16	2	31425	Clamp	
17	1	27887	Nylon drag chain	
18	1	6397104	Pipe, stabilizer leg, up	
19	1	6397105	Pipe, stabilizer, out (4213)	
20	4	25201	Bulkhead connection	
21	2	56900	Hose	3/8" x 3850 mm L/S 12L

9520K-RCS, 9520OK-RCS

Internal ref. 6398320

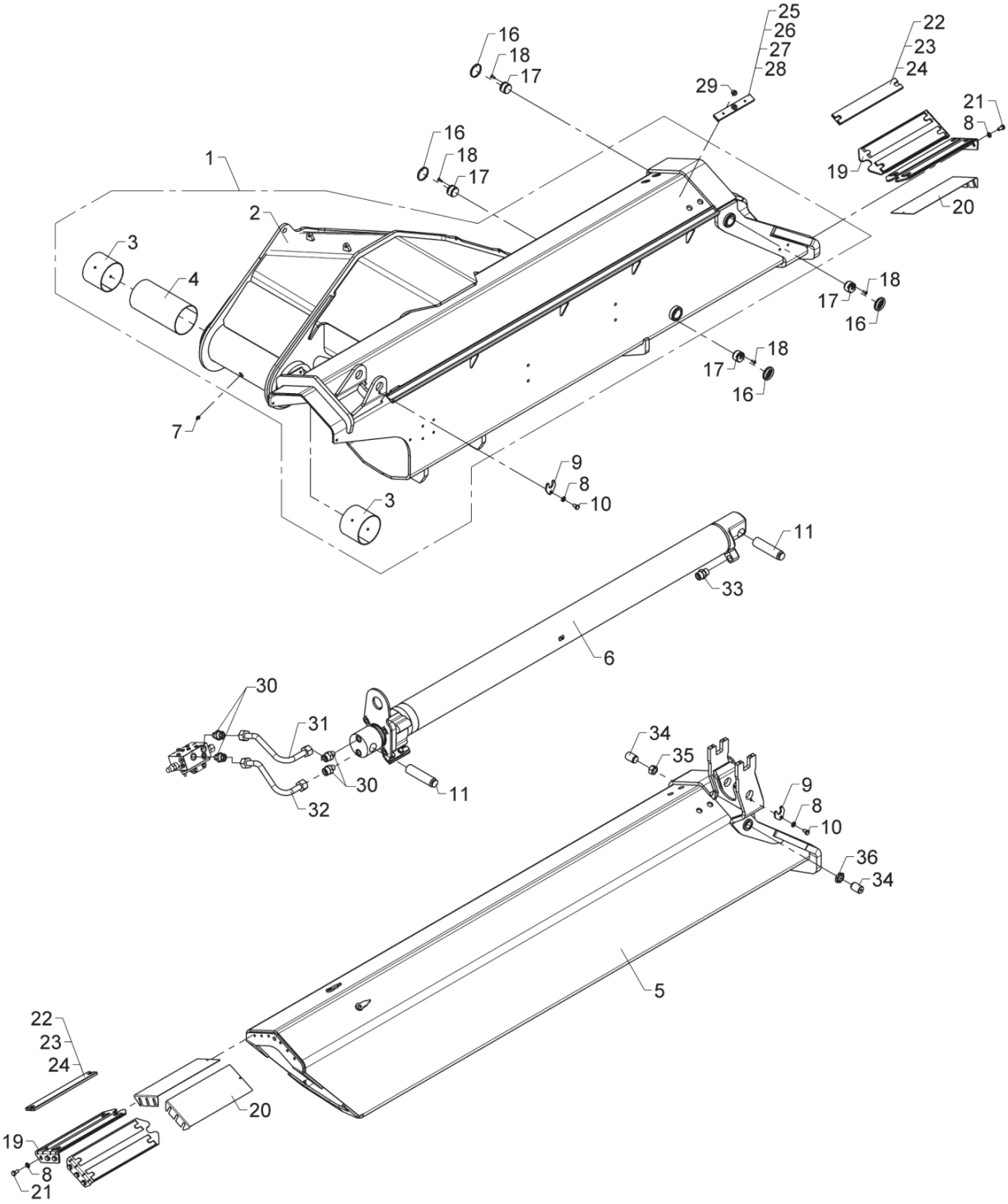

Jib and K1 extension, complete

Pos	Qty.	Part no.	Description	Remarks
1	1	6398100	Jib incl. bushings	
2	1	6398110	Jib, painted	63 98 281
3	2	23924	Bushing	PM 120100 DX
4	1	63549	Plate	
5	1	6398311	Extension I	
6	1	6397540	Extension cylinder I	
7	1	31318	Lubricator	1/8" RG
8	14	31177	Washer	10 mm
9	2	6302277	Lock plate	
10	2	31510	Set screw, stainless	M10 x 16
11	2	6302274	Pin	
12	1	63689	Slide block with bushing	
13	1	6367297	Dataflex, shim	
14	2	31565	Washer, stainless	10 mm
15	2	31517	Set screw, stainless	M10 x 20
16	4	64362	Plastic plug	
17	4	6300334	Guide	
18	8	30540	Countersunk screw	MK6 x 16
19	4	6300335	Bracket	
20	4	6300531	Shim	
21	12	30154	Set screw	M10 x 20
22	8	68083	Slide block	10 mm
23	8	63685	Slide block	9 mm
24	8	63697	Slide block	8 mm
25	2	6294434	Spacer	5 mm
26	2	6193304	Spacer	6 mm
27	2	6235944	Spacer	7 mm
28	2	6193314	Spacer	8 mm
29	4	31865	Torx screw M8 x 6 m	M8 x 6
30	4	26221	Connection	P-GEV 20 SR 1/2-WD
31	1	6397701	Pipe, ext. out	
32	1	6397702	Pipe, ext. in	
33	1	26197	Connection	P-GEV 20 SR-WD
34	2	6398416	Slide block	
35	1	32333	Nut	M20
36	1	32399	Counter nut M30 x 2	M30 x 2

9520K-RCS, 9520OK-RCS

Internal ref. 6400320

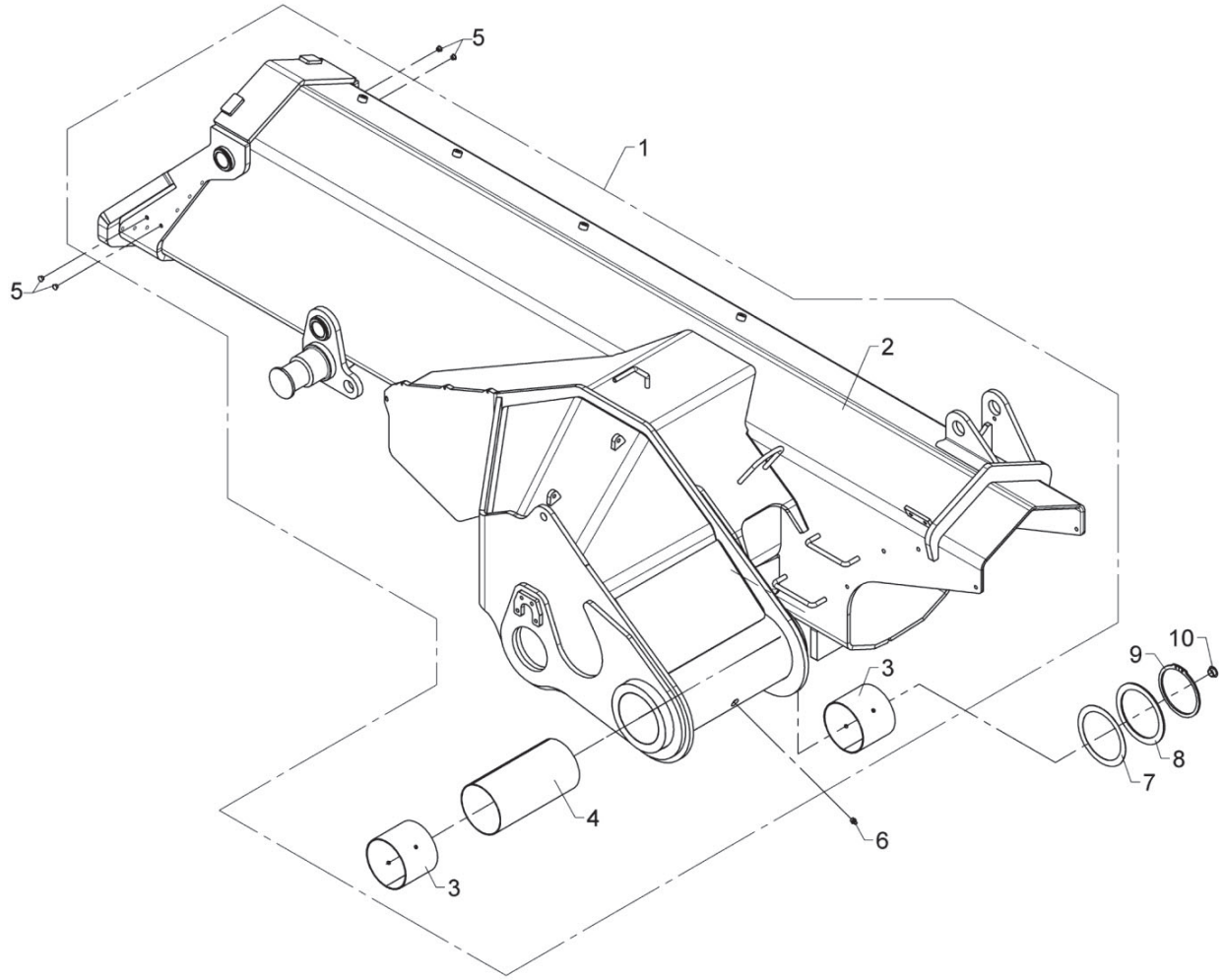

Jib, complete (OK)

Pos	Qty.	Part no.	Description	Remarks
1	1	6400090	OK jib with bushings	
2	1	6400100	OK jib, painted	63 02 281
3	2	23924	Bushing	PM 120100 DX
4	1	63549	Plate	
5	4	64366	Plug	
6	1	31318	Lubricator	1/8" RG
7	1	33263	Washer Dacromet	PS 120 x 150 x 1,0
8	1	33261	Back ring	SS 120 x 150 x 3,5
9	1	33242	Circlip	120U
10	1	68034	Plug	

9520K-RCS, 9520OK-RCS

Internal ref. 6398340

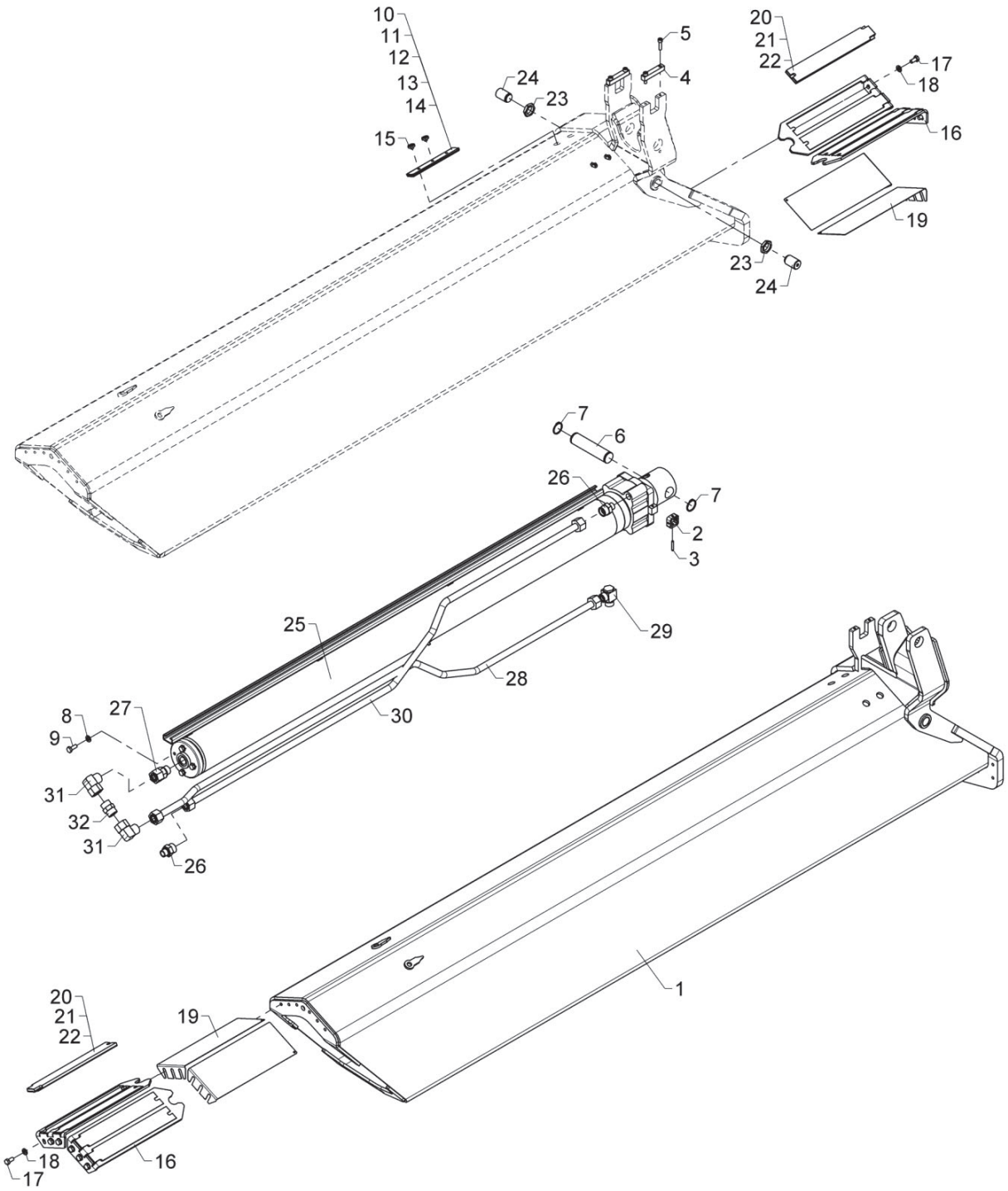

BOM obsolete

K2 extension, complete

559 03 110

From loader 1370001
To loader 1370035

Created 09-04-18
Modified 12-12-19

Pos	Qty.	Part no.	Description	Remarks
1	1	6398331	Extension II	
2	2	6398408	Disc for cylinder	
3	2	31214	Retaining pin ø5	ø5 x 36
4	2	6302279	Lock plate	
5	4	30442	Screw	MC8 x 30
6	1	6193254	Pin	
7	2	33119	Circlip	36U
8	4	31565	Washer, stainless	10 mm
9	4	31513	Set screw, stainless	M10 x 25
10	2	6360414	Spacer	4 mm
11	2	6294434	Spacer	5 mm
12	2	6193304	Spacer	6 mm
13	2	6235944	Spacer	7 mm
14	2	6193314	Spacer	8 mm
15	4	31864	Allen screw	M8 x 6
16	4	6300375	Bracket for slide block	
17	12	30154	Set screw	M10 x 20
18	12	31177	Washer	10 mm
19	4	6300535	Shim	
20	8	63525	Slide block	9 mm
21	8	63526	Slide block	8 mm
22	8	68085	Slide block	10 mm
23	2	32399	Counter nut M30 x 2	M30 x 2
24	2	6398416	Slide block	
25	1	6397560	Extension cylinder II	
26	2	26221	Connection	P-GEV 20 SR 1/2-WD
27	1	26358	Connection	EGESD 20 SR-WD
28	1	6397715		*#
29	1	26964	Banjo connection	RSWV 20 SR
30	1	6397713	Pipe, C2 ext. in	C2
31	2	26198	Elbow connection	EWVD 20 S-SV
32	1	26140	Double connection	GS 20 S

9520K-RCS, 9520OK-RCS

Internal ref. 6398340

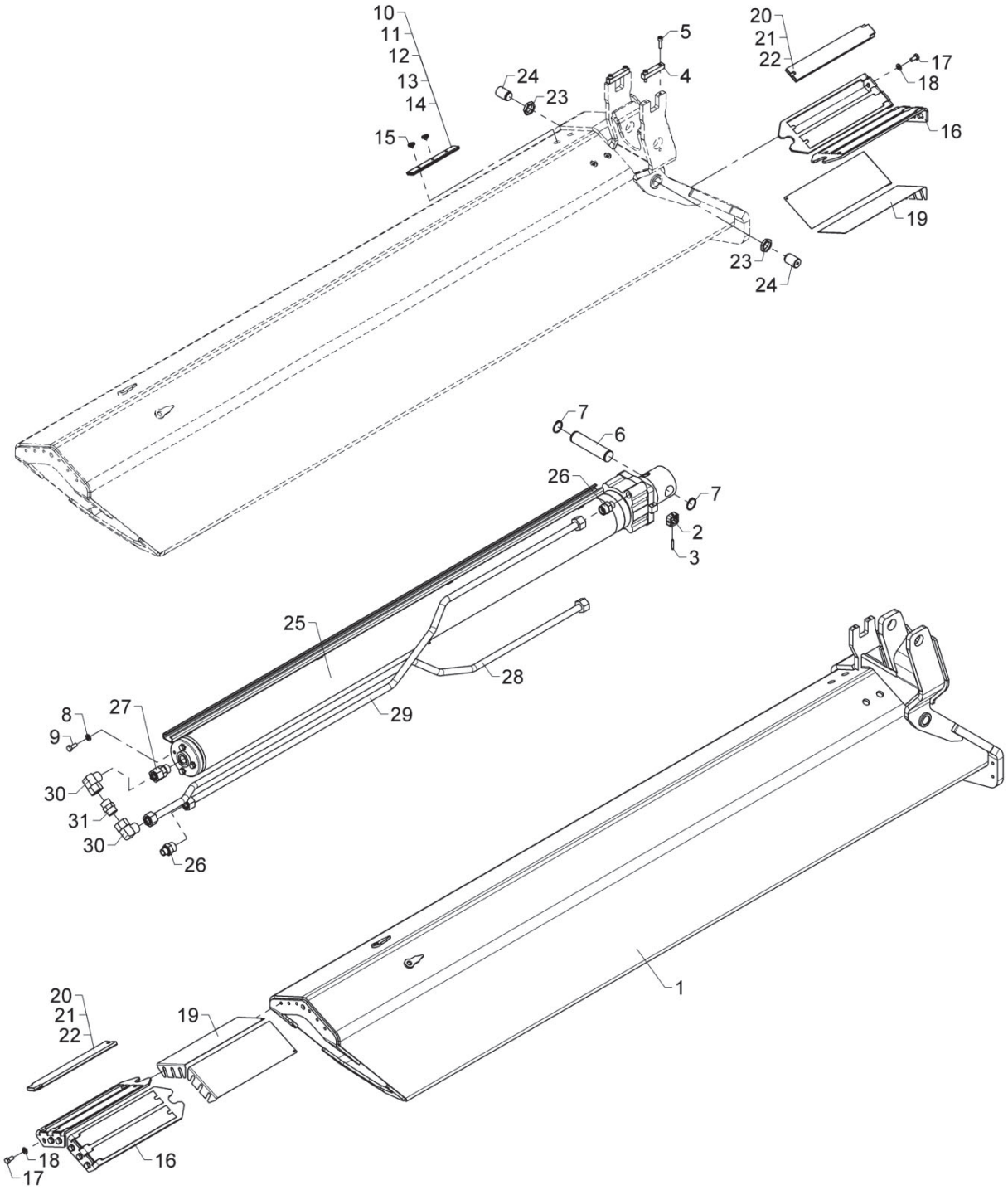

K2 extension, complete

Pos	Qty.	Part no.	Description	Remarks
1	1	6398331	Extension II	
2	2	6398408	Disc for cylinder	
3	2	31214	Retaining pin ø5	ø5 x 36
4	2	6302279	Lock plate	
5	4	30442	Screw	MC8 x 30
6	1	6193254	Pin	
7	2	33119	Circlip	36U
8	4	31565	Washer, stainless	10 mm
9	4	31513	Set screw, stainless	M10 x 25
10	2	6360414	Spacer	4 mm
11	2	6294434	Spacer	5 mm
12	2	6193304	Spacer	6 mm
13	2	6235944	Spacer	7 mm
14	2	6193314	Spacer	8 mm
15	4	31865	Torx screw M8 x 6 m	M8 x 6
16	4	6300375	Bracket for slide block	
17	12	30154	Set screw	M10 x 20
18	12	31177	Washer	10 mm
19	4	6300535	Shim	
20	8	63525	Slide block	9 mm
21	8	63526	Slide block	8 mm
22	8	68085	Slide block	10 mm
23	2	32399	Counter nut M30 x 2	M30 x 2
24	2	6398416	Slide block	
25	1	6397560	Extension cylinder II	
26	2	26221	Connection	P-GEV 20 SR 1/2-WD
27	1	26358	Connection	EGESD 20 SR-WD
28	1	6397711	Pipe, C2 ext. out K2	*#
29	1	6397713	Pipe, C2 ext. in	C2
30	2	26198	Elbow connection	EWVD 20 S-SV
31	1	26140	Double connection	GS 20 S

9520K-RCS, 9520OK-RCS

Internal ref. 6398360

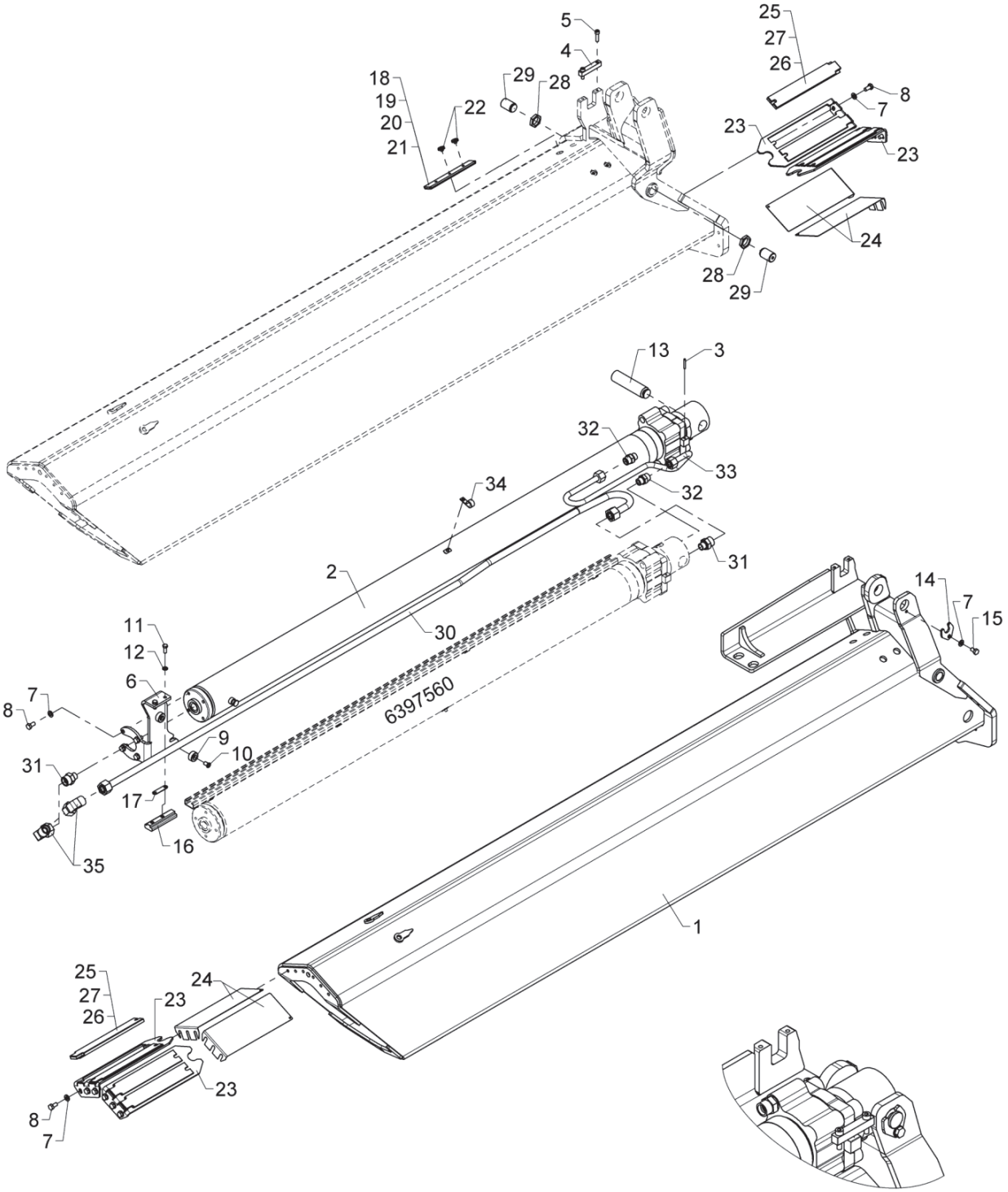

K3 extension, complete

Pos	Qty.	Part no.	Description	Remarks
1	1	6398351	Extension III, K3 system	
2	1	6397570	Extension cylinder III	
3	2	31214	Retaining pin ø5	ø5 x 36
4	2	6302279	Lock plate	
5	4	30442	Screw	MC8 x 30
6	1	6398349	Bracket, C3	
7	17	31177	Washer	10 mm
8	16	30154	Set screw	M10 x 20
9	2	63503	Bushing	
10	2	32423	Sockethead screw	MC10 x 16
11	2	30133	Set screw, stainless	
12	2	31147	Face washer, 8 mm	
13	1	6302276	Pin	
14	1	6302277	Lock plate	
15	1	31510	Set screw, stainless	M10 x 16
16	1	63689	Slide block with bushing	
17	1	6367297	Dataflex, shim	
18	2	6294434	Spacer	5 mm
19	2	6193304	Spacer	6 mm
20	2	6235944	Spacer	7 mm
21	2	6193314	Spacer	8 mm
22	4	31865	Torx screw M8 x 6 m	M8 x 6
23	4	6300394	Bracket for slide block	
24	4	6300532	Shim	
25	8	68084	Slide block	10 mm
26	8	63527	Slide block	9 mm
27	8	63528	Slide block	8 mm
28	2	32399	Counter nut M30 x 2	M30 x 2
29	2	6398416	Slide block	
30	1	6397721	Pipe, C3 ext. out K3	C3
31	2	26221	Connection	P-GEV 20 SR 1/2-WD
32	2	26334	Connection	P-GEV 16 SR-WD
33	1	6397722	Pipe, C3 ext. in K3	C3
34	1	31449	Clamp	
35	2	26198	Elbow connection	EWVD 20 S-SV

9520K-RCS, 9520OK-RCS

Internal ref. 6398380

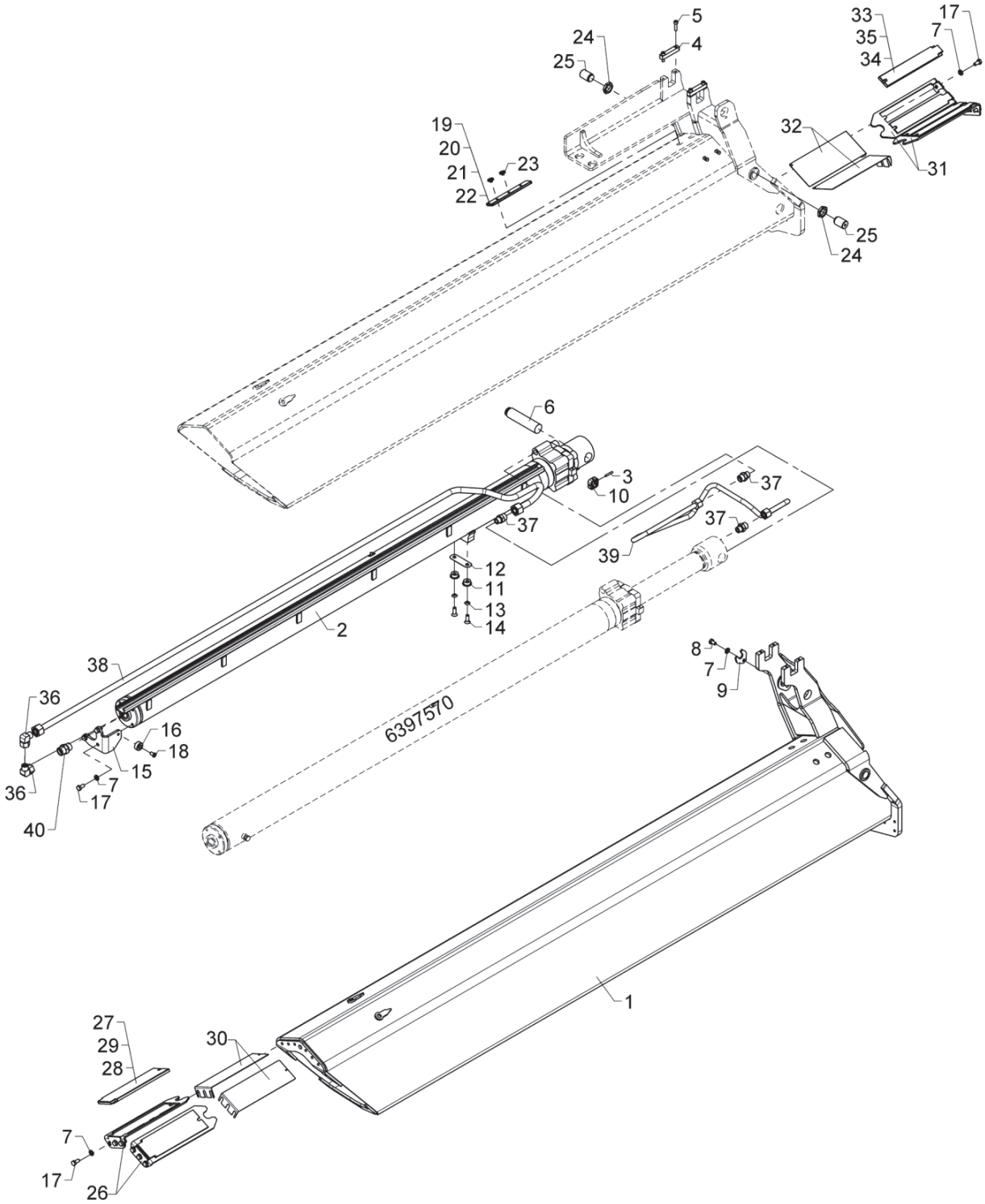

K4 extension, complete

Pos	Qty.	Part no.	Description	Remarks
1	1	6398371	Extension IV, K4 system	
2	1	6397580	Extension cylinder IV	
3	2	31214	Retaining pin ø5	ø5 x 36
4	2	6302279	Lock plate	
5	4	30442	Screw	MC8 x 30
6	1	6398276	Pin ø36 x 154	
7	16	31177	Washer	10 mm
8	1	31510	Set screw, stainless	M10 x 16
9	1	6302277	Lock plate	
10	2	6398408	Disc for cylinder	
11	2	6398418	Adjustment disc	
12	1	6398417	Spacer	
13	2	31171	Washer	10 mm
14	2	30581	Counter-sunk screw	MK10 x 30
15	1	6300457	Guide	
16	1	63503	Bushing	
17	15	30154	Set screw	M10 x 20
18	1	32423	Sockethead screw	MC10 x 16
19	2	6294434	Spacer	5 mm
20	2	6193304	Spacer	6 mm
21	2	6235944	Spacer	7 mm
22	2	6193314	Spacer	8 mm
23	4	31865	Torx screw M8 x 6 m	M8 x 6
24	2	32399	Counter nut M30 x 2	M30 x 2
25	2	6398416	Slide block	
26	2	6300369	Bracket for slide block	
27	2	68082	Slide block	10 mm
28	2	63696	Slide block	9 mm
29	2	63521	Slide block	8 mm
30	2	6300533	Shim	
31	2	6300394	Bracket for slide block	
32	2	6300532	Shim	
33	4	68084	Slide block	10 mm
34	4	63527	Slide block	9 mm
35	4	63528	Slide block	8 mm
36	2	26340	Elbow connection	EWSD 16 S
37	3	26334	Connection	P-GEV 16 SR-WD
38	1	6397731	Pipe, C4 ext. out K4	
39	1	6397732	Pipe, C4 ext. in K4	
40	1	26197	Connection	P-GEV 20 SR-WD

9520K-RCS, 9520OK-RCS

Internal ref. 6398420

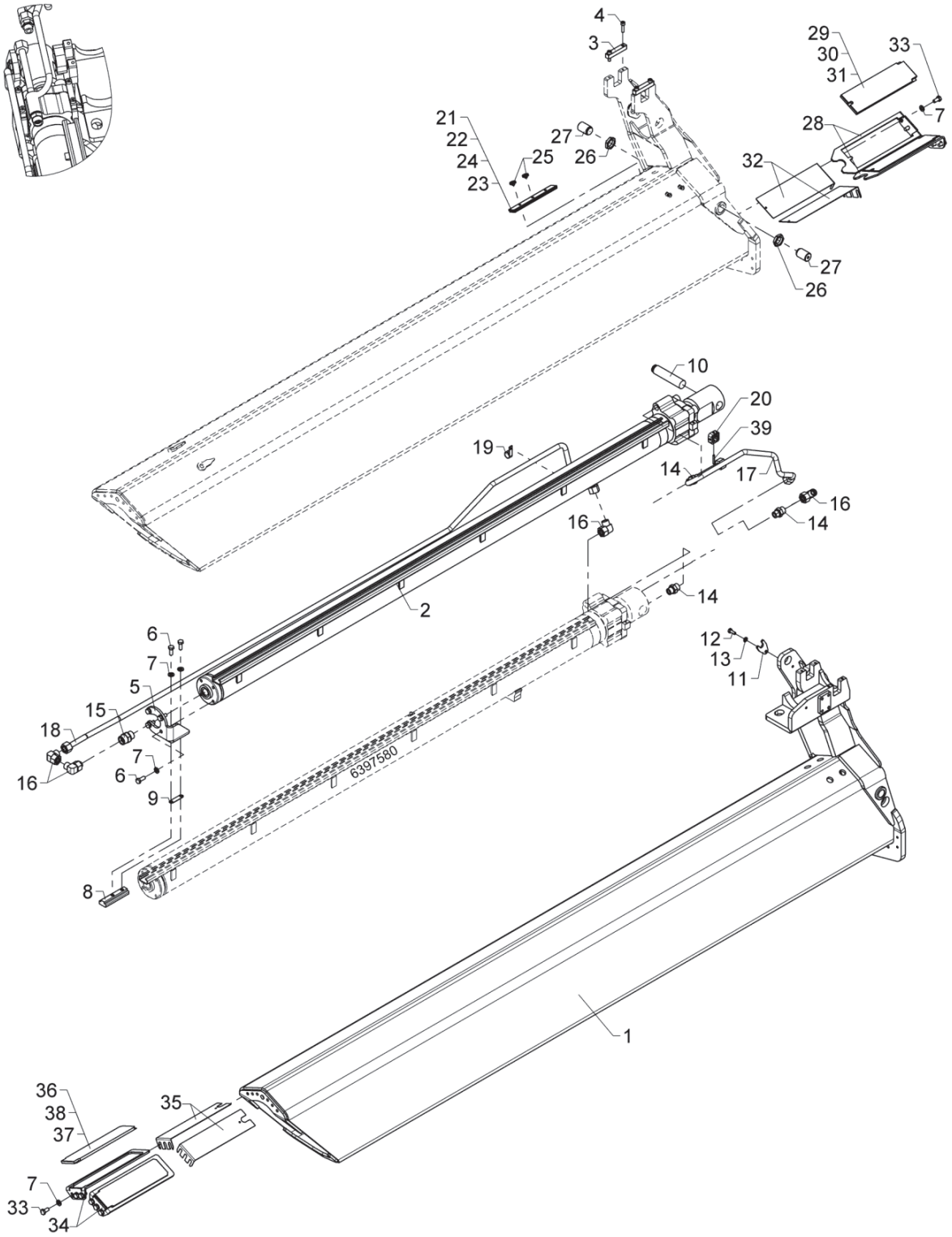

K5 extension, complete

Pos	Qty.	Part no.	Description	Remarks
1	1	6398391	Extension V, K5 system	
2	1	6397590	Extension cylinder V	
3	2	6302279	Lock plate	
4	4	30442	Screw	MC8 x 30
5	1	6398409	Bracket, C5	
6	6	31513	Set screw, stainless	M10 x 25
7	18	31177	Washer	10 mm
8	1	63689	Slide block with bushing	
9	1	6367297	Dataflex, shim	
10	2	6390552	Pin	
11	2	6340337	Lock plate	
12	2	30132	Set screw, stainless	
13	2	31147	Face washer, 8 mm	
14	3	26334	Connection	P-GEV 16 SR-WD
15	1	26197	Connection	P-GEV 20 SR-WD
16	4	26340	Elbow connection	EWSD 16 S
17	1	6397745	Pipe, C5 ext. out K5	
18	1	6397746	Pipe, C5 ext. in K5	
19	1	31449	Clamp	
20	2	6398408	Disc for cylinder	
21	2	6294434	Spacer	5 mm
22	2	6193304	Spacer	6 mm
23	2	6235944	Spacer	7 mm
24	2	6193314	Spacer	8 mm
25	4	31865	Torx screw M8 x 6 m	M8 x 6
26	2	32399	Counter nut M30 x 2	M30 x 2
27	2	6398416	Slide block	
28	2	6300369	Bracket for slide block	85x290
29	2	68082	Slide block	10 mm
30	2	63696	Slide block	9 mm
31	2	63521	Slide block	8 mm
32	2	6300533	Shim	
33	12	30154	Set screw	M10 x 20
34	2	6300366	Bracket for slide block	75x290
35	2	6300534	Shim	
36	2	63582	Slide block	8 mm
37	2	63583	Slide block	9 mm
38	2	63584	Slide block	10 mm
39	2	31214	Retaining pin ø5	ø5 x 36

9520K-RCS, 9520OK-RCS

Internal ref. 6398440

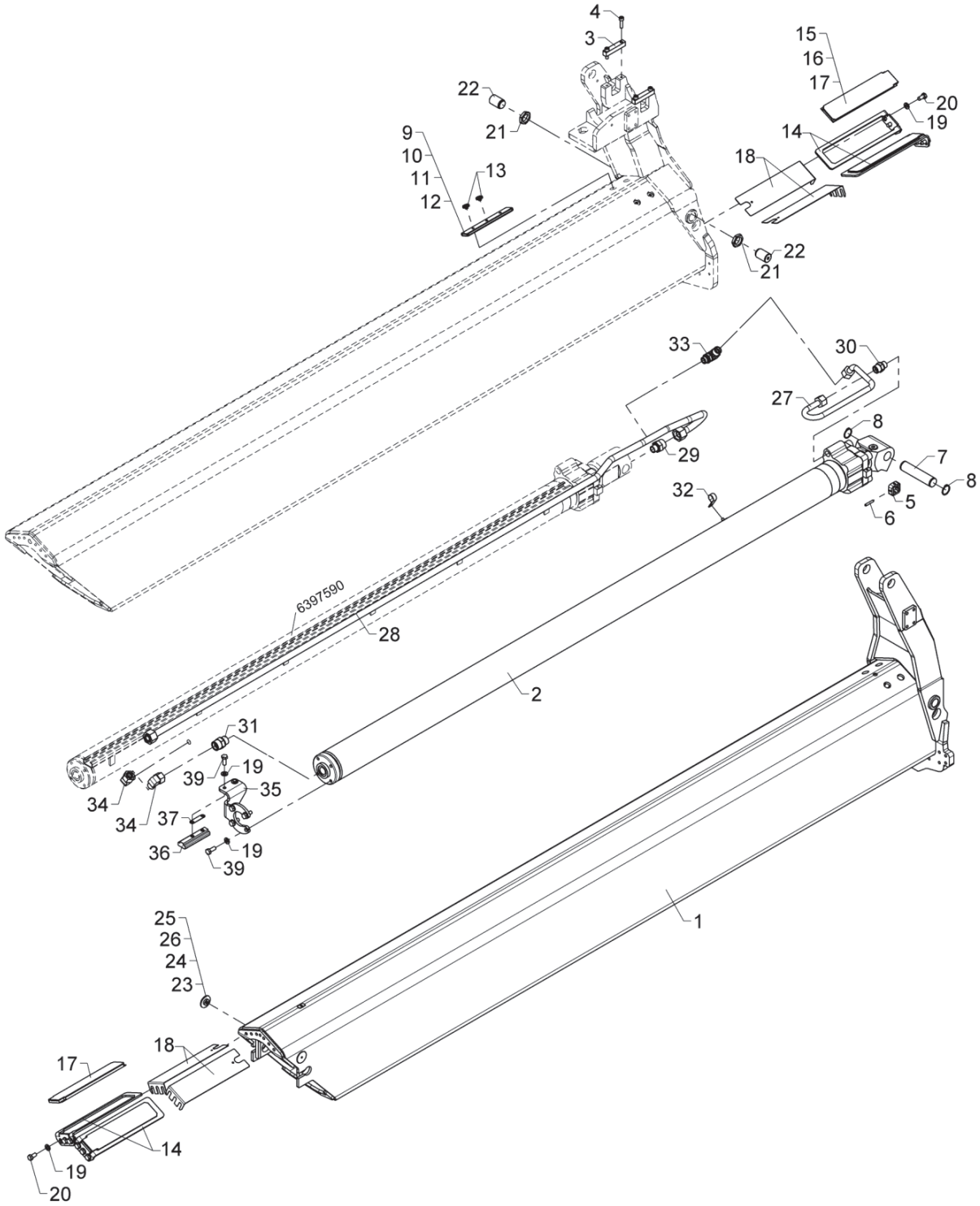

K6 extension, complete

Pos	Qty.	Part no.	Description	Remarks
1	1	6398541	Extension VI, K6 system	
2	1	6397600	Extension cylinder VI	
3	2	6302279	Lock plate	
4	4	30442	Screw	MC8 x 30
5	2	6398408	Disc for cylinder	
6	2	31214	Retaining pin ø5	ø5 x 36
7	1	6302278	Pin	
8	2	33115	Circlip	30U
9	2	6294434	Spacer	5 mm
10	2	6193304	Spacer	6 mm
11	2	6235944	Spacer	7 mm
12	2	6193314	Spacer	8 mm
13	4	31865	Torx screw M8 x 6 m	M8 x 6
14	4	6300399	Bracket for slide block	
15	4	63585	Slide block	8 mm
16	4	63586	Slide block	9 mm
17	4	63587	Slide block	10 mm
18	4	6300534	Shim	
19	18	31177	Washer	10 mm
20	12	30154	Set screw	M10 x 20
21	2	32399	Counter nut M30 x 2	M30 x 2
22	2	6398416	Slide block	
23	2	6306312	Guide	5 + 3,5mm
24	2	6394631	Guide, 5 + 2.5 mm	5 + 2,5mm
25	2	6394632	Guide, 5 + 1.75 mm	5 + 1,75mm
26	2	6394636	Guide	5 + 1mm
27	1	6397749	Pipe, C6 ext. in K6	
28	1	6397748	Pipe, C6 ext. out K6	
29	2	26221	Connection	P-GEV 20 SR 1/2-WD
30	1	26334	Connection	P-GEV 16 SR-WD
31	1	26197	Connection	P-GEV 20 SR-WD
32	1	31449	Clamp	
33	1	26893	Elbow connection	16 mm - 1/2"
34	2	26340	Elbow connection	EWSD 16 S
35	1	6398549	Bracket, C6	
36	1	63689	Slide block with bushing	
37	1	6367297	Dataflex, shim	
38	1	30705	Set screw, black, M 6 x 10	M6 x 10
39	5	31513	Set screw, stainless	M10 x 25

9520K-RCS, 9520OK-RCS

Internal ref. 6398460

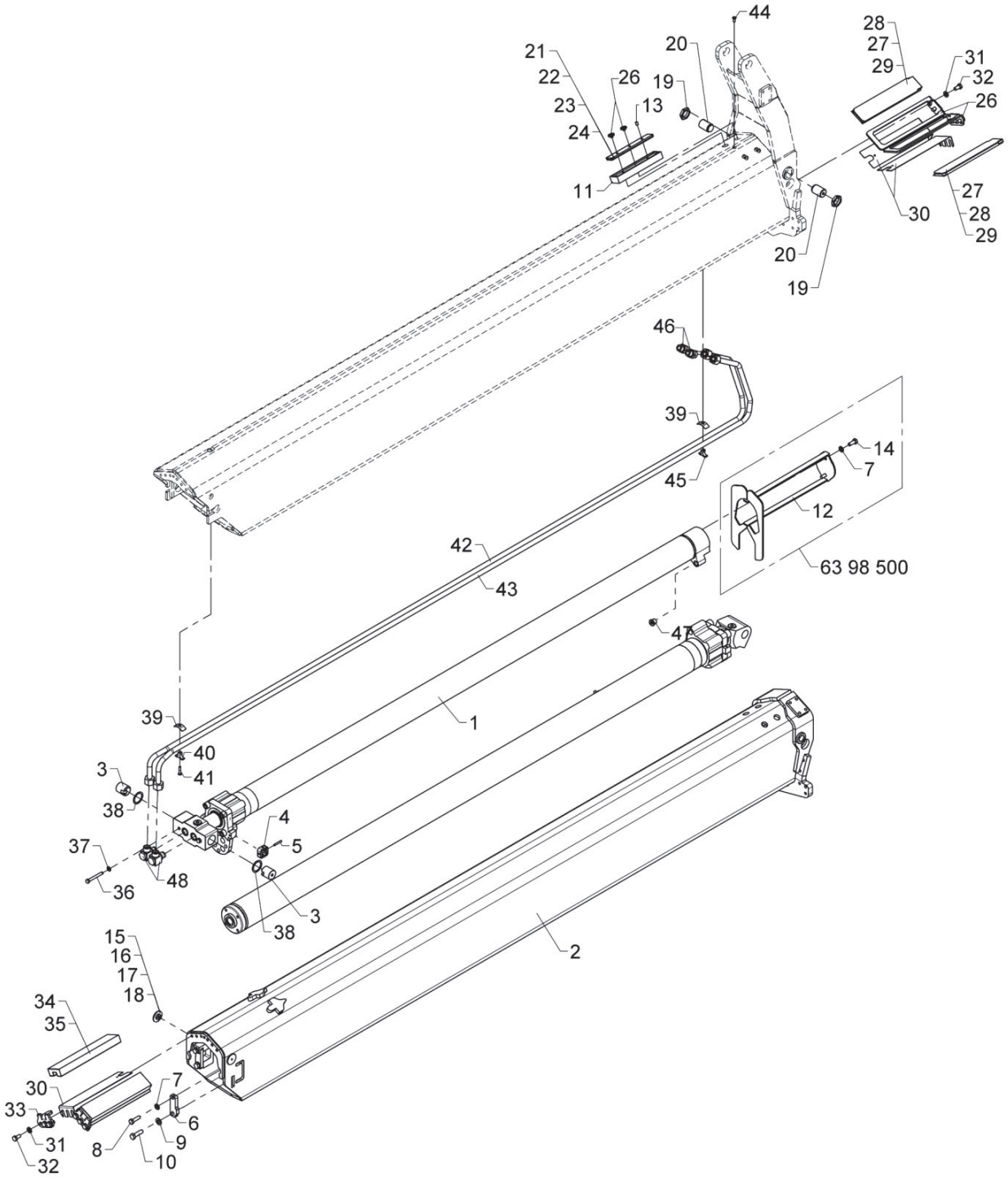

K7 extension, complete

Pos	Qty.	Part no.	Description	Remarks
1	1	6398610	Extension cylinder VII	
2	1	6400561	Extension VII, K7 syst.	
3	2	6400741	Lock bolt for C7	
4	2	6398408	Disc for cylinder	
5	2	31214	Retaining pin ø5	ø5 x 36
6	2	6400742	Lock plate for C7	
7	4	31565	Washer, stainless	10 mm
8	2	30157	Set screw	M10 x 35
9	2	32338	Washer	12 mm
10	2	30179	Set screw	M12 x 40
11	2	6400743	Distance block	
12	1	6400751	Bracket for C7	
13	2	30563	Pointed screw	MSP8 x 10
14	2	31513	Set screw, stainless	M10 x 25
15	2	6306312	Guide	5 + 3,5mm
16	2	6394631	Guide, 5 + 2.5 mm	5 + 2,5mm
17	2	6394636	Guide	5 + 1mm
18	2	6394632	Guide, 5 + 1.75 mm	5 + 1,75mm
19	2	32399	Counter nut M30 x 2	M30 x 2
20	2	6398416	Slide block	
21	2	6294434	Spacer	5 mm
22	2	6193304	Spacer	6 mm
23	2	6235944	Spacer	7 mm
24	2	6193314	Spacer	8 mm
25	4	31865	Torx screw M8 x 6 m	M8 x 6
26	2	6300399	Bracket for slide block	
27	2	63585	Slide block	8 mm
28	2	63586	Slide block	9 mm
29	2	63587	Slide block	10 mm
30	4	6300534	Shim	
31	12	31177	Washer	10 mm
32	12	30154	Set screw	M10 x 20
33	2	6302635	Bracket for slide block	
34	2	68081	Slide block	27 mm
35	2	63402	Slide block	26 mm
36	2	32250	Set screw	M8 x 65
37	2	31147	Face washer, 8 mm	
38	2	31767	Washer	ø35 x 45 x 1,0
39	2	6302639	Base plate	
40	1	6300704	Clamp	
41	1	30585	Countersunk screw	MK6 x 30

9520K-RCS, 9520OK-RCS

Internal ref. 6398460

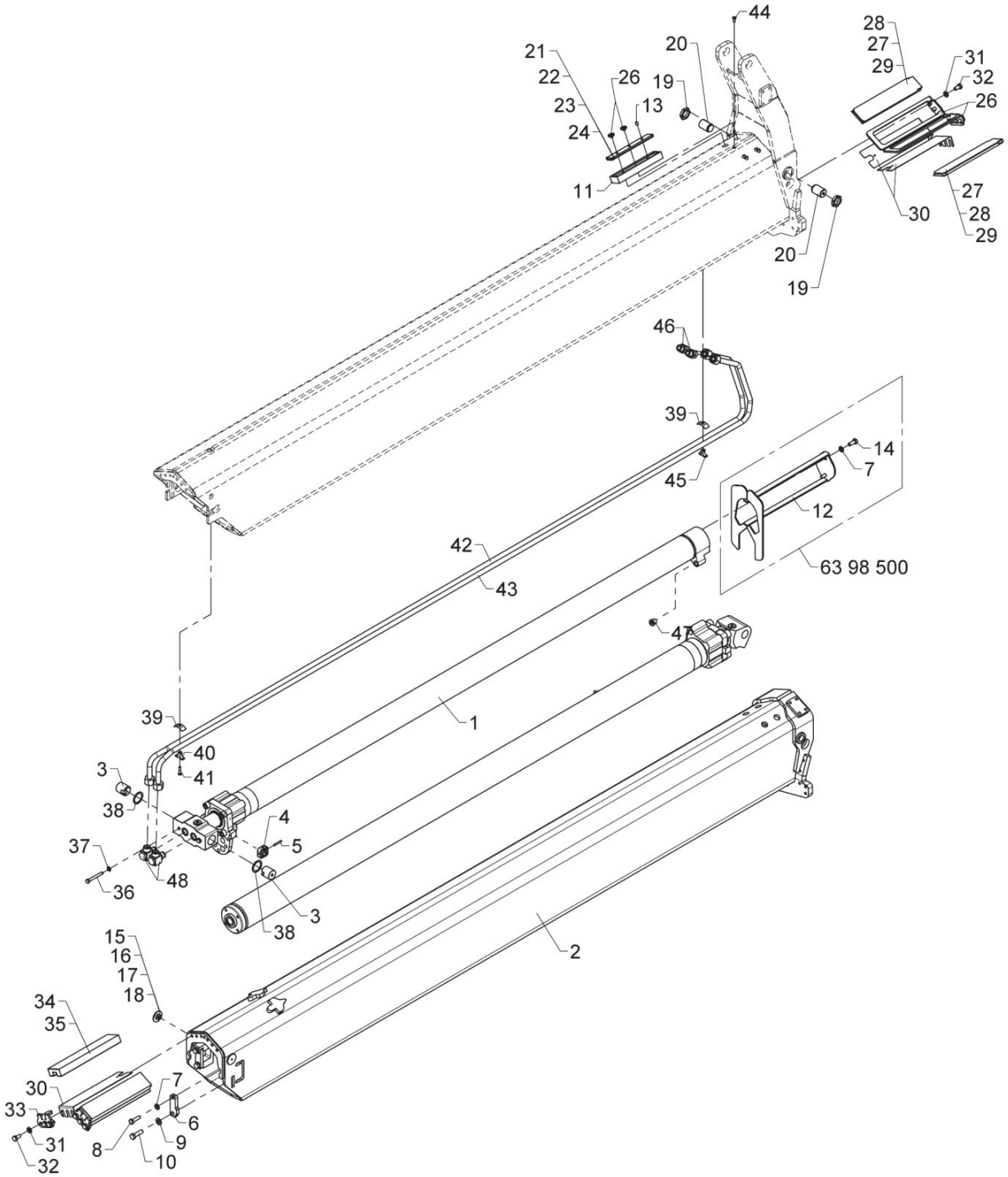

K7 extension, complete

559 03 160

From loader 1370001
To loader

Created 26-04-17
Modified 11-12-19

Pos	Qty.	Part no.	Description	Remarks
42	1	6398753	Pipe, in, K7	
43	1	6398752	Pipe, out, K7	
44	1	32201	Countersunk screw	MK6 x 16
45	1	6300928	Clamp	
46	2	26334	Connection	P-GEV 16 SR-WD
47	2	25277	Plug	VS-R-3/8 WD
48	2	26344	Banjo connection	RSWV 16 SR

9520K-RCS, 9520OK-RCS

Internal ref. 6398480

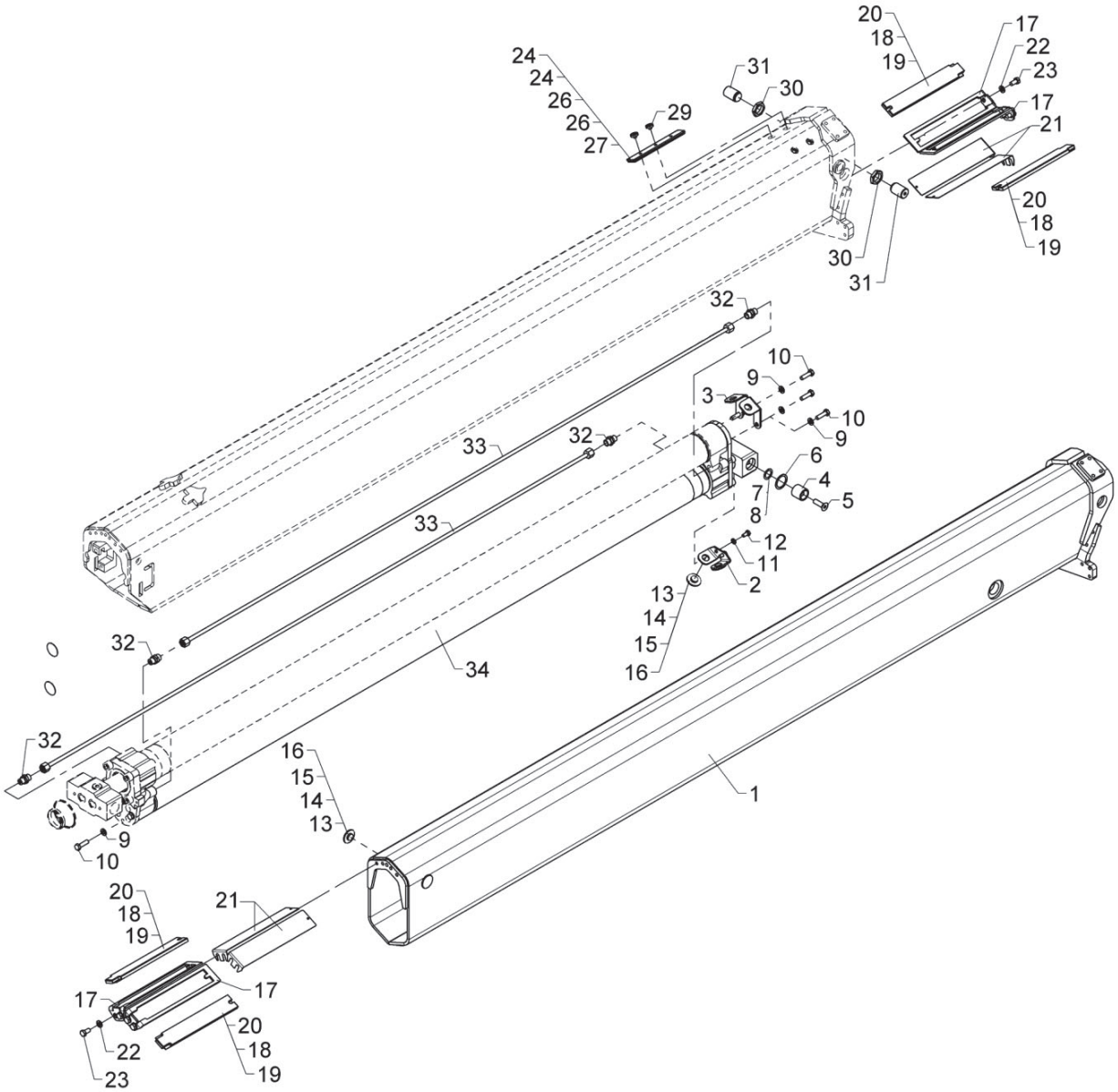

BOM obsolete

K8 extension, complete

559 03 170

From loader 1370001
To loader 1370044

Created 26-04-17
Modified 24-06-19

Pos	Qty.	Part no.	Description	Remarks
1	1	6400581	Extension VIII, K8 syst.	
2	1	6400749	Lower bracket for slide block	
3	1	6400748	Upper bracket for slide block	
4	2	6353502	Mounting plate	
5	2	32453	Countersunk screw	MK12 x 40
6	2	31767	Washer	ø35 x 45 x 1,0
7	2	30916	Washer	PS 22 x 32 x 1,0
8	2	31770	Washer	ø22 x 32 x 0,5
9	8	31565	Washer, stainless	10 mm
10	8	30157	Set screw	M10 x 35
11	2	31147	Face washer, 8 mm	
12	2	30131	Set screw, stainless	M8 x 16
13	6	6306312	Guide	5 + 3,5mm
14	6	6394631	Guide, 5 + 2.5 mm	5 + 2,5mm
15	6	6394632	Guide, 5 + 1.75 mm	5 + 1,75mm
16	6	6394636	Guide	5 + 1mm
17	4	6300443	Bracket for slide block	
18	4	68084	Slide block	10 mm
19	4	63527	Slide block	9 mm
20	4	63528	Slide block	8 mm
21	4	6300568	Shim	
22	8	31177	Washer	10 mm
23	8	30154	Set screw	M10 x 20
24	2	6360414	Spacer	4 mm
25	2	6294434	Spacer	5 mm
26	2	6193304	Spacer	6 mm
27	2	6235944	Spacer	7 mm
28	2	6193314	Spacer	8 mm
29	4	31864	Allen screw	M8 x 6
30	2	32399	Counter nut M30 x 2	M30 x 2
31	2	6398416	Slide block	
32	4	49698	Straight connection	24-SDS-S10-G3/8E
33	2	6398766	Pipe	
34	1	6398620	Extension cylinder VIII	

9520K-RCS, 9520OK-RCS

Internal ref. 6398480

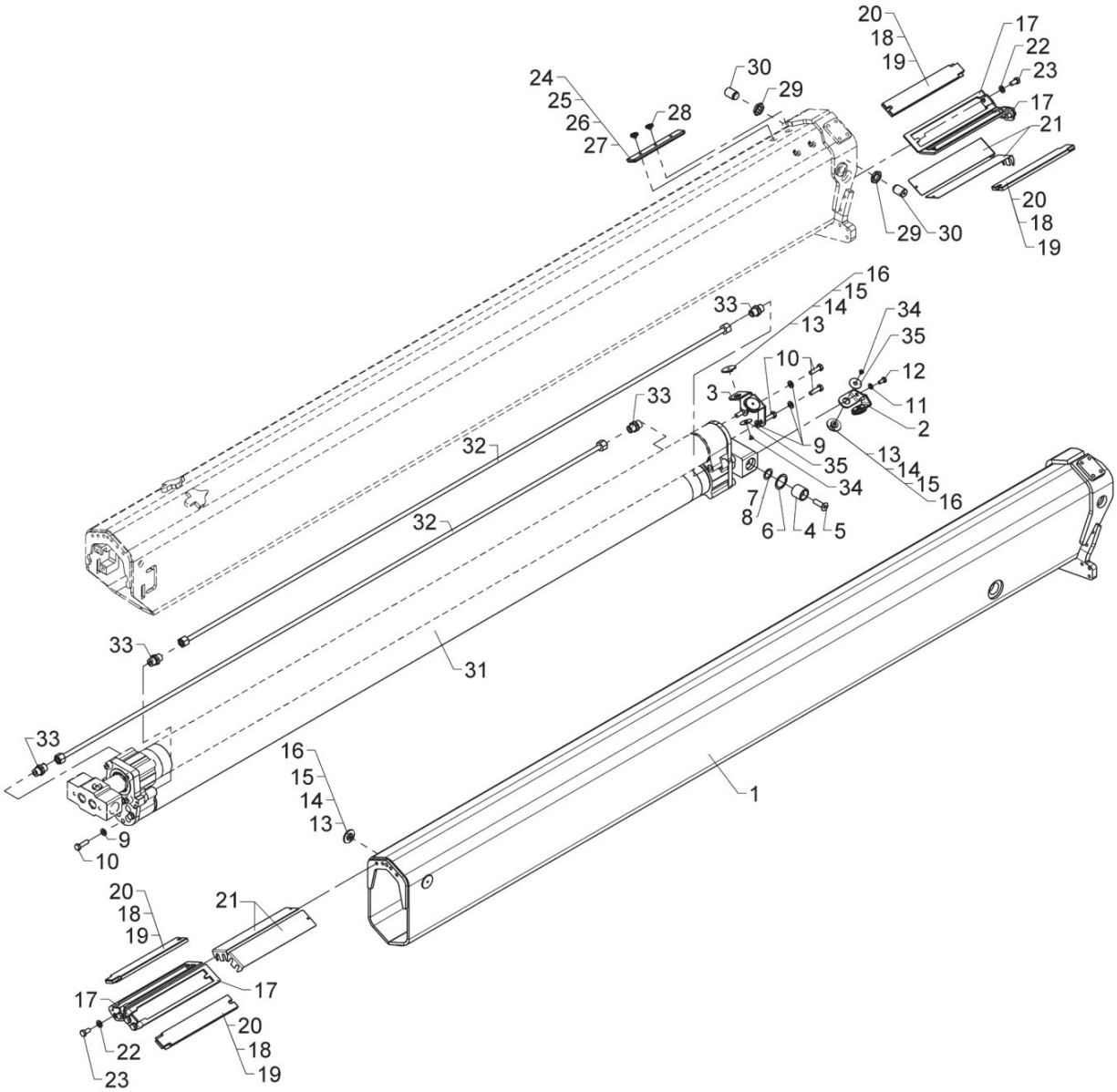

K8 extension, complete

Pos	Qty.	Part no.	Description	Remarks
1	1	6400581	Extension VIII, K8 syst.	
2	1	6400749	Lower bracket for slide block	
3	1	6400748	Upper bracket for slide block	
4	2	6353502	Mounting plate	
5	2	32453	Countersunk screw	MK12 x 40
6	2	31767	Washer	ø35 x 45 x 1,0
7	2	30916	Washer	PS 22 x 32 x 1,0
8	2	31770	Washer	ø22 x 32 x 0,5
9	8	31565	Washer, stainless	10 mm
10	8	30157	Set screw	M10 x 35
11	2	31147	Face washer, 8 mm	
12	2	30131	Set screw, stainless	M8 x 16
13	6	6306312	Guide	5 + 3,5mm
14	6	6394631	Guide, 5 + 2.5 mm	5 + 2,5mm
15	6	6394632	Guide, 5 + 1.75 mm	5 + 1,75mm
16	6	6394636	Guide	5 + 1mm
17	4	6300443	Bracket for slide block	
18	4	68084	Slide block	10 mm
19	4	63527	Slide block	9 mm
20	4	63528	Slide block	8 mm
21	4	6300568	Shim	
22	8	31177	Washer	10 mm
23	8	30154	Set screw	M10 x 20
24	2	6294434	Spacer	5 mm
25	2	6193304	Spacer	6 mm
26	2	6235944	Spacer	7 mm
27	2	6193314	Spacer	8 mm
28	4	31865	Torx screw M8 x 6 m	M8 x 6
29	2	32364	Counter nut	M24 x 2
30	2	6304409	Guide	
31	1	6398620	Extension cylinder VIII	
32	2	6398756	Pipe, in+out, K7	
33	4	25194	Straight connection	GES 12 SR 1-2-WD
34	4	30516	Countersunk screw	MK6 x 8
35	4	31141	Washer	10 mm

9520K-RCS, 9520OK-RCS

6308710
6308700
6300330
6308850 6300310
Internal ref. 6308920

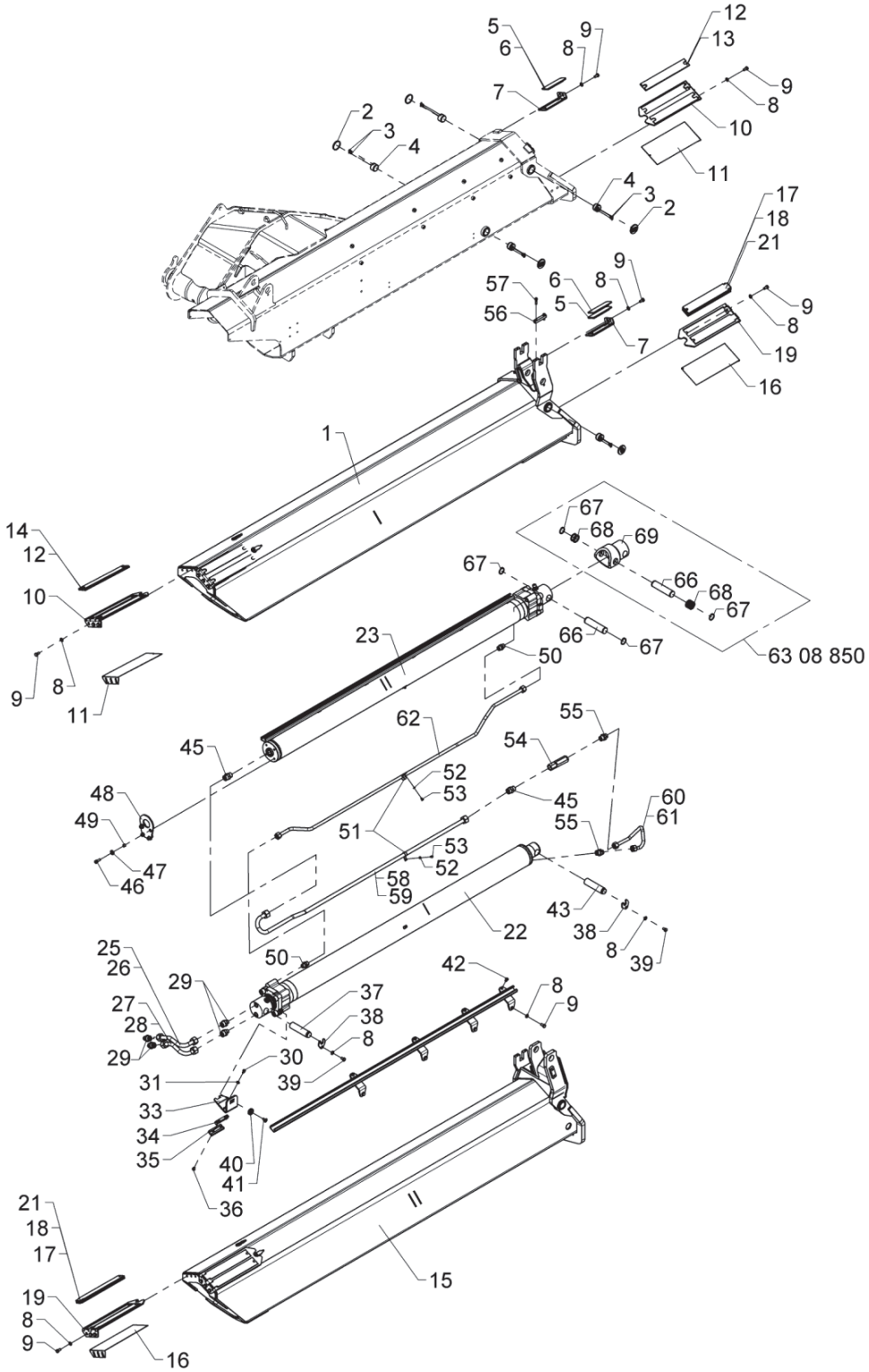

OK1-OK2 extension, complete

Pos	Qty.	Part no.	Description	Remarks
1	1	6300311	Jib extension I	7020OK
2	6	64362	Plastic plug	
3	12	30540	Countersunk screw	MK6 x 16
4	6	6300334	Guide	
5	4	63668	Slide block	6381524, 7 mm
6	4	63698	Slide block	6 mm
7	4	6300336	Bracket	
8	40	31177	Washer	10 mm
9	36	30154	Set screw	M10 x 20
10	4	6300335	Bracket	
11	4	6300531	Shim	
12	8	63685	Slide block	9 mm
13	8	63697	Slide block	8 mm
14	8	68083	Slide block	10 mm
15	1	6300331	Jib extension II	7020OK
16	4	6300535	Shim	
17	8	63526	Slide block	8 mm
18	8	63525	Slide block	9 mm
19	4	6300375	Bracket for slide block	
20	6	64366	Plug	
21	8	68085	Slide block	10 mm
22	1	6300400	Ext. cyl. I C110/80 h x 1850	
23	1	6300410	Extension cylinder II	
24	1	6308700	Hydr. system, extension cyl. I	
25	1	6300701	Pipe	
26	1	6301701	Pipe	MEWP
27	1	6300702	Pipe	
28	1	6301702	Pipe	MEWP
29	4	26221	Connection	P-GEV 20 SR 1/2-WD
30	2	30131	Set screw, stainless	M8 x 16
31	2	31147	Face washer, 8 mm	
32	1	6300354	Guide rail, I-K5	
33	1	6300337	Bracket, C-I	
34	1	6300338	Spacer	
35	1	63686	Guide shoe	
36	2	30543	Countersunk screw	MK8 x 16
37	1	6302276	Pin	
38	2	6302277	Lock plate	
39	2	31510	Set screw, stainless	M10 x 16
40	1	6300339	Disc	
41	1	30545	Countersunk screw	MK10 x 20

9520K-RCS, 9520OK-RCS

6308710
6308700
6300330
6308850 6300310
Internal ref. 6308920

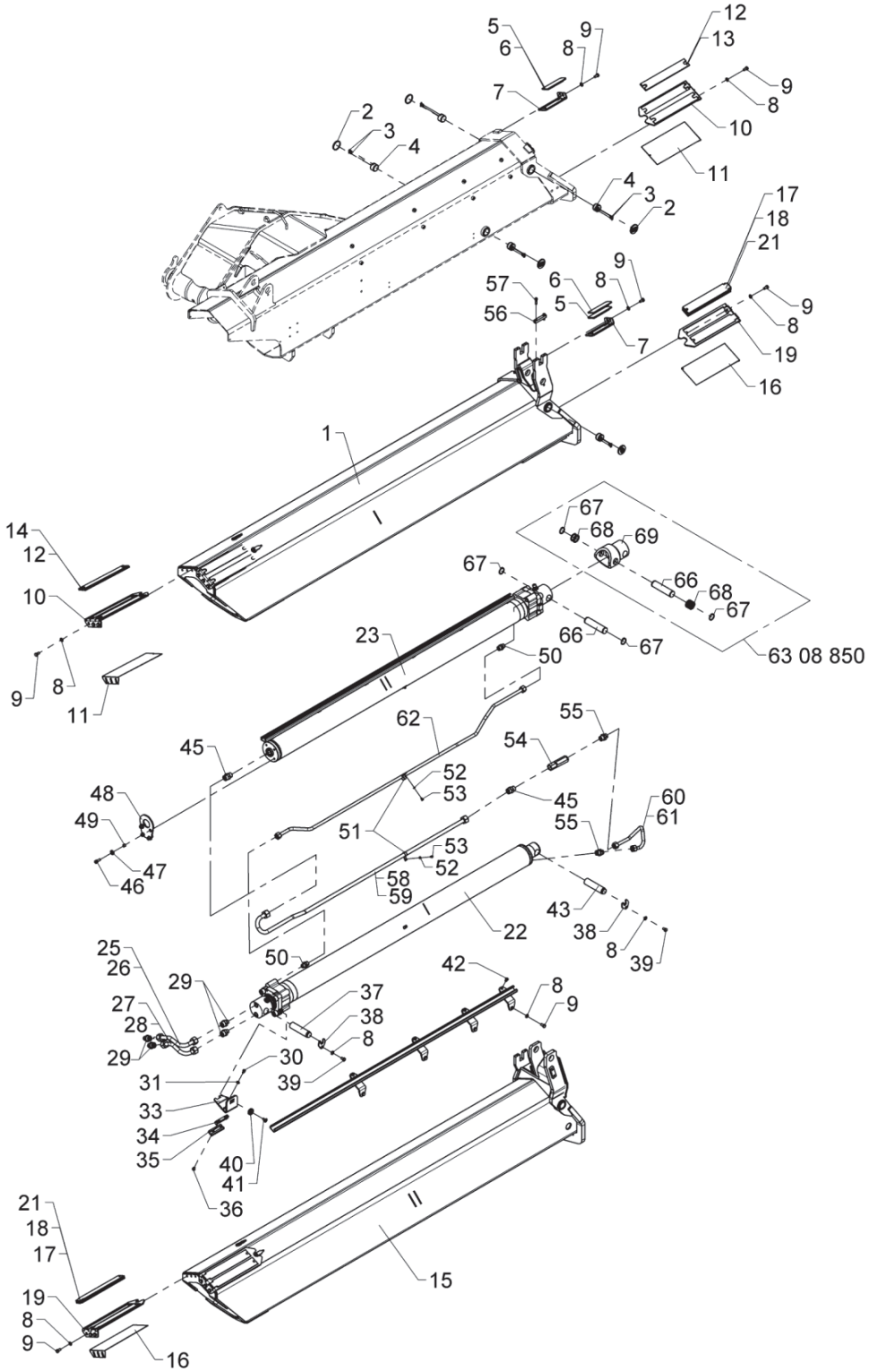

OK1-OK2 extension, complete

Pos	Qty.	Part no.	Description	Remarks
42	4	32423	Sockethead screw	MC10 x 16
43	1	6302274	Pin	
44	1	6308710	Hydr. system, extension cyl.II	
45	2	26197	Connection	P-GEV 20 SR-WD
46	4	30453	Screw	MC10 x 25
47	2	31756	Washer	10 mm
48	1	6300348	Bracket, C-II	
49	2	6302369	Spacer	
50	2	26334	Connection	P-GEV 16 SR-WD
51	2	31449	Clamp	
52	2	32302	Face washer, stainless	6 mm
53	2	30110	Set screw, stainless	M6 x 10
54	1	59076	Counter-balance valve	
55	2	26390	Connection	P-GEV 16 SR 3/4-WD
56	2	6302279	Lock plate	
57	4	30442	Screw	MC8 x 30
58	1	6300711	Pipe	
59	1	6301711	Pipe	MEWP
60	1	6300712	Pipe	
61	1	6301712	Pipe	MEWP
62	1	6300713	Pipe	
63	2	25103	Plug	VS-R-1/2 WD
64	1	26103	Pressure-gauge connect.	
65	1	25180	Reducing connection	RED-R 1/2-WD/R 1/4
66	2	6193254	Pin	
67	4	33119	Circlip	36U
68	5	33257	Supporting washer	SS 36 x 45 x 2,5
69	1	6300377	Adapter	K2 + K3

9520K-RCS, 9520OK-RCS

6308860
6308720
6300350
Internal ref. 6308930

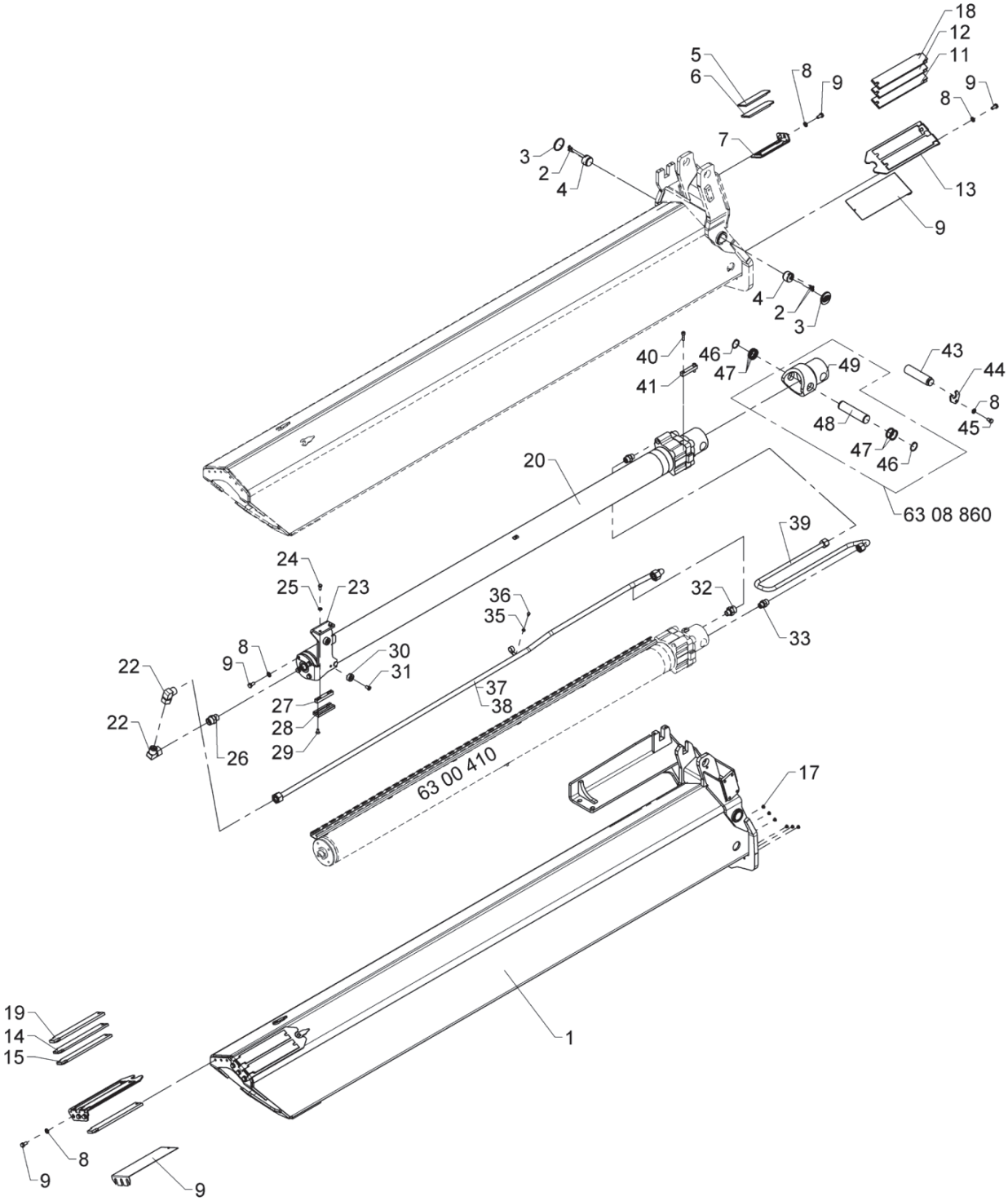

OK3 extension, complete

Pos	Qty.	Part no.	Description	Remarks
1	1	6300351	Jib extension III	7020OK
	1	6302351	Jib extension III	9520OK
2	4	30540	Countersunk screw	MK6 x 16
3	2	64362	Plastic plug	
4	2	6300334	Guide	
5	2	63698	Slide block	6 mm
6	2	63668	Slide block	6381524, 7 mm
7	2	6300336	Bracket	
8	21	31177	Washer	10 mm
9	20	30154	Set screw	M10 x 20
9	4	6300532	Shim	
11	4	63588	Slide block	8 mm
12	4	63589	Slide block	9 mm
13	2	6300379	Bracket for slide block	
14	4	63528	Slide block	8 mm
15	4	63527	Slide block	9 mm
16	2	6300394	Bracket for slide block	
17	6	64366	Plug	
18	4	63590	Slide block	10 mm
19	4	68084	Slide block	10 mm
20	1	6300420	Ext. cyl. III C100/70h x 2000	
21	1	6308720	Hydr. system,extension cyl.III	
22	2	26198	Elbow connection	EWVD 20 S-SV
23	1	6300349	Bracket for guide shoe, C-III	
24	2	30131	Set screw, stainless	M8 x 16
25	2	31147	Face washer, 8 mm	
26	1	26197	Connection	P-GEV 20 SR-WD
27	1	6300338	Spacer	
28	1	63686	Guide shoe	
29	2	30543	Countersunk screw	MK8 x 16
30	2	63503	Bushing	
31	2	32423	Sockethead screw	MC10 x 16
32	1	26221	Connection	P-GEV 20 SR 1/2-WD
33	2	26334	Connection	P-GEV 16 SR-WD
34	1	31449	Clamp	
35	1	32302	Face washer, stainless	6 mm
36	1	30110	Set screw, stainless	M6 x 10
37	1	6300721	Pipe	
38	1	6301721	Pipe	MEWP
39	1	6300722	Pipe	
40	4	30442	Screw	MC8 x 30

9520K-RCS, 9520OK-RCS

6308860
6308720
6300350
Internal ref. 6308930

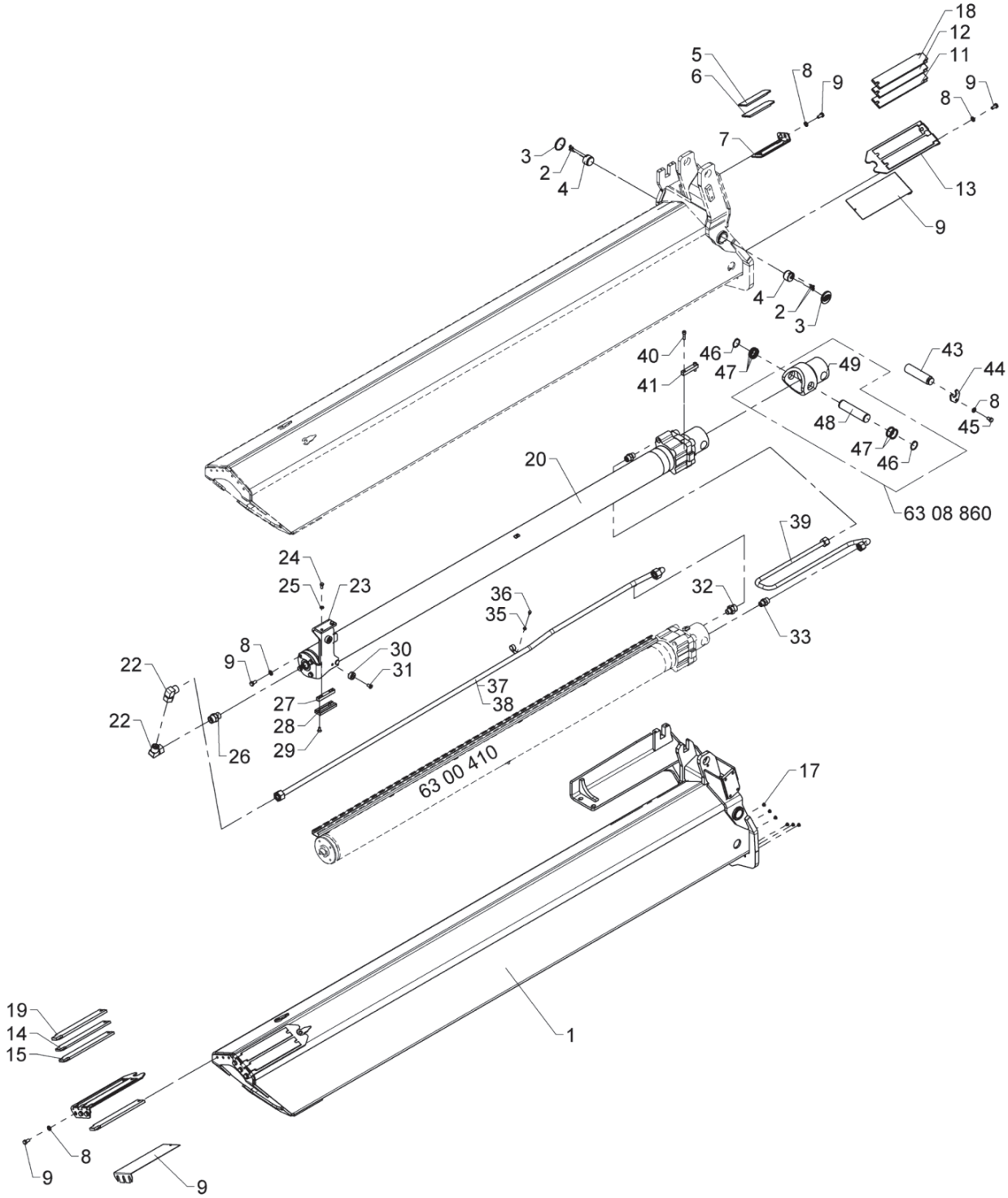

OK3 extension, complete

Pos	Qty.	Part no.	Description	Remarks
41	2	6302279	Lock plate	
42	2	25103	Plug	VS-R-1/2 WD
43	1	6302276	Pin	
44	1	6302277	Lock plate	
45	1	31510	Set screw, stainless	M10 x 16
46	2	33119	Circlip	36U
47	5	33257	Supporting washer	SS 36 x 45 x 2,5
48	1	6193254	Pin	
49	1	6300377	Adapter	K2 + K3

9520K-RCS, 9520OK-RCS

6308730
6300370
Internal ref. 6308940

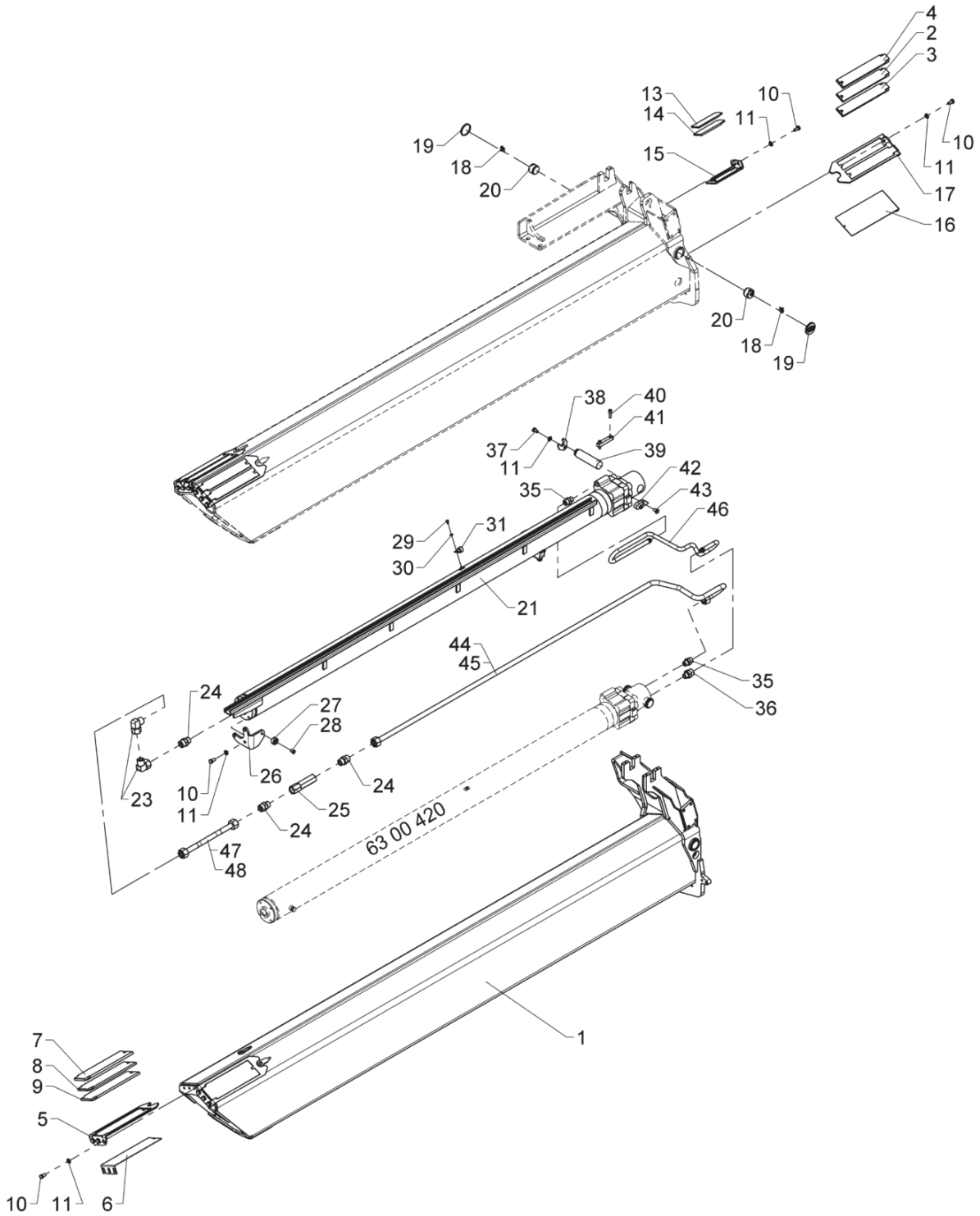

OK4 extension, complete

Pos	Qty.	Part no.	Description	Remarks
1	1	6300685	Jib extension IV	7020OK
	1	6302685	Jib extension IV	9520OK
2	8	63528	Slide block	8 mm
3	8	63527	Slide block	9 mm
4	8	68084	Slide block	10 mm
5	2	6300369	Bracket for slide block	
6	2	6300533	Shim	
7	2	68082	Slide block	10 mm
8	2	63521	Slide block	8 mm
9	2	63696	Slide block	9 mm
10	25	30154	Set screw	M10 x 20
11	28	31177	Washer	10 mm
12	9	64366	Plug	
13	2	63698	Slide block	6 mm
14	2	63668	Slide block	6381524, 7 mm
15	2	6300336	Bracket	
16	4	6300532	Shim	
17	4	6300394	Bracket for slide block	
18	4	30540	Countersunk screw	MK6 x 16
19	2	64362	Plastic plug	
20	2	6300334	Guide	
21	1	6302420	Ext. cyl. IV C100/70h x 2100	
22	1	6308730	Hydr. system, extension cyl.IV	
23	2	26198	Elbow connection	EWVD 20 S-SV
24	3	26197	Connection	P-GEV 20 SR-WD
25	1	59076	Counter-balance valve	
26	1	6300457	Guide	
27	1	63503	Bushing	
28	1	32423	Sockethead screw	MC10 x 16
29	1	30110	Set screw, stainless	M6 x 10
30	1	32302	Face washer, stainless	6 mm
31	1	31449	Clamp	
32	1	6302389	Shim	
33	2	6302369	Spacer	
34	2	30652	Screw	M10 x 25
35	2	26334	Connection	P-GEV 16 SR-WD
36	1	26221	Connection	P-GEV 20 SR 1/2-WD
37	1	31510	Set screw, stainless	M10 x 16
38	1	6302277	Lock plate	
39	1	6302276	Pin	
40	2	30442	Screw	MC8 x 30

9520K-RCS, 9520OK-RCS

6308730
6300370
Internal ref. 6308940

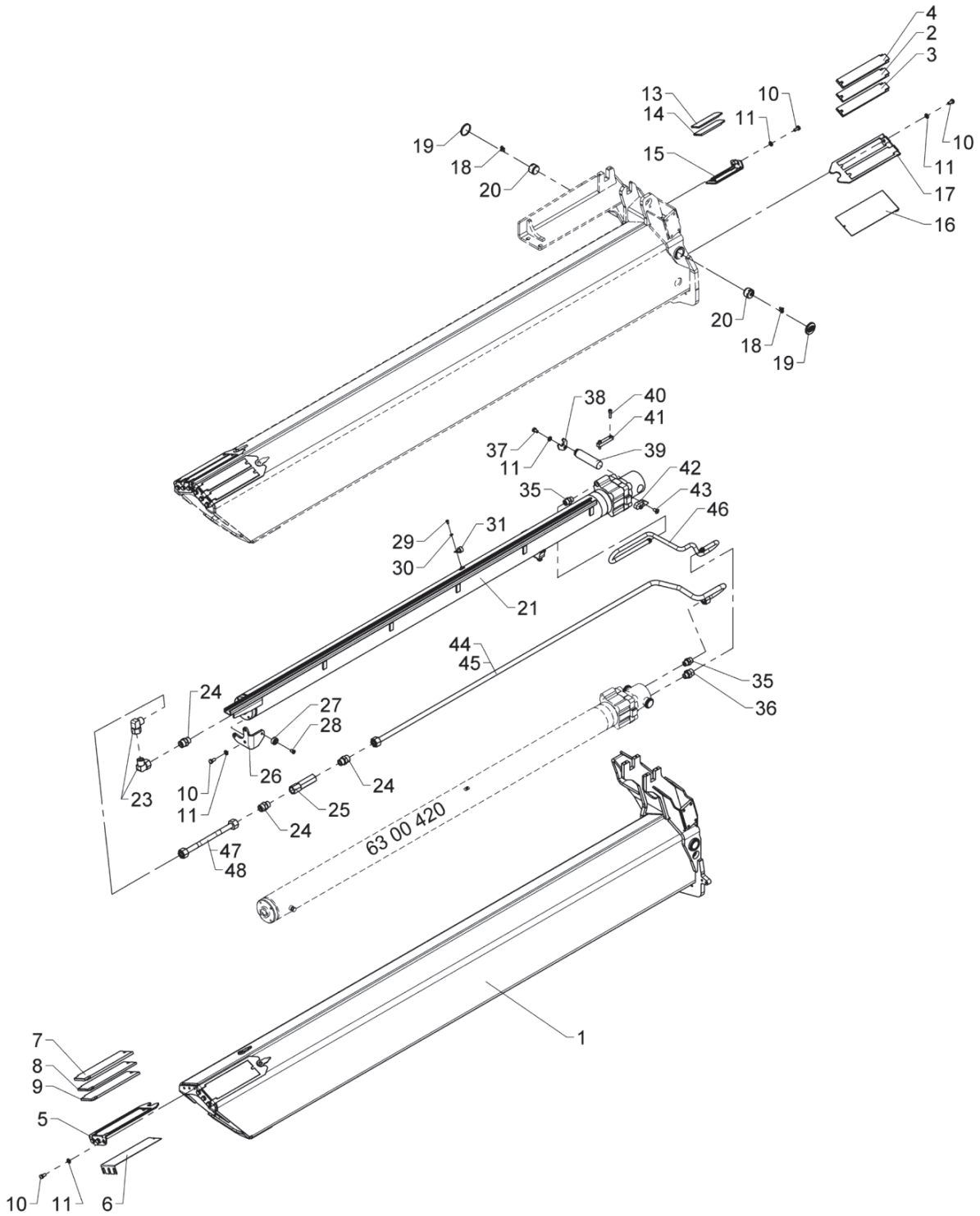

OK4 extension, complete

Pos	Qty.	Part no.	Description	Remarks
41	1	6302279	Lock plate	
42	1	6302275	Lock plate	
43	2	30545	Countersunk screw	MK10 x 20
44	1	6300731	Pipe	
45	1	6301731	Pipe	MEWP
46	1	6300732	Pipe	
47	1	6300733	Pipe	
48	1	6301733	Pipe	MEWP
49	2	25103	Plug	VS-R-1/2 WD

9520K-RCS, 9520OK-RCS

6308740
6300390
Internal ref. 6308950

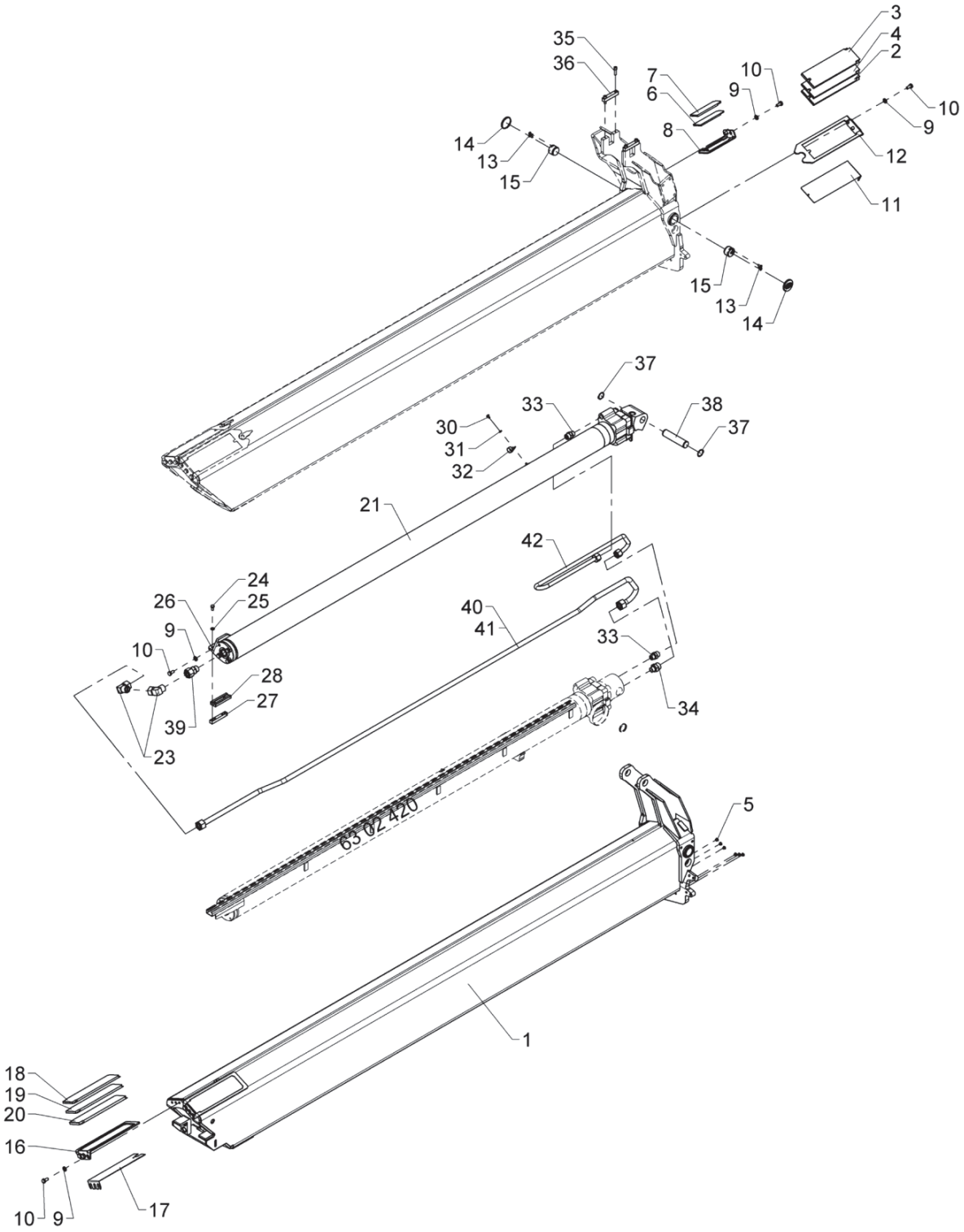

OK5 extension, complete

Pos	Qty.	Part no.	Description	Remarks
1	1	6300691	Jib extension V	7020OK
	1	6302691	Jib extension V	9520OK
2	2	63521	Slide block	8 mm
3	2	68082	Slide block	10 mm
4	2	63696	Slide block	9 mm
5	8	64366	Plug	
6	2	63698	Slide block	6 mm
7	2	63668	Slide block	6381524, 7 mm
8	2	6300336	Bracket	
9	20	31177	Washer	10 mm
10	20	30154	Set screw	M10 x 20
11	2	6300533	Shim	
12	2	6300369	Bracket for slide block	
13	4	30540	Countersunk screw	MK6 x 16
14	2	64362	Plastic plug	
15	2	6300334	Guide	
16	2	6300366	Bracket for slide block	
17	2	6300534	Shim	
18	2	63582	Slide block	8 mm
19	2	63583	Slide block	9 mm
20	2	63584	Slide block	10 mm
21	1	6302350	Ext. cyl. V C90/60h x 2175	
22	1	6308740	Hydr. system, extension cyl. V	
23	2	26198	Elbow connection	EWVD 20 S-SV
24	2	30131	Set screw, stainless	M8 x 16
25	2	31147	Face washer, 8 mm	
26	1	6300456	Bracket for guide shoe, C-V	
27	1	6300338	Spacer	
28	1	63686	Guide shoe	
29	2	30543	Countersunk screw	MK8 x 16
30	1	30110	Set screw, stainless	M6 x 10
31	1	32302	Face washer, stainless	6 mm
32	1	31449	Clamp	
33	2	26334	Connection	P-GEV 16 SR-WD
34	1	26221	Connection	P-GEV 20 SR 1/2-WD
35	4	30442	Screw	MC8 x 30
36	2	6302279	Lock plate	
37	2	33115	Circlip	30U
38	1	6302278	Pin	
39	1	26358	Connection	EGESD 20 SR-WD
40	1	6300745	Pipe	

9520K-RCS, 9520OK-RCS

6308740
6300390
Internal ref. 6308950

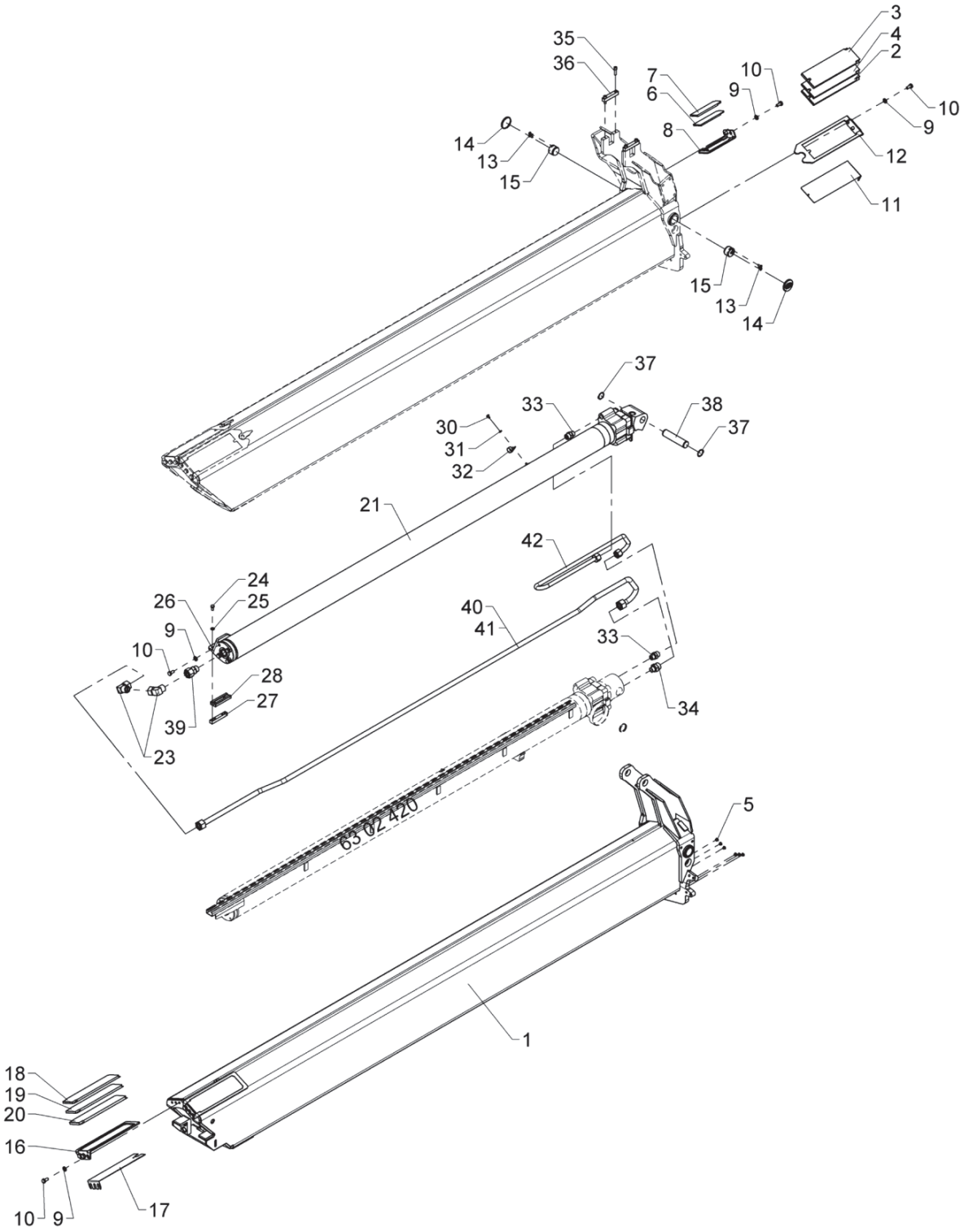

OK5 extension, complete

559 03 230

From loader 1370001
To loader

Created 02-06-17
Modified

Pos	Qty.	Part no.	Description	Remarks
41	1	6301745	Pipe	MEWP
42	1	6302746	Pipe	

9520K-RCS, 9520OK-RCS

6308750
6308560
Internal ref. 6308960

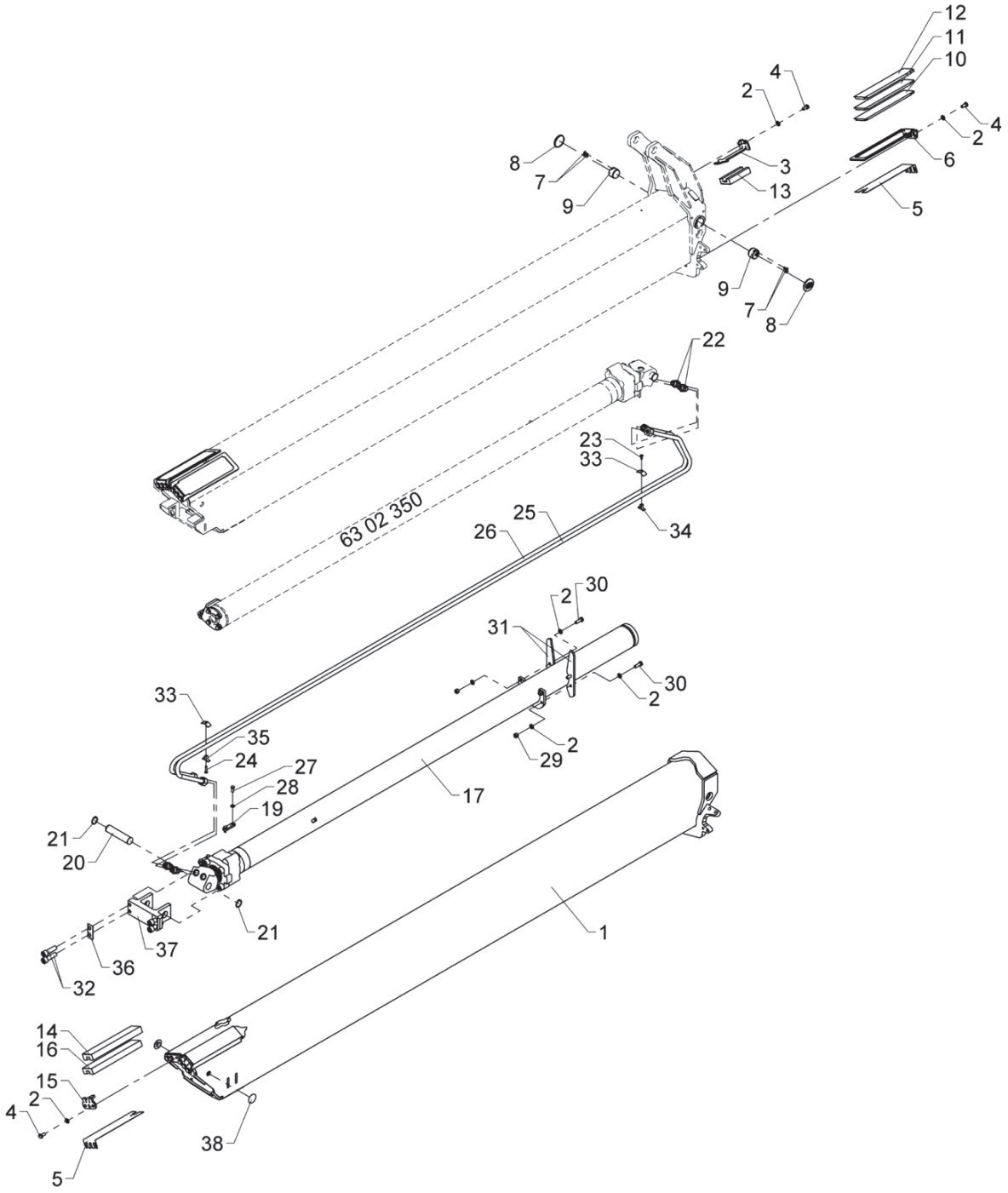

OK6 extension, complete

Pos	Qty.	Part no.	Description	Remarks
1	1	6300911	Jib extension VI	7020OK
	1	6302911	Jib extension VI	9520OK
2	30	31177	Washer	10 mm
3	2	6302636	Bracket for slide block	
4	22	30154	Set screw	M10 x 20
5	6	6300534	Shim	
6	4	6300366	Bracket for slide block	
7	4	30540	Countersunk screw	MK6 x 16
8	2	64362	Plastic plug	
9	2	6300334	Guide	
10	4	63582	Slide block	8 mm
11	4	63583	Slide block	9 mm
12	4	63584	Slide block	10 mm
13	2	63401	Slide block	24 mm
14	2	68081	Slide block	27 mm
15	2	6302635	Bracket for slide block	
16	2	63402	Slide block	26 mm
17	1	6302450	Ext. cyl. VI C90/60s x 2250	
18	1	6308750	Hydr. system, extension cyl.VI	
19	2	6232964	Stowing pin	
20	1	6302278	Pin	
21	2	33115	Circlip	30U
22	4	26334	Connection	P-GEV 16 SR-WD
23	1	32201	Countersunk screw	MK6 x 16
24	1	30585	Countersunk screw	MK6 x 30
25	1	6300748	Pipe	
26	1	6300749	Pipe	
27	4	30132	Set screw, stainless	
28	4	31147	Face washer, 8 mm	
29	4	30888	Lock nut	
30	4	30156	Set screw, stainless	M10 x 30
31	2	6300459	Support plate	
32	4	32420	Sockethead screw	MC16 x 55
33	2	6302639	Base plate	
34	1	6300928	Clamp	
35	1	6300704	Clamp	
36	2	6302638	Base plate	
37	1	6302637	Adapter	
38	2	6381484	Guide	

9520K-RCS, 9520OK-RCS

Internal ref. 6395570

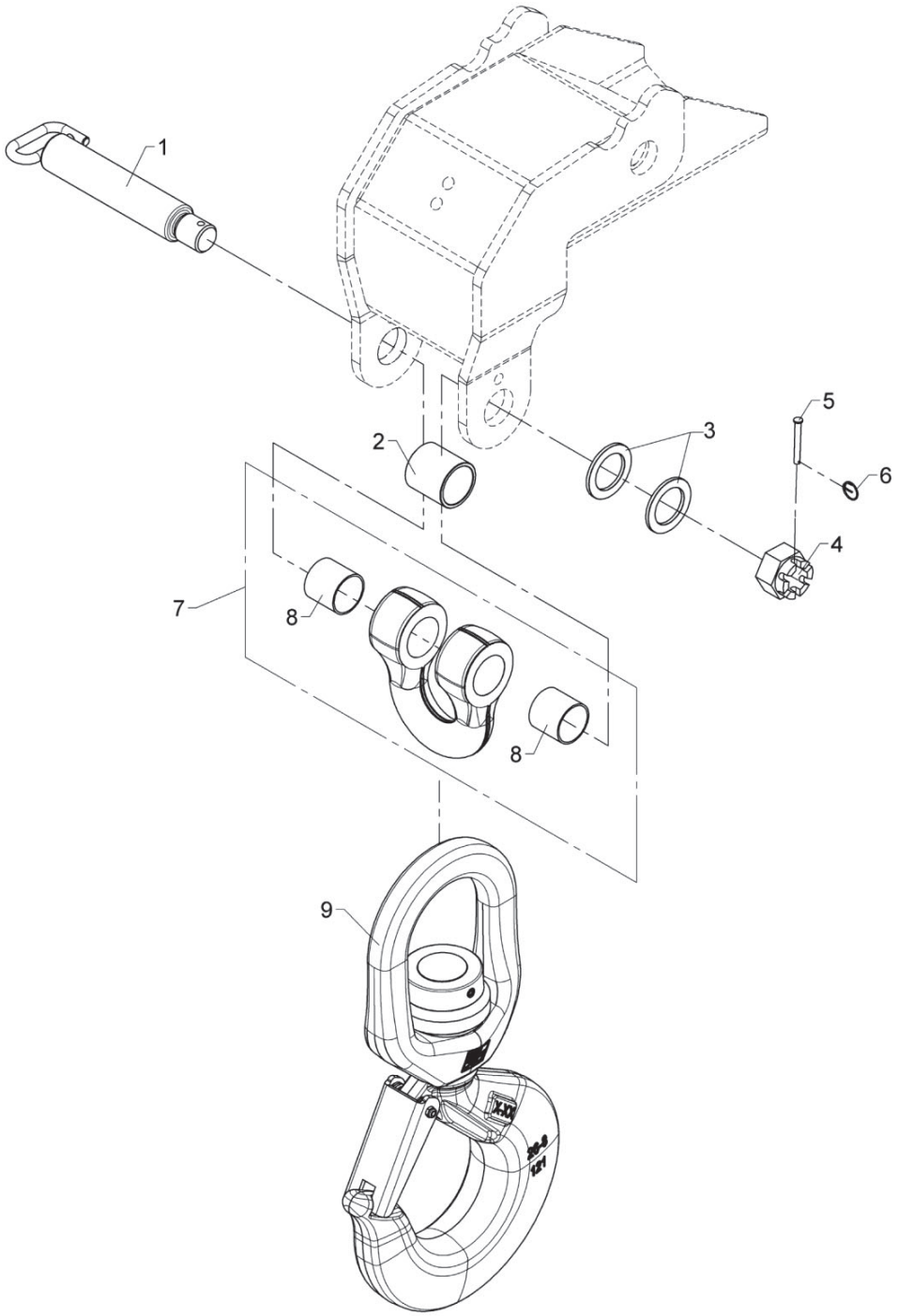

Hook suspension 22 t

Pos	Qty.	Part no.	Description	Remarks
1	1	6300387	Pin for suspension	
2	1	68095	Spacer, ø50 / 42 x 50	ø50 / 42 x 50
3	2	6193554	Distance ring	
4	1	30839	Nut	M30
5	1	31279	Cotter bolt	ø6 x 50
6	1	33458	Lock ring	
7	1	6395561	Shackle 22.5 t	22,5 t
8	2	23343	Bushing	ø40/44 x 40
9	1	66307	Load hook 22 t	

9520K-RCS, 9520OK-RCS

Internal ref. 6397540

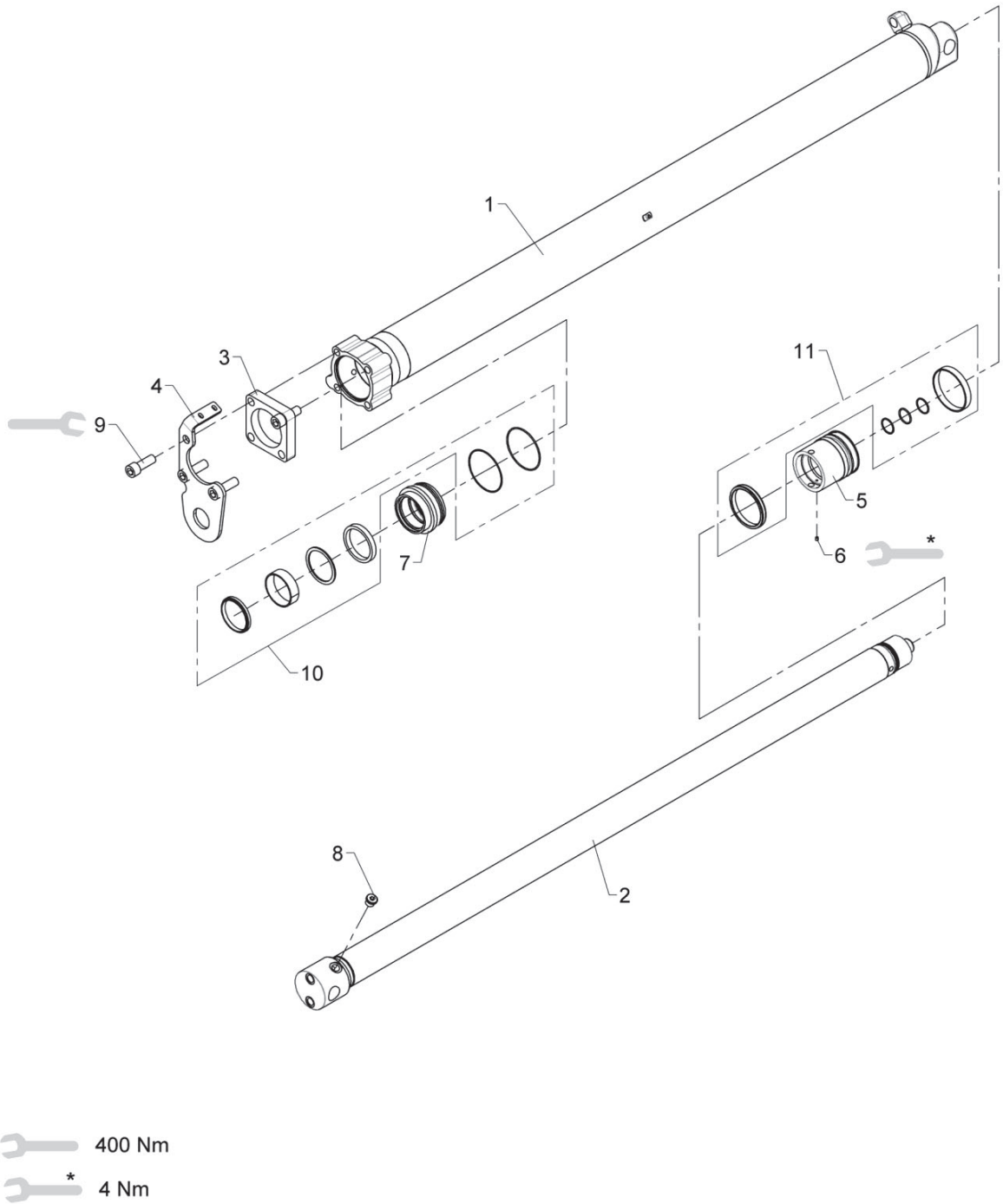

Extension cylinder I - C110/Ø80 x 1700h

559 03 300

From loader 1370001
To loader

Created 06-10-16
Modified

Pos	Qty.	Part no.	Description	Remarks
1	1	6397545	Cylinder tube C1	
2	1	6397541	Piston rod C1	
3	1	6397544	Flange	
4	1	6397558	Bracket for slide block	
5	1	6300406	Piston	
6	1	30903	Screw	MSP6 x 8
7	1	6302407	Guide	
8	1	25103	Plug	VS-R-1/2 WD
9	4	32449	Sockethead screw	MC20 x 55
10	1	22139	Seal kit	
11	1	6893600	Seal kit, C110/80h	

9520K-RCS, 9520OK-RCS

Internal ref. 6397560

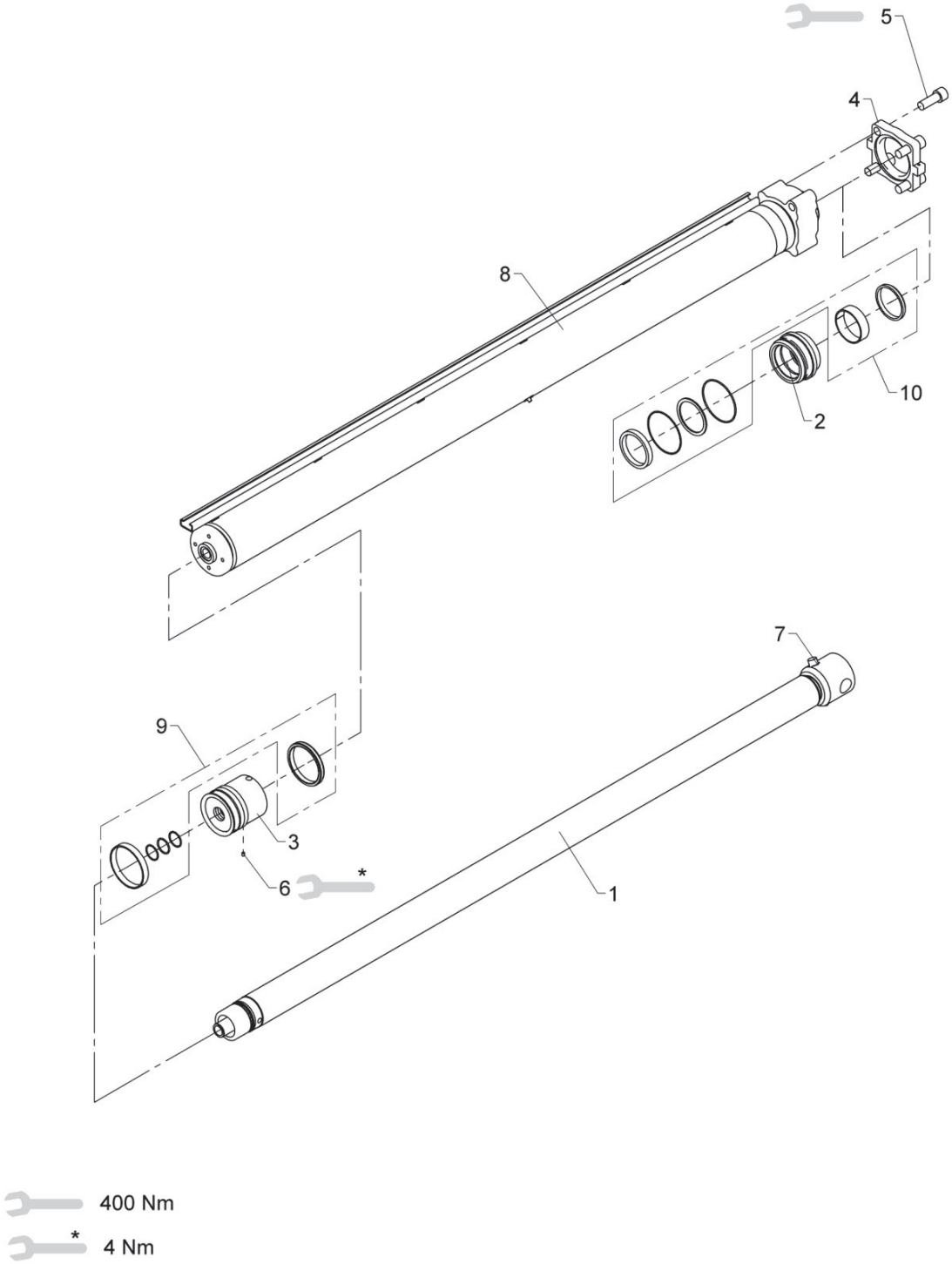

Extension cylinder II, C110/Ø80 x 1767h

Pos	Qty.	Part no.	Description	Remarks
1	1	6397561	Piston rod C2	
2	1	6302407	Guide	
3	1	6300406	Piston	
4	1	6397564	Flange	
5	4	32449	Sockethead screw	MC20 x 55
6	1	30903	Screw	MSP6 x 8
7	1	25103	Plug	VS-R-1/2 WD
8	1	6397565	Cylinder tube C2	
9	1	6893600	Seal kit, C110/80h	Pos. 1, 2, 4, 5
10	1	22139	Seal kit	

9520K-RCS, 9520OK-RCS

Internal ref. 6397570

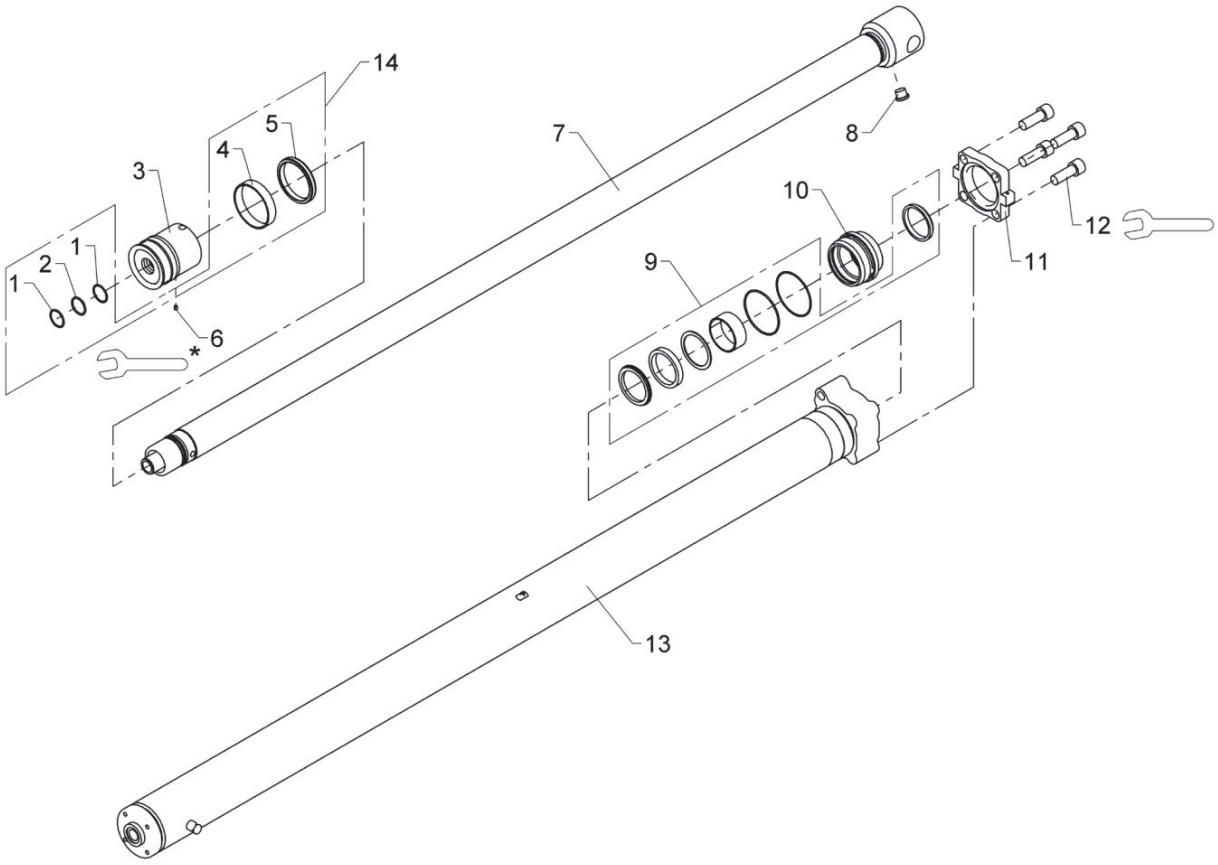

*4 Nm

400 Nm

559 03 320

Extension cylinder III - C100/Ø70 x 1900h

From loader 1370001
To loader
Created 06-10-16
Modified

Pos	Qty.	Part no.	Description	Remarks
1	2	20705	Back ring	STR 35 x 40 x 1,3
2	1	20177	O-ring	OR 34,2 x 3
3	1	6300424	Piston	
4	1	22142	Guide ring	PWR 100/94 x 20 - PF
5	1	22141	Seal	GHT 100/85 x 12,5
6	1	30903	Screw	MSP6 x 8
7	1	6397571	Piston rod C3	
8	1	25103	Plug	VS-R-1/2 WD
9	1	22140	Seal kit	
10	1	6300425	Guide	
11	1	6397574	Flange C3	
12	4	32449	Sockethead screw	MC20 x 55
13	1	6397575	Cylinder tube C3	
14	1	6893610	Seal kit, C100/70h	Pos. 1, 2, 4, 5

9520K-RCS, 9520OK-RCS

Internal ref. 6397580

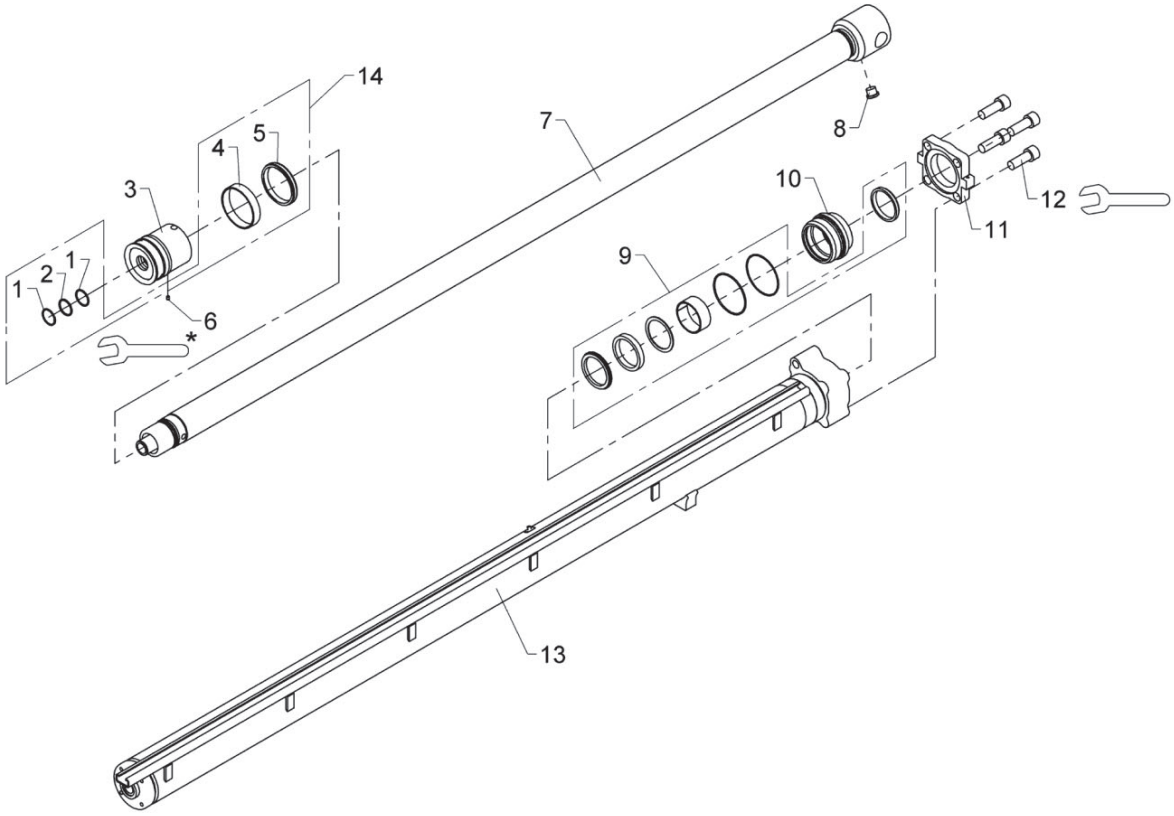

* 4 Nm

400 Nm

Extension cylinder IV, C100/Ø70 x 2000h

559 03 330

From loader 1370001
To loader

Created 07-10-16
Modified

Pos	Qty.	Part no.	Description	Remarks
1	2	20705	Back ring	STR 35 x 40 x 1,3
2	1	20177	O-ring	OR 34,2 x 3
3	1	6300424	Piston	
4	1	22142	Guide ring	PWR 100/94 x 20 - PF
5	1	22141	Seal	GHT 100/85 x 12,5
6	1	30903	Screw	MSP6 x 8
7	1	6397581	Piston rod C4	
8	1	25103	Plug	VS-R-1/2 WD
9	1	22140	Seal kit	
10	1	6300425	Guide	
11	1	6397574	Flange C3	
12	4	32449	Sockethead screw	MC20 x 55
13	1	6397585	Cylinder tube C4	
14	1	6893610	Seal kit, C100/70h	Pos. 1, 2, 4, 5

9520K-RCS, 9520OK-RCS

Internal ref. 6397590

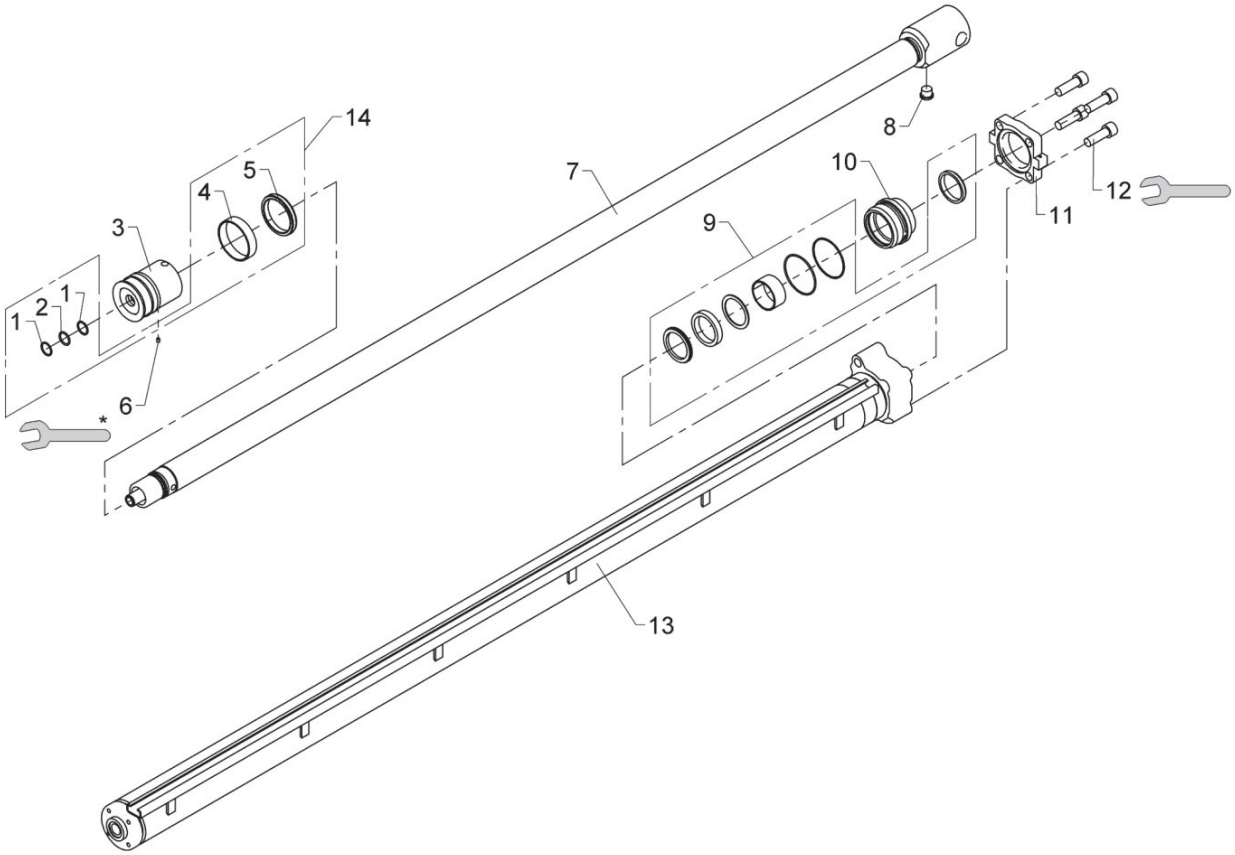

* 4 Nm

400 Nm

Extension cylinder V, C90/Ø60 x 2050h

559 03 340

From loader 1370001
To loader

Created 10-10-16
Modified

Pos	Qty.	Part no.	Description	Remarks
1	2	20706	Back ring	STR 25 x 30 x 1,3
2	1	20174	O-ring	OR 24,2 x 3
3	1	6300477	Piston	
4	1	22145	Guide ring	PWR 90/84 x 20 - PF
5	1	22144	Seal	GHT 90/75 x 12,5
6	1	30903	Screw	MSP6 x 8
7	1	6397591	Piston rod C5	
8	1	25103	Plug	VS-R-1/2 WD
9	1	22143	Seal kit	
10	1	6300441	Guide	
11	1	6397594	Flange C5	
12	4	32450	Screw	MC18 x 55
13	1	6397595	Cylinder tube C5	
14	1	6893630	Seal kit for piston, C90/60h	Pos. 1, 2, 4, 5

9520K-RCS, 9520OK-RCS

Internal ref. 6397600

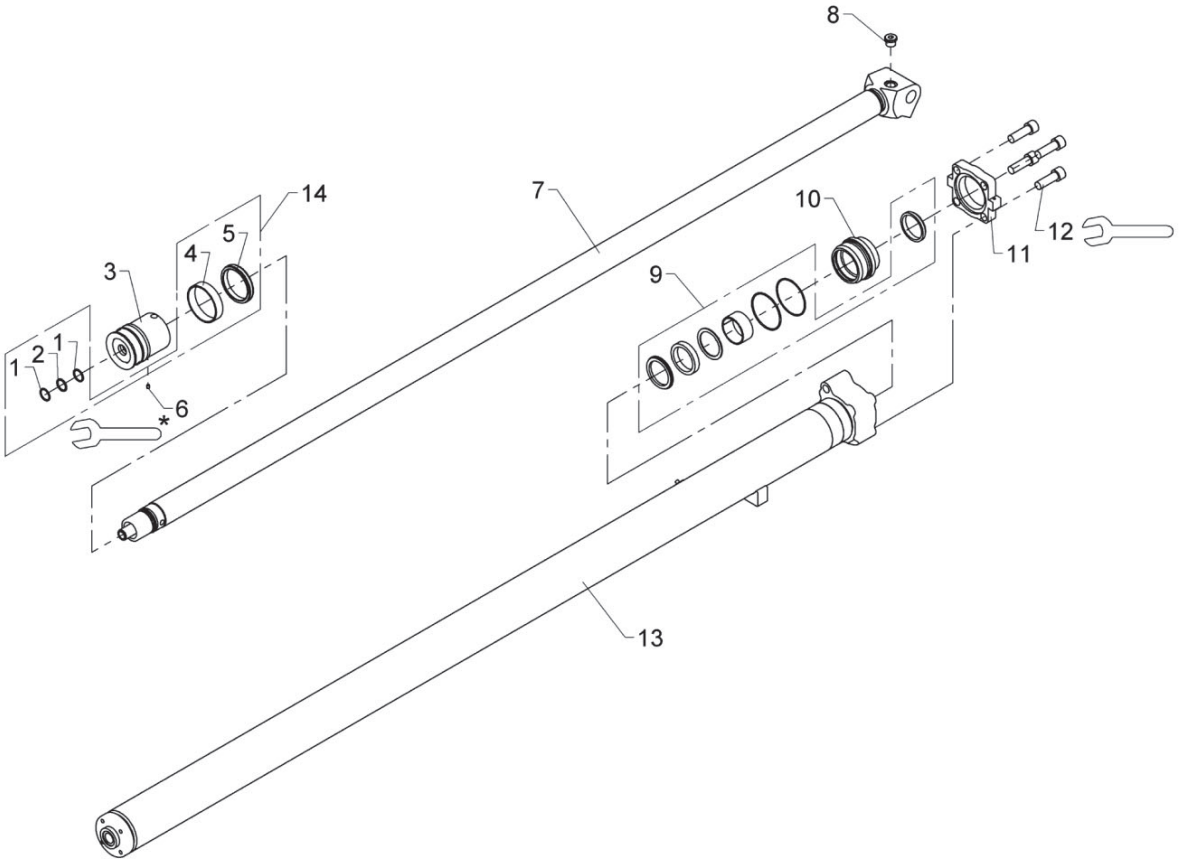

* 4 Nm

400 Nm

Extension cylinder VI - C90/Ø60 x 2150h

559 03 350

From loader 1370001
To loader
Created 11-10-16
Modified

Pos	Qty.	Part no.	Description	Remarks
1	2	20706	Back ring	STR 25 x 30 x 1,3
2	1	20174	O-ring	OR 24,2 x 3
3	1	6300477	Piston	
4	1	22145	Guide ring	PWR 90/84 x 20 - PF
5	1	22144	Seal	GHT 90/75 x 12,5
6	1	30903	Screw	MSP6 x 8
7	1	6397601	Piston rod C6	
8	1	25103	Plug	VS-R-1/2 WD
9	1	22143	Seal kit	
10	1	6300441	Guide	
11	1	6397594	Flange C5	
12	4	32450	Screw	MC18 x 55
13	1	6397605	Cylinder tube C5	
14	1	6893630	Seal kit for piston, C90/60h	Pos. 1, 2, 4, 5

9520K-RCS, 9520OK-RCS

Internal ref. 6398610

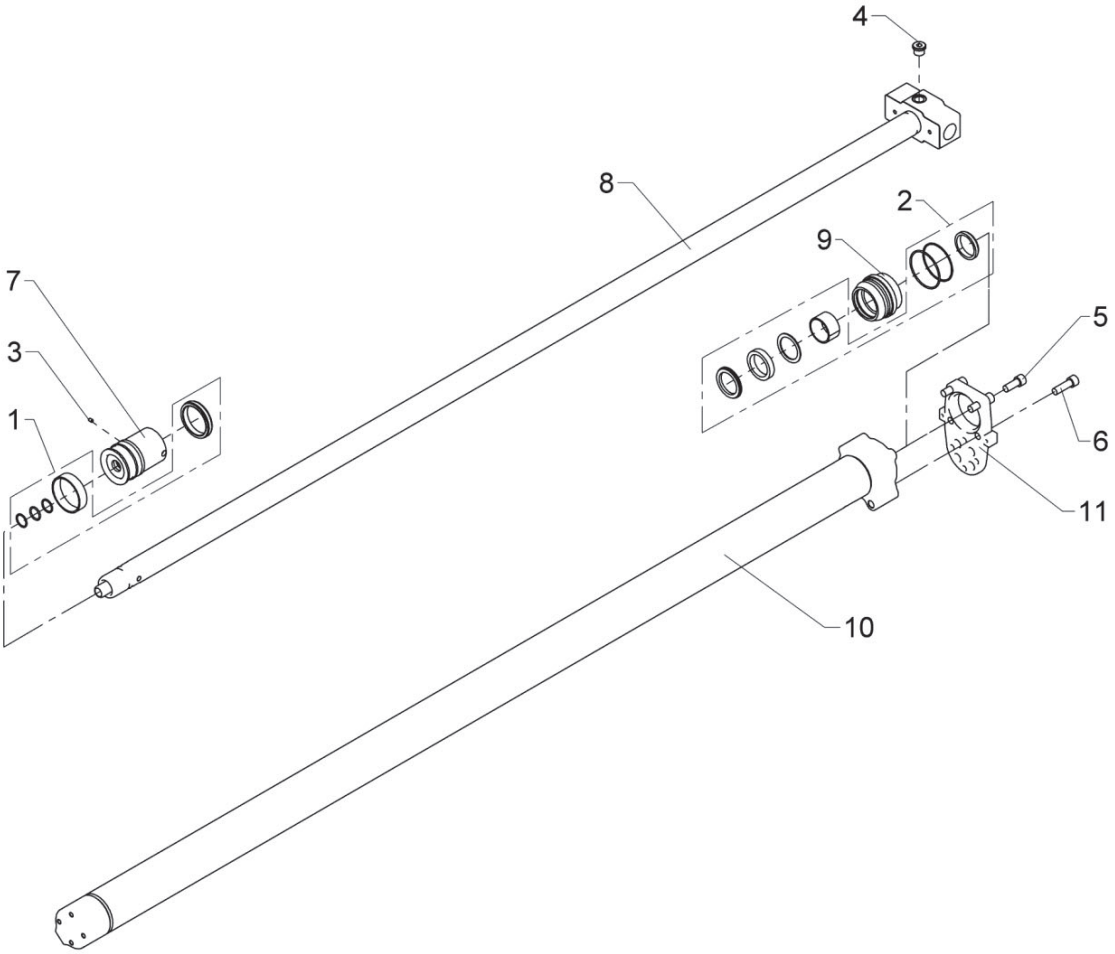

559 03 360

Extension cylinder VII C70/Ø45 x 2102h

From loader 1370001
To loader

Created 28-02-17
Modified 06-05-20

Pos	Qty.	Part no.	Description	Remarks
1	1	6893640	Seal kit C80/50h	Pos. 1, 2, 5, 6
2	1	22150	Seal kit	
3	1	30903	Screw	MSP6 x 8
4	1	25103	Plug	VS-R-1/2 WD
5	1	30482	Screw	MC14 x 35
6	3	32487	Screw	MC14 x 45
7	1	6300489	Piston	
8	1	6398611	Piston rod C7	
9	1	6300491	Guide	
10	1	6398615	Cylinder tube C7	
11	1	6398619	Mounting flange	

9520K-RCS, 9520OK-RCS

Internal ref. 6398620

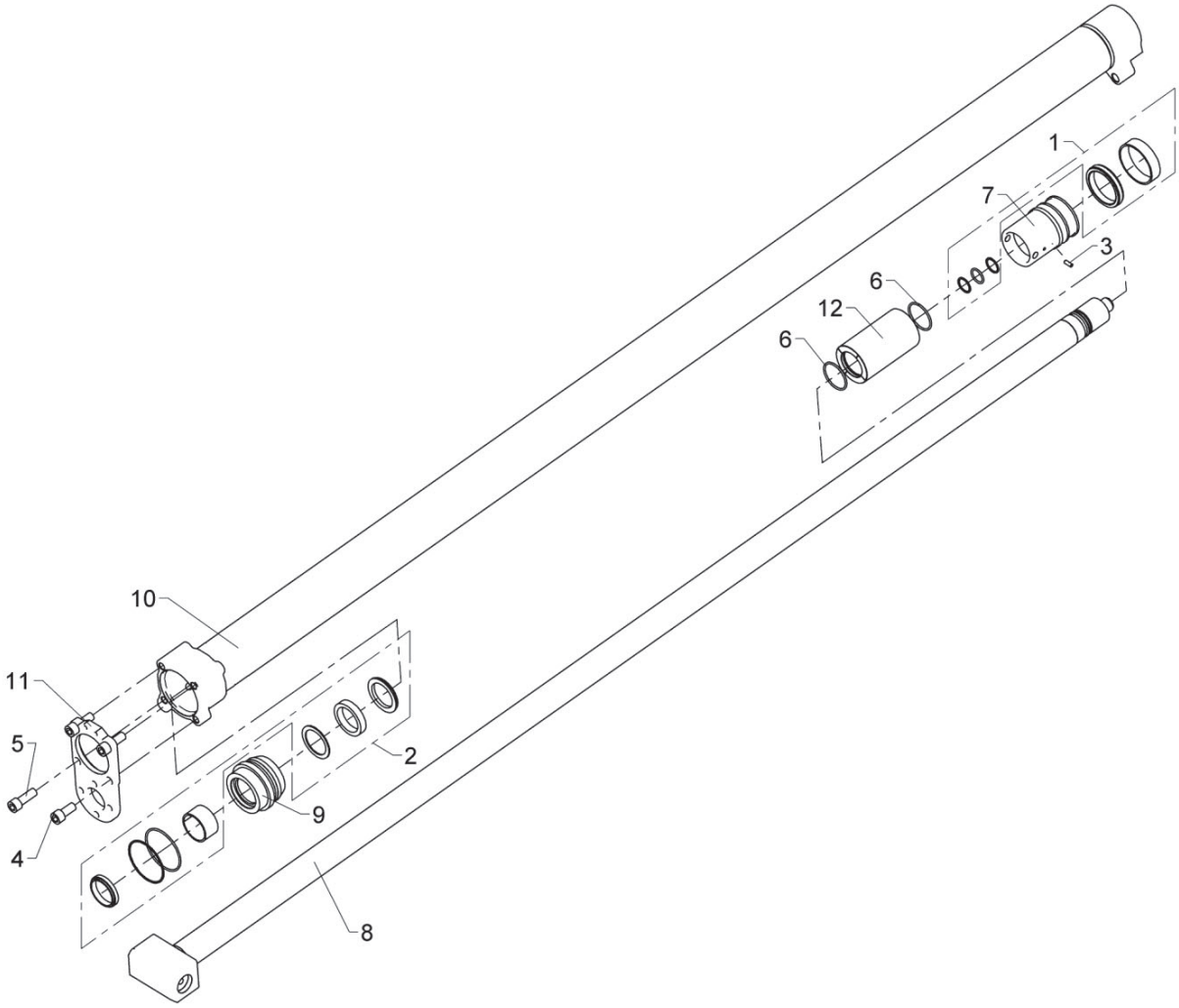

Extension cylinder VIII C70/Ø45 x 1972s

559 03 370

From loader 1370001
To loader

Created 09-03-17
Modified 07-05-20

Pos	Qty.	Part no.	Description	Remarks
1	1	6893640	Seal kit C80/50h	Pos. 1, 2, 5, 6
2	1	22150	Seal kit	
3	1	30562	Pointed screw, stainless	MPS6 x 16
4	1	30480	Screw	MC14 x 30
5	3	30483	Screw	MC14 x 40
6	2	20182	O-ring	OR 49,5 x 3
7	1	6300489	Piston	
8	1	6398621	Piston rod C8	
9	1	6300491	Guide	
10	1	6398615	Cylinder tube C7	
11	1	6398629	Flange for cylinder, C8	
12	1	6398625	Distance pipe for C8	

9520K-RCS, 9520OK-RCS

Internal ref. 6300400

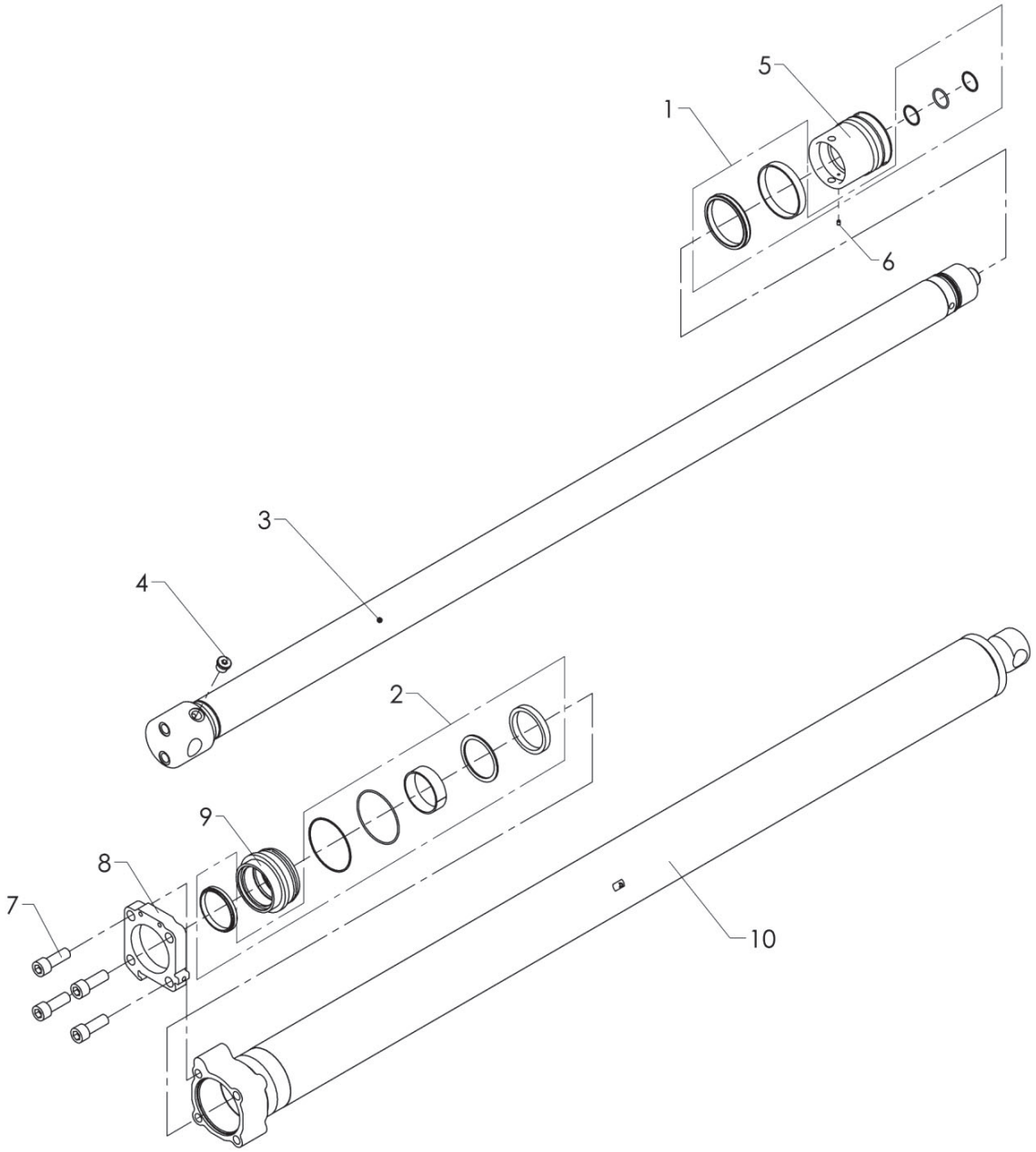

559 03 400

From loader 1370001
To loader

Extension cylinder I C110/80h x 1850 (OK)

Created 08-06-17
Modified 26-07-19

Pos	Qty.	Part no.	Description	Remarks
1	1	6893600	Seal kit, C110/80h	
2	1	22139	Seal kit	
3	1	6300401	Piston rod	
4	1	25103	Plug	VS-R-1/2 WD
5	1	6300406	Piston	
6	1	30903	Screw	MSP6 x 8
7	4	32449	Sockethead screw	MC20 x 55
8	1	6300405	Flange	
9	1	6302407	Guide	
10	1	6300408	Cylinder pipe	

9520K-RCS, 9520OK-RCS

Internal ref. 6300410

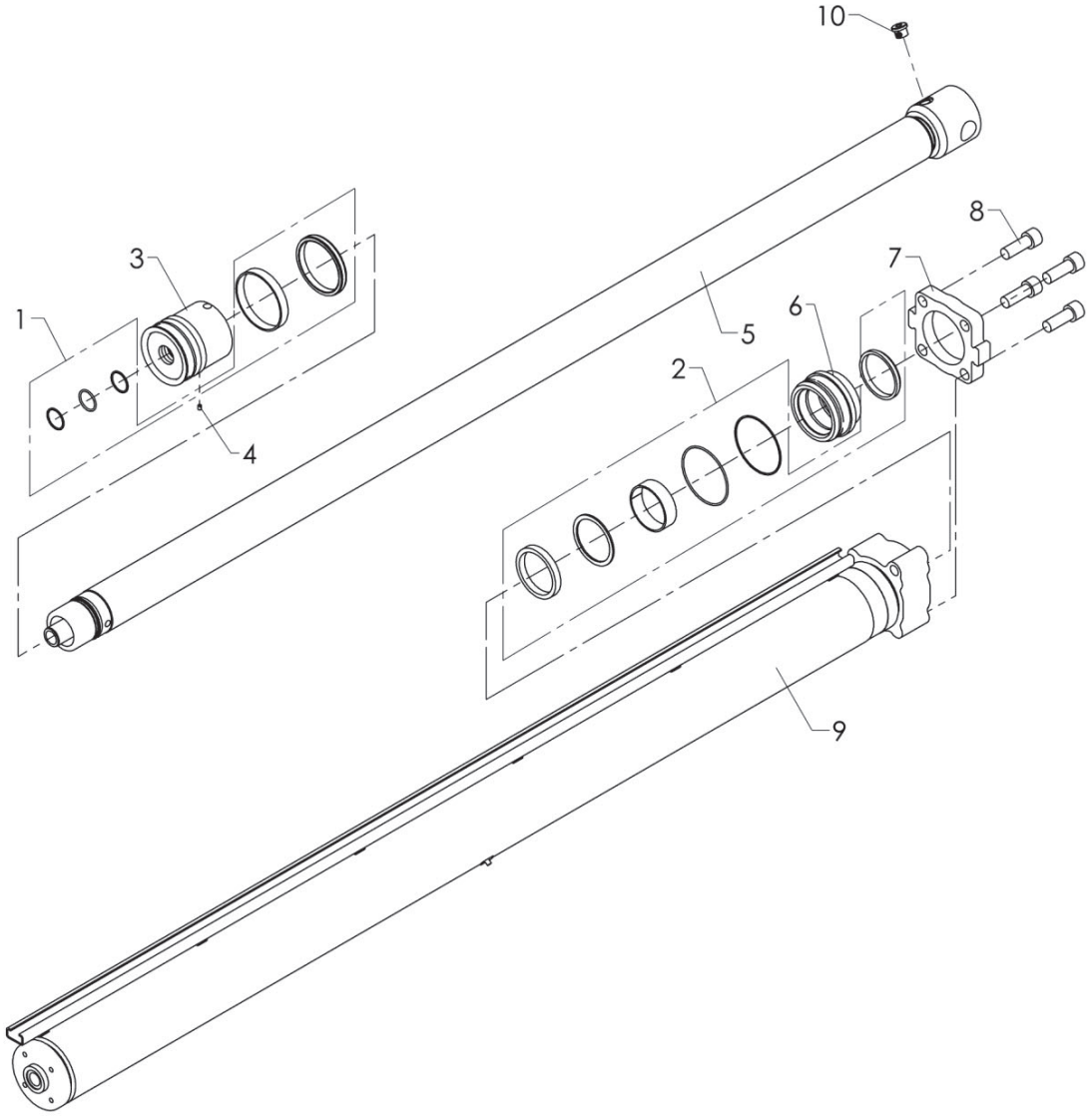

Extension cylinderII C110/80h x 1900 (OK)

559 03 410

From loader 1370001
To loader

Created 08-06-17
Modified 13-02-19

Pos	Qty.	Part no.	Description	Remarks
1	1	6893600	Seal kit, C110/80h	Pos. 1, 2, 4, 5
2	1	22139	Seal kit	
3	1	6300406	Piston	
4	1	30903	Screw	MSP6 x 8
5	1	6300412	Piston rod	
6	1	6302407	Guide	
7	1	6300419	Flange	
8	4	32449	Sockethead screw	MC20 x 55
9	1	6300415	Cylinder	
10	1	25103	Plug	VS-R-1/2 WD

9520K-RCS, 9520OK-RCS

Internal ref. 6300420

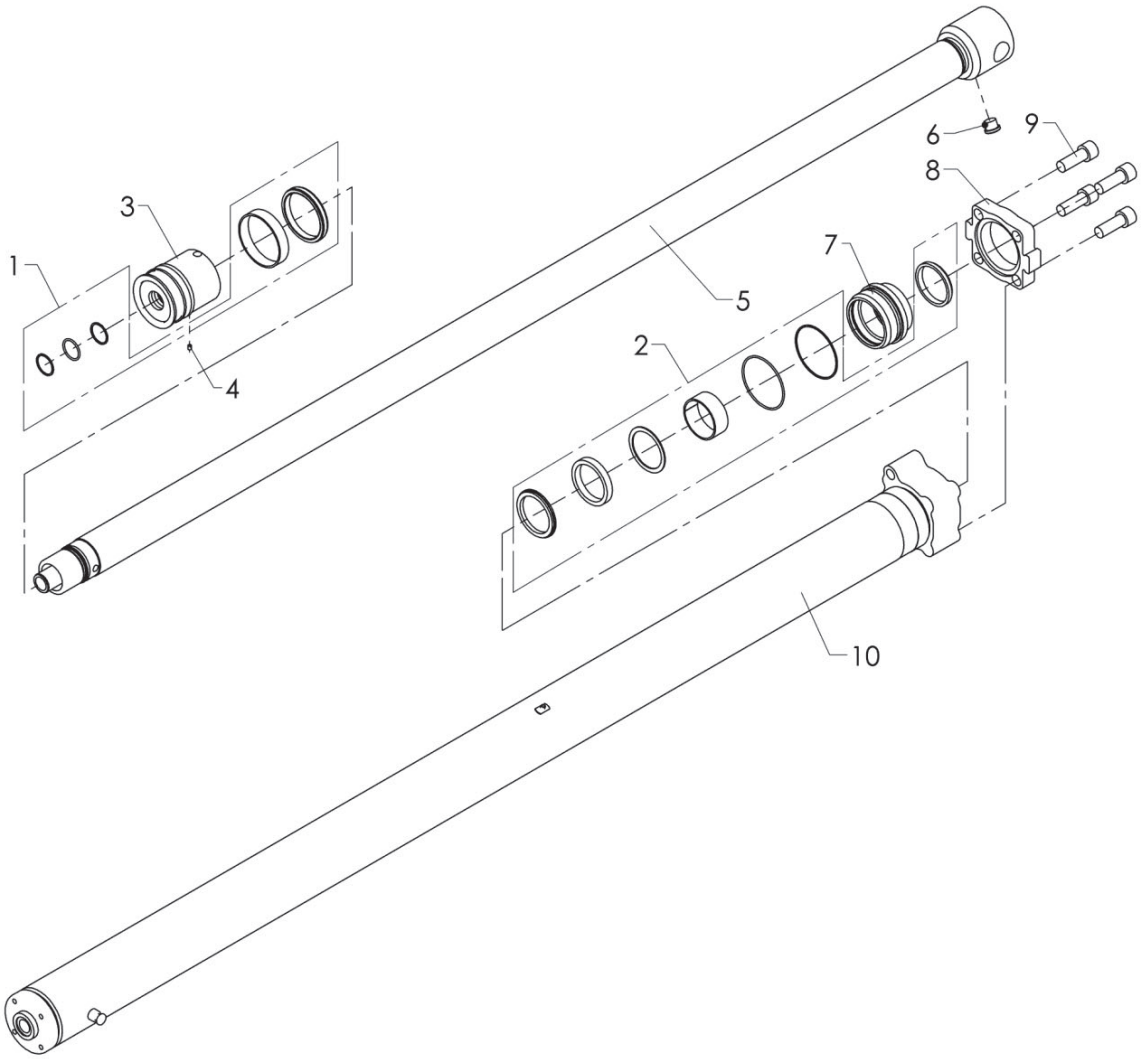

559 03 420

Extension cylinder III C100/70h x2000 (OK)

From loader 1370001
To loader

Created 08-06-17
Modified 19-07-19

Pos	Qty.	Part no.	Description	Remarks
1	1	6893610	Seal kit, C100/70h	
2	1	22140	Seal kit	
3	1	6300424	Piston	
4	1	30903	Screw	MSP6 x 8
5	1	6300673	Piston rod	
6	1	25103	Plug	VS-R-1/2 WD
7	1	6300425	Guide	
8	1	6300426	Flange	
9	4	32449	Sockethead screw	MC20 x 55
10	1	6300427	Cylinder tube	

9520K-RCS, 9520OK-RCS

Internal ref. 6302420

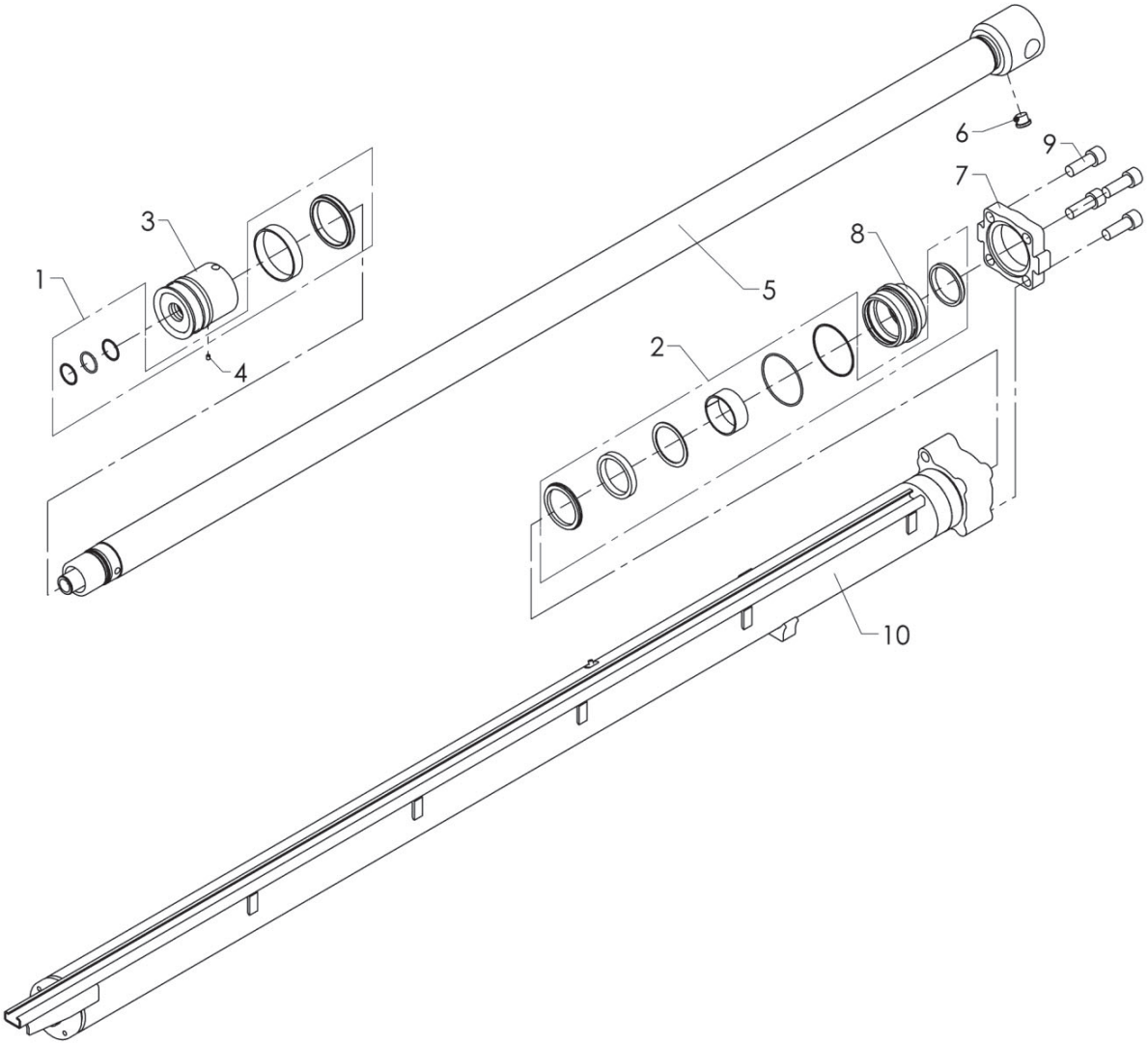

Extension cylinder IV C100/70h x 2100 (OK)

559 03 430

From loader 1370001
To loader

Created 08-06-17
Modified 15-08-19

Pos	Qty.	Part no.	Description	Remarks
1	1	6893610	Seal kit, C100/70h	
2	1	22140	Seal kit	
3	1	6300424	Piston	
4	1	30903	Screw	MSP6 x 8
5	1	6300421	Piston rod	
6	1	25103	Plug	VS-R-1/2 WD
7	1	6300426	Flange	
8	1	6300425	Guide	
9	4	32449	Sockethead screw	MC20 x 55
10	1	6302427	Cylinder tube	

9520K-RCS, 9520OK-RCS

Internal ref. 6302400

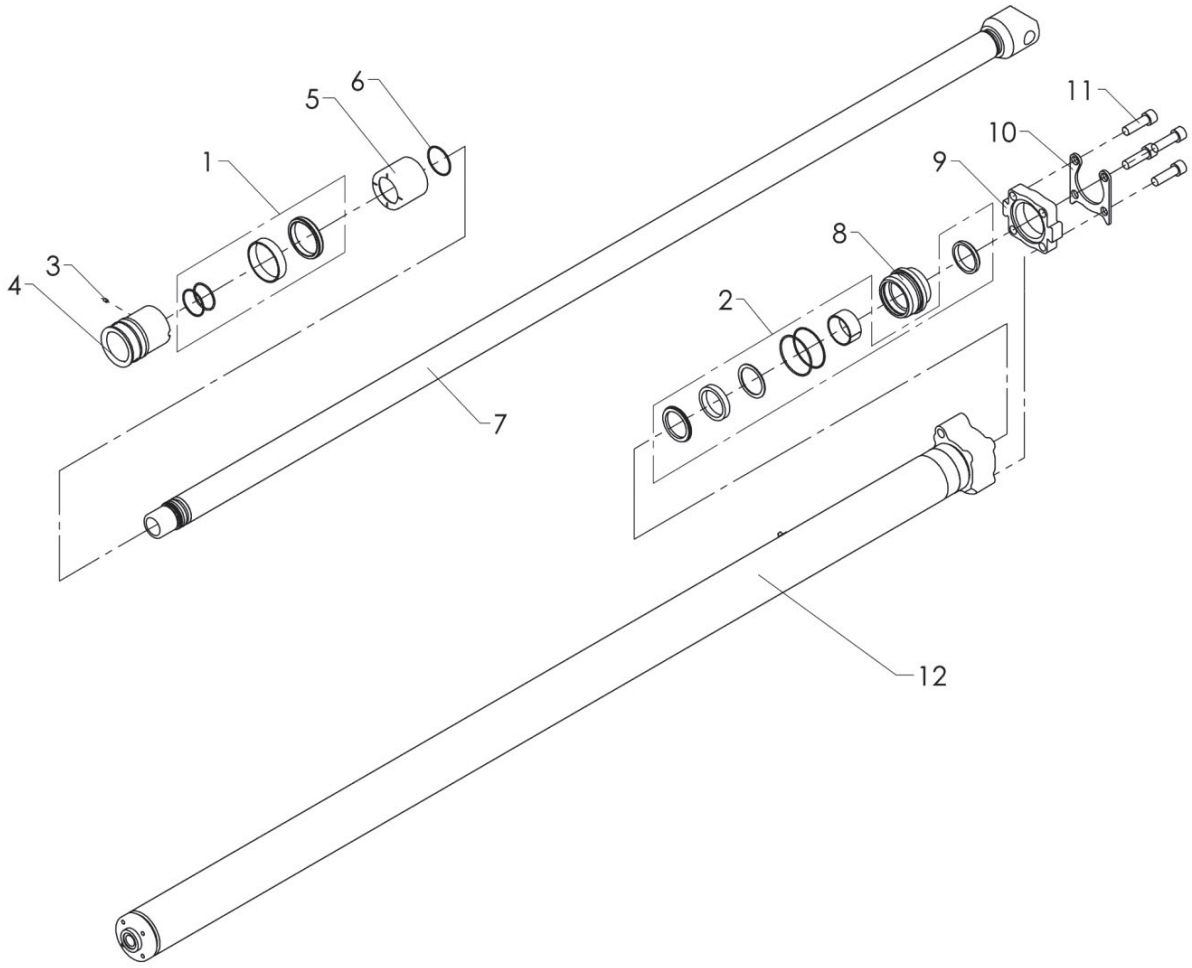

559 03 440

From loader 1370001
To loader

Extension cylinder V C90/60 x 2175 - (OK5 max)

Created 08-06-17
Modified 15-08-19

Pos	Qty.	Part no.	Description	Remarks
1	1	6894940	Seal kit, c90/60s	
2	1	22143	Seal kit	
3	1	30903	Screw	MSP6 x 8
4	1	6300435	Piston	
5	1	6302453	Spacer	
6	1	61236	O-ring	OR 60 x 2,62
7	1	6300432	Piston rod	
8	1	6300441	Guide	
9	1	6300442	Flange	
10	1	6300536	Safety device	
11	4	32456	Screw	MC18 x 60
12	1	6300436	Cylinder	

9520K-RCS, 9520OK-RCS

Internal ref. 6302350

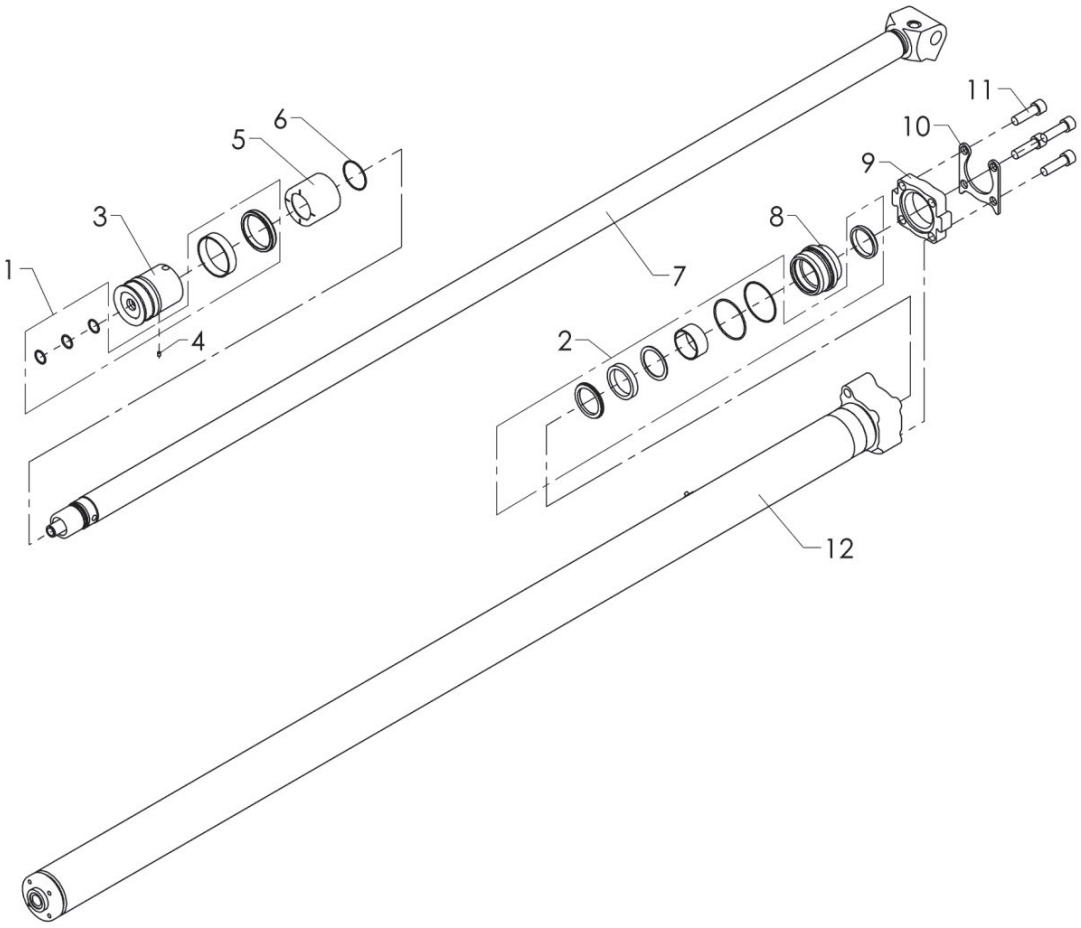

559 03 450

From loader 1370001
To loader

Extension cylinder V C90/60h x 2175 - (OK6)

Created 08-06-17
Modified 24-07-19

Pos	Qty.	Part no.	Description	Remarks
1	1	6893630	Seal kit for piston, C90/60h	
2	1	22143	Seal kit	
3	1	6300477	Piston	
4	1	30903	Screw	MSP6 x 8
5	1	6302453	Spacer	
6	1	61236	O-ring	OR 60 x 2,62
7	1	6302641	Piston rod	
8	1	6300441	Guide	
9	1	6300442	Flange	
10	1	6300536	Safety device	
11	4	32456	Screw	MC18 x 60
12	1	6300436	Cylinder	

9520K-RCS, 9520OK-RCS

Internal ref. 6302450

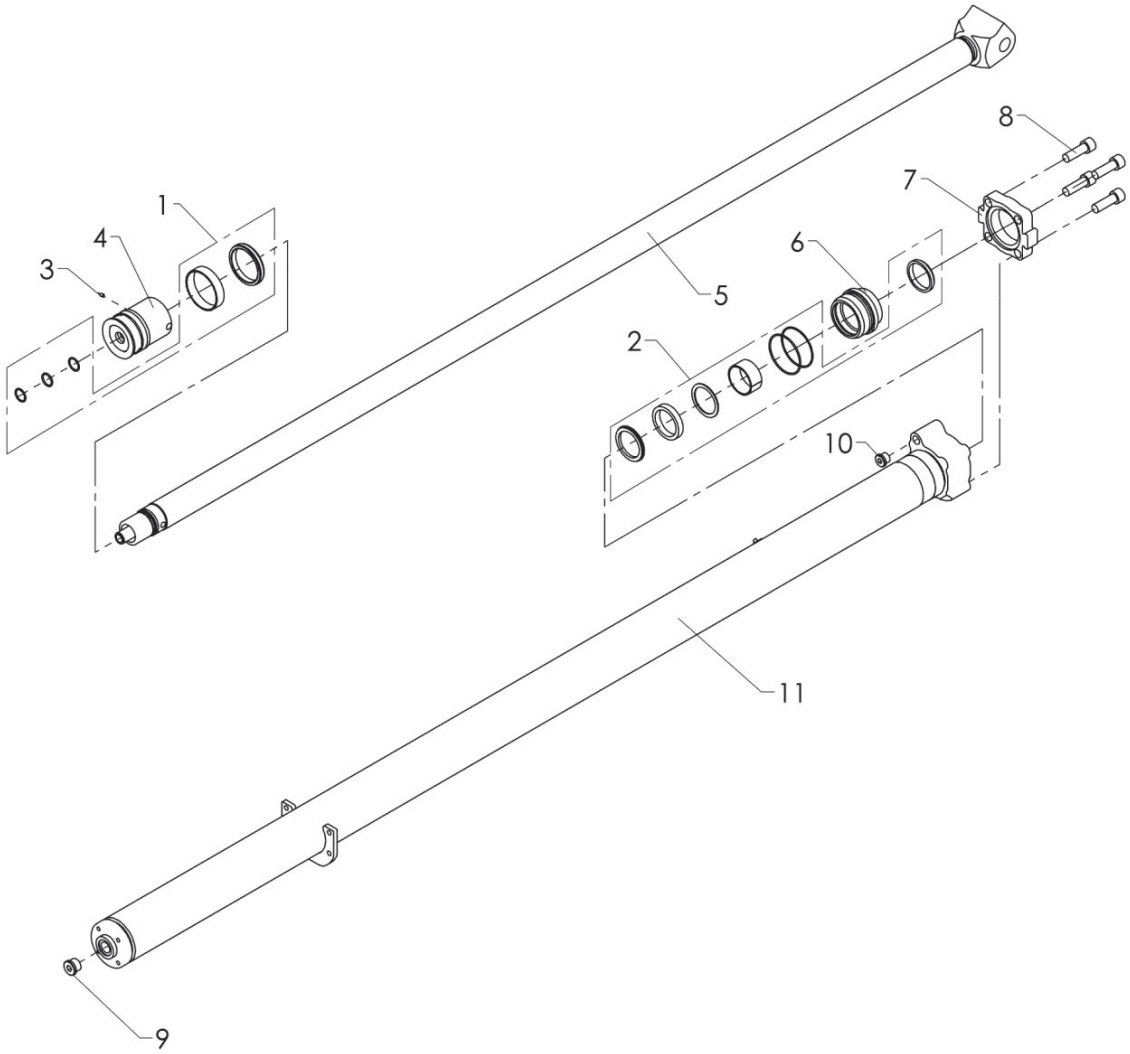

Extension cylinder VI C90/60s x 2250 (OK)

559 03 460

From loader 1370001
To loader

Created 08-06-17
Modified 16-08-19

Pos	Qty.	Part no.	Description	Remarks
1	1	6893630	Seal kit for piston, C90/60h	
2	1	22143	Seal kit	
3	1	30903	Screw	MSP6 x 8
4	1	6300477	Piston	
5	1	6302641	Piston rod	
6	1	6300441	Guide	
7	1	6300442	Flange	
8	4	32450	Screw	MC18 x 55
9	1	26355	Plug	VS-R-3/4 WD
10	1	25103	Plug	VS-R-1/2 WD
11	1	6302451	Cylinder	

9520K-RCS, 9520OK-RCS

Internal ref. 6400890

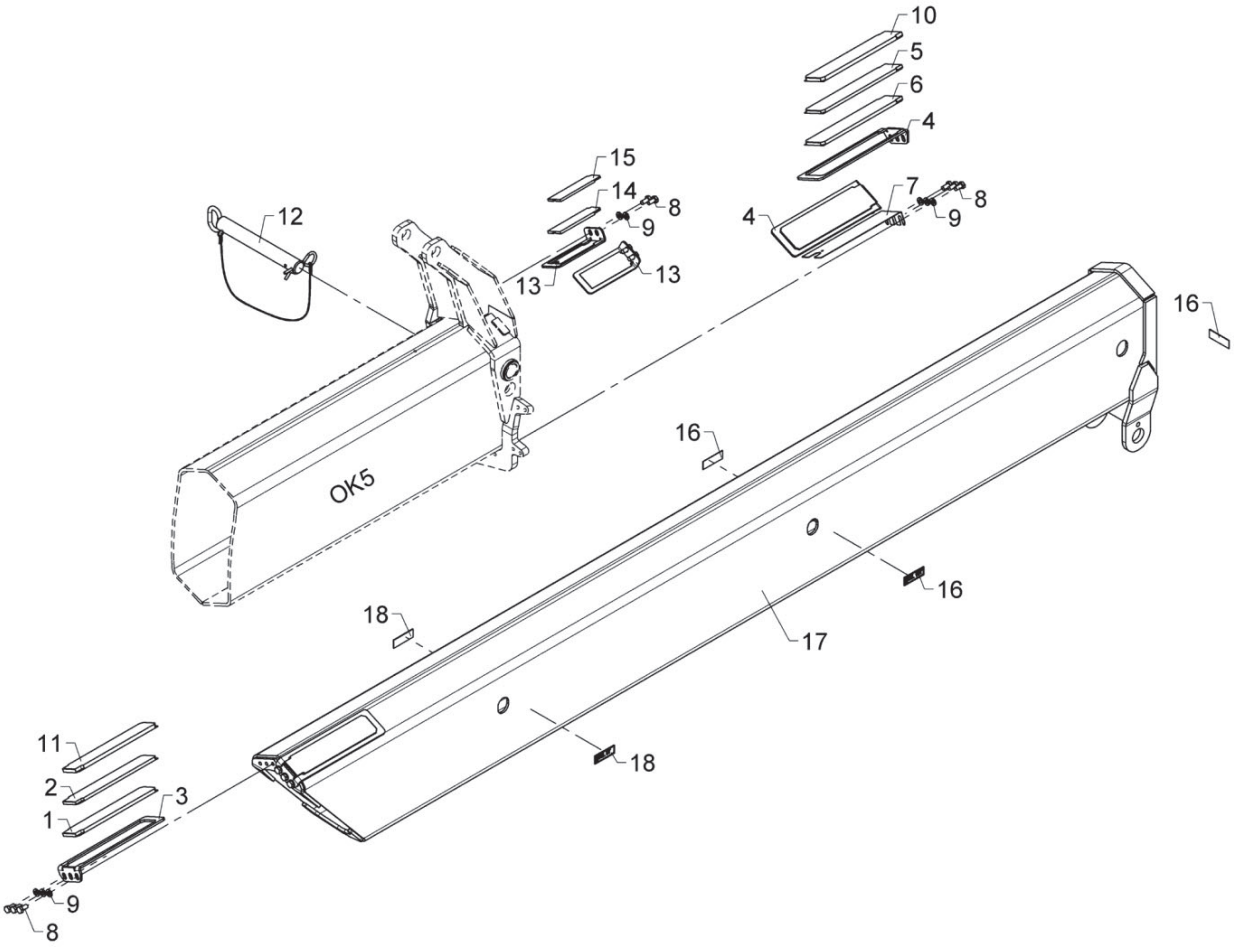

Manual extension, OF6

Pos	Qty.	Part no.	Description	Remarks
1	2	63586	Slide block	9 mm
2	2	63585	Slide block	8 mm
3	2	6300399	Bracket for slide block	
4	2	6300366	Bracket for slide block	75x290
5	2	63582	Slide block	8 mm
6	2	63583	Slide block	9 mm
7	2	6300534	Shim	
8	16	31517	Set screw, stainless	M10 x 20
9	16	31177	Washer	10 mm
10	2	63584	Slide block	10 mm
11	2	63587	Slide block	10 mm
12	1	6300517	Lock pin with split pin	
13	2	6300336	Bracket	
14	2	63668	Slide block	6381524, 7 mm
15	2	63698	Slide block	6 mm
16	3	66541	Plate SWL 16 t	
17	1	6400891	Manual extension OF6	
18	2	66953	Label, - SWL 8 t	

9520K-RCS, 9520OK-RCS

Internal ref. 6400900

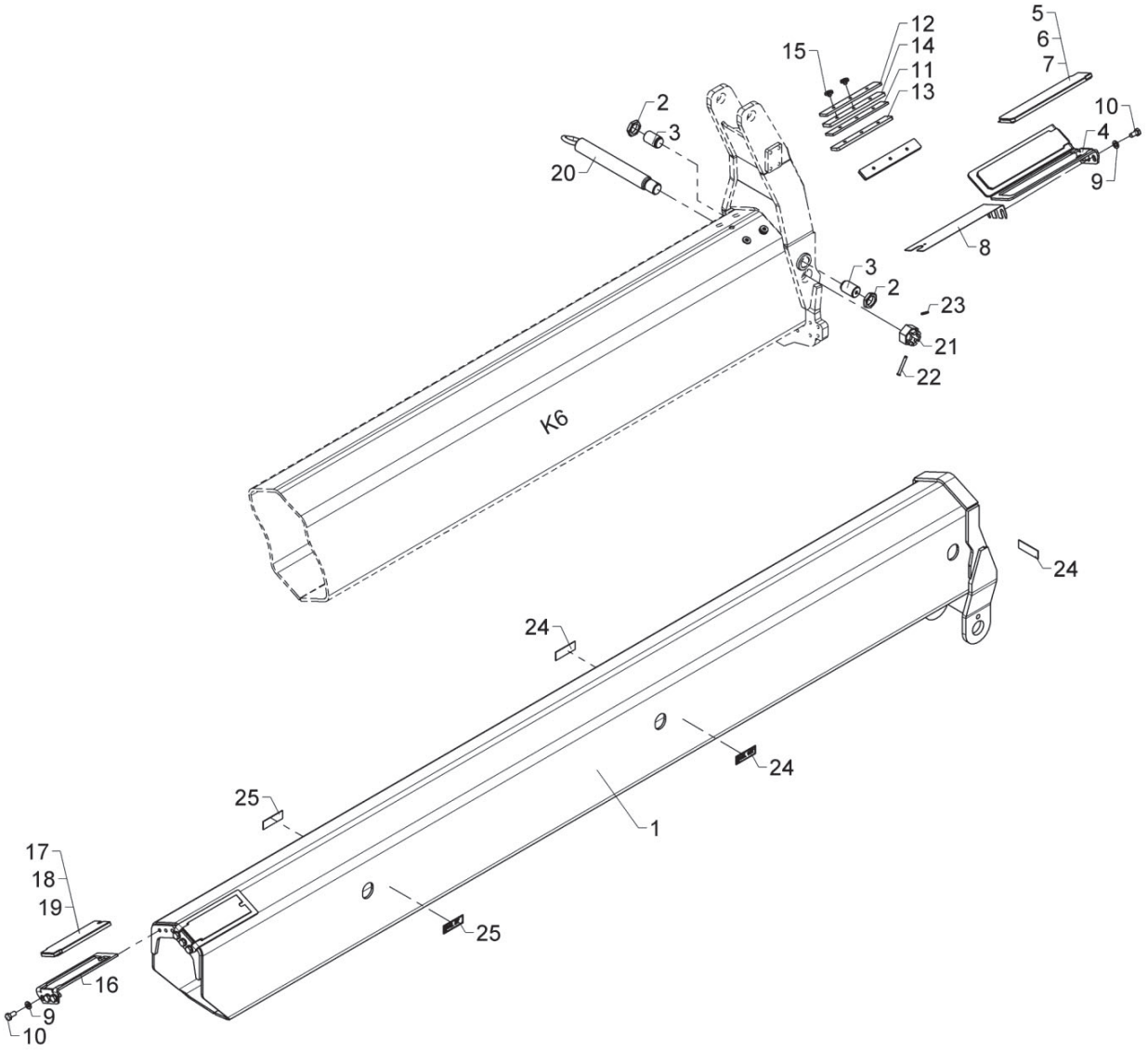

Manual extension, F7

Pos	Qty.	Part no.	Description	Remarks
1	1	6400901	Manual extension F7	
2	2	32399	Counter nut M30 x 2	M30 x 2
3	2	6398416	Slide block	
4	2	6300399	Bracket for slide block	
5	2	63585	Slide block	8 mm
6	2	63586	Slide block	9 mm
7	2	63587	Slide block	10 mm
8	2	6300534	Shim	
9	12	31177	Washer	10 mm
10	12	31517	Set screw, stainless	M10 x 20
11	2	6294434	Spacer	5 mm
12	2	6193304	Spacer	6 mm
13	2	6235944	Spacer	7 mm
14	2	6193314	Spacer	8 mm
15	4	31865	Torx screw M8 x 6 m	M8 x 6
16	2	6300367	Bracket for slide block	
17	2	63695	Slide block	9 mm
18	2	63523	Slide block	8 mm
19	2	68080	Slide block	10 mm
20	1	6302728	Pin for suspension	
21	1	30839	Nut	M30
22	1	31279	Cotter bolt	ø6 x 50
23	1	33458	Lock ring	
24	3	66541	Plate SWL 16 t	
25	2	66953	Label, - SWL 8 t	

9520K-RCS, 9520OK-RCS

Internal ref. 6308660

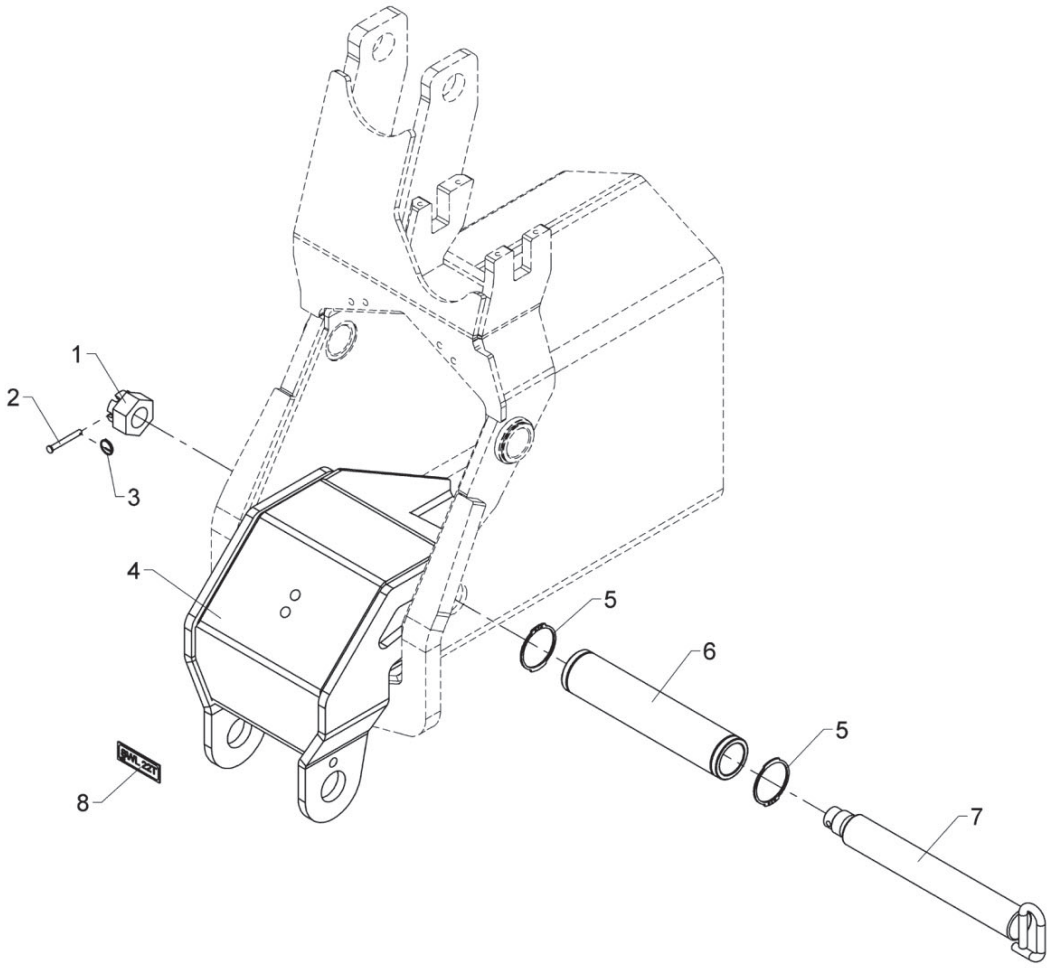

Separate hook suspension, OK2

559 03 880

From loader 1370001
To loader

Created 02-06-17
Modified

Pos	Qty.	Part no.	Description	Remarks
1	1	30839	Nut	M30
2	1	31279	Cotter bolt	ø6 x 50
3	1	33458	Lock ring	
4	1	6300381	Hook suspension	
5	2	33132	Circlip Din 471	55U
6	1	6300376	Hub	
7	1	6300467	Pin for suspension	
8	1	68985	Label SWL 22 t	

9520K-RCS, 9520OK-RCS

Internal ref. 6308670

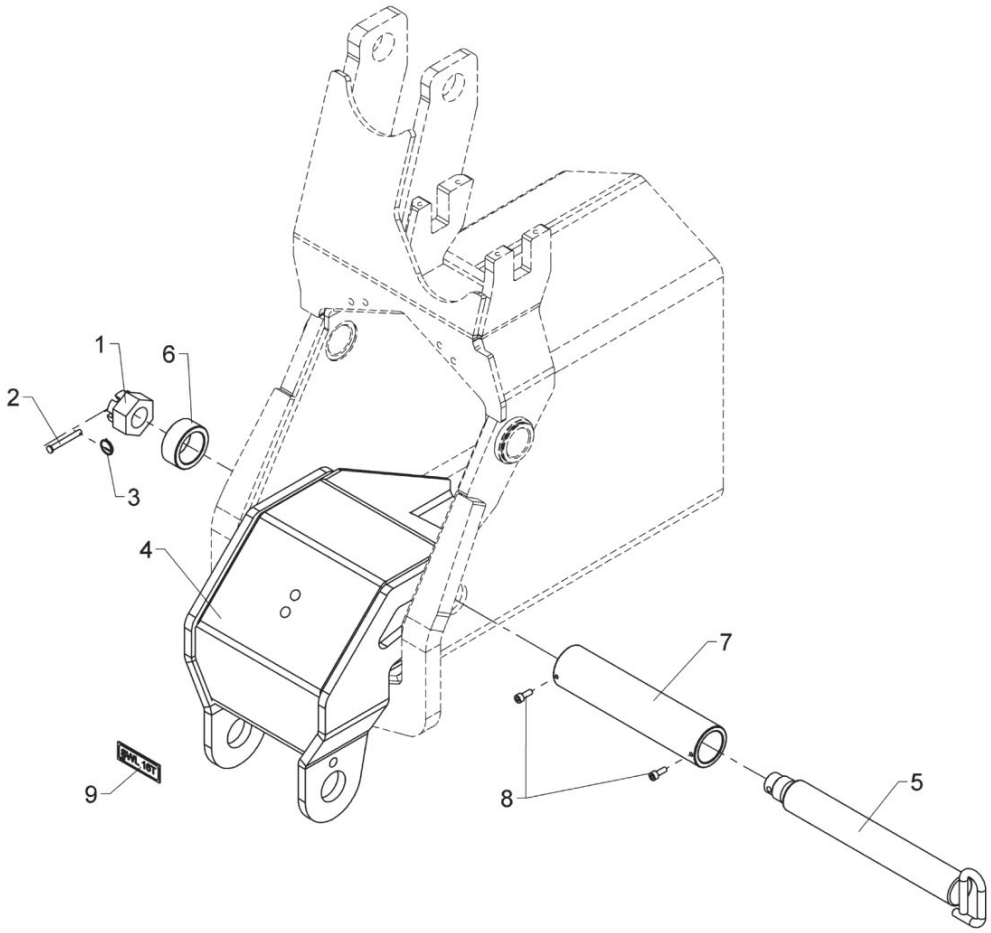

Separate hook suspension, OK3

559 03 890

From loader 1370001
To loader

Created 02-06-17
Modified

Pos	Qty.	Part no.	Description	Remarks
1	1	30839	Nut	M30
2	1	31279	Cotter bolt	ø6 x 50
3	1	33458	Lock ring	
4	1	6300381	Hook suspension	
5	1	6300467	Pin for suspension	
6	1	6300469	Spacer	
7	1	6300479	Hub	
8	2	31539	Screw, stainless	MC6 x 16
9	1	66541	Plate SWL 16 t	

9520K-RCS, 9520OK-RCS

Internal ref. 6308680

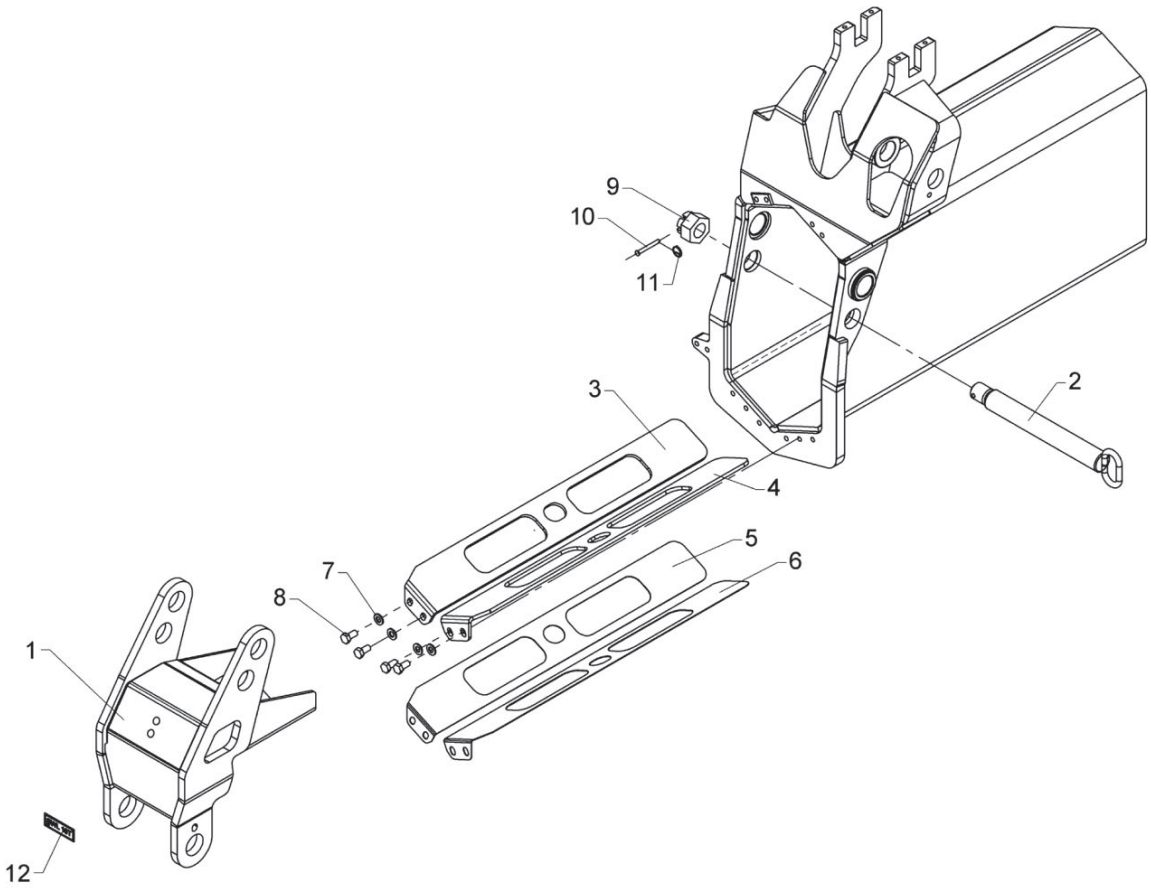

Separate hook suspension, OK4

Pos	Qty.	Part no.	Description	Remarks
1	1	6302715	Hook suspension OK4	
2	1	6302718	Pin for hook suspension	
3	1	6300705	Spacer, right	
4	1	6300706	Spacer, left	
5	1	6300707	Shim, right	
6	1	6300708	Shim, left	
7	4	31177	Washer	10 mm
8	4	31517	Set screw, stainless	M10 x 20
9	1	30839	Nut	M30
10	1	31279	Cotter bolt	ø6 x 50
11	1	33458	Lock ring	
12	1	66541	Plate SWL 16 t	

9520K-RCS, 9520OK-RCS

Internal ref. 6308690

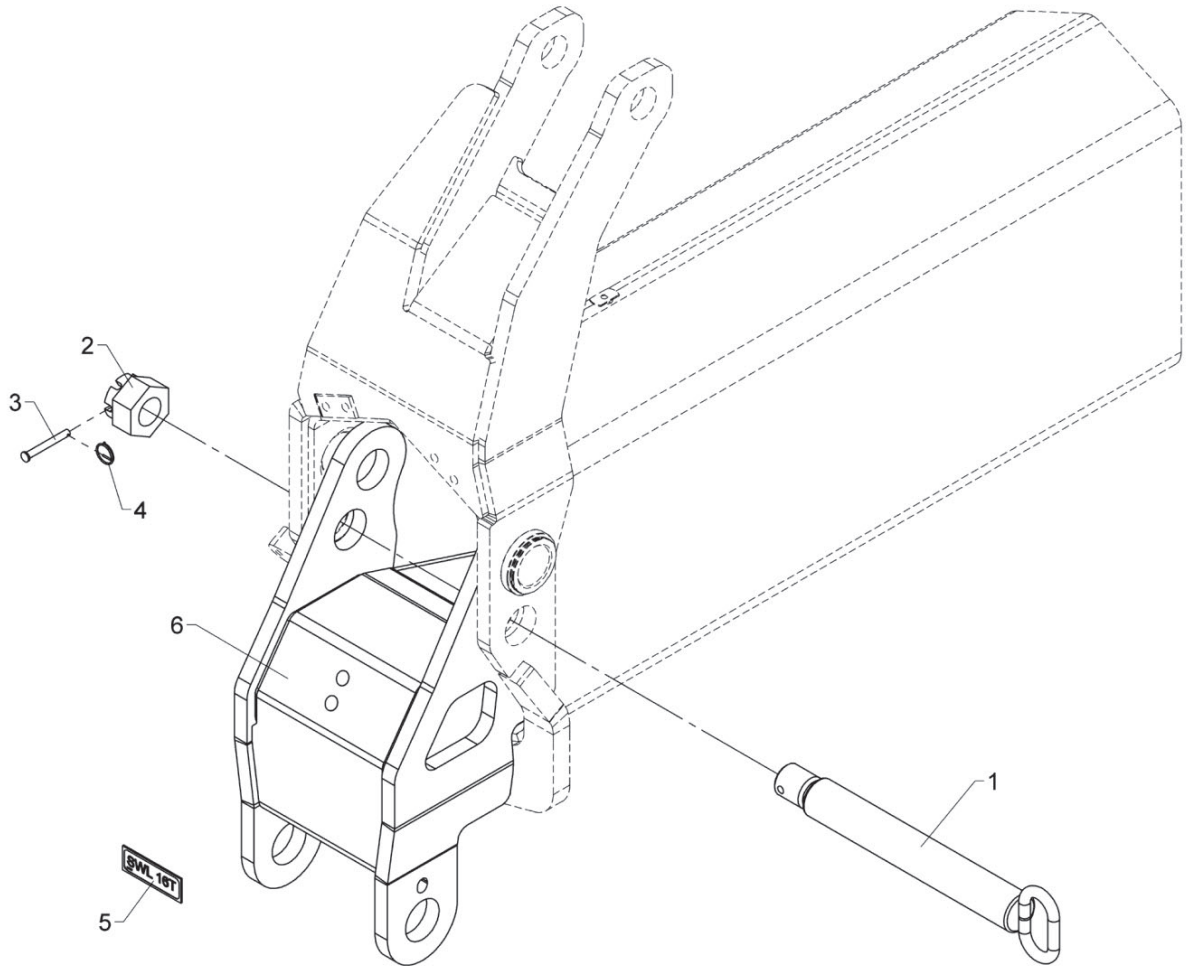

Separate hook suspension, OK5

Pos	Qty.	Part no.	Description	Remarks
1	1	6302728	Pin for suspension	
2	1	30839	Nut	M30
3	1	31279	Cotter bolt	ø6 x 50
4	1	33458	Lock ring	
5	1	66541	Plate SWL 16 t	
6	1	6302725	Hook suspension OK5	

9520K-RCS, 9520OK-RCS

Internal ref. 6303270

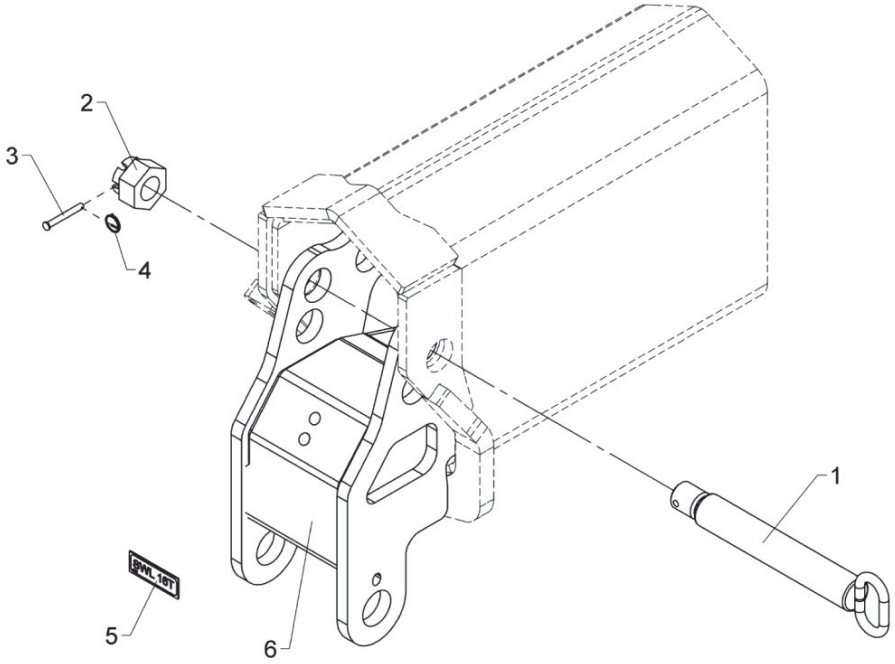

559 03 920

Separate hook suspension, OK6

From loader 1370001
To loader

Created 12-06-13
Modified 27-11-13

Pos	Qty.	Part no.	Description	Remarks
1	1	6302748	Pin for hook suspension	
2	1	30839	Nut	M30
3	1	31279	Cotter bolt	ø6 x 50
4	1	33458	Lock ring	
5	1	66541	Plate SWL 16 t	
6	1	6302735	Hook suspension OK6	

9520K-RCS, 9520OK-RCS

Internal ref. 6398450

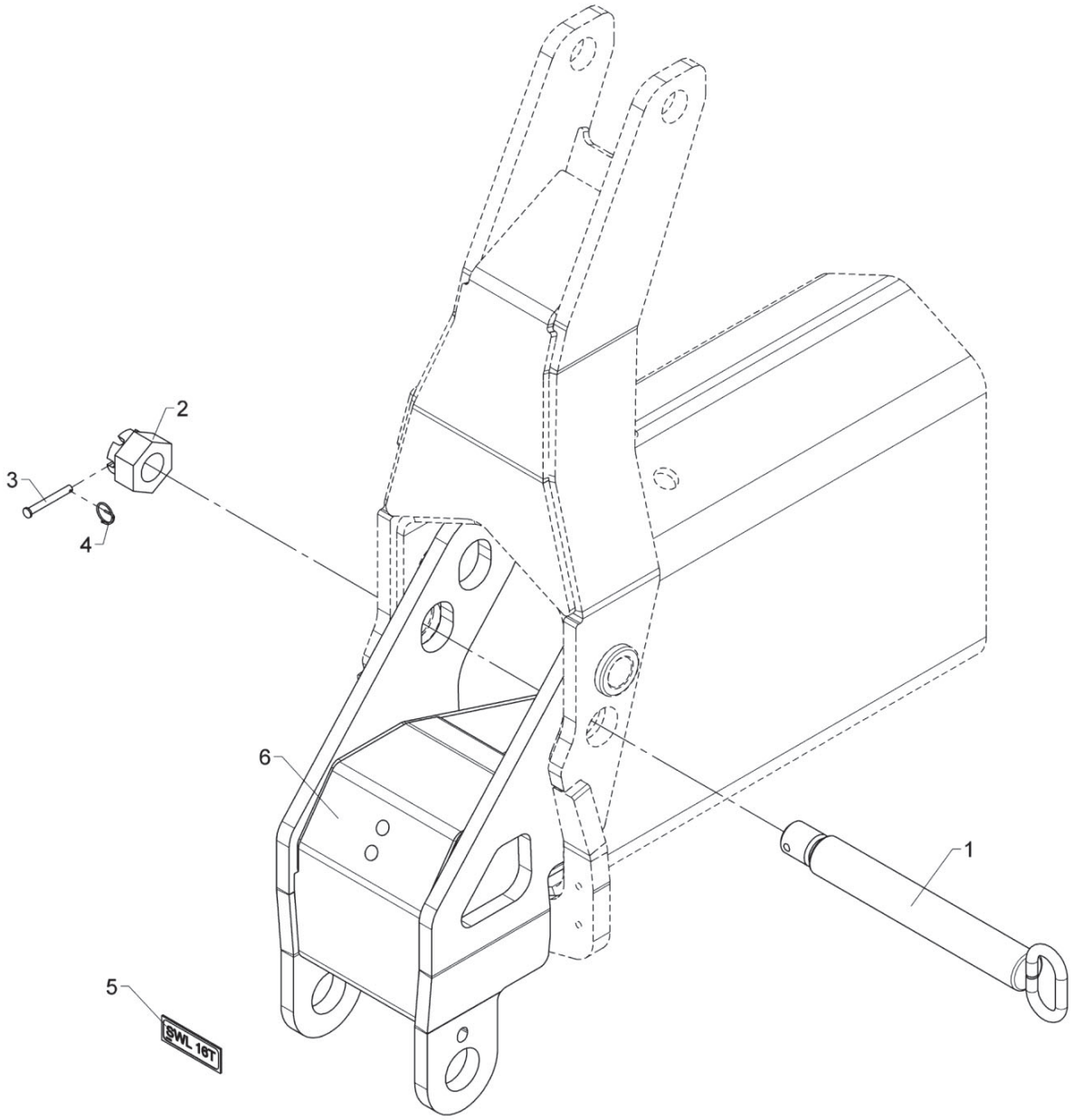

Separate hook suspension, K6

559 03 950

From loader 1370001
To loader

Created 05-02-18
Modified

Pos	Qty.	Part no.	Description	Remarks
1	1	6302728	Pin for suspension	
2	1	30839	Nut	M30
3	1	31279	Cotter bolt	ø6 x 50
4	1	33458	Lock ring	
5	1	66541	Plate SWL 16 t	
6	1	6398725	Hook suspension, ext. sys.	K5/K6

9520K-RCS, 9520OK-RCS

Internal ref. 6398470

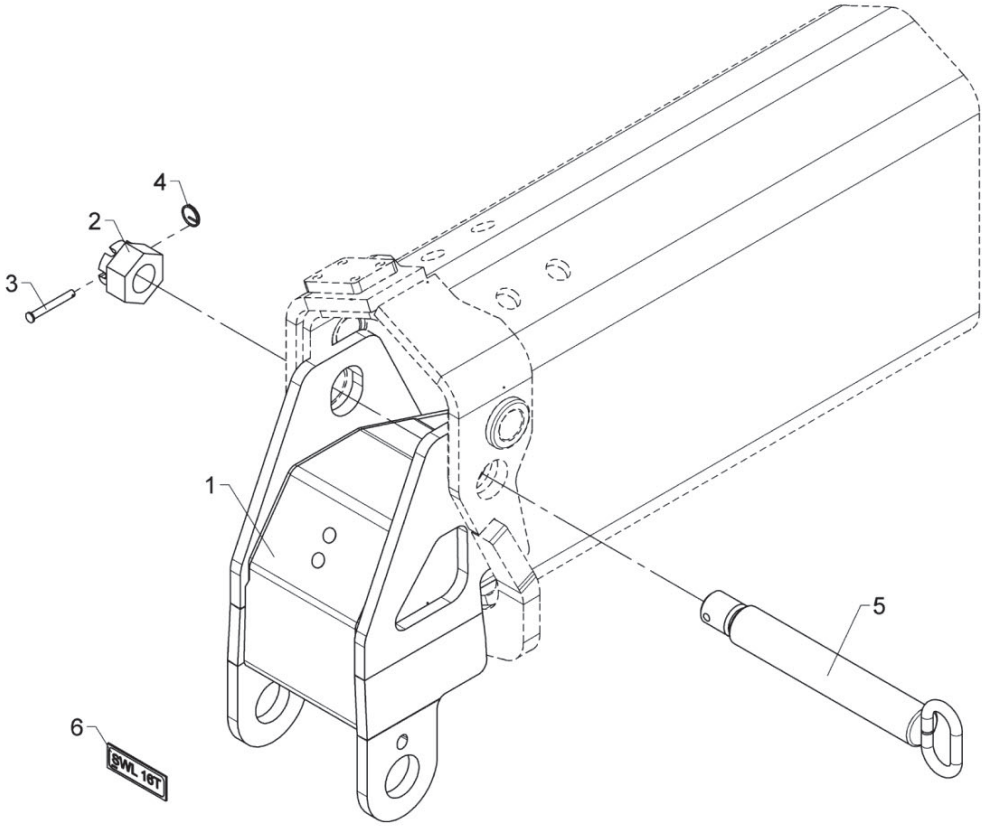

559 03 960

From loader 1370001
To loader

Created 05-02-18
Modified

Separate hook suspension, K7

Pos	Qty.	Part no.	Description	Remarks
1	1	6400841	Hook suspension	K7
2	1	30839	Nut	M30
3	1	31279	Cotter bolt	ø6 x 50
4	1	33458	Lock ring	
5	1	6302748	Pin for hook suspension	
6	1	66541	Plate SWL 16 t	

9520K-RCS, 9520OK-RCS

Internal ref. 6398490

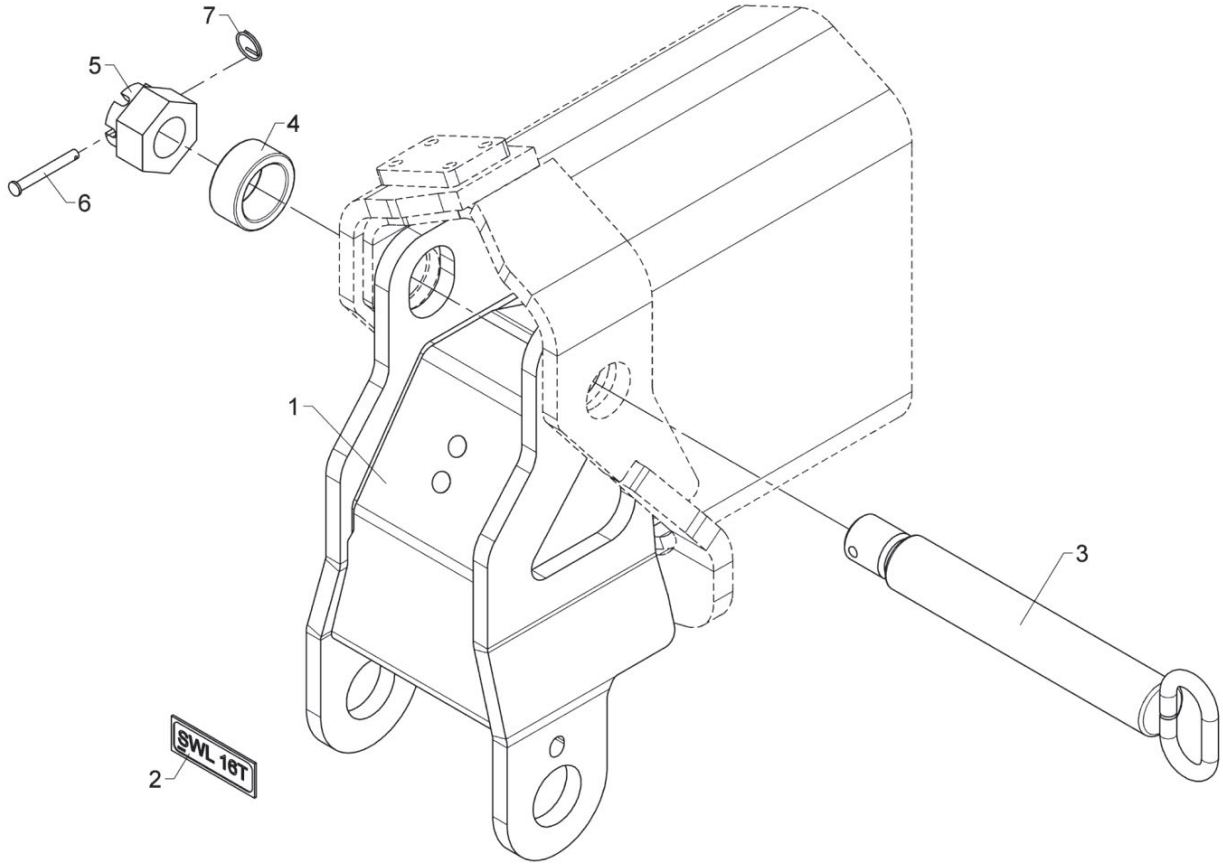

559 03 970

From loader 1370001
To loader

Created 05-02-18
Modified

Separate hook suspension, K8

Pos	Qty.	Part no.	Description	Remarks
1	1	6398841	Hook suspension	K8
2	1	66541	Plate SWL 16 t	
3	1	6302748	Pin for hook suspension	
4	1	6301036	Hub	
5	1	30839	Nut	M30
6	1	31279	Cotter bolt	ø6 x 50
7	1	33458	Lock ring	

9520K-RCS, 9520OK-RCS

Internal ref. 6398650

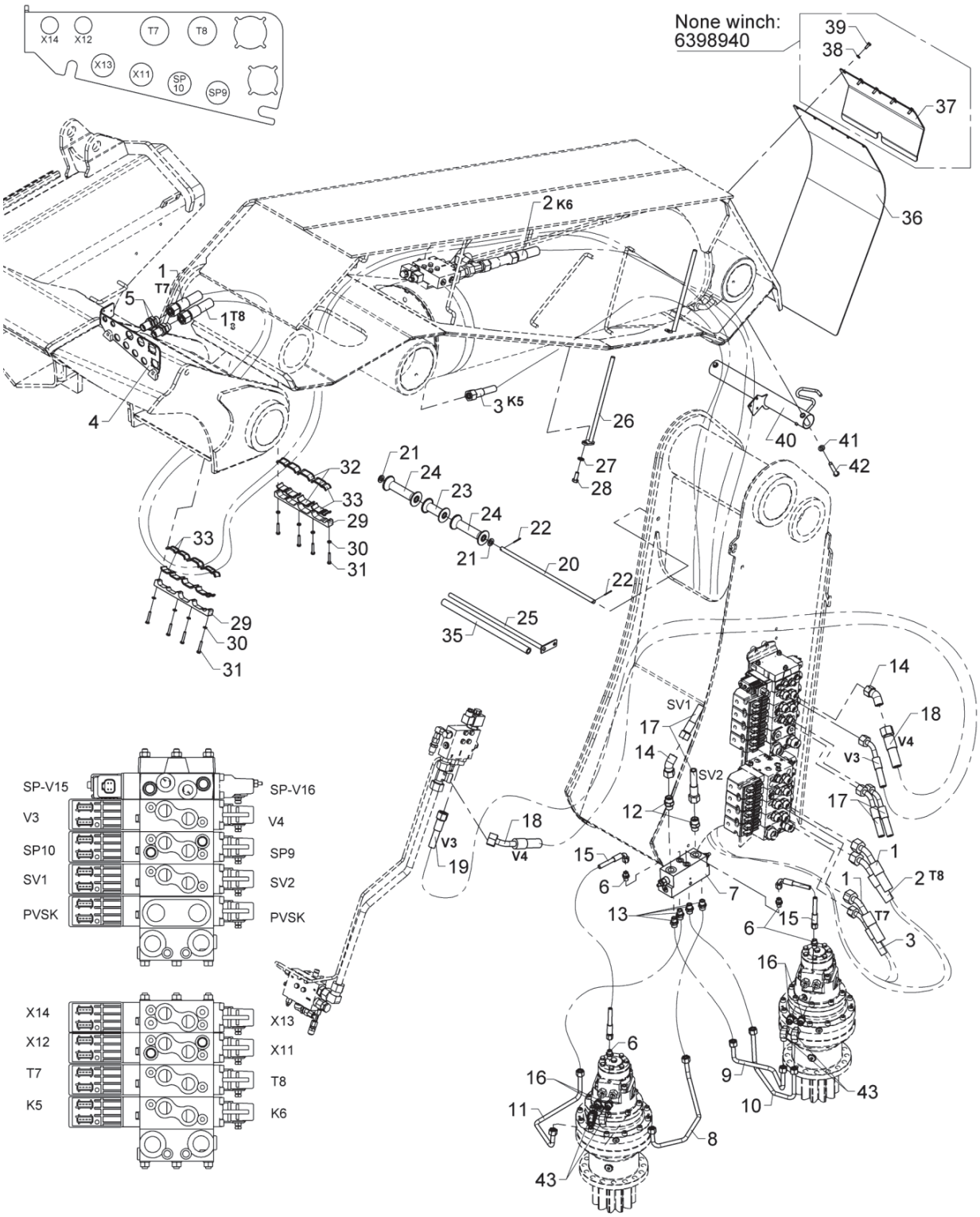

Hose kit, loader functions

Pos	Qty.	Part no.	Description	Remarks
1	2	56689	Hose	5/8 X 5700 mm V45gr. 16S / O 20S
2	1	56688	Hose	5/8 X 3800 mm V45gr. 16S / O 20S
3	1	56683	Hose	1/2 x 3800 L/45
4	1	6397667	Bracket,bulkhead connections-K	
5	2	26335	Bulkhead connection	P-GSV 16 S
6	4	25109	Connection	GES 8 LR-WD
7	1	50528	Load-holding valve	HBS
8	1	6398984	Pipe C4	C4
9	1	6398981	Pipe C1	C1
10	1	6398982	Pipe C3	C2
11	1	6398983	Pipe C2	C3
12	2	26334	Connection	P-GEV 16 SR-WD
13	4	25127	Connection	P-GEV 12 LR-WD
14	2	25628	Elbow connection 45°	EV 16 S
15	2	62525	Hose	1/4 X 400 M14 X 1.5 L/90
16	4	26396	Straight connection	P-GEV 12 SR-WD
17	2	56208	Hose	1/2" x 800 L/45
18	1	56210	Hose	5/8 X 1170 mm V45gr. 20S / O 16S
19	1	56211	Hose	1/2 X 1070 mm V45gr. 16S / O 16S
20	1	6398204	Rod	
21	2	31131	Washer	12 mm
22	2	31607	Split pin	ø2,5 x 25
23	1	63546	Guide roller	
24	2	63510	Guide roller	
25	1	6398205	Hose clamp	
26	2	6398201	Hose clamp	
27	2	31177	Washer	10 mm
28	2	30155	Set screw	M10 x 25
29	2	6300665	Clamp - K	
30	8	31154	Spring washer, stainless	6 mm
31	8	30116	Steel pin, stainless	M6 x 35
32	4	64323	Rubber section	63 mm
33	4	64323	Rubber section	73 mm
33	4	64323	Rubber section	95 mm
35	1	56212	Hose	385mm.
36	1	6398944	Wear plate	
37	1	6398945	Cover plate	
38	5	32302	Face washer, stainless	6 mm
39	5	30112	Set screw, stainless	M6 x 16
40	1	6398197	Hose guide	
41	2	31565	Washer, stainless	10 mm

9520K-RCS, 9520OK-RCS

Internal ref. 6398650

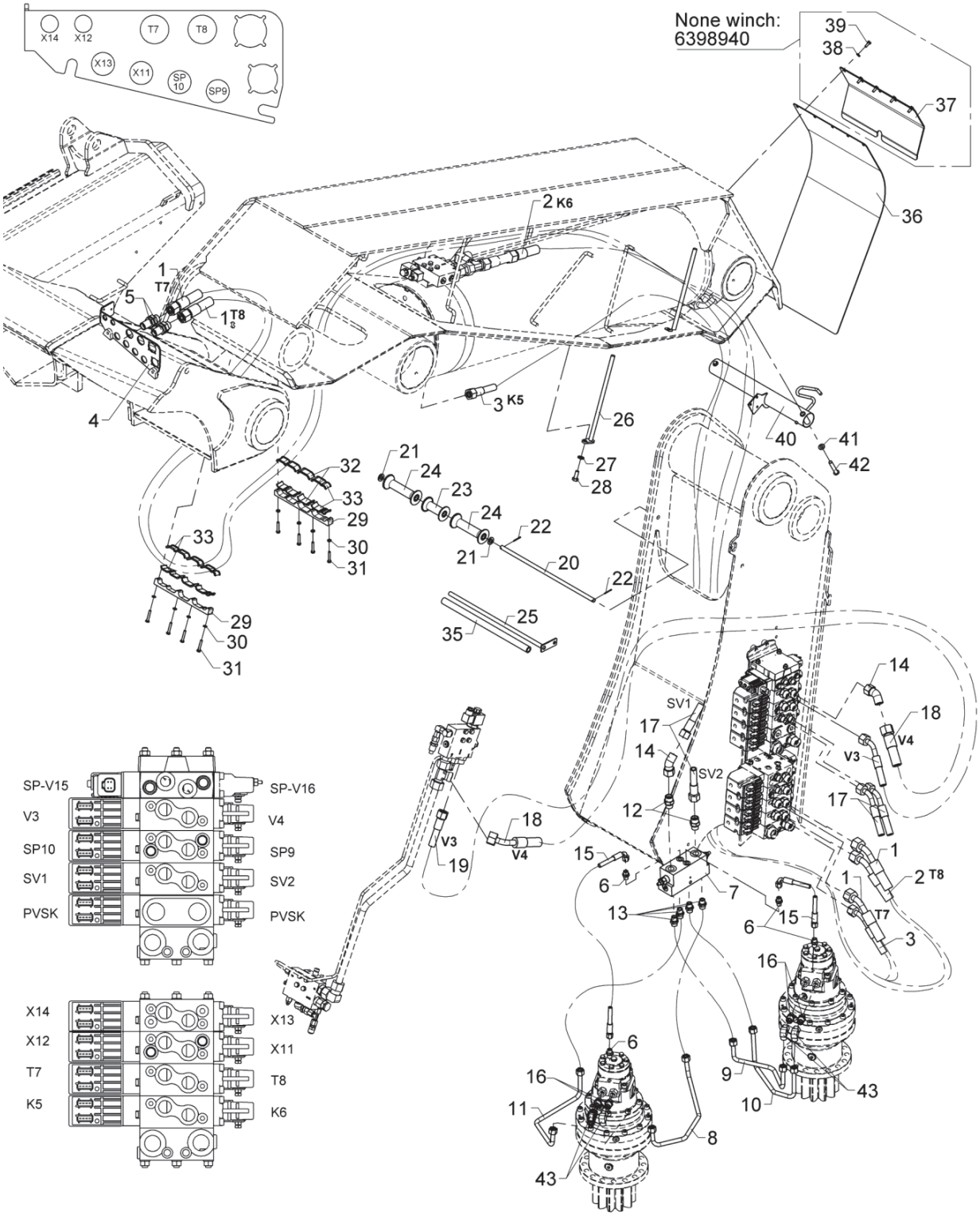

Hose kit, loader functions

Pos	Qty.	Part no.	Description	Remarks
42	2	31342	Screw	M10 x 60
43	4	25242	Elbow connection	EWSD 12 L

9520K-RCS, 9520OK-RCS

Internal ref. 6398660

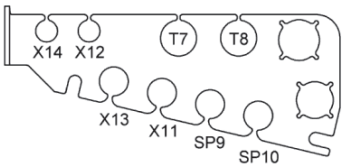

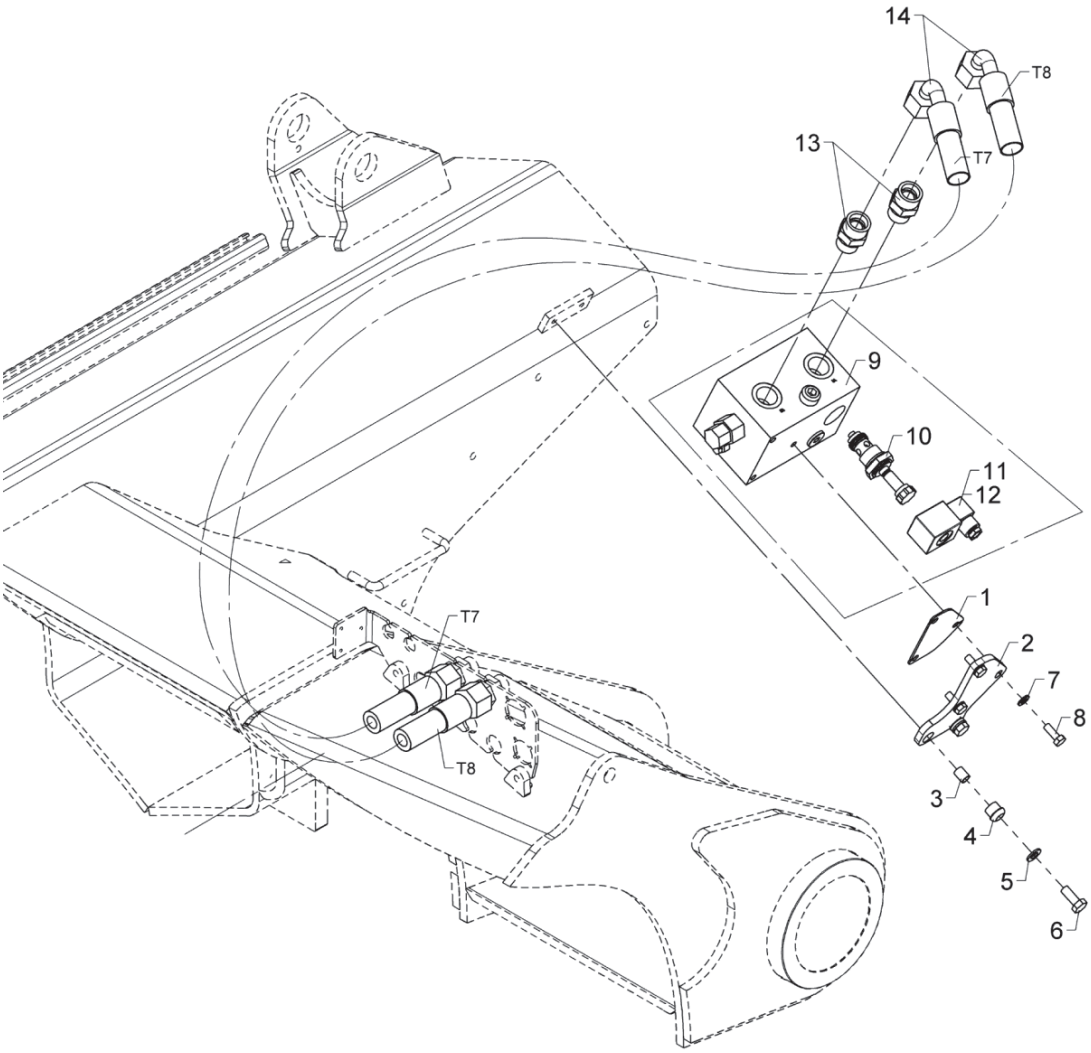

BOM obsolete

559 05 420

Hydraulic system, regeneration, K

From loader 1370001
To loader 1370023
Created 22-05-18
Modified

Pos	Qty.	Part no.	Description	Remarks
1	1	6300608	Division plate	
2	1	6300605	Bracket	
3	2	6300607	Spacer	
4	2	27088	Rubber bushing	
5	2	31177	Washer	10 mm
6	2	30155	Set screw	M10 x 25
7	3	31147	Face washer, 8 mm	
8	3	30133	Set screw, stainless	
9	1	59065	Regeneration valve	
10	1	59071	Magnetic cartridge	
11	1	61777	Solenoid	12V
12	1	61778	Solenoid	
13	2	26197	Connection	P-GEV 20 SR-WD
14	2	56673	Hose	5/8 x 1500mm L/90

9520K-RCS, 9520OK-RCS

Internal ref. 6398660

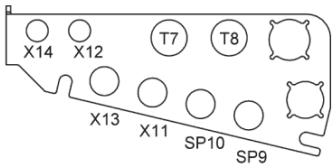

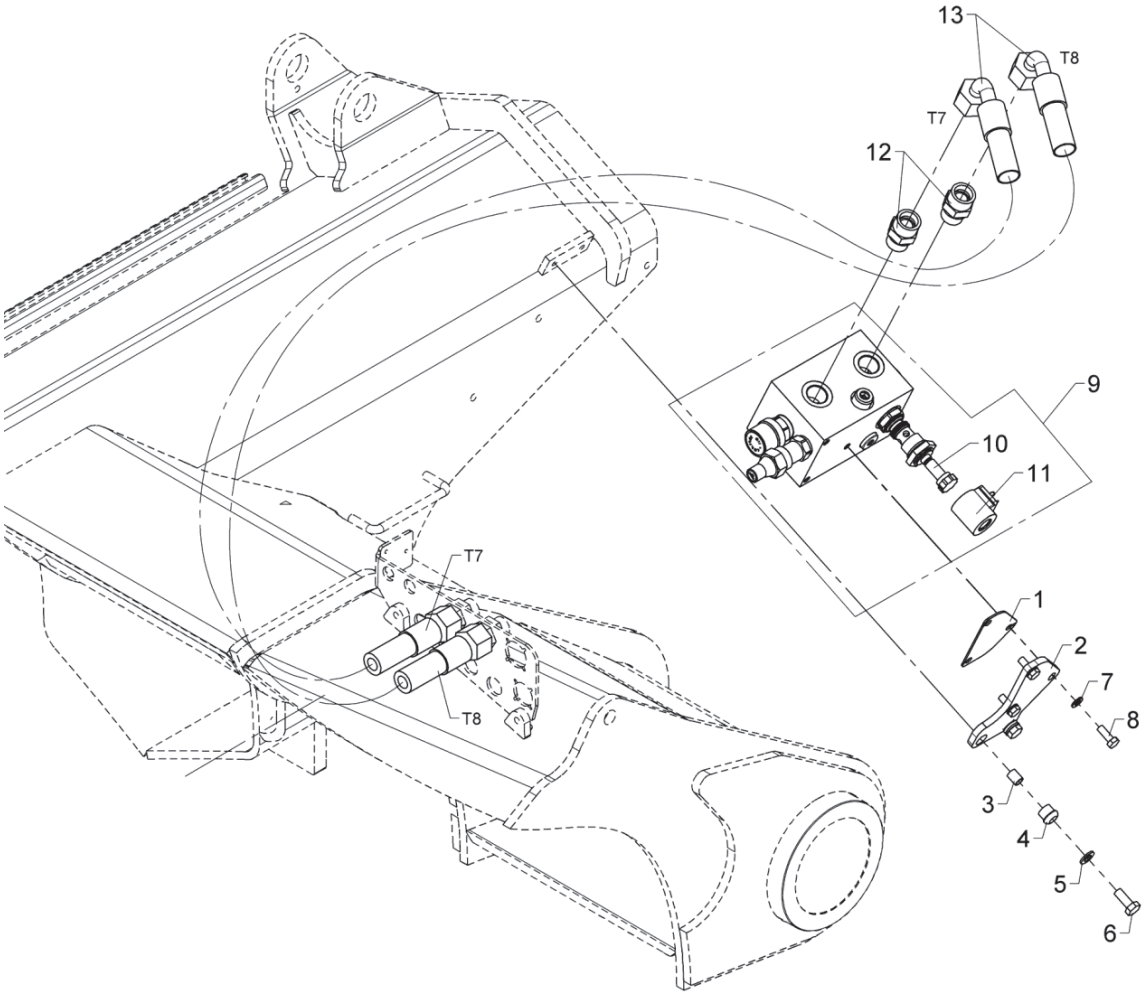

Hydraulic system, regeneration

Pos	Qty.	Part no.	Description	Remarks
1	1	6300608	Division plate	
2	1	6300605	Bracket	
3	2	6300607	Spacer	
4	2	27088	Rubber bushing	
5	2	31177	Washer	10 mm
6	2	30155	Set screw	M10 x 25
7	3	31147	Face washer, 8 mm	
8	3	30133	Set screw, stainless	
9	1	59065	Regeneration valve	
10	1	59458	Magnetic cartridge	
11	1	62363	Solenoid	
12	2	26197	Connection	P-GEV 20 SR-WD
13	2	56673	Hose	5/8 x 1500mm L/90

9520K-RCS, 9520OK-RCS

Internal ref. 6398670

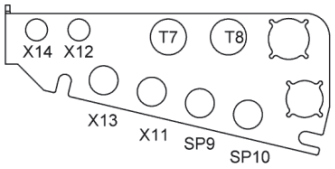

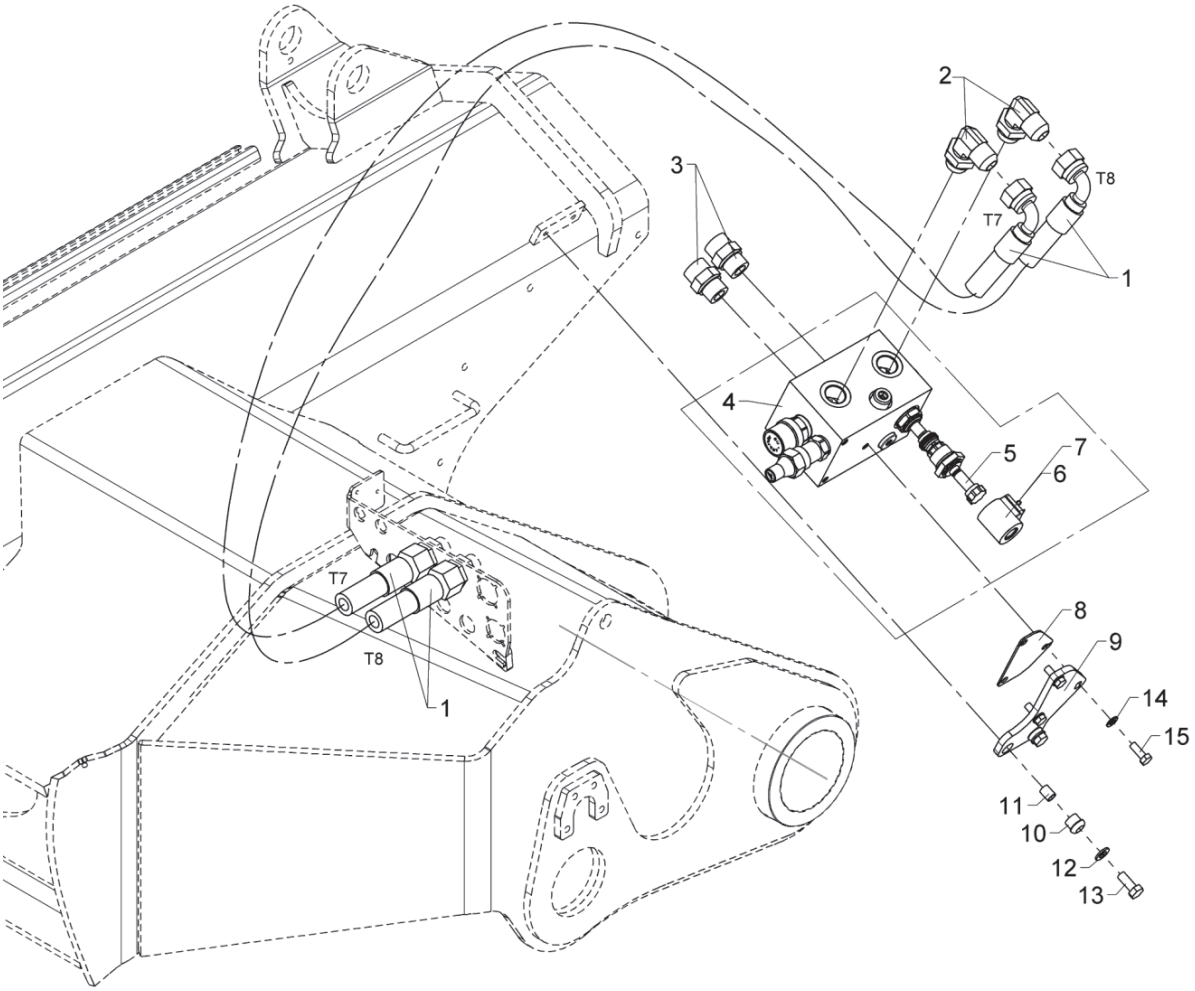

BOM obsolete

559 05 430

Hydraulic system, regeneration, OK

From loader 1370001
To loader 1370023
Created 08-03-18
Modified

Pos	Qty.	Part no.	Description	Remarks
1	2	56213	Hose	5/8x1400 L-S20/90 JIC
2	2	26693	Elbow connection	C40XS18/20 - 3/4
3	2	26197	Connection	P-GEV 20 SR-WD
4	1	59065	Regeneration valve	
5	1	59071	Magnetic cartridge	
6	1	61777	Solenoid	12V
7	1	61778	Solenoid	26V
8	1	6300608	Division plate	
9	1	6300605	Bracket	
10	2	27088	Rubber bushing	
11	2	6300607	Spacer	
12	2	31177	Washer	10 mm
13	2	30155	Set screw	M10 x 25
14	3	31147	Face washer, 8 mm	
15	3	30133	Set screw, stainless	

9520K-RCS, 9520OK-RCS

Internal ref. 6398800

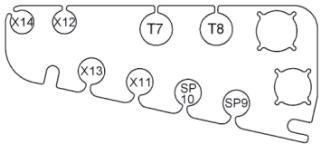

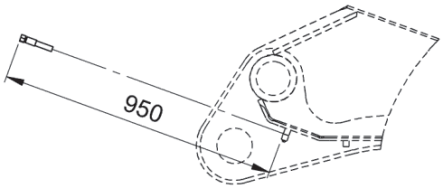

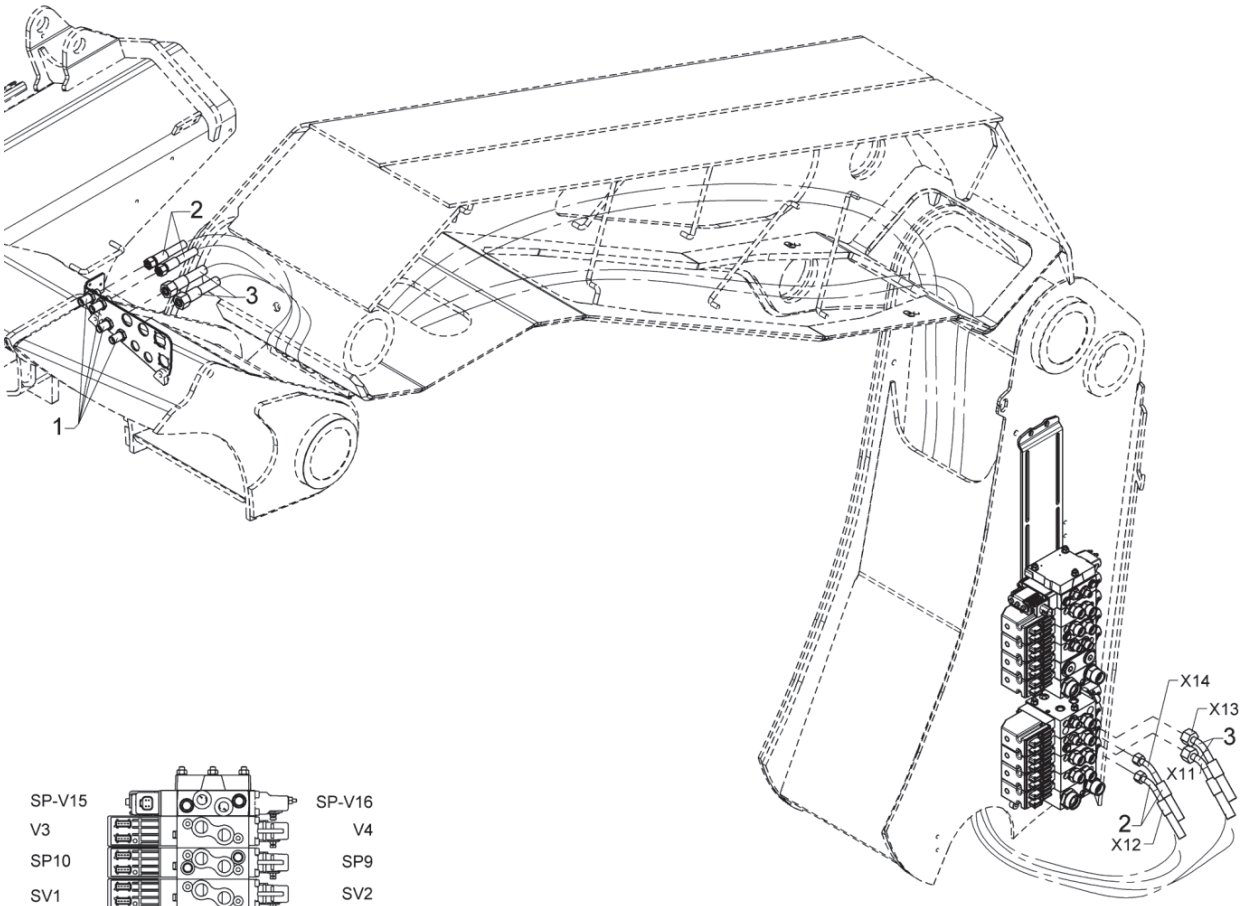

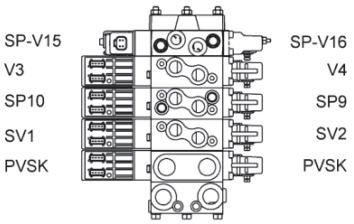

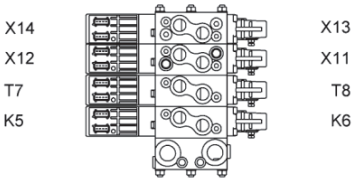

559 05 500

Hose kit, extra valves

From loader 1370001
To loader
Created 22-02-18
Modified

Pos	Qty.	Part no.	Description	Remarks
1	4	25201	Bulkhead connection	
2	2	56686	Hose	3/8 x 5700 L/45° (12L)
3	2	56685	Hose	1/2 x 5700 L/45

9520K-RCS, 9520OK-RCS

Internal ref. 6398920

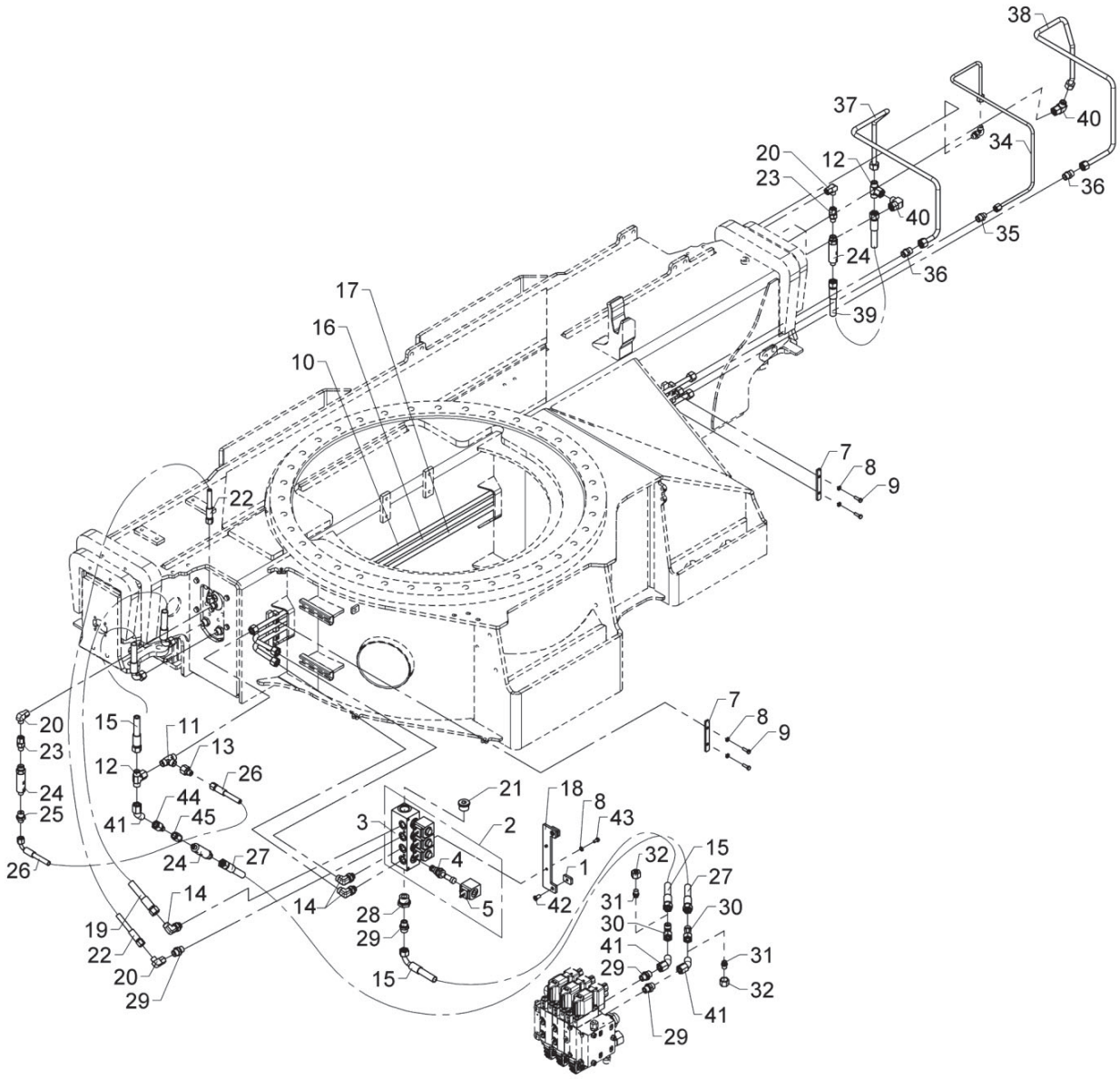

BOM obsolete

559 05 700

From loader 1370001
To loader 1370030
Created 23-01-18
Modified

Hydraulic system, stabilizers

Pos	Qty.	Part no.	Description	Remarks
1	2	6400395	Threaded disc	
2	1	50548	Stabilizer control valve	
3	1	69466	Valve housing	
4	4	69467	Cartridge	
5	4	69468	Solenoid. 24V	
6	2	6300044	Clamp	
7	2	6300047	Plate	
8	6	32302	Face washer, stainless	6 mm
9	4	30113	Set screw, stainless	M6 x 20
10	1	6301424	Hydraulic pipe	
11	1	25137	T-connection	TV 12 L
12	2	25212	T-connection	ETVD 12 L
13	1	26101	Reducing connection	REDSDN 12/8 L
14	3	26897	Elbow connection	12 mm - 3/8"
15	2	0017710	Hose	3/8" x 350 V/O
16	1	6398425	Hydraulic pipe	
17	1	6398426	Hydraulic pipe	
18	1	6400393	Fittings	
19	1	0017000	Hose	
20	3	26170	Elbow connection	EWSD 8 L
21	1	26355	Plug	VS-R-3/4 WD
22	1	62536	Hose	1/4 X 350 L/L
23	2	26104	Connection	EGESD 8 LR-WD
24	3	55239	Sequence valve	
25	1	25244	Connection	GES 8 LR 3/8-WD
26	1	62526	Hose	
27	1	56383	Hose	
28	1	26319	Reducing connection	RED-R 3/4-WD/R 3/8
29	4	25127	Connection	P-GEV 12 LR-WD
30	2	25270	Connection	ELSD 12 L
31	2	26180	Blanking plug	VSD 12 L
32	2	25183	Coupling nut	M 12 L
33	1	25109	Connection	GES 8 LR-WD
34	1	6303422	Hydraulic pipe	
35	1	25931	Connection	GS 12/8 L
36	2	25204	Double connection	GS 12 L
37	1	6303421	Hydraulic pipe	
38	1	6303423	Hydraulic pipe	
39	1	0015680	Hose	3/8" x260 O/O
40	2	25242	Elbow connection	EWSD 12 L
41	3	26981	Elbow connection	24-SWOE 45-12L

9520K-RCS, 9520OK-RCS

Internal ref. 6398920

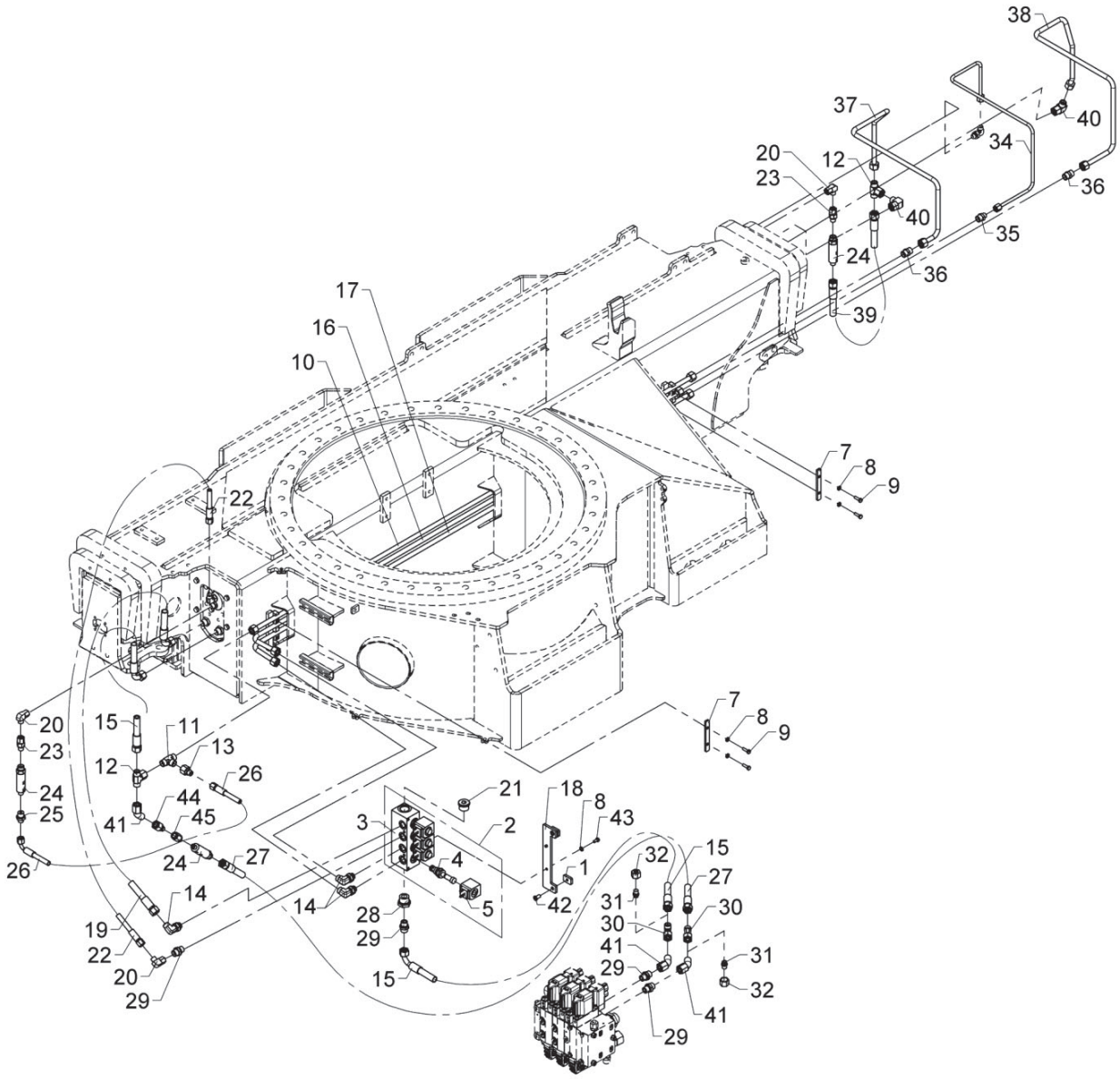

BOM obsolete

559 05 700

Hydraulic system, stabilizers

From loader 1370001
To loader 1370030
Created 23-01-18
Modified

Pos	Qty.	Part no.	Description	Remarks
42	2	32481	Screw	MC8 x 16
43	2	30111	Set screw, stainless	
44	1	25241	Connection	EGESD 12 LR 1/4-WD
45	1	25904	Socket	

9520K-RCS, 9520OK-RCS

Internal ref. 6398920

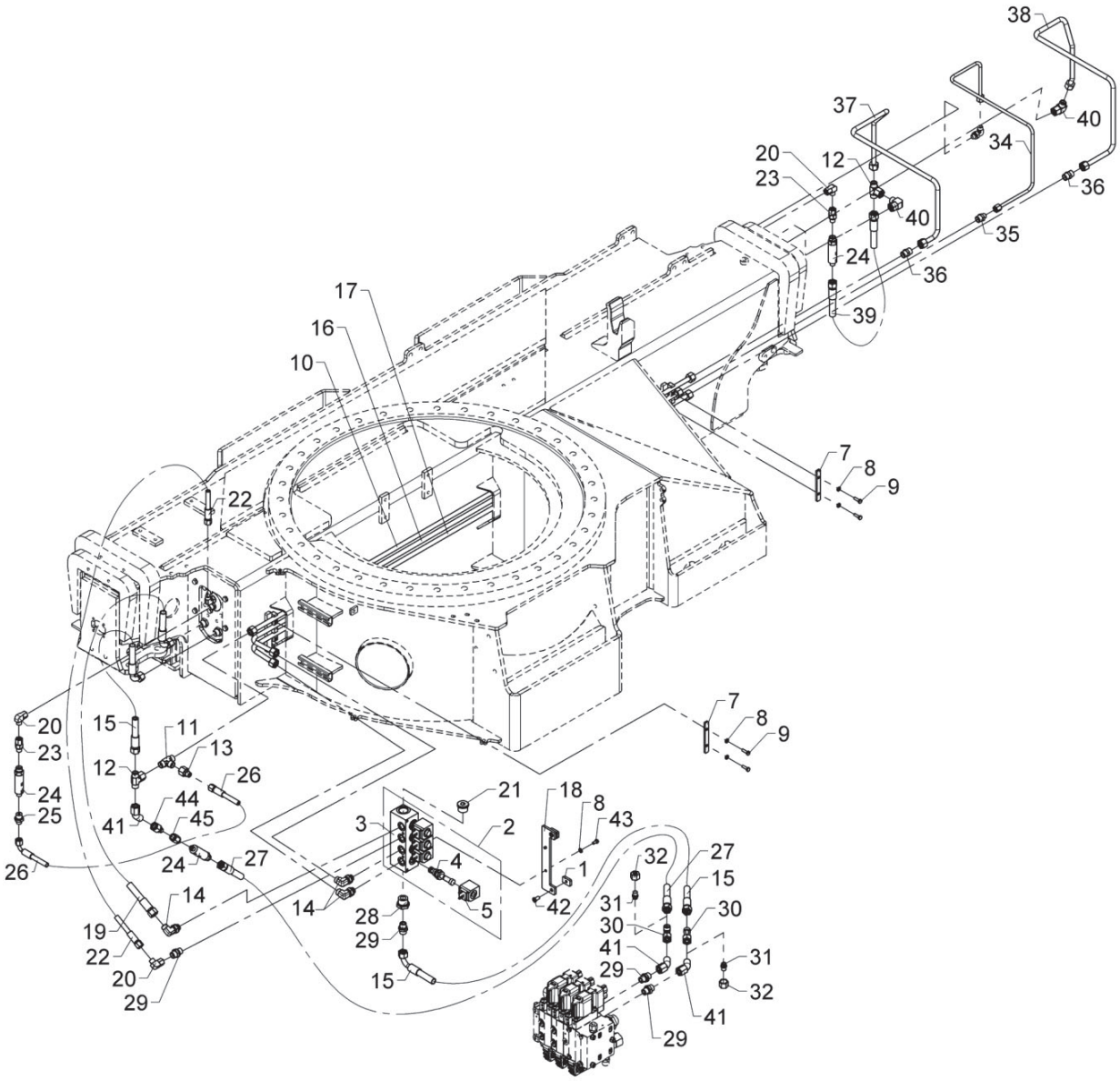

Hydraulic system, stabilizers

Pos	Qty.	Part no.	Description	Remarks
1	2	6400395	Threaded disc	
2	1	50548	Stabilizer control valve	
3	1	69466	Valve housing	
4	4	69467	Cartridge	
5	4	69468	Solenoid. 24V	
6	2	6300044	Clamp	
7	2	6300047	Plate	
8	6	32302	Face washer, stainless	6 mm
9	4	30113	Set screw, stainless	M6 x 20
10	1	6301424	Hydraulic pipe	
11	1	25137	T-connection	TV 12 L
12	2	25212	T-connection	ETVD 12 L
13	1	26101	Reducing connection	REDSDN 12/8 L
14	3	26897	Elbow connection	12 mm - 3/8"
15	2	0017710	Hose	3/8" x 350 V/O
16	1	6398425	Hydraulic pipe	
17	1	6398426	Hydraulic pipe	
18	1	6400393	Fittings	
19	1	0017000	Hose	
20	3	26170	Elbow connection	EWSD 8 L
21	1	26355	Plug	VS-R-3/4 WD
22	1	62536	Hose	1/4 X 350 L/L
23	2	26104	Connection	EGESD 8 LR-WD
24	3	55239	Sequence valve	
25	1	25244	Connection	GES 8 LR 3/8-WD
26	1	62526	Hose	
27	1	56383	Hose	
28	1	26319	Reducing connection	RED-R 3/4-WD/R 3/8
29	4	25127	Connection	P-GEV 12 LR-WD
30	2	25270	Connection	ELSD 12 L
31	2	26180	Blanking plug	VSD 12 L
32	2	25183	Coupling nut	M 12 L
33	1	25109	Connection	GES 8 LR-WD
34	1	6303422	Hydraulic pipe	
35	1	25931	Connection	GS 12/8 L
36	2	25204	Double connection	GS 12 L
37	1	6303421	Hydraulic pipe	
38	1	6303423	Hydraulic pipe	
39	1	0015680	Hose	3/8" x260 O/O
40	2	25242	Elbow connection	EWSD 12 L
41	3	26981	Elbow connection	24-SWOE 45-12L

9520K-RCS, 9520OK-RCS

Internal ref. 6398920

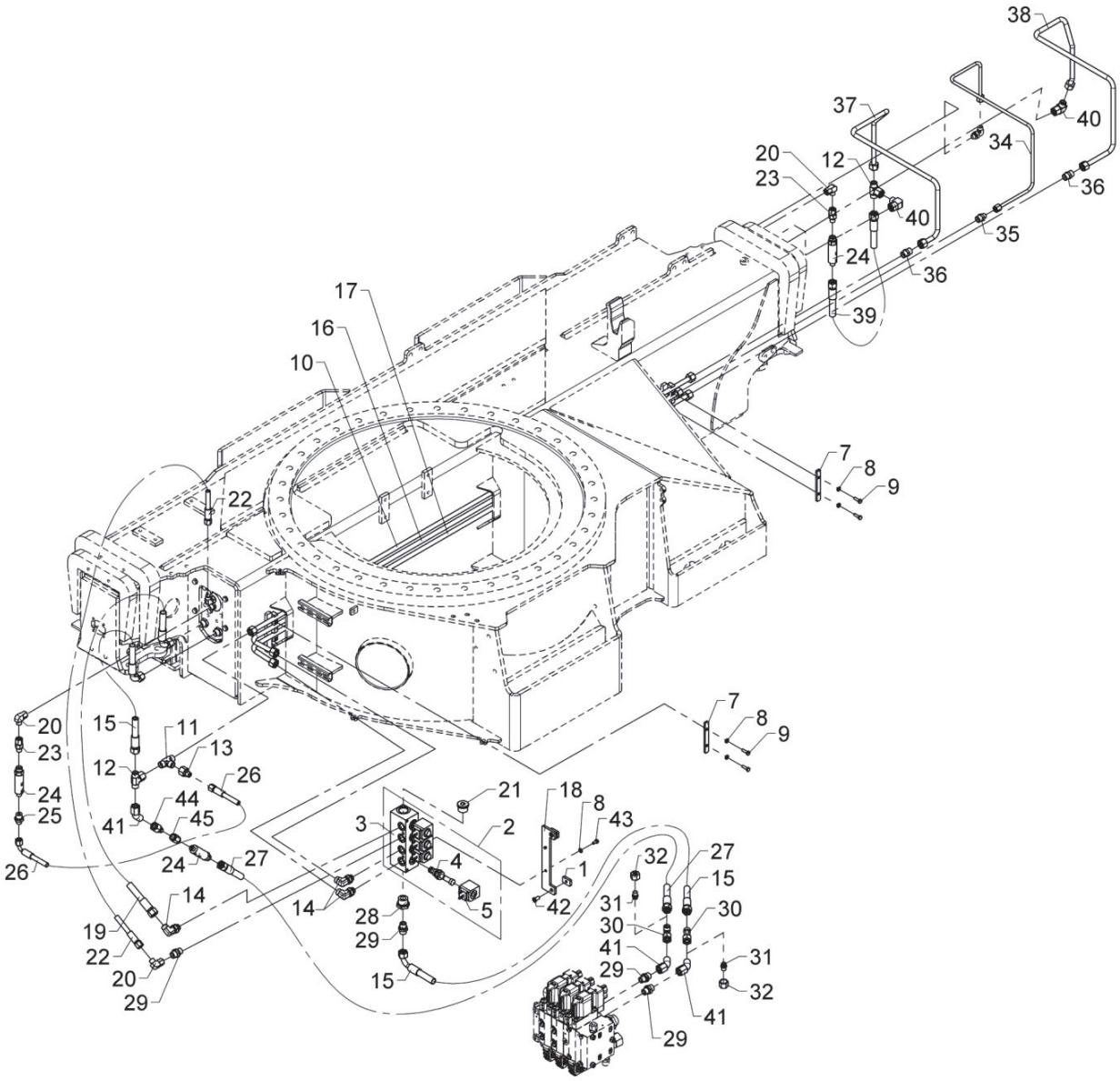

Hydraulic system, stabilizers

Pos	Qty.	Part no.	Description	Remarks
42	2	32481	Screw	MC8 x 16
43	2	30111	Set screw, stainless	
44	1	25241	Connection	EGESD 12 LR 1/4-WD
45	1	25904	Socket	

9520K-RCS, 9520OK-RCS

6303090
Internal ref. 6301090

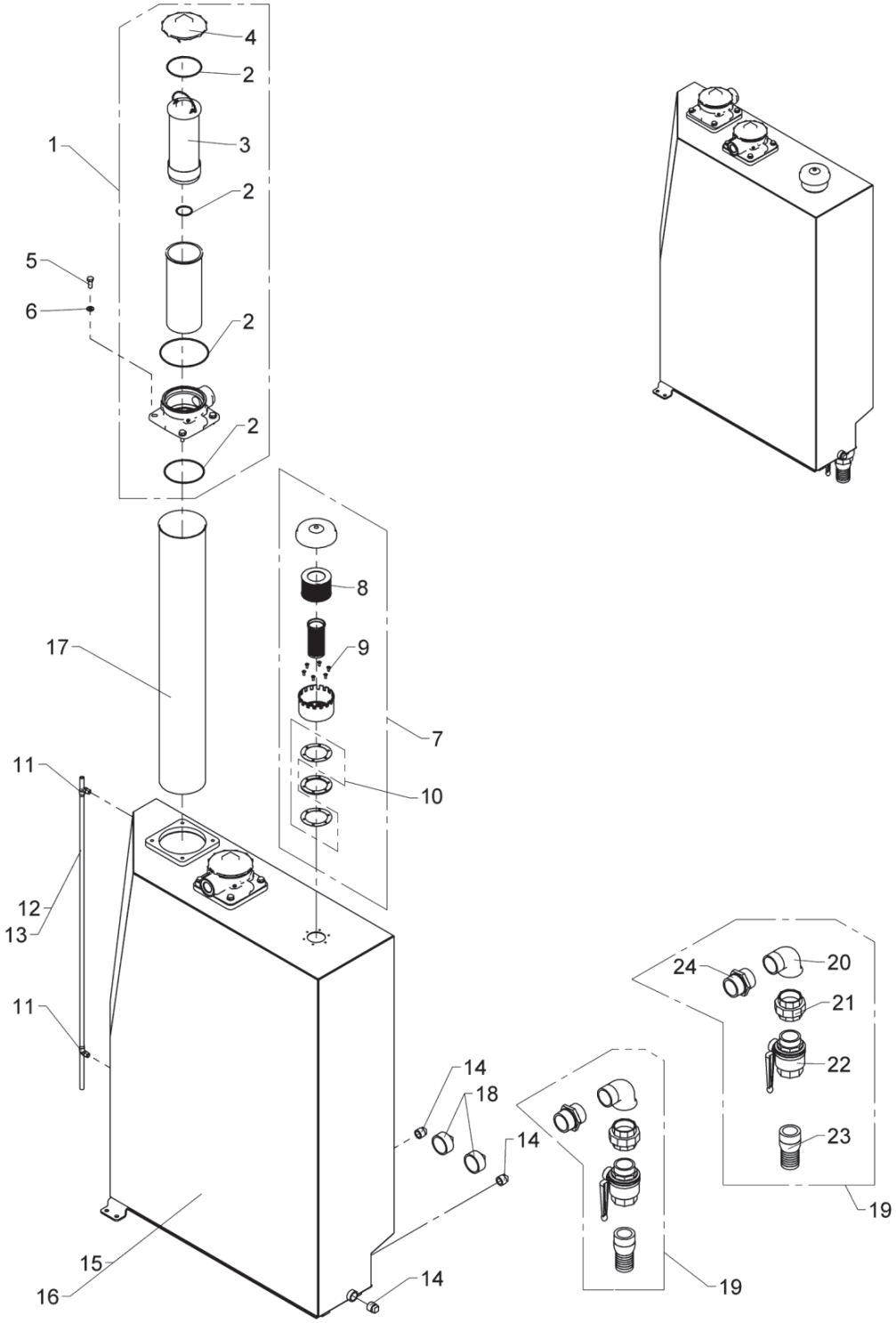

Tank, cpl.

Pos	Qty.	Part no.	Description	Remarks
		6301090	Oil tank, complete (320L)	320L, sort malet
		6303090	Oil tank, complete (390L)	390L, sort malet
1	2	49408	Return filter	
2	2	49419	Seal kit	
3	2	49409	Filter	
4	2	49423	Cover	
5	8	31513	Set screw, stainless	M10 x 25
6	8	31565	Washer, stainless	10 mm
7	1	60275	Air filter	
8	1	60276	Filter	
9	6	32405	Sockethead screw	MK5 x 12
10	1	62399	Seal kit for i.a. 60275	
11	2	25535	Elbow connection	
12	1	62472	Nylon pipe	1090 mm
13	1	62472	Nylon pipe	900 mm
14	3	26914	Plug 3/4"	
15	1	49152	Oil tank, 320 l, black	
16	1	49151	Oil tank 390 l, black	
17	2	58409	Pipe	
18	2	25398	Plug	
19	2	6395290	Ball valve for tank	
20	2	25430	Elbow	
21	2	25595	Union nut 2"	
22	2	58787	3-way ball valve	2"
23	2	60991	Nipple	CN 200 / HMF
24	2	25342	Hexagon nipple	2"

9520K-RCS, 9520OK-RCS

6398530
Internal ref. 6398520

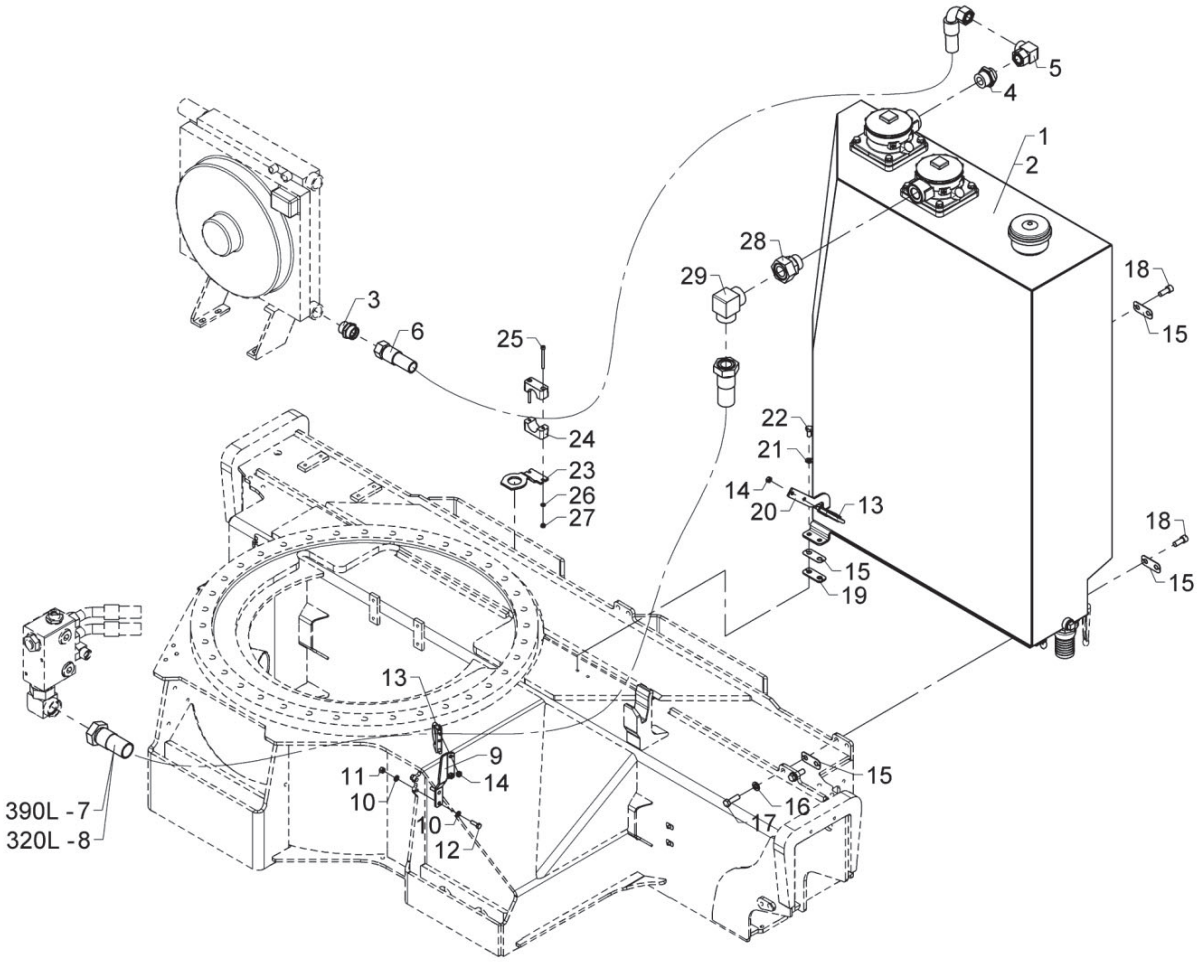

Tank incl. fittings

Pos	Qty.	Part no.	Description	Remarks
		6398520	Hydraulic tank 320L with mounting fittings	320L
		6398530	Hydraulic tank 390L with mounting fittings	390L
1	1	6301090	Oil tank, complete (320L)	320L
2	1	6303090	Oil tank, complete (390L)	390L
3	1	26163	Connection	P-GEV 28 LR-WD
4	1	25892	Straight connection	GA 28 LR 1.1/4
5	1	26817	Elbow connection	P-EWV 28 L-SV
6	1	56539	Hose 1" X 1900 mm L/90 28 L	1" X 1900 mm L/90 28 Let
7	1	57854	Hose	1 1/2" X 3400 mm L/L 42 Let
8	1	57855	Hose	1 1/2" X 3200 mm L/L 42 Let
9	1	6301068	Fitting	
10	4	31147	Face washer, 8 mm	
11	2	30886	Lock nut, stainless	M8
12	2	31009	Set screw	M8 x 25
13	2	31828	Hose clip	
14	4	30856	Nut, stainless	M8
15	4	6301084	Division plate	
16	6	31131	Washer	12 mm
17	2	30179	Set screw	M12 x 40
18	4	31542	Sockethead screw, stainless	MC12 x 30
19	1	6301085	Division plate	
20	1	6301069	Fitting	
21	2	31177	Washer	10 mm
22	2	31517	Set screw, stainless	M10 x 20
23	1	6303067	Fitting	
24	1	31468	Clamp	
25	2	30966	Screw	MC6 x 65
26	2	32302	Face washer, stainless	6 mm
27	2	30884	Lock nut, stainless	M6
28	1	26937	Straight connection + top nut	EGESD 42 LR-1 1-4
29	1	26938	Elbow connection	WS 42 L

9520K-RCS, 9520OK-RCS

6398690
Internal ref. 6398680

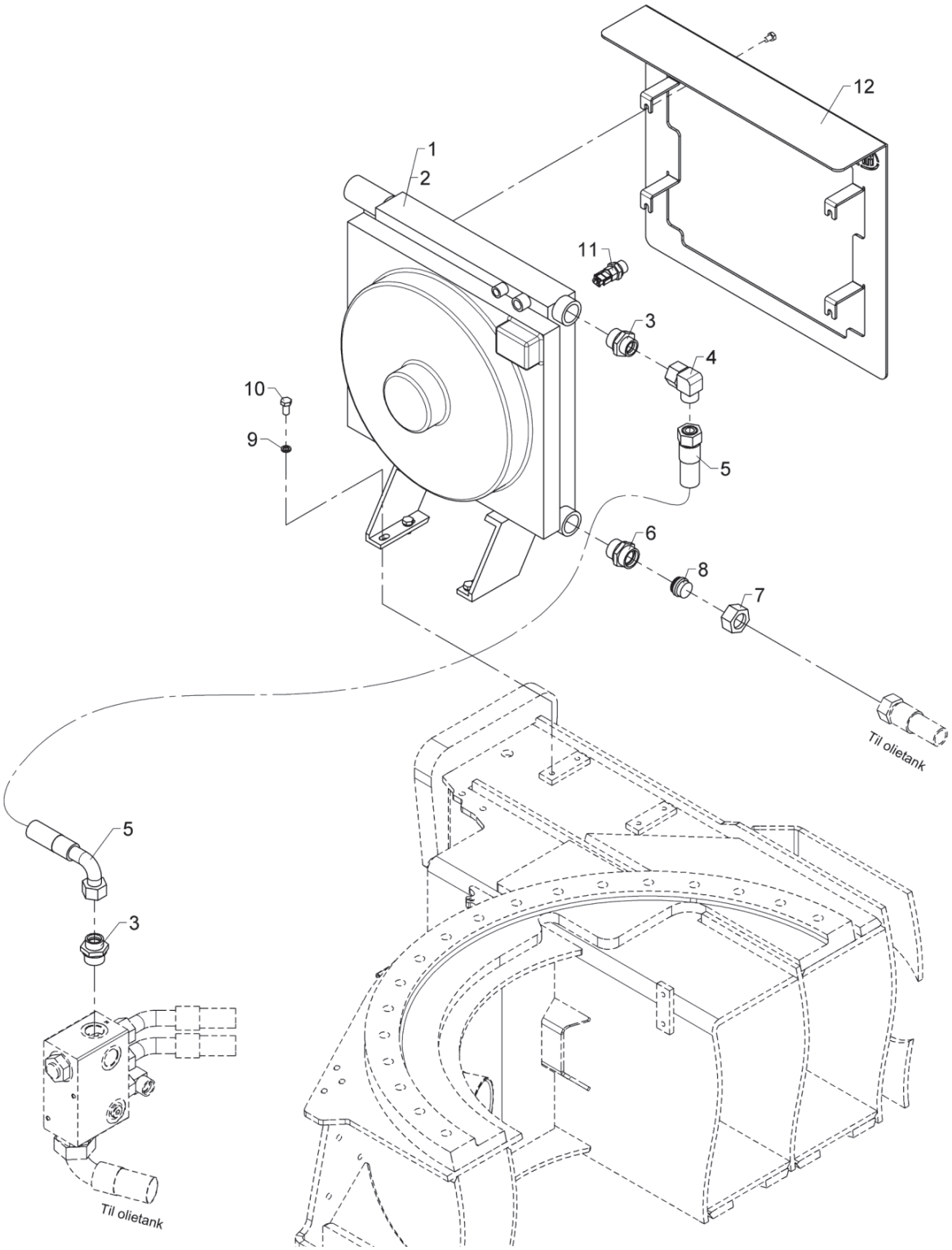

Oil cooler

Pos	Qty.	Part no.	Description	Remarks
		6398680	Oil cooler, large, 24 V, complete	24V
		6398690	Oil cooler, large, 12 V, complete	12V
1	1	50274	Oil cooler 24 V + Smartdrive	
2	1	50275	Oil cooler 12 V + Smartdrive	
3	2	26122	Connection	P-GEV 22 LR 1-WD
4	1	25209	Elbow connection	EWSD 22 L
5	1	56502	Hose	Til køler
6	1	26163	Connection	P-GEV 28 LR-WD
7	1	26108	Coupling nut	M 28 L
8	1	26347	Blanking plug	VSD 28 L
9	4	31156	Spring washer	10 mm
10	4	31517	Set screw, stainless	M10 x 20
11	1	50290	Temperature sensor, oil cooler	
12	1	6398681	Shield, oil cooler, large	

9520K-RCS, 9520OK-RCS

6397630
Internal ref. 6398630

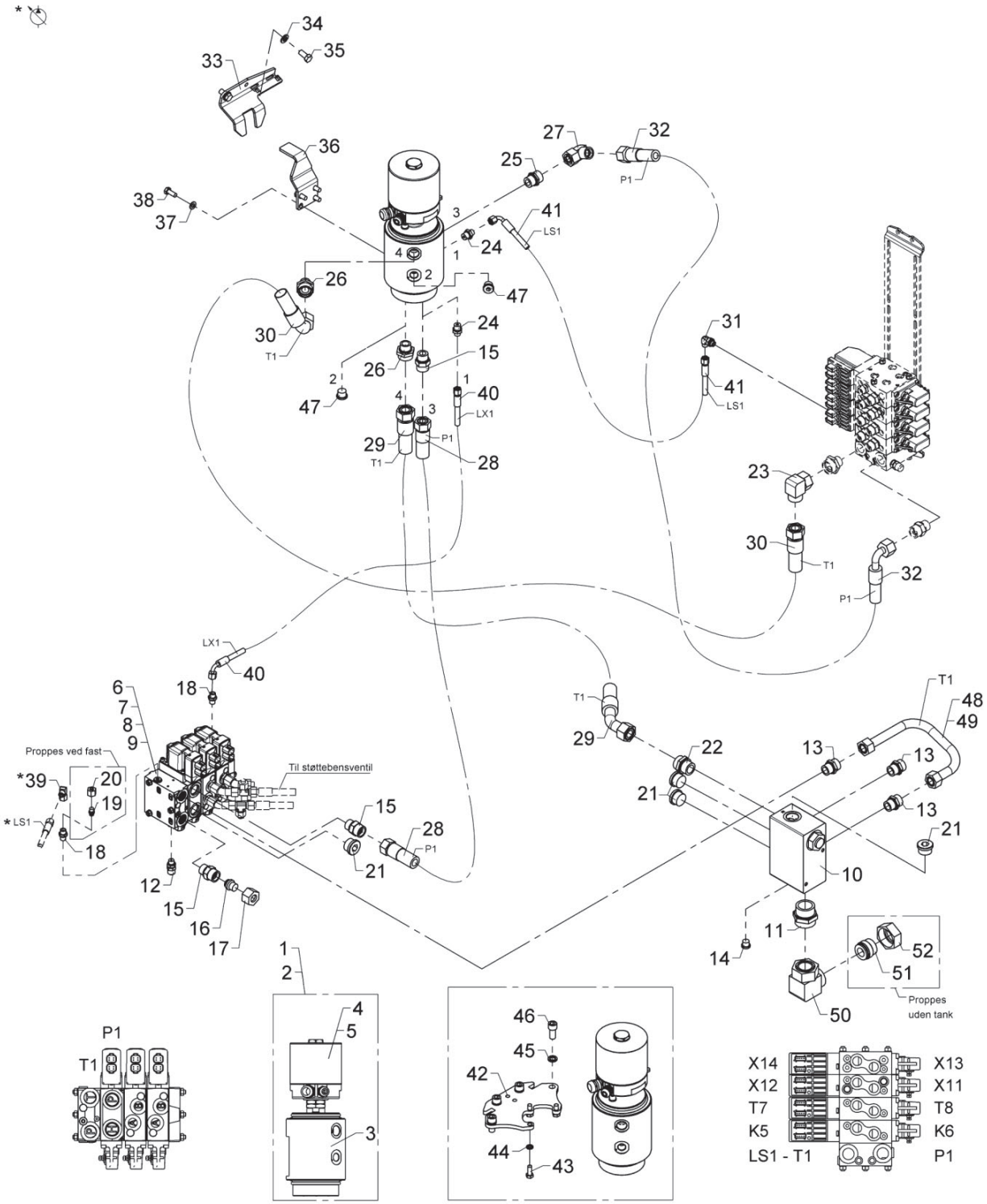

Hydraulic system, pump 1-circuit

Pos	Qty.	Part no.	Description	Remarks
1	1	49622	Swivel coupling	
2	1	49631	Collector ring with sensor	MEWP
3	1	49623	Hydr. part, swivel coupling	
4	1	49625	Electr.part+sensor,swivel coup	
5	1	49630	Electric part	MEWP
6	1	55827	Valve block	Fixed pump
7	1	55828	Valve block	Variable pump
8	1	55829	Valve block	Fixed pump
9	1	55830	Valve block	Variable pump
10	1	50368	Connecting block	
11	1	26930	Straight connection	P-GEV 42 LR-1 1-2
12	1	26103	Pressure-gauge connect.	
13	3	25169	Connection	P-GEV 22 LR-WD
14	1	25277	Plug	VS-R-3/8 WD
15	3	26197	Connection	P-GEV 20 SR-WD
16	1	26361	Blanking plug	VSD 20 S
17	1	26109	Coupling nut	M 20 S
18	2	25109	Connection	GES 8 LR-WD
19	1	25202	Blanking plug	VSD 10 L
20	1	25182	Coupling nut	M 10 L
21	4	26321	Plug	VS-R 1" WD
22	1	26163	Connection	P-GEV 28 LR-WD
23	1	26192	Elbow connection	EWSD 22 L
24	2	25244	Connection	GES 8 LR 3/8-WD
25	1	25637	Connection	P-GEV 20 SR-WD - short special e
26	2	26845	Connection	GES 28 LR 3/4-WD
27	1	26198	Elbow connection	EWVD 20 S-SV
28	1	57853	Hose	3/4 x 1200 mm 20S O/O
29	1	62760	Hose	1"x1400 L/45°
30	1	62762	Hose	1" x 750mm L/90
31	1	26898	Elbow connection	8 mm - 1/4"
32	1	62758	Hose	3/4 x 1200mm L/90
33	1	6399671	Carrier	
34	2	31131	Washer	12 mm
35	2	30176	Set screw	M12 x 25
36	1	6399669	Carrier fitting, 1 circuits	
37	4	31177	Washer	10 mm
38	4	30155	Set screw	M10 x 25
39	1	26170	Elbow connection	EWSD 8 L
40	1	62753	Hose	1/4 x 1300mm L/90
41	1	62754	Hose	1/4 x 950mm L/90

9520K-RCS, 9520OK-RCS

6397630
Internal ref. 6398630

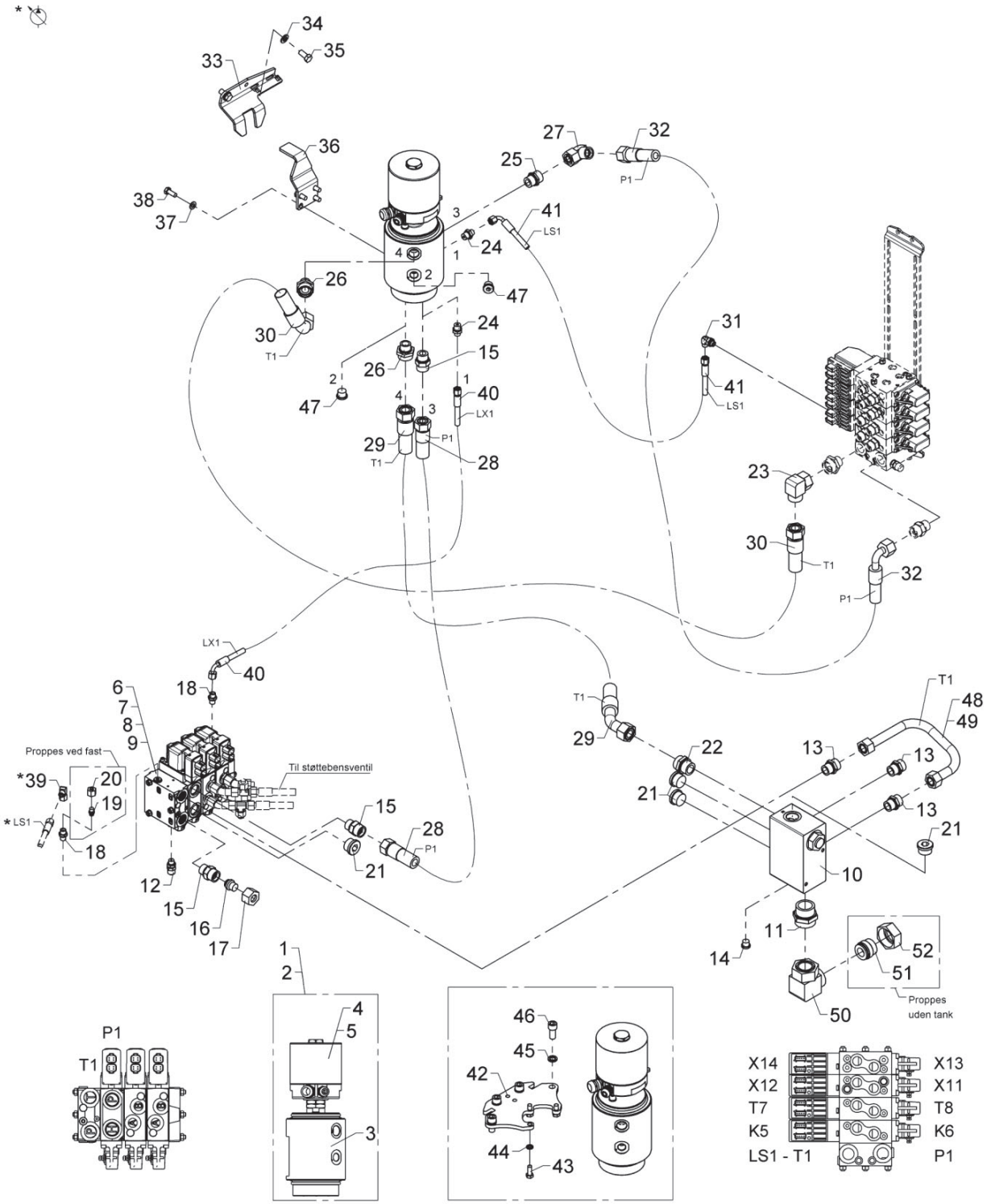

Hydraulic system, pump 1-circuit

Pos	Qty.	Part no.	Description	Remarks
42	1	6399667	Mounting flange, 1 circuits	
43	3	31513	Set screw, stainless	M10 x 25
44	3	30933	Nordlock washer	10 mm
45	4	31099	Washer, 14 mm	14 mm
46	4	30480	Screw	MC14 x 30
47	2	25103	Plug	VS-R-1/2 WD
48	1	6400397	Pipe	9520
49	1	6399397	Pipe for connecting block	7020
50	1	26928	Elbow connection	P-EW 42 L-SV
51	1	26989	Blanking plug	VSD 42 L
52	1	26988	Coupling nut	M 42 L

9520K-RCS, 9520OK-RCS

6397640
Internal ref. 6398640

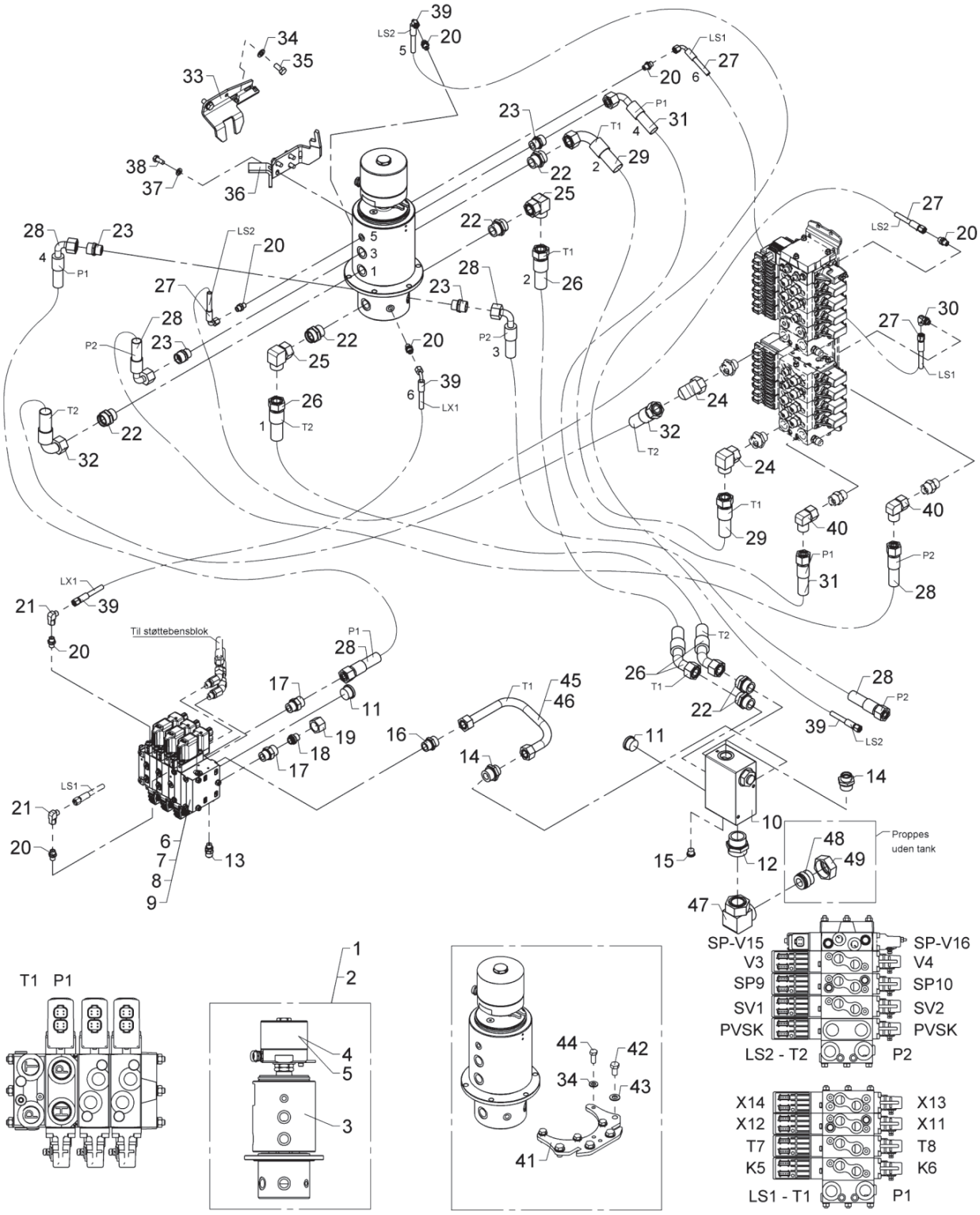

Hydraulic system, variable flow pump, dual circuit

Pos	Qty.	Part no.	Description	Remarks
1	1	49627	Swivel coupling + sensor	
2	1	49634	Collector ring with sensor	MEWP
3	1	49628	Hydraulic part	
4	1	49625	Electr.part+sensor,swivel coup	
5	1	49630	Electric part	MEWP
6	1	55827	Valve block	Fixed pump
7	1	55828	Valve block	Variable pump
8	1	55829	Valve block	Fixed pump
9	1	55830	Valve block	Variable pump
10	1	50368	Connecting block	
11	2	26321	Plug	VS-R 1" WD
12	1	26930	Straight connection	P-GEV 42 LR-1 1-2
13	1	26103	Pressure-gauge connect.	
14	2	26122	Connection	P-GEV 22 LR 1-WD
15	1	25277	Plug	VS-R-3/8 WD
16	1	25169	Connection	P-GEV 22 LR-WD
17	2	26197	Connection	P-GEV 20 SR-WD
18	1	26361	Blanking plug	VSD 20 S
19	1	26109	Coupling nut	M 20 S
20	7	25109	Connection	GES 8 LR-WD
21	2	26170	Elbow connection	EWSD 8 L
22	6	26163	Connection	P-GEV 28 LR-WD
23	4	25637	Connection	P-GEV 20 SR-WD - short special e
24	2	26192	Elbow connection	EWSD 22 L
25	2	26817	Elbow connection	P-EWV 28 L-SV
26	2	62760	Hose	1"x1400 L/45°
27	2	62754	Hose	1/4 x 950mm L/90
28	3	62758	Hose	3/4 x 1200mm L/90
29	1	62755	Hose	1" x 900mm L/90
30	1	26898	Elbow connection	
31	1	62757	Hose	3/4 x 850mm L/90
32	1	62759	Hose	1" x 1100mm L/90
33	1	6399671	Carrier	
34	6	31131	Washer	12 mm
35	2	30176	Set screw	M12 x 25
36	1	6399668	Carrier fitting, 2 circuits	
37	4	31177	Washer	10 mm
38	4	30155	Set screw	M10 x 25
39	2	62753	Hose	1/4 x 1300mm L/90
40	2	26198	Elbow connection	EWVD 20 S-SV
41	1	6399666	Mounting flange, 2 circuits	

9520K-RCS, 9520OK-RCS

6397640
Internal ref. 6398640

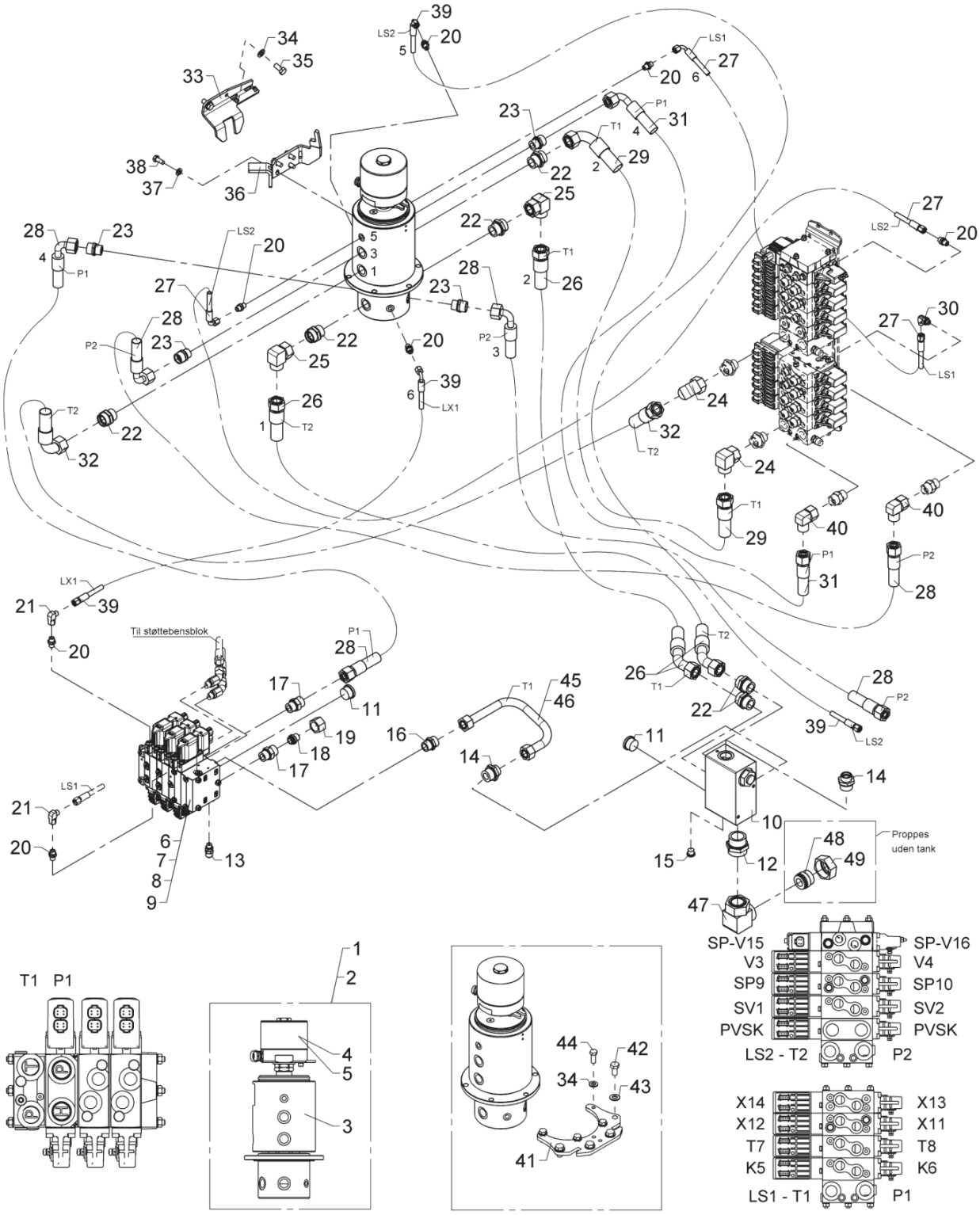

Hydraulic system, variable flow pump, dual circuit

Pos	Qty.	Part no.	Description	Remarks
42	4	30205	Set screw	M14 x 25
43	4	31178	Washer	14 mm
44	4	31523	Set screw, stainless	M12 x 30
45	1	6400397	Pipe	9520
46	1	6399397	Pipe for connecting block	7020
47	1	26928	Elbow connection	P-EW 42 L-SV
48	1	26989	Blanking plug	VSD 42 L
49	1	26988	Coupling nut	M 42 L

9520K-RCS, 9520OK-RCS

Internal ref. 6340550

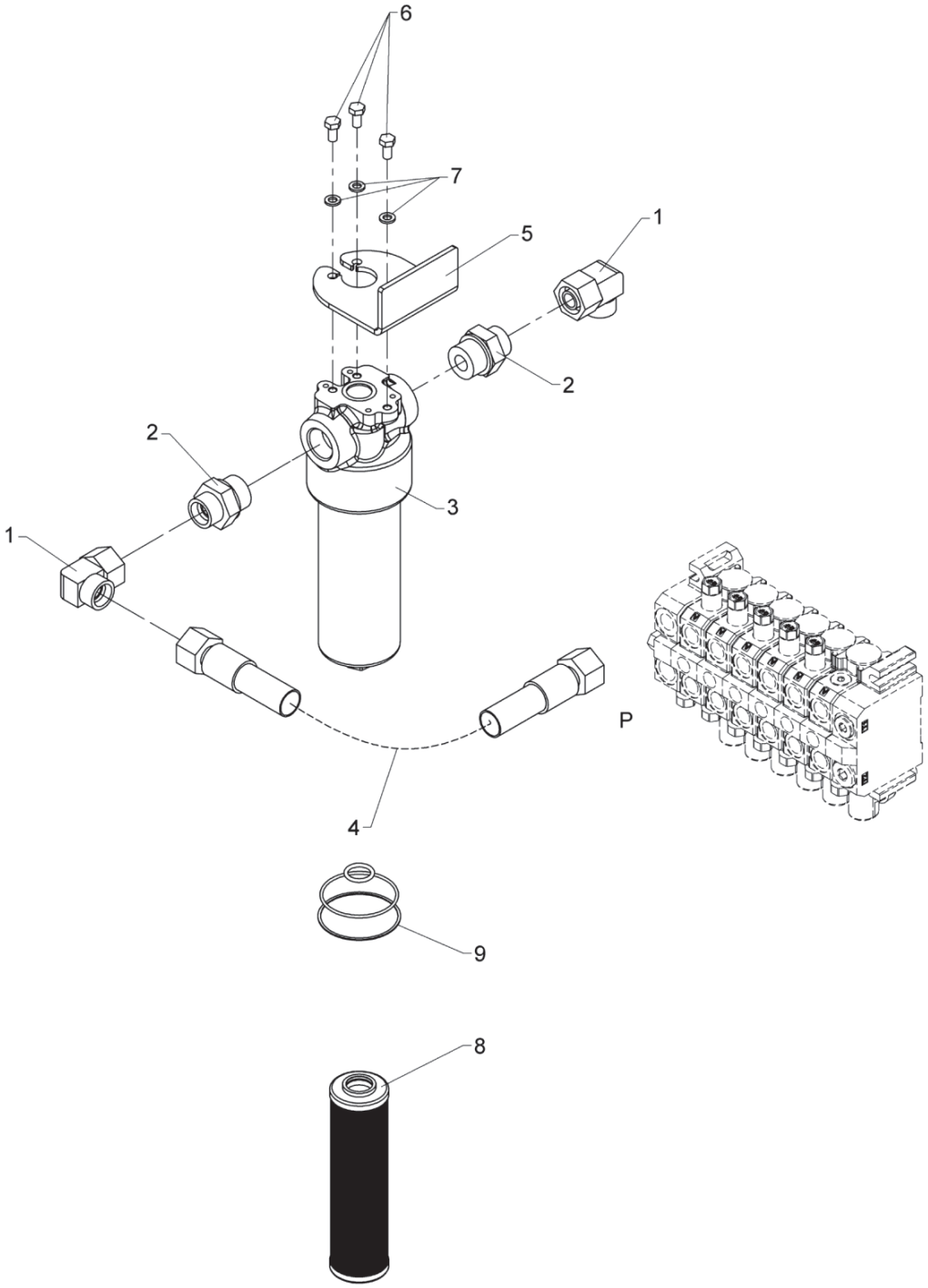

High-pressure filter

Pos	Qty.	Part no.	Description	Remarks
1	2	26198	Elbow connection	EWVD 20 S-SV
2	2	26851	Connection	GES 20 SR 1-WD
3	1	49401	High pressure filter	
4	1	62626	Hose	
5	1	6882974	Bracket, high pressure filter	
6	3	30131	Set screw, stainless	M8 x 16
7	3	31155	Spring washer	8 mm
8	1	49402	Filter	
9	1	49417	Seal kit	

9520K-RCS, 9520OK-RCS

Internal ref. 6653150

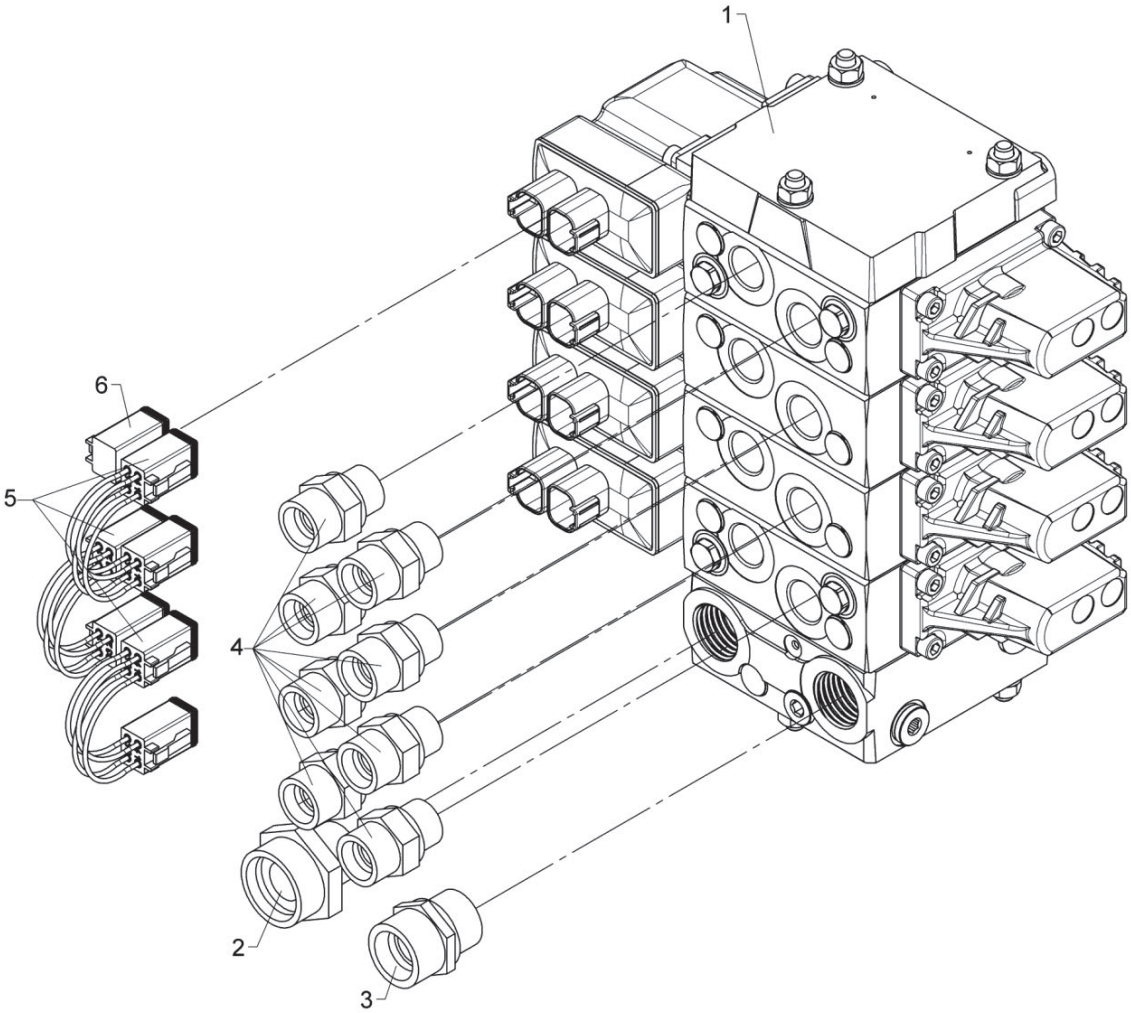

559 06 200

Valve block, 4 sects. fixed/variable

From loader 1370001
To loader
Created 03-10-18
Modified

Pos	Qty.	Part no.	Description	Remarks
1	1	55901	Valve block	
2	1	26845	Connection	GES 28 LR 3/4-WD
3	1	25637	Connection	P-GEV 20 SR-WD - short special e
4	8	26334	Connection	P-GEV 16 SR-WD
5	3	28779	Connection cable, 80 mm	80mm
6	1	7009997	Safety plug	

9520K-RCS, 9520OK-RCS

Internal ref. 6653170

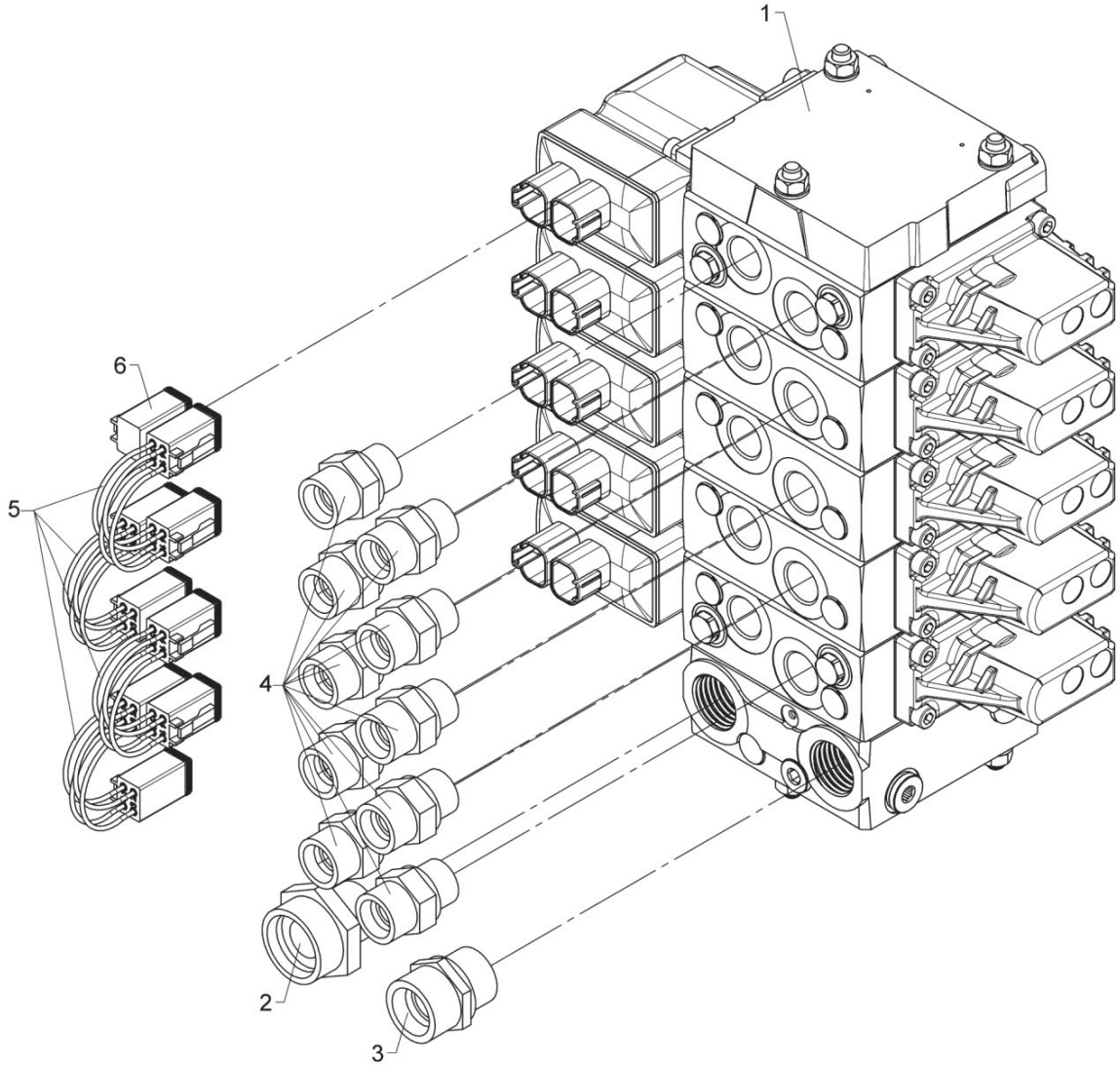

559 06 205

Valve block, 5 sects. fixed/variable

From loader 1370001
To loader
Created 03-10-18
Modified

Pos	Qty.	Part no.	Description	Remarks
1	1	55902	Valve block	
2	1	26845	Connection	GES 28 LR 3/4-WD
3	1	25637	Connection	P-GEV 20 SR-WD - short special e
4	10	26334	Connection	P-GEV 16 SR-WD
5	4	28779	Connection cable, 80 mm	80mm
6	1	7009997	Safety plug	

9520K-RCS, 9520OK-RCS

6653190
Internal ref. 6653160

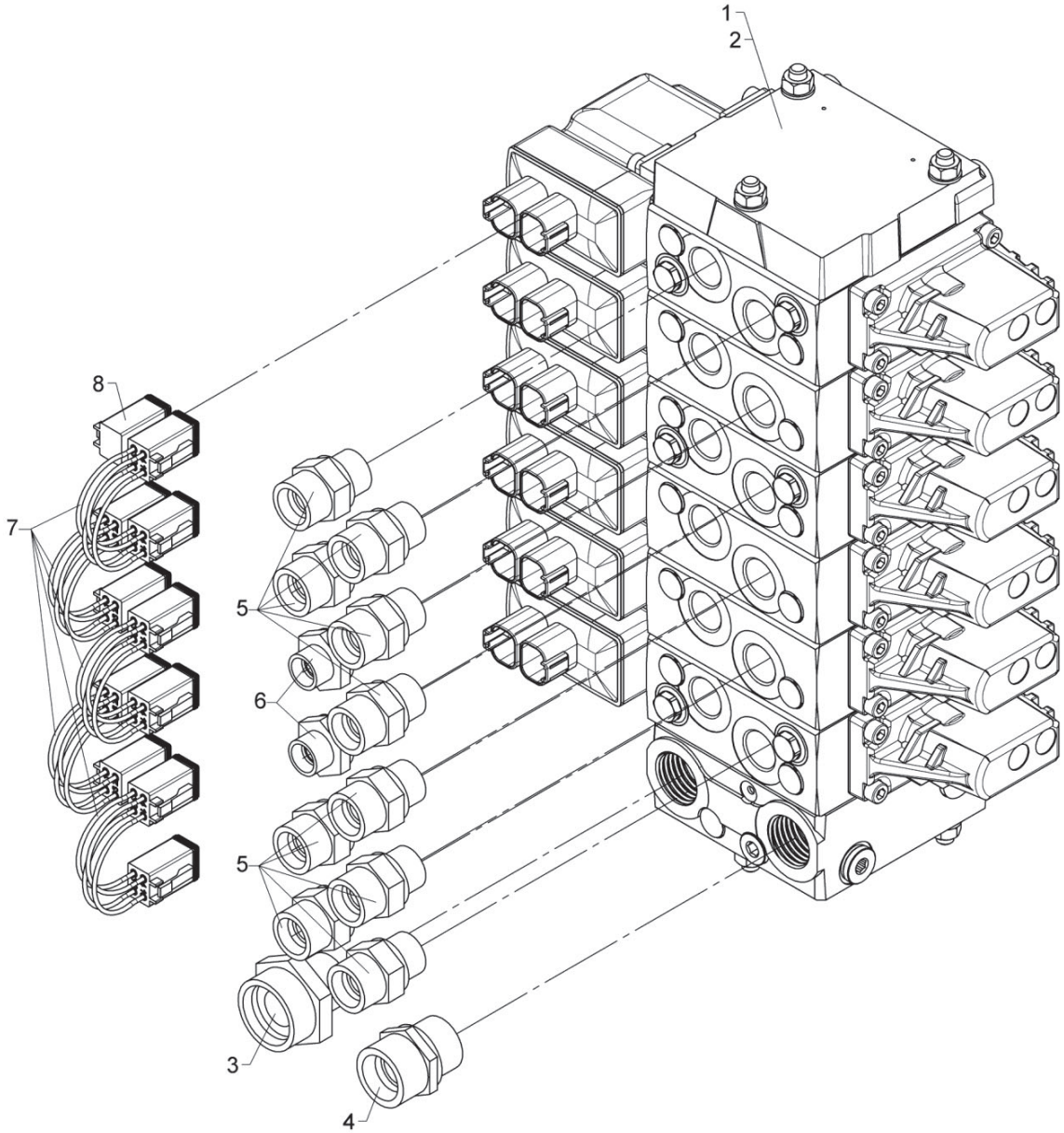

559 06 210

Valve block, 6 sects. fixed/variable

From loader 1370001
To loader
Created 03-10-18
Modified

Pos	Qty.	Part no.	Description	Remarks
1	1	55903	Valve block	
2	1	55904	Valve block	
3	1	26845	Connection	GES 28 LR 3/4-WD
4	1	25637	Connection	P-GEV 20 SR-WD - short special e
5	10	26334	Connection	P-GEV 16 SR-WD
6	2	25108	Connection	GES 12 LR 1/2-WD
7	5	28779	Connection cable, 80 mm	80mm
8	1	7009997	Safety plug	

9520K-RCS, 9520OK-RCS

Internal ref. 6653180

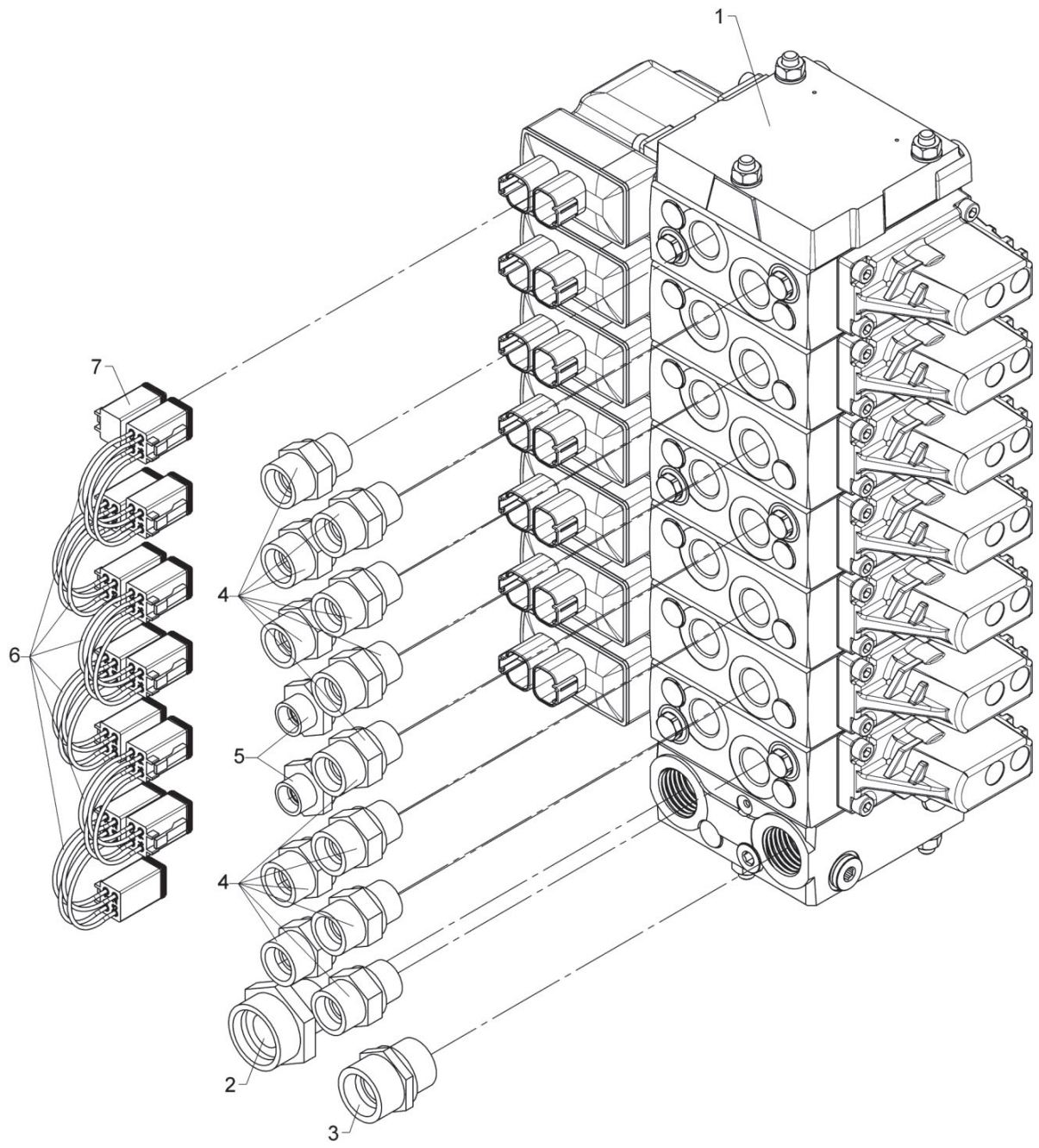

559 06 220

From loader 1370001
To loader

Created 03-10-18
Modified

Valve block, 7 sects. fixed/variable

Pos	Qty.	Part no.	Description	Remarks
1	1	55906	Valve block	
2	1	26845	Connection	GES 28 LR 3/4-WD
3	1	25637	Connection	P-GEV 20 SR-WD - short special e
4	12	26334	Connection	P-GEV 16 SR-WD
5	2	25108	Connection	GES 12 LR 1/2-WD
6	6	28779	Connection cable, 80 mm	80mm
7	1	7009997	Safety plug	

9520K-RCS, 9520OK-RCS

Internal ref. 6653200

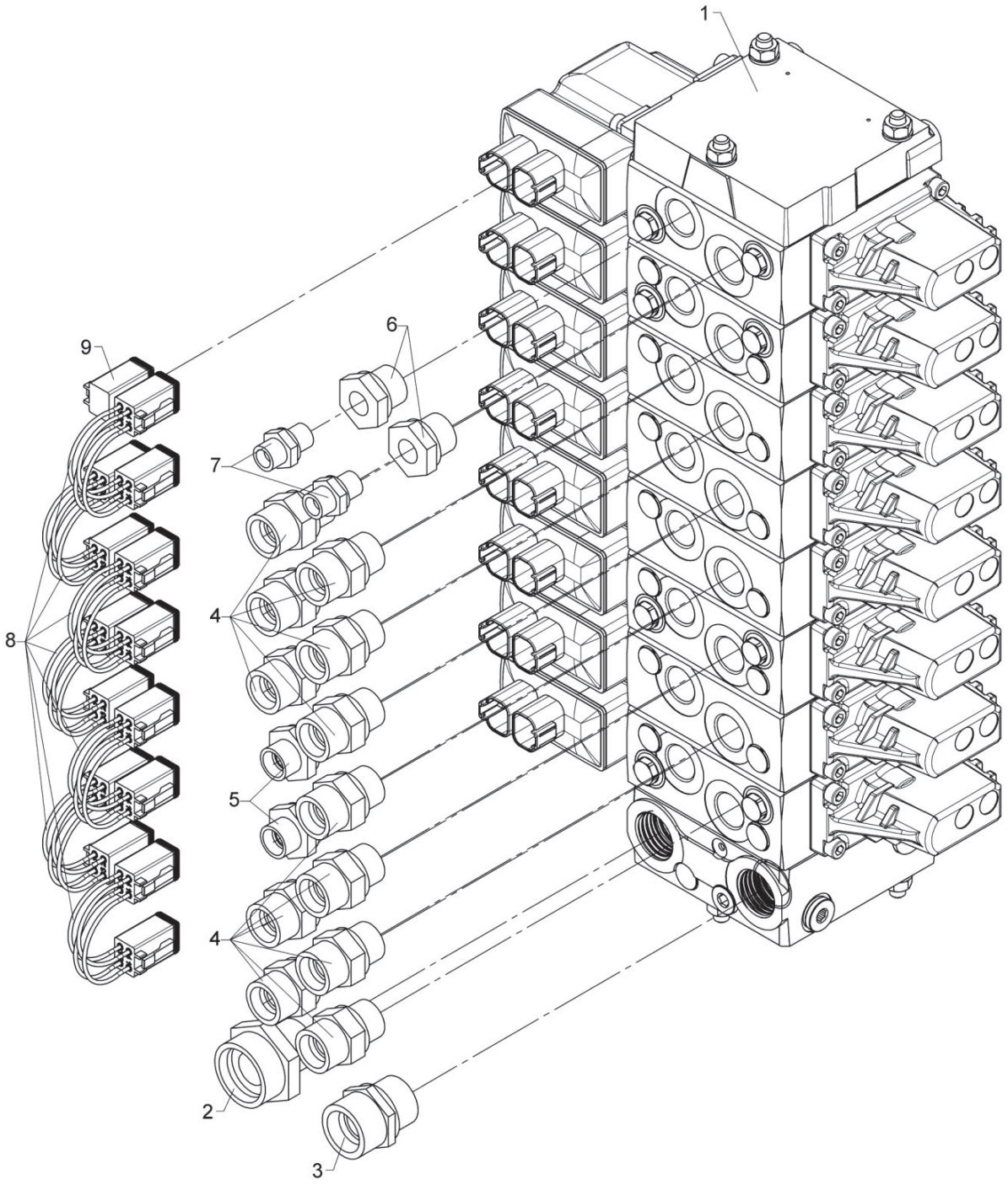

559 06 230

From loader 1370001
To loader

Created 03-10-18
Modified

Valve block, 8 sects. fixed/variable

Pos	Qty.	Part no.	Description	Remarks
1	1	55905	Valve block	
2	1	26845	Connection	GES 28 LR 3/4-WD
3	1	25637	Connection	P-GEV 20 SR-WD - short special e
4	12	26334	Connection	P-GEV 16 SR-WD
5	2	25108	Connection	GES 12 LR 1/2-WD
6	2	25180	Reducing connection	RED-R 1/2-WD/R 1/4
7	2	25109	Connection	GES 8 LR-WD
8	7	28779	Connection cable, 80 mm	80mm
9	1	7009997	Safety plug	

9520K-RCS, 9520OK-RCS

Internal ref. 6653270

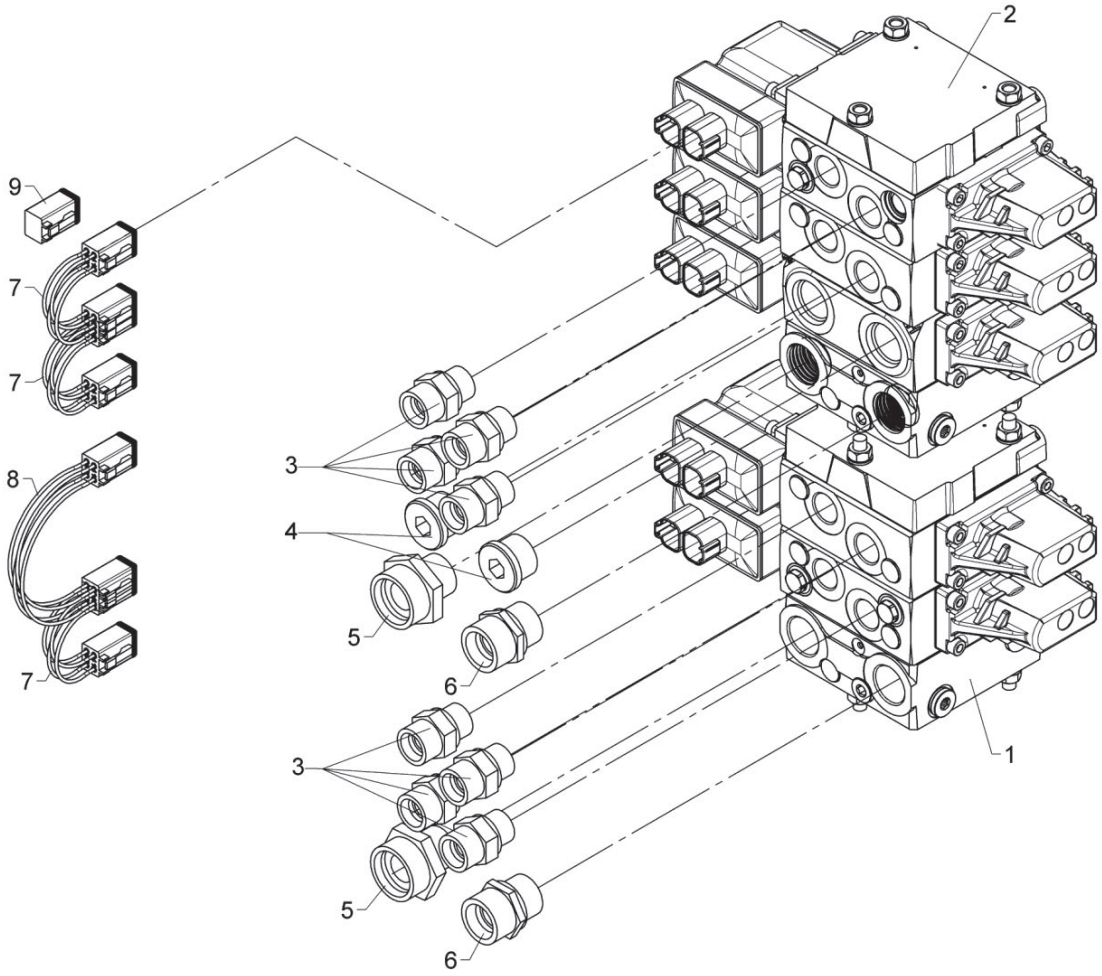

559 06 240

Valve block, 4 sects. dual circuit, variable

From loader 1370001
To loader
Created 03-10-18
Modified

Pos	Qty.	Part no.	Description	Remarks
1	1	55907	Valve block	2 sekt._2K_F-V_P1
2	1	55909	Valve block	2 sekt._2K_V_P2
3	8	26334	Connection	P-GEV 16 SR-WD
4	2	26355	Plug	VS-R-3/4 WD
5	2	26845	Connection	GES 28 LR 3/4-WD
6	2	25637	Connection	P-GEV 20 SR-WD - short special e
7	3	28779	Connection cable, 80 mm	80mm
8	1	7009998	Cable	180mm
9	1	7009997	Safety plug	

9520K-RCS, 9520OK-RCS

Internal ref. 6653280

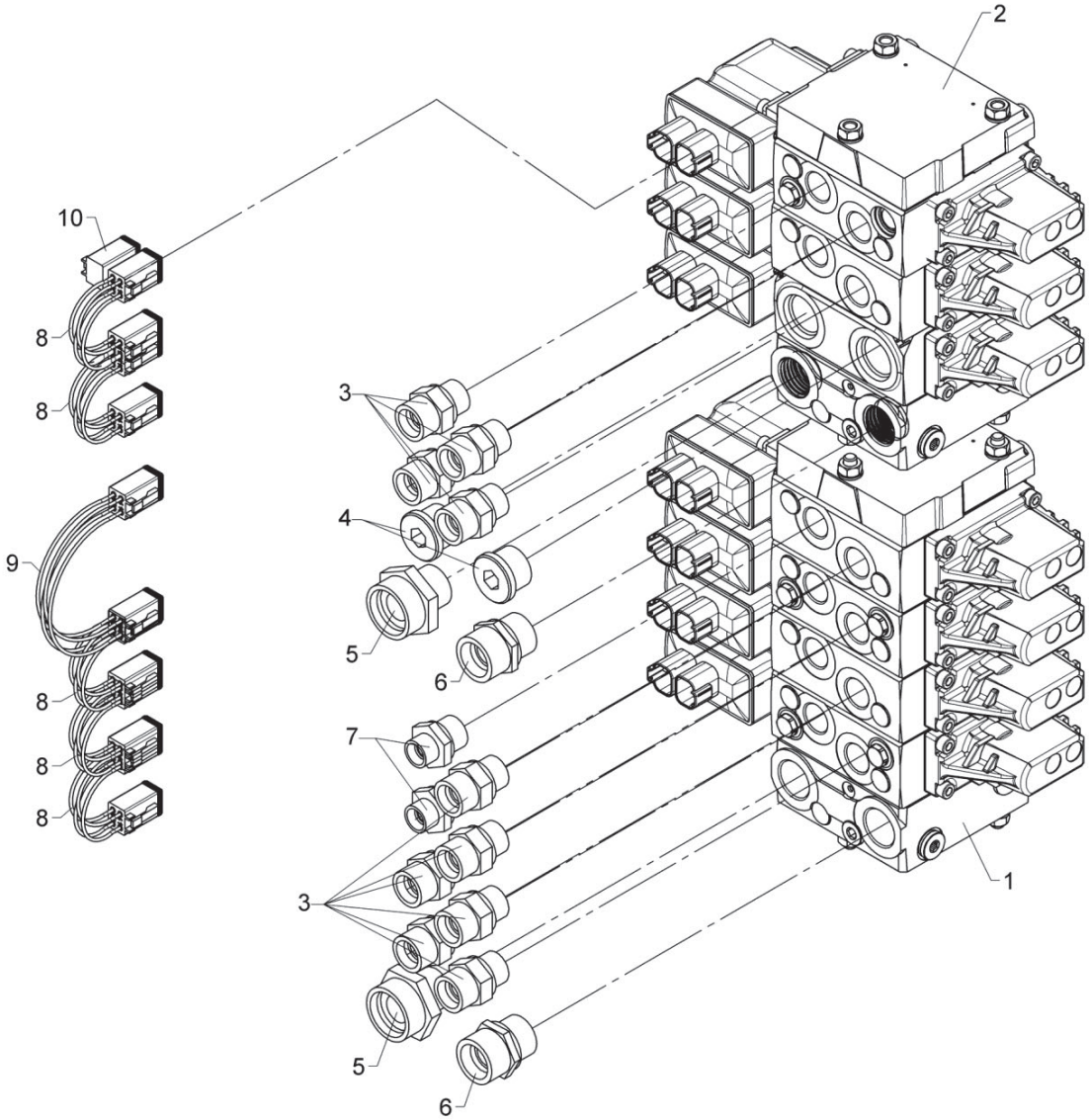

559 06 250

Valve block, 6 sects. dual circuit, EXV., variable

From loader 1370001
To loader
Created 04-10-18
Modified

Pos	Qty.	Part no.	Description	Remarks
1	1	55913	Valve block	4 sekt._2K_2X_F-V_P1
2	1	55909	Valve block	2 sekt._2K_V_P2
3	10	26334	Connection	P-GEV 16 SR-WD
4	2	26355	Plug	VS-R-3/4 WD
5	2	26845	Connection	GES 28 LR 3/4-WD
6	2	25637	Connection	P-GEV 20 SR-WD - short special e
7	2	25108	Connection	GES 12 LR 1/2-WD
8	5	28779	Connection cable, 80 mm	80mm
9	1	7009998	Cable	180mm
10	1	7009997	Safety plug	

9520K-RCS, 9520OK-RCS

Internal ref. 6653290

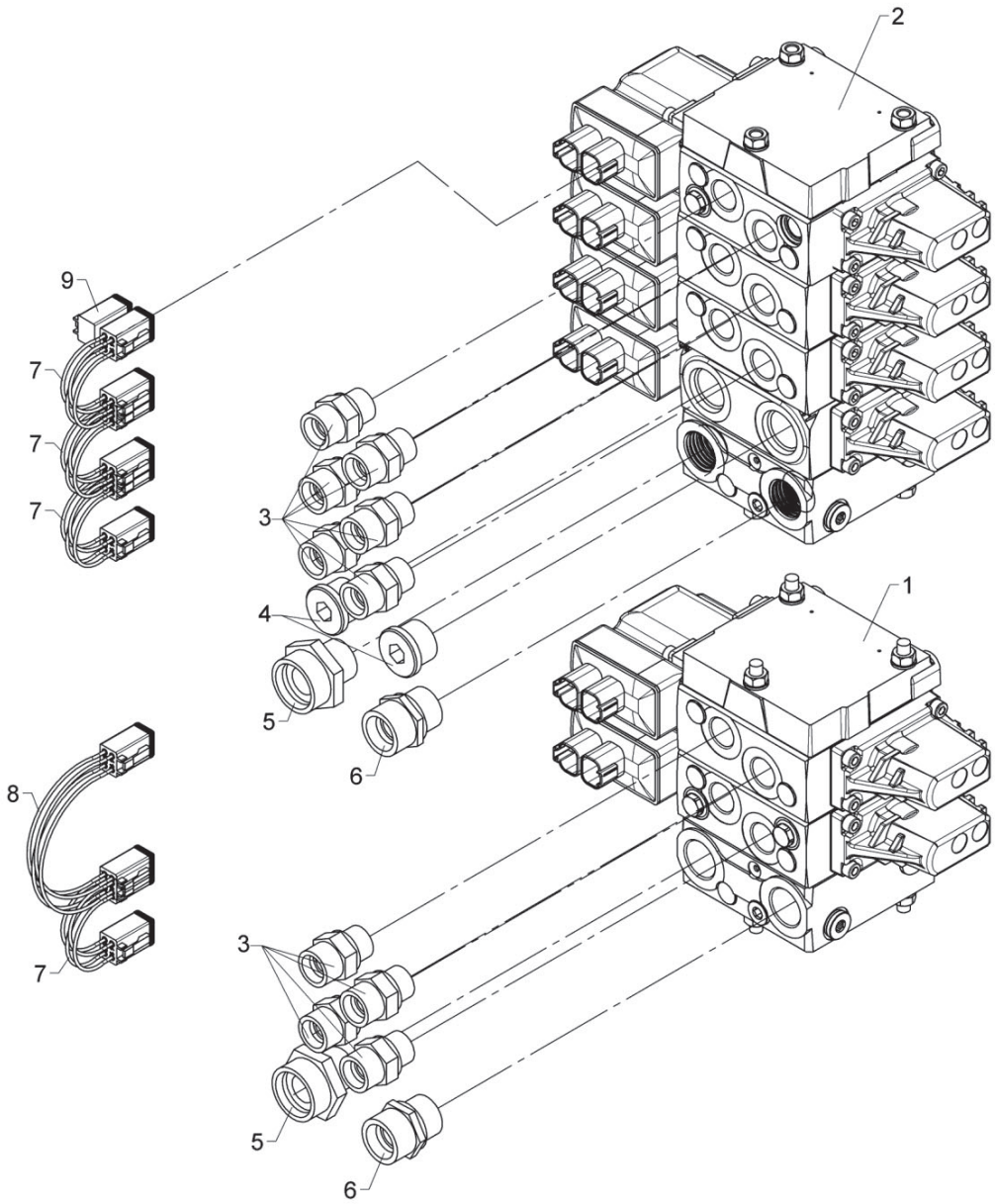

559 06 260

Valve block, 5 sects. dual circuit, winch, variable

From loader 1370001
To loader
Created 04-10-18
Modified

Pos	Qty.	Part no.	Description	Remarks
1	1	55907	Valve block	2 sekt._2K_F-V_P1
2	1	55911	Valve block	3 sekt._2K_Wi_V_P2
3	10	26334	Connection	P-GEV 16 SR-WD
4	2	26355	Plug	VS-R-3/4 WD
5	2	26845	Connection	GES 28 LR 3/4-WD
6	2	25637	Connection	P-GEV 20 SR-WD - short special e
7	4	28779	Connection cable, 80 mm	80mm
8	1	7009998	Cable	180mm
9	1	7009997	Safety plug	

9520K-RCS, 9520OK-RCS

Internal ref. 6653300

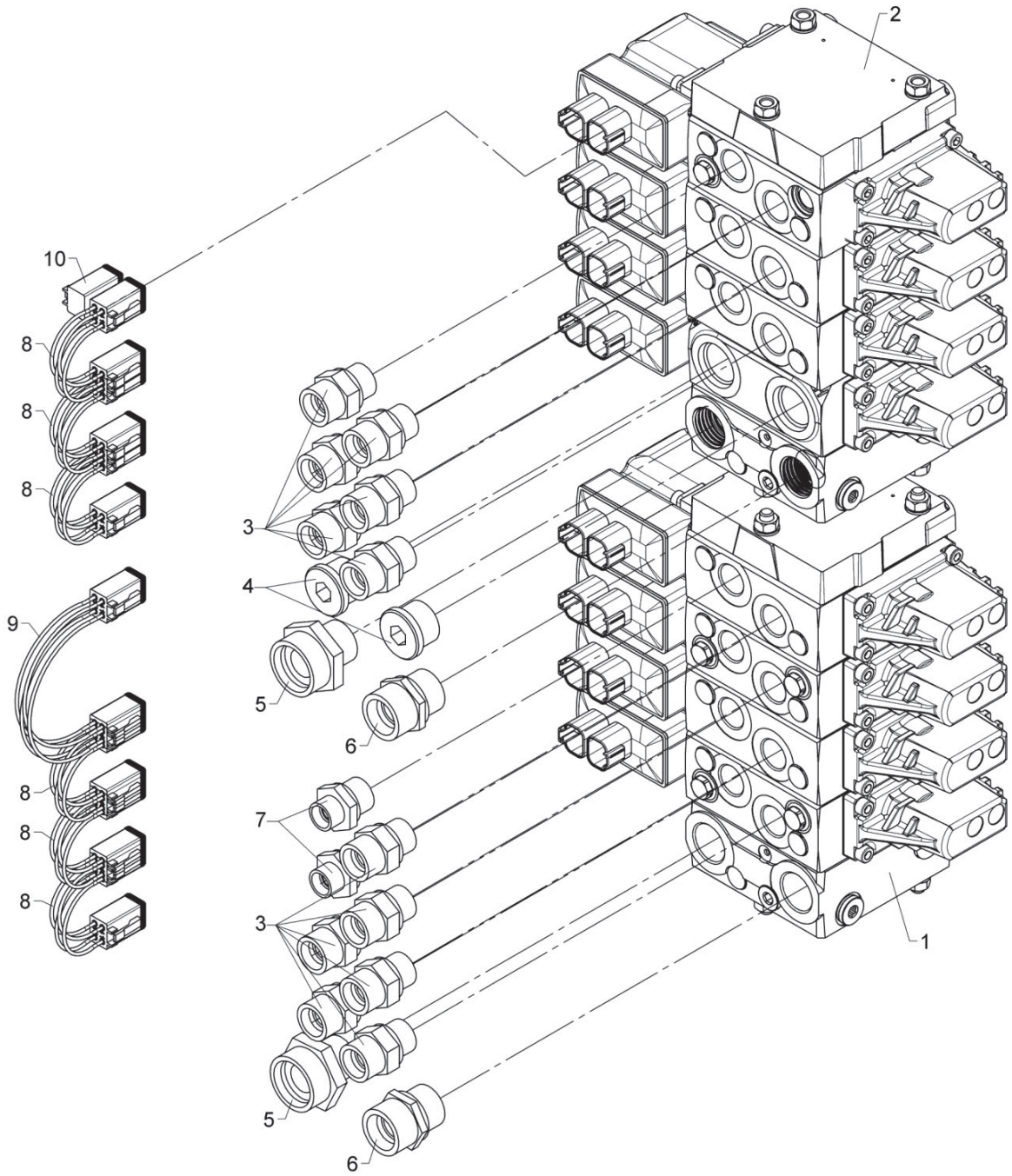

559 06 270

From loader 1370001
To loader
Created 04-10-18
Modified

Valve block, 7 sects. dual circuit, EXV. + winch, variable

Pos	Qty.	Part no.	Description	Remarks
1	1	55913	Valve block	4 sekt._2K_2X_F-V_P1
2	1	55911	Valve block	3 sekt._2K_Wi_V_P2
3	12	26334	Connection	P-GEV 16 SR-WD
4	2	26355	Plug	VS-R-3/4 WD
5	2	26845	Connection	GES 28 LR 3/4-WD
6	2	25637	Connection	P-GEV 20 SR-WD - short special e
7	2	25108	Connection	GES 12 LR 1/2-WD
8	6	28779	Connection cable, 80 mm	80mm
9	1	7009998	Cable	180mm
10	1	7009997	Safety plug	

9520K-RCS, 9520OK-RCS

Internal ref. 6653310

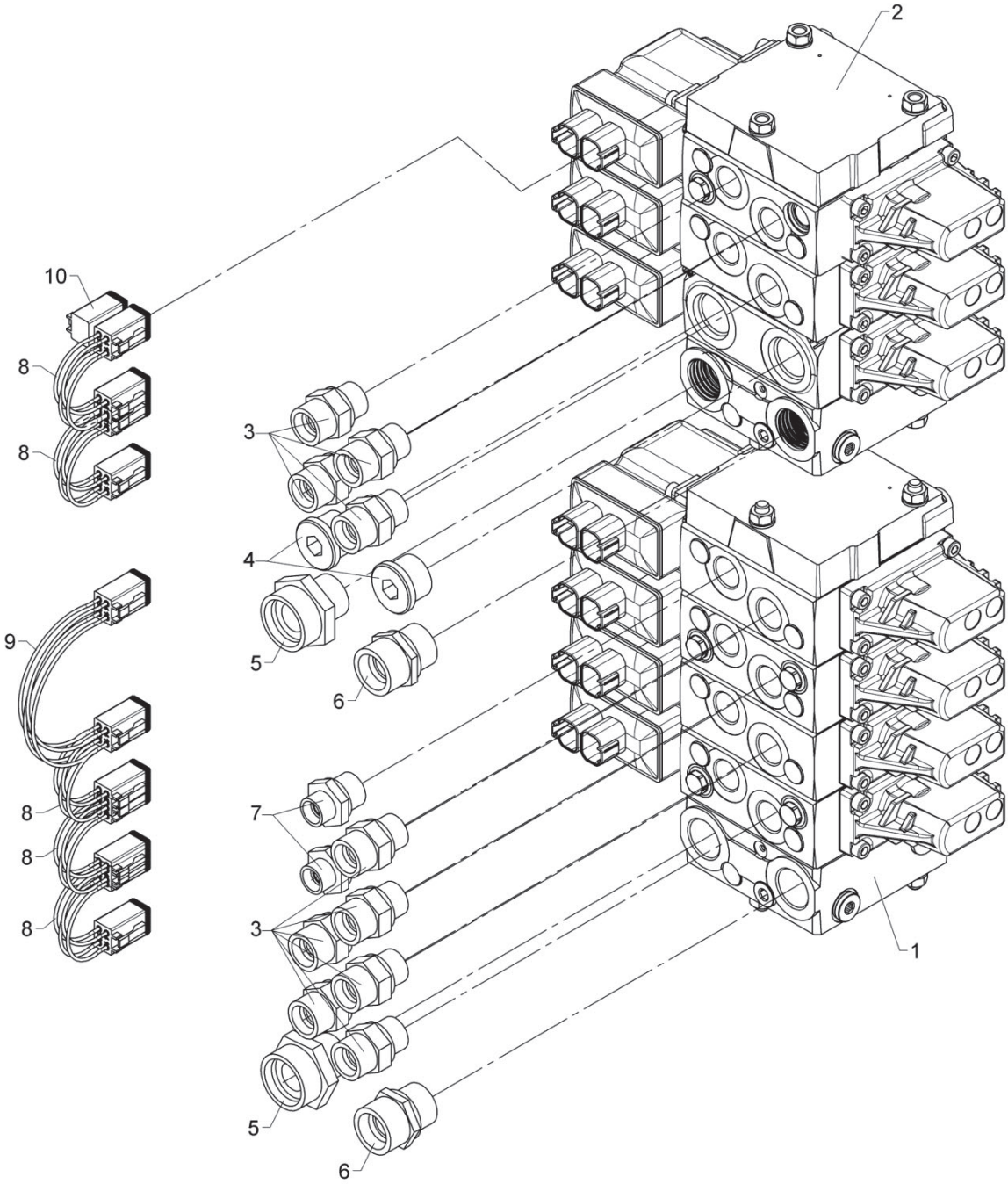

559 06 280

Valve block, 6 sects. dual circuit, FJ, variable

From loader 1370001
To loader
Created 05-10-18
Modified

Pos	Qty.	Part no.	Description	Remarks
1	1	55912	Valve block	4 sekt._2K_FJ_F-V_P1
2	1	55909	Valve block	2 sekt._2K_V_P2
3	10	26334	Connection	P-GEV 16 SR-WD
4	2	26355	Plug	VS-R-3/4 WD
5	2	26845	Connection	GES 28 LR 3/4-WD
6	2	25637	Connection	P-GEV 20 SR-WD - short special e
7	2	25108	Connection	GES 12 LR 1/2-WD
8	5	28779	Connection cable, 80 mm	80mm
9	1	7009998	Cable	180mm
10	1	7009997	Safety plug	

9520K-RCS, 9520OK-RCS

Internal ref. 6653320

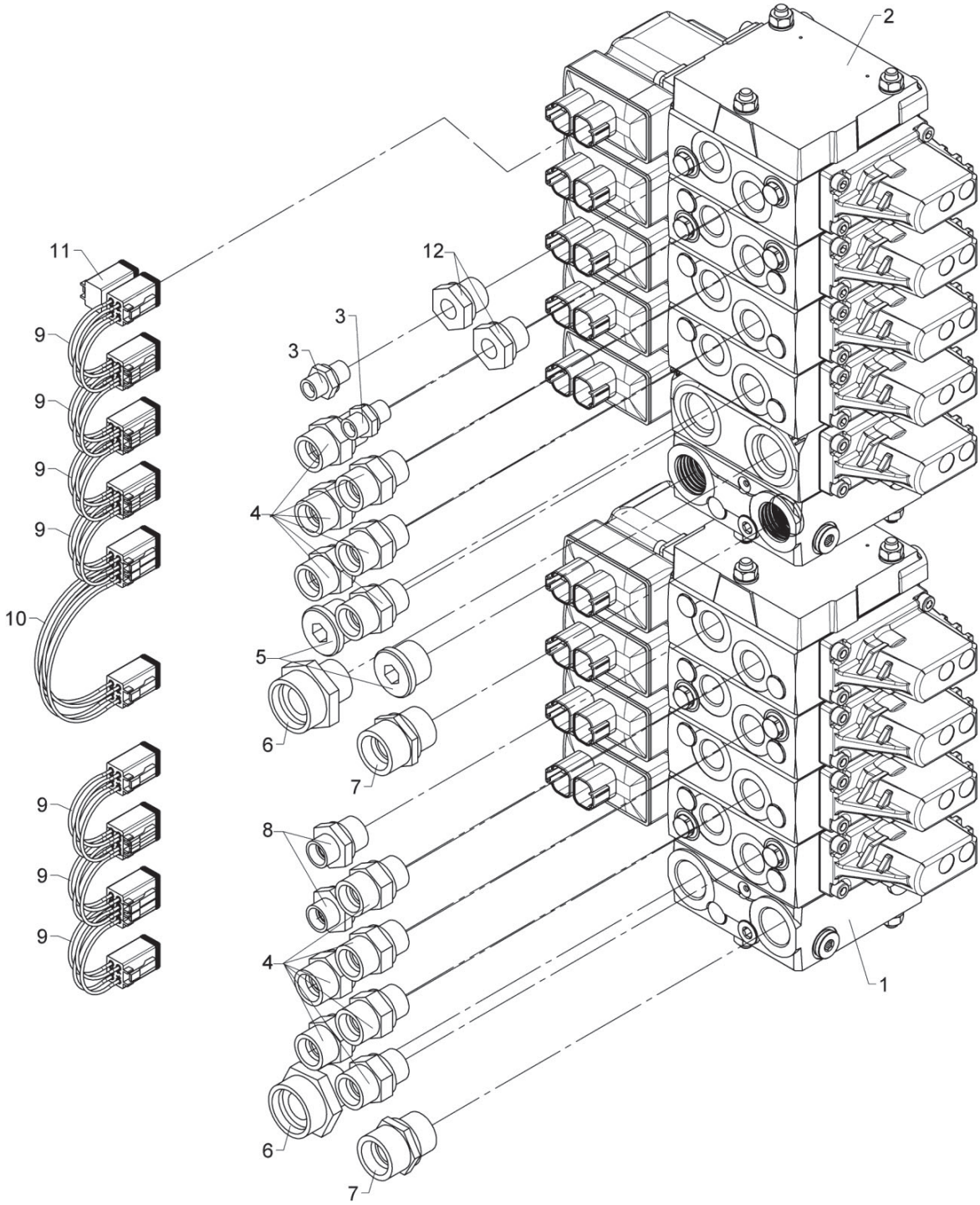

559 06 290

From loader 1370001
To loader

Valve block, 8 sects. dual circuit, FJ + winch, variable

Created 05-03-19
Modified 05-03-19

Pos	Qty.	Part no.	Description	Remarks
1	1	55912	Valve block	4 sekt._2K_FJ_F-V_P1
2	1	55915	Valve block	4 sekt._2K_Wi_FJ_V_P2
3	2	25109	Connection	GES 8 LR-WD
4	12	26334	Connection	P-GEV 16 SR-WD
5	2	26355	Plug	VS-R-3/4 WD
6	2	26845	Connection	GES 28 LR 3/4-WD
7	2	25637	Connection	P-GEV 20 SR-WD - short special e
8	2	25108	Connection	GES 12 LR 1/2-WD
9	7	28779	Connection cable, 80 mm	80mm
10	1	7009998	Cable	180mm
11	1	7009997	Safety plug	
12	2	25180	Reducing connection	RED-R 1/2-WD/R 1/4

9520K-RCS, 9520OK-RCS

6400400
6398400
6400410
Internal ref. 6398410

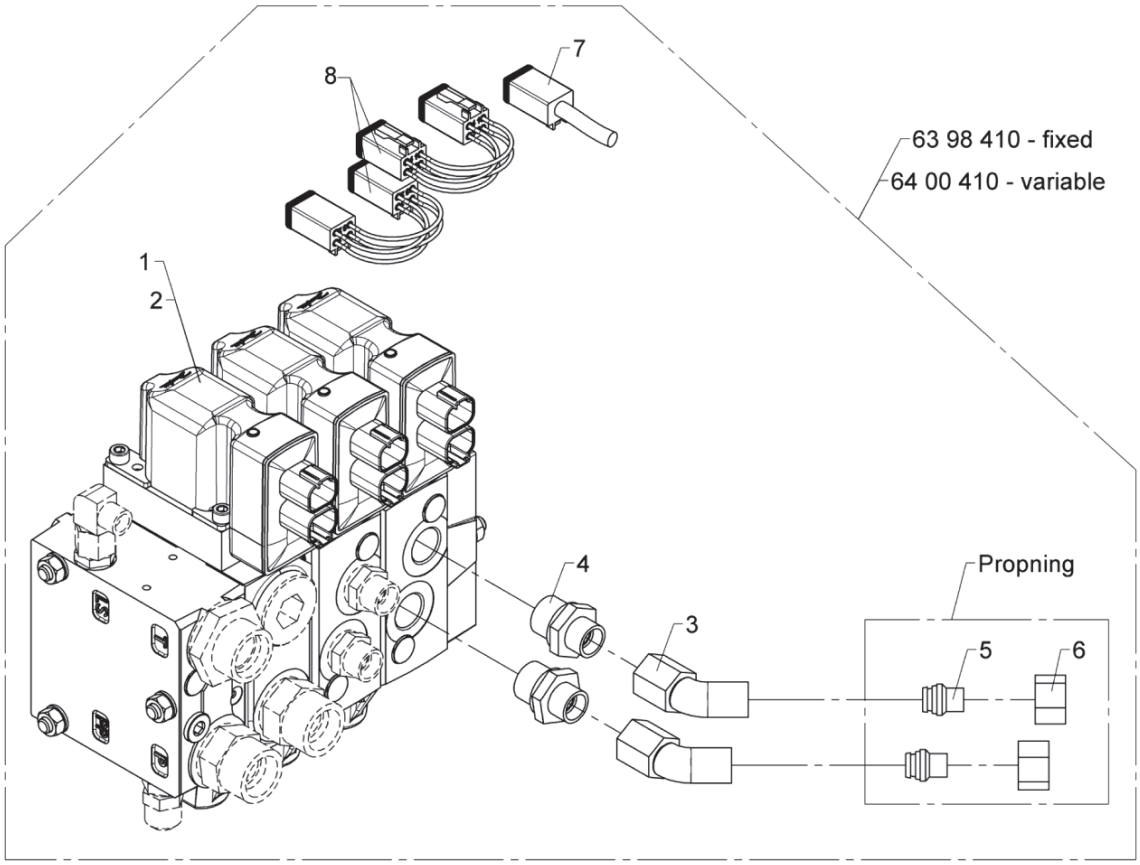

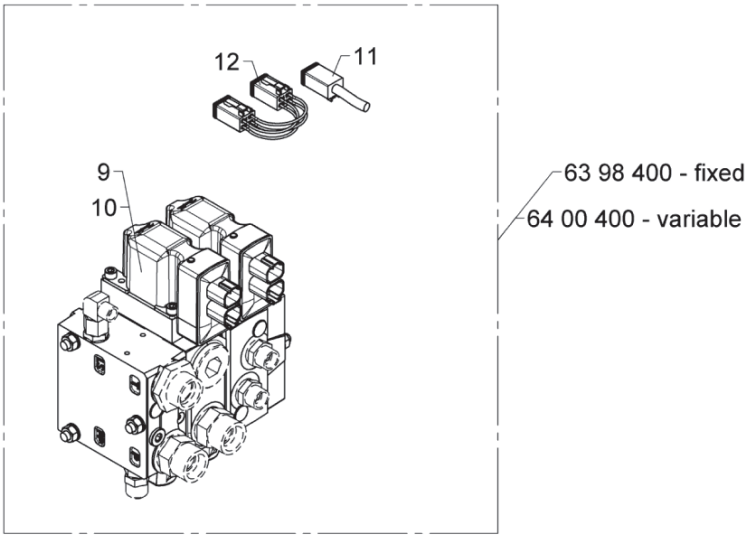

Control valve

Pos	Qty.	Part no.	Description	Remarks
		6398410	Extra fixed cont. valve func.	Fixed
		6400410	Extra vari. contr. valve func.	Variable
1	1	55829	Valve block	Fixed pump
2	1	55830	Valve block	Variable pump
3	2	26981	Elbow connection	24-SWOE 45-12L
4	2	25108	Connection	GES 12 LR 1/2-WD
5	2	26180	Blanking plug	VSD 12 L
6	2	25183	Coupling nut	M 12 L
7	1	62701	Termination	
8	2	28779	Connection cable, 80 mm	80mm
		6398400	No ext. fix. cont. valve func.	Fixed
		6400400	No ext. var. cont. valve func.	Variable
9	1	55827	Valve block	Fixed pump
10	1	55828	Valve block	Variable pump
11	1	62701	Termination	
12	1	28779	Connection cable, 80 mm	80mm

9520K-RCS, 9520OK-RCS

Internal ref. 6398200

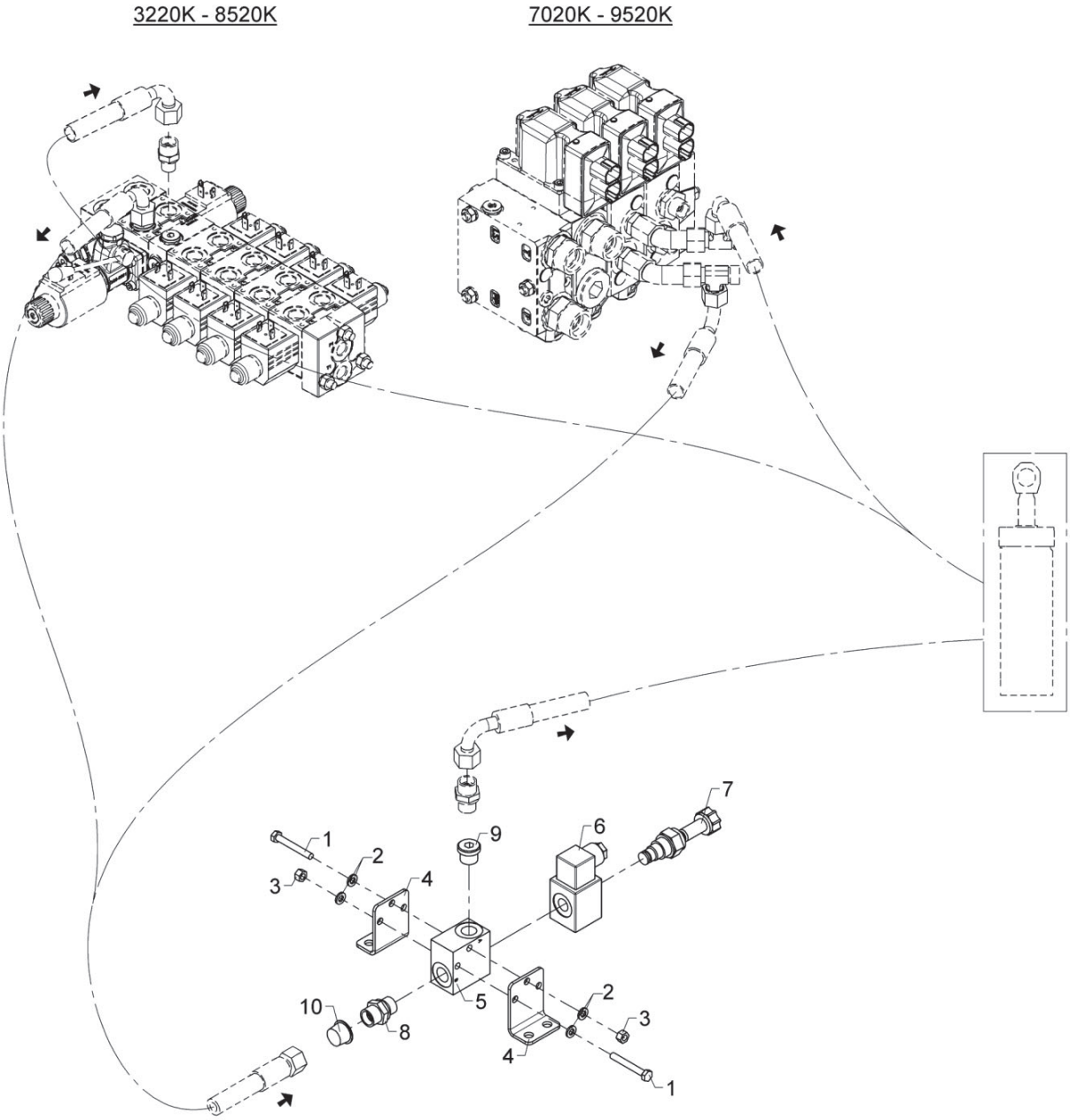

BOM obsolete

559 06 500

1 extra funct., stabilizer mode

From loader 1370001
To loader 1370066
Created 14-12-18
Modified

Pos	Qty.	Part no.	Description	Remarks
1	2	30118	Steel pin, stainless	M6 x 45
2	4	32302	Face washer, stainless	6 mm
3	2	30884	Lock nut, stainless	M6
4	2	6301202	Bracket	
5	1	59771	Valve housing	
6	1	61778	Solenoid	
7	1	59057	Solenoid valve	
8	1	25127	Connection	P-GEV 12 LR-WD
9	1	25277	Plug	VS-R-3/8 WD
10	1	64221	Plug	

9520K-RCS, 9520OK-RCS

Internal ref. 6398200

7020K - 9520K

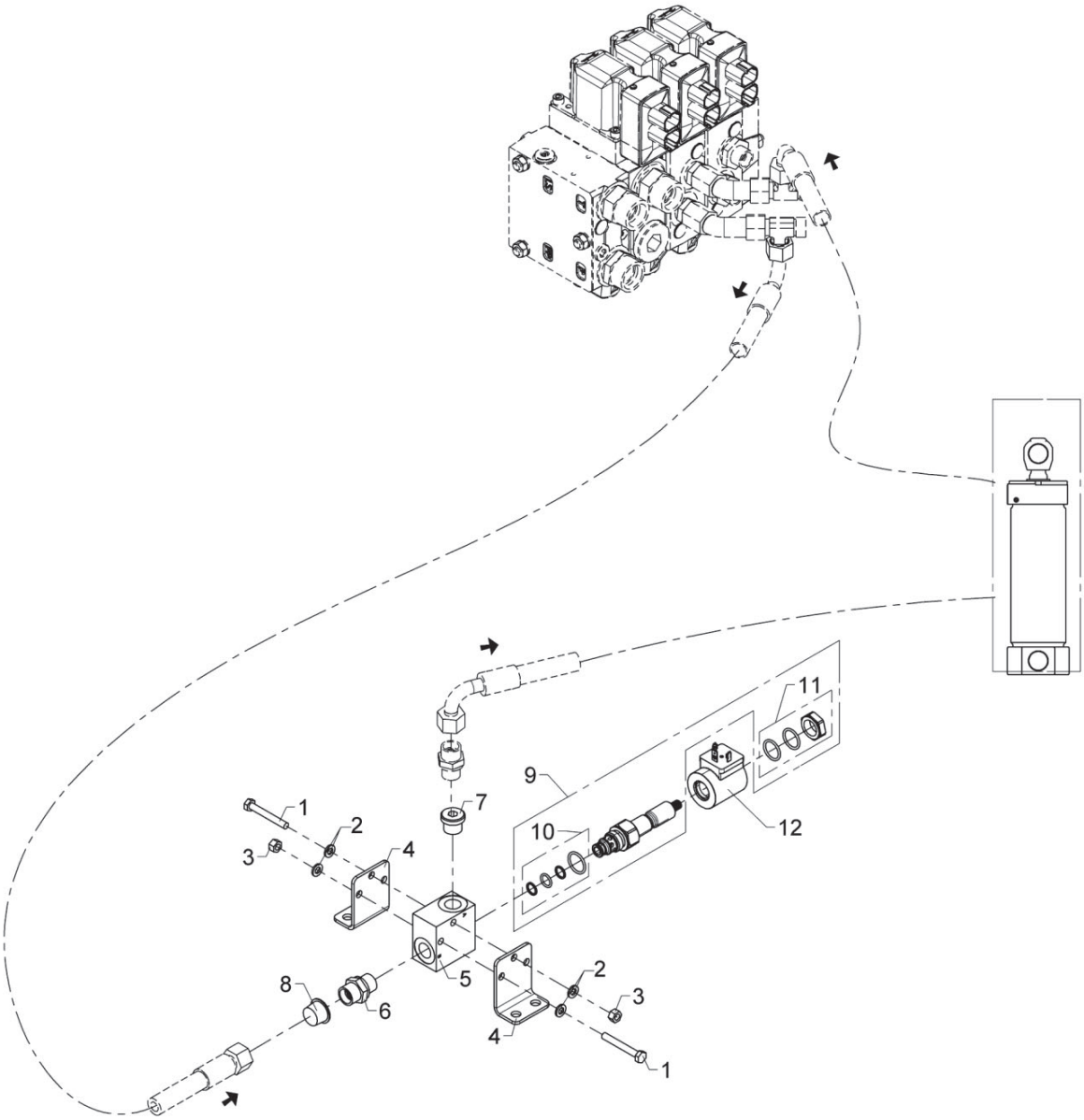

1 extra funct., stabilizer mode

Pos	Qty.	Part no.	Description	Remarks
1	2	30118	Steel pin, stainless	M6 x 45
2	4	32302	Face washer, stainless	6 mm
3	2	30884	Lock nut, stainless	M6
4	2	6301202	Bracket	
5	1	59771	Valve housing	
6	1	25127	Connection	P-GEV 12 LR-WD
7	1	25277	Plug	VS-R-3/8 WD
8	1	64221	Plug	
9	1	59457		
10	1	2008003		
11	1	2008001		
12	1	50523		

9520K-RCS, 9520OK-RCS

Internal ref. 6398210

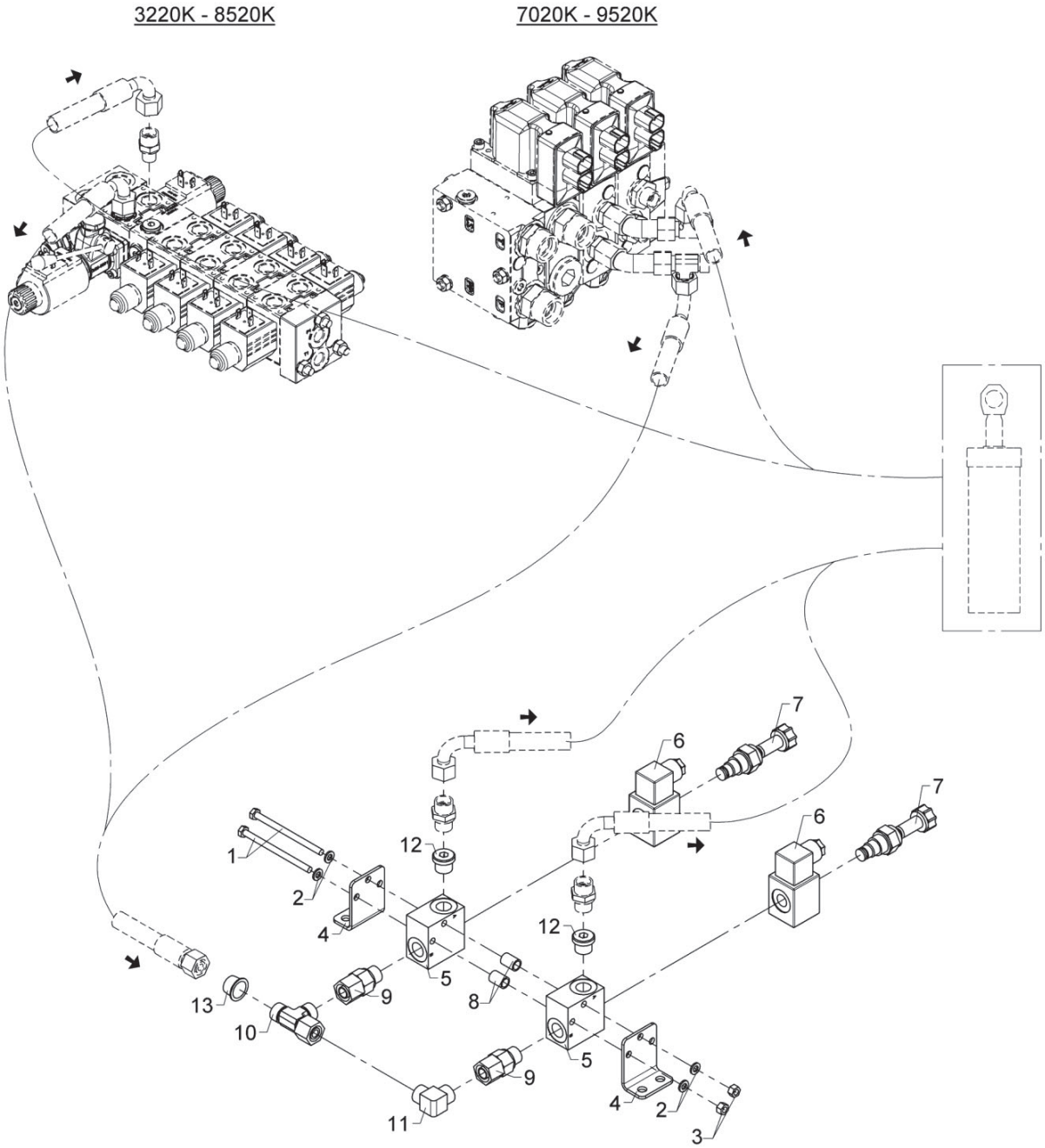

BOM obsolete

559 06 510

2 extra funct., stabilizer mode

From loader 1370001
To loader 1370066
Created 13-12-18
Modified

Pos	Qty.	Part no.	Description	Remarks
1	2	30124	Steel bolt, stainless	M6 x 90
2	4	32302	Face washer, stainless	6 mm
3	2	30884	Lock nut, stainless	M6
4	2	6301202	Bracket	
5	2	59771	Valve housing	
6	2	61778	Solenoid	
7	2	59057	Solenoid valve	
8	2	6301203	Pipe	
9	2	25240	Connection	EGESD 12 LR-WD
10	1	25270	Connection	ELSD 12 L
11	1	25129	Elbow connection	WV 12 L
12	2	25277	Plug	VS-R-3/8 WD
13	1	64221	Plug	

9520K-RCS, 9520OK-RCS

Internal ref. 6398210

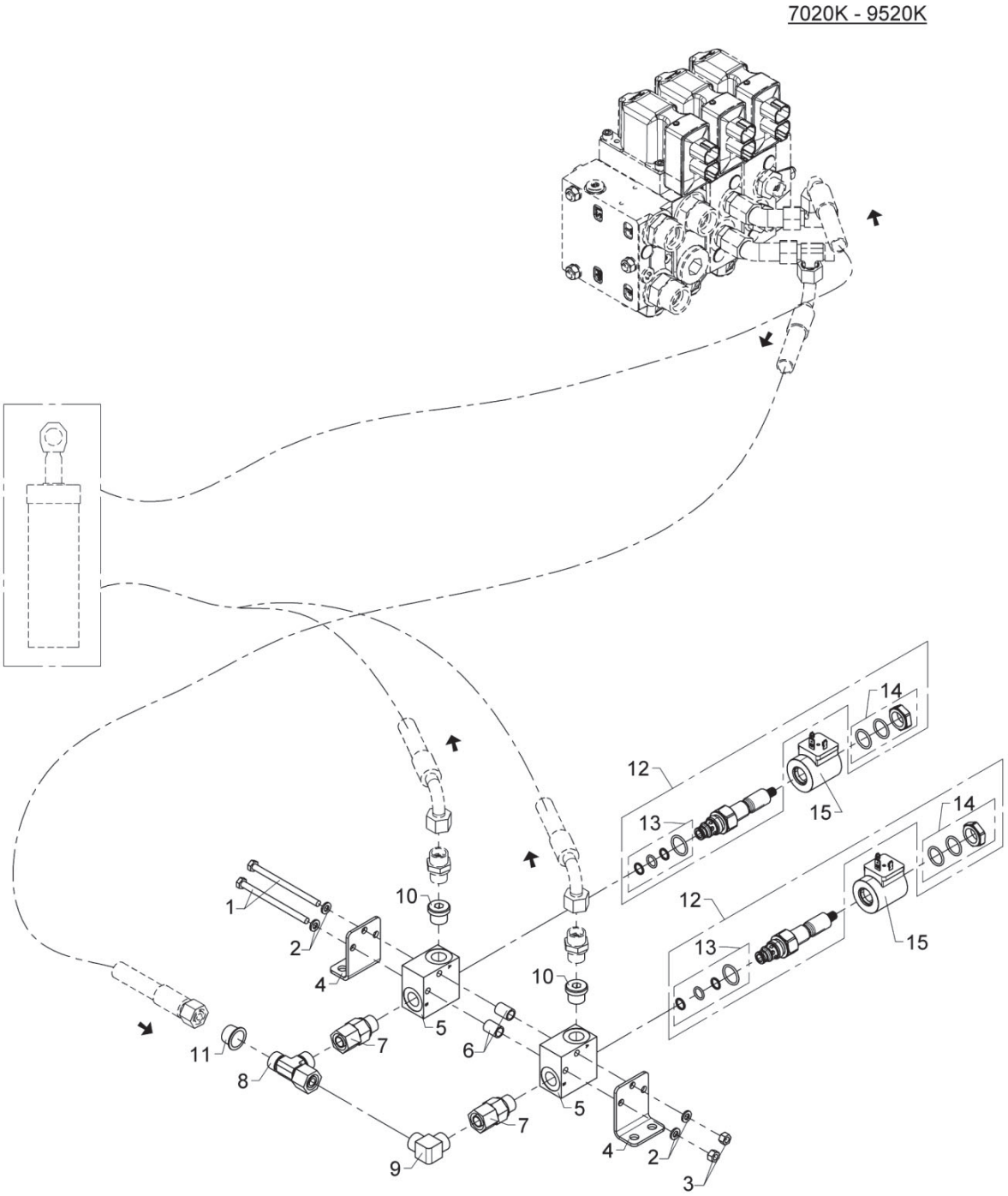

2 extra funct., stabilizer mode

Pos	Qty.	Part no.	Description	Remarks
1	2	30124	Steel bolt, stainless	M6 x 90
2	4	32302	Face washer, stainless	6 mm
3	2	30884	Lock nut, stainless	M6
4	2	6301202	Bracket	
5	2	59771	Valve housing	
6	2	6301203	Pipe	
7	2	25240	Connection	EGESD 12 LR-WD
8	1	25270	Connection	ELSD 12 L
9	1	25129	Elbow connection	WV 12 L
10	2	25277	Plug	VS-R-3/8 WD
11	1	64221	Plug	
12	2	59457		
13	2	2008003		
14	2	2008001		
15	2	50523		

9520K-RCS, 9520OK-RCS

Internal ref. 6398220

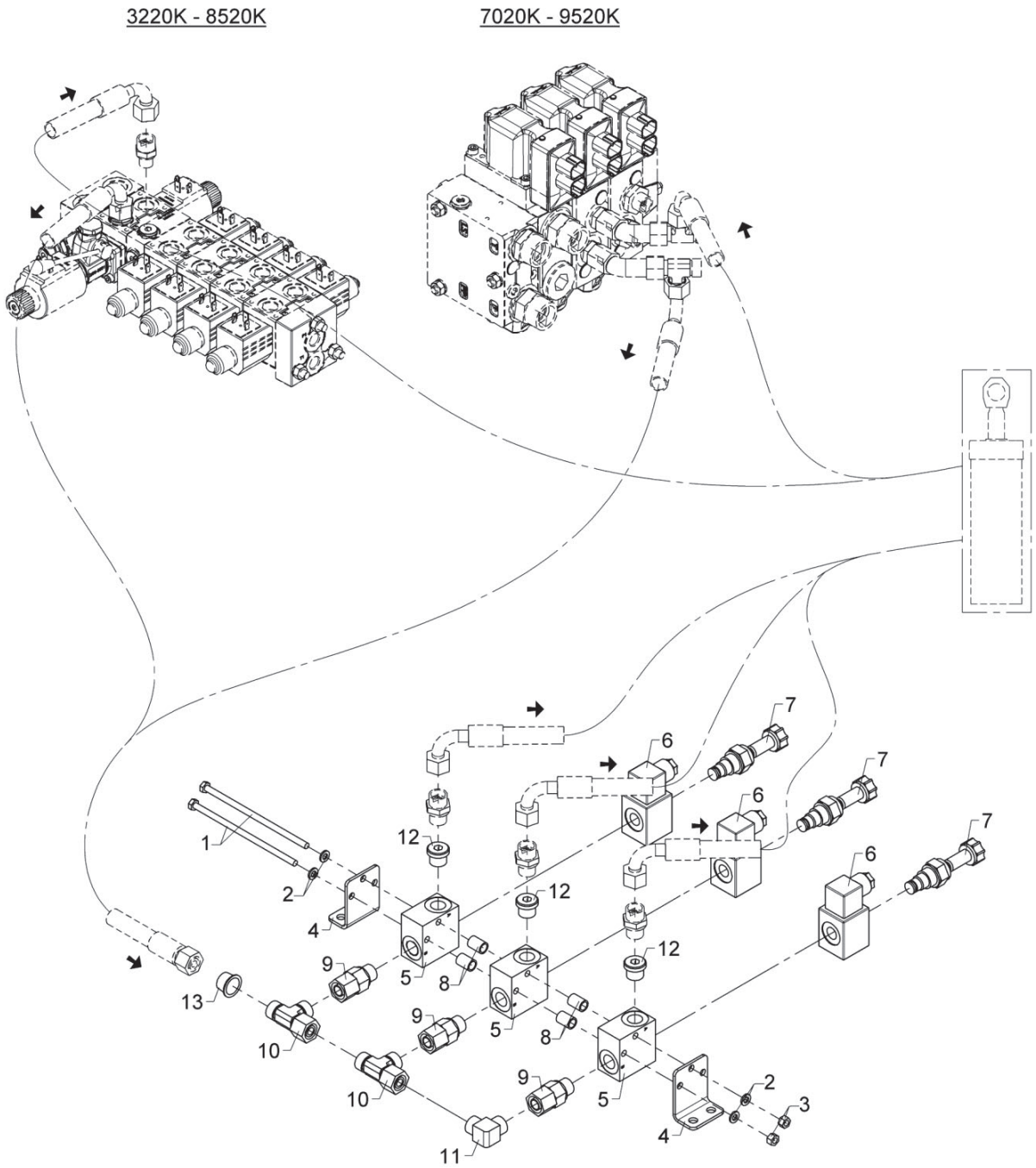

BOM obsolete

559 06 520

From loader 1370001
To loader 1370066

Created 14-12-18
Modified

3 extra funct., stabilizer mode

Pos	Qty.	Part no.	Description	Remarks
1	2	32922	Steel bolt	M6 x 140
2	4	32302	Face washer, stainless	6 mm
3	2	30884	Lock nut, stainless	M6
4	2	6301202	Bracket	
5	3	59771	Valve housing	
6	3	61778	Solenoid	
7	3	59057	Solenoid valve	
8	4	6301203	Pipe	
9	3	25240	Connection	EGESD 12 LR-WD
10	2	25270	Connection	ELSD 12 L
11	1	25129	Elbow connection	WV 12 L
12	3	25277	Plug	VS-R-3/8 WD
13	1	64221	Plug	

9520K-RCS, 9520OK-RCS

Internal ref. 6398220

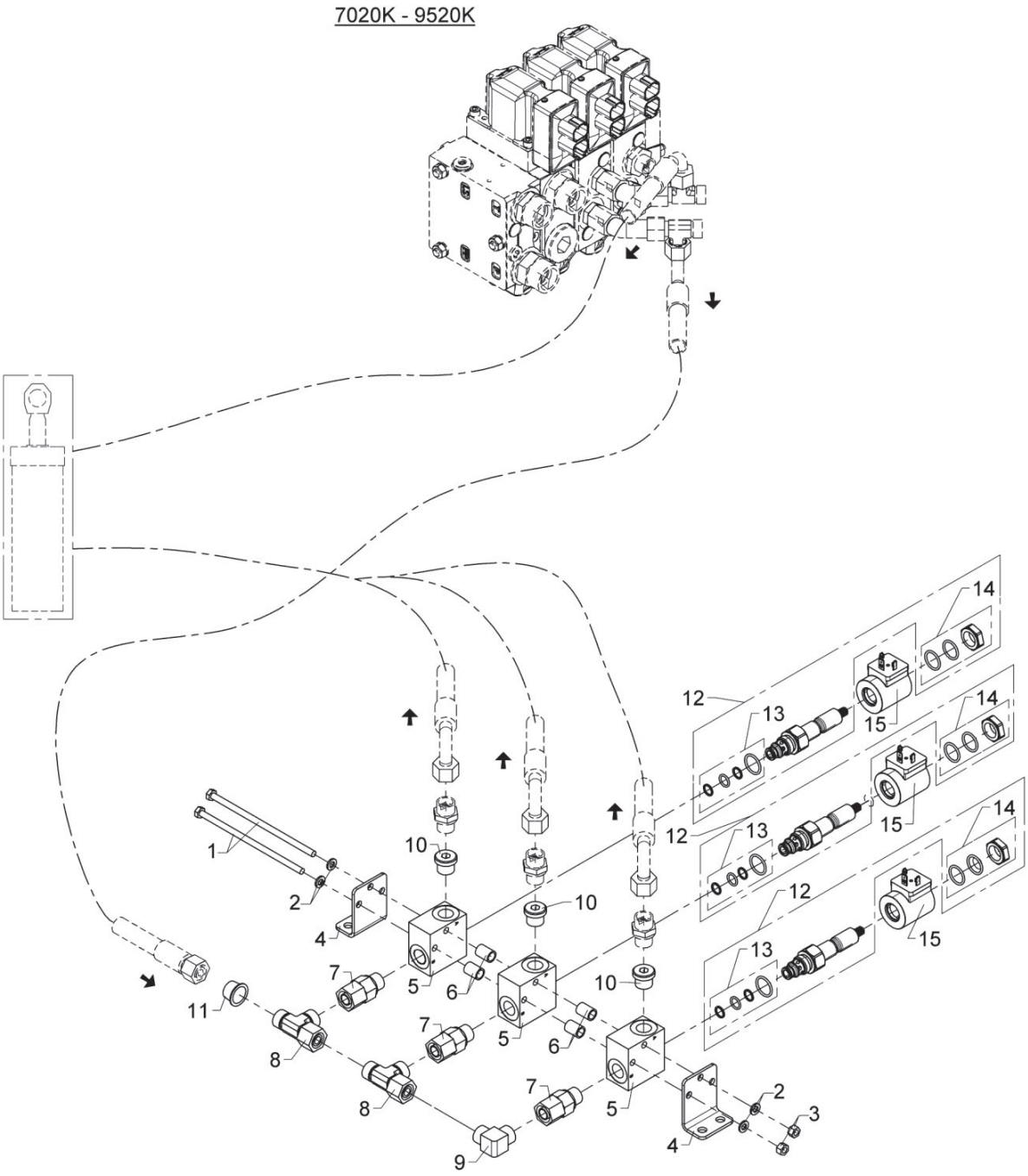

3 extra funct., stabilizer mode

Pos	Qty.	Part no.	Description	Remarks
1	2	32922	Steel bolt	M6 x 140
2	4	32302	Face washer, stainless	6 mm
3	2	30884	Lock nut, stainless	M6
4	2	6301202	Bracket	
5	3	59771	Valve housing	
6	4	6301203	Pipe	
7	3	25240	Connection	EGESD 12 LR-WD
8	2	25270	Connection	ELSD 12 L
9	1	25129	Elbow connection	WV 12 L
10	3	25277	Plug	VS-R-3/8 WD
11	1	64221	Plug	
12	3	59457		
13	3	2008003		
14	3	2008001		
15	3	50523		

9520K-RCS, 9520OK-RCS

Internal ref. 6398230

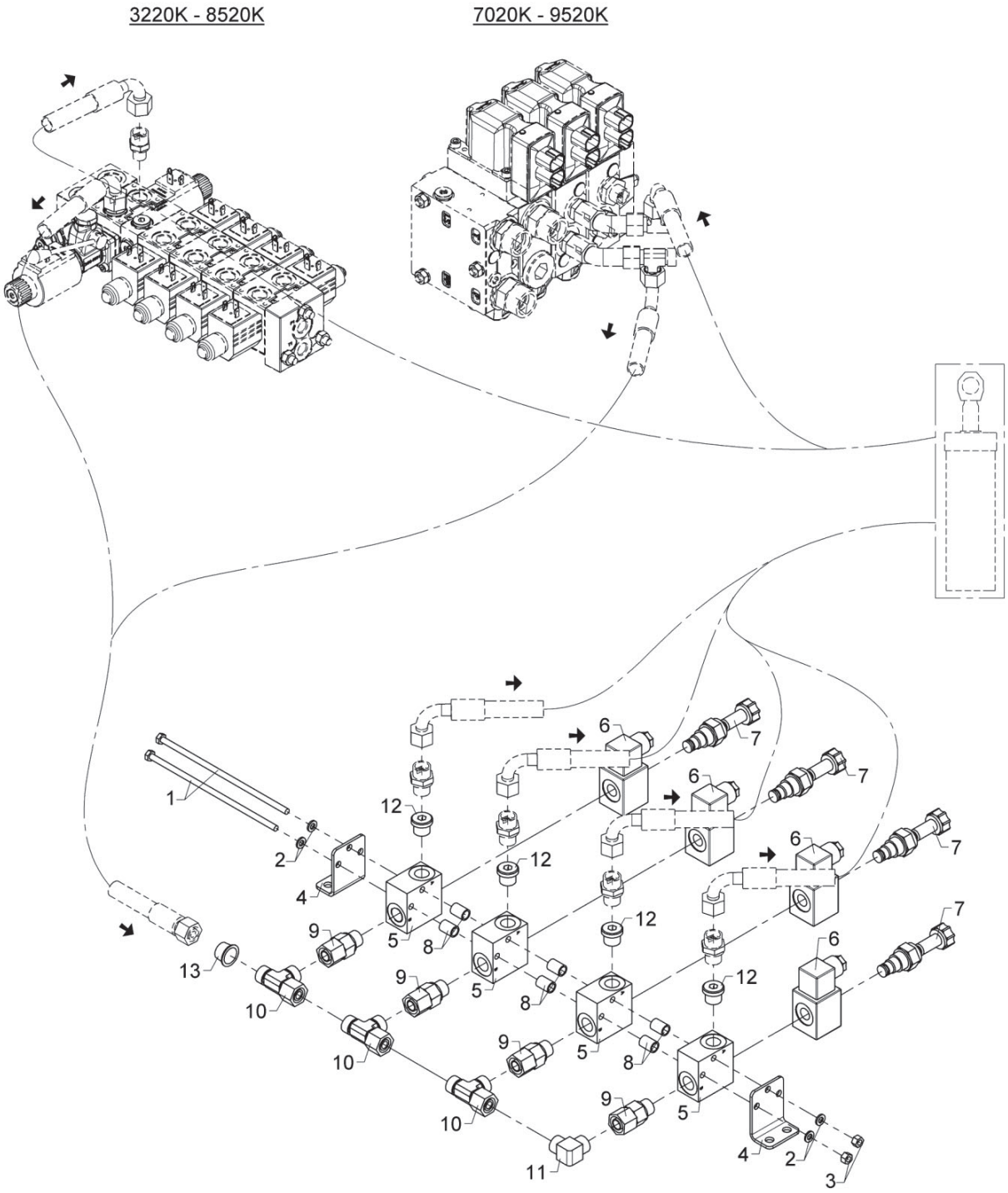

BOM obsolete

559 06 530

From loader 1370001
To loader 1370066

Created 14-12-18
Modified

4 extra funct., stabilizer mode

Pos	Qty.	Part no.	Description	Remarks
1	2	32257	Steel bolt	M6 x 180
2	4	32302	Face washer, stainless	6 mm
3	2	30884	Lock nut, stainless	M6
4	2	6301202	Bracket	
5	4	59771	Valve housing	
6	4	61778	Solenoid	
7	4	59057	Solenoid valve	
8	6	6301203	Pipe	
9	4	25240	Connection	EGESD 12 LR-WD
10	3	25270	Connection	ELSD 12 L
11	1	25129	Elbow connection	WV 12 L
12	4	25277	Plug	VS-R-3/8 WD
13	1	64221	Plug	

9520K-RCS, 9520OK-RCS

Internal ref. 6398230

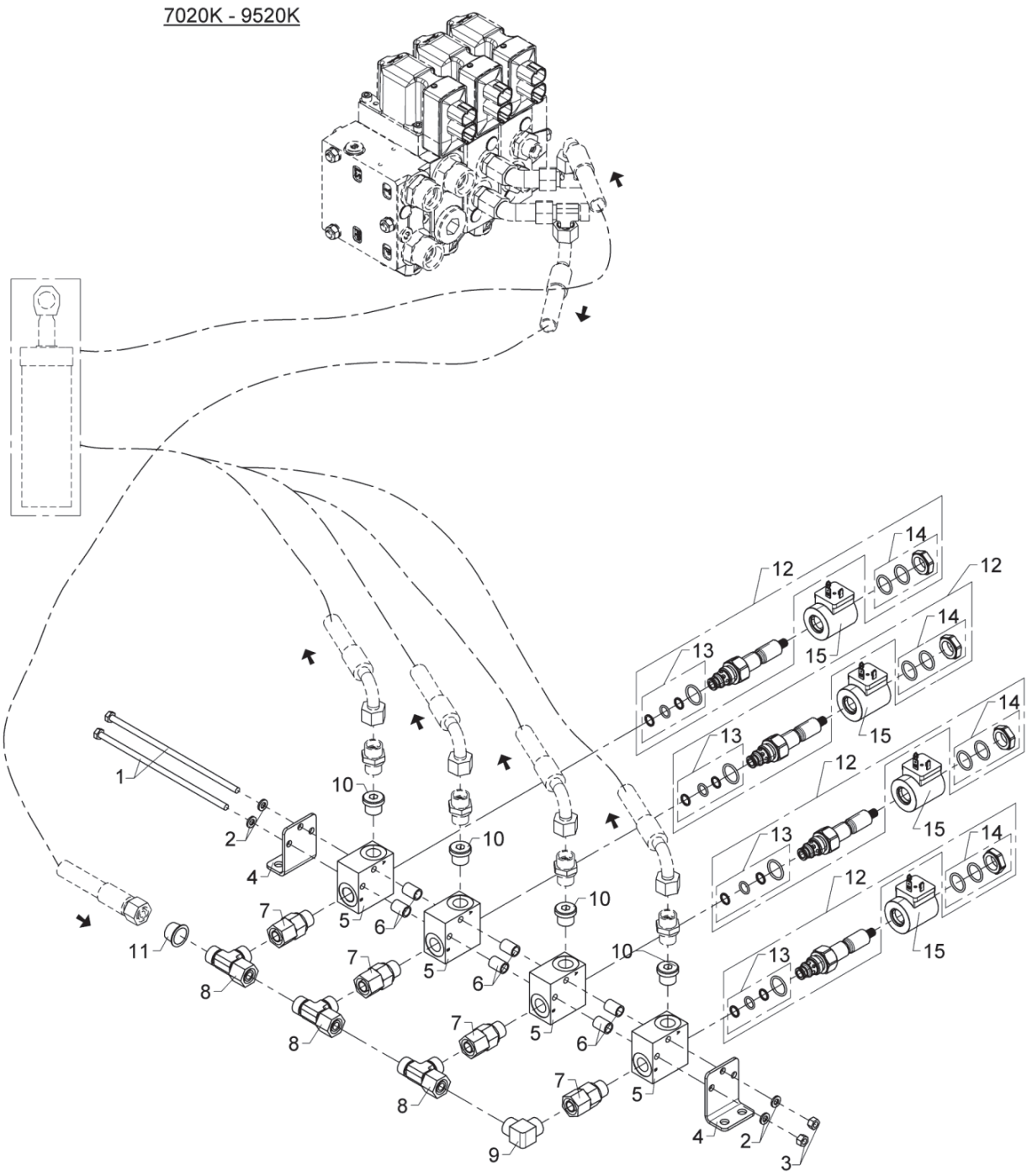

4 extra funct., stabilizer mode

Pos	Qty.	Part no.	Description	Remarks
1	2	32257	Steel bolt	M6 x 180
2	4	32302	Face washer, stainless	6 mm
3	2	30884	Lock nut, stainless	M6
4	2	6301202	Bracket	
5	4	59771	Valve housing	
6	6	6301203	Pipe	
7	4	25240	Connection	EGESD 12 LR-WD
8	3	25270	Connection	ELSD 12 L
9	1	25129	Elbow connection	WV 12 L
10	4	25277	Plug	VS-R-3/8 WD
11	1	64221	Plug	
12	4	59457		
13	4	2008003		
14	4	2008001		
15	4	50523		

9520K-RCS, 9520OK-RCS

Internal ref. 6399210

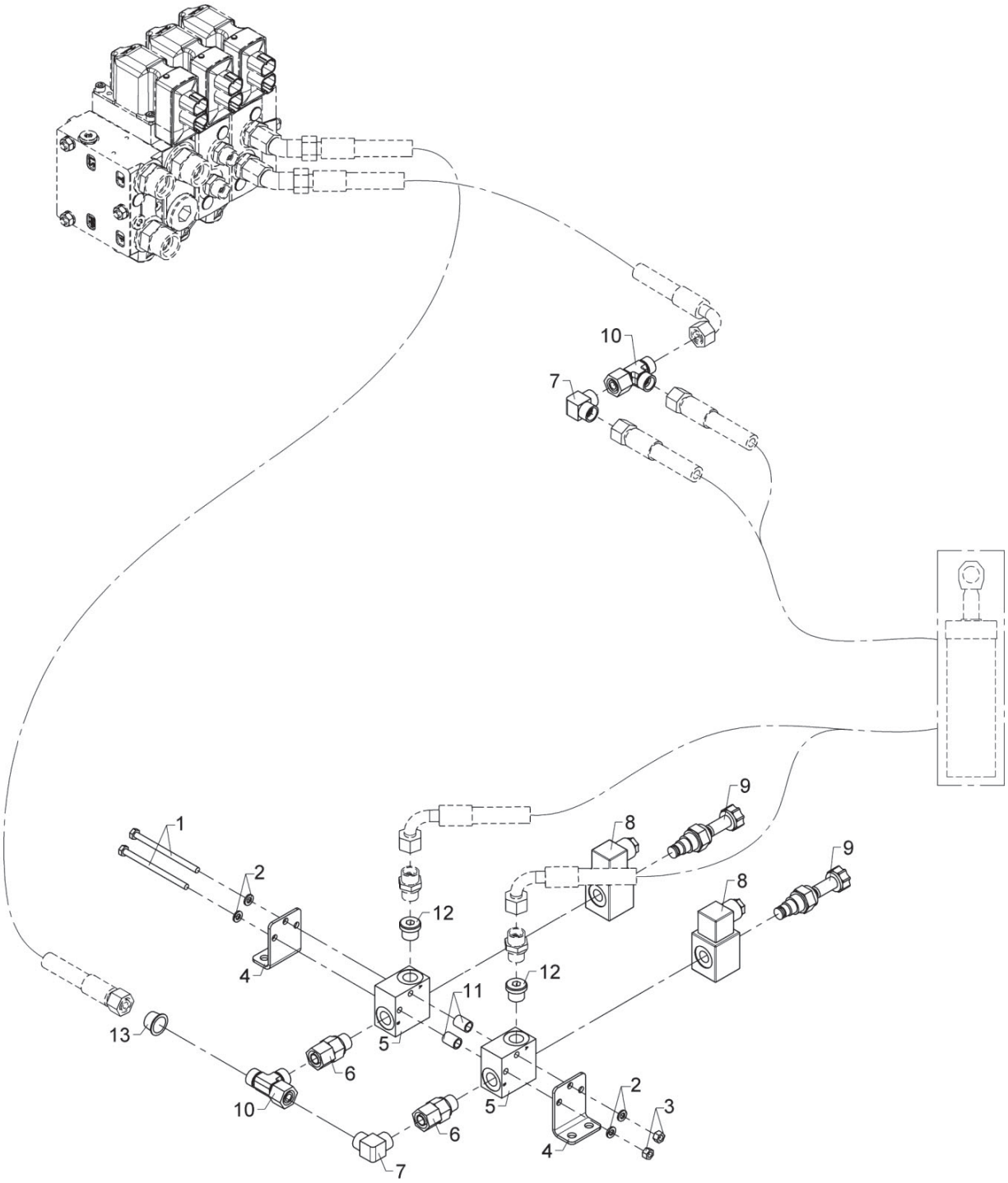

BOM obsolete

559 06 550

From loader 1370001
To loader 1370066

Created 20-12-18
Modified

2 extra funct., crane mode

Pos	Qty.	Part no.	Description	Remarks
1	2	30124	Steel bolt, stainless	M6 x 90
2	4	32302	Face washer, stainless	6 mm
3	2	30884	Lock nut, stainless	M6
4	2	6301202	Bracket	
5	2	59771	Valve housing	
6	2	25240	Connection	EGESD 12 LR-WD
7	2	25129	Elbow connection	WV 12 L
8	2	61778	Solenoid	
9	2	59057	Solenoid valve	
10	2	25270	Connection	ELSD 12 L
11	2	6301203	Pipe	
12	2	25277	Plug	VS-R-3/8 WD
13	1	64221	Plug	

9520K-RCS, 9520OK-RCS

Internal ref. 6399210

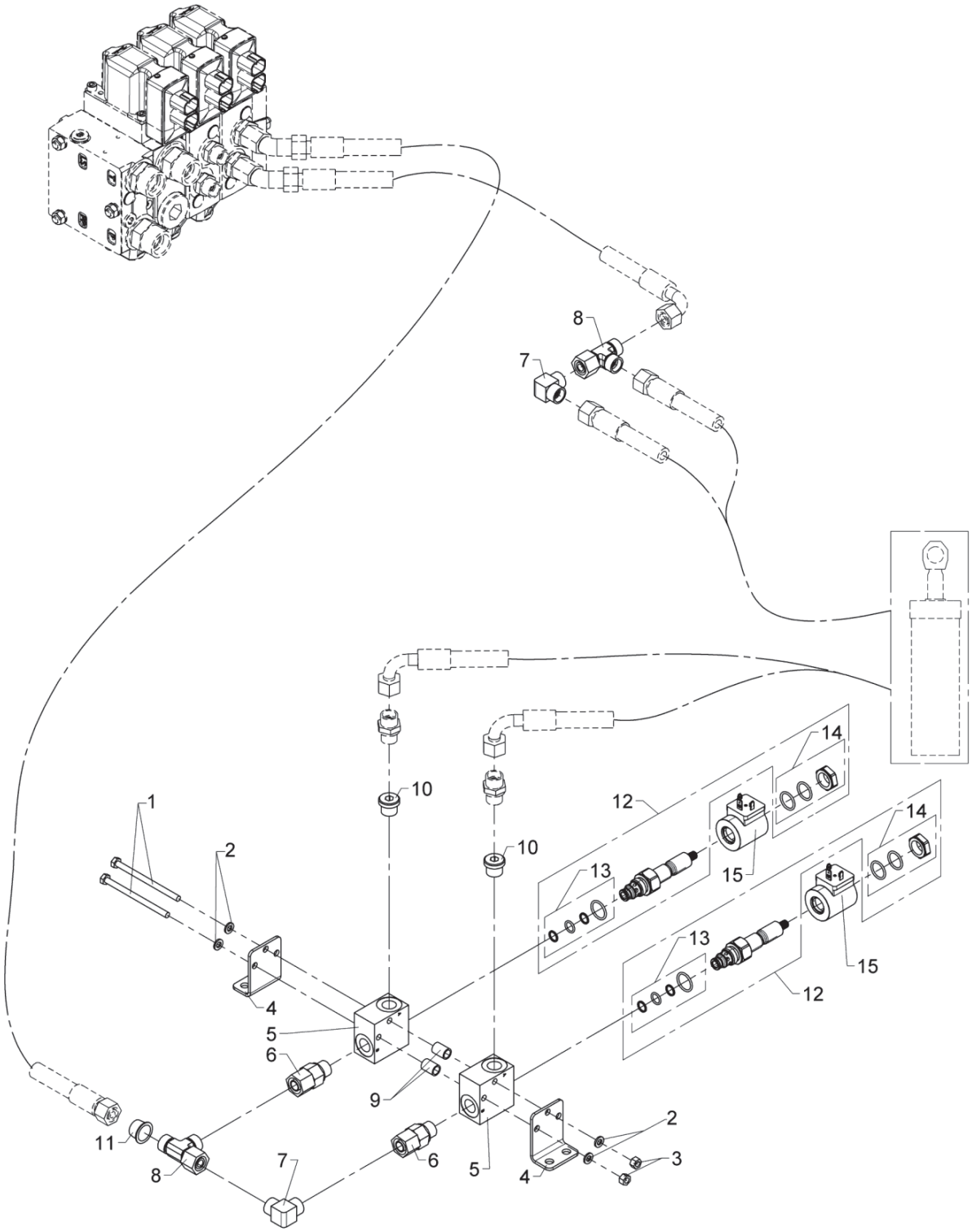

2 extra funct., crane mode

Pos	Qty.	Part no.	Description	Remarks
1	2	30124	Steel bolt, stainless	M6 x 90
2	4	32302	Face washer, stainless	6 mm
3	2	30884	Lock nut, stainless	M6
4	2	6301202	Bracket	
5	2	59771	Valve housing	
6	2	25240	Connection	EGESD 12 LR-WD
7	2	25129	Elbow connection	WV 12 L
8	2	25270	Connection	ELSD 12 L
9	2	6301203	Pipe	
10	2	25277	Plug	VS-R-3/8 WD
11	1	64221	Plug	
12	2	59457		
13	2	2008003		
14	2	2008001		
15	2	50523		

9520K-RCS, 9520OK-RCS

Internal ref. 6399220

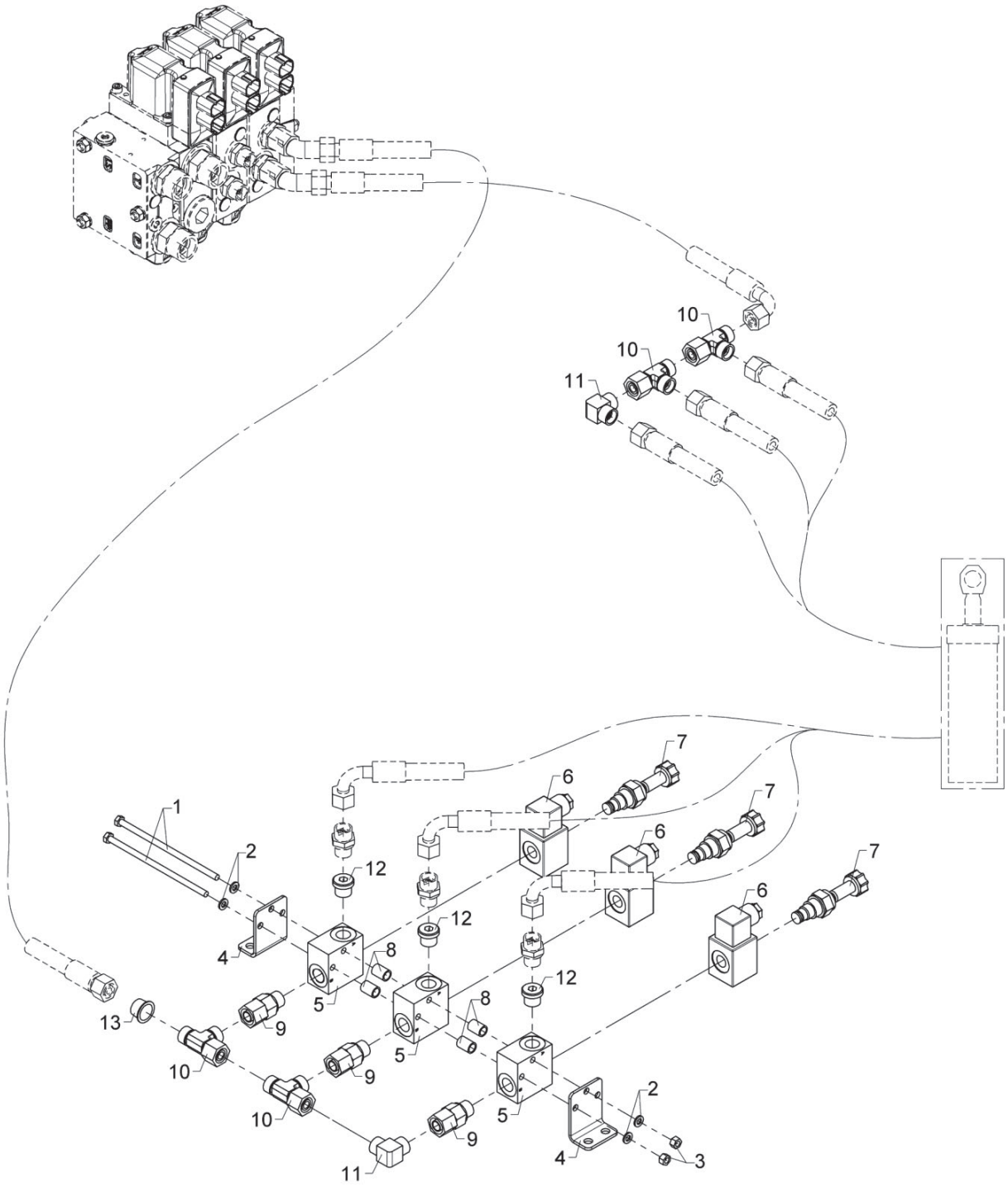

BOM obsolete

559 06 560

From loader 1370066
To loader

3 extra funct., crane mode

Created 19-12-18
Modified

Pos	Qty.	Part no.	Description	Remarks
1	2	32922	Steel bolt	M6 x 140
2	4	32302	Face washer, stainless	6 mm
3	2	30884	Lock nut, stainless	M6
4	2	6301202	Bracket	
5	3	59771	Valve housing	
6	3	61778	Solenoid	
7	3	59057	Solenoid valve	
8	4	6301203	Pipe	
9	3	25240	Connection	EGESD 12 LR-WD
10	4	25270	Connection	ELSD 12 L
11	2	25129	Elbow connection	WV 12 L
12	3	25277	Plug	VS-R-3/8 WD
13	1	64221	Plug	

9520K-RCS, 9520OK-RCS

Internal ref. 6399220

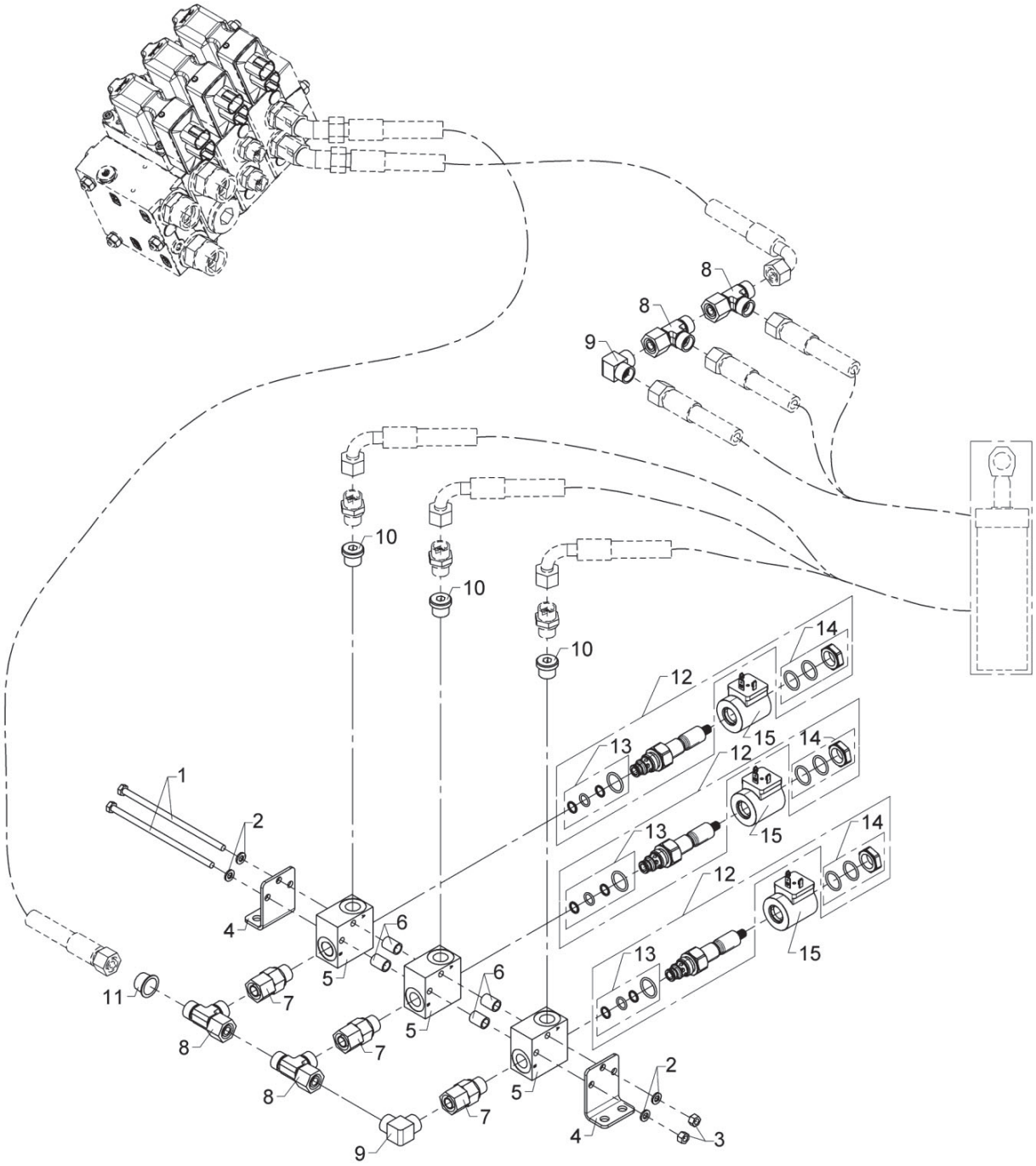

3 extra funct., crane mode

Pos	Qty.	Part no.	Description	Remarks
1	2	32922	Steel bolt	M6 x 140
2	4	32302	Face washer, stainless	6 mm
3	2	30884	Lock nut, stainless	M6
4	2	6301202	Bracket	
5	3	59771	Valve housing	
6	4	6301203	Pipe	
7	3	25240	Connection	EGESD 12 LR-WD
8	4	25270	Connection	ELSD 12 L
9	2	25129	Elbow connection	WV 12 L
10	3	25277	Plug	VS-R-3/8 WD
11	1	64221	Plug	
12	3	59457		
13	3	2008003		
14	3	2008001		
15	3	50523		

9520K-RCS, 9520OK-RCS

Internal ref. 6399230

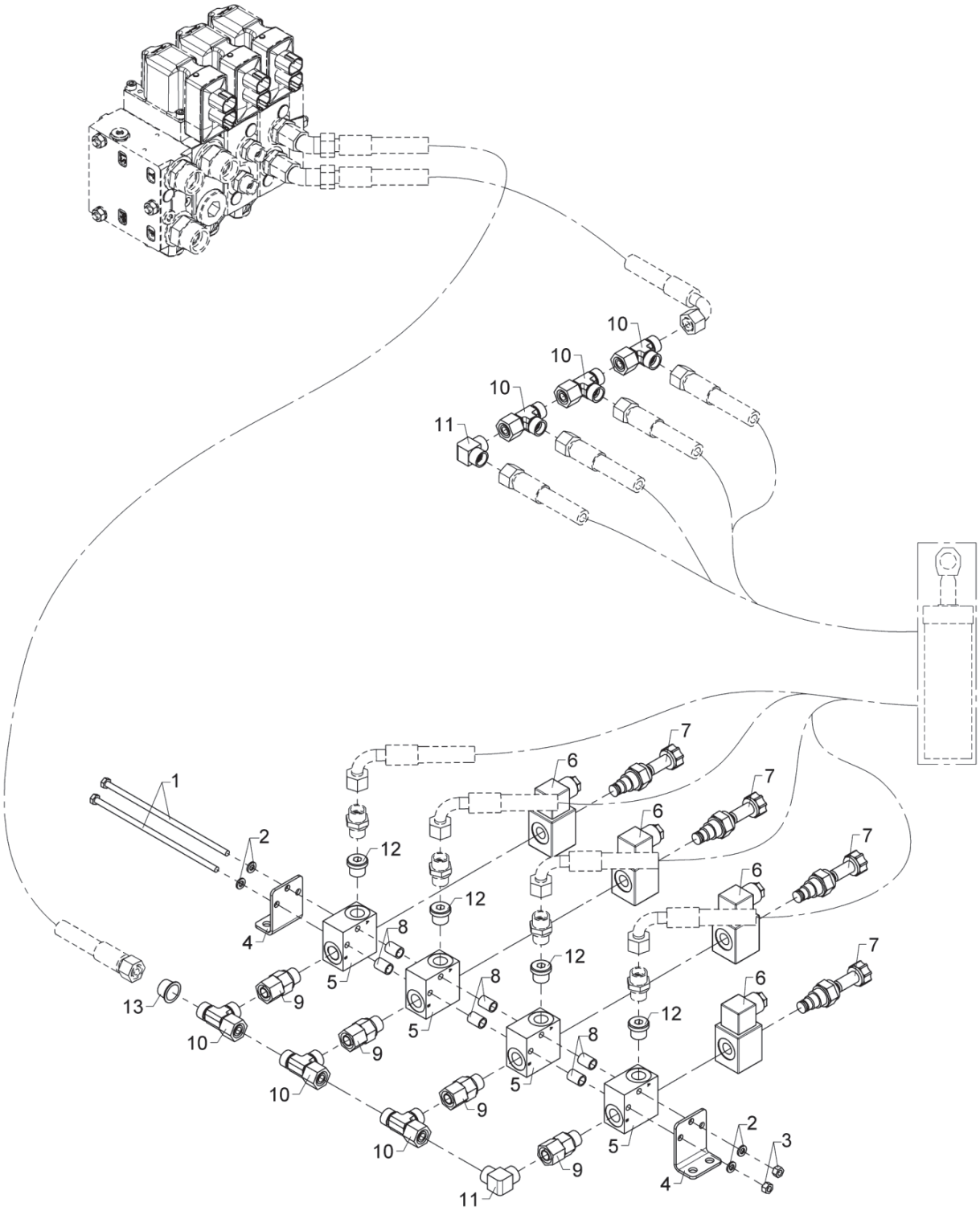

BOM obsolete

559 06 570

4 extra funct., crane mode

From loader 1370001
To loader 1370066
Created 20-12-18
Modified

Pos	Qty.	Part no.	Description	Remarks
1	2	32257	Steel bolt	M6 x 180
2	4	32302	Face washer, stainless	6 mm
3	2	30884	Lock nut, stainless	M6
4	2	6301202	Bracket	
5	4	59771	Valve housing	
6	4	61778	Solenoid	
7	4	59057	Solenoid valve	
8	6	6301203	Pipe	
9	4	25240	Connection	EGESD 12 LR-WD
10	6	25270	Connection	ELSD 12 L
11	2	25129	Elbow connection	WV 12 L
12	4	25277	Plug	VS-R-3/8 WD
13	1	64221	Plug	

9520K-RCS, 9520OK-RCS

Internal ref. 6399230

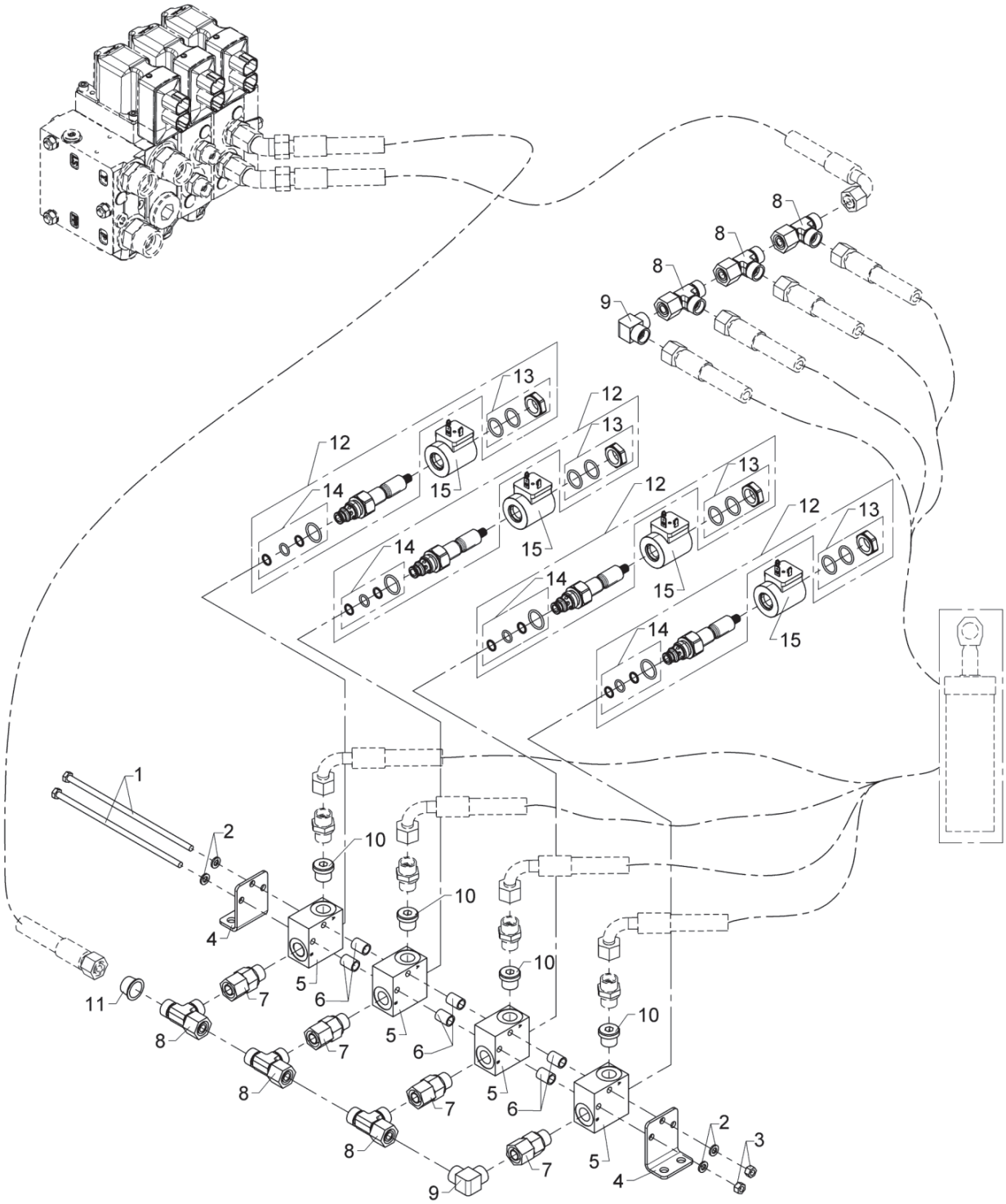

4 extra funct., crane mode

Pos	Qty.	Part no.	Description	Remarks
1	2	32257	Steel bolt	M6 x 180
2	4	32302	Face washer, stainless	6 mm
3	2	30884	Lock nut, stainless	M6
4	2	6301202	Bracket	
5	4	59771	Valve housing	
6	6	6301203	Pipe	
7	4	25240	Connection	EGESD 12 LR-WD
8	6	25270	Connection	ELSD 12 L
9	2	25129	Elbow connection	WV 12 L
10	4	25277	Plug	VS-R-3/8 WD
11	1	64221	Plug	
12	4	59457		
13	4	2008001		
14	4	2008003		
15	4	50523		

9520K-RCS, 9520OK-RCS

Internal ref. 6397670

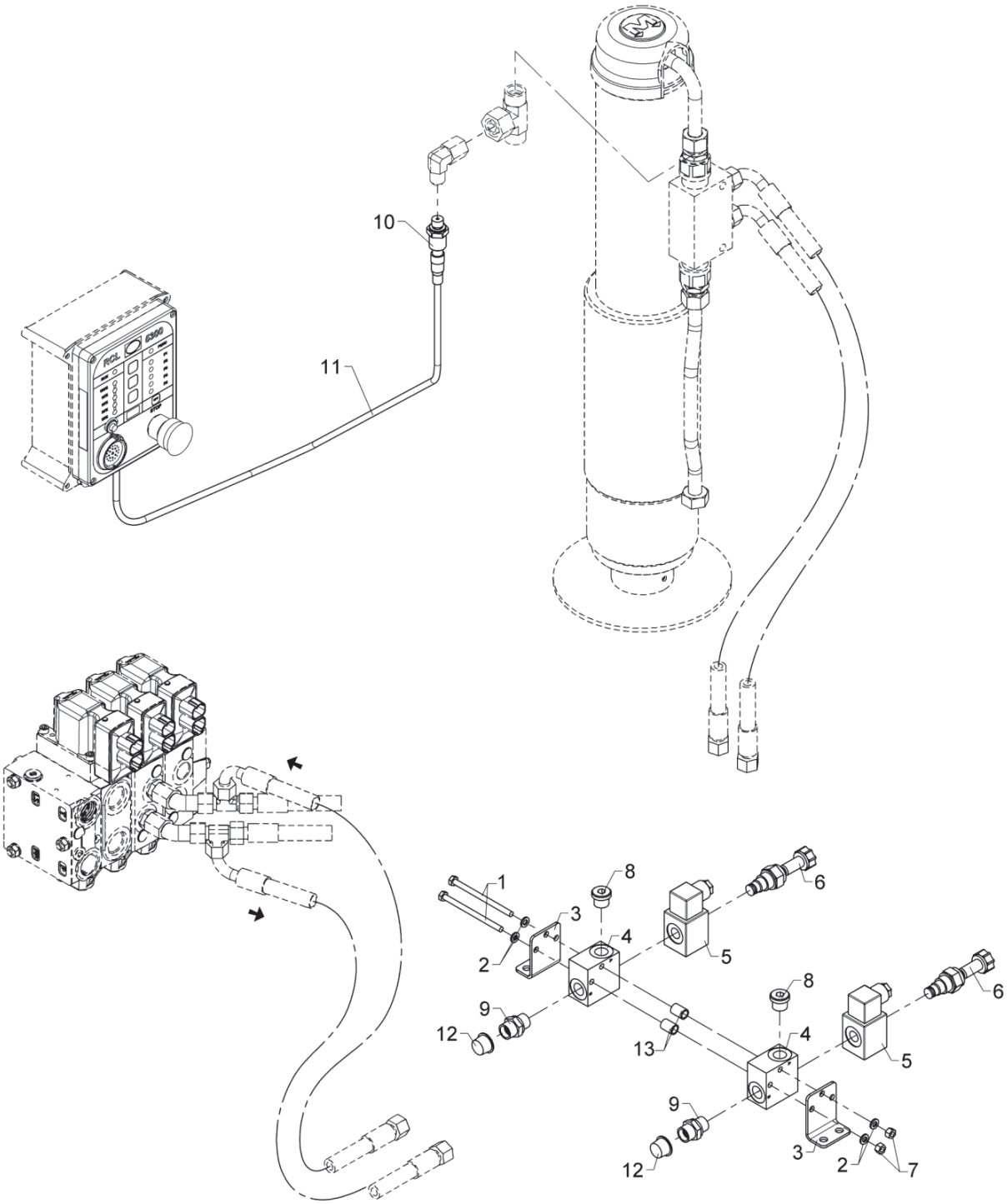

BOM obsolete

559 06 600

Front stabilizer leg

From loader 1370001
To loader 1370066
Created 14-12-18
Modified

Pos	Qty.	Part no.	Description	Remarks
1	2	30124	Steel bolt, stainless	M6 x 90
2	4	32302	Face washer, stainless	6 mm
3	2	6301202	Bracket	
4	2	59771	Valve housing	
5	2	61778	Solenoid	
6	2	59057	Solenoid valve	
7	2	30884	Lock nut, stainless	M6
8	2	25277	Plug	VS-R-3/8 WD
9	2	25127	Connection	P-GEV 12 LR-WD
10	1	28850	Pressure transducer	
11	1	29224	Cable with socket, 5 m	
12	2	64221	Plug	
13	2	6301203	Pipe	

9520K-RCS, 9520OK-RCS

Internal ref. 6397670

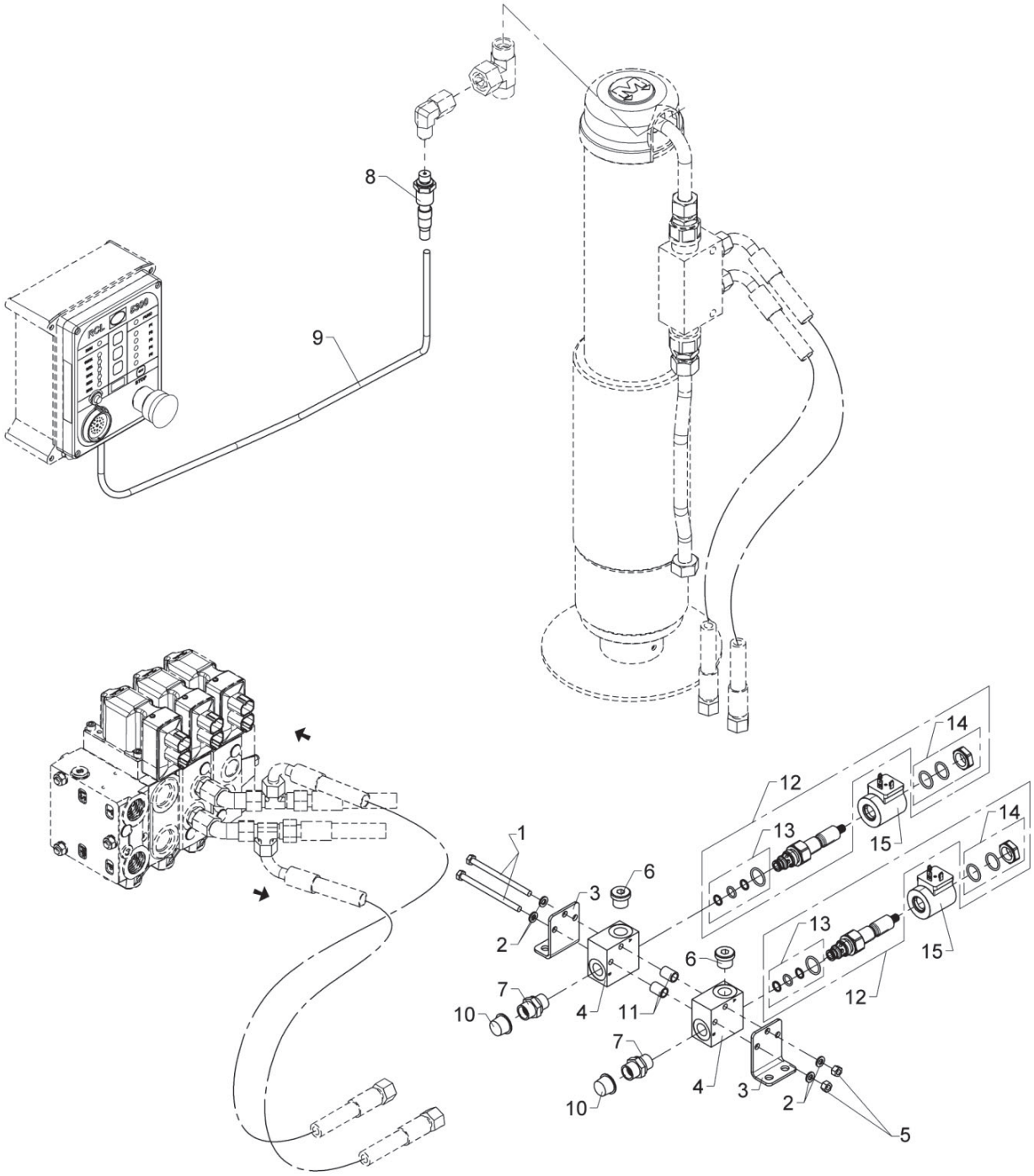

Front stabilizer leg

Pos	Qty.	Part no.	Description	Remarks
1	2	30124	Steel bolt, stainless	M6 x 90
2	4	32302	Face washer, stainless	6 mm
3	2	6301202	Bracket	
4	2	59771	Valve housing	
5	2	30884	Lock nut, stainless	M6
6	2	25277	Plug	VS-R-3/8 WD
7	2	25127	Connection	P-GEV 12 LR-WD
8	1	28850	Pressure transducer	
9	1	29224	Cable with socket, 5 m	
10	2	64221	Plug	
11	2	6301203	Pipe	
12	2	59457		
13	2	2008003		
14	2	2008001		
15	2	50523		

DECAL PARTS LIST

	PART NO.	DESCRIPTION	QTY.
	70392864	DECAL-WARNING STAB STAND CLEAR	2
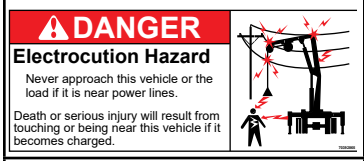	70392865	DECAL-DANGER ELEC HAZARD LG	4
	70392868	DECAL-WARNING CR LOADLINE (TRK) LARGE	4
	70392891	DECAL-DANGER DRIVE-LINE	2
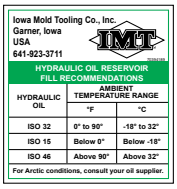	70394189	DECAL-HYDRAULIC OIL RESERVOIR	1
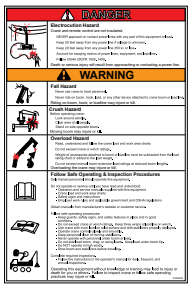	70396918	DECAL-DANGER ARTICULATED LG	2
	70396919	DECAL-DANGER ARTICULATING SM	2

DECAL PARTS LIST

	PART NO.	DESCRIPTION	QTY.
	70396021	DECAL-MADE IN DENMARK	1
	71392365	DECAL-ALIGNMENT CRANE ROTATION	1
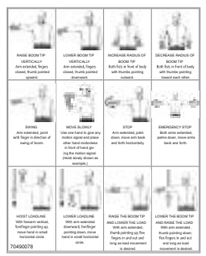	70490078	DECAL-ARTICULATING CRANE HAND SIGNALS	2
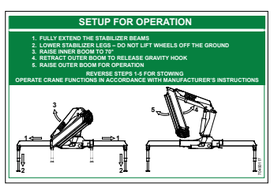	70490117	DECAL-SETUP INSTRUCTIONS	2
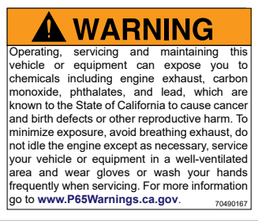	70490167	DECAL-WARNING-PROP 65	2
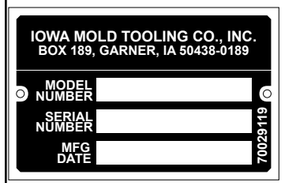	70029119	PLACARD-SERIAL NUMBER	1

DECAL PARTS LIST

	PART NO.	DESCRIPTION	QTY.
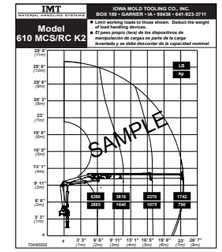	70490191-RCS K6 70490192-RCS K7 70490193-RCS K8 70490175-RCS OK2 70490176-RCS OK3 70490177-RCS OK4 70490173-RCS OK5 70490178-RCS OK6	DECAL-CP-9520	2
 SAMPLE	70490363	DECAL-ID-9520	2
	70490237	DECAL-EVS	1
	66598	MARKING TAPE - DARK-YELLOW	4
	65770	NO HIGH PRESSURE	1
	64793	SWING-UP LEG	2
	68995	EMERGENCY OPER.4 FUNC,RC	1
	66626	OPERATING LABEL	1

DECAL PARTS LIST			
	66636	STAB. OPERATION, VALVE BL.SIDE	1
	66637	STABILIZER OPERATION, DUAL CTRL SIDE	1
	66638	STAB. OPERATION, (HC-M50-2FCTS)	1
	66643	OPERATING LABEL, (PVG 32-4FCTS)	1
	66642	OPERATING LABEL, (PVG 32-6FCTS)	1
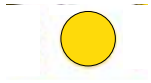	66645	LABEL	1
	66837	OPERATING LABEL	1

*MANUAL KIT NUMBER 95720380 PARTS LIST

PART NO.	DESCRIPTION
70392864	DECAL-WARNING STAB STAND CLEAR
70392865	DECAL-DANGER ELEC HAZARD LG
70392868	DECAL-WARNING CR LOADLINE (TRK) LARGE
70392891	DECAL-DANGER DRIVELINE
70394189	DECAL-HYDRAULIC OIL RESERVOIR
70396918	DECAL-DANGER ARTICULATED LG
70396919	DECAL-DANGER ARTICULATING SM
70396021	DECAL-MADE IN DENMARK
71392365	DECAL-ALIGNMENT CRANE ROTATION
70490078	DECAL-ARTICULATING CRANE HAND SIGNALS
70490117	DECAL-SETUP INSTRUCTIONS
70490167	DECAL-WARNING-PROP 65

9520 TECHNICAL SPECIFICATION MANUAL: 99906397

9520K-RCS, 9520OK-RCS

Internal ref. 6888480

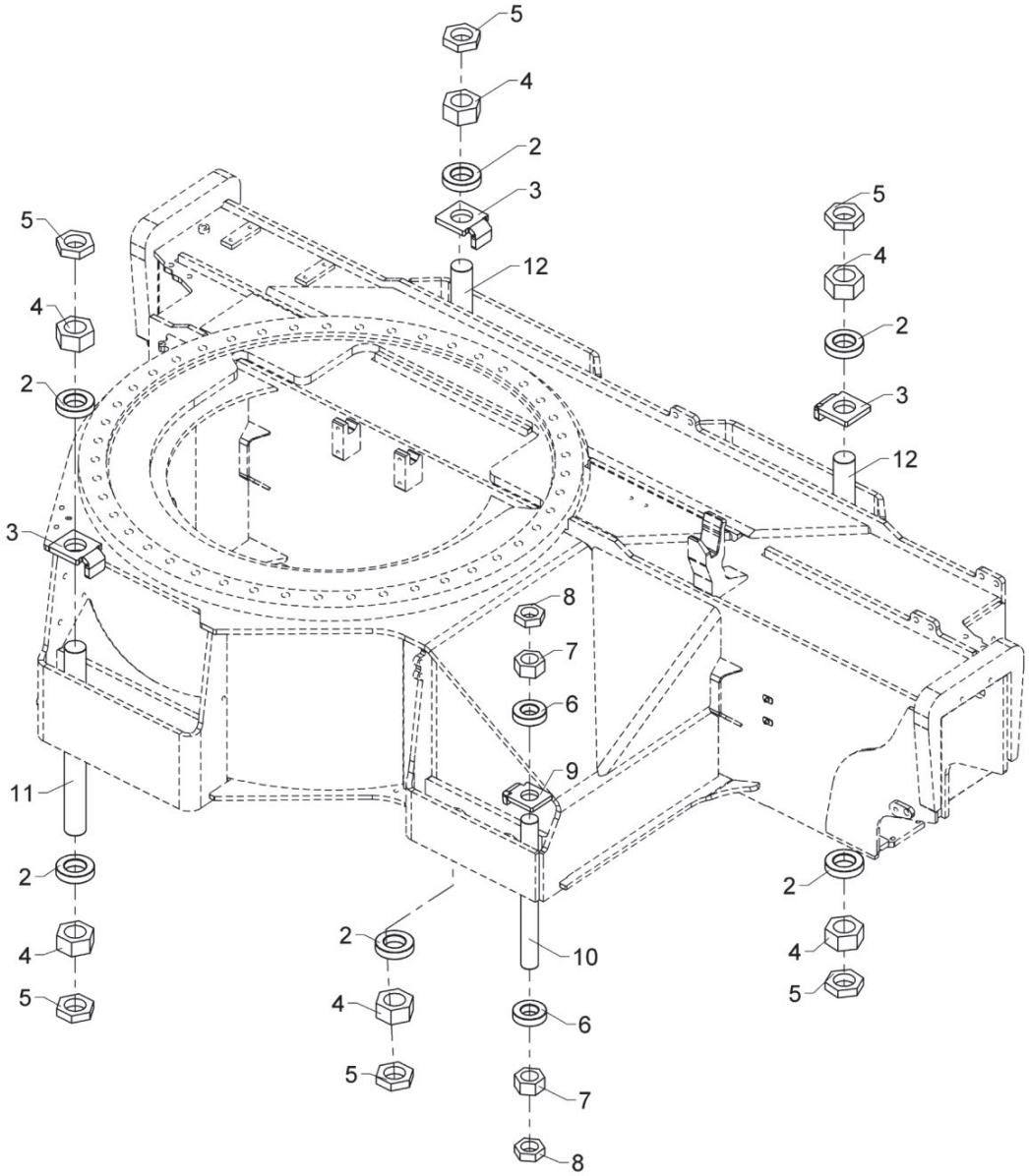

559 07 100

From loader 1370001
To loader

Created 19-04-18
Modified

Mounting kit 4 bolt - subframe

Pos	Qty.	Part no.	Description	Remarks
1	1	6888640	Nut/washer/stop - kit	
2	6	6398701	Mounting disc	
3	3	6398702	Mounting washer	
4	6	32280	Lock nut M45x2	M45 x 2
5	6	32278	Counter nut M45x2	M45 x 2
6	2	6394703	Mounting plate 36 mm	
7	2	32343	Nut	M36 x 2
8	2	31057	Counter nut	M36 x 2
9	1	6394704	Mounting plate 36 mm	
10	1	6888041	Mounting bolt, M36 x 2 x 370	
11	1	6888481	Mounting bolt M45x2x465	
12	2	6888482	Mounting bolt M45x2x750	

9520K-RCS, 9520OK-RCS

Internal ref. 6888670

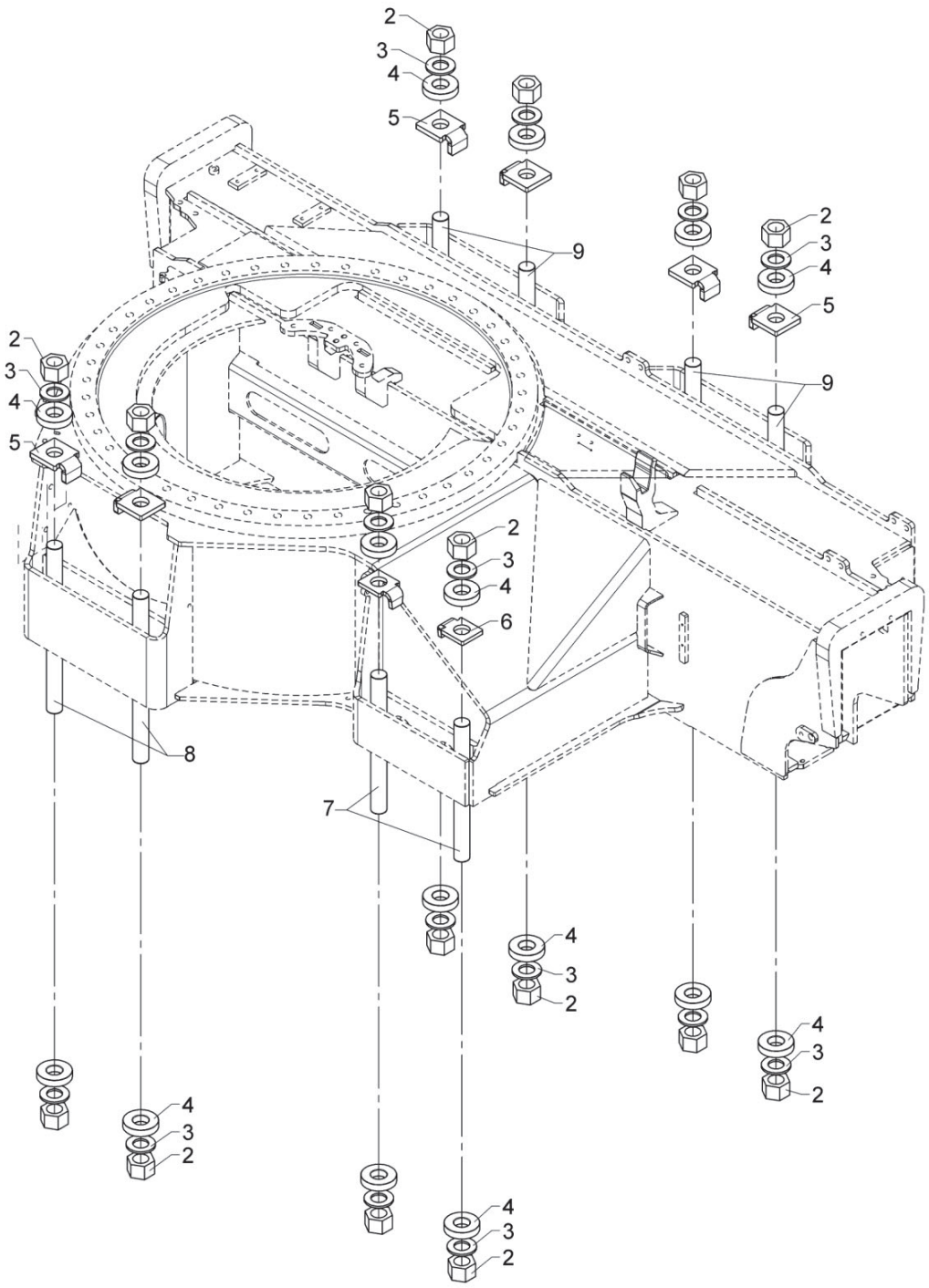

559 07 105

From loader 1370001
To loader

Mounting kit 8 bolt - subframe

Created 17-08-18
Modified 02-08-19

Pos	Qty.	Part no.	Description	Remarks
1	1	6888630	Nut/washer/stop - kit	
2	16	31043	Lock nut M36 x 2 hexagonal	M36 x 2
3	16	31059	Washer	36 mm
4	16	6398703	Mounting plate 36 mm	
5	6	6398704	Mounting plate 36 mm	
6	2	6394704	Mounting plate 36 mm	
7	2	6888041	Mounting bolt, M36 x 2 x 370	
8	2	6888042	Mounting bolt, M36 x 2 x 450	
9	4	6888043	Stay bolt, M36 x 2 x 735	

9520K-RCS, 9520OK-RCS

Internal ref. 6888620

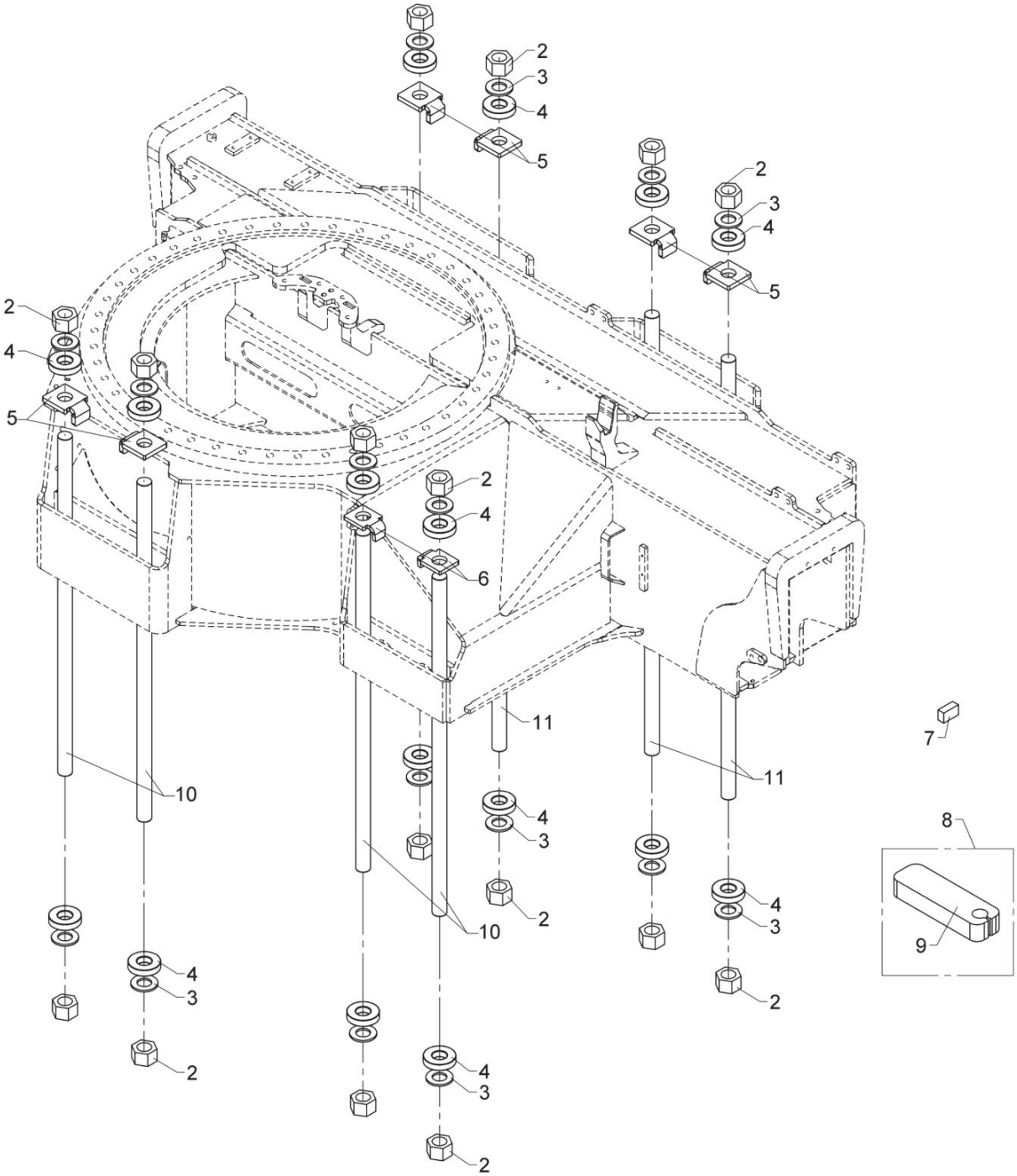

559 07 110

From loader 1370001
To loader

Mounting kit 8 bolt - chassis

Created 19-04-18
Modified 02-08-19

Pos	Qty.	Part no.	Description	Remarks
1	1	6888630	Nut/washer/stop - kit	
2	16	31043	Lock nut M36 x 2 hexagonal	M36 x 2
3	16	31059	Washer	36 mm
4	16	6398703	Mounting plate 36 mm	
5	6	6398704	Mounting plate 36 mm	
6	2	6394704	Mounting plate 36 mm	
7	6	6644084	Stop block	
8	1	6668920	Mounting fittings (mount. kit)	
9	4	6302999	Clamp	
10	4	6888045	Stay bolt, M36 x 2 x 1000	
11	4	6888044	Mounting bolt, M36 x 2 x 1300	

9520K-RCS, 9520OK-RCS

6397740
6397730
6398840
6398830
Internal ref. 6398820

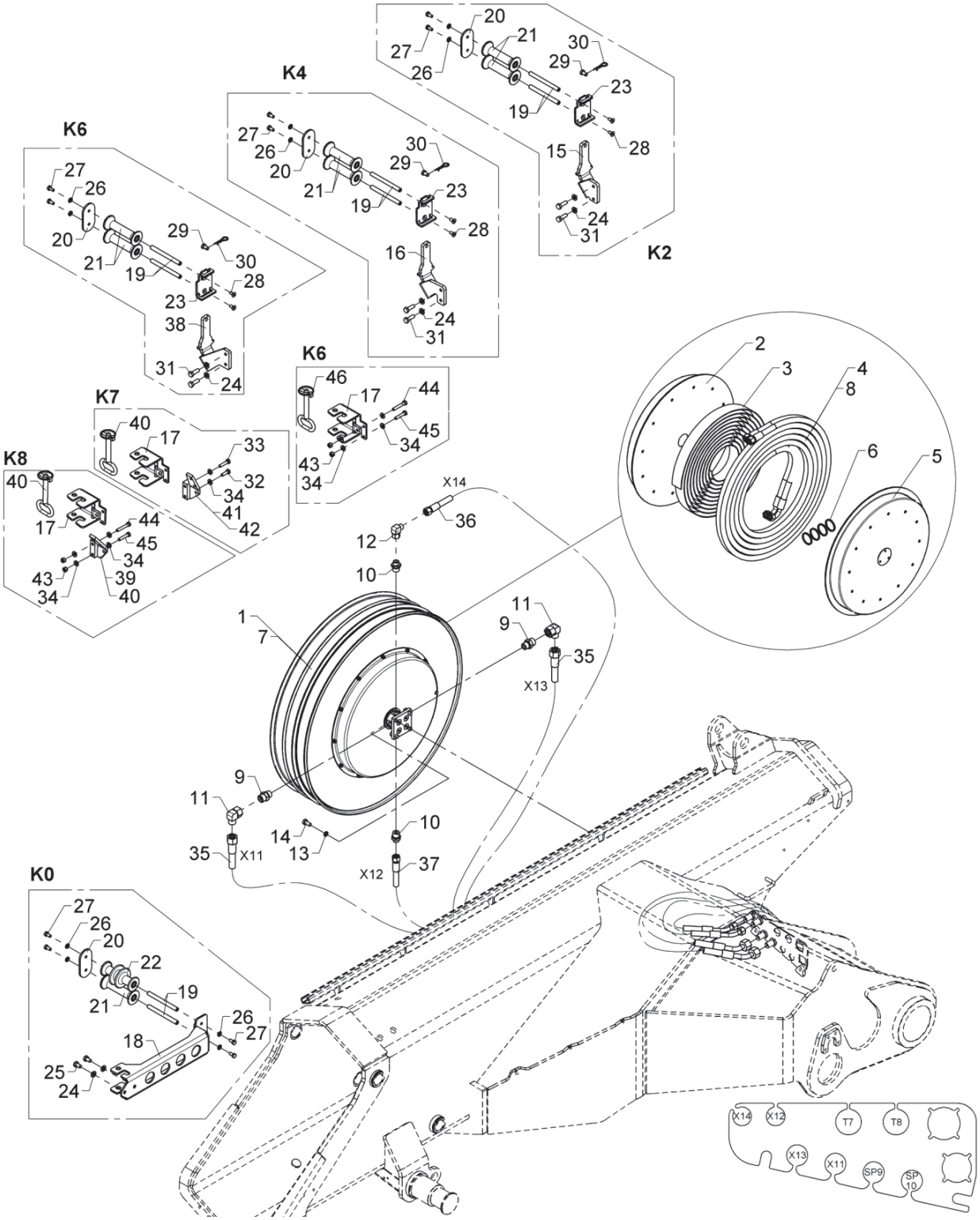

BOM obsolete

559 09 250

From loader 1370001
To loader 1370040

Created 04-07-17
Modified 30-01-19

Hose reels, K

Pos	Qty.	Part no.	Description	Remarks
1	1	56315	Hose reel, double	K6
2	2	56346	Spring container	56315 / 56317
3	2	56345	Spring	56315 / 56317
4	1	56316	Hose	1/2"B3 X 15500 mm
5	2	56486	Spring housing	56315 / 56317
6	2	56482	Seal kit	56315 / 56317
7	1	56240	Hose reel, double	1/2" x 18500 mm
8	1	56318	Hose	1/2"B3 x 18500 mm
9	2	26334	Connection	P-GEV 16 SR-WD
10	2	25108	Connection	GES 12 LR 1/2-WD
11	2	26340	Elbow connection	EWSD 16 S
12	1	25242	Elbow connection	EWSD 12 L
13	4	31156	Spring washer	10 mm
14	4	31517	Set screw, stainless	M10 x 20
15	1	6398884	Attachment	K2
16	1	6398885	Attachment	K4
17	3	6398927	Adaptor	K6
18	1	6302877	Attachment - jib	
19	8	6302883	Pin	
20	4	6302882	End plate	
21	7	63510	Guide roller	
22	1	63600	Guide roller	
23	3	6398881	Bracket	
24	8	31177	Washer	10 mm
25	2	30153	Set screw	M10 x 16
26	10	31147	Face washer, 8 mm	
27	10	30131	Set screw, stainless	M8 x 16
28	6	30543	Countersunk screw	MK8 x 16
29	3	6302896	Lock pin	
30	3	33379	Spring	
31	6	30156	Set screw, stainless	M10 x 30
32	1	30134	Set screw, stainless	M8 x 25
33	1	30136	Steel bolt, stainless	M8 x 35
34	10	31754	Washer	8 mm
35	2	56201	Hose	1/2 x 1900 L/45
36	1	56694	Hose	3/8 x 2000 L/45° (12L)
37	1	56695	Hose	3/8 x 1800 L/45° (12L)
38	1	6398929	Attachment, K6	K6
39	1	6398933	Bracket	K8 - 9520
40	1	6397933	Extra valve bracket K8, SV.	K8 - 7020
41	1	6398939	Bracket	K7 - 9520

9520K-RCS, 9520OK-RCS

6397740
6397730
6398840
6398830
Internal ref. 6398820

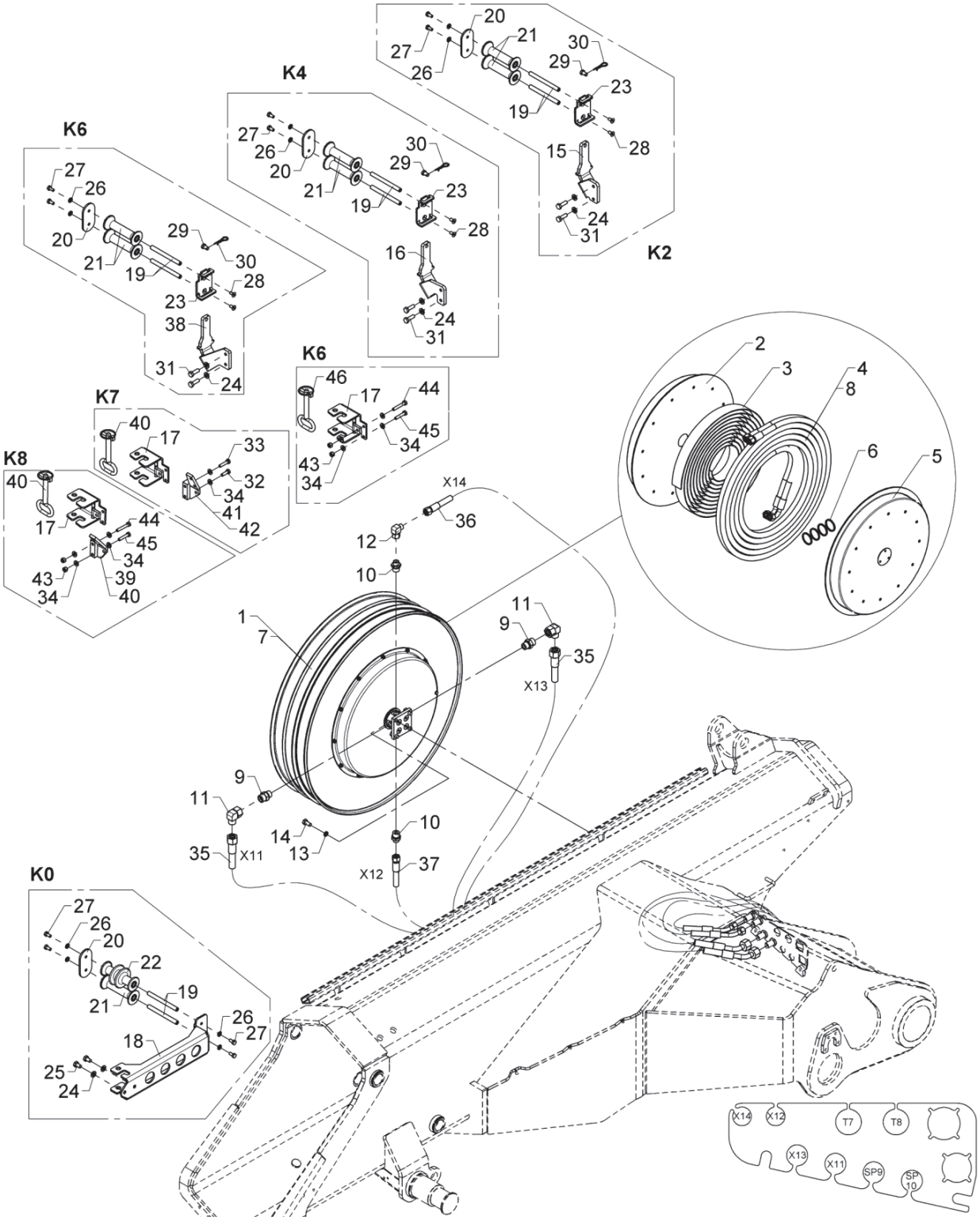

BOM obsolete

559 09 250

Hose reels, K

From loader 1370001
To loader 1370040

Created 04-07-17
Modified 30-01-19

Pos	Qty.	Part no.	Description	Remarks
42	1	6397939	Extra valve bracket K7, SV.	K7 - 7020
43	4	30886	Lock nut, stainless	M8
44	2	30139	Steel bolt, stainless	M8 x 50
45	2	30137	Set screw, stainless	M8 x 40
46	1	1261144	Lock pin with chain	

9520K-RCS, 9520OK-RCS

6398840
6398830
Internal ref. 6398820

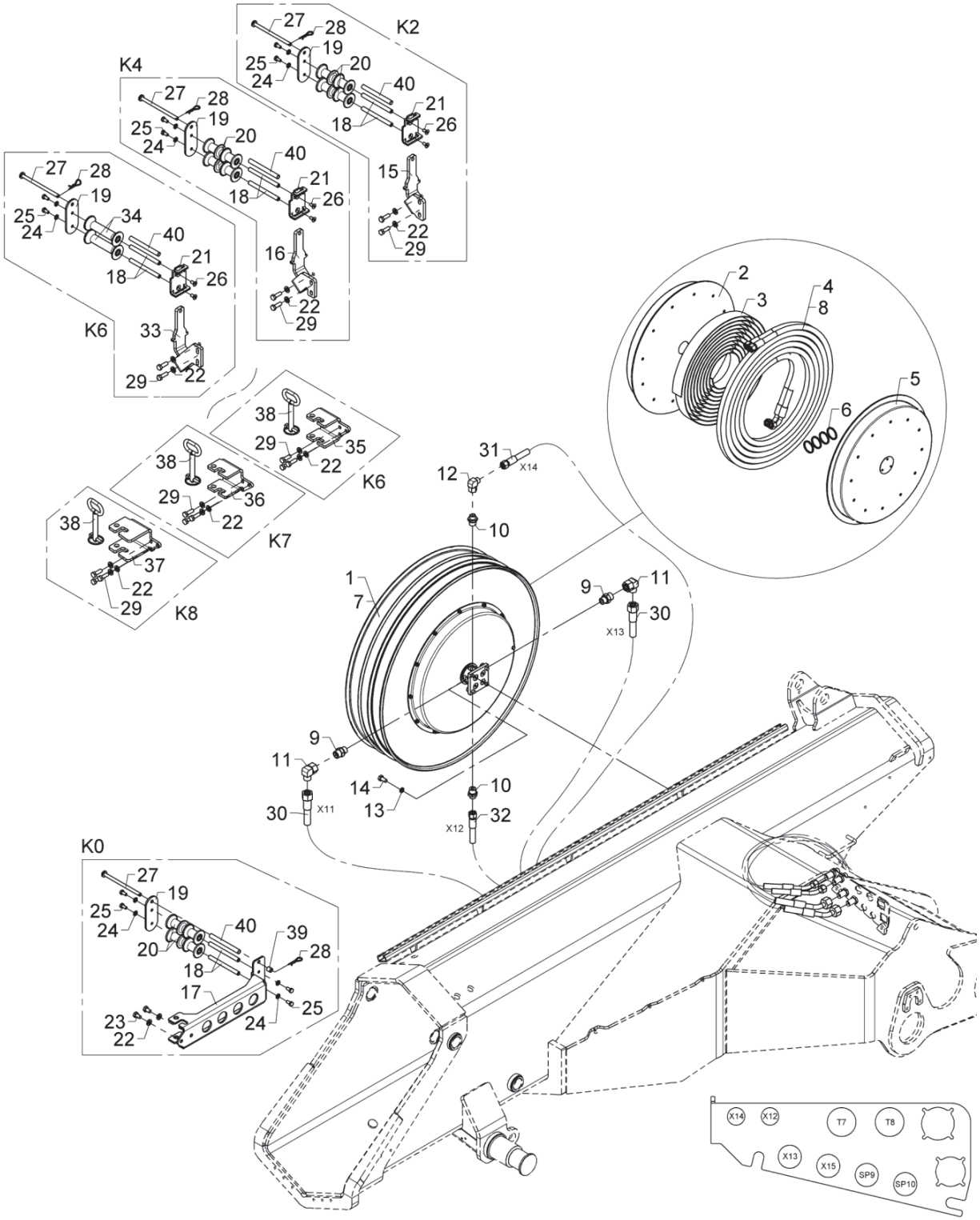

Hose reels, K

Pos	Qty.	Part no.	Description	Remarks
		6398820	Hose reel K6, complete	
		6398830	Hose reel K7, complete	
		6398840	Hose reel K8, complete	
1	1	56315	Hose reel, double	K6
2	2	56346	Spring container	56315 / 56317
3	2	56345	Spring	56315 / 56317
4	1	56316	Hose	1/2"B3 X 15500 mm
5	2	56486	Spring housing	56315 / 56317
6	2	56482	Seal kit	56315 / 56317
7	1	56240	Hose reel, double	1/2" x 18500 mm
8	1	56318	Hose	1/2"B3 x 18500 mm
9	2	26334	Connection	P-GEV 16 SR-WD
10	2	25108	Connection	GES 12 LR 1/2-WD
11	2	26340	Elbow connection	EWSD 16 S
12	1	25242	Elbow connection	EWSD 12 L
13	4	31156	Spring washer	10 mm
14	4	31517	Set screw, stainless	M10 x 20
15	1	6398884	Attachment	K2
16	1	6398885	Attachment	K4
17	1	6397877	Attachment, jib	
18	8	6302883	Pin	
19	4	6397882	End plate	
20	6	68120	Guide roller	
21	3	6397881	Bracket	
22	17	31177	Washer	10 mm
23	2	30153	Set screw	M10 x 16
24	10	31147	Face washer, 8 mm	
25	10	30131	Set screw, stainless	M8 x 16
26	6	30543	Countersunk screw	MK8 x 16
27	4	6397883	Rod	
28	4	33379	Spring	
29	15	30156	Set screw, stainless	M10 x 30
30	2	56201	Hose	1/2 x 1900 L/45
31	1	56694	Hose	3/8 x 2000 L/45° (12L)
32	1	56695	Hose	3/8 x 1800 L/45° (12L)
33	1	6398929	Attachment, K6	
34	2	63510	Guide roller	
35	1	6398967	Adapter, K6	K6
36	1	6398968	Adapter, K7	K7
37	1	6398969	Adapter, K8	K8
38	1	1261144	Lock pin with chain	

9520K-RCS, 9520OK-RCS

6398840
6398830
Internal ref. 6398820

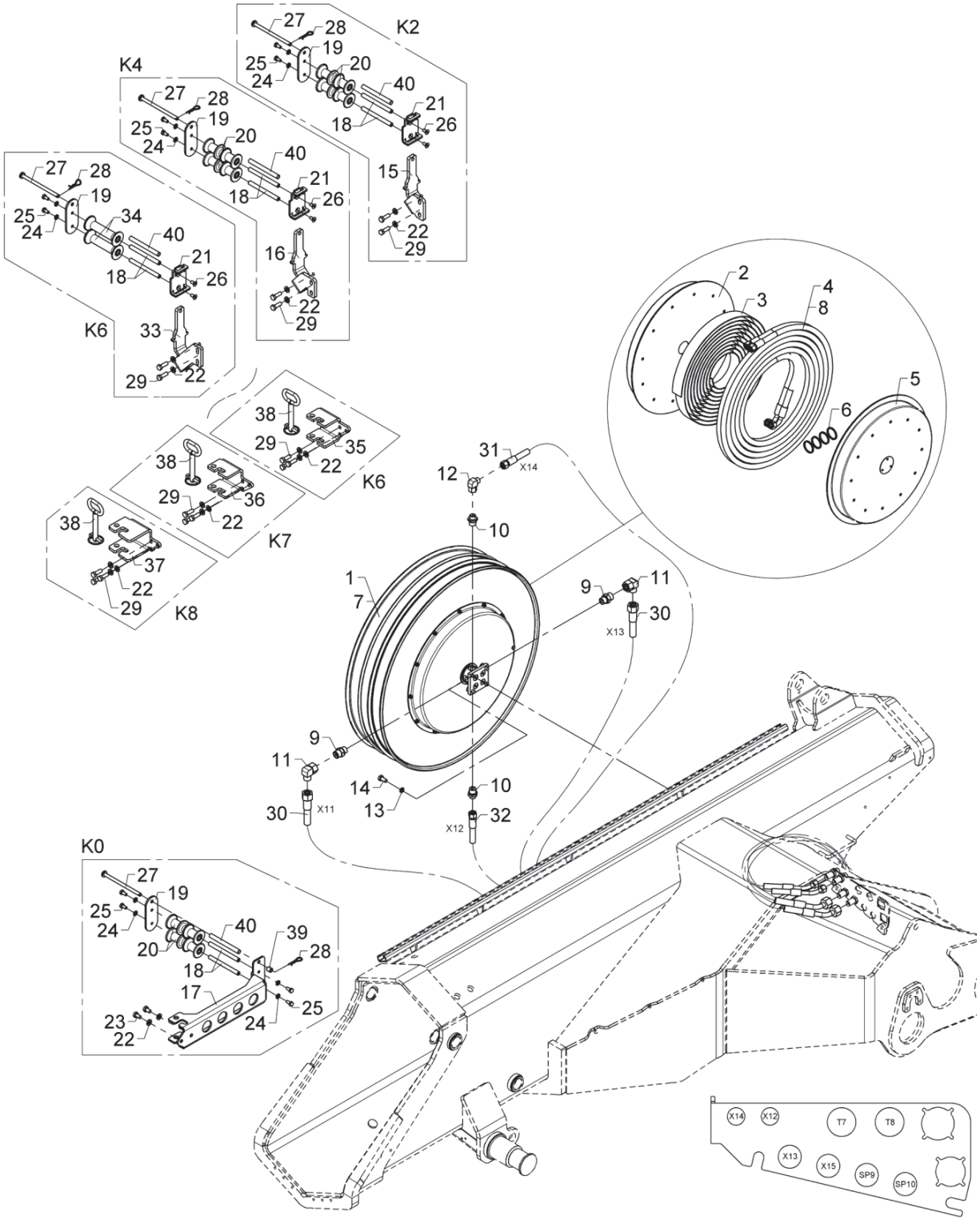

Hose reels, K

Pos	Qty.	Part no.	Description	Remarks
39	1	6390038	Distance pipe	
40	4	6397884	Guide roller	

9520K-RCS, 9520OK-RCS

6397700
6397720
Internal ref. 6397710

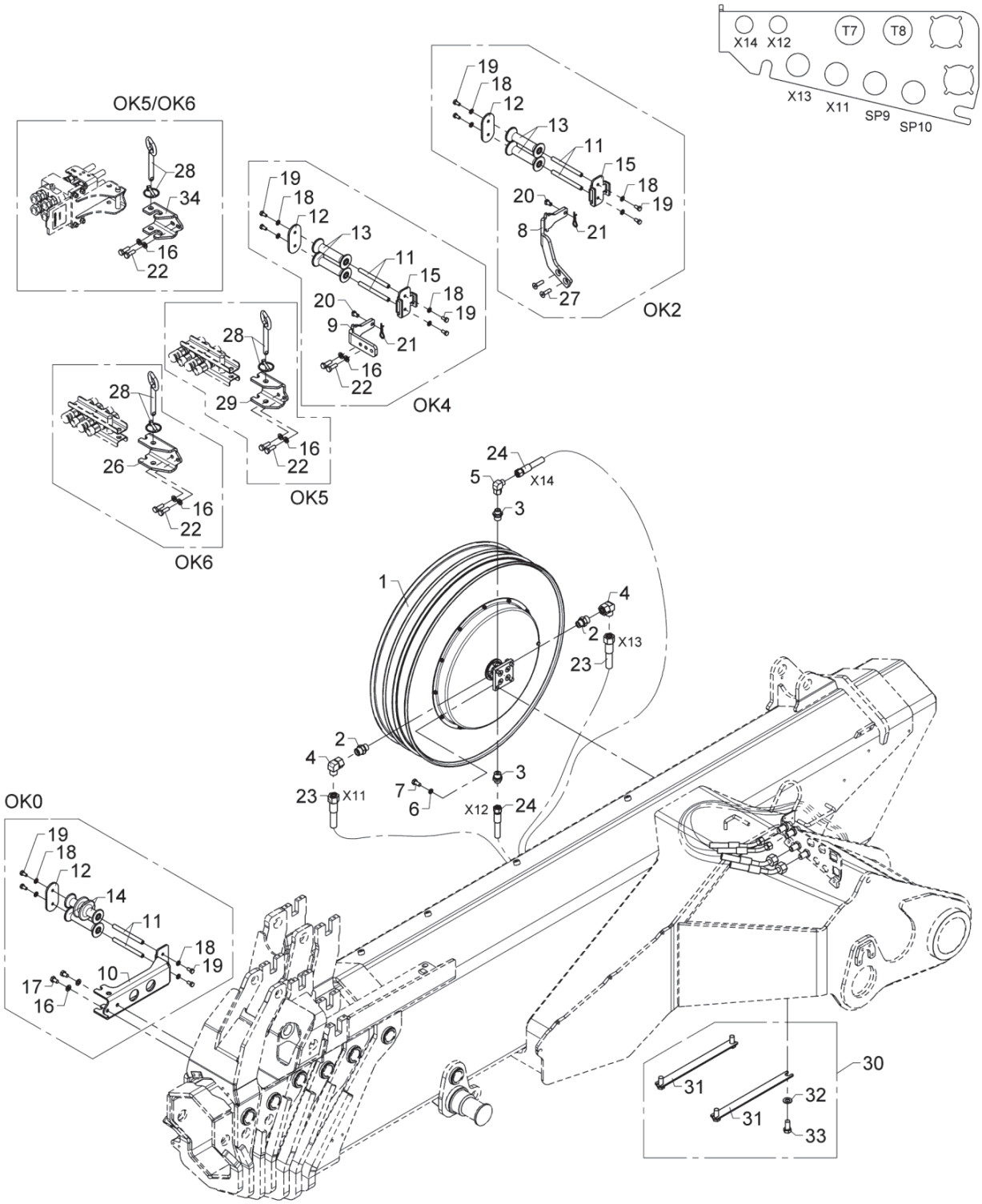

BOM obsolete

559 09 310

From loader 1370001
To loader

Created 03-01-19
Modified

Hose reel, quick-release coupling, OK5/OK6

Pos	Qty.	Part no.	Description	Remarks
1	1	56315	Hose reel, double	1/2" x 15500 mm
2	2	26334	Connection	P-GEV 16 SR-WD
3	2	25108	Connection	GES 12 LR 1/2-WD
4	2	26340	Elbow connection	EWSD 16 S
5	1	25242	Elbow connection	EWSD 12 L
6	4	31156	Spring washer	10 mm
7	4	31517	Set screw, stainless	M10 x 20
8	1	6302626	Attachment	OK2
9	1	6302598	Attachment	OK4
10	1	6302899	Attachment, jib	
11	6	6302883	Pin	
12	3	6302882	End plate	
13	5	63510	Guide roller	
14	1	63600	Guide roller	
15	2	6302881	Plate	
16	8	31177	Washer	10 mm
17	2	30153	Set screw	M10 x 16
18	12	31147	Face washer, 8 mm	
19	12	30131	Set screw, stainless	M8 x 16
20	2	6302896	Lock pin	
21	2	33379	Spring	
22	6	30156	Set screw, stainless	M10 x 30
23	2	56201	Hose	1/2 x 1900 L/45
24	1	56694	Hose	3/8 x 2000 L/45° (12L)
25	1	56695	Hose	3/8 x 1800 L/45° (12L)
26	1	6302891	Adapter	OK6
27	2	30526	Countersunk screw	MK10 x 35
28	3	1261144	Lock pin with chain	
29	1	6302869	Adapter	OK5
30	1	6397750	Clamp, complete	
31	2	6300444	Hose bracket	
32	4	31178	Washer	14 mm
33	4	30206	Set screw	M14 x 30
34	1	6302926	Adapter	

9520K-RCS, 9520OK-RCS

6397700
6397720
Internal ref. 6397710

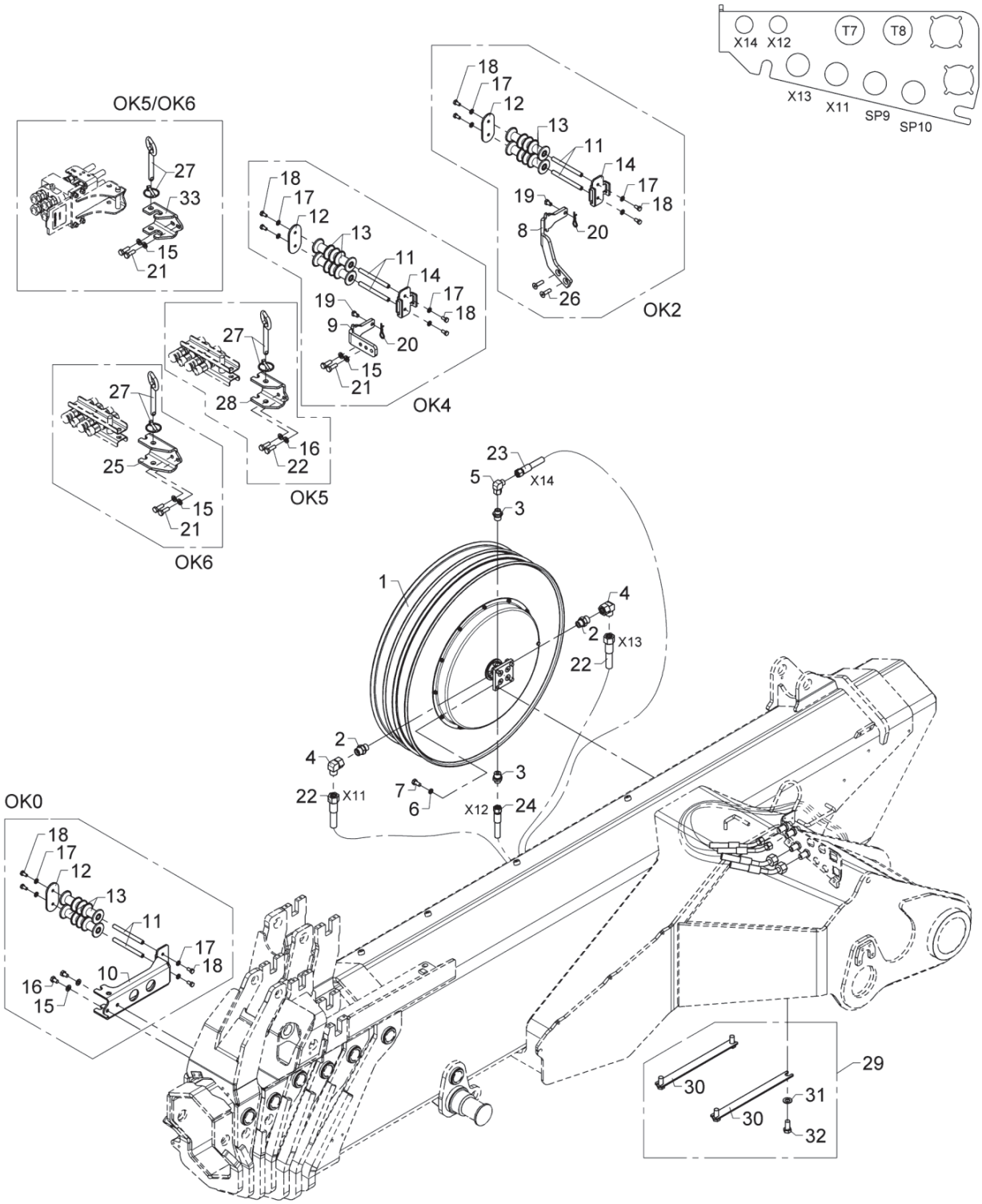

Hose reel, quick-release coupling, OK5/OK6

Pos	Qty.	Part no.	Description	Remarks
1	1	56315	Hose reel, double	1/2" x 15500 mm
2	2	26334	Connection	P-GEV 16 SR-WD
3	2	25108	Connection	GES 12 LR 1/2-WD
4	2	26340	Elbow connection	EWSD 16 S
5	1	25242	Elbow connection	EWSD 12 L
6	4	31156	Spring washer	10 mm
7	4	31517	Set screw, stainless	M10 x 20
8	1	6302626	Attachment	OK2
9	1	6302598	Attachment	OK4
10	1	6302899	Attachment, jib	
11	6	6398822	Pin	
12	3	6302882	End plate	
13	6	68123	Guide roller	
14	2	6302881	Plate	
15	8	31177	Washer	10 mm
16	2	30153	Set screw	M10 x 16
17	12	31147	Face washer, 8 mm	
18	12	30131	Set screw, stainless	M8 x 16
19	2	6302896	Lock pin	
20	2	33379	Spring	
21	6	30156	Set screw, stainless	M10 x 30
22	2	56201	Hose	1/2 x 1900 L/45
23	1	56694	Hose	3/8 x 2000 L/45° (12L)
24	1	56695	Hose	3/8 x 1800 L/45° (12L)
25	1	6302891	Adapter	OK6
26	2	30526	Countersunk screw	MK10 x 35
27	3	1261144	Lock pin with chain	
28	1	6302869	Adapter	OK5
29	1	6397750	Clamp, complete	
30	2	6300444	Hose bracket	
31	4	31178	Washer	14 mm
32	4	30206	Set screw	M14 x 30
33	1	6302926	Adapter	

9520K-RCS, 9520OK-RCS

Internal ref. 6390160

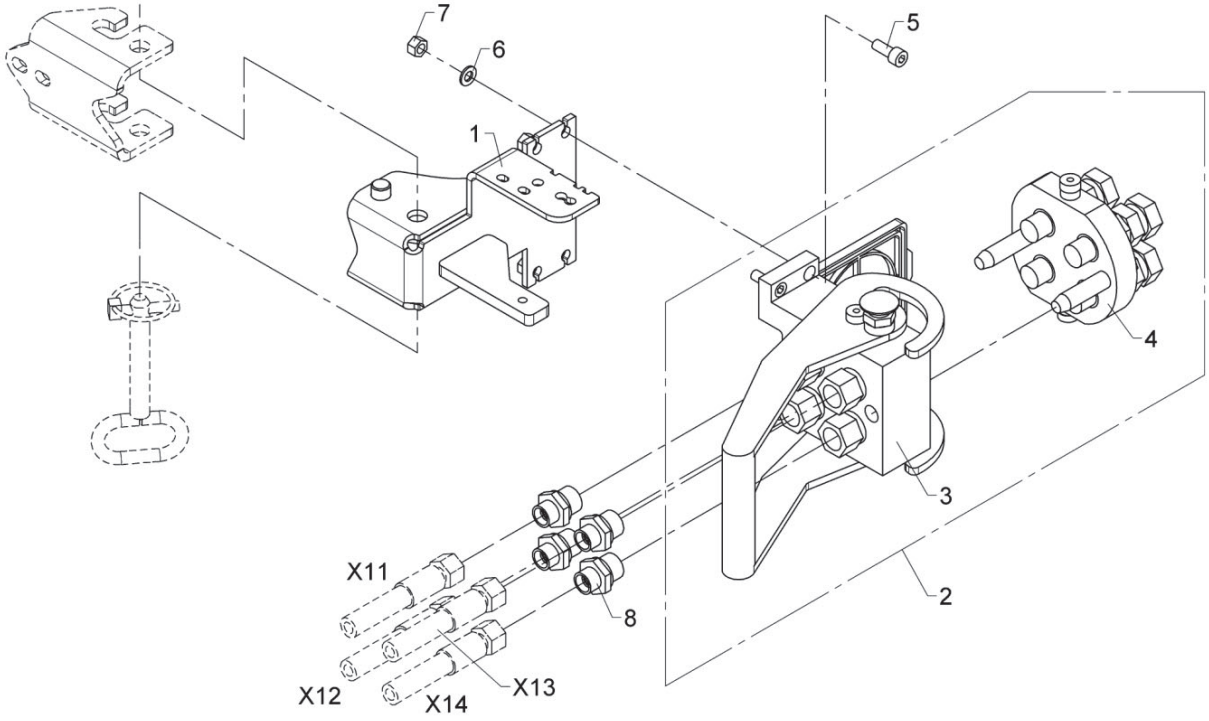

Multicouplings, hose reels

Pos	Qty.	Part no.	Description	Remarks
1	1	6397927	Bracket, welded	
2	1	58430	Multifaster coupling	1/2"
3	1	58432	Multifaster coupling	
4	1	58431	Multifaster coupling	
5	4	30438	Screw	MC8 x 20
6	4	31147	Face washer, 8 mm	
7	4	30886	Lock nut, stainless	M8
8	4	25108	Connection	GES 12 LR 1/2-WD

9520K-RCS, 9520OK-RCS

Internal ref. 6390170

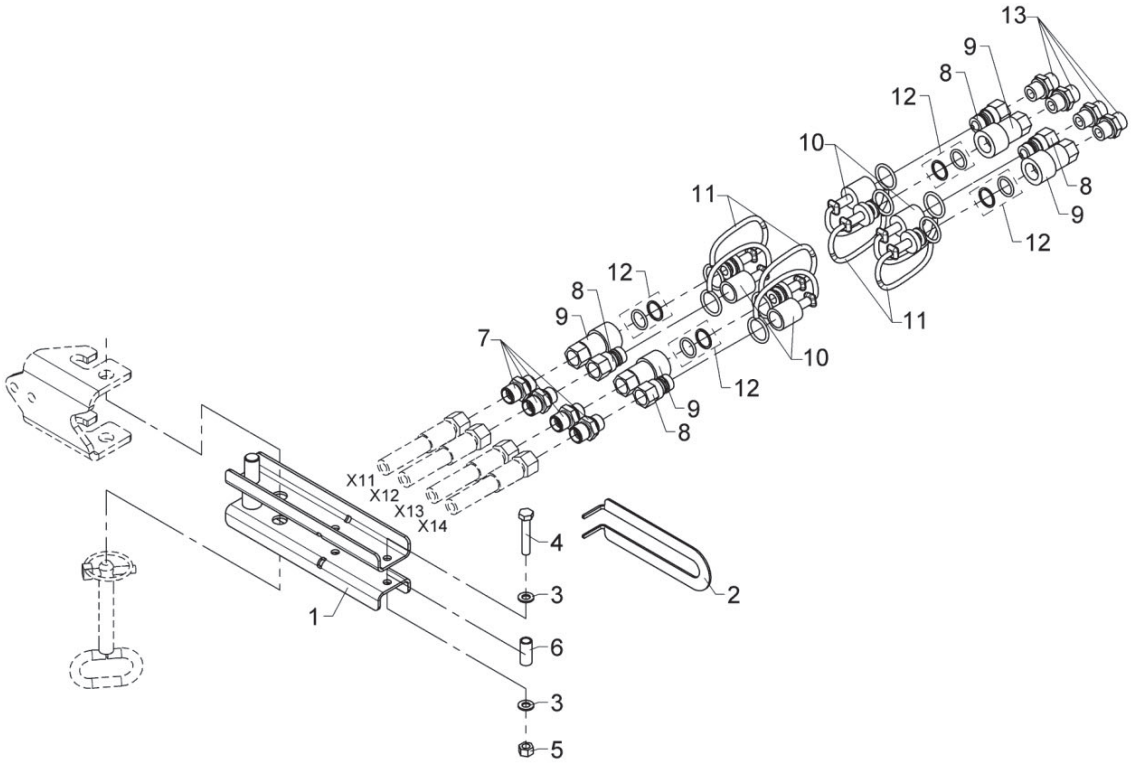

Quick-release coupling, hose reel, K

Pos	Qty.	Part no.	Description	Remarks
1	1	6390158	Clamp	
2	1	6302878	Bracket	
3	2	31147	Face washer, 8 mm	
4	1	30138	Steel bolt, stainless	M8 x 45
5	1	30886	Lock nut, stainless	M8
6	1	6302888	Pipe	
7	4	6661444	Socket	
8	4	60620	Quick-release coupling,M	3/8"
9	4	60619	Quick-release coupling,F	3/8"
10	4	60622	Dust cap, F	3/8"
11	4	60621	Dust cap, M	3/8"
12	4	60635	Seal kit	
13	4	25127	Connection	P-GEV 12 LR-WD

9520K-RCS, 9520OK-RCS

Internal ref. 6399790

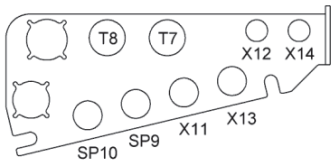

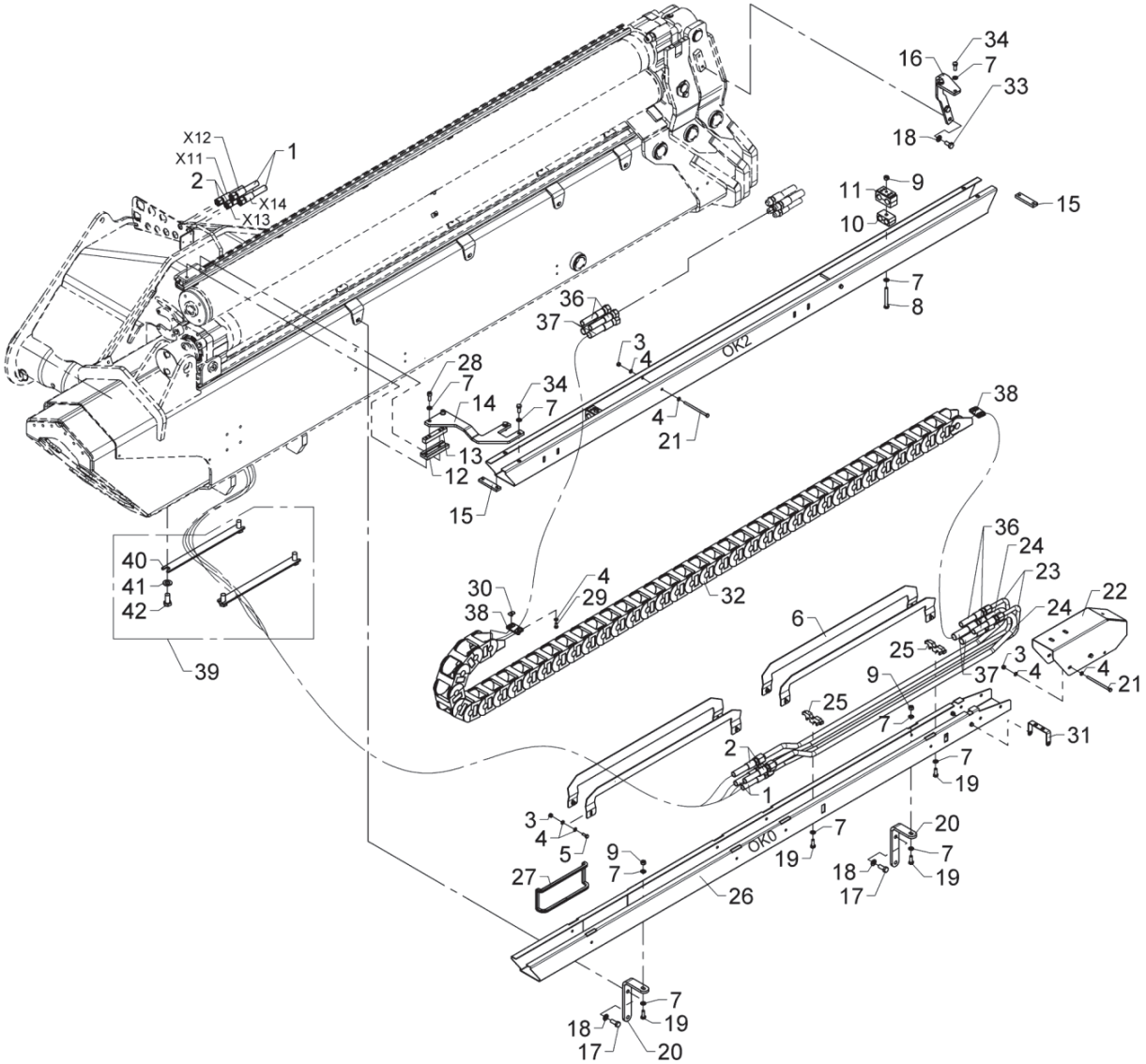

Hose guides (OK2)

Pos	Qty.	Part no.	Description	Remarks
1	2	56214	Hose	3/8x2300 L-S12/S JIC
2	2	56215	Hose	1/2x2300 L-S16/S JIC
3	14	30884	Lock nut, stainless	M6
4	32	32302	Face washer, stainless	6 mm
5	10	30112	Set screw, stainless	M6 x 16
6	4	6301253	Guide plate	
7	14	31147	Face washer, 8 mm	
8	2	30142	Steel bolt, stainless	M8 x 70
9	4	30886	Lock nut, stainless	M8
10	2	31833	Clamp	2 x 18 mm
11	2	31845	Clamp, rubber	
12	1	63686	Guide shoe	
13	1	6300338	Spacer	
14	1	6301258	Susp. K2-hose guide, rear	
15	2	6301239	Threaded disc 20x 8x80, 2xM8	
16	1	6301222	Susp. K2-hose guide, front	
17	2	30155	Set screw	M10 x 25
18	4	31177	Washer	10 mm
19	4	30133	Set screw, stainless	
20	2	6301243	Susp. K0-hose guide, K2-K4	
21	4	32112	Steel bolt stainless	M6 x 100
22	1	6301219	End protection plate	
23	2	6301242	Pipe JIC ø12 short exv.	
24	2	6301241	Pipe JIC ø16 short exv.	
25	2	6301218	Clamp	
26	1	6301213	Hose guide, K0	
27	1	46586	Rubber protection	
28	2	30438	Screw	MC8 x 20
29	4	30111	Set screw, stainless	
30	4	32122	Nut, stainless	M6
31	1	6301217	Chain fittings	
32	1	27893	Nylon drag chain	
33	2	31517	Set screw, stainless	M10 x 20
34	4	30132	Set screw, stainless	
35	1	6301214	Hose guide, K2	
36	2	56113	Hose	3/8 x 3750 S/O JIC
37	2	56112	Hose	1/2 x 3760 S/O JIC
38	2	64596	Washer for welding nut	
39	1	6397750	Clamp, complete	
40	2	6300444	Hose bracket	
41	4	31178	Washer	14 mm

9520K-RCS, 9520OK-RCS

Internal ref. 6399790

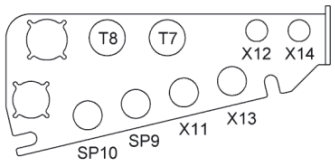

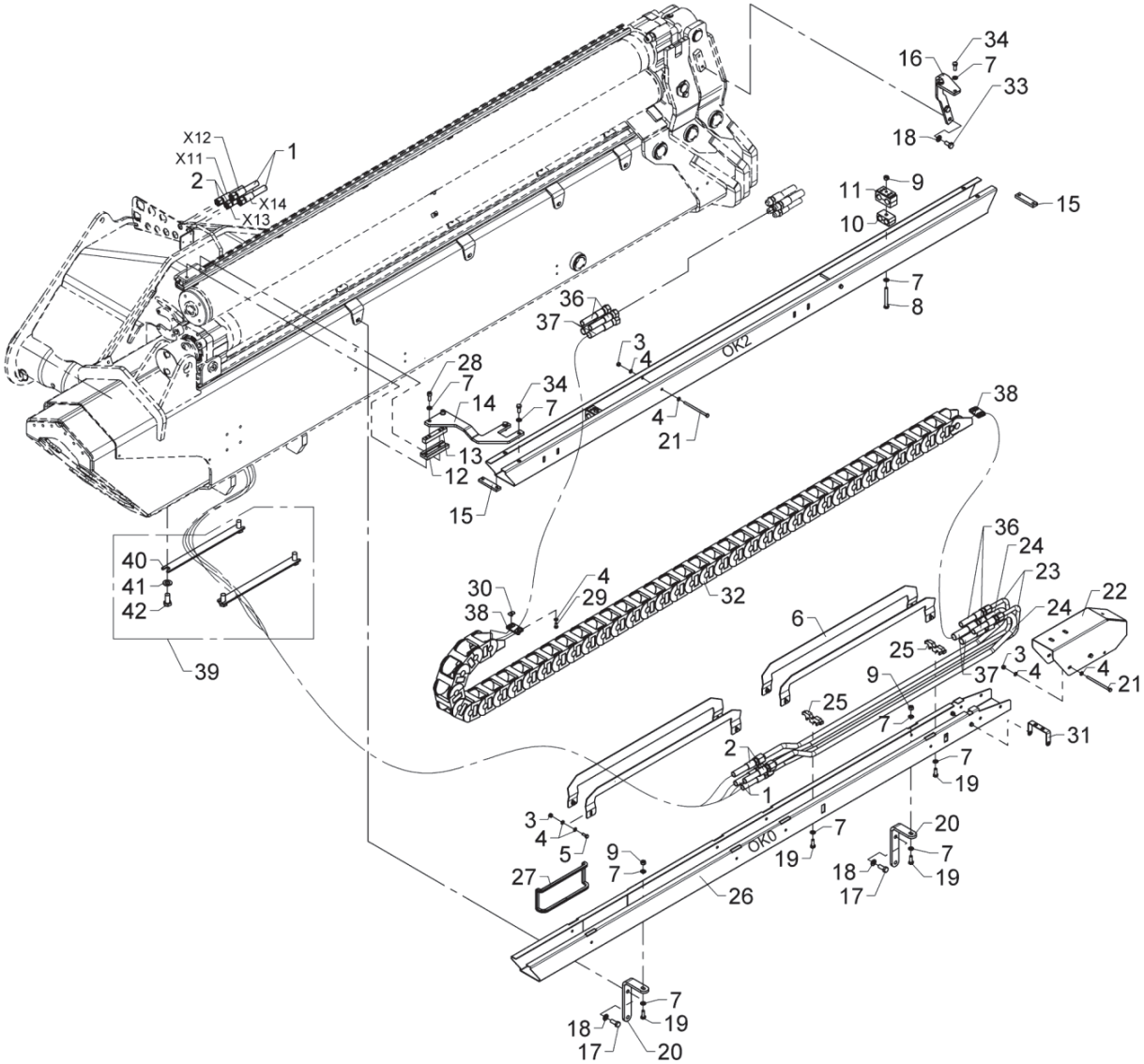

Hose guides (OK2)

Pos	Qty.	Part no.	Description	Remarks
42	4	30206	Set screw	M14 x 30

9520K-RCS, 9520OK-RCS

Internal ref. 6399800

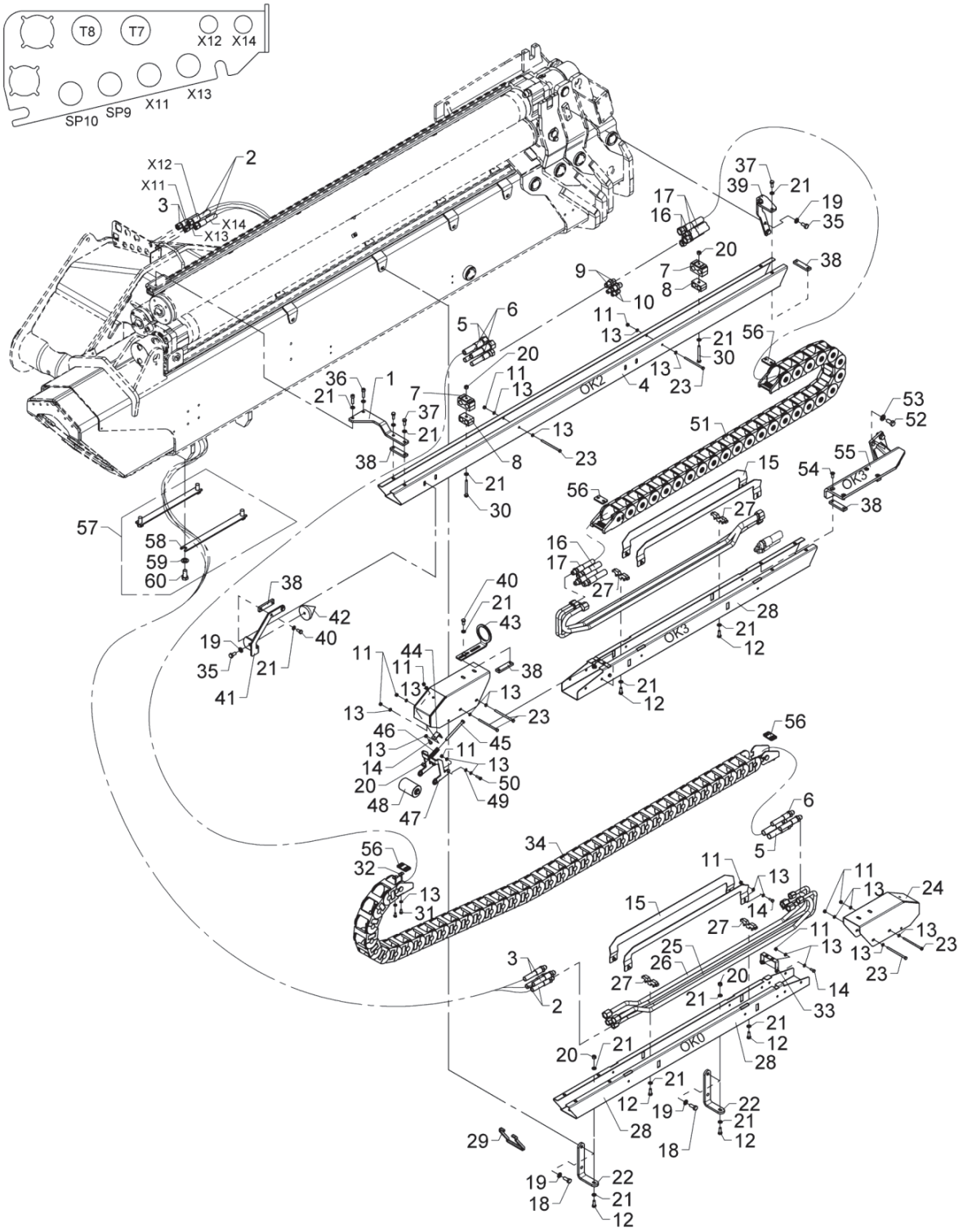

Hose guides (OK3)

Pos	Qty.	Part no.	Description	Remarks
1	1	6301223	Suspension K2 hose guide, rear	
2	2	56214	Hose	3/8x2300 L-S12/S JIC
3	2	56215	Hose	1/2x2300 L-S16/S JIC
4	1	6301214	Hose guide, K2	
5	2	56112	Hose	1/2 x 3760 S/O JIC
6	2	56113	Hose	3/8 x 3750 S/O JIC
7	2	31845	Clamp, rubber	
8	2	31833	Clamp	2 x 18 mm
9	2	26281	Union nut	HTXS14
10	2	25843	Double connection	HTXS12
11	19	30884	Lock nut, stainless	M6
12	6	30133	Set screw, stainless	
13	42	32302	Face washer, stainless	6 mm
14	11	30112	Set screw, stainless	M6 x 16
15	4	6301253	Guide plate	
16	2	56106	Hose	1/2 x 2900 S/O JIC
17	2	56107	Hose	3/8 x 2890 S/O JIC
18	2	30155	Set screw	M10 x 25
19	5	31177	Washer	10 mm
20	5	30886	Lock nut, stainless	M8
21	20	31147	Face washer, 8 mm	
22	2	6301243	Susp. K0-hose guide, K2-K4	
23	6	32112	Steel bolt stainless	M6 x 100
24	2	6301219	End protection plate	
25	4	6301242	Pipe JIC ø12 short exv.	
26	4	6301241	Pipe JIC ø16 short exv.	
27	4	6301218	Clamp	
28	2	6301215	Hose guide, K3+K5	
29	1	46586	Rubber protection	
30	2	30142	Steel bolt, stainless	M8 x 70
31	4	30111	Set screw, stainless	
32	4	32122	Nut, stainless	M6
33	2	6301217	Chain fittings	
34	1	27893	Nylon drag chain	
35	3	31517	Set screw, stainless	M10 x 20
36	2	30442	Screw	MC8 x 30
37	4	30132	Set screw, stainless	
38	6	6301239	Threaded disc 20x 8x80, 2xM8	
39	1	6301222	Susp. K2-hose guide, front	
40	4	30131	Set screw, stainless	M8 x 16
41	1	6301251	Guide, upper part	

9520K-RCS, 9520OK-RCS

Internal ref. 6399800

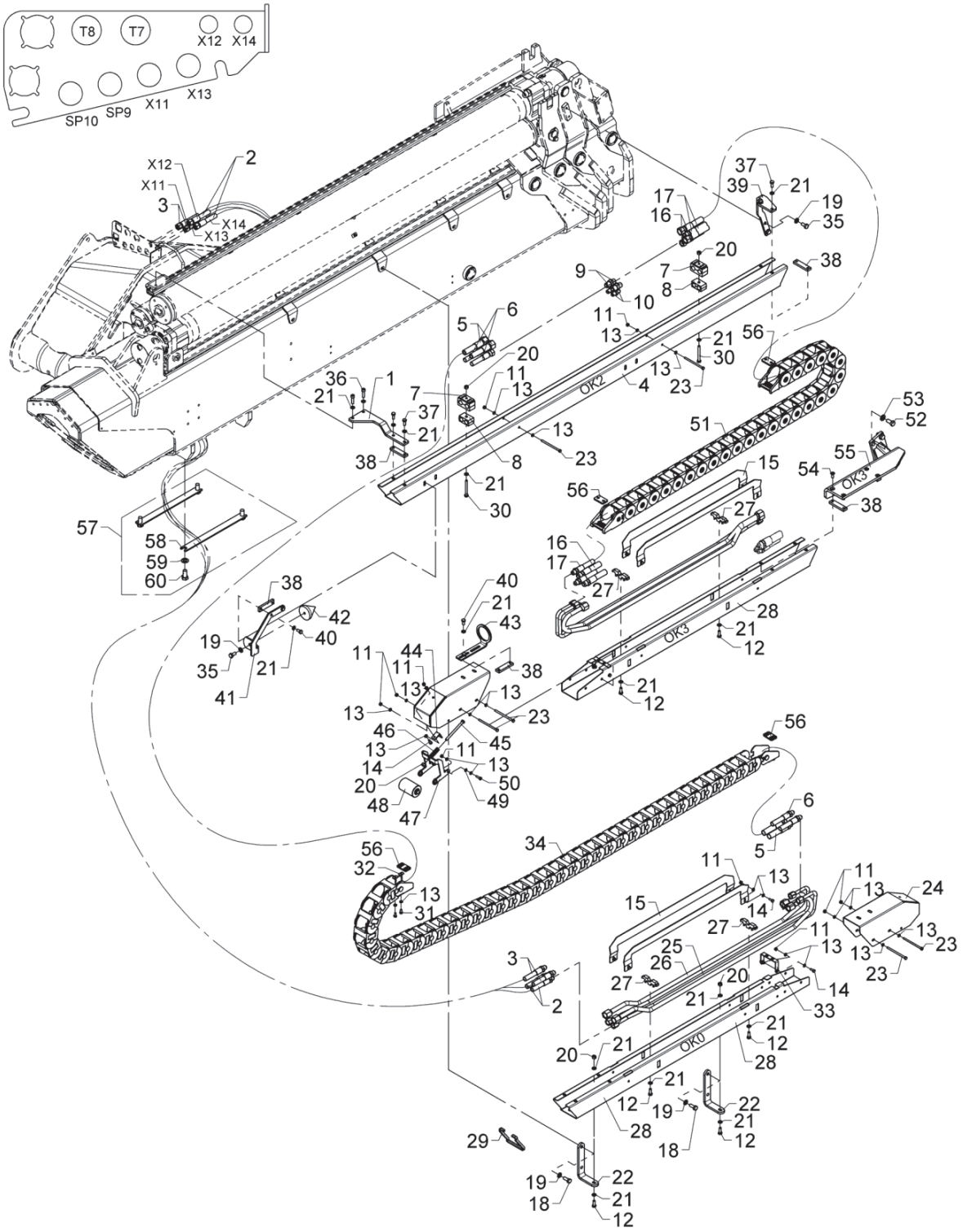

Hose guides (OK3)

Pos	Qty.	Part no.	Description	Remarks
42	1	63540	Cone	
43	1	6301252	Guide, lower part	
44	1	6232984	Elbow	
45	1	30145	Steel bolt, stainless	M8 x 100
46	1	33377	Compression spring	6884924
47	1	6301225	Roller bracket	
48	1	63537	Guide roller	
49	2	64286	Washer	6 mm
50	2	30113	Set screw, stainless	M6 x 20
51	1	27892	Nylon drag chain	
52	4	30176	Set screw	M12 x 25
53	4	31131	Washer	12 mm
54	4	30957	Countersunk screw	MK8 x 20
55	1	6301238	Bracket K4, sl	
56	4	64596	Washer for welding nut	
57	1	6397750	Clamp, complete	
58	2	6300444	Hose bracket	
59	4	31178	Washer	14 mm
60	4	30206	Set screw	M14 x 30

9520K-RCS, 9520OK-RCS

Internal ref. 6399810

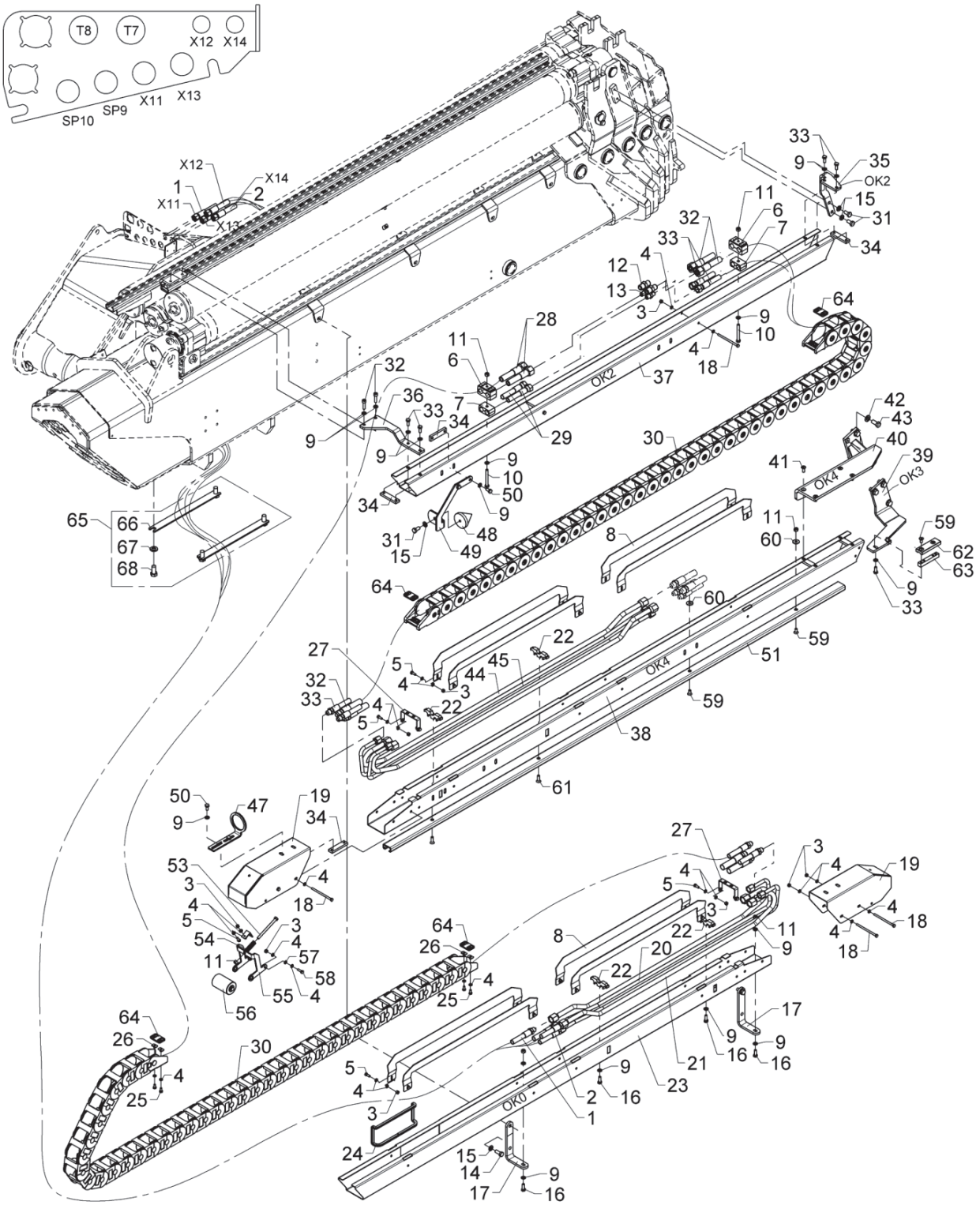

Hose guides (OK4)

Pos	Qty.	Part no.	Description	Remarks
1	2	56214	Hose	3/8x2300 L-S12/S JIC
2	2	56215	Hose	1/2x2300 L-S16/S JIC
3	25	30884	Lock nut, stainless	M6
4	54	32302	Face washer, stainless	6 mm
5	17	30112	Set screw, stainless	M6 x 16
6	2	31845	Clamp, rubber	
7	2	31833	Clamp	2 x 18 mm
8	8	6301253	Guide plate	
9	20	31147	Face washer, 8 mm	
10	2	30142	Steel bolt, stainless	M8 x 70
11	7	30886	Lock nut, stainless	M8
12	2	26281	Union nut	HTXS14
13	2	25843	Double connection	HTXS12
14	2	30155	Set screw	M10 x 25
15	5	31177	Washer	10 mm
16	4	30133	Set screw, stainless	
17	2	6301243	Susp. K0-hose guide, K2-K4	
18	6	32112	Steel bolt stainless	M6 x 100
19	2	6301219	End protection plate	
20	2	6301242	Pipe JIC ø12 short exv.	
21	2	6301241	Pipe JIC ø16 short exv.	
22	4	6301218	Clamp	
23	1	6301213	Hose guide, K0	
24	1	46586	Rubber protection	
25	4	30111	Set screw, stainless	
26	4	32122	Nut, stainless	M6
27	2	6301217	Chain fittings	
28	2	56112	Hose	1/2 x 3760 S/O JIC
29	2	56113	Hose	3/8 x 3750 S/O JIC
30	2	27893	Nylon drag chain	
31	3	31517	Set screw, stainless	M10 x 20
32	2	30442	Screw	MC8 x 30
33	6	30132	Set screw, stainless	
34	6	6301239	Threaded disc 20x 8x80, 2xM8	
35	1	6301222	Susp. K2-hose guide, front	
36	1	6301223	Suspension K2 hose guide, rear	
37	1	6301214	Hose guide, K2	
38	1	6301216	Hose guide, K4+K6	
39	1	6301233	Bracket for slide block - K3	
40	1	6301238	Bracket K4, sl	
41	4	30957	Countersunk screw	MK8 x 20

9520K-RCS, 9520OK-RCS

Internal ref. 6399810

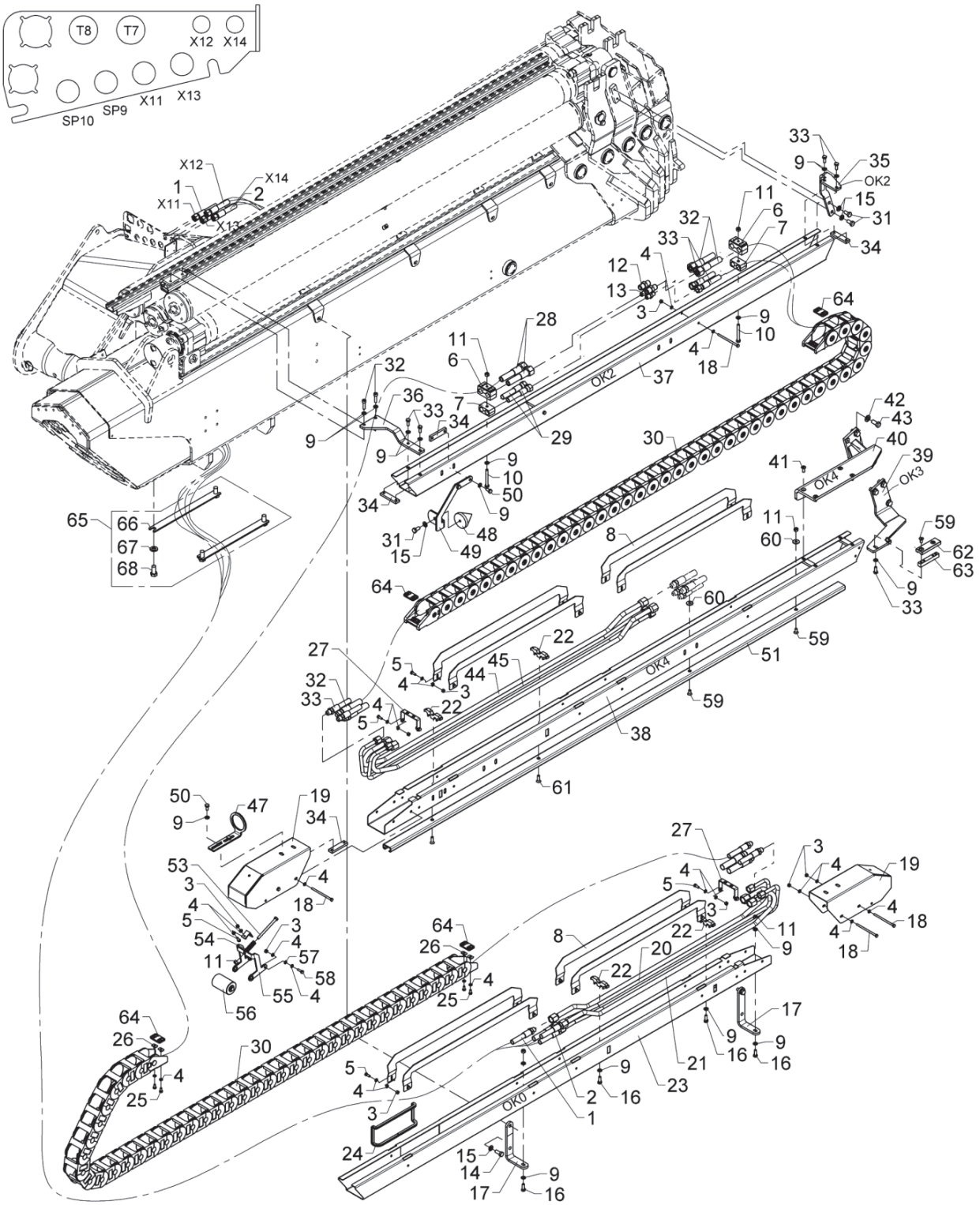

Hose guides (OK4)

Pos	Qty.	Part no.	Description	Remarks
42	7	31131	Washer	12 mm
43	7	30176	Set screw	M12 x 25
44	2	6301211	Pipe JIC ø16 long exv.	
45	2	6301212	Pipe JIC ø12 long exv	
46	1	27893	Nylon drag chain	
47	1	6301252	Guide, lower part	
48	1	63540	Cone	
49	1	6301251	Guide, upper part	
50	4	30131	Set screw, stainless	M8 x 16
51	1	6301224	C-profile 20x40, L=2350	
52	1	6232984	Elbow	
53	1	30145	Steel bolt, stainless	M8 x 100
54	1	33377	Compression spring	6884924
55	1	6301225	Roller bracket	
56	1	63537	Guide roller	
57	2	64286	Washer	6 mm
58	2	30113	Set screw, stainless	M6 x 20
59	4	30543	Countersunk screw	MK8 x 16
60	2	31136	Washer, stainless	8 mm
61	2	31964	Counter sunk screw, stainless	MK8 x 25
62	1	63686	Guide shoe	
63	1	6300338	Spacer	
64	4	64596	Washer for welding nut	
65	1	6397750	Clamp, complete	
66	2	6300444	Hose bracket	
67	4	31178	Washer	14 mm
68	4	30206	Set screw	M14 x 30

9520K-RCS, 9520OK-RCS

Internal ref. 6400820

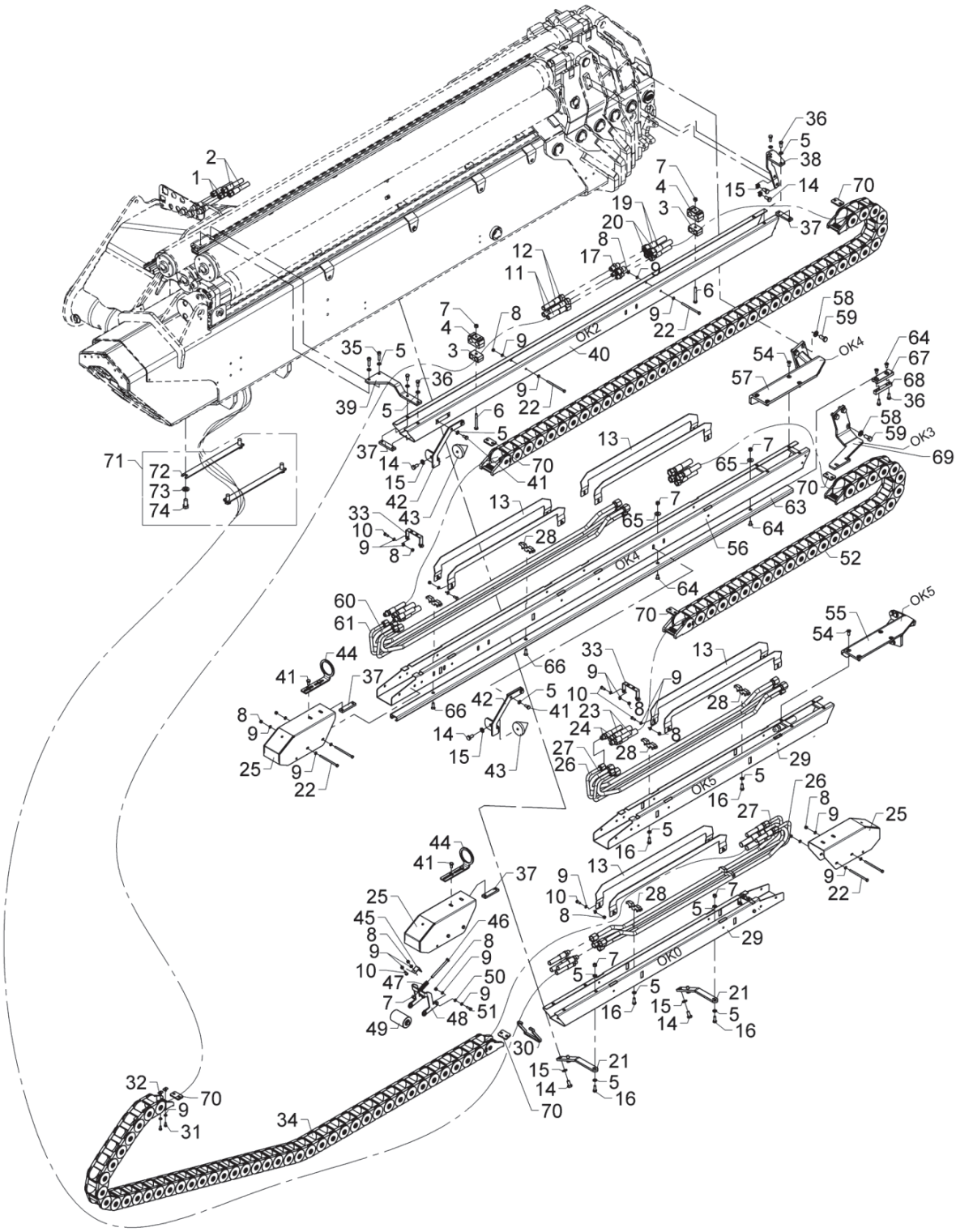

Hose guides (OK5)

Pos	Qty.	Part no.	Description	Remarks
1	2	56214	Hose	3/8x2300 L-S12/S JIC
2	2	56215	Hose	1/2x2300 L-S16/S JIC
3	2	31833	Clamp	2 x 18 mm
4	2	31845	Clamp, rubber	
5	26	31147	Face washer, 8 mm	
6	2	30142	Steel bolt, stainless	M8 x 70
7	7	30886	Lock nut, stainless	M8
8	27	30884	Lock nut, stainless	M6
9	58	32302	Face washer, stainless	6 mm
10	17	30112	Set screw, stainless	M6 x 16
11	2	56114	Hose	1/2 x 4095 S/O JIC
12	2	56115	Hose	3/8 x 4085 S/O JIC
13	8	6301253	Guide plate	
14	8	31517	Set screw, stainless	M10 x 20
15	12	31177	Washer	10 mm
16	6	30133	Set screw, stainless	
17	2	26281	Union nut	HTXS14
18	2	25843	Double connection	HTXS12
19	2	56112	Hose	1/2 x 3760 S/O JIC
20	2	56113	Hose	3/8 x 3750 S/O JIC
21	2	6301254	Susp. K0 hose guide, THOR	
22	8	32112	Steel bolt stainless	M6 x 100
23	2	56106	Hose	1/2 x 2900 S/O JIC
24	2	56107	Hose	3/8 x 2890 S/O JIC
25	3	6301219	End protection plate	
26	4	6301242	Pipe JIC ø12 short exv.	
27	4	6301241	Pipe JIC ø16 short exv.	
28	6	6301218	Clamp	
29	2	6301215	Hose guide, K3+K5	
30	1	46586	Rubber protection	
31	4	30111	Set screw, stainless	
32	4	32122	Nut, stainless	M6
33	3	6301217	Chain fittings	
34	1	28587	Nylon drag chain (43 elts)	
35	2	30442	Screw	MC8 x 30
36	6	30132	Set screw, stainless	
37	10	6301239	Threaded disc 20x 8x80, 2xM8	
38	1	6301222	Susp. K2-hose guide, front	
39	1	6301223	Suspension K2 hose guide, rear	
40	1	6301214	Hose guide, K2	
41	8	30131	Set screw, stainless	M8 x 16

9520K-RCS, 9520OK-RCS

Internal ref. 6400820

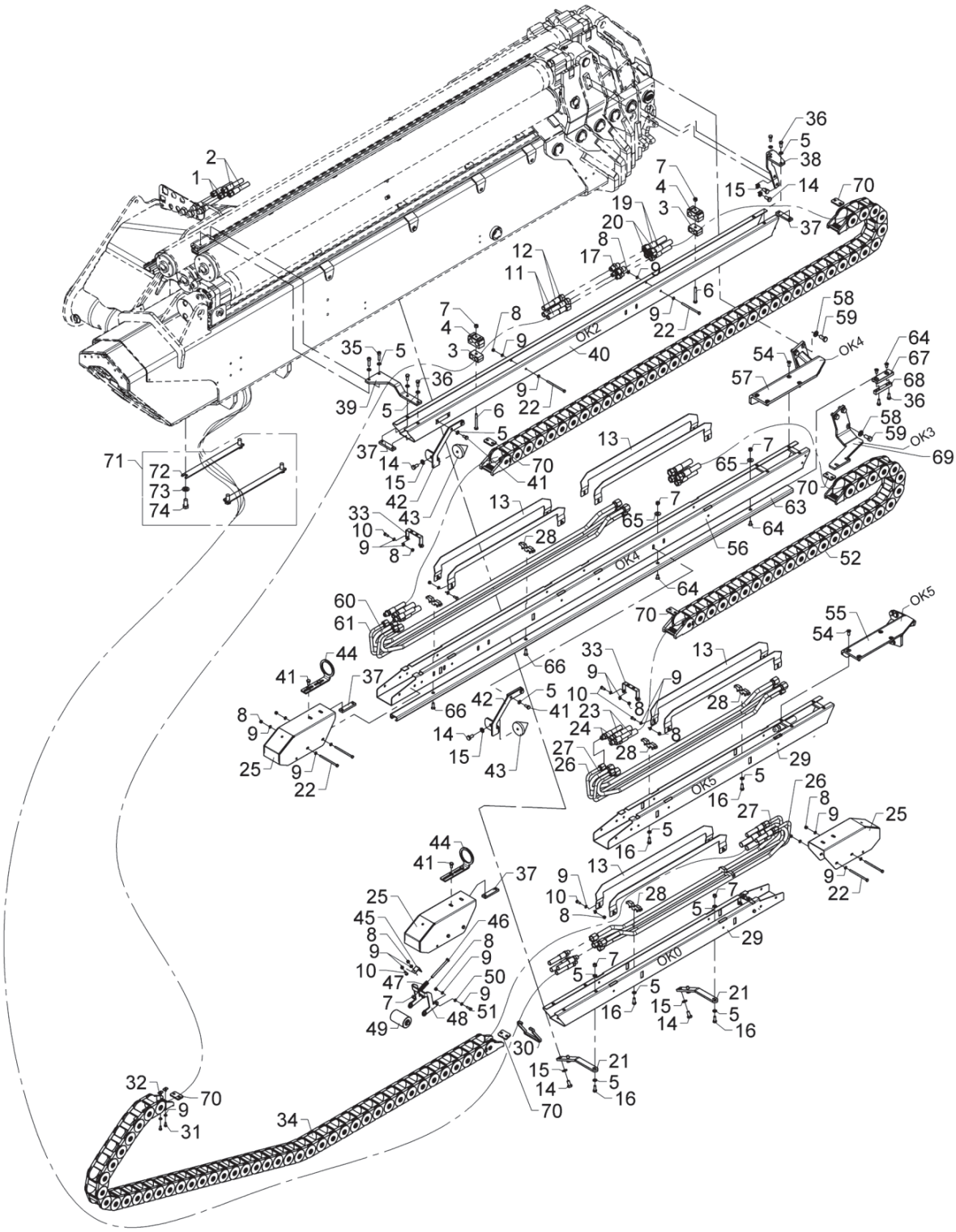

Hose guides (OK5)

Pos	Qty.	Part no.	Description	Remarks
42	2	6301251	Guide, upper part	
43	2	63540	Cone	
44	2	6301252	Guide, lower part	
45	1	6232984	Elbow	
46	1	30145	Steel bolt, stainless	M8 x 100
47	1	33377	Compression spring	6884924
48	1	6301225	Roller bracket	
49	1	63537	Guide roller	
50	2	64286	Washer	6 mm
51	2	30113	Set screw, stainless	M6 x 20
52	1	27892	Nylon drag chain	
53	4	30155	Set screw	M10 x 25
54	8	30957	Countersunk screw	MK8 x 20
55	1	6301255	Bracket K5	
56	1	6301216	Hose guide, K4+K6	
57	1	6301238	Bracket K4, sl	
58	7	31131	Washer	12 mm
59	7	30176	Set screw	M12 x 25
60	2	6301211	Pipe JIC ø16 long exv.	
61	2	6301212	Pipe JIC ø12 long exv	
62	1	27893	Nylon drag chain	
63	1	6301224	C-profile 20x40, L=2350	
64	4	30543	Countersunk screw	MK8 x 16
65	2	31136	Washer, stainless	8 mm
66	2	31964	Counter sunk screw, stainless	MK8 x 25
67	1	63686	Guide shoe	
68	1	6300338	Spacer	
69	1	6301233	Bracket for slide block - K3	
70	6	64596	Washer for welding nut	
71	1	6397750	Clamp, complete	
72	2	6300444	Hose bracket	
73	4	31178	Washer	14 mm
74	4	30206	Set screw	M14 x 30

9520K-RCS, 9520OK-RCS

Internal ref. 6400830

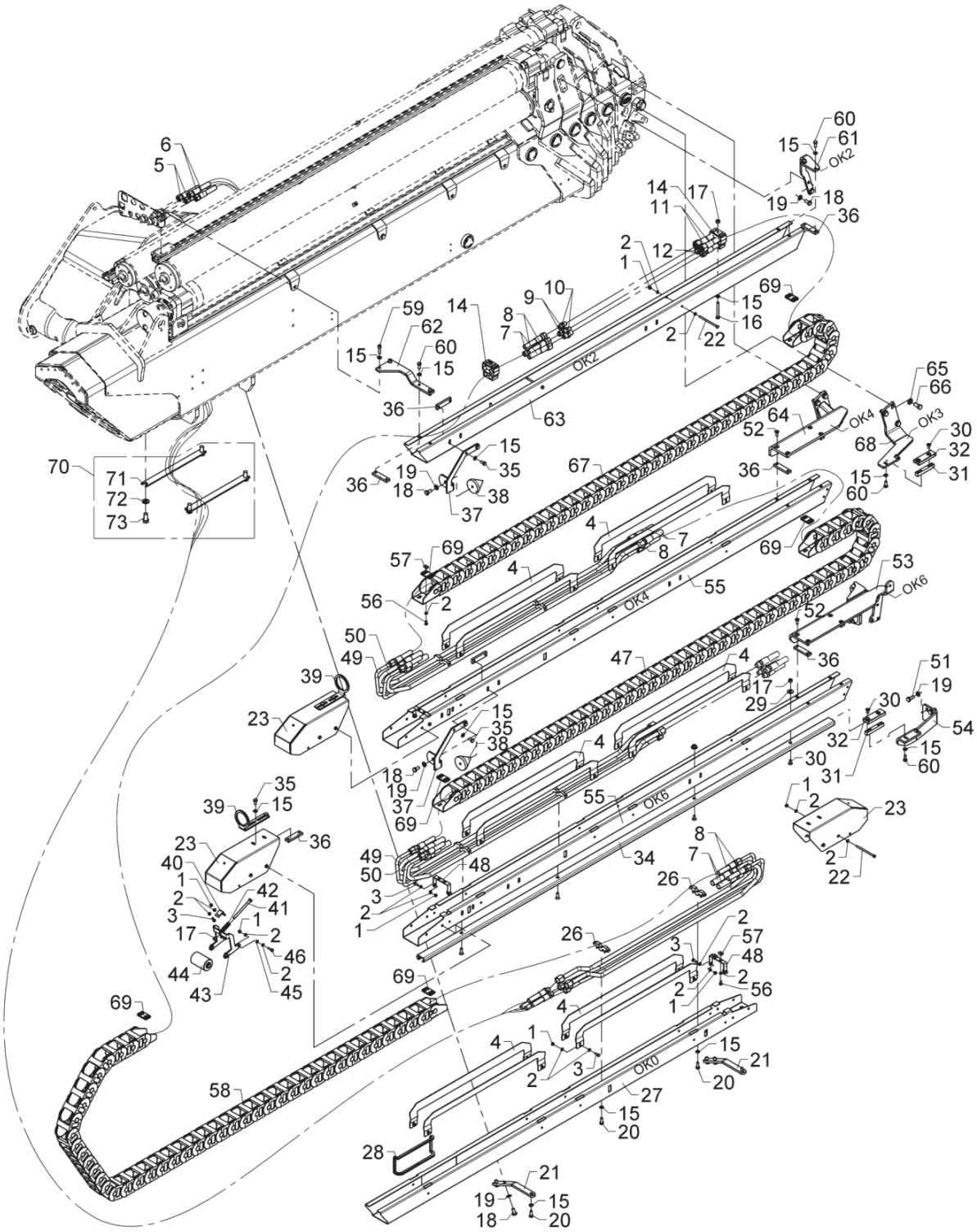

Hose guides (OK6)

Pos	Qty.	Part no.	Description	Remarks
1	33	30884	Lock nut, stainless	M6
2	70	32302	Face washer, stainless	6 mm
3	23	30112	Set screw, stainless	M6 x 16
4	12	6301253	Guide plate	
5	2	56214	Hose	3/8x2300 L-S12/S JIC
6	2	56215	Hose	1/2x2300 L-S16/S JIC
7	2	56114	Hose	1/2 x 4095 S/O JIC
8	2	56115	Hose	3/8 x 4085 S/O JIC
9	2	26281	Union nut	HTXS14
10	2	25843	Double connection	HTXS12
11	2	56112	Hose	1/2 x 3760 S/O JIC
12	2	56113	Hose	3/8 x 3750 S/O JIC
13	2	31833	Clamp	2 x 18 mm
14	2	31845	Clamp, rubber	
15	26	31147	Face washer, 8 mm	
16	2	30142	Steel bolt, stainless	M8 x 70
17	9	30886	Lock nut, stainless	M8
18	8	31517	Set screw, stainless	M10 x 20
19	12	31177	Washer	10 mm
20	4	30133	Set screw, stainless	
21	2	6301254	Susp. K0 hose guide, THOR	
22	8	32112	Steel bolt stainless	M6 x 100
23	3	6301219	End protection plate	
24	2	6301242	Pipe JIC ø12 short exv.	
25	2	6301241	Pipe JIC ø16 short exv.	
26	6	6301218	Clamp	
27	1	6301213	Hose guide, K0	
28	1	46586	Rubber protection	
29	4	31136	Washer, stainless	8 mm
30	8	30543	Countersunk screw	MK8 x 16
31	2	6300338	Spacer	
32	2	63686	Guide shoe	
33	4	31964	Counter sunk screw, stainless	MK8 x 25
34	2	6301224	C-profile 20x40, L=2350	
35	8	30131	Set screw, stainless	M8 x 16
36	10	6301239	Threaded disc 20x 8x80, 2xM8	
37	2	6301251	Guide, upper part	
38	2	63540	Cone	
39	2	6301252	Guide, lower part	
40	1	6232984	Elbow	
41	1	30145	Steel bolt, stainless	M8 x 100

9520K-RCS, 9520OK-RCS

Internal ref. 6400830

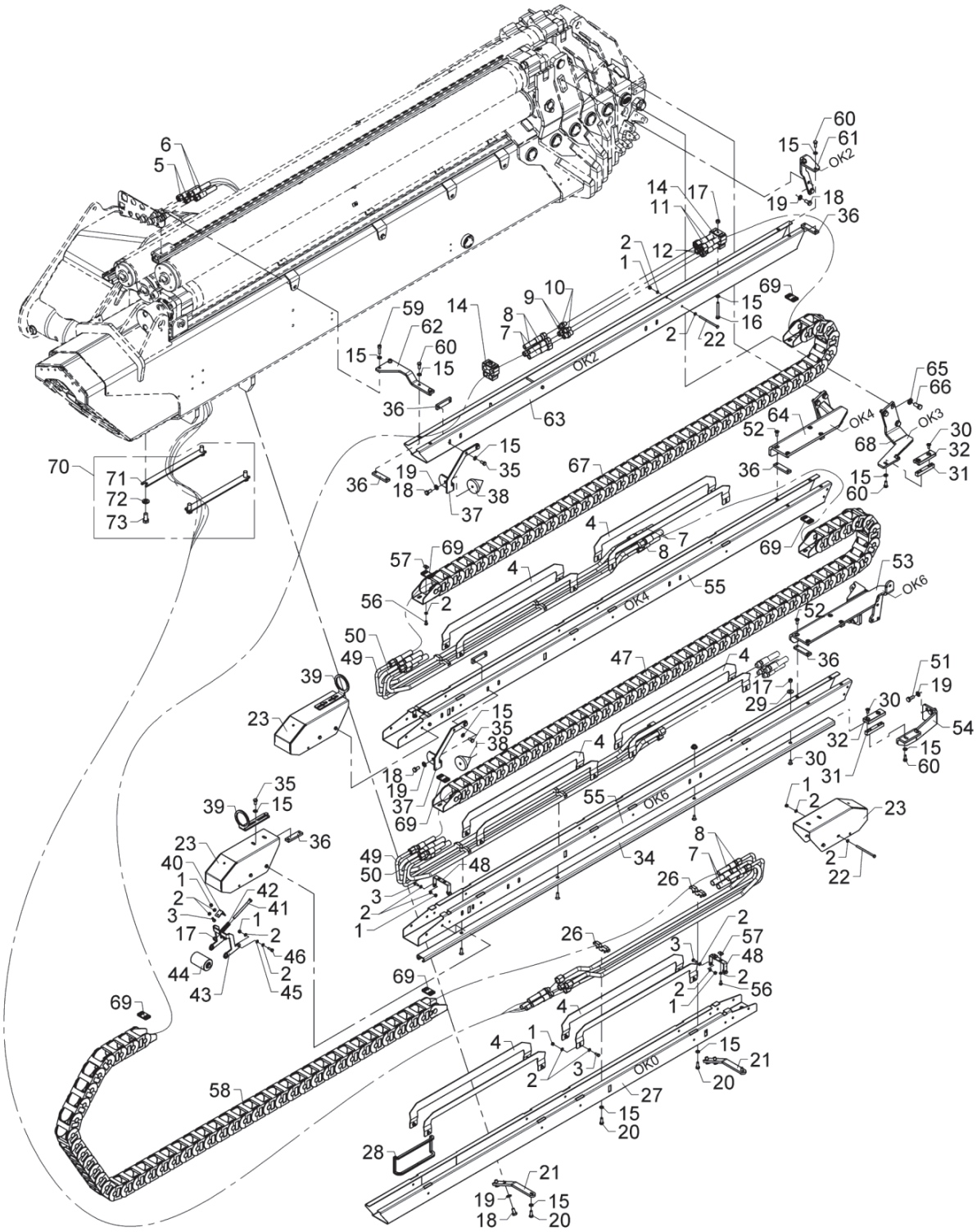

Hose guides (OK6)

Pos	Qty.	Part no.	Description	Remarks
42	1	33377	Compression spring	6884924
43	1	6301225	Roller bracket	
44	1	63537	Guide roller	
45	2	64286	Washer	6 mm
46	2	30113	Set screw, stainless	M6 x 20
47	1	28587	Nylon drag chain (43 elts)	
48	3	6301217	Chain fittings	
49	4	6301212	Pipe JIC ø12 long exv	
50	4	6301211	Pipe JIC ø16 long exv.	
51	4	30155	Set screw	M10 x 25
52	8	30957	Countersunk screw	MK8 x 20
53	1	6303261	Bracket, sl.	
54	1	6303265	Bracket for slide block	
55	2	6301216	Hose guide, K4+K6	
56	4	30111	Set screw, stainless	
57	4	32122	Nut, stainless	M6
58	1	28587	Nylon drag chain (43 elts)	
59	2	30442	Screw	MC8 x 30
60	8	30132	Set screw, stainless	
61	1	6301222	Susp. K2-hose guide, front	
62	1	6301223	Suspension K2 hose guide, rear	
63	1	6301214	Hose guide, K2	
64	1	6301238	Bracket K4, sl	
65	7	31131	Washer	12 mm
66	7	30176	Set screw	M12 x 25
67	1	27893	Nylon drag chain	
68	1	6301233	Bracket for slide block - K3	
69	6	64596	Washer for welding nut	
70	1	6397750	Clamp, complete	
71	2	6300444	Hose bracket	
72	4	31178	Washer	14 mm
73	4	30206	Set screw	M14 x 30

9520K-RCS, 9520OK-RCS

Internal ref. 6303770

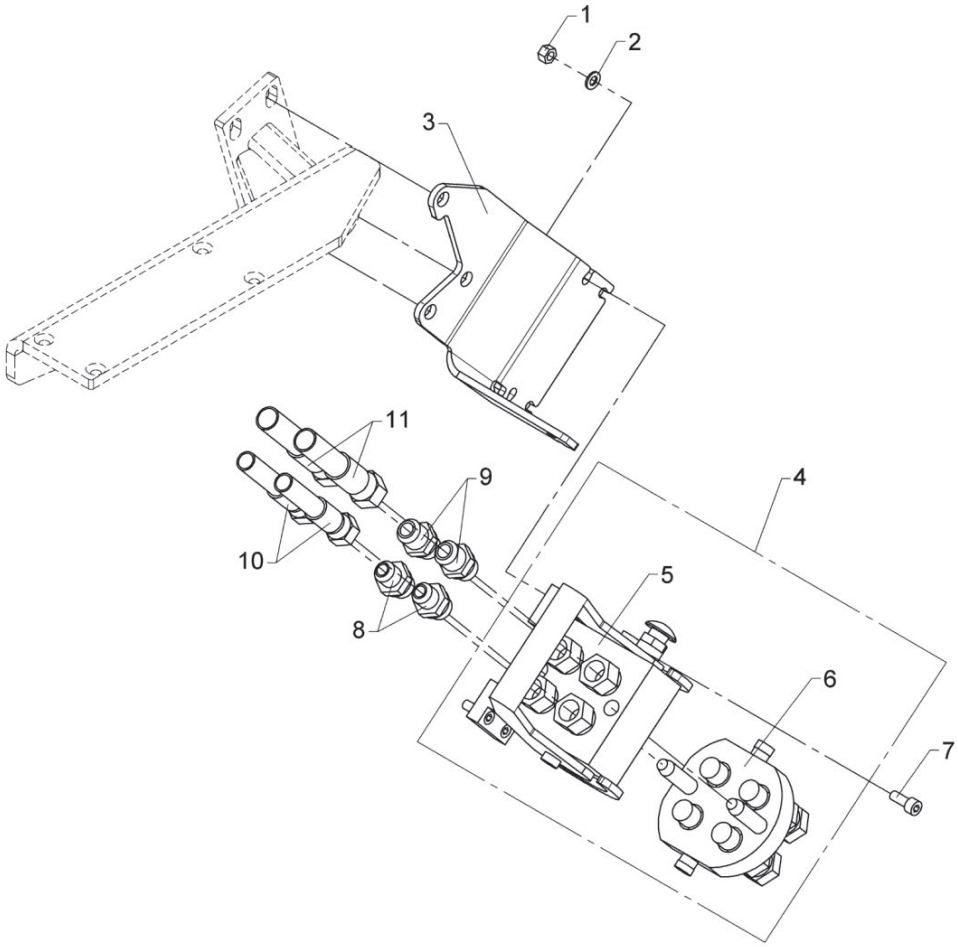

Multi-coupling, hose guides (OK4)

Pos	Qty.	Part no.	Description	Remarks
1	4	30886	Lock nut, stainless	M8
2	4	31147	Face washer, 8 mm	
3	1	6301271	Bracket	
4	1	58430	Multifaster coupling	1/2"
5	1	58432	Multifaster coupling	
6	1	58431	Multifaster coupling	
7	4	30438	Screw	MC8 x 20
8	2	25832	Straight connection	F40XS12 - 1/2
9	2	25833	Straight connection	F40XS14/16 - 1/2
10	2	56263	Hose	3/8" x 1260 S/O JIC
11	2	62891	Hose	1/2" x 1300 L/L JIC

9520K-RCS, 9520OK-RCS

Internal ref. 6303780

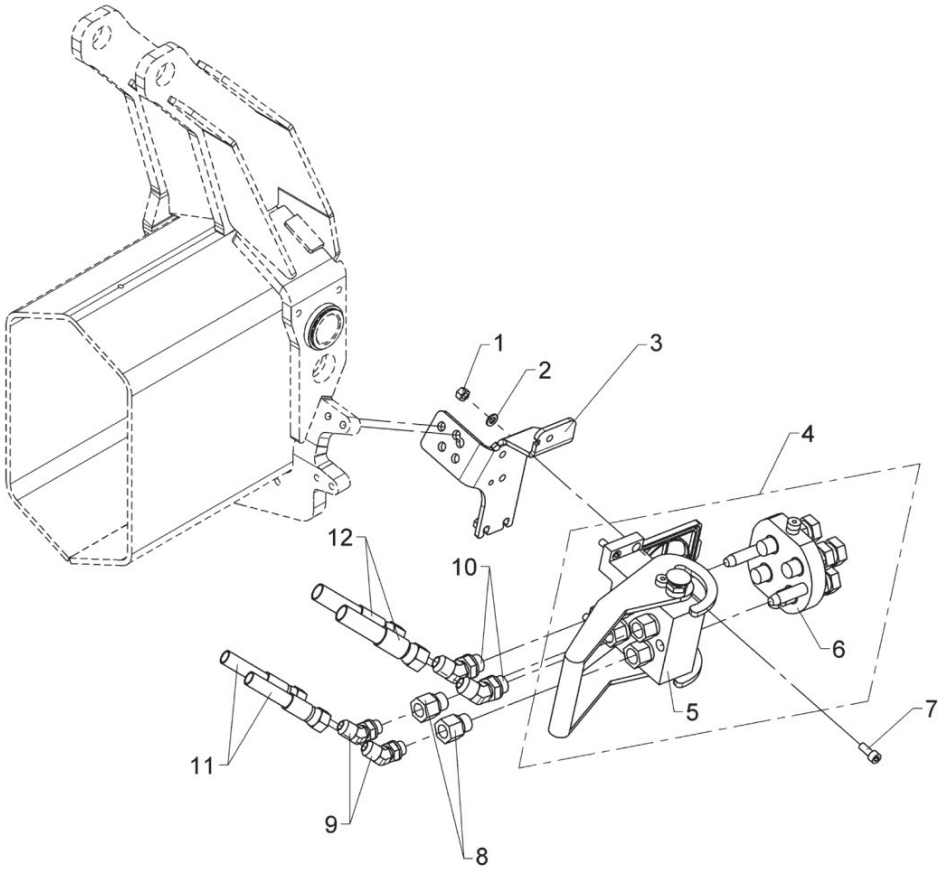

Multi-coupling, hose guides (OK5)

Pos	Qty.	Part no.	Description	Remarks
1	4	30886	Lock nut, stainless	M8
2	4	31147	Face washer, 8 mm	
3	1	6301273	Bracket	
4	1	58430	Multifaster coupling	1/2"
5	1	58432	Multifaster coupling	
6	1	58431	Multifaster coupling	
7	4	30438	Screw	MC8 x 20
8	2	25243	Reducing connection	RED-R 1/2-WD/R 3/8
9	2	26695	Elbow connection 45°	V40XS12 - 3/8
10	2	25723	Elbow connection 45°	V40XS14-16 - 1/2
11	2	56121	Hose	1/2" x 405 S/O JIC
12	2	56122	Hose	3/8" x 380 S/O JIC

9520K-RCS, 9520OK-RCS

Internal ref. 6303790

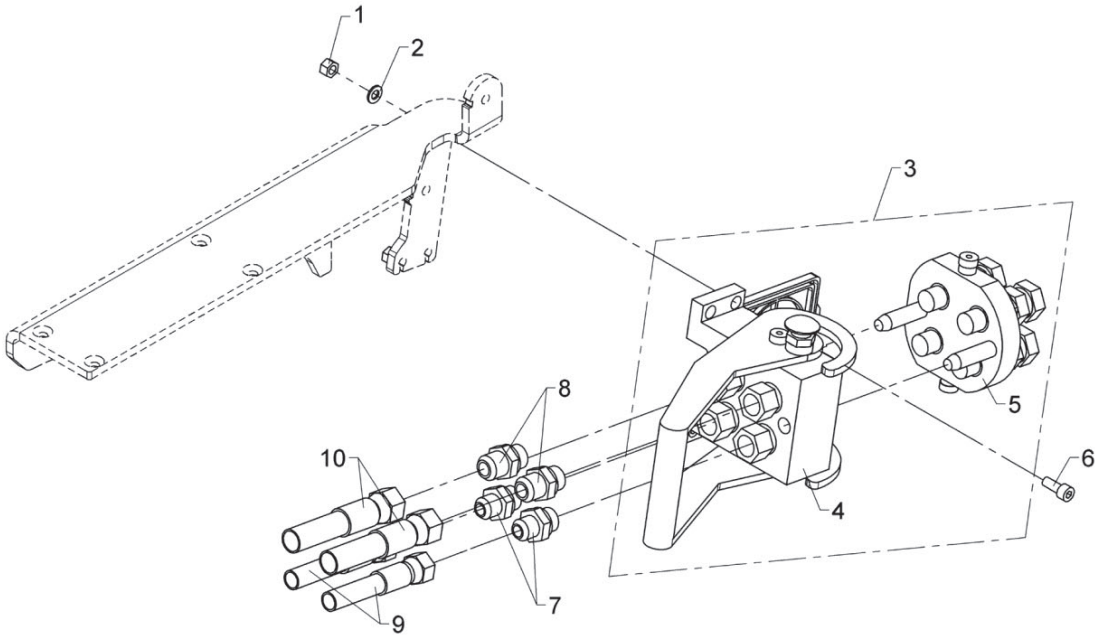

Multi-coupling, hose guides (OK6)

Pos	Qty.	Part no.	Description	Remarks
1	4	30886	Lock nut, stainless	M8
2	4	31147	Face washer, 8 mm	
3	1	58430	Multifaster coupling	1/2"
4	1	58432	Multifaster coupling	
5	1	58431	Multifaster coupling	
6	4	30438	Screw	MC8 x 20
7	2	25832	Straight connection	F40XS12 - 1/2
8	2	25833	Straight connection	F40XS14/16 - 1/2
9	2	56263	Hose	3/8" x 1260 S/O JIC
10	2	56264	Hose	1/2" x 1260 S/O JIC

9520K-RCS, 9520OK-RCS

Internal ref. 6397770

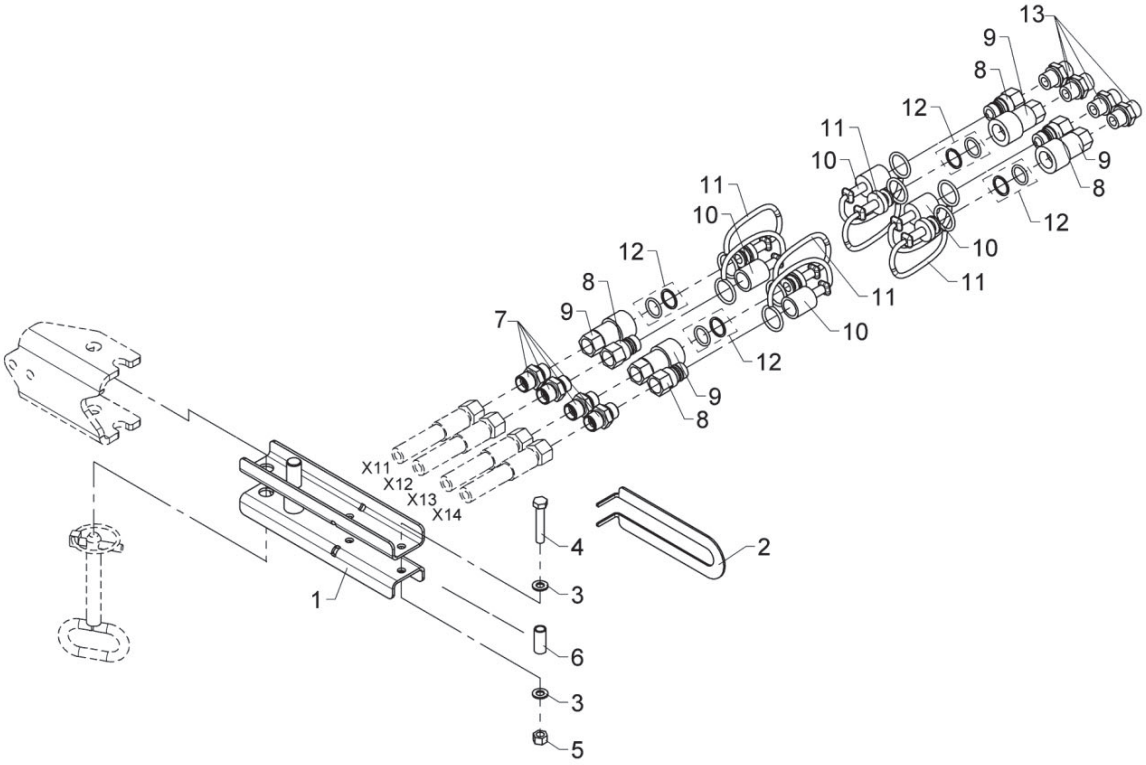

Quick-release coupling, hose reels (OK)

Pos	Qty.	Part no.	Description	Remarks
1	1	6302897	Clamp	
2	1	6302878	Bracket	
3	2	31147	Face washer, 8 mm	
4	1	30138	Steel bolt, stainless	M8 x 45
5	1	30886	Lock nut, stainless	M8
6	1	6302888	Pipe	
7	4	6661444	Socket	
8	4	60620	Quick-release coupling,M	3/8"
9	4	60619	Quick-release coupling,F	3/8"
10	4	60622	Dust cap, F	3/8"
11	4	60621	Dust cap, M	3/8"
12	4	60635	Seal kit	
13	4	25127	Connection	P-GEV 12 LR-WD

9520K-RCS, 9520OK-RCS

6303840
Internal ref. 6303830

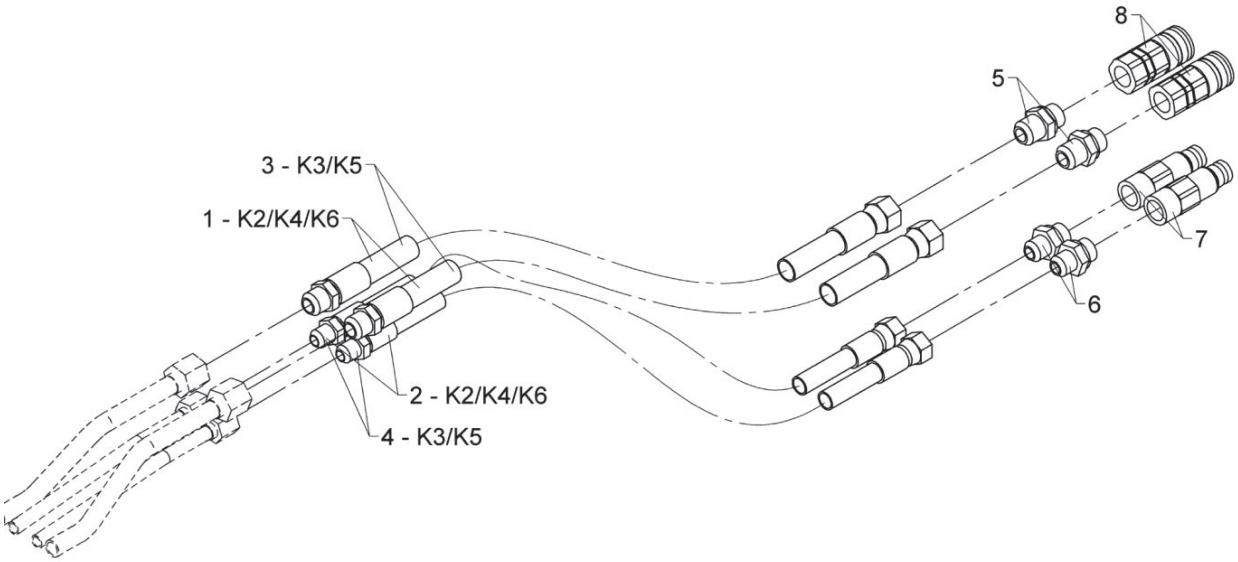

Quick-release couplings, guides

Pos	Qty.	Part no.	Description	Remarks
1	1	56123	Hose	1/2 x 1150 S/O JIC
2	1	56124	Hose	3/8 x 1150 S/O JIC
3	1	56121	Hose	1/2 x 405 S/O JIC
4	1	56122	Hose	3/8 x 380 S/O JIC
5	2	25833	Straight connection	F40XS14/16 - 1/2
6	2	25832	Straight connection	F40XS12 - 1/2
7	2	58447	Coupling	1/2"
8	2	58448	Coupling	1/2"

9520K-RCS, 9520OK-RCS

Internal ref. 6397870

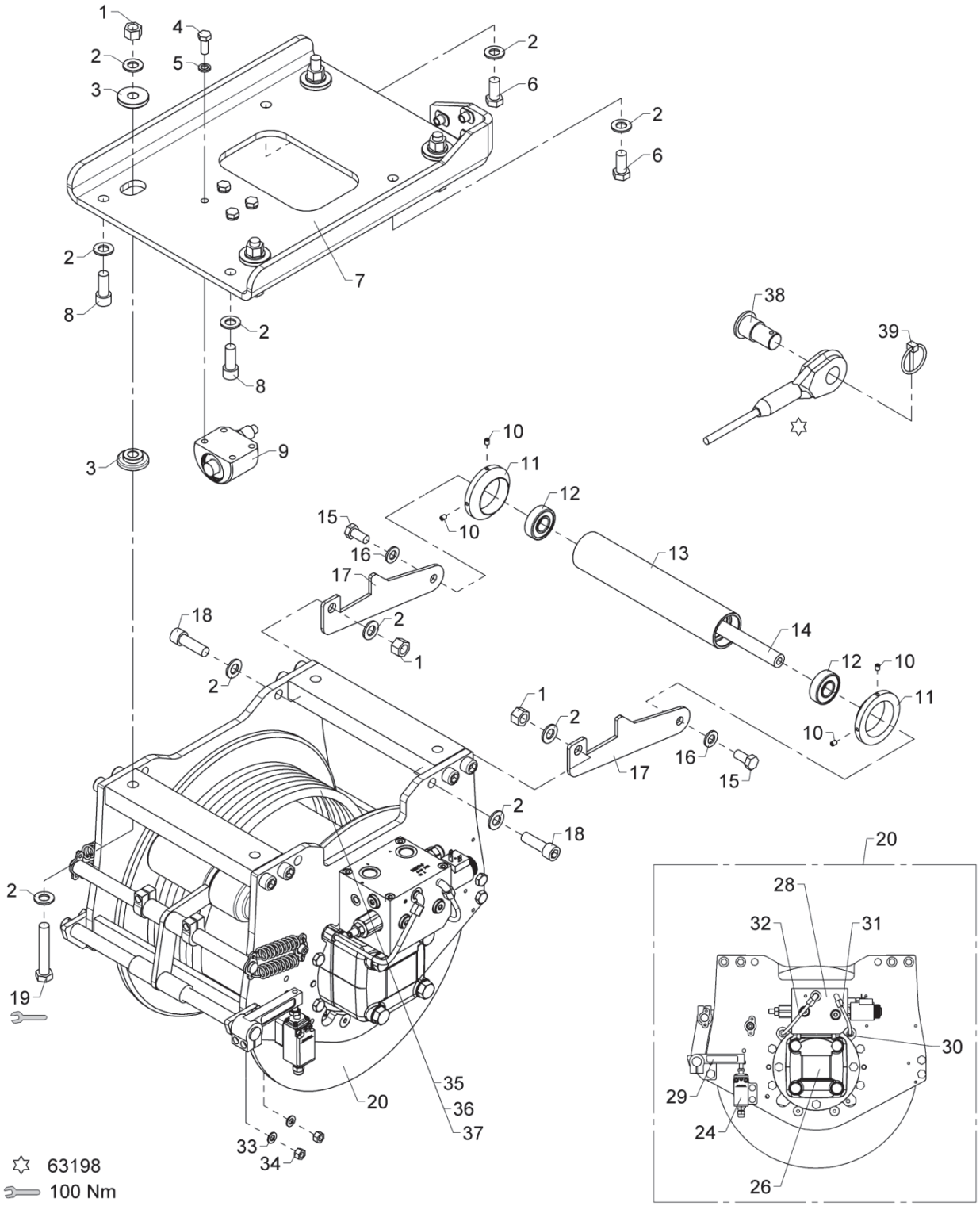

Winch 3,2T cpl.

Pos	Qty.	Part no.	Description	Remarks
1	6	30891	Lock nut	M14
2	16	31178	Washer	14 mm
3	8	6301337	Washer	
4	4	30155	Set screw	M10 x 25
5	4	30933	Nordlock washer	10 mm
6	2	30206	Set screw	M14 x 30
7	1	6301331	Winch bracket	
8	2	30482	Screw	MC14 x 35
9	1	6887210	Weighing cell, hydraul.	
10	4	30903	Screw	MSP6 x 8
11	2	6886764	Guide roller	
12	2	23178	Ball bearing	
13	1	6300571	Roller	
14	1	6300649	Pin	
15	2	30176	Set screw	M12 x 25
16	2	31131	Washer	12 mm
17	2	6301335	Guide roller bracket	
18	2	32487	Screw	MC14 x 45
19	4	30214	Steel bolt	M14 x 80
20	1	58290	Winch	
21	1	69260	Seal kit for brake	600140101
22	1	69262	Kit for brake	6x415030800 + 5x415040400 + 2x
23	1	69255	Wire guide	905146800
24	1	29532	Switch, winch	Endestop
25	1	69257	Thimble	02410204
26	1	69258	Motor	425020300
27	1	69261	Seal kit for motor	600008800
28	1	62725	Valve	X043017001
29	1	69730	Lever	010200002
30	1	55559	Drain kit, S25	029810106
31	1	55560	Drain hose, S25	026710220
32	1	55561	Brake hose, S25	026710221
33	2	31147	Face washer, 8 mm	
34	2	30886	Lock nut, stainless	M8
35	1	63203	Wire rope	ø12 x 61 mtr.
36	1	63202	Wire rope	ø12 x 71 mtr.
37	1	63205	Wire rope	ø12 x 78 mtr.
38	1	6886754	Pin	
39	1	31967	Ring split	ø4,5 x 40

9520K-RCS, 9520OK-RCS

Internal ref. 6398890

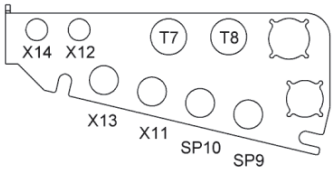

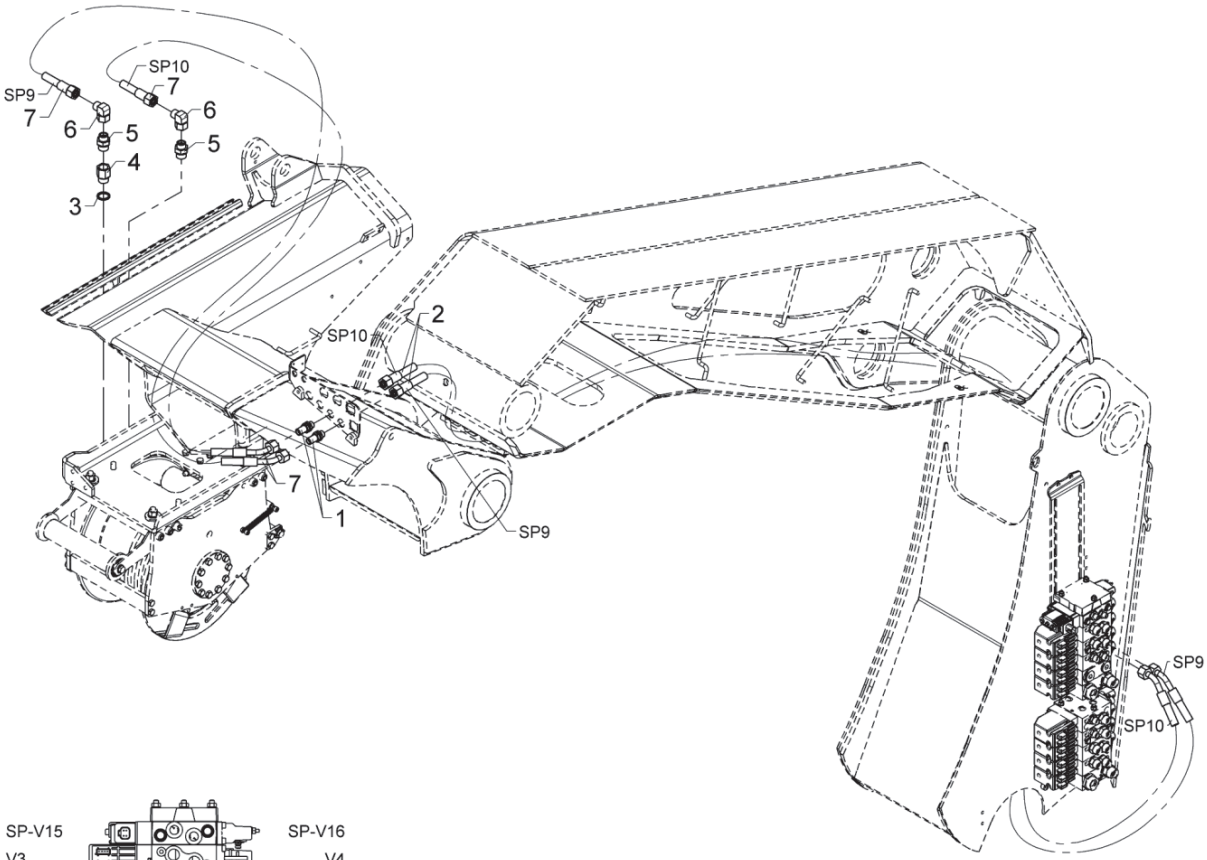

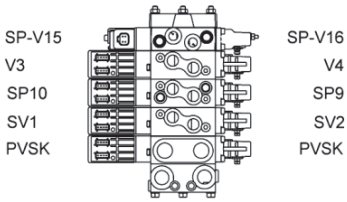

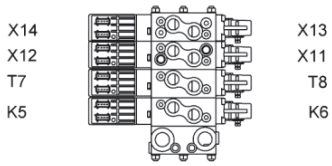

Hydraulic system, winch

Pos	Qty.	Part no.	Description	Remarks
1	2	25201	Bulkhead connection	
2	2	56685	Hose	1/2 x 5700 L/45
3	1	21108	Seal washer	ø27,05 x 34,93 x 2,34
4	1	25949	Reducing nipple	3/4 BSP x 3/8 BSP
5	2	26390	Connection	P-GEV 16 SR 3/4-WD
6	2	26340	Elbow connection	EWSD 16 S
7	2	56938	Hose	1/2" x 2000 L/45° (16S)

9520K-RCS, 9520OK-RCS

Internal ref. 6398880

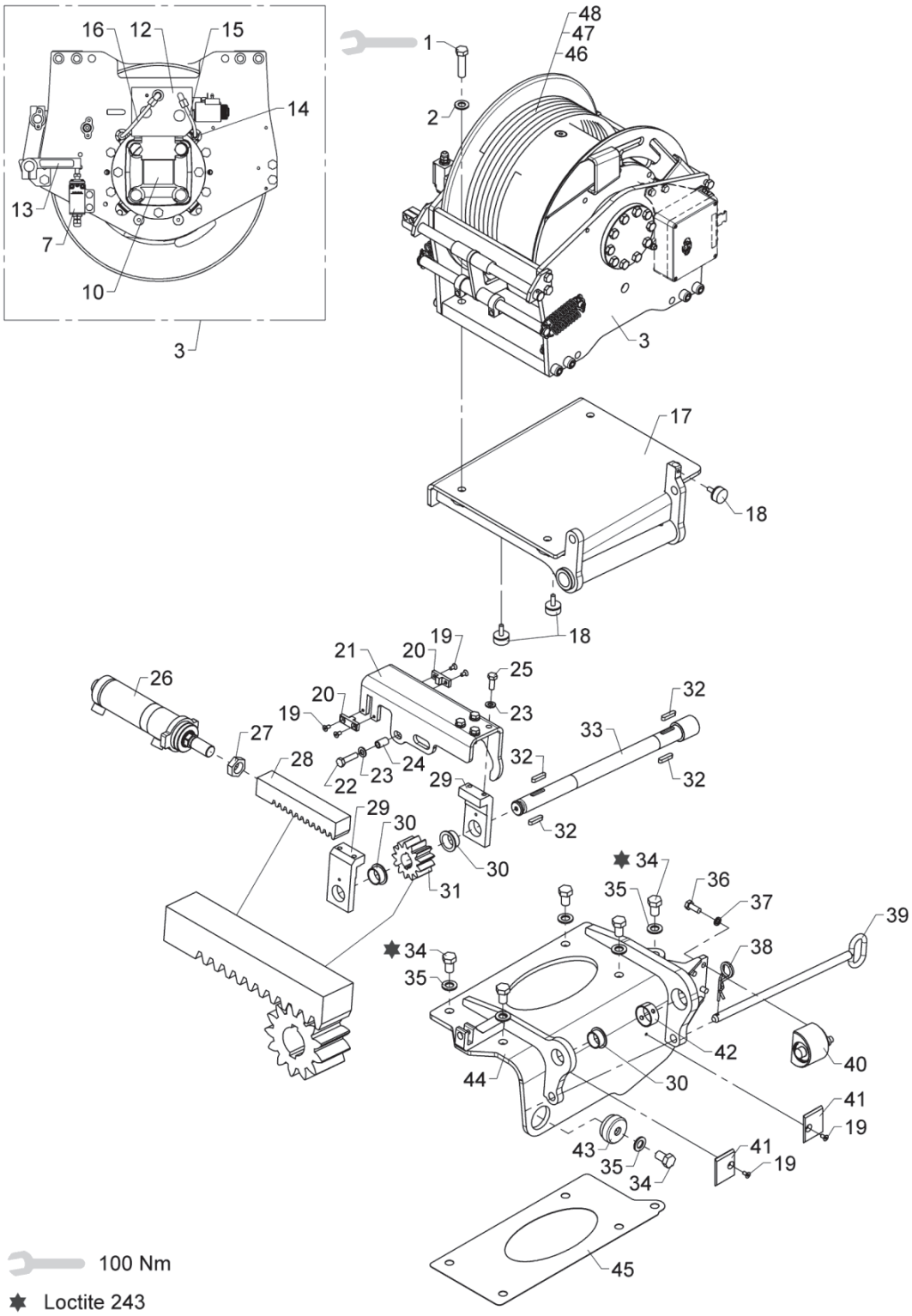

BOM obsolete

559 13 020

From loader 1370001
To loader

Created 25-09-18
Modified 16-09-19

Swing-up hoist 3,2T cpl.

Pos	Qty.	Part no.	Description	Remarks
1	4	32533	Steel bolt	M14 x 55
2	4	31178	Washer	14 mm
3	1	58290	Winch	
4	1	69260	Seal kit for brake	600140101
5	1	69262	Kit for brake	6x415030800 + 5x415040400 + 2x
6	1	69255	Wire guide	905146800
7	1	29532	Switch, winch	Endestop
8	1	69256	Stop	905000102
9	1	69257	Thimble	02410204
10	1	69258	Motor	425020300
11	1	69261	Seal kit for motor	600008800
12	1	62725	Valve	
13	1	69730	Lever	010200002
14	1	55559	Drain kit, S25	029810106
15	1	55560	Drain hose, S25	026710220
16	1	55561	Brake hose, S25	026710221
17	1	6301341	Stowing bracket	
18	3	61910	Rubber buffer	
19	6	30542	Counter-sunk screw	MK6 x 12
20	2	6300789	Lock plate	
21	1	6300798	Cylinder bracket	
22	1	30158	Steel bolt	M10 x 40
23	10	31177	Washer	10 mm
24	1	6302405	Distance pipe	
25	4	30155	Set screw	M10 x 25
26	1	6300790	Slewing cylinder C50 - 102	
27	1	31053	Counter nut	M24 x 1,5
28	1	6300794	Rack	
29	2	6300797	Rack guide	
30	3	23931	Bushing	BB 3016 DU-B
31	1	6300795	Pinion	
32	4	31054	Spring	
33	1	6397912	Pin	
34	6	30266	Set screw	M16 x 25
35	6	31135	Washer	16 mm
36	4	31513	Set screw, stainless	M10 x 25
37	4	30933	Nordlock washer	10 mm
38	1	33382	Lock spring	
39	1	6300821	Pin	
40	1	6887210	Weighing cell, hydraul.	
41	2	63724	Slide block	1210624

9520K-RCS, 9520OK-RCS

Internal ref. 6398880

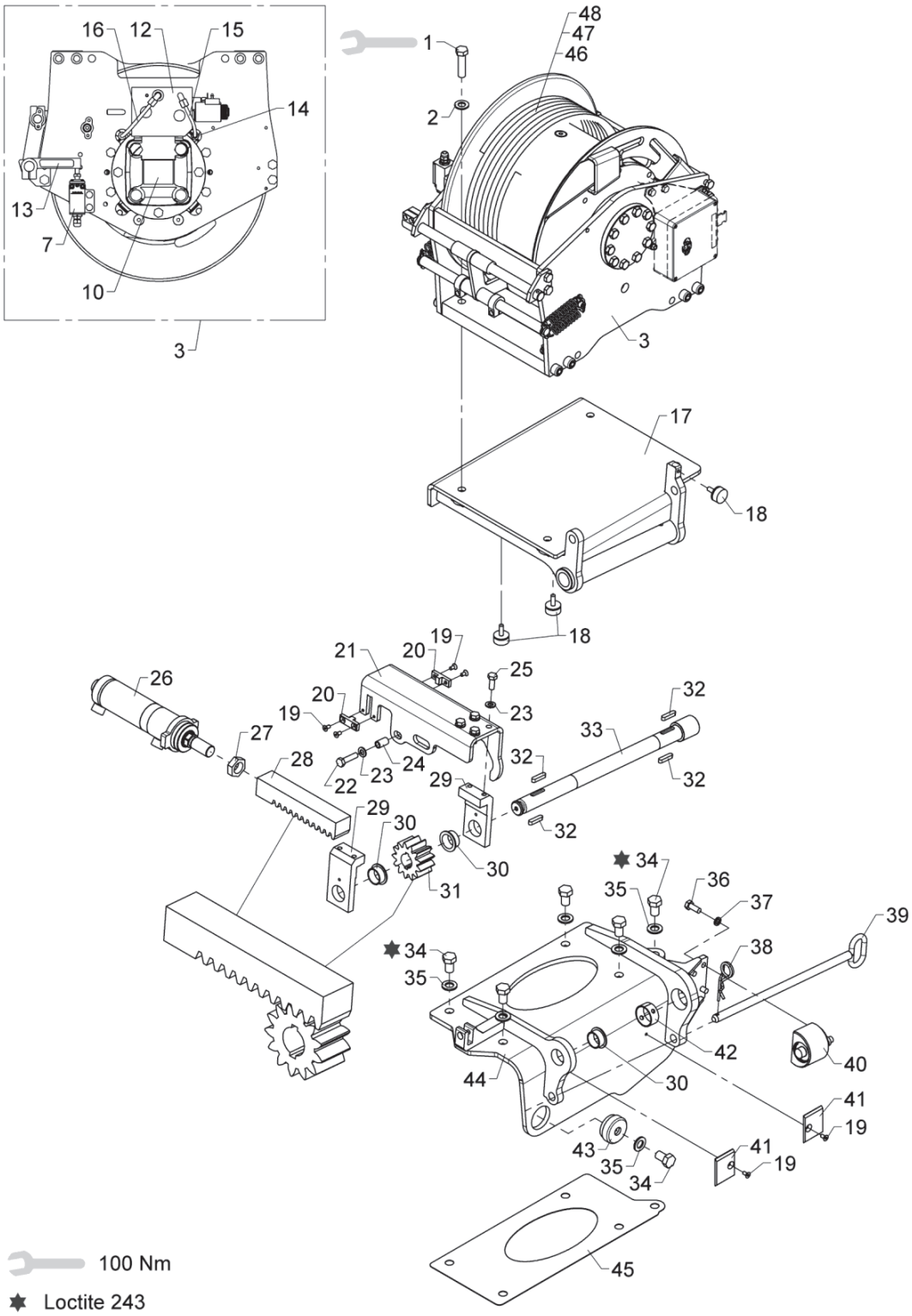

BOM obsolete

559 13 020

Swing-up hoist 3,2T cpl.

From loader 1370001
To loader

Created 25-09-18
Modified 16-09-19

Pos	Qty.	Part no.	Description	Remarks
42	1	23311	Bushing	PM 4030 DX
43	1	6300823	Washer	
44	1	6303351	Mounting bracket	
45	1	6302809	Adjusting plate	
46	1	63203	Wire rope	ø12 x 61 mtr.
47	1	63202	Wire rope	ø12 x 71 mtr.
48	1	63205	Wire rope	ø12 x 78 mtr.

9520K-RCS, 9520OK-RCS

Internal ref. 6398880

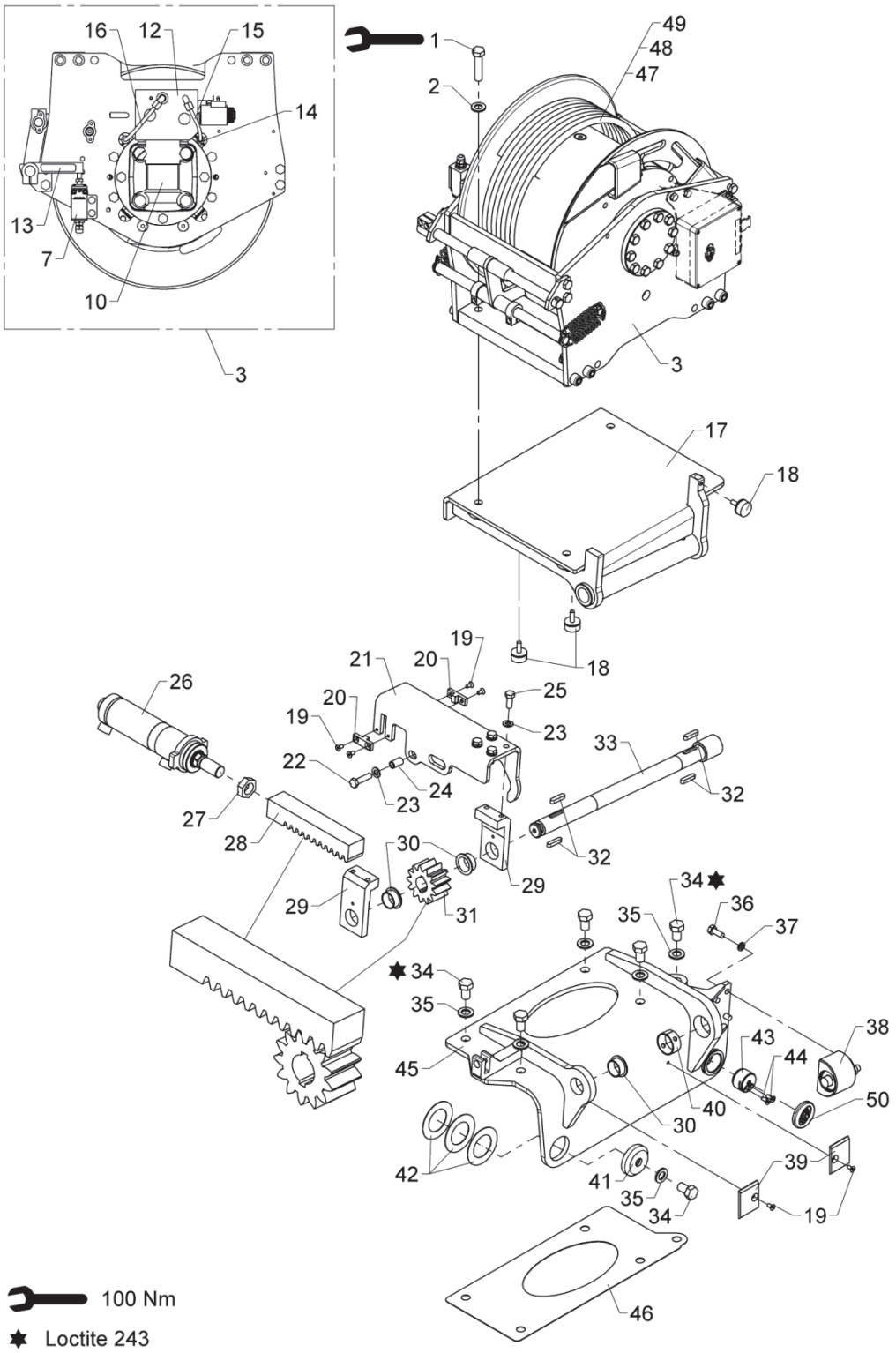

Swing-up hoist 3,2T cpl.

Pos	Qty.	Part no.	Description	Remarks
1	4	30212	Steel bolt	M14 x 60
2	4	31178	Washer	14 mm
3	1	58290	Winch	
4	1	69260	Seal kit for brake	600140101
5	1	69262	Kit for brake	6x415030800 + 5x415040400 + 2x
6	1	69255	Wire guide	905146800
7	1	29532	Switch, winch	Endestop
8	1	69256	Stop	905000102
9	1	69257	Thimble	02410204
10	1	69258	Motor	425020300
11	1	69261	Seal kit for motor	600008800
12	1	62725	Valve	
13	1	69730	Lever	010200002
14	1	55559	Drain kit, S25	029810106
15	1	55560	Drain hose, S25	026710220
16	1	55561	Brake hose, S25	026710221
17	1	6301341	Stowing bracket	
18	3	61910	Rubber buffer	
19	6	30542	Counter-sunk screw	MK6 x 12
20	2	6300789	Lock plate	
21	1	6300798	Cylinder bracket	
22	1	30158	Steel bolt	M10 x 40
23	10	31177	Washer	10 mm
24	1	6302405	Distance pipe	
25	4	30155	Set screw	M10 x 25
26	1	6300790	Slewing cylinder C50 - 102	
27	1	31053	Counter nut	M24 x 1,5
28	1	6300794	Rack	
29	2	6300797	Rack guide	
30	3	23931	Bushing	BB 3016 DU-B
31	1	6300795	Pinion	
32	4	31054	Spring	
33	1	6397912	Pin	
34	6	30266	Set screw	M16 x 25
35	6	31135	Washer	16 mm
36	4	31513	Set screw, stainless	M10 x 25
37	4	30933	Nordlock washer	10 mm
38	1	6887210	Weighing cell, hydraul.	
39	2	63724	Slide block	1210624
40	1	23311	Bushing	PM 4030 DX
41	1	6397886		

9520K-RCS, 9520OK-RCS

Internal ref. 6398880

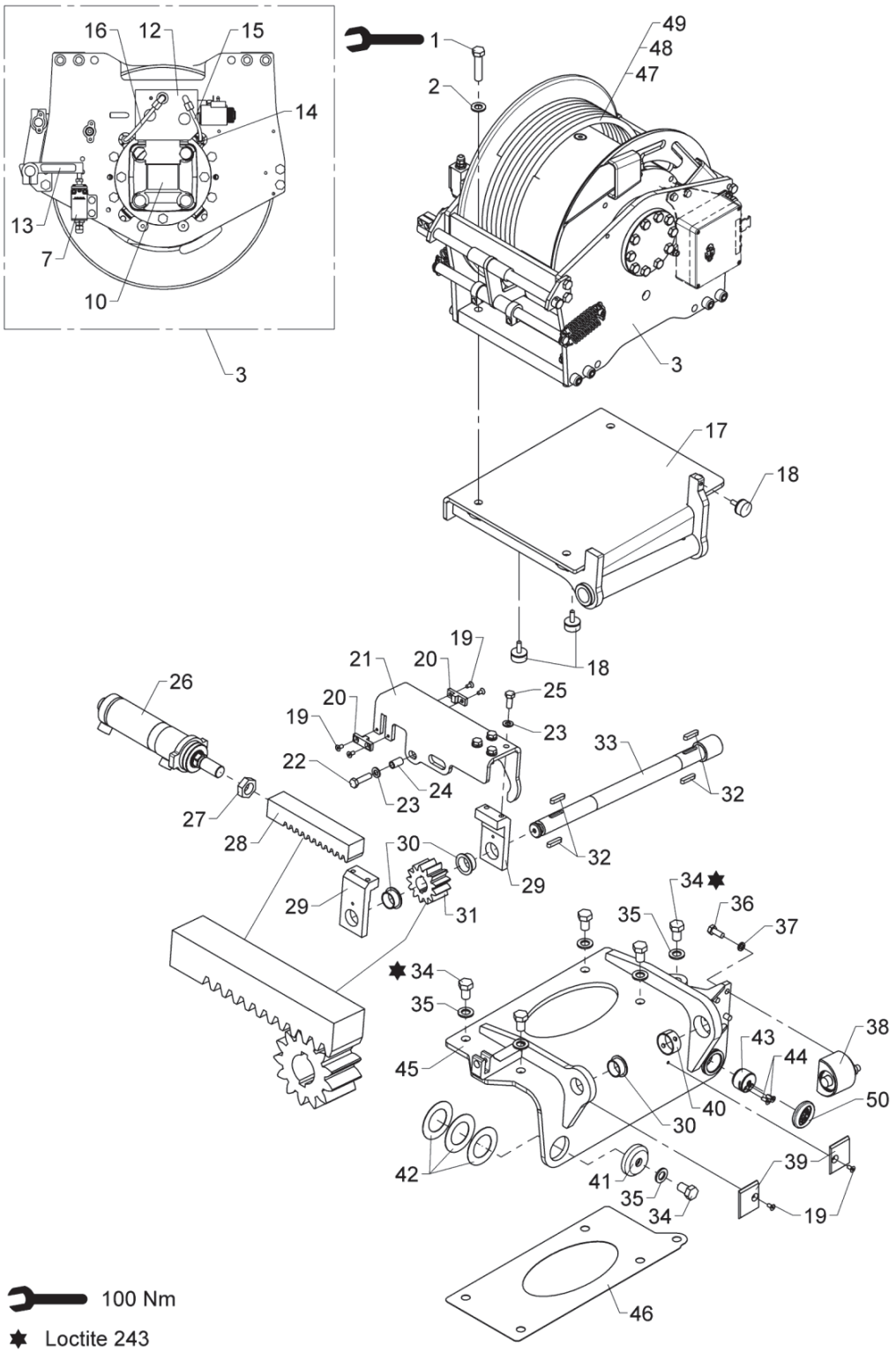

Swing-up hoist 3,2T cpl.

Pos	Qty.	Part no.	Description	Remarks
42	3	6301357		
43	1	6300334	Guide	
44	2	30540	Countersunk screw	MK6 x 16
45	1	6303351	Mounting bracket	
46	1	6302809	Adjusting plate	
47	1	63203	Wire rope	ø12 x 61 mtr.
48	1	63202	Wire rope	ø12 x 71 mtr.
49	1	63205	Wire rope	ø12 x 78 mtr.
50	1	64362	Plastic plug	

9520K-RCS, 9520OK-RCS

Internal ref. 6398900

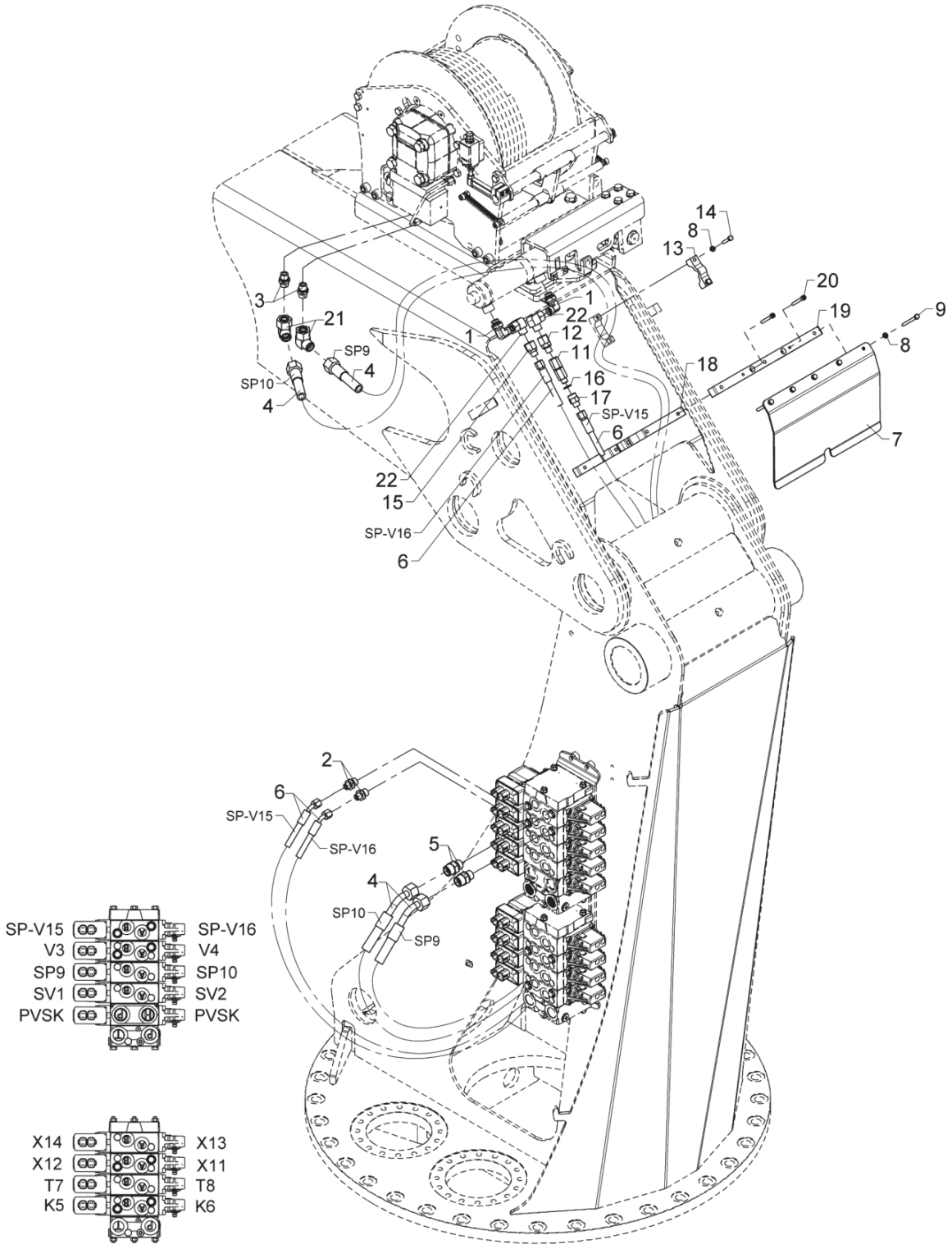

Hydraulic system, Swing-up hoist

Pos	Qty.	Part no.	Description	Remarks
1	2	26897	Elbow connection	12 mm - 3/8"
2	2	25244	Connection	GES 8 LR 3/8-WD
3	2	25127	Connection	P-GEV 12 LR-WD
4	2	56684	Hose	1/2 x 4250 L/45
5	2	26334	Connection	P-GEV 16 SR-WD
6	2	56682	Hose	
7	1	6398946	Cover plate	
8	7	32302	Face washer, stainless	6 mm
9	3	30120	Steel pin, stainless	M6 x 60
10	2	30112	Set screw, stainless	M6 x 16
11	1	59033	One way restrictor valve	
12	1	25241	Connection	EGESD 12 LR 1/4-WD
13	1	6300945	Clamp	
14	2	30115	Steel pin, stainless	M6 x 30
15	1	26101	Reducing connection	REDSDN 12/8 L
16	1	21102	Seal washer	ø14 x 18,7 x 1,5
17	1	26106	Connection	P-MAV 8 LR
18	1	6398942	Clamp	
19	1	6398943	Clamp	
20	2	30435	Screw	MC6 x 45
21	2	26340	Elbow connection	EWSD 16 S
22	2	25242	Elbow connection	EWSD 12 L

9520K-RCS, 9520OK-RCS

Internal ref. 6397930

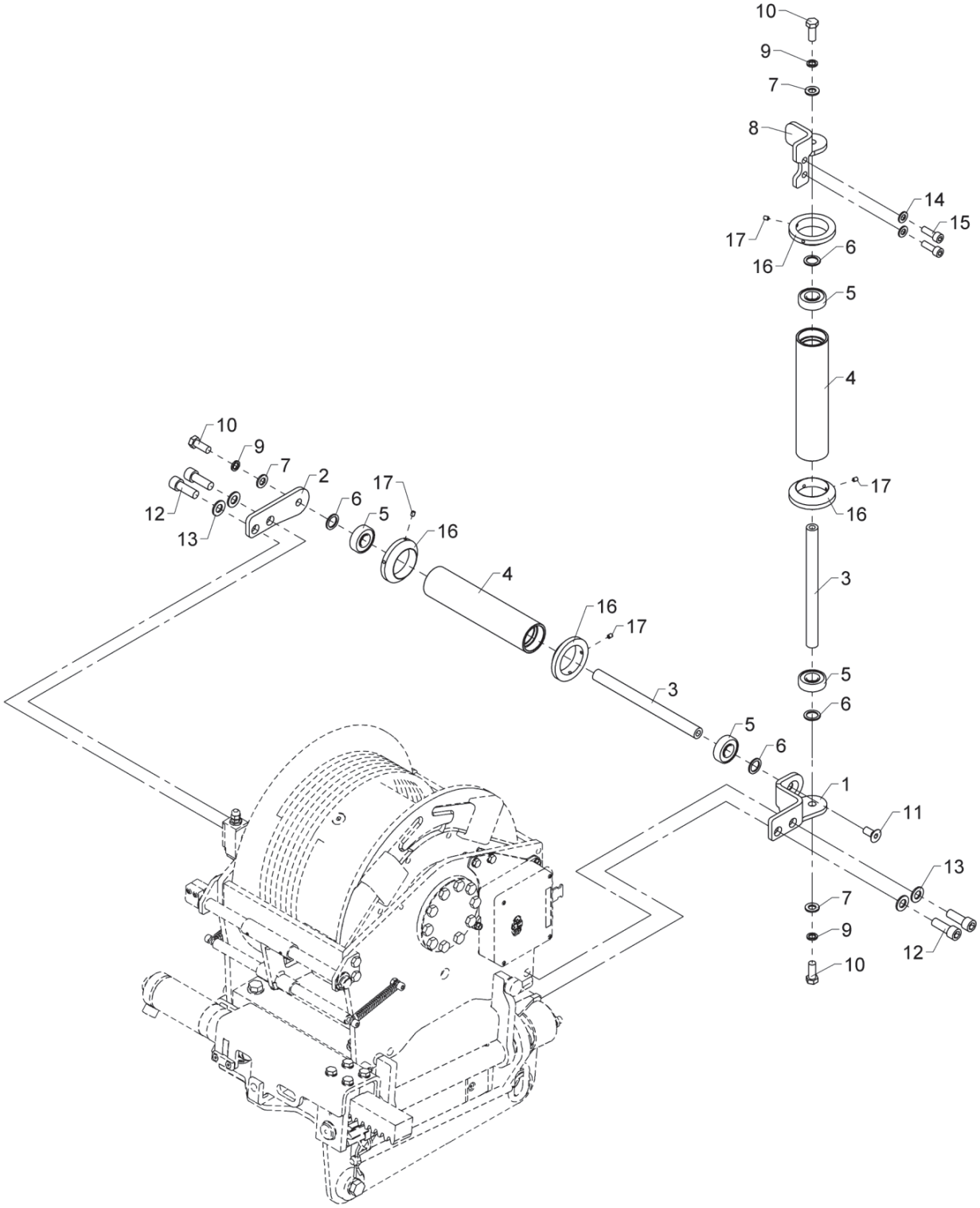

Wire sheave guide roller

Pos	Qty.	Part no.	Description	Remarks
1	1	6398872	Roller bracket	
2	1	6398873	Roller bracket	
3	2	6295614	Pin	
4	2	6290984	Guide roller	
5	4	23178	Ball bearing	
6	4	33227	Back ring	SS 20 x 28 x 2
7	3	31131	Washer	12 mm
8	1	6398871	Roller bracket	
9	3	31158	Spring washer	12 mm
10	3	30177	Set screw	M12 x 30
11	1	30586	Countersunk screw	MK12 x 25
12	4	30483	Screw	MC14 x 40
13	4	31178	Washer	14 mm
14	2	31565	Washer, stainless	10 mm
15	2	30455	Screw	MC10 x 30
16	4	6886764	Guide roller	
17	4	30903	Screw	MSP6 x 8

9520K-RCS, 9520OK-RCS

6893890
Internal ref. 6300790

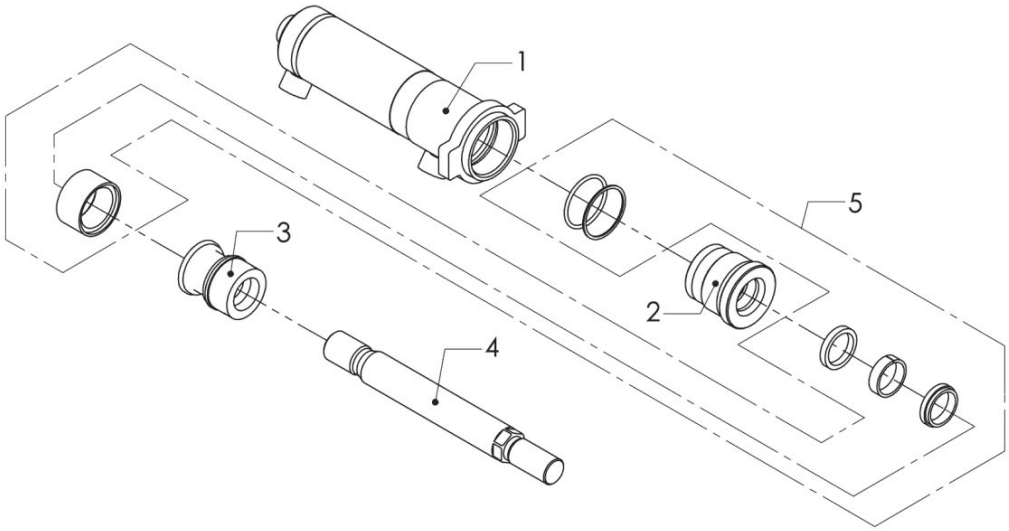

559 13 040

From loader 1370001
To loader

Slewing cylinder, C50-102

Created 02-11-07
Modified 05-04-19

Pos	Qty.	Part no.	Description	Remarks
1	1	6300791	Cylinder pipe	
2	1	6321413	Guide	
3	1	6325273	Piston	
4	1	6300793	Piston rod	
5	1	6893890	Seal kit	

9520K-RCS, 9520OK-RCS

Internal ref. 6397910

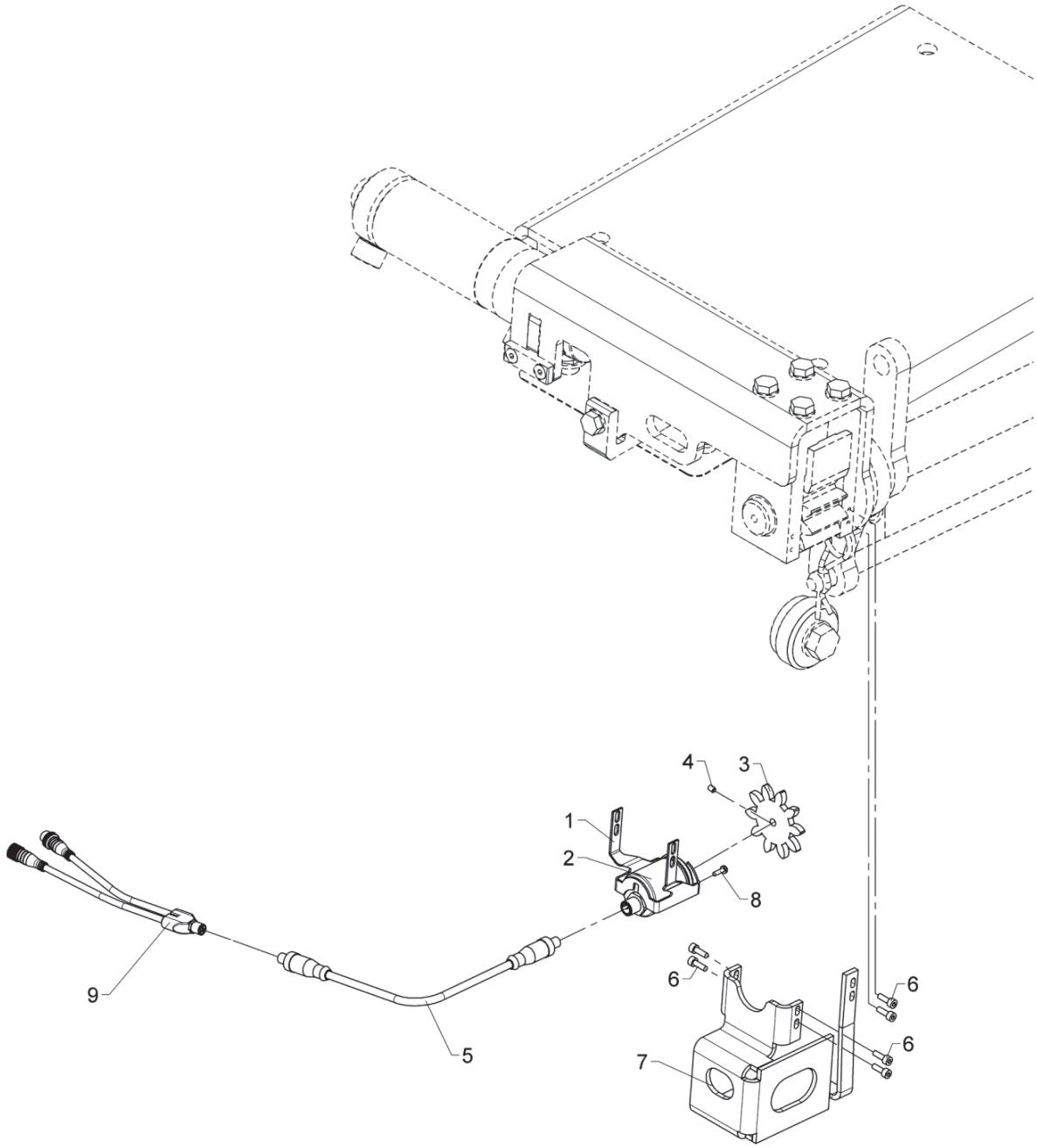

BOM obsolete

559 13 050

Sensor, swing-up hoist

From loader 1370001
To loader 1370050

Created 22-10-18
Modified 26-03-19

Pos	Qty.	Part no.	Description	Remarks
1	1	6303752	Encoder bracket	
2	1	29870	Encoder 36A	
3	1	6303753	Pinion	
4	1	31050	Pointed screw	MSP5 x 5
5	1	29735	CAN cable extension 0.6m	
6	6	32406	Sockethead screw	MC4 x 12
7	1	6397911	Guard rail	
8	4	32534	Screw	M3 x 10
9	1	29898	CAN cable, 2 x 0.7 m	

9520K-RCS, 9520OK-RCS

Internal ref. 6397910

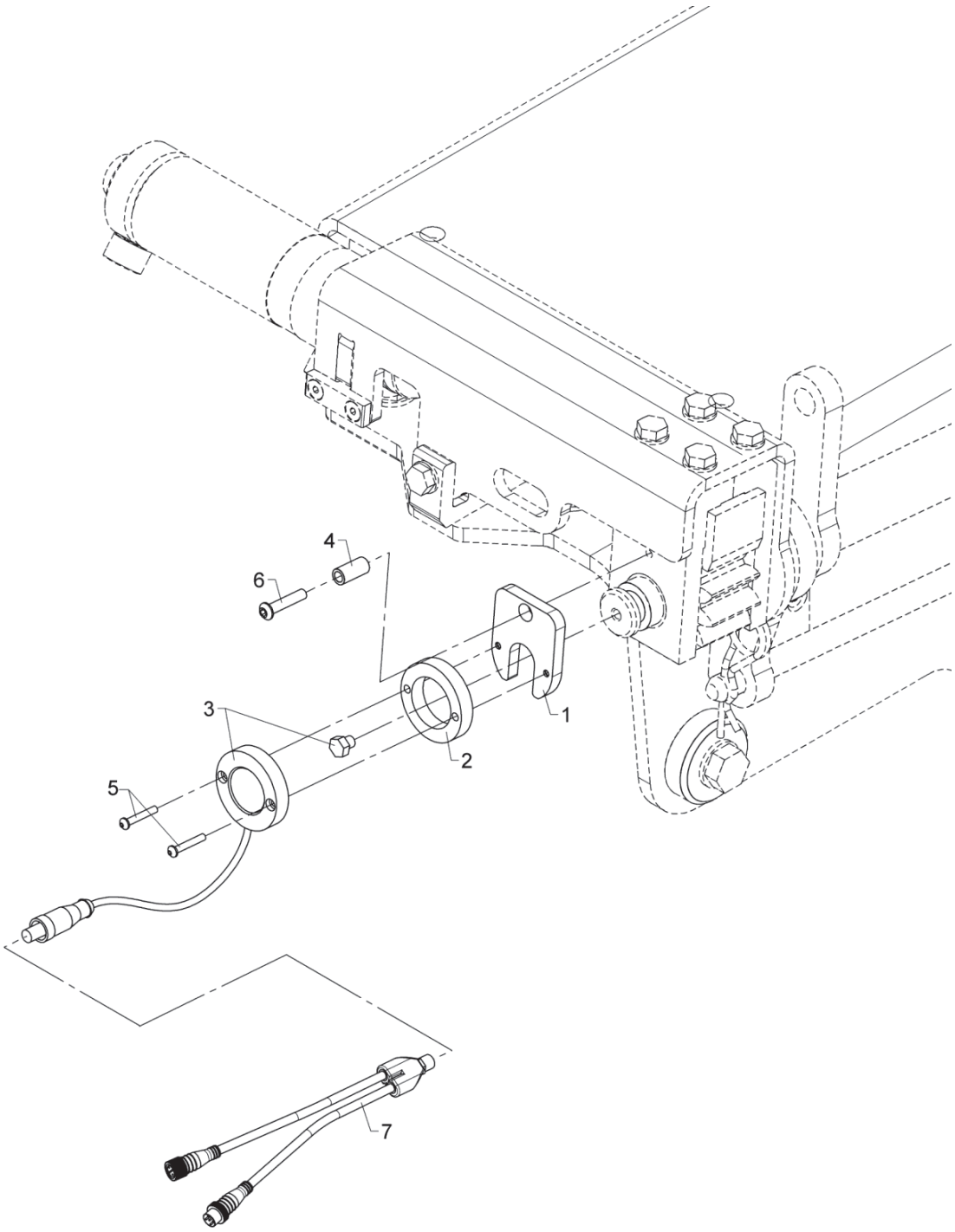

Sensor, swing-up hoist

Pos	Qty.	Part no.	Description	Remarks
1	1	6397914	Guide	
2	1	6397913	Spacer	
3	1	29899	Encoder	
4	1	6397915	Distance pipe	
5	2	32536	Screw	M4 x 25
6	1	32458	Screw	M6 x 30
7	1	29898	CAN cable, 2 x 0.7 m	

9520K-RCS, 9520OK-RCS

Internal ref. 6300830

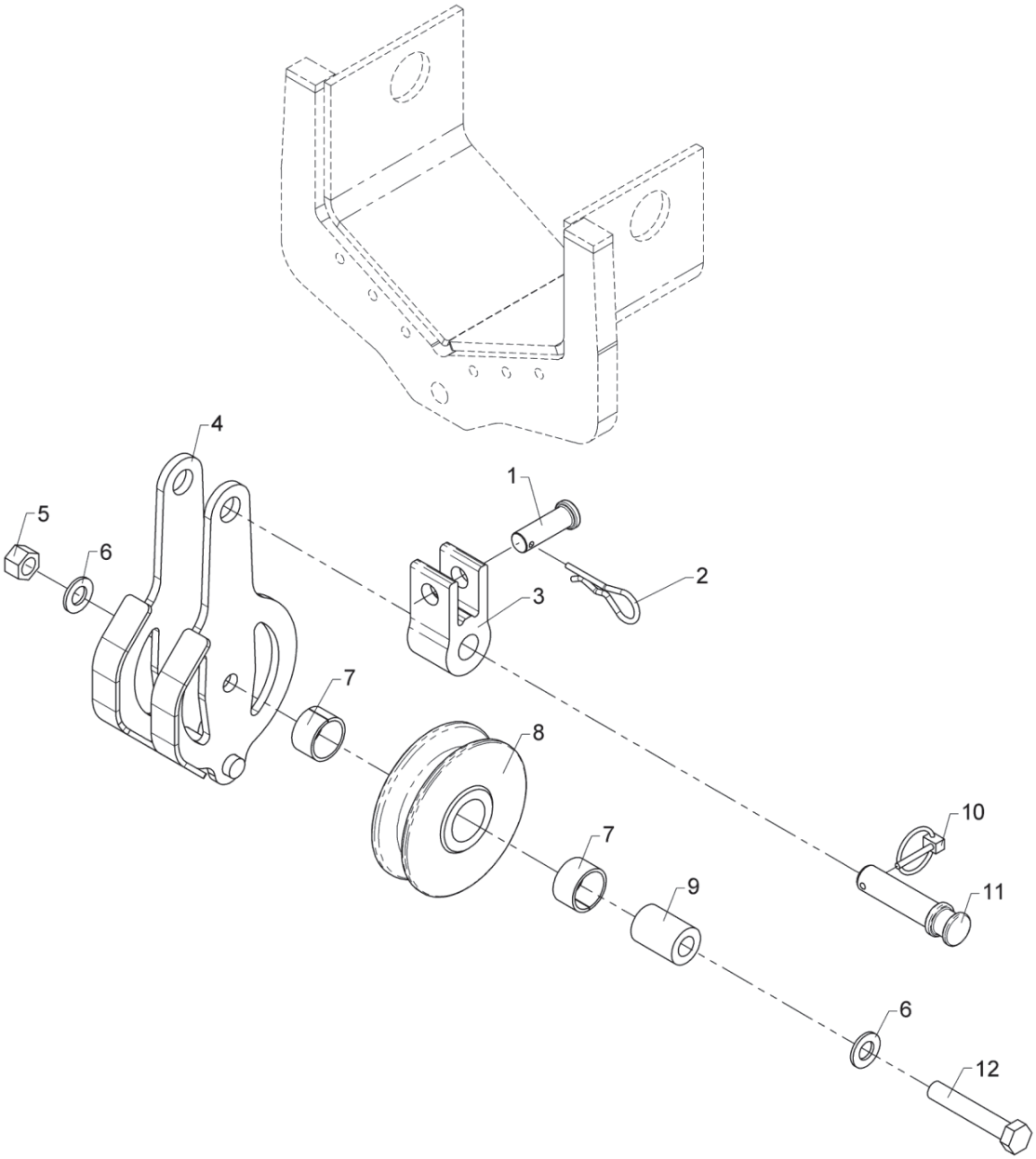

Used at: 4020-K6, 5020-K6
7020-OK3, 9520-OK3

Wire roller guide

Pos	Qty.	Part no.	Description	Remarks
1	1	6300858	Pin	
2	1	33399	Lock spring	
3	1	6300828	Suspension for roller guide	
4	1	6300792	Wire pulley	
5	1	30891	Lock nut	M14
6	2	31178	Washer	14 mm
7	2	23302	Bushing	MB 3020 DU
8	1	63513	Wire roller guide	
9	1	6885504	Distance pipe	
10	1	33385	Ring split	ø4,5 x 27
11	1	6300859	Pin	
12	1	30214	Steel bolt	M14 x 80

9520K-RCS, 9520OK-RCS

Internal ref. 6398810

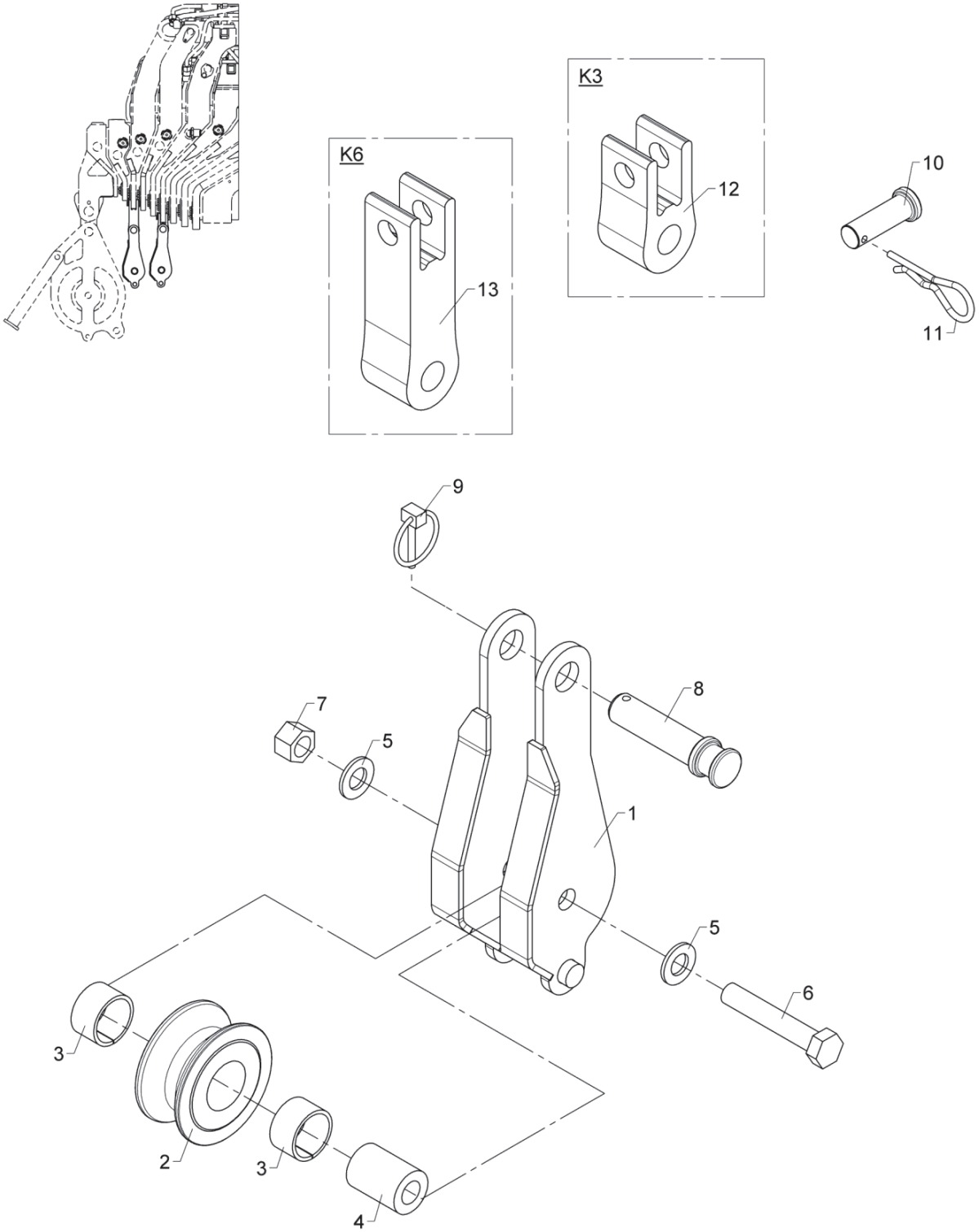

Wire roller guide, K3/K6

Pos	Qty.	Part no.	Description	Remarks
1	1	6398811	Wire pulley, welded	
2	1	68117	Wire sheave	
3	2	23302	Bushing	MB 3020 DU
4	1	6885504	Distance pipe	
5	2	31178	Washer	14 mm
6	1	30214	Steel bolt	M14 x 80
7	1	30891	Lock nut	M14
8	1	6300859	Pin	
9	1	33385	Ring split	ø4,5 x 27
10	1	6300858	Pin	
11	1	33399	Lock spring	
12	1	6398815	Suspension for roller guide	K3
13	1	6398816	Suspension for roller guide	K6

9520K-RCS, 9520OK-RCS

6301037
Internal ref. 6887280

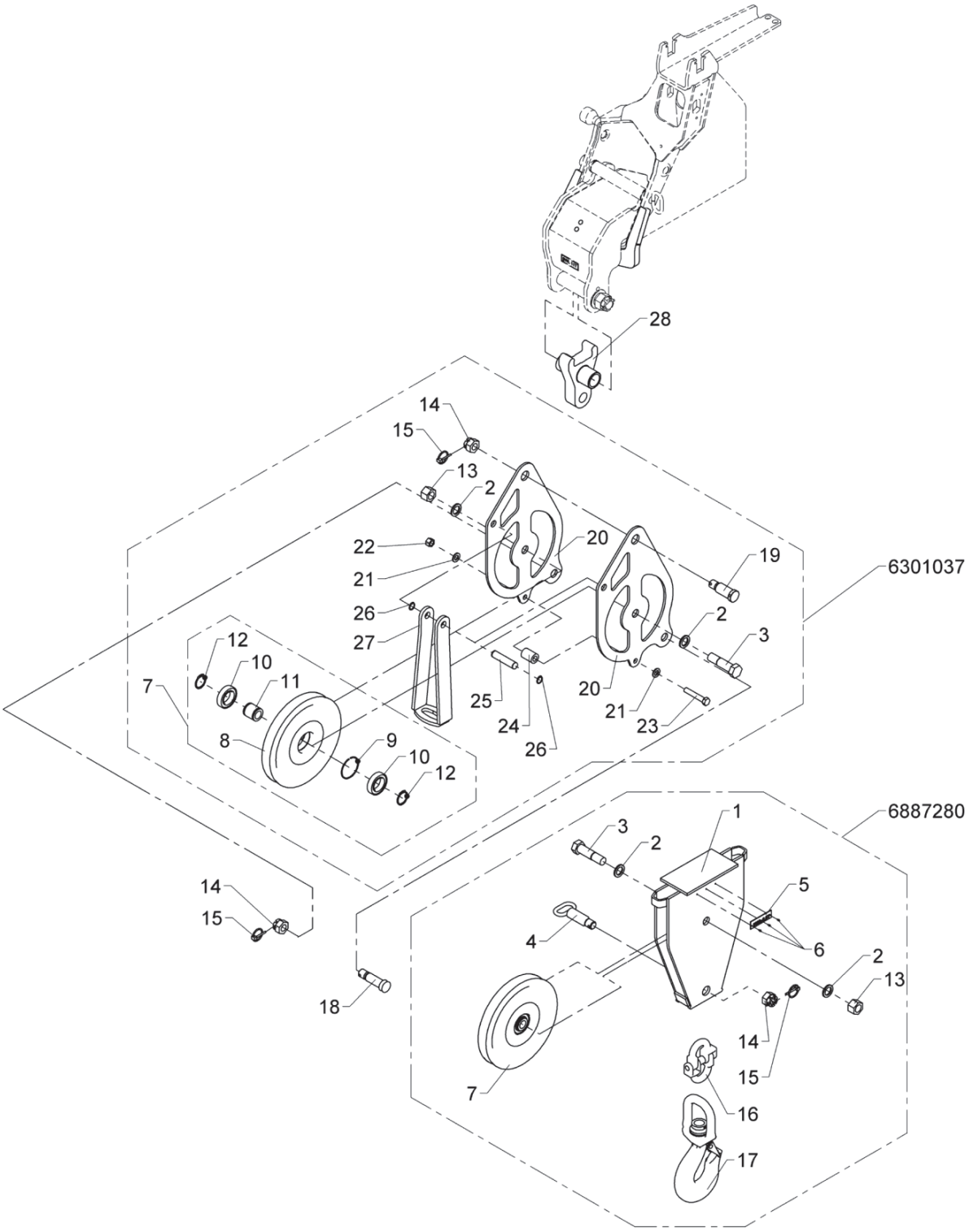

Wire pulley 3.2 t

Pos	Qty.	Part no.	Description	Remarks
1	1	6887313	Snatch block	
2	4	30929	Nordlock washer	24 mm
3	2	32476	Steel bolt	M24 x 95
4	1	6301004	Lock pin	
5	1	65699	Brass label	
6	3	31340	Rivet	
7	2	6887290	Wire sheave incl. bearing	
8	1	64136	Wire disc	
9	1	23904	Spring ring	BR 68
10	2	23150	Ball bearing	
11	1	6887304	Hub	
12	2	33121	Circlip	40U
13	2	30897	Lock nut	M24
14	3	30837	Nut	M24
15	3	31967	Ring split	ø4,5 x 40
16	1	50309	Link 16 CW	
17	1	63292	Hook, 8 t incl. bearing	
18	1	6300558	Pin	
19	1	6256324	Pin	
20	2	6301038	Side plate	
21	2	31178	Washer	14 mm
22	1	30891	Lock nut	M14
23	1	30214	Steel bolt	M14 x 80
24	1	6885504	Distance pipe	
25	1	6300543	Pin	
26	2	33108	Circlip	20U
27	1	6300548	Stop	
28	1	6302615	Wire pulley	

9520K-RCS, 9520OK-RCS

6400980
6400970
Internal ref. 6400960

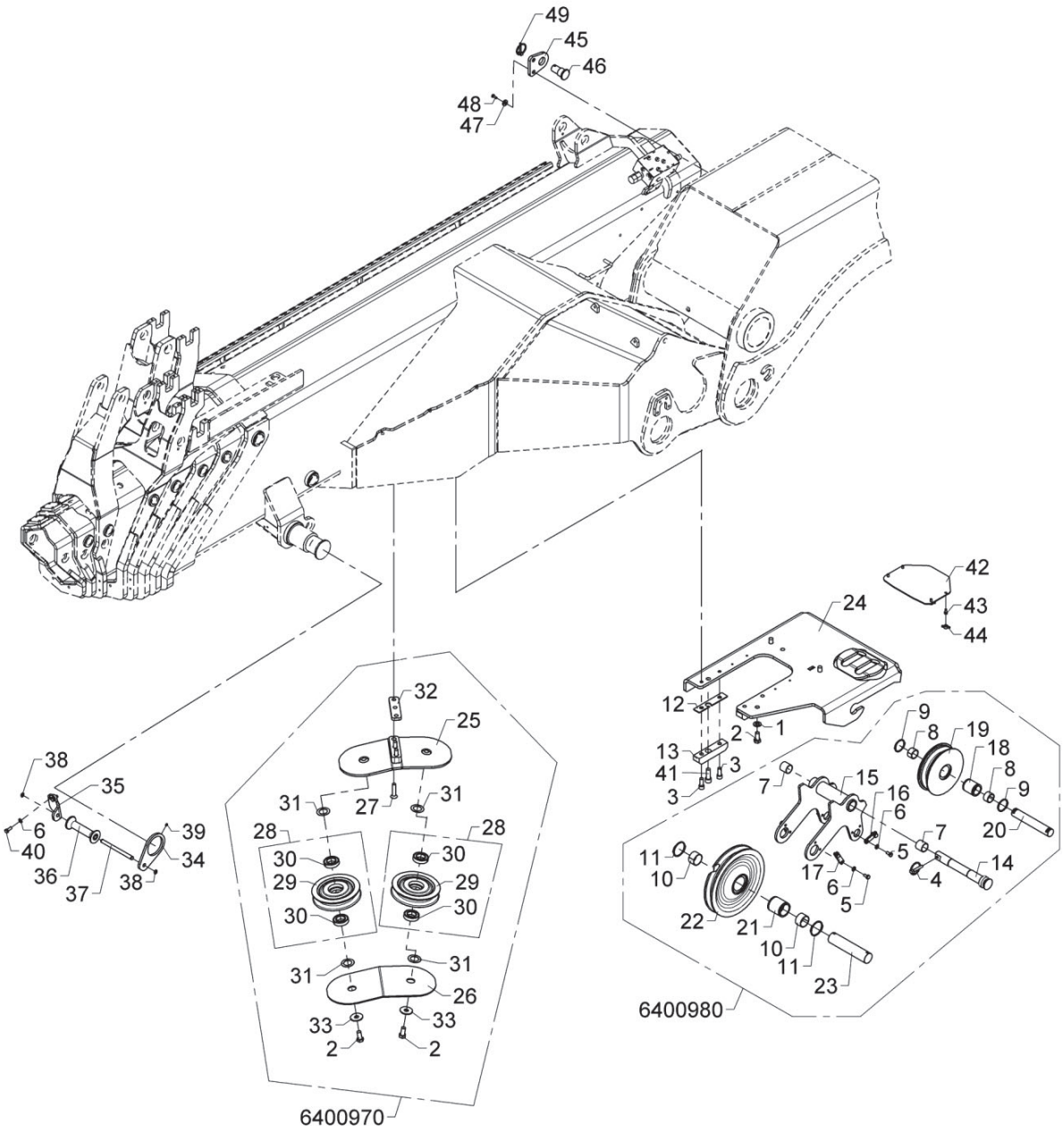

BOM obsolete

559 13 200

Winch bacis, Power Hoist

From loader 1370001
To loader 1370028
Created 15-02-19
Modified

Pos	Qty.	Part no.	Description	Remarks
1	5	31178	Washer	14 mm
2	7	30206	Set screw	M14 x 30
3	4	31542	Sockethead screw, stainless	MC12 x 30
4	1	33387	Ring split	ø8 x 45
5	8	30131	Set screw, stainless	M8 x 16
6	10	31147	Face washer, 8 mm	
7	2	23946	Composite bearing	ø30/34 x 30
8	2	23302	Bushing	MB 3020 DU
9	2	33125	Circlip	45U
10	2	23932	Bushing	MB 4025 DU-B
11	2	33132	Circlip Din 471	55U
12	2	6300898	Spacer	
13	2	63538	Stop block	
14	1	6398882	Pin f.suspension f.wire sheave	
15	1	6398877	Wire pulley	
16	2	6300934	Lock plate	
17	2	6182444	Lock plate	
18	1	6300278	Bushing for wire roller	
19	1	63507	Wire roller	
20	1	6398886	Pin for wire sheave	
21	1	6300277	Bushing for wire sheave	
22	1	63508	Sheave	
23	1	6398883	Pin for wire sheave	
24	1	6398874	Bracket for wire guide	
25	1	6398891	Wire pulley	
26	1	6398889	Top plate	
27	3	32291	Countersunk screw M12x55	MK12 x 55
28	2	6304950	Wire sheave, complete	
29	1	68111	Wire sheave	
30	2	23187	Ball bearing	
31	4	23188	Spacer	
32	1	6398888	Spacer	
33	2	31763	Washer	45 x 15 x 3
34	1	6398894	End plate	
35	1	6398895	Plate	
36	1	63510	Guide roller	
37	1	6398896	Shaft	
38	2	33102	Circlip	12U
39	1	30565	Pointed screw, stainless	MSP5 x 8
40	2	30132	Set screw, stainless	
41	1	30483	Screw	MC14 x 40

9520K-RCS, 9520OK-RCS

Internal ref. 6400980
6400970
6400960

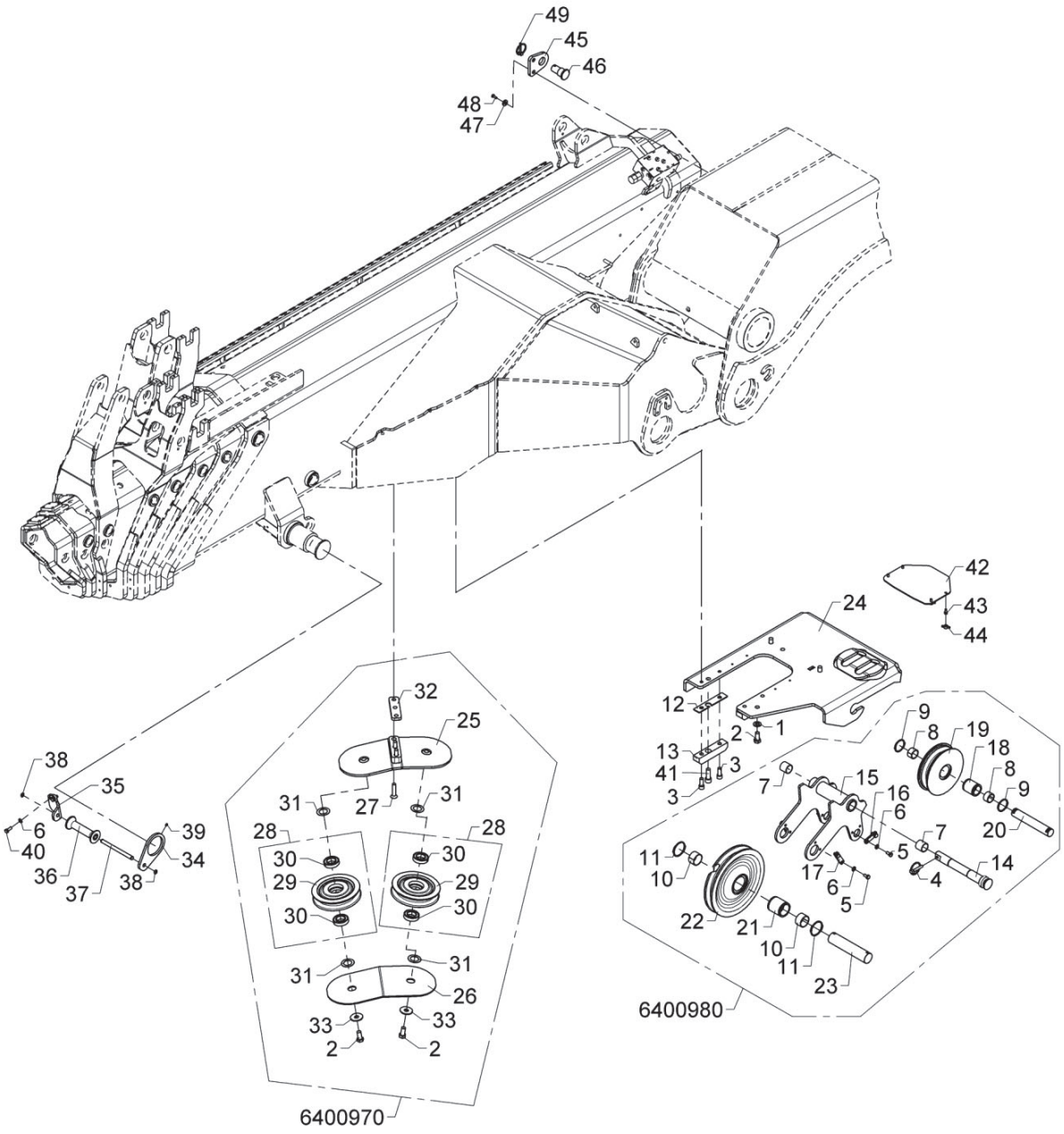

BOM obsolete

559 13 200

Winch bacis, Power Hoist

From loader 1370001
To loader 1370028
Created 15-02-19
Modified

Pos	Qty.	Part no.	Description	Remarks
42	1	6398926	Cover plate	
43	4	30423	Sockethead screw	MC6 x 12
44	4	64353	Thumb screw	M6
45	1	6398917	Plate	
46	1	6886754	Pin	
47	2	31755	Washer	
48	2	30112	Set screw, stainless	M6 x 16
49	1	31967	Ring split	ø4,5 x 40

9520K-RCS, 9520OK-RCS

6400980
6400970
Internal ref. 6400960

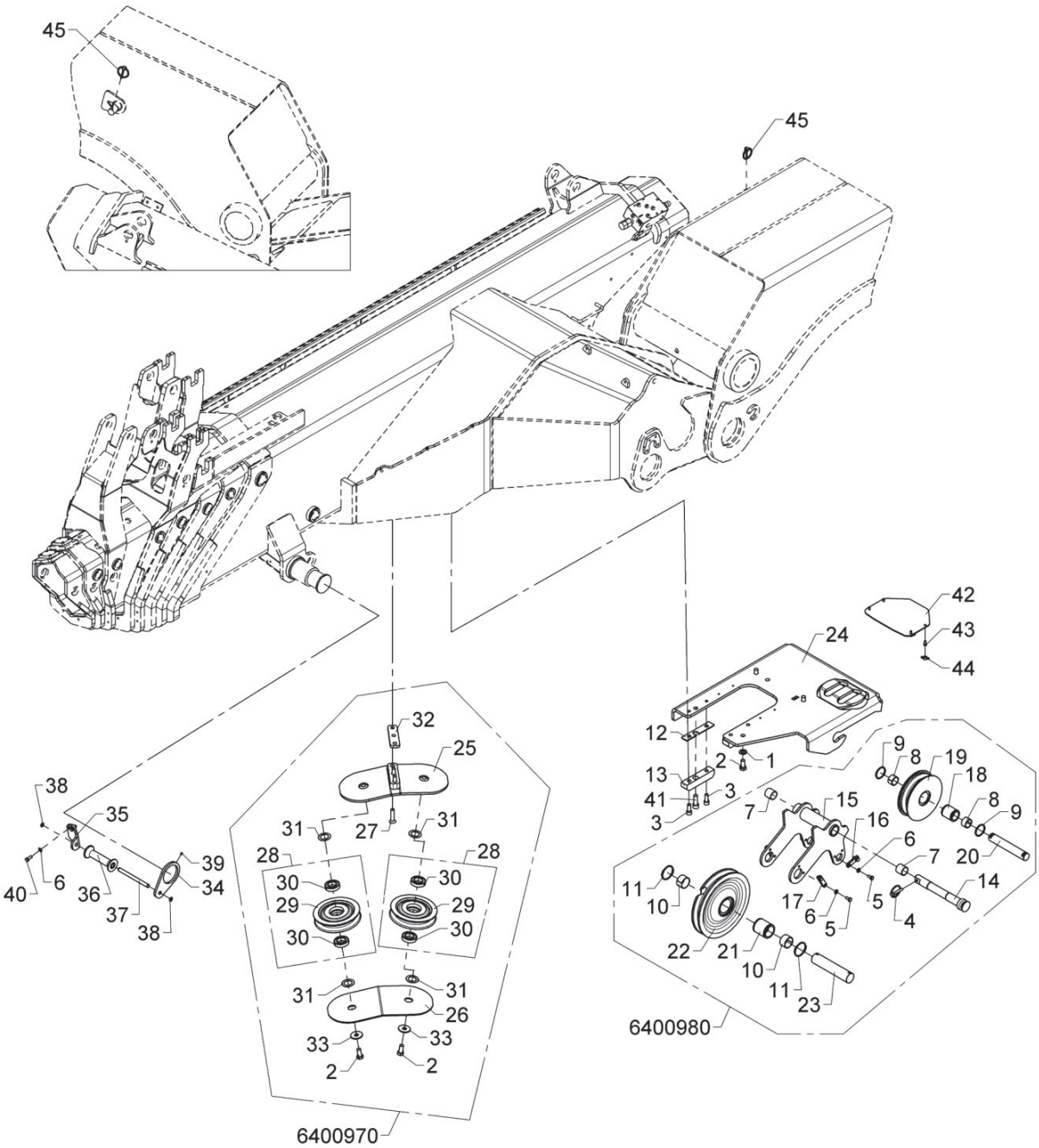

Winch bacis, Power Hoist

Pos	Qty.	Part no.	Description	Remarks
1	5	31178	Washer	14 mm
2	7	30206	Set screw	M14 x 30
3	4	31542	Sockethead screw, stainless	MC12 x 30
4	1	33387	Ring split	ø8 x 45
5	8	30131	Set screw, stainless	M8 x 16
6	10	31147	Face washer, 8 mm	
7	2	23946	Composite bearing	ø30/34 x 30
8	2	23302	Bushing	MB 3020 DU
9	2	33125	Circlip	45U
10	2	23932	Bushing	MB 4025 DU-B
11	2	33132	Circlip Din 471	55U
12	2	6300898	Spacer	
13	2	63538	Stop block	
14	1	6398882	Pin f.suspension f.wire sheave	
15	1	6398877	Wire pulley	
16	2	6300934	Lock plate	
17	2	6182444	Lock plate	
18	1	6300278	Bushing for wire roller	
19	1	63507	Wire roller	
20	1	6398886	Pin for wire sheave	
21	1	6300277	Bushing for wire sheave	
22	1	63508	Sheave	
23	1	6398883	Pin for wire sheave	
24	1	6398874	Bracket for wire guide	
25	1	6398891	Wire pulley	
26	1	6398889	Top plate	
27	3	32291	Countersunk screw M12x55	MK12 x 55
28	2	6304950	Wire sheave, complete	
29	1	68111	Wire sheave	
30	2	23187	Ball bearing	
31	4	23188	Spacer	
32	1	6398888	Spacer	
33	2	31763	Washer	45 x 15 x 3
34	1	6398894	End plate	
35	1	6398895	Plate	
36	1	63510	Guide roller	
37	1	6398896	Shaft	
38	2	33102	Circlip	12U
39	1	30565	Pointed screw, stainless	MSP5 x 8
40	2	30132	Set screw, stainless	
41	1	30483	Screw	MC14 x 40

9520K-RCS, 9520OK-RCS

6400980
6400970
Internal ref. 6400960

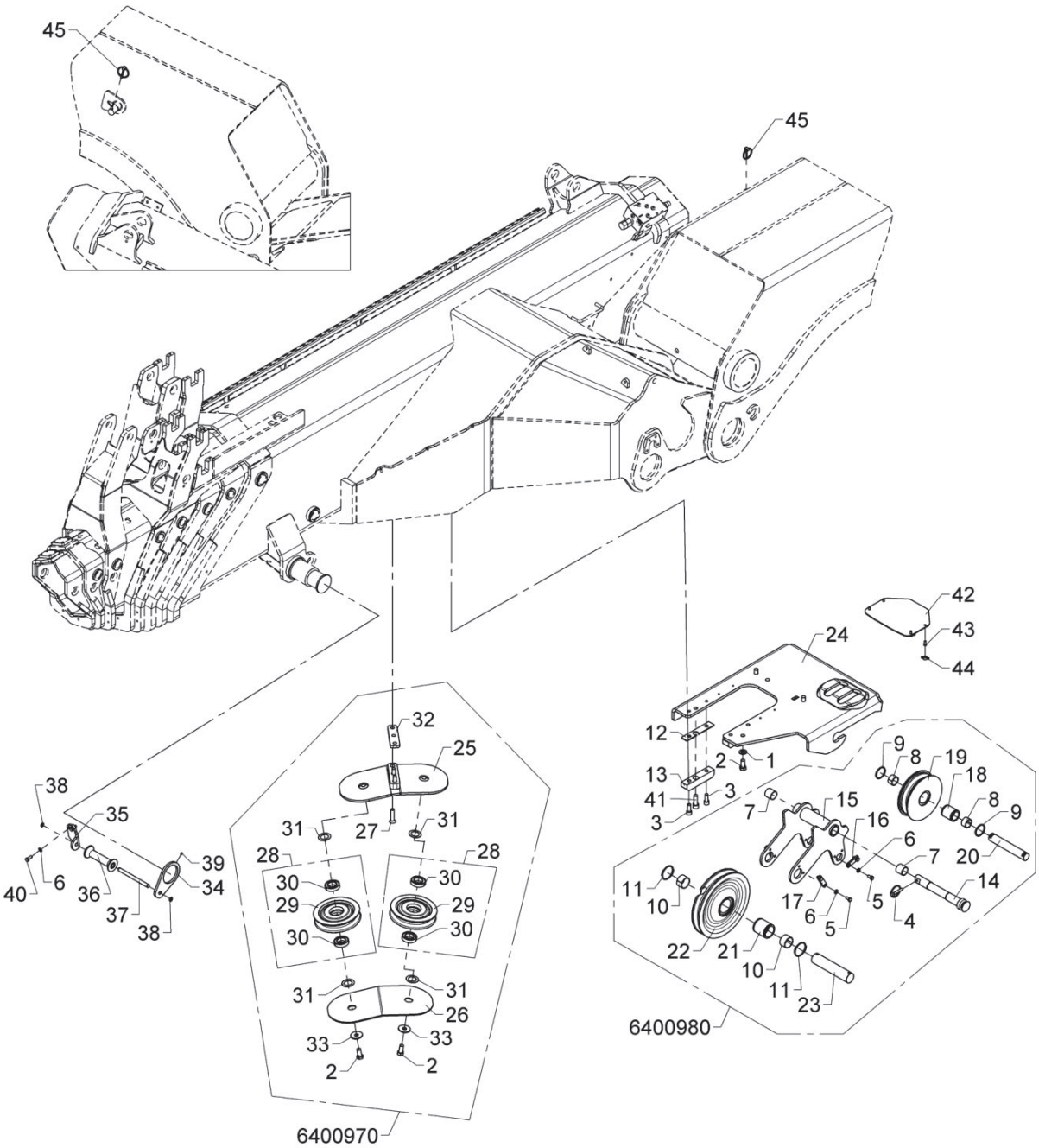

Winch bacis, Power Hoist

Pos	Qty.	Part no.	Description	Remarks
42	1	6398926	Cover plate	
43	4	30423	Sockethead screw	MC6 x 12
44	4	64353	Thumb screw	M6
45	1	31967	Ring split	ø4,5 x 40

9520K-RCS, 9520OK-RCS

Internal ref. 6398930

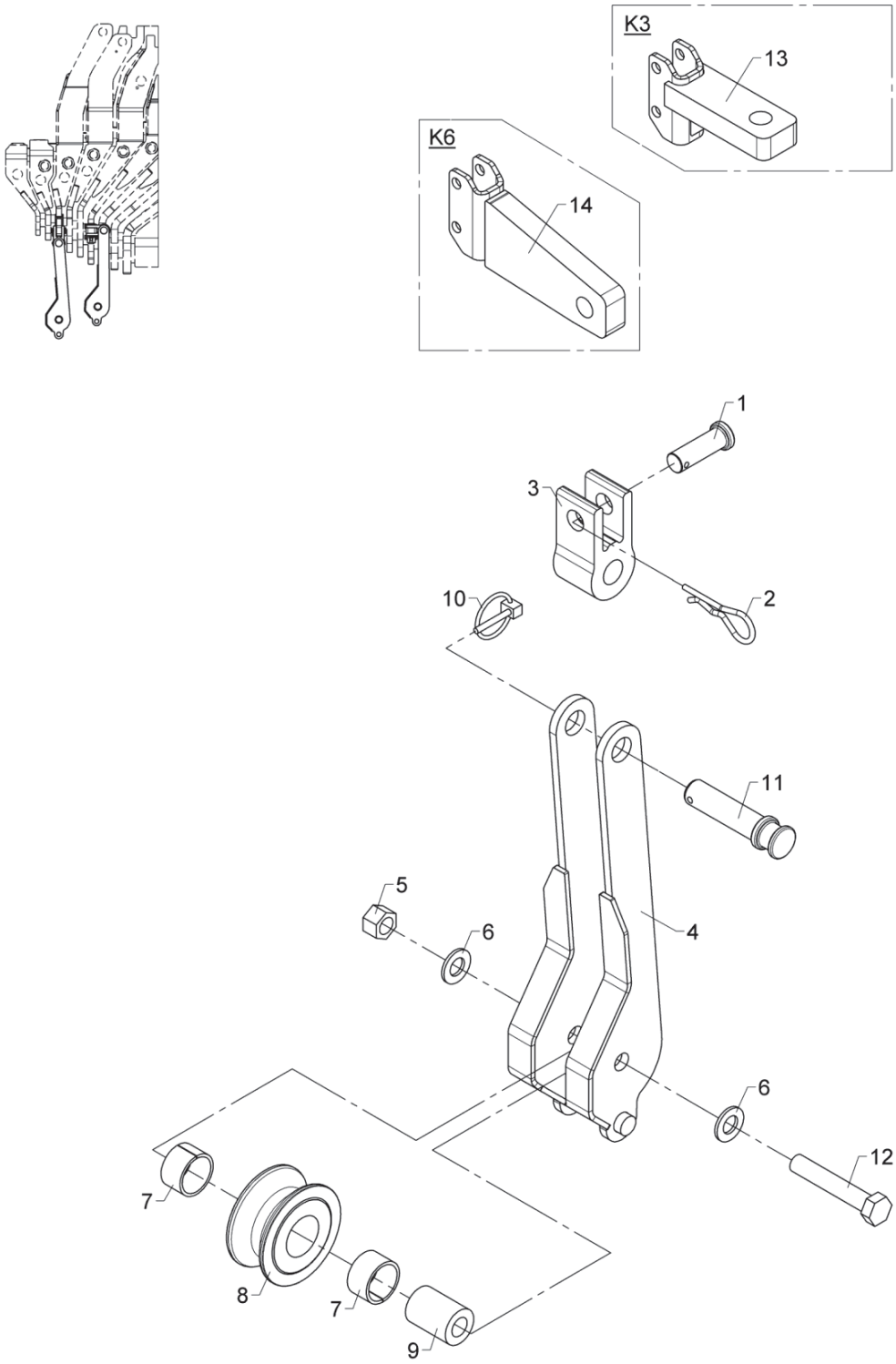

Wire roller guide, K3/K6, Power Hoist

Pos	Qty.	Part no.	Description	Remarks
1	1	6300858	Pin	
2	1	33399	Lock spring	
3	1	6300828	Suspension for roller guide	
4	1	6398921	Wire pulley	
5	1	30891	Lock nut	M14
6	2	31178	Washer	14 mm
7	2	23302	Bushing	MB 3020 DU
8	1	68117	Wire sheave	
9	1	6885504	Distance pipe	
10	1	33385	Ring split	ø4,5 x 27
11	1	6300859	Pin	
12	1	30214	Steel bolt	M14 x 80
13	1	6398911	Bracket	K3
14	1	6398914	Bracket	K6

9520K-RCS, 9520OK-RCS

Internal ref. 6301010

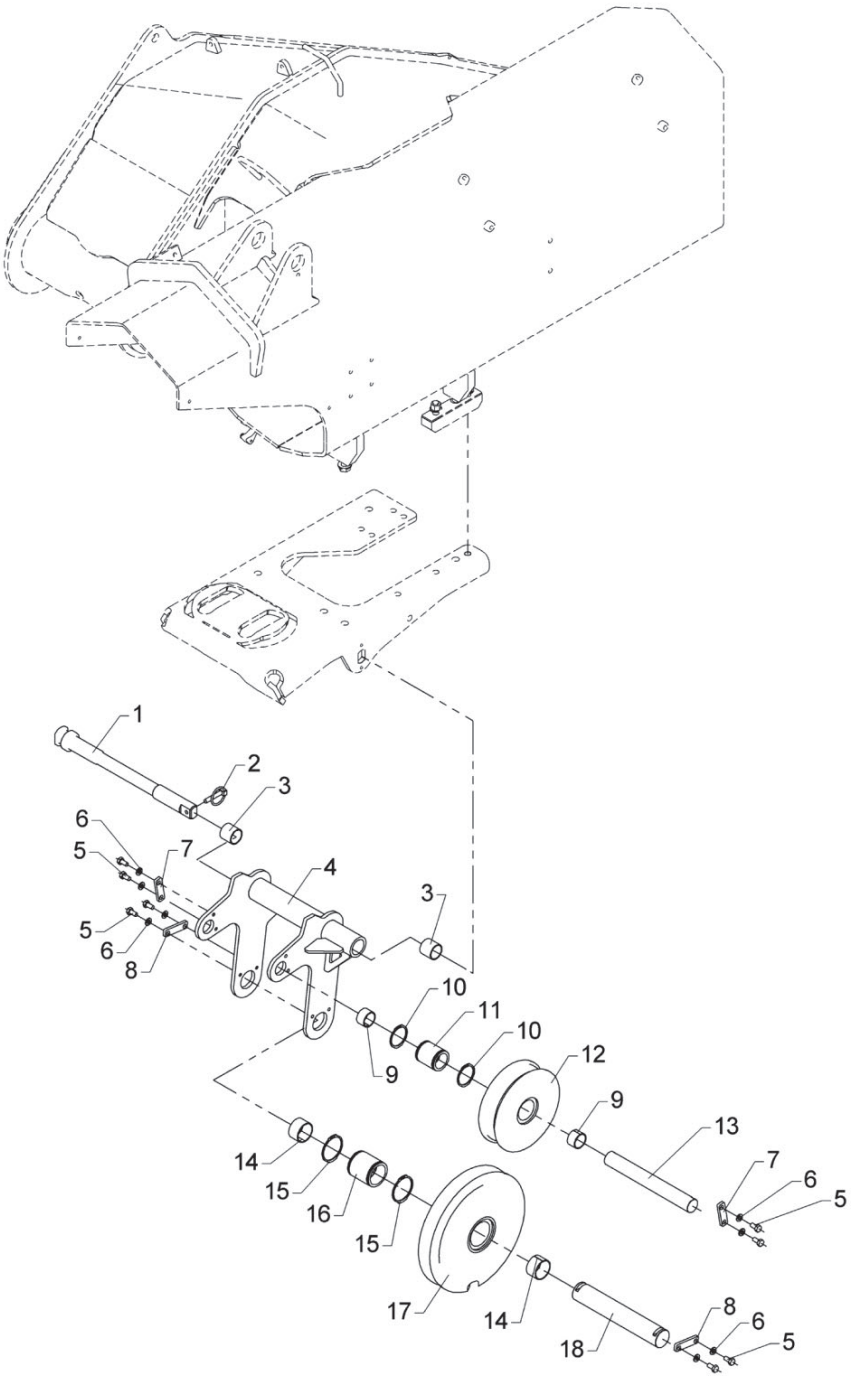

Movable wire guide (OK)

Pos	Qty.	Part no.	Description	Remarks
1	1	6300938	Mounting bolt for wire pulley	
2	1	33387	Ring split	ø8 x 45
3	2	23946	Composite bearing	ø30/34 x 30
4	1	6300932	Wire pulley	
5	8	30131	Set screw, stainless	M8 x 16
6	8	31147	Face washer, 8 mm	
7	2	6300934	Lock plate	
8	2	6182444	Lock plate	
9	2	23933	Bushing	MB 3020 DU-B
10	2	33125	Circlip	45U
11	1	6300278	Bushing for wire roller	
12	1	63507	Wire roller	
13	1	6300937	Pin for wire sheave	
14	2	23932	Bushing	MB 4025 DU-B
15	2	33132	Circlip Din 471	55U
16	1	6300277	Bushing for wire sheave	
17	1	63508	Sheave	
18	1	6300826	Pin for wire sheave	

9520K-RCS, 9520OK-RCS

6391910
Internal ref. 6390900

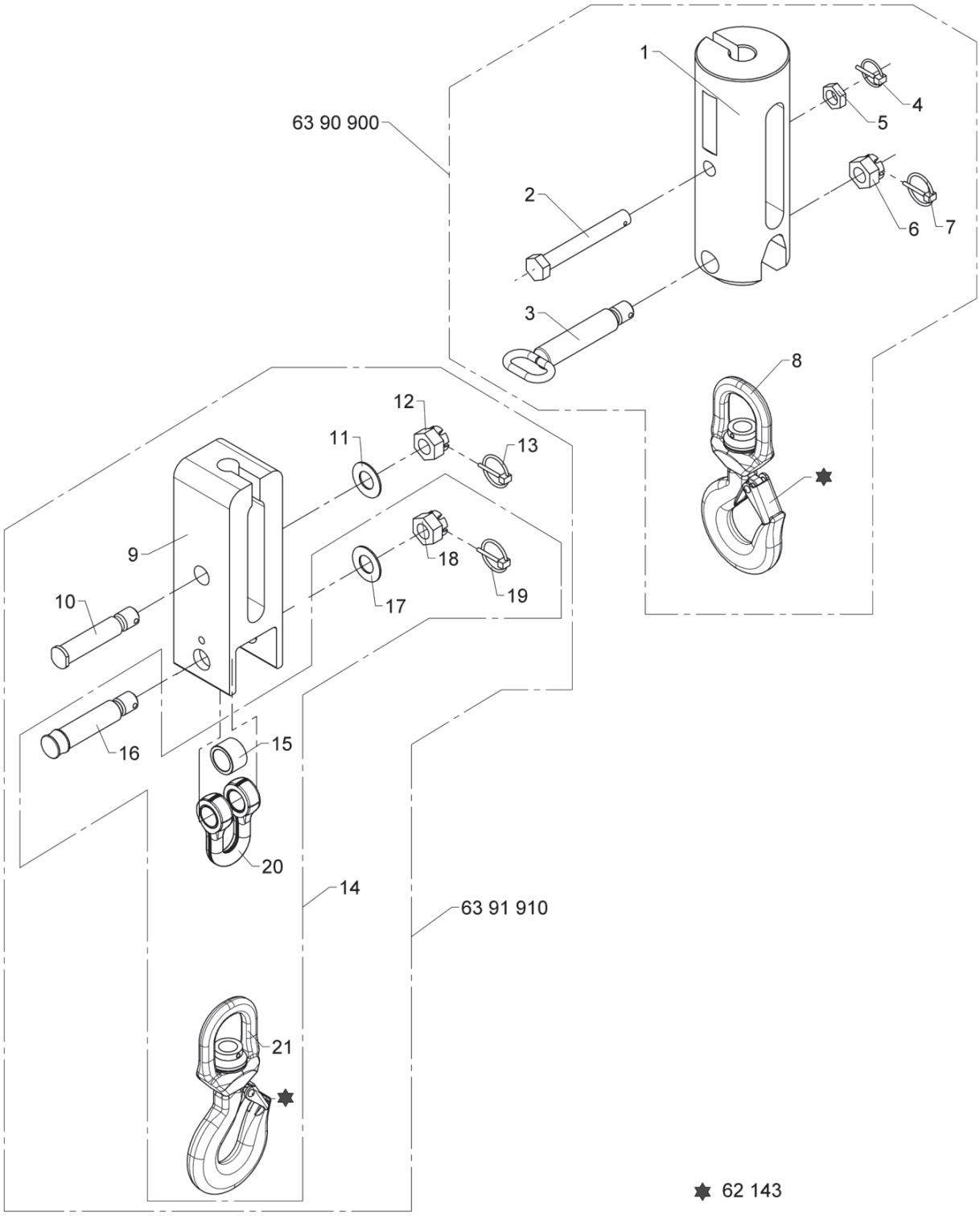

Swivel hook, 2.5 t and 3.2 t

Pos	Qty.	Part no.	Description	Remarks
		6390900	Swivel hook 3.2t	
		6391910	Swivel hook 2.5t	
1	1	6256452	Swivel hook	
2	1	6256464	Pin	
3	1	6301005	Lock pin	
4	1	33385	Ring split	ø4,5 x 27
5	1	30810	Counter nut	M20
6	1	30837	Nut	M24
7	1	31967	Ring split	ø4,5 x 40
8	1	62169	Hook with ball bearing	
9	1	6340958	Counterweight	
10	1	6340959	Pin	
11	1	31128	Washer	24 mm
12	1	30837	Nut	M24
13	1	31967	Ring split	ø4,5 x 40
14	1	6391920	Hook suspension	
15	1	68094	Spacer, ø40 / 30 x 26	ø40 / 30 x 26
16	1	6304458	Pin for suspension	
17	1	31128	Washer	24 mm
18	1	30837	Nut	M24
19	1	31967	Ring split	ø4,5 x 40
20	1	6395541	Shackle 8 t	
21	1	62169	Hook with ball bearing	

9520K-RCS, 9520OK-RCS

Internal ref. 6301060

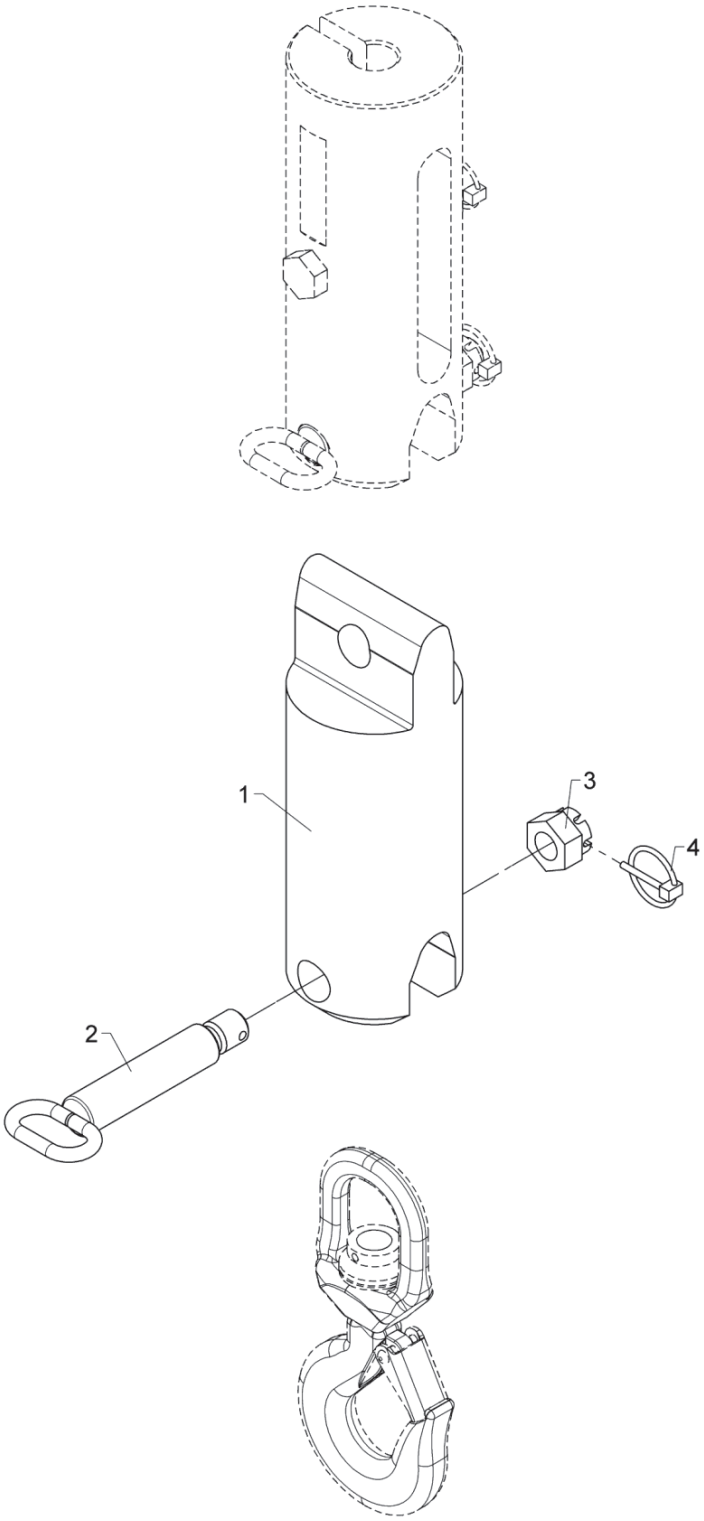

559 13 340

Counter weight cpl.

From loader 1370001
To loader
Created 21-10-03
Modified

Pos	Qty.	Part no.	Description	Remarks
1	1	6300839	Counter weight	
2	1	6301005	Lock pin	
3	1	30837	Nut	M24
4	1	31967	Ring split	ø4,5 x 40

9520K-RCS, 9520OK-RCS

Internal ref. 6668680

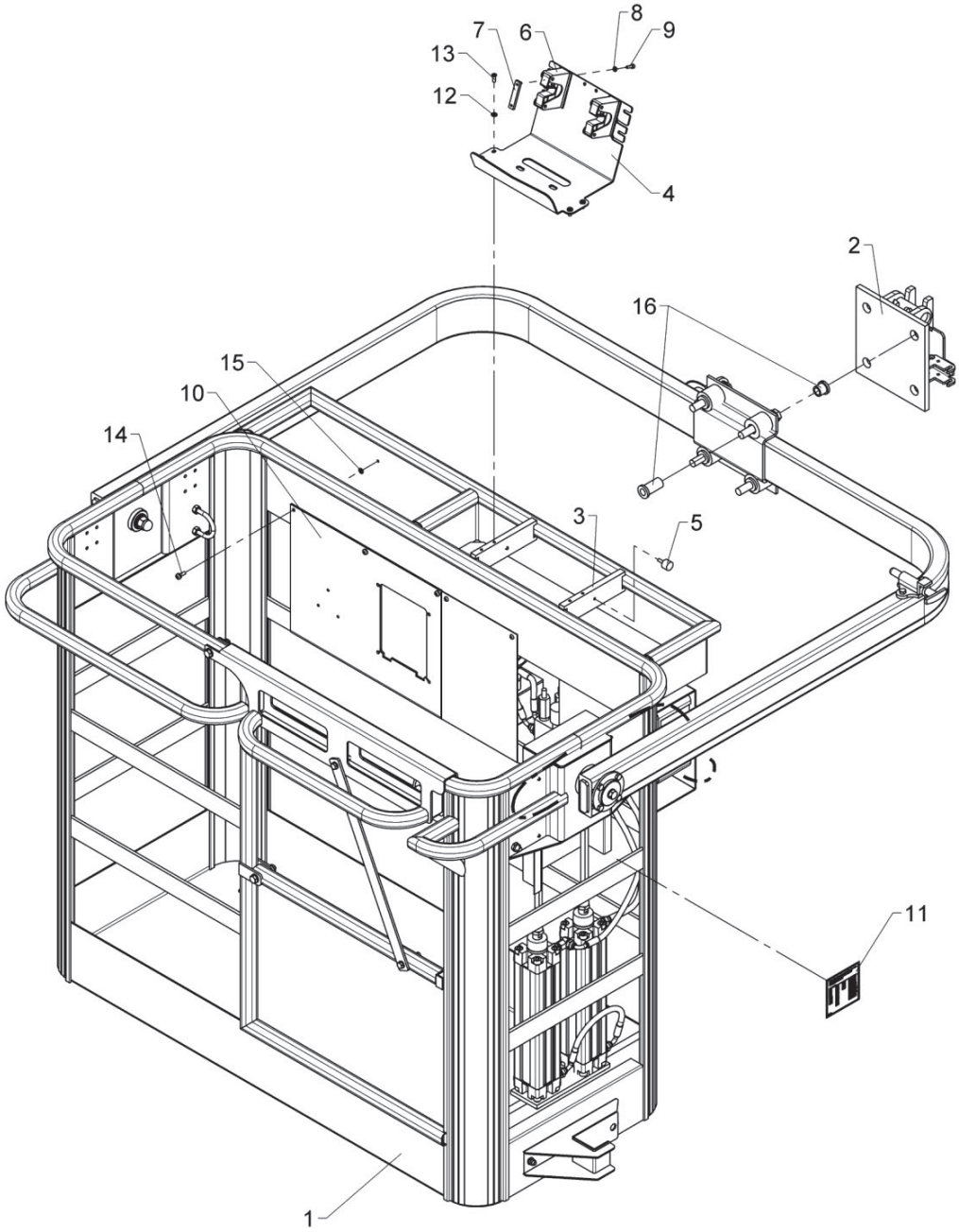

Basket, PB 800 Hy

Pos	Qty.	Part no.	Description	Remarks
1	1	47674	Personnel basket	PB 800 Hy
2	1	8518500	Coupling for MEWP	
3	2	68017	Bracket	
4	1	6340901	Bracket, Scanreco RC box	
5	2	61916	Torsion balancer Type 4	
6	2	46454	Bracket	
7	2	8507105	Threaded plate (Scanreco G2)	
8	4	31189	Washer	5 mm
9	4	30433	Screw	MC5 x 16
10	1	7004033	Bracket for connection box	
11	1	68917	Operating label lift for basket	
12	4	32302	Face washer, stainless	6 mm
13	4	32490	Screw	MC6 x 16
14	3	32480	Screw	M6 x 18
15	2	31154	Spring washer, stainless	6 mm
16	4	47815	Bushing	

9520K-RCS, 9520OK-RCS

Internal ref. 6668690

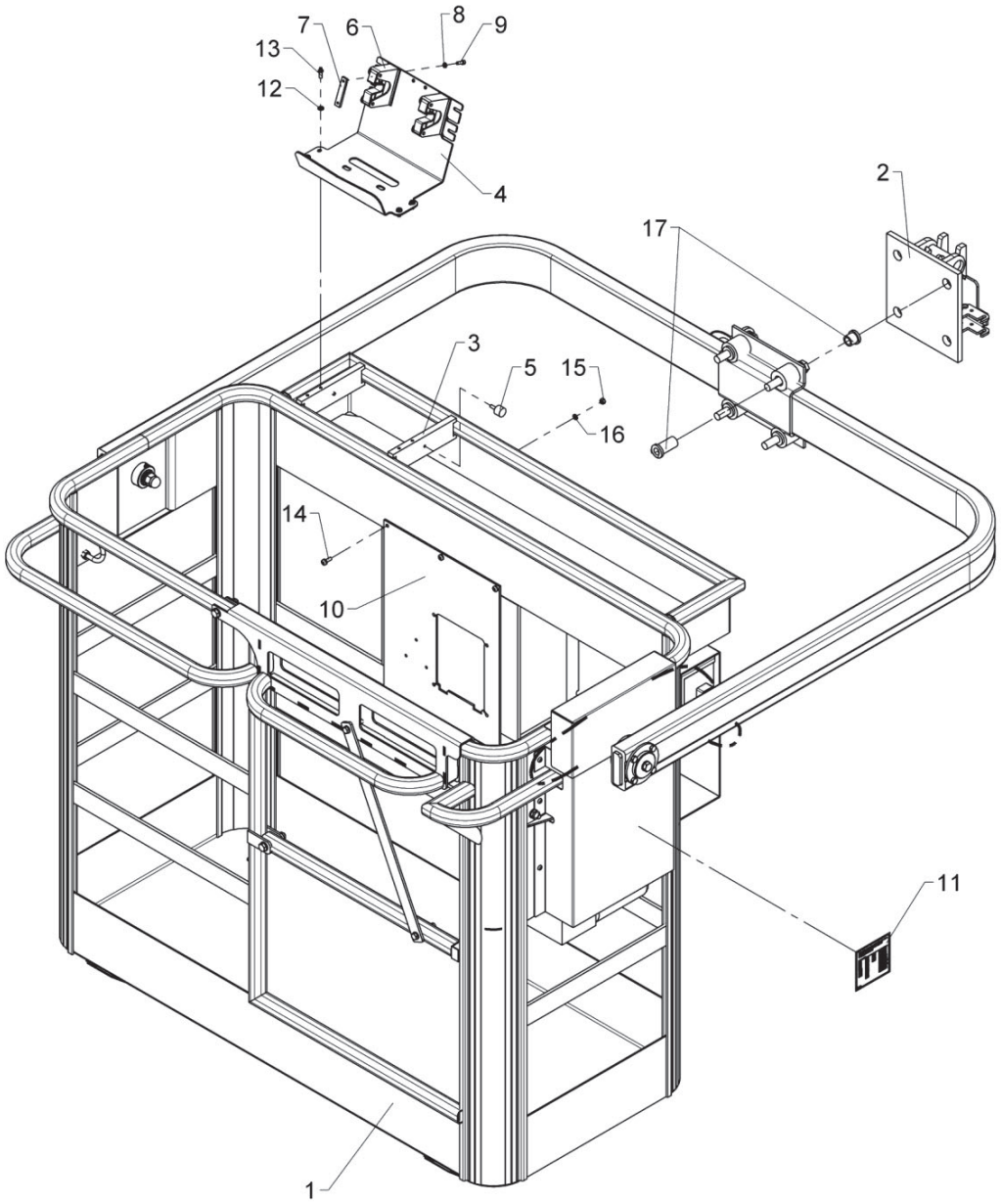

Basket, PB 800 E

Pos	Qty.	Part no.	Description	Remarks
1	1	47820	Personnel basket	PB 800 E
2	1	8518500	Coupling for MEWP	
3	2	68017	Bracket	
4	1	6340901	Bracket, Scanreco RC box	
5	2	61916	Torsion balancer Type 4	
6	2	46454	Bracket	
7	2	8507105	Threaded plate (Scanreco G2)	
8	4	31189	Washer	5 mm
9	4	30433	Screw	MC5 x 16
10	1	7004034	Conn. box bracket (RCL box)	
11	1	68917	Operating label lift for basket	
12	4	32302	Face washer, stainless	6 mm
13	4	32490	Screw	MC6 x 16
14	3	32480	Screw	M6 x 18
15	3	30884	Lock nut, stainless	M6
16	3	31154	Spring washer, stainless	6 mm
17	4	47815	Bushing	

9520K-RCS, 9520OK-RCS

Internal ref. 6668670

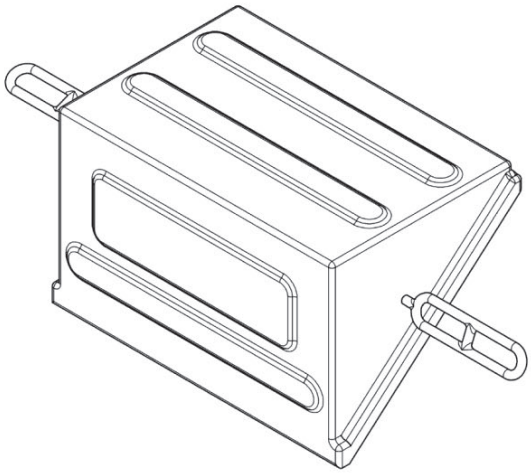

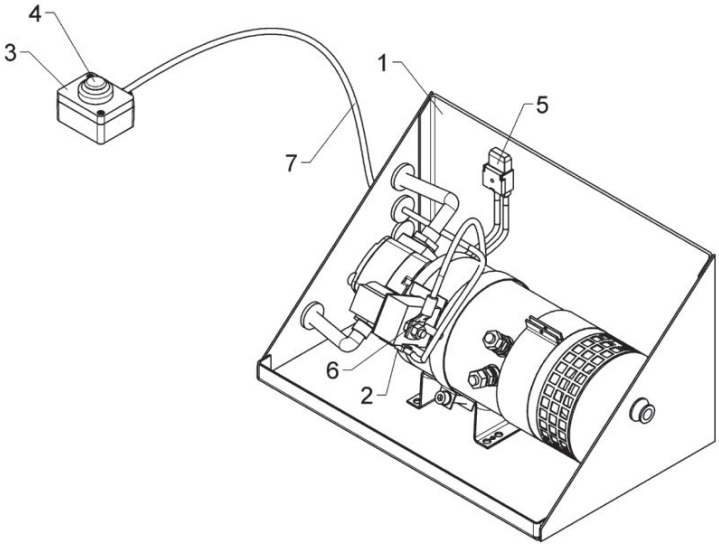

Emergency pump, basket loader

Pos	Qty.	Part no.	Description	Remarks
1	1	50080	Emergency pump, basket loader	
2	3	27429	Clamp	
3	1	28384	Connection box	
4	1	27333	Push button	
5	1	27250	Fuse holder	
6	1	28347	Clip	
7	3	28249	Cable 2 x 0.75	10 mtr.

9520K-RCS, 9520OK-RCS

Internal ref. 6397950

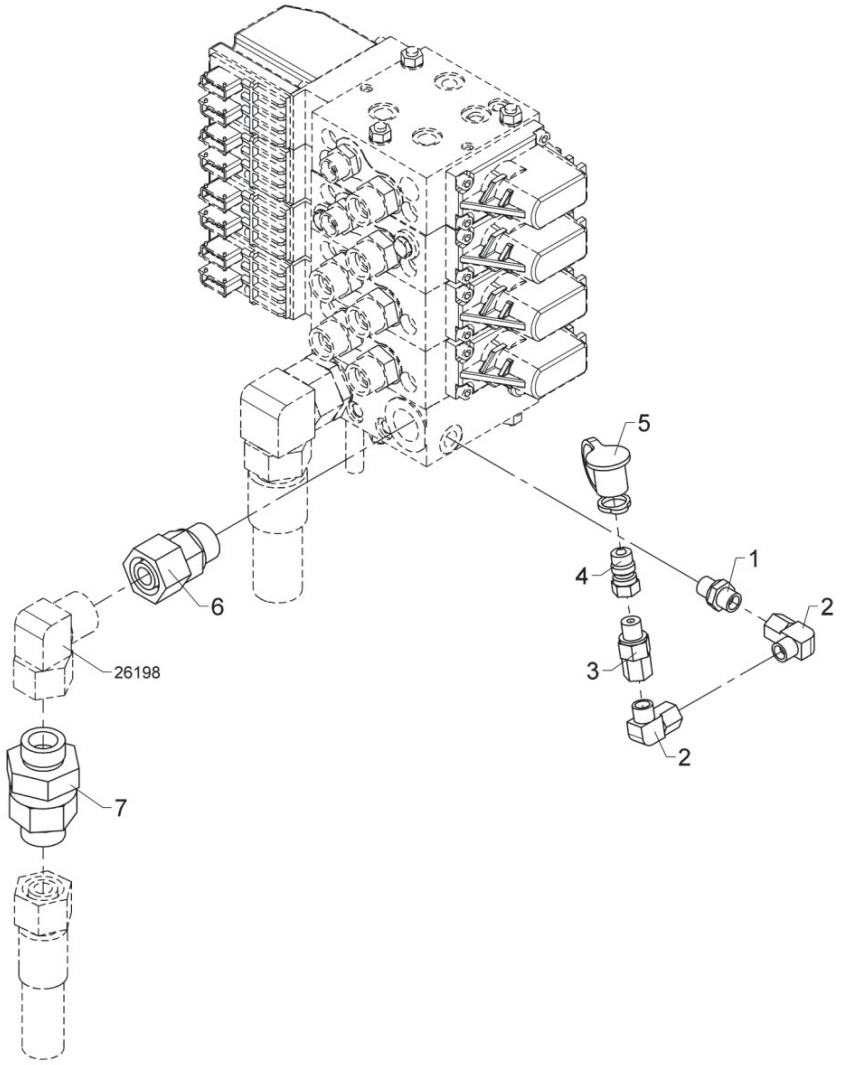

Parts for emergency pump (1 circuit)

Pos	Qty.	Part no.	Description	Remarks
1	1	25109	Connection	GES 8 LR-WD
2	2	26170	Elbow connection	EWSD 8 L
3	1	26104	Connection	EGESD 8 LR-WD
4	1	69702	1/4" Connector, male	450 bar
5	1	60699	Dust cap. F.	1/4"
6	1	26358	Connection	EGESD 20 SR-WD
7	1	26844	Check valve	P-RW 20 S

9520K-RCS, 9520OK-RCS

Internal ref. 6397960

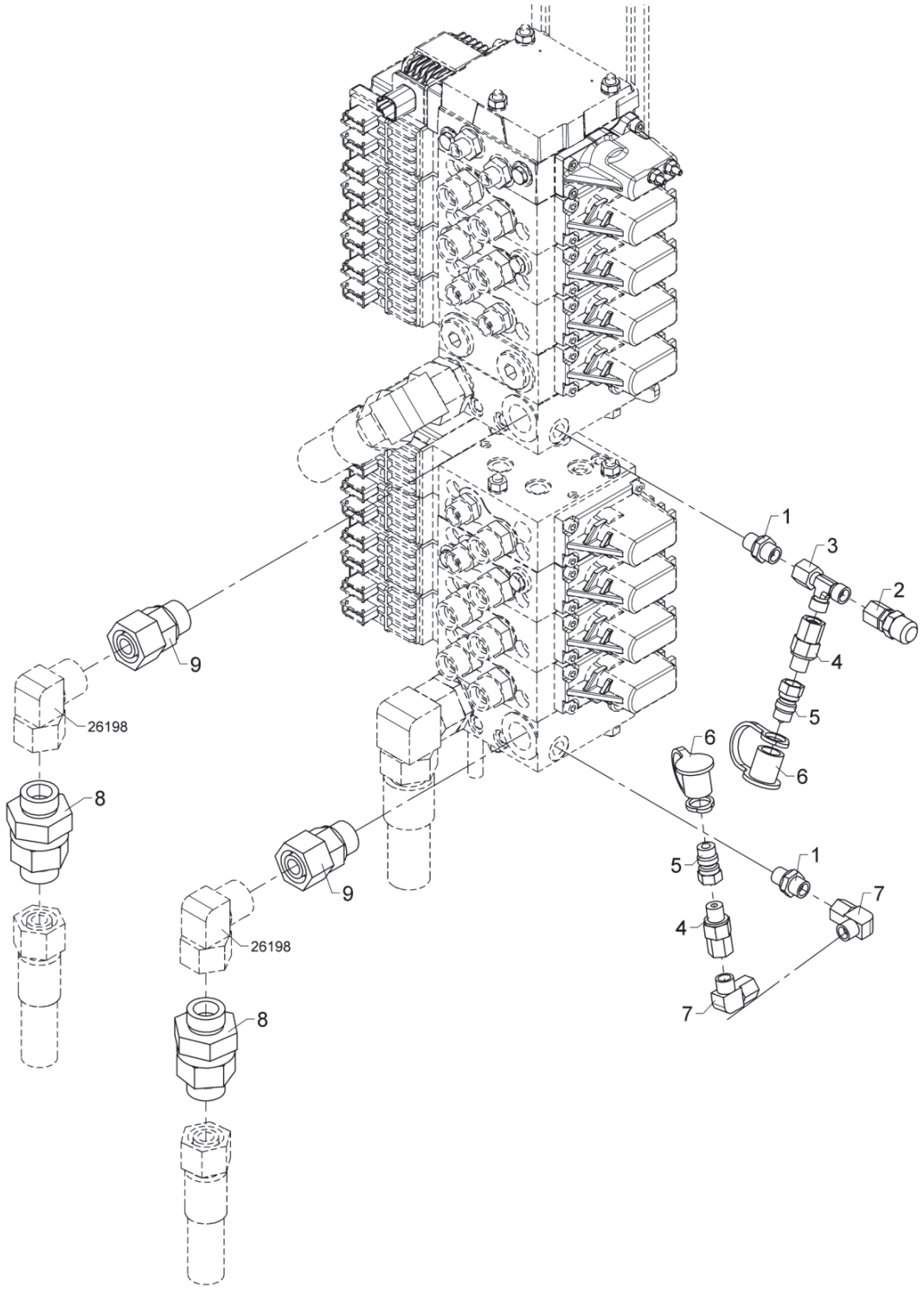

Parts for emergency pump (2 circuits)

Pos	Qty.	Part no.	Description	Remarks
1	2	25109	Connection	GES 8 LR-WD
2	1	26148	Connection	
3	1	25249	Connection	ELSD 8 L
4	2	26104	Connection	EGESD 8 LR-WD
5	2	69702	1/4" Connector, male	1/4"
6	2	60699	Dust cap. F.	1/4"
7	2	26170	Elbow connection	EWSD 8 L
8	2	26844	Check valve	P-RW 20 S
9	2	26358	Connection	EGESD 20 SR-WD

9520K-RCS, 9520OK-RCS

Internal ref. 6302990

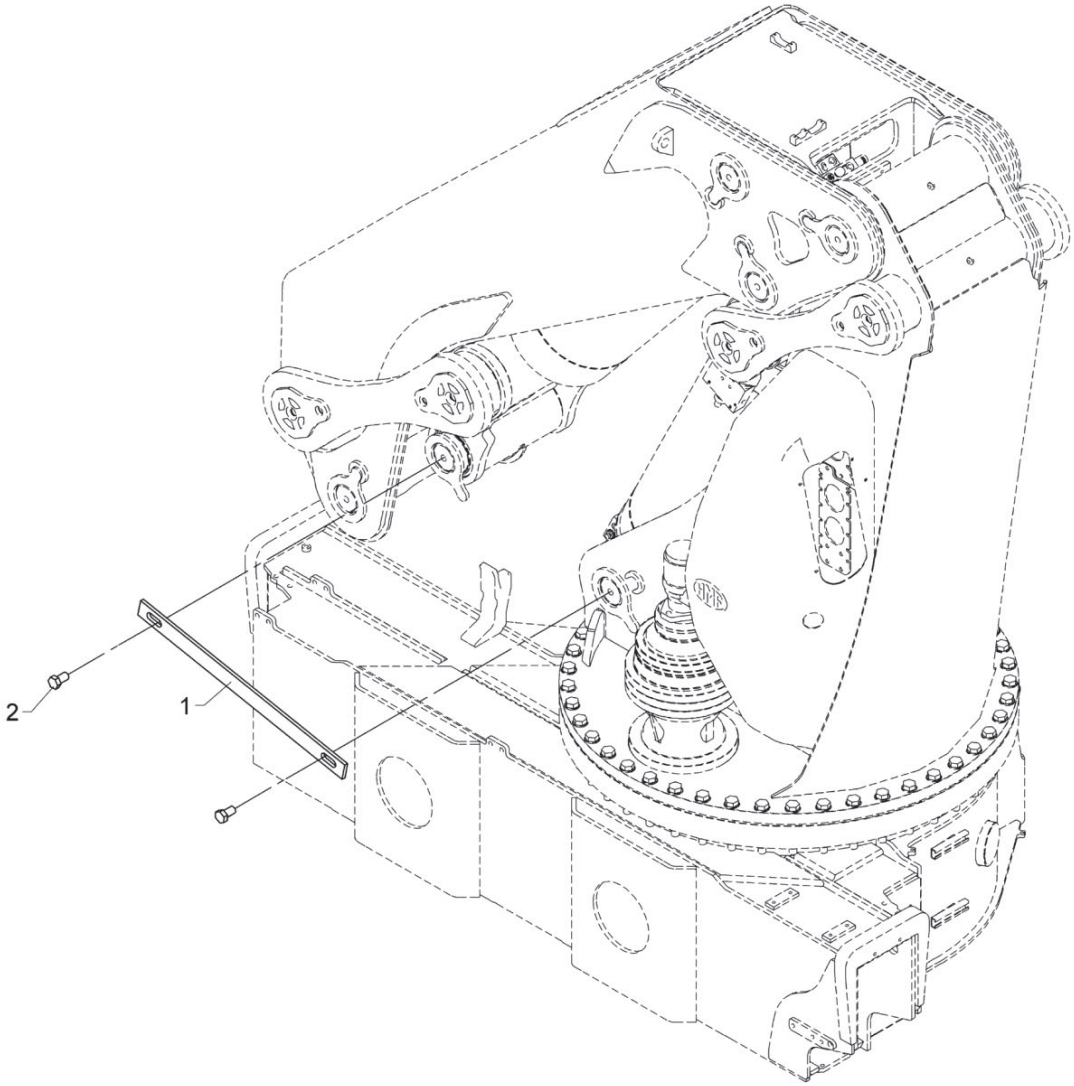

Brackets

Pos	Qty.	Part no.	Description	Remarks
1	1	6302997	Transport fittings	
2	2	30242	Set screw	M20 x 35

9520K-RCS, 9520OK-RCS

Internal ref. 6398550

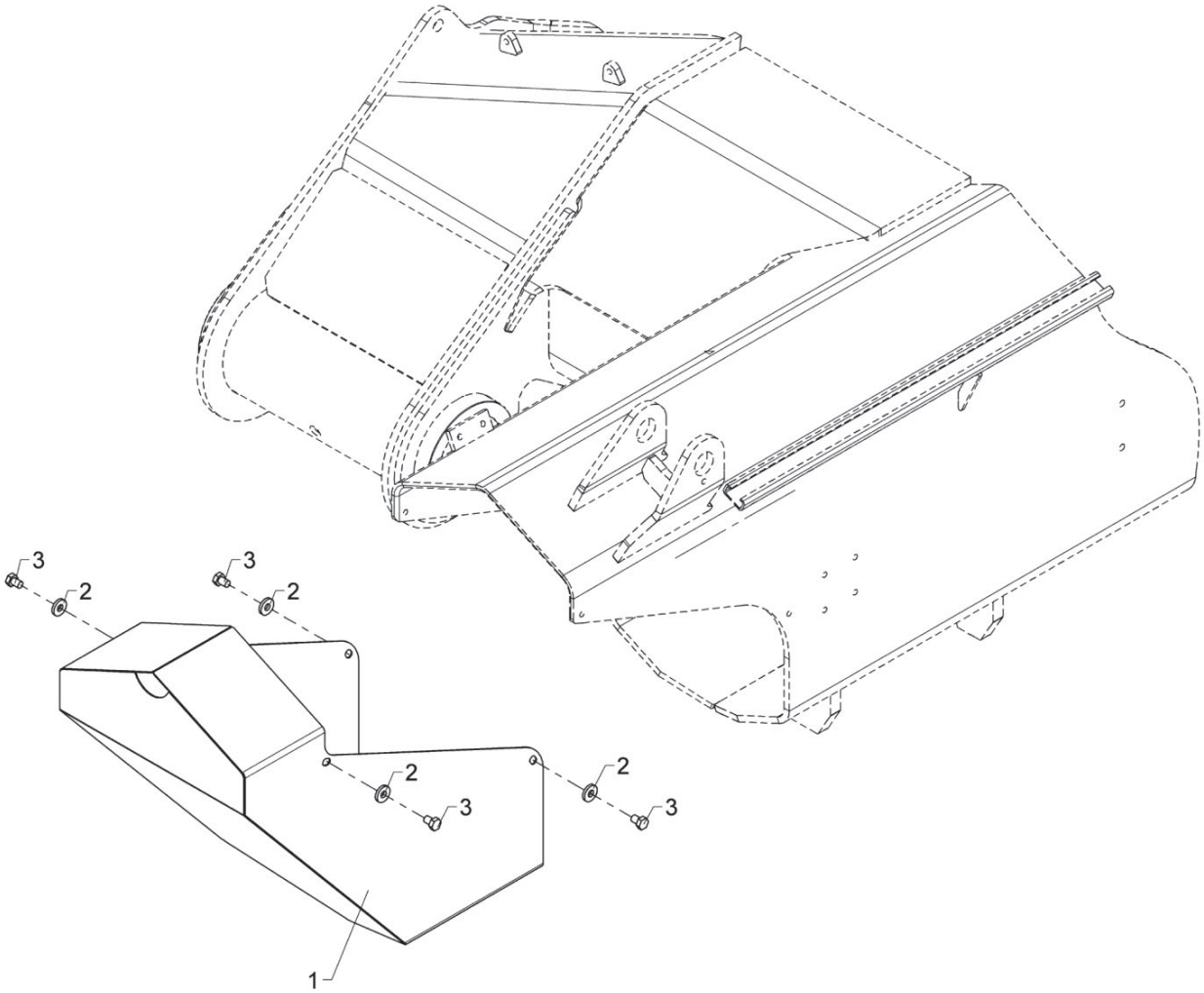

BOM obsolete

559 16 020

From loader 1370001
To loader

Created 14-05-18
Modified

Shield at the end of the jib (K)

Pos	Qty.	Part no.	Description	Remarks
1	1	6398107	Protection plate, jib	
2	4	31756	Washer	
3	4	30152	Set screw	M10 x 14

9520K-RCS, 9520OK-RCS

Internal ref. 6398550

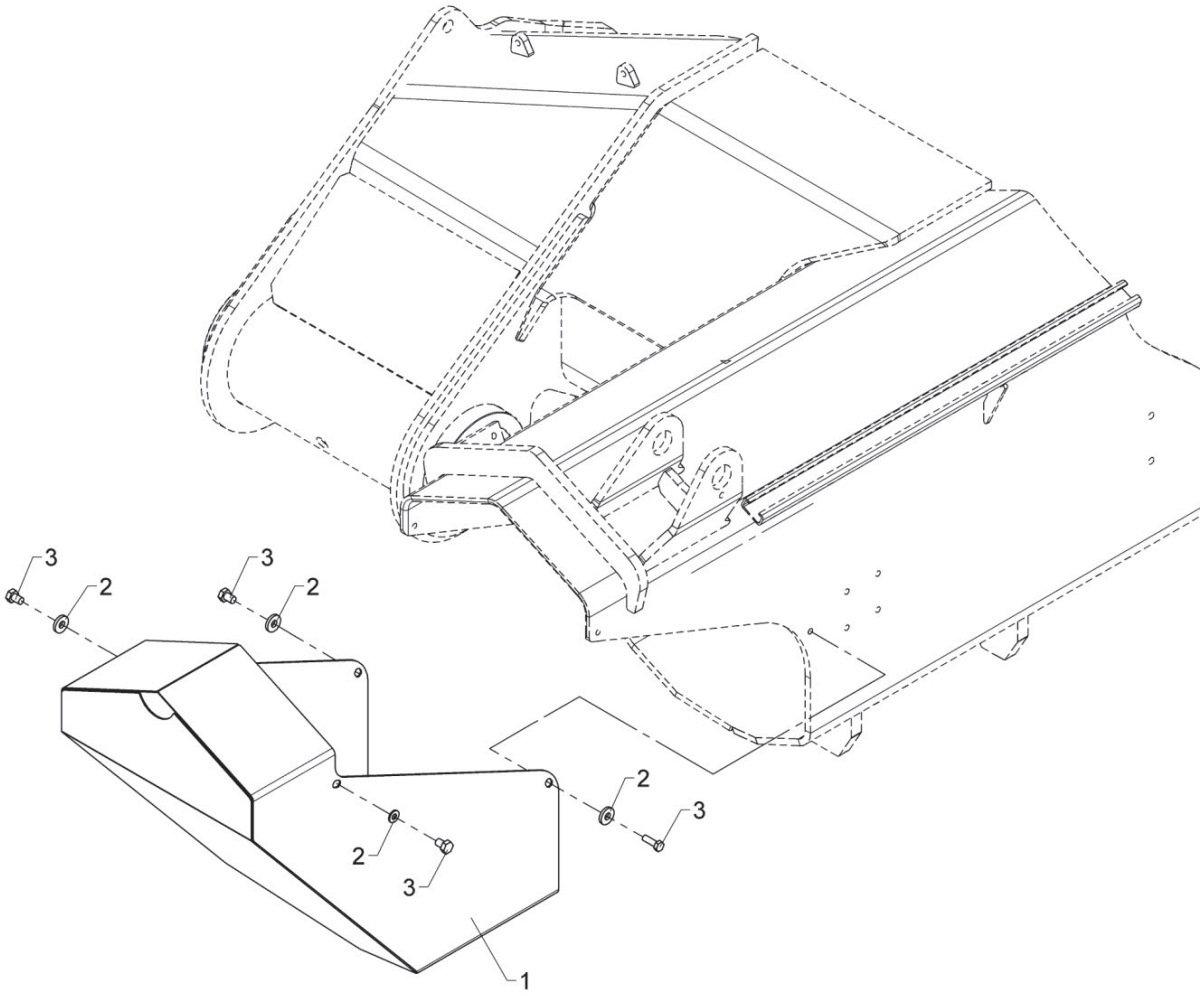

From loader
To loader
Created 31-05-19
Modified

Shield at the end of the jib (K)

Pos	Qty.	Part no.	Description	Remarks
1	1	6398177	Jib guard, welded	
2	4	31756	Washer	
3	4	30152	Set screw	M10 x 14

9520K-RCS, 9520OK-RCS

Internal ref. 6302510

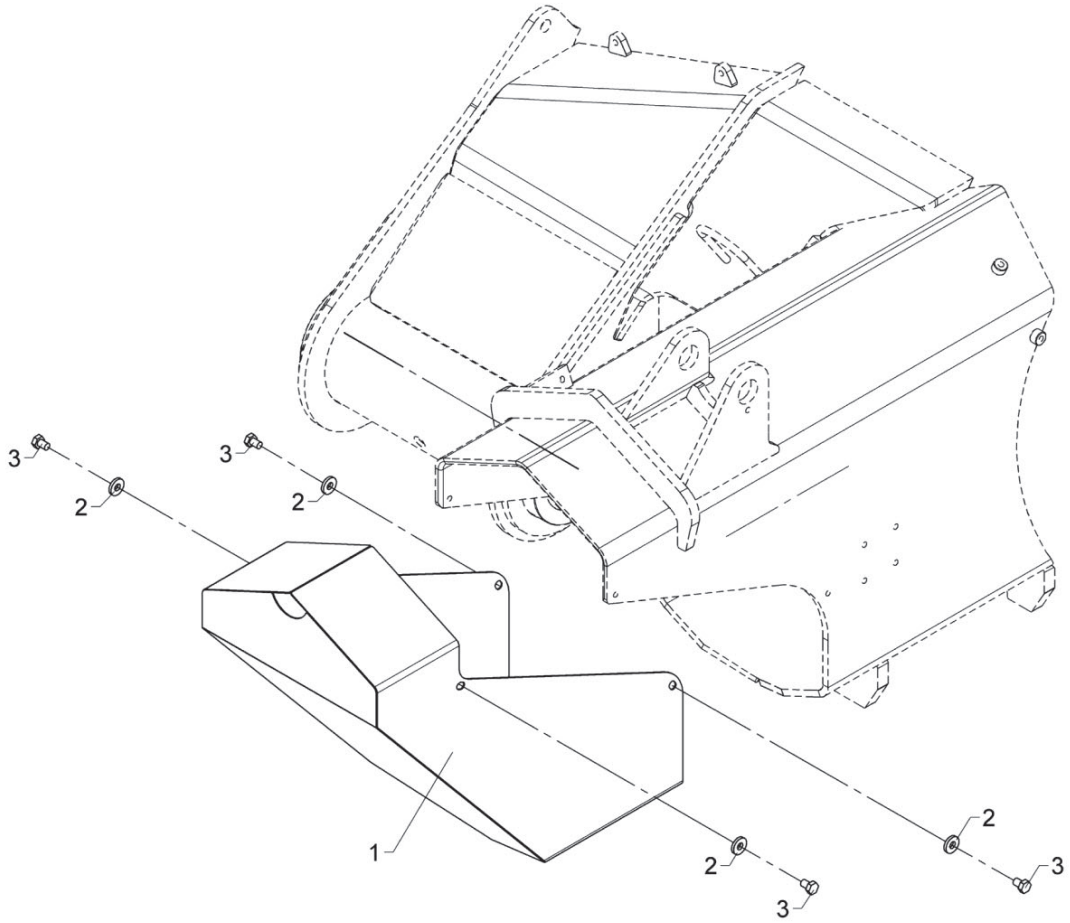

559 16 030

From loader 1370001
To loader

Created 03-08-18
Modified

Shield at the end of the jib (OK)

Pos	Qty.	Part no.	Description	Remarks
1	1	6303107	Protection plate, jib	
2	4	31756	Washer	10 mm
3	4	30152	Set screw	M10 x 14

9520K-RCS, 9520OK-RCS

Internal ref. 1014330

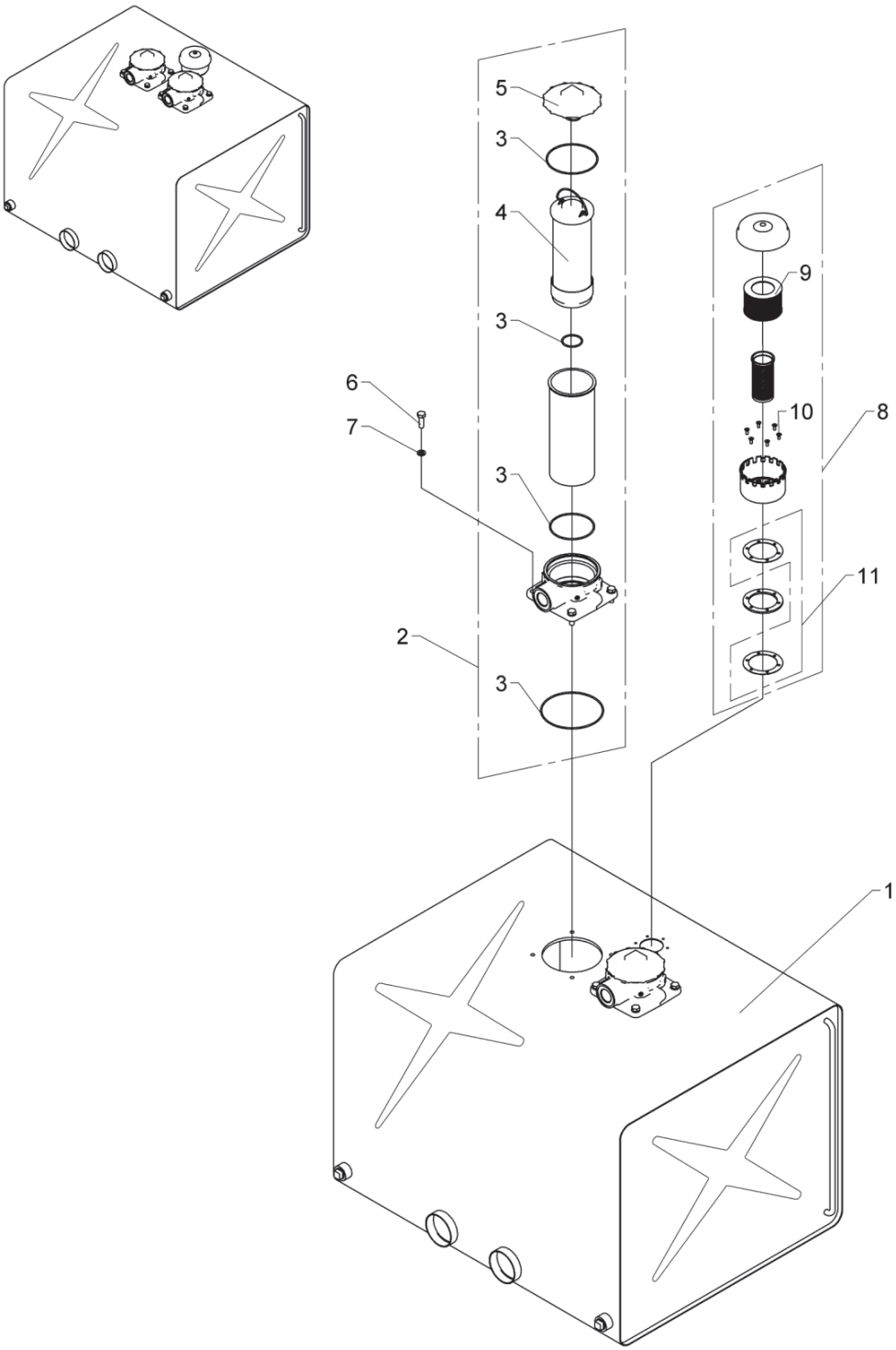

External hydraulic tank, 320L

Pos	Qty.	Part no.	Description	Remarks
1	1	58708	Oil tank 320 l	
2	2	49408	Return filter	
3	2	49419	Seal kit	
4	2	49409	Filter	
5	2	49423	Cover	
6	8	30156	Set screw, stainless	M10 x 30
7	8	31571	Spring washer, stainless	10 mm
8	1	60275	Air filter	
9	1	60276	Filter	
10	6	32405	Sockethead screw	MK5 x 12
11	1	62399	Seal kit for i.a. 60275	

9520K-RCS, 9520OK-RCS

Internal ref. 1014340

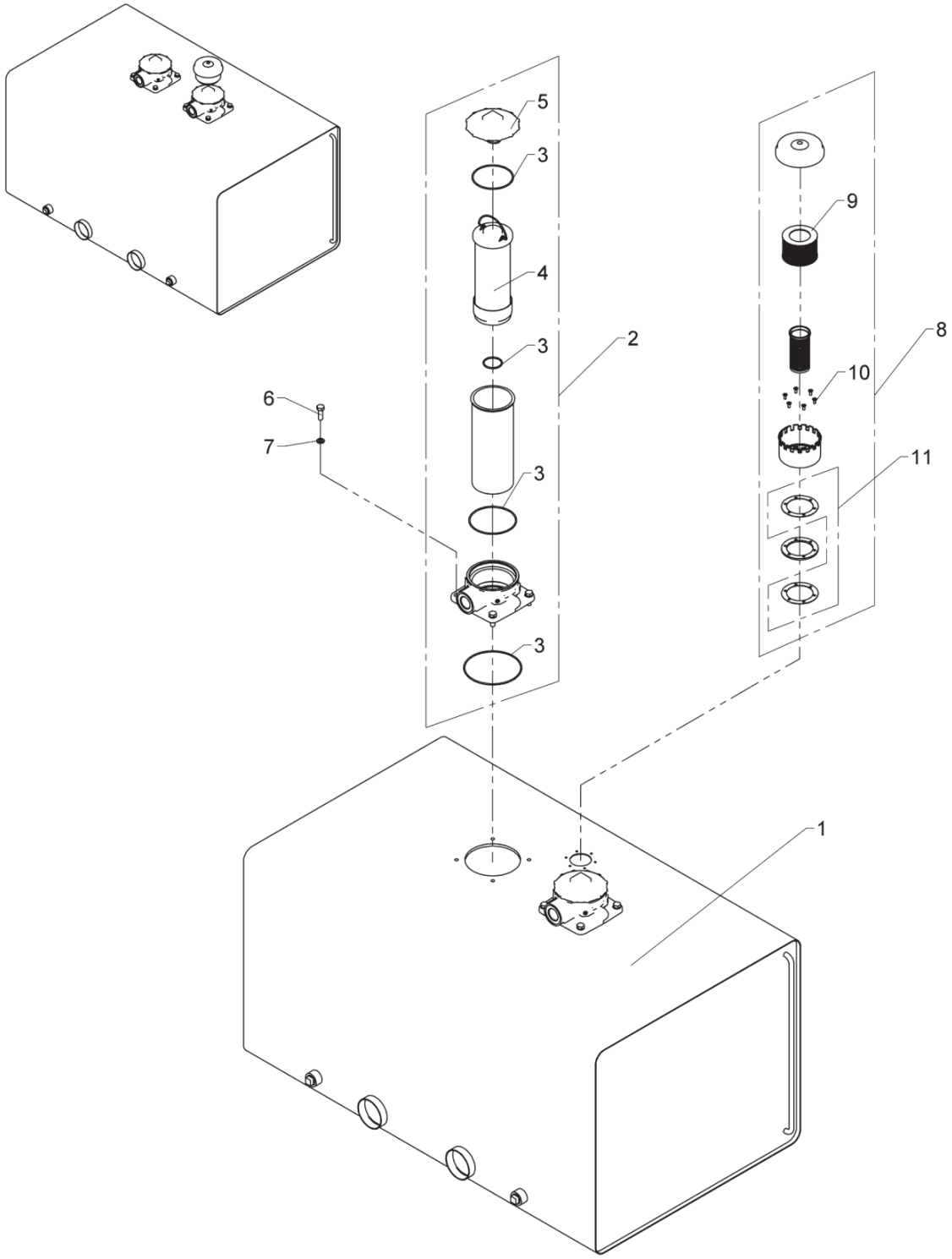

External hydraulic tank, 420L

Pos	Qty.	Part no.	Description	Remarks
1	1	58709	Oil tank, 420 l	
2	2	49408	Return filter	
3	2	49419	Seal kit	
4	2	49409	Filter	
5	2	49423	Cover	
6	8	30156	Set screw, stainless	M10 x 30
7	8	31571	Spring washer, stainless	10 mm
8	1	60275	Air filter	
9	1	60276	Filter	
10	6	32405	Sockethead screw	MK5 x 12
11	1	62399	Seal kit for i.a. 60275	

9520K-RCS, 9520OK-RCS

Internal ref. 7006307

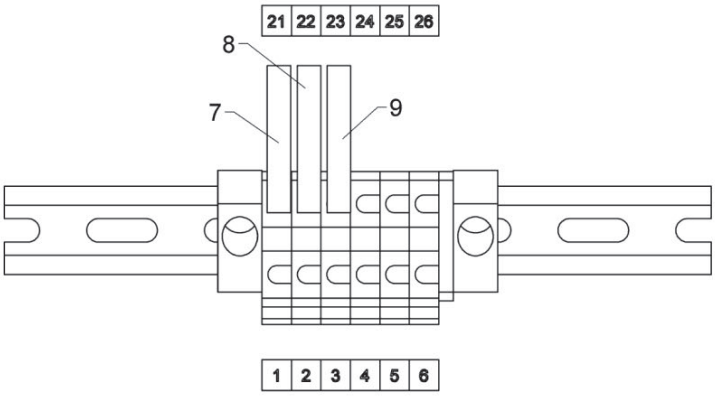

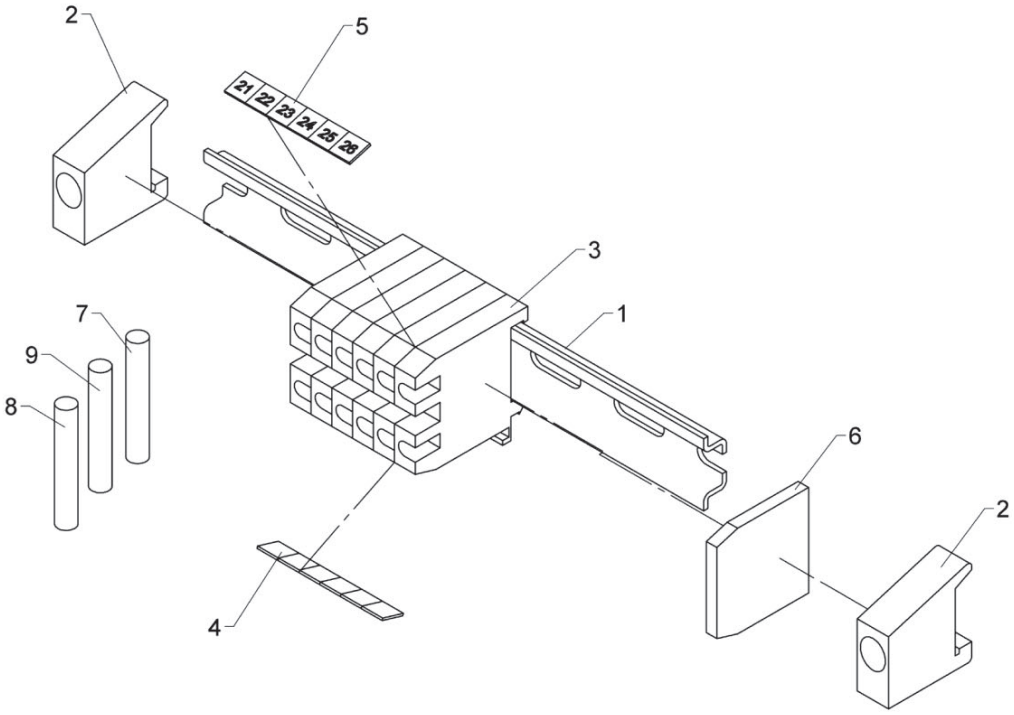

559 20 050

Terminal block for RCL box with RC

From loader 1370001
To loader
Created 26-10-18
Modified

Pos	Qty.	Part no.	Description	Remarks
1	1	28013	Guide rail	120 mm.
2	2	28012	End angle	
3	6	28010	Terminal	
4	1	28019	Labels nos. 1-10	
5	1	28965	Dekafix labels 21-30	
6	1	28011	End plate	
7	1	27202	Cable	0,3 m
8	1	27204	Wire, 1 x1.5mm2	0,3 m
9	1	27120	Cable	0,3 m

9520K-RCS, 9520OK-RCS

Internal ref. 7008040

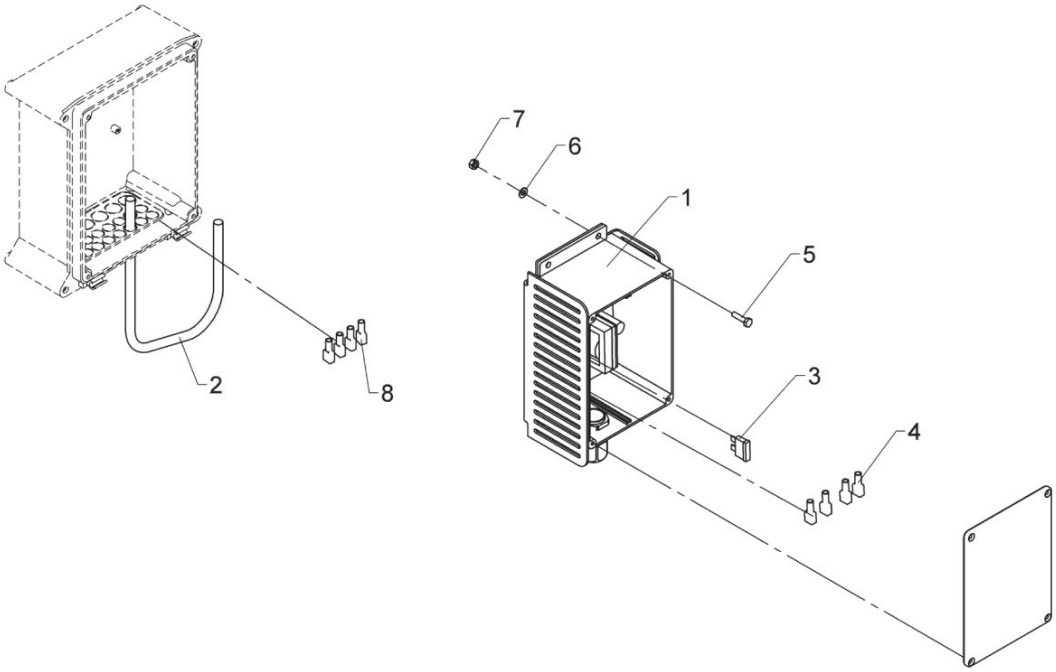

12 V converter

Pos	Qty.	Part no.	Description	Remarks
1	1	29478	Converter, 12-24 V, complete	
2	1	28278	Cable 4 x 2.5	
3	1	27378	Fuse 25 Amp	
4	4	27428	Clip	
5	4	30125	Set screw	M4 x 16
6	4	31188	Washer, stainless	4 mm
7	4	30857	Lock nut	M4
8	4	27428	Clip	

9520K-RCS, 9520OK-RCS

Internal ref. 7008010

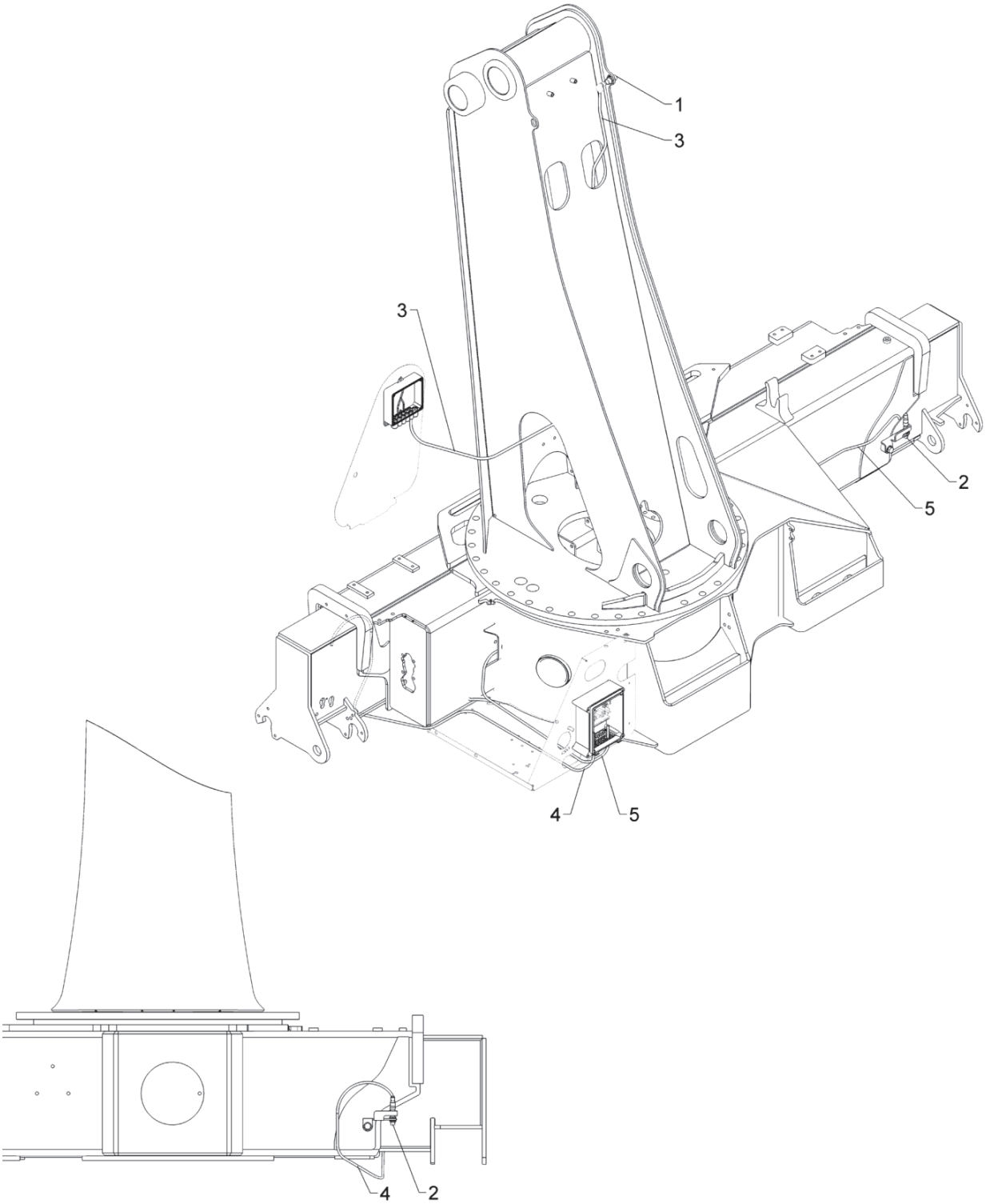

BEHEW

Pos	Qty.	Part no.	Description	Remarks
1	1	28980	Proximity switch	
2	2	29447	Proximity switchM12 8mm PNP-NO	
3	1	28077	Cable with plug	
4	1	29223	Cable with socket, 2 m	
5	1	29224	Cable with socket, 5 m	

9520K-RCS, 9520OK-RCS

Internal ref. 7002460

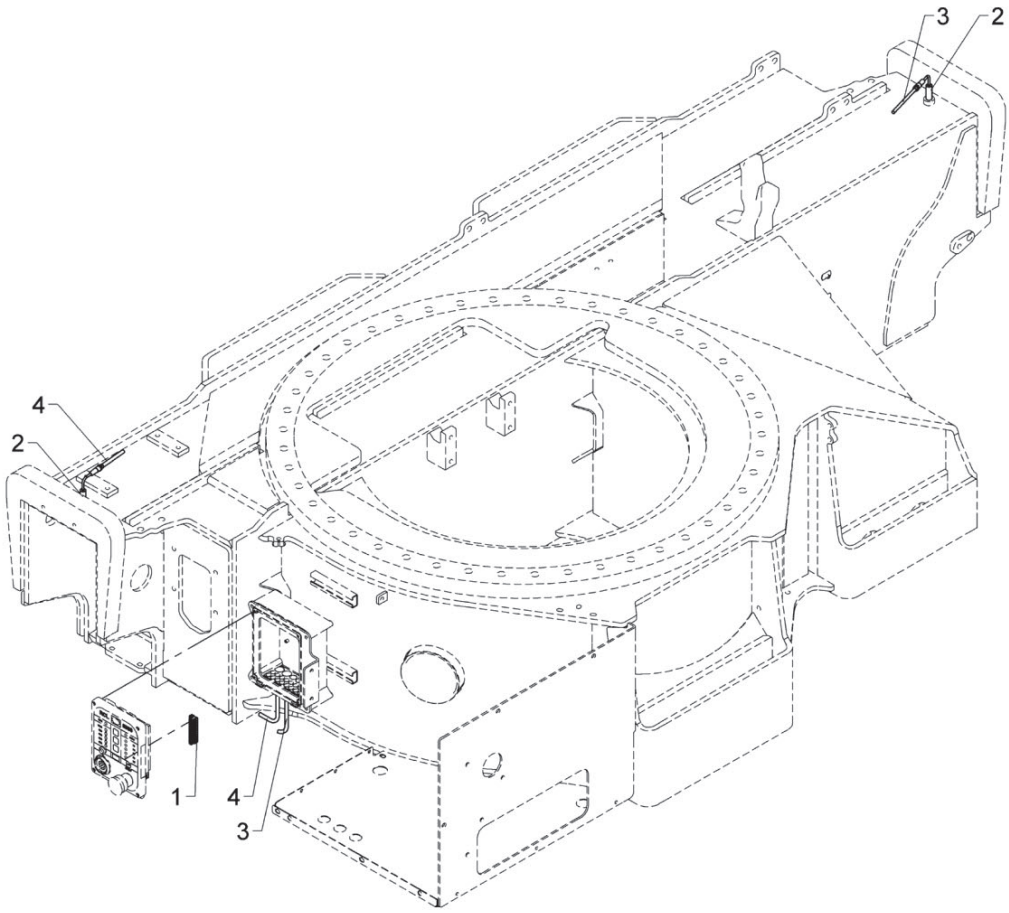

CYL

Pos	Qty.	Part no.	Description	Remarks
1	1	29322	Plug, 12-polar for RCL 53XX	
2	2	29282	Proximity switch M12-4mm NO	
3	1	29224	Cable with socket, 5 m	
4	1	29223	Cable with socket, 2 m	

9520K-RCS, 9520OK-RCS

Internal ref. 7002470

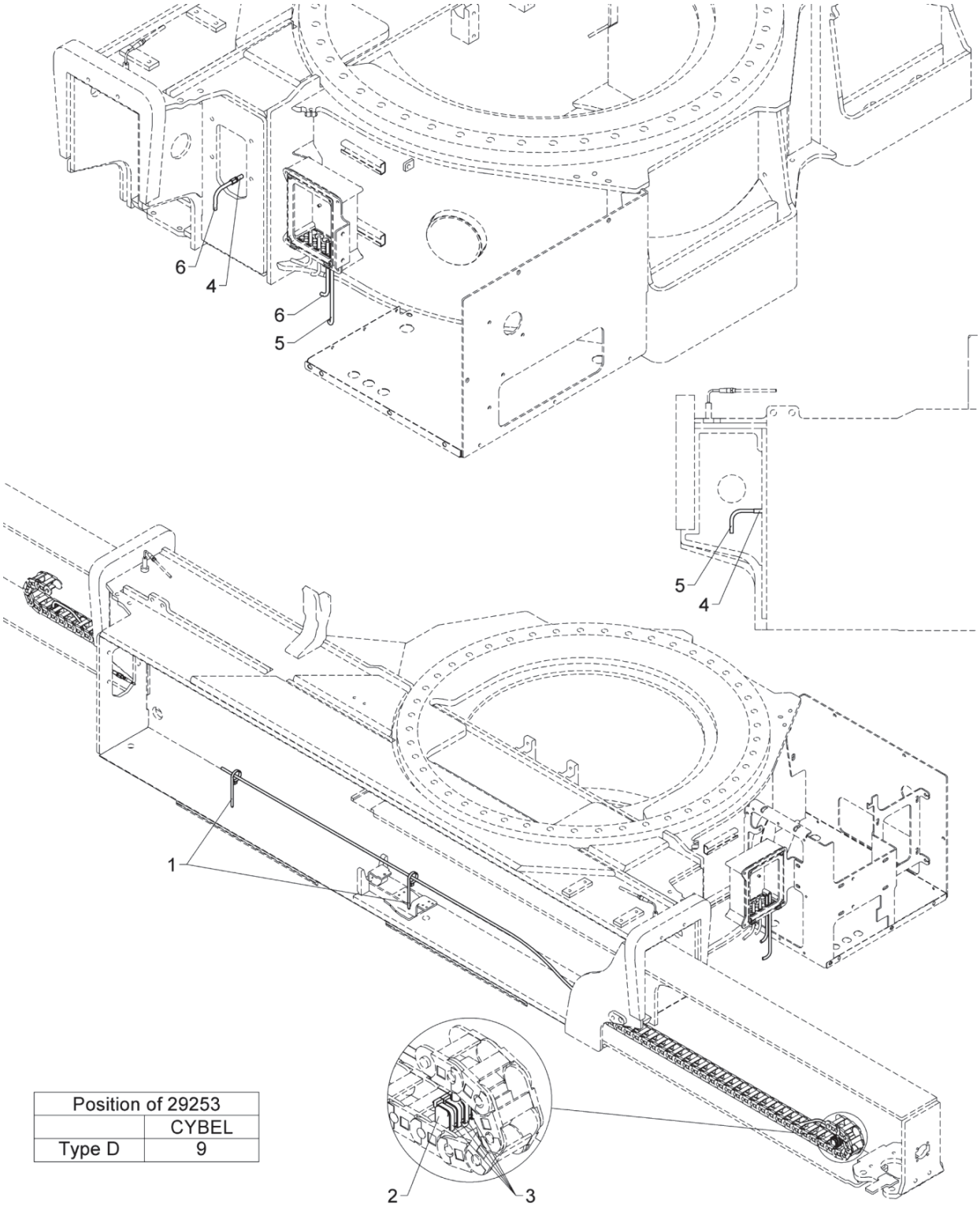

Position of 29253	
	CYBEL
Type D	9

CYBEL

Pos	Qty.	Part no.	Description	Remarks
1	4	27275	Cable tie, black, 7.6x385mm	
2	2	29253	Tilt switch, nylon drag chain	
3	8	27274	Clip	
4	2	29443	Panel lead-in M8 - 3-polar	
5	1	29264	Cable 5 m, M8 socket	
6	1	29265	Cable 2m, M8, straight female	

9520K-RCS, 9520OK-RCS

Internal ref. 7007990

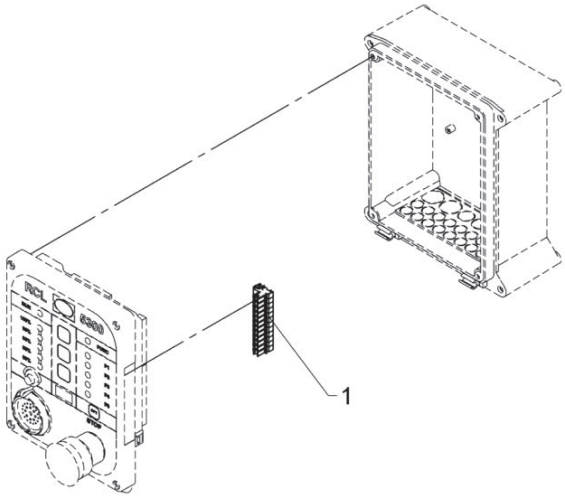

PAS

Pos	Qty.	Part no.	Description	Remarks
1	1	29322	Plug, 12-polar for RCL 53XX	

9520K-RCS, 9520OK-RCS

Internal ref. 7006330

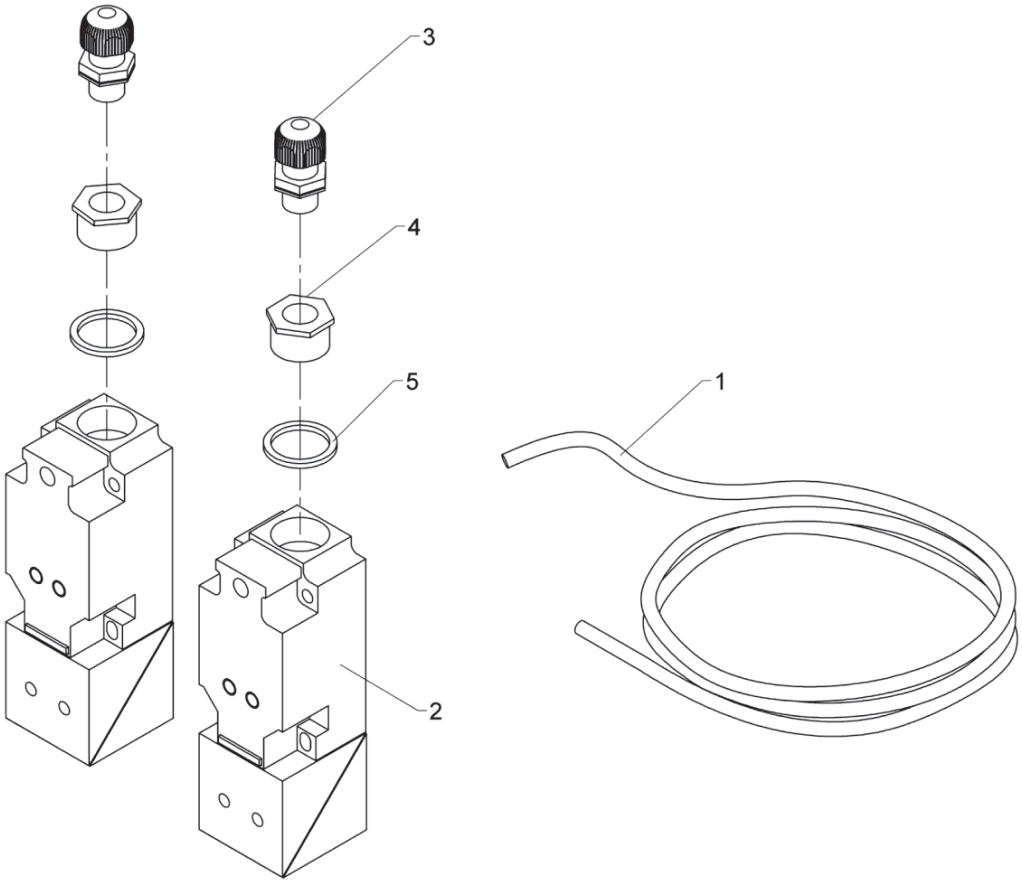

CYW

Pos	Qty.	Part no.	Description	Remarks
1	1	28262	Cable 4 x 0.75	8 m
2	2	27598	Proximity switch	
3	2	28459	Connection	
4	2	29200	Socket M12/M20	
5	2	28402	Sealing ring	

9520K-RCS, 9520OK-RCS

Internal ref. 7008390

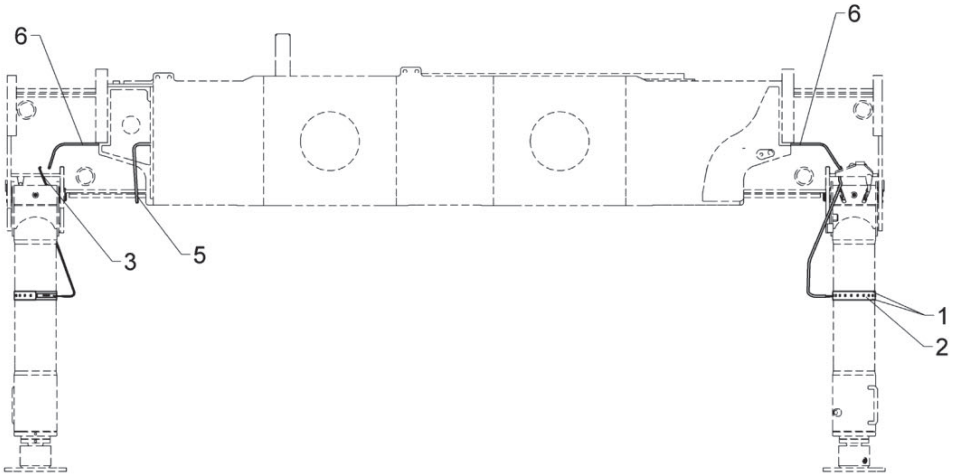

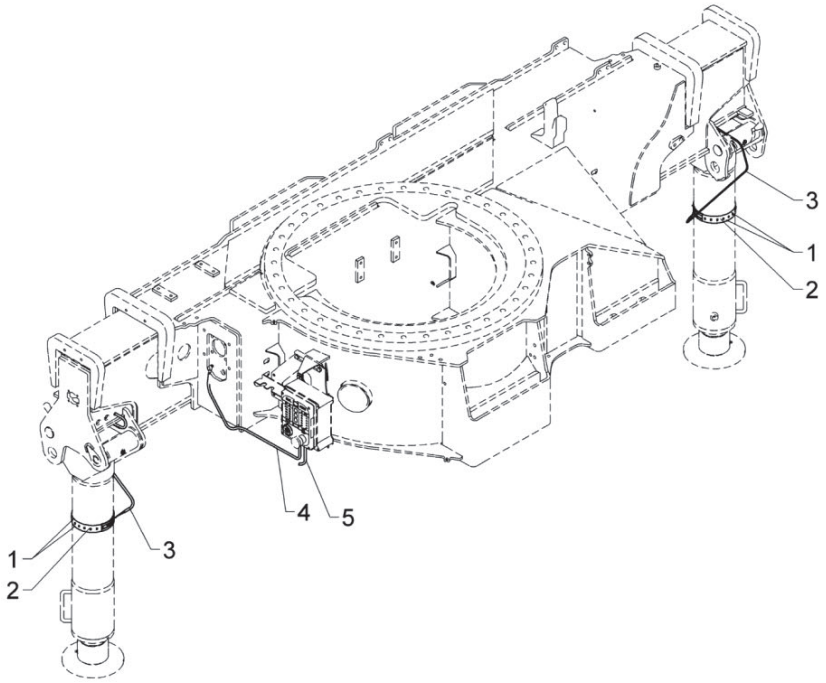

Alarm flash

559 20 350

From loader 1370001
To loader

Created 11-03-14
Modified 21-04-15

Pos	Qty.	Part no.	Description	Remarks
1	4	29299	Cable tie, black 7.6x760mm	
2	2	29431	Alarm flash, yellow 24V, 34 cm	
3	2	29445	Cable, M8 - PUR 3-polar	
4	1	29482	Cable M8, 2 m, female, 3 polar	
5	1	29483	Cable M8, 5 m, female, 3 polar	
6	2	29436	Cable M8, socket and plug 6.3m	

9520K-RCS, 9520OK-RCS

Internal ref. 7006140

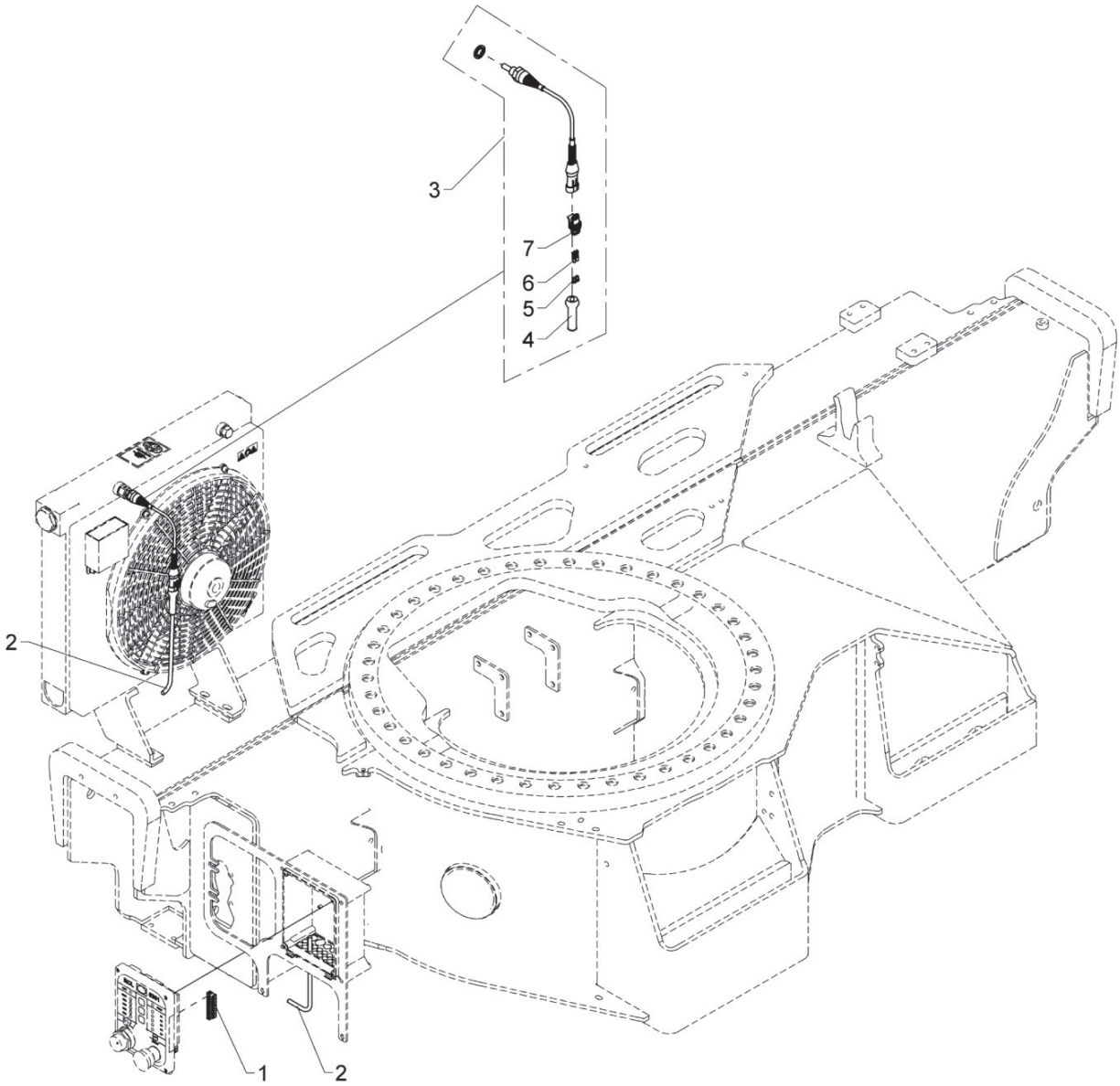

Temperature monitoring for oil cooler

Pos	Qty.	Part no.	Description	Remarks
1	1	29321	Plug, 10-polar for RCL 53XX	
2	1	28249	Cable 2 x 0.75	2,3 m
3	1	49652	Thermostat for RCL5300	
4	1	29888	Cap, 2-polar pos.	
5	2	29159	Cable lead-in, AMP	
6	2	28844	Female pin, AMP	
7	1	28843	Plug, 2 polar, AMP	

9520K-RCS, 9520OK-RCS

Internal ref. 7008350

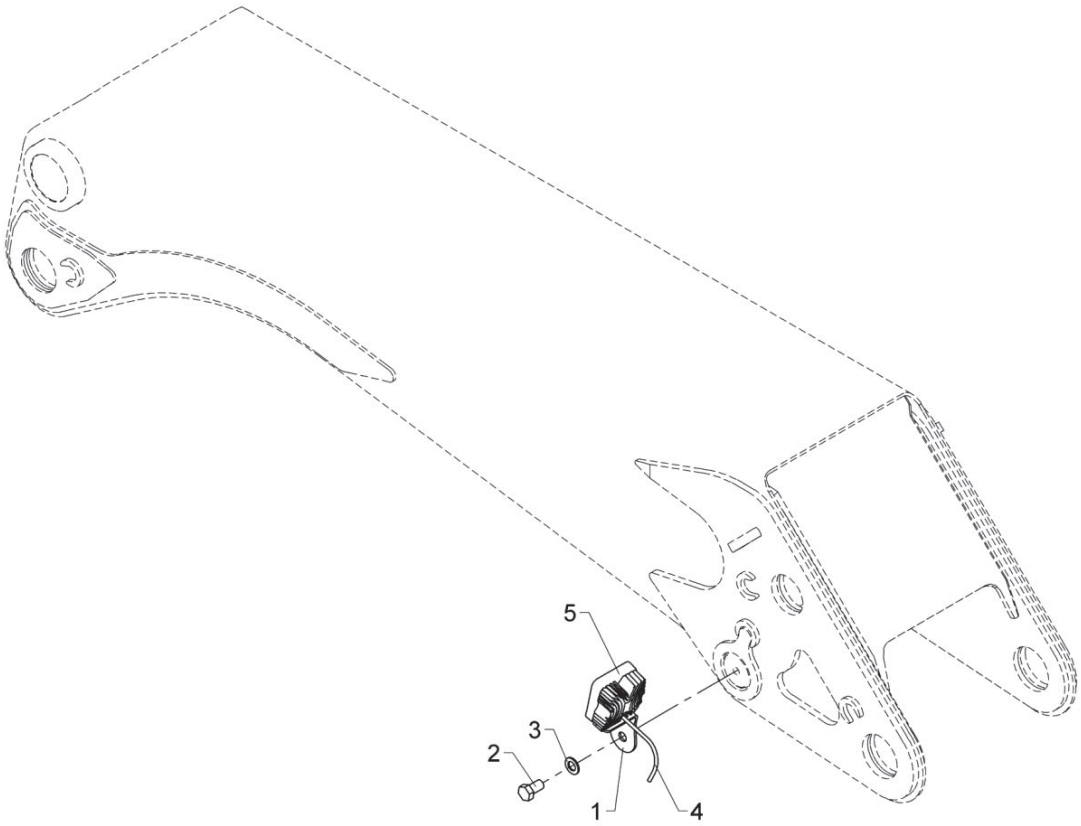

Spotlight, boom

559 20 430

From loader 1370001
To loader

Created 27-03-14
Modified 05-02-20

Pos	Qty.	Part no.	Description	Remarks
1	1	7004024	Bracket for spotlight, boom	
2	1	30242	Set screw	M20 x 35
3	1	31179	Washer	20 mm
4	1	29462	Cable, LED spotlight, 9.0m	
5	1	29768	Spotlight LED 48 W	

9520K-RCS, 9520OK-RCS

Internal ref. 7007510

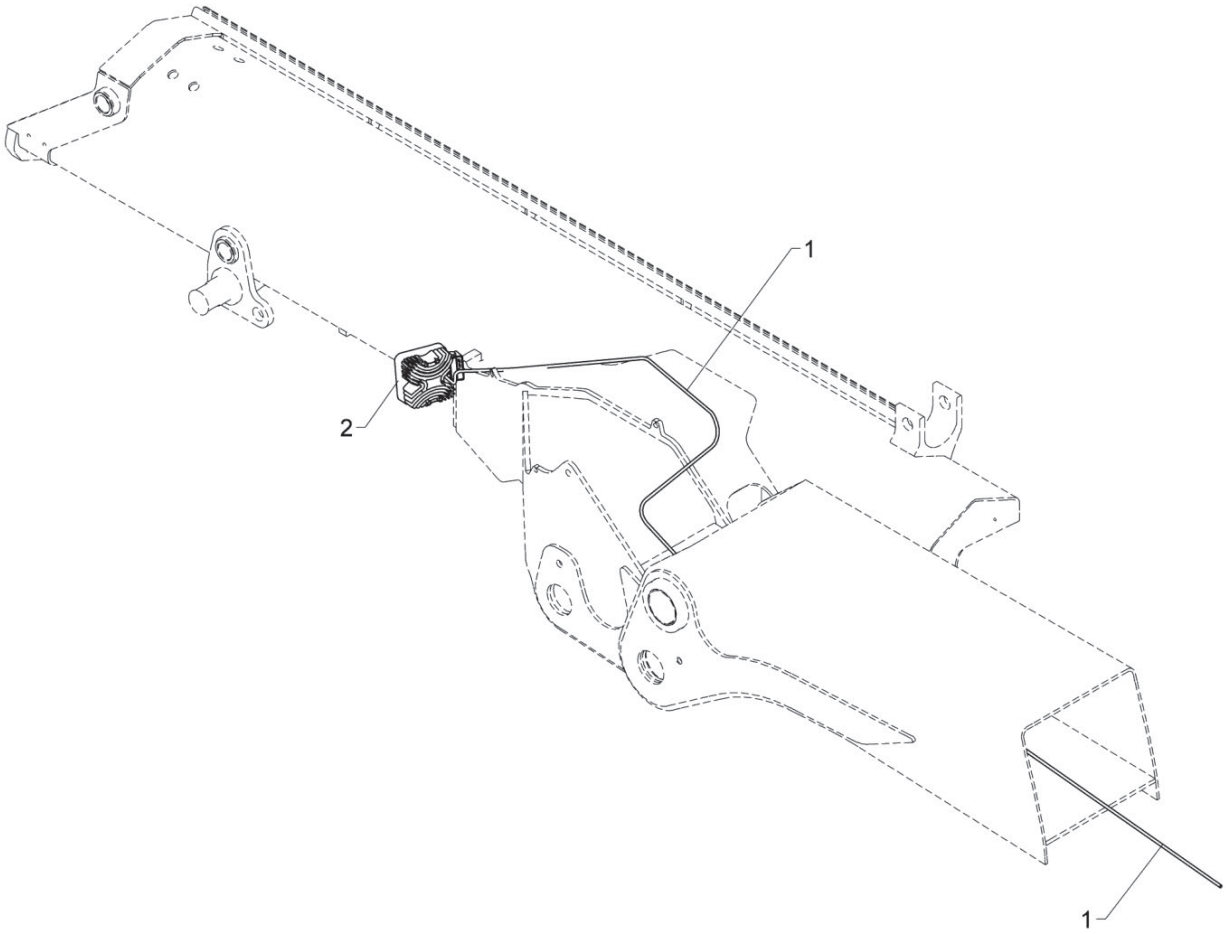

Spotlight, jib

559 20 440

From loader 1370001
To loader

Created 17-12-12
Modified 03-02-20

Pos	Qty.	Part no.	Description	Remarks
1	1	29462	Cable, LED spotlight, 9.0m	
2	1	29768	Spotlight LED 48 W	

9520K-RCS, 9520OK-RCS

Internal ref. 7007530

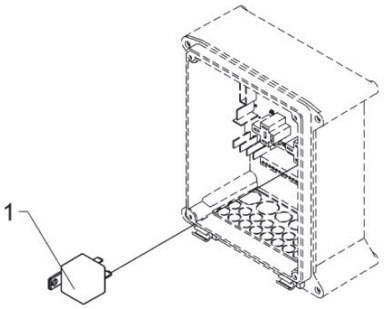

559 20 450

From loader 1370001
To loader

Created 01-02-13
Modified

Spotlight, radio remote controlled.

Pos	Qty.	Part no.	Description	Remarks
1	1	27342	Relay, 24V	

9520K-RCS, 9520OK-RCS

7008030
7008020
Internal ref. 7002000

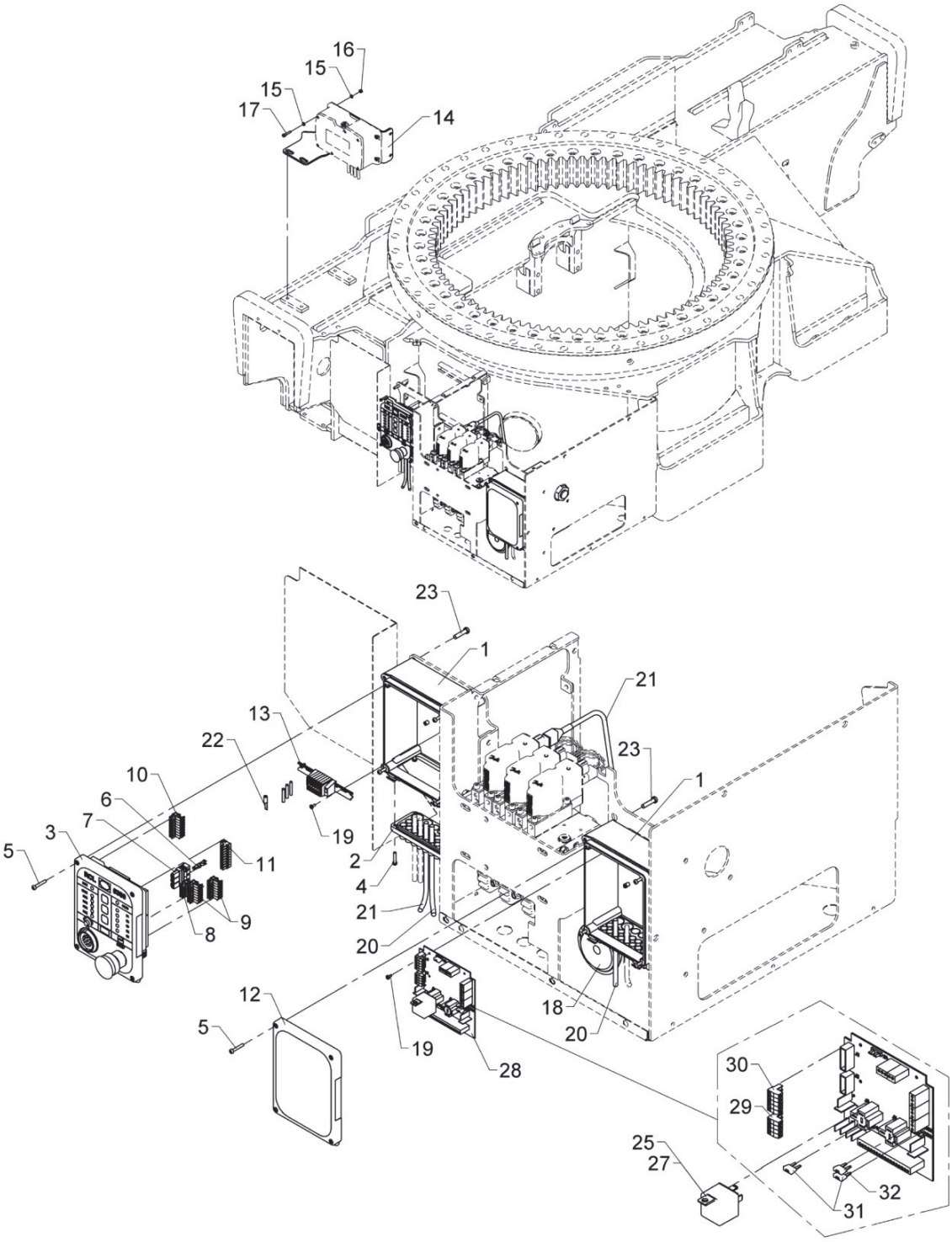

Basic electronic parts, base

Pos	Qty.	Part no.	Description	Remarks
		7002000	Basic electronic parts, base	
		7008020	Relay, 24 V	
		7008030	Relay, 12 V	
1	2	29304	Bottom f. RCL-box incl. hinge	
2	2	29307	Cable lead-in	
3	1	29301	Front complete, RCL 5300	
4	8	30346	Screw, stainless	4,0 x 20
5	8	30347	Screw, stainless	4,0 x 25
6	3	29316	Pin	
7	1	29315	Plug, 3-polar for RCL 53XX	
8	1	29317	Plug, 5-polar for RCL 53XX	
9	2	29318	Plug, 7-polar for RCL 53XX	
10	1	29319	Plug, 8-polar for RCL 53XX	
11	1	29320	Plug, 9-polar for RCL 53XX	
12	1	29347	RCL 5300 indicator panel	
13	1	7006307	Terminal block f. RCL box + RC	
14	1	6301207	Bracket for G2	
15	8	32308	Washer	5 mm
16	4	30859	Lock nut, stainless	
17	4	30481	Screw	
18	1	28971	Horn, 24 V, 2.5 Amp.	
19	8	30361	Screw, stainless	3,0 x 8
20	1	28278	Cable 4 x 2.5	1,5 m
21	1	28780	CAN cable, 2.0 m	
22	1	29543	Cable shoe	
23	8	30340	Screw, stainless	6,0 x 25
24	1	7008020	Relay, 24 V	
25	1	27342	Relay, 24V	
26	1	7008030	Relay, 12 V	
27	1	27340	Relay, 12 V	
28	1	29473	EJB5380	
29	1	29331	Plug, 4-polar	
30	1	29887	Plug, 5-polar	
31	2	27822	Fuse 10A MINI	
32	1	29370	Fuse 15A MINI	

9520K-RCS, 9520OK-RCS

Internal ref. 7002010

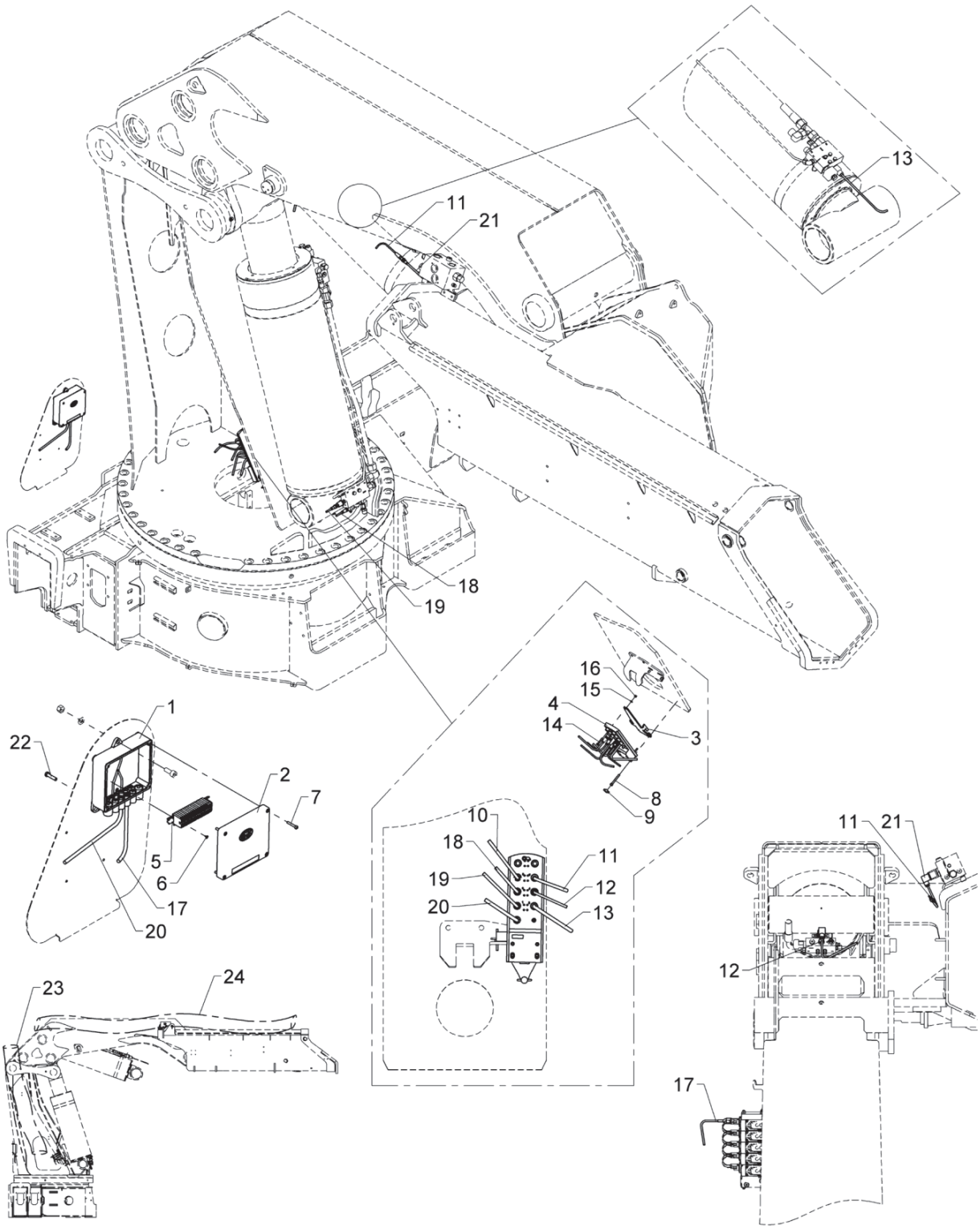

Basic electronic parts, column

Pos	Qty.	Part no.	Description	Remarks
1	1	29313	Bottom f. Fly-Jib box	
2	1	29314	Cover for Fly-Jib box	
3	1	6399672	Bracket for IO module	
4	1	29470	IO module CR2033	
5	1	7002011	Terminal block, Box2, column	
6	2	28693	Screw	Ø2.9 x 6.5
7	4	30347	Screw, stainless	4,0 x 25
8	1	30457	Screw	MC6 x 50
9	1	64353	Thumb screw	M6
10	1	29668	Cable extension M12, 2,0m	
11	1	29497	Extension cable, 5 m	
12	1	29877	Cable M12,solenoid valve,2.0 m	
13	1	29878	Cable M12,solenoid valve, 5.0m	
14	3	30425	Screw	MC5 x 30
15	3	32308	Washer	5 mm
16	3	30859	Lock nut, stainless	
17	1	28780	CAN cable, 2.0 m	
18	1	29389	Extension for cable M12, 1,2m	
19	1	29389	Extension for cable M12, 1,2m	
20	1	29456	CAN cable, 2m, M12, straight female	
21	1	29391	Cable M12, solenoid valve,0,6m	
22	4	30340	Screw, stainless	6,0 x 25
23	1	27780	Flexible pipe	3,0m
24	1	27780	Flexible pipe	5,0m

9520K-RCS, 9520OK-RCS

Internal ref. 7002011

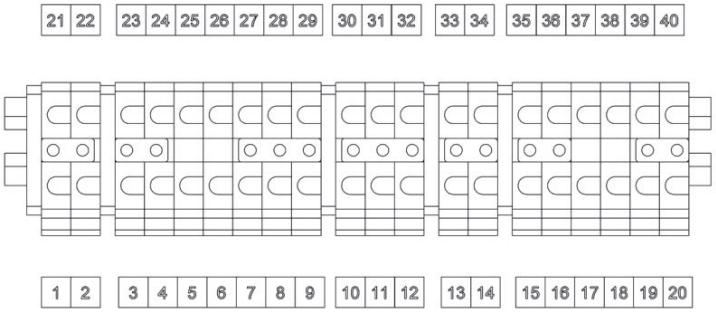

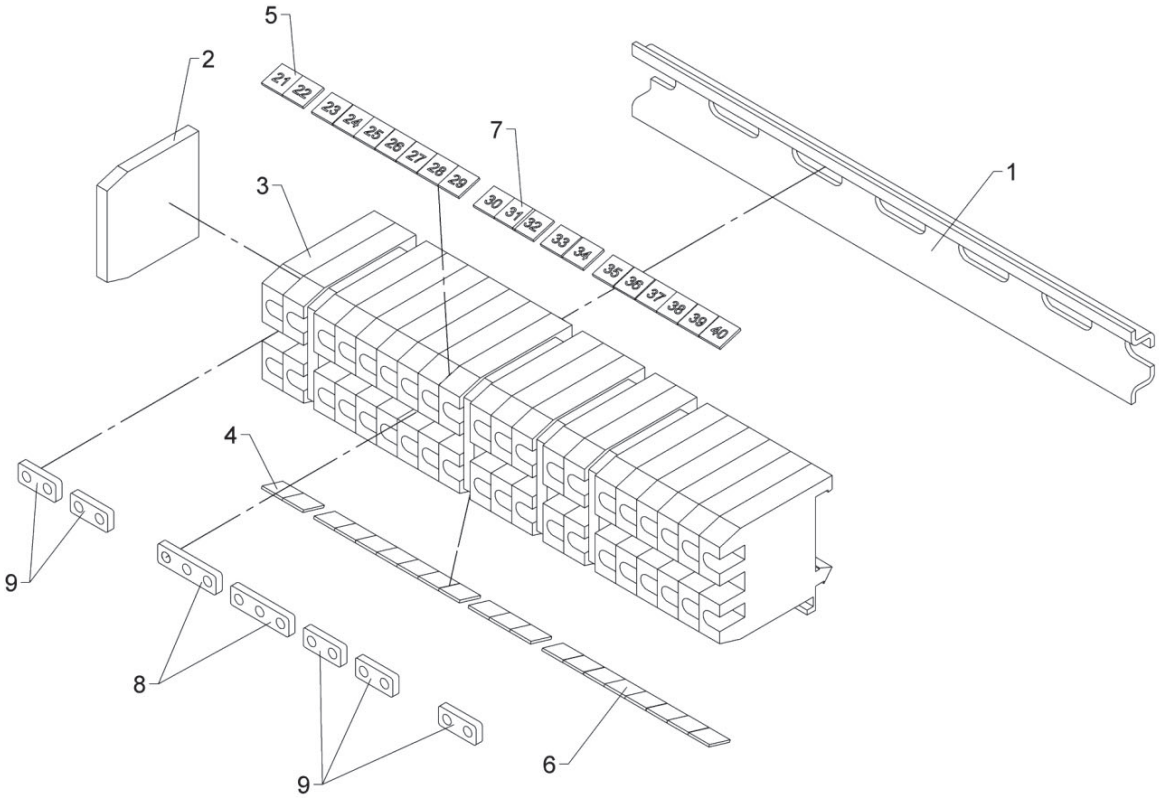

Terminal block, Box2, column

559 22 145

From loader 1370001
To loader

Created 29-10-18
Modified 09-12-19

Pos	Qty.	Part no.	Description	Remarks
1	1	28013	Guide rail	120 mm.
2	5	28011	End plate	
3	20	28010	Terminal	
4	1	28019	Labels nos. 1-10	
5	1	28965	Dekafix labels 21-30	
6	1	28020	Labels nos. 11-20	
7	1	29427	Dekafix marker 31-40	
8	2	28014	Fish plate	
9	5	28208	Fish plate	

9520K-RCS, 9520OK-RCS

Internal ref. 7002270

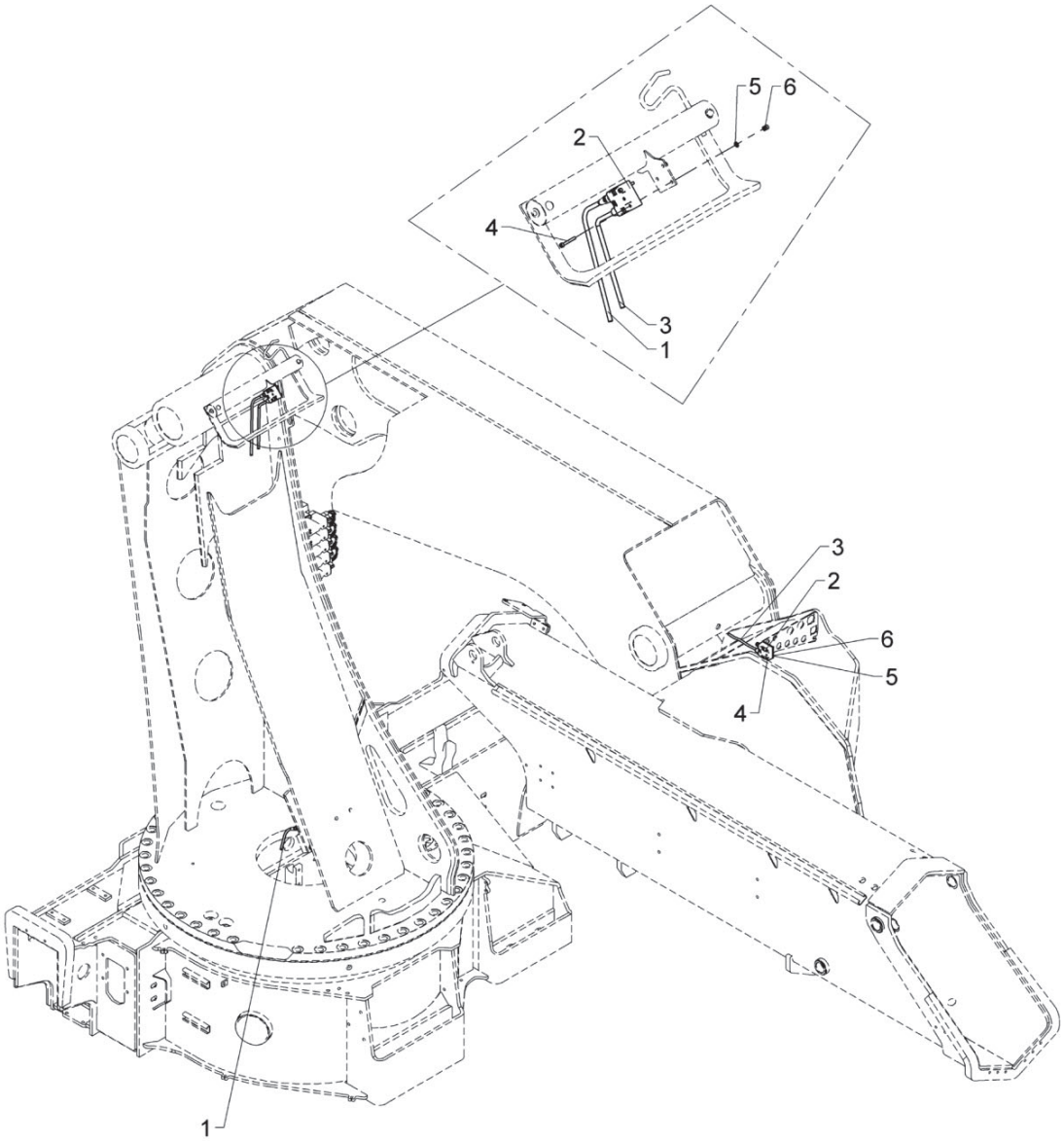

Basic electronic parts, Jib

Pos	Qty.	Part no.	Description	Remarks
1	1	28781	CAN cable extension 3.0 m	
2	2	29876	Angle sensor	
3	1	28790	Cable extension, 4,0m	
4	6	31393	Cyl. screw stainless MC4 x 30	MC4 x 20
5	6	31188	Washer, stainless	4 mm
6	6	30857	Lock nut	M4

9520K-RCS, 9520OK-RCS

7009550
Internal ref. 7006150

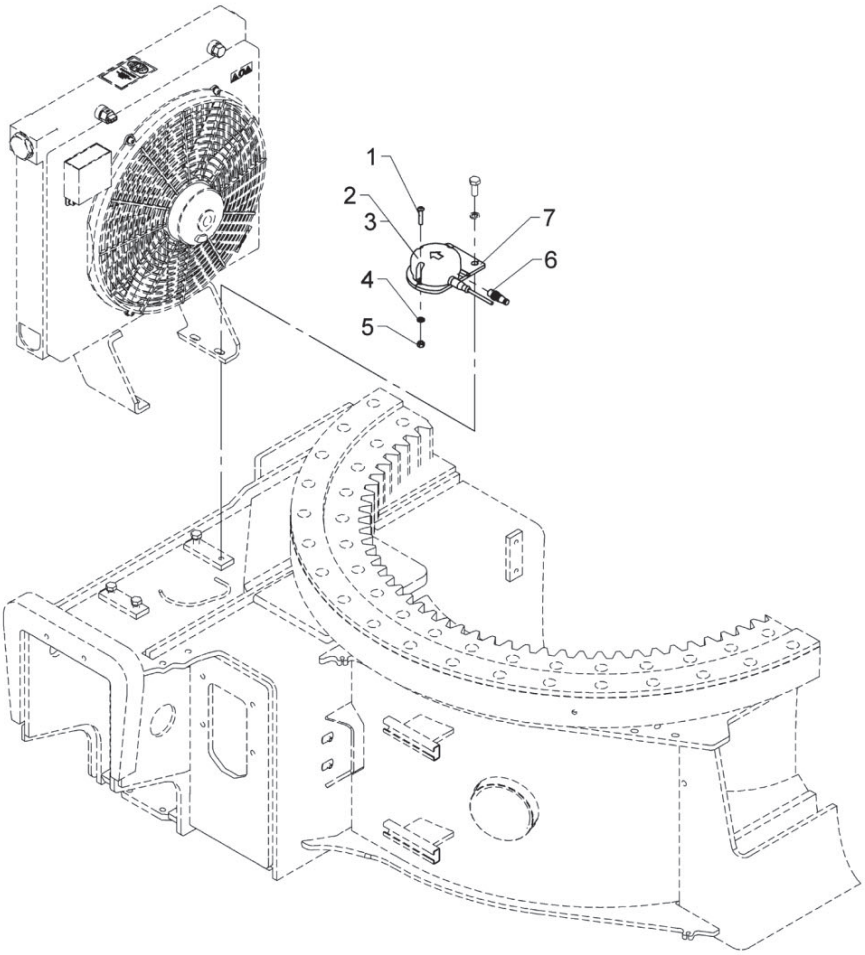

Inclination sensor, base

Pos	Qty.	Part no.	Description	Remarks
		7006150	Inclination sensor, base	
		7009550	Inclination sensor dublex, base	
1	3	32458	Screw	M6 x 30
2	1	29426	Electronic inclinometer,single	70 06 150
3	1	29425	Inclinometer, redundant	70 09 550
4	3	32302	Face washer, stainless	6 mm
5	3	30884	Lock nut, stainless	M6
6	1	29486	Plug M12, termination	
7	1	7004013	Bracket for AIC	

9520K-RCS, 9520OK-RCS

Internal ref. 7002260

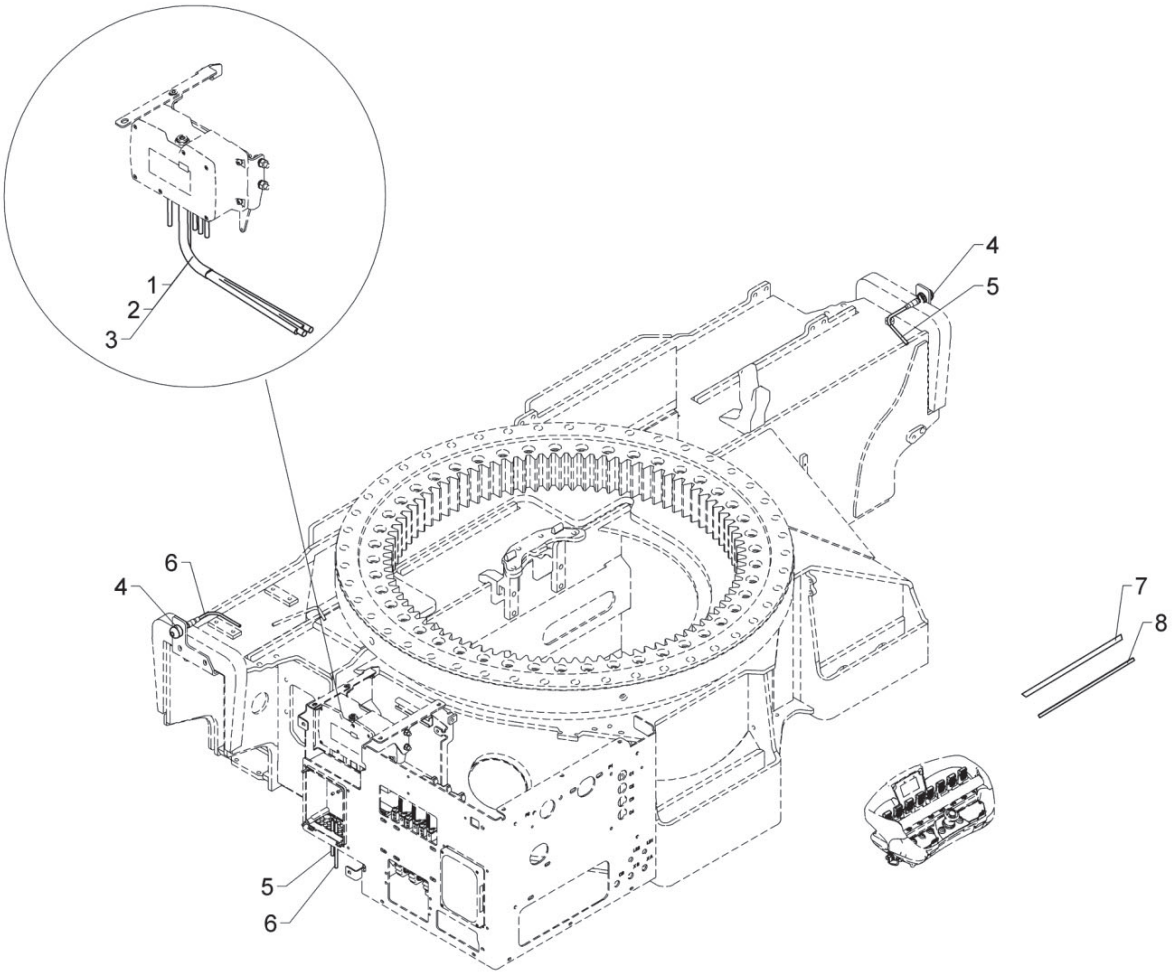

Stabilizer operation via RC

Pos	Qty.	Part no.	Description	Remarks
1	1	56721	Cable, Scanreco 47925 G2	
2	1	56722	Cable Scanreco 47924 G2	
3	1	56723	Cable, Scanreco 47903 G2	
4	2	29498	Touch button with light	
5	1	29224	Cable with socket, 5 m	
6	1	29223	Cable with socket, 2 m	
7	1	63512	Rail for label	
8	1	66454	Operating label	8 funk.

9520K-RCS, 9520OK-RCS

Internal ref. 7002340

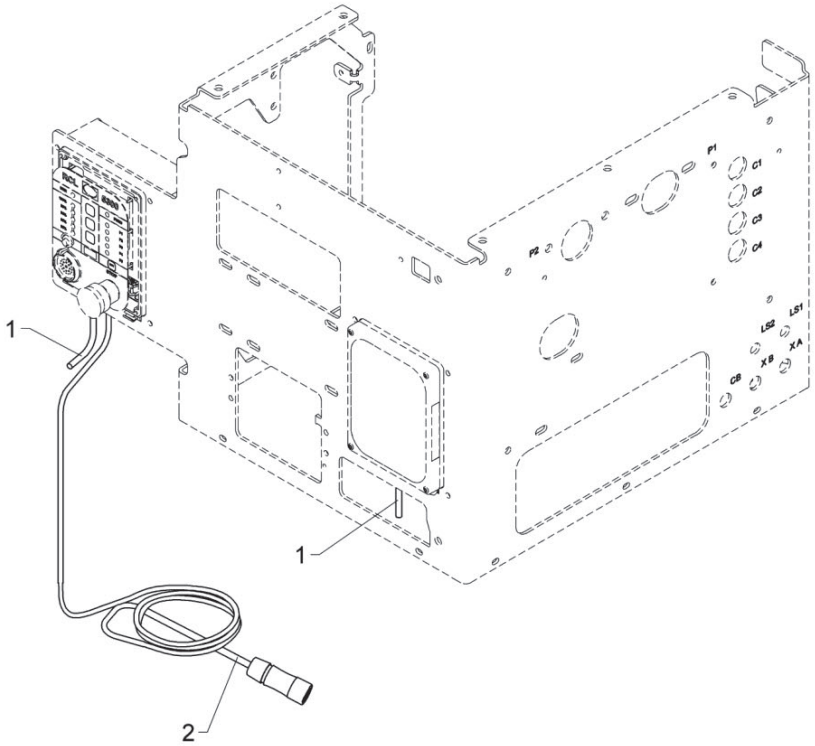

559 22 400

From loader 1370001
To loader

Created 06-11-18
Modified

Electricity supply, separate traverse

Pos	Qty.	Part no.	Description	Remarks
1	1	28262	Cable 4 x 0.75	1,5 m
2	1	7002312	CAN cable, 8-pole fem., 2.0 m	

9520K-RCS, 9520OK-RCS

Internal ref. 7002310

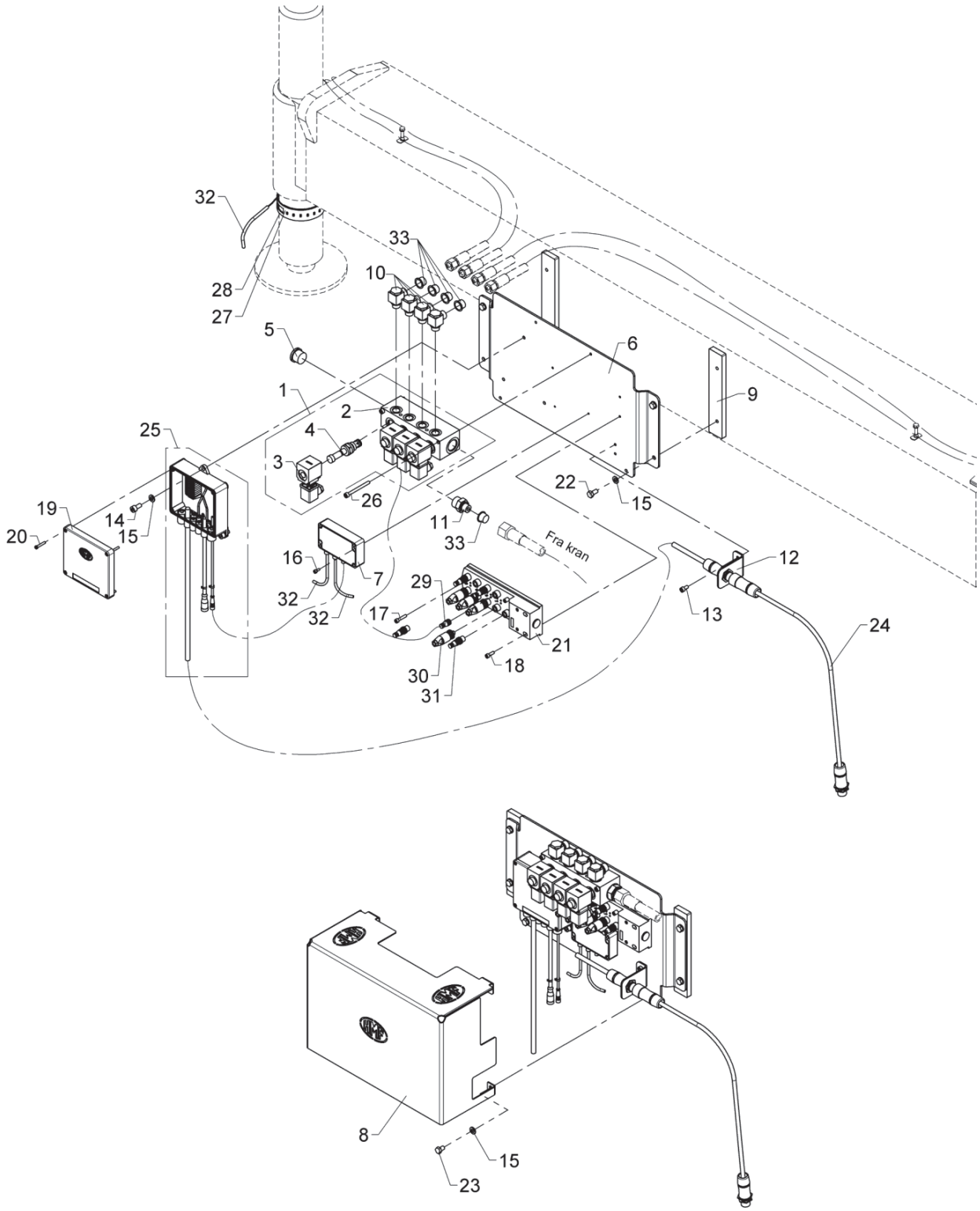

Electric/hydraulic parts, separate traverse

Pos	Qty.	Part no.	Description	Remarks
1	1	50548	Stabilizer control valve	
2	1	69466	Valve housing	
3	4	69468	Solenoid. 24V	
4	4	69467	Cartridge	
5	1	26355	Plug	VS-R-3/4 WD
6	1	6400272	Bracket for stabilizer beam	
7	1	29430	Flash controller	
8	1	6400275	Protective box	
9	2	6400274	Mounting block for bracket	
10	4	25130	Banjo connection	RSWV 12 LR
11	1	26368	Straight connection	P-GEV 16 SR 3/8-WD
12	1	6400273	Fittings for electric plug	
13	2	30423	Sockethead screw	MC6 x 12
14	3	32228	Cylinder screw	MC8 x 16
15	9	31147	Face washer, 8 mm	
16	2	31853	Sockethead screw	MC4 x 10
17	1	30481	Screw	
18	2	30433	Screw	MC5 x 16
19	1	29314	Cover for Fly-Jib box	
20	4	30347	Screw, stainless	4,0 x 25
21	1	29470	IO module CR2033	
22	4	30131	Set screw, stainless	M8 x 16
23	2	30130	Set screw, stainless	M8 x 12
24	1	7002313	CAN cable extension 8.0 m	
25	1	7002311	Conn. box, extra stabil. beam	
26	2	30966	Screw	MC6 x 65
27	2	29431	Alarm flash, yellow 24V, 34 cm	
28	4	29299	Cable tie, black 7.6x760mm	
29	4	29391	Cable M12, solenoid valve,0,6m	
30	4	29270	Plug, M12, straight 5-polar	
31	1	29486	Plug M12, termination	
32	2	29438	Cable M8, socket and plug 5 m	
33	5	64221	Plug	

9520K-RCS, 9520OK-RCS

Internal ref. 7008360

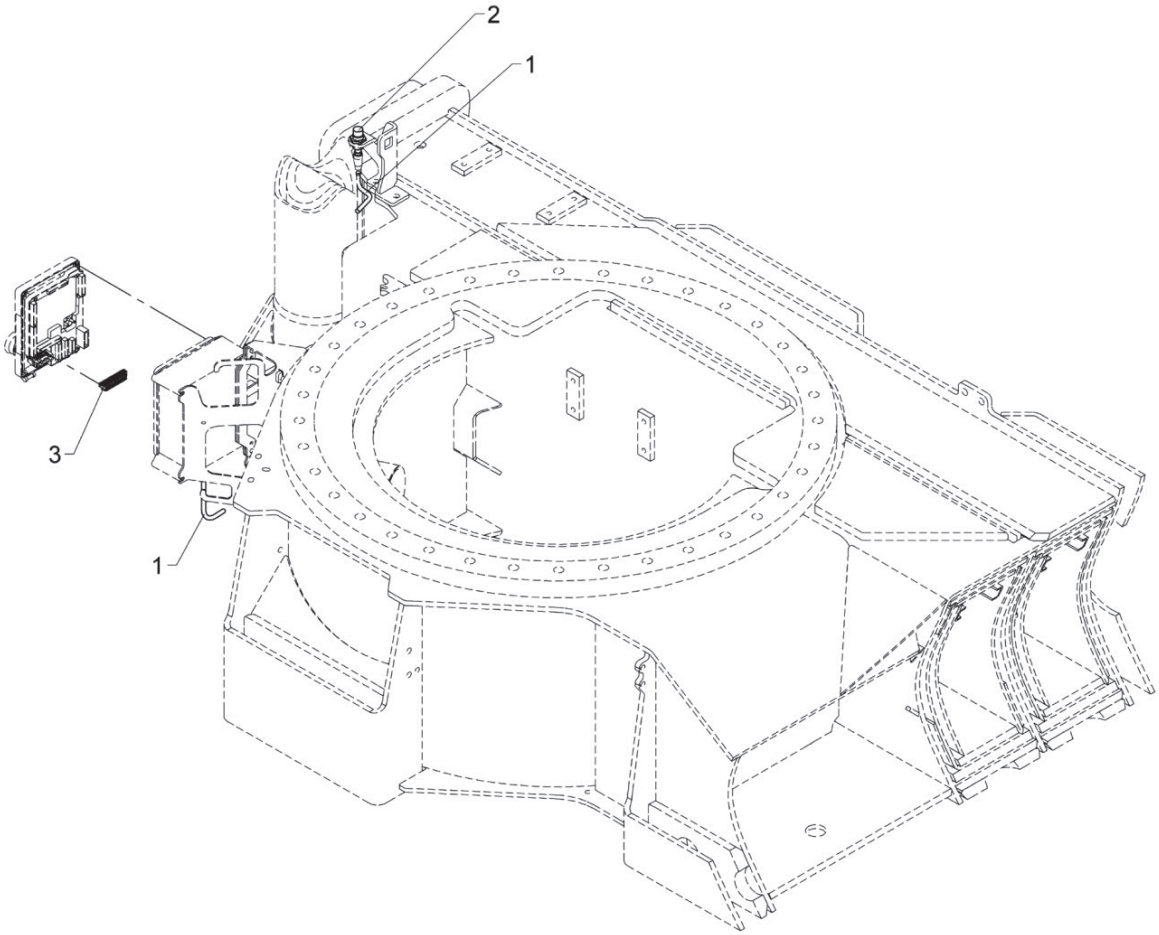

559 22 420

From loader 1370001
To loader

Electronic parts, swing-up stabilizer leg 3 o'clock

Created 11-03-14
Modified 17-10-14

Pos	Qty.	Part no.	Description	Remarks
1	1	29223	Cable with socket, 2 m	
2	1	28980	Proximity switch	
3	1	29321	Plug, 10-polar for RCL 53XX	

9520K-RCS, 9520OK-RCS

Internal ref. 7008370

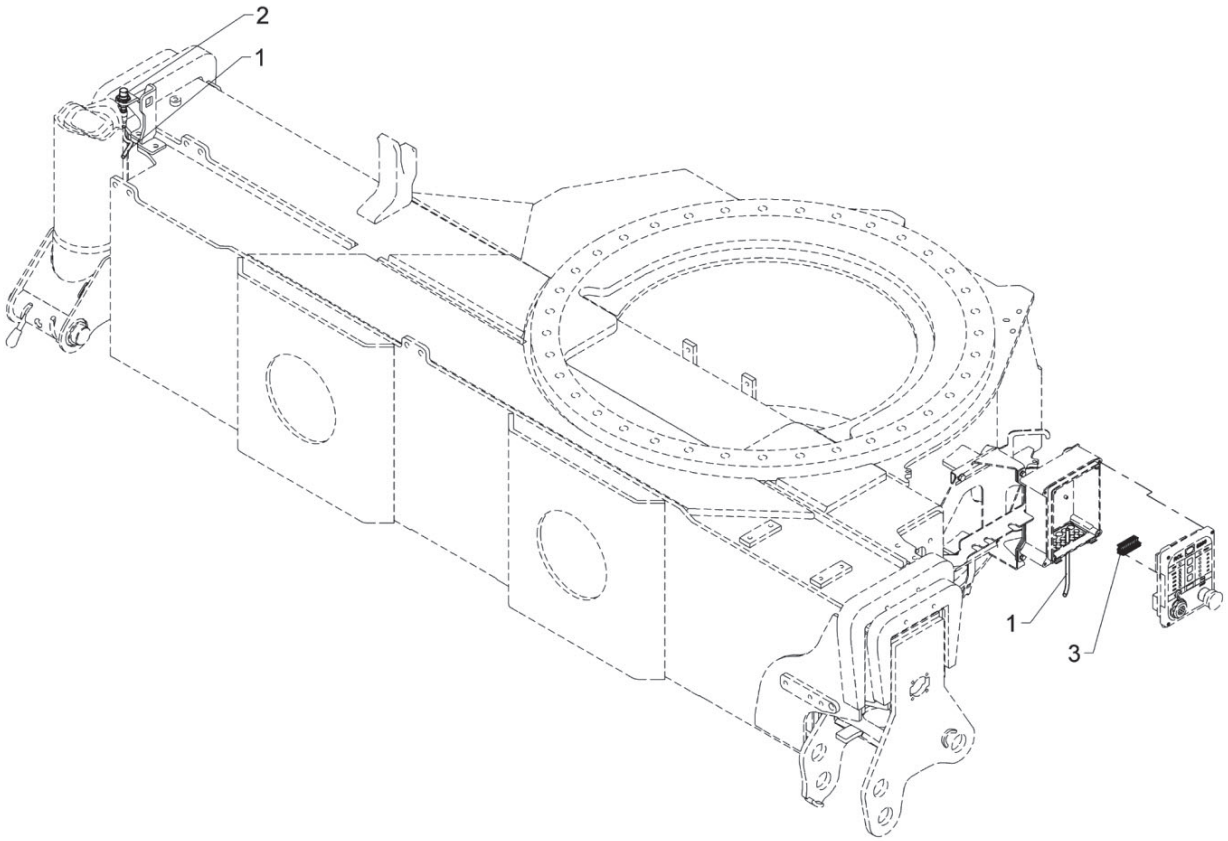

559 22 430

From loader 1370001
To loader

Created 11-03-14
Modified 17-10-14

Electronic parts, swing-up stabilizer leg 9 o'clock

Pos	Qty.	Part no.	Description	Remarks
1	1	29224	Cable with socket, 5 m	
2	1	28980	Proximity switch	
3	1	29321	Plug, 10-polar for RCL 53XX	

9520K-RCS, 9520OK-RCS

Internal ref. 7002030

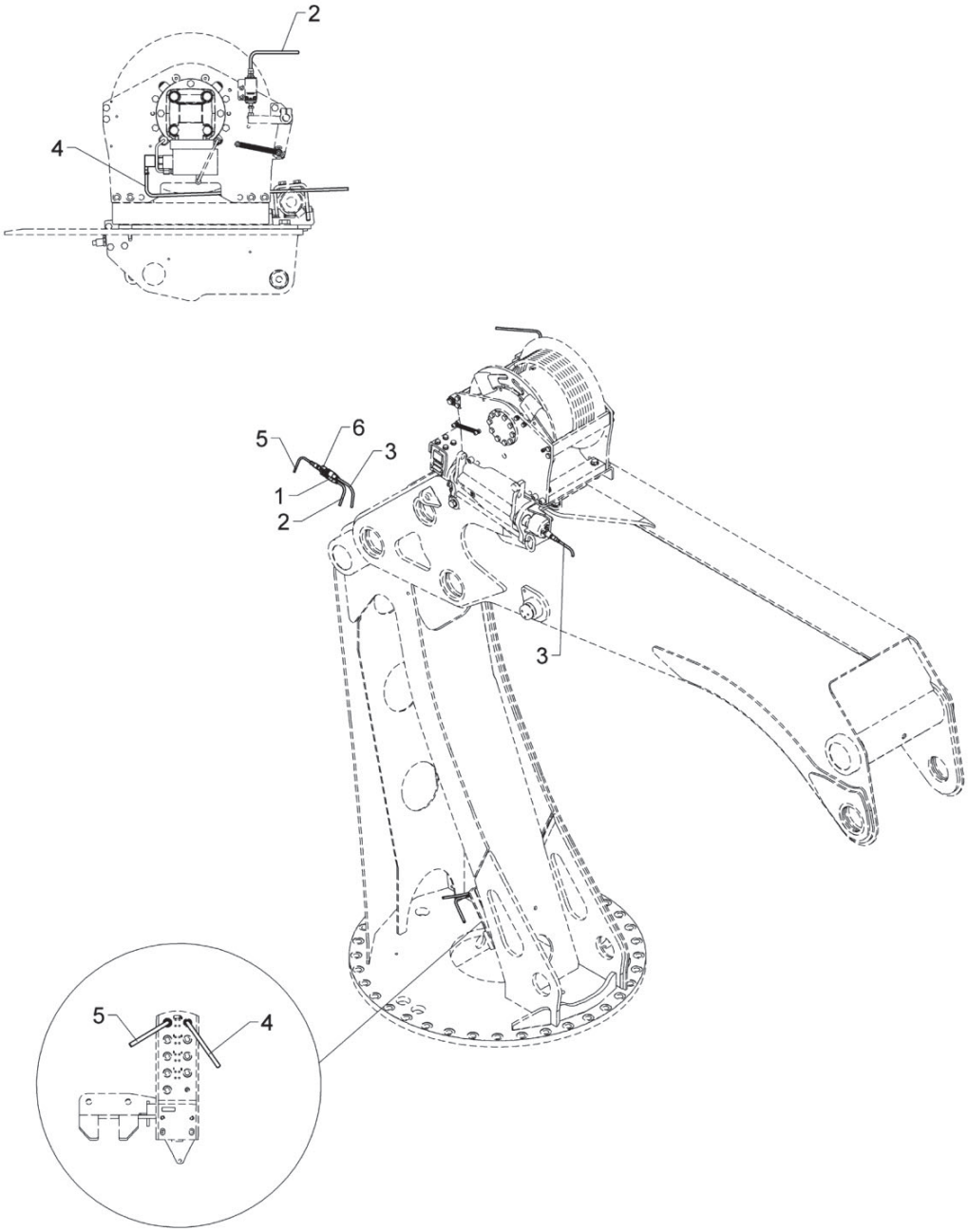

BOM obsolete

559 22 450

From loader 1370001
To loader

Created 05-12-18
Modified

Winch

Pos	Qty.	Part no.	Description	Remarks
1	1	29268	Plug, M12, straight 4-polar	
2	1	28249	Cable 2 x 0.75	1,5 m
3	1	29389	Extension for cable M12, 1,2m	
4	1	29878	Cable M12,solenoid valve, 5.0m	
5	1	29235	Extension cable, 5 m	
6	1	29477	Y-splitter 3xM12 - Parallel	

9520K-RCS, 9520OK-RCS

Internal ref. 7002030

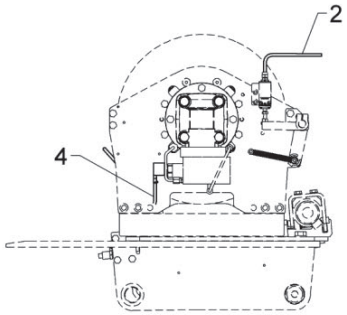

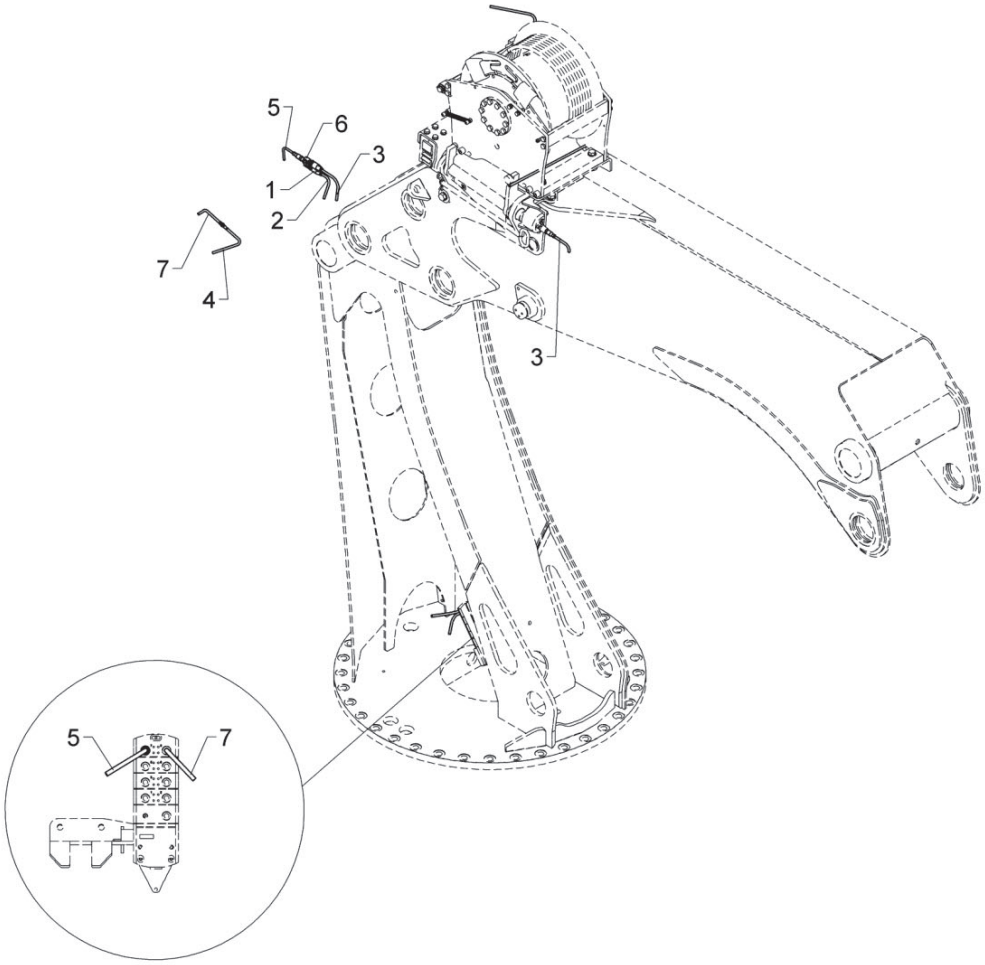

Winch

Pos	Qty.	Part no.	Description	Remarks
1	1	29268	Plug, M12, straight 4-polar	
2	1	28249	Cable 2 x 0.75	2,5 m
3	1	29668	Cable extension M12, 2,0m	
4	1	29877	Cable M12,solenoid valve,2.0 m	
5	1	29509	Cable M12, 3,0m	
6	1	29477	Y-splitter 3xM12 - Parallel	
7	1	29509	Cable M12, 3,0m	

9520K-RCS, 9520OK-RCS

Internal ref. 7002630

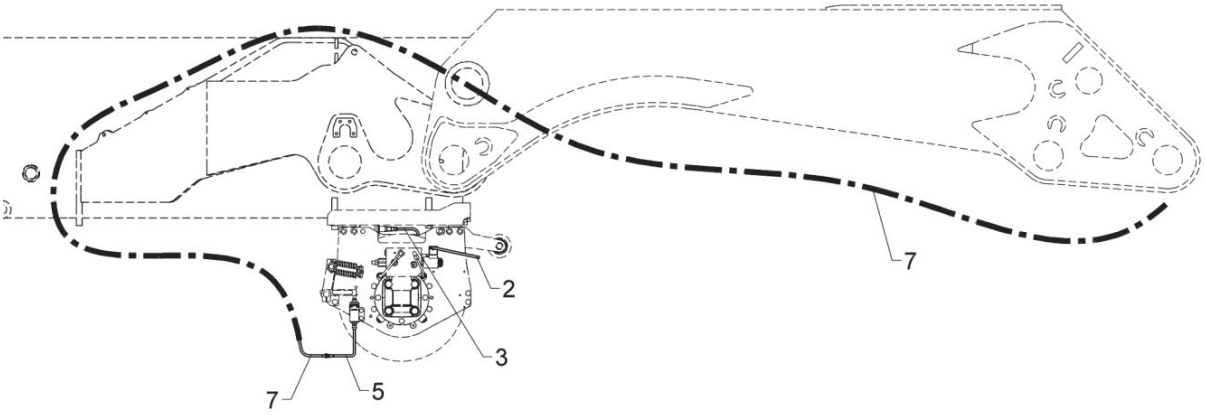

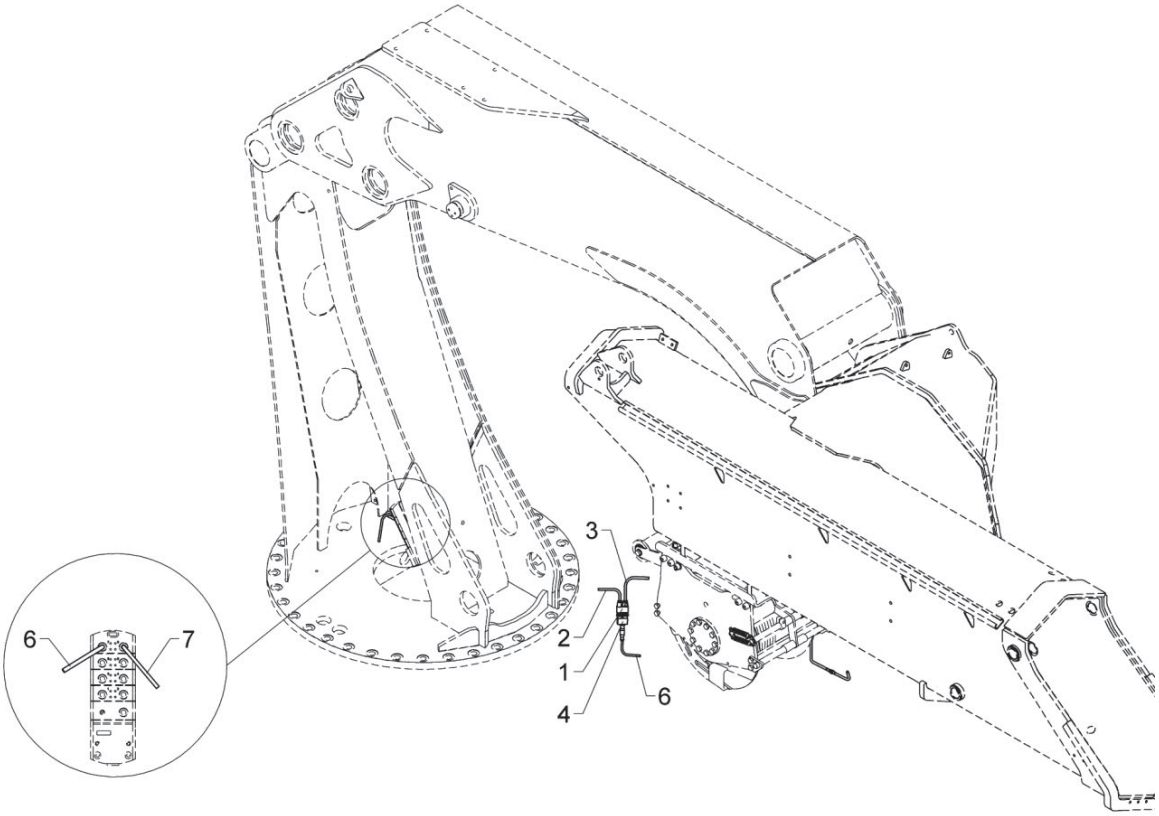

Winch

Pos	Qty.	Part no.	Description	Remarks
1	1	29268	Plug, M12, straight 4-polar	
2	1	28249	Cable 2 x 0.75	1,5 m
3	1	29389	Extension for cable M12, 1,2m	
4	1	29477	Y-splitter 3xM12 - Parallel	
5	1	29391	Cable M12, solenoid valve,0,6m	
6	1	29459	Cable extension 10m M12	
7	1	29459	Cable extension 10m M12	

9520K-RCS, 9520OK-RCS

Internal ref. 7002050

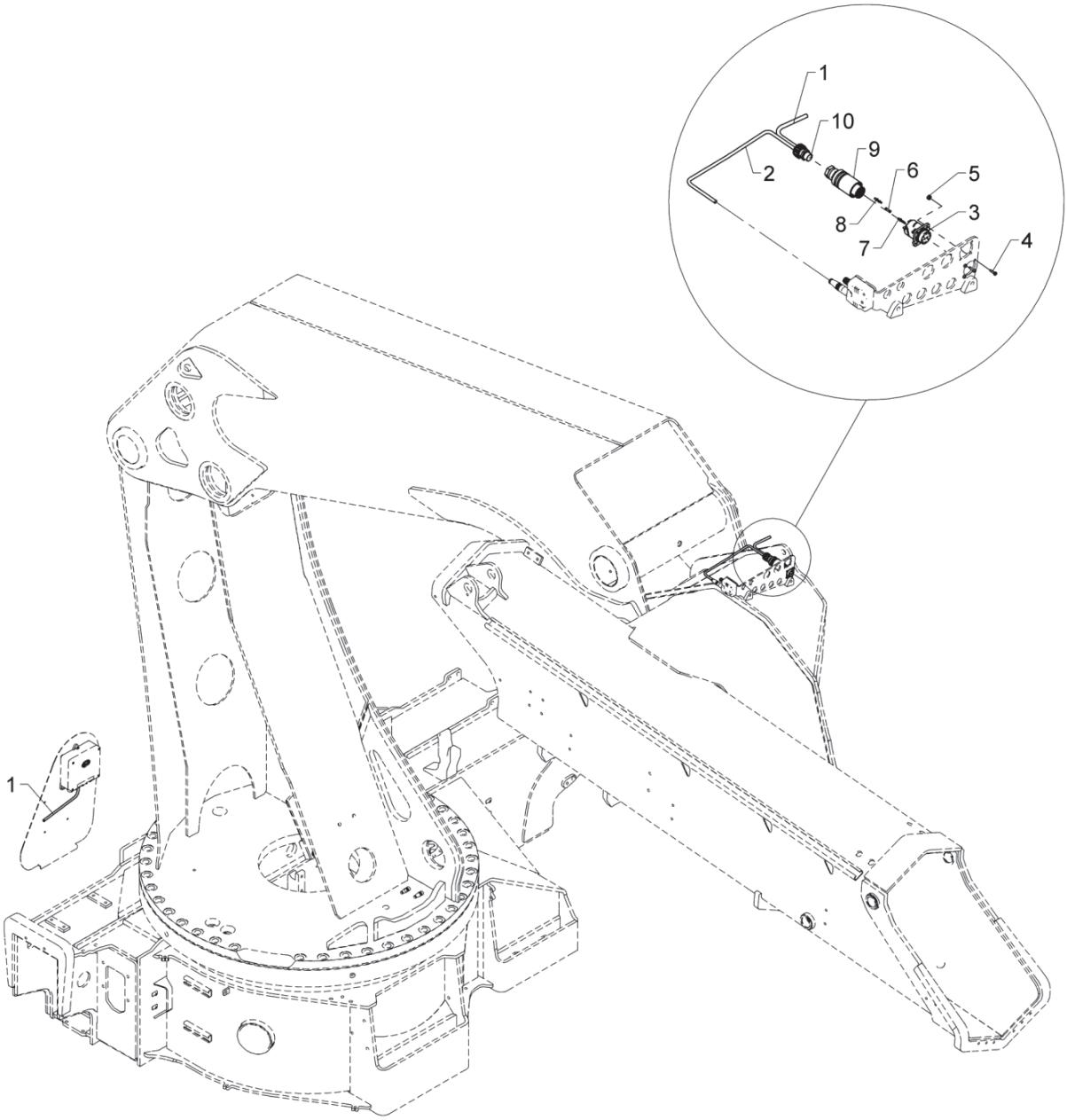

Fly-Jib supply Column

Pos	Qty.	Part no.	Description	Remarks
1	1	28262	Cable 4 x 0.75	7,0 m
2	1	29881	CAN cable 1.5m, M12 male plug	
3	1	29628	Socket 10-polar	
4	4	32386	Screw M3 x 12 stainless	M3 x 12
5	4	32387	Lock nut M3 stainless	M3
6	3	29638	Sealing	
7	4	29633	Pin, female, 0,75mm² - 1,5mm²	
8	3	29631	Pin, female, 0,32-0,52 mm²	
9	1	29635	Housing, Socket, short	
10	1	29700	Connection PG 13,5 2x 5,5-7,5	

9520K-RCS, 9520OK-RCS

7002290
7002280
7009530
7009520
Internal ref. 7009510

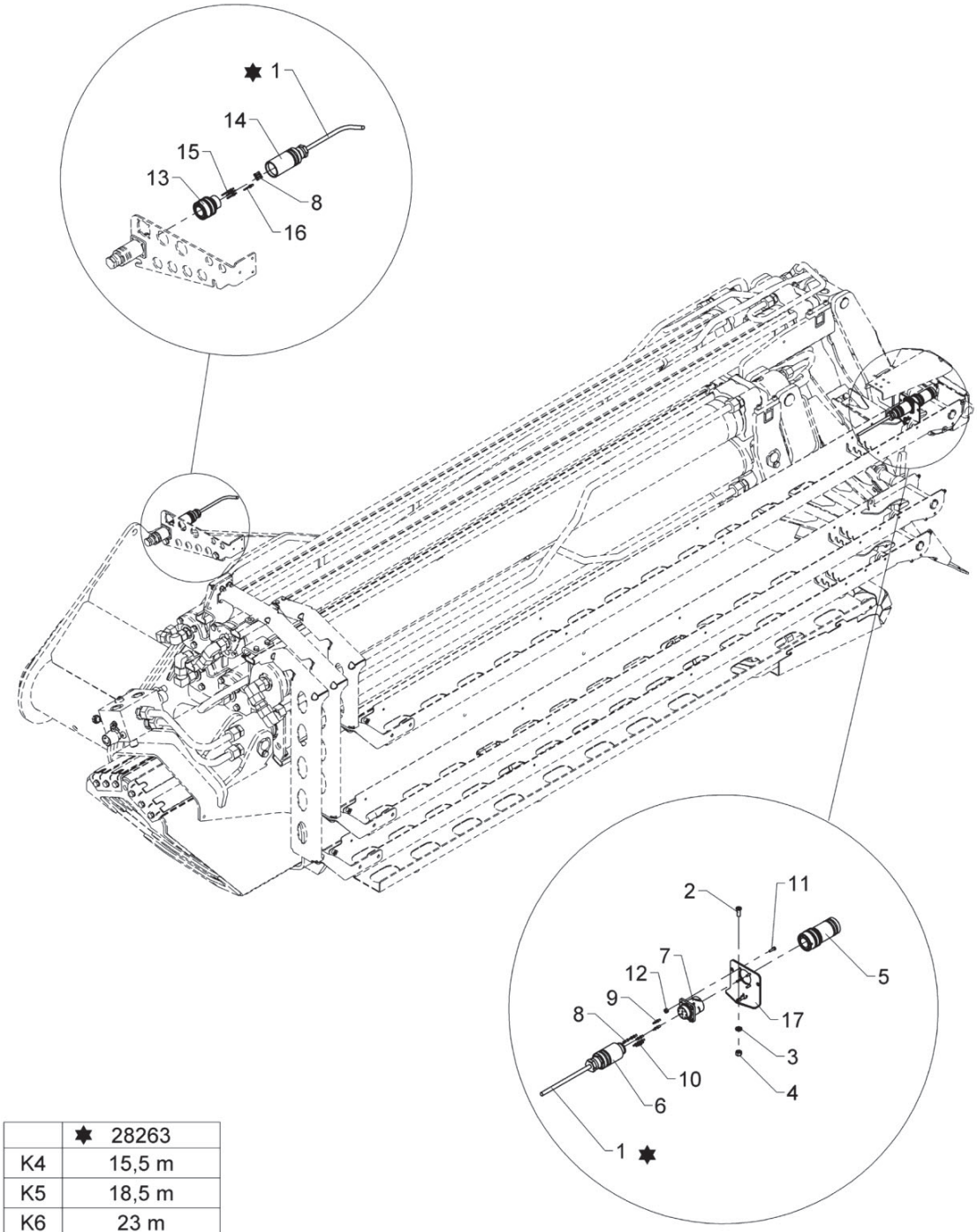

	✸ 28263
K4	15,5 m
K5	18,5 m
K6	23 m
K7	26 m
K8	29 m

FJ supply, hose guides

Pos	Qty.	Part no.	Description	Remarks
		7009510	FJ electric cable, K4	
		7009520	FJ electric cable, K5	
		7009530	FJ electric cable, K6	
		7002280	FJ electric cable, K7	
		7002290	FJ electric cable, K8	
1	1	28263	CAN BUS cable	
2	1	32490	Screw	MC6 x 16
3	1	32302	Face washer, stainless	6 mm
4	1	30884	Lock nut, stainless	M6
5	1	7009999	Dummy plug for Fly-Jib	
6	1	29635	Housing, Socket, short	
7	1	29628	Socket 10-polar	
8	6	29638	Sealing	
9	2	29631	Pin, female, 0,32-0,52 mm²	
10	5	29633	Pin, female, 0,75mm² - 1,5mm²	
11	4	32386	Screw M3 x 12 stainless	M3 x 12
12	4	32387	Lock nut M3 stainless	M3
13	1	29629	Plug, 10-polar	
14	1	29634	Housing, plug, long	
15	5	29632	Pin, 0,75-1,5 mm²	
16	2	29630	Pin, male, 0,32mm² - 0,52mm²	
17	1	7004028	Bracket, FJ plug	

9520K-RCS, 9520OK-RCS

Internal ref. 7002020

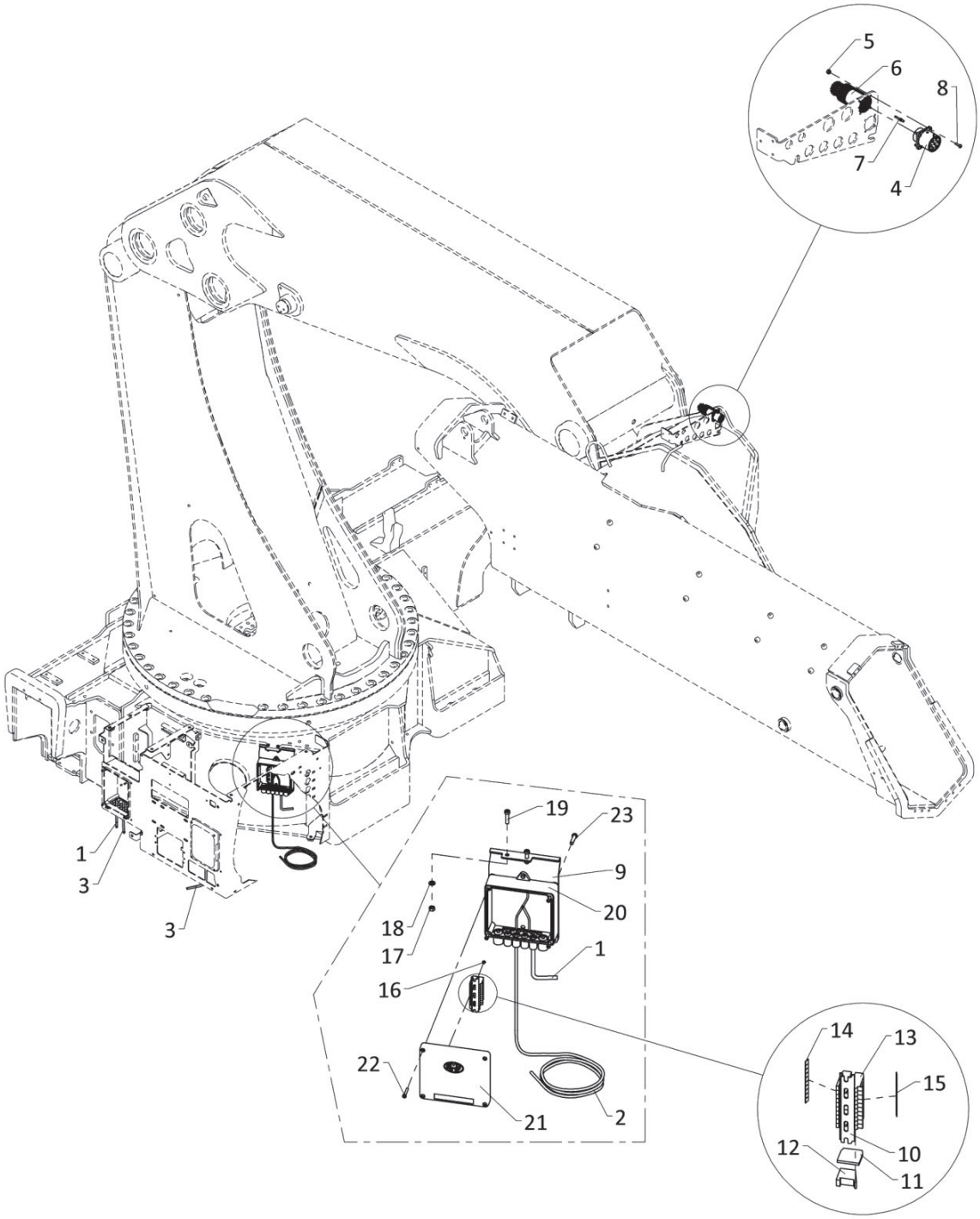

MEWP supply Column

Pos	Qty.	Part no.	Description	Remarks
1	1	29399	Cable CAN Bus	1,5 m
2	1	28278	Cable 4 x 2.5	5,0 m
3	1	29600	Cable, 4x2.5 + 2x0.75 mm²	1,0 m
4	1	29618	Socket, 7-polar	
5	4	32387	Lock nut M3 stainless	M3
6	1	29625	Housing, socket, short	
7	7	29623	Pin, female, 2,5mm²	
8	4	32386	Screw M3 x 12 stainless	M3 x 12
9	1	6340899	Mounting fittings (FJC 5330)	
10	1	28013	Guide rail	80 mm
11	1	28011	End plate	
12	1	28012	End angle	
13	10	28010	Terminal	
14	1	28019	Labels nos. 1-10	
15	1	28965	Dekafix labels 21-30	
16	2	28693	Screw	Ø2.9 x 6.5
17	2	30854	Nut, stainless	M6
18	2	32302	Face washer, stainless	6 mm
19	2	32477	Screw	MC6 x 25
20	1	29313	Bottom f. Fly-Jib box	
21	1	29346	CIO5376 controller cover cpl.	
22	4	30347	Screw, stainless	4,0 x 25
23	4	30340	Screw, stainless	6,0 x 25

9520K-RCS, 9520OK-RCS

Internal ref. 7008380

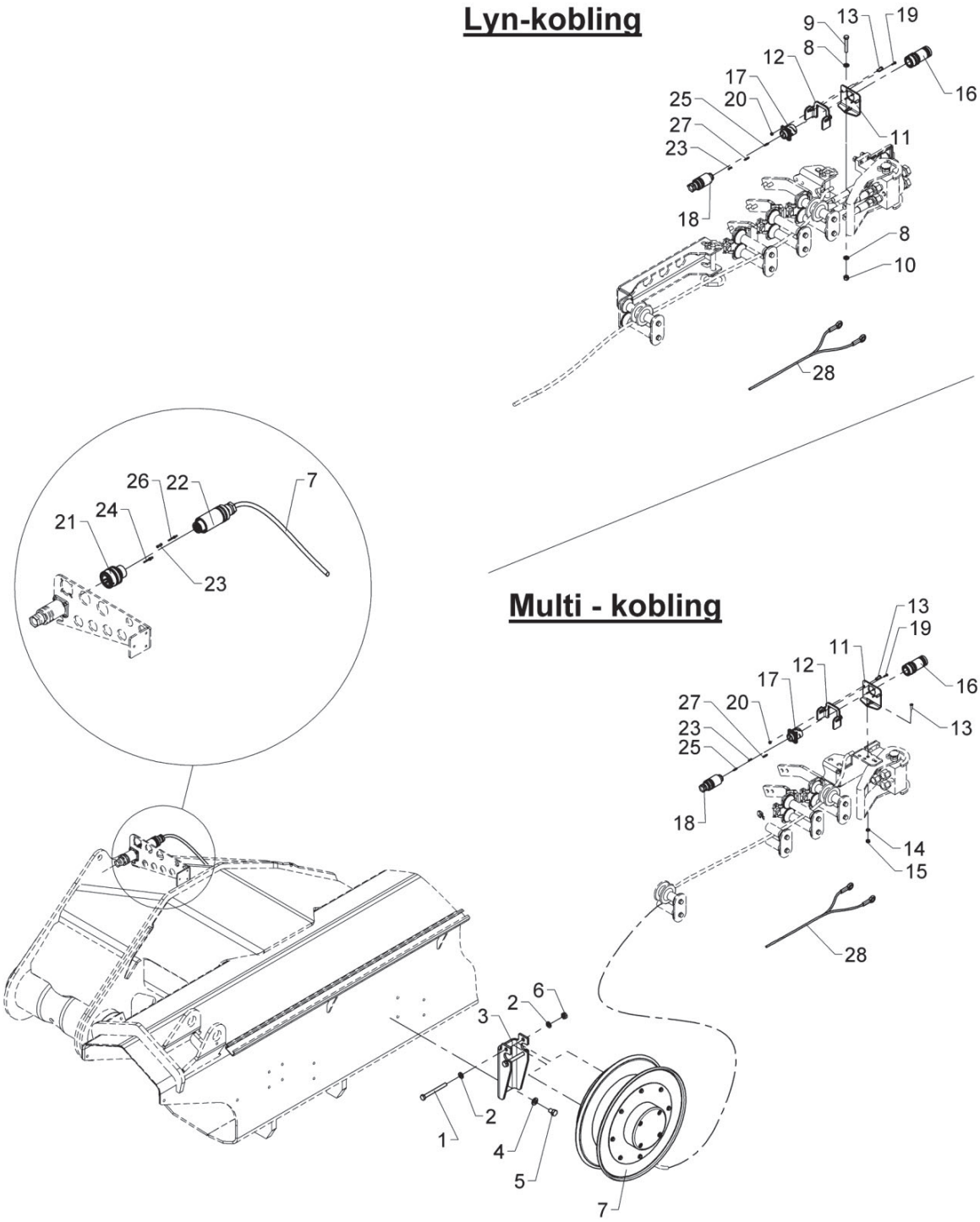

Fly-Jib power supply, Cable drum

Pos	Qty.	Part no.	Description	Remarks
1	2	30106	Steel bolt	M10 x 100
2	4	31565	Washer, stainless	10 mm
3	1	6303058	Bracket for cable drum	
4	2	31131	Washer	12 mm
5	2	30174	Set screw	M12 x 16
6	2	30858	Nut	M10
7	1	29801	Cable drum	CRS400.9978
8	2	31147	Face washer, 8 mm	
9	1	30139	Steel bolt, stainless	M8 x 50
10	1	30886	Lock nut, stainless	M8
11	1	7004028	Bracket, FJ plug	
12	1	7004064	Hook for cable relief	
13	3	32490	Screw	MC6 x 16
14	1	32302	Face washer, stainless	6 mm
15	1	30854	Nut, stainless	M6
16	1	7009999	Dummy plug for Fly-Jib	
17	1	29628	Socket 10-polar	
18	1	29635	Housing, Socket, short	
19	4	32386	Screw M3 x 12 stainless	M3 x 12
20	4	32387	Lock nut M3 stainless	M3
21	1	29629	Plug, 10-polar	
22	1	29634	Housing, plug, long	
23	6	29638	Sealing	
24	2	29630	Pin, male, 0,32mm² - 0,52mm²	
25	2	29631	Pin, female, 0,32-0,52 mm²	
26	5	29632	Pin, 0,75-1,5 mm²	
27	5	29633	Pin, female, 0,75mm² - 1,5mm²	
28	1	29492	Cableclamp	

9520K-RCS, 9520OK-RCS

Internal ref. 7007500

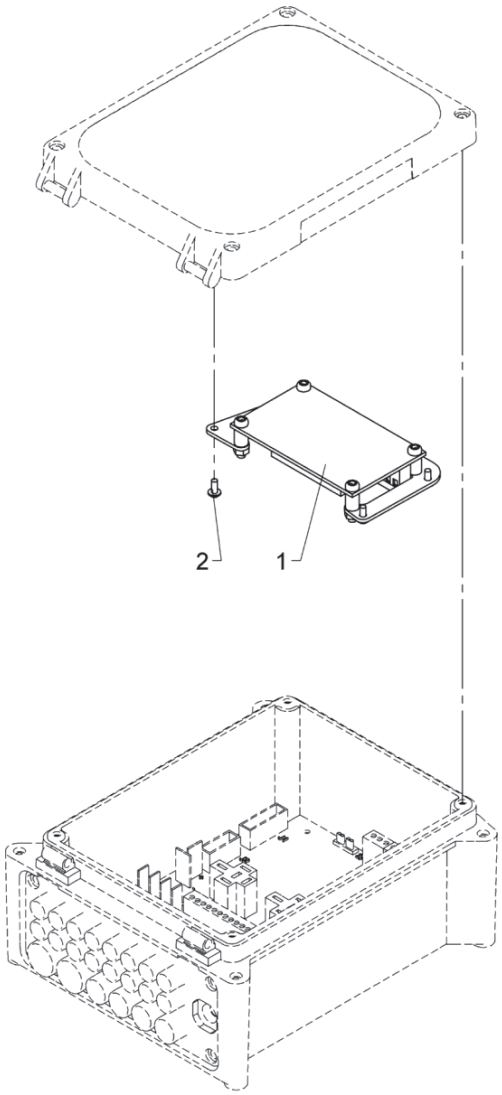

EJB5385, installation

Pos	Qty.	Part no.	Description	Remarks
1	1	29474	EJB5385	
2	4	30361	Screw, stainless	3,0 x 8

9520K-RCS, 9520OK-RCS

7003910
Internal ref. 7006050

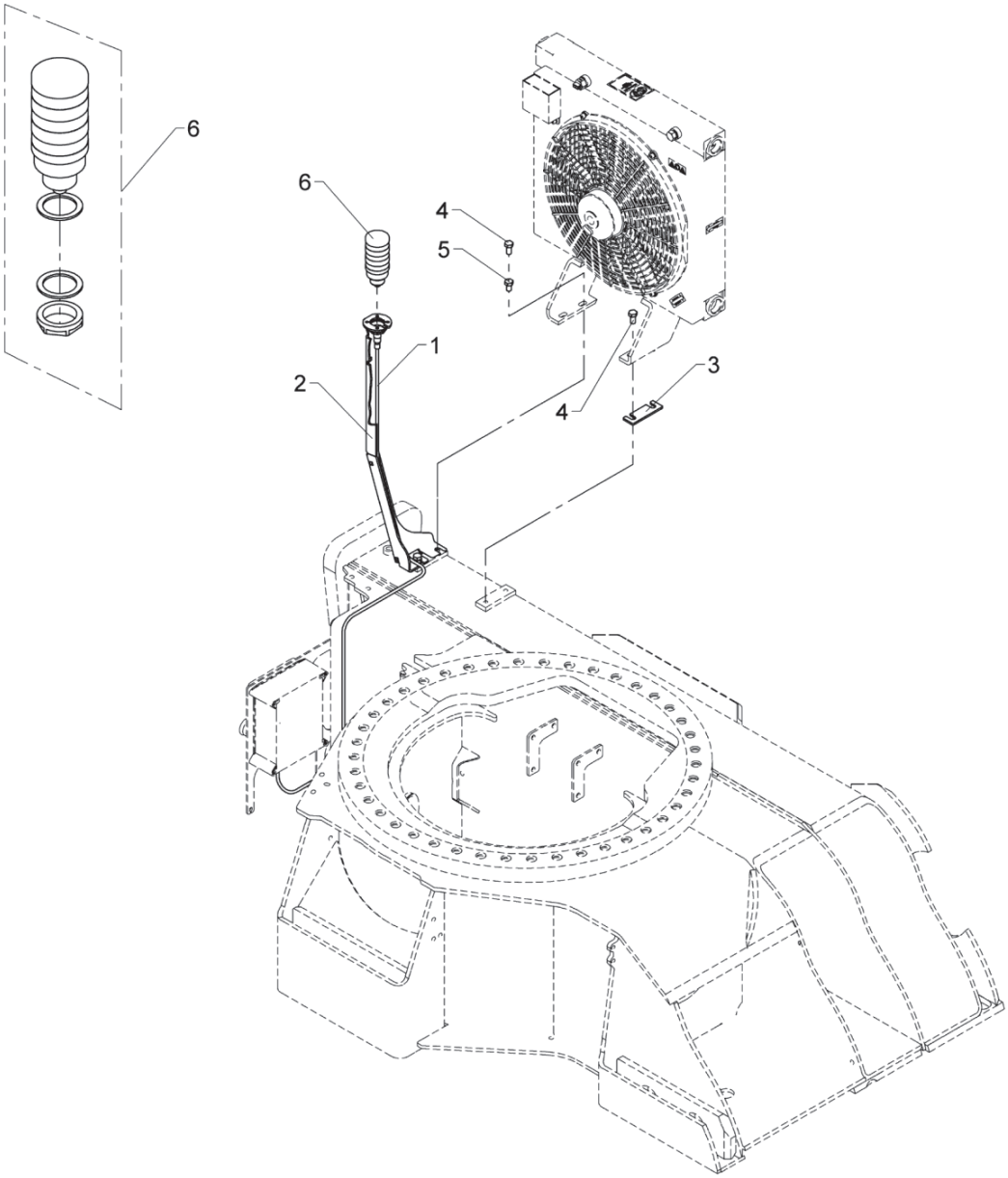

Light tower

Pos	Qty.	Part no.	Description	Remarks
		7006050	Light tower	
		7003910	Light tower	
1	1	29224	Cable with socket, 5 m	
2	1	7004016	Support for light tower	
3	1	7004017	Support for oil cooler	70 03 910
4	4	31517	Set screw, stainless	70 03 910
5	2	31510	Set screw, stainless	70 06 050
6	1	29542	Light tower	

9520K-RCS, 9520OK-RCS

7002430
7002420
Internal ref. 7002120

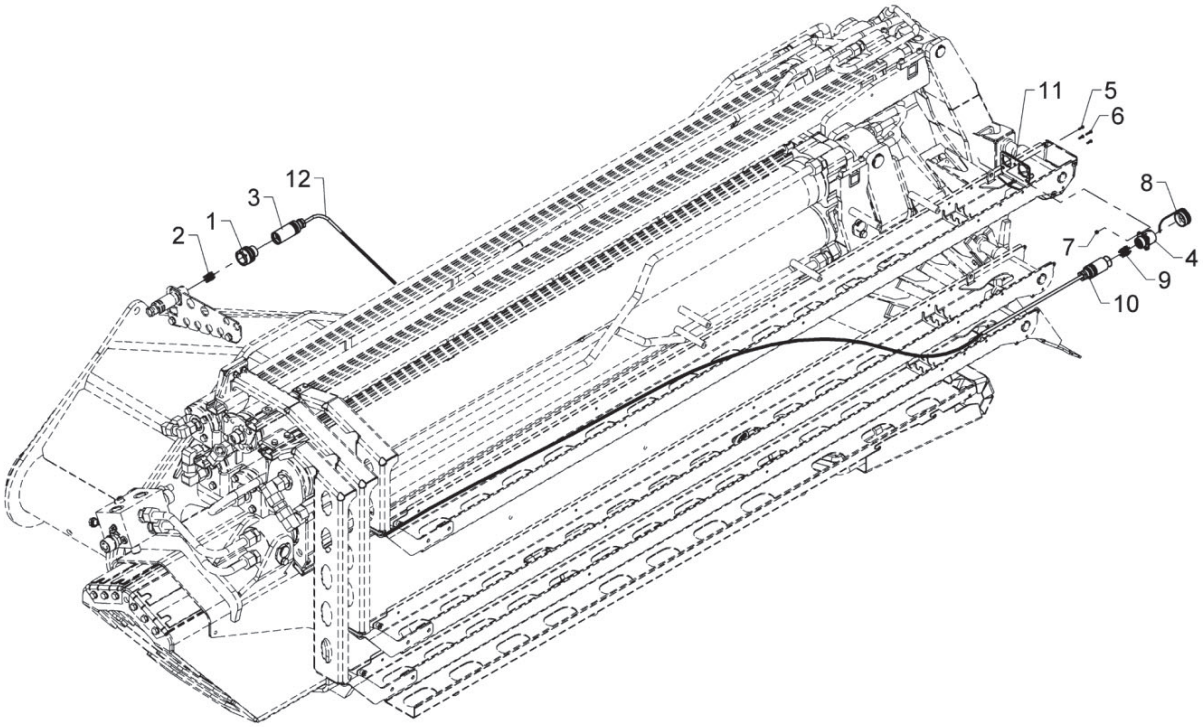

	✸ 28 263
K6	23m
K7	26m
K8	29m

MEWP supply, hose guides

Pos	Qty.	Part no.	Description	Remarks
		7002120	MEWP supply, hose guide K6	K6/OK6
		7002420	MEWP supply, hose guide K7	K7
		7002430	MEWP supply, hose guide K8	K8
1	1	29619	Plug, 7-polar	
2	7	29622	Pin, male, 2,5mm²	
3	1	29624	Housing, plug, long	
4	1	29618	Socket, 7-polar	
5	3	32386	Screw M3 x 12 stainless	M3 x 12
6	1	32398	Screw M3 x 16, stainless A2	M3x16
7	4	32387	Lock nut M3 stainless	M3
8	1	29627	Plug for socket	
9	7	29623	Pin, female, 2,5mm²	
10	1	29625	Housing, socket, short	
11	1	7004031	Fitting FJ+ MEWP plug	
12	1	29481	Cable 7x2.5 mm2, PUR	

9520K-RCS, 9520OK-RCS

Internal ref. 7002110

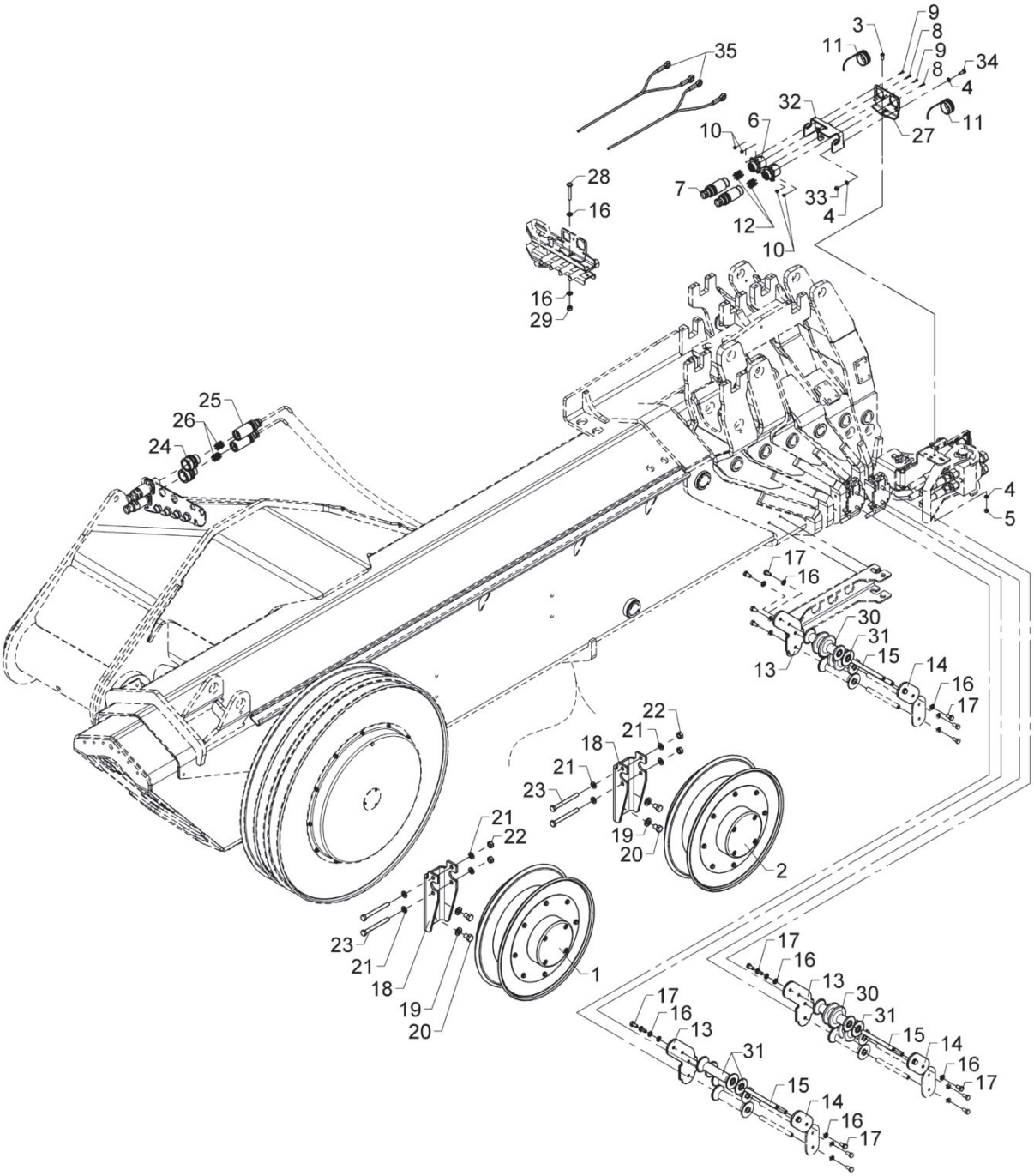

BOM obsolete

559 22 820

From loader 1370001
To loader 1370013
Created 07-11-17
Modified

MEWP supply, hose reel, multi- and quick-release coupling

Pos	Qty.	Part no.	Description	Remarks
1	1	29801	Cable drum	CRS400.9978
2	1	29802	Cable drum 7 x 2.5 mm²	CRS420.072517
3	1	32490	Screw	MC6 x 16
4	7	32302	Face washer, stainless	6 mm
5	1	30854	Nut, stainless	M6
6	2	29618	Socket, 7-polar	
7	2	29625	Housing, socket, short	
8	2	32398	Screw M3 x 16, stainless A2	M3x16
9	6	32386	Screw M3 x 12 stainless	M3 x 12
10	8	32387	Lock nut M3 stainless	M3
11	2	29627	Plug for socket	
12	14	29623	Pin, female, 2,5mm²	
13	3	6301321	Bracket	
14	3	6302882	End plate	
15	6	6302883	Pin	
16	14	31147	Face washer, 8 mm	
17	12	30131	Set screw, stainless	M8 x 16
18	2	6303058	Bracket for cable drum	
19	4	31131	Washer	12 mm
20	4	30174	Set screw	M12 x 16
21	8	31565	Washer, stainless	10 mm
22	4	30858	Nut	M10
23	4	30106	Steel bolt	M10 x 100
24	2	29619	Plug, 7-polar	
25	2	29624	Housing, plug, long	
26	14	29622	Pin, male, 2,5mm²	
27	1	7004031	Fitting FJ+ MEWP plug	
28	1	30139	Steel bolt, stainless	M8 x 50
29	1	30886	Lock nut, stainless	M8
30	2	63600	Guide roller	
31	4	63510	Guide roller	
32	1	7004065	Cable clamp	
33	3	30884	Lock nut, stainless	M6
34	3	30112	Set screw, stainless	M6 x 16
35	2	29492	Cableclamp	

9520K-RCS, 9520OK-RCS

Internal ref. 7002110

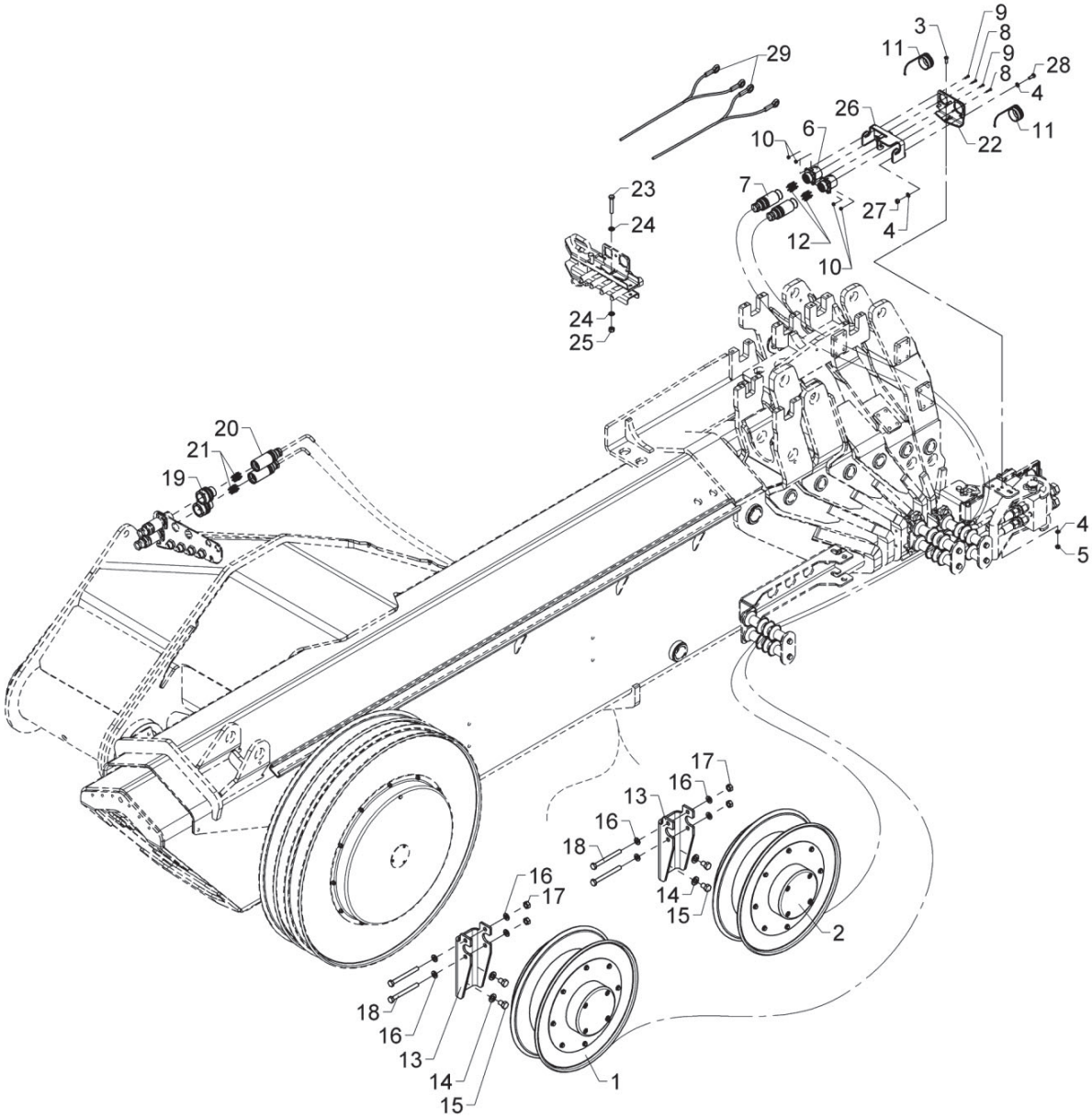

MEWP supply, hose reel, multi- and quick-release coupling

Pos	Qty.	Part no.	Description	Remarks
1	1	29801	Cable drum	CRS400.9978
2	1	29802	Cable drum 7 x 2.5 mm²	CRS420.072517
3	1	32490	Screw	MC6 x 16
4	7	32302	Face washer, stainless	6 mm
5	1	30854	Nut, stainless	M6
6	2	29618	Socket, 7-polar	
7	2	29625	Housing, socket, short	
8	2	32398	Screw M3 x 16, stainless A2	M3x16
9	6	32386	Screw M3 x 12 stainless	M3 x 12
10	8	32387	Lock nut M3 stainless	M3
11	2	29627	Plug for socket	
12	14	29623	Pin, female, 2,5mm²	
13	2	6303058	Bracket for cable drum	
14	4	31131	Washer	12 mm
15	4	30174	Set screw	M12 x 16
16	8	31565	Washer, stainless	10 mm
17	4	30858	Nut	M10
18	4	30106	Steel bolt	M10 x 100
19	2	29619	Plug, 7-polar	
20	2	29624	Housing, plug, long	
21	14	29622	Pin, male, 2,5mm²	
22	1	7004031	Fitting FJ+ MEWP plug	
23	1	30139	Steel bolt, stainless	M8 x 50
24	2	31147	Face washer, 8 mm	
25	1	30886	Lock nut, stainless	M8
26	1	7004065	Cable clamp	
27	3	30884	Lock nut, stainless	M6
28	3	30112	Set screw, stainless	M6 x 16
29	2	29492	Cableclamp	