IOWA MOLD TOOLING CO., INC.

P.O. Box 189
Garner, IA 50438
Tel: 641.923.3711
Fax: 641.923.2424
www.imt.com

Manual # 99906410

7020K - RCS
7020OK - RCS
Technical Specifications

Revised: 02-18-2021

Iowa Mold Tooling Co., Inc. is an Oshkosh Corporation Company

Table of Contents

Section - 7 51

7020 RCS - Technical Specifications

Section - 1

7020 RCS K6 - K8 Technical Specifications

7020 - Performance Specifications				
	Unit	**K6**	**K7**	**K8**
Load Moment	ft-lb	417934	412881	404941
Hydraulic Reach	ft	52’8”	60’0”	67’6”
Hydraulic Telescopic Movement	ft-in	37’6”	44’3”	51’3”
Lifting Capacity, Horizontal	lb-ft	28373 - 14’9”	27403 - 14’9”	26874 - 15’1”
	lb-ft	19996 - 20’ 0”	19445 - 20’ 4”	18938 - 20’ 8”
	lb-ft	15058 - 25’11”	14550-26’ 3”	14132 - 26’ 3”
	lb-ft	11795 - 32’ 2”	11310-32’ 6”	10891 - 32’ 6”
	lb-ft	9568 - 38’ 8”	9083-39’ 0”	8686 - 39’ 0”
	lb-ft	8025 - 45’ 7”	7540-45’ 7”	7143 - 45’ 7”
	lb-ft	6923 - 52’ 6”	6415-52’10”	6019 - 52’10”
	lb-ft	-	5578-59’ 8”	5181 - 59 ’8”
	lb-ft	-		4519 - 66’11”
Lifting Capacity, manual extensions	lb	4850	-	-
Slewing Torque, gross	ft-lb	5163	5163	5163
Slewing Angle	°	∞	∞	∞
Max. heel at max load moment	°	5	5	5
Slewing Speed	°/s	12	12	12
Dimensions				
Height above chassis	in	97.6	97.6	97.6
Width	in	99.2	99.2	99.2
Length, no extra valves	in	61	61	61
Length, with extra valves (int. hose routing	in	63	63	63
Stabilizer spread, S1, (standard)	ft-in	27’7”	27’7”	27’7”
Weights, Basic Loader *1				
Standard loader, excl. stabilizers	lb	12599	13040	13481
Stabilizers, S1 swing-up	lb	2039	2039	2039
Stabilizers, S1 hydr. swing-up	lb	2061	2061	2061
Mounting kit, 4 bolts	lb	99	99	99
Mounting kit, 8 bolts	lb	198	198	198
Manual extensions	lb	298	-	-
Tank 84.5 ga, excl. oil (fitted on loader)	lb	231	231	231
Tank 103 ga, excl. oil (fitted on loader)	lb	276	276	276
Tank 84.5 ga , excl. oil (external)	lb	176	176	176
Tank 111 ga, excl. oil (external)	lb	231	231	231
Oil in loader (stowing position)	lb	276	298	320
***1 WEIGHTS ± 5% BECAUSE OF TOLERANCES FOR PLATE THICKNESS**				

Max. Load on Stabilizers (Per Stabilizer Cylinder)				
	Unit	**K6**	**K7**	**K8**
S1, fixed	ft-lb	147512	147512	147512
S1, swing-up	ft-lb	147512	147512	147512
S1, hydr. swing-up	ft-lb	147512	147512	147512
Power Consumption / Oil Capacity				
Working pressure	psi	5438	5438	5438
Max. pump performance, fixed flow	g/min kW	1 x 21.1 - 52 1 x 31.7 - 85 2 x 17.2 - 77 2 x 29.1- 131	1 x 21.1 - 52 1 x 31.7 - 85 2 x 17.2 - 77 2 x 9.1 - 131	1 x 21.1 - 52 1 x 31.7 - 85 2 x 17.2 - 77 2 x 19.1 - 131
Max. oil consumption	ga	8	29.3	30.4

7020 RCS K6 - K8 Technical Specifications (Metric)

7020 - Performance Specifications				
	Unit	**K6**	**K7**	**K8**
Load Moment	tm	57,9	57,2	56,1
Hydraulic Reach	m	16,1	18,3	20,6
Hydraulic Telescopic Movement	mm	11450	13500	15650
Lifting Capacity, Horizontal	kg-m	12870 - 4,5	12430 - 4,5	12190 - 4,6
	kg-m	9070 - 6,1	8820 - 6,2	8590 - 6,3
	kg-m	6830 - 7,9	6600 - 8,0	6410 - 8,0
	kg-m	5350 - 9,8	5130 - 9,9	4940 - 9,9
	kg-m	4340 - 11,8	4120 - 11,9	3940 - 11,9
	kg-m	3640 - 13,9	3420 - 13,9	3240 - 13,9
	kg-m	3140 - 16,0	2910 - 16,1	2730 - 16,1
	kg-m		2530 - 18,2	2350 - 18,2
	kg-m			2050 - 20,4
Lifting Capacity, manual extensions	kg-m	2200	-	-
Slewing Torque, gross	kNm	7,0	7,0	7,0
Slewing Angle	∘	∞	∞	∞
Max. heel at max load moment	∘	5	5	5
Slewing Speed	°/s	12	12	12
Dimensions				
Height above chassis	mm	2480	2480	2480
Width	mm	2520	2520	2520
Length, no extra valves	mm	1550	1550	1550
Length, with 2 extra valves (hose reels)	mm	1600	1600	1600
Stabilizer spread, S1, (standard)	mm	8420	8420	8420
Weights, Basic Loader *1				
Standard loader, excl. stabilizers	kg	5715	5915	6115
Stabilizers, S1 swing-up	kg	925	925	925
Stabilizers, S1 hydr. swing-up	kg	935	935	935
Mounting kit, 4 bolts	kg	45	45	45
Mounting kit, 8 bolts	kg	90	90	90
Manual extensions	kg	135	-	-
Tank 320L, excl. oil (fitted on loader)	kg	105	105	105
Tank 390L, excl. oil (fitted on loader)	kg	125	125	125
Tank 320L, excl. oil (external)	kg	80	80	80
Tank 420L, excl. oil (external)	kg	105	105	105
Oil in loader (stowing position)	kg	125	135	145
***1 WEIGHTS ± 5% BECAUSE OF TOLERANCES FOR PLATE THICKNESS**				

Max. Load on Stabilizers (Per Stabilizer Cylinder)				
	Unit	**K6**	**K7**	**K8**
S1, fixed	ft-lb	200	200	200
S1, swing-up	ft-lb	200	200	200
S1, hydr. swing-up	ft-lb	200	200	200
Power Consumption / Oil Capacity				
Working pressure	Bar	375	375	375
Max. pump performance, fixed flow	L/min kW	1 x 80 - 52 1 x 120 - 85 2 x 65 - 77 2 x 110 - 131	1 x 80 - 52 1 x 120 - 85 2 x 65 - 77 2 x 110 - 131	1 x 80 - 52 1 x 120 - 85 2 x 65 - 77 2 x 110 -131
Max. oil consumption	L	106	111	115

This page left intentionally blank

7020 RCS K6-K8 Lifting Capacity Charts

Section - 2

7020 K6 Capacity Chart

IMT
MATERIAL HANDLING SYSTEMS

IOWA MOLD TOOLING CO., INC.
BOX 189 • GARNER • IA • 50438 • 641-923-3711

Model 7020 RCS K6

- **Limit working loads to those shown. Deduct the weight of load handling devices.**
- ***El peso propio (tara) de los dispositivos de manipulación de cargas es parte de la carga levantada y se debe descontar de la capacidad nominal.***

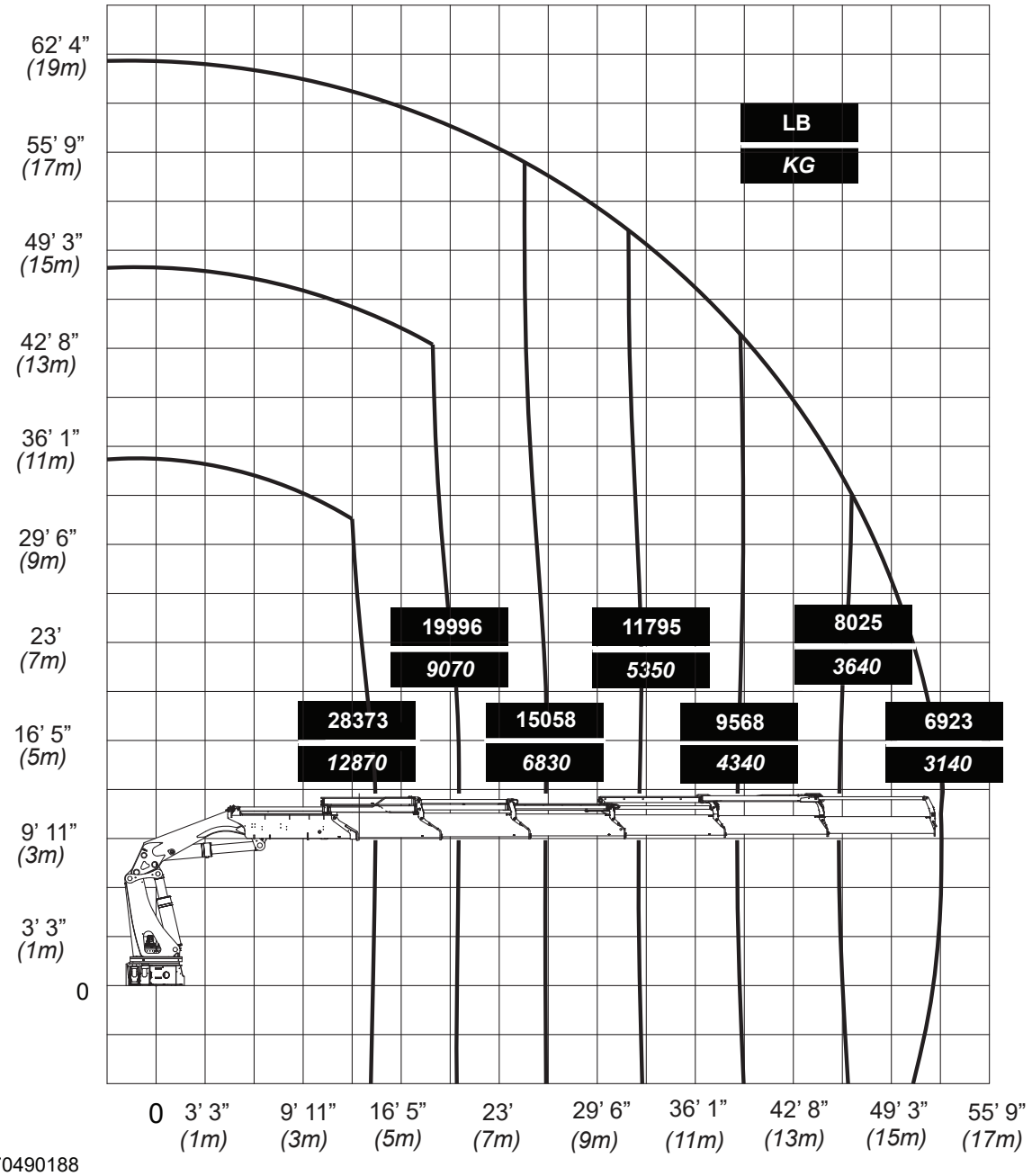

70490188

7020 K7 Capacity Chart

IMT
MATERIAL HANDLING SYSTEMS

IOWA MOLD TOOLING CO., INC.
BOX 189 • GARNER • IA • 50438 • 641-923-3711

Model 7020 RCS K7

- **Limit working loads to those shown. Deduct the weight of load handling devices.**
- ***El peso propio (tara) de los dispositivos de manipulación de cargas es parte de la carga levantada y se debe descontar de la capacidad nominal.***

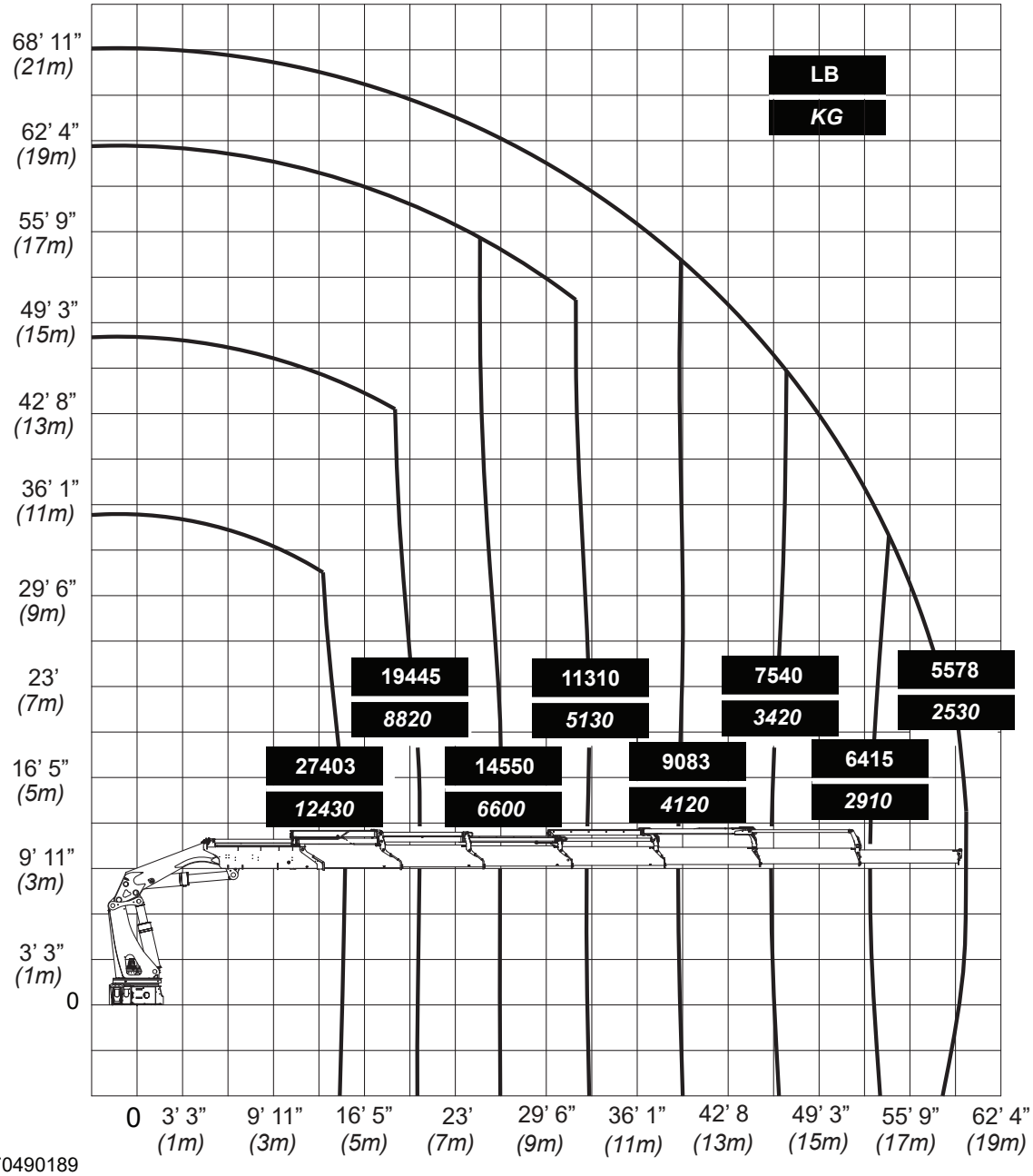

70490189

7020 K8 Capacity Chart

IMT
MATERIAL HANDLING SYSTEMS

IOWA MOLD TOOLING CO., INC.
BOX 189 • GARNER • IA • 50438 • 641-923-3711

Model 7020 RCS K8

- **Limit working loads to those shown. Deduct the weight of load handling devices.**
- ***El peso propio (tara) de los dispositivos de manipulación de cargas es parte de la carga levantada y se debe descontar de la capacidad nominal.***

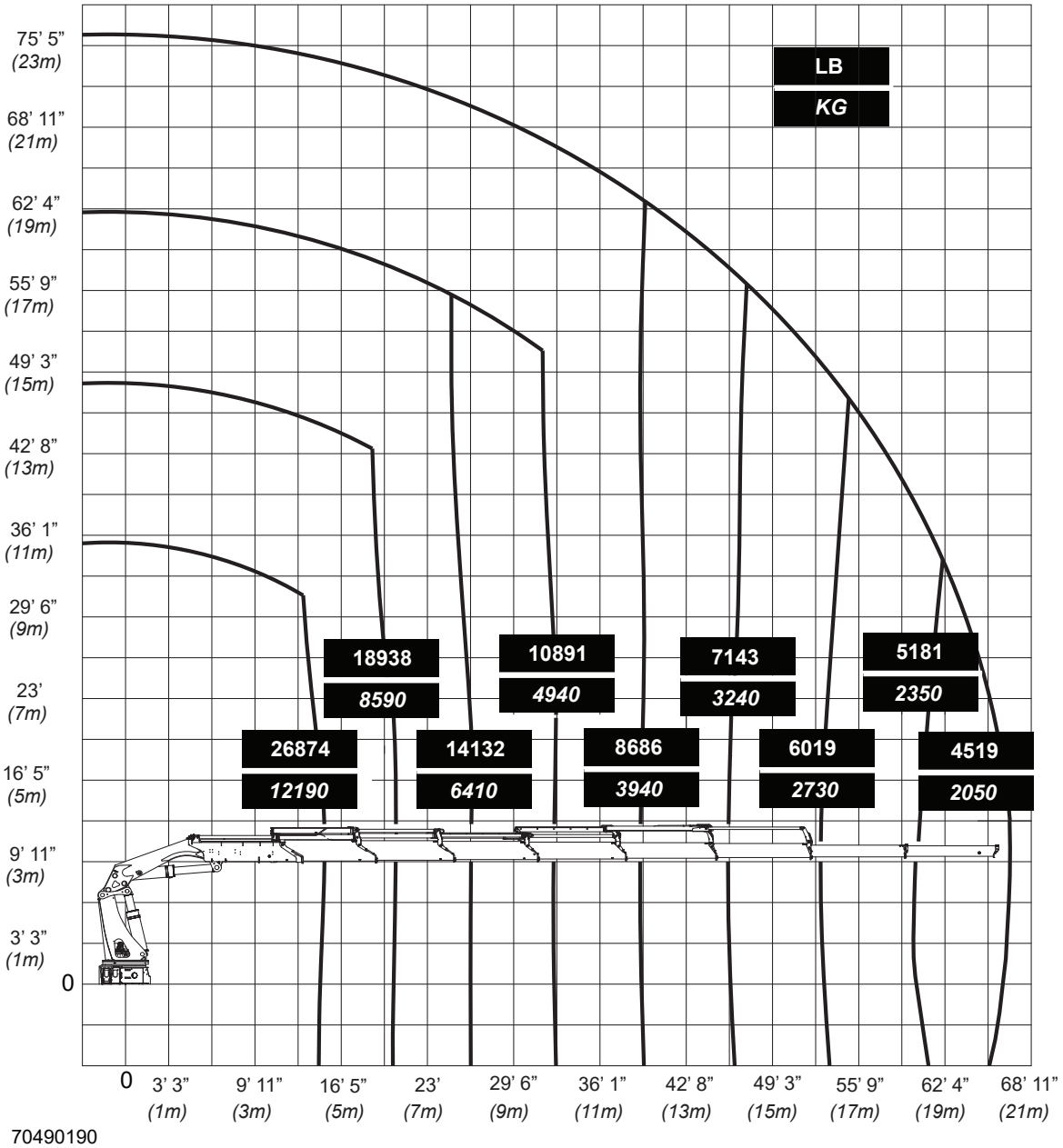

70490190

7020 RCS K6-K8 - Lifting Capacity

7020-K6

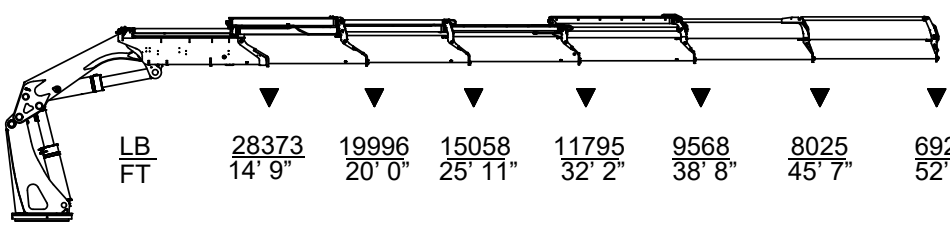

LB / FT	28373 / 14’ 9”	19996 / 20’ 0”	15058 / 25’ 11”	11795 / 32’ 2”	9568 / 38’ 8”	8025 / 45’ 7”	6923 / 52’ 6”
KG / M	12870 / 4,5	9070 / 6,1	6830 / 7,9	5350 / 9,8	4340 / 11,8	3640 / 13,9	3140 / 16,0

7020-K7

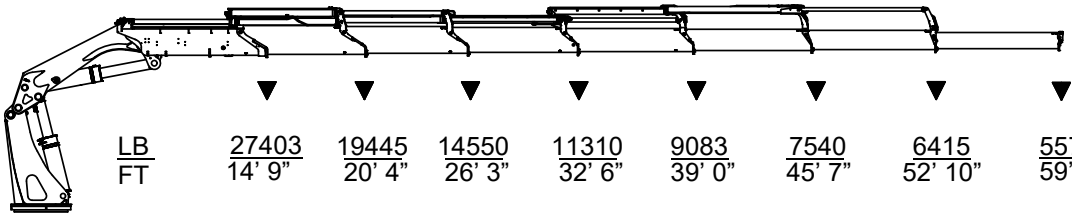

LB / FT	27403 / 14’ 9”	19445 / 20’ 4”	14550 / 26’ 3”	11310 / 32’ 6”	9083 / 39’ 0”	7540 / 45’ 7”	6415 / 52’ 10”	5578 / 59’ 8”
KG / M	12430 / 4,5	8820 / 6,2	6600 / 8,0	5130 / 9,9	4120 / 11,9	3420 / 13,9	2910 / 16,1	2530 / 18,2

7020-K8

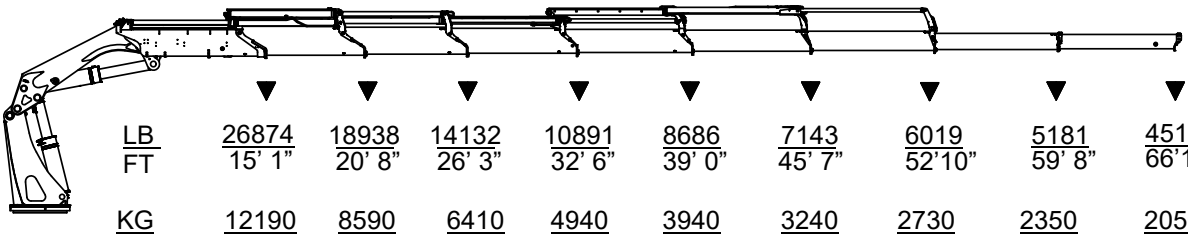

LB / FT	26874 / 15’ 1”	18938 / 20’ 8”	14132 / 26’ 3”	10891 / 32’ 6”	8686 / 39’ 0”	7143 / 45’ 7”	6019 / 52’10”	5181 / 59’ 8”	4519 / 66’11”
KG / M	12190 / 4,6	8590 / 6,3	6410 / 8,0	4940 / 9,9	3940 / 11,9	3240 / 13,9	2730 / 16,1	2350 / 18,2	2050 / 20,4

This page left intentionally blank

7020 RCS K6-K8 Dimension Drawings

Section - 3

Dimension sketch K6-K8

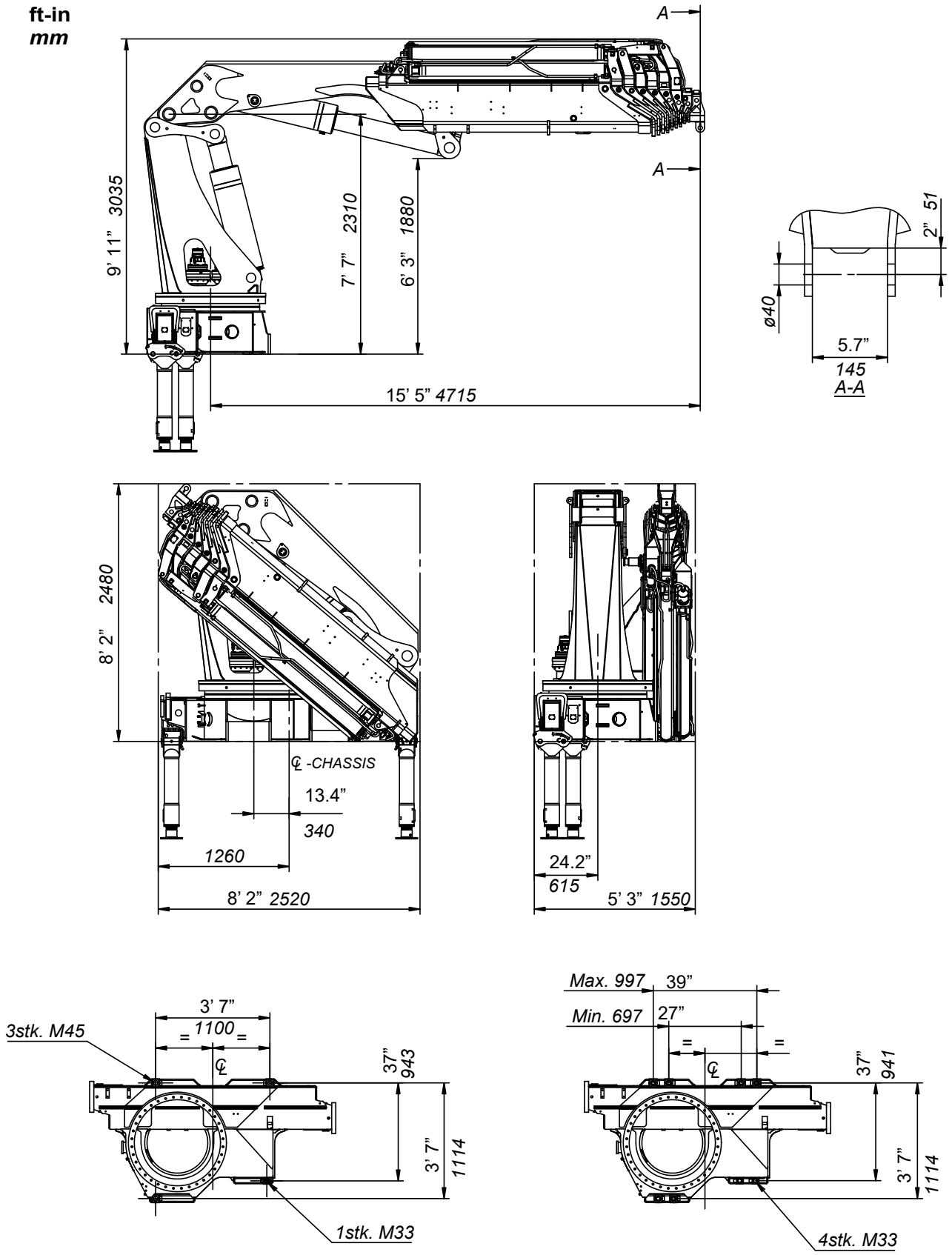

Slewing Radius

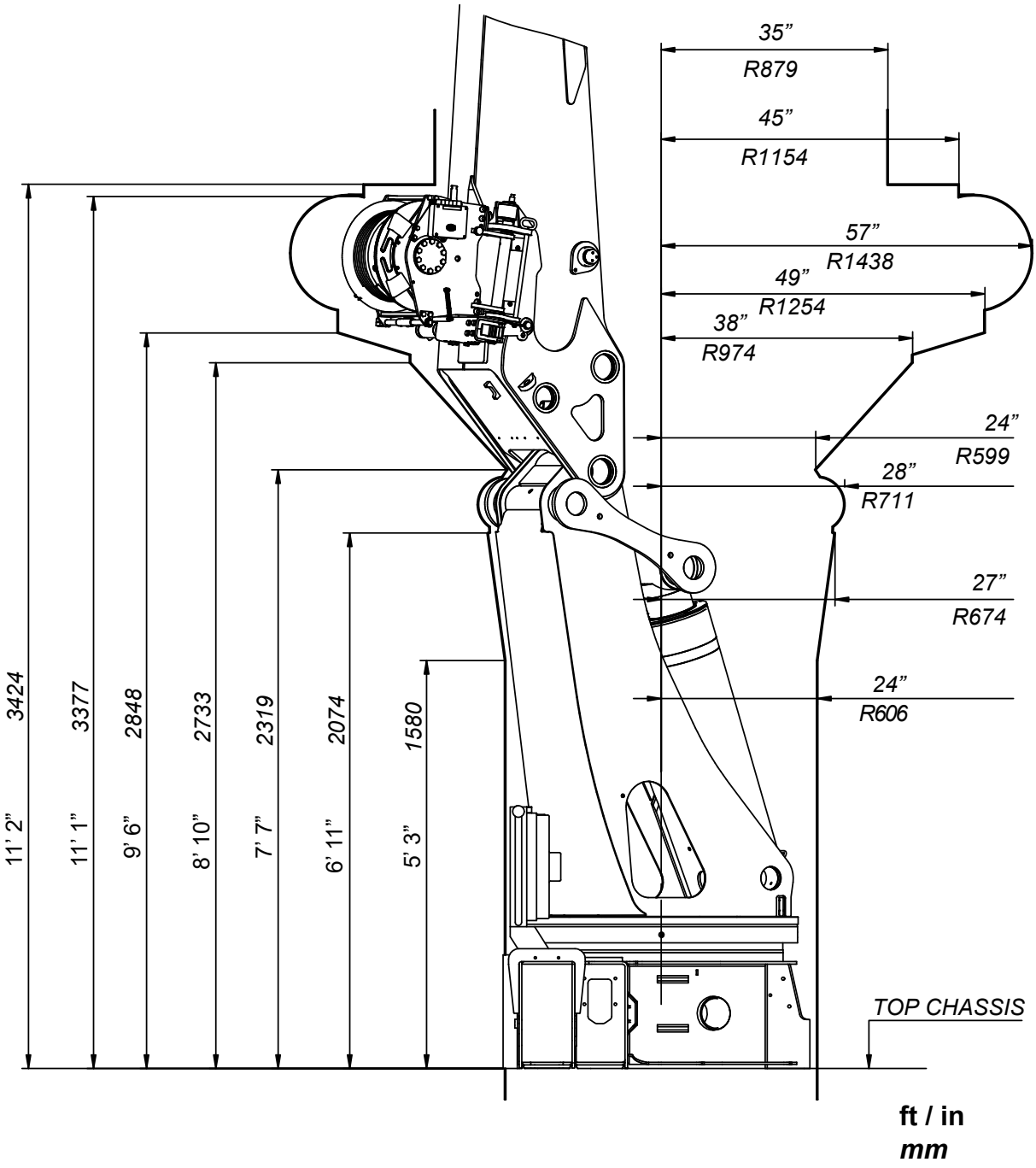

Lifting Height at Column

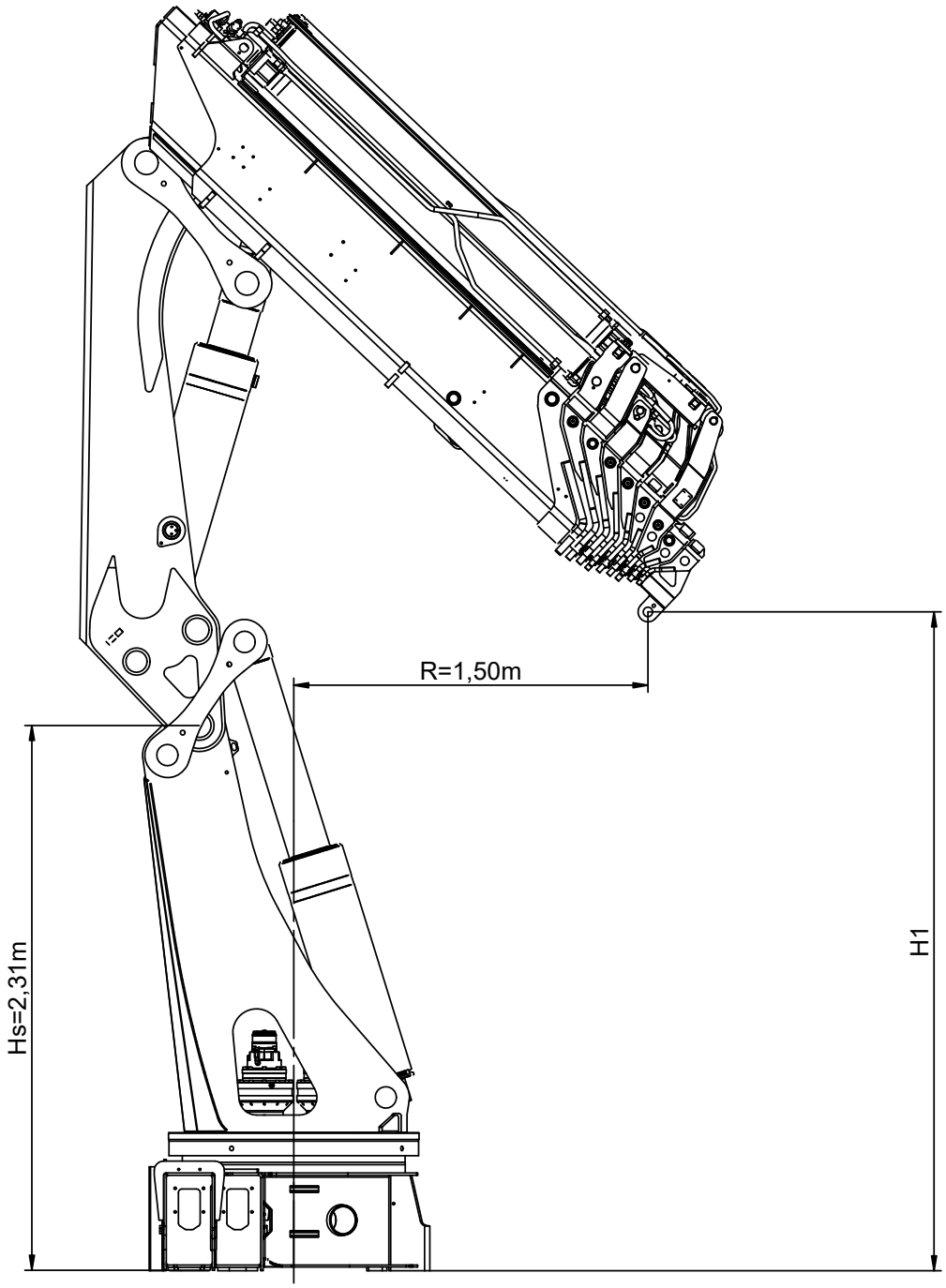

FT / IN		*Meters*	
f	H1	f	H1
K6	10’ 3”	K6	3,13m
K7	9’ 4”	K7	2,84m
K8	9’ 2”	K8	2,79m

Dimension Sketch, Stabilizer Legs

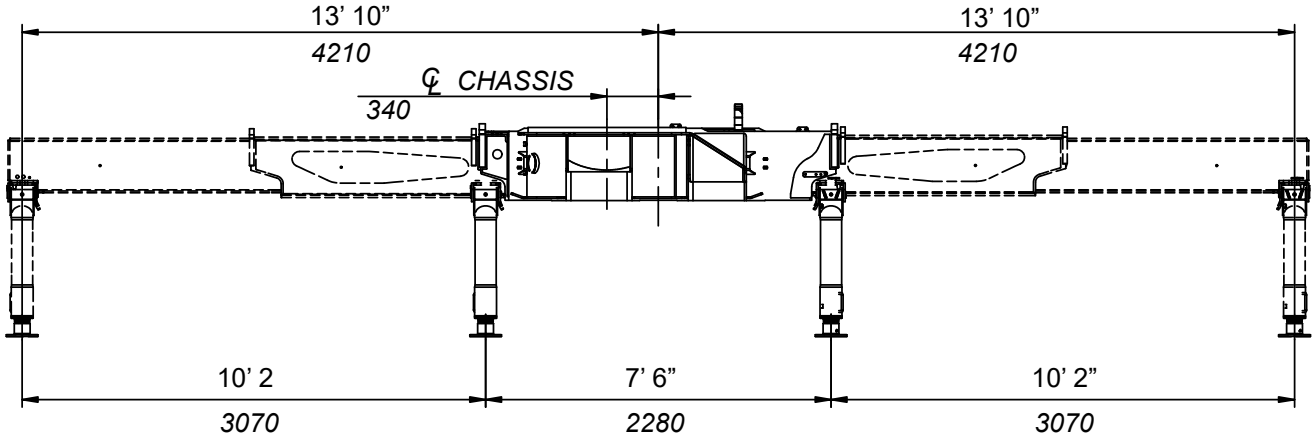

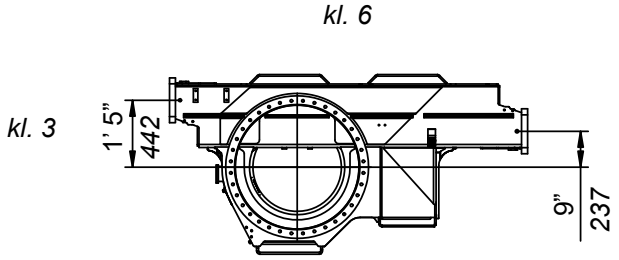

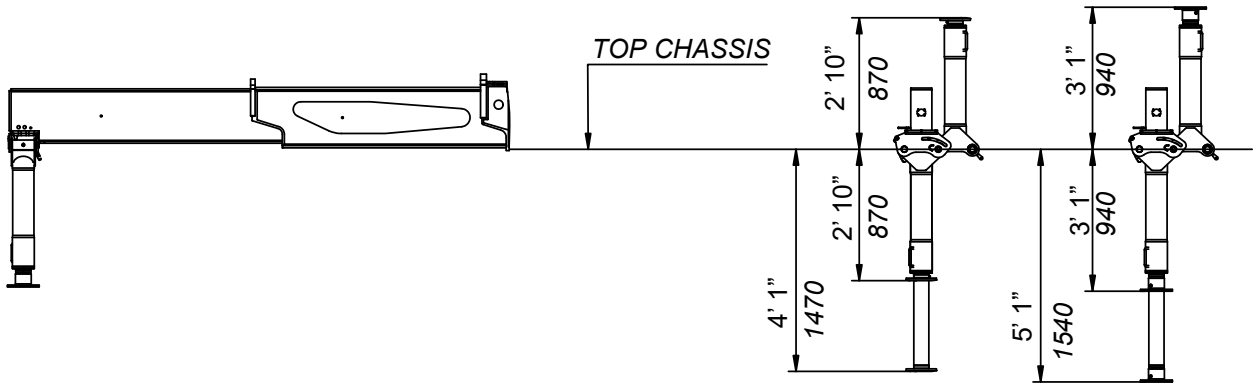

Dimension Sketch, Stabilizer Cylinder

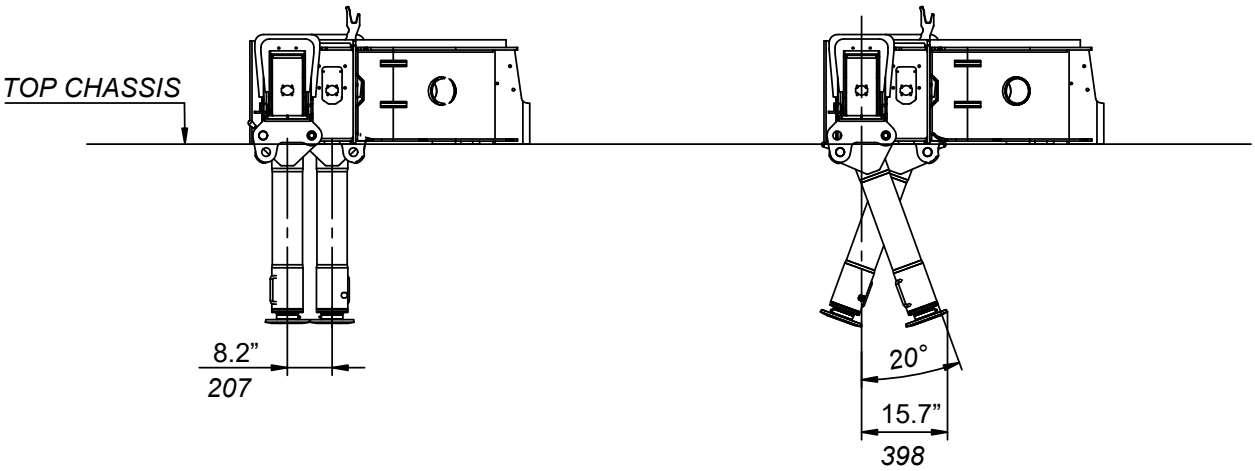

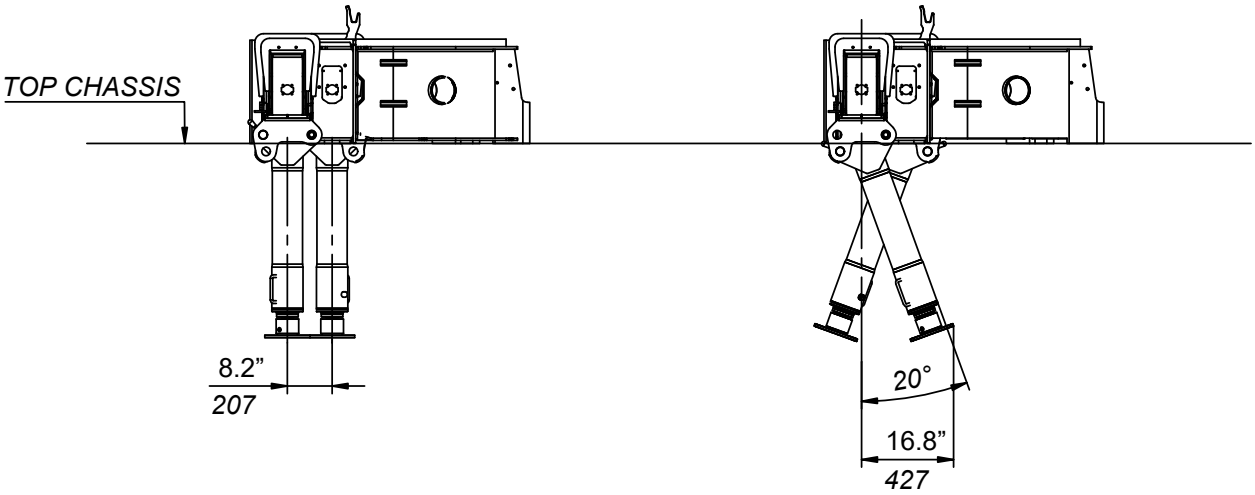

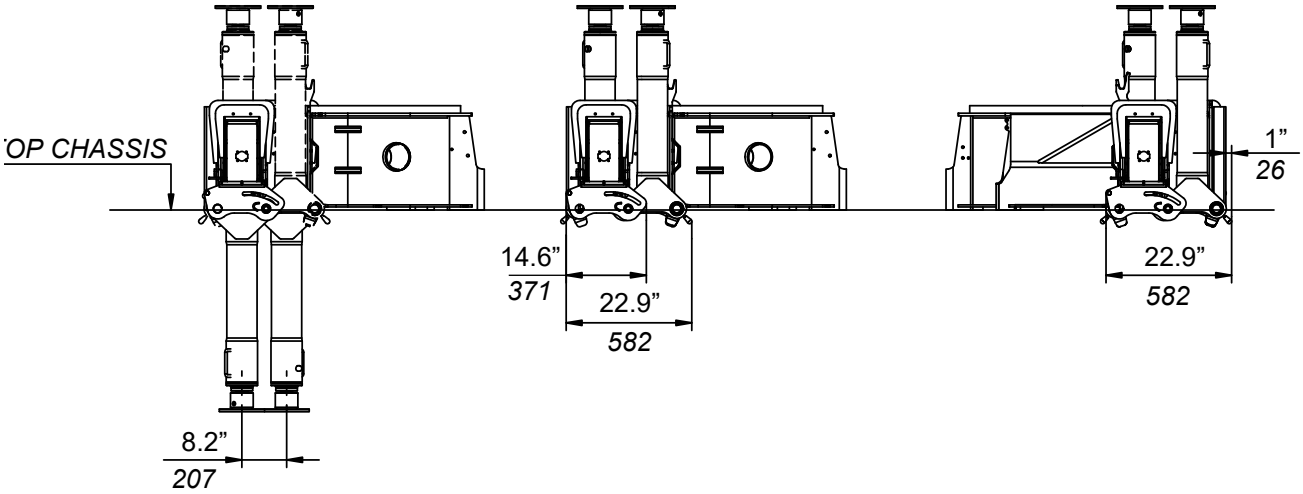

Stabilzier Cylinders

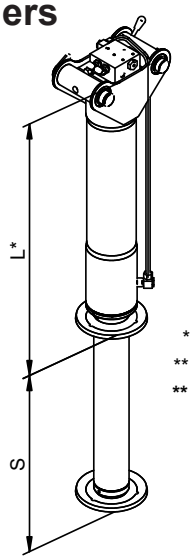

* Dimension from bottom to base.
** Approx. 125 mm are used for the rotation of the leg.
****** Approx. 5” Is Used For The Rotation Of The Leg.

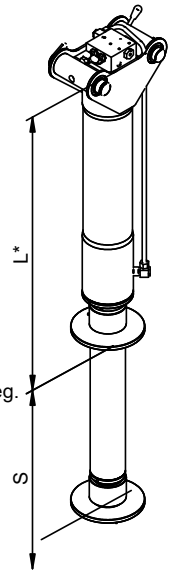

	TYPE 600		TYPE 600
Part #	63 03 570	No.	63 03 570
L*	33”	L*	*850 mm*
S**	24”	S**	*600 mm*
D	8”	D	*200 mm*

			TYPE 600
No.	63 03 570	No.	63 03 570
L	36”	L*	*920 mm*
S**	24”	S**	*600 mm*
D	8”	D	*210 mm*

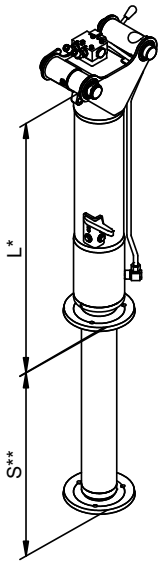

* Dimension from bottom to base.
** Approx. 125 mm are used for the rotation of the leg.
****** Approx. 5” Is Used For The Rotation Of The Leg.

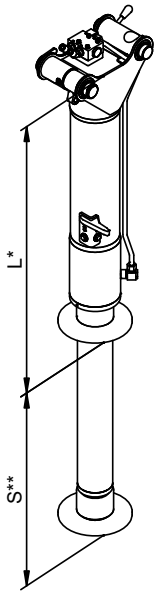

	TYPE 500	TYPE 600
No.	64 00 240	64 00 250
L*	30”	34”
S**	20”	24”
D	8”	8”
	TYPE 500	TYPE 600
No.	64 00 240	64 00 250
L*	*770 mm*	*870 mm*
S**	*500 mm*	*600 mm*
D	*200 mm*	*200 mm*

	TYPE 500	TYPE 600
No.	64 00 240	64 00 250
L*	29”	37”
S**	20”	24”
D	8”	8”
	TYPE 500	TYPE 600
No.	64 00 240	64 00 250
L*	*730 mm*	*940 mm*
S**	*500 mm*	*600 mm*
D	*210 mm*	*210 mm*

Dimension Sketch - Tanks

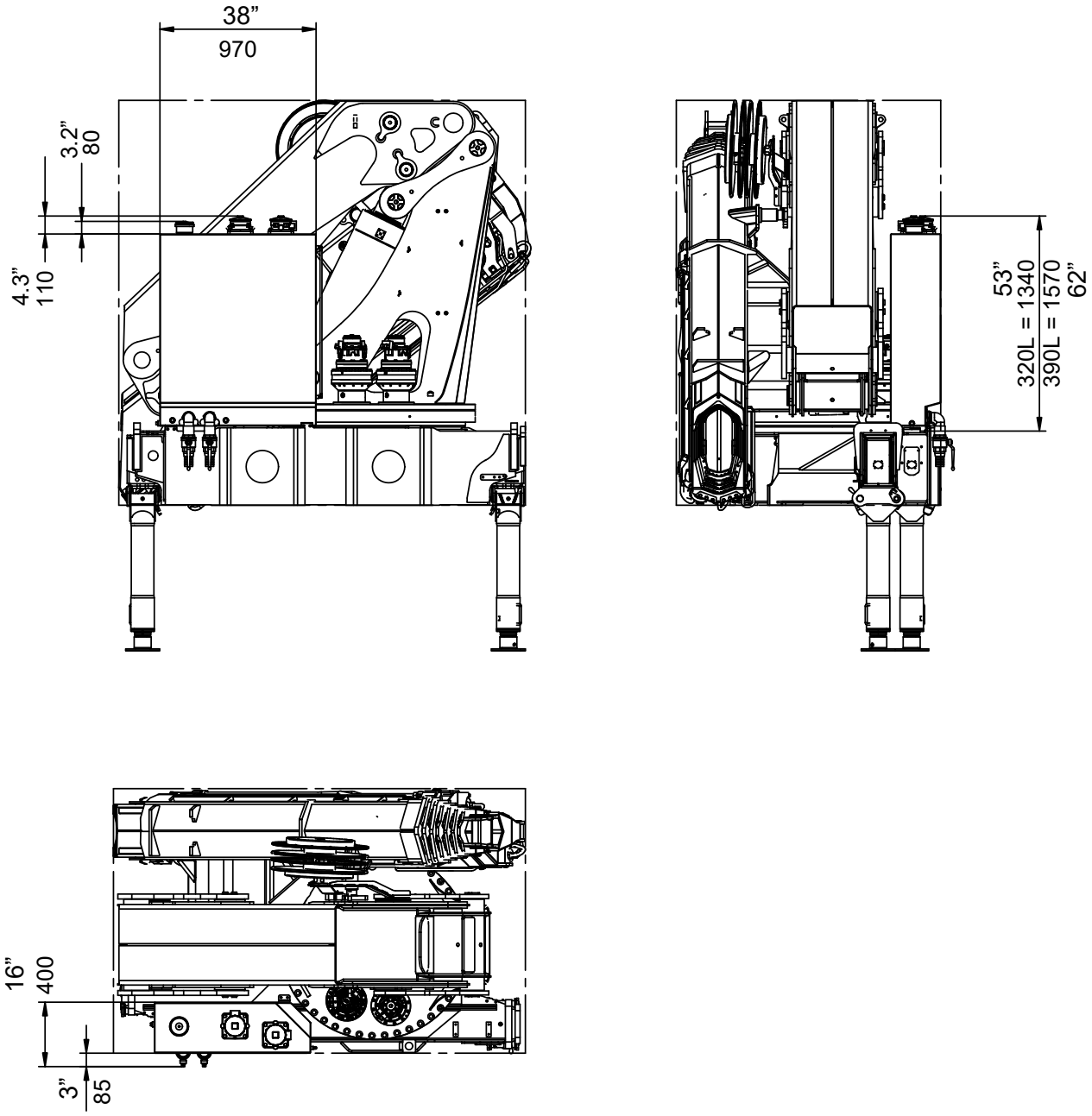

Technical Data, Winch

Performance:	Unit	K2-K8	Unit	K2-K8
Max. wire pull – 1nd layer	lb	7055	kg	3200
Max. wire pull – 2nd layer	lb	6437	kg	2920
Max. wire pull – 3nd layer	lb	5952	kg	2700
Max. wire pull – 4nd layer	lb	5512	kg	2500

Weights:	Unit	W/O Fly-Jib	K5-K7 With Fly-Jib	K8 With Fly-Jib
Fixed parts	lb	529	849	849
Loose parts	lb	110*	209*	209*

Weights:	Unit	W/O Fly-Jib	K5-K7 With Fly-Jib	K8 With Fly-Jib
Fixed parts	kg	240	385	385
Loose parts	kg	50*	95*	95*

Wire Speed:	Unit		Unit	
1st layer	ft/min	102	m/mim	31
2nd layer	ft/min	115	m/mim	35
3nd layer	ft/min	125	m/mim	38
4nd layer	ft/min	138	m/mim	42

Weights:	W/O Fly-Jib	K5-K7 With Fly-Jib	K8 With Fly-Jib
Dimension	Ø12mm x 61m	Ø 12mm x 71m	Ø12mm x 78m
IMT Item No.	63203	63202	63205

Weights:	W/O Fly-Jib	K5-K7 With Fly-Jib	K8 With Fly-Jib
Dimension	.Ø1/2” x 200’	Ø1/2” x 233’	Ø1/2” x 256’
IMT Item No.	63203	63202	63205

* Weight without wire block for double cutting 53 lb (24 kg) and extra counterweight 49 lb (22 kg).

Dimension Sketch, Winch

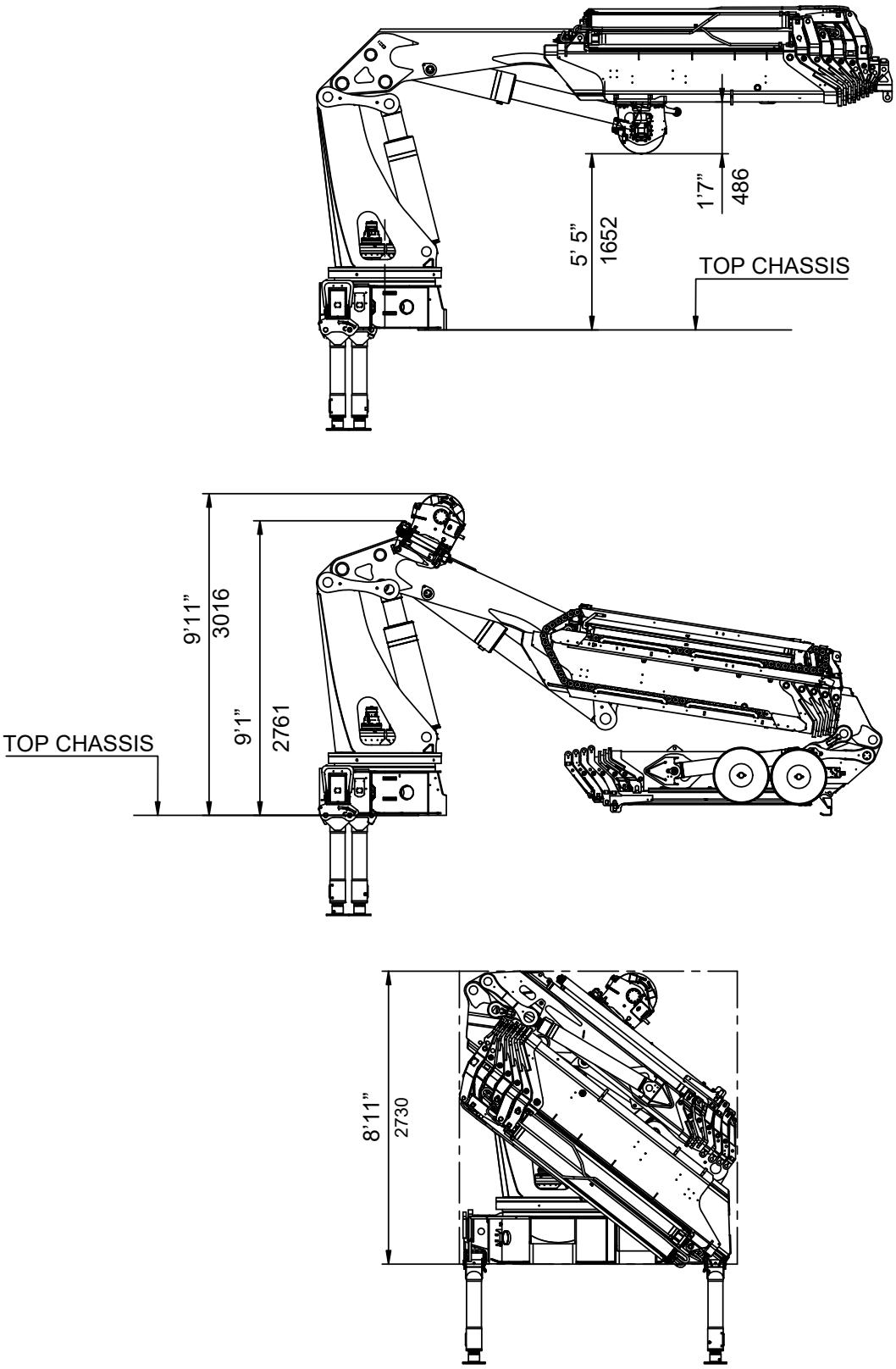

Stowed in Truck Body

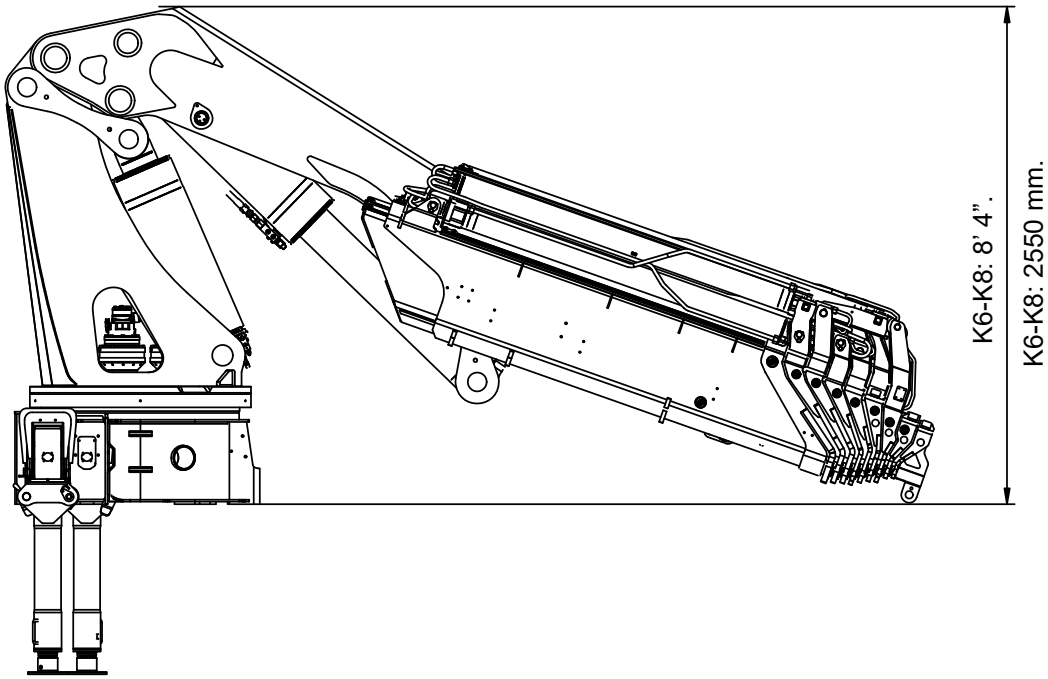

This page left intentionally blank

7020OK RCS - Technical Specifications

Section - 4

7020 RCS OK2 - OK6 Technical Specifications

7020 - Performance Specifications						
	Unit	**OK2**	**OK3**	**OK4**	**OK5**	**OK6**
Load Moment	ft-lb	449893	439043	433980	421684	420961
Hydraulic Reach	ft	27	34	41	48	56
Hydraulic Telescopic Movement	ft-in	12’ 4”	18’ 10”	25’ 8”	32’ 10”	40’ 4”
Lifting Capacity, Horizontal	lb-ft	30490 - 14’9”	29740 - 14’9”	29410 - 14’9”	28572 - 14’9”	27888 - 15’ 1”
	lb-ft	21649 - 20’ 8”	20966 - 20’ 8”	20503 - 20’ 8”	19820 - 21’ 0”	19246 - 21’ 0”
	lb-ft	16689 - 26’ 11”	15917 - 26’11”	15498 - 26’11”	14903 - 27’ 3”	14374 - 27’ 3”
	lb-ft		13007 - 33’6”	12412 - 33’ 6”	11729 - 33’10”	11199 - 33’10”
	lb-ft			10163 - 40’ 4”	9612 - 40’ 8”	9083 - 40’ 8”
	lb-ft				8135 - 47’11”	7606 - 47’ 11”
	lb-ft					6526 - 55’ 5”
Lifting Capacity, manual extensions	lb-ft	—	—	—	6162 - 55’ 5”	—
Slewing Torque, gross	ft-lb	5163	5163	5163	5163	5163
Slewing Angle	°	∞	∞	∞	∞	∞
Max. heel at max load moment	°	5	5	5	5	5
Slewing Speed	°/s	12	12	12	12	12
Dimensions						
Height above chassis	in	97.2	97.2	97.2	97.2	97.2
Width	in	98.4	98.4	98.4	98.4	998.4
Length, no extra valves	in	52.8	52.8	52.8	52.8	52.8
Length, with 2 extra valves (hose reels)	in	—	—	—	63	63
Length, with extra valves (int. hose routing	in	52.8	52.8	52.8	52.8	52.8
Stabilizer spread, S1, (standard)	ft-in	27’ 7”	27’ 7”	27’ 7”	27’ 7”	27’ 7”
Weights, Basic Loader *1						
Standard loader, excl. stabilizers	lb	9844	10505	11166	11762	12291
Stabilizers, S1 swing-up	lb	2039	2039	2039	2039	2039
Stabilizers, S1 hydr. swing-up	lb	2061	2061	2061	2061	2061
Mounting kit, 4 bolts	lb	198	198	198	198	198
Mounting kit, 8 bolts	lb	99	99	99	99	99
Manual extensions	—	—	—	—	331	—
Tank 84.5 ga, excl. oil (fitted on loader)	lb	231	231	231	231	231
Tank 103 ga, excl. oil (fitted on loader)	lb	276	276	276	276	276
Tank 84.5 ga , excl. oil (external)	lb	176	176	176	176	176
Tank 111 ga, excl. oil (external)	lb	231	231	231	231	231
Oil in loader (stowing position)	lb	198	220	254	276	298
***1 WEIGHTS ± 5% BECAUSE OF TOLERANCES FOR PLATE THICKNESS**						

7020 OK TECHNICAL SPECIFICATIONS - CONTINUED

Max. load on stabilizers (Per stabilizer cylinder)	Unit	7020 OK2	7020 OK3	7020 OK4	7020 OK5	7020 OK6
S1, swing-up	ft-lb	147512	147512	147512	147512	147512
S1, hydraulic swing-up	ft-lb	147512	147512	147512	147512	147512
Power Consumption Oil Capacity	**Unit**	**7020 OK2**	**7020 OK3**	**7020 OK4**	**7020 OK5**	**7020 OK6**
Working Pressure	PSI	5439	5439	5439	5439	5439
Tank Capacity (fitted on loader)	ga					
Max. Oil Consumption	ga	21.7	23.8	25.9	27.5	29.1
Max Pump Performance, fixed flow	g/min	21.	21	21	21	21

Power Consumption Oil Capacity	Unit	7020 OK2	7020 OK3	7020 OK4	7020 OK5	7020 OK6
Max. pump perfoance, fixed flow	g/min & KW	1 x 21 - 50 1 x 31.7 - 82 2 x 17 - 75 2 x 29 - 127	1 x 21 - 50 1 x 31.7 - 82 1 x 17 - 75 1 x 29 - 127	1 x 21 - 50 1 x 31.7 - 82 1 x 17 - 75 1 x 29 - 127	1 x 21 - 50 1 x 31.7 - 82 1 x 17 - 75 1 x 29 - 127	1 x 21 - 50 1 x 31.7 - 82 1 x 17 - 75 1 x 29 - 127

7020 RCS OK2 - OK6 Metric Specifications

7020 Metric Perfomance Specificaions						
	Unit	OK2	OK3	OK4	OK5	OK6
Loading Moment	tm	62.2	60.7	60	58.3	58.2
Hydraulic Reach	m	8.3	10.34	12.4	14.64	16.94
Hydraulic Telescopic Movement	mm	3750	5750	7850	10025	12275
Lifting Capacity, Horizontal	kg-m	13830 - 4.5	13490 - 4.5	13390 - 4.5	12960 - 4.5	12650 - 4.6
	kg-m	9820 - 6.3	9510 - 6.3	9300 - 6.3	8990 - 6.4	8730 - 6.4
	kg-m	7520 - 8.2	7220 - 8.2	7030 - 8.2	6760 - 8.3	6520 - 8.3
	kg-m		5900 - 10.2	5630 - 10.2	5320 - 10.3	5080 - 10.3
	kg-m			4610 - 12.3	4360 - 12.4	4120 - 12.4
	kg-m				3690 - 14.6	3450 - 14.6
	kg-m					2960 - 16.9
Lifting Capacity, manual extension	kg-m	—	—	—	3550 - 16.7	—
Slewing Torque, gross	kNm	7.0	7.0	7.0	7.0	7.0
Slewing Angle	°	∞	∞	∞	∞	∞
Max. heel at max. load moment	°	5	5	5	5	5
Slewing Speed	°/s	12	12	12	12	12
Dimensions						
Height above chassis	mm	2470	2470	2470	2470	2470
Width	mm	2500	2500	2500	2500	2500
Length, no extra valves	mm	1340	1340	1340	1340	12340
Length, with 2 extra valves (hose reels)	mm	—	—	—	1600	1600
Length, with extra valves (int. hose routing	mm	1340	1340	1340	1340	1340
Stabilizer spread, S1, (standard)	mm	8420	8420	8420	8420	8420
Weights, Basic Loader *1						
Standard loader, excl. stabilizers	kg	4465	4765	5065	5335	5575
Stabilizers, S1 swing-up	kg	925	925	925	925	925
Stabilizers, S1 hydr. swing-up	kg	935	935	935	935	935
Mounting kit, 4 bolts	kg	90	90	90	90	90
Mounting kit, 8 bolts	kg	45	45	45	45	45
Manual extensions	kg	—	—	—	—	—
Tank *320L*, excl. oil (fitted on loader)	kg	105	105	105	105	105
Tank *390L,* excl. oil (fitted on loader)	kg	125	125	125	125	125
Tank *320L,* excl. oil (external)	kg	80	80	80	80	80
Tank *420L*, excl. oil (external)	kg	105	105	105	105	105
Oil in loader (stowing position)	kg	90	100	115	125	135
***1 WEIGHTS ± 5% BECAUSE OF TOLERANCES FOR PLATE THICKNESS**						

METRIC SPECIFICATIONS - CONTINUED

Max. load on stabilizers (Per stabilizer cylinder)	Unit	7020 OK2	7020 OK3	7020 OK4	7020 OK5	7020 OK6
S1, swing-up	KN	200	200	200	200	200
S1, hydraulic swing-up	KN	200	200	200	200	200
Power Consumption Oil Capacity	**Unit**	**7020 OK2**	**7020 OK3**	**7020 OK4**	**7020 OK5**	**7020 OK6**
Working Pressure	Bar	375	375	375	375	375
Tank Capacity (fitted on loader)	L					
Max. Oil Consumption	L	82	90	98	104	110
Max Pump Performance, fixed flow	L/min	80	80	80	80	80

Power Consumption Oil Capacity	Unit	7020 OK2	7020 OK3	7020 OK4	7020 OK5	7020 OK6
Max. pump performance, fixed flow	L/min & KW	1 x 80 - 50 1 x 120 - 82 2 x 65 - 75 2 x 110 - 127	1 x 80 - 50 1 x 120 - 82 1 x 65 - 75 1 x 110 - 127	1 x 80 - 50 1 x 120 - 82 1 x 65 - 75 1 x 110 - 127	1 x 80 - 50 1 x 120 - 82 1 x 65 - 75 1 x 110 - 127	1 x 80 - 50 1 x 120 - 82 1 x 65 - 75 1 x 110 - 127

This page left intentionally blank

7020OK2-OK6 RCS Lifting Capacity

Section - 5

7020RCS-OK2- Capacity Chart

IMT
MATERIAL HANDLING SYSTEMS

IOWA MOLD TOOLING CO., INC.
BOX 189 • GARNER • IA • 50438 • 641-923-3711

Model 7020 RCS-OK2

- **Limit working loads to those shown. Deduct the weight of load handling devices.**
- ***El peso propio (tara) de los dispositivos de manipulación de cargas es parte de la carga levantada y se debe descontar de la capacidad nominal.***

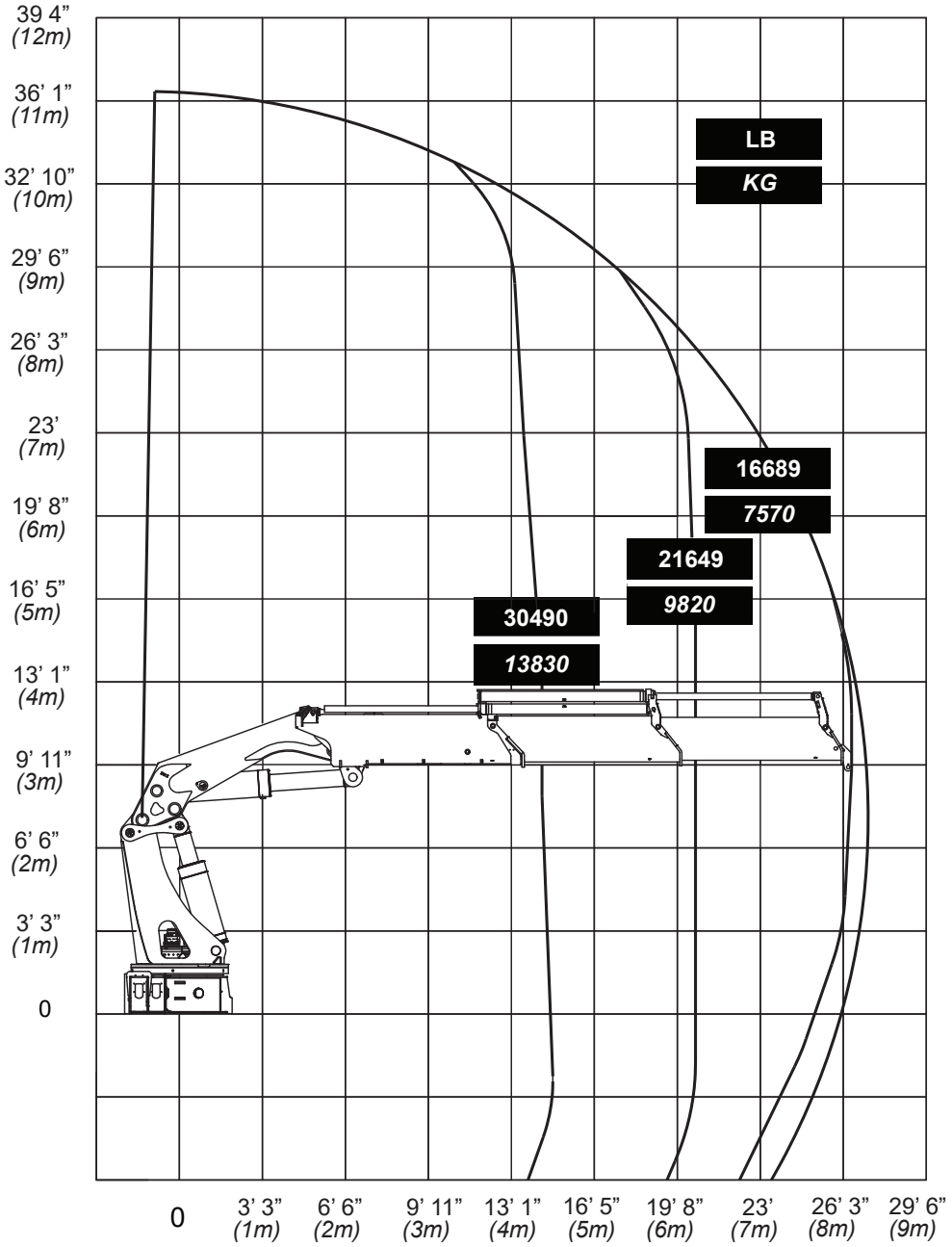

70490179

7020 RCS-OK3 - Capacity Chart

IMT
MATERIAL HANDLING SYSTEMS

IOWA MOLD TOOLING CO., INC.
BOX 189 • GARNER • IA • 50438 • 641-923-3711

Model 7020 RCS-OK3

- **Limit working loads to those shown. Deduct the weight of load handling devices.**
- ***El peso propio (tara) de los dispositivos de manipulación de cargas es parte de la carga levantada y se debe descontar de la capacidad nominal.***

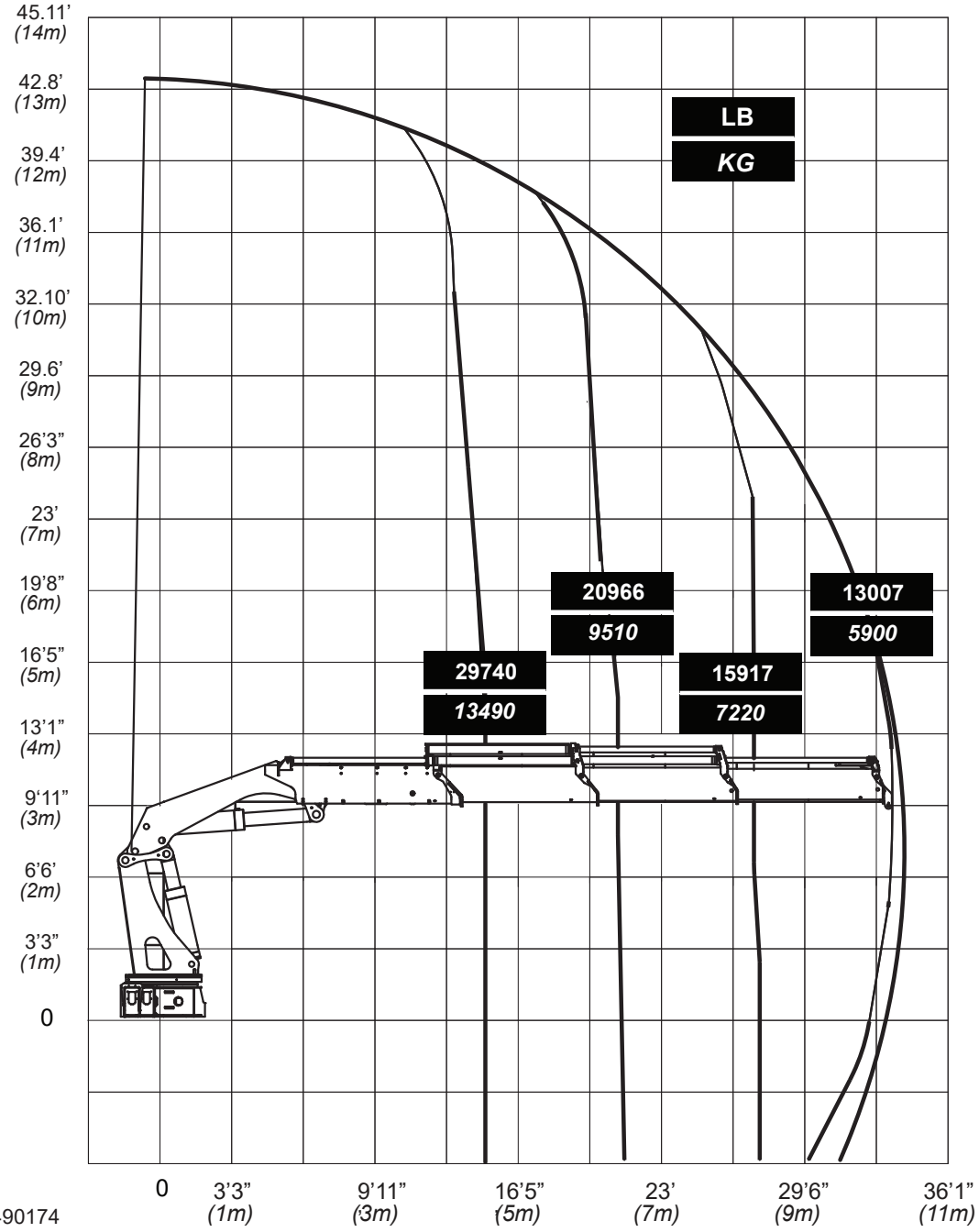

70490174

7020 RCS-OK4 - Capacity Chart

IMT
MATERIAL HANDLING SYSTEMS

IOWA MOLD TOOLING CO., INC.
BOX 189 • GARNER • IA • 50438 • 641-923-3711

Model 7020 RCS-OK4

- **Limit working loads to those shown. Deduct the weight of load handling devices.**
- ***El peso propio (tara) de los dispositivos de manipulación de cargas es parte de la carga levantada y se debe descontar de la capacidad nominal.***

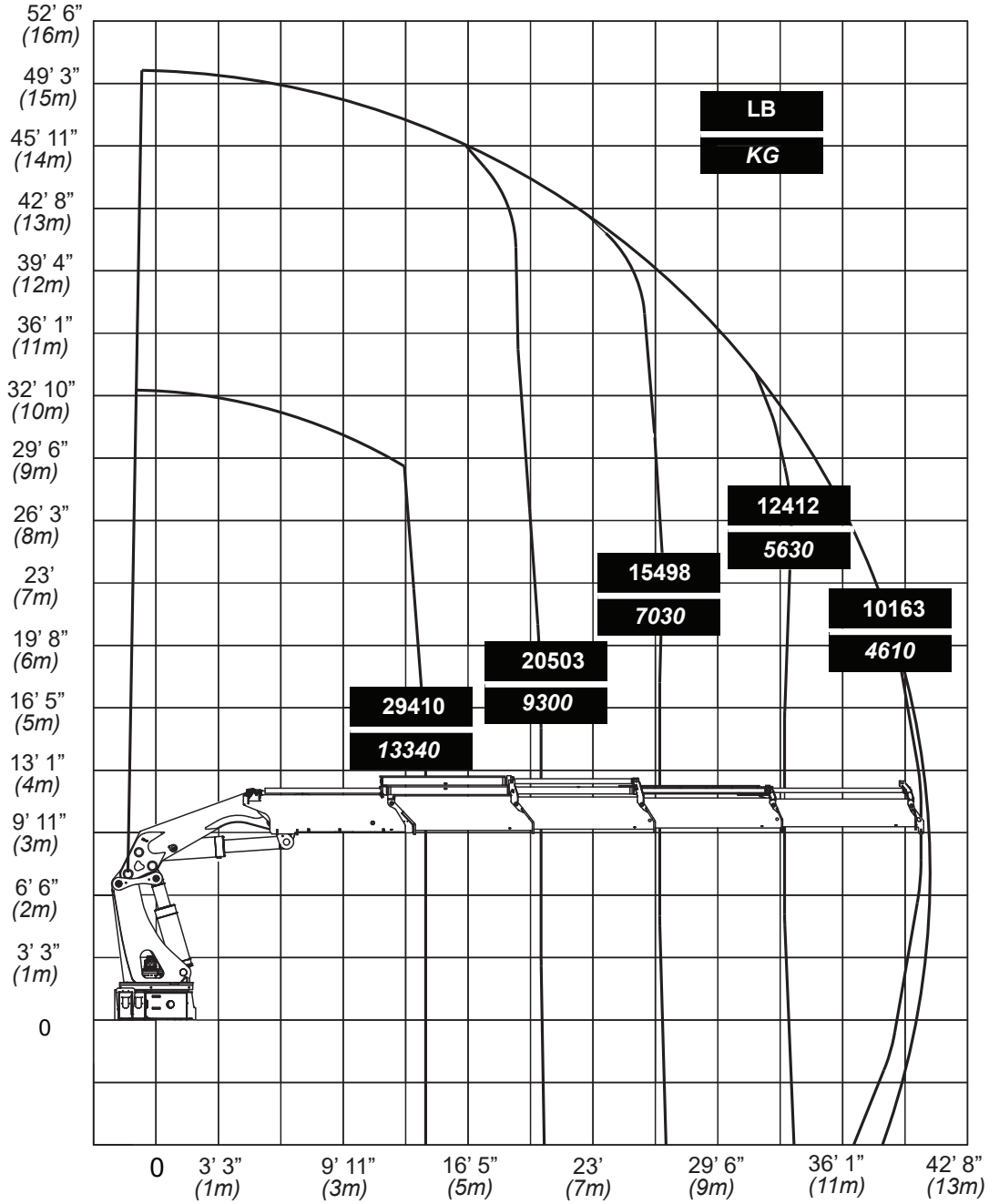

70490181

7020 RCS-OK5 - Capacity Chart

IMT
MATERIAL HANDLING SYSTEMS

IOWA MOLD TOOLING CO., INC.
BOX 189 • GARNER • IA • 50438 • 641-923-3711

Model 7020 RCS-OK5

- **Limit working loads to those shown. Deduct the weight of load handling devices.**
- ***El peso propio (tara) de los dispositivos de manipulación de cargas es parte de la carga levantada y se debe descontar de la capacidad nominal.***

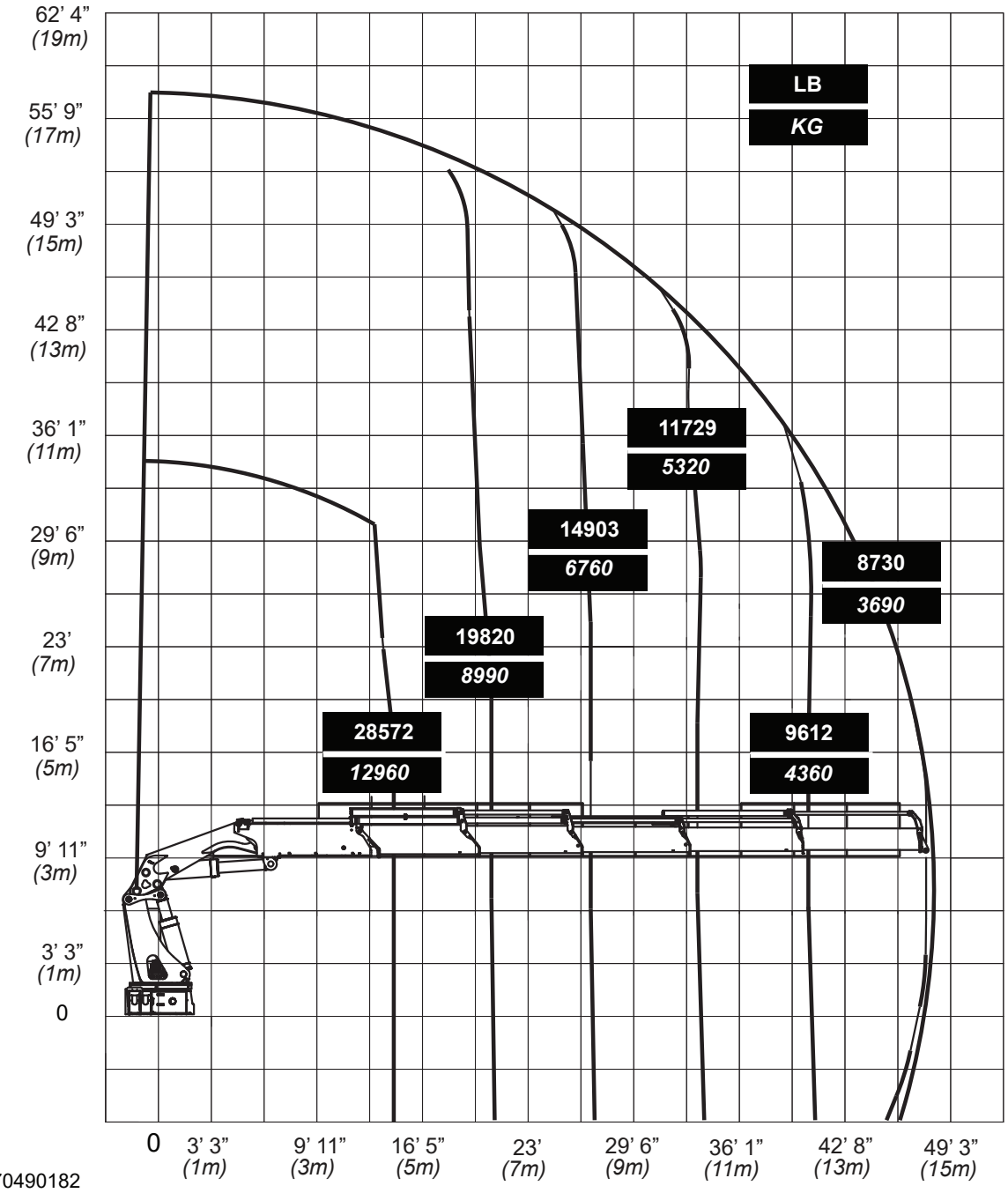

70490182

7020 RCS-OK6 - Capacity Chart

IMT
MATERIAL HANDLING SYSTEMS

IOWA MOLD TOOLING CO., INC.
BOX 189 • GARNER • IA • 50438 • 641-923-3711

Model 7020 RCS-OK6

- **Limit working loads to those shown. Deduct the weight of load handling devices.**
- ***El peso propio (tara) de los dispositivos de manipulación de cargas es parte de la carga levantada y se debe descontar de la capacidad nominal.***

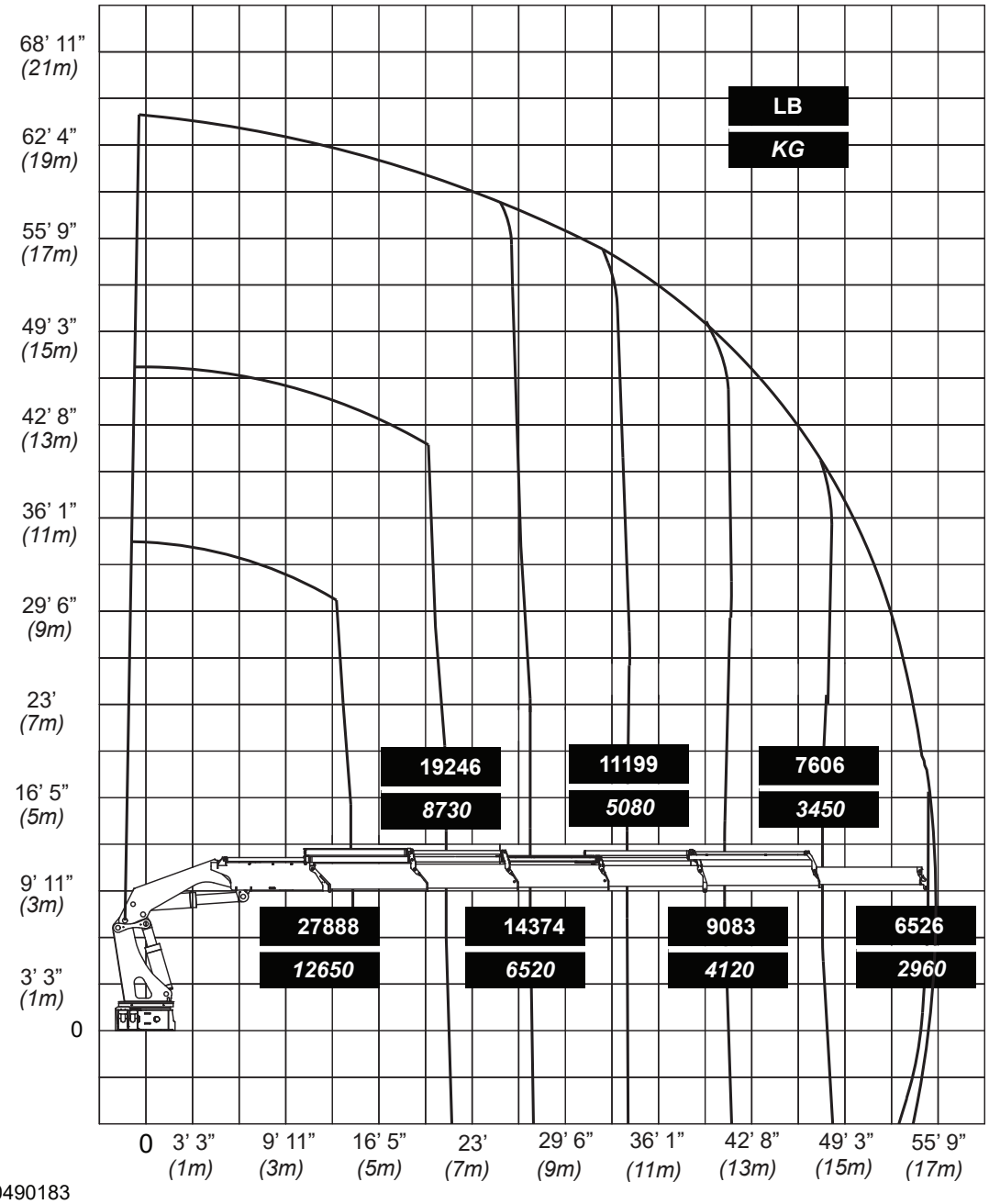

70490183

7020 RCS OK2-OK6 - Lifting Capacity

7020-OK2

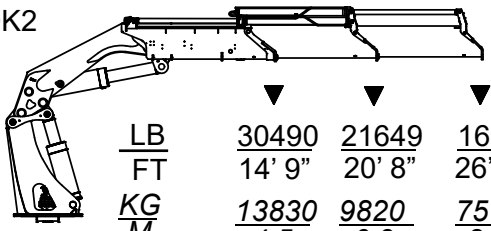

LB	30490	21649	16689
FT	14’ 9”	20’ 8”	26’ 11”
KG	13830	9820	7570
M	4,5	6,3	8,2

7020-OK3

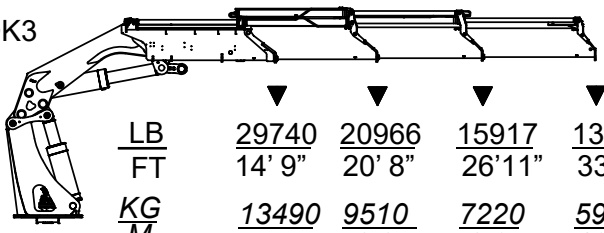

LB	29740	20966	15917	13005
FT	14’ 9”	20’ 8”	26’11”	33’ 6”
KG	13490	9510	7220	5900
M	4,5	6,3	8,2	10,2

7020-OK4

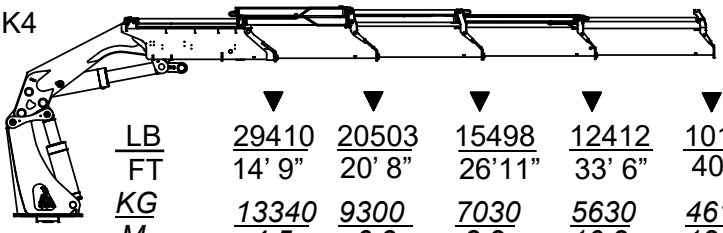

LB	29410	20503	15498	12412	10163
FT	14’ 9”	20’ 8”	26’11”	33’ 6”	40’ 5”
KG	13340	9300	7030	5630	4610
M	4,5	6,3	8,2	10,2	12,3

7020-OK5

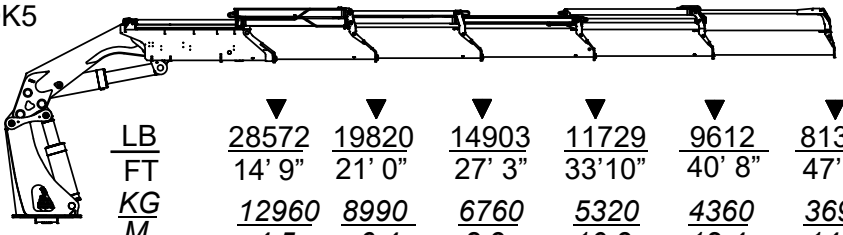

LB	28572	19820	14903	11729	9612	8135
FT	14’ 9”	21’ 0”	27’ 3”	33’10”	40’ 8”	47’11”
KG	12960	8990	6760	5320	4360	3690
M	4,5	6,4	8,3	10,3	12,4	14,6

7020-OK6

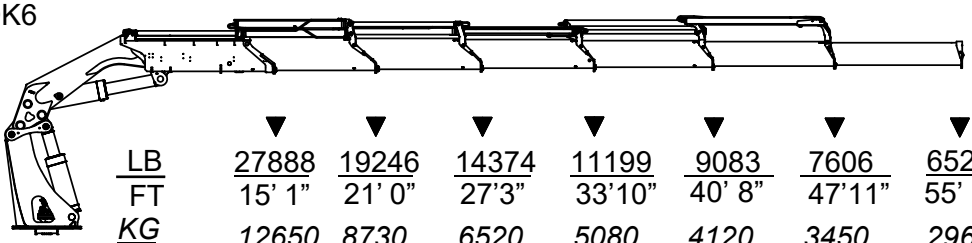

LB	27888	19246	14374	11199	9083	7606	6526
FT	15’ 1”	21’ 0”	27’3”	33’10”	40’ 8”	47’11”	55’ 5”
KG	12650	8730	6520	5080	4120	3450	2960
M	4,6	6,4	8,3	10,3	12,4	14,6	16,9

7020 RCS - Lifting Capacity with Winch

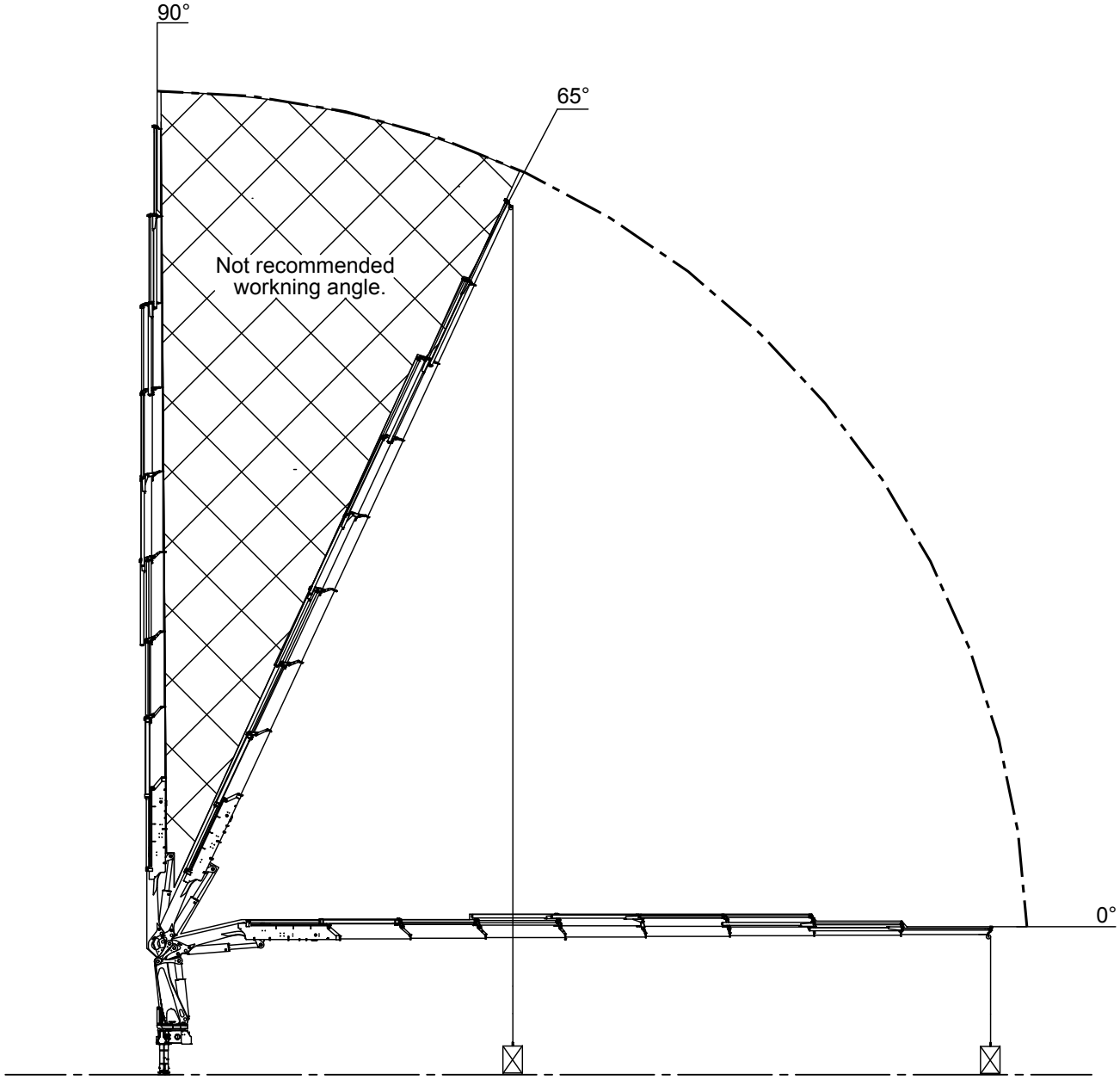

Hydraulic hoist type	MAXW	MAXWD	MAXW	MAXWD
Dinamic S 25 Brevini 2500	7055 lb	14110 lb	3200 kg	6400 kg
				

7020OK RCS Dimensional Drawings

Section - 6

7020OK RCS - Dimension Sketch OK2-OK6

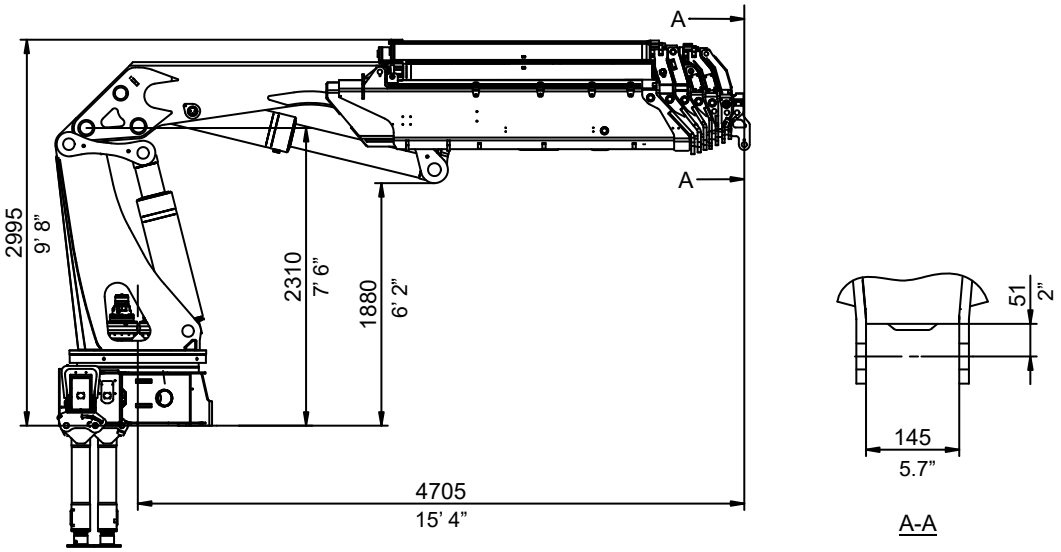

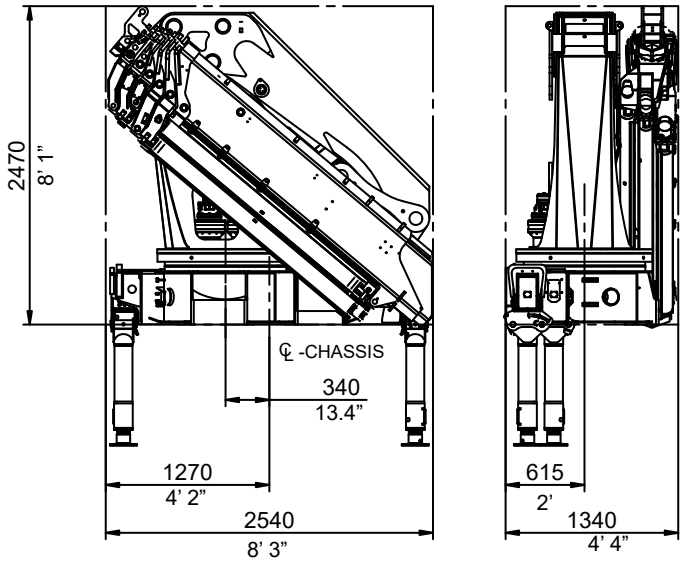

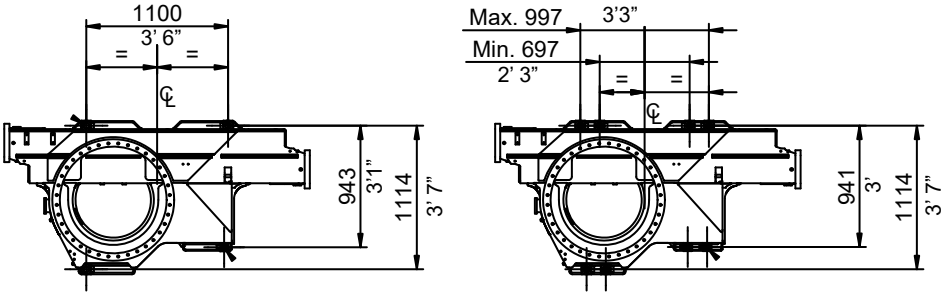

Slewing Radius

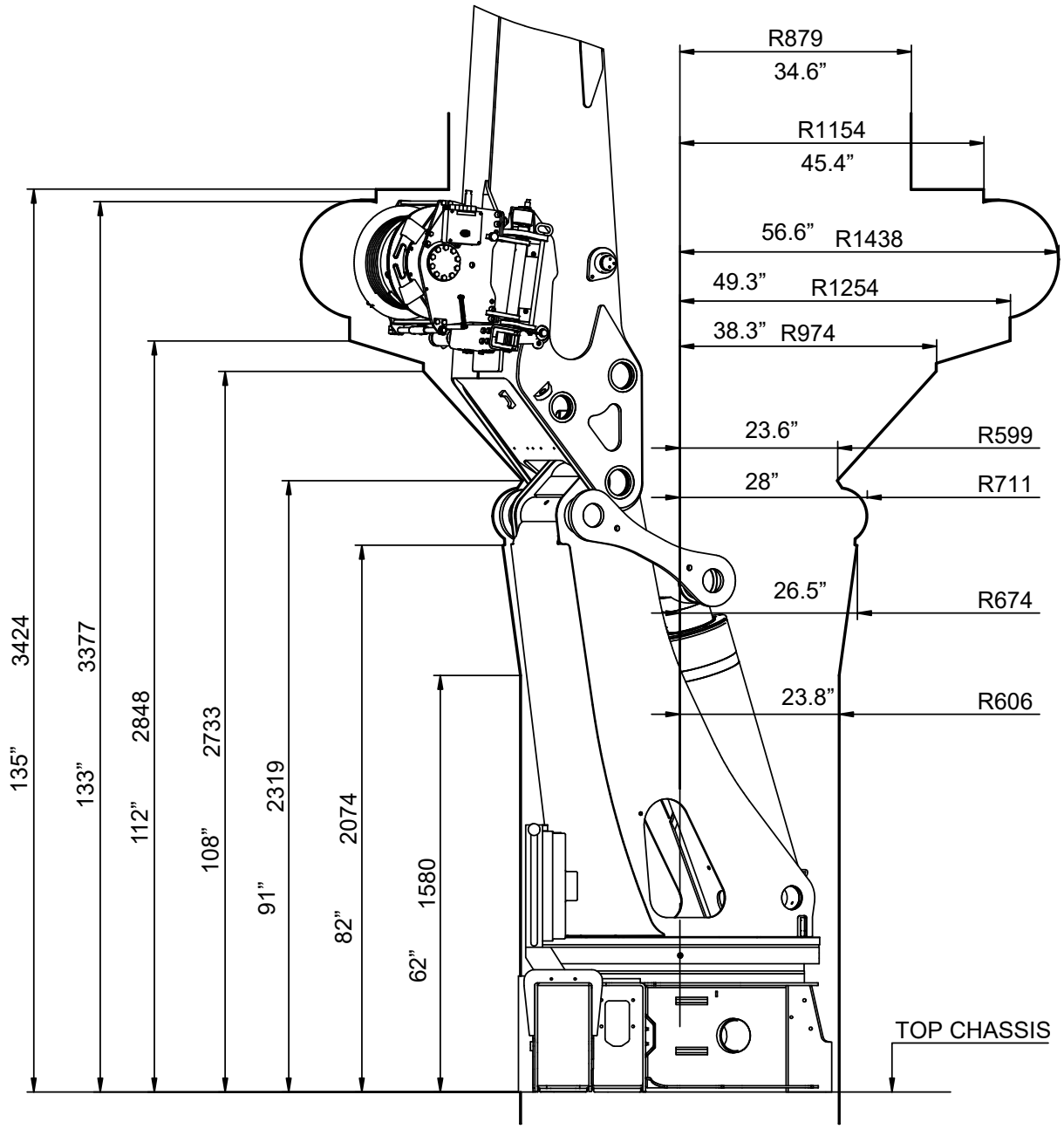

Lifting Height at Column

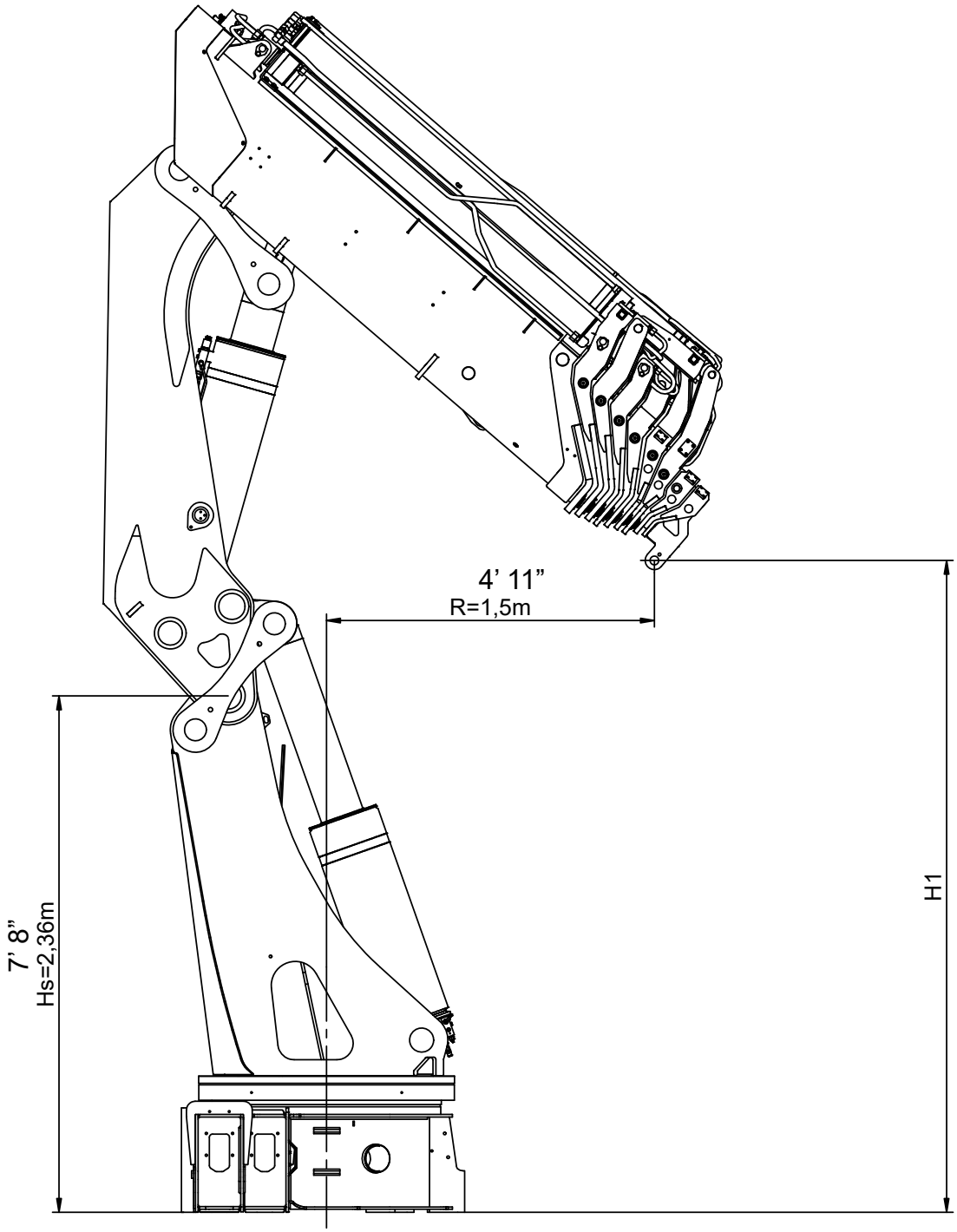

H1 (ft)		Metric H1	
OK2	10.4’	OK2	3,16m
OK3	10.2’	OK3	3,10m
OK4	9.9’	OK4	3,01m
OK5	9.5’	OK5	2,90m
OK6	9.3’	OK6	2,83m

Dimension Sketch, Stabilizer Legs

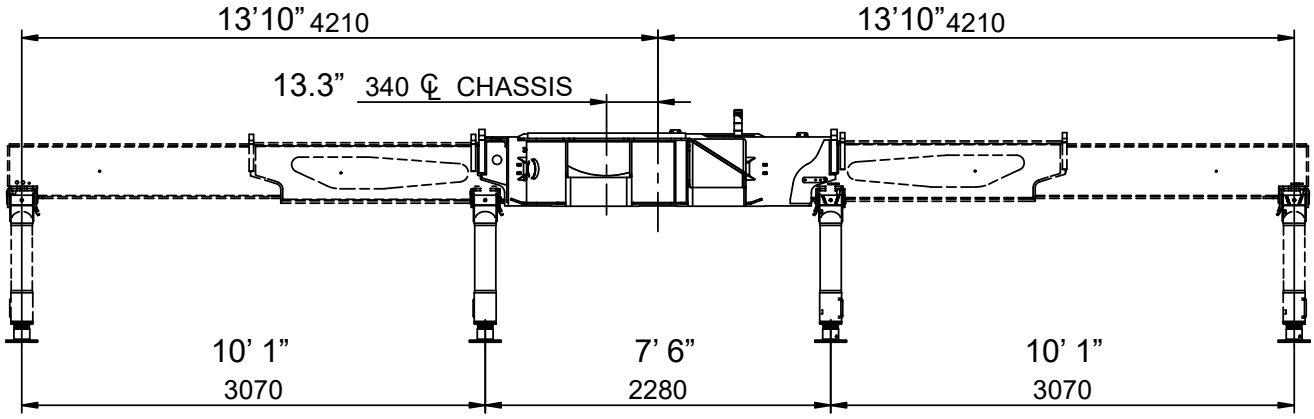

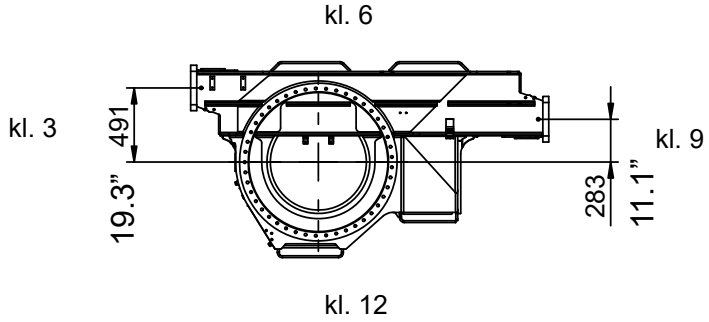

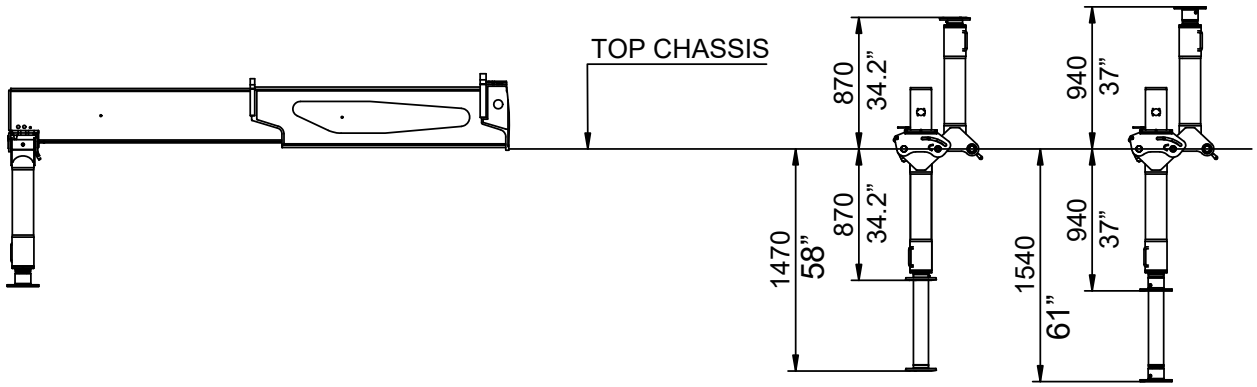

Dimension Sketch, Stabilizer Cylinder

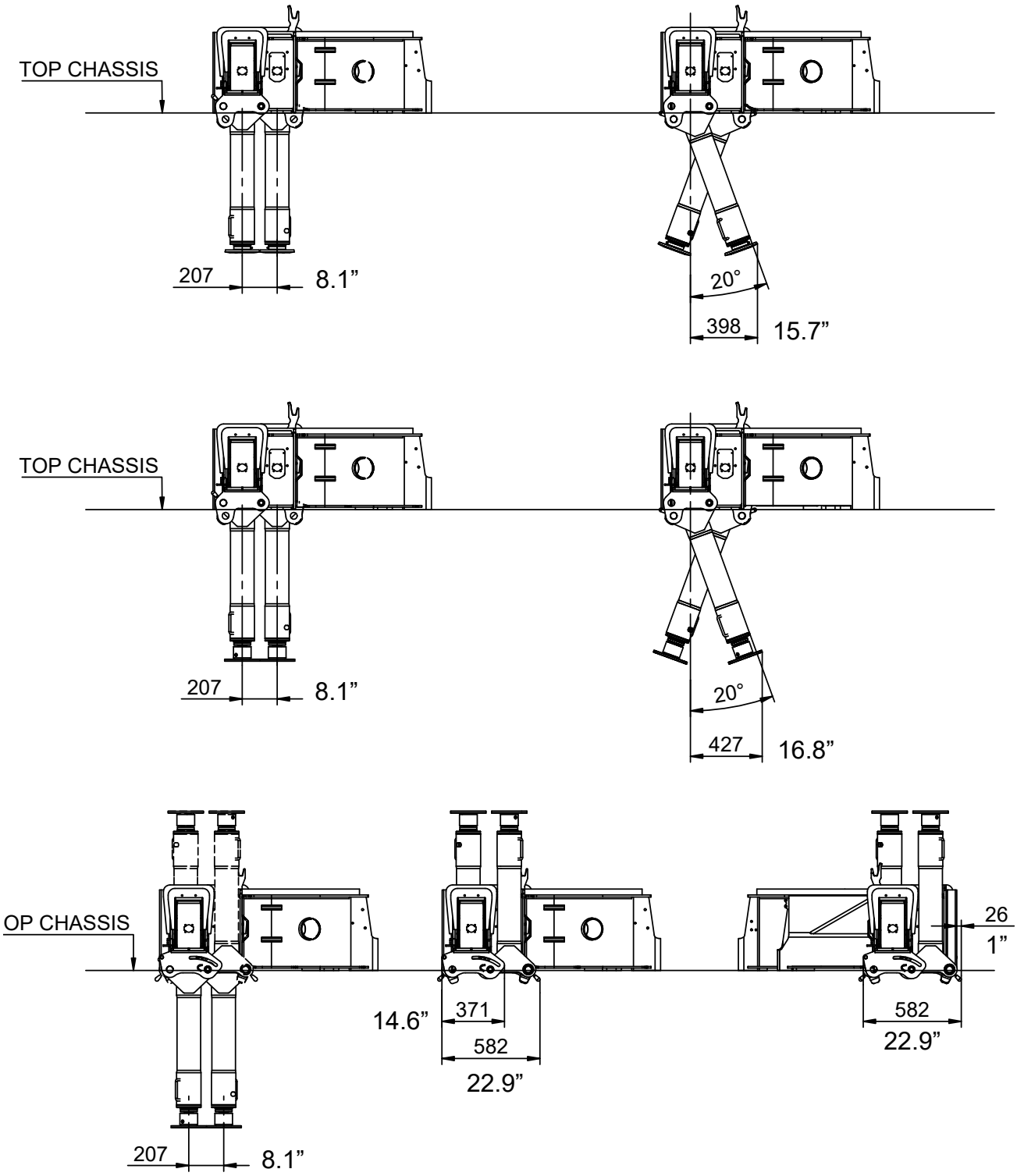

Stabilizer Cylinders

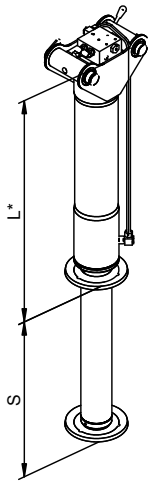

INCHES		METRIC	
	TYPE 600		TYPE 600
NO.	63 03 570	No.	63 03 570
L*	33.5	L*	850 mm
S**	23.6	S**	600 mm
D	7.9	D	200 mm

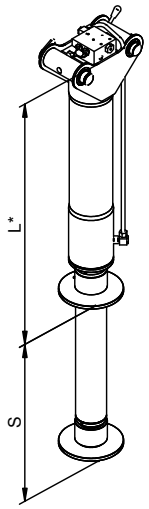

INCHES		METRIC	
	TYPE 600		TYPE 600
NO.	63 03 570	No.	63 03 570
L*	36.2	L*	920 mm
S**	19.7	S**	600 mm
D	8.7	D	210 mm

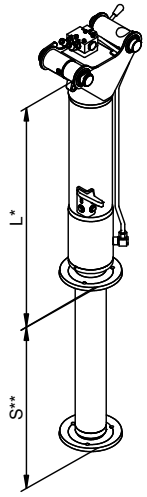

*** Dimension from bottom to base.**
**** Aprox. 4.9 in. are used for the rotation of the leg.**

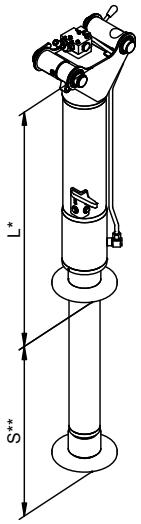

INCHES		
	TYPE 500	TYPE 600
NO.	64 00 240	64 00 250
L*	30.3	34.3
S**	19.7	23.6
D	7.9	7.9
METRIC		
	TYPE 500	TYPE 600
No.	64 00 240	64 00 250
L*	770 mm	870 mm
S**	500 mm	600 mm
D	200 mm	200 mm

INCHES		
	TYPE 500	TYPE 600
NO.	64 00 240	64 00 250
L*	28.7	37
S**	19.7	19.7
D	8.7	8.7
METRIC		
	TYPE 500	TYPE 600
No.	64 00 240	64 00 250
L*	730 mm	940 mm
S**	500 mm	600 mm
D	210 mm	210 mm

Dimension Sketch, Tank

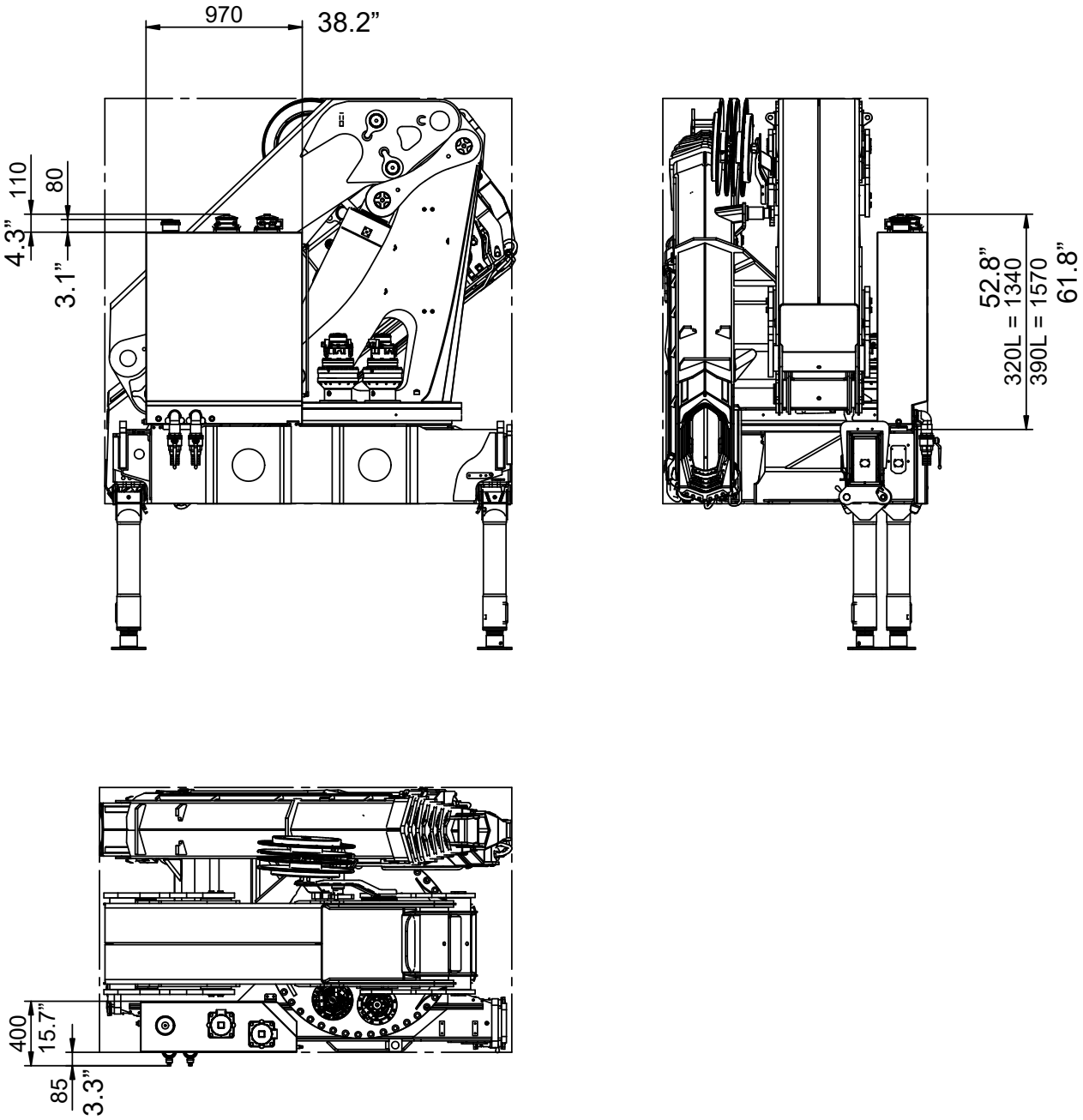

Technical Information, Winch

	PERFORMANCE				
	UNIT	K2-K8	FJ1400	FJ2200	MAN
Max. Wire Pull - 1st Layer	lb	7055	7055 / 2205	7055 / 2866	7055
Max. Wire Pull - 2nd Layer	lb	6393	6393 / 2205	6393 / 2866	6437
Max. Wire Pull - 3rd Layer	lb	5952	5952 / 2205	5952 / 2866	5952
Max. Wire Pull - 4th Layer	bl	5512	5512 / 2205	5512 / 2866	5512

	WEIGHTS			
	UNIT	WITHOUT FLY-JIB	K5-7 WITH FLY-JIB	K8 WITH FLY-JIB110
Fixed Parts	lb	529	849	849
Loose Parts	lb	110*	209*	209*

	CRANE WIRE		
	WITHOUT FLY-JIB	K5-7 WITH FLY-JIB	K8 WITH FLY-JIB110
Imt Item No.	63203	63202	63205
Dimention	Ø 0.47 X 200’	Ø 0.47 X 233’	Ø 0.47 X 256’

	WIRE SPEED	
	UNIT	K2-K8
1st Layer	ft/min	101
2nd Layer	ft/min	114
3rd Layer	ft/min	124
4th Layer	ft/min	138

*** Weight without wire block for double cutting (53 lb) and extra counterweight (49 lb).**

Technical Data, Winch - Metric

	PERFORMANCE				
	UNIT	K2-K8	FJ1400	FJ2200	MAN
Max. Wire Pull - 1st Layer	kg	3200	3200 / 1000	3200 / 1300	3200
Max. Wire Pull - 2nd Layer	kg	2920	2920 / 1000	2920 / 1300	2920
Max. Wire Pull - 3rd Layer	kg	2700	2700 / 1000	2700 / 1300	2700
Max. Wire Pull - 4th Layer	kg	2500	2500 / 1000	2500 / 1300	2500

	WEIGHTS			
	UNIT	WITHOUT FLY-JIB	K5-7 WITH FLY-JIB	K8 WITH FLY-JIB110
Fixed Parts	kg	240	385	385
Loose Parts	kg	50*	95*	95*

	CRANE WIRE		
	WITHOUT FLY-JIB	K5-7 WITH FLY-JIB	K8 WITH FLY-JIB110
Imt Item No.	63203	63202	63205
Dimention	Ø 0.12mm X 61m	Ø 0.12mm X 71m	Ø 0.12mm X 78m

	WIRE SPEED	
	UNIT	K2-K8
1st Layer	m/min	31
2nd Layer	m/min	35
3rd Layer	m/min	38
4th Layer	m/min	42

*** Weight without wire block for double cutting (24 kg) and extra counterweight (22 kg).**

Dimension Sketch, Winch

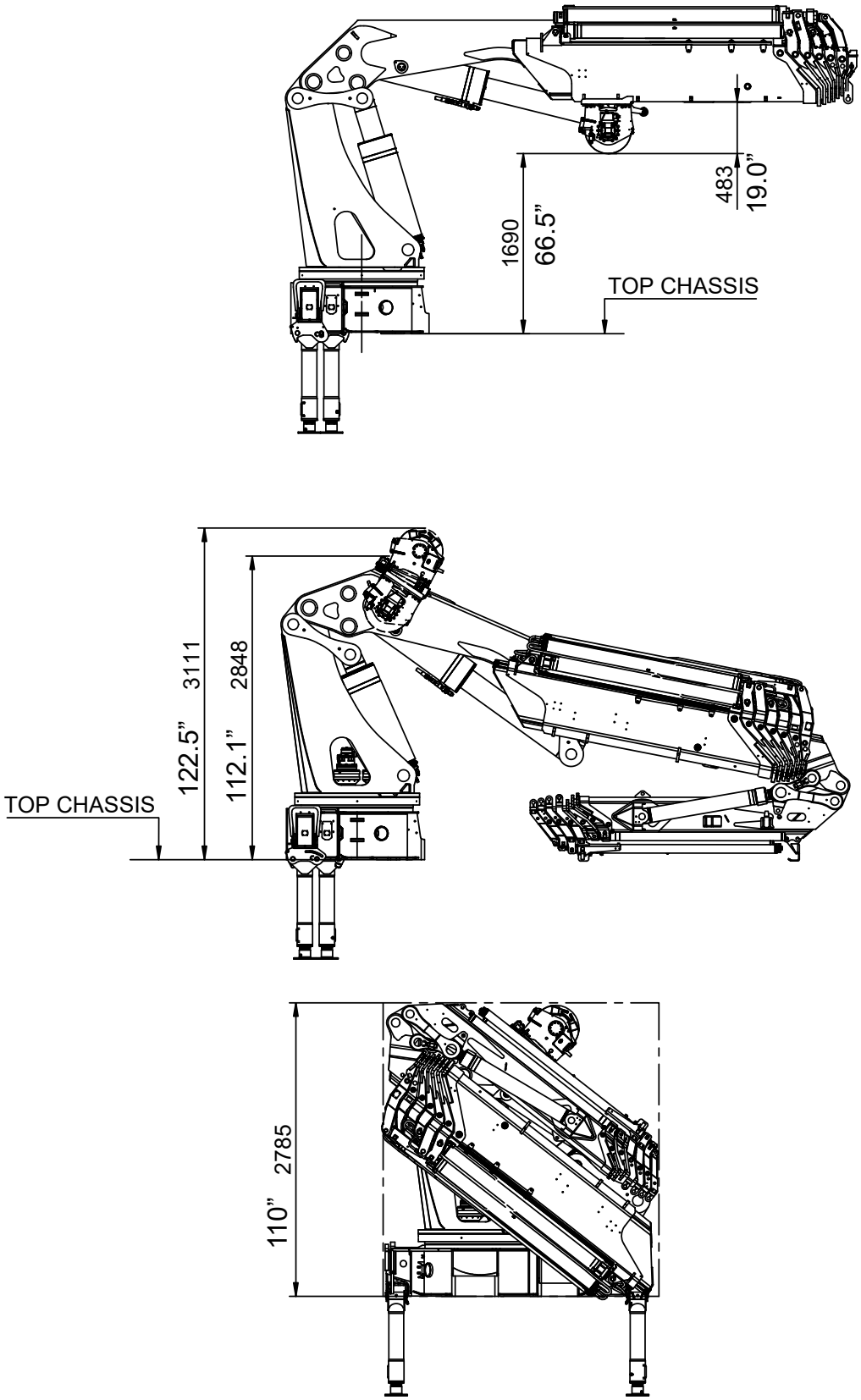

Stowed in Truck Body

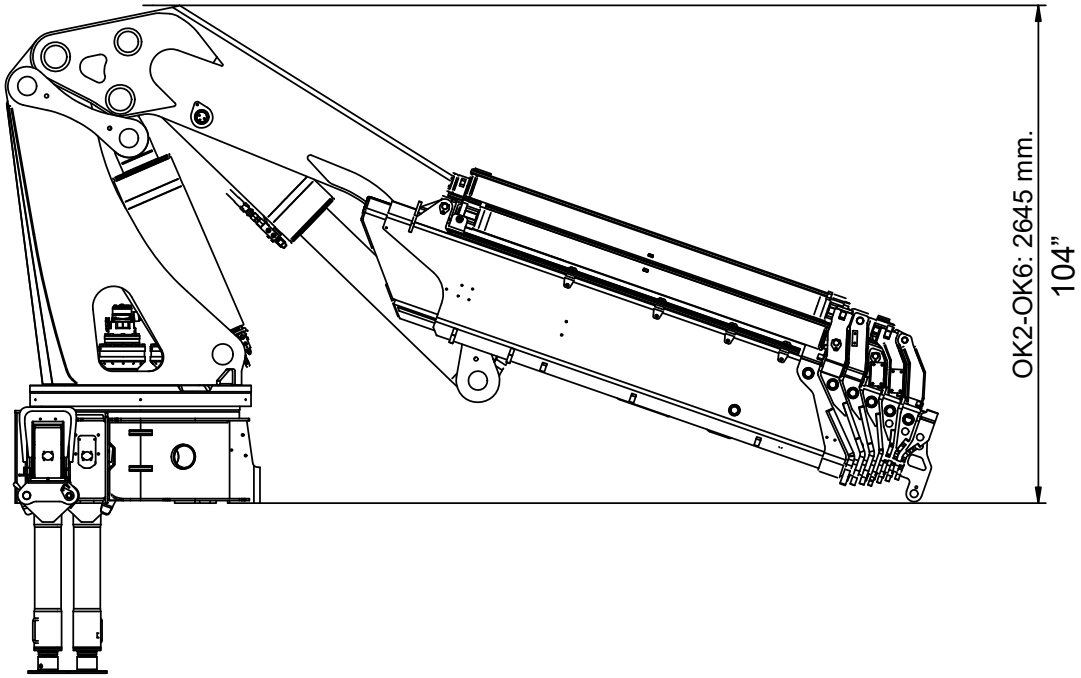

Dimensional Sketch - Internal Hose Routing

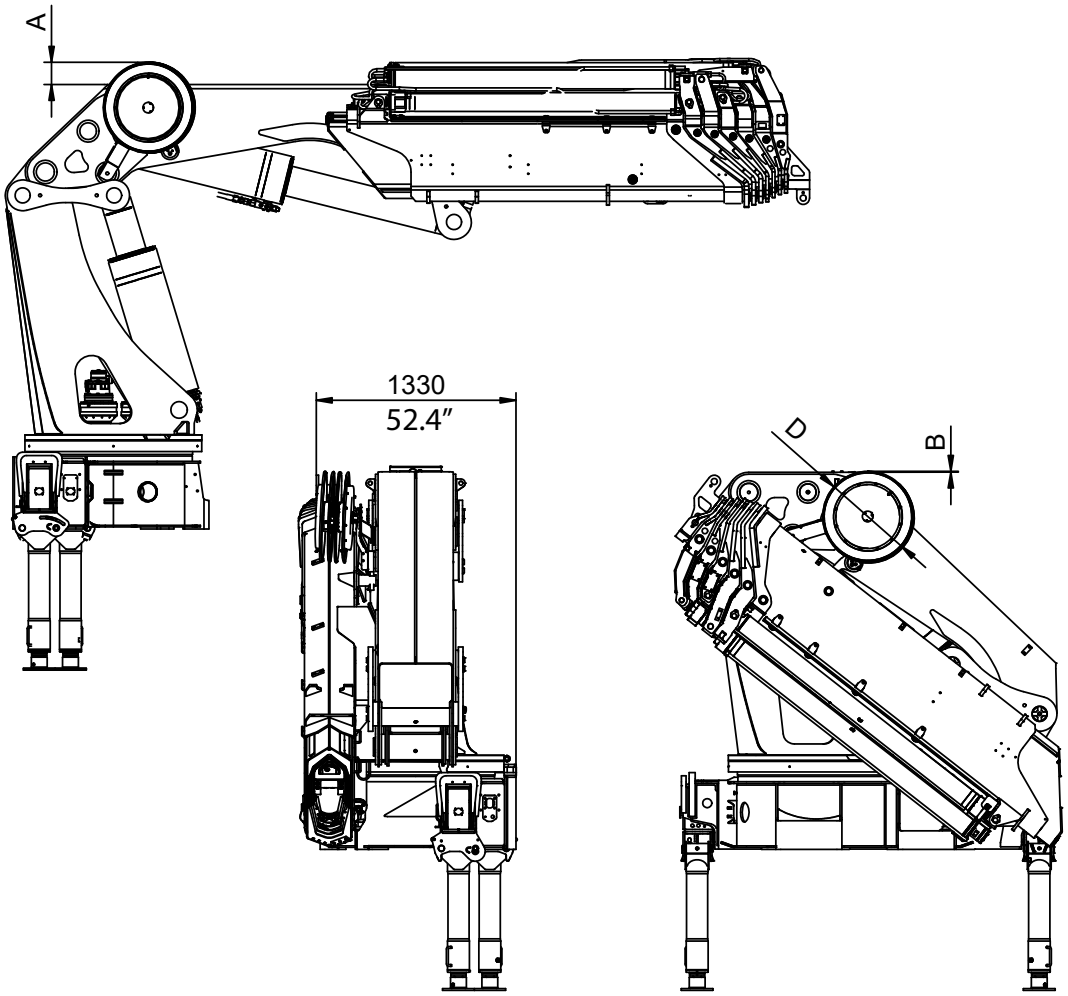

	OK-2	OK-3	OK-4	OK-5
A	4.2”	4.2”	5.2”	5.2”
B	1.5”	1.5”	0.6”	0.6”
D	20.5”	20.5”	22.4”	22.4”
METRIC				
	OK-2	OK-3	OK-4	OK-5
A	107	107	132	132
B	39	39	14	14
D	520	520	570	570

Hydraulic Drawings

Section - 7

Working Pressure & Port Relief Valves

	Port	Port-relief valves psi	LS-pressure adjustment psi	Load-holding valve, opening pressure psi	
Relief valve, crane		5802			
	A	-	2683	2828	C1-V1
	B	-	2683	2828	C1-V2
	A	5802	5439	5874	C1-V2
	B	-	5439	1813	C1-V2
	A	5511	5004	5874	C1-V2
	B	3626	2901	3046	C1-V2
	A	-	4351	5511	C1-V2
	B	-	4351	3771	C1-V2
	B	-	-	3481**	C1-V1
	A	-	725-4351	-	
	B	-	725-4351	-	
	A	4531	725-4351	-	
	B	4061*	725-4351	-	
	A	2756	-	-	
	B	4641	-	-	
	A	-	3046	3553	A1-A
	B	-	3046	-	

Fly-Jib sections are adjusted according to separate table.

* Can be adjusted or replaced individually.
With regeneration deactivated

Distribution valve on base

		LS-pressure adjustment
Main-relief valve	psi	5802
Stabilizer circuit, supply	psi	3046
Proportional function for installation purposes	psi	1813*

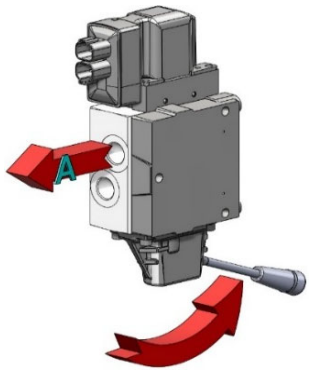

Max. recommended pump performance

Choice of pump kit		Fixed flow	Variable flow	2 x variable flow
Oil capacity	g/min	16-21	26-32	26-32
Pressure	psi	5439-5584	5439-5584	5439-5584

Pressure setting in RCL

Load moment limitation (LMB)	psi	5149
HDL	psi	3844

WORKING PRESSURE CONTINUED (METRIC)

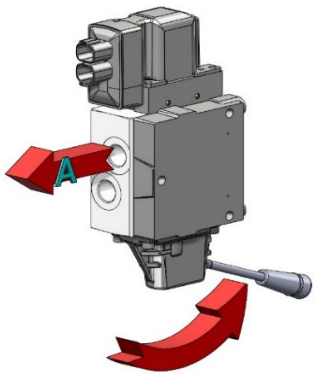

Function		Direction	Port	Fly-Jib:		
				OK6 FJ1200 psi	K6 FJ1400 psi	K7 FJ1400 psi
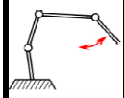	LS-pressure adjustment	↗	A	4641	4931	4641
		↙	B	3626	3626	3626
	Port-relief valves	↗	A	5294	5294	5294
		↙	B	4061	4061	4061
	Load-holding Valve	↗	A1-A	5511	5511	5511
		↙	A1-A	4351	4351	4351
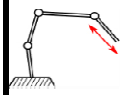	LS-pressure adjustment	→	A	4351	4351	4351
		←	B	4351	4351	4351
	Load-holding Valve	→	C2-V2	3046	3046	3046
		←	C1-C2	6237	6237	6237
Load moment limitation (LMB)				4424	4714	4424

Working Pressure & Port Relief Valves (Metric)

	Port	Port-relief valves [bar]	LS-pressure adjustment [bar]	Load-holding valve, opening pressure [bar]	
Relief valve, crane		400			
	A	-	185	195	C1-V1
	B	-	185	195	C2-V2
	A	400	375	405	C2-V2
	B	-	125	125	C1-V2
	A	380	345	405	C2-V2
	B	250	200	210	C1-V2
	A	-	300	380	C1-C2
	B	-	300	260	C2-V2
	B	-	-	240**	C2-V1
	A	-	50-300*	-	
	B	-	50-300*	-	
	A	300*	50-300*	-	
	B	280*	50-300*	-	
	A	190	-	-	
	B	320	-	-	
	A	-	210	245	A1-A
	B	-	210	-	

Fly-Jib sections are adjusted according to separate table.

* Can be adjusted or replaced individually.
With regeneration deactivated

Distribution valve on base

		LS-pressure adjustment [bar]
Main-relief valve	[bar]	400
Stabilizer circuit, supply	[bar]	210
Proportional function for installation purposes	[bar]	125*

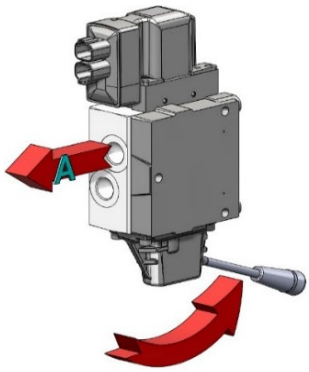

Max. recommended pump performance

Choice of pump kit		Fixed flow	Variable flow	2 x variable flow
Oil capacity	[L/min]	60-80	100-120	100-120
Pressure	[bar]	375-385	375-385	375-385

Pressure setting in RCL

Load moment limitation (LMB)	[bar]	355
HDL	[bar]	265

WORKING PRESSURE CONTINUED (METRIC)

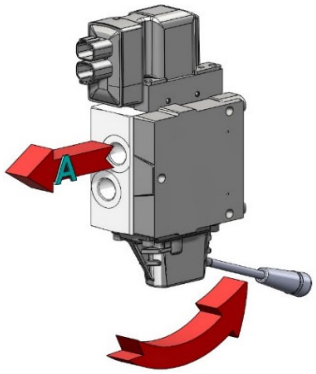

Function		Direction	Port	Fly-Jib: OK6 FJ1200 [bar]	K6 FJ1400 [bar]	K7 FJ1400 [bar]
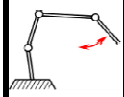	LS-pressure adjustment	↗	A	320	340	320
		↙	B	250	250	250
	Port-relief valves	↗	A	365	365	365
		↙	B	280	280	280
	Load-holding Valve	↗	A1-A	380	380	380
		↙	A1-A	300	300	300
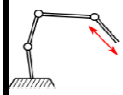	LS-pressure adjustment	→	A	300	300	300
		←	B	300	300	300
	Load-holding Valve	→	C2-V2	210	210	210
		←	C1-C2	430	430	430
Load moment limitation (LMB)				305	325	305

Survey

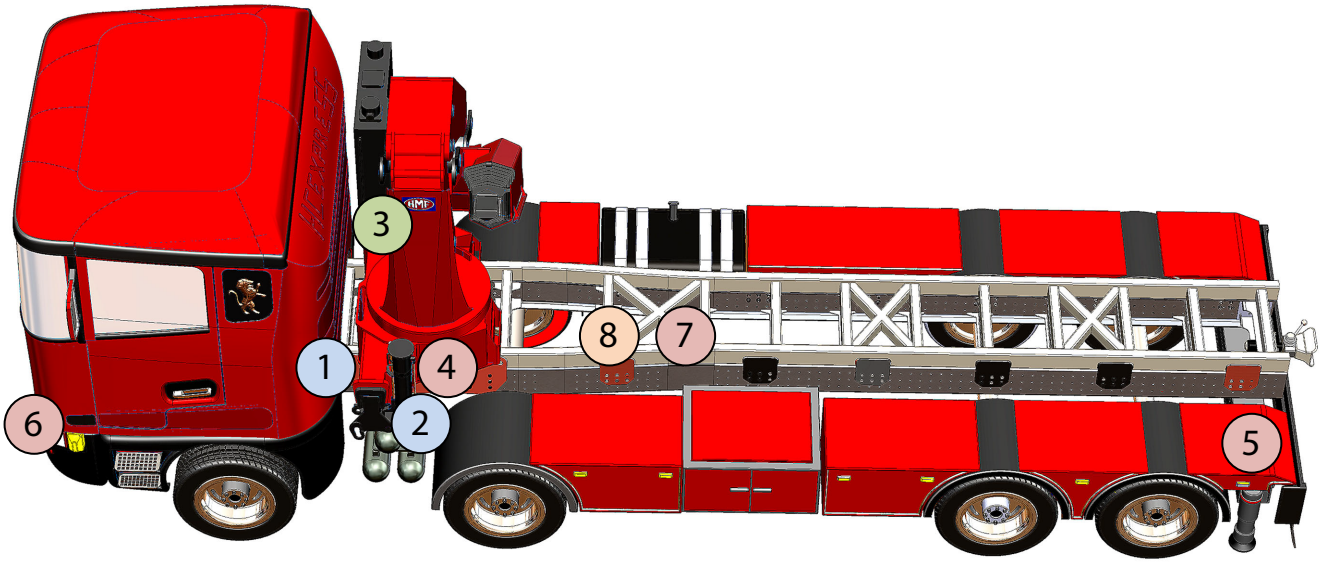

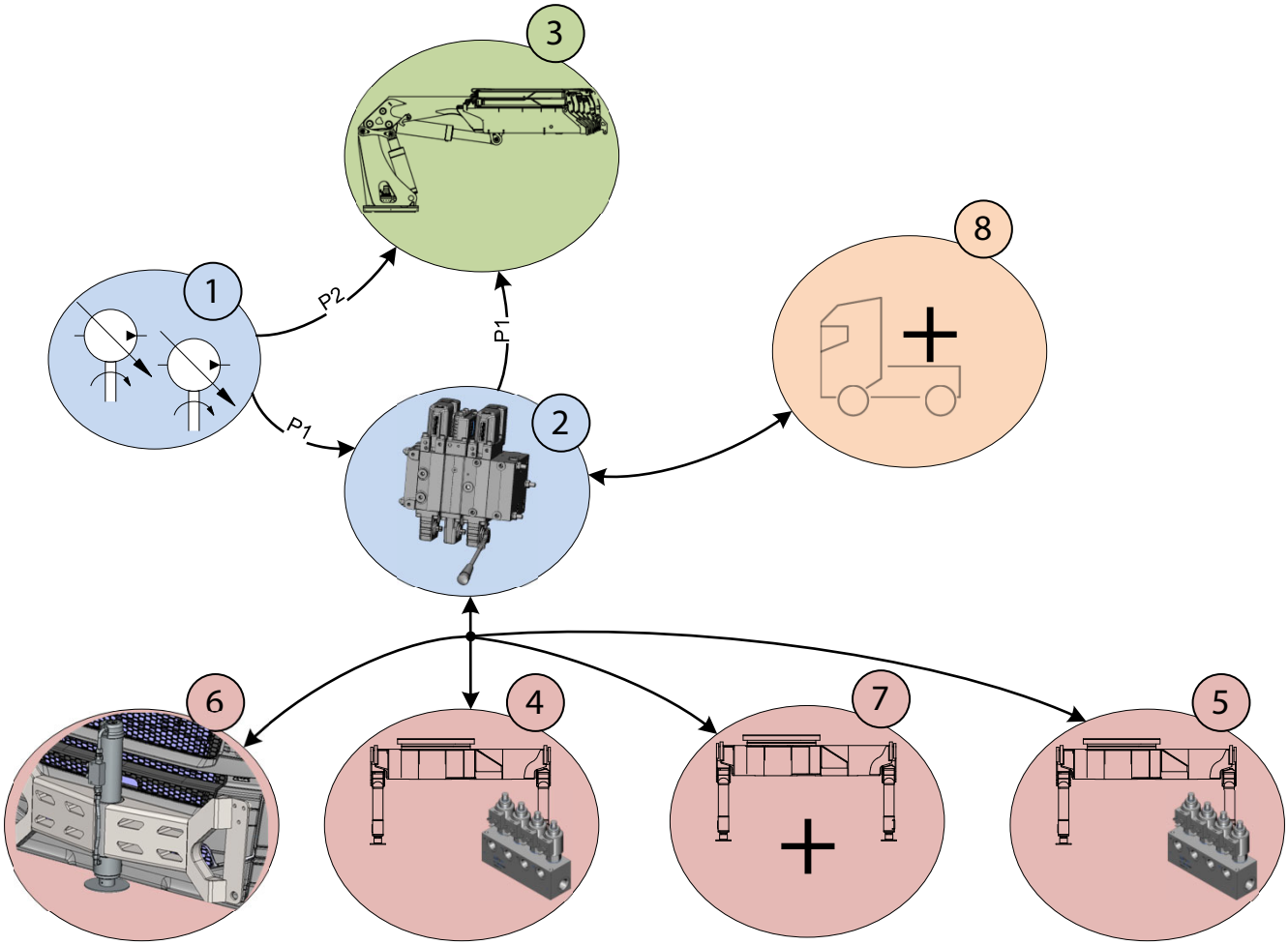

Hydraulic Diagram – Supply 1-Circuit – Fixed/Variable Flow Pump

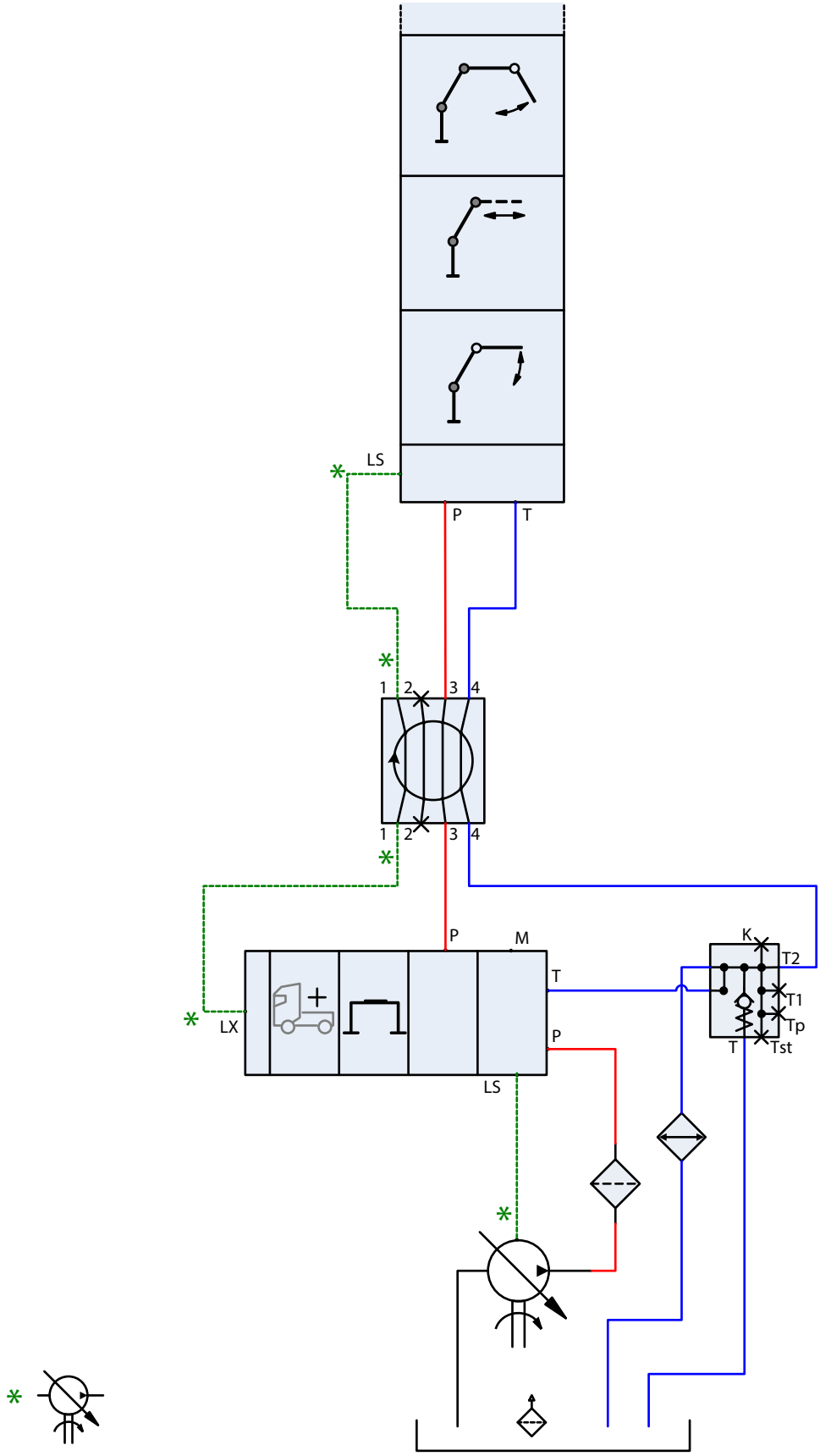

Hydraulic Diagram – Supply 2-Circuit – Variable Flow Pump

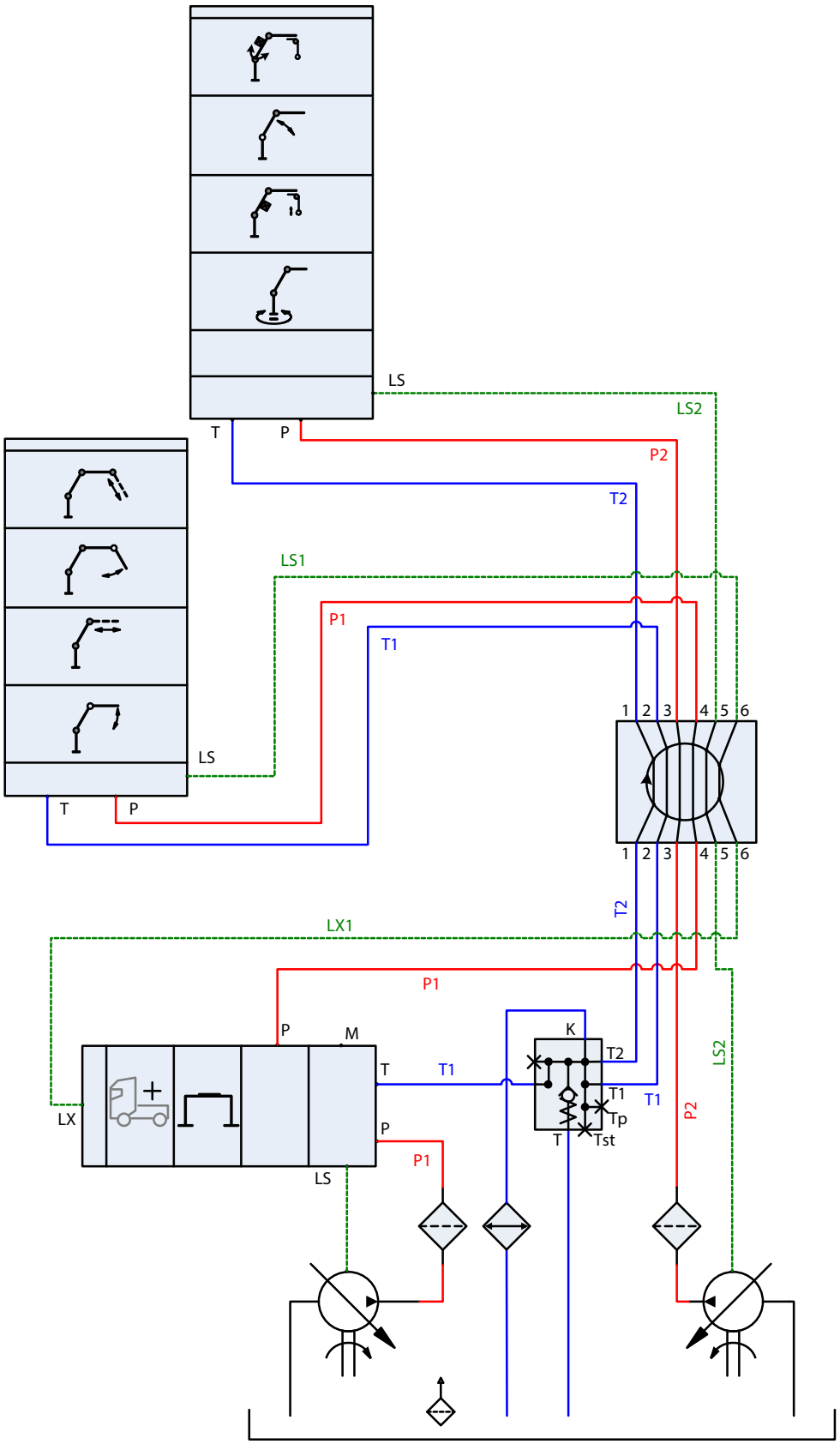

Hydraulic Diagram – Supply Distribution Valve On Crane Base - Fixed Flow Pump

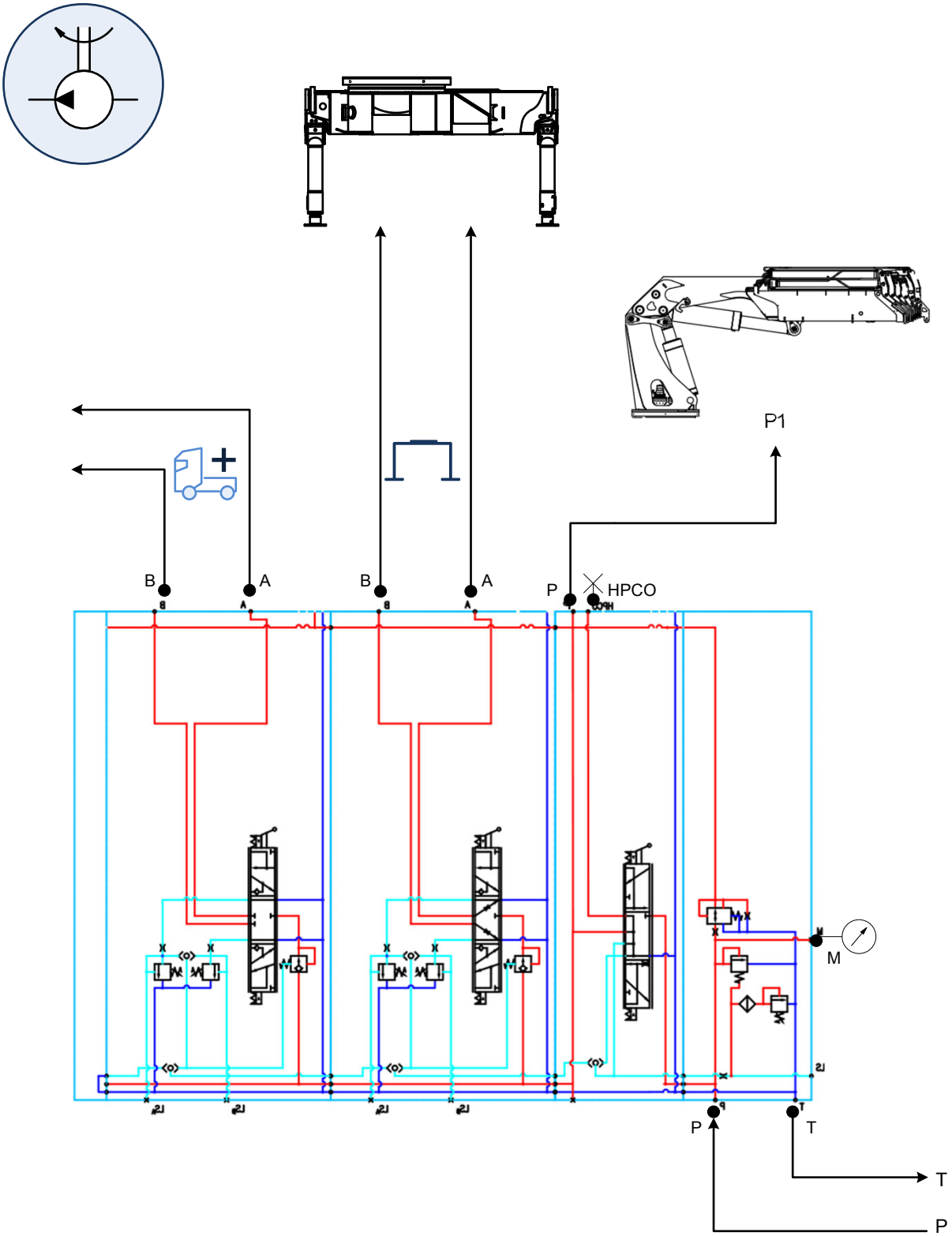

Hydraulic Diagram – Supply Distribution Valve On Crane Base - Variable Flow Pump

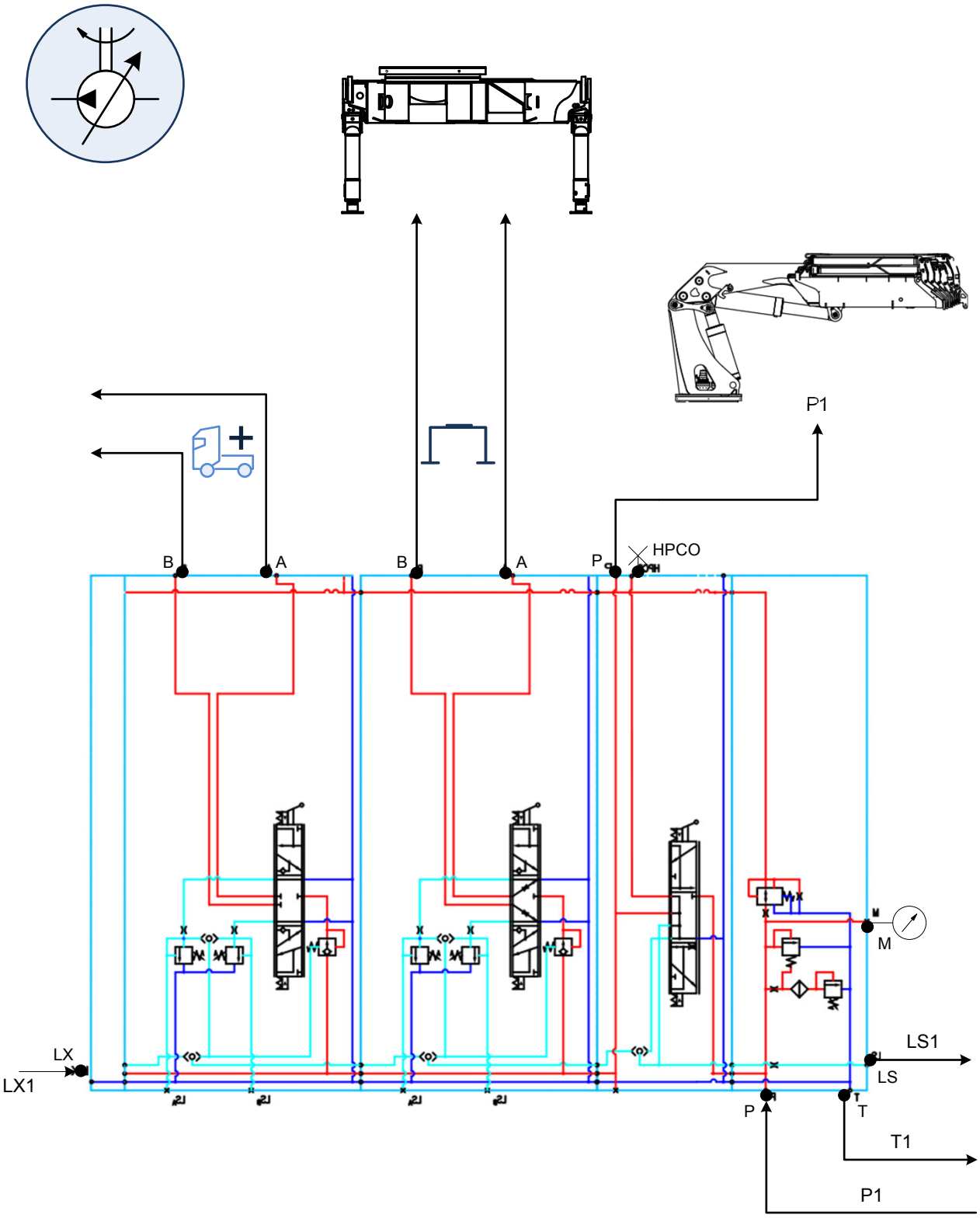

Hydraulic Diagram - Crane Functions, Control Valve 1-Circuit, Fixed And Variable Flow Pump

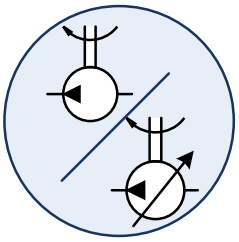

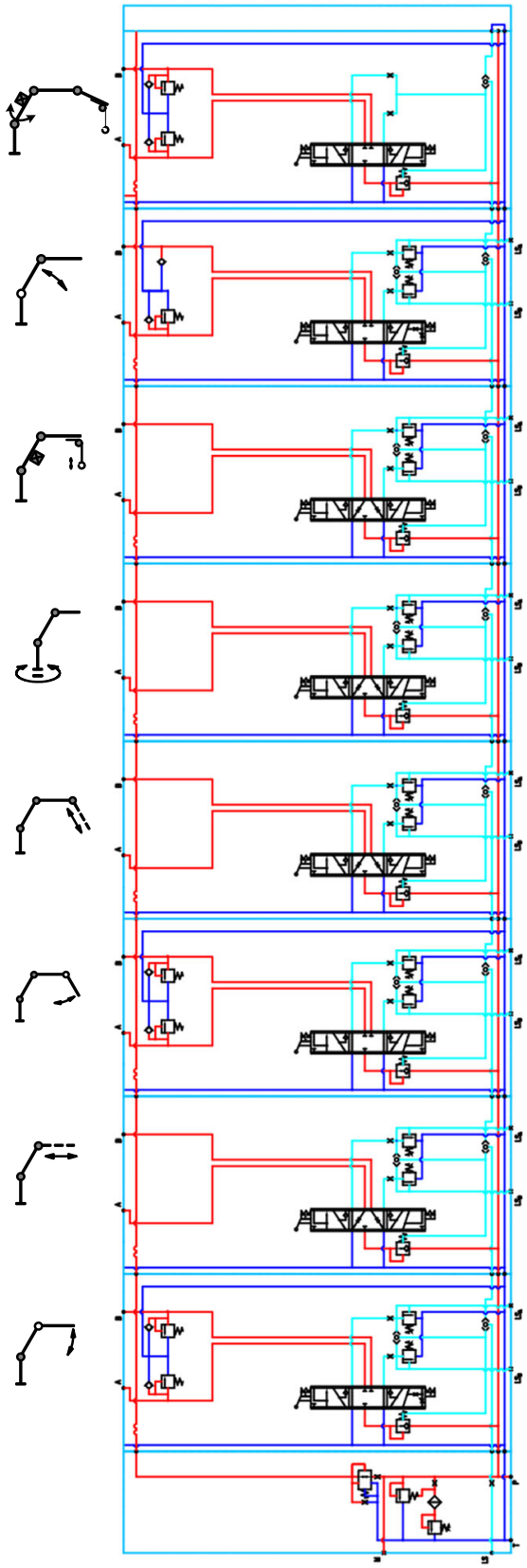

Hydraulic Diagram - Crane functions, Control Valve 2-Circuit, Variable Flow Pump

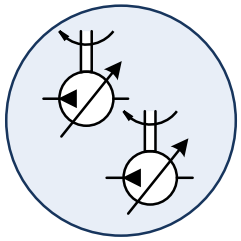

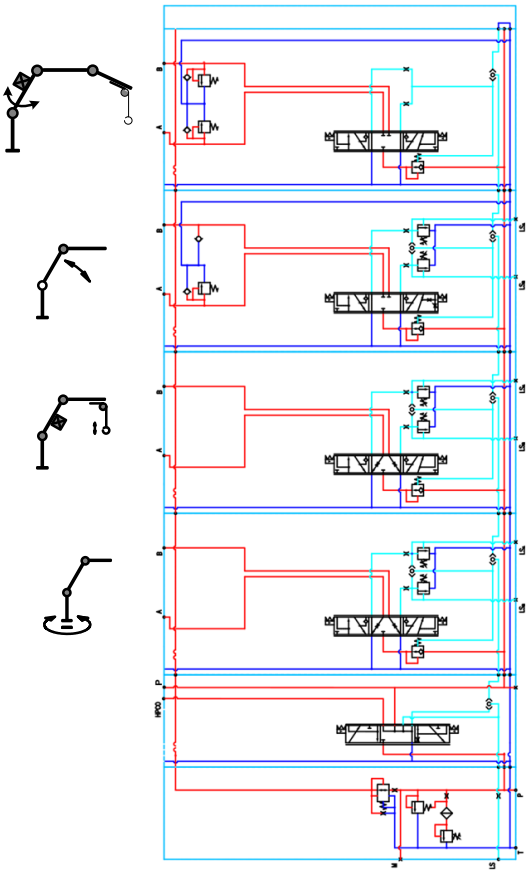

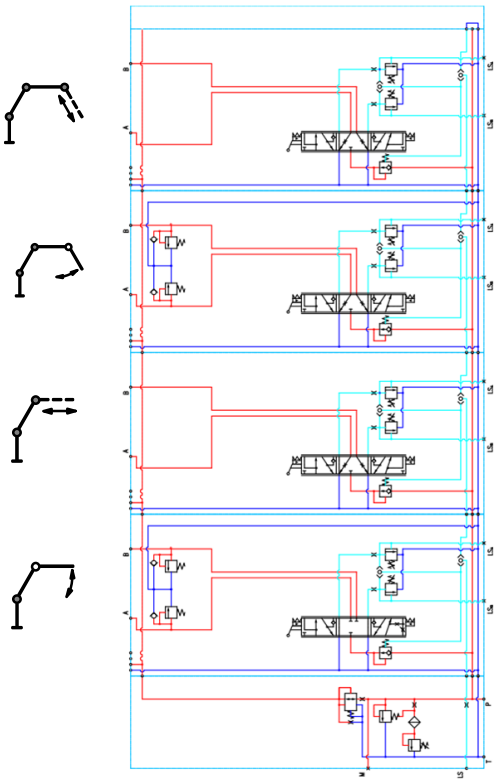

Hydraulic Diagram – Crane Functions Slew, Boom and Jib

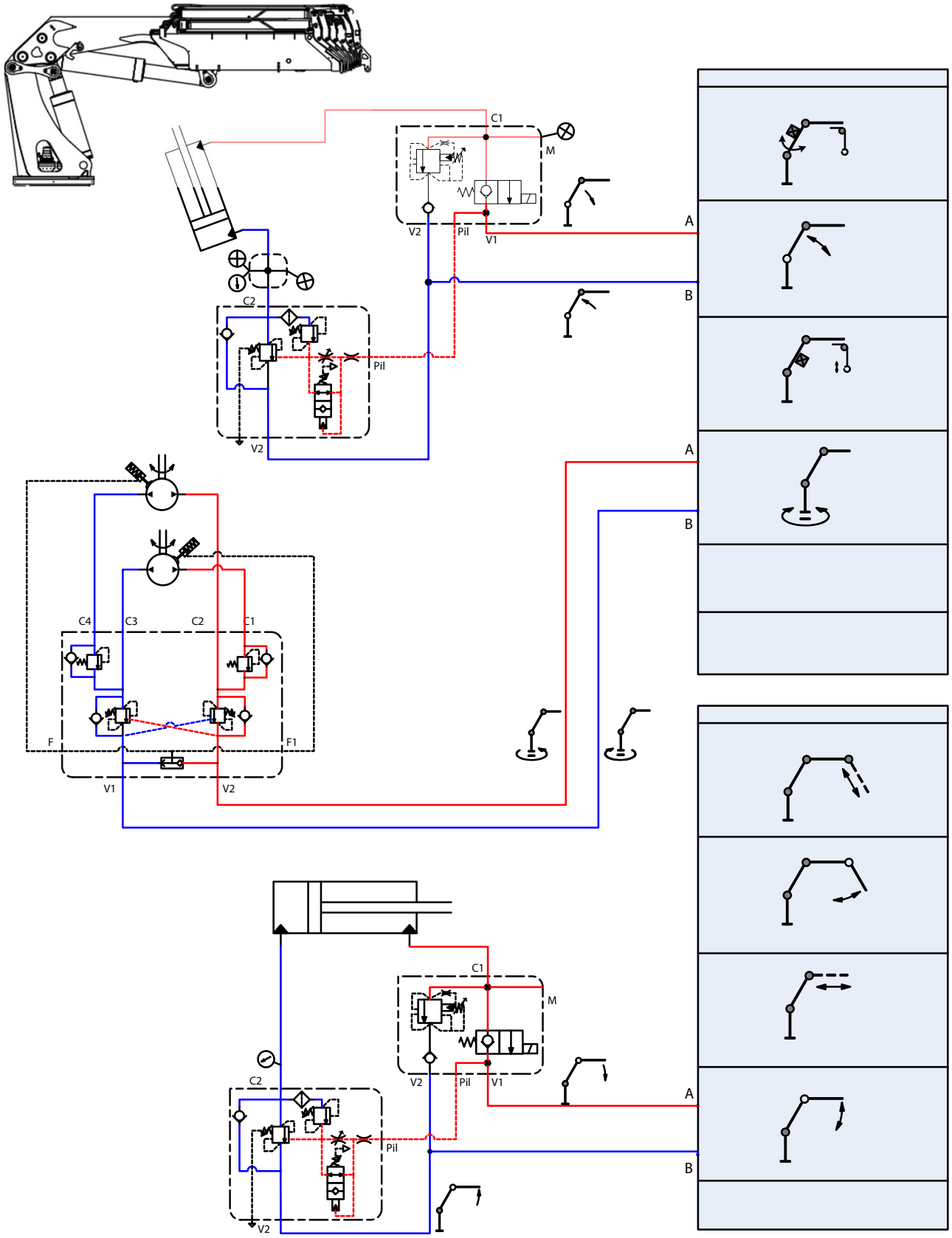

Hydraulic Diagram – Crane Functions Extension

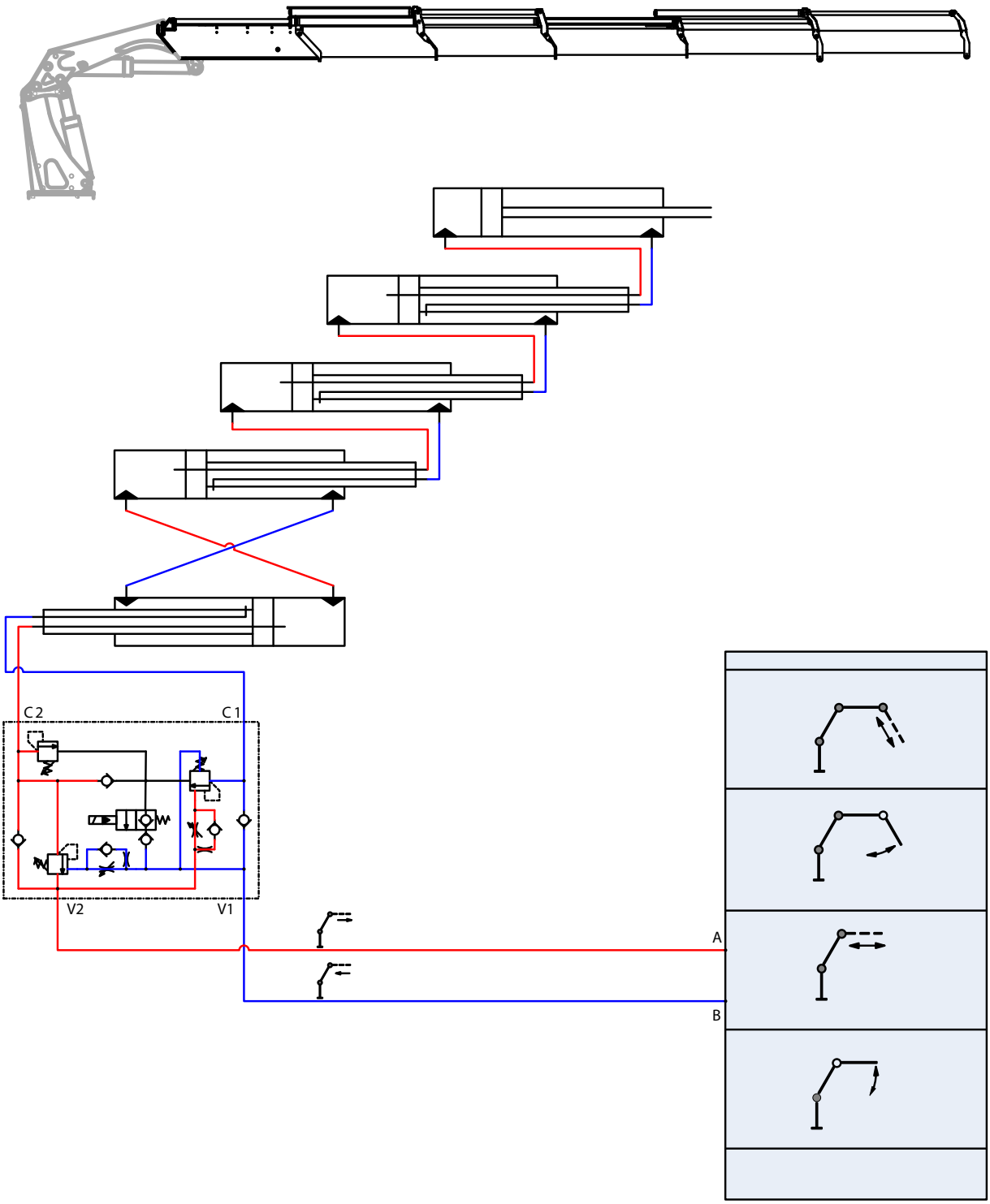

Hydraulic Diagram - Crane Functions Fly-Jib

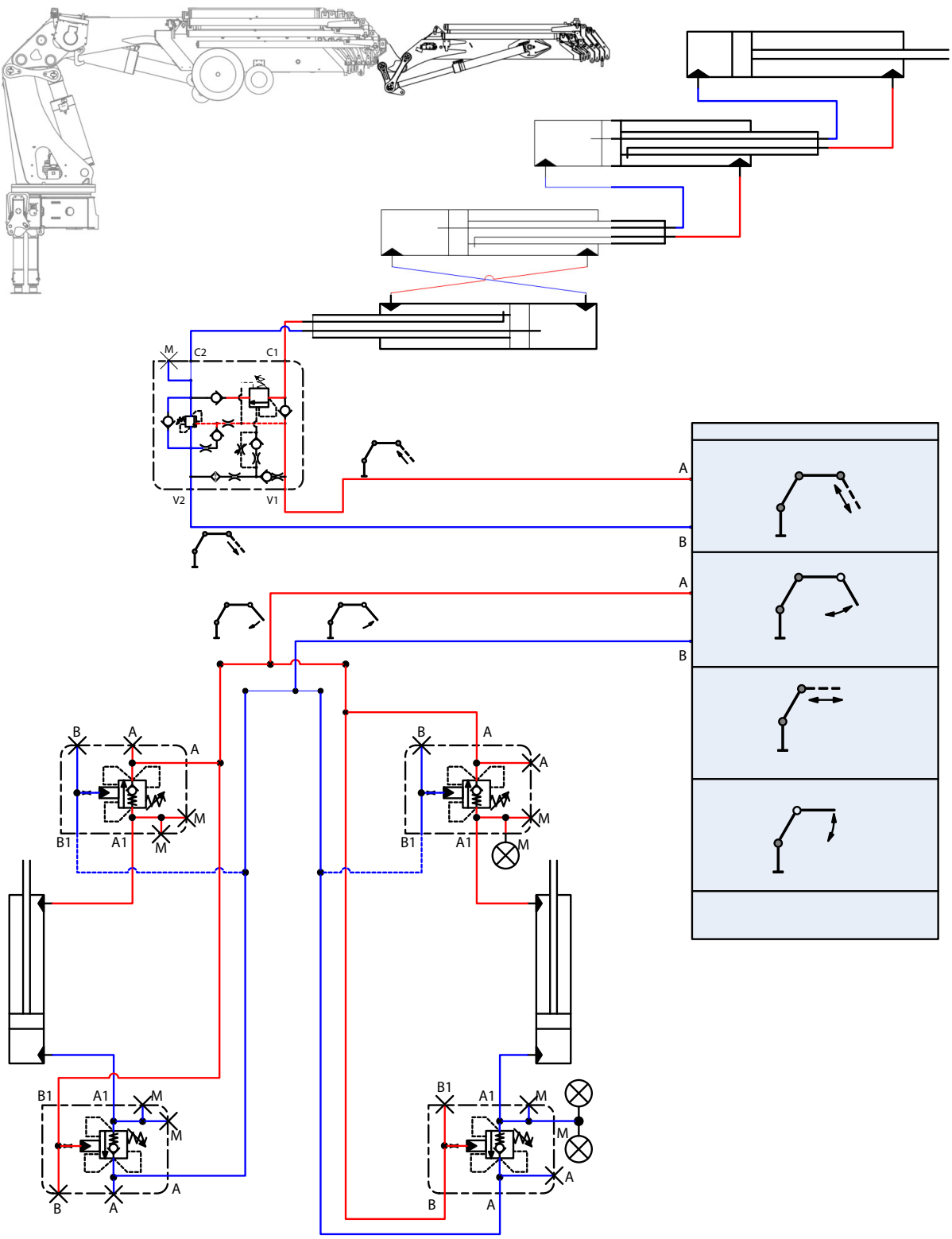

Hydraulic Diagram - Crane Functions Fly-Jib and Change-Over Valve

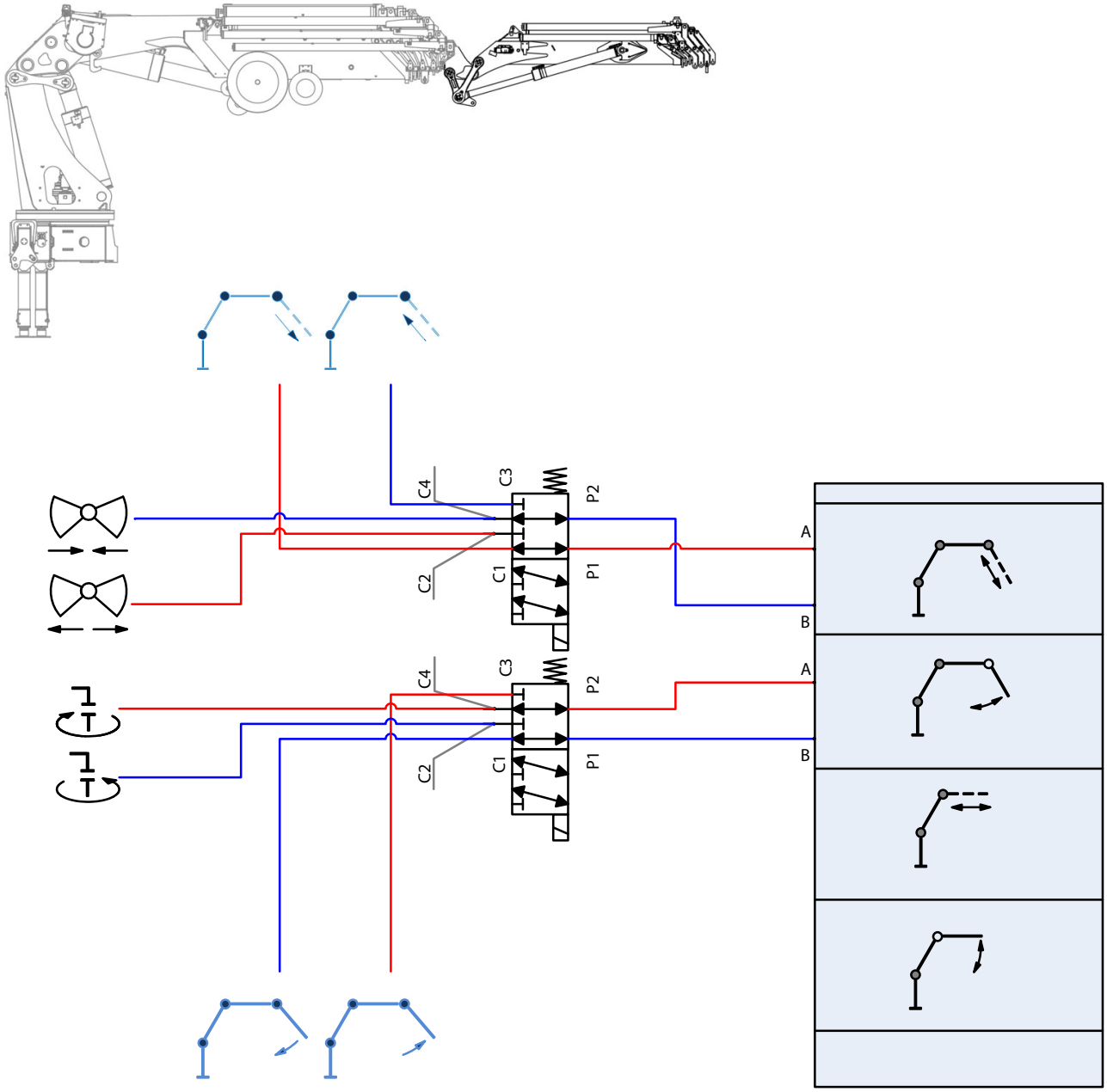

Hydraulic Diagram – Stabilizer Circuit Stabilizer Beam

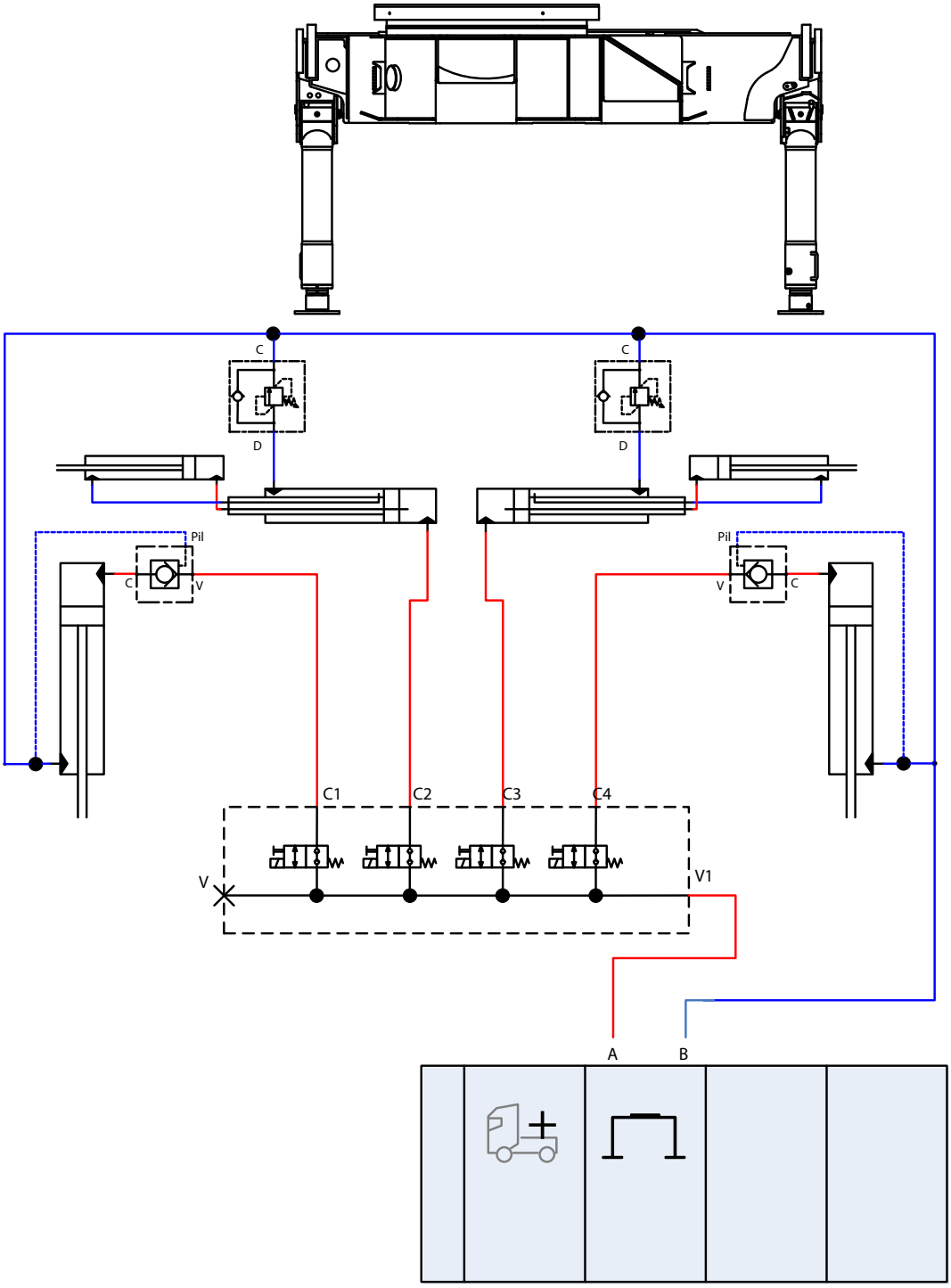

Hydraulic Diagram – Stabilizer Circuit Separate Traverse

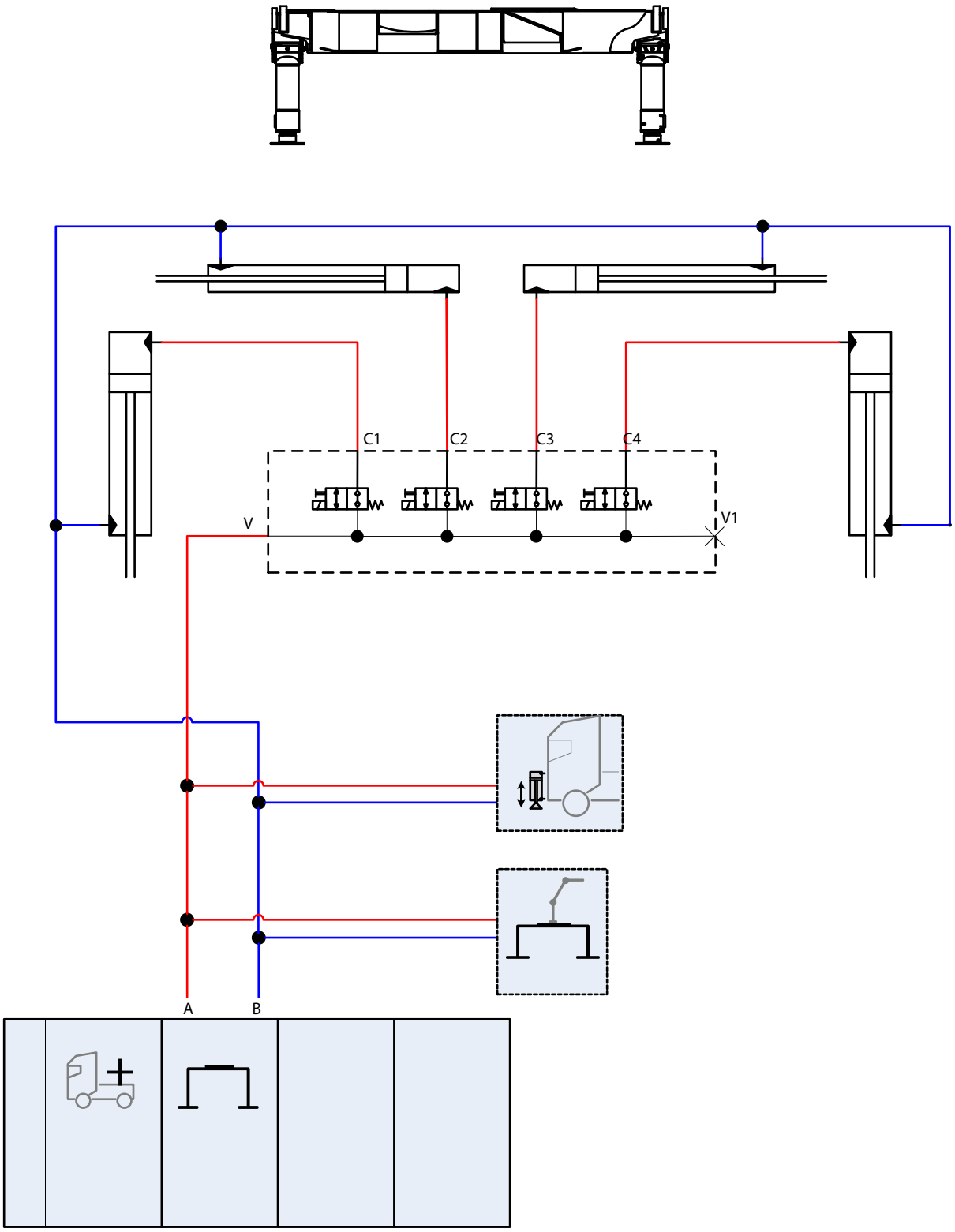

Hydraulic Diagram – Stabilizer Circuit Front Stabilizer Leg

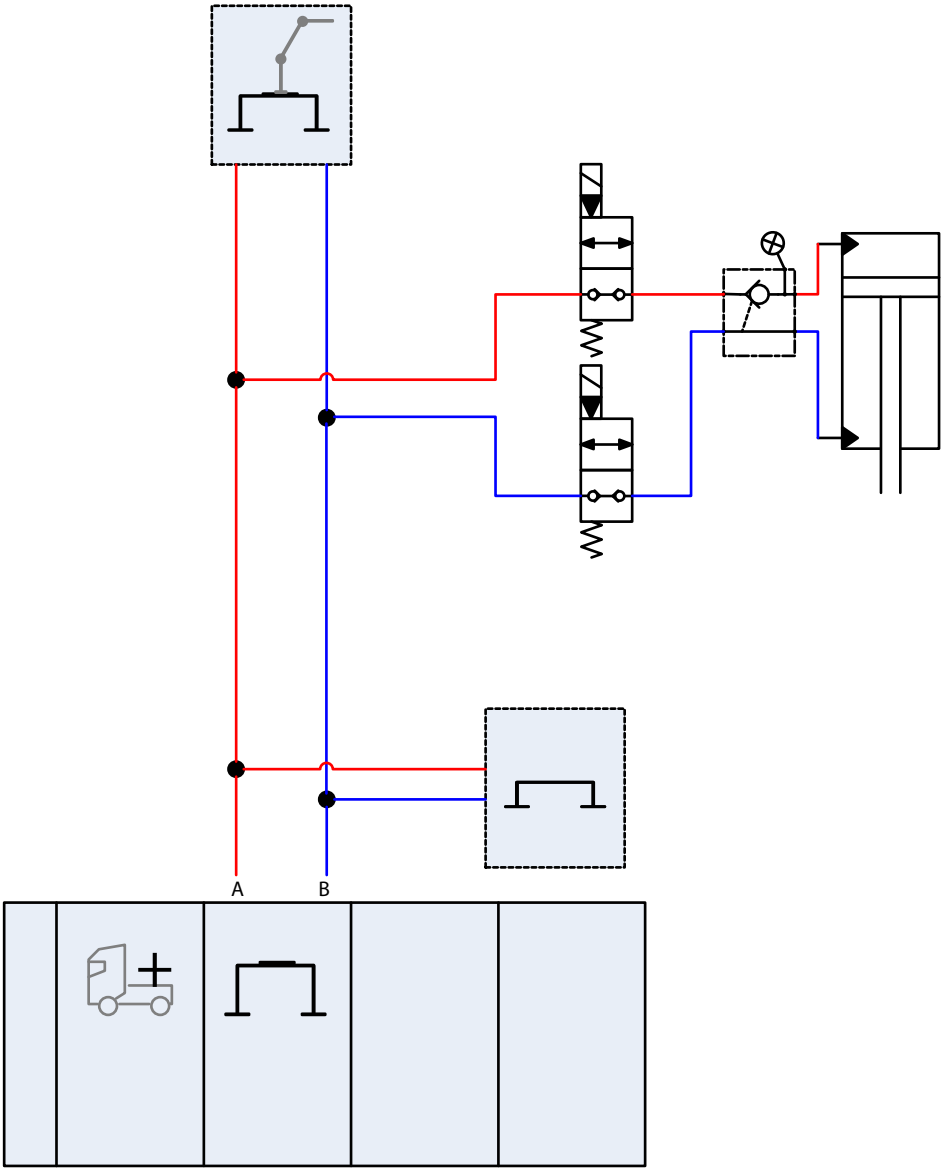

Hydraulic Diagram – Stabilizer Circuit – Available functions Example: Extensible Rear End

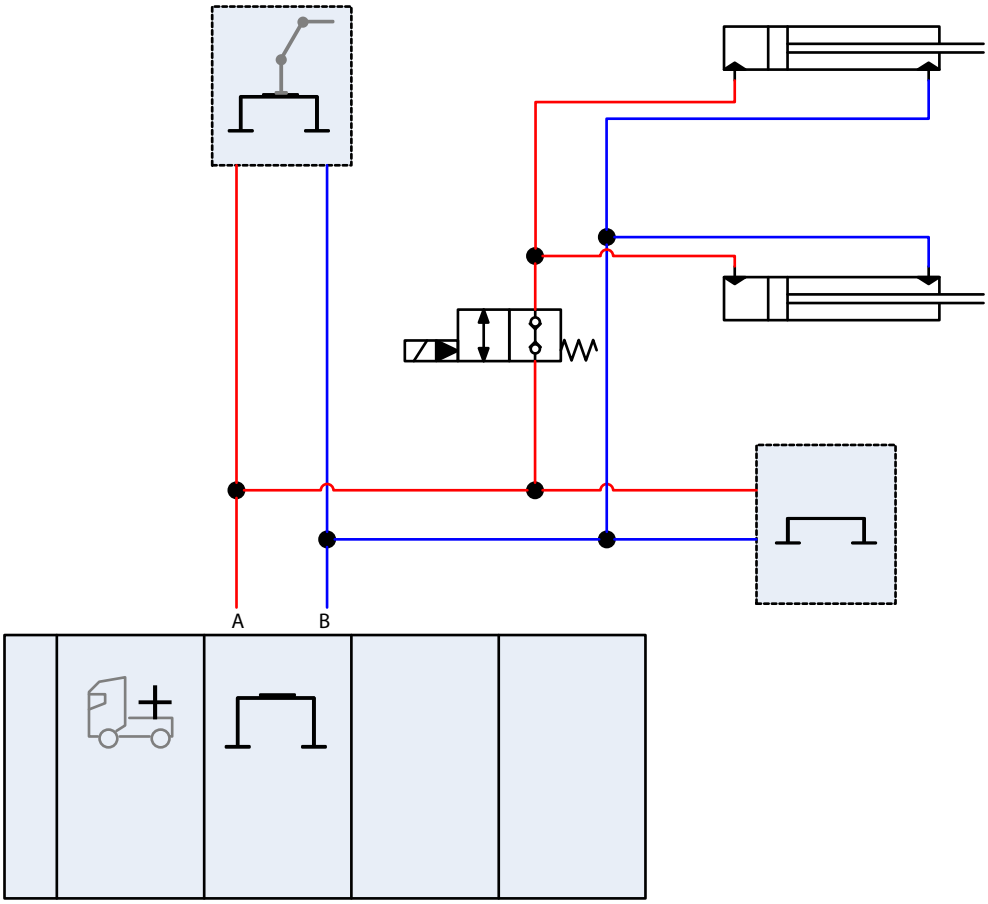

EXTENSIBLE REAR END, CONTINUED

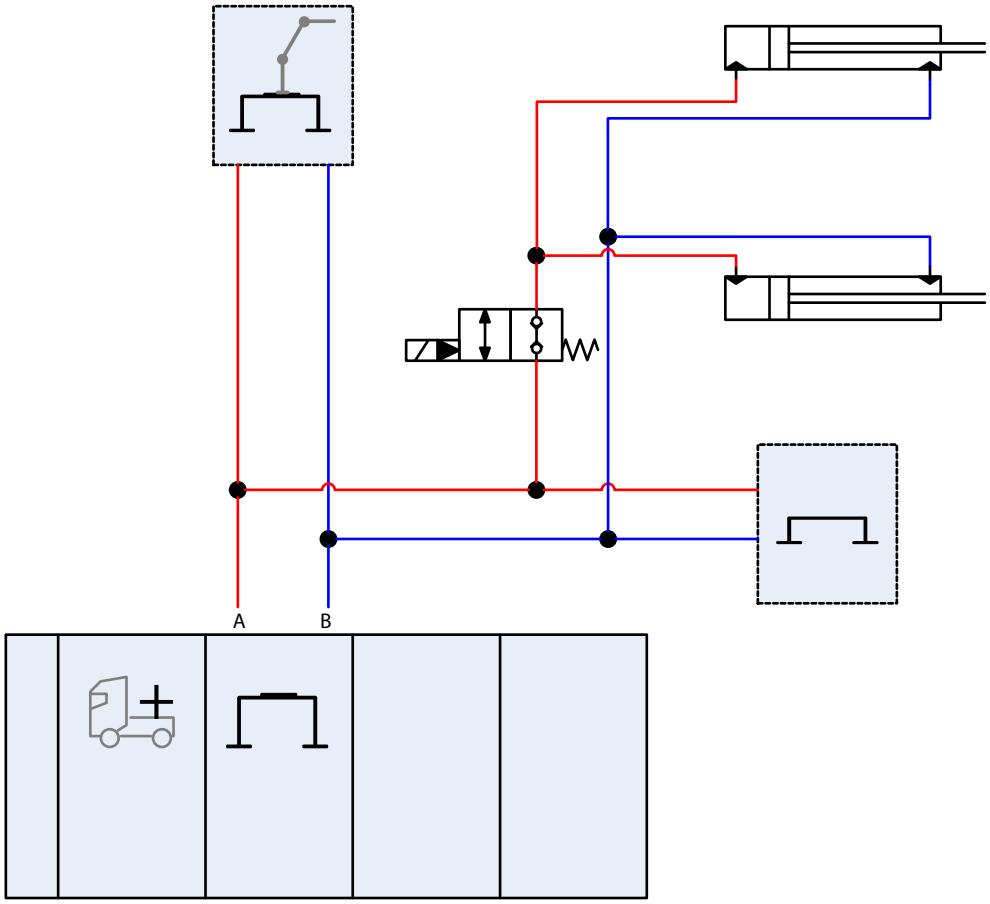

Hydraulic Diagram – Stabilizer Circuit (available functions hydraulic opening and closing of the side panel)

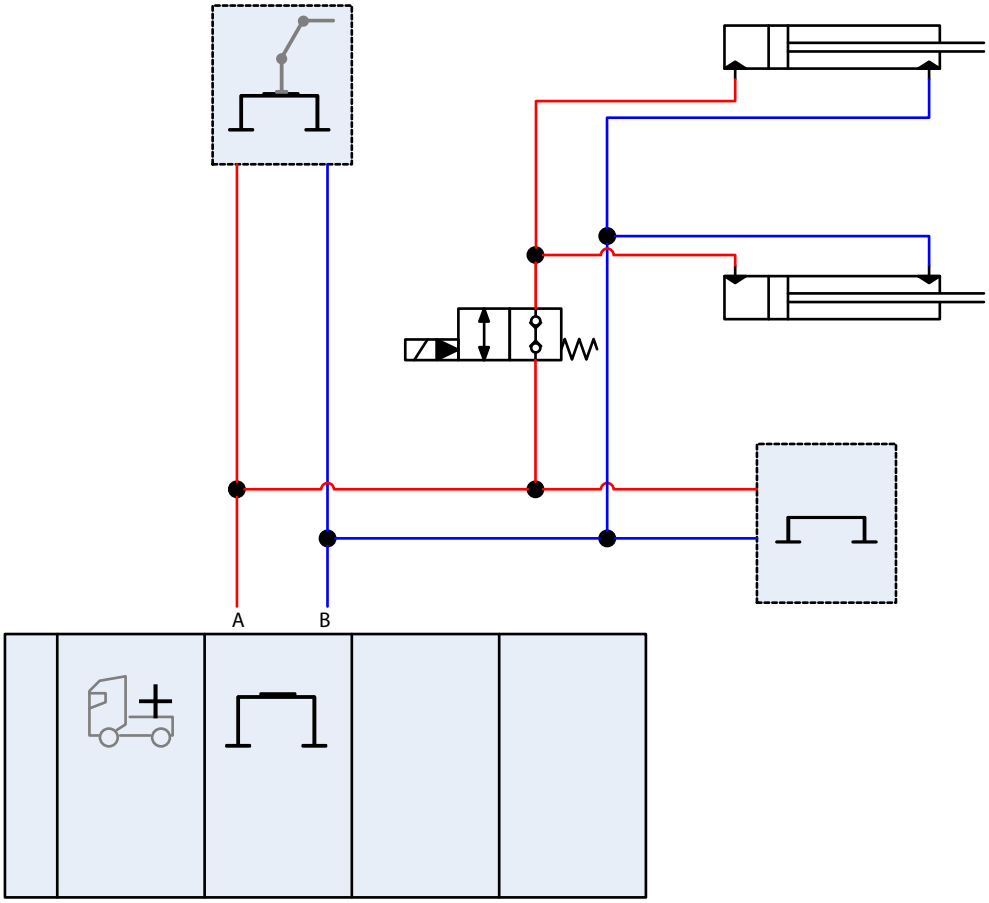

Proportional Function for Installation Purposes: Boat Supports

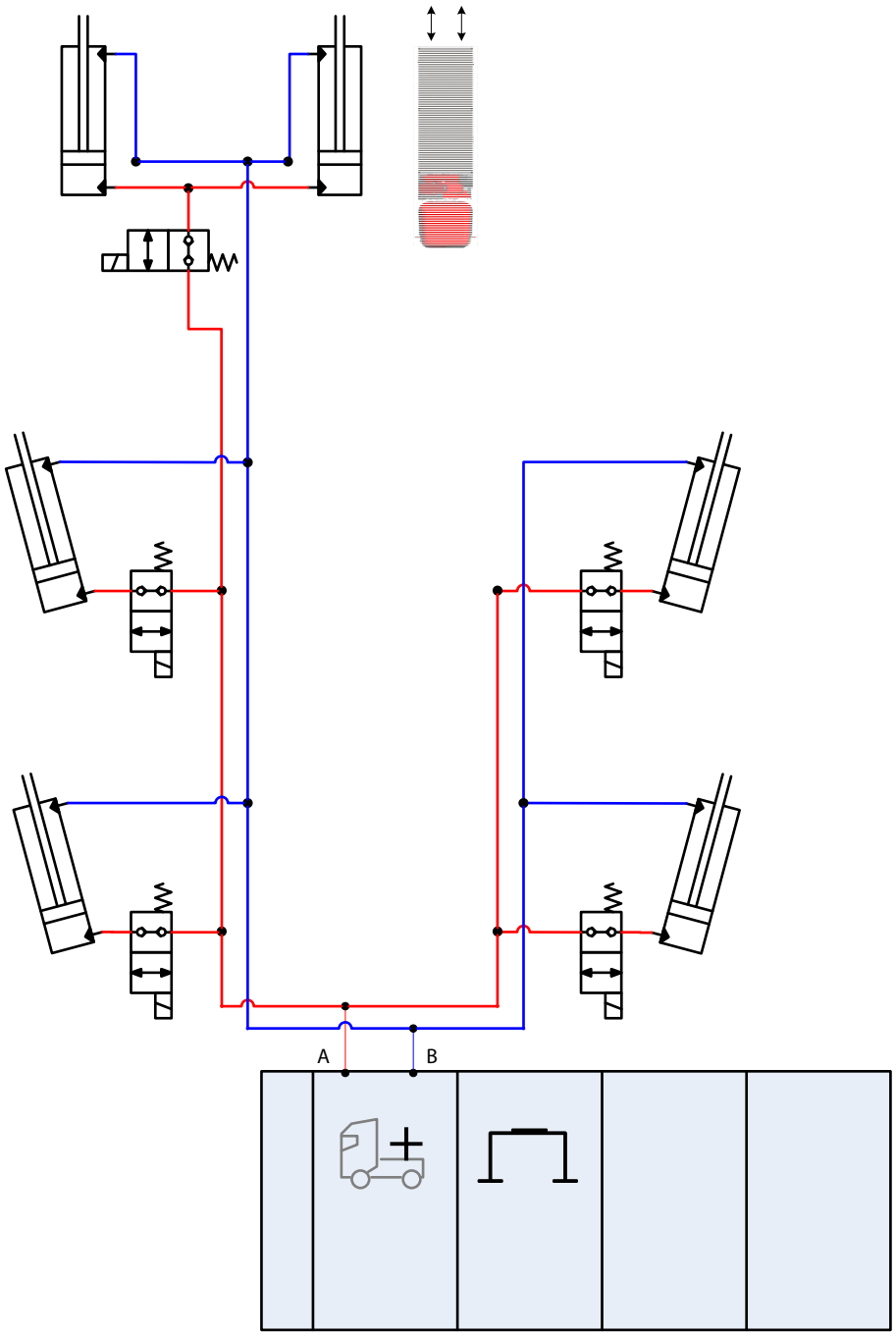

IOWA MOLD TOOLING CO., INC.

P.O. Box 189 Garner, IA 50438

Tel: 641.923.3711

Fax: 641.923.2424

www.imt.com