IOWA MOLD TOOLING CO., INC.

P.O. Box 189
Garner, IA 50438
Tel: 641.923.3711
Fax: 641.923.2424
www.imt.com

Manual # 99906429

2820 RCS Spare Parts Manual

Revised: March 18, 2020

Copyright © 2020 Iowa Mold Tooling Co., Inc.
All rights reserved

No part of this publication may be reproduced, stored in a retrieval system, or transmitted in any form or by any means, electronic, mechanical, photocopying, recording or otherwise without the prior written permission of Iowa Mold Tooling Co., Inc.

Iowa Mold Tooling Co., Inc. is an Oshkosh Corporation Company

2820K-RCS

Description	Page no.	From loader	To loader
Basic loader			
Base, complete	565 01 010	1440001	
Protection plate, cpl. (std.)	565 01 050	1440001	
Central lubrication and lubricating brush	565 01 080	1440001	
Slewing system, 400°	565 01 100	1440001	
Column, cpl. for link arm system, boom	565 01 300	1440001	
Main boom, cpl. for link arm system, boom	565 01 400	1440001	
Stowing hook, complete	565 01 450	1440001	
Mounting fittings, basic loader incl. link arm system	565 01 720	1440001	
Hose shield, cpl.	565 01 760	1440001	
Stabilizers			
Stabilizer beam, type SV - 5570	565 02 010	1440001	
Stabilizer beam, type SR-60°, 5570	565 02 021	1440001	
Stabilizer beam, type SH - 5570	565 02 030	1440001	
Stabilizer beam, type DV - 6450	565 02 040	1440001	
Stabilizer beam, type DR-60°, 6450	565 02 051	1440001	
Stabilizer beam, type DH - 6450	565 02 060	1440001	
Stabilizer safety lock	565 02 150	1440001	
Stabilizer lock and lever	565 02 160	1440001	
Safety lock (CE, manual extension)	565 02 165	1440001	
Stabilizer cylinder, C90-520, type R-60°	565 02 220	1440001	
Stabilizer cylinder, C90-520, type R-180°	565 02 222	1440001	
Stabilizer cylinder with check valve, type R-60°	565 02 230	1440001	
Stabilizer cylinder, C90-520, type HR	565 02 240	1440001	
Stabilizer cylinder incl. swing-up mechanism, type HR	565 02 245	1440001	
Stabilizer cylinder with check valve, C90-520, Type R-180°	565 02 250	1440001	
Extension piece, cpl.	565 02 260	1440001	
Foot plate with ball joint, cpl. (ø180)	565 02 270	1440001	

2820K-RCS

Description	Page no.	From loader	To loader
Footplate, std. and with ball joint	565 02 275	1440001	
Stabilizer cylinder with check valve, C90-750, type V	565 02 280	1440001	
Stabilizer cylinder with check valve, C90-850, type V	565 02 290	1440001	
	565 02 330	1440001	
	565 02 340	1440001	
Boom System			
Jib, complete	565 03 010	1440001	
Jib, complete (winch)	565 03 020	1440001	
Fitting of jib and jib cylinder	565 03 030	1440001	
Jib extension I incl. fittings	565 03 100	1440001	
Jib extension II incl. fittings	565 03 110	1440001	
Jib extension K3 incl. fittings	565 03 120	1440001	
Jib extension K4 incl. fittings	565 03 130	1440001	
Jib extension K5 incl. fittings	565 03 140	1440001	
Jib extension K6 incl. fittings	565 03 150	1440001	
Jib extension VI (K7/K8) incl. fittings	565 03 155	1440001	
Jib extension K7 incl. fittings	565 03 160	1440001	
Jib extension K8 incl. fittings	565 03 170	1440001	
Hook suspension	565 03 290	1440001	
Extension cylinder I incl. fittings	565 03 500	1440001	
Extension cylinder II incl. fittings	565 03 510	1440001	
Extension cylinder III incl. fittings	565 03 520	1440001	
Extension cylinder IV incl. fittings	565 03 530	1440001	
Extension cylinder V incl. fittings	565 03 540	1440001	
Extension cylinder VI incl. fittings	565 03 550	1440001	
Extension cylinder VI (K7/K8) incl. fittings	565 03 555	1440001	
Extension cylinder VII incl. fittings	565 03 560	1440001	

2820K-RCS

Description	Page no.	From loader	To loader
Extension cylinder VIII incl. fittings	565 03 570	1440001	
Manual extension, F5	565 03 740	1440001	
Manual extension, F6	565 03 750	1440001	
Manual extension, F7	565 03 760	1440001	
Manual extension, F8 (F8 in K7)	565 03 770	1440001	
Manual extension, F9	565 03 780	1440001	
Hydraulic systems, valve brackets and dual controls			
Valve bracket - RCS	565 05 010	1440001	
Counter-balance valve	565 05 190	1440001	
Valve bracket, cpl. 2 fcts.	565 05 200	1440001	
Valve bracket, cpl., 2 fcts. + 2 available fcts.	565 05 205	1440001	
Valve bracket, cpl. 4 fcts.	565 05 210	1440001	
Valve bracket, cpl. 4 fcts. + 4 available	565 05 220	1440001	
Valve bracket, cpl. 4 fcts. - RC	565 05 230	1440001	
Stabilizer valve block, 5 available functions	565 05 300	1440001	
Stabilizer valve block, 6 available functions	565 05 310	1440001	
Stabilizer valve block, 7 available functions	565 05 320	1440001	
Stabilizer valve block, 8 available functions	565 05 330	1440001	
Dual control, 2 fcts. std.	565 05 340	1440001	
Dual control, 4 fcts. std.	565 05 350	1440001	
Dual control.4 fcts. + 4 available functions (std.)	565 05 360	1440001	
Dual control, 4 fcts., hydr. swing-up stabilizer legs	565 05 370	1440001	
Dual control, 4 fcts. + 4 available fcts. (hydr. swing-up stabilizer legs)	565 05 380	1440001	
Hydraulic systems, loader functions			
Hose kit, loader functions, std.	565 05 400	1440001	
Hose kit, loader functions, 1 EXV.	565 05 410	1440001	
Hose kit, loader functions, 2 EXV.	565 05 420	1440001	
Hose kit, loader functions, std./winch	565 05 430	1440001	

2820K-RCS

Description	Page no.	From loader	To loader
Hose kit, loader functions, 2 EXV/winch	565 05 440	1440001	
Hydraulic system, slewing	565 05 500	1440001	
Hydraulic systems, stabilizer beams			
Hydraulic system, stabilizers, manual extension	565 05 700	1440001	
Hydraulic system, stabilizers, hydr. extension	565 05 710	1440001	
Hydraulic system, SV (+ SR-20° -Obsolete) 5570, manual extension	565 05 780	1440001	
Hydraulic system, SR-60°/180°, 5570, manual extension	565 05 785	1440001	
Hydraulic system, SV (+ SR-20° -Obsolete) 5570, hydr. extension	565 05 790	1440001	
Hydraulic system, SH + SR-60°/180° - 5570, hydr. extension	565 05 800	1440001	
Hydraulic system, DV (+ DR-20° -Obsolete) 6450, hydr. extension	565 05 810	1440001	
Hydraulic system, DH + DR-60°/180° - 6450, hydr. extension	565 05 815	1440001	
Hydraulic system, DV 7400 hydr. extension	565 05 820	1440001	
Hydraulic systems, pump and tank			
Tank, cpl. (150L)	565 06 010	1440001	
Hydr. syst. pump + return hoses	565 06 030	1440001	
Hydr. syst. pump + return hoses	565 06 040	1440001	
Tank incl. fittings, (90L)	565 06 080	1440001	
Tank incl. fittings (150L)	565 06 090	1440001	
Tank bracket	565 06 095	1440001	
Oil cooler	565 06 100	1440001	
Oil cooler	565 06 110	1440001	
High-pressure filter	565 06 130	1440001	
Hydraulic systems, valve blocks			
Control valves, Danfoss, 7 sects., fixed	565 06 200	1440001	
Control valves Danfoss, 7 sect.(crane) + RC stb, fixed flow	565 06 210	1440001	
Control valves, Danfoss, 7 sections, variable	565 06 220	1440001	
Control valves Danfoss, 7 sect.(crane) + RC stb, variable flow	565 06 230	1440001	
Hydraulic systems, miscellaneous			

2820K-RCS

Description	Page no.	From loader	To loader
	565 06 500	1440001	
	565 06 510	1440001	
	565 06 520	1440001	
	565 06 530	1440001	
CYW sensor on stabilizer	565 06 600	1440001	
Labels and mounting kits			
Standard labels	565 07 010	1440001	
Labels for emergency operation	565 07 025	1440001	
Lifting capacity diagrams and various labels	565 07 040	1440001	
Mounting kit (3 M33 x 2 + 1 M30 x 2) - 50 mm.	565 07 115	1440001	
Mounting kit (3 M33 x 2 + 1 M30 x 2) - 150 mm.	565 07 120	1440001	
Mounting kit (3 M33 x 2 + 1 M30 x 2) - 250 mm.	565 07 130	1440001	
Mounting kit (8 M24 x 2 pins)	565 07 140	1440001	
Accessories, extra valves			
Hose guides, K2-1EXV.	565 09 110	1440001	
Hose guides, K3-1 EXV.	565 09 120	1440001	
Hose guides, K4-1 EXV.	565 09 130	1440001	
Hose guides, K5-1 EXV.	565 09 140	1440001	
Hose guides, K6-1 EXV.	565 09 150	1440001	
Hose guides, K2-2 EXV.	565 09 210	1440001	
Hose guides, K3-2 EXV.	565 09 220	1440001	
Hose guides, K4-2 EXV.	565 09 230	1440001	
Hose guides, K5-2 EXV.	565 09 240	1440001	
Hose guides, K6-2 EXV.	565 09 250	1440001	
Hose guides, K2-2 EXV-raised	565 09 260	1440001	
Bracket for hose reel, cpl. (jib)	565 09 280	1440001	
Attachment for hose reel, cpl. (extension 2)	565 09 290	1440001	
Attachment for hose reel, cpl. (extension 4)	565 09 300	1440001	

2820K-RCS

Description	Page no.	From loader	To loader
Hydr. system, hose reels, 2 EXV.	565 09 309	1440001	
Hydr. system, hose reels, 2 EXV.	565 09 310	1440001	
Kit, quick-release coupling for internal hose routing, 2 EXV.	565 09 320	1440001	
Hydr. system, hose reels, 1 EXV.	565 09 330	1440001	
Kit, quick-release coupling for internal hose routing, 1 EXV.	565 09 340	1440001	
Quick-release coupling for 1 extra valve	565 09 390	1440001	
Quick-release coupling for 2 extra valves	565 09 400	1440001	
Multi-coupling for 2 extra valves K1-K5/T3-T4	565 09 430	1440001	
Multi-coupling for 2 extra valves K6/T5	565 09 440	1440001	
Kit for 3 extra valves (K1-K5)	565 09 460	1440001	
Kit for 3 extra valves (K6)	565 09 470	1440001	
Hose clamps, complete (K7-K8)	565 09 500	1440001	
Hose reels (K7 - K8), 1 EXV.	565 09 510	1440001	
Hose reels (K5 - K8), 2 EXV.	565 09 520	1440001	
Kit, quick-release coupling for hose reel, (K7-K8), 1EXV	565 09 530	1440001	
Kit, quick-release coupling for hose reel, (K7-K8) 2EXV	565 09 540	1440001	
Accessories, stand-up controls, HS			
Stand-up controls	565 10 010	1440001	
Mounting fittings, HSRC	565 10 800	1440001	
Accessories, top seat, TS			
Mounting fittings, TS	565 11 010	1440001	
Top seat (RC), cpl.	565 11 030	1440001	
Mounting fittings, TS RC	565 11 040	1440001	
Accessories, winch			
Winch 1.5 T + mounting fittings and weighing cell	565 13 020	1440001	
Winch 2.5 T + mounting fittings and weighing cell	565 13 030	1440001	
Wire pulley, single snatch block	565 13 040	1440001	
Wire pulley, double snatch block	565 13 050	1440001	

2820K-RCS

Description	Page no.	From loader	To loader
Wire roller guide	565 13 090	1440001	
Hydraulic system, winch	565 13 100	1440001	
Hydraulic system, P15E	565 13 110	1440001	
Accessories, miscellaneous			
Slewing sensor	565 16 030	1440001	
Protective guard, jib cylinder, cpl.	565 16 090	1440001	
Protective guard (LHV boom), cpl.	565 16 100	1440001	
Electronic parts, in general			
RCL 5300	565 20 010	1440001	
Plugs in RCL	565 20 020	1440001	
Mounting fittings for junction box (FJC 5330)	565 20 030	1440001	
CAN termination, CIO5376	565 20 040	1440001	
Terminal block for RCL box with RC	565 20 050	1440001	
12 V Converter	565 20 055	1440001	
BEHEW	565 20 060	1440001	
BEHEW	565 20 061	1440001	
BEPAW, 12_23	565 20 070	1440001	
BEPAW	565 20 072	1440001	
CYW	565 20 080	1440001	
CYL	565 20 085	1440001	
CYBEL, single extension	565 20 090	1440001	
CYBEL double extension	565 20 100	1440001	
Alarm flash on stabilizer legs	565 20 140	1440001	
Spotlight, boom	565 20 150	1440001	
Spotlight, jib	565 20 160	1440001	
Temperature monitoring without oil cooler	565 20 170	1440001	
Temperature monitoring for oil cooler	565 20 180	1440001	
Heated seating 12V/24V	565 20 200	1440001	

2820K-RCS

Description	Page no.	From loader	To loader
EVS	565 20 210	1440001	
PAS	565 20 220	1440001	
Mounting fittings for junction box, RCS	565 20 250	1440001	
CAN termination, RCL53xx	565 20 340	1440001	
Electronic parts, manual crane			
ECT 5310 on the side of the dual controls.	565 20 525	1440001	
Electronic parts, RC crane			
Basic electronic parts, crane with RC	565 22 010	1440001	
Antenna, HSRC	565 22 025	1440001	
HSL G4	565 22 070	1440001	
HSL-E G4	565 22 095	1440001	
HSL-Q RC G4	565 22 100	1440001	
Termination, G2	565 22 120	1440001	
Winch, electric parts	565 22 130	1440001	
Column, Fly-Jib	565 22 140	1440001	
Supply, separate traverse	565 22 150	1440001	
Stabilizer operation via RC (without CIO)	565 22 154	1440001	
Fly-Jib supply	565 22 160	1440001	
Spotlight, radio remote controlled.	565 22 170	1440001	
3rd extra valve	565 22 190	1440001	
QOPS RC G4	565 22 220	1440001	
Light tower	565 22 230	1440001	
EJB5385, installation	565 22 460	1440001	

2820K-RCS

Internal ref. 63 47 000

An Oshkosh Corportation Company

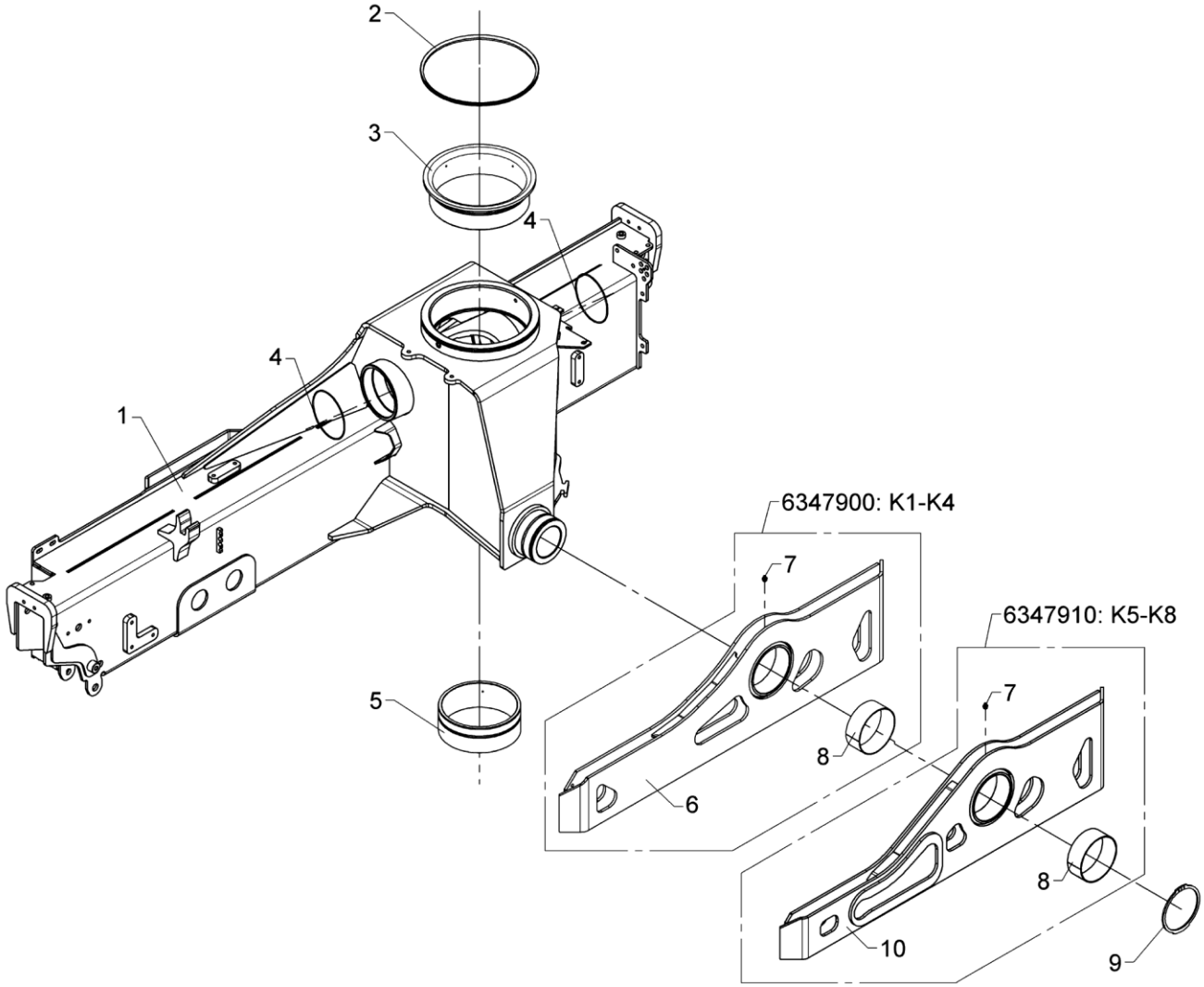

565 01 010

From loader 1440001
To loader

Created 16-10-2017
Modified

Base, complete

Pos	Qty.	Part no.	Description	Remarks
1	1	6347010	Base, painted	6347101
2	1	22154	V-ring	VL-0300
3	1	63433	Top bearing	
4	2	20205	O-ring	OR 134,5 x 3
5	1	63434	Bottom bearing	
6	1	6306135	Suspension traverse	
7	1	31318	Lubricator	1/8" RG
8	1	23362	Bushing	PM 13050 DX
9	1	33151	Circlip	130U
10	1	6345135	Suspension traverse	

2820K-RCS

Internal ref. 63 44 260

An Oshkosh Corportation Company

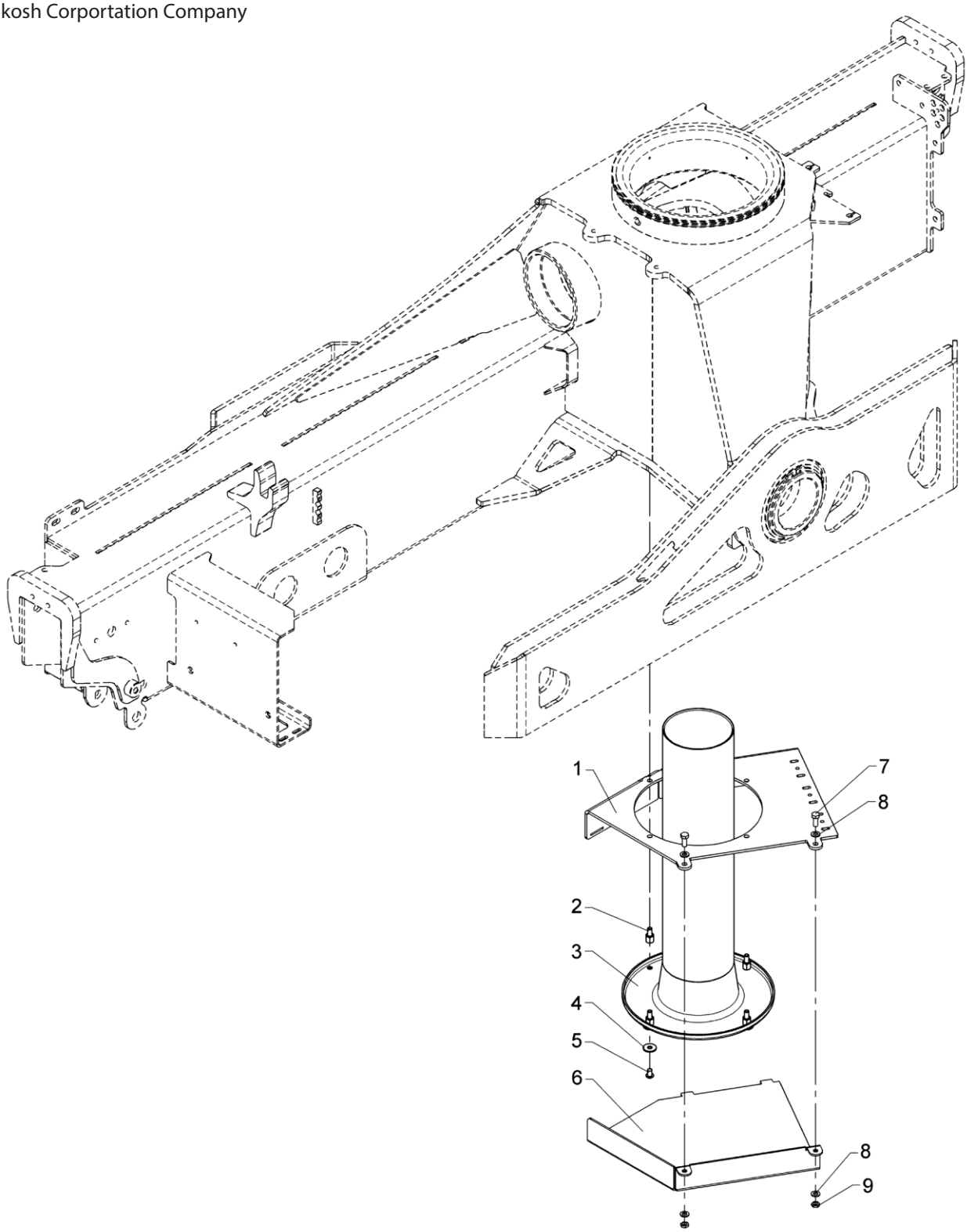

565 01 050

From loader 1440001
To loader

Protection plate, cpl. (std.)

Created 12-12-2008
Modified 08-01-2014

Pos	Qty.	Part no.	Description	Remarks
1	1	6344231	Cover	
2	4	6340223	Spacer	
3	1	63491	Bushing	
4	4	31136	Washer, stainless	8 mm
5	4	30924	Screw	M8 x 12
6	1	6340233	Hose shield	
7	2	30132	Set screw, stainless	M8 x 20
8	4	31147	Face washer, 8 mm	8 mm
9	2	30874	Counter nut, stainless	M8

2820K-RCS

Internal ref. 63 47 020

An Oshkosh Corportation Company

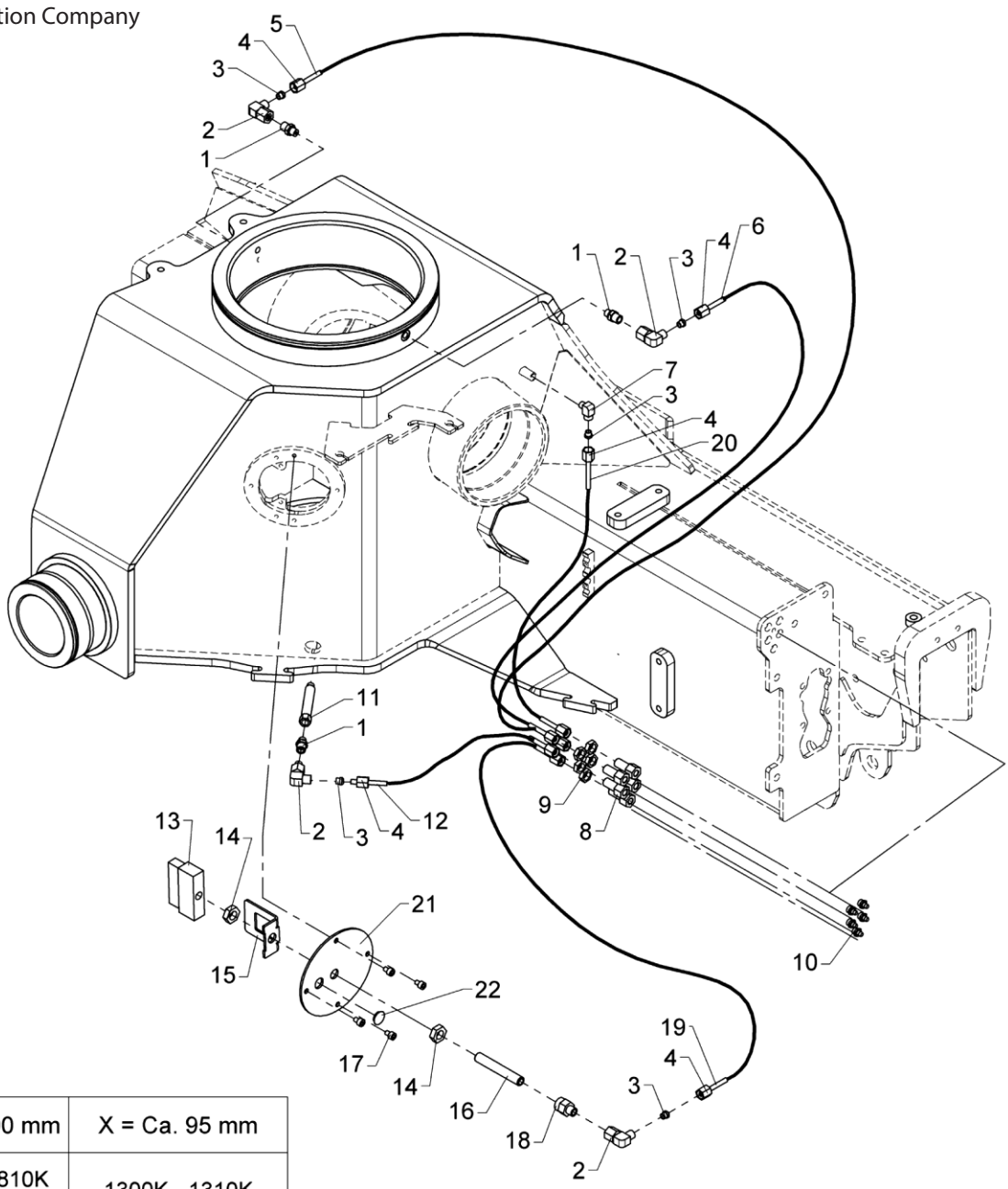

X = Ca. 100 mm	X = Ca. 95 mm
1800K - 1810K 2020K - 2030K 2120K - 2130K 2200K - 2210K 2310K - 2320K 2420K - 2430K 2620K - 2630K 2810K - 2820K 1943Z 2243Z 2310S	1300K - 1310K 1420K - 1430K 1500K - 1510K 1520K - 1530K 1610K - 1620K 1720K - 1730K 1820K - 1830K 1410T - 1530T 1630T - 1910T 2030T - 2130T

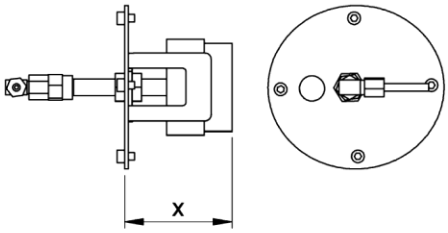

Central lubrication and lubricating brush

Pos	Qty.	Part no.	Description	Remarks
1	3	26189	Connection	P-GEV 6 LR-WD
2	4	26174	Elbow connection	EWSD 6 L
3	10	26114	Profile ring	P-R 6 L/S
4	10	26164	Coupling nut	M 6 L
5	1	62821	Nylon pipe	1260 mm
6	1	62821	Nylon pipe	970 mm
7	1	26186	Elbow connection	WEV 6 LRK
8	5	26891	Bulkhead connection	
9	5	26890	Counter nut	M12 x 1,5
10	5	31318	Lubricator	1/8" RG
11	1	6340046	Nipple (1/8" RG - 90 mm)	
12	1	62821	Nylon pipe	1200 mm
13	1	31395	Brush	
14	2	25354	Counter nut	1/4"
15	1	6306047	Safety device, lubrica. brush	
16	1	6306048	Threaded pipe	
17	4	30454	Screw	MC6 x 8
18	1	26372	Pressure gauge connection	P-MAV 6 LR
19	1	62821	Nylon pipe	640 mm
20	1	62821	Nylon pipe	1200 mm
21	1	6346047	Cover	
22	1	64360	Plug	

2820K-RCS

Internal ref. 63 47 030

An Oshkosh Corportation Company

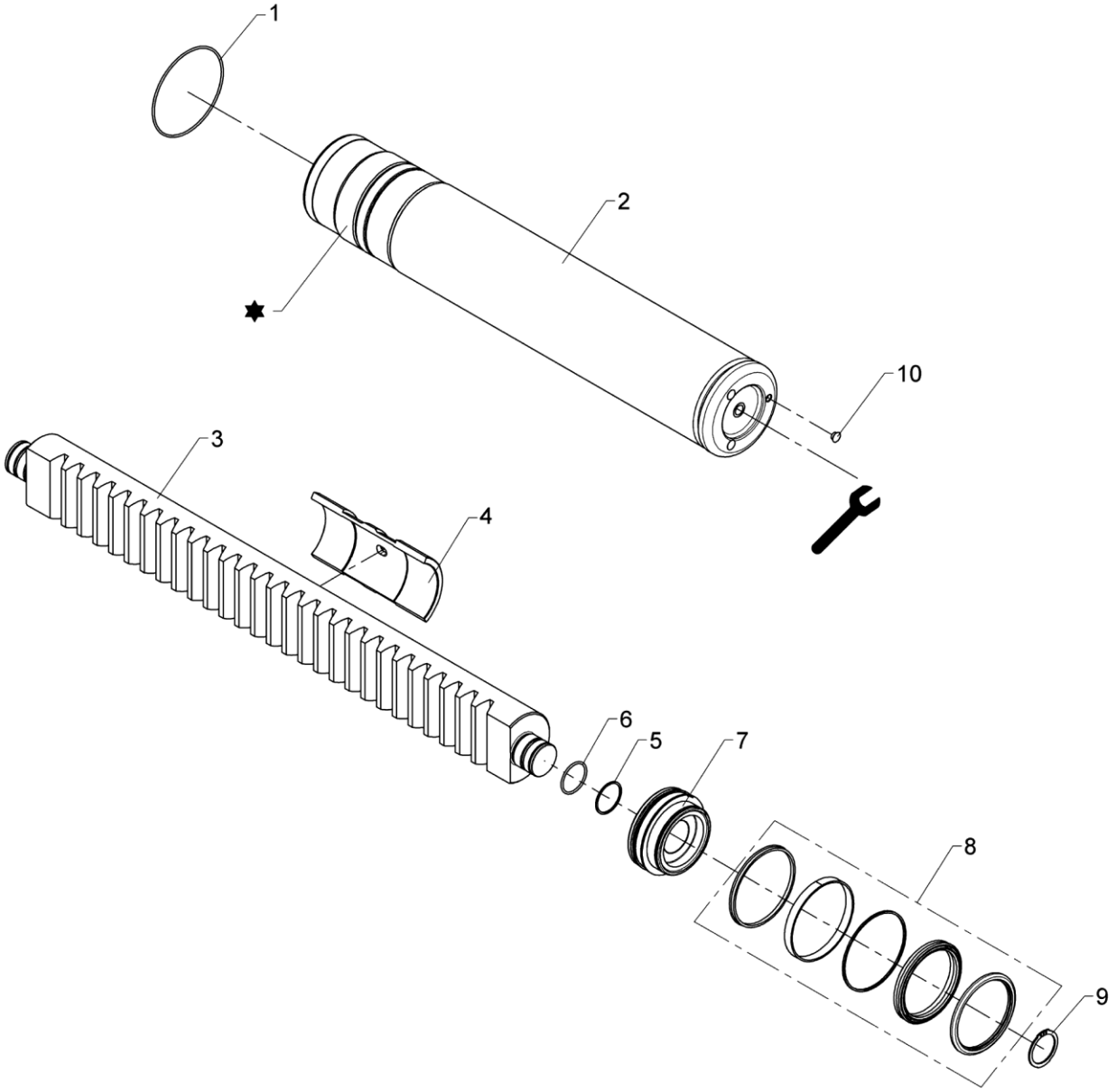

✸ Loctite 8156

600 Nm

565 01 100

From loader 1440001
To loader

Slewing system, 400°

Created 22-09-2017
Modified

Pos	Qty.	Part no.	Description	Remarks
1	2	20205	O-ring	OR 134,5 x 3
2	2	6354241	Slewing cylinder, sv.	
3	1	6344044	Rack	
4	1	63555	Guide block	
5	2	20868	Back ring	STR 45 x 50 x 1,3-Y95A
6	2	20181	O-ring	OR 44,2 x 3
7	2	6346085	Piston	
8	2	6894690	Seal kit f. slewing cyl.(ø125)	
9	2	33129	Circlip	
10	6	64371	Plug	

2820K-RCS

Internal ref. 63 47 310

An Oshkosh Corportation Company

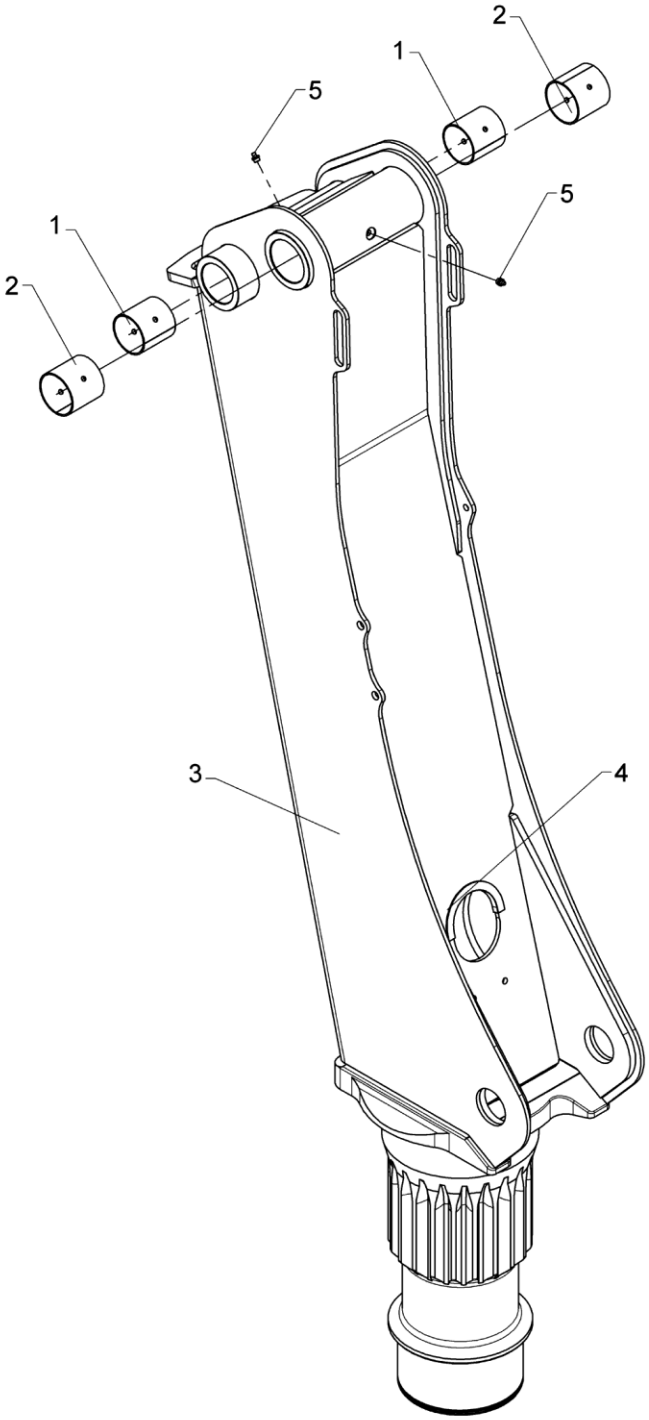

565 01 300

From loader 1440001
To loader

Column, cpl. for link arm system, boom

Created 06-09-2018
Modified

Pos	Qty.	Part no.	Description	Remarks
1	2	23418	Bushing	PM 6570 DX
2	2	23338	Bushing	PM 7070 DX
3	1	6347300	Column, painted	6347151
4	1	46587	Rubber protection	180 mm
5	2	31318	Lubricator	1/8" RG

2820K-RCS

Internal ref. 63 47 340

An Oshkosh Corportation Company

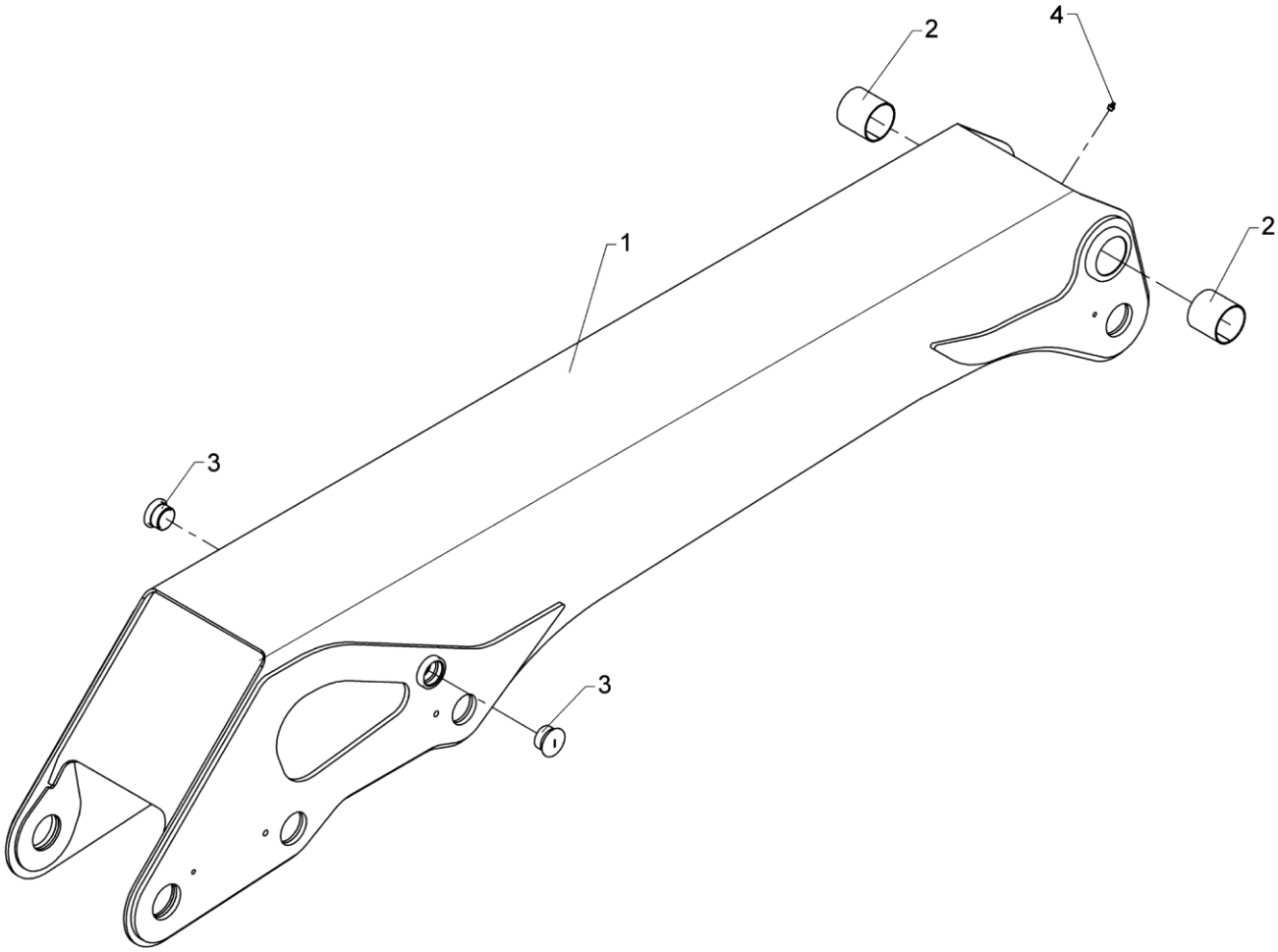

565 01 400

From loader 1440001
To loader

Main boom, cpl. for link arm system, boom

Created 06-09-2018
Modified

Pos	Qty.	Part no.	Description	Remarks
1	1	6347320	Main boom, painted	6347181
2	2	23338	Bushing	PM 7070 DX
3	2	68114		M44 x 2
4	1	31318	Lubricator	1/8" RG

2820K-RCS

63 46 600
63 42 210
Internal ref. 63 40 210

An Oshkosh Corportation Company

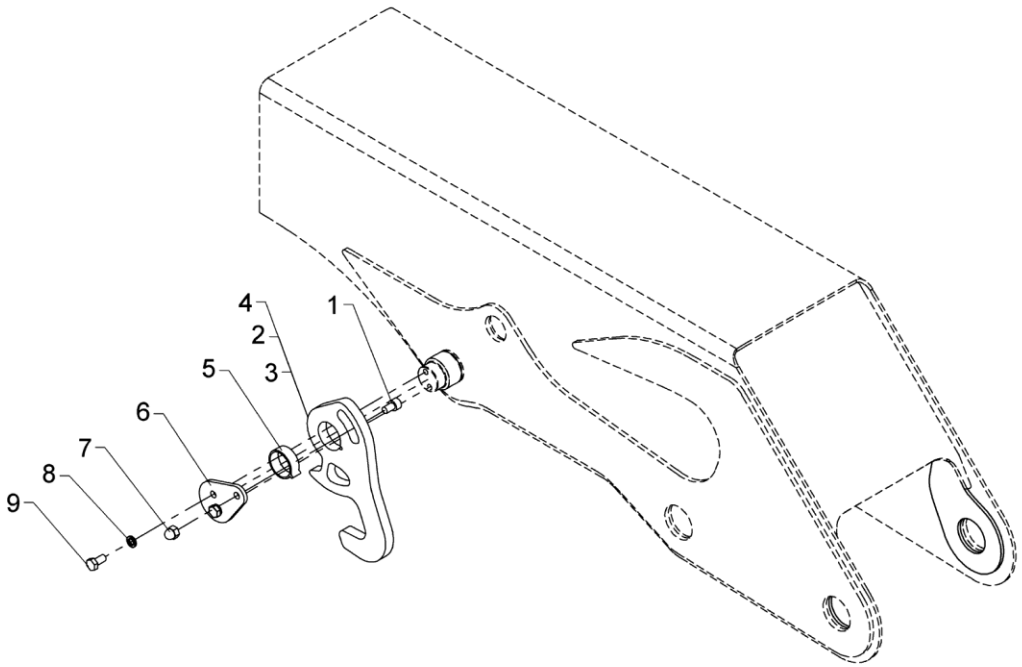

565 01 450

From loader 1440001
To loader

Stowing hook, complete

Created 10-09-2013
Modified 15-11-2018

Pos	Qty.	Part no.	Description	Remarks
		6340210	Stowing hook	
		6342210	Stowing hook, cpl. (+FJ)	
		6346600		
1	1	30964	Screw	MC10 x 16
2	1	6340208	Stowing hook	
3	1	6340948	Stowing hook (loader + FJ)	
4	2	6340985		
5	1	63565	Bearing	
6	1	6340209	End plate	
7	1	30902	Nut	M10
8	2	30933	Nordlock washer	
9	2	31517	Set screw, stainless	M10 x 20

2820K-RCS

Internal ref. 63 46 090

An Oshkosh Corportation Company

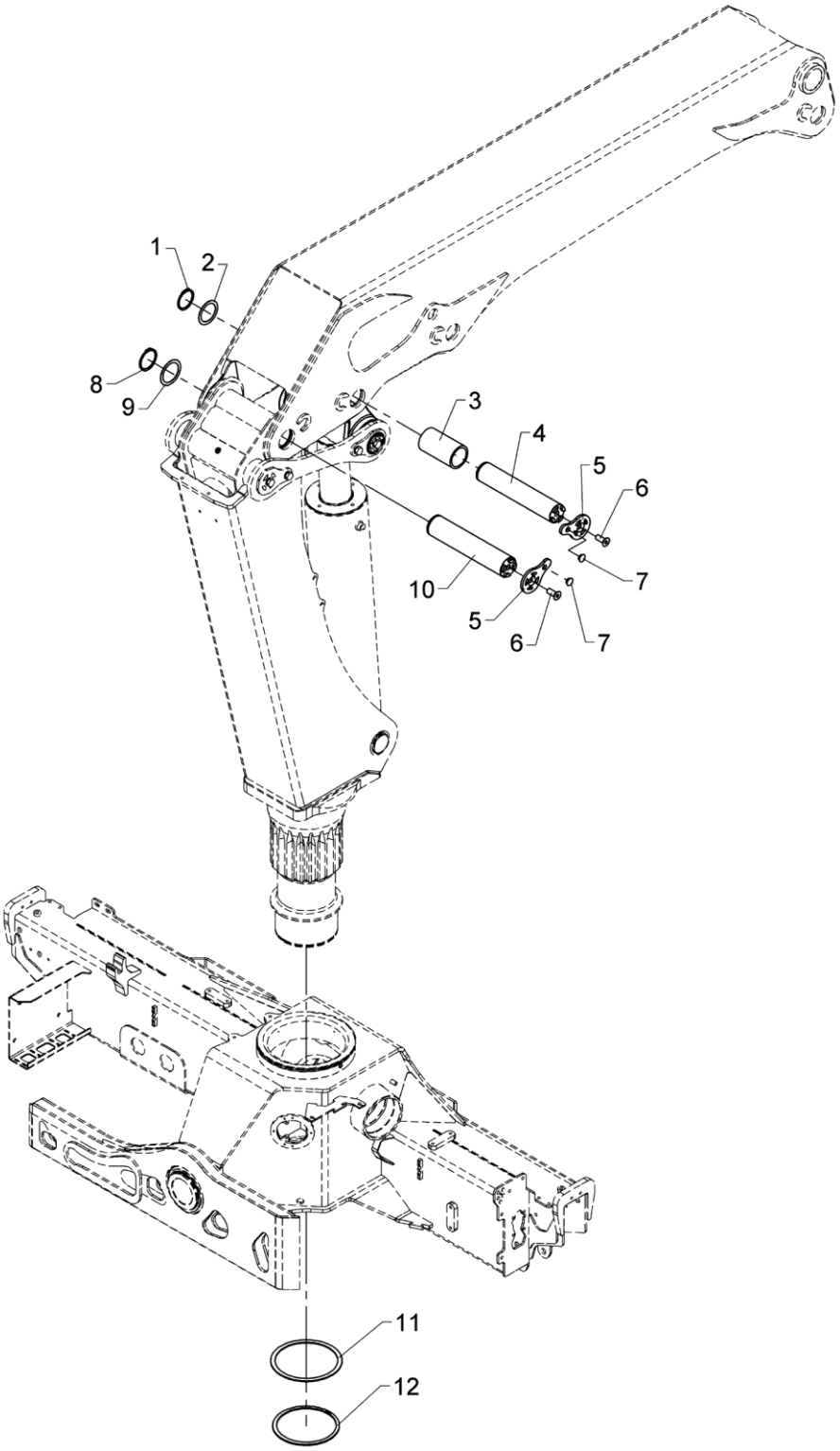

Mounting fittings, basic loader incl. link arm system

Pos	Qty.	Part no.	Description	Remarks
1	1	33137	Circlip	65U
2	1	33278	Washer	PS 65 x 85 x 1,0
3	1	63482	Distance pipe	
4	1	6345801	Pin (ø65 x 326 with susp.)	
5	2	6345802	Lock plate ø60	
6	2	32360	Countersunk screw	MK16 x 40
7	2	68034	Plug	
8	1	33139	Circlip	70U
9	1	33248	Washer	PS 70 x 90 x 1,0
10	1	6347801	Pin (ø70 x 326 with susp.)	
11	1	6344049	Supporting washer	
12	1	33274	Circlip	200U

2820K-RCS

63 43 240
Internal ref. 63 43 220

An Oshkosh Corportation Company

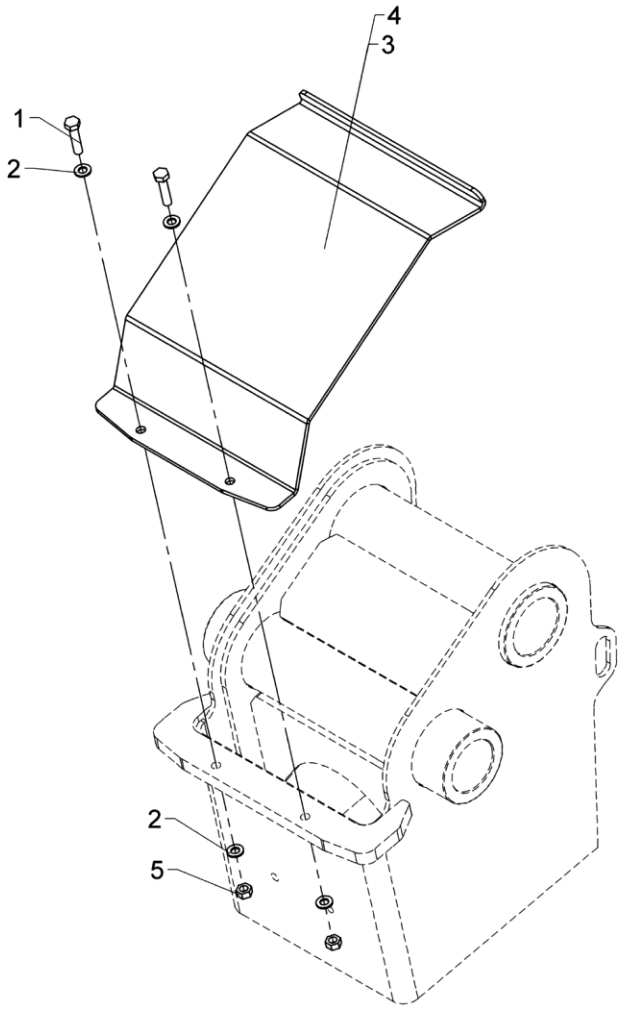

Hose shield, cpl.

565 01 760

From loader 1440001
To loader

Created 16-12-2008
Modified 09-09-2011

Pos	Qty.	Part no.	Description	Remarks
		6343220	Protective plate	
		6343240	Protective plate	
1	2	30136	Steel bolt, stainless	M8 x 35
2	4	31147	Face washer, 8 mm	8 mm
3	1	6344089	Hose shield	1800K/2020K/2200K/2420K
4	1	6344079	Hose shield	1810K/2030K/2210K/2430K/1910T/
5	2	30856	Nut, stainless	M8

2820K-RCS

63 42 030
Internal ref. 63 47 100

An Oshkosh Corportation Company

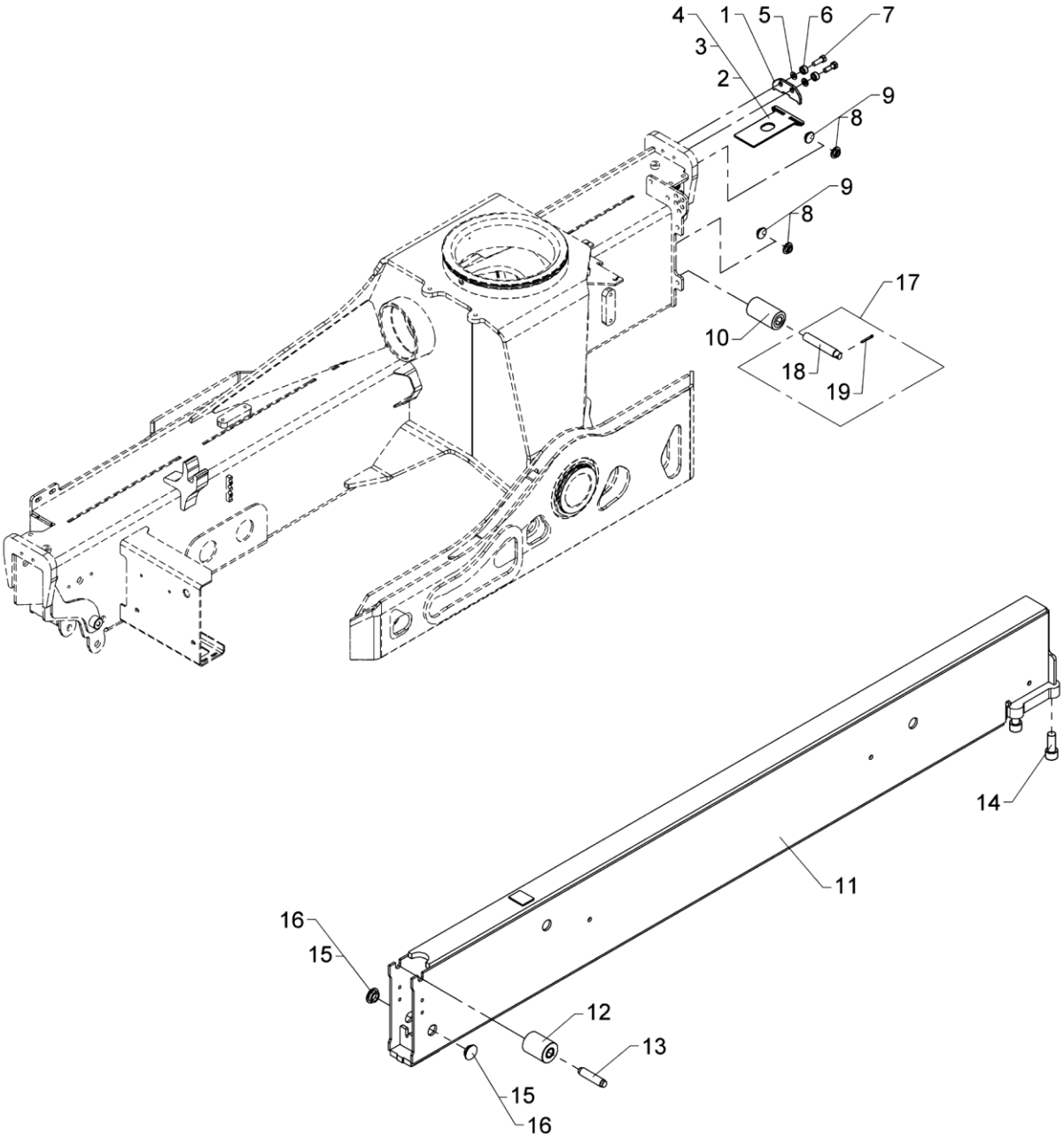

From loader 1440001
To loader

Stabilizer beam, type SV - 5570

Created 17-11-2008
Modified 28-06-2018

Pos	Qty.	Part no.	Description	Remarks
		6347100	Stabilizer beam, type SV	
		6342030	No detection, legs down	
1	1	6353091	Bracket	
2	1	6353092	Spacer, 4 mm	4 mm
3	1	6353093	Spacer, 5 mm	5 mm
4	1	6353099	Spacer, 6 mm	6 mm
5	2	31565	Washer, stainless	10 mm
6	2	6344747	Spacer	
7	2	30156	Set screw, stainless	M10 x 30
8	4	63429	Guide	ø30 x 3 mm
9	4	63430	Guide	ø30 x 2 mm
10	1	63553	Guide roller	
11	1	6346121	Stabilizer beam (SV5570)	
12	1	63554	Guide roller	
13	1	6306167	Pin for guide roller	
14	4	30496	Sockethead screw	MC20 x 50
15	2	63681	Slide block	3 mm
16	2	64424	Slide block	2 mm
17	1	6342030	No detection, legs down	
18	1	6344048	Pin for guide roller	
19	1	31615	Split pin	ø4 x 32

2820K-RCS

63 42 030
Internal ref. 63 46 820

An Oshkosh Corportation Company

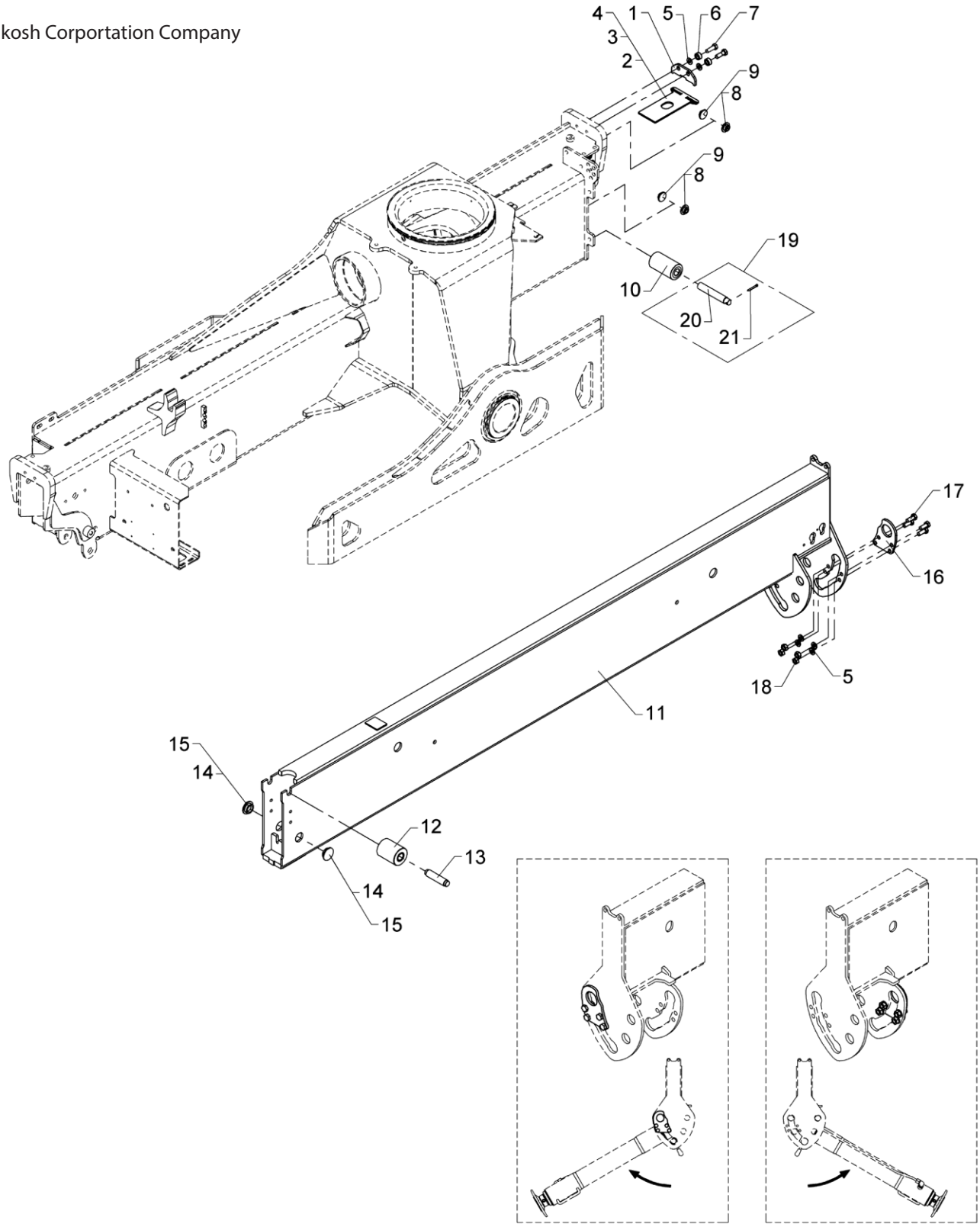

Stabilizer beam, type SR-60°, 5570

Pos	Qty.	Part no.	Description	Remarks
		6346820	Stabilizer beam, type SR-60°	
		6342030	No detection, legs down	
1	1	6353091	Bracket	
2	1	6353092	Spacer, 4 mm	4 mm
3	1	6353093	Spacer, 5 mm	5 mm
4	1	6353099	Spacer, 6 mm	6 mm
5	6	31565	Washer, stainless	10 mm
6	2	6344747	Spacer	
7	2	30156	Set screw, stainless	M10 x 30
8	4	63429	Guide	ø30 x 3 mm
9	4	63430	Guide	ø30 x 2 mm
10	1	63553	Guide roller	
11	1	6346861	Stabilizer beam, SR,reversible	
12	1	63554	Guide roller	
13	1	6306167	Pin for guide roller	
14	2	63681	Slide block	3 mm
15	2	64424	Slide block	2 mm
16	1	6342855	Plate	
17	4	30155	Set screw	M10 x 25
18	4	31551	Nut, stainless	M10
19	1	6342030	No detection, legs down	
20	1	6344048	Pin for guide roller	
21	1	31615	Split pin	ø4 x 32

2820K-RCS

63 42 030
Internal ref. 63 47 120

An Oshkosh Corportation Company

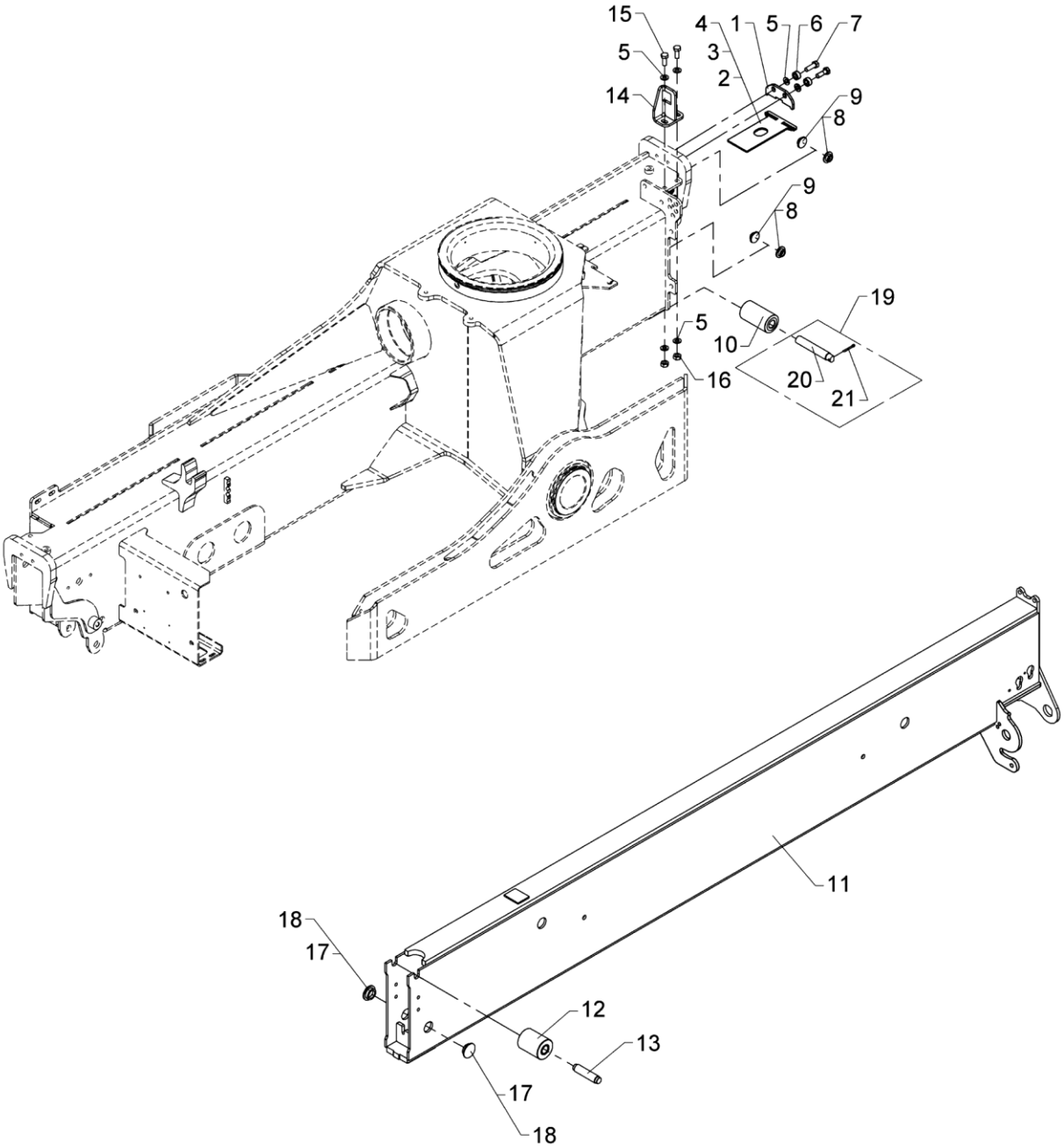

From loader 1440001
To loader

Stabilizer beam, type SH - 5570

Created 17-11-2008
Modified 01-02-2016

Pos	Qty.	Part no.	Description	Remarks
		6347120	Stabilizer beam, type SH	
		6342030	No detection, legs down	
1	1	6353091	Bracket	
2	1	6353092	Spacer, 4 mm	4 mm
3	1	6353093	Spacer, 5 mm	5 mm
4	1	6353099	Spacer, 6 mm	6 mm
5	6	31565	Washer, stainless	10 mm
6	2	6344747	Spacer	
7	2	30156	Set screw, stainless	M10 x 30
8	4	63429	Guide	ø30 x 3 mm
9	4	63430	Guide	ø30 x 2 mm
10	1	63553	Guide roller	
11	1	6346135	Stabilizer beam (SH)	
12	1	63554	Guide roller	
13	1	6306167	Pin for guide roller	
14	1	6340817	Bracket	
15	2	30155	Set screw	M10 x 25
16	2	30858	Nut	M10
17	2	63681	Slide block	3 mm
18	2	64424	Slide block	2 mm
19	1	6342030	No detection, legs down	
20	1	6344048	Pin for guide roller	
21	1	31615	Split pin	ø4 x 32

2820K-RCS

63 42 030
Internal ref. 63 47 130

An Oshkosh Corportation Company

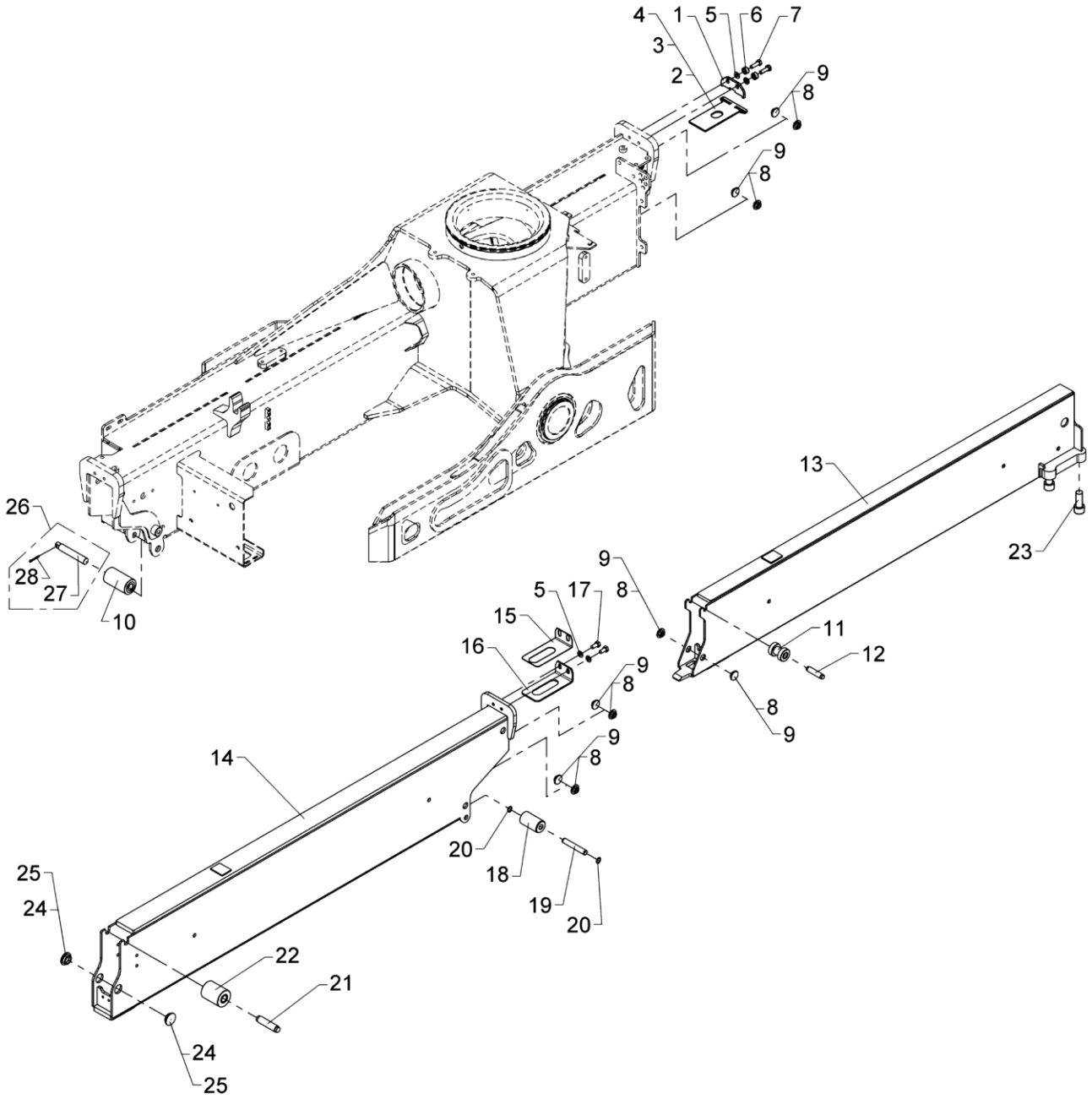

Stabilizer beam, type DV - 6450

Created 17-11-2008
Modified 28-06-2018

Pos	Qty.	Part no.	Description	Remarks
		6347130	Stabilizer beam, type DV	
		6342030	No detection, legs down	
1	1	6353091	Bracket	
2	1	6353092	Spacer, 4 mm	4 mm
3	1	6353093	Spacer, 5 mm	5 mm
4	1	6353099	Spacer, 6 mm	6 mm
5	4	31565	Washer, stainless	10 mm
6	2	6344747	Spacer	
7	2	30156	Set screw, stainless	M10 x 30
8	10	63429	Guide	ø30 x 3 mm
9	10	63430	Guide	ø30 x 2 mm
10	1	63553	Guide roller	
11	1	63426	Guide roller	
12	1	6306168	Pin for guide roller	
13	1	6344101	Stabilizer beam II (DV-6450)	
14	1	6346091	Stabilizer beam I	
15	1	6306721	Adjusting plate	
16	1	6306157	Spacer	
17	2	31517	Set screw, stainless	M10 x 20
18	1	63986	Guide roller	
19	1	6306166	Pin for guide roller	
20	2	33104	Circlip	15U
21	1	6306167	Pin for guide roller	
22	1	63554	Guide roller	
23	4	30496	Sockethead screw	MC20 x 50
24	2	63681	Slide block	3 mm
25	2	64424	Slide block	2 mm
26	1	6342030	No detection, legs down	
27	1	6344048	Pin for guide roller	
28	1	31615	Split pin	ø4 x 32

2820K-RCS

63 42 030
Internal ref. 63 46 830

An Oshkosh Corportation Company

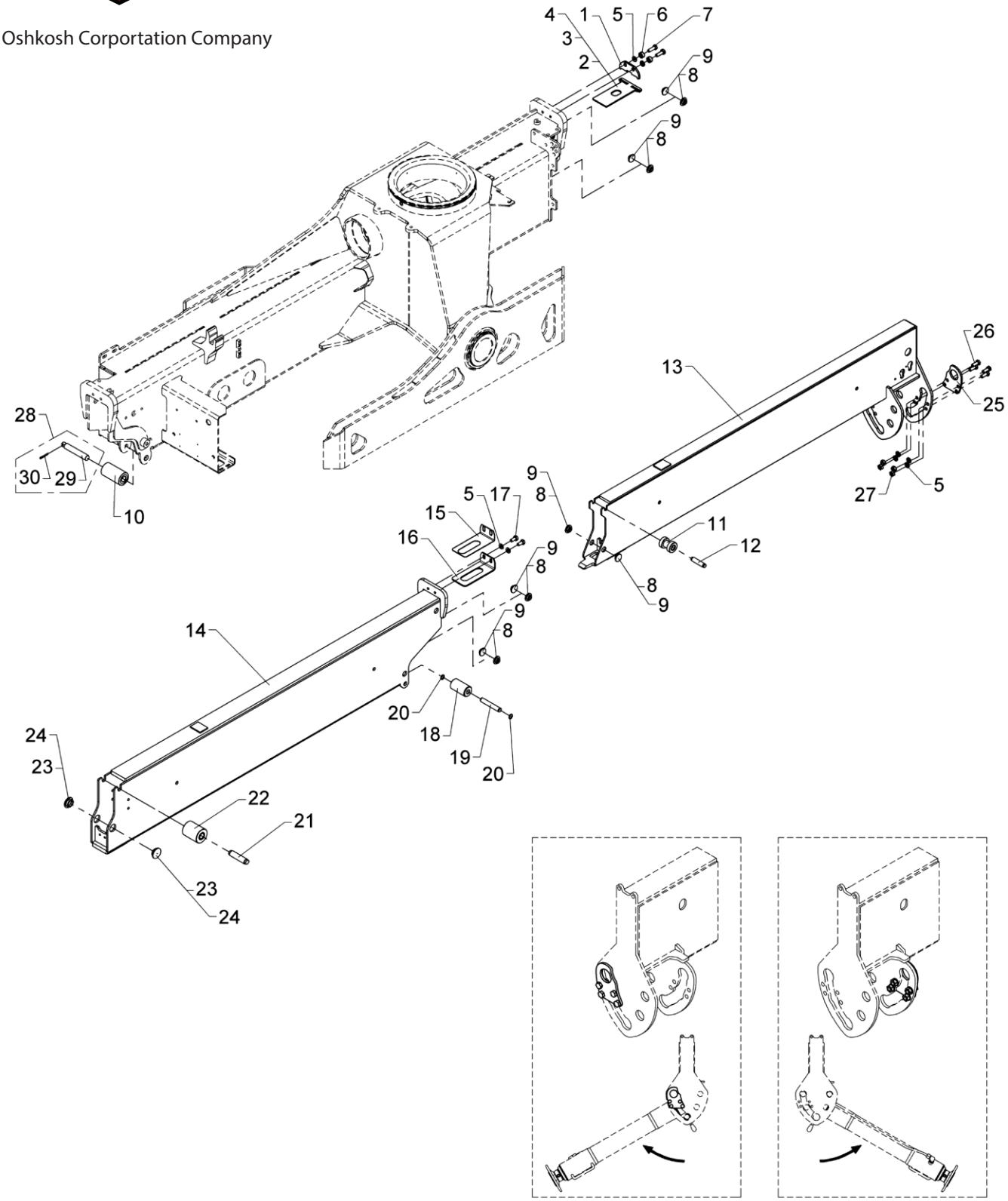

From loader 1440001
To loader

Stabilizer beam, type DR-60°, 6450

Created 10-07-2009
Modified 01-02-2016

Pos	Qty.	Part no.	Description	Remarks
		6346830	Stabilizer beam, type DR-60°	
		6342030	No detection, legs down	
1	1	6353091	Bracket	
2	1	6353092	Spacer, 4 mm	4 mm
3	1	6353093	Spacer, 5 mm	5 mm
4	1	6353099	Spacer, 6 mm	6 mm
5	8	31565	Washer, stainless	10 mm
6	2	6344747	Spacer	
7	2	30156	Set screw, stainless	M10 x 30
8	10	63429	Guide	ø30 x 3 mm
9	10	63430	Guide	ø30 x 2 mm
10	1	63553	Guide roller	
11	1	63426	Guide roller	
12	1	6306168	Pin for guide roller	
13	1	6344851	Stabilizer beam, DR,reversible	
14	1	6346091	Stabilizer beam I	
15	1	6306721	Adjusting plate	
16	1	6306157	Spacer	
17	2	31517	Set screw, stainless	M10 x 20
18	1	63986	Guide roller	
19	1	6306166	Pin for guide roller	
20	2	33104	Circlip	15U
21	1	6306167	Pin for guide roller	
22	1	63554	Guide roller	
23	2	63681	Slide block	3 mm
24	2	64424	Slide block	2 mm
25	1	6342855	Plate	
26	4	30155	Set screw	M10 x 25
27	4	31551	Nut, stainless	M10
28	1	6342030	No detection, legs down	
29	1	6344048	Pin for guide roller	
30	1	31615	Split pin	ø4 x 32

2820K-RCS

63 42 030
Internal ref. 63 47 150

An Oshkosh Corportation Company

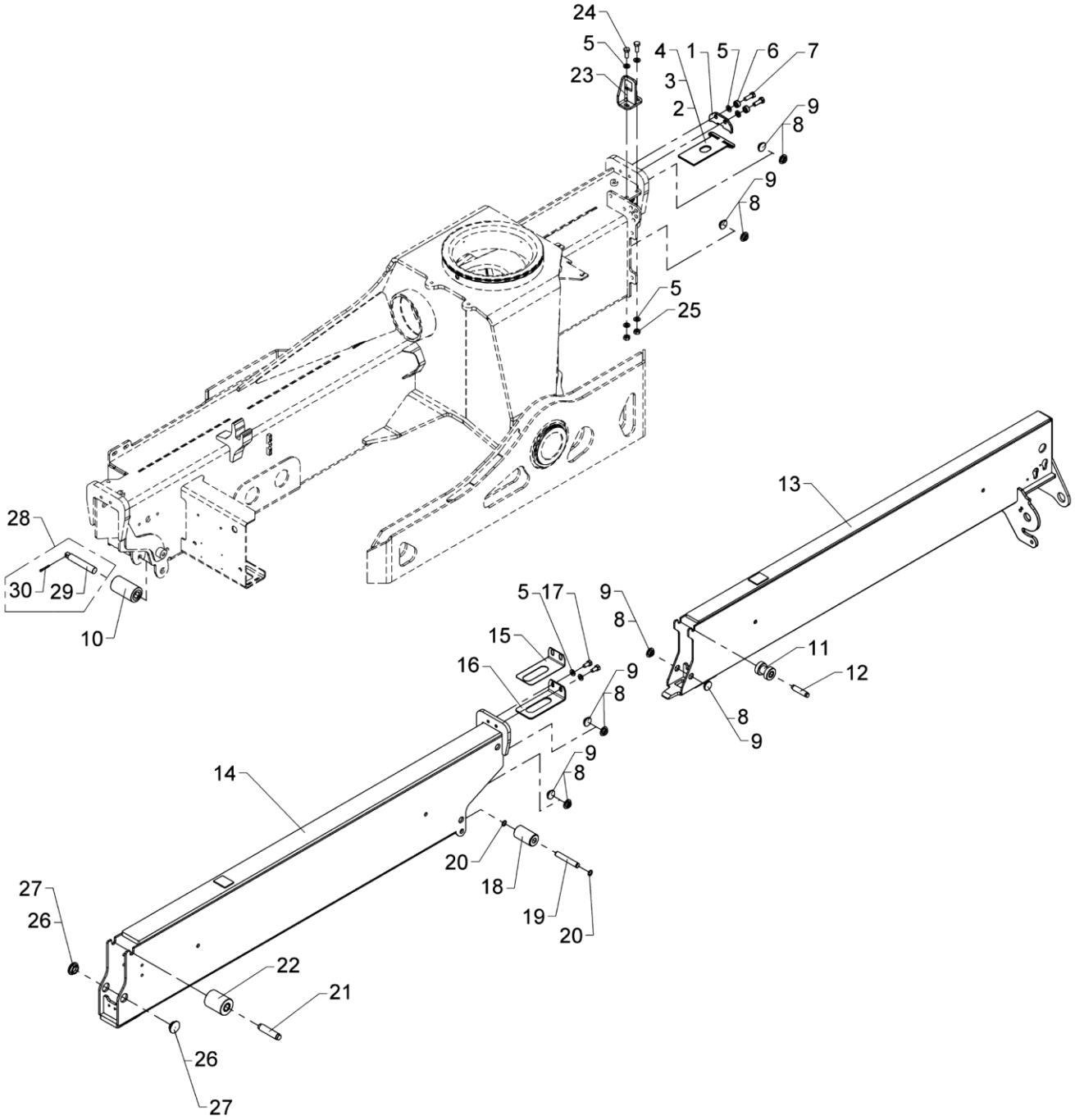

From loader 1440001
To loader

Stabilizer beam, type DH - 6450

Created 17-11-2008
Modified 01-02-2016

Pos	Qty.	Part no.	Description	Remarks
		6347150	Stabilizer beam, type DH	
		6342030	No detection, legs down	
1	1	6353091	Bracket	
2	1	6353092	Spacer, 4 mm	4 mm
3	1	6353093	Spacer, 5 mm	5 mm
4	1	6353099	Spacer, 6 mm	6 mm
5	8	31565	Washer, stainless	10 mm
6	2	6344747	Spacer	
7	2	30156	Set screw, stainless	M10 x 30
8	10	63429	Guide	ø30 x 3 mm
9	10	63430	Guide	ø30 x 2 mm
10	1	63553	Guide roller	
11	1	63426	Guide roller	
12	1	6306168	Pin for guide roller	
13	1	6344115	Stabilizer beam II (DH)	
14	1	6346091	Stabilizer beam I	
15	1	6306721	Adjusting plate	
16	1	6306157	Spacer	
17	2	31517	Set screw, stainless	M10 x 20
18	1	63986	Guide roller	
19	1	6306166	Pin for guide roller	
20	2	33104	Circlip	15U
21	1	6306167	Pin for guide roller	
22	1	63554	Guide roller	
23	1	6340817	Bracket	
24	2	30155	Set screw	M10 x 25
25	2	30858	Nut	M10
26	2	63681	Slide block	3 mm
27	2	64424	Slide block	2 mm
28	1	6342030	No detection, legs down	
29	1	6344048	Pin for guide roller	
30	1	31615	Split pin	ø4 x 32

2820K-RCS

Internal ref. 63 41 810

An Oshkosh Corportation Company

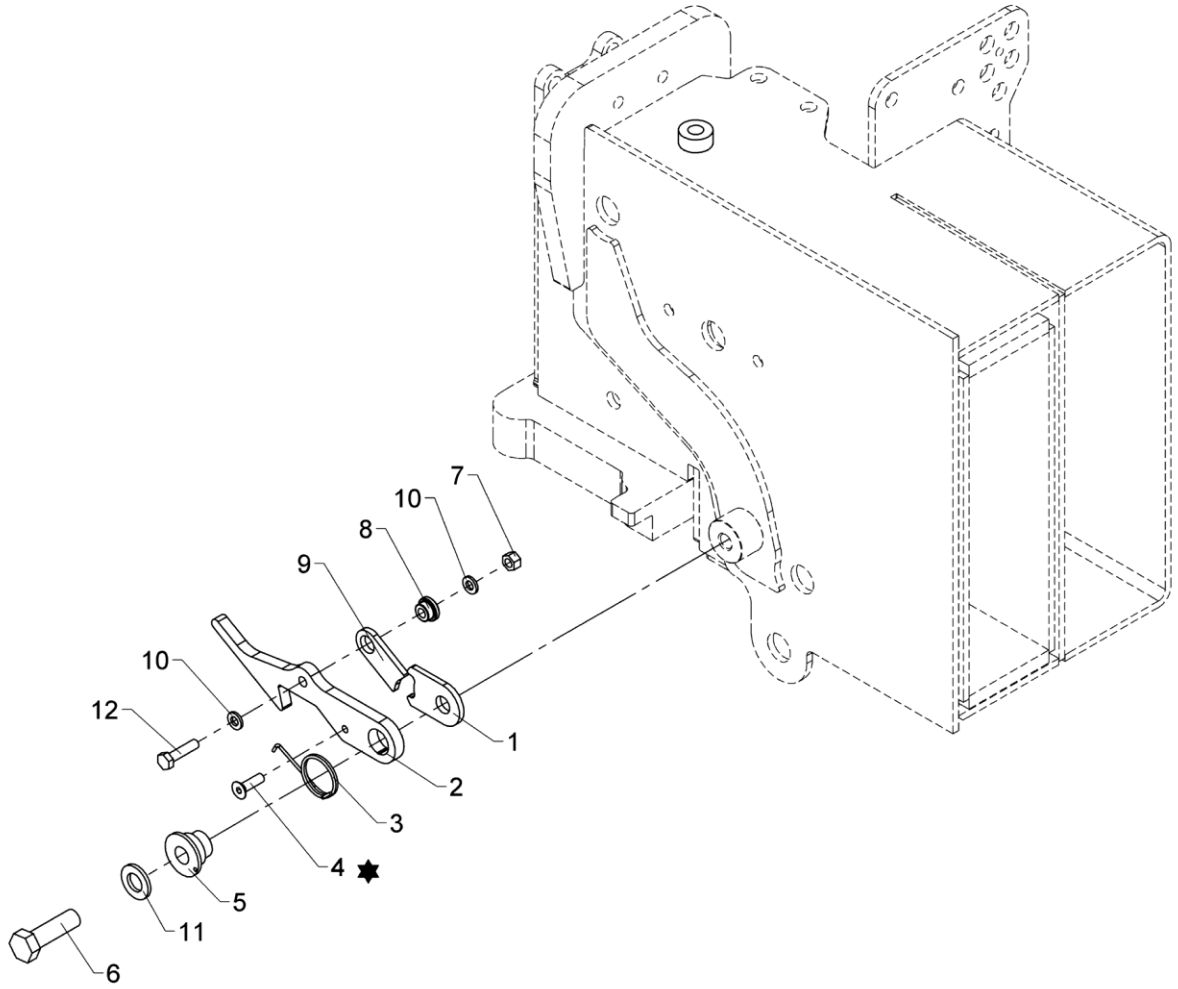

✸ Loctite 243

565 02 150

From loader 1440001
To loader

Stabilizer safety lock

Created 11-11-2008
Modified 08-05-2017

Pos	Qty.	Part no.	Description	Remarks
1	1	6236044	Plate	
2	1	6245244	Hook	
3	1	33476	Spring	6247194
4	1	30579	Countersunk screw	MK6 x 20
5	1	6245264	Bushing	
6	1	30179	Set screw	M12 x 40
7	1	30884	Lock nut, stainless	M6
8	1	63440	Washer	
9	1	6236054	Click	
10	2	32302	Face washer, stainless	6 mm
11	1	32338	Washer	12 mm
12	1	30114	Set screw, stainless	M6 x 25

2820K-RCS

Internal ref. 63 40 520

An Oshkosh Corportation Company

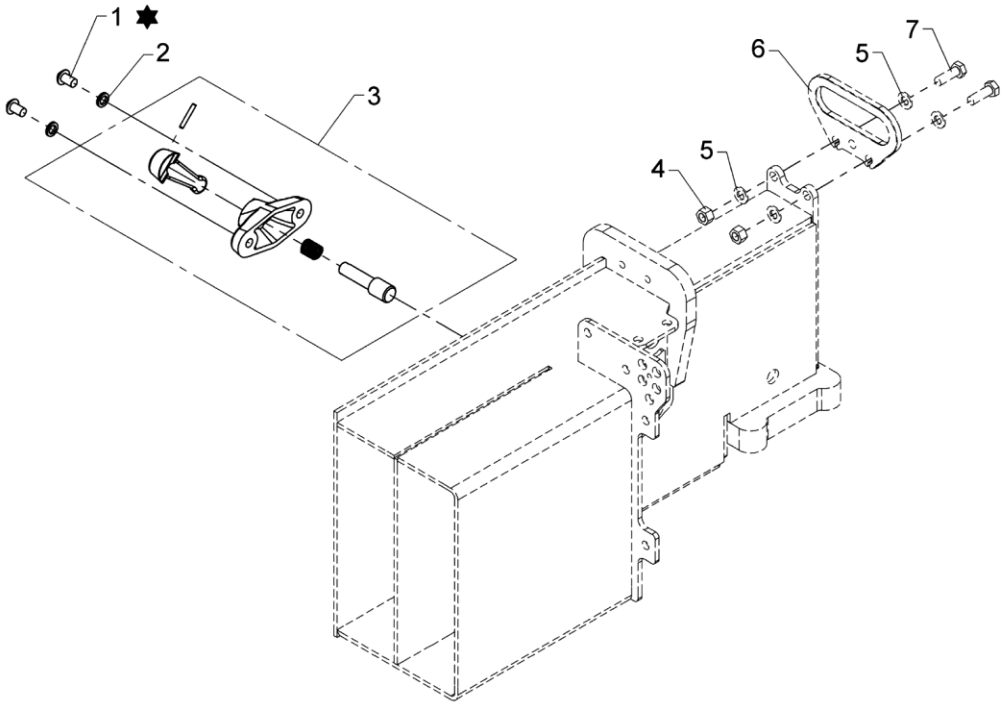

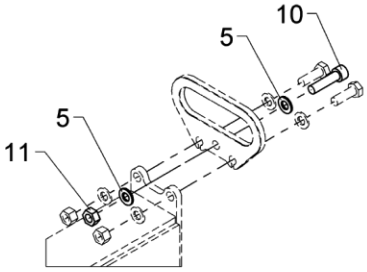

900K til 1230K

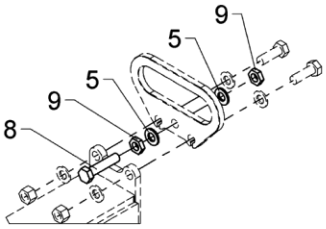

Kun til A = 4600

✸ Loctite 243

Stabilizer lock and lever

Pos	Qty.	Part no.	Description	Remarks
		6340520	Stabilizer lock + handle	
1	2	31081	Screw	M10 x 16
2	2	30933	Nordlock washer	
3	1	63451	Stabilizer lock	
4	2	30888	Lock nut	
5	8	31565	Washer, stainless	10 mm
6	1	6306169	Lever, stabilizer beam	
7	2	30156	Set screw, stainless	M10 x 30
8	1	30377	Set screw	M10 x 45
9	2	32111	Counter nut	M10
10	1	30456	Screw	MC10 x 40
11	1	30858	Nut	M10

2820K-RCS

Internal ref. 63 43 880

An Oshkosh Corportation Company

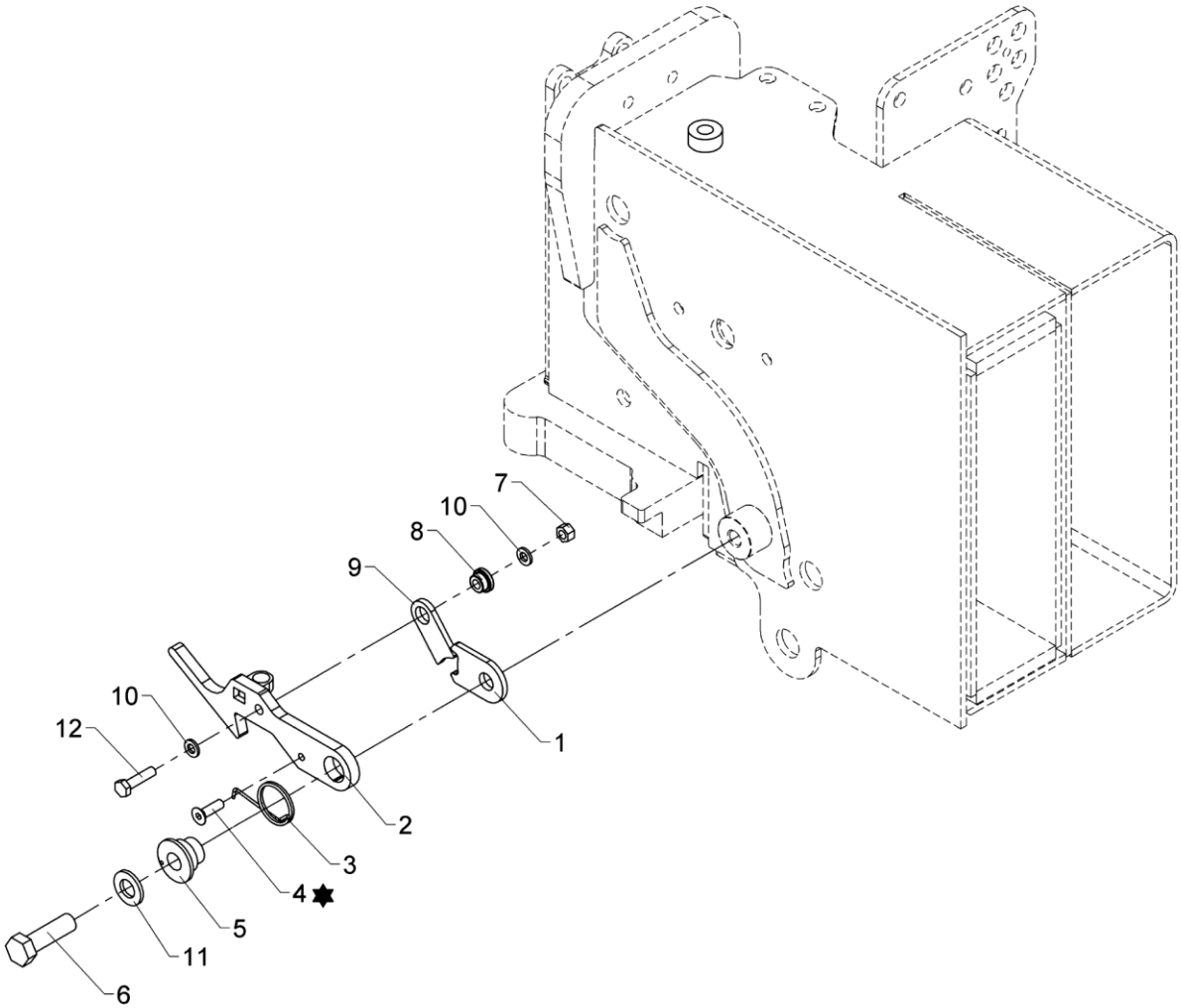

✸ Loctite 243

Safety lock (CE, manual extension)

565 02 165

From loader 1440001
To loader

Created 03-10-2011
Modified 06-02-2017

Pos	Qty.	Part no.	Description	Remarks
1	1	6236044	Plate	
2	1	6341091	Latch	
3	1	33476	Spring	6247194
4	1	30579	Countersunk screw	MK6 x 20
5	1	6245264	Bushing	
6	1	30179	Set screw	M12 x 40
7	1	30884	Lock nut, stainless	M6
8	1	63440	Washer	
9	1	6236054	Click	
10	2	32302	Face washer, stainless	6 mm
11	1	32338	Washer	12 mm
12	1	30114	Set screw, stainless	M6 x 25

2820K-RCS

Internal ref. 63 45 800

An Oshkosh Corportation Company

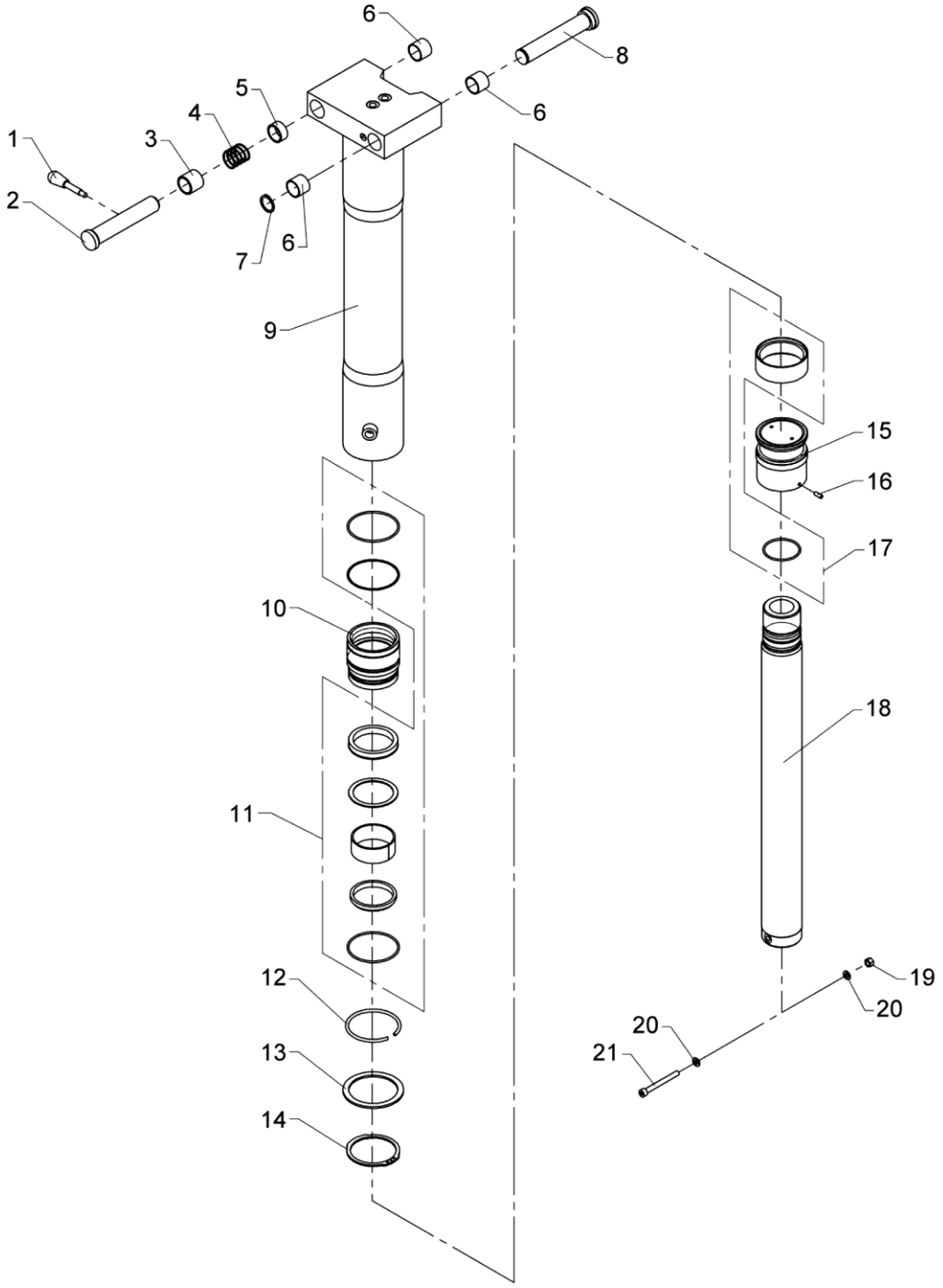

565 02 220

From loader 1440001
To loader

Stabilizer cylinder, C90-520, type R-60°

Created 03-04-2013
Modified 28-01-2016

Pos	Qty.	Part no.	Description	Remarks
1	1	64352	Lever with knob	
2	1	6344812	Pin	
3	1	6340824	Bushing	
4	1	33490	Compression spring	
5	1	6340811	Distance ring	
6	3	23417	Composite bearing	ø28/32 x 25
7	1	33122	Circlip	28U
8	1	6344814	Pin	
9	1	6344821	Cylinder tube	
10	1	6306501	Guide	
11	1	6893840	Seal kit, guide	
12	1	33488	Lock ring, black	
13	1	33236	Back ring	SS 85 x 105 x 3,5
14	1	33145	Circlip	80U
15	1	6306502	Piston	
16	1	30562	Pointed screw, stainless	MPS6 x 16
17	1	6893850	Seal kit, piston + rod	
18	1	6306503	Piston rod	
19	1	30886	Lock nut, stainless	M8
20	2	31147	Face washer, 8 mm	
21	1	30965	Screw	MC8 x 80

2820K-RCS

Internal ref. 63 45 170

An Oshkosh Corportation Company

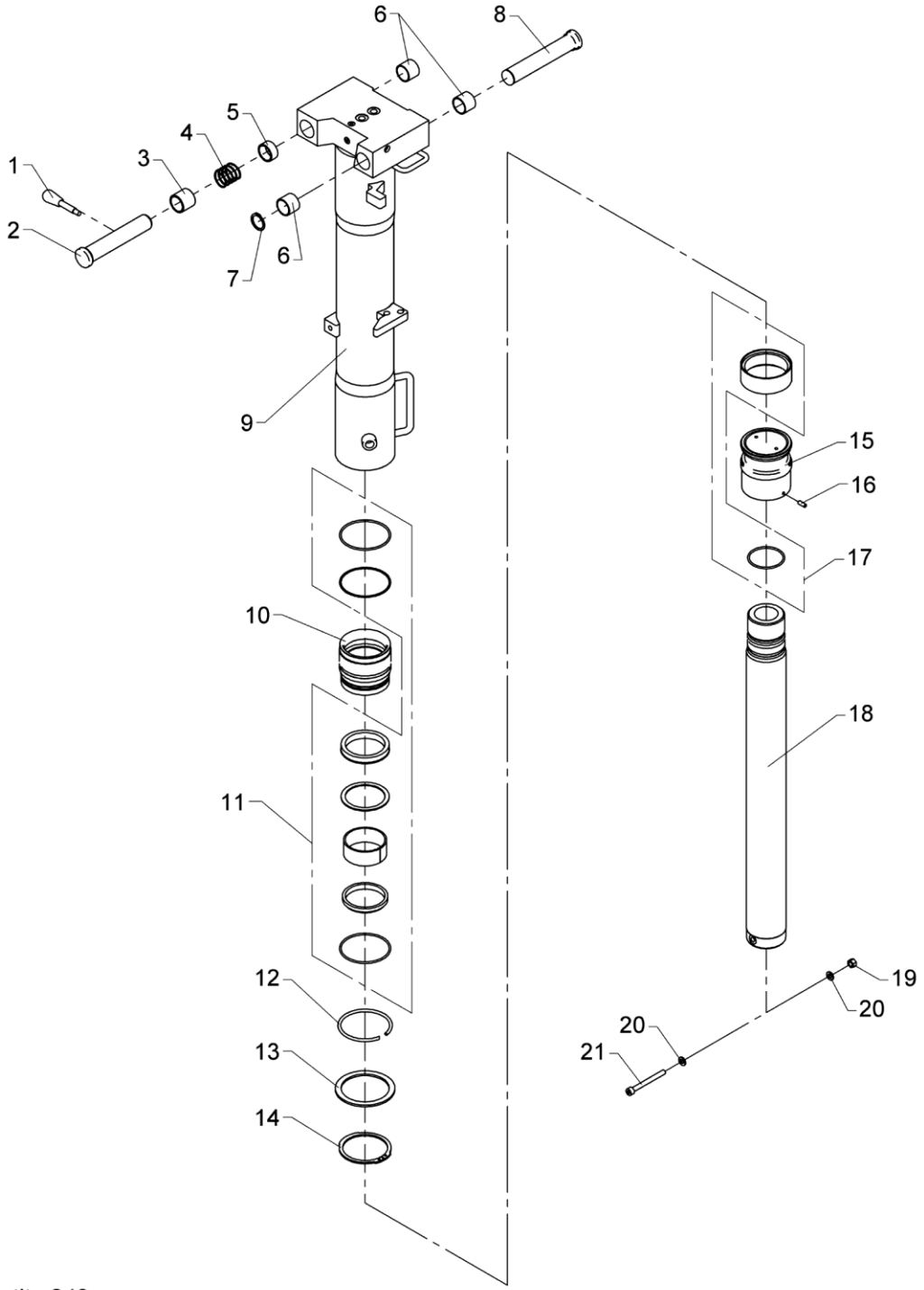

✱ Loctite 243

565 02 222

From loader 1440001
To loader

Stabilizer cylinder, C90-520, type R-180°

Created 03-04-2013
Modified 28-01-2016

Pos	Qty.	Part no.	Description	Remarks
1	1	64352	Lever with knob	
2	1	6344812	Pin	
3	1	6340824	Bushing	
4	1	33490	Compression spring	
5	1	6340811	Distance ring	
6	3	23417	Composite bearing	ø28/32 x 25
7	1	33122	Circlip	28U
8	1	6344813	Pin	
9	1	6344828	Cylinder tube R180	
10	1	6306501	Guide	
11	1	6893840	Seal kit, guide	
12	1	33488	Lock ring, black	
13	1	33236	Back ring	SS 85 x 105 x 3,5
14	1	33145	Circlip	80U
15	1	6306502	Piston	
16	1	30562	Pointed screw, stainless	MPS6 x 16
17	1	6893850	Seal kit, piston + rod	
18	1	6306503	Piston rod	
19	1	30886	Lock nut, stainless	M8
20	2	31147	Face washer, 8 mm	
21	1	30965	Screw	MC8 x 80

2820K-RCS

Internal ref. 63 45 810

An Oshkosh Corportation Company

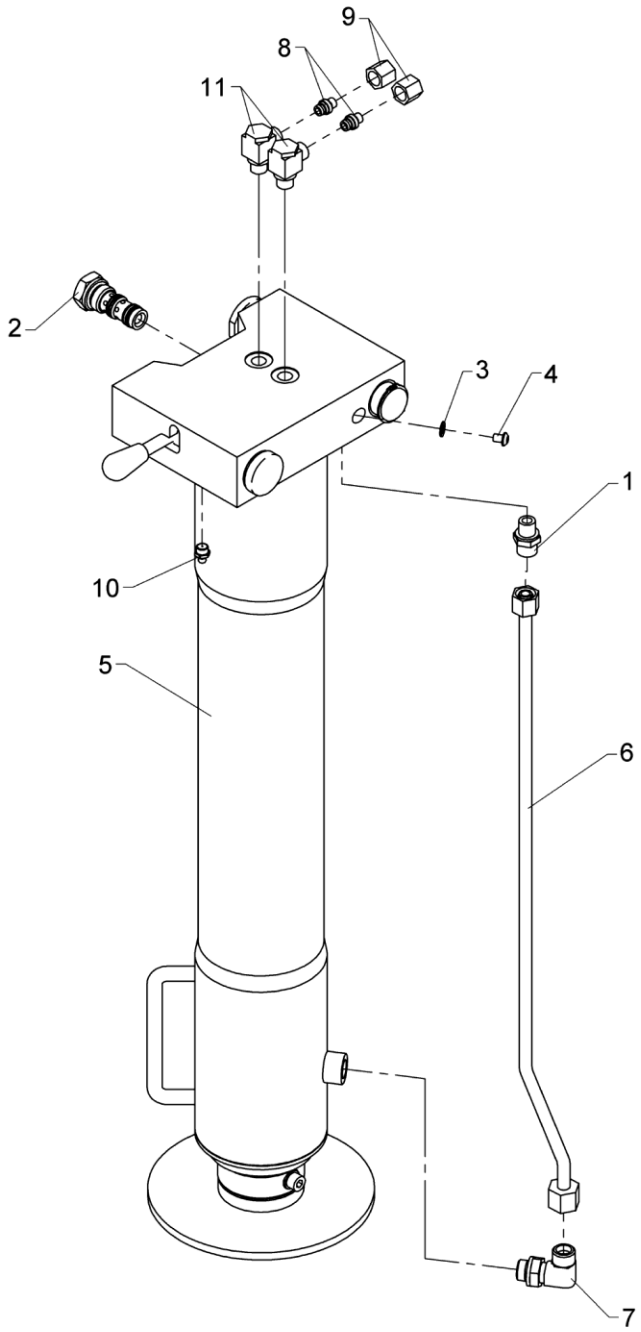

565 02 230

From loader 1440001
To loader

Stabilizer cylinder with check valve, type R-60°

Created 30-06-2009
Modified 02-05-2014

Pos	Qty.	Part no.	Description	Remarks
1	1	25121	Connection	P-GEV 10 LR-WD
2	1	58496	Cartridge	
3	1	21109	Seal washer	ø7,1 x 12 x 1
4	1	31778	Screw, stainless	M6 x 8
5	1	6345800	Stabilizer cylinder C90-520, R	
6	1	6340823	Pipe, R	
7	1	26899	Elbow connection	12 mm - 3/8"
8	2	26166	Blanking plug	VSD 8 L
9	2	25181	Coupling nut	M 8 L
10	1	31318	Lubricator	1/8" RG
11	2	25113	Banjo connection	RSWV 8 LR

2820K-RCS

Internal ref. 63 44 930

An Oshkosh Corporation Company

Patentanmeldt.
Patent pending.
Patentangemeldet.
La demande de brêvet a été déposée.
Solicitud de patente.

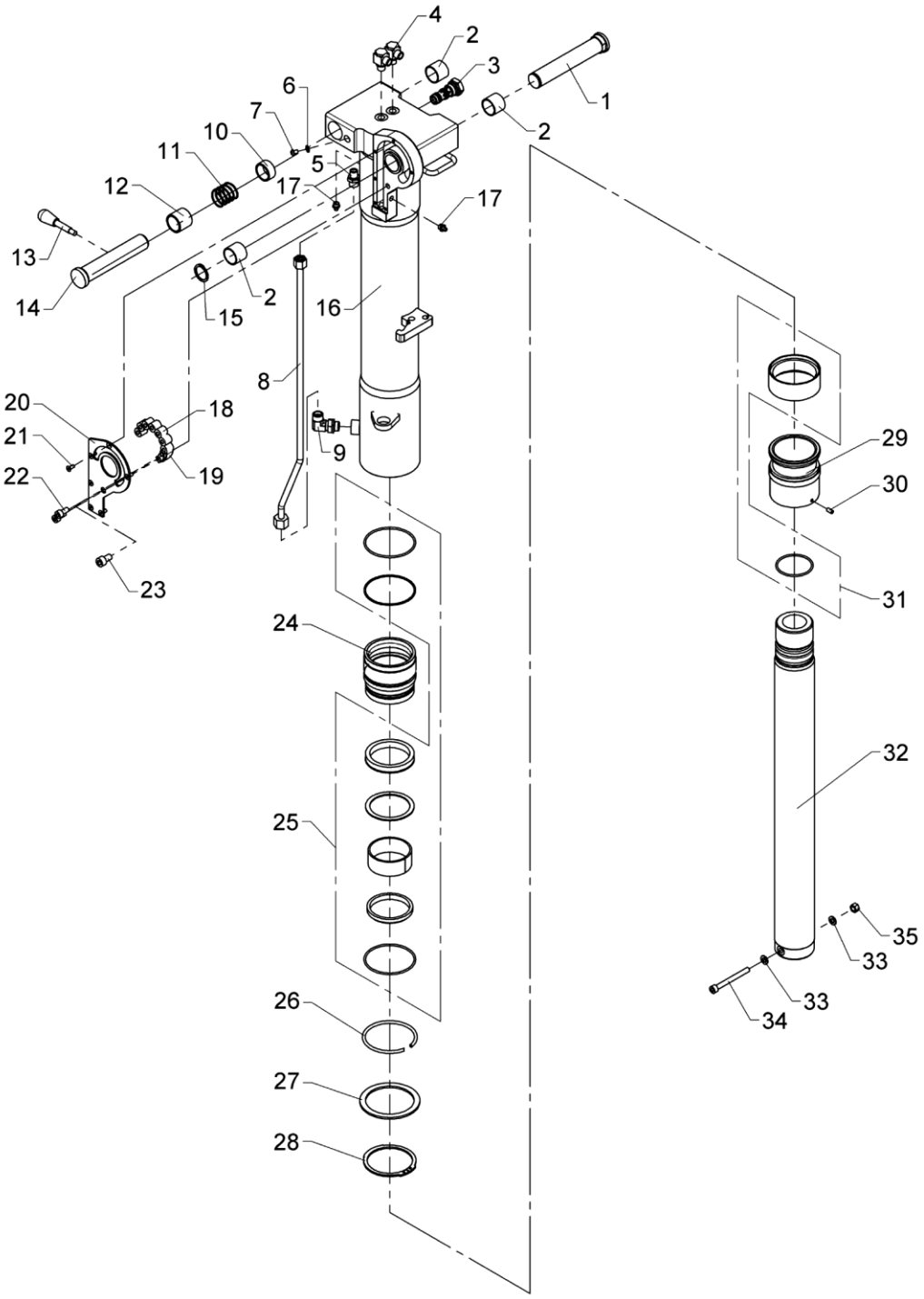

Stabilizer cylinder, C90-520, type HR

Pos	Qty.	Part no.	Description	Remarks
1	1	6344813	Pin	
2	3	23417	Composite bearing	ø28/32 x 25
3	1	58496	Cartridge	
4	2	25113	Banjo connection	RSWV 8 LR
5	1	25121	Connection	P-GEV 10 LR-WD
6	1	21109	Seal washer	ø7,1 x 12 x 1
7	1	31778	Screw, stainless	M6 x 8
8	1	6344825	Pipe	
9	1	26899	Elbow connection	12 mm - 3/8"
10	1	6340811	Distance ring	
11	1	33490	Compression spring	
12	1	6340824	Bushing	
13	1	64352	Lever with knob	
14	1	6344812	Pin	
15	1	33122	Circlip	28U
16	1	6344806	Cylinder pipe, HR	
17	2	31318	Lubricator	1/8" RG
18	7	23120	Cylindrical roller	RC 16 x 16 CD
19	1	6340808	Stop	
20	1	6340807	Cover	
21	6	32405	Sockethead screw	MK5 x 12
22	2	30449	Screw	MC8 x 16
23	1	30964	Screw	MC10 x 16
24	1	6306501	Guide	
25	1	6893840	Seal kit, guide	
26	1	33488	Lock ring, black	
27	1	33236	Back ring	SS 85 x 105 x 3,5
28	1	33145	Circlip	80U
29	1	6306502	Piston	
30	1	32256	Pointed screw	MSP6 x 12
31	1	6893850	Seal kit, piston + rod	
32	1	6306503	Piston rod	
33	2	31147	Face washer, 8 mm	
34	1	30965	Screw	MC8 x 80
35	1	30886	Lock nut, stainless	M8

2820K-RCS

Internal ref. 63 47 920

An Oshkosh Corporation Company

Patentanmeldt.
Patent pending.
Patentangemeldet.
La demande de brêvet a été déposée.
Solicitud de patente.

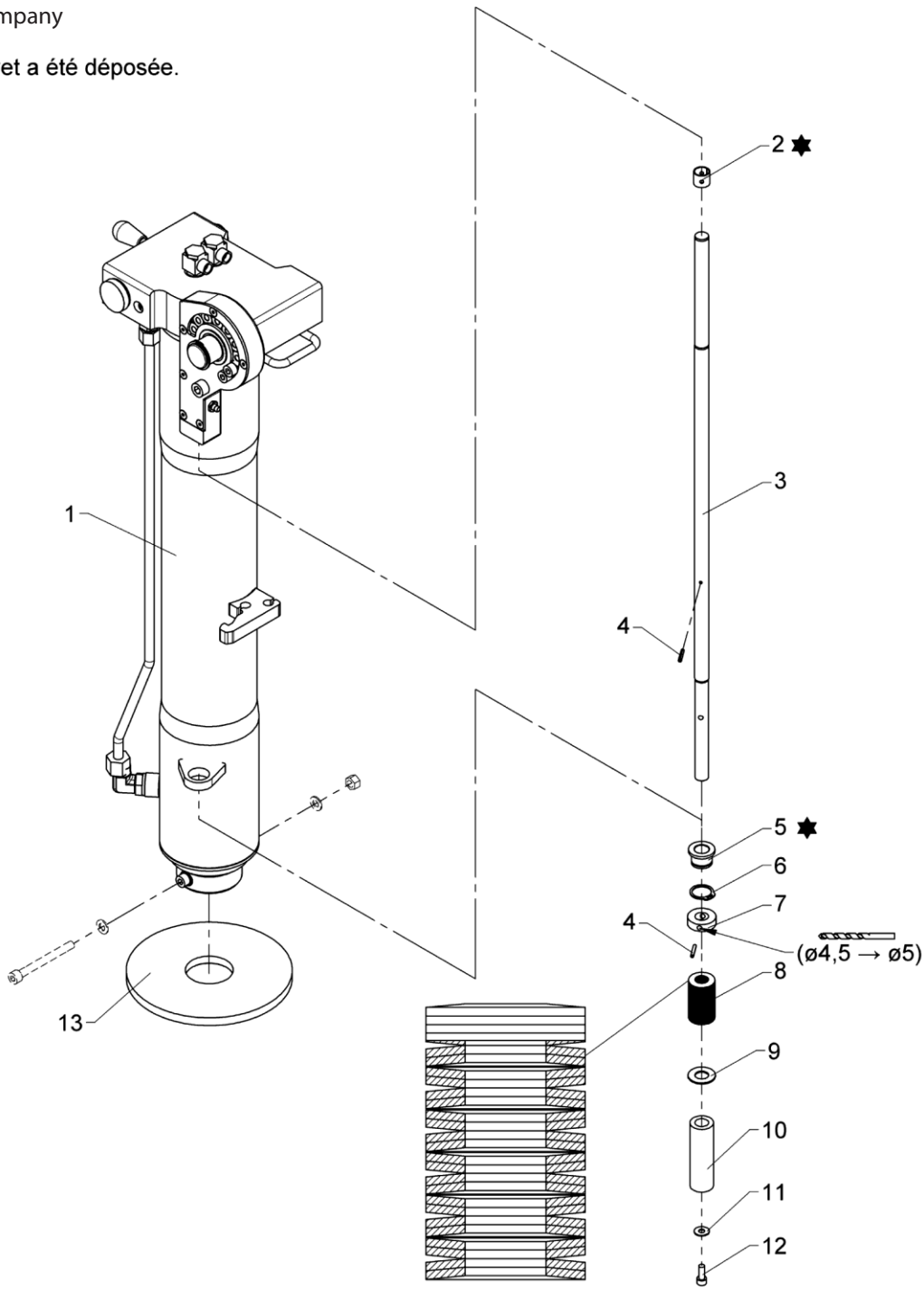

✸ Loctite 601

From loader 1440001
To loader

Stabilizer cylinder incl. swing-up mechanism, type HR

Created 04-04-2013
Modified 28-01-2016

Pos	Qty.	Part no.	Description	Remarks
1	1	6344930	Stabilizer cylinder, type HR	
2	1	23948	Bushing	PM 1515 DX
3	1	6340539	Compression rod, std.	
4	2	31202	Retaining pin	ø3 x 20
5	1	63597	Bushing	
6	1	33110	Circlip	22U
7	1	6340816	Washer	
8	26	33489	Disc spring	
9	1	31111	Washer	14 mm
10	1	6340815	Pipe	
11	1	32306	Washer	6 mm
12	1	30424	Screw	MC6 x 16
13	1	6346538	Compression plate, HR	

2820K-RCS

63 43 190
Internal ref. 63 45 180

An Oshkosh Corportation Company

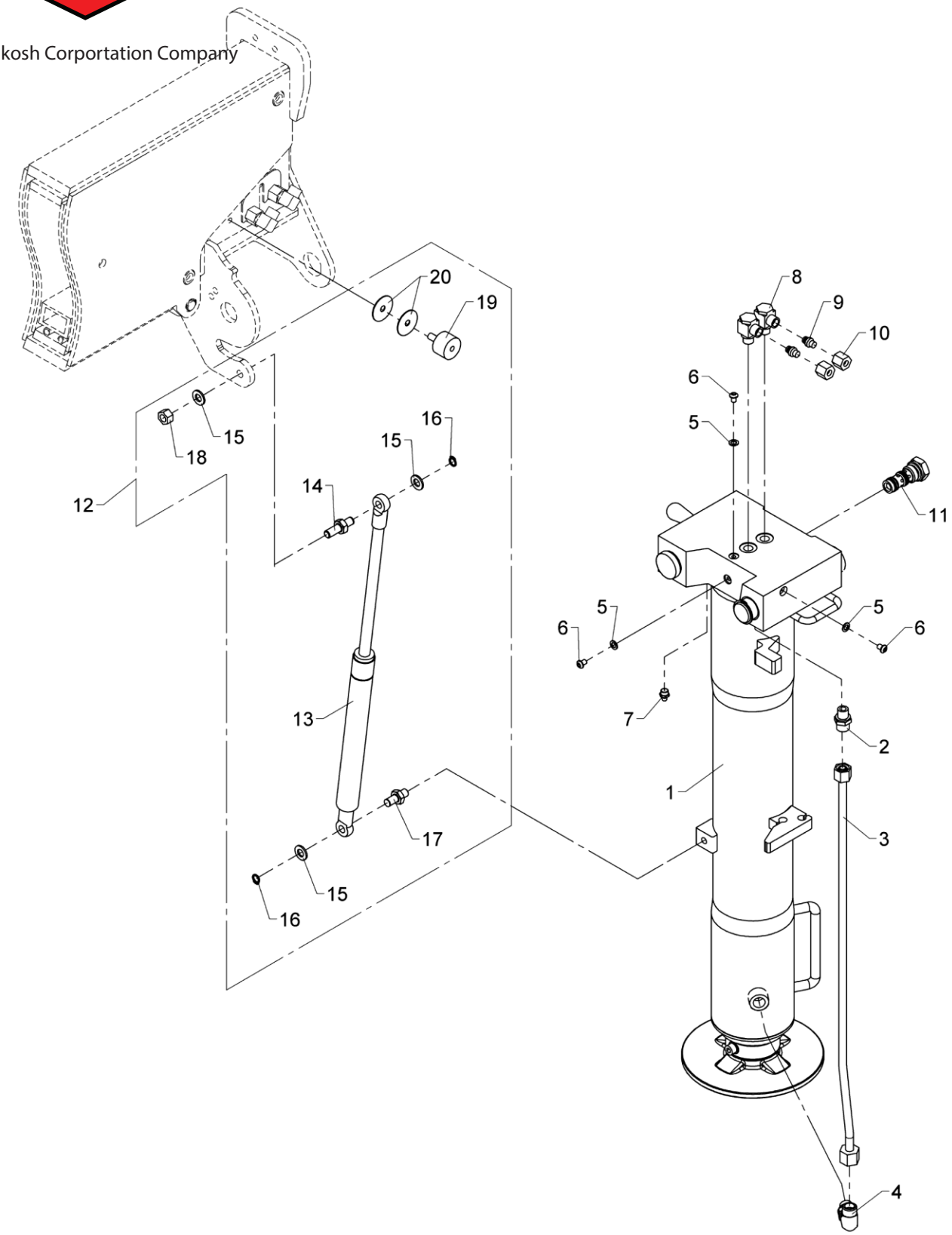

From loader 1440001
To loader

Stabilizer cylinder with check valve, C90-520, Type R-180°

Created 27-10-2011
Modified 05-03-2015

Pos	Qty.	Part no.	Description	Remarks
		6345180	Stab. cyl. w. check valve C90	
		6343190	Gas spring with fittings	
1	1	6345170	Stab. cyl., C90-520, R	
2	1	25121	Connection	P-GEV 10 LR-WD
3	1	6340823	Pipe, R	
4	1	26899	Elbow connection	10 mm - 3/8"
5	3	21109	Seal washer	ø7,1 x 12 x 1
6	3	31778	Screw, stainless	M6 x 8
7	1	31318	Lubricator	1/8" RG
8	2	25113	Banjo connection	RSWV 8 LR
9	2	26166	Blanking plug	VSD 8 L
10	2	25181	Coupling nut	M 8 L
11	1	58496	Cartridge	
12	1	6343190	Gas spring with fittings	
13	1	48487	Gas spring	
14	1	6344067	Screw for gas spring, long	
15	3	31565	Washer, stainless	10 mm
16	2	33101	Circlip	10U
17	1	6344068	Screw for gas spring, short	
18	1	31564	Lock nut, stainless	M10
19	1	44263	Torsion balancer Type 2	
20	2	31150	Washer	8 mm

2820K-RCS

63 47 520
Internal ref. 63 47 510

An Oshkosh Corportation Company

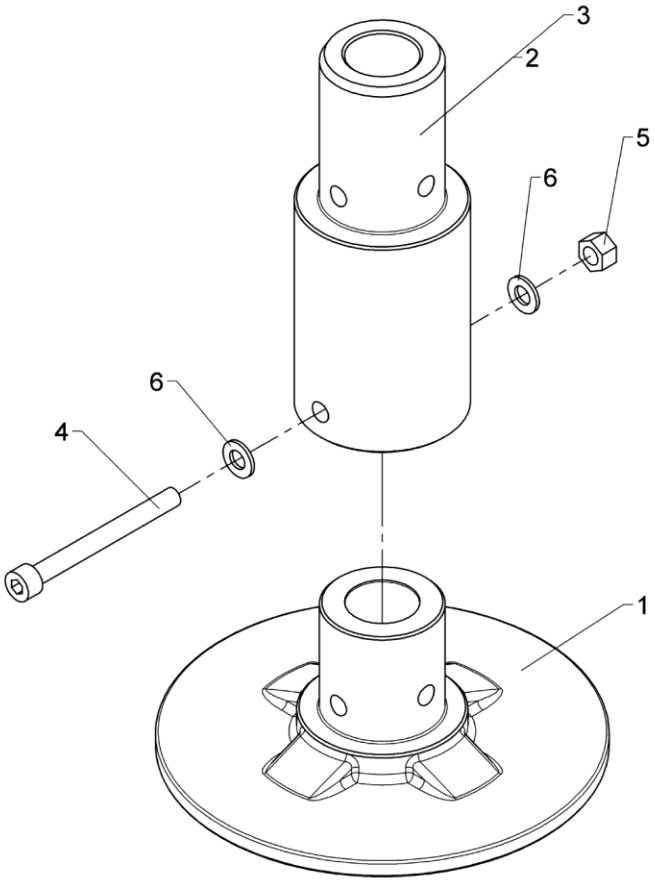

565 02 260

From loader 1440001
To loader

Extension piece, cpl.

Created 04-04-2013
Modified 02-05-2014

Pos	Qty.	Part no.	Description	Remarks
1	1	6306506	Footplate, standard	
2	1	6346518	Extension piece 100 mm	
3	1	6346519	Extension piece 200 mm	
4	1	30965	Screw	MC8 x 80
5	1	30886	Lock nut, stainless	M8
6	2	31147	Face washer, 8 mm	

2820K-RCS

63 47 680
63 47 670
Internal ref. 63 47 660

An Oshkosh Corportation Company

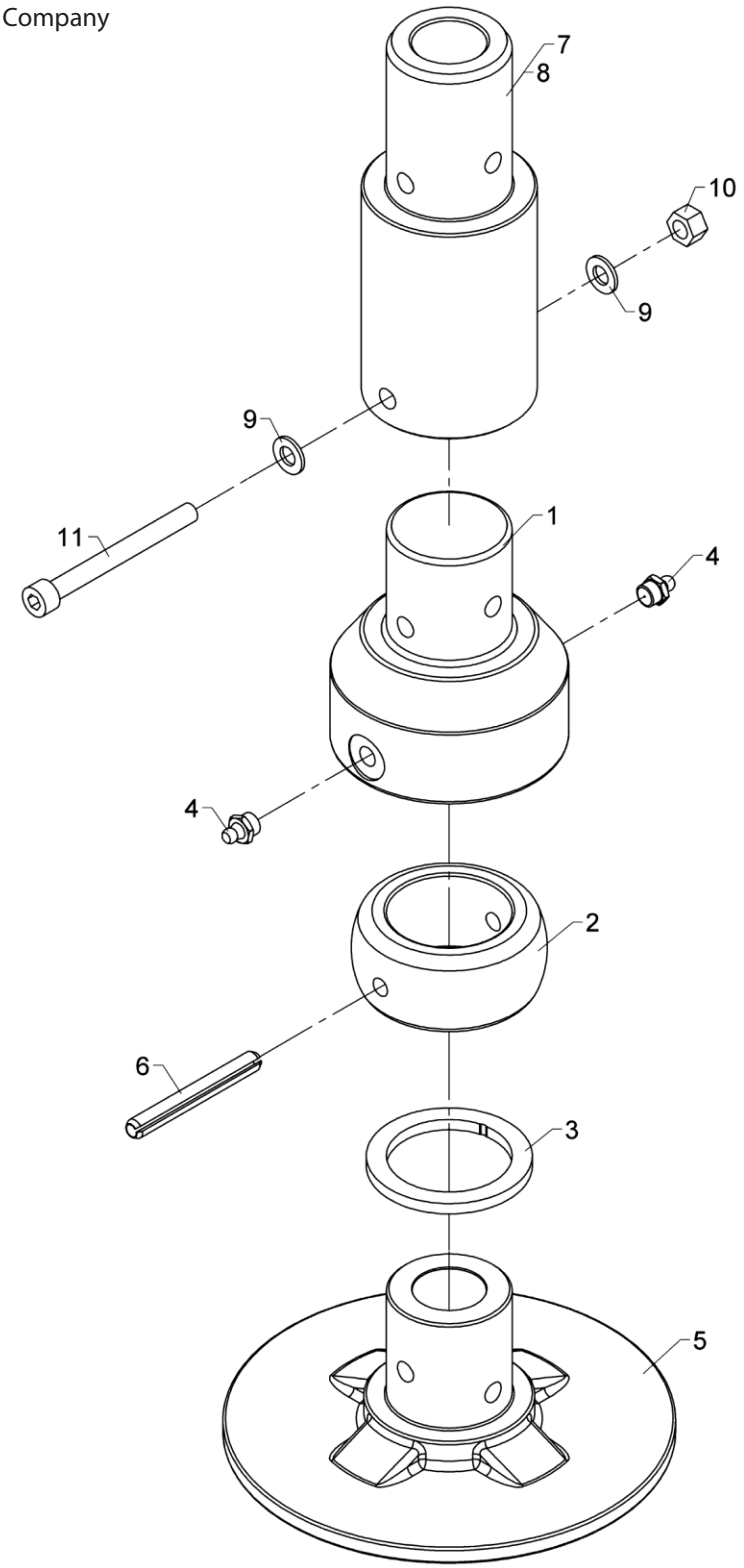

565 02 270

From loader 1440001
To loader

Foot plate with ball joint, cpl. (ø180)

Created 01-02-2016
Modified

Pos	Qty.	Part no.	Description	Remarks
		6347660	Footplate + ball joint std.cpl	Pos. 1, 2, 3, 4, 5, 6
		6347670		Pos. 1 - 6, 7 - 11
		6347680		Pos. 1 - 6, 8 - 11
1	1	6347531	Pin	
2	1	6347532	Ball joint	
3	1	6347533	Distance ring	
4	2	31318	Lubricator	1/8" RG
5	1	6306506	Footplate, standard	
6	1	31229	Retaining pin	ø8 x 70
7	1	6346518	Extension piece 100 mm	
8	1	6346519	Extension piece 200 mm	
9	2	31147	Face washer, 8 mm	
10	1	30886	Lock nut, stainless	M8
11	1	30965	Screw	MC8 x 80

2820K-RCS

63 45 860
Internal ref. 63 47 710

An Oshkosh Corportation Company

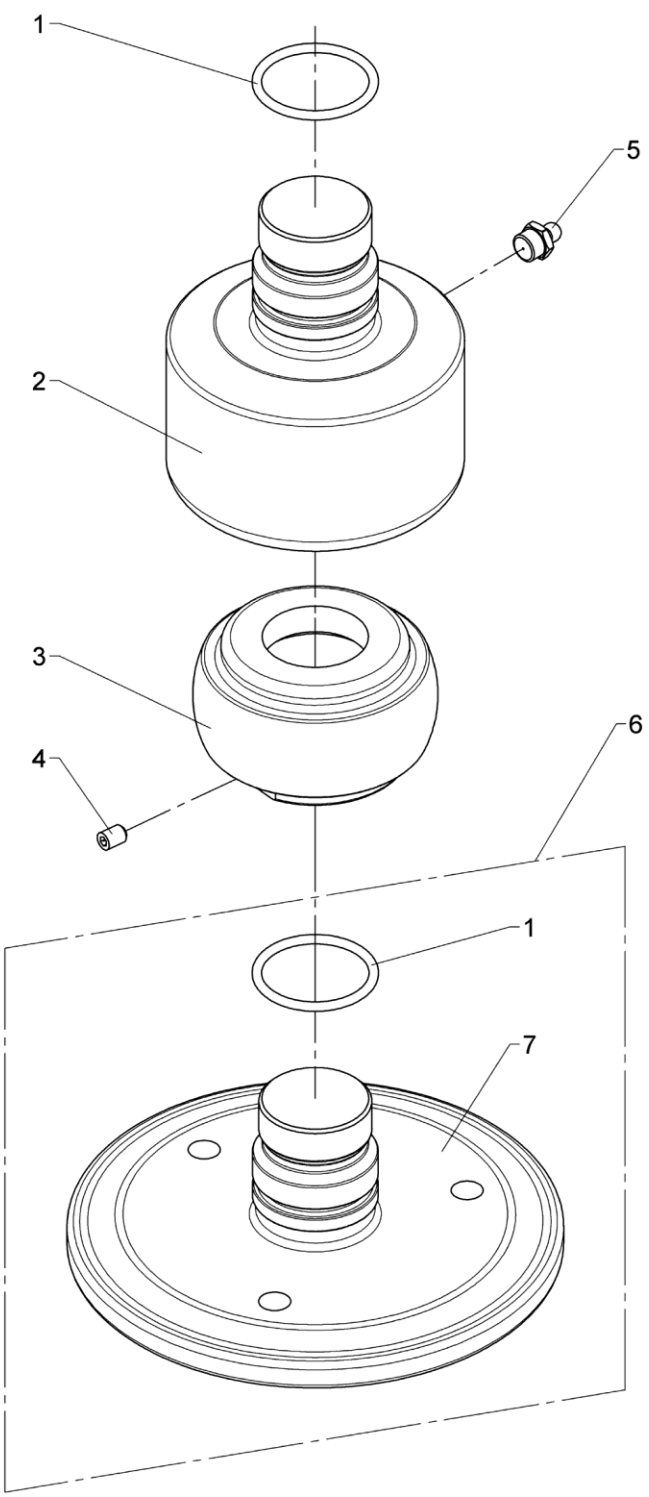

565 02 275

From loader 1440001
To loader

Footplate, std. and with ball joint

Created 25-10-2017
Modified

Pos	Qty.	Part no.	Description	Remarks
1	2	20177	O-ring	OR 34,2 x 3
2	1	6347535	Pin	
3	1	6347534	Ball joint	
4	1	30903	Screw	MSP6 x 8
5	1	31318	Lubricator	1/8" RG
6	1	6345860	Footplate, std. cpl.	
7	1	6345947	Footplate, std.	

2820K-RCS

Internal ref. 63 45 940

An Oshkosh Corportation Company

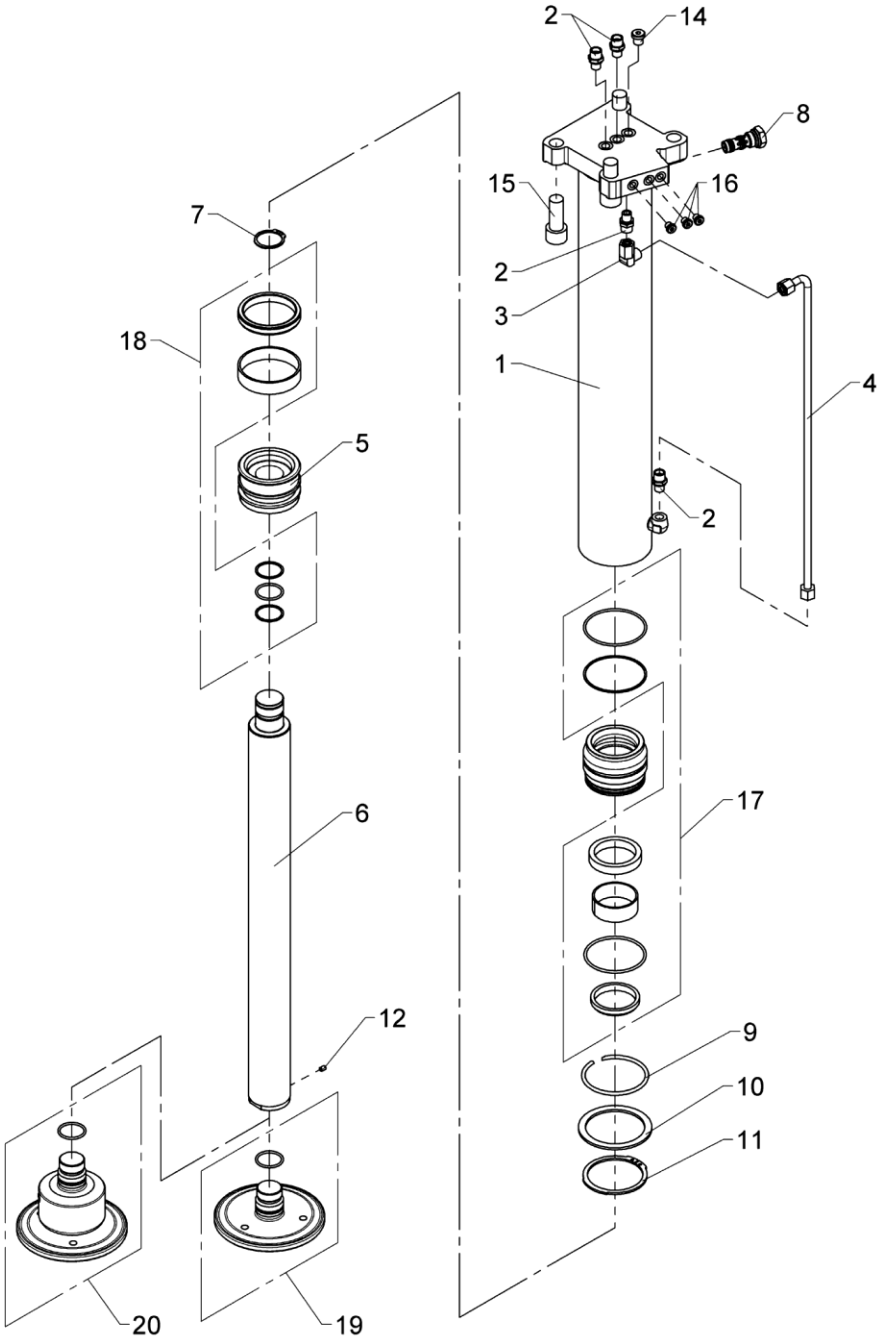

Stabilizer cylinder with check valve, C90-750, type V

Pos	Qty.	Part no.	Description	Remarks
		6345940	Stabilizer cyl.,C90-750,type V	
1	1	6345941	Cylinder tube	
2	4	25121	Connection	P-GEV 10 LR-WD
3	1	25120	Elbow connection	P-EWV 10 L-SV
4	1	6345951	Hydraulic pipe	
5	1	6345943	Piston	
6	1	6345944	Piston rod	
7	1	33121	Circlip	40U
8	1	58496	Cartridge	
9	1	33488	Lock ring, black	
10	1	33236	Back ring	SS 85 x 105 x 3,5
11	1	33145	Circlip	80U
12	1	30903	Screw	MSP6 x 8
13	1	6345952	Guide (ø90/60)	
14	1	25197	Plug	VS-R-1/4 WD
15	4	30496	Sockethead screw	MC20 x 50
16	3	25187	Plug	VS-R-1/8 WD
17	1	6894970	Seal kit f. guide (C90/60)	
18	1	6894980	Seal kit for piston (C90/60)	
19	1	6345860	Footplate, std. cpl.	
20	1	6347710	Footplate, ball joint, cpl.	

2820K-RCS

Internal ref. 63 45 950

An Oshkosh Corportation Company

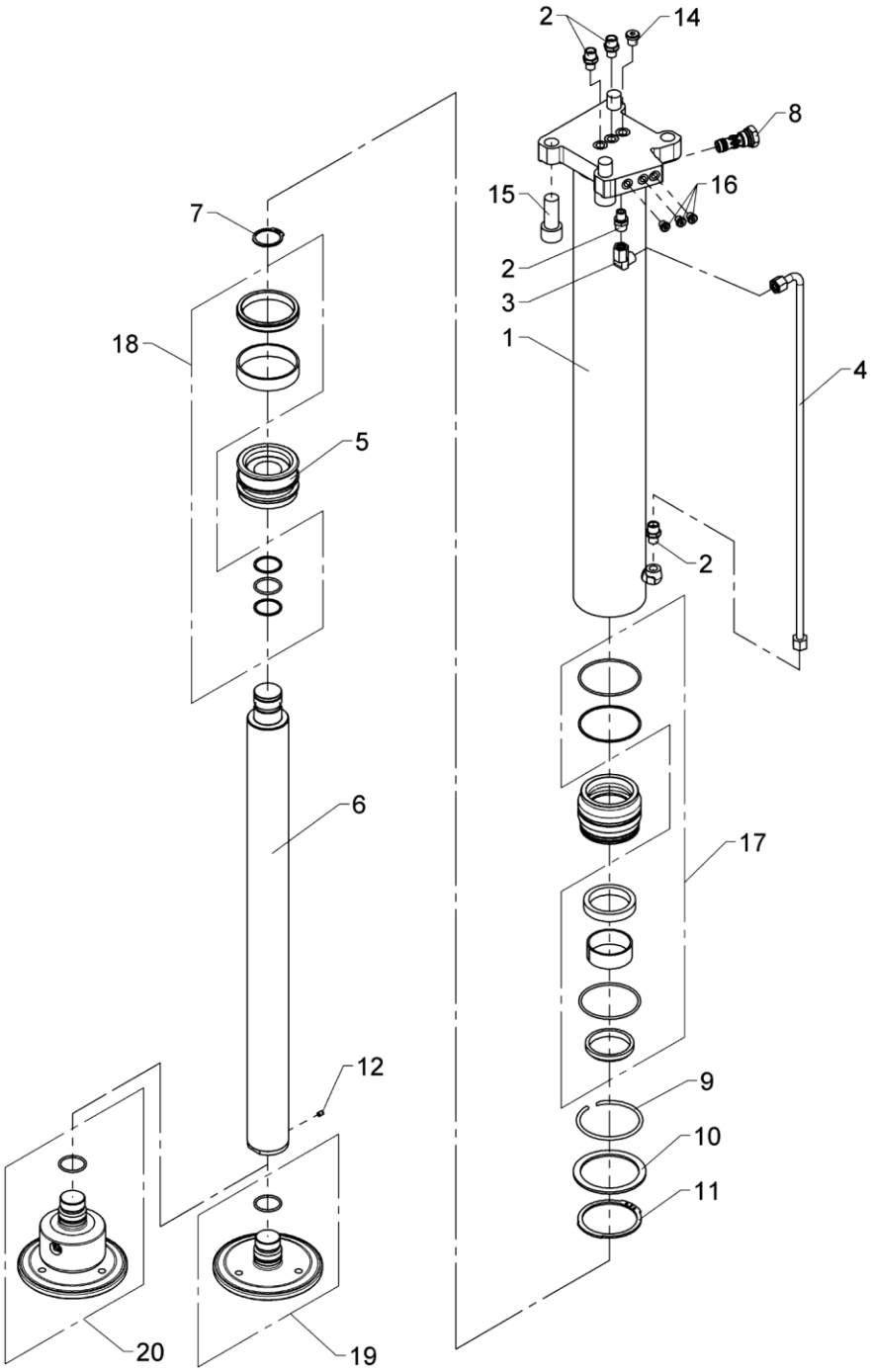

From loader 1440001
To loader
Created 10-11-2017
Modified

Stabilizer cylinder with check valve, C90-850, type V

Pos	Qty.	Part no.	Description	Remarks
		6345950		
1	1	6345953	Cylinder tube	
2	4	25121	Connection	P-GEV 10 LR-WD
3	1	25120	Elbow connection	P-EWV 10 L-SV
4	1	6345956	Hydraulic pipe	
5	1	6345943	Piston	
6	1	6345955	Piston rod	
7	1	33121	Circlip	40U
8	1	58496	Cartridge	
9	1	33488	Lock ring, black	
10	1	33236	Back ring	SS 85 x 105 x 3,5
11	1	33145	Circlip	80U
12	1	30903	Screw	MSP6 x 8
13	1	6345952	Guide (ø90/60)	
14	1	25197	Plug	VS-R-1/4 WD
15	4	30496	Sockethead screw	MC20 x 50
16	3	25187	Plug	VS-R-1/8 WD
17	1	6894970	Seal kit f. guide (C90/60)	
18	1	6894980	Seal kit for piston (C90/60)	
19	1	6345860	Footplate, std. cpl.	
20	1	6347710	Footplate, ball joint, cpl.	

2820K-RCS

Internal ref. 63 46 800

An Oshkosh Corportation Company

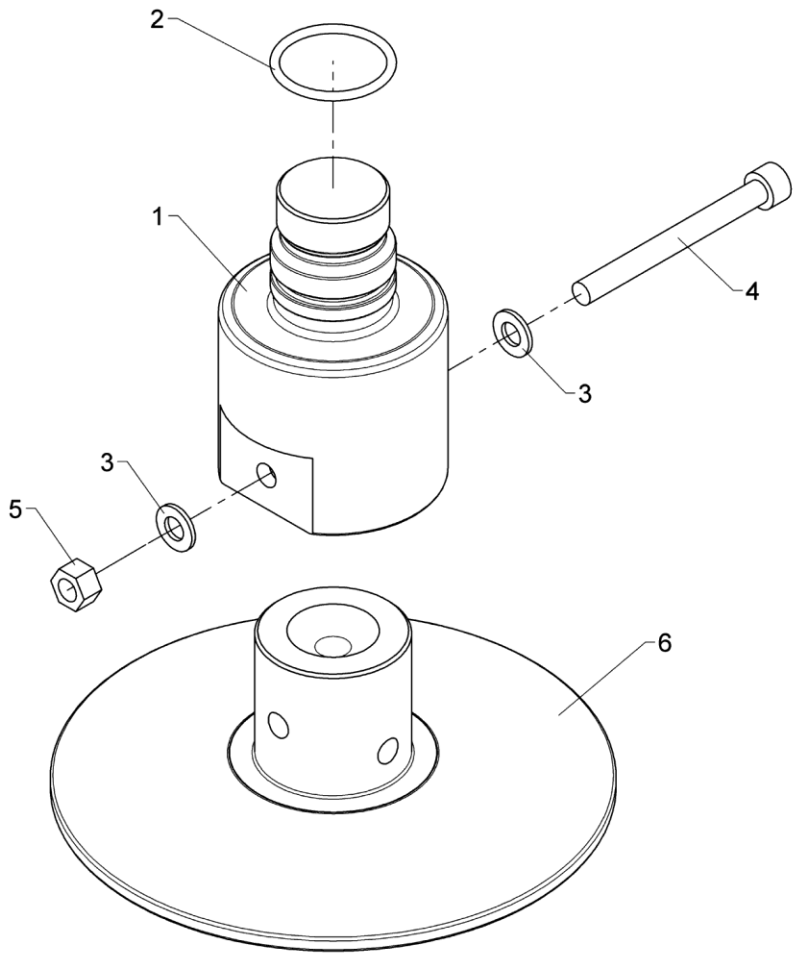

565 02 330

From loader 1440001
To loader

Created 07-11-2018
Modified

Pos	Qty.	Part no.	Description	Remarks
1	1	6347536	Pin	
2	1	20177	O-ring	OR 34,2 x 3
3	2	31147	Face washer, 8 mm	
4	1	30965	Screw	MC8 x 80
5	1	30886	Lock nut, stainless	M8
6	1	6306506	Footplate, standard	

2820K-RCS

Internal ref. 63 46 810

An Oshkosh Corportation Company

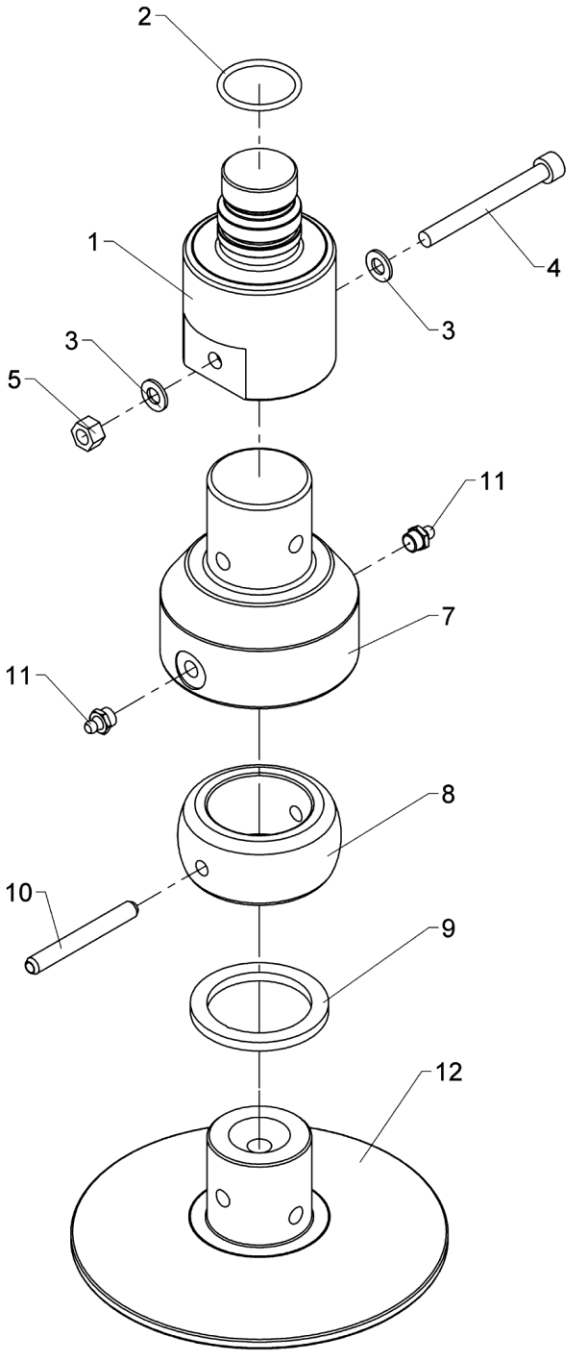

565 02 340

From loader 1440001
To loader

Created 07-11-2018
Modified

Pos	Qty.	Part no.	Description	Remarks
1	1	6347536	Pin	
2	1	20177	O-ring	OR 34,2 x 3
3	2	31147	Face washer, 8 mm	
4	1	30965	Screw	MC8 x 80
5	1	30886	Lock nut, stainless	M8
6	1	6347660	Footplate + ball joint std.cpl	Pos. 7, 8, 9, 10, 11, 12
7	1	6347531	Pin	
8	1	6347532	Ball joint	
9	1	6347533	Distance ring	
10	1	31229	Retaining pin	ø8 x 70
11	2	31318	Lubricator	1/8" RG
12	1	6306506	Footplate, standard	

2820K-RCS

Internal ref. 63 44 290

An Oshkosh Corportation Company

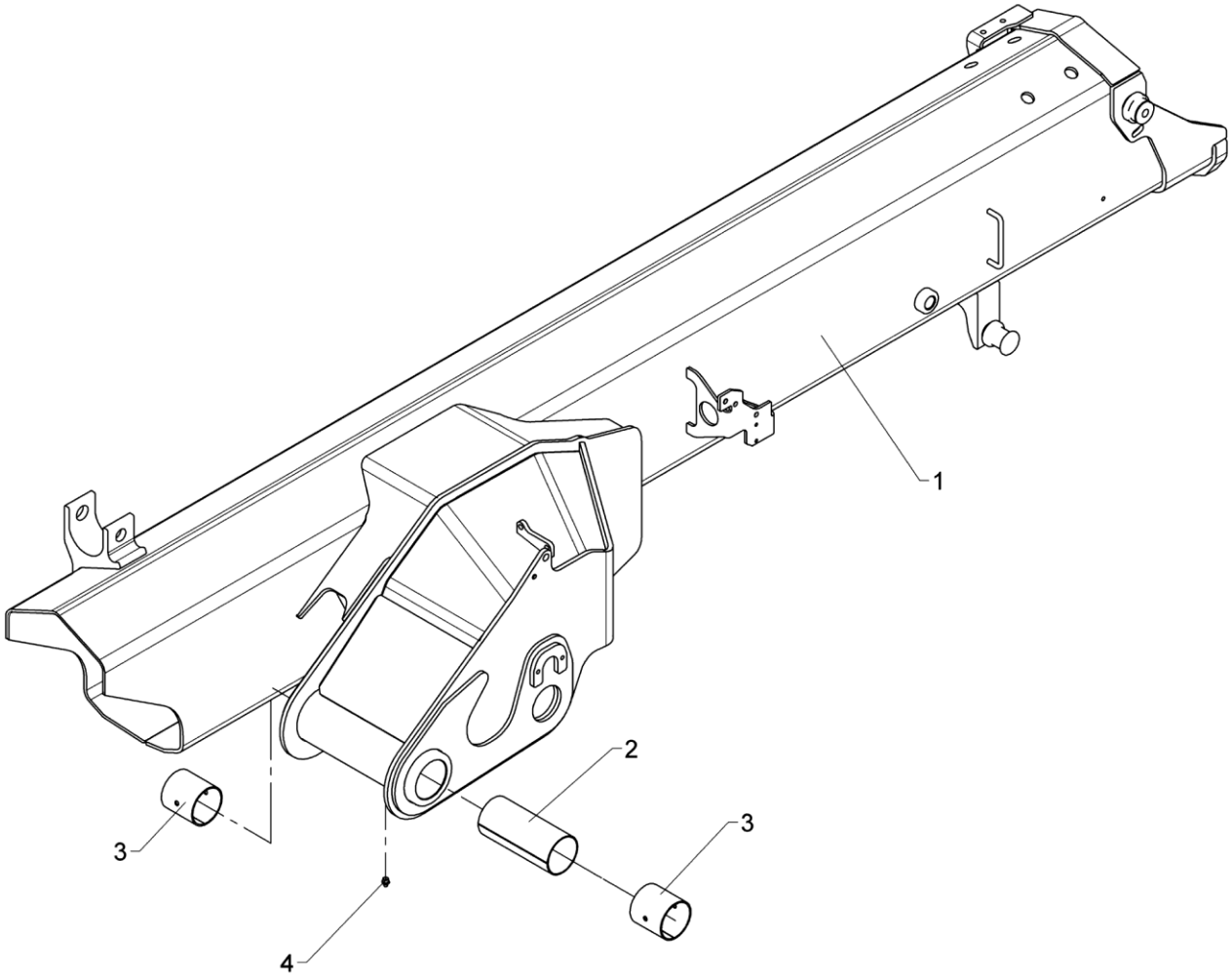

565 03 010

From loader 1440001
To loader

Jib, complete

Created 15-07-2010
Modified 02-05-2014

Pos	Qty.	Part no.	Description	Remarks
1	1	6344280	Jib, painted	6344281
2	1	63476	Plate	
3	2	23418	Bushing	PM 6570 DX
4	1	31318	Lubricator	1/8" RG

2820K-RCS

Internal ref. 63 44 980

An Oshkosh Corportation Company

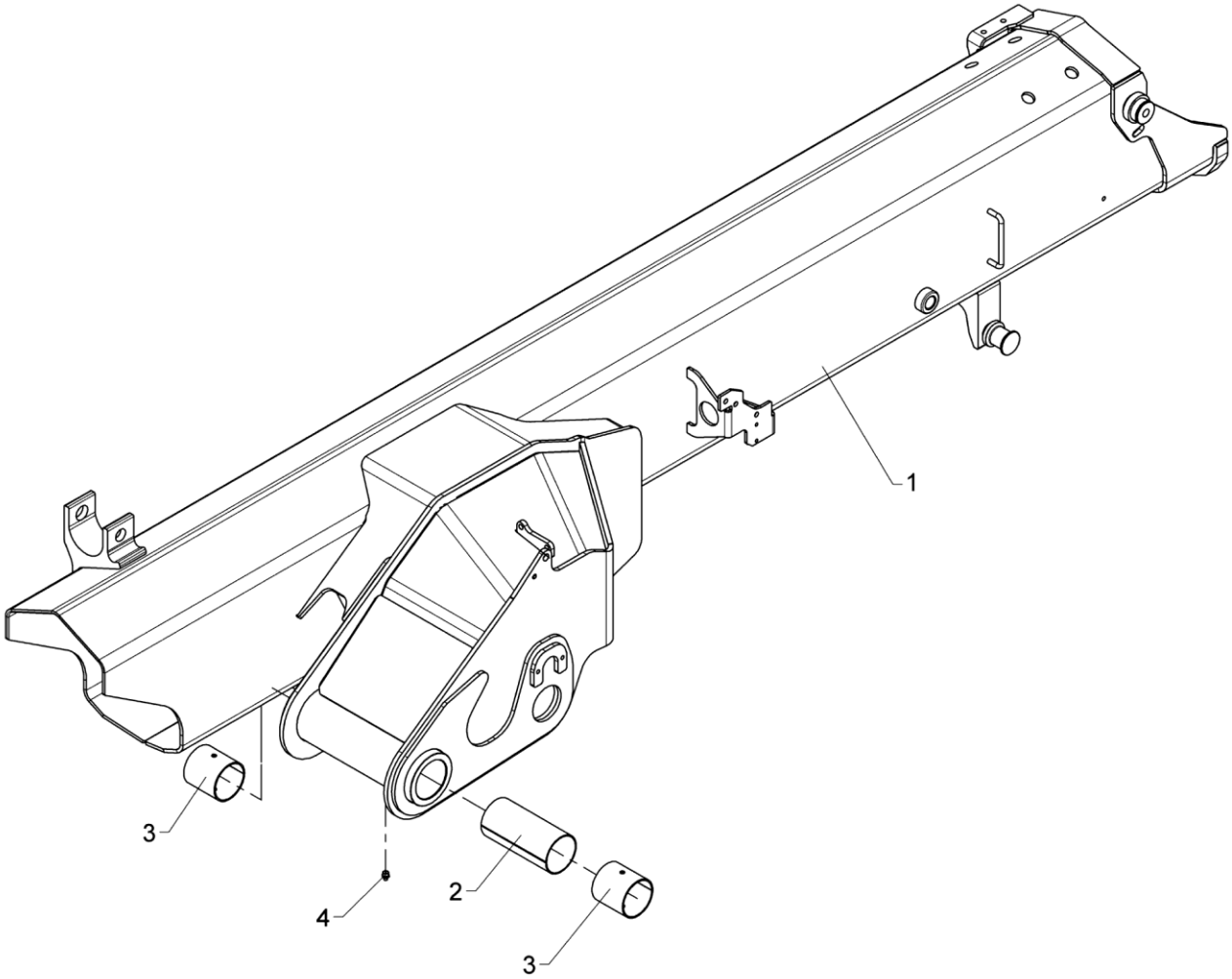

565 03 020

From loader 1440001
To loader

Jib, complete (winch)

Created 16-07-2010
Modified

Pos	Qty.	Part no.	Description	Remarks
1	1	6344970	Jib, painted (winch)	6344971
2	1	68035	Plate for spacer	
3	2	23418	Bushing	PM 6570 DX
4	1	31318	Lubricator	1/8" RG

2820K-RCS

Internal ref. 63 44 300

An Oshkosh Corportation Company

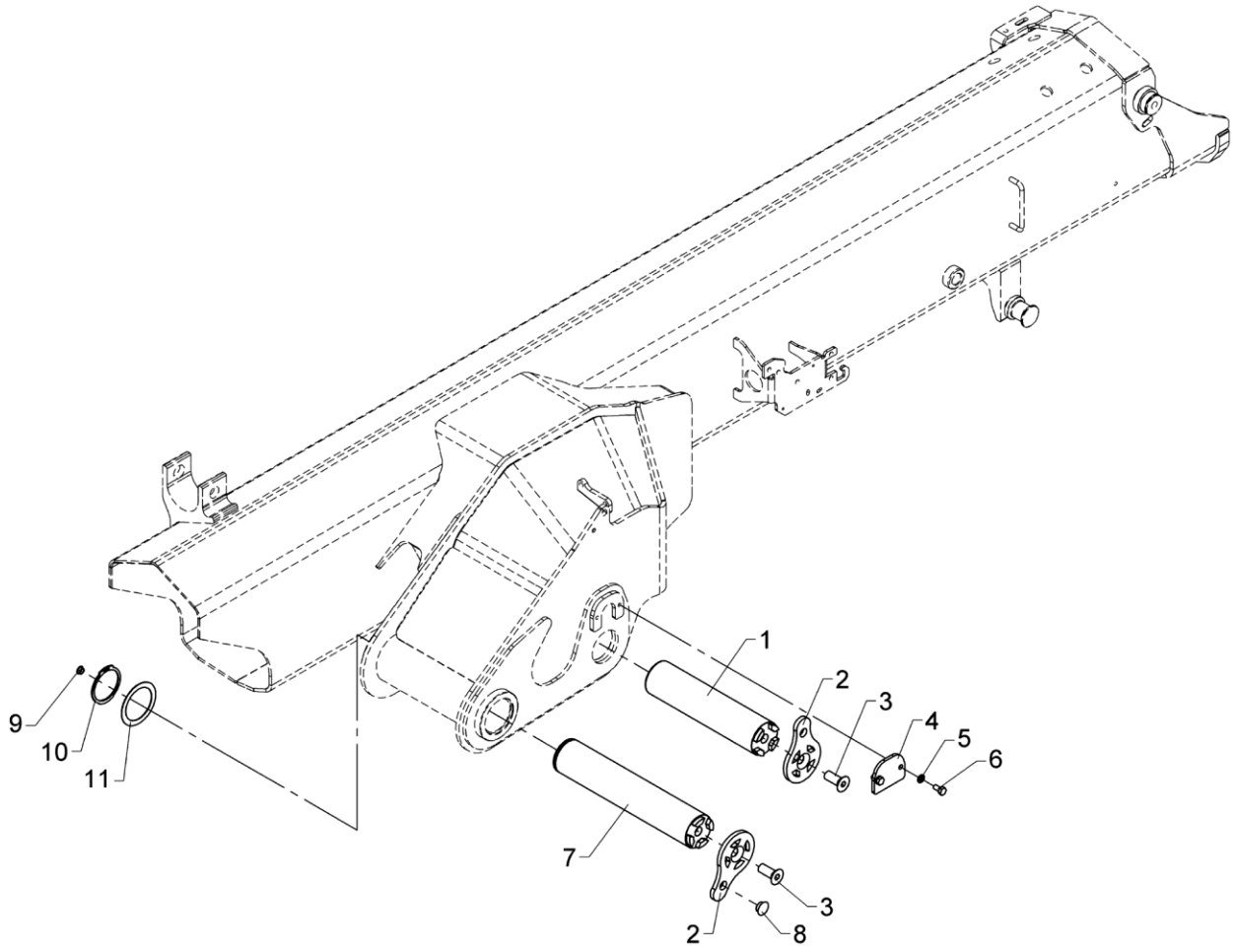

From loader 1440001
To loader

Fitting of jib and jib cylinder

Created 06-01-2009
Modified 22-11-2017

Pos	Qty.	Part no.	Description	Remarks
1	1	6345806	Pin (ø65 x 280)	
2	2	6345802	Lock plate ø60	
3	2	32360	Countersunk screw	MK16 x 40
4	1	6340318	Lock plate	
5	2	31155	Spring washer	8 mm
6	2	30131	Set screw, stainless	M8 x 16
7	1	6345801	Pin (ø65 x 326 with susp.)	
8	1	68034	Plug	
9	1	64371	Plug	
10	1	33137	Circlip	65U
11	1	33278	Washer	PS 65 x 85 x 1,0

2820K-RCS

Internal ref. 63 46 320

An Oshkosh Corportation Company

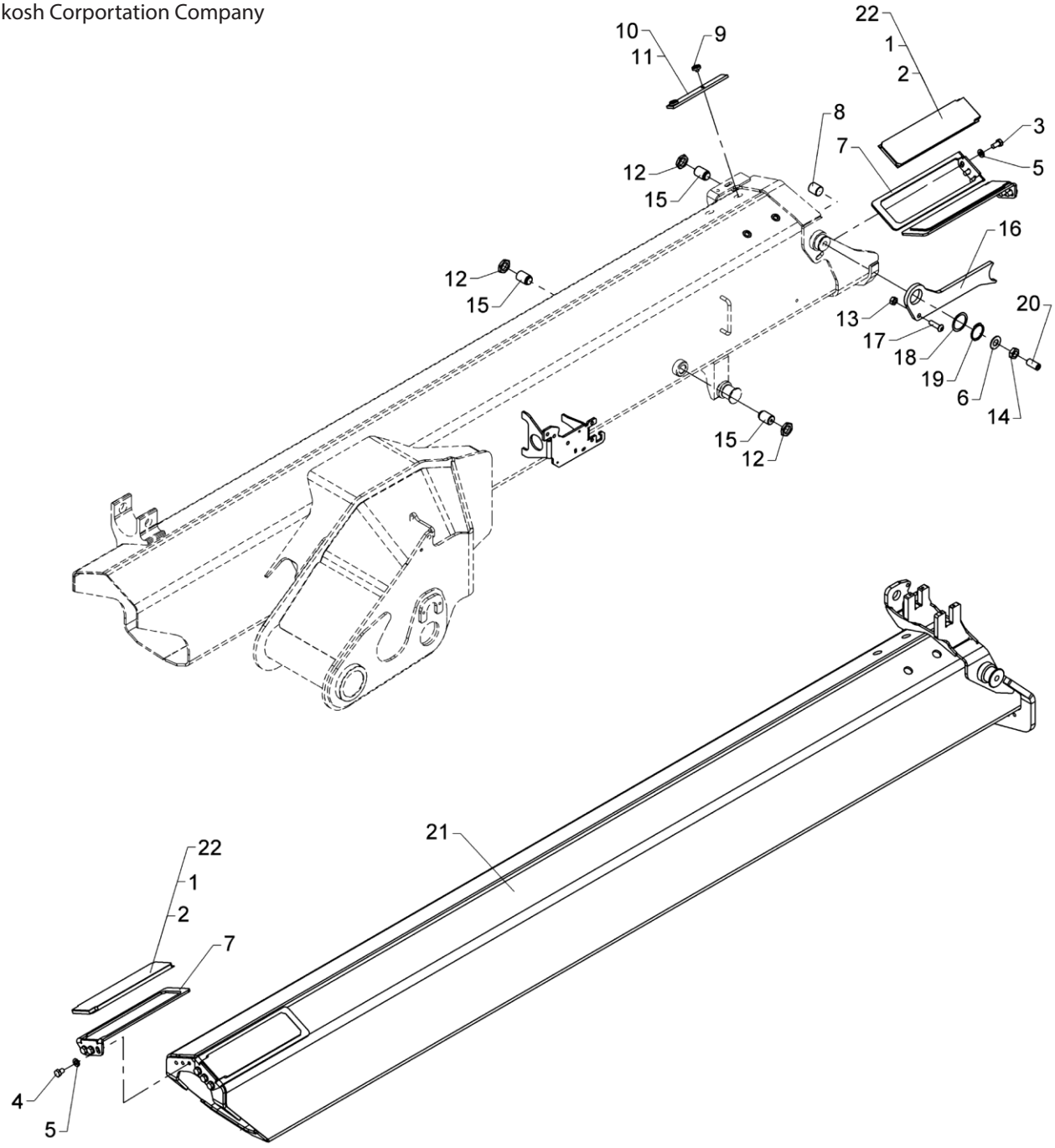

Jib extension I incl. fittings

Pos	Qty.	Part no.	Description	Remarks
1	4	63582	Slide block	8 mm
2	4	63583	Slide block	9 mm
3	6	31517	Set screw, stainless	M10 x 20
4	6	30152	Set screw	M10 x 14
5	12	31177	Washer	10 mm
6	1	31196	Washer	16 mm
7	4	6300366	Bracket for slide block	
8	1	6340335	Guide	
9	4	31864	Allen screw	M8 x 6
10	2	6243004	Wear plate	6 mm
11	2	6244064	Wear plate	7 mm
12	3	32364	Counter nut	M24 x 2
13	1	30858	Nut	M10
14	1	30821	Counter nut	M16
15	3	6304409	Guide	
16	1	6344319	Lock pawl	
17	1	31772	Screw	M10 x 35
18	1	31102	Washer Ø40 x 50x 1,0	ø40 x 50 x 1,0
19	1	33121	Circlip	40U
20	1	30567	Pointed screw	MSP16 x 35
21	1	6346531	Jib extension I	
22	4	63584	Slide block	10 mm

2820K-RCS

Internal ref. 63 46 340

An Oshkosh Corportation Company

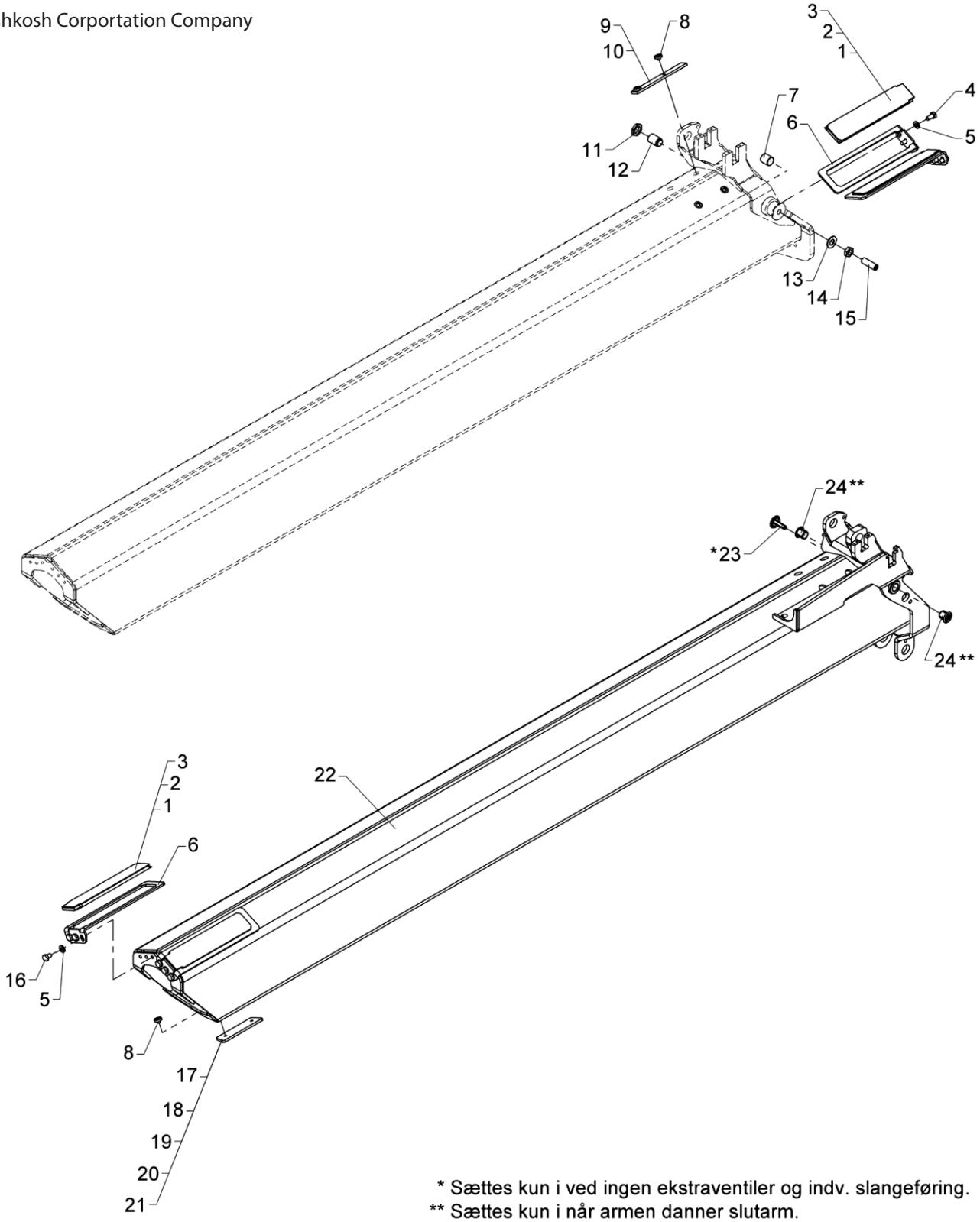

* Sættes kun i ved ingen ekstraventiler og indv. slangeføring.
** Sættes kun i når armen danner slutarm.

Jib extension II incl. fittings

Created 15-05-2006
Modified 27-10-2014

Pos	Qty.	Part no.	Description	Remarks
		6346340	Jib extension K2incl. fittings	
1	4	63585	Slide block	8 mm
2	4	63586	Slide block	9 mm
3	4	63587	Slide block	10 mm
4	6	31517	Set screw, stainless	M10 x 20
5	12	31177	Washer	10 mm
6	4	6300399	Bracket for slide block	
7	1	6340335	Guide	
8	8	31864	Allen screw	M8 x 6
9	2	6243004	Wear plate	6 mm
10	2	6244064	Wear plate	7 mm
11	1	32364	Counter nut	M24 x 2
12	1	6304409	Guide	
13	1	31196	Washer	16 mm
14	1	30821	Counter nut	M16
15	1	32495	Pointed screw	MSP16 x 50
16	6	30152	Set screw	M10 x 14
17	2	6340396	Spacer, 1.5mm	1,5 mm
18	2	6340416	Spacer	5 mm
19	2	6340377	Spacer	6 mm
20	2	6340378	Spacer	7 mm
21	2	6340379	Spacer	8 mm
22	1	6346341	Extension II	
23	1	63568	Plastic plug with logo	
24	2	63487	Plug	

2820K-RCS

Internal ref. 63 46 360

An Oshkosh Corportation Company

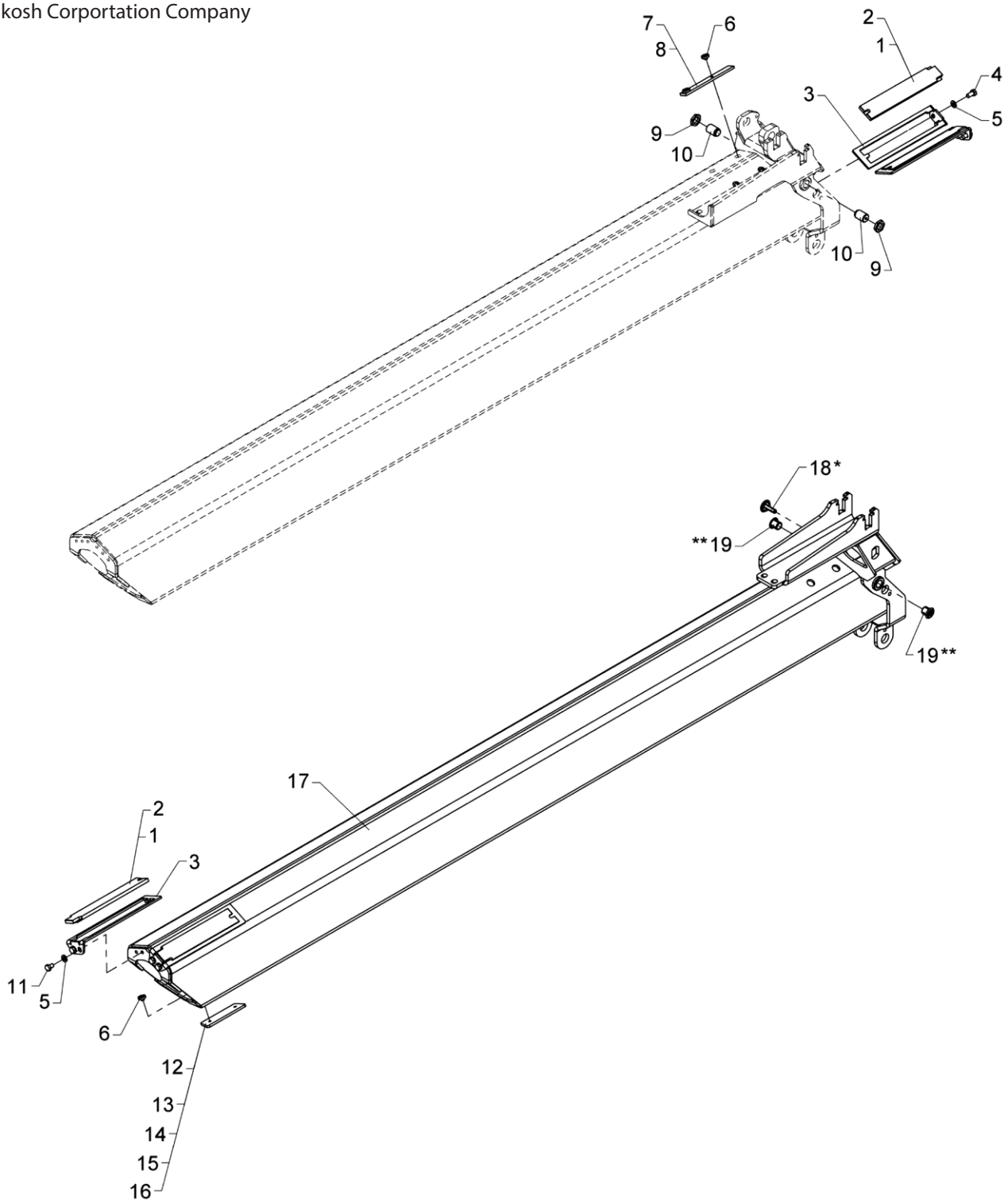

* Sættes kun i ved ingen ekstraventiler og indv. slangeføring.
** Sættes kun i når armen danner slutarm.

Jib extension K3 incl. fittings

Pos	Qty.	Part no.	Description	Remarks
		6346360	Jib extension K3incl. fittings	
1	4	63588	Slide block	8 mm
2	4	63589	Slide block	9 mm
3	4	6300368	Bracket for slide block	
4	4	31517	Set screw, stainless	M10 x 20
5	8	31177	Washer	10 mm
6	8	31864	Allen screw	M8 x 6
7	2	6243004	Wear plate	6 mm
8	2	6244064	Wear plate	7 mm
9	2	32364	Counter nut	M24 x 2
10	2	6304409	Guide	
11	4	30152	Set screw	M10 x 14
12	2	6340396	Spacer, 1.5mm	1,5 mm
13	2	6340416	Spacer	5 mm
14	2	6340377	Spacer	6 mm
15	2	6340378	Spacer	7 mm
16	2	6340379	Spacer	8 mm
17	1	6346361	Extension III	
18	1	63568	Plastic plug with logo	
19	2	63487	Plug	

2820K-RCS

Internal ref. 63 46 380

An Oshkosh Corportation Company

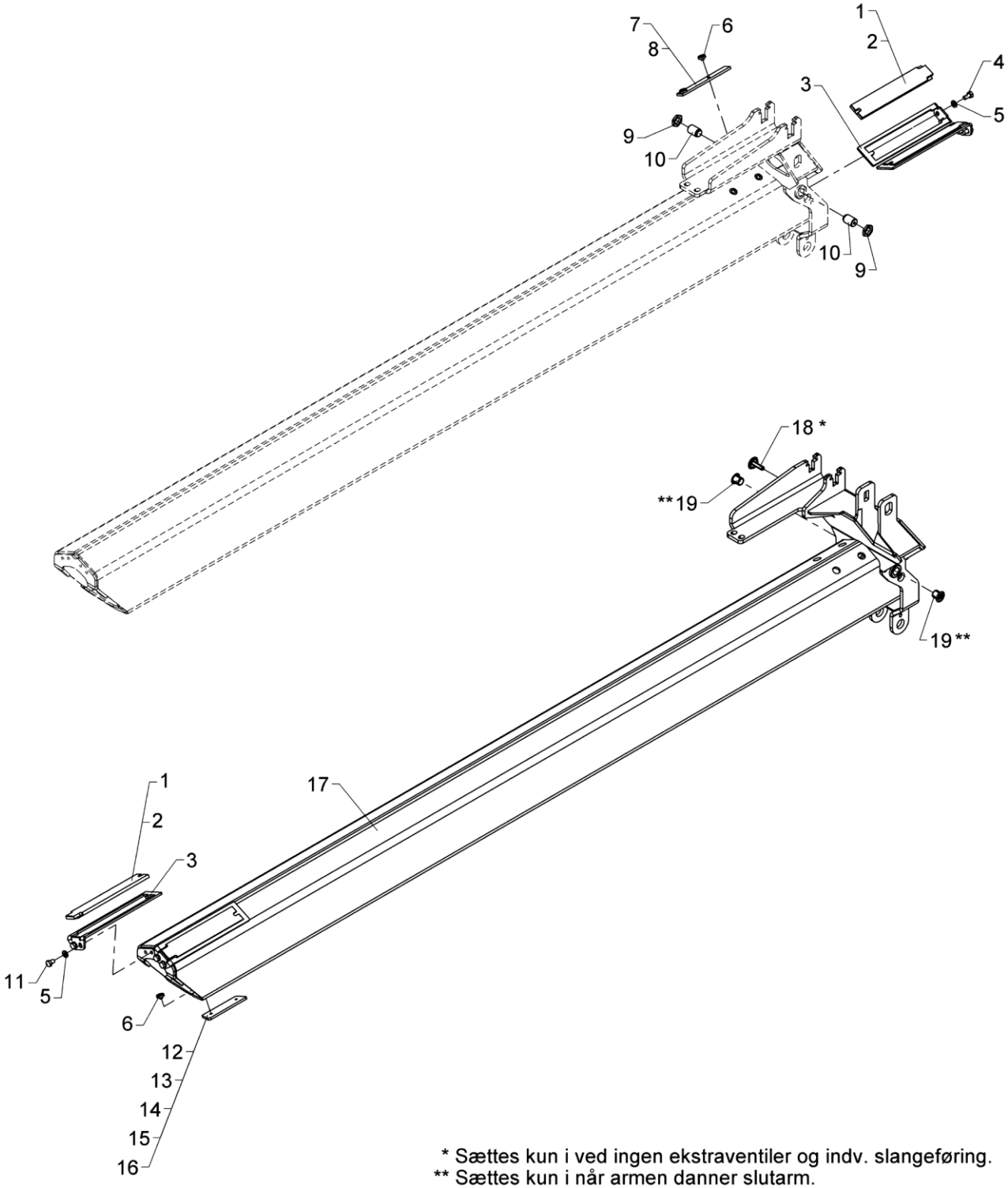

* Sættes kun i ved ingen ekstraventiler og indv. slangeføring.
** Sættes kun i når armen danner slutarm.

Jib extension K4 incl. fittings

Pos	Qty.	Part no.	Description	Remarks
		6346380	Jib extension K4incl. fittings	
1	4	63588	Slide block	8 mm
2	4	63589	Slide block	9 mm
3	4	6300368	Bracket for slide block	
4	4	31517	Set screw, stainless	M10 x 20
5	8	31177	Washer	10 mm
6	8	31864	Allen screw	M8 x 6
7	2	6243004	Wear plate	6 mm
8	2	6244064	Wear plate	7 mm
9	2	32364	Counter nut	M24 x 2
10	2	6304409	Guide	
11	4	30152	Set screw	M10 x 14
12	2	6340396	Spacer, 1.5mm	1,5 mm
13	2	6340416	Spacer	5 mm
14	2	6340377	Spacer	6 mm
15	2	6340378	Spacer	7 mm
16	2	6340379	Spacer	8 mm
17	1	6346381	Extension IV	
18	1	63568	Plastic plug with logo	
19	2	63487	Plug	

2820K-RCS

Internal ref. 63 46 400

An Oshkosh Corportation Company

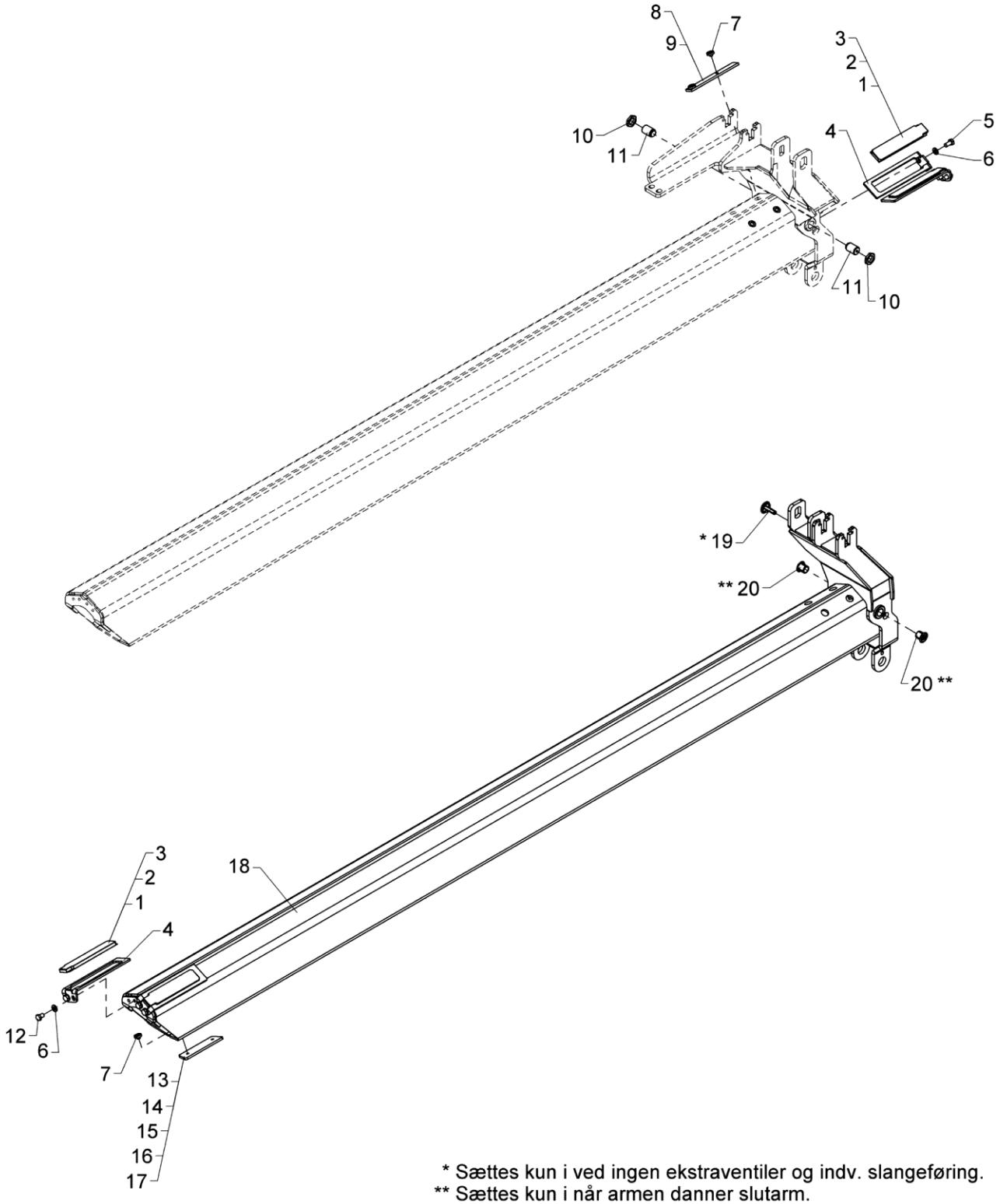

* Sættes kun i ved ingen ekstraventiler og indv. slangeføring.
** Sættes kun i når armen danner slutarm.

Jib extension K5 incl. fittings

Pos	Qty.	Part no.	Description	Remarks
		6346400	Jib extension K5incl. fittings	
1	4	63518	Slide block	8 mm
2	4	63762	Slide block	6299074, 9 mm
3	4	63593	Slide block	10 mm
4	4	6340441	Bracket for slide block	
5	4	31517	Set screw, stainless	M10 x 20
6	8	31177	Washer	10 mm
7	8	31864	Allen screw	M8 x 6
8	2	6243004	Wear plate	6 mm
9	2	6244064	Wear plate	7 mm
10	2	32364	Counter nut	M24 x 2
11	2	6304409	Guide	
12	4	30152	Set screw	M10 x 14
13	2	6340396	Spacer, 1.5mm	1,5 mm
14	2	6340416	Spacer	5 mm
15	2	6340377	Spacer	6 mm
16	2	6340378	Spacer	7 mm
17	2	6340379	Spacer	8 mm
18	1	6346401	Extension V	
19	1	63568	Plastic plug with logo	
20	2	63487	Plug	

2820K-RCS

Internal ref. 63 46 420

An Oshkosh Corportation Company

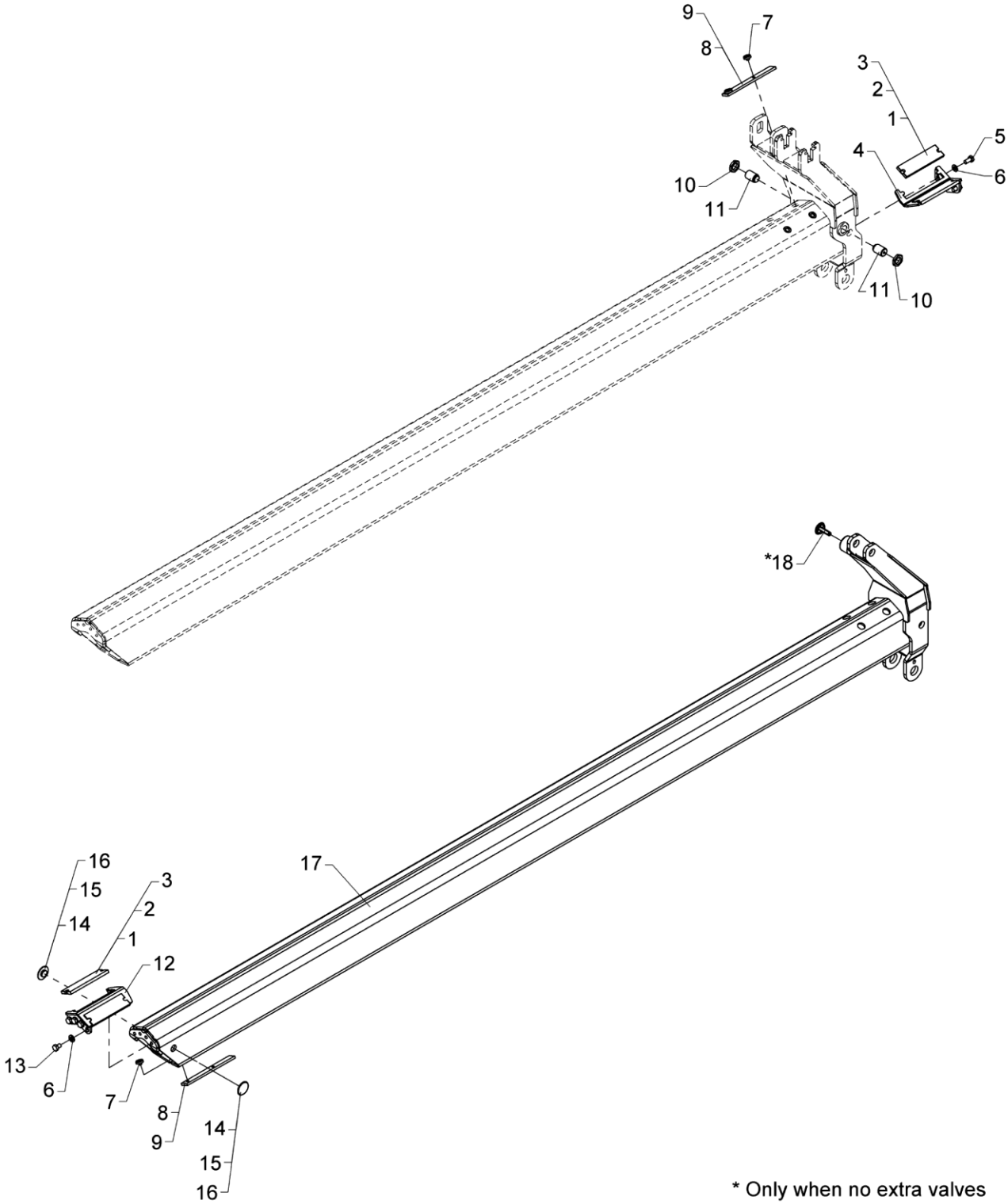

* Only when no extra valves

Jib extension K6 incl. fittings

Pos	Qty.	Part no.	Description	Remarks
		6346420	Jib extension K6incl. fittings	
1	4	63573	Slide block	8 mm
2	4	63574	Slide block	9 mm
3	4	63575	Side block	10 mm
4	1	6340442	Bracket for slide block	
5	3	31517	Set screw, stainless	M10 x 20
6	7	31177	Washer	10 mm
7	8	31864	Allen screw	M8 x 6
8	4	6243004	Wear plate	6 mm
9	4	6244064	Wear plate	7 mm
10	2	32364	Counter nut	M24 x 2
11	2	6304409	Guide	
12	1	6340445	Bracket for slide block	
13	4	30152	Set screw	M10 x 14
14	2	6394631	Guide, 5 + 2.5 mm	5 + 2,5mm
15	2	6394632	Guide, 5 + 1.75 mm	5 + 1,75mm
16	2	6394636	Guide	5 + 1mm
17	1	6346421	Extension VI	
18	1	63568	Plastic plug with logo	

2820K-RCS

Internal ref. 63 46 440

An Oshkosh Corportation Company

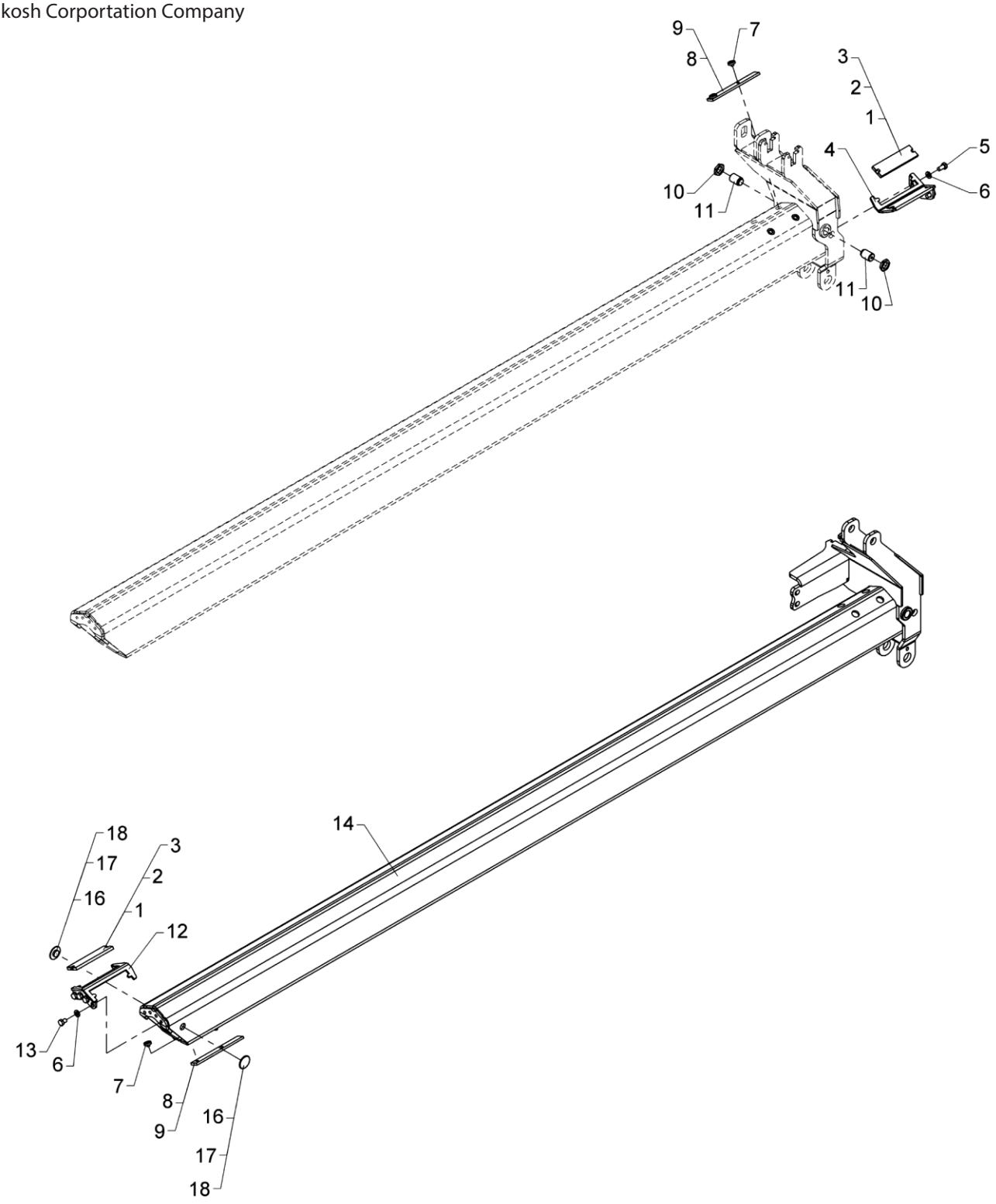

Jib extension VI (K7/K8) incl. fittings

Created 07-06-2006
Modified 06-08-2012

Pos	Qty.	Part no.	Description	Remarks
1	4	63573	Slide block	8 mm
2	4	63574	Slide block	9 mm
3	4	63575	Side block	10 mm
4	1	6340442	Bracket for slide block	
5	3	31517	Set screw, stainless	M10 x 20
6	7	31177	Washer	10 mm
7	8	31864	Allen screw	M8 x 6
8	4	6243004	Wear plate	6 mm
9	4	6244064	Wear plate	7 mm
10	2	32364	Counter nut	M24 x 2
11	2	6304409	Guide	
12	1	6340445	Bracket for slide block	
13	4	30152	Set screw	M10 x 14
14	1	6346441	Extension VI	
15	1	6346401	Extension V	
16	2	6394632	Guide, 5 + 1.75 mm	5 + 1,75mm
17	2	6394631	Guide, 5 + 2.5 mm	5 + 2,5mm
18	2	6394636	Guide	5 + 1mm

2820K-RCS

Internal ref. 63 44 460

An Oshkosh Corportation Company

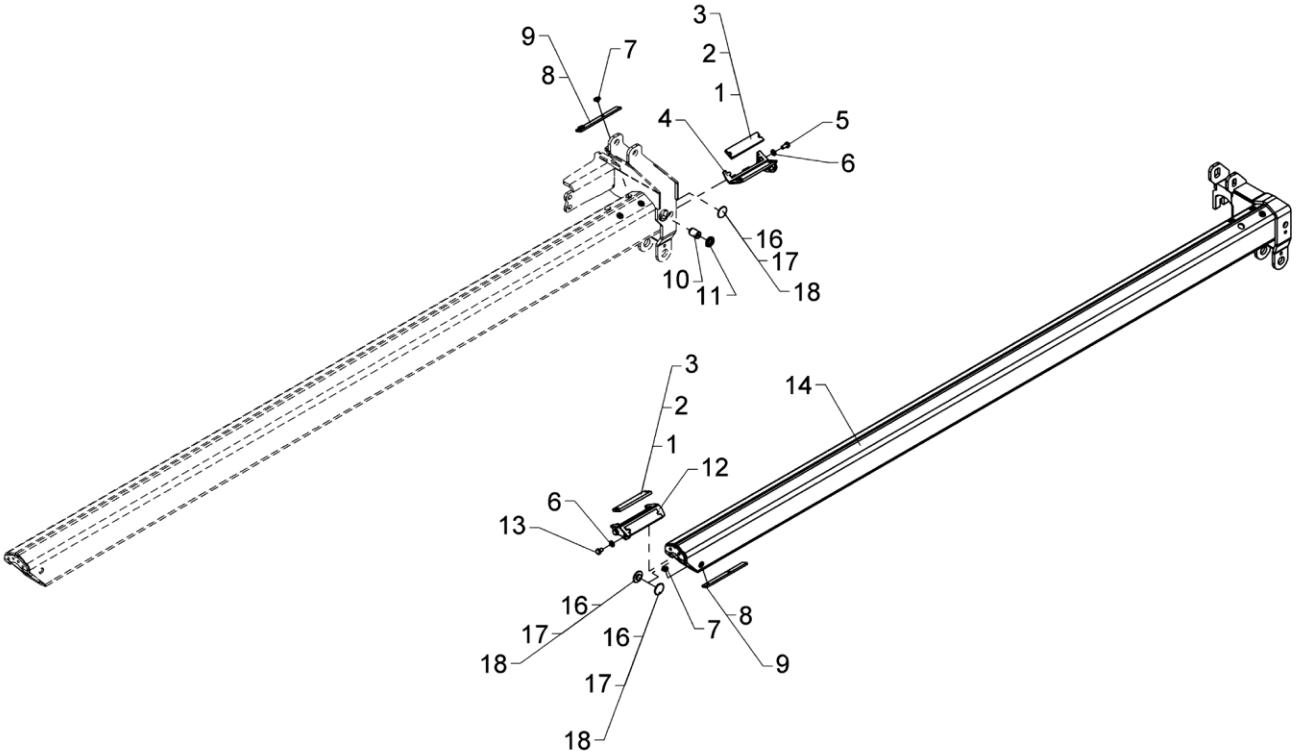

Jib extension K7 incl. fittings

565 03 160

From loader 1440001
To loader

Created 06-01-2009
Modified 26-04-2012

Pos	Qty.	Part no.	Description	Remarks
1	4	63570	Slide block	8 mm
2	4	63571	Slide block	9 mm
3	4	63572	Slide block	10 mm
4	1	6340447	Bracket for slide block	
5	3	31517	Set screw, stainless	M10 x 20
6	5	31177	Washer	10 mm
7	8	31865	Torx screw M8 x 6 m	M8 x 6
8	4	6243004	Wear plate	6 mm
9	4	6244064	Wear plate	7 mm
10	1	6304409	Guide	
11	1	32364	Counter nut	M24 x 2
12	1	6340451	Bracket for slide block	
13	2	30152	Set screw	M10 x 14
14	1	6344461	Extension K7	
16	3	6394631	Guide, 5 + 2.5 mm	5 + 2,5mm
17	3	6394632	Guide, 5 + 1.75 mm	5 + 1,75mm
18	3	6394636	Guide	5 + 1mm

565 03 170

2820K-RCS

Internal ref. 63 44 480

An Oshkosh Corportation Company

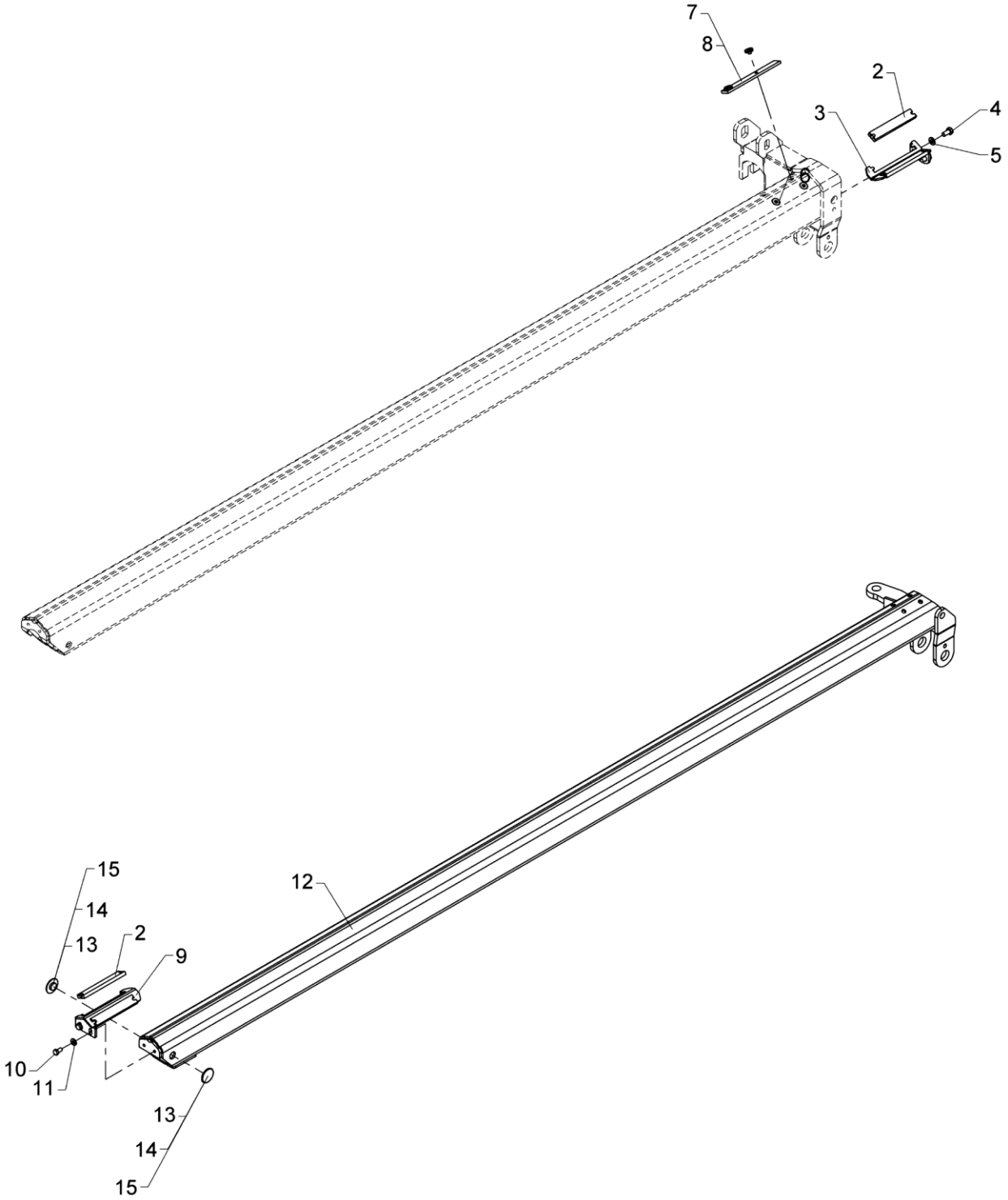

Jib extension K8 incl. fittings

565 03 170

From loader 1440001
To loader

Created 06-01-2009
Modified 21-05-2012

Pos	Qty.	Part no.	Description	Remarks
1	4	63594	Slide block	8 mm
2	4	63595	Slide block	9 mm
3	1	6304296	Bracket	
4	2	31517	Set screw, stainless	M10 x 20
5	2	31177	Washer	10 mm
6	4	31865	Torx screw M8 x 6 m	M8 x 6
7	2	6243004	Wear plate	6 mm
8	2	6244064	Wear plate	7 mm
9	1	6304303	Bracket	
10	2	30131	Set screw, stainless	M8 x 16
11	2	31754	Washer	8,4 x 18 x 2
12	1	6344481	Extension K8	
13	2	6394632	Guide, 5 + 1.75 mm	5 + 1,75mm
14	2	6394631	Guide, 5 + 2.5 mm	5 + 2,5mm
15	2	6394636	Guide	5 + 1mm

2820K-RCS

63 46 900
Internal ref. 63 44 910

An Oshkosh Corportation Company

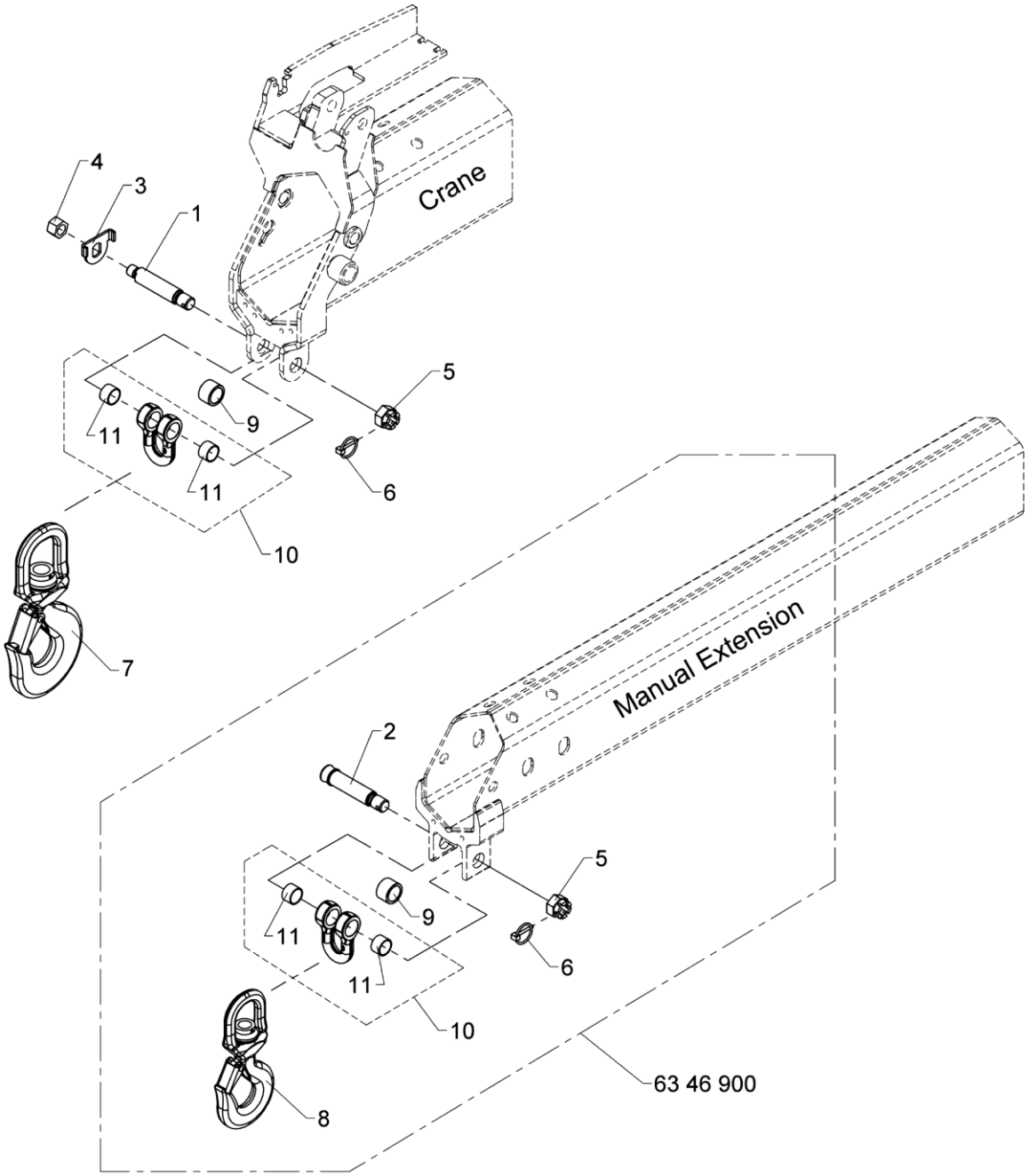

Hook suspension

Pos	Qty.	Part no.	Description	Remarks
		6344910	Hook suspension	
		6346900		
1	1	6662114	Pin	Til 6344910
2	1	6304458	Pin for suspension	Til 6346900
3	1	6662104	Plate	
4	1	30894	Lock nut	M20
5	2	30837	Nut	M24
6	2	31967	Ring split	ø4,5 x 40
7	1	63292	Hook, 8 t incl. bearing	Til 6344910
8	1	62169	Hook with ball bearing	Til 6346900
9	2	68094	Spacer, ø40 / 30 x 26	
10	2	6395541	Shackle 8 t	
11	4	23426	Bushing	ø28/32 x 20

2820K-RCS

63 47 330
Internal ref. 63 44 330

An Oshkosh Corportation Company

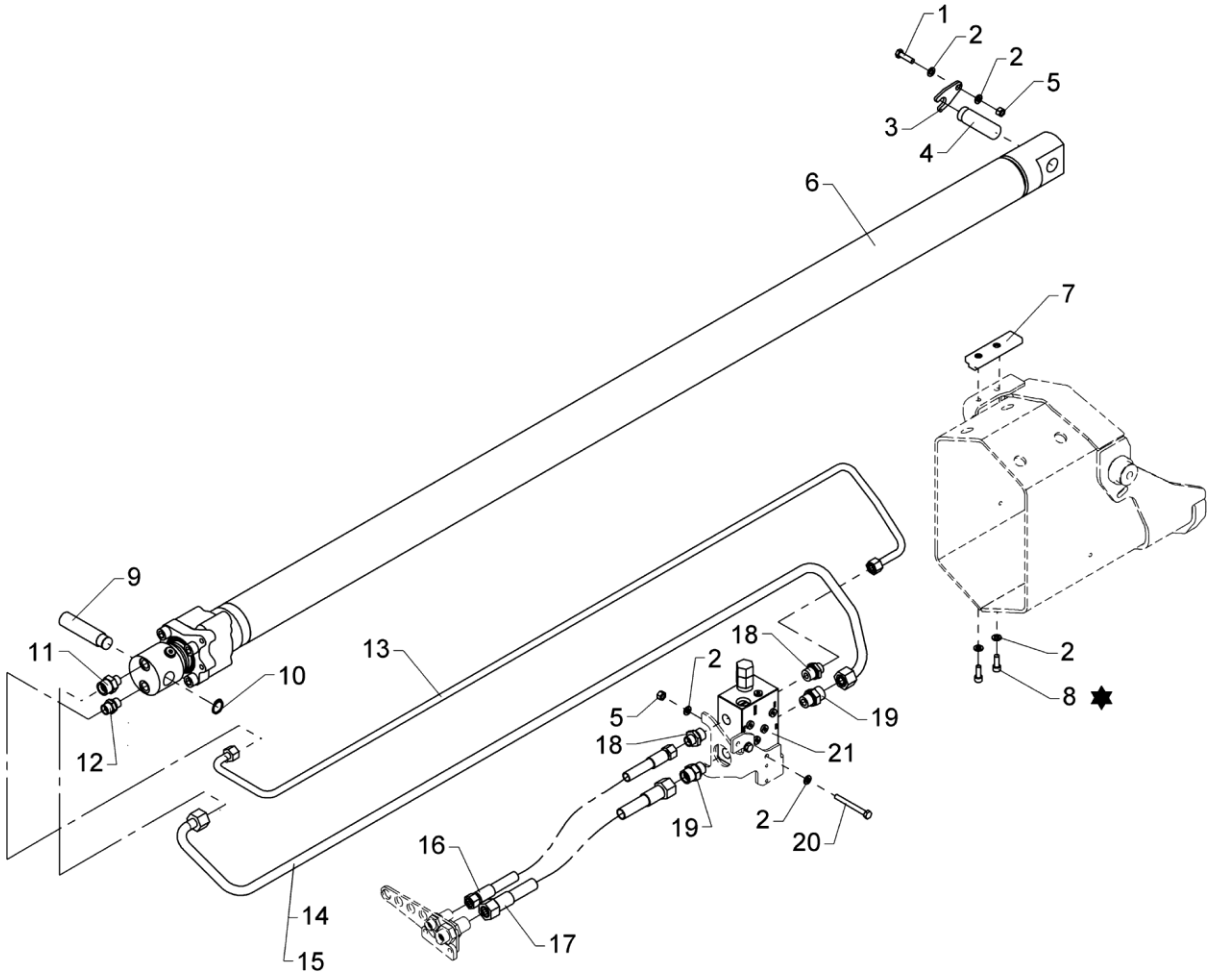

✸ Loctite 243

Extension cylinder I incl. fittings

Pos	Qty.	Part no.	Description	Remarks
		6344330	Extension cylinder I +fittings	
		6347330	Ext. cyl. I +fittings, basket	
1	1	30135	Set screw, stainless	M8 x 30
2	8	31147	Face washer, 8 mm	8 mm
3	1	6340337	Lock plate	
4	1	6344522	Pin	
5	3	30886	Lock nut, stainless	M8
6	1	6344540	Extension cylinder I	
7	1	63689	Slide block with bushing	
8	2	30460	Sockethead screw	MC8 x 22
9	1	6344521	Pin	
10	1	33110	Circlip	22U
11	1	26368	Straight connection	P-GEV 16 SR 3/8-WD
12	1	25127	Connection	P-GEV 12 LR-WD
13	1	6344642	Pipe	
14	1	6344641	Pipe	
15	1	6345641	Pipe, CI extend	Kurvekan/Man basket
16	1	56383	Hose	3/8 X 650 mm L/L
17	1	56384	Hose	1/2 X 680 mm L/L
18	2	25108	Connection	GES 12 LR 1/2-WD
19	2	26334	Connection	P-GEV 16 SR-WD
20	2	30812	Steel bolt, stainless	M8 x 75
21	1	59044	Load holding valve	

2820K-RCS

63 47 350
Internal ref. 63 44 350

An Oshkosh Corportation Company

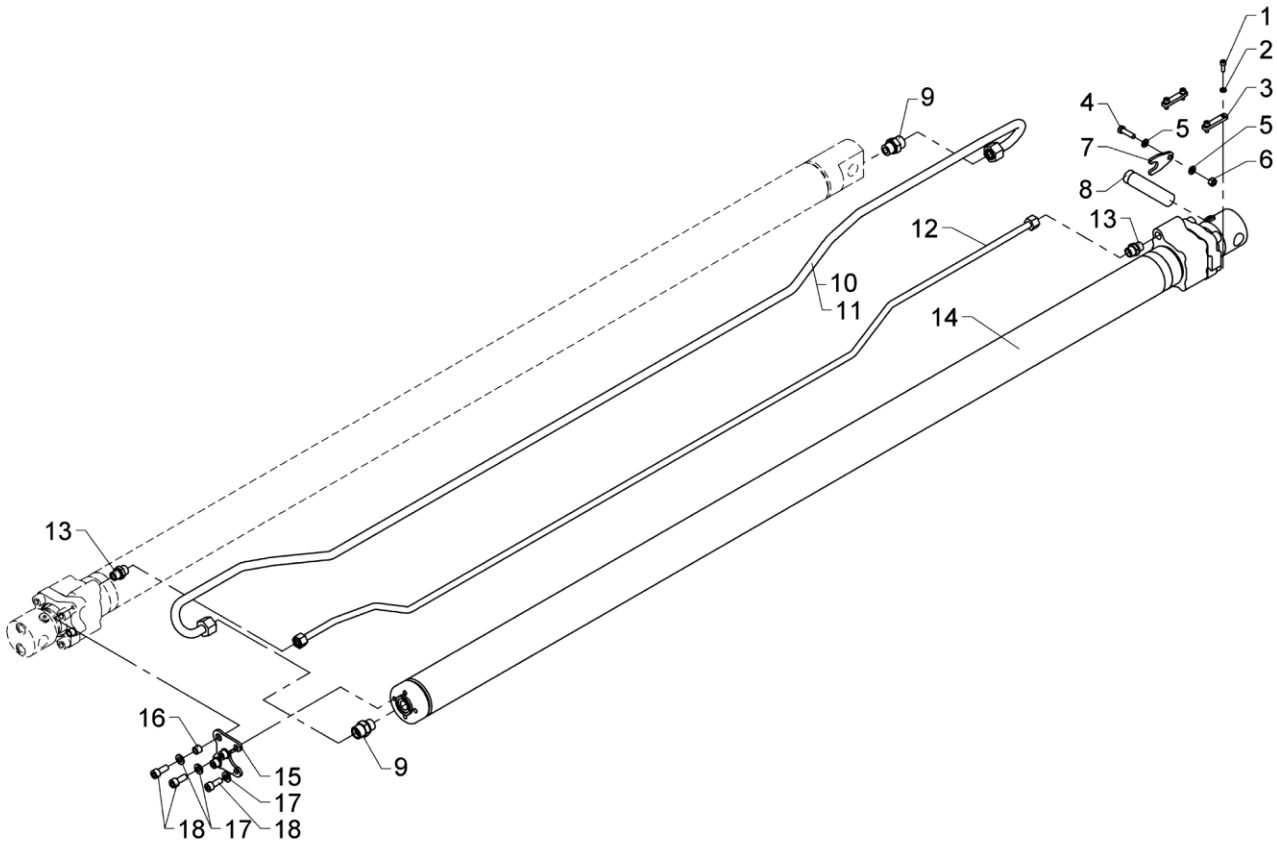

Extension cylinder II incl. fittings

Pos	Qty.	Part no.	Description	Remarks
		6344350	Extension cylinder II+fittings	
		6347350	Ext. cyl. II+fittings, basket	
1	4	31539	Screw, stainless	MC6 x 16
2	4	31154	Spring washer, stainless	6 mm
3	2	6340336	Lock plate	
4	1	30135	Set screw, stainless	M8 x 30
5	2	31147	Face washer, 8 mm	8 mm
6	1	30886	Lock nut, stainless	M8
7	1	6340337	Lock plate	
8	1	6344523	Pin	
9	2	26334	Connection	GEV 16 SR-WD
10	1	6344643	Pipe	
11	1	6345643	Pipe, CII extend	Kurvekran/Man basket
12	1	6344644	Pipe	
13	2	25127	Connection	GES 12 LR-WD
14	1	6344560	Extension cylinder II	
15	1	6344524	Plate	
16	2	6302369	Spacer	
17	5	31177	Washer	10 mm
18	5	30453	Screw	MC10 x 25

2820K-RCS

63 47 370
Internal ref. 63 44 370

An Oshkosh Corportation Company

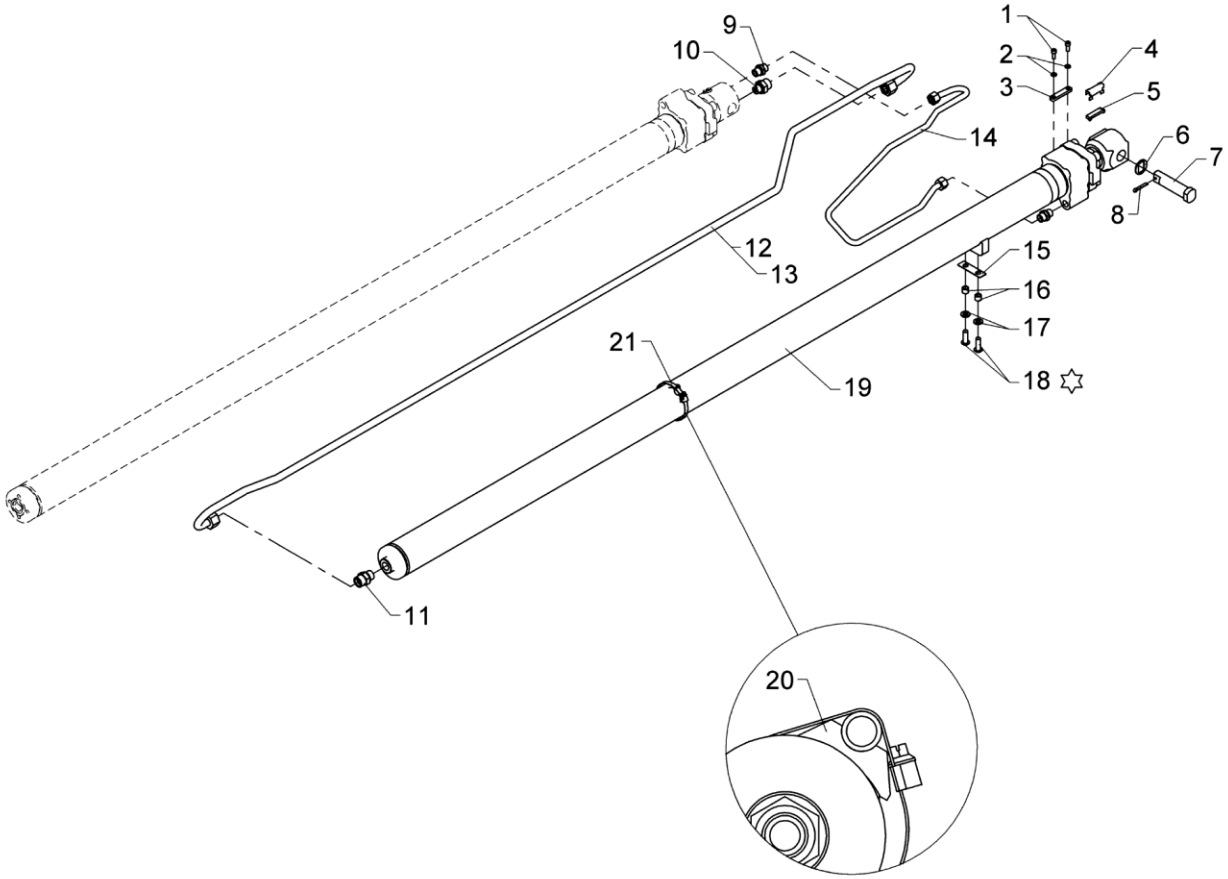

✡ Loctite 243

Extension cylinder III incl. fittings

565 03 520

From loader 1440001
To loader

Created 06-01-2009
Modified 02-05-2014

Pos	Qty.	Part no.	Description	Remarks
		6344370	Extension cylinderIII+fittings	
		6347370	Ext. cyl. III+fittings, basket	
1	2	31539	Screw, stainless	MC6 x 16
2	2	31154	Spring washer, stainless	6 mm
3	1	6340336	Lock plate	
4	1	31920	Clip, stainless, 10mm	
5	1	6340317	Lock plate (10 mm)	
6	1	6304289	Spacer	
7	1	6304062	Pin	
8	1	31634	Split pin	ø5 x 32
9	2	25127	Connection	P-GEV 12 LR-WD
10	1	26368	Straight connection	P-GEV 16 SR 3/8-WD
11	1	26334	Connection	P-GEV 16 SR-WD
12	1	6344645	Pipe	
13	1	6345645	Pipe, CIII extend	Kurvekan/Man basket
14	1	6344646	Pipe	
15	1	6304279	Shim	
16	2	6302369	Spacer	
17	2	31177	Washer	10 mm
18	2	30649	Screw	M10 x 30
19	1	6344570	Extension cylinder III	
20	1	64409	Clamp	
21	1	31406	Clip	

2820K-RCS

63 47 390
Internal ref. 63 44 390

An Oshkosh Corportation Company

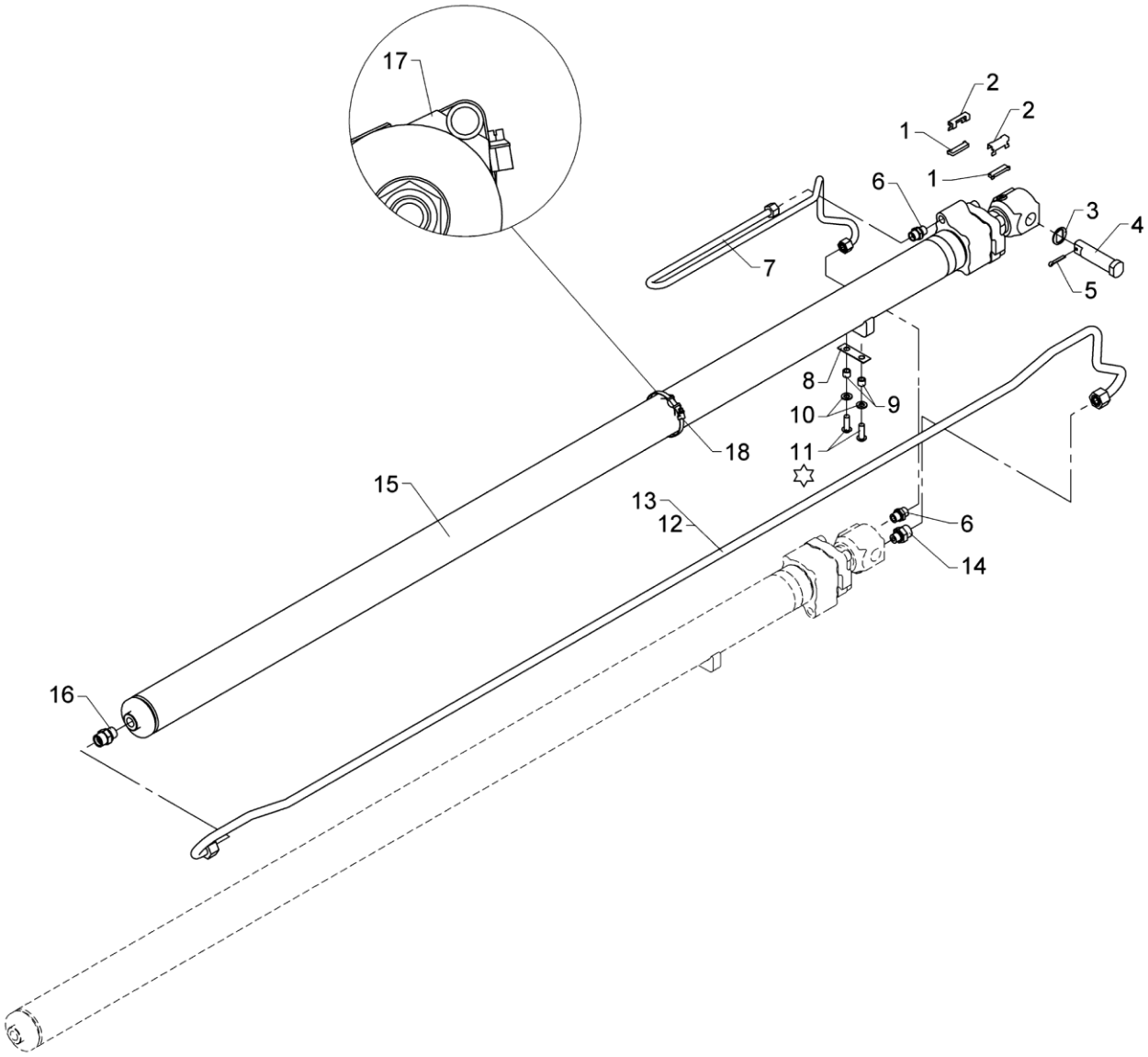

☆ Loctite 243

Extension cylinder IV incl. fittings

Pos	Qty.	Part no.	Description	Remarks
		6344390	Extension cylinder IV+fittings	
		6347390	Ext. cyl. IV+fittings, basket	
1	2	6340317	Lock plate (10 mm)	
2	2	31920	Clip, stainless, 10mm	
3	1	6304289	Spacer	
4	1	6304062	Pin	
5	1	31634	Split pin	ø5 x 32
6	2	25127	Connection	GES 12 LR-WD
7	1	6344648	Pipe	
8	1	6304279	Shim	
9	2	6302369	Spacer	
10	2	31177	Washer	10 mm
11	2	30649	Screw	M10 x 30
12	1	6344647	Pipe	
13	1	6345647	Pipe, CIV extend	Kurvekan/Man basket
14	1	26368	Straight connection	GEV 16 S/R 3/8-WD
15	1	6344580	Extension cylinder IV	
16	1	26334	Connection	GEV 16 SR-WD
17	1	64409	Clamp	
18	1	31406	Clip	

2820K-RCS

63 47 410
Internal ref. 63 44 410

An Oshkosh Corportation Company

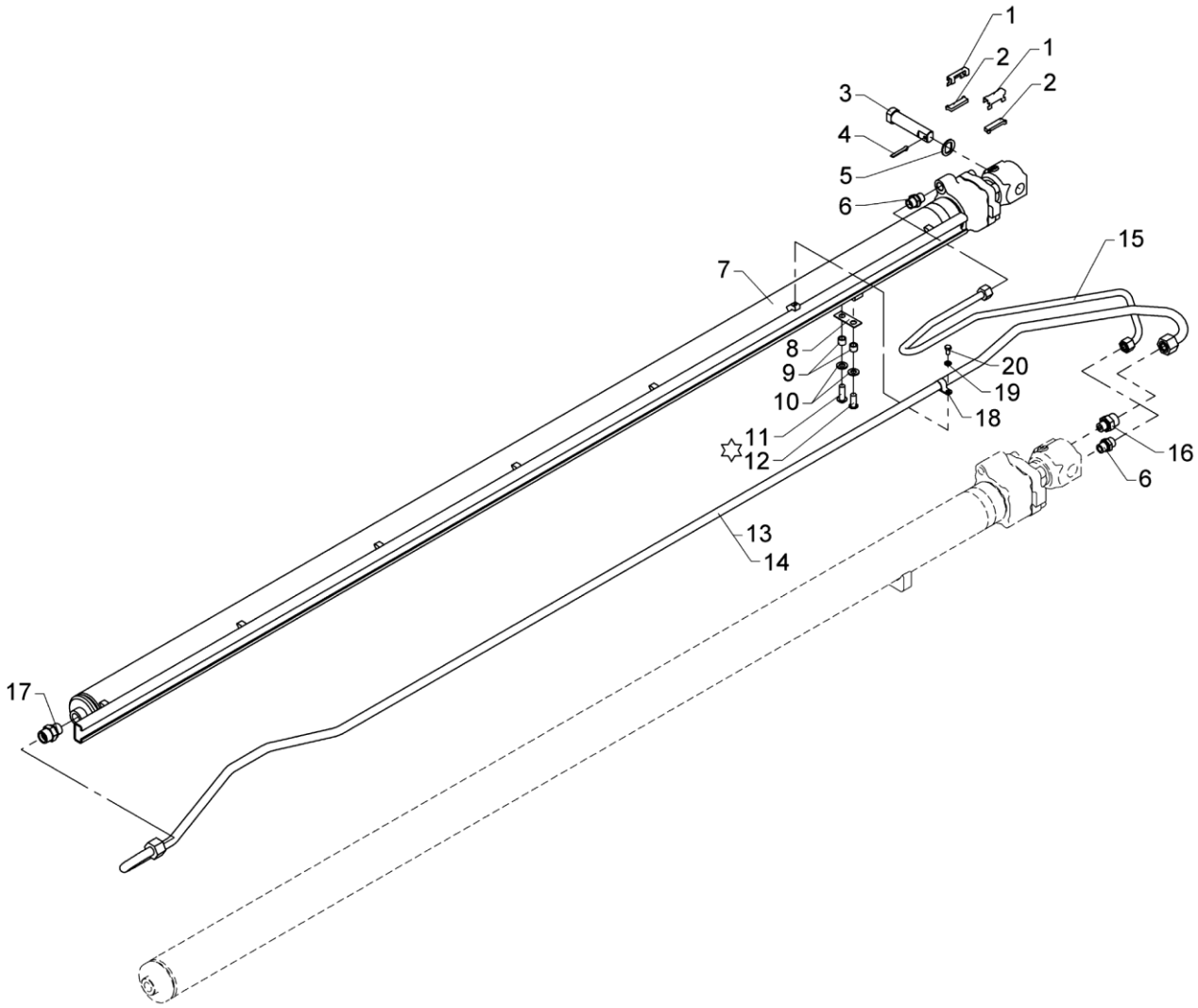

✡ Loctite 243

Extension cylinder V incl. fittings

Pos	Qty.	Part no.	Description	Remarks
		6344410	Extension cylinder V+fittings	
		6347410	Ext. cyl. V+fittings, basket	
1	2	31920	Clip, stainless, 10mm	
2	2	6340317	Lock plate (10 mm)	
3	1	6344525	Pin	
4	1	31634	Split pin	ø5 x 32
5	1	6340526	Spacer	
6	2	25127	Connection	P-GEV 12 LR-WD
7	1	6344590	Extension cylinder V	
8	1	6340527	Shim	
9	2	6302369	Spacer	
10	2	31177	Washer	10 mm
11	1	30649	Screw	M10 x 30
12	1	32348	Cylinder screw	MC10 x 25
13	1	6344649	Pipe	
14	1	6345649	Pipe, CV extend	Kurvekan/Man basket
15	1	6344651	Pipe	
16	1	26368	Straight connection	P-GEV 16 SR 3/8-WD
17	1	26334	Connection	P-GEV 16 SR-WD
18	1	33493	Clamp	
19	1	32302	Face washer, stainless	6 mm
20	1	30111	Set screw, stainless	M6 x 12

2820K-RCS

63 47 430
Internal ref. 63 44 430

An Oshkosh Corportation Company

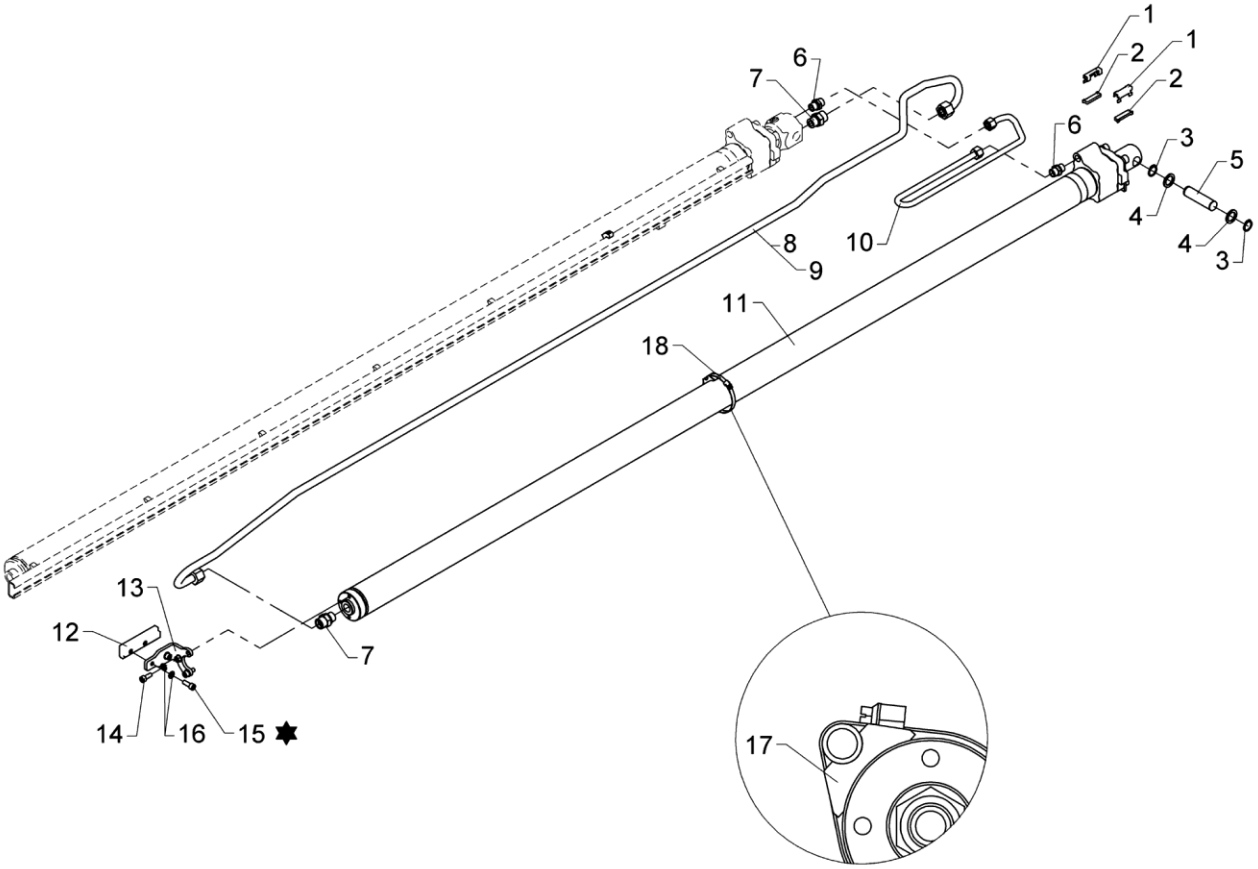

✸ Loctite 243

Extension cylinder VI incl. fittings

Pos	Qty.	Part no.	Description	Remarks
		6344430	Extension cyl. VI(K6)+fittings	
		6347430	Ext. cyl. VI (K6)+fittings	
1	2	31920	Clip, stainless, 10mm	
2	2	6340317	Lock plate (10 mm)	
3	2	33110	Circlip	22U
4	2	33228	Back ring	SS 22 x 32 x 2
5	1	6304229	Pin	
6	2	25127	Connection	P-GEV 12 LR-WD
7	2	26334	Connection	P-GEV 16 SR-WD
8	1	6344652	Pipe	
9	1	6345652	Pipe, CVI extend	Kurvekan/Man basket
10	1	6344653	Pipe	
11	1	6344600	Extension cylinder VI	
12	1	63689	Slide block with bushing	
13	1	6344529	Bracket for slide block	
14	3	30438	Screw	MC8 x 20
15	2	30460	Sockethead screw	MC8 x 22
16	5	31147	Face washer, 8 mm	8 mm
17	1	64409	Clamp	
18	1	31406	Clip	

2820K-RCS

63 47 460
Internal ref. 63 44 450

An Oshkosh Corportation Company

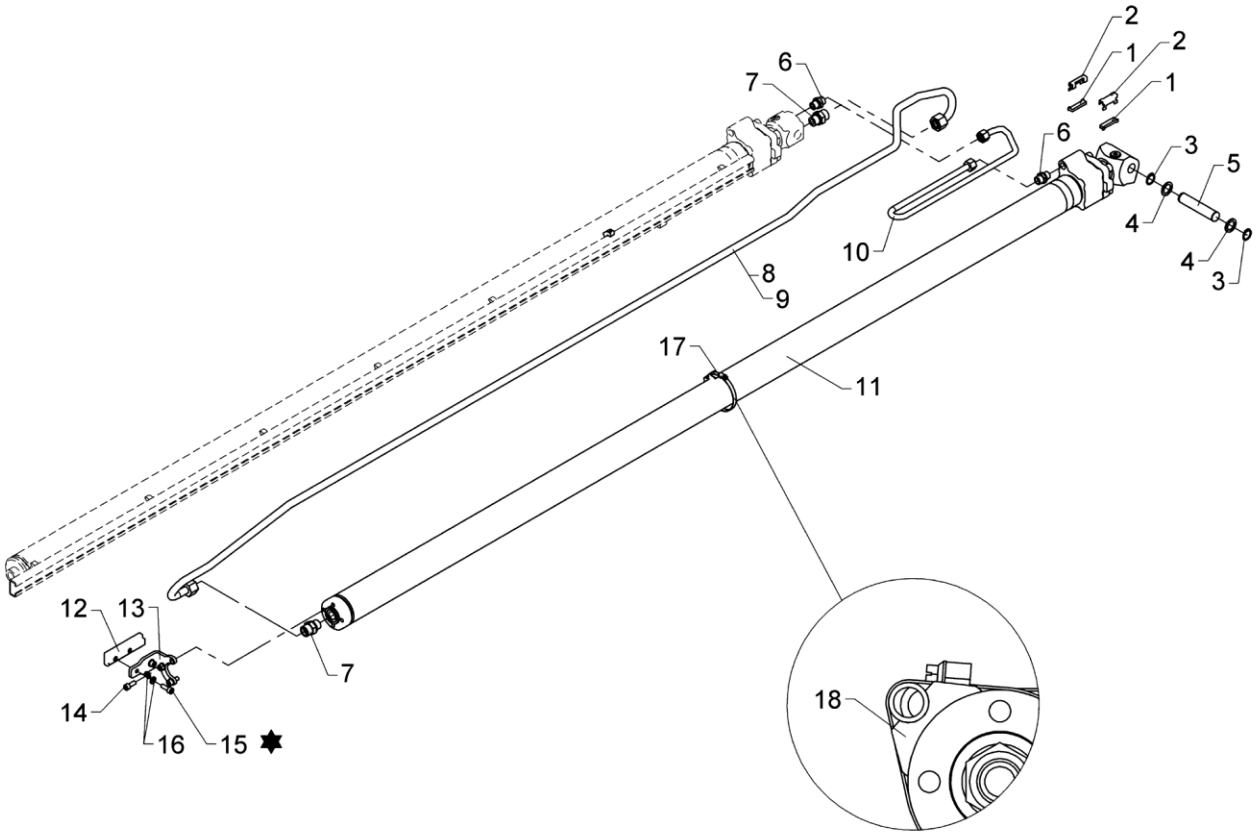

✸ Loctite 243

Extension cylinder VI (K7/K8) incl. fittings

Pos	Qty.	Part no.	Description	Remarks
		6344450	Ext. cyl.VI (K7/K8) + fittings	
		6347460	Ext. cyl. VI(K7/K8)+fittings	
1	2	6340317	Lock plate (10 mm)	
2	2	31920	Clip, stainless, 10mm	
3	2	33110	Circlip	22U
4	2	33228	Back ring	SS 22 x 32 x 2
5	1	6344527	Pin	
6	2	25127	Connection	P-GEV 12 LR-WD
7	2	26334	Connection	P-GEV 16 SR-WD
8	1	6344652	Pipe	
9	1	6345652	Pipe, CVI extend	Kurvekan/Man basket
10	1	6344653	Pipe	
11	1	6344610	Extension cylinder VI	
12	1	63689	Slide block with bushing	
13	1	6344528	Bracket for slide block	
14	3	30438	Screw	MC8 x 20
15	2	30460	Sockethead screw	MC8 x 22
16	5	31147	Face washer, 8 mm	8 mm
17	1	31406	Clip	
18	1	64409	Clamp	

2820K-RCS

63 47 470
Internal ref. 63 44 470

An Oshkosh Corportation Company

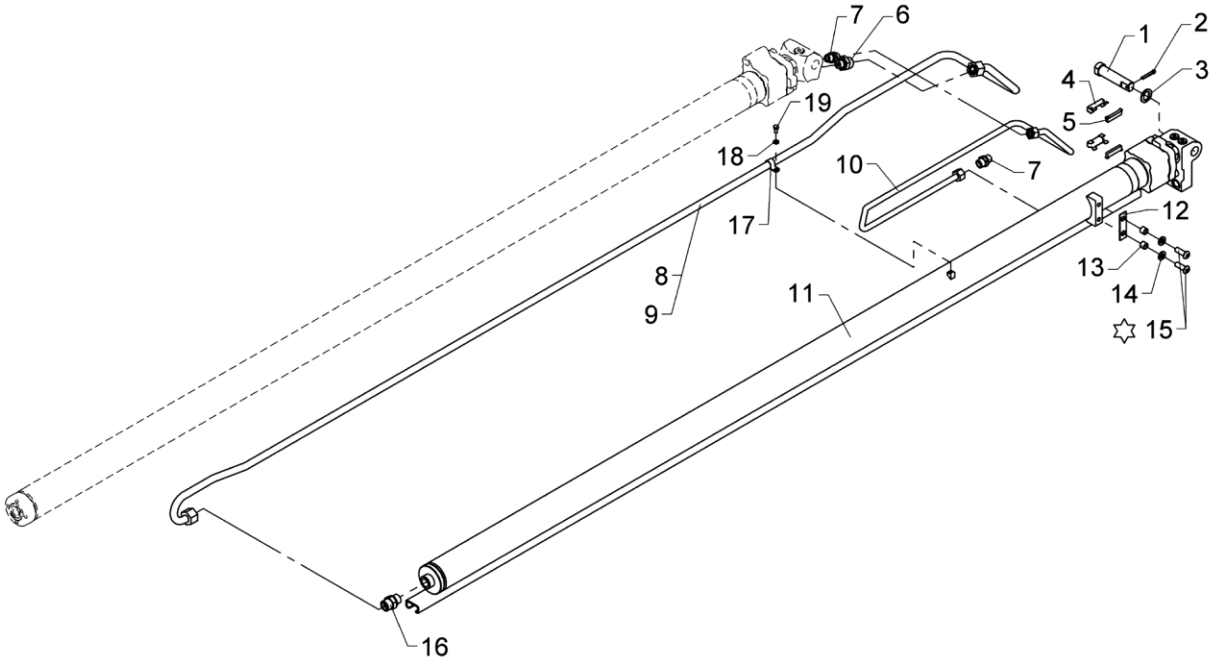

✡ Loctite 243

Extension cylinder VII incl. fittings

Pos	Qty.	Part no.	Description	Remarks
		6344470	Extension cylinderVII+fittings	
		6347470	Ext. cyl. VII+fittings, basket	
1	1	6344525	Pin	
2	1	31634	Split pin	ø5 x 32
3	1	6340526	Spacer	
4	2	31920	Clip, stainless, 10mm	
5	2	6340317	Lock plate (10 mm)	
6	1	26368	Straight connection	P-GEV 16 SR 3/8-WD
7	2	25127	Connection	P-GEV 12 LR-WD
8	1	6344654	Pipe	
9	1	6345654	Pipe, CVII extend	Kurvekan/Man basket
10	1	6344655	Pipe	
11	1	6344620	Extension cylinder VII	
12	1	6304279	Shim	
13	2	6302369	Spacer	
14	2	31177	Washer	10 mm
15	2	30649	Screw	M10 x 30
16	1	26334	Connection	P-GEV 16 SR-WD
17	1	33493	Clamp	
18	1	32302	Face washer, stainless	6 mm
19	1	30111	Set screw, stainless	M6 x 12

2820K-RCS

63 47 490
Internal ref. 63 44 490

An Oshkosh Corportation Company

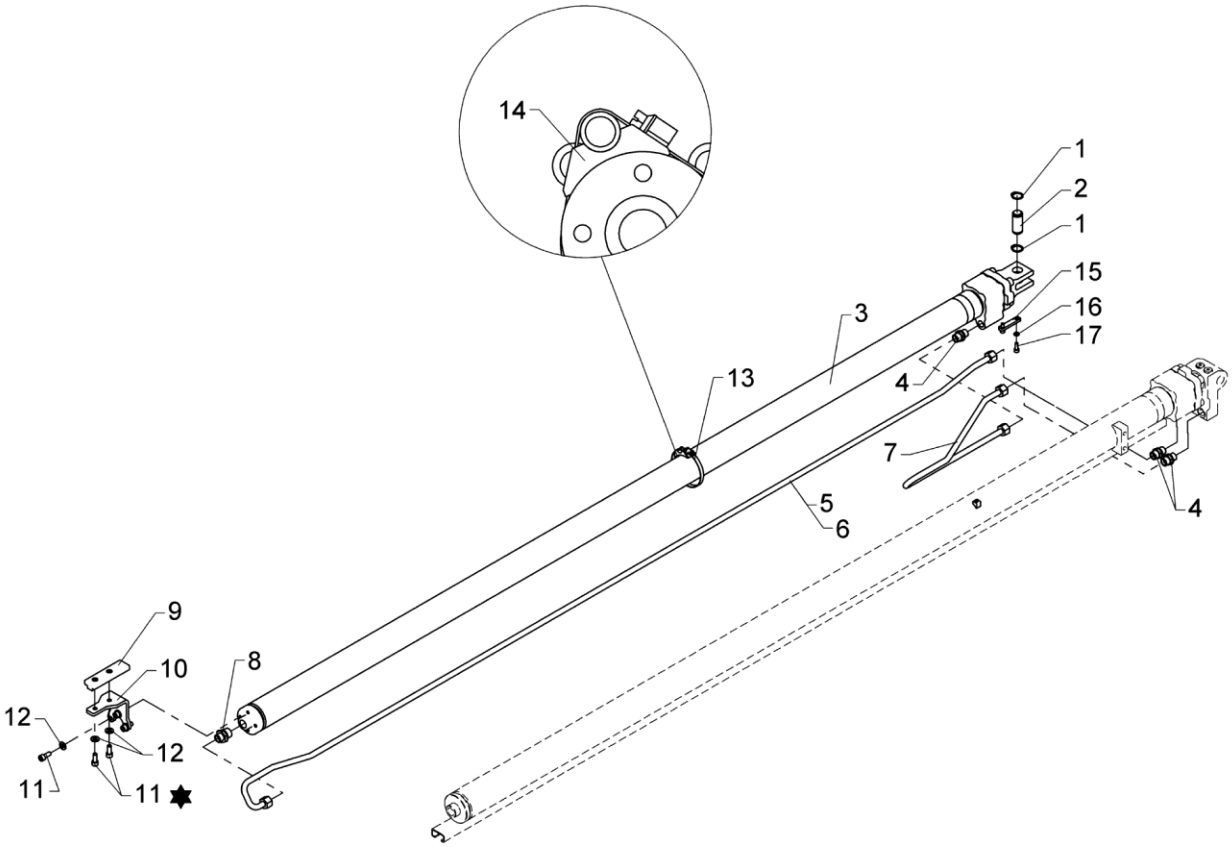

✸ Loctite 243

Extension cylinder VIII incl. fittings

565 03 570

From loader 1440001
To loader

Created 06-01-2009
Modified 23-05-2011

Pos	Qty.	Part no.	Description	Remarks
		6344490	Extension cyl. VIII + fittings	
		6347490	Ext. cyl.VIII+fittings, basket	
1	2	33110	Circlip	22U
2	1	6306379	Pin	
3	1	6344630	Extension cylinder VIII	
4	3	25127	Connection	P-GEV 12 LR-WD
5	1	6344656	Pipe	
6	1	6345656	Pipe CVIII extend	Kurvekan/Man basket
7	1	6344657	Pipe	
8	1	25108	Connection	GES 12 LR 1/2-WD
9	1	63689	Slide block with bushing	
10	1	6344639	Bracket for slide block	
11	5	30438	Screw	MC8 x 20
12	5	31754	Washer	8,4 x 18 x 2
13	1	31406	Clip	
14	1	64409	Clamp	
15	2	6340336	Lock plate	
16	4	31154	Spring washer, stainless	6 mm
17	4	31539	Screw, stainless	MC6 x 16

2820K-RCS

Internal ref. 63 44 690

An Oshkosh Corportation Company

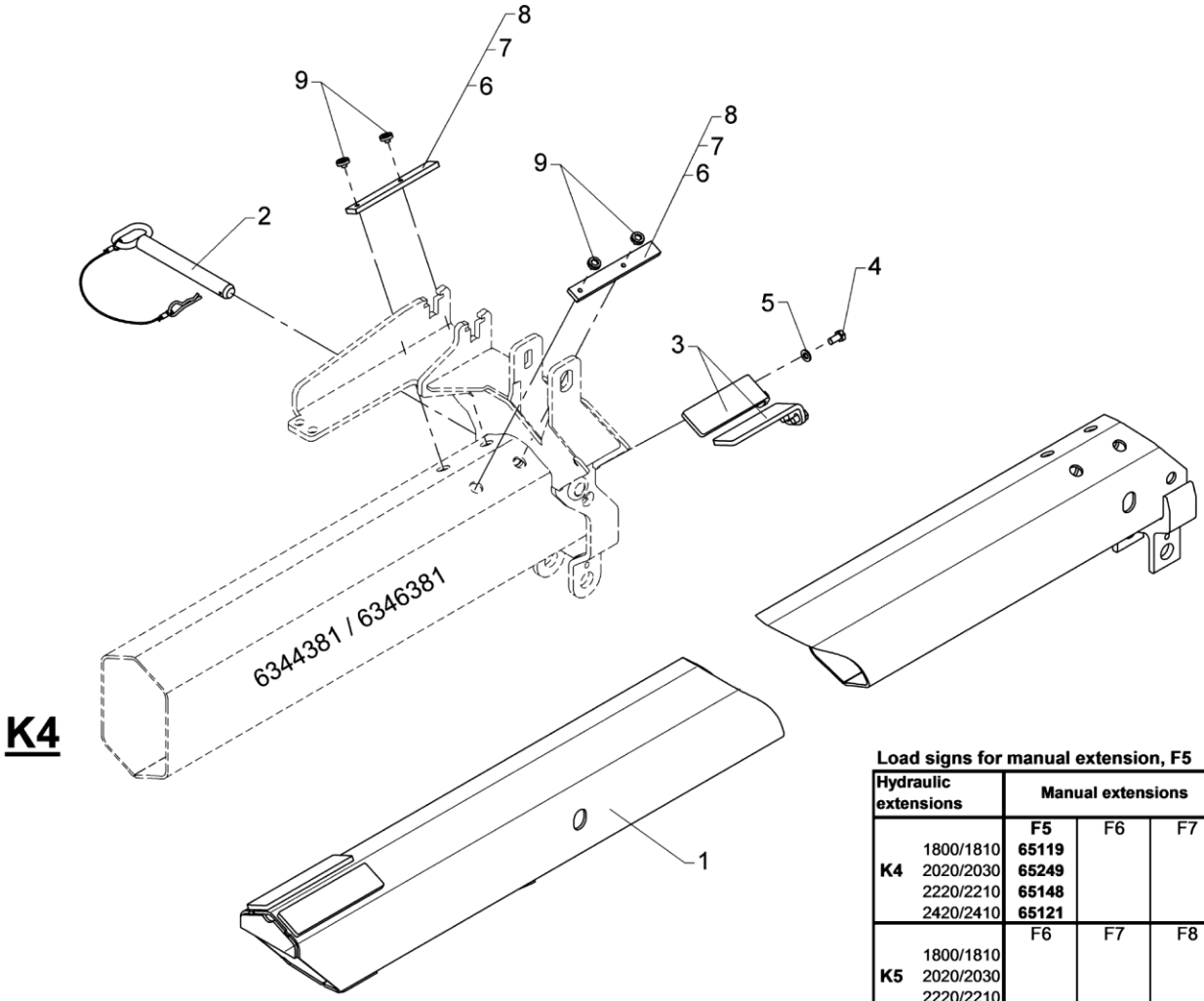

K4

Load signs for manual extension, F5

Hydraulic extensions		Manual extensions		
		F5	F6	F7
K4	1800/1810 2020/2030 2220/2210 2420/2410	**65119** **65249** **65148** **65121**		
		F6	F7	F8
K5	1800/1810 2020/2030 2220/2210 2420/2410			
		F7	F8	F9
K6	1800/1810 2020/2030 2220/2210 2420/2410			
		F8	F9	
K7	1800/1810 2020/2030 2220/2210 2420/2410			
		F9		
K8	1800/1810 2020/2030 2220/2210 2420/2410			

Manual extension, F5

565 03 740

From loader 1440001
To loader

Created 06-01-2009
Modified

Pos	Qty.	Part no.	Description	Remarks
1	1	6344691	Manual extension, F5	
2	1	6092454	Lock pin with chain	
3	2	6340689	Shim	
4	4	30154	Set screw	M10 x 20
5	4	31177	Washer	10 mm
6	2	6243004	Wear plate	6 mm
7	2	6244064	Wear plate	7 mm
8	2	6243014	Wear plate	8 mm
9	4	31864	Allen screw	M8 x 6

2820K-RCS

Internal ref. 63 44 700

An Oshkosh Corportation Company

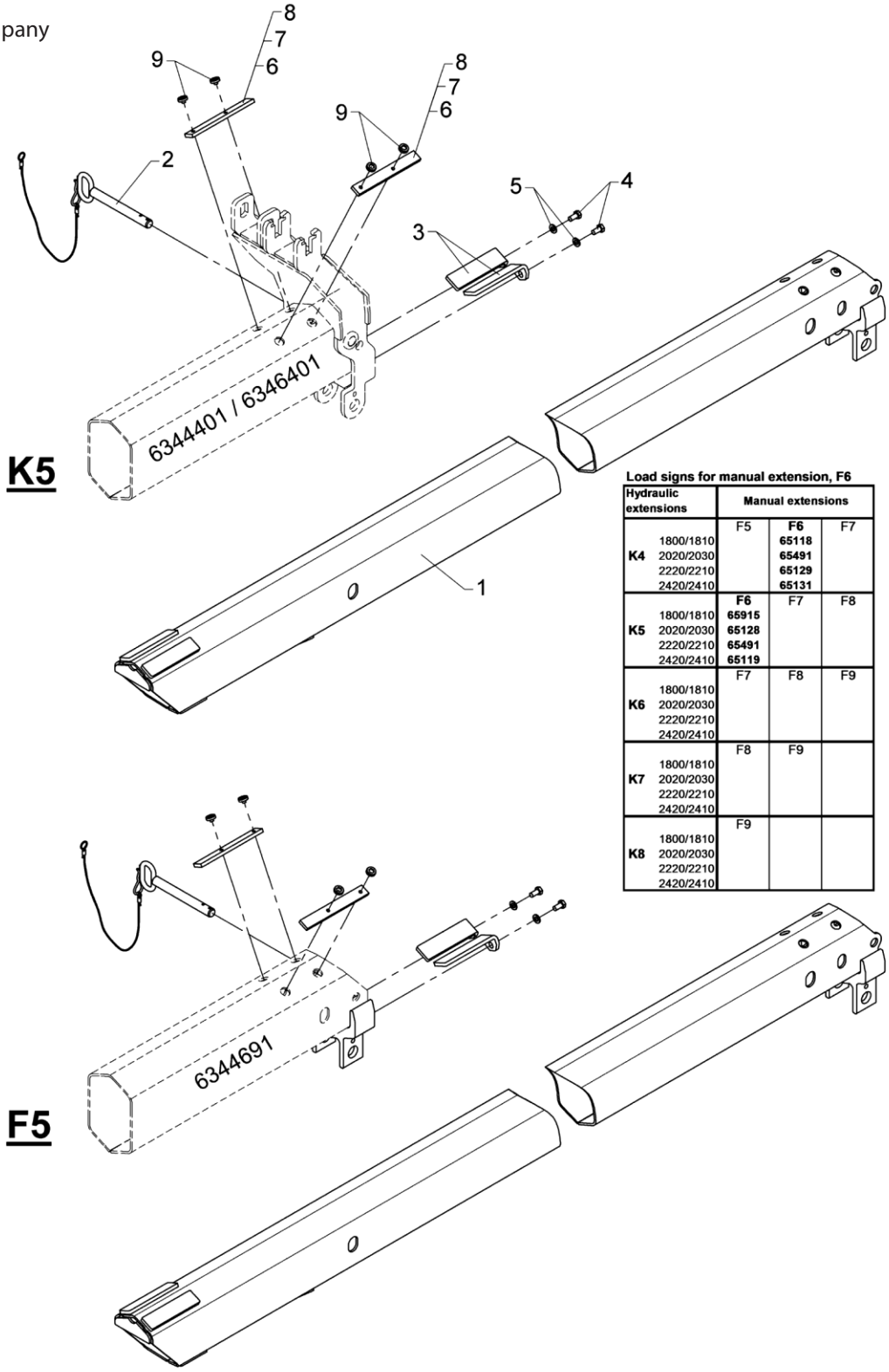

Load signs for manual extension, F6

Hydraulic extensions		Manual extensions		
K4	1800/1810 2020/2030 2220/2210 2420/2410	F5	**F6** **65118** **65491** **65129** **65131**	F7
K5	1800/1810 2020/2030 2220/2210 2420/2410	**F6** **65915** **65128** **65491** **65119**	F7	F8
K6	1800/1810 2020/2030 2220/2210 2420/2410	F7	F8	F9
K7	1800/1810 2020/2030 2220/2210 2420/2410	F8	F9	
K8	1800/1810 2020/2030 2220/2210 2420/2410	F9		

Manual extension, F6

565 03 750

From loader 1440001
To loader

Created 06-01-2009
Modified

Pos	Qty.	Part no.	Description	Remarks
1	1	6344701	Manual extension, F6	
2	1	6340397	Lock pin with lock spring	
3	2	6340699	Shim	
4	2	30154	Set screw	M10 x 20
5	2	31177	Washer	10 mm
6	2	6243004	Wear plate	6 mm
7	2	6244064	Wear plate	7 mm
8	2	6243014	Wear plate	8 mm
9	4	31864	Allen screw	M8 x 6

2820K-RCS

Internal ref. 63 44 710

An Oshkosh Corportation Company

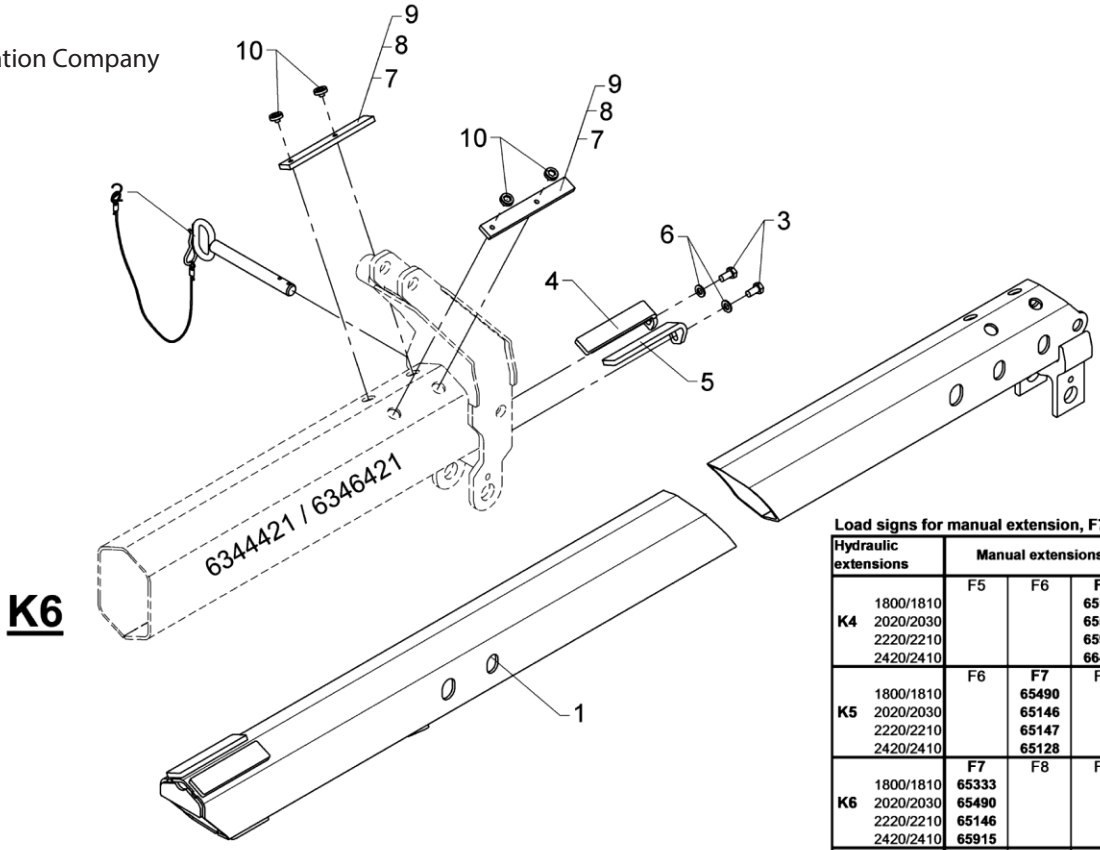

K6

Load signs for manual extension, F7

Hydraulic extensions		Manual extensions		
		F5	F6	**F7**
K4	1800/1810 2020/2030 2220/2210 2420/2410			**65117** **65552** **65915** **66460**
		F6	**F7**	F8
K5	1800/1810 2020/2030 2220/2210 2420/2410		**65490** **65146** **65147** **65128**	
		F7	F8	F9
K6	1800/1810 2020/2030 2220/2210 2420/2410	**65333** **65490** **65146** **65915**		
		F8	F9	
K7	1800/1810 2020/2030 2220/2210 2420/2410			
		F9		
K8	1800/1810 2020/2030 2220/2210 2420/2410			

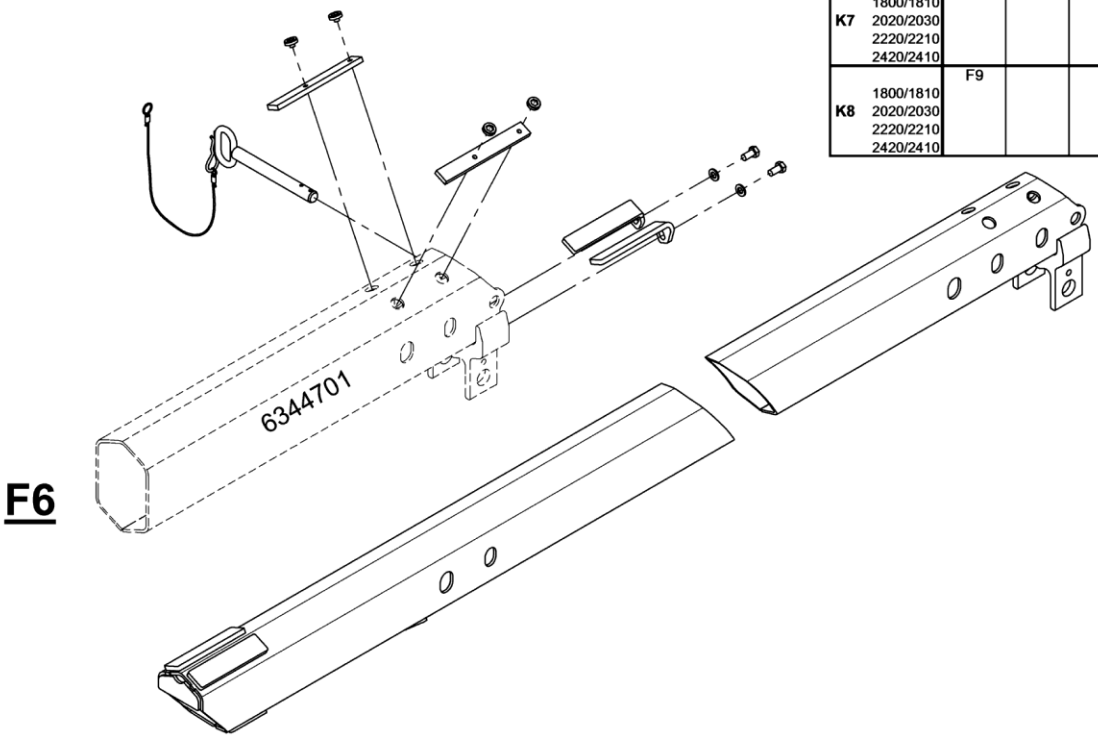

F6

Manual extension, F7

565 03 760

From loader 1440001
To loader

Created 06-01-2009
Modified

Pos	Qty.	Part no.	Description	Remarks
1	1	6344711	Manual extension, F7	
2	1	6340397	Lock pin with lock spring	
3	2	31517	Set screw, stainless	M10 x 20
4	1	6340709	Shim, left	
5	1	6340708	Shim, right	
6	2	31177	Washer	10 mm
7	2	6243004	Wear plate	6 mm
8	2	6244064	Wear plate	7 mm
9	2	6243014	Wear plate	8 mm
10	4	31864	Allen screw	M8 x 6

2820K-RCS

Internal ref. 63 44 720

An Oshkosh Corportation Company

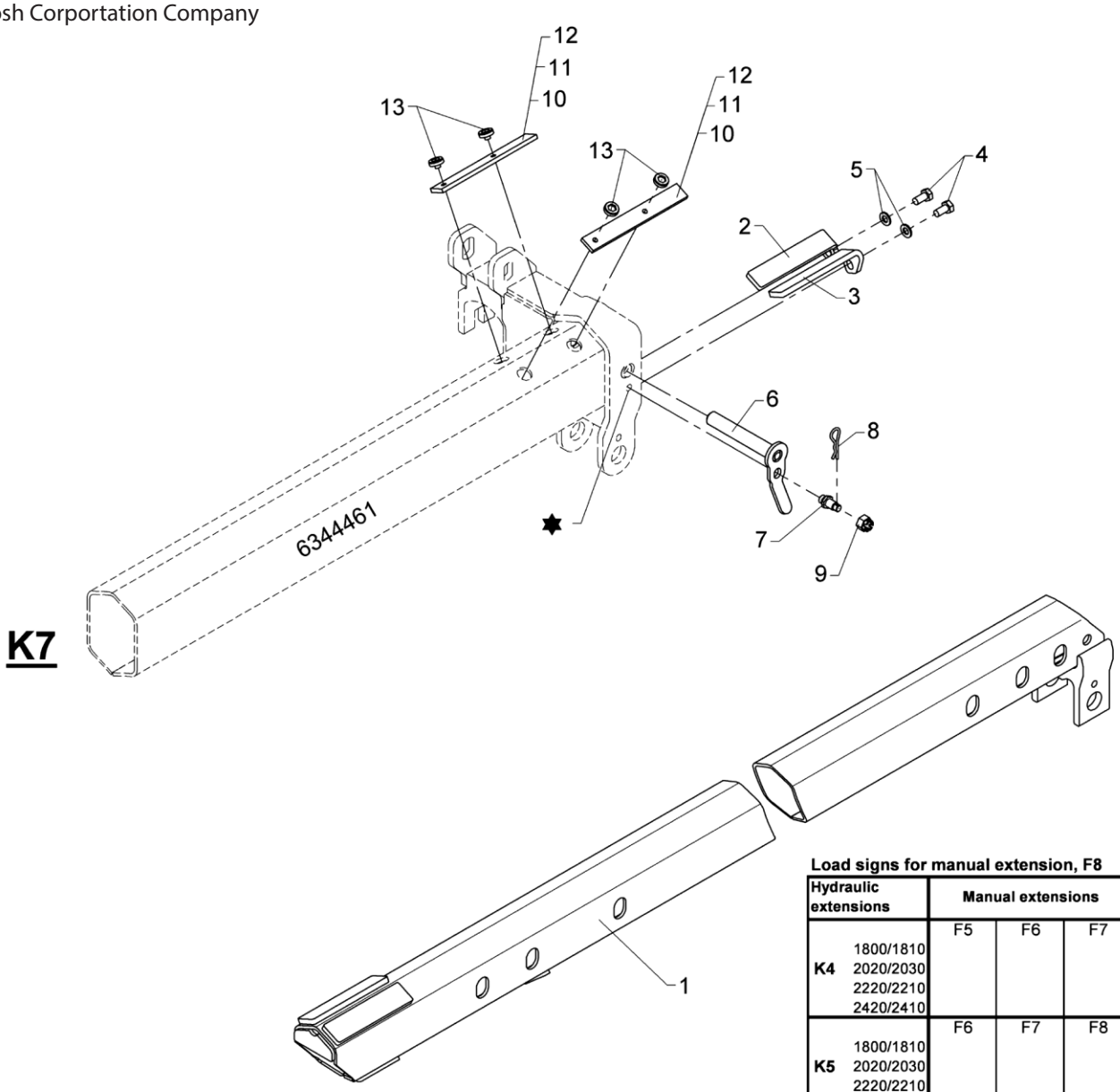

K7

Load signs for manual extension, F8

Hydraulic extensions		Manual extensions		
K4	1800/1810 2020/2030 2220/2210 2420/2410	F5	F6	F7
K5	1800/1810 2020/2030 2220/2210 2420/2410	F6	F7	F8
K6	1800/1810 2020/2030 2220/2210 2420/2410	F7	F8	F9
K7	1800/1810 2020/2030 2220/2210 2420/2410	**F8** **66461** **65965** **65115** **65563**	F9	
K8	1800/1810 2020/2030 2220/2210 2420/2410	F9		

Manual extension, F8 (F8 in K7)

565 03 770

From loader 1440001
To loader

Created 06-01-2009
Modified

Pos	Qty.	Part no.	Description	Remarks
1	1	6344721	Manual extension, F8	
2	1	6340709	Shim, left	
3	1	6340708	Shim, right	
4	2	31517	Set screw, stainless	M10 x 20
5	2	31177	Washer	10 mm
6	1	6344727	Pin	
7	1	6340359	Lock pin	
8	1	33379	Spring	
9	1	32127	Nut	M12
10	2	6243004	Wear plate	6 mm
11	2	6244064	Wear plate	7 mm
12	2	6243014	Wear plate	8 mm
13	4	31864	Allen screw	M8 x 6

2820K-RCS

Internal ref. 63 44 740

An Oshkosh Corportation Company

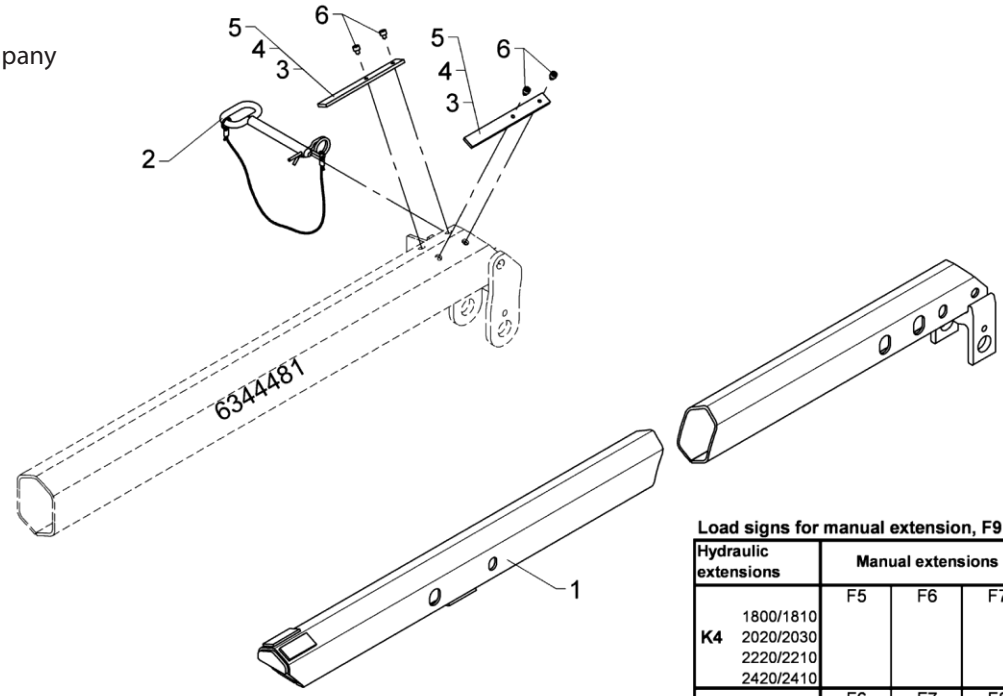

K8

Load signs for manual extension, F9

Hydraulic extensions		Manual extensions		
		F5	F6	F7
K4	1800/1810 2020/2030 2220/2210 2420/2410			
		F6	F7	F8
K5	1800/1810 2020/2030 2220/2210 2420/2410			
		F7	F8	**F9**
K6	1800/1810 2020/2030 2220/2210 2420/2410			**66594** **65559** **66594** **65590**
		F8	**F9**	
K7	1800/1810 2020/2030 2220/2210 2420/2410		**66594** **65590** **66594** **65590**	
		F9		
K8	1800/1810 2020/2030 2220/2210 2420/2410	**66594** **65590** **66594** **65590**		

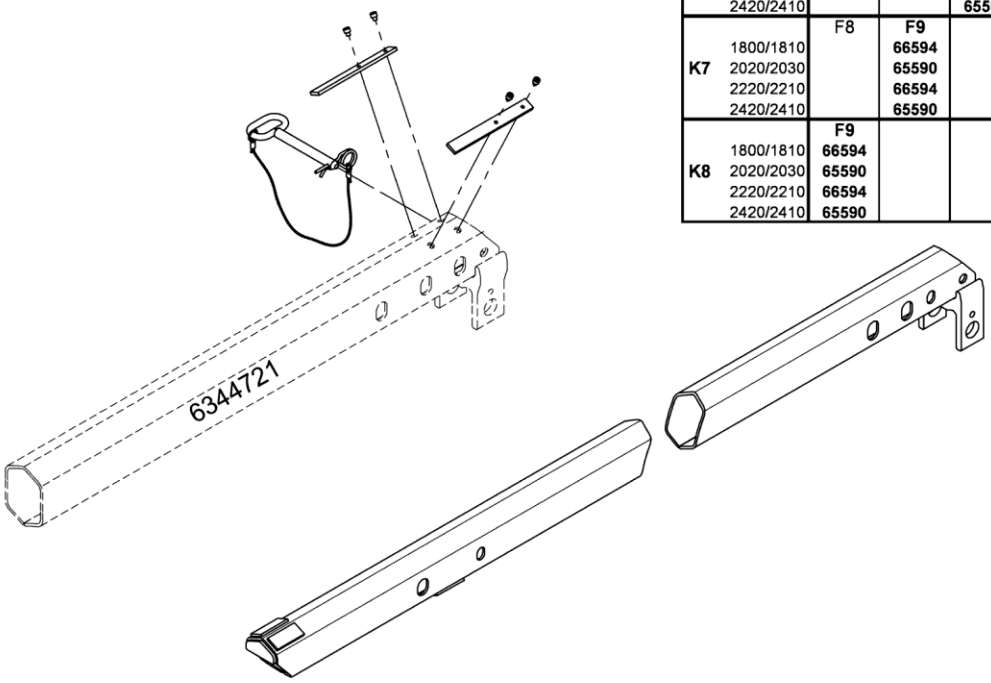

F8

Manual extension, F9

565 03 780

From loader 1440001
To loader

Created 06-01-2009
Modified 17-04-2009

Pos	Qty.	Part no.	Description	Remarks
1	1	6344731	Manual extension, F9	
2	1	6135434	Lock pin	
3	2	6233814	Wear plate	
4	2	6233794	Wear plate	
5	2	6233804	Wear plate	
6	4	30956	Screw	MC6 x 6

2820K-RCS

Internal ref. 63 47 220

An Oshkosh Corportation Company

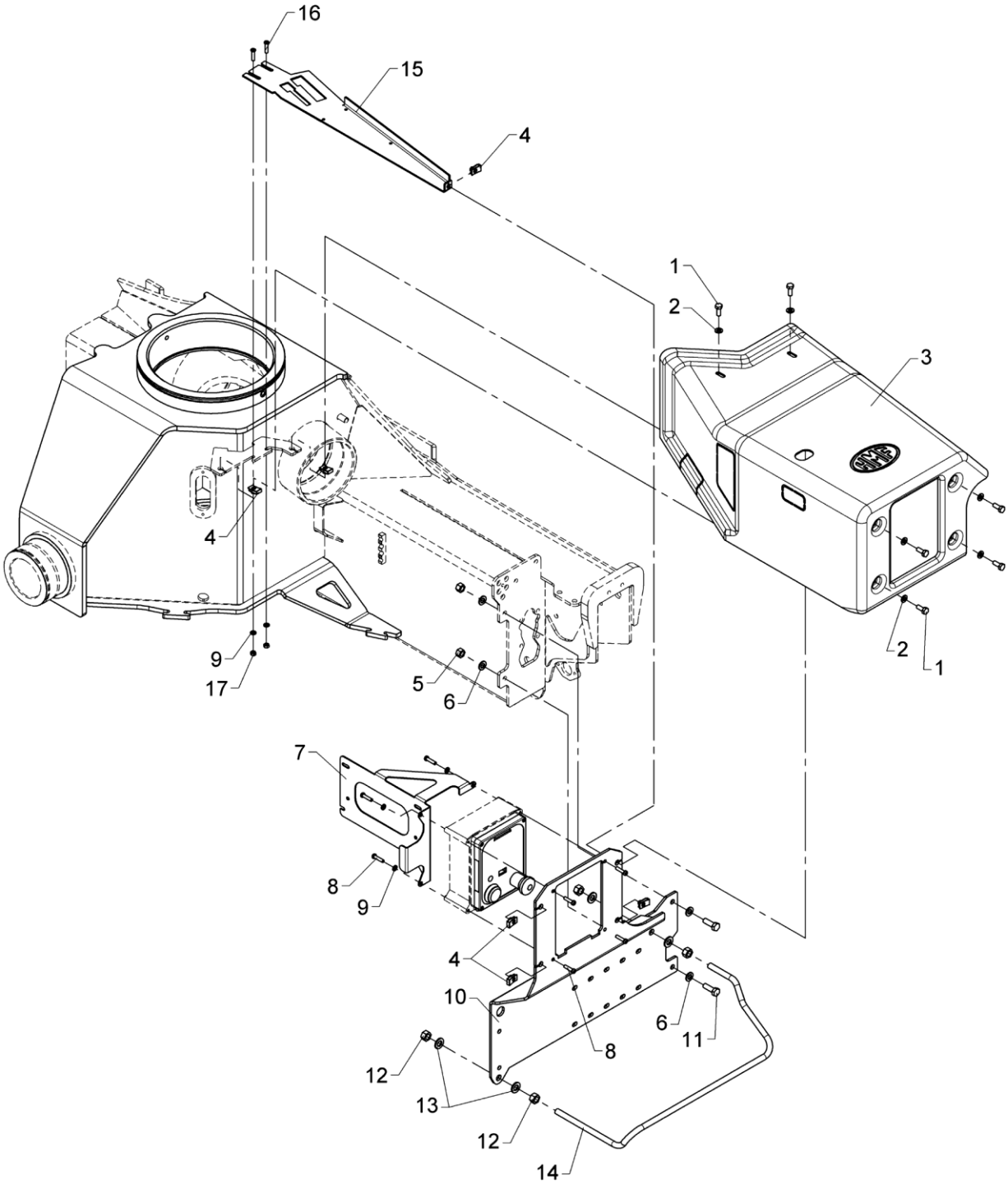

565 05 010

From loader 1440001
To loader

Valve bracket - RCS

Created 29-08-2018
Modified 21-09-2018

Pos	Qty.	Part no.	Description	Remarks
1	6	30132	Set screw, stainless	
2	6	31147	Face washer, 8 mm	
3	1	64407	Shield	
4	6	31069	Clip	M8 1,5 - 5,5 mm.
5	2	31564	Lock nut, stainless	M10
6	4	31565	Washer, stainless	10 mm
7	1	6340242	Mounting fittings	
8	7	30340	Screw, stainless	6,0 x 25
9	5	32302	Face washer, stainless	6 mm
10	1	6347241	Valve bracket	
11	2	30156	Set screw, stainless	M10 x 30
12	4	30860	Nut, stainless	M12
13	4	32338	Washer	12 mm
14	1	6347973	Clamp	
15	1	6340946	Reinforcement	
16	2	32509	Screw, 6 x 25	MC6 x 25
17	2	30854	Nut, stainless	M6

2820K-RCS

Internal ref. 63 41 260

An Oshkosh Corportation Company

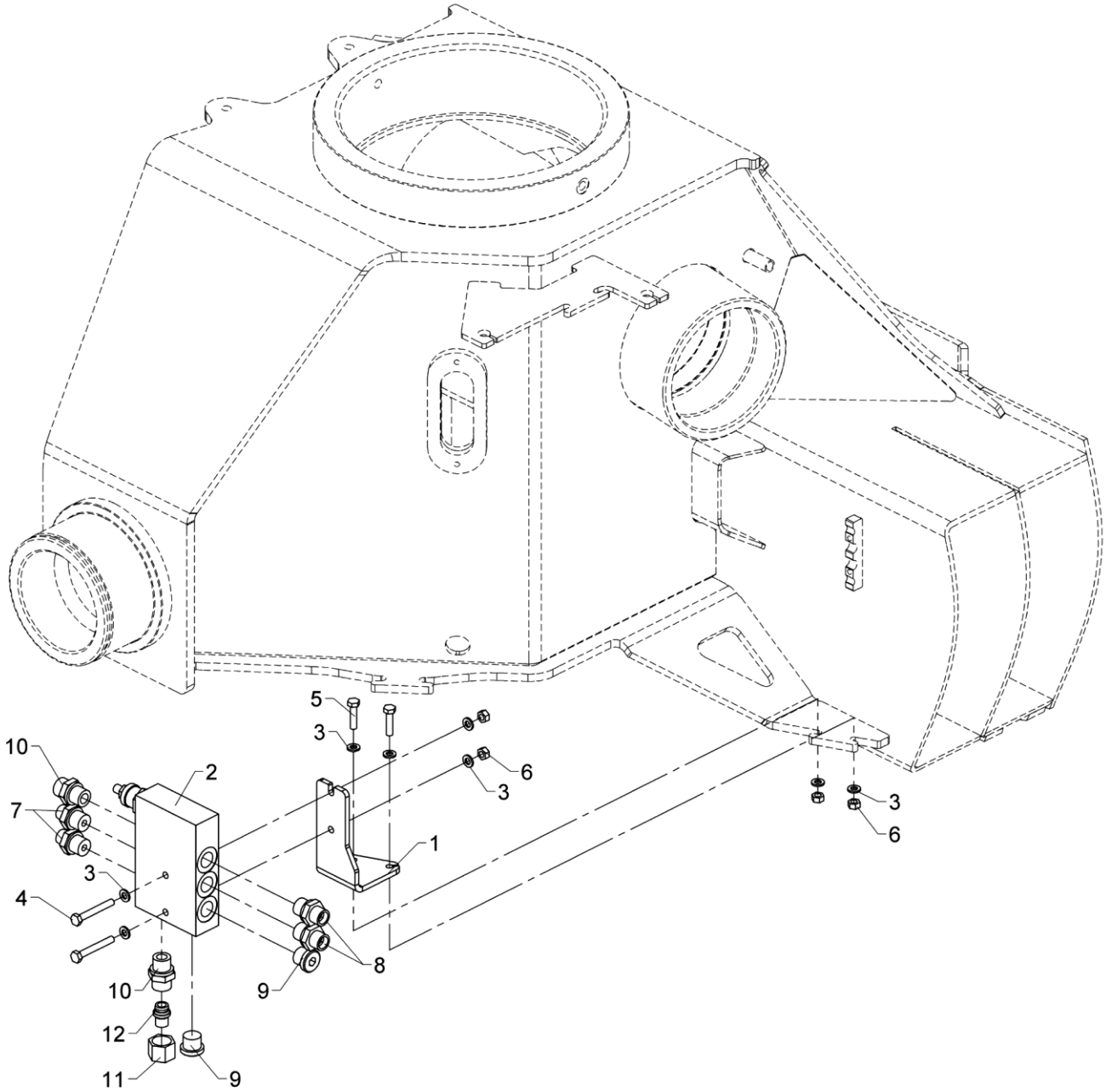

Counter-balance valve

Pos	Qty.	Part no.	Description	Remarks
1	1	6340273	Bracket (counter-balance valve	
2	1	50521	Sequence valve	
3	8	32302	Face washer, stainless	6 mm
4	2	30118	Steel pin, stainless	M6 x 45
5	2	30114	Set screw, stainless	M6 x 25
6	4	30854	Nut, stainless	M6
7	2	25244	Connection	GES 8 LR 3/8-WD
8	2	25253	Connection	P-GEV 10 LR 3/8-WD
9	2	25277	Plug	VS-R-3/8 WD
10	2	25127	Connection	P-GEV 12 LR-WD
11	1	25183	Coupling nut	M 12 L
12	1	26180	Blanking plug	VSD 12 L

2820K-RCS

63 41 600
Internal ref. 63 41 210

An Oshkosh Corportation Company

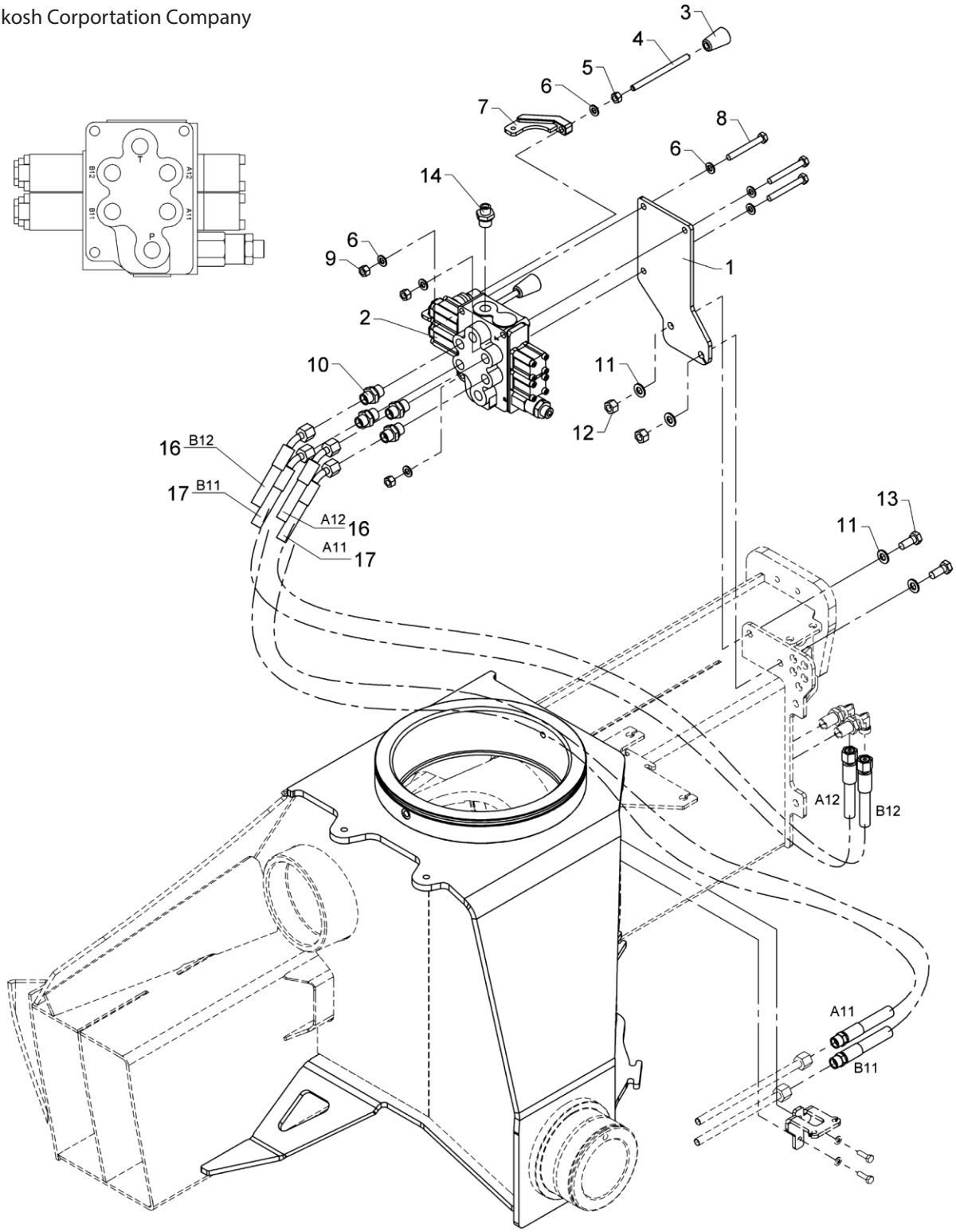

565 05 200

From loader 1440001
To loader

Valve bracket, cpl. 2 fcts.

Created 20-11-2008
Modified 05-05-2014

Pos	Qty.	Part no.	Description	Remarks
		6341210	Valve bracket, compl. 2 functs	
		6341600	Hose kit, 2 functions	
1	1	6340254	Valve bracket (2 functions)	
2	1	55225	Stabilizer valve	
3	2	59224	Knob for lever	
4	2	1330187	Control lever, long, straight	
5	2	30856	Nut, stainless	M8
6	8	31147	Face washer, 8 mm	8 mm
7	2	63450	Adapter for dual controls	
8	3	30259	Steel bolt, stainless	M8 x 65
9	3	30886	Lock nut, stainless	M8
10	4	25253	Connection	P-GEV 10 LR 3/8-WD
11	4	31565	Washer, stainless	10 mm
12	2	31564	Lock nut, stainless	M10
13	2	31513	Set screw, stainless	M10 x 25
14	1	25244	Connection	GES 8 LR 3/8-WD
15	1	6341600	Hose kit, 2 functions	
16	2	56393	Hose	5/16"x950mm L/V 10Let / vinkel 45
17	2	56394	Hose	5/16"x600mm S/V 10L studs / vinke

2820K-RCS

63 41 600
Internal ref. 63 41 060

An Oshkosh Corportation Company

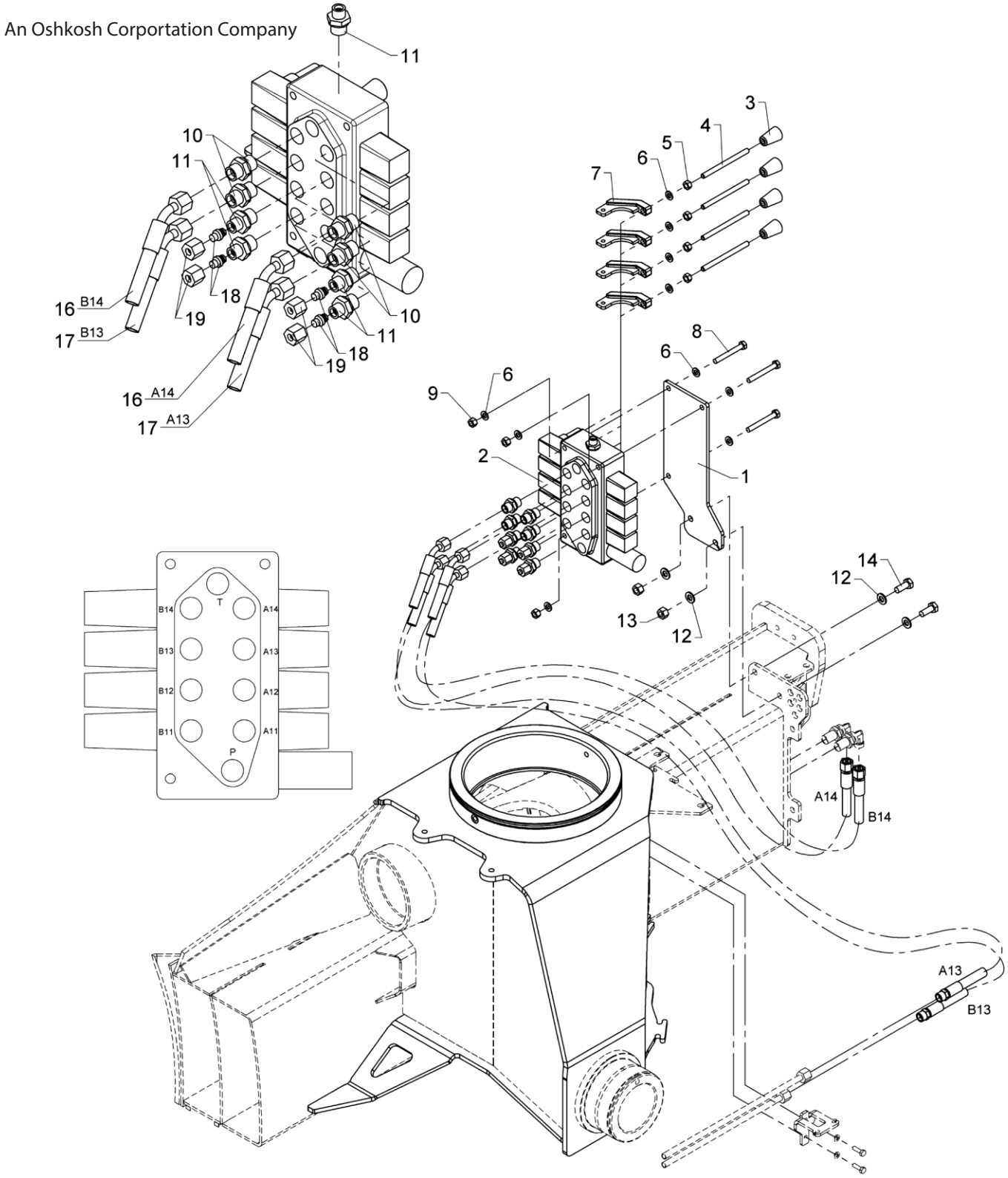

From loader 1440001
To loader
Created
Modified 05-05-2014

Valve bracket, cpl., 2 fcts. + 2 available fcts.

Pos	Qty.	Part no.	Description	Remarks
		6341060	Valve br., cpl.2fcts.+2 avail.	
		6341600	Hose kit, 2 functions	
1	1	6340255	Valve bracket (4 functions)	
2	1	55226	Stabilizer valve	
3	4	59224	Knob for lever	
4	4	1330187	Control lever, long, straight	
5	4	30856	Nut, stainless	M8
6	10	31147	Face washer, 8 mm	8 mm
7	4	63450	Adapter for dual controls	
8	3	30259	Steel bolt, stainless	M8 x 65
9	3	30886	Lock nut, stainless	M8
10	4	25253	Connection	P-GEV 10 LR 3/8-WD
11	5	25244	Connection	GES 8 LR 3/8-WD
12	4	31565	Washer, stainless	10 mm
13	2	31564	Lock nut, stainless	M10
14	2	31513	Set screw, stainless	M10 x 25
15	1	6341600	Hose kit, 2 functions	
16	2	56393	Hose	5/16"x950mm L/V
17	2	56394	Hose	5/16"x600mm S/V
18	4	26166	Blanking plug	VSD 8 L
19	4	25181	Coupling nut	M 8 L

2820K-RCS

63 41 610
Internal ref. 63 41 220

An Oshkosh Corportation Company

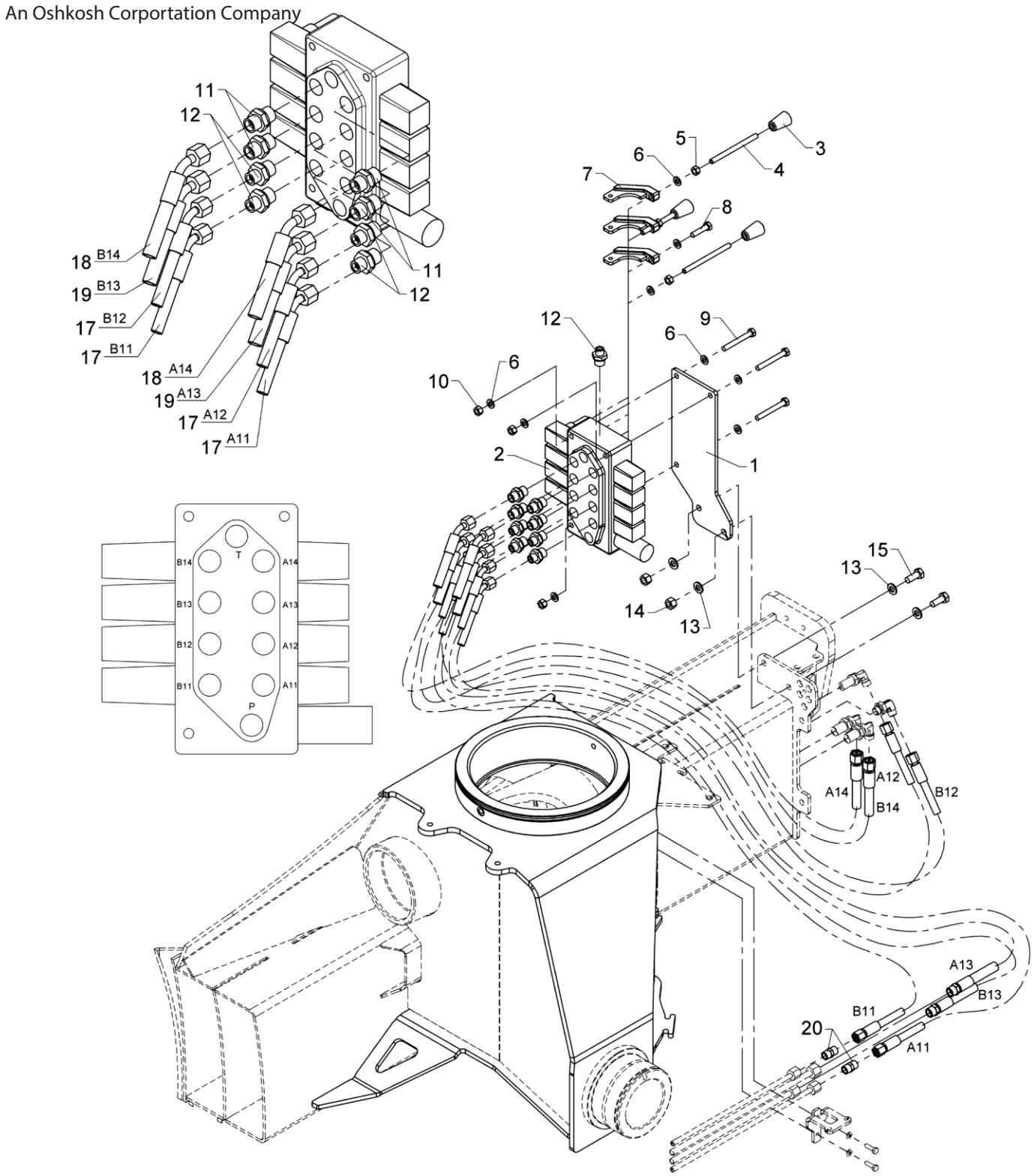

565 05 210

From loader 1440001
To loader

Valve bracket, cpl. 4 fcts.

Created 20-11-2008
Modified 05-05-2014

Pos	Qty.	Part no.	Description	Remarks
		6341220	Valve bracket, cpl., 4 funct.	
		6341610	Hose kit, 4 functions	
1	1	6340255	Valve bracket (4 functions)	
2	1	55226	Stabilizer valve	
3	3	59224	Knob for lever	
4	3	1330187	Control lever, long, straight	
5	3	30856	Nut, stainless	M8
6	10	31147	Face washer, 8 mm	8 mm
7	3	63450	Adapter for dual controls	
8	1	30136	Steel bolt, stainless	M8 x 35
9	3	30259	Steel bolt, stainless	M8 x 65
10	3	30886	Lock nut, stainless	M8
11	4	25253	Connection	P-GEV 10 LR 3/8-WD
12	5	25244	Connection	GES 8 LR 3/8-WD
13	4	31565	Washer, stainless	10 mm
14	2	31564	Lock nut, stainless	M10
15	2	31513	Set screw, stainless	M10 x 25
16	1	6341610	Hose kit, 4 functions	
17	4	56381	Hose	1/4"x600mm L/V 8Let / vinkel 45 gr.
18	2	56393	Hose	5/16"x950mm L/V 10Let / vinkel 45
19	2	56394	Hose	5/16"x600mm S/V 10L studs / vinke
20	2	25246	Double connection	GS 8 L

2820K-RCS

63 41 620
Internal ref. 63 41 250

An Oshkosh Corportation Company

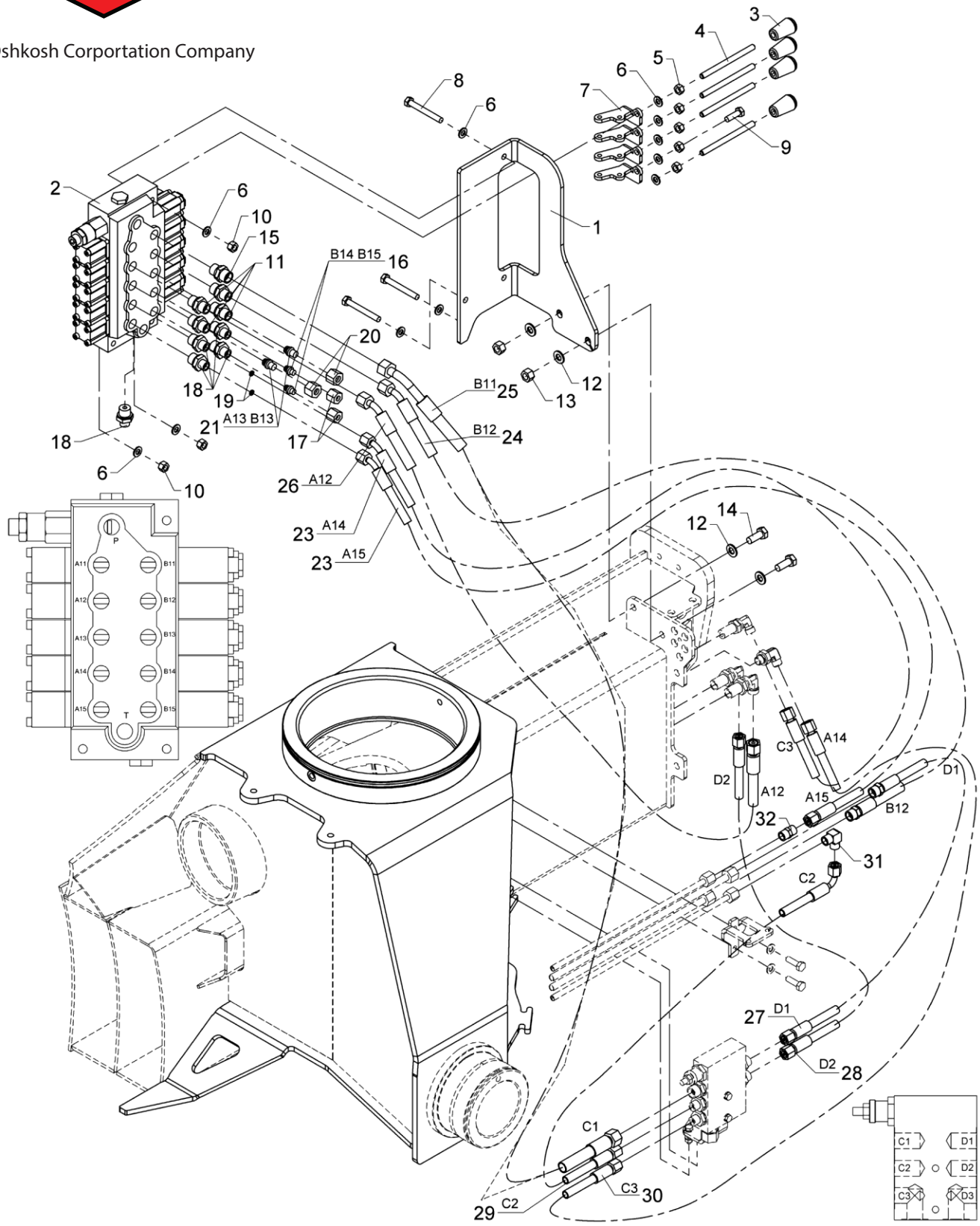

Valve bracket, cpl. 4 fcts. + 4 available

Pos	Qty.	Part no.	Description	Remarks
		6341250	Valve br., cpl.4fcts.+4 avail.	
		6341620	Hose kit, 4 fcts + 4 available	
1	1	6340271	Valve bracket (4 + 4 fcts.)	
2	1	55277	Valve block, complete	
3	4	59224	Knob for lever	
4	4	1330187	Control lever, long, straight	
5	5	30856	Nut, stainless	M8
6	11	31147	Face washer, 8 mm	8 mm
7	4	6340229	Adapter	
8	3	30259	Steel bolt, stainless	M8 x 65
9	1	30134	Set screw, stainless	M8 x 25
10	3	30886	Lock nut, stainless	M8
11	4	25253	Connection	P-GEV 10 LR 3/8-WD
12	4	31565	Washer, stainless	10 mm
13	2	31564	Lock nut, stainless	M10
14	2	31513	Set screw, stainless	M10 x 25
15	1	25127	Connection	P-GEV 12 LR-WD
16	2	26166	Blanking plug	VSD 8 L
17	2	25181	Coupling nut	M 8 L
18	5	25244	Connection	GES 8 LR 3/8-WD
19	2	60963	Washer	
20	2	25182	Coupling nut	M 10 L
21	2	25202	Blanking plug	VSD 10 L
22	1	6341620	Hose kit, 4 fcts + 4 available	
23	2	56381	Hose	1/4"x600mm L/V 8Let / vinkel 45 gr.
24	1	56394	Hose	5/16"x600mm S/V 10L studs / vinke
25	1	56511	Hose	3/8 X 900 mm 45/L 12Let
26	1	56393	Hose	5/16"x950mm L/V 10Let / vinkel 45
27	1	56460	Hose	1/4" x 550mm L/S-10mm
28	1	56510	Hose	1/4 X 600 mm L/L 10Let
29	1	62525	Hose	1/4 X 400 M14 X 1.5 L/90
30	1	62569	Hose	1/4 X 800 M14 X 1.5 L/L
31	1	25247	Elbow connection	WV 8 L
32	1	25246	Double connection	GS 8 L

2820K-RCS

63 53 600
63 47 170
Internal ref. 63 47 160

An Oshkosh Corportation Company

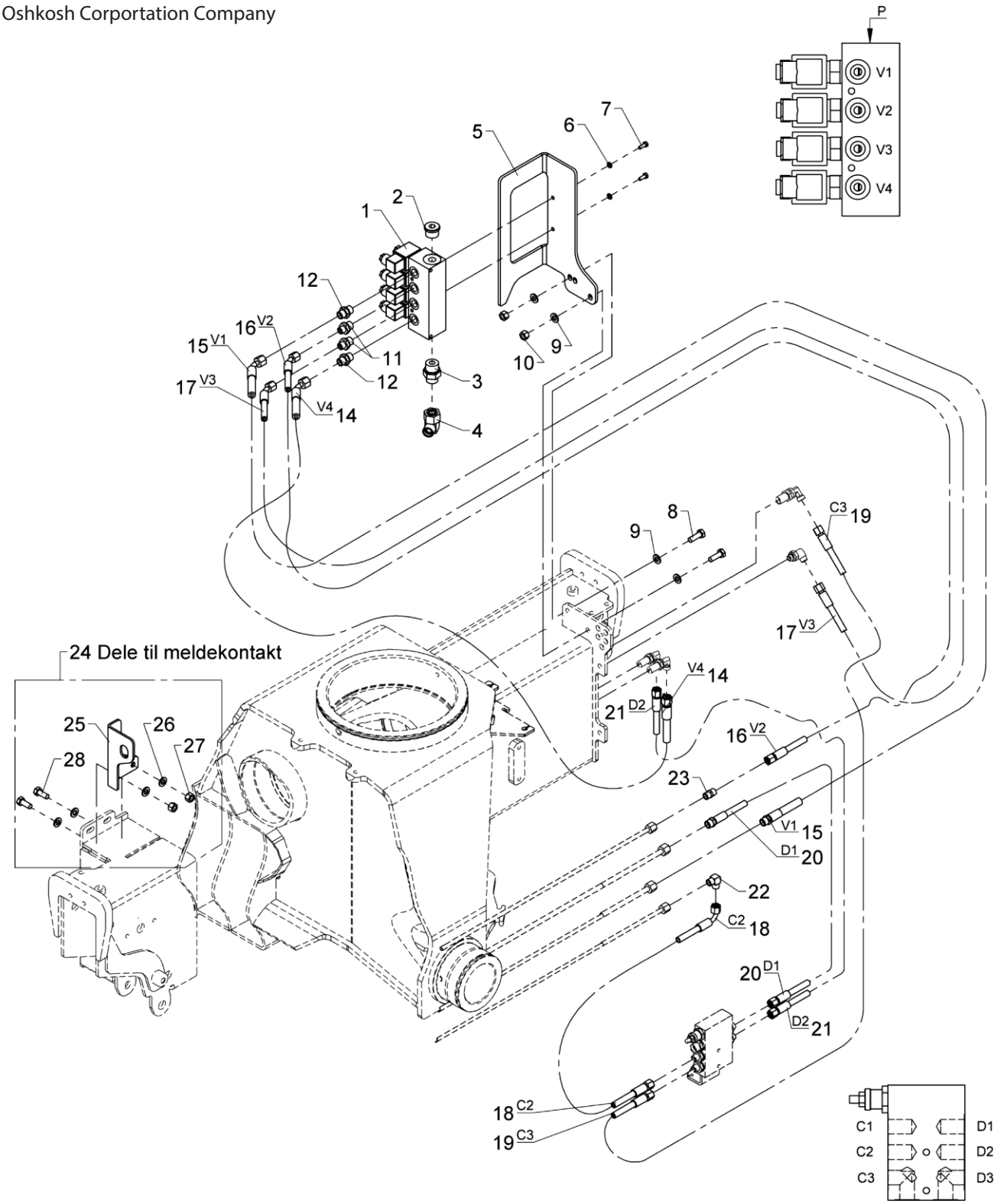

From loader 1440001
To loader

Valve bracket, cpl. 4 fcts. - RC

Created 05-07-2018
Modified

Pos	Qty.	Part no.	Description	Remarks
		6347160		Pos. 1 - 12
		6347170		Pos. 14 - 23
		6353600	Parts f.acknowledgement button	Pos. 25 - 31
1	1	50548	Stabilizer control valve	
2	1	26355	Plug	VS-R-3/4 WD
3	1	26390	Connection	P-GEV 16 SR 3/4-WD
4	1	26340	Elbow connection	EWSD 16 S
5	1	6353274	Valve bracket, 6+8 functions	
6	2	32302	Face washer, stainless	6 mm
7	2	30112	Set screw, stainless	M6 x 16
8	2	30156	Set screw, stainless	M10 x 30
9	4	31565	Washer, stainless	10 mm
10	2	31564	Lock nut, stainless	M10
11	2	25244	Connection	GES 8 LR 3/8-WD
12	2	25253	Connection	P-GEV 10 LR 3/8-WD
13	1	6347170		
14	1	56393	Hose	5/16"x950mm L/V
15	1	56394	Hose	5/16"x600mm S/V
16	1	56381	Hose	
17	1	56963	Hose 1/4"x700mm L/V	
18	1	62525	Hose	1/4 X 400 M14 X 1.5 L/90
19	1	62569	Hose	
20	1	56460	Hose	
21	1	56510	Hose	
22	1	25247	Elbow connection	WV 8 L
23	1	25246	Double connection	GS 8 L
24	1	6353600	Parts f.acknowledgement button	
25	1	6353271	Bracket f. acknowledgemt butto	
26	4	31565	Washer, stainless	10 mm
27	2	31564	Lock nut, stainless	M10
28	2	31513	Set screw, stainless	M10 x 25
29	1	26355	Plug	VS-R-3/4 WD
30	1	26390	Connection	P-GEV 16 SR 3/4-WD
31	1	26340	Elbow connection	EWSD 16 S

2820K-RCS

Internal ref. 63 91 200

An Oshkosh Corportation Company

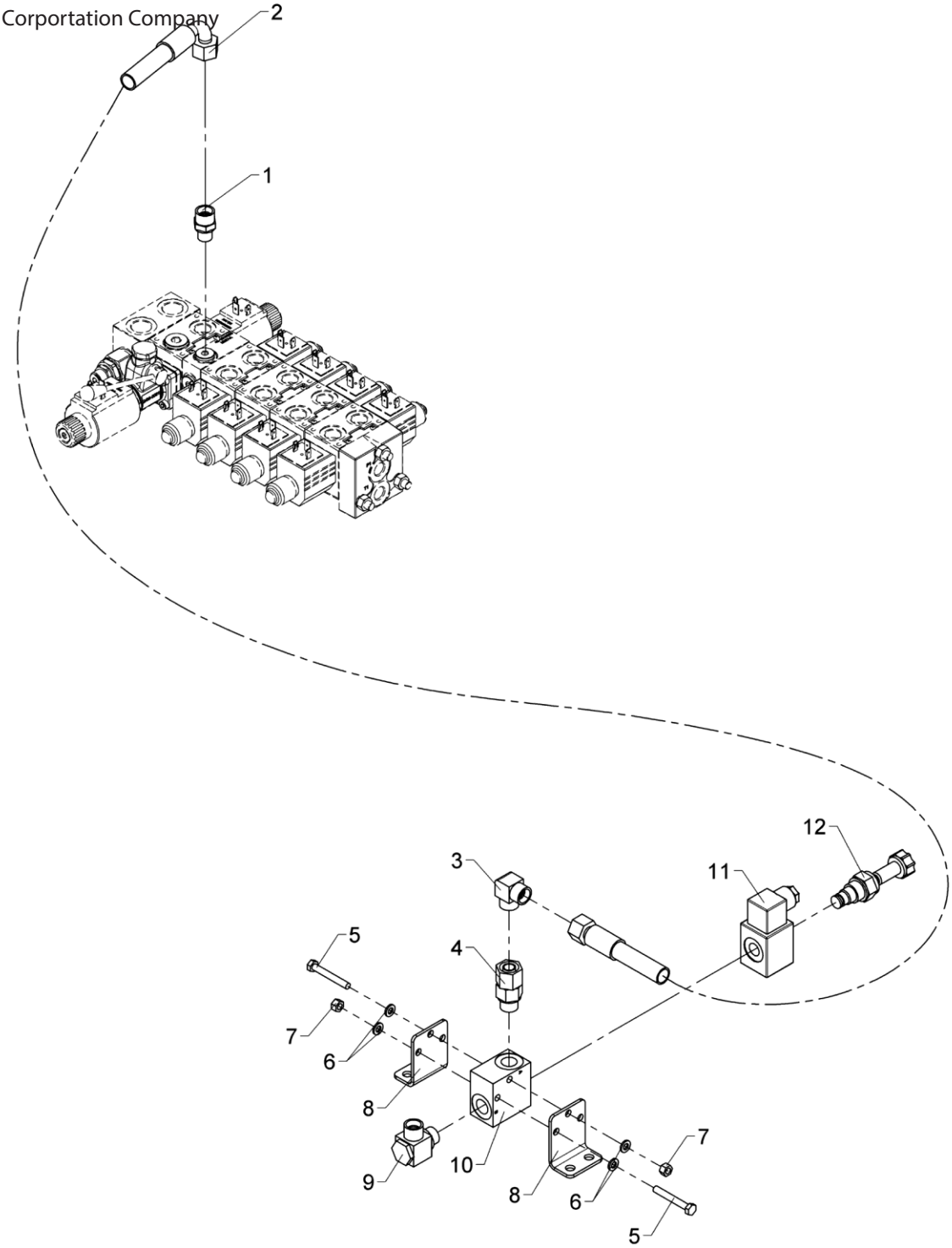

565 05 300

From loader 1440001
To loader

Stabilizer valve block, 5 available functions

Created 17-08-2010
Modified 14-09-2016

Pos	Qty.	Part no.	Description	Remarks
1	1	25195	Connection	P-GEV 12 LR 1/4-WD
2	1	0015020	Hose	3/8" x 1600 mm L/90°
3	1	25129	Elbow connection	WV 12 L
4	1	25240	Connection	EGESD 12 LR-WD
5	2	30118	Steel pin, stainless	M6 x 45
6	4	32302	Face washer, stainless	6 mm
7	2	30884	Lock nut, stainless	M6
8	2	6301202	Bracket	
9	1	25130	Banjo connection	RSWV 12 LR
10	1	59771	Valve housing	
11	1	61778	Solenoid	
12	1	59057	Solenoid valve	

2820K-RCS

Internal ref. 63 91 210

An Oshkosh Corportation Company

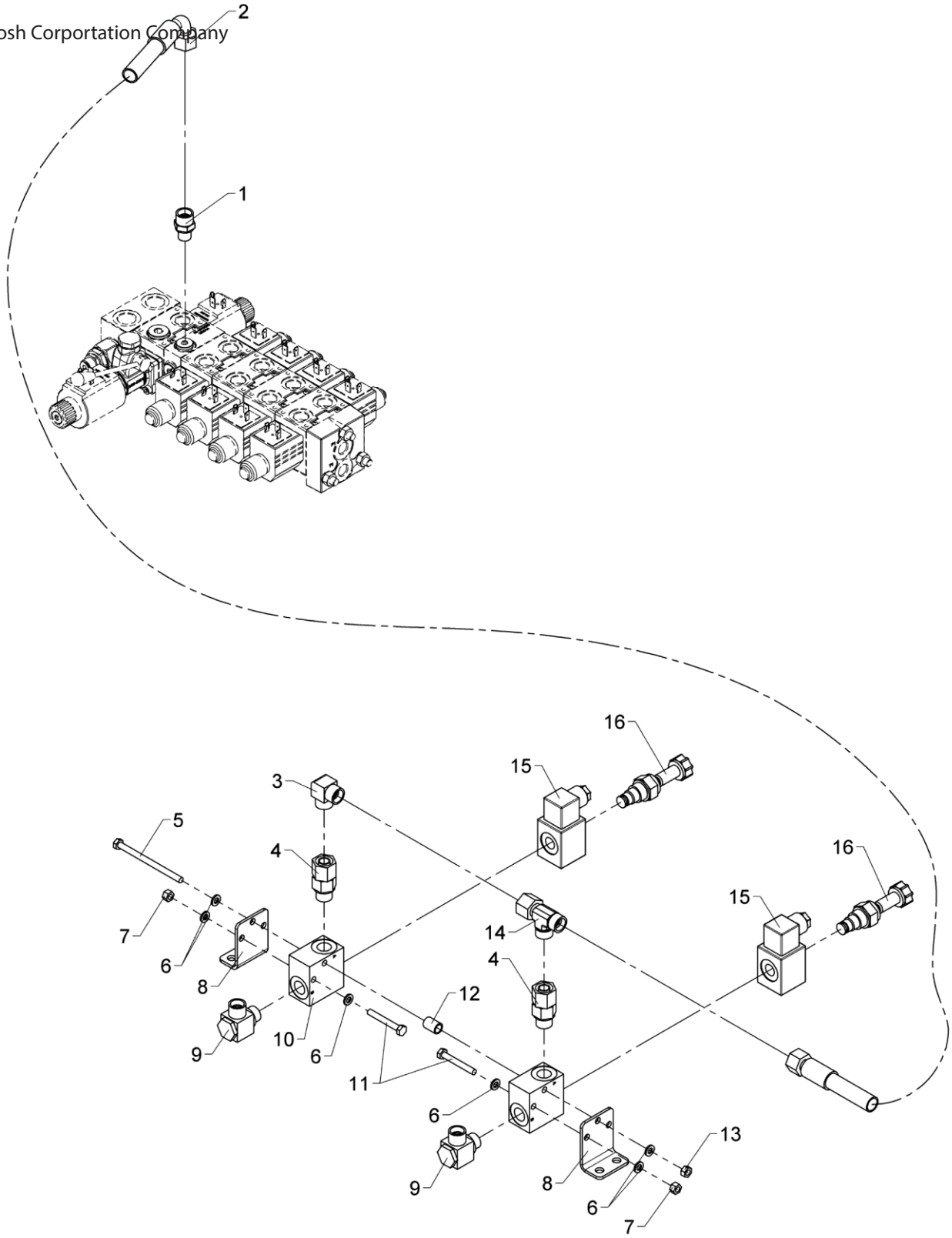

565 05 310

From loader 1440001
To loader

Stabilizer valve block, 6 available functions

Created 17-08-2010
Modified 14-09-2016

Pos	Qty.	Part no.	Description	Remarks
1	1	25195	Connection	P-GEV 12 LR 1/4-WD
2	1	0015020	Hose	3/8" x 1600 mm L/90°
3	1	25129	Elbow connection	WV 12 L
4	2	25240	Connection	EGESD 12 LR-WD
5	1	30124	Steel bolt, stainless	M6 x 90
6	6	32302	Face washer, stainless	6 mm
7	2	30884	Lock nut, stainless	M6
8	2	6301202	Bracket	
9	2	25130	Banjo connection	RSWV 12 LR
10	2	59771	Valve housing	
11	2	30118	Steel pin, stainless	M6 x 45
12	1	6301203	Pipe	
13	1	30854	Nut, stainless	M6
14	1	25270	Connection	ELSD 12 L
15	2	61778	Solenoid	
16	2	59057	Solenoid valve	

2820K-RCS

Internal ref. 63 91 220

An Oshkosh Corportation Company

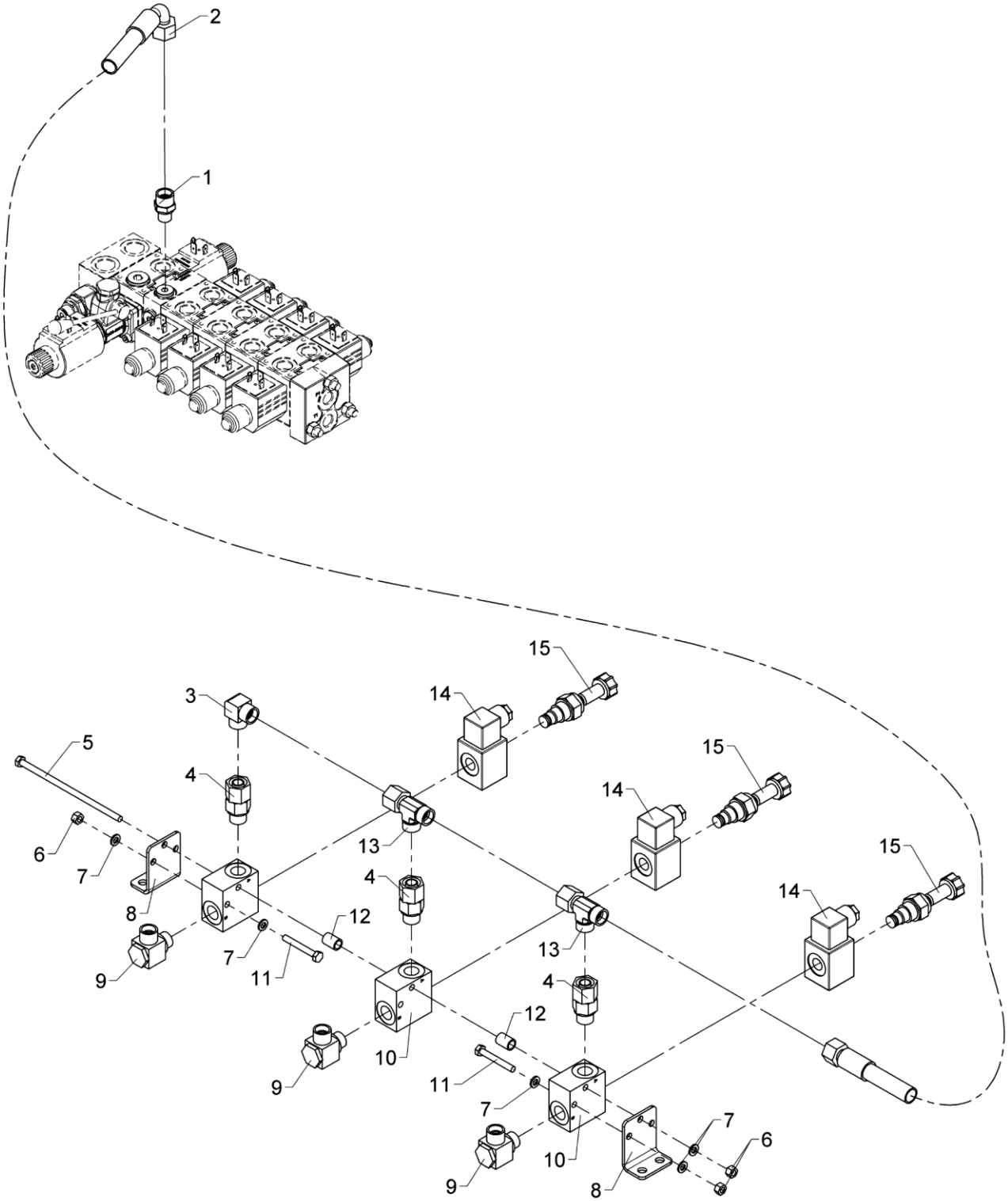

Stabilizer valve block, 7 available functions

Created 17-08-2010
Modified 14-09-2016

Pos	Qty.	Part no.	Description	Remarks
1	1	25195	Connection	P-GEV 12 LR 1/4-WD
2	1	0015020	Hose	3/8" x 1600 mm L/90°
3	1	25129	Elbow connection	WV 12 L
4	3	25240	Connection	EGESD 12 LR-WD
5	1	32922	Steel bolt	M6 x 140
6	3	30884	Lock nut, stainless	M6
7	5	32302	Face washer, stainless	6 mm
8	2	6301202	Bracket	
9	3	25130	Banjo connection	RSWV 12 LR
10	3	59771	Valve housing	
11	2	30118	Steel pin, stainless	M6 x 45
12	2	6301203	Pipe	
13	2	25270	Connection	ELSD 12 L
14	3	61778	Solenoid	
15	3	59057	Solenoid valve	

2820K-RCS

An Oshkosh Corportation Company

Internal ref. 63 91 230

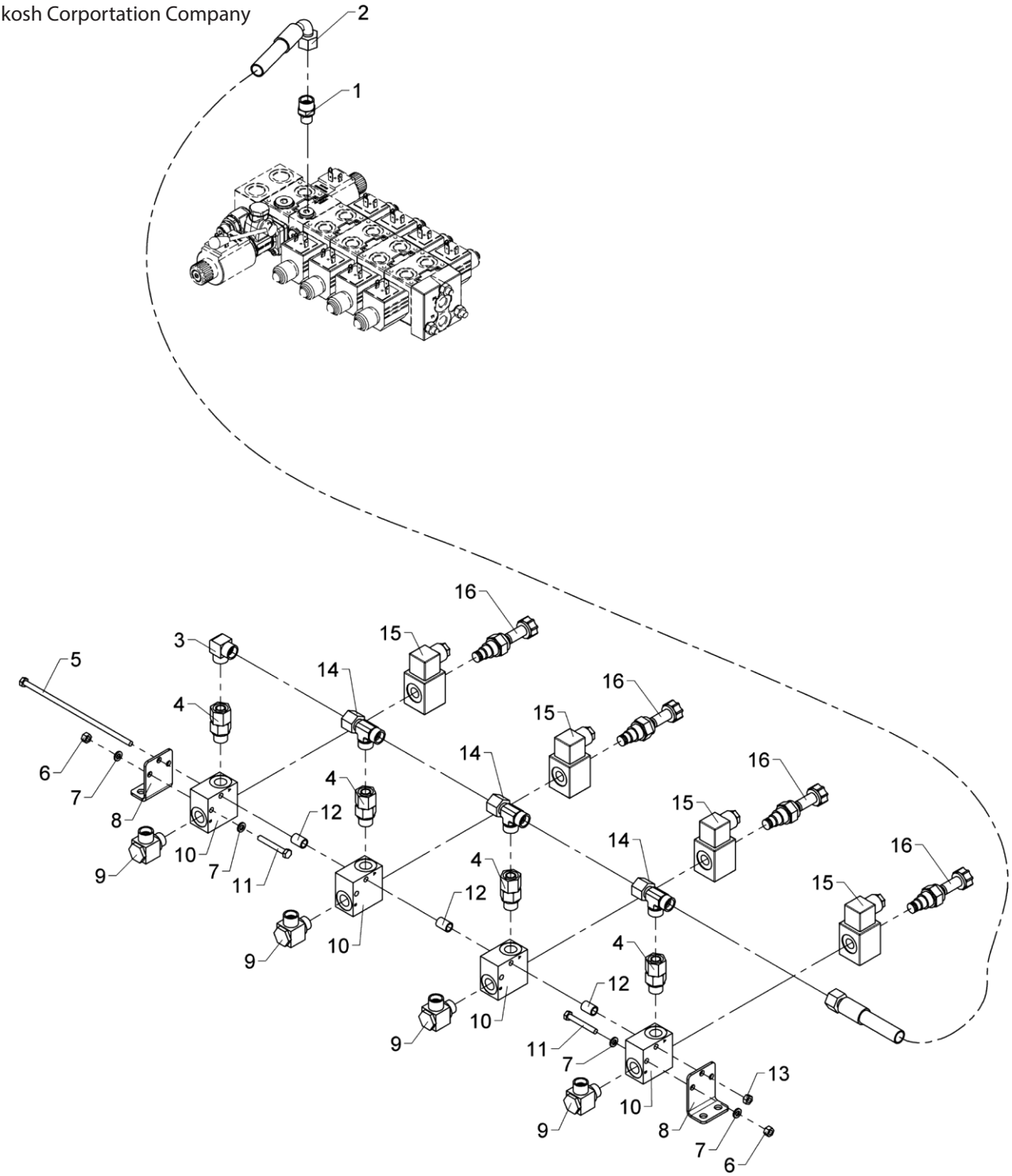

565 05 330

From loader 1440001
To loader

Stabilizer valve block, 8 available functions

Created 17-08-2010
Modified 14-09-2016

Pos	Qty.	Part no.	Description	Remarks
1	1	25195	Connection	P-GEV 12 LR 1/4-WD
2	1	0015020	Hose	3/8" x 1600 mm L/90°
3	1	25129	Elbow connection	WV 12 L
4	4	25240	Connection	EGESD 12 LR-WD
5	1	32257	Steel bolt	M6 x 180
6	2	30884	Lock nut, stainless	M6
7	4	32302	Face washer, stainless	6 mm
8	2	6301202	Bracket	
9	4	25130	Banjo connection	RSWV 12 LR
10	4	59771	Valve housing	
11	2	30118	Steel pin, stainless	M6 x 45
12	3	6301203	Pipe	
13	1	30854	Nut, stainless	M6
14	3	25270	Connection	ELSD 12 L
15	4	61778	Solenoid	
16	4	59057	Solenoid valve	

2820K-RCS

Internal ref. 63 44 790

An Oshkosh Corportation Company

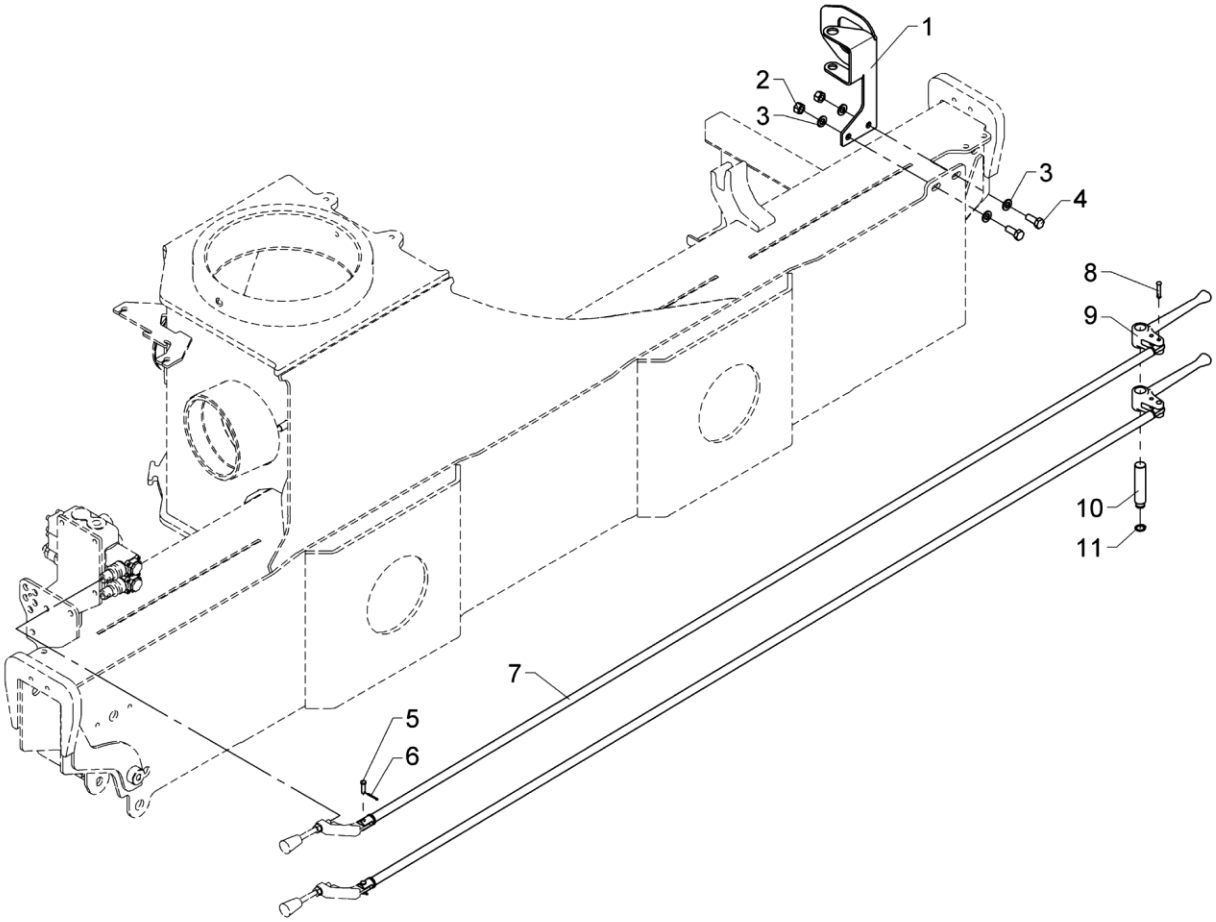

565 05 340

From loader 1440001
To loader

Created 13-11-2008
Modified

Dual control, 2 fcts. std.

Pos	Qty.	Part no.	Description	Remarks
1	1	6340256	Bracket for dual control	
2	2	31564	Lock nut, stainless	M10
3	4	31565	Washer, stainless	10 mm
4	2	31513	Set screw, stainless	M10 x 25
5	2	31271	Cotter bolt	ø6 x 21
6	2	31601	Split pin, stainless	ø1,6 x 20
7	2	6340263	Connecting rod	
8	2	63468	Split pin with spring lock	
9	2	63444	Lever for dual controls	
10	1	6340261	Pin (2 functions)	
11	1	33104	Circlip	15U

2820K-RCS

Internal ref. 63 44 850

An Oshkosh Corportation Company

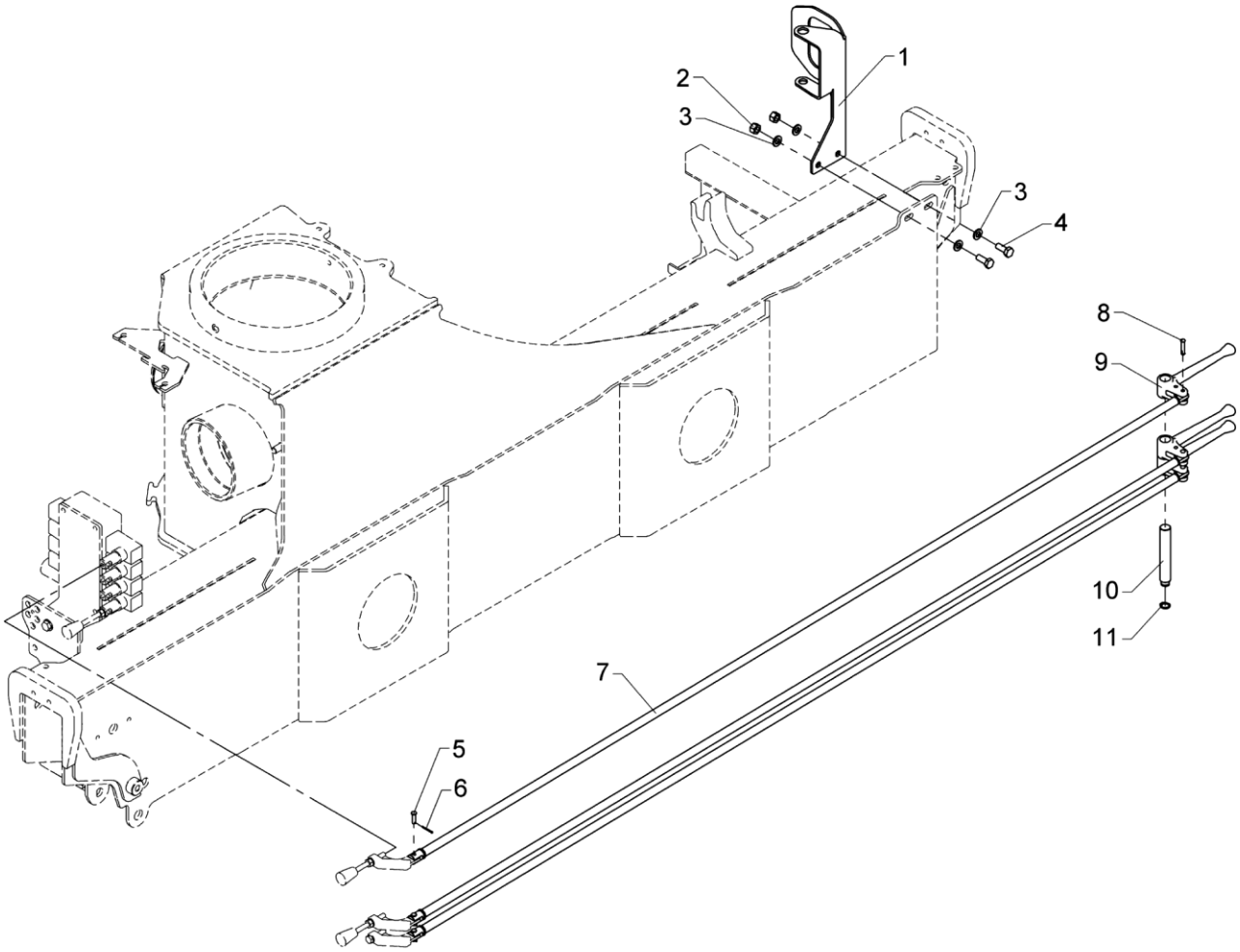

565 05 350

From loader 1440001
To loader

Dual control, 4 fcts. std.

Created 13-11-2008
Modified

Pos	Qty.	Part no.	Description	Remarks
1	1	6340257	Bracket for dual control	
2	2	31564	Lock nut, stainless	M10
3	4	31565	Washer, stainless	10 mm
4	2	31513	Set screw, stainless	M10 x 25
5	3	31271	Cotter bolt	ø6 x 21
6	3	31601	Split pin, stainless	ø1,6 x 20
7	3	6340263	Connecting rod	
8	3	63468	Split pin with spring lock	
9	3	63444	Lever for dual controls	
10	1	6340262	Pin (4 functions)	
11	1	33104	Circlip	15U

2820K-RCS

Internal ref. 63 45 870

An Oshkosh Corportation Company

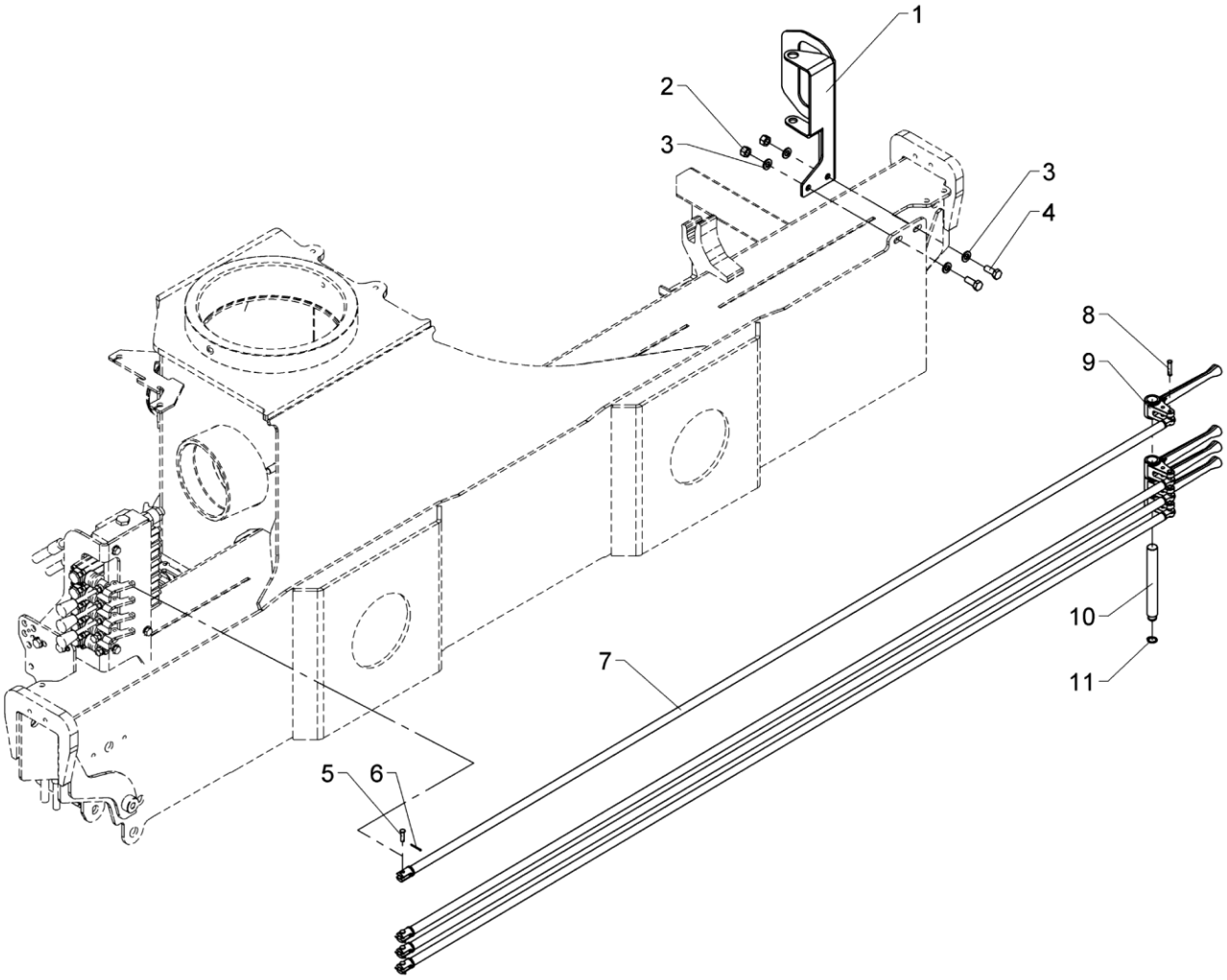

565 05 360

From loader 1440001
To loader

Created 13-11-2008
Modified

Dual control.4 fcts. + 4 available functions (std.)

Pos	Qty.	Part no.	Description	Remarks
1	1	6340258	Bracket, dual control (4 + 4)	
2	2	31564	Lock nut, stainless	M10
3	4	31565	Washer, stainless	10 mm
4	2	31513	Set screw, stainless	M10 x 25
5	4	31271	Cotter bolt	ø6 x 21
6	4	31601	Split pin, stainless	ø1,6 x 20
7	4	6340263	Connecting rod	
8	4	63468	Split pin with spring lock	
9	4	63444	Lever for dual controls	
10	1	6340264	Pin(4 fcts.+4 available fcts.)	
11	1	33104	Circlip	15U

2820K-RCS

Internal ref. 63 44 860

An Oshkosh Corportation Company

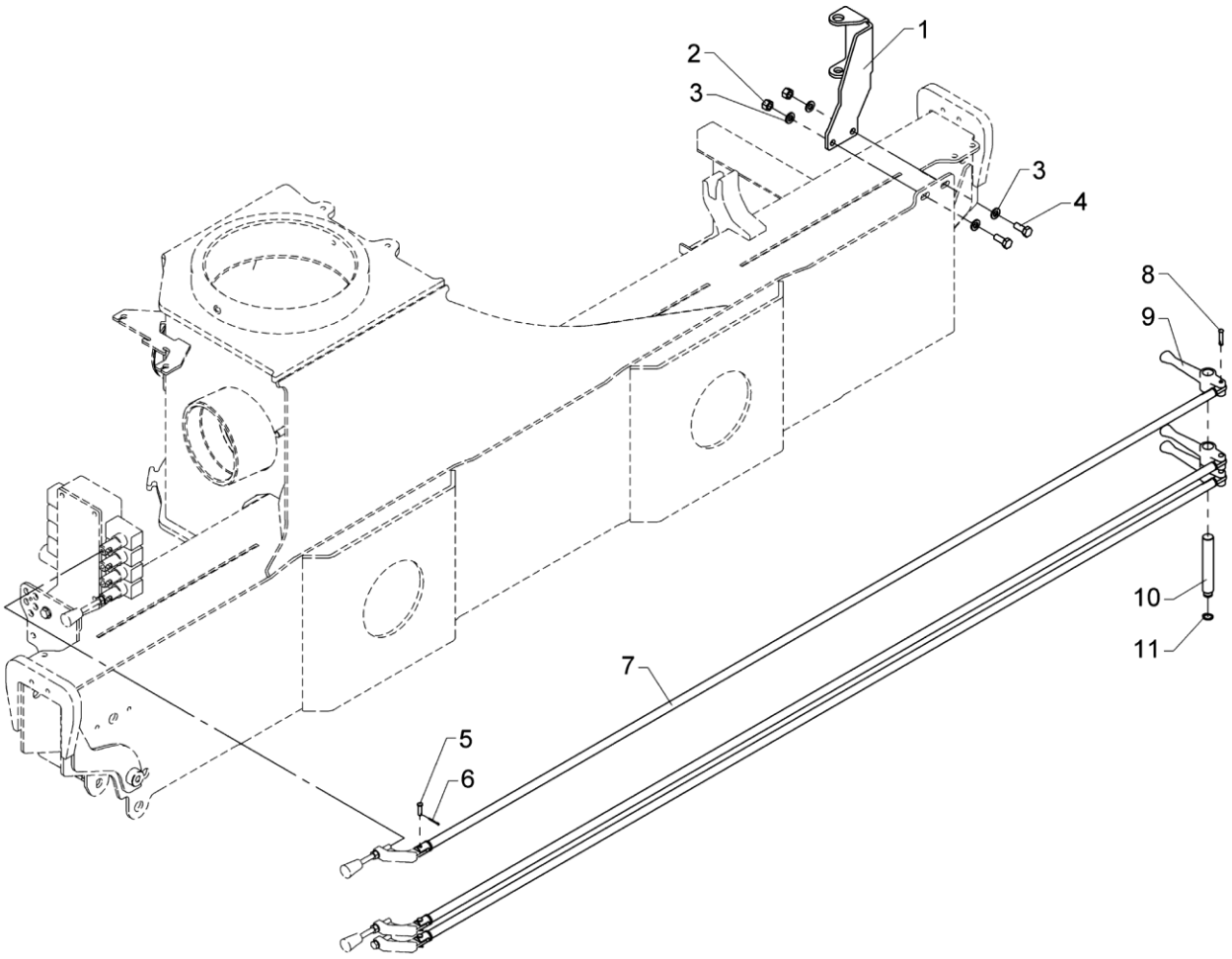

Dual control, 4 fcts., hydr. swing-up stabilizer legs

Pos	Qty.	Part no.	Description	Remarks
1	1	6340259	Bracket for dual control	
2	2	31564	Lock nut, stainless	M10
3	4	31565	Washer, stainless	10 mm
4	2	31513	Set screw, stainless	M10 x 25
5	3	31271	Cotter bolt	ø6 x 21
6	3	31601	Split pin, stainless	ø1,6 x 20
7	3	6340263	Connecting rod	
8	3	63468	Split pin with spring lock	
9	3	63483	Lever for dual control	
10	1	6340262	Pin (4 functions)	
11	1	33104	Circlip	15U

2820K-RCS

Internal ref. 63 45 880

An Oshkosh Corportation Company

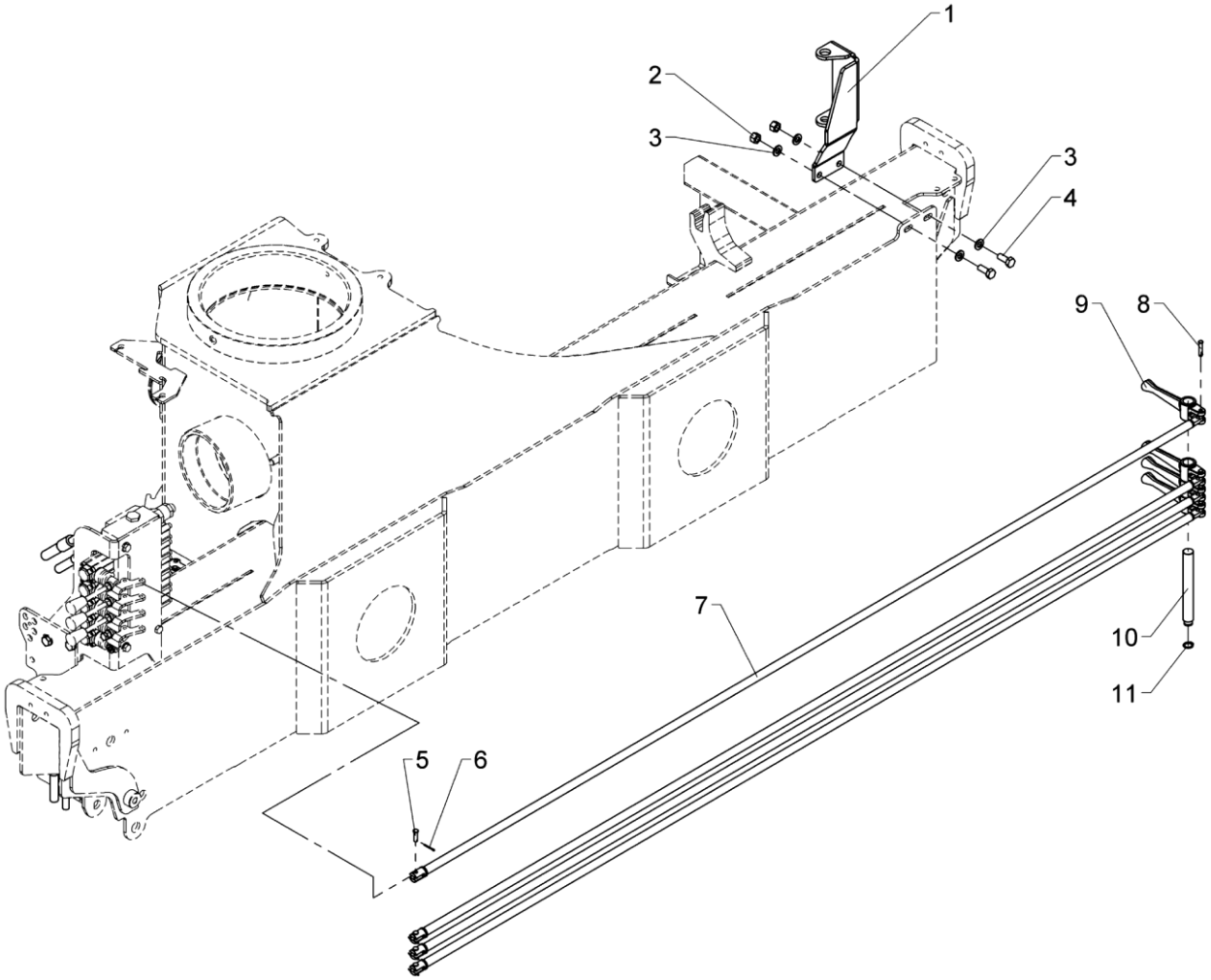

Dual control, 4 fcts. + 4 available fcts. (hydr. swing-up stabilizer legs)

Pos	Qty.	Part no.	Description	Remarks
1	1	6340269	Bracket for dual control	
2	2	31564	Lock nut, stainless	M10
3	4	31565	Washer, stainless	10 mm
4	2	31513	Set screw, stainless	M10 x 25
5	4	31271	Cotter bolt	ø6 x 21
6	4	31601	Split pin, stainless	ø1,6 x 20
7	4	6340263	Connecting rod	
8	4	63468	Split pin with spring lock	
9	4	63483	Lever for dual control	
10	1	6340264	Pin(4 fcts.+4 available fcts.)	
11	1	33104	Circlip	15U

565 05 400

2820K-RCS

	63 55 110
	63 46 450
63 43 250	63 43 090
63 55 470	63 43 080
Internal ref.	63 43 010

An Oshkosh Corportation Company

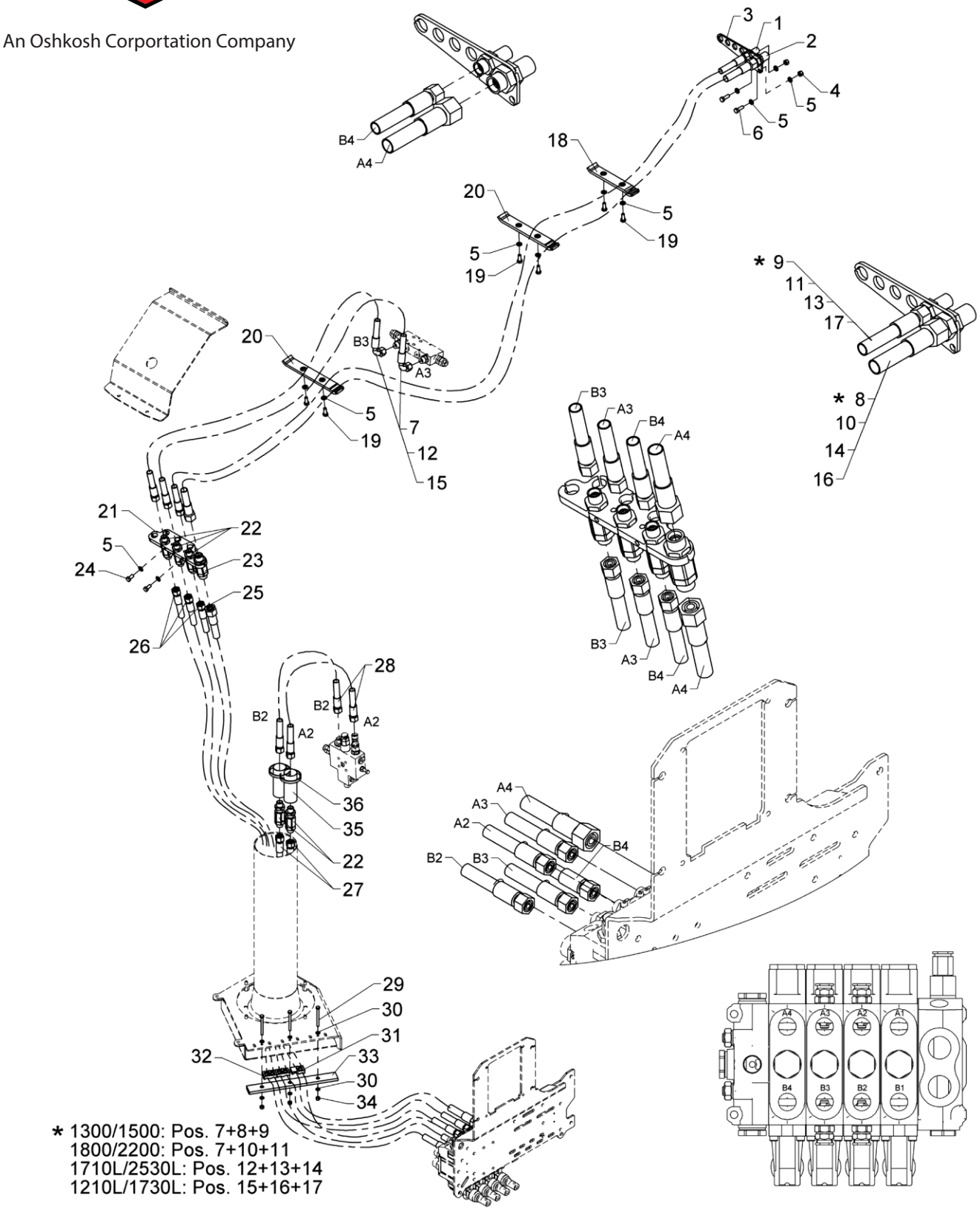

* 1300/1500: Pos. 7+8+9
1800/2200: Pos. 7+10+11
1710L/2530L: Pos. 12+13+14
1210L/1730L: Pos. 15+16+17

Hose kit, loader functions, std.

Created 24-11-2008
Modified 22-08-2017

Pos	Qty.	Part no.	Description	Remarks
		6343010	Hose kit, column, std.	
		6343080	Hose kit, boom cylinder	
		6343090	Hose kit, main boom, std.	
		6346450	Hose kit, main boom, std.V	
		6355110	Hose kit, main boom, std.	1210L/1730L
		6355470	Hose kit, main boom, std.	1710L/2530L
		6343250	Clamp kit, std.	
1	1	25201	Bulkhead connection	GSS 12 L
2	1	26335	Bulkhead connection	P-GSV 16 S
3	1	6340315	Bracket, bulkhead connections	
4	2	30886	Lock nut, stainless	M8
5	12	31147	Face washer, 8 mm	8 mm
6	2	30134	Set screw, stainless	M8 x 25
7	2	0017690	Hose	3/8" x 1300 mm V90/L
8	1	56382	Hose	
9	1	0017600	Hose	
10	1	56529	Hose	1/2 X 3500 mm L/L
11	1	0017770	Hose	
12	2	56950	Hose 3/8" x 2450 L/90 (12L)	
13	1	56951	Hose 3/8" x 4650 L/L (12L)	
14	1	56952	Hose 1/2" x 4650 L/L(16S)	
15	2	56917	Hose	
16	1	56918	Hose	
17	1	56916	Hose	
18	1	6340211	Clamp, complete	
19	6	30132	Set screw, stainless	
20	2	6340213	Clamp, complete	
21	1	6340252	Bracket for swivel coupling	
22	5	58478	Swivel coupling	M18 x 1,5 12L
23	1	58479	Swivel coupling	M24 x 1,5 16L
24	2	30131	Set screw, stainless	M8 x 16
25	1	62846	Hose	1/2" x 2750 L/L (16S, M24X1.5)
26	3	0015130	Hose	3/8" x 2750 L/L (12L)
27	2	0015120	Hose	3/8" x 1400 L/L (12L)
28	2	0015500	Hose	
29	3	30199	Steel bolt, stainless	M6 x 65
30	6	32302	Face washer, stainless	6 mm
31	1	63562	Clamp	
32	2	63561	Clamp	
33	1	6340238	Clamp, complete	
34	3	30884	Lock nut, stainless	M6

565 05 400

2820K-RCS

	63 55 110
	63 46 450
63 43 250	63 43 090
63 55 470	63 43 080
Internal ref.	63 43 010

An Oshkosh Corportation Company

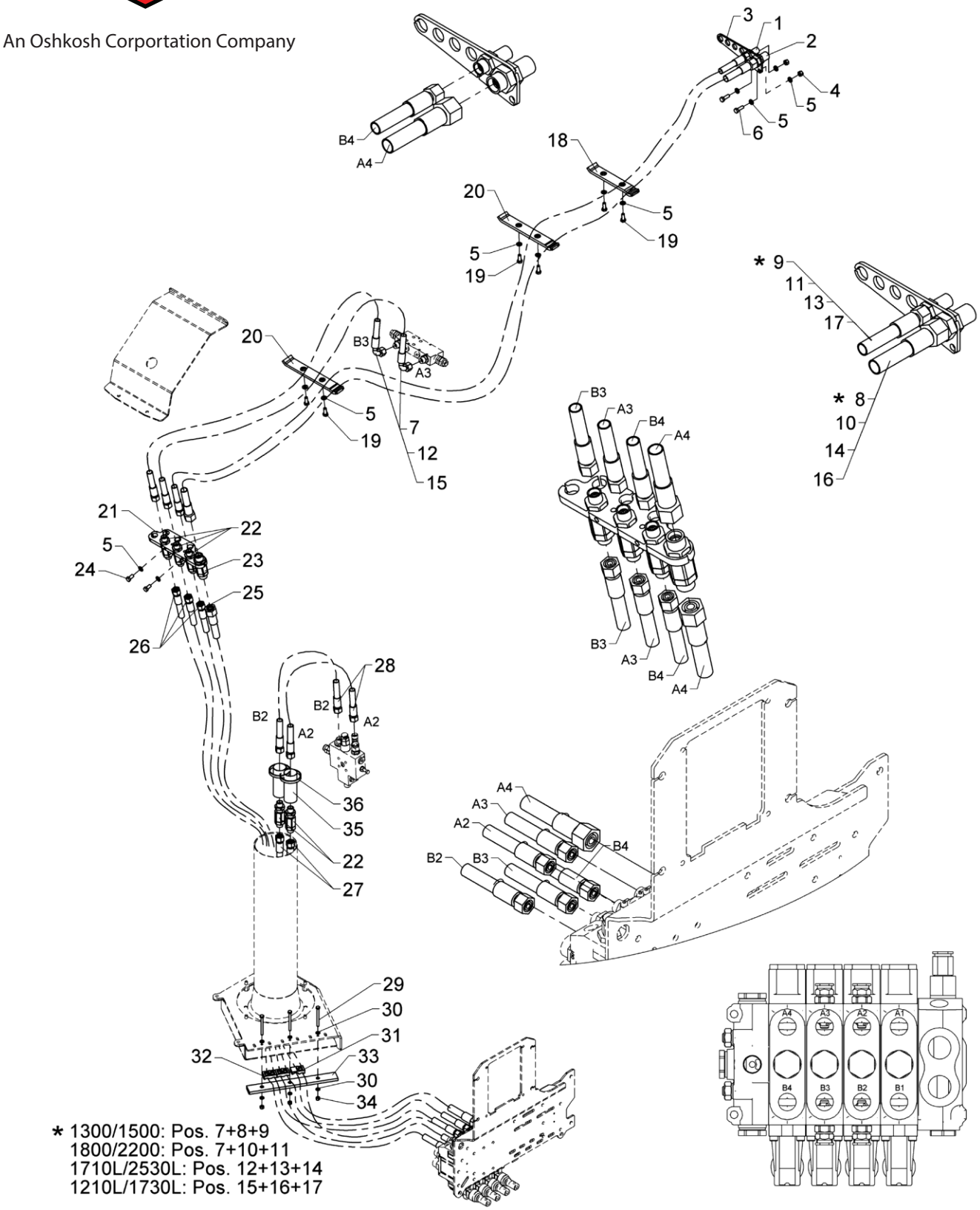

* 1300/1500: Pos. 7+8+9
1800/2200: Pos. 7+10+11
1710L/2530L: Pos. 12+13+14
1210L/1730L: Pos. 15+16+17

565 05 400

From loader 1440001
To loader

Hose kit, loader functions, std.

Created 24-11-2008
Modified 22-08-2017

Pos	Qty.	Part no.	Description	Remarks
35	2	29131	Protective cover	400 mm
36	2	27275	Cable tie, black, 7.6x385mm	

2820K-RCS

63 43 260
63 43 080
63 46 470
63 43 110
Internal ref. 63 43 040

An Oshkosh Corportation Company

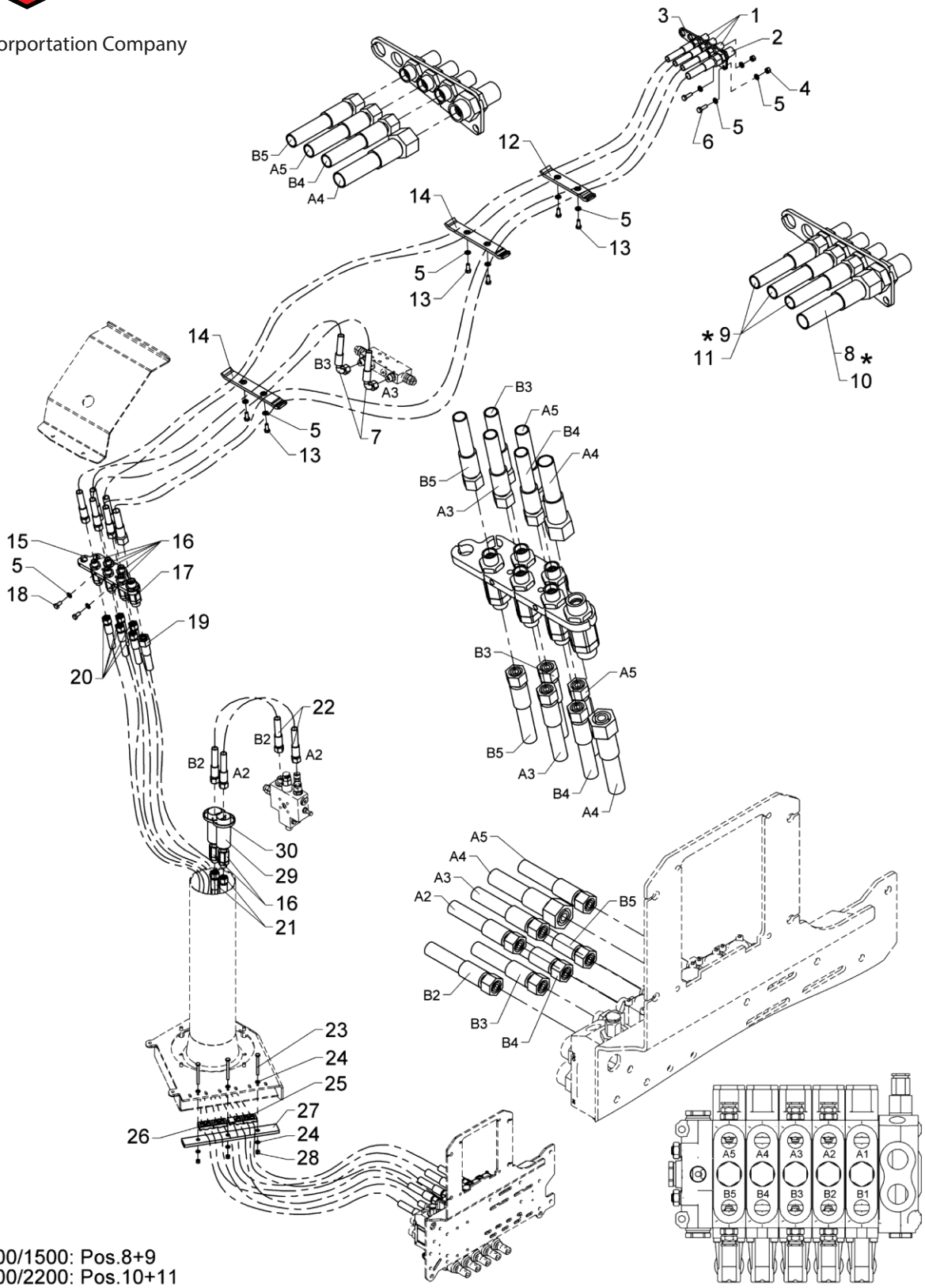

* 1300/1500: Pos.8+9
1800/2200: Pos.10+11

Hose kit, loader functions, 1 EXV.

Pos	Qty.	Part no.	Description	Remarks
		6343040	Hose kit, column, 1 EXV	
		6343110	Hose kit, main boom, 1 EXV	
		6346470	Hose kit, main boom, 1 EXV	
		6343080	Hose kit, boom cylinder	
		6343260	Clamp, 1 EXV	
1	3	25201	Bulkhead connection	GSS 12 L
2	1	26335	Bulkhead connection	P-GSV 16 S
3	1	6340315	Bracket, bulkhead connections	
4	2	30886	Lock nut, stainless	M8
5	12	31147	Face washer, 8 mm	8 mm
6	2	30134	Set screw, stainless	M8 x 25
7	2	0017690	Hose	
8	1	56382	Hose	1/2 X 3400 mm L/L
9	3	0017600	Hose	
10	1	56529	Hose	1/2 X 3500 mm L/L
11	3	0017770	Hose	
12	1	6340211	Clamp, complete	
13	6	30132	Set screw, stainless	M8 x 20
14	2	6340213	Clamp, complete	
15	1	6340252	Bracket for swivel coupling	
16	7	58478	Swivel coupling	M18 x 1,5 12L
17	1	58479	Swivel coupling	M24 x 1,5 16L
18	2	30131	Set screw, stainless	M8 x 16
19	1	62846	Hose	1/2 X 2750 M24X1.5 L/L
20	5	0015130	Hose	
21	2	0015120	Hose	
22	2	0015500	Hose	
23	3	30199	Steel bolt, stainless	M6 x 65
24	6	32302	Face washer, stainless	6 mm
25	1	63562	Clamp	
26	3	63561	Clamp	
27	1	6340238	Clamp, complete	
28	3	30884	Lock nut, stainless	M6
29	2	29131	Protective cover	400 mm
30	2	27275	Cable tie, black, 7.6x385mm	

565 05 420

2820K-RCS

63 43 270
63 43 080
63 46 480
63 43 120
Internal ref. 63 43 050

An Oshkosh Corportation Company

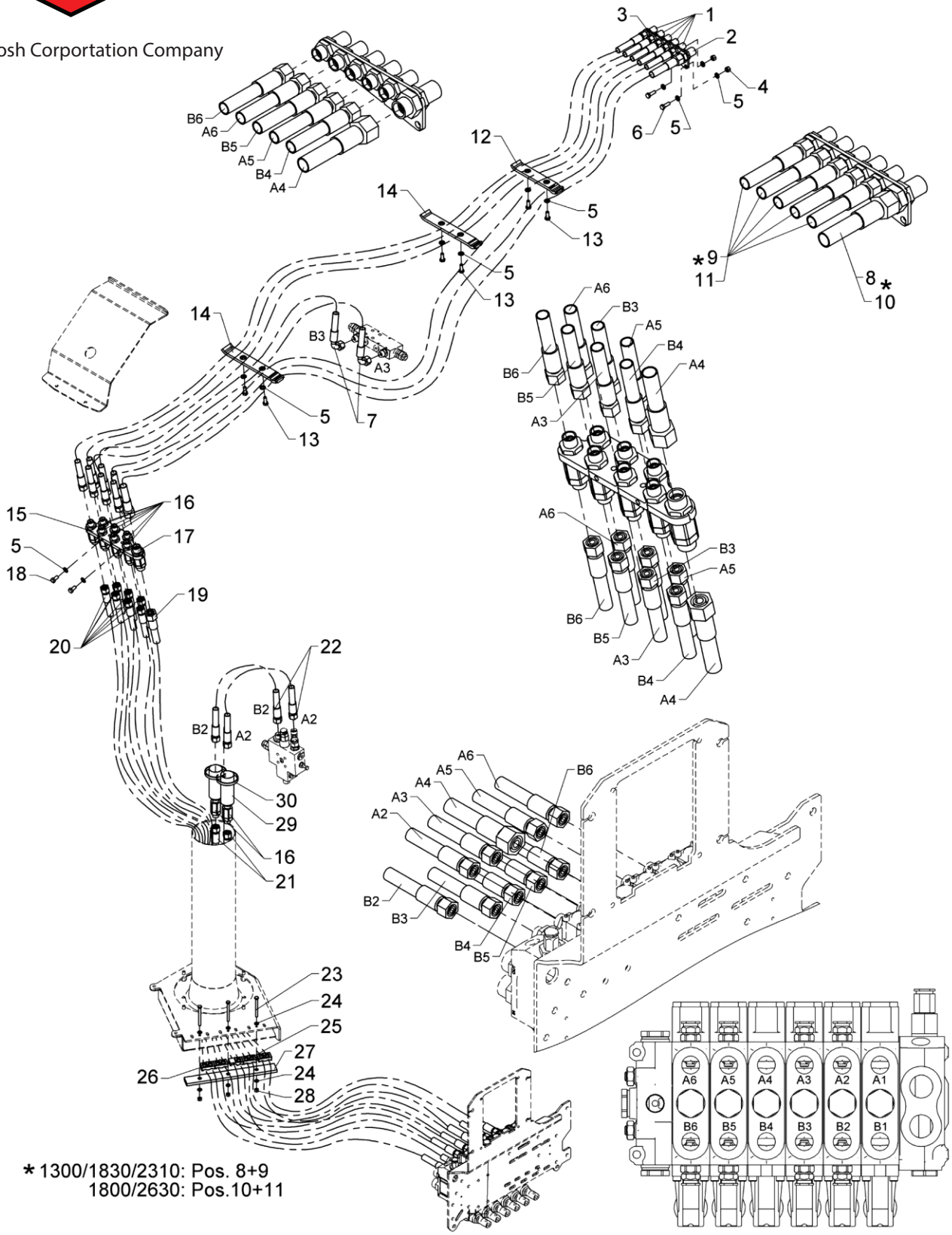

Hose kit, loader functions, 2 EXV.

Pos	Qty.	Part no.	Description	Remarks
		6343050	Hose kit, column, 2 EXV	
		6343120	Hose kit, main boom, 2 EXV	1300K-1830K, 2310S
		6346480	Hose kit, main boom, 2 EXV	1800K-2630K
		6343080	Hose kit, boom cylinder	
		6343270	Clamp, 2 EXV	
1	5	25201	Bulkhead connection	GSS 12 L
2	1	26335	Bulkhead connection	P-GSV 16 S
3	1	6340315	Bracket, bulkhead connections	
4	2	30886	Lock nut, stainless	M8
5	12	31147	Face washer, 8 mm	8 mm
6	2	30134	Set screw, stainless	M8 x 25
7	2	0017690	Hose	
8	1	56382	Hose	1/2 X 3400 mm L/L
9	5	0017600	Hose	
10	1	56529	Hose	1/2 X 3500 mm L/L
11	5	0017770	Hose	
12	1	6340211	Clamp, complete	
13	6	30132	Set screw, stainless	M8 x 20
14	2	6340213	Clamp, complete	
15	1	6340252	Bracket for swivel coupling	
16	9	58478	Swivel coupling	M18 x 1,5 12L
17	1	58479	Swivel coupling	M24 x 1,5 16L
18	2	30131	Set screw, stainless	M8 x 16
19	1	62846	Hose	1/2 X 2750 M24X1.5 L/L
20	7	0015130	Hose	
21	2	0015120	Hose	
22	2	0015500	Hose	
23	3	30199	Steel bolt, stainless	M6 x 65
24	6	32302	Face washer, stainless	6 mm
25	1	63562	Clamp	
26	4	63561	Clamp	
27	1	6340238	Clamp, complete	
28	3	30884	Lock nut, stainless	M6
29	2	29131	Protective cover	400 mm
30	2	27275	Cable tie, black, 7.6x385mm	

565 05 430

2820K-RCS

63 43 290
63 46 460
63 43 100
63 43 080
Internal ref. 63 43 020

An Oshkosh Corportation Company

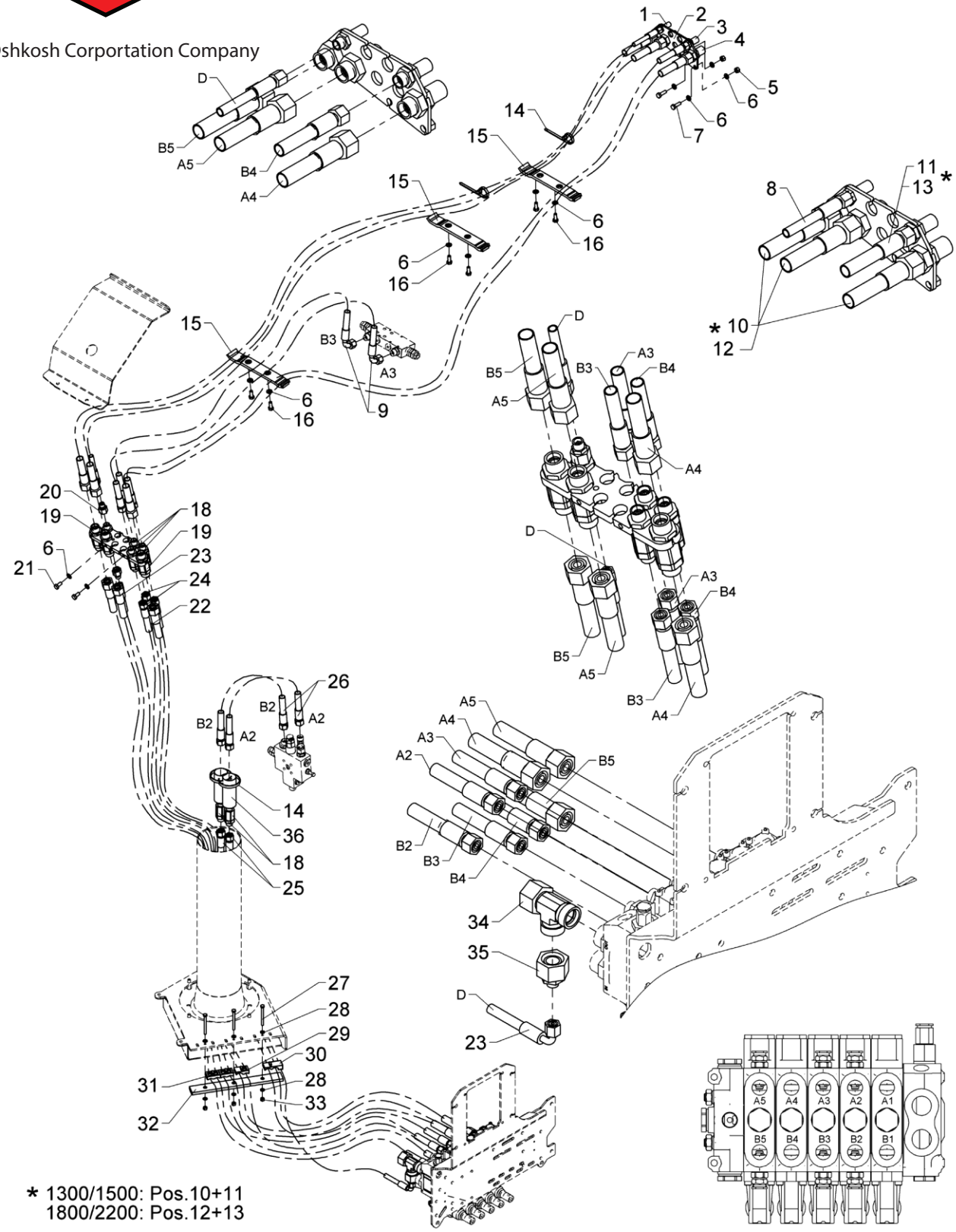

Hose kit, loader functions, std./winch

Pos	Qty.	Part no.	Description	Remarks
		6343020	Hose kit, column, winch	
		6343080	Hose kit, boom cylinder	
		6343100	Hose kit, main boom, winch	
		6346460	Hose kit, main boom, winch	
		6343290	Clamp, winch	
1	1	25261	Bulkhead connection	P-GSV 8 L
2	1	6340986	Bracket, bulkhead connections	
3	1	25201	Bulkhead connection	GSS 12 L
4	3	26335	Bulkhead connection	P-GSV 16 S
5	2	30886	Lock nut, stainless	M8
6	12	31147	Face washer, 8 mm	8 mm
7	2	30134	Set screw, stainless	M8 x 25
8	1	62539	Hose	1/4 X 3430 M14 X 1.5 L/L
9	2	0017690	Hose	3/8" x 1300 mm V90/L
10	3	56382	Hose	1/2 X 3400 mm L/L
11	1	0017600	Hose	
12	3	56529	Hose	1/2 X 3500 mm L/L
13	1	0017770	Hose	
14	4	27275	Cable tie, black, 7.6x385mm	7,6 x 390mm
15	3	6340217	Clamp, complete	
16	6	30132	Set screw, stainless	M8 x 20
17	1	6340253	Bracket for swivel coupling	
18	6	58478	Swivel coupling	M18 x 1,5 12L
19	3	58479	Swivel coupling	M24 x 1,5 16L
20	2	26101	Reducing connection	REDSDN 12/8 L
21	2	30131	Set screw, stainless	M8 x 16
22	3	62846	Hose	1/2" x 2750 L/L (16S, M24X1.5)
23	1	56024	Hose	1/4X2800 M14X1.5 L/90
24	3	0015130	Hose	3/8" x 2750 L/L (12L)
25	2	0015120	Hose	3/8" x 1400 L/L (12L)
26	2	0015500	Hose	
27	3	30199	Steel bolt, stainless	M6 x 65
28	6	32302	Face washer, stainless	6 mm
29	1	63562	Clamp	
30	1	63563	Clamp	
31	2	63561	Clamp	
32	1	6340238	Clamp, complete	
33	3	30884	Lock nut, stainless	M6
34	1	26149	Connection	ELSD 22 L
35	1	25286	Reducing connection	REDSDN 22/8 L
36	2	29131	Protective cover	400 mm

565 05 440

2820K-RCS

63 43 280
63 43 080
63 46 490
63 43 130
Internal ref. 63 43 030

An Oshkosh Corportation Company

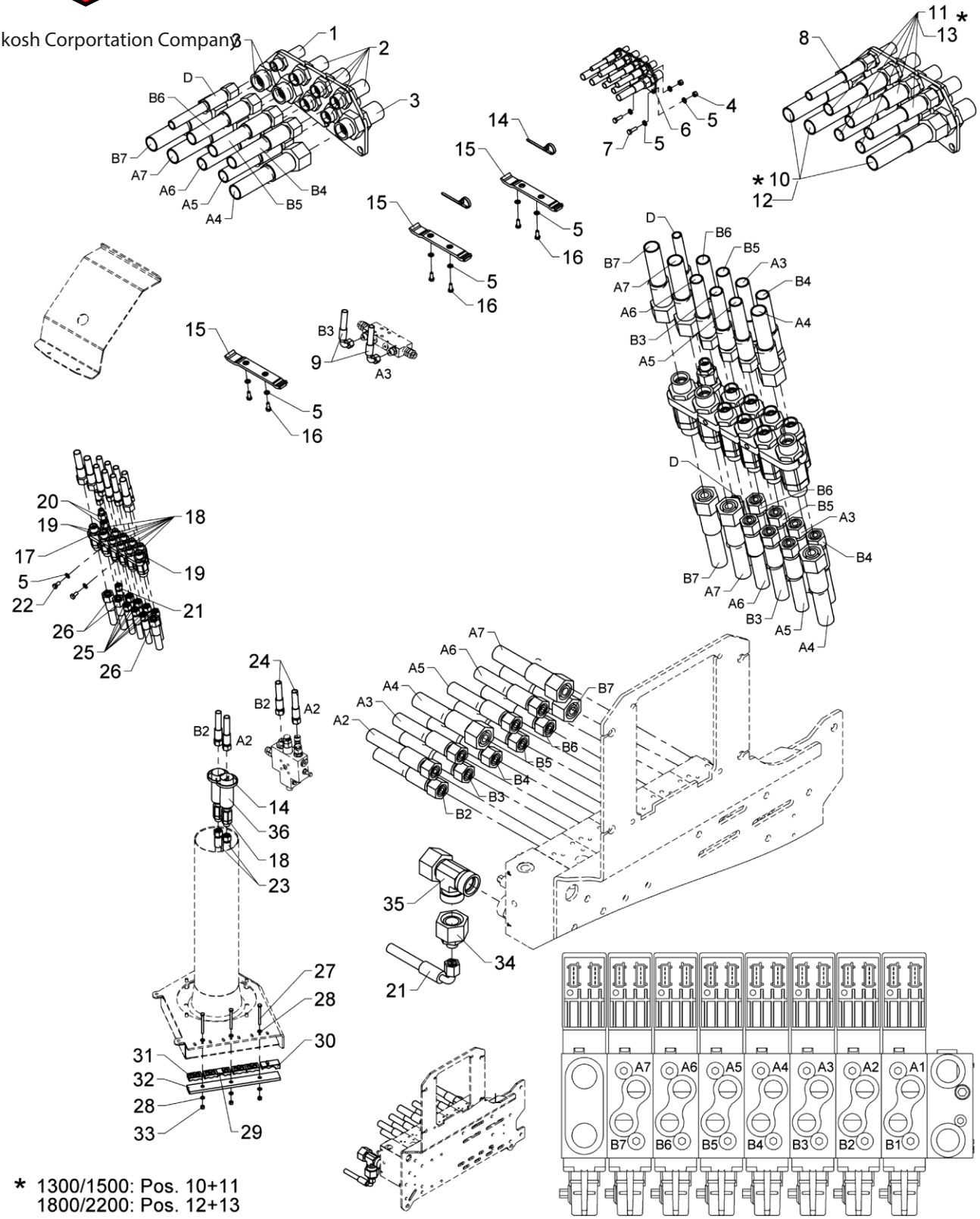

* 1300/1500: Pos. 10+11
1800/2200: Pos. 12+13

Hose kit, loader functions, 2 EXV/winch

Pos	Qty.	Part no.	Description	Remarks
		6343030	Hose kit, column, 2 EXV/winch	
		6343130	Hose kit, main boom, 2 EXV/win	
		6346490	Hose kit, main boom, 2 EXV	
		6343080	Hose kit, boom cylinder	
		6343280	Clamp, 2 EXV/winch	
1	1	25261	Bulkhead connection	P-GSV 8 L
2	5	25201	Bulkhead connection	GSS 12 L
3	3	26335	Bulkhead connection	P-GSV 16 S
4	2	30886	Lock nut, stainless	M8
5	12	31147	Face washer, 8 mm	8 mm
6	1	6340986	Bracket, bulkhead connections	
7	2	30134	Set screw, stainless	M8 x 25
8	1	62539	Hose	1/4 X 3430 M14 X 1.5 L/L
9	2	0017690	Hose	3/8" x 1300 mm V90/L
10	3	56382	Hose	1/2 X 3400 mm L/L
11	5	0017600	Hose	
12	3	56529	Hose	1/2 X 3500 mm L/L
13	5	0017770	Hose	
14	4	27275	Cable tie, black, 7.6x385mm	7,6 x 390mm
15	3	6340217	Clamp, complete	
16	6	30132	Set screw, stainless	M8 x 20
17	1	6340253	Bracket for swivel coupling	
18	10	58478	Swivel coupling	M18 x 1,5 12L
19	3	58479	Swivel coupling	M24 x 1,5 16L
20	2	26101	Reducing connection	REDSDN 12/8 L
21	1	56024	Hose	1/4X2800 M14X1.5 L/90
22	2	30131	Set screw, stainless	M8 x 16
23	2	0015120	Hose	3/8" x 1400 L/L (12L)
24	2	0015500	Hose	
25	7	0015130	Hose	3/8" x 2750 L/L (12L)
26	3	62846	Hose	1/2" x 2750 L/L (16S, M24X1.5)
27	3	30199	Steel bolt, stainless	M6 x 65
28	6	32302	Face washer, stainless	6 mm
29	1	63562	Clamp	
30	1	63563	Clamp	
31	4	63561	Clamp	
32	1	6340238	Clamp, complete	
33	3	30884	Lock nut, stainless	M6
34	1	25286	Reducing connection	REDSDN 22/8 L
35	1	26149	Connection	ELSD 22 L
36	2	29131	Protective cover	400 mm

2820K-RCS

63 47 610
Internal ref. 63 47 600

An Oshkosh Corportation Company

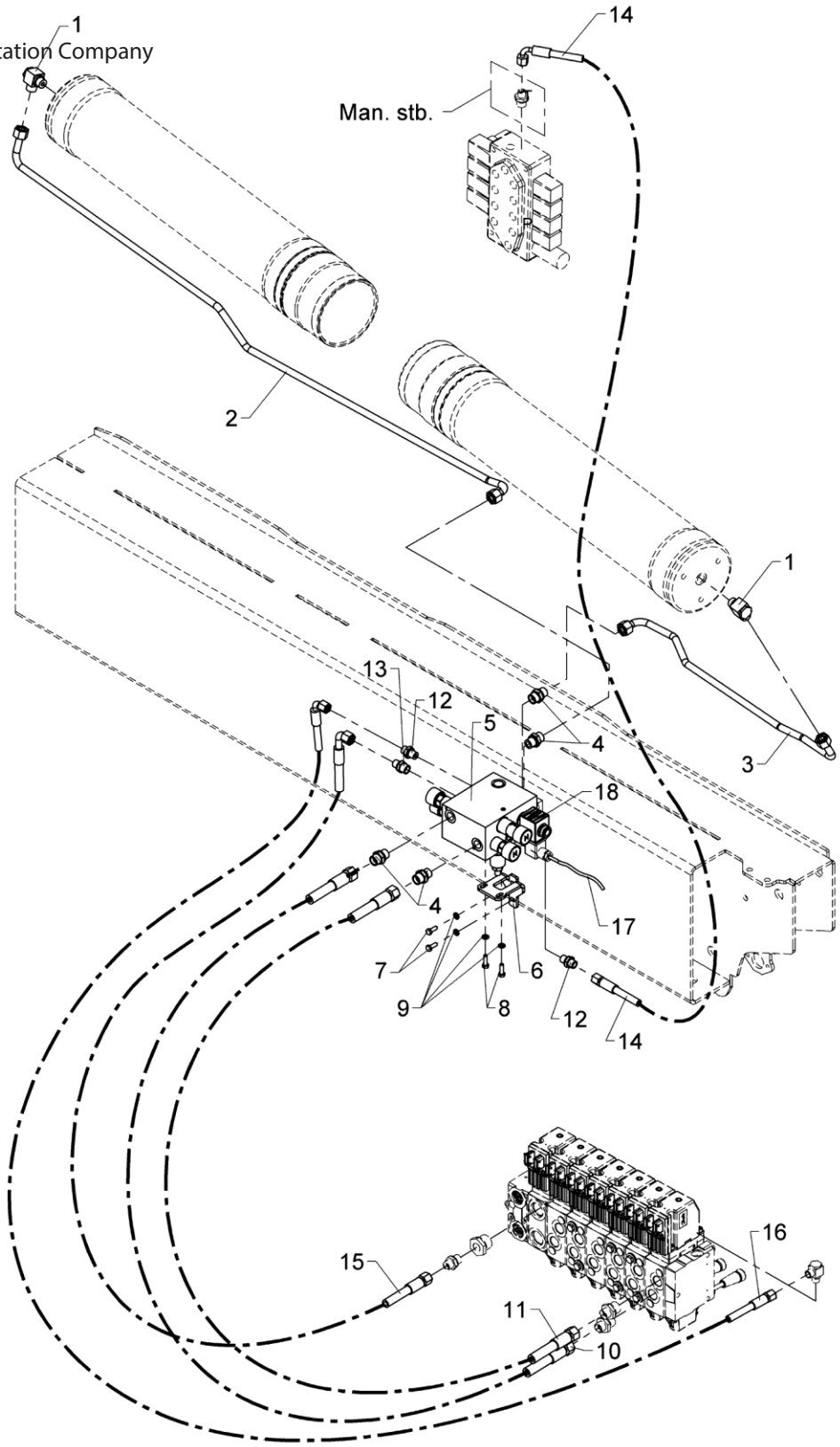

Hydraulic system, slewing

Pos	Qty.	Part no.	Description	Remarks
		6347600		
		6347610		
1	2	25130	Banjo connection	RSWV 12 LR
2	1	6344279	Pipe	
3	1	6344278	Pipe	
4	4	25127	Connection	P-GEV 12 LR-WD
5	1	55713	Load holding valve	
6	1	6340237	Bracket for load-holding valve	
7	2	30112	Set screw, stainless	M6 x 16
8	2	30113	Set screw, stainless	M6 x 20
9	4	32302	Face washer, stainless	6 mm
10	1	56561	Hose	3/8" x 570 mm L/L
11	1	0017970	Hose	
12	2	25109	Connection	GES 8 LR-WD
13	1	25121	Connection	P-GEV 10 LR-WD
14	1	62751	Hose	6347610
15	1	56668	Hose	5/16"x 650 mm L/V
16	1	62571	Hose	
17	1	29865	Cable, 5 m	
18	1	61736	Solenoid 26V	

2820K-RCS

Internal ref. 63 45 190

An Oshkosh Corportation Company

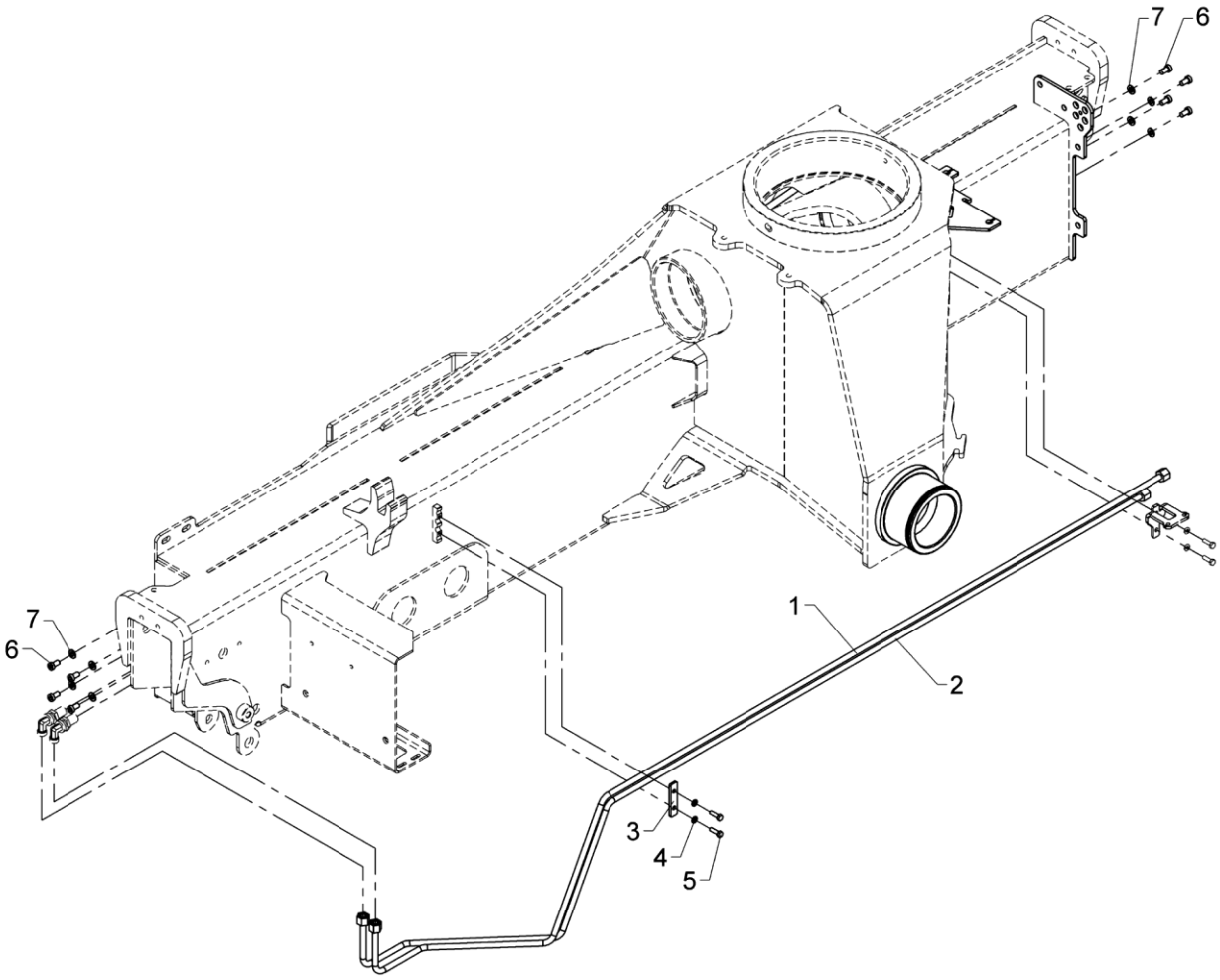

Hydraulic system, stabilizers, manual extension

Pos	Qty.	Part no.	Description	Remarks
		6345190	Hydr. system stabilizers,2fcts	
1	1	6344265	Pipe, stabilizers	
2	1	6344266	Pipe, stabilizers	
3	1	6340236	Plate	
4	2	32302	Face washer, stainless	6 mm
5	2	30113	Set screw, stainless	M6 x 20
6	8	32478	Screw	M8 x 15
7	8	31147	Face washer, 8 mm	8 mm

2820K-RCS

Internal ref. 63 45 200

An Oshkosh Corportation Company

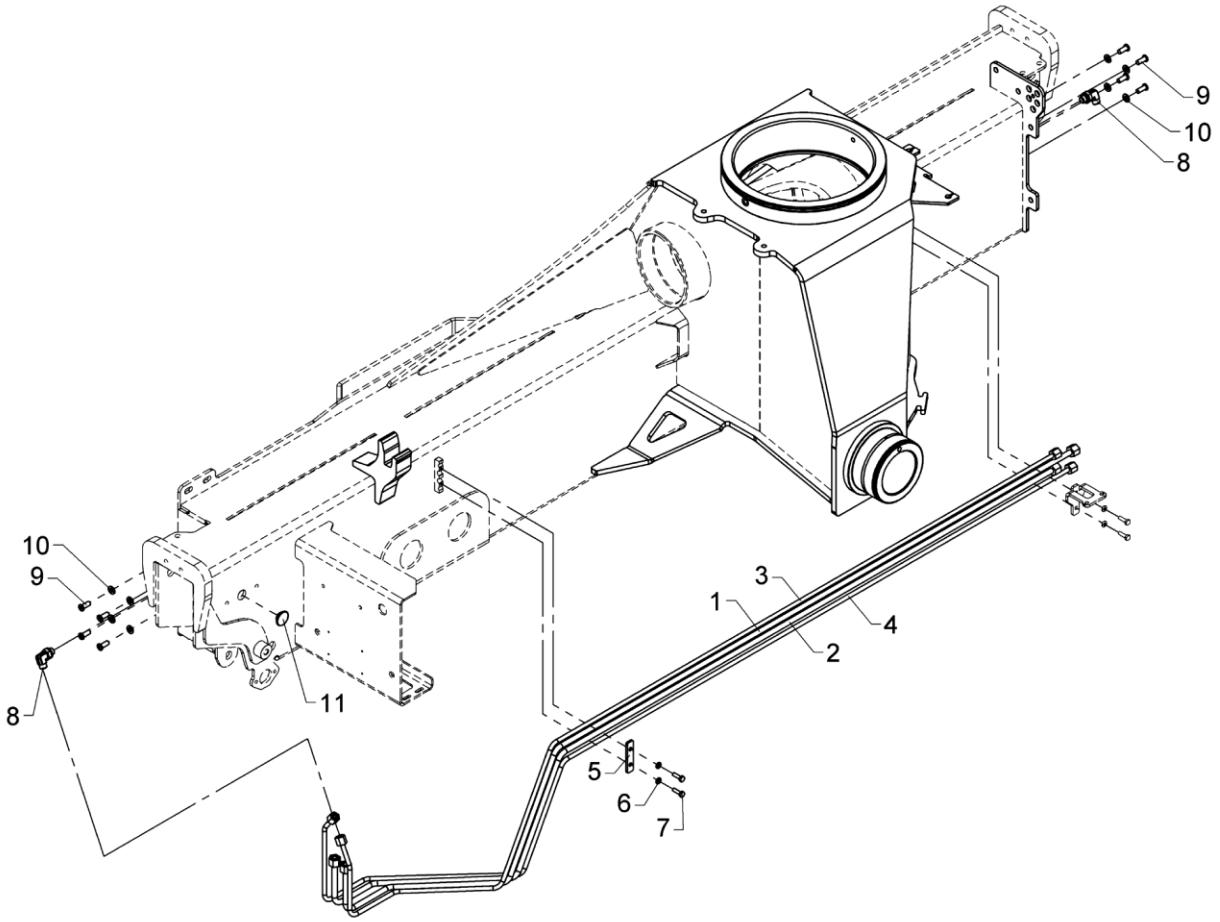

Hydraulic system, stabilizers, hydr. extension

Pos	Qty.	Part no.	Description	Remarks
		6345200	Hydr. system stabilizers,4fcts	
1	1	6344265	Pipe, stabilizers	
2	1	6344266	Pipe, stabilizers	
3	1	6344267	Pipe, stabilizers	
4	1	6344268	Pipe, stabilizers	
5	1	6340236	Plate	
6	2	32302	Face washer, stainless	6 mm
7	2	30113	Set screw, stainless	M6 x 20
8	2	26898	Elbow connection	8 mm - 1/4"
9	8	32486	Screw	MCL8 x 20
10	8	31147	Face washer, 8 mm	8 mm
11	2	63430	Guide	ø30 x 2 mm

2820K-RCS

Internal ref. 63 44 520

An Oshkosh Corportation Company

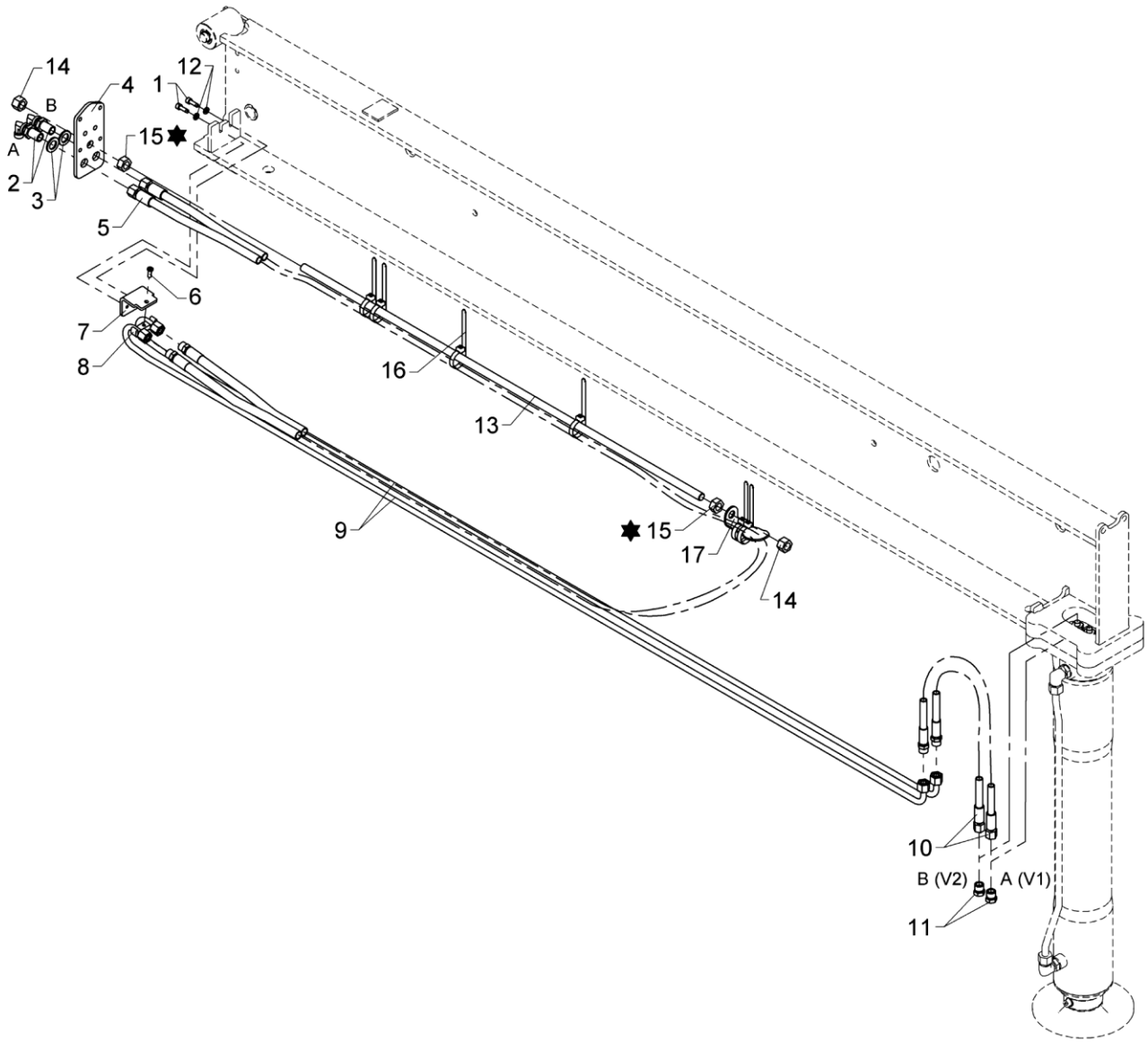

✸ Loctite 270

Hydraulic system, SV (+ SR-20° -Obsolete) 5570, manual extension

Pos	Qty.	Part no.	Description	Remarks
1	2	31539	Screw, stainless	MC6 x 16
2	2	26894	Elbow connection	10mm - 90 gr.
3	2	31791	Washer M16, stainless	16 mm
4	1	6344095	End plate	
5	1	56279	Hose	
6	1	32490	Screw	MC6 x 16
7	1	6344109	Clamp	
8	1	6306097	Clamp	
9	2	6344218	Pipe	
10	2	56460	Hose	1/4" x 550 mm L/S - 10
11	2	25635	Screw	VSK 10L
12	2	32302	Face washer, stainless	6 mm
13	1	31262	Threaded pin	
14	2	32317	Lock nut	M14
15	2	32145	Nut, stainless	M14
16	6	27275	Cable tie, black, 7.6x385mm	
17	1	6344107	Clamp	

2820K-RCS

63 43 620
Internal ref. 63 45 520

An Oshkosh Corportation Company

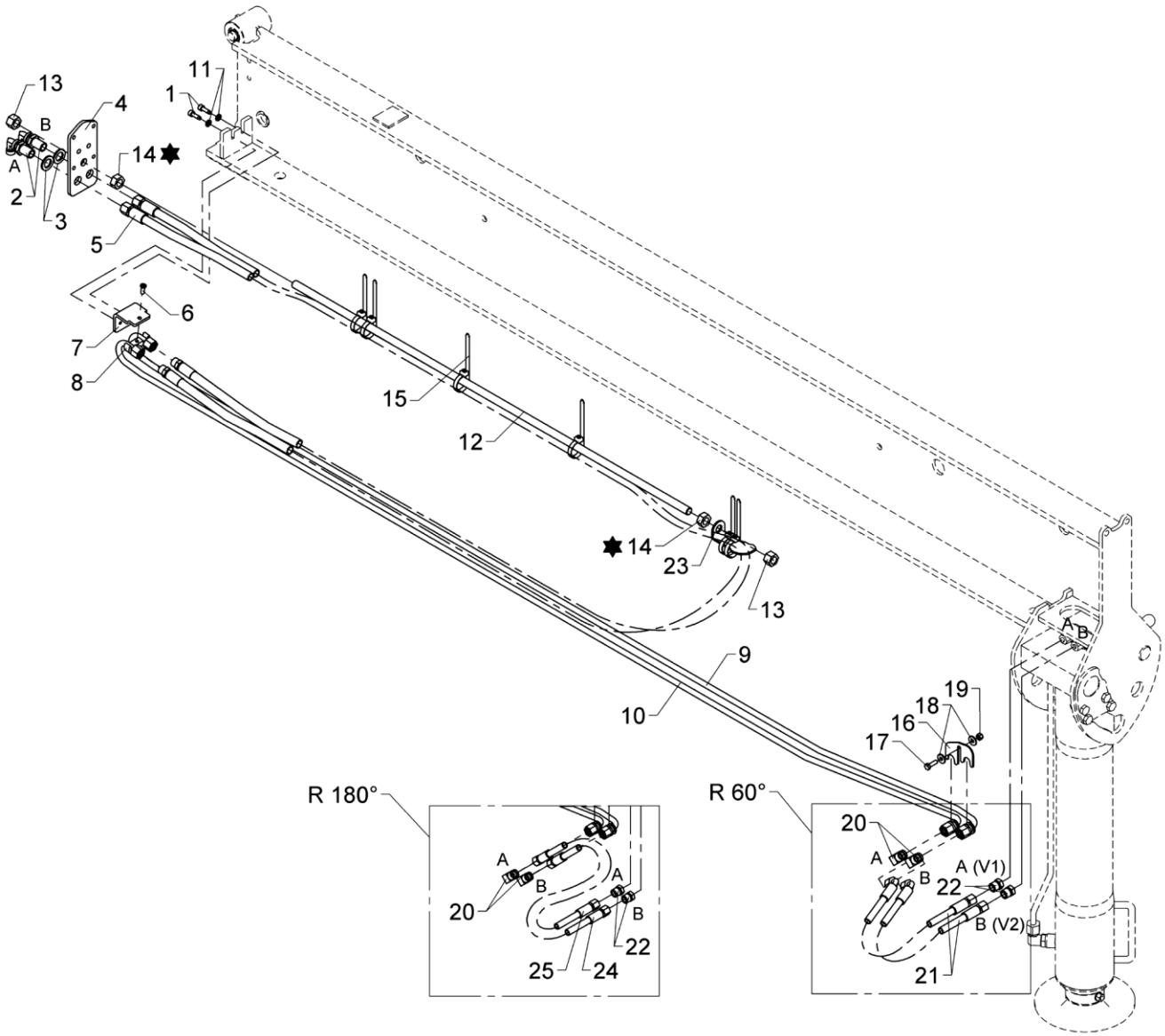

✸ Loctite 270

From loader 1440001
To loader

Hydraulic system, SR-60°/180°, 5570, manual extension

Created 07-07-2009
Modified 22-09-2014

Pos	Qty.	Part no.	Description	Remarks
		6345520	Hydr. syst., SR-60°- 5570 man	
		6343620	Hydraulic syst.,SR180°,5570man	
1	2	31539	Screw, stainless	MC6 x 16
2	2	26894	Elbow connection	10mm - 90 gr.
3	2	31791	Washer M16, stainless	16 mm
4	1	6344095	End plate	
5	1	56279	Hose	
6	1	32490	Screw	MC6 x 16
7	1	6344109	Clamp	
8	1	6306097	Clamp	
9	1	6344234	Pipe	
10	1	6344233	Pipe	
11	2	32302	Face washer, stainless	6 mm
12	1	31262	Threaded pin	
13	2	32317	Lock nut	M14
14	2	32145	Nut, stainless	M14
15	6	27275	Cable tie, black, 7.6x385mm	
16	1	6306164	Bracket	
17	1	30113	Set screw, stainless	M6 x 20
18	2	31134	Washer, stainless	6 mm
19	1	30884	Lock nut, stainless	M6
20	2	25125	Elbow connection	WV 10 L
21	2	56363	Hose	L=8mm / V=10 mm
22	2	25635	Screw	VSK 10L
23	1	6344107	Clamp	
24	1	56905	Hose 1/4 X 550 mm	L=8mm/L=10mm
25	1	56904	Hose 1/4 X 500 mm	L=8mm/L=10mm

2820K-RCS

63 44 530
Internal ref. 63 40 880

An Oshkosh Corportation Company

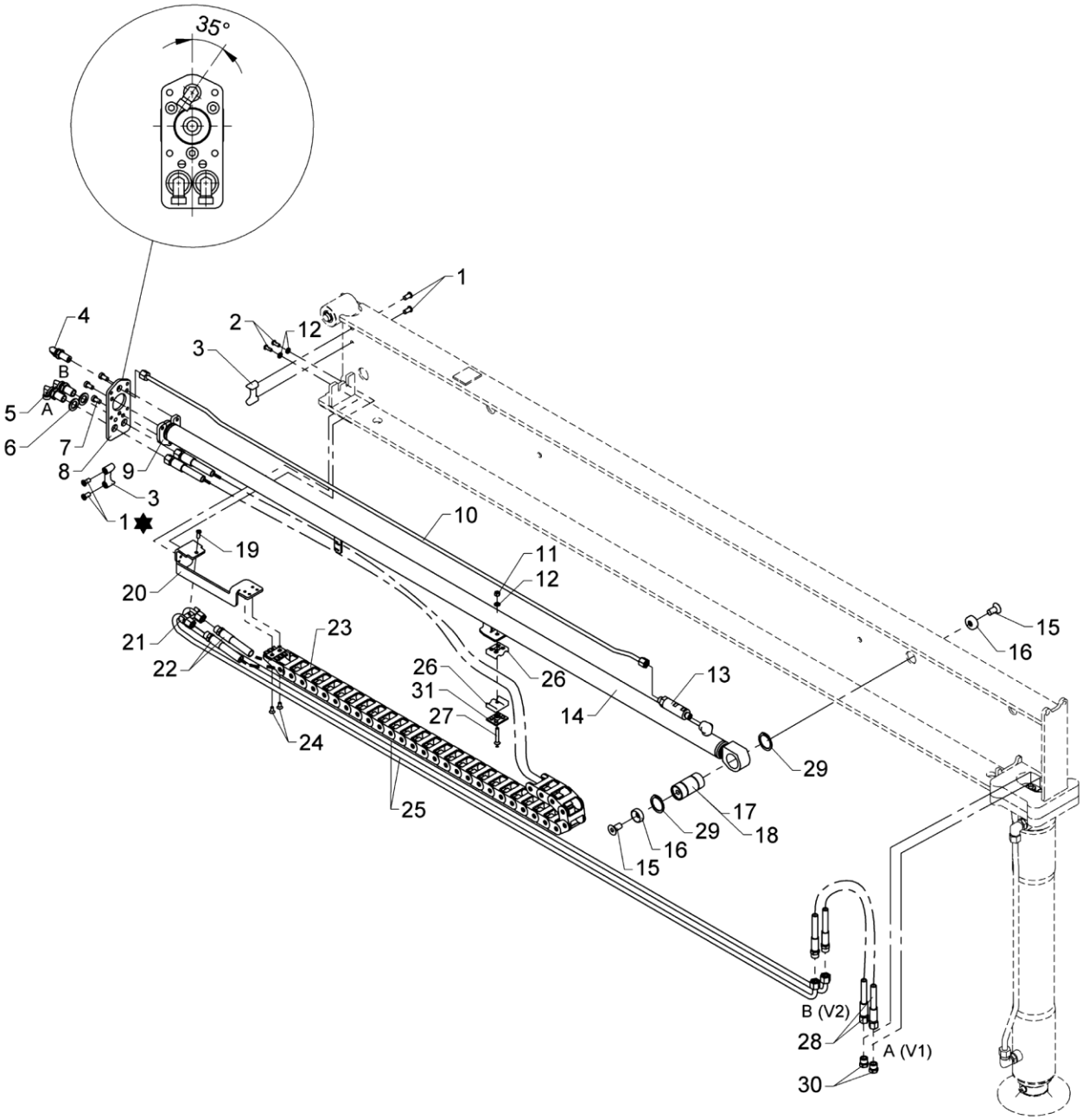

✱ Loctite 243

Hydraulic system, SV (+ SR-20° -Obsolete) 5570, hydr. extension

Pos	Qty.	Part no.	Description	Remarks
		6340880	Hydraulic system, SV-SR - 5570	
		6344530	Hydraulic system, SV-SR - 5570	
1	4	32481	Screw	MCL8 x 16
2	2	32222	Button head screw	M6 x 16
3	2	63556	Guide	
4	1	26864	Elbow connection	WSS 8L
5	2	26894	Elbow connection	10mm - 90 gr.
6	2	31791	Washer M16, stainless	16 mm
7	3	32478	Screw	M8 x 16
8	1	6344097	End plate	
9	1	6344098	Bracket	
10	1	6344219	Pipe	
11	1	30884	Lock nut, stainless	M6
12	3	32302	Face washer, stainless	6 mm
13	1	55228	Sequence valve	
14	1	6344210	Beam cylinder	
15	2	30586	Countersunk screw	MK12 x 25
16	2	6306241	Mounting plate	
17	1	6340118	Pin	Serie 1300/1500
18	1	6344118	Pin	Serie 1800/2200
19	1	32490	Screw	MCL6 x 16
20	1	6344096	Clamp	
21	1	6306097	Clamp	
22	2	56364	Hose	5/16" x 2300 mm L/S - 10
23	1	28886	Nylon drag chain	
24	2	30542	Counter-sunk screw	MK6 x 12
25	2	6344218	Pipe	
26	2	64408	Clamp	
27	1	32352	Countersunk screw	MK6 x 40
28	2	56460	Hose	1/4" x 550 mm L/S - 10
29	2	33117	Circlip	35U
30	2	25635	Screw	VSK 10L
31	1	6344106	Welding plate	

2820K-RCS

63 43 740
63 43 610
63 46 530
Internal ref. 63 42 540

An Oshkosh Corportation Company

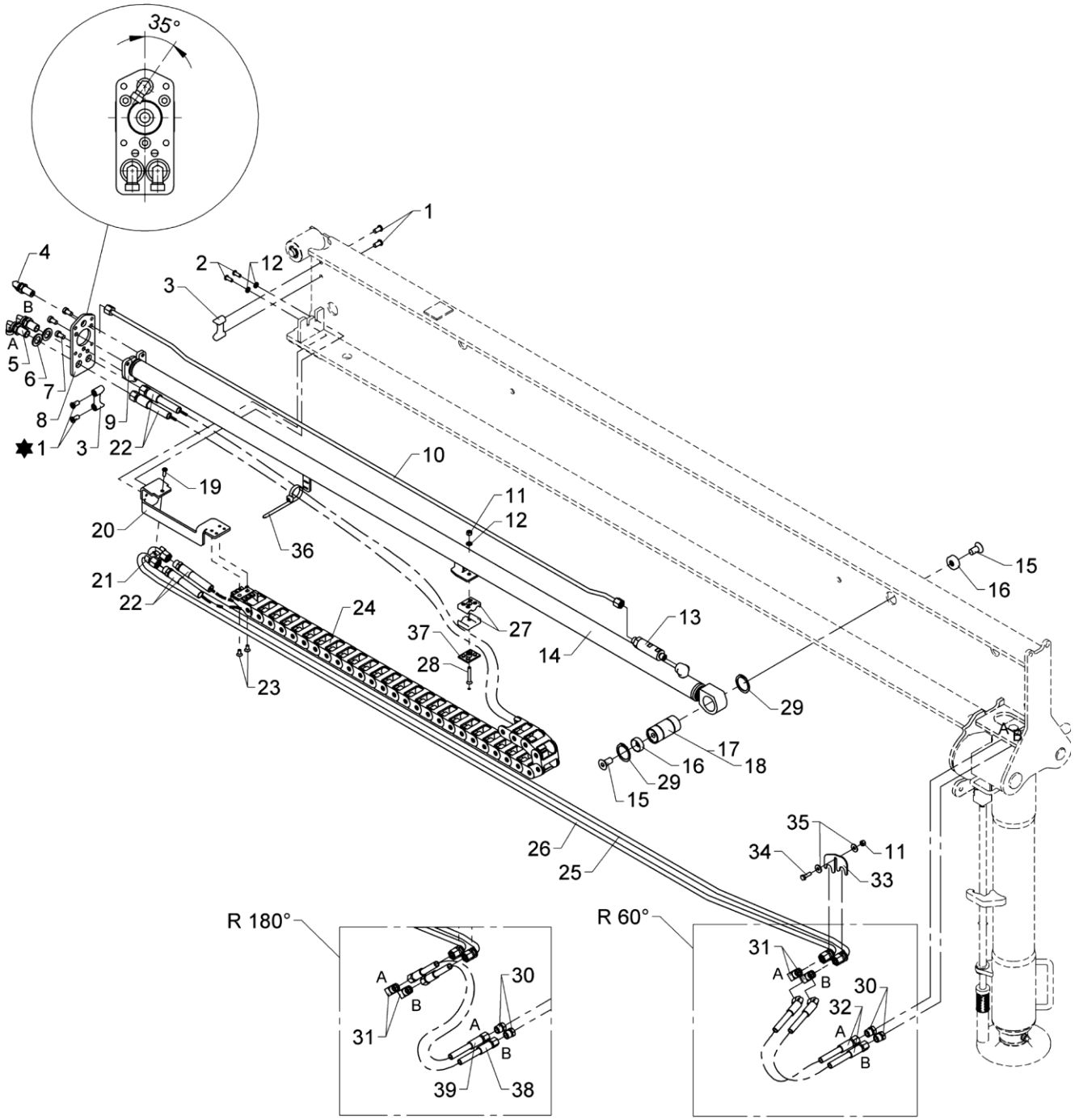

✱ Loctite 243

Hydraulic system, SH + SR-60°/180° - 5570, hydr. extension

Pos	Qty.	Part no.	Description	Remarks
		6342540	Hydraulic system, SH - 5570	1300/1500
		6346530	Hydraulic system, SH - 5570	1800/2200/2310S
		6343610	Hydr.system,SR180°, 5570 hydr	1300/1500
		6343740	Hydr.system,SR180°, 5570 hydr	1800/2200/2310S
1	4	32481	Screw	MCL8 x 16
2	2	32222	Button head screw	M6 x 16
3	2	63556	Guide	
4	1	26864	Elbow connection	WSS 8L
5	2	26894	Elbow connection	10mm - 90 gr.
6	2	31791	Washer M16, stainless	16 mm
7	3	32478	Screw	M8 x 16
8	1	6344097	End plate	
9	1	6344098	Bracket	
10	1	6344219	Pipe	
11	2	30884	Lock nut, stainless	M6
12	3	32302	Face washer, stainless	6 mm
13	1	55228	Sequence valve	
14	1	6344210	Beam cylinder	
15	2	30586	Countersunk screw	MK12 x 25
16	2	6306241	Mounting plate	
17	1	6340118	Pin	Serie 1300/1500
18	1	6344118	Pin	Serie 1800/2200
19	1	32490	Screw	MCL6 x 16
20	1	6344096	Clamp	
21	1	6306097	Clamp	
22	2	56364	Hose	5/16" x 2300 mm L/S - 10
23	2	30542	Counter-sunk screw	MK6 x 12
24	1	28886	Nylon drag chain	
25	1	6344234	Pipe	
26	1	6344233	Pipe	
27	2	64408	Clamp	
28	1	32352	Countersunk screw	MK6 x 40
29	2	33117	Circlip	35U
30	2	25635	Screw	VSK 10L
31	2	25125	Elbow connection	WV 10 L
32	2	56363	Hose	L=8mm / V=10 mm
33	1	6306164	Bracket	
34	1	30113	Set screw, stainless	M6 x 20
35	2	31134	Washer, stainless	6 mm
36	1	27275	Cable tie, black, 7.6x385mm	
37	1	6344106	Welding plate	

2820K-RCS

63 43 740
63 43 610
63 46 530
Internal ref. 63 42 540

An Oshkosh Corportation Company

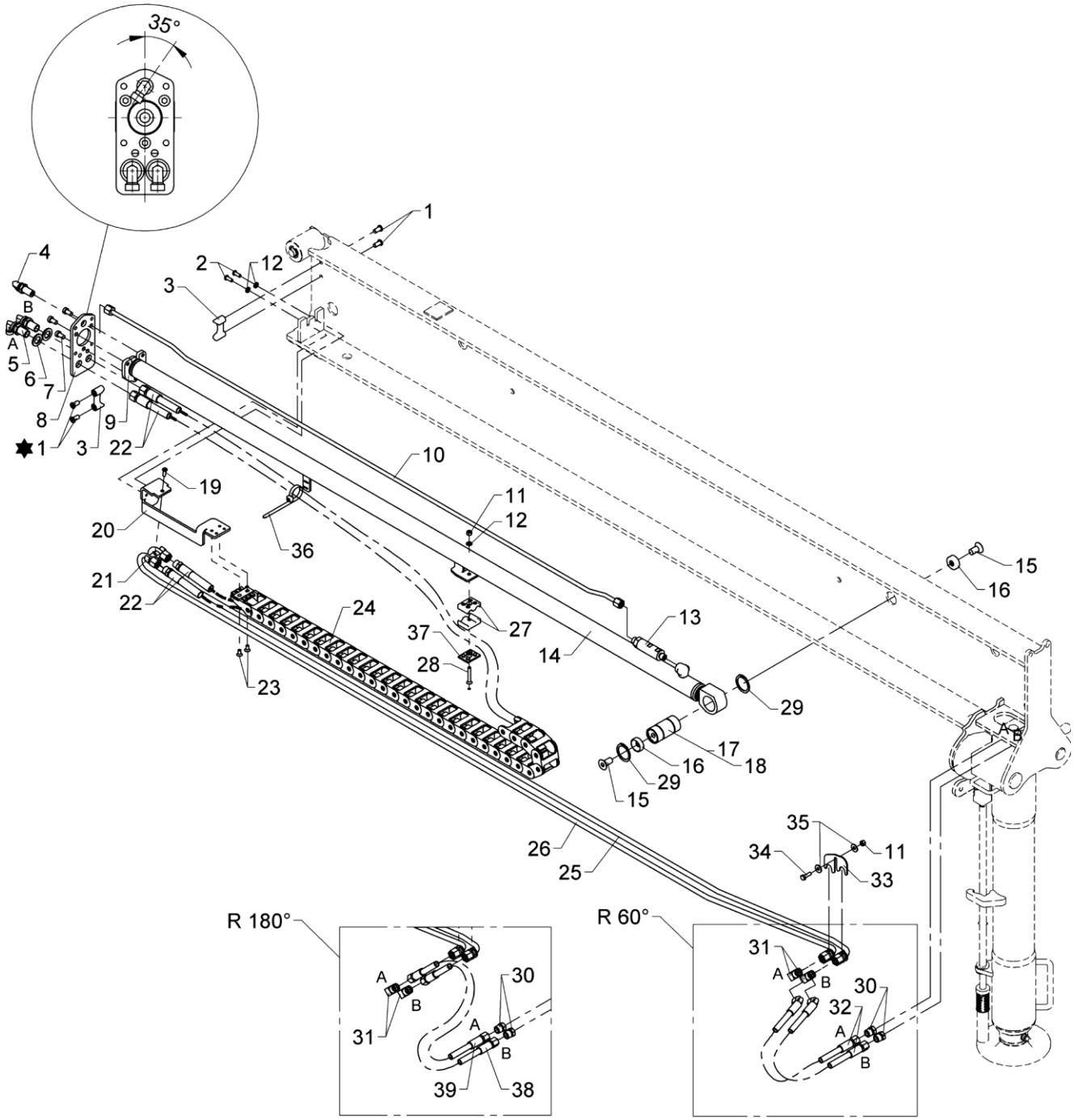

✱ Loctite 243

Hydraulic system, SH + SR-60°/180° - 5570, hydr. extension

Pos	Qty.	Part no.	Description	Remarks
38	1	56905	Hose 1/4 X 550 mm	L=8mm/L=10mm
39	1	56904	Hose 1/4 X 500 mm	L=8mm/L=10mm

2820K-RCS

Internal ref. 63 44 550

An Oshkosh Corportation Company

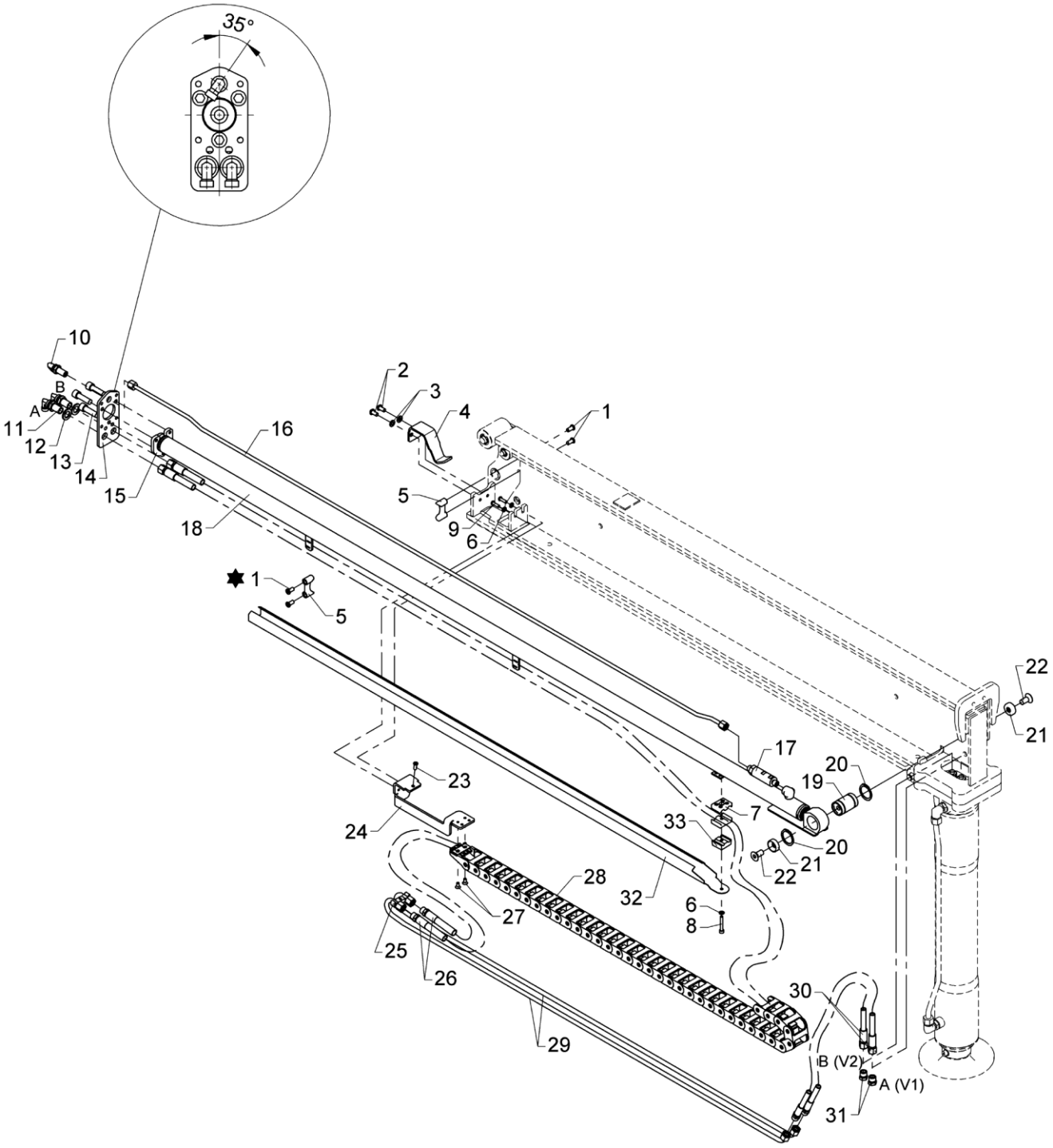

✸ Loctite 243

From loader 1440001
To loader

Hydraulic system, DV (+ DR-20° -Obsolete) 6450, hydr. extension

Created 06-03-2007
Modified 23-09-2014

Pos	Qty.	Part no.	Description	Remarks
1	4	32481	Screw	MCL8 x 16
2	2	30925	Round-head screw	M8 x 16
3	2	31147	Face washer, 8 mm	
4	1	6306099	Spring holder	
5	2	63556	Guide	
6	3	32302	Face washer, stainless	6 mm
7	2	64408	Clamp	
8	1	32410	Screw	MC6 x 40
9	2	32491	Round-head screw	M6 x 20
10	1	26864	Elbow connection	WSS 8L
11	2	26894	Elbow connection	10mm - 90 gr.
12	2	31791	Washer M16, stainless	16 mm
13	3	30475	Screw	MC12 x 40
14	1	6344097	End plate	
15	1	6344098	Bracket	
16	1	6344229	Pipe	
17	1	55228	Sequence valve	
18	1	6344220	Beam cylinder	
19	1	6340119	Pin	
20	2	33117	Circlip	35U
21	2	6306241	Mounting plate	
22	2	30586	Countersunk screw	MK12 x 25
23	1	32490	Screw	MC6 x 16
24	1	6344096	Clamp	
25	1	6306097	Clamp	
26	2	56365	Hose	5/16" x 3340 mm L/S - 10
27	2	30542	Counter-sunk screw	MK6 x 12
28	1	28887	Nylon drag chain	
29	2	6344228	Pipe	
30	2	56366	Hose	1/4" x 260 mm L/S - 10
31	2	25635	Screw	VSK 10L
32	1	6342561	Guide rail	
33	1	31417	Clamp	

2820K-RCS

63 43 630
Internal ref. 63 42 560

An Oshkosh Corportation Company

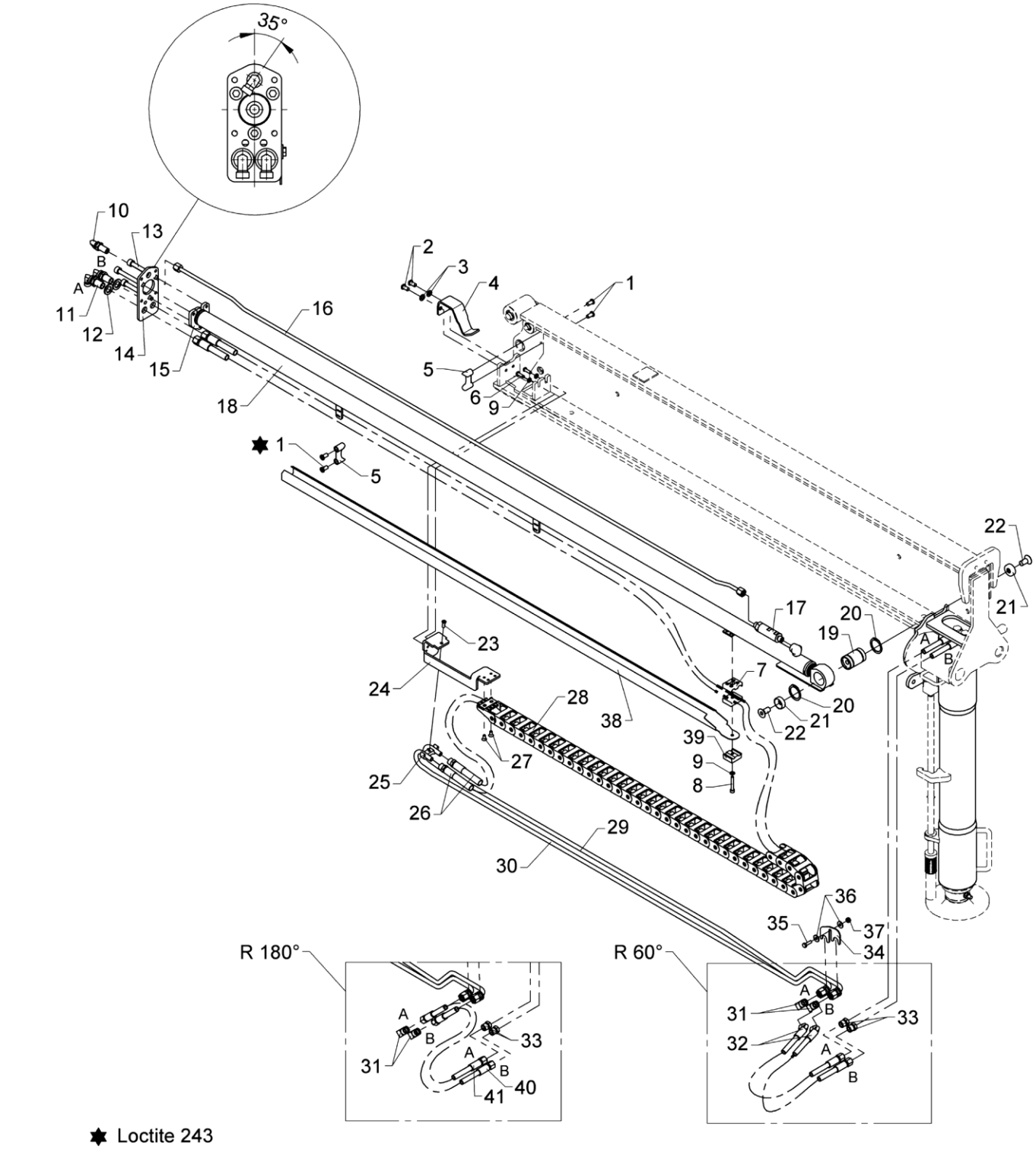

✸ Loctite 243

From loader 1440001
To loader

Hydraulic system, DH + DR-60°/180° - 6450, hydr. extension

Created 15-05-2009
Modified 23-09-2014

Pos	Qty.	Part no.	Description	Remarks
		6342560	Hydraulic system, DH - 6450	
		6343630	Hydr.system, DR180°, 6450 hydr	
1	4	32481	Screw	MCL8 x 16
2	2	30925	Round-head screw	M8 x 16
3	2	31147	Face washer, 8 mm	
4	1	6306099	Spring holder	
5	2	63556	Guide	
6	2	32491	Round-head screw	M6 x 20
7	2	64408	Clamp	
8	1	32410	Screw	MC6 x 40
9	3	32302	Face washer, stainless	6 mm
10	1	26864	Elbow connection	WSS 8L
11	2	26894	Elbow connection	10mm - 90 gr.
12	2	31791	Washer M16, stainless	16 mm
13	3	32459	Screw	MC10 x 85
14	1	6344097	End plate	
15	1	6344098	Bracket	
16	1	6344229	Pipe	
17	1	55228	Sequence valve	
18	1	6344220	Beam cylinder	
19	1	6340119	Pin	
20	2	33117	Circlip	35U
21	2	6306241	Mounting plate	
22	2	30586	Countersunk screw	MK12 x 25
23	1	32490	Screw	MC6 x 16
24	1	6344096	Clamp	
25	1	6306097	Clamp	
26	2	56365	Hose	5/16" x 3340 mm L/S - 10
27	2	30542	Counter-sunk screw	MK6 x 12
28	1	28887	Nylon drag chain	
29	1	6344236	Pipe	
30	1	6344235	Pipe, stabilizers	
31	2	25125	Elbow connection	WV 10 L
32	2	56363	Hose	L=8mm / V=10 mm
33	2	25635	Screw	VSK 10L
34	1	6306164	Bracket	
35	1	30113	Set screw, stainless	M6 x 20
36	2	31134	Washer, stainless	
37	1	30884	Lock nut, stainless	M6
38	1	6342561	Guide rail	
39	1	31417	Clamp	

2820K-RCS

63 43 630
Internal ref. 63 42 560

An Oshkosh Corportation Company

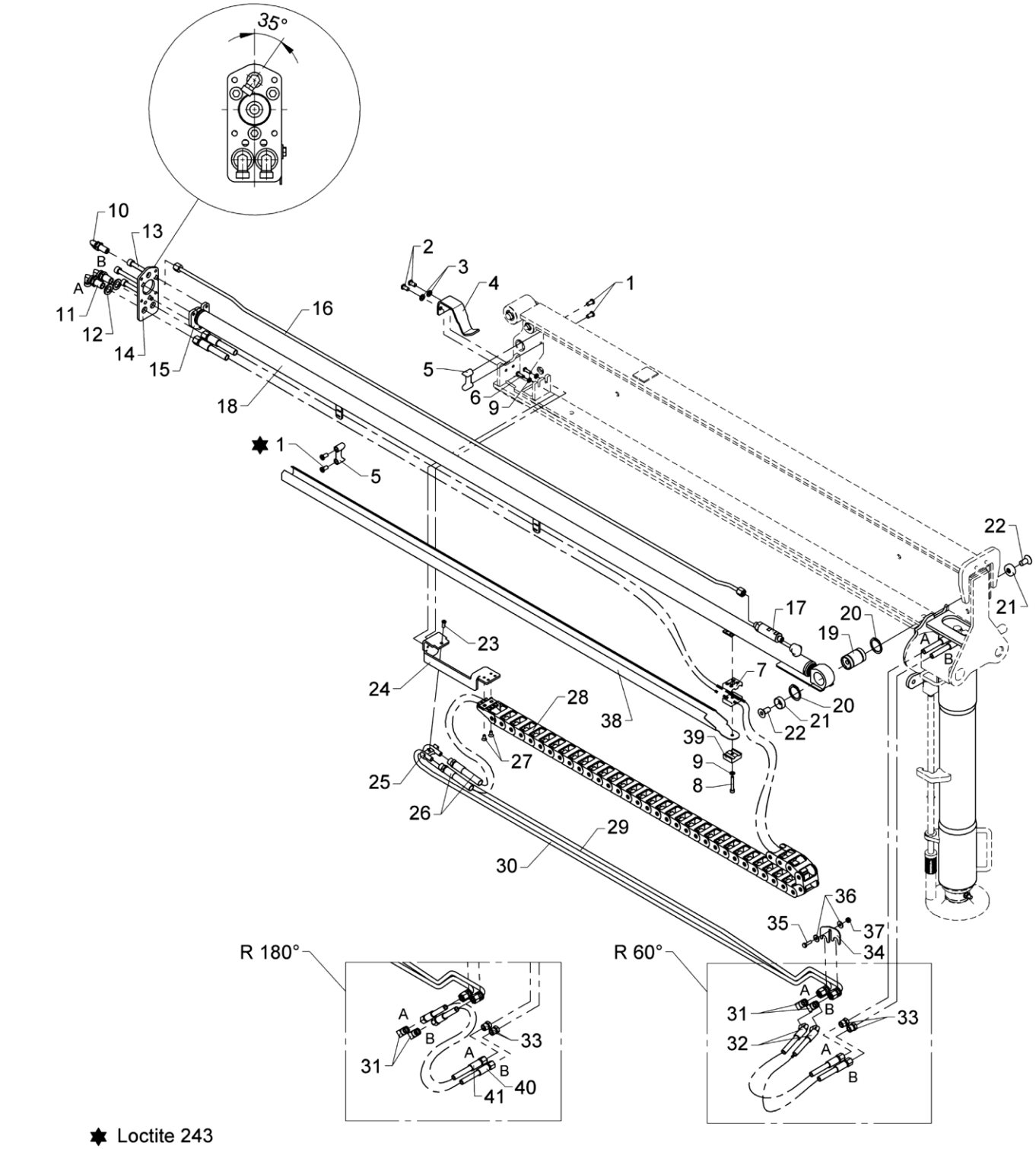

✸ Loctite 243

Hydraulic system, DH + DR-60°/180° - 6450, hydr. extension

Pos	Qty.	Part no.	Description	Remarks
40	1	56905	Hose 1/4 X 550 mm	L=8mm/L=10mm
41	1	56904	Hose 1/4 X 500 mm	L=8mm/L=10mm

2820K-RCS

Internal ref. 63 45 460

An Oshkosh Corportation Company

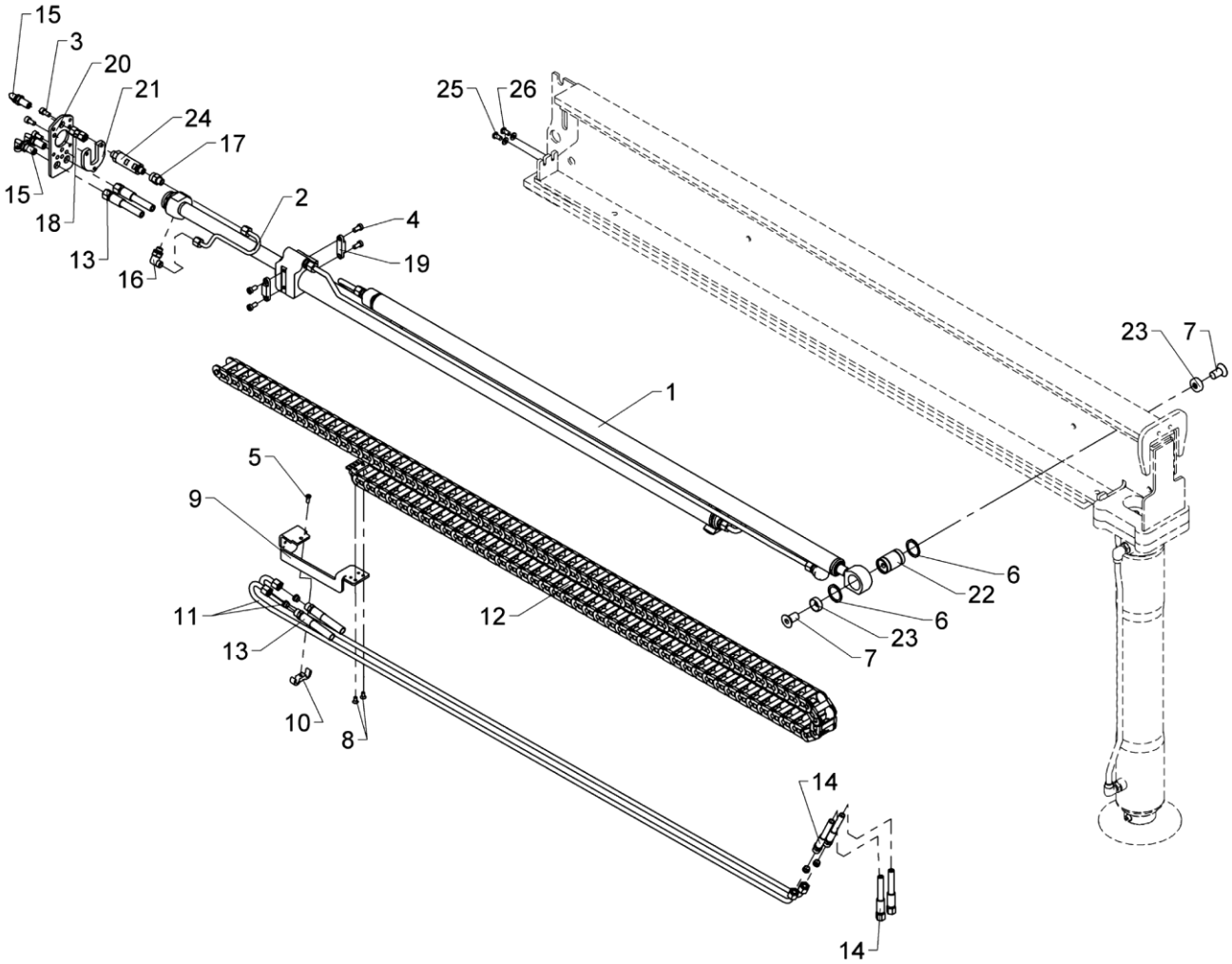

Hydraulic system, DV 7400 hydr. extension

Pos	Qty.	Part no.	Description	Remarks
1	1	6346210	Beam cylinder assy., S=2537.5	
2	1	6346232		
3	3	30449	Screw	MC8 x 16
4	4	32478	Screw	MC8 x 16
5	1	32490	Screw	MC6 x 16
6	2	33117	Circlip	35U
7	2	32401	Sockethead screw	MK16 x 30
8	2	30542	Counter-sunk screw	MK6 x 12
9	1	6344096	Clamp	
10	1	6306097	Clamp	
11	2	6346235		
12	1	29524	Nylon drag chain (94 links)	
13	2	56555	Hose	5/16" x 3540 mm L/S - 10
14	2	56460	Hose	
15	3	26864	Elbow connection	WSS 8L
16	1	26898	Elbow connection	8 mm - 1/4"
17	1	26106	Connection	P-MAV 8 LR
18	1	25669	Connection	
19	2	6346228		
20	1	6344097	End plate	
21	1	6344098	Bracket	
22	1	6340119	Pin	
23	2	6306241	Mounting plate	
24	1	55228	Sequence valve	
25	2	30925	Round-head screw	M8 x 16
26	2	32306	Washer	6 mm

2820K-RCS

An Oshkosh Corportation Company

Internal ref. 63 46 550

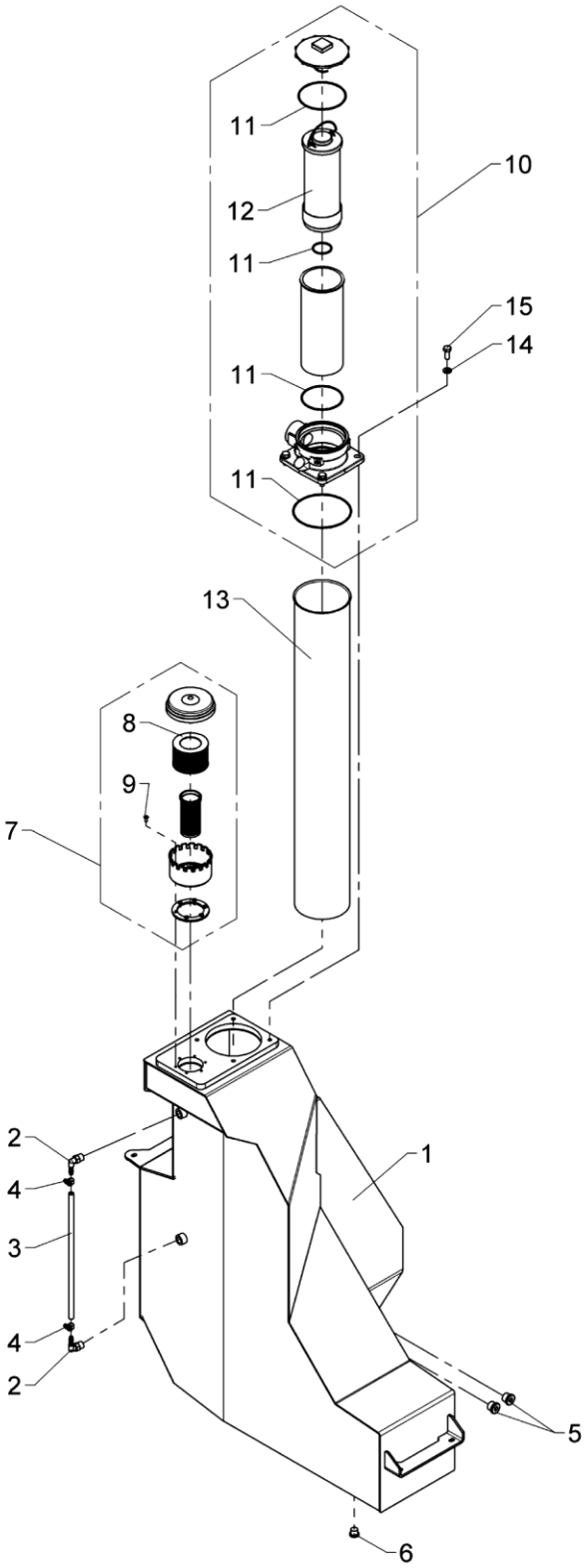

565 06 010

From loader 1440001
To loader

Tank, cpl. (150L)

Created 13-07-2018
Modified 30-11-2018

Pos	Qty.	Part no.	Description	Remarks
1	1	6341531	Tank	
2	2	64500	Elbow	WES 8/R-3/8"
3	1	62511	Plastic hose	
4	2	31452	Clamp	
5	2	25103	Plug	VS-R-1/2 WD
6	1	25277	Plug	VS-R-3/8 WD
7	1	60275	Air filter	
8	1	60276	Filter	
9	6	32405	Sockethead screw	MK5 x 12
10	1	49408	Return filter	
11	1	49419	Seal kit	
12	1	49409	Filter	
13	1	58409	Pipe	
14	4	31565	Washer, stainless	10 mm
15	4	31513	Set screw, stainless	M10 x 25

2820K-RCS

63 46 960
Internal ref. 63 46 950

An Oshkosh Corportation Company

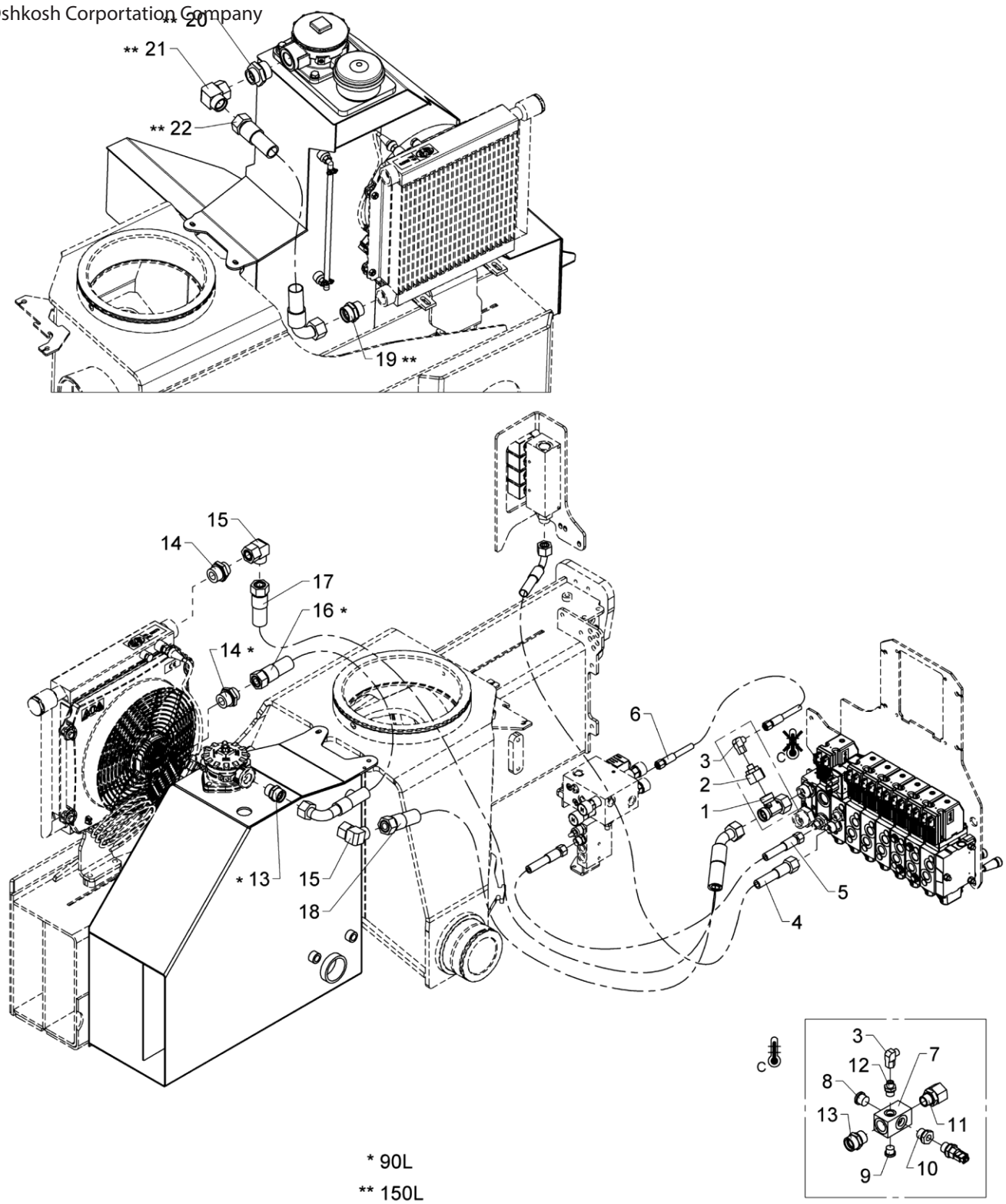

Hydr. syst. pump + return hoses

Pos	Qty.	Part no.	Description	Remarks
		6346950		
		6346960		
1	1	26149	Connection	ELSD 22 L
2	1	25286	Reducing connection	REDSDN 22/8 L
3	1	26170	Elbow connection	EWSD 8 L
4	1	62763	Hose	1/2 X 750 M24 X 1.5 L/90
5	1	0017580	Hose	
6	1	62536	Hose	1/4 X 350 L/L
7	1	59355	Return block	
8	1	25103	Plug	VS-R-1/2 WD
9	1	25277	Plug	VS-R-3/8 WD
10	1	25180	Reducing connection	RED-R 1/2-WD/R 1/4
11	1	25279	Connection	EGESD 22 LR-WD
12	1	25244	Connection	GES 8 LR 3/8-WD
13	2	25169	Connection	P-GEV 22 LR-WD
14	2	26122	Connection	P-GEV 22 LR 1-WD
15	2	25209	Elbow connection	EWSD 22 L
16	1	56501	Hose	Til køler/tank
17	1	62562	Hose	Til køler
18	1	62648	Hose	Til tank
19	1	26163	Connection	P-GEV 28 LR-WD
20	1	25892	Straight connection	GA 28 LR 1.1/4
21	1	26192	Elbow connection	EWSD 22 L
22	1	62762	Hose	Til køler/tank

2820K-RCS

63 47 860
Internal ref. 63 47 850

An Oshkosh Corportation Company

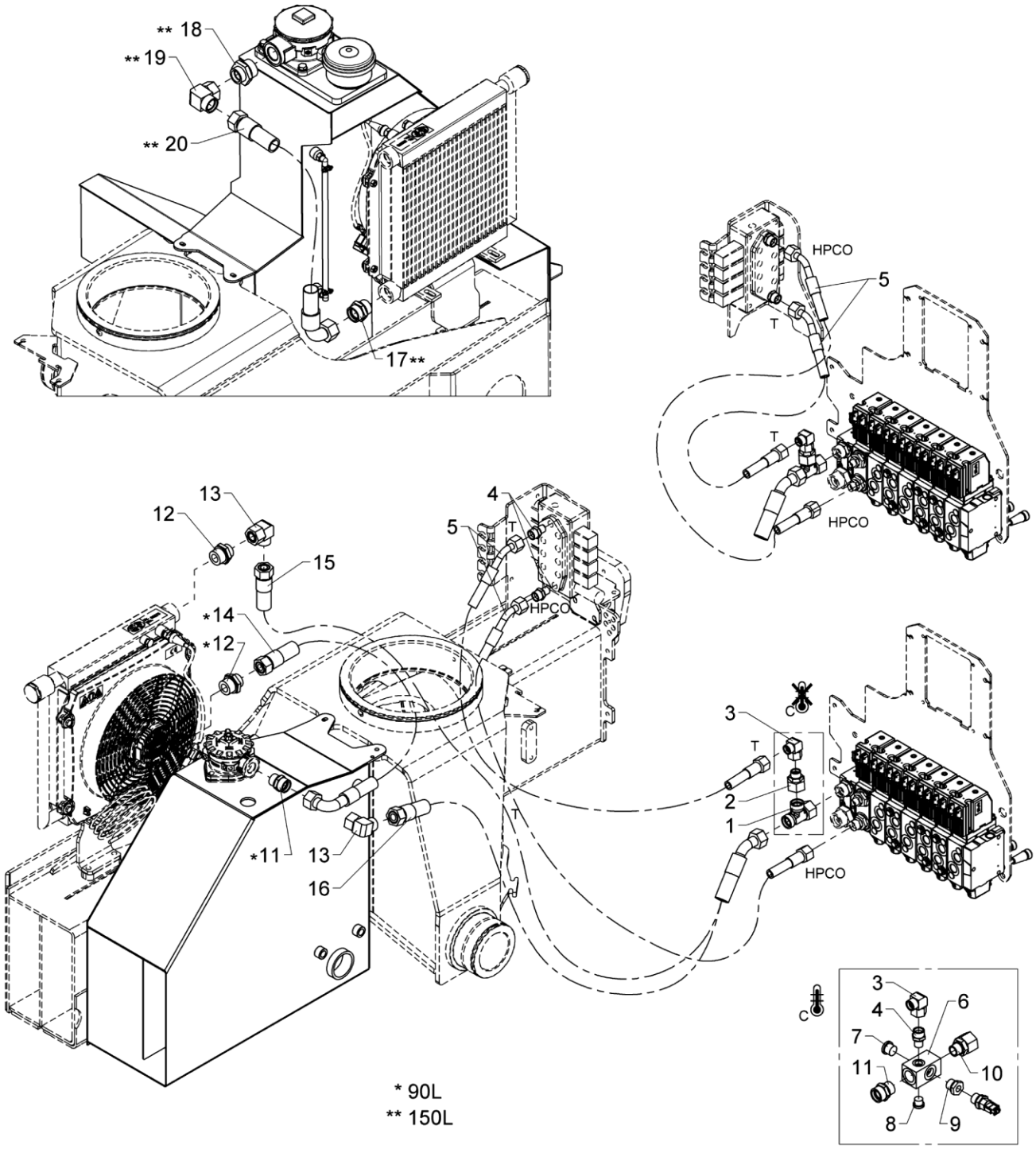

Hydr. syst. pump + return hoses

Pos	Qty.	Part no.	Description	Remarks
		6347850		
		6347860		
1	1	26149	Connection	ELSD 22 L
2	1	25298	Connection	REDSDN 22/15 L
3	1	25284	Elbow connection	EWSD 15 L
4	3	25273	Connection	GES 15 LR 3-8 A3L
5	2	56503	Hose	
6	1	59355	Return block	
7	1	25103	Plug	VS-R-1/2 WD
8	1	25277	Plug	VS-R-3/8 WD
9	1	25180	Reducing connection	RED-R 1/2-WD/R 1/4
10	1	25279	Connection	EGESD 22 LR-WD
11	2	25169	Connection	P-GEV 22 LR-WD
12	2	26122	Connection	P-GEV 22 LR 1-WD
13	2	25209	Elbow connection	EWSD 22 L
14	1	56501	Hose	Til køler/tank
15	1	62562	Hose	Til køler
16	1	62648	Hose	Til tank
17	1	26163	Connection	P-GEV 28 LR-WD
18	1	25892	Straight connection	GA 28 LR 1.1/4
19	1	26192	Elbow connection	EWSD 22 L
20	1	62762	Hose	Til køler/tank

2820K-RCS

63 95 290
Internal ref. 63 47 500

An Oshkosh Corportation Company

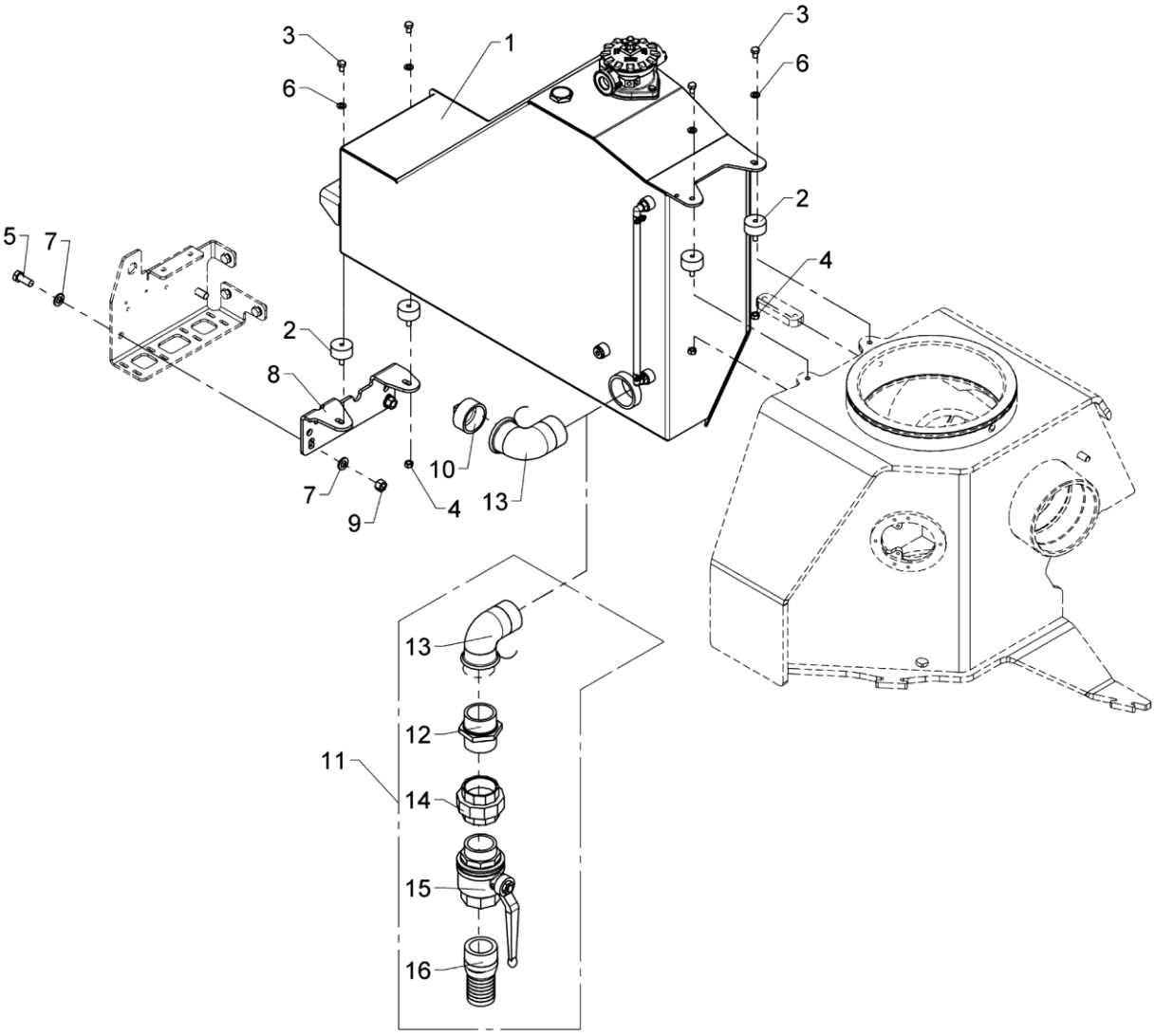

565 06 080

From loader 1440001
To loader

Tank incl. fittings, (90L)

Created 12-10-2017
Modified 07-08-2018

Pos	Qty.	Part no.	Description	Remarks
1	1	6341580	Tank with fittings	
2	4	62000	Torsion balancer Type 2	
3	4	30130	Set screw, stainless	M8 x 12
4	4	30856	Nut, stainless	M8
5	2	30177	Set screw	M12 x 30
6	4	31147	Face washer, 8 mm	
7	4	32338	Washer	12 mm
8	1	6340557	Mounting fittings	
9	2	30860	Nut, stainless	M12
10	1	25398	Plug	
11	1	6395290	Ball valve for tank	
12	1	25342	Hexagon nipple	2"
13	2	25430	Elbow	
14	1	25595	Union nut 2"	
15	1	58787	3-way ball valve	2"
16	1	60991	Nipple	CN 200 / HMF

2820K-RCS

63 95 290
63 46 970
Internal ref. 63 46 540

An Oshkosh Corportation Company

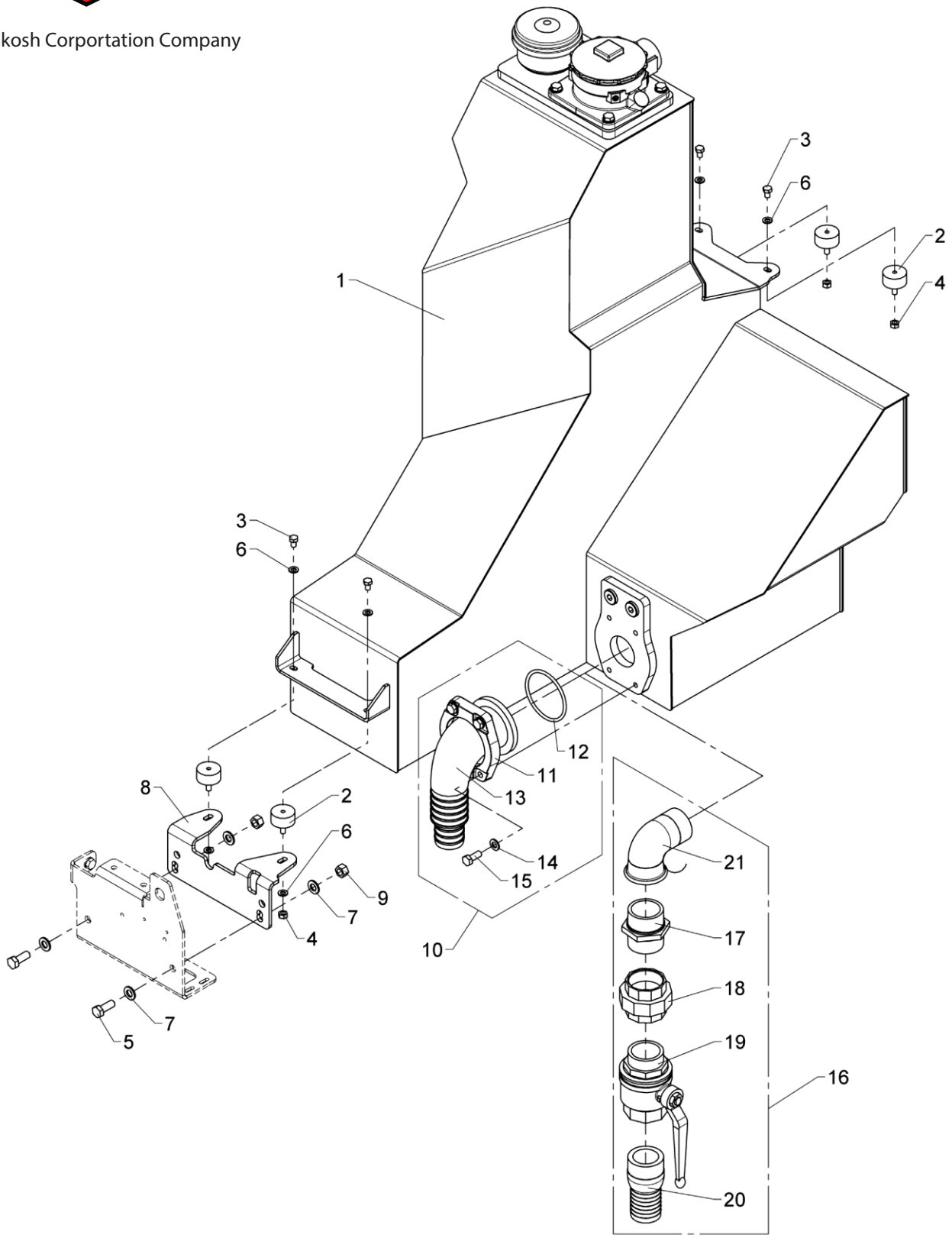

Tank incl. fittings (150L)

565 06 090

From loader 1440001
To loader

Created 13-07-2018
Modified

Pos	Qty.	Part no.	Description	Remarks
1	1	6346550		
2	4	62000	Torsion balancer Type 2	
3	4	30130	Set screw, stainless	M8 x 12
4	4	30856	Nut, stainless	M8
5	2	30177	Set screw	M12 x 30
6	6	31147	Face washer, 8 mm	
7	4	32338	Washer	12 mm
8	1	6340557	Mounting fittings	
9	2	30860	Nut, stainless	M12
10	1	6346970		
11	1	49279	Flange	
12	1	49275	O-ring	
13	1	49276	Nipple	
14	4	31177	Washer	10 mm
15	4	30155	Set screw	M10 x 25
16	1	6395290	Ball valve for tank	
17	1	25342	Hexagon nipple	2"
18	1	25595	Union nut 2"	
19	1	58787	3-way ball valve	2"
20	1	60991	Nipple	CN 200 / HMF
21	1	25430	Elbow	

2820K-RCS

Internal ref. 63 47 540

An Oshkosh Corportation Company

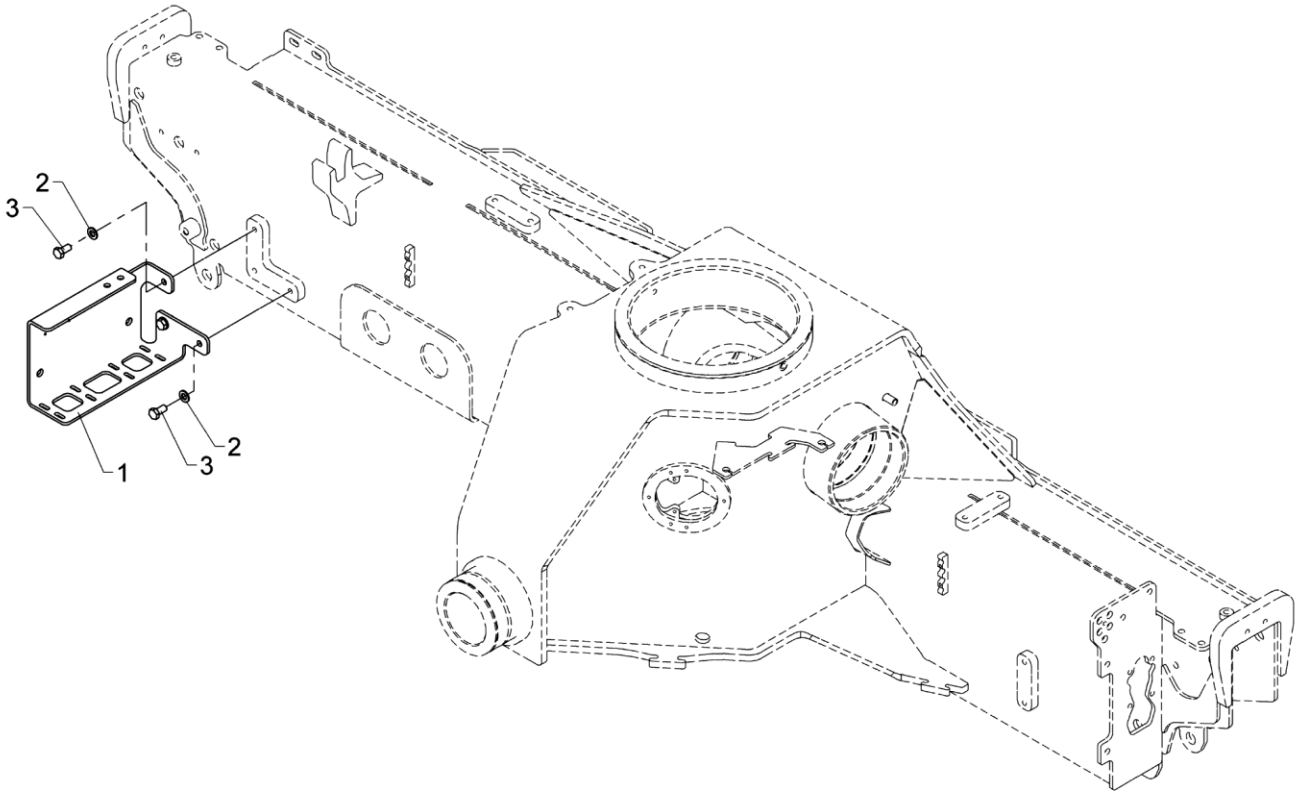

Tank bracket

565 06 095

From loader 1440001
To loader

Created 12-10-2017
Modified

Pos	Qty.	Part no.	Description	Remarks
1	1	6340587	Tank bracket	
2	3	31177	Washer	10 mm
3	3	31517	Set screw, stainless	M10 x 20

2820K-RCS

63 47 810
Internal ref. 63 47 800

An Oshkosh Corportation Company

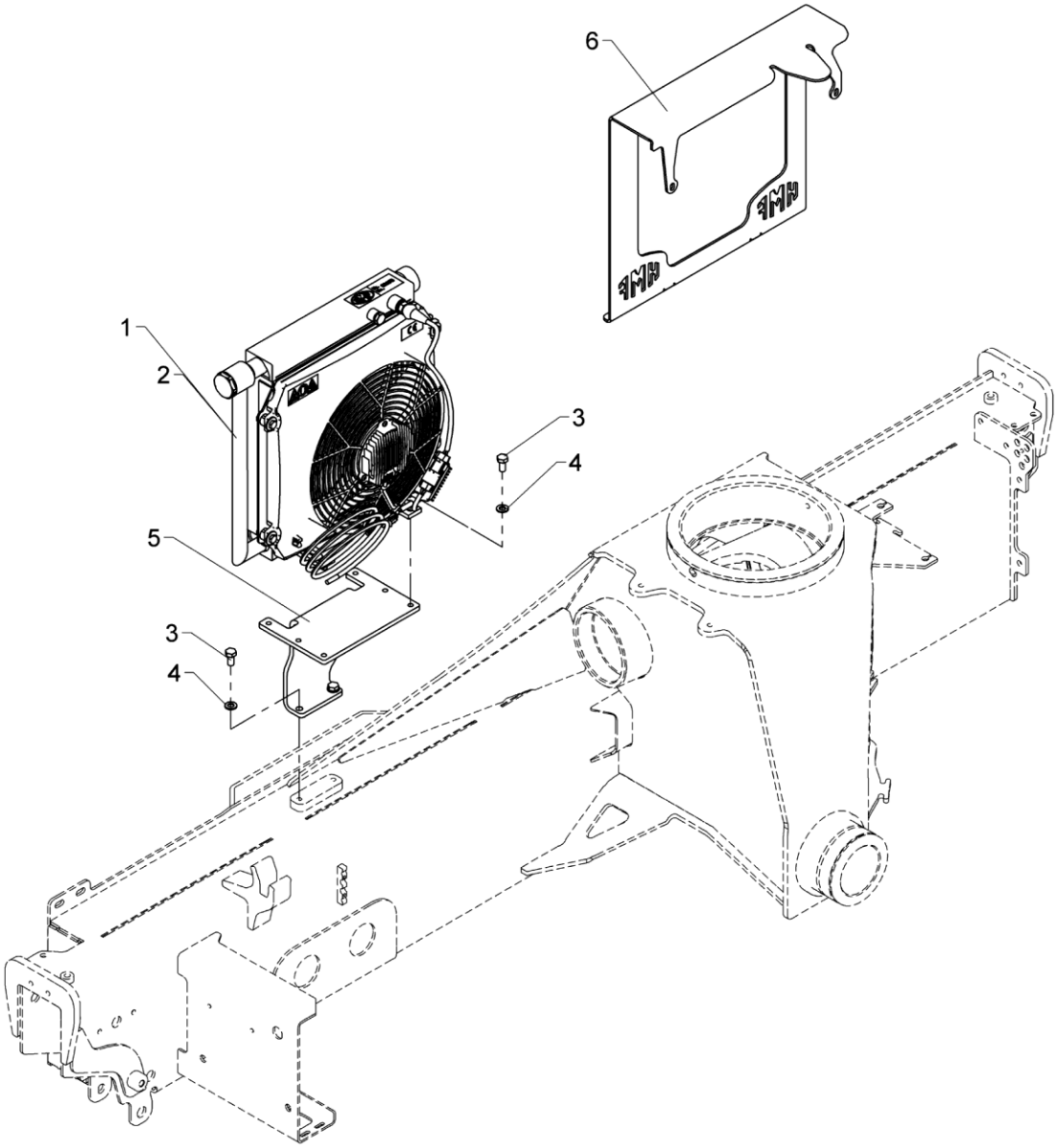

Oil cooler

Pos	Qty.	Part no.	Description	Remarks
		6347800		
		6347810		
1	1	50272	Oil cooler, 24 V + Smartdrive	63 47 810
2	1	50273	Oil cooler 12 V + Smartdrive	63 47 800
3	6	31517	Set screw, stainless	M10 x 20
4	6	31565	Washer, stainless	10 mm
5	1	6354757	Cooler bracket	
6	1	6340928	Protection plate	

2820K-RCS

63 47 780
Internal ref. 63 47 790

An Oshkosh Corportation Company

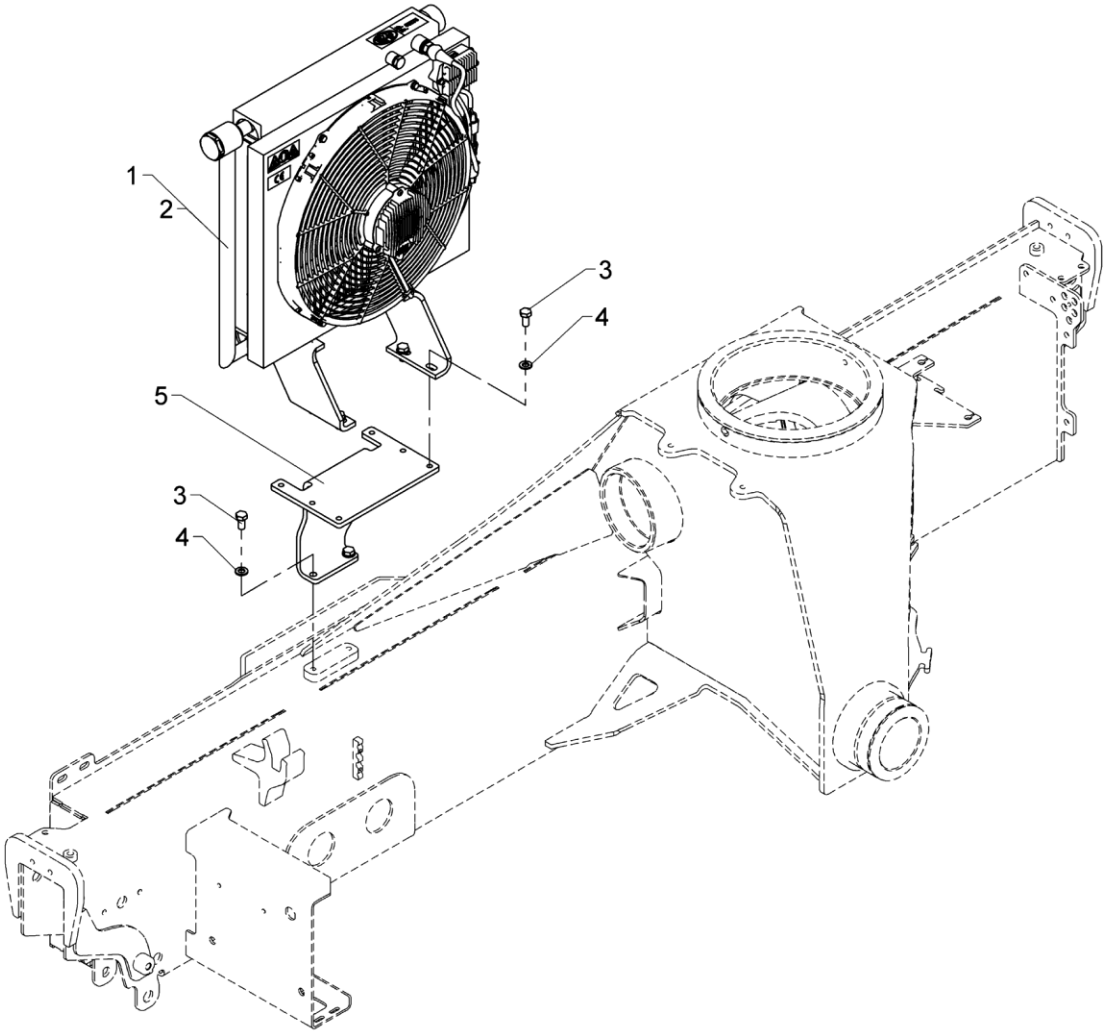

Oil cooler

565 06 110

From loader 1440001
To loader

Created 20-06-2017
Modified

Pos	Qty.	Part no.	Description	Remarks
		6347790		
		6347780		
1	1	50274	Oil cooler 24 V + Smartdrive	
2	1	50275	Oil cooler 12 V + Smartdrive	
3	6	31517	Set screw, stainless	M10 x 20
4	6	31565	Washer, stainless	10 mm
5	1	6354757	Cooler bracket	

2820K-RCS

Internal ref. 63 47 550

An Oshkosh Corportation Company

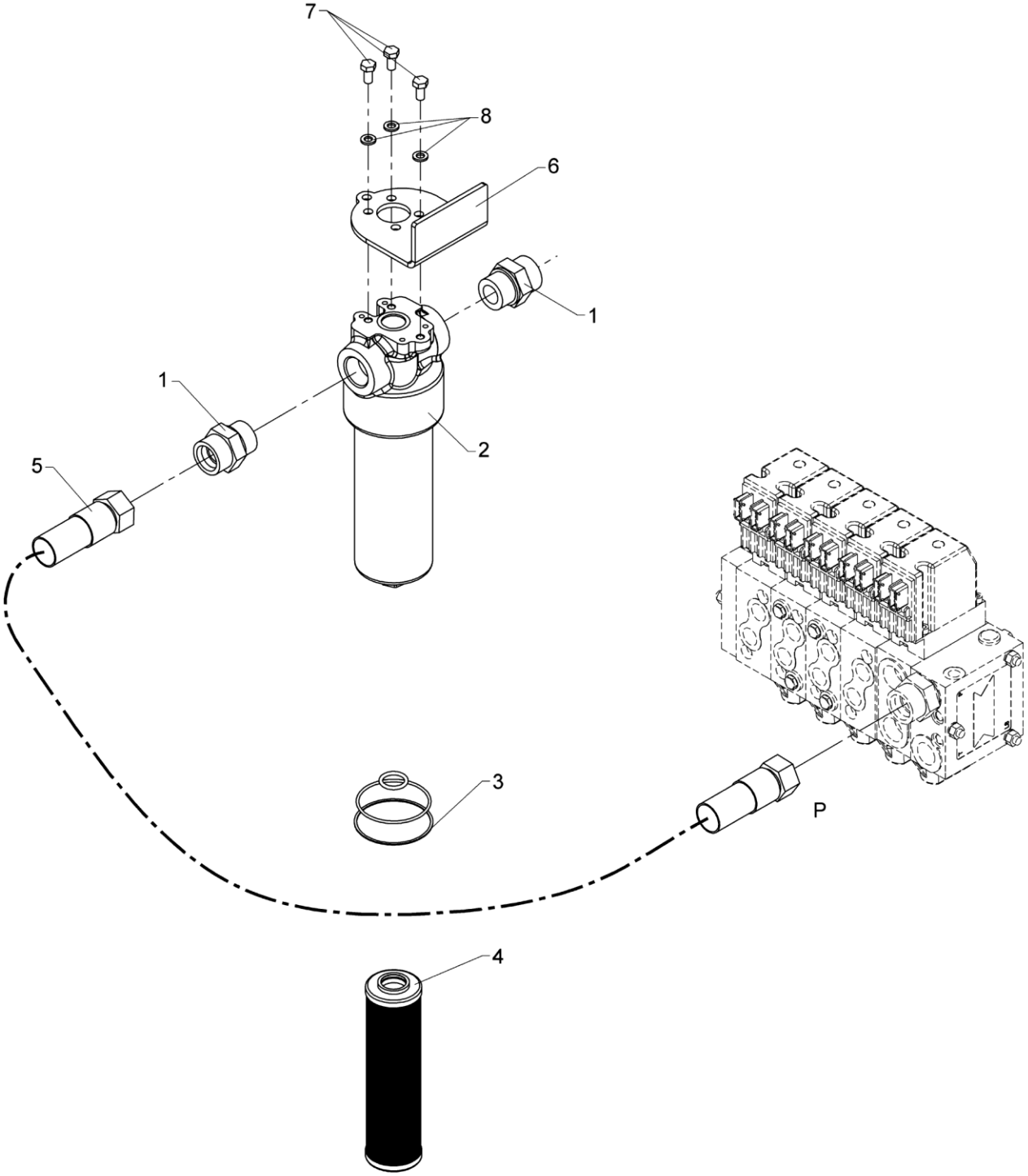

565 06 130

From loader 1440001
To loader

High-pressure filter

Created 23-06-2017
Modified 12-12-2017

Pos	Qty.	Part no.	Description	Remarks
1	2	26840	Straight connection	P-GEV 25 SR A3L
2	1	49401	High pressure filter	
3	1	49417	Seal kit	
4	1	49402	Filter	
5	1	56681	Hose 3/4 X 1800	
6	1	6882974	Bracket, high pressure filter	
7	3	30131	Set screw, stainless	M8 x 16
8	3	31155	Spring washer	8 mm

2820K-RCS

66 53 720
66 53 730
66 53 700 66 53 740
66 53 710 66 53 750
Internal ref. 66 53 760

An Oshkosh Corportation Company

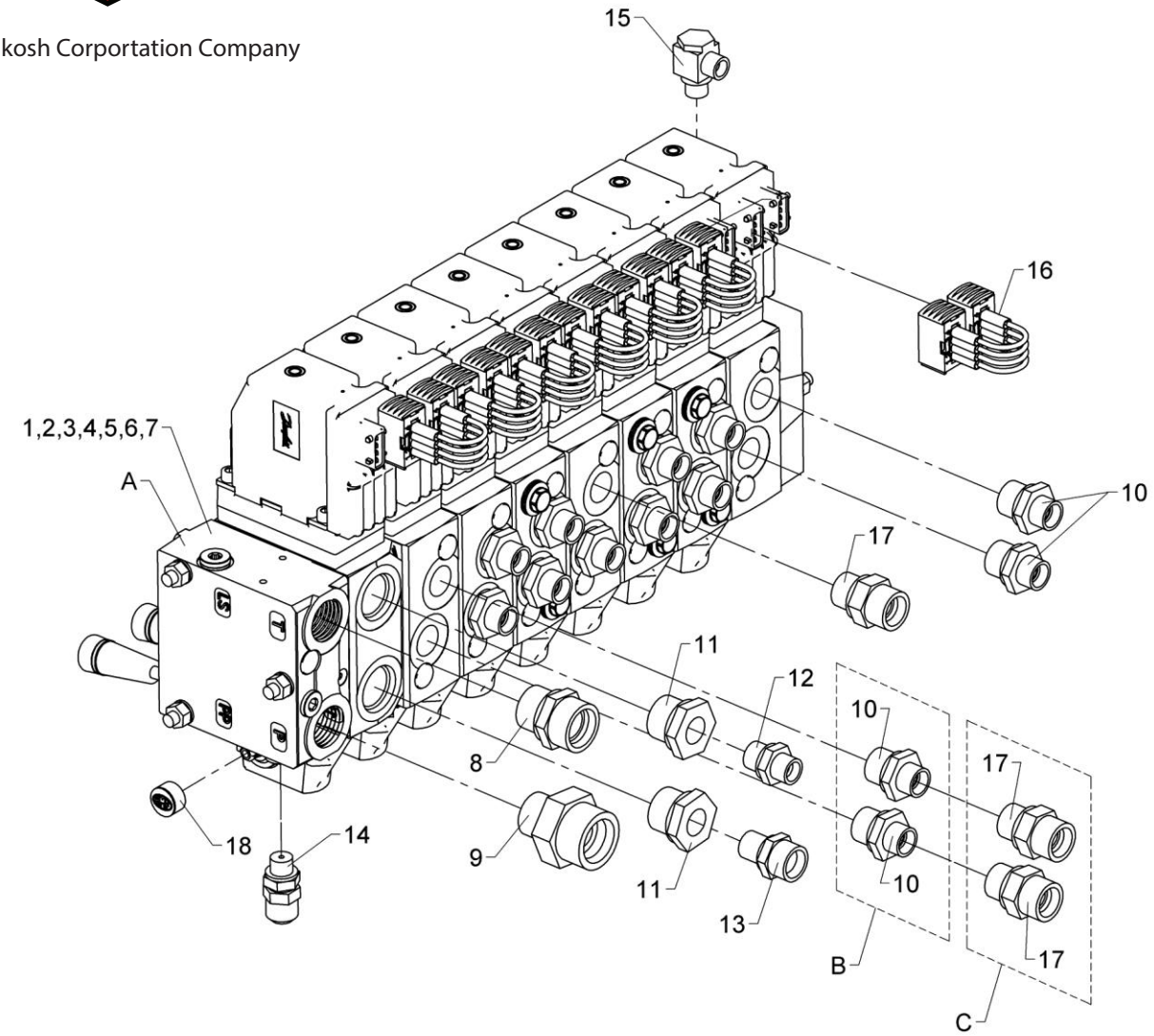

	A	B	C
66 53 700	55 925	X	
66 53 710	55 926	X	
66 53 720	55 927		X
66 53 730	55 928	X	
66 53 740	55 929		X
66 53 750	55 930	X	
66 53 760	55 931		X

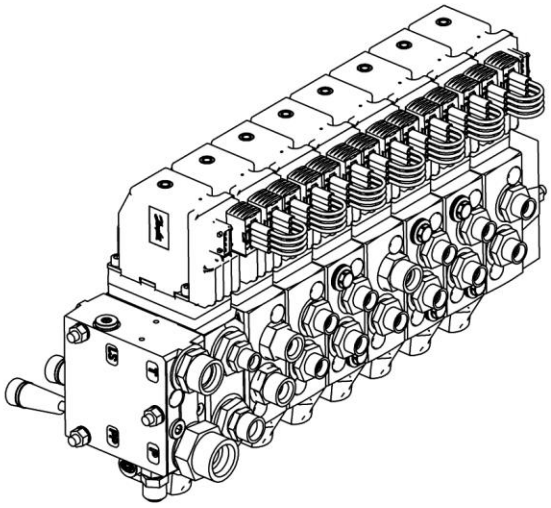

Control valves, Danfoss, 7 sects., fixed

Pos	Qty.	Part no.	Description	Remarks
		6653760		
		6653750		
		6653740		
		6653730		
		6653720		
		6653710		
		6653700		
1	1	55925		Ventilblok, 4 sekt._F
2	1	55926		Ventilblok, 5 sekt._1X_F
3	1	55927		Ventilblok. 5 sekt._Wi_F
4	1	55928		Ventilblok, 6 sekt._2X_F
5	1	55929		Ventilblok, 7 sekt._2X_Wi_F
6	1	55930		Ventilblok, 6 sekt._FJ_F
7	1	55931		Ventilblok, 7 sekt._FJ_Wi_F
8	1	25169	Connection	P-GEV 22 LR-WD
9	1	26805	Straight connection	GES 25 SR 3-4-WD
10	11	25108	Connection	GES 12 LR 1/2-WD
11	2	26319	Reducing connection	RED-R 3/4-WD/R 3/8
12	1	25253	Connection	P-GEV 10 LR 3/8-WD
13	1	25273	Connection	GES 15 LR 3-8 A3L
14	1	26103	Pressure-gauge connect.	
15	1	25113	Banjo connection	RSWV 8 LR
16	7	28771	Connection cable 0.75 mm2	
17	3	26334	Connection	P-GEV 16 SR-WD
18	1	64416	Cover for sealing	

565 06 210

2820K-RCS

66 53 790
66 53 800
66 53 770 66 53 810
66 53 780 66 53 820
Internal ref. 66 53 830

An Oshkosh Corportation Company

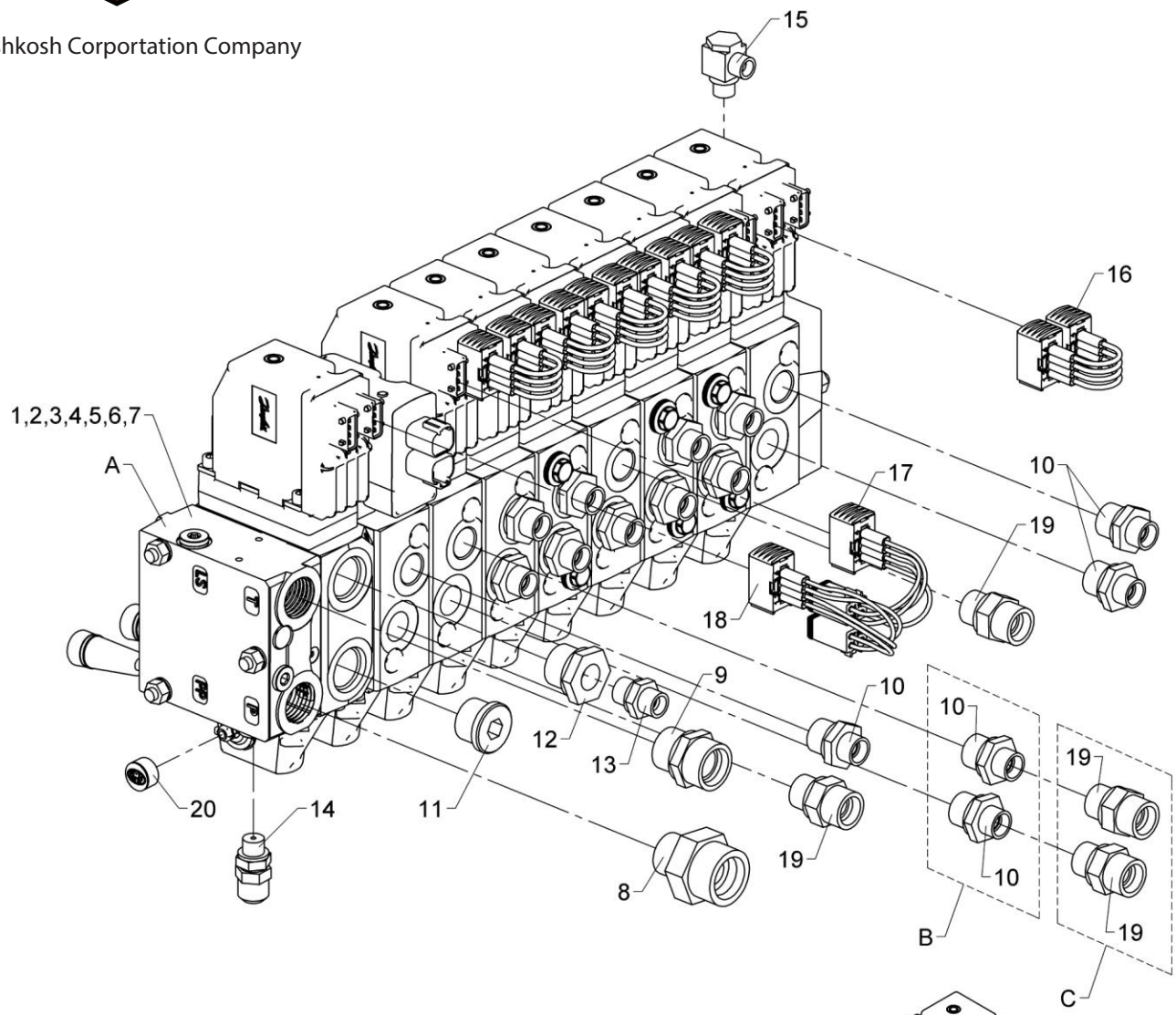

	A	B	C
66 53 770	55 932	X	
66 53 780	55 933	X	
66 53 790	55 934		X
66 53 800	55 935	X	
66 53 810	55 936		X
66 53 820	55 937	X	
66 53 830	55 938		X

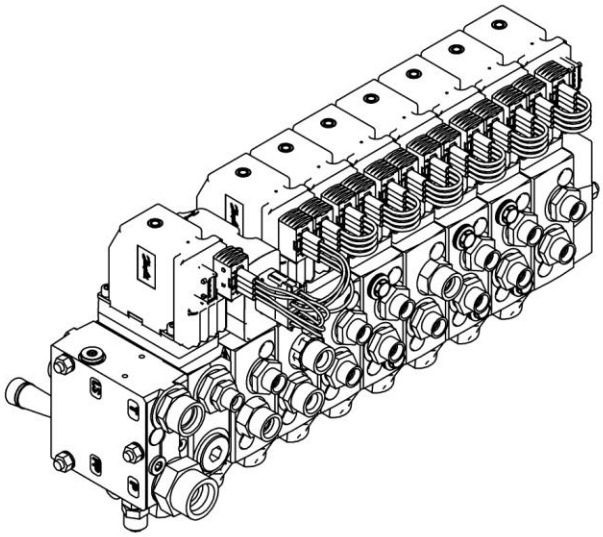

From loader 1440001
To loader
Created 21-09-2018
Modified

Control valves Danfoss, 7 sect.(crane) + RC stb, fixed flow

Pos	Qty.	Part no.	Description	Remarks
		6653830		
		6653820		
		6653810		
		6653800		
		6653790		
		6653780		
		6653770		
1	1	55932		Ventilblok, 4 sekt._StbRC_F
2	1	55933		Ventilblok, 5 sekt._1X_StbRC_F
3	1	55934		Ventilblok, 5 sekt._Wi_StbRC_F
4	1	55935		Ventilblok, 6 sekt._2X_StbRC_F
5	1	55936		Ventilblok, 7 s._2X_Wi_StbRC_F
6	1	55937		Ventilblok, 6 sekt._FJ_StbRC_F
7	1	55938		Ventilblok, 7 s._FJ_Wi_StbRC_F
8	1	26805	Straight connection	GES 25 SR 3-4-WD
9	1	25169	Connection	P-GEV 22 LR-WD
10	12	25108	Connection	GES 12 LR 1/2-WD
11	1	26355	Plug	VS-R-3/4 WD
12	1	26319	Reducing connection	RED-R 3/4-WD/R 3/8
13	1	25253	Connection	P-GEV 10 LR 3/8-WD
14	1	26103	Pressure-gauge connect.	
15	1	25113	Banjo connection	RSWV 8 LR
16	6	28771	Connection cable 0.75 mm2	
17	1	7009995	Cable	sort
18	1	7009996	Cable	grå
19	4	26334	Connection	P-GEV 16 SR-WD
20	1	64416	Cover for sealing	

565 06 220

2820K-RCS

66 53 860
66 53 870
66 53 840 66 53 880
66 53 850 66 53 890
Internal ref. 66 53 900

An Oshkosh Corportation Company

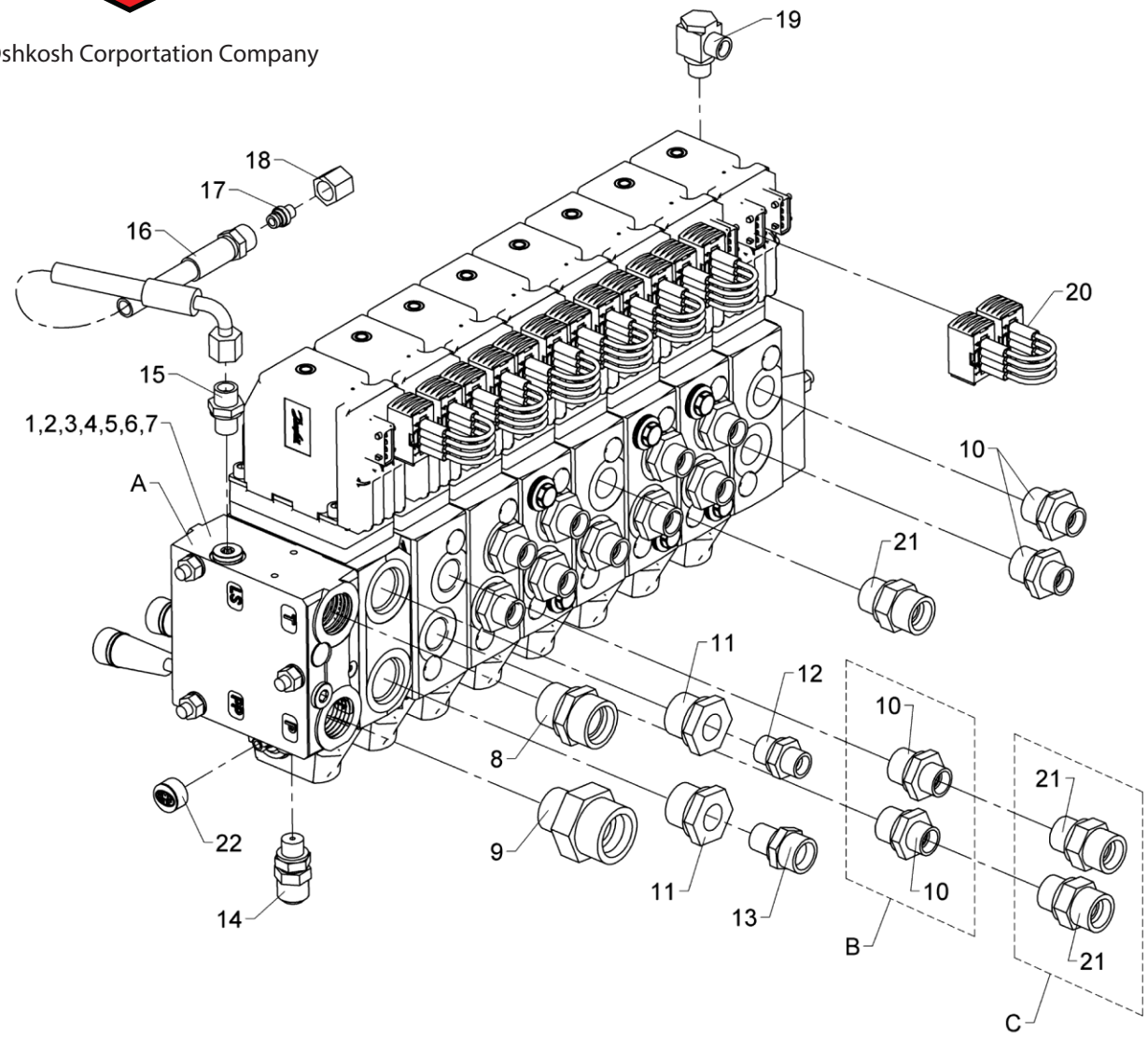

	A	B	C
66 53 840	55 939	■	
66 53 850	55 940	■	
66 53 860	55 941		■
66 53 870	55 942	■	
66 53 880	55 943		■
66 53 890	55 944	■	
66 53 900	55 945		■

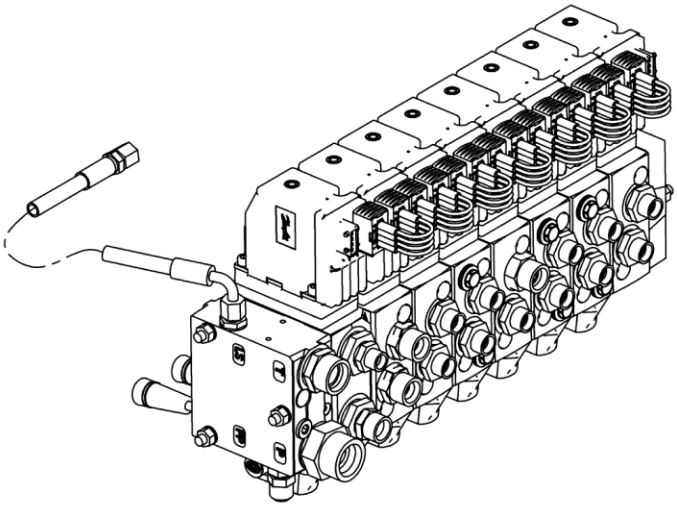

Control valves, Danfoss, 7 sections, variable

Pos	Qty.	Part no.	Description	Remarks
		6653900		
		6653890		
		6653880		
		6653870		
		6653860		
		6653850		
		6653840		
1	1	55939		Ventilblok, 4 sekt._V
2	1	55940		Ventilblok, 5 sekt._1X_V
3	1	55941		Ventilblok, 5 sekt._Wi_V
4	1	55942		Ventilblok, 6 sekt._2X_V
5	1	55943		Ventilblok, 7 sekt._2X_Wi_V
6	1	55944		Ventilblok, 6 sekt._FJ_V
7	1	55945		Ventilblok, 7 sekt._FJ_Wi_V
8	1	25169	Connection	P-GEV 22 LR-WD
9	1	26805	Straight connection	GES 25 SR 3-4-WD
10	11	25108	Connection	GES 12 LR 1/2-WD
11	2	26319	Reducing connection	RED-R 3/4-WD/R 3/8
12	1	25253	Connection	P-GEV 10 LR 3/8-WD
13	1	25273	Connection	GES 15 LR 3-8 A3L
14	1	26103	Pressure-gauge connect.	
15	1	25109	Connection	GES 8 LR-WD
16	1	62766		1/4 X 400 S/90 8L (studs/90grader
17	1	26166	Blanking plug	VSD 8 L
18	1	25181	Coupling nut	M 8 L
19	1	25113	Banjo connection	RSWV 8 LR
20	7	28771	Cable	
21	3	26334	Connection	P-GEV 16 SR-WD
22	1	64416	Cover for sealing	

2820K-RCS

66 53 930
66 53 940
66 53 910 66 53 950
66 53 920 66 53 960
Internal ref. 66 53 970

An Oshkosh Corportation Company

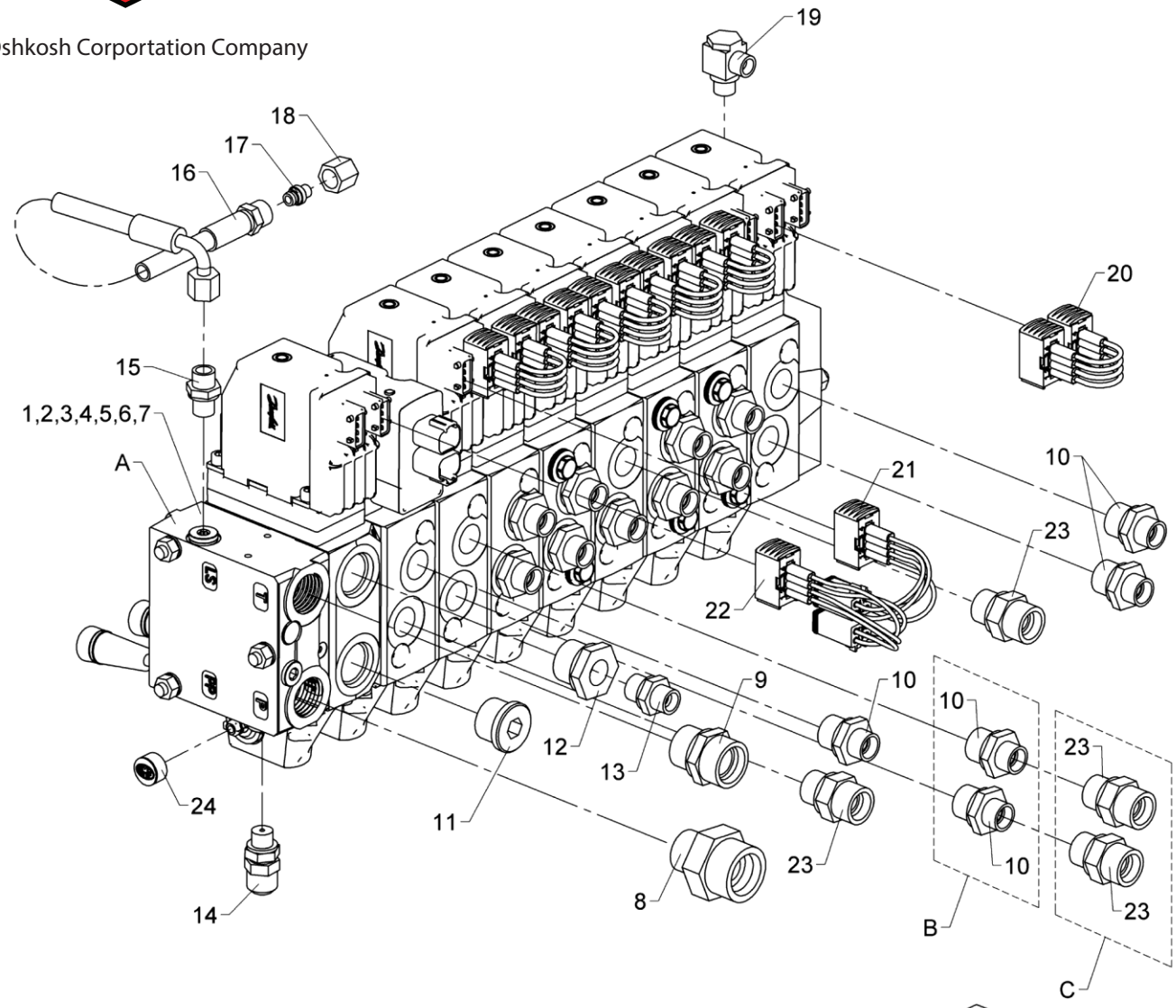

	A	B	C
66 53 910	55 946	■	
66 53 920	55 947	■	
66 53 930	55 948		■
66 53 940	55 949	■	
66 53 950	55 950		■
66 53 960	55 951	■	
66 53 970	55 952		■

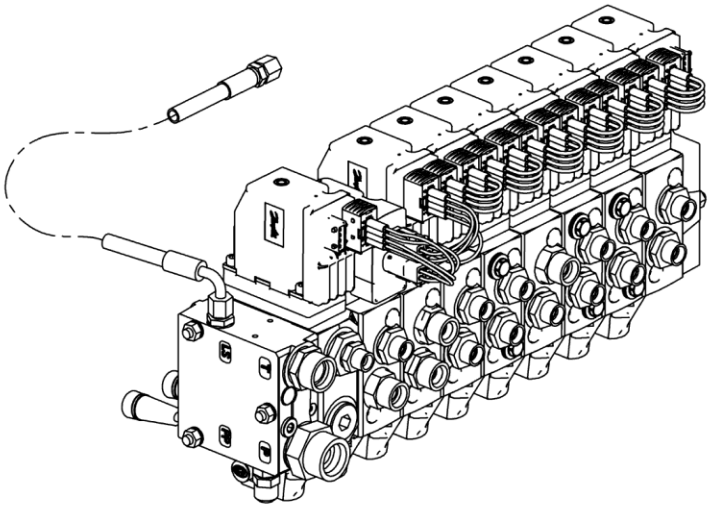

Control valves Danfoss, 7 sect.(crane) + RC stb, variable flow

Pos	Qty.	Part no.	Description	Remarks
		6653970		
		6653960		
		6653950		
		6653940		
		6653930		
		6653920		
		6653910		
1	1	55946		Ventilblok, 4 sekt._StbRC_V
2	1	55947		Ventilblok, 5 sekt._1X_StbRC_V
3	1	55948		Ventilblok, 5 sekt._Wi_StbRC_V
4	1	55949		Ventilblok, 6 sekt._2X_StbRC_V
5	1	55950		Ventilblok, 7 s._2X_Wi_StbRC_V
6	1	55951		Ventilblok, 6 sekt._FJ_StbRC_V
7	1	55952		Ventilblok, 7 s._FJ_Wi_StbRC_V
8	1	26805	Straight connection	GES 25 SR 3-4-WD
9	1	25169	Connection	P-GEV 22 LR-WD
10	12	25108	Connection	GES 12 LR 1/2-WD
11	1	26355	Plug	VS-R-3/4 WD
12	1	26319	Reducing connection	RED-R 3/4-WD/R 3/8
13	1	25253	Connection	P-GEV 10 LR 3/8-WD
14	1	26103	Pressure-gauge connect.	
15	1	25109	Connection	GES 8 LR-WD
16	1	62766		1/4 X 400 S/90 8L (studs/90grader
17	1	26166	Blanking plug	VSD 8 L
18	1	25181	Coupling nut	M 8 L
19	1	25113	Banjo connection	RSWV 8 LR
20	6	28771	Cable	
21	1	7009995	Cable	sort
22	1	7009996	Cable	grå
23	4	26334	Connection	P-GEV 16 SR-WD
24	1	64416	Cover for sealing	

2820K-RCS

Internal ref. 63 58 200

An Oshkosh Corportation Company

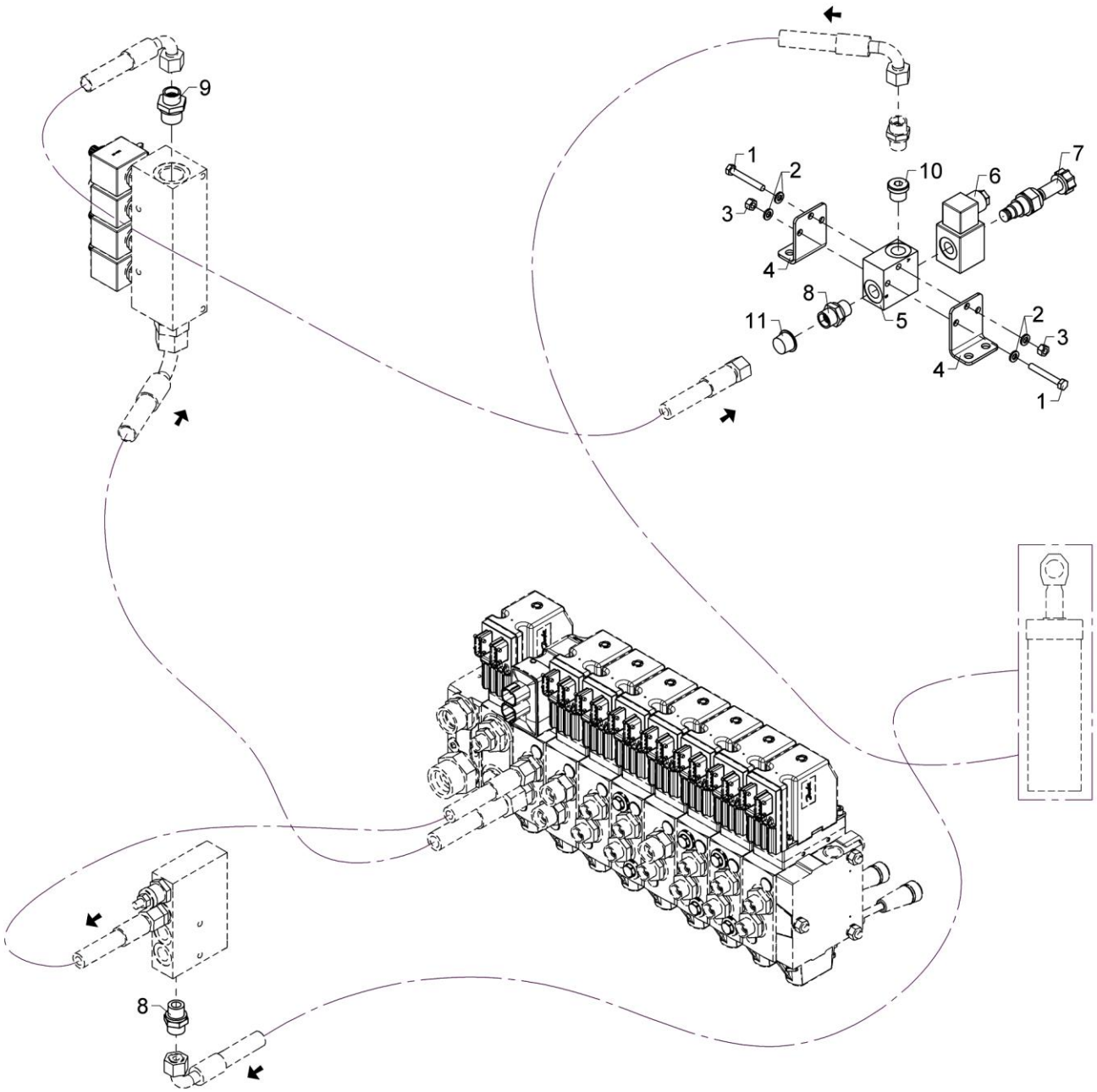

565 06 500

From loader 1440001
To loader

Created 17-12-2018
Modified 17-12-2018

Pos	Qty.	Part no.	Description	Remarks
1	2	30118	Steel pin, stainless	M6 x 45
2	4	32302	Face washer, stainless	6 mm
3	2	30884	Lock nut, stainless	M6
4	2	6301202	Bracket	
5	1	59771	Valve housing	
6	1	61778	Solenoid	
7	1	59057	Solenoid valve	
8	2	25127	Connection	P-GEV 12 LR-WD
9	1	25108	Connection	GES 12 LR 1/2-WD
10	1	25277	Plug	VS-R-3/8 WD
11	1	64221	Plug	

2820K-RCS

Internal ref. 63 58 210

An Oshkosh Corportation Company

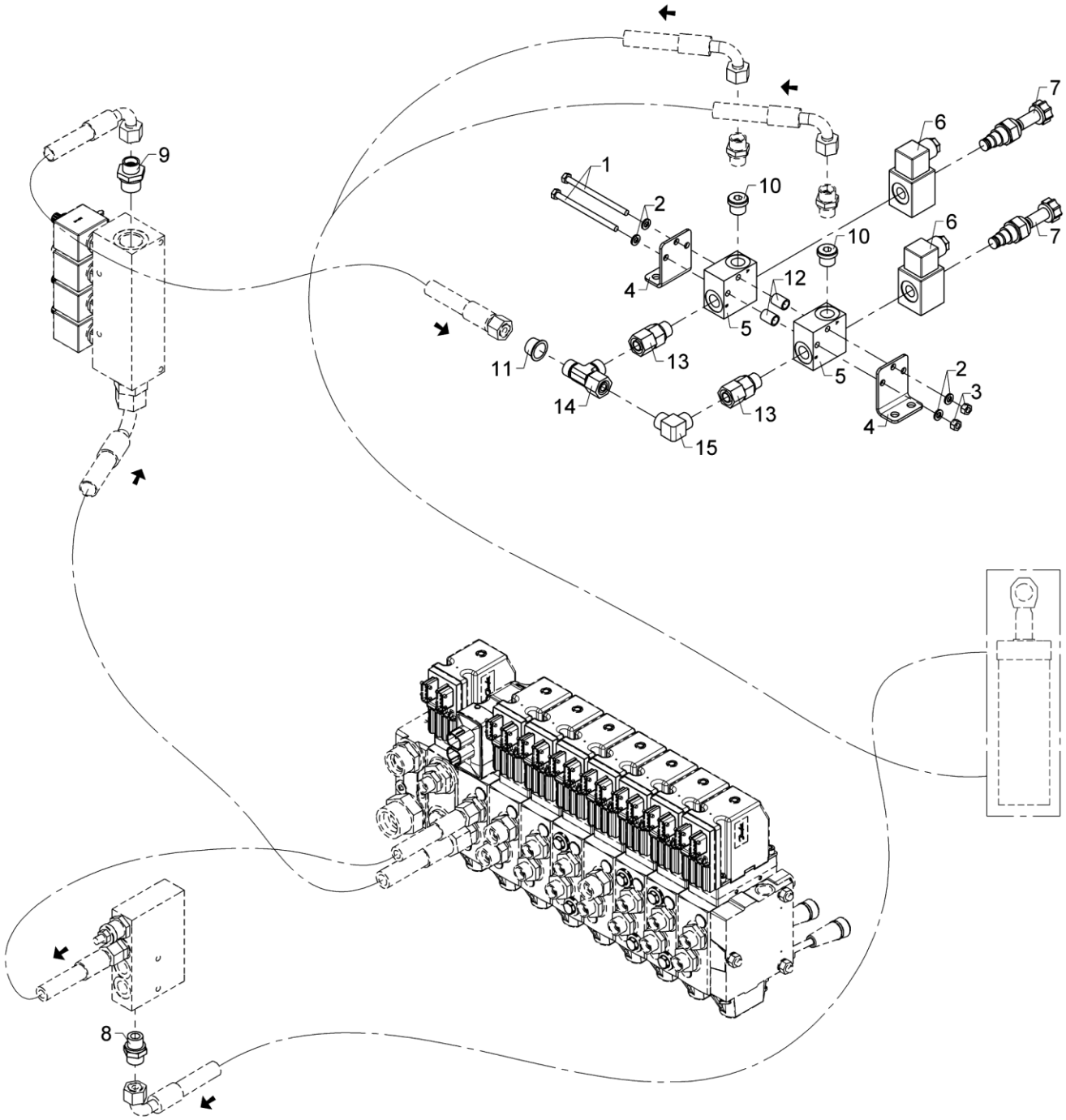

565 06 510

From loader 1440001
To loader

Created 17-12-2018
Modified

Pos	Qty.	Part no.	Description	Remarks
1	2	30124	Steel bolt, stainless	M6 x 90
2	4	32302	Face washer, stainless	6 mm
3	2	30884	Lock nut, stainless	M6
4	2	6301202	Bracket	
5	2	59771	Valve housing	
6	2	61778	Solenoid	
7	2	59057	Solenoid valve	
8	1	25127	Connection	P-GEV 12 LR-WD
9	1	25108	Connection	GES 12 LR 1/2-WD
10	2	25277	Plug	VS-R-3/8 WD
11	1	64221	Plug	
12	2	6301203	Pipe	
13	2	25240	Connection	EGESD 12 LR-WD
14	1	25270	Connection	ELSD 12 L
15	1	25129	Elbow connection	WV 12 L

2820K-RCS

Internal ref. 63 58 220

An Oshkosh Corportation Company

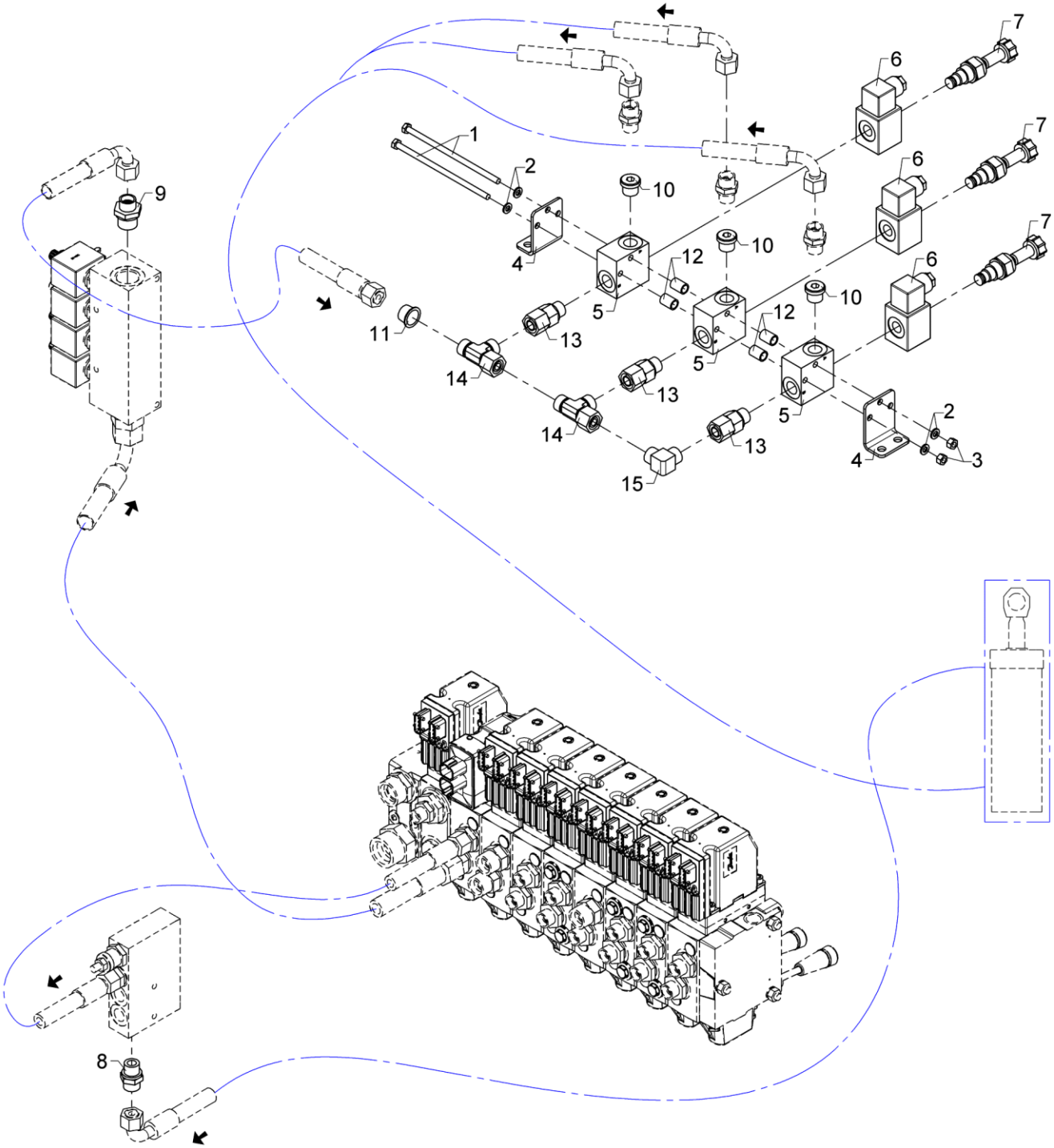

565 06 520

From loader 1440001
To loader

Created 18-12-2018
Modified

Pos	Qty.	Part no.	Description	Remarks
1	2	32922	Steel bolt	M6 x 140
2	4	32302	Face washer, stainless	6 mm
3	2	30884	Lock nut, stainless	M6
4	2	6301202	Bracket	
5	3	59771	Valve housing	
6	3	61778	Solenoid	
7	3	59057	Solenoid valve	
8	1	25127	Connection	P-GEV 12 LR-WD
9	1	25108	Connection	GES 12 LR 1/2-WD
10	3	25277	Plug	VS-R-3/8 WD
11	1	64221	Plug	
12	4	6301203	Pipe	
13	3	25240	Connection	EGESD 12 LR-WD
14	2	25270	Connection	ELSD 12 L
15	1	25129	Elbow connection	WV 12 L

2820K-RCS

Internal ref. 63 58 230

An Oshkosh Corportation Company

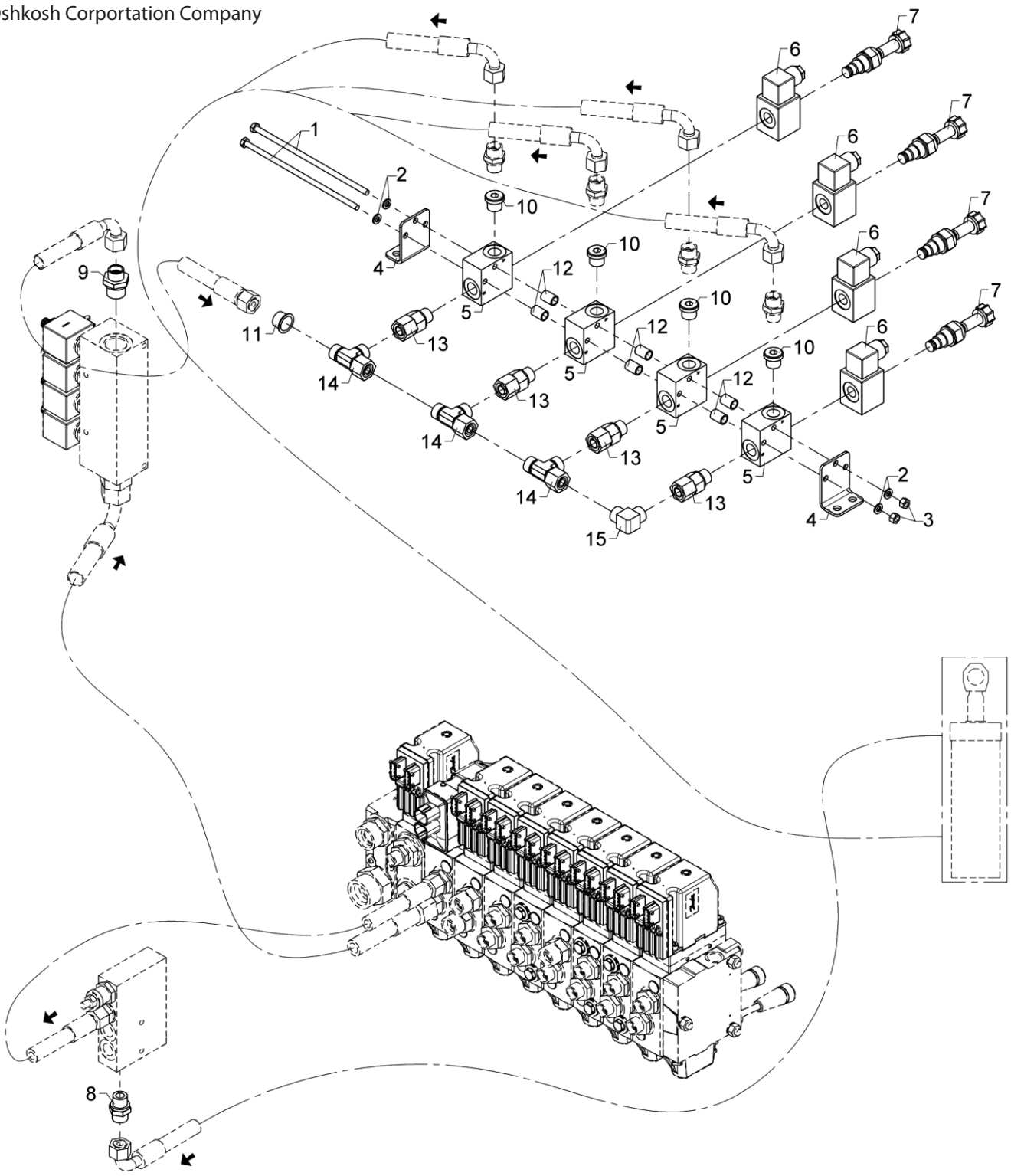

565 06 530

From loader 1440001
To loader

Created 18-12-2018
Modified

Pos	Qty.	Part no.	Description	Remarks
1	2	32257	Steel bolt	M6 x 180
2	4	32302	Face washer, stainless	6 mm
3	2	30884	Lock nut, stainless	M6
4	2	6301202	Bracket	
5	4	59771	Valve housing	
6	4	61778	Solenoid	
7	4	59057	Solenoid valve	
8	1	25127	Connection	P-GEV 12 LR-WD
9	1	25108	Connection	GES 12 LR 1/2-WD
10	4	25277	Plug	VS-R-3/8 WD
11	1	64221	Plug	
12	6	6301203	Pipe	
13	4	25240	Connection	EGESD 12 LR-WD
14	3	25270	Connection	ELSD 12 L
15	1	25129	Elbow connection	WV 12 L

2820K-RCS

63 46 880
Internal ref. 63 46 870

An Oshkosh Corportation Company

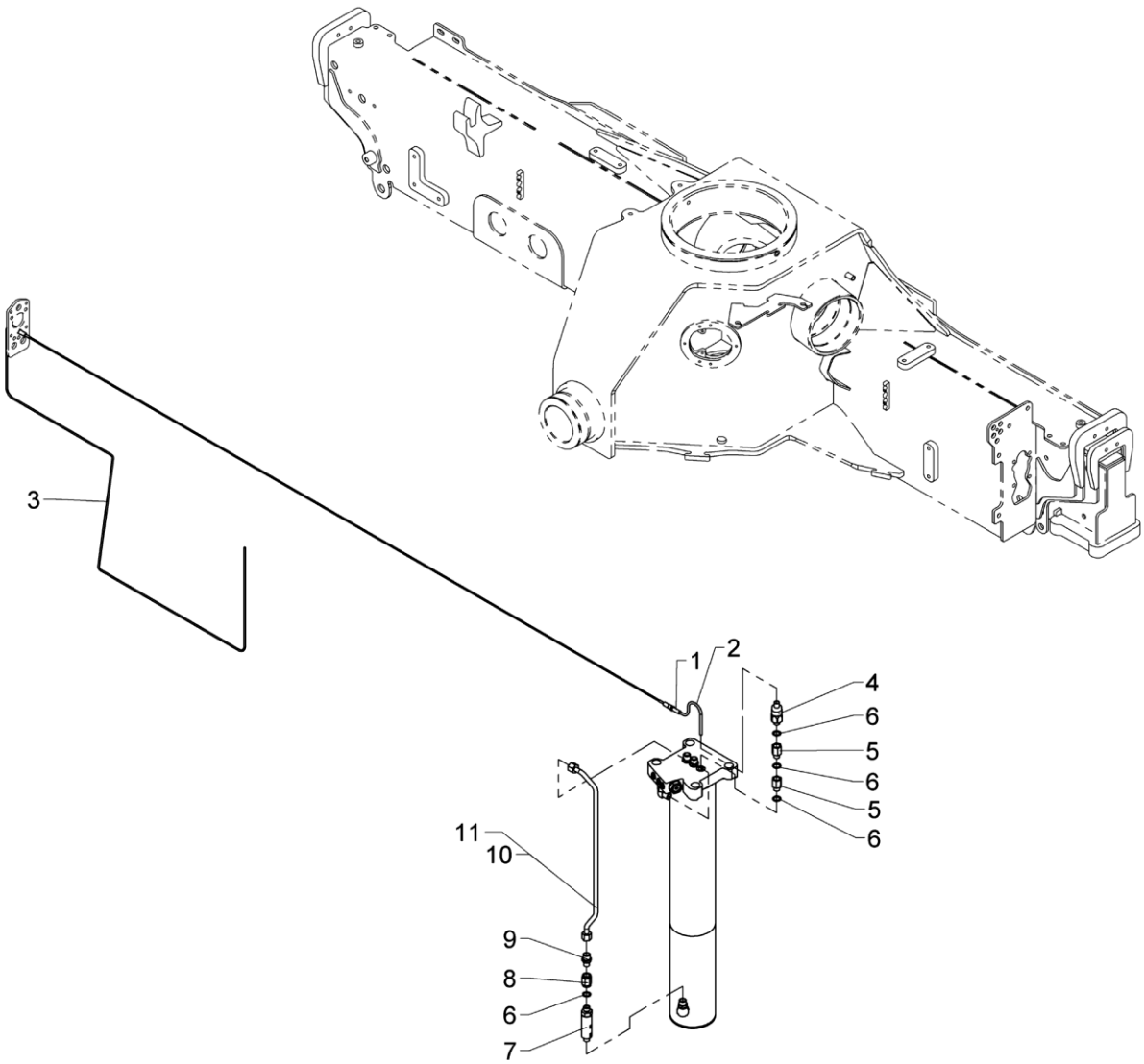

CYW sensor on stabilizer

Pos	Qty.	Part no.	Description	Remarks
		6346870		
		6346880		
1	1	29436	Cable M8, socket and plug 6.3m	
2	1	29556	Cable extension M12/M8, 0.6 m	0,6 m
3	1	29483	Cable M8, 5 m, female, 3 polar	
4	1	29550	Pressure switch 300 bar	
5	2	59077	Reducing nipple	1/4 BSP x 1/4 BSP
6	4	21102	Seal washer	ø14 x 18,7 x 1,5
7	1	55228	Sequence valve	
8	1	25904	Socket	
9	1	25121	Connection	P-GEV 10 LR-WD
10	1	6345961		6346870
11	1	6345962		6346880

An Oshkosh Corportation Company

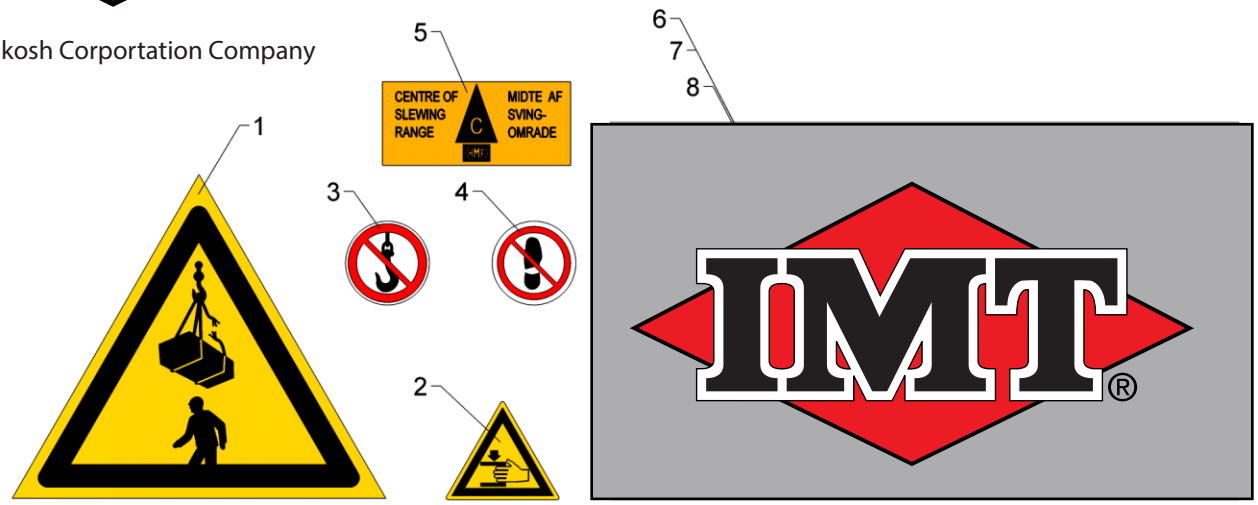

- power to lift.

9
10

- power to lift.

11
12

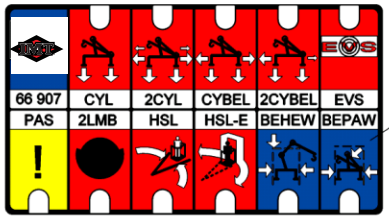

13

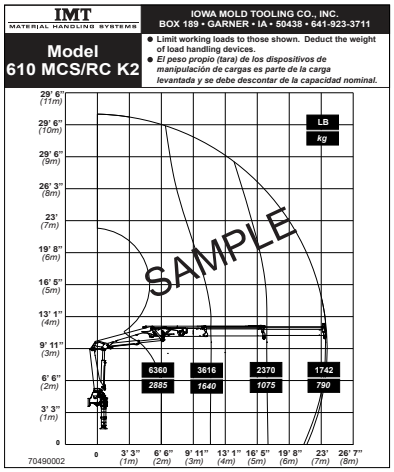

Standard labels

Pos	Qty.	Part no.	Description	Remarks
1	2	66462	"NEVER WALK UNDER LOAD"	
2	2	66469	Label - "Danger - squeezing"	
3	1	66466	Label, "HOOK FORBIDDEN"	
4	1	66464	Label "NO STEP"	
5	1	64702	Label for slewing	
6	2	64604	HMF label 180X300	
7	2	64664	Label, 'Power to lift.', white	
8	1	66907	Pictogram for column	

2820K-RCS

Internal ref. 99 99 061

An Oshkosh Corportation Company

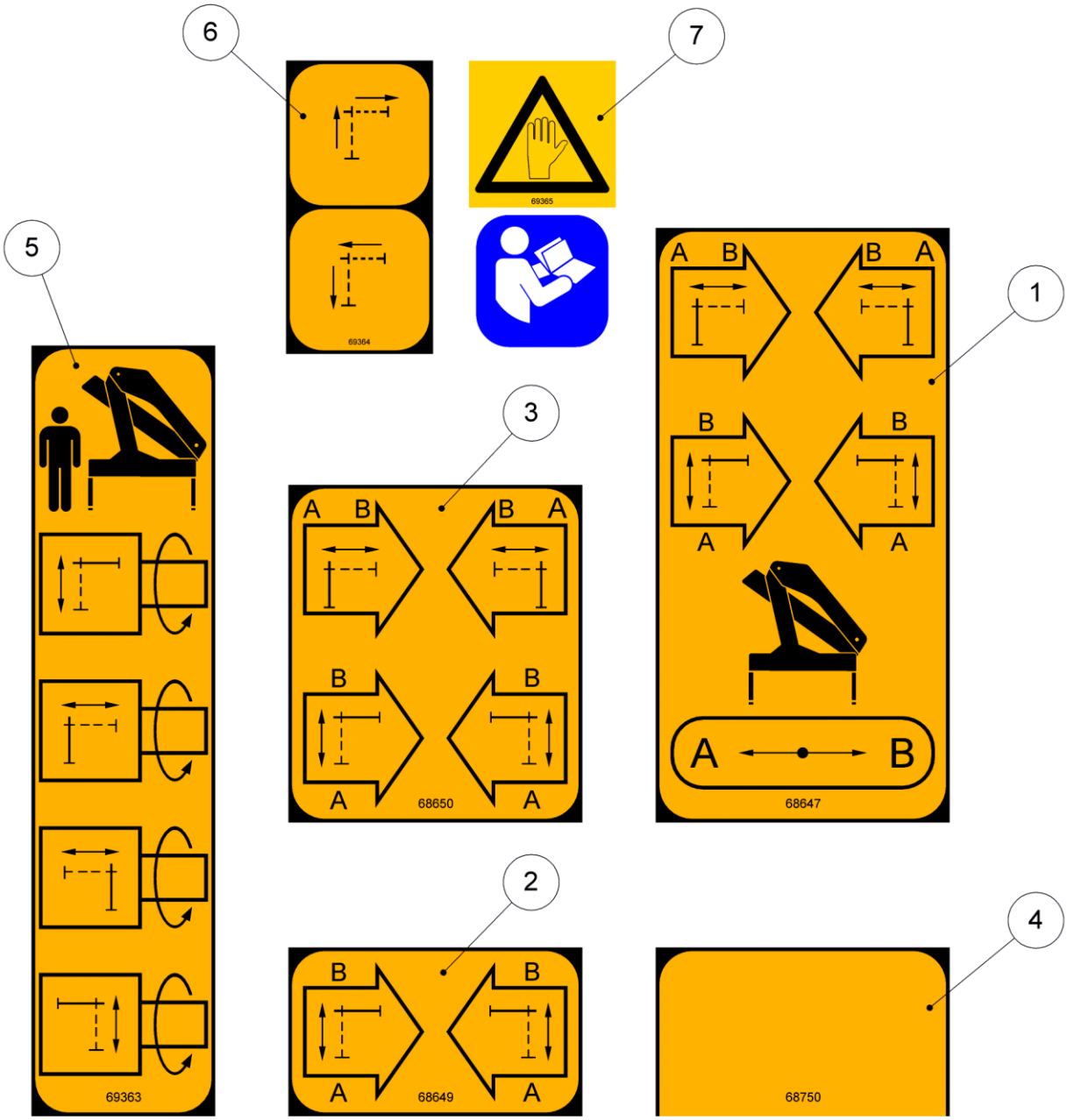

Labels for emergency operation

Pos	Qty.	Part no.	Description	Remarks
1	1	68647	Label, emergency operation	
2	1	68649	Label, emergency operation	
3	1	68650	Label, emergency operation	
4	1	68750	Label, emergency operation	
5	1	69363	Label, emergency operation	
6	1	69364	Label, emergency operation	
7	1	69365		

An Oshkosh Company

IOWA MOLD TOOLING CO., INC.
BOX 189, GARNER, IA 50438-0189

MODEL NUMBER

SERIAL NUMBER

MFG DATE

70029119

1

2

3

4

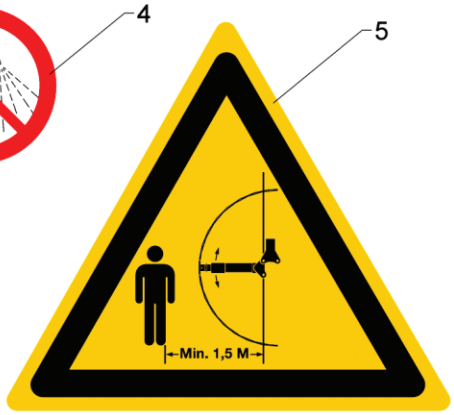

5

7

2820K-RCS

68 88 190
Internal ref. 68 88 060

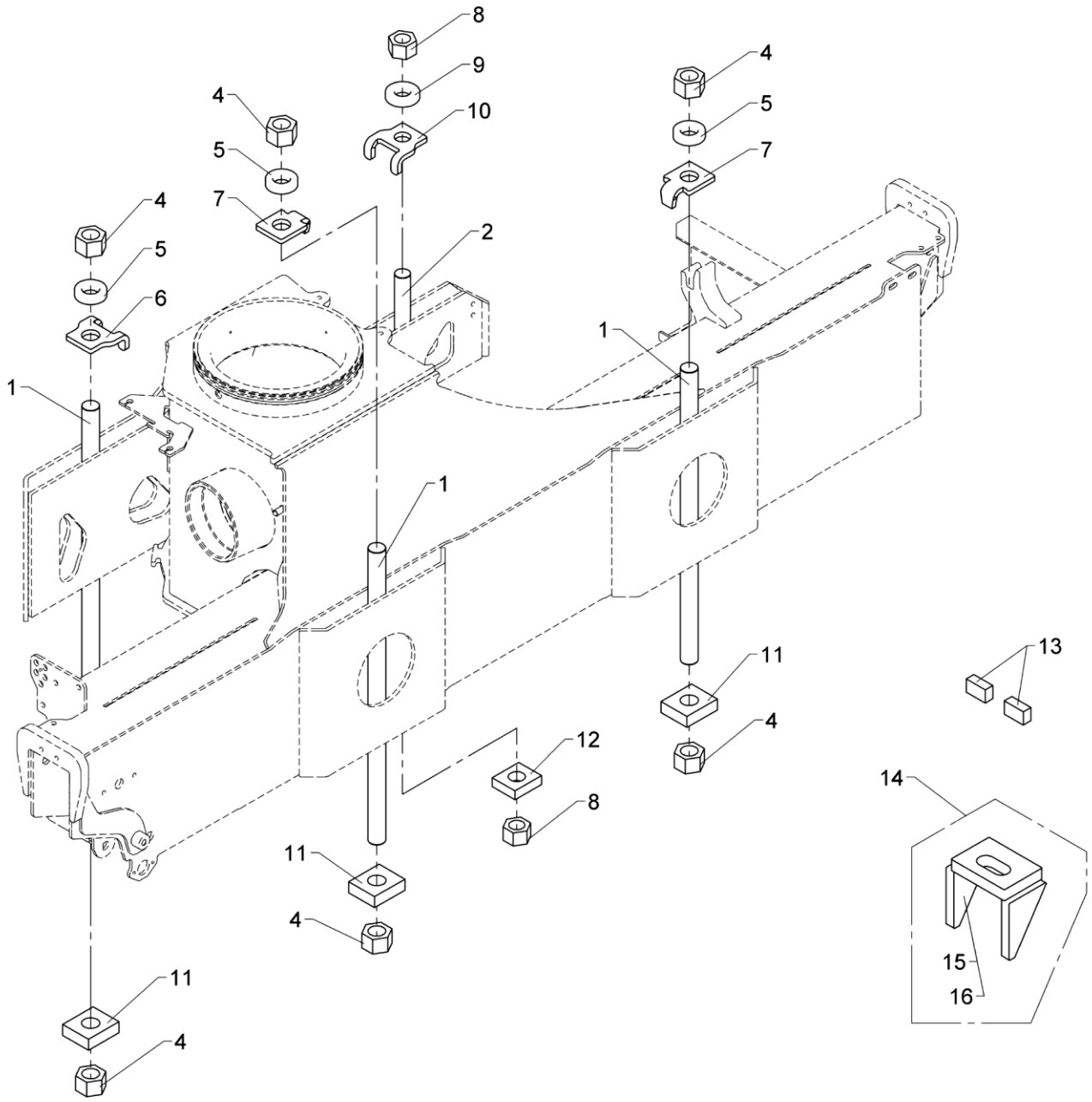

565 07 115

From loader 1440001
To loader

Created 06-05-2014
Modified

Mounting kit (3 M33 x 2 + 1 M30 x 2) - 50 mm.

An Oshkosh Corporation Company

Pos	Qty	Part no.	Description	Remarks
		6888060	Kit of stay bolts, 4 pcs.,50mm	Pos. 1, 2, 3
		6888190	Fittings	Pos. 14
1	3	6888033	Mounting bolt, M33 x 2 x 665	
2	1	6888022	Monting bolt, M30 x 2 x 450	
3	1	6888140	Nut/washer/stop - kit	Pos. 4, 5, 6, 7, 8, 9, 10, 11, 12, 13
4	6	31087	Lock nut M33 x 2 hexagonal	M33 x 2
5	3	6394709	Mounting plate 33 mm	
6	1	6394707	Mounting plate 33 mm	
7	2	6394705	Mounting plate 33 mm	
8	2	31086	Lock nut	M30 x 2
9	1	6394701	Mounting plate 30 mm	
10	1	6394706	Mouting plate 30 mm	
11	3	6887374	Washer	
12	1	6658094	Washer	
13	6	6644084	Stop block	
14	1	6888190	Fittings	Pos. 15, 16
15	1	6668244	Bracket	
16	3	6668501	Bracket	

2820K-RCS

68 88 200
Internal ref. 68 88 070

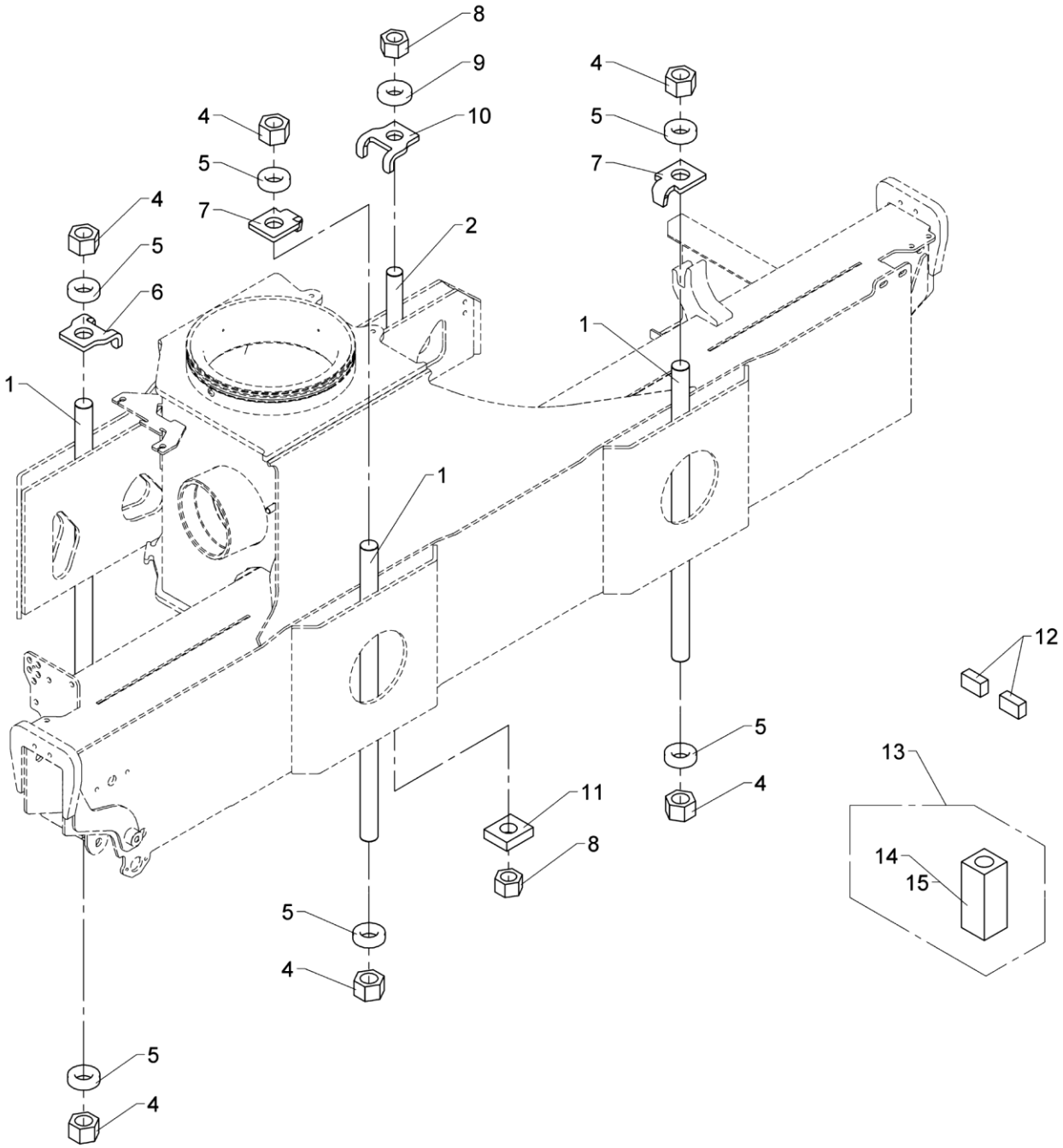

565 07 120

From loader 1440001
To loader

Created 30-01-2014
Modified

Mounting kit (3 M33 x 2 + 1 M30 x 2) - 150 mm.

An Oshkosh Corporation Company

Pos	Qty	Part no.	Description	Remarks
		6888070	Kit of stay bolts,4 pcs.,150mm	Pos. 1, 2, 3
		6888200	Fittings	Pos. 13
1	3	6888033	Mounting bolt, M33 x 2 x 665	
2	1	6888023	Mounting bolt, M30 x 2 x 600	
3	1	6888150	Nut/washer/stop - kit	Pos. 4, 5, 6, 7, 8, 9, 10, 11, 12
4	6	31087	Lock nut M33 x 2 hexagonal	M33 x 2
5	6	6394709	Mounting plate 33 mm	
6	1	6394707	Mounting plate 33 mm	
7	2	6394705	Mounting plate 33 mm	
8	2	31086	Lock nut	M30 x 2
9	1	6394701	Mounting plate 30 mm	
10	1	6394706	Mouting plate 30 mm	
11	1	6658094	Washer	
12	6	6644084	Stop block	
13	1	6888200	Fittings	Pos. 14, 15
14	1	6887599	Mounting block	
15	3	6887601	Mounting block (M33 pin)	

2820K-RCS

66 68 980
Internal ref. 68 88 080

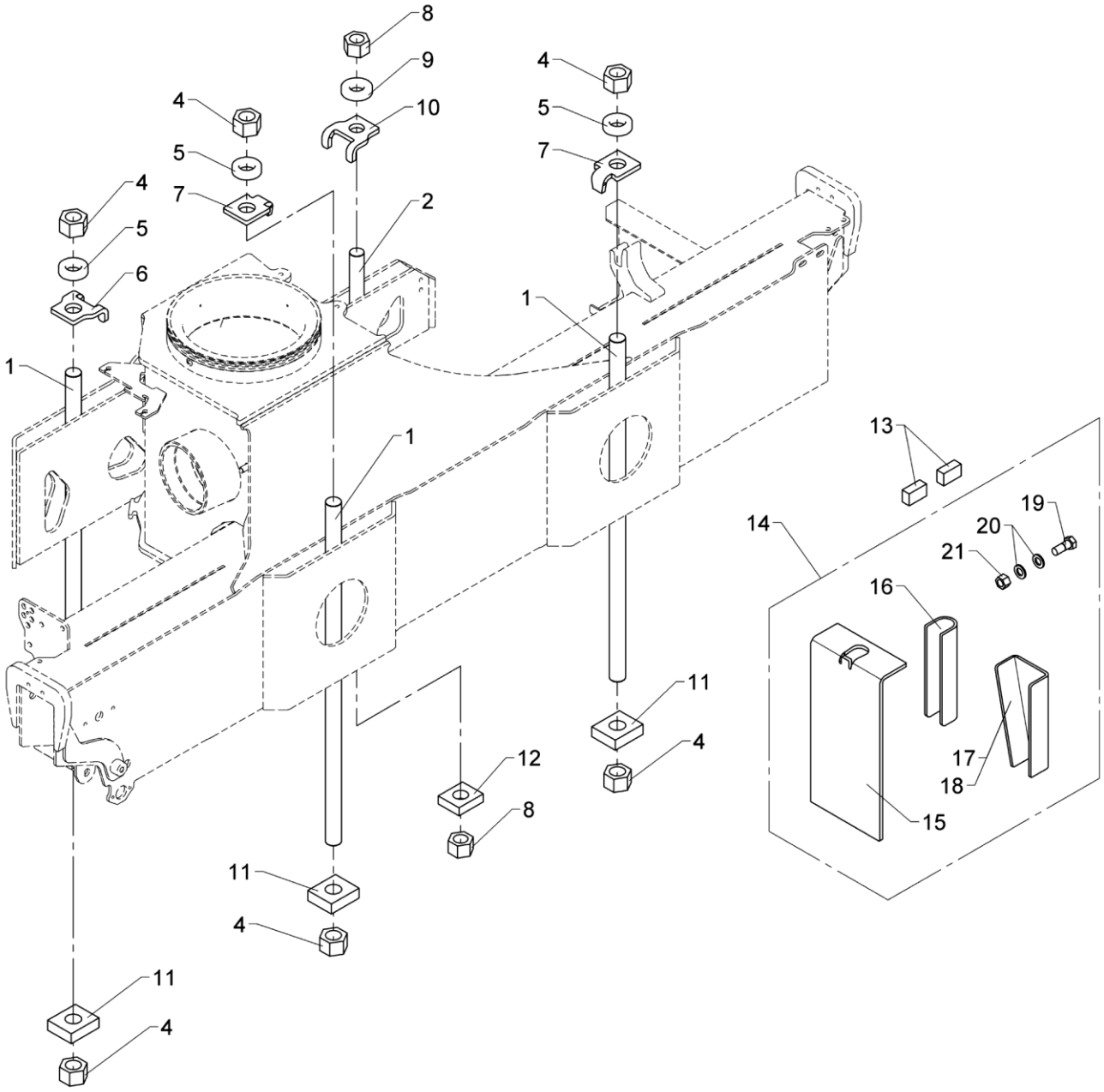

565 07 130

From loader 1440001
To loader

Created 31-01-2014
Modified

Mounting kit (3 M33 x 2 + 1 M30 x 2) - 250 mm.

An Oshkosh Corporation Company

Pos	Qty	Part no.	Description	Remarks
		6888080	Kit of stay bolts,4 pcs.,250mm	Pos. 1, 2, 3
		6668980	Mouting brackets	Pos. 14
1	3	6888034	Mounting bolt, M33 x 2 x 850	
2	1	6888023	Mounting bolt, M30 x 2 x 600	
3	1	6888140	Nut/washer/stop - kit	Pos. 4, 5, 6, 7, 8, 9, 10, 11, 12, 13
4	6	31087	Lock nut M33 x 2 hexagonal	M33 x 2
5	3	6394709	Mounting plate 33 mm	
6	1	6394707	Mounting plate 33 mm	
7	2	6394705	Mounting plate 33 mm	
8	2	31086	Lock nut	M30 x 2
9	1	6394701	Mounting plate 30 mm	
10	1	6394706	Mouting plate 30 mm	
11	3	6887374	Washer	
12	1	6658094	Washer	
13	6	6644084	Stop block	
14	1	6668980	Mouting brackets	Pos. 15, 16, 17, 18, 19, 20, 21
15	4	6881704	Mounting plate	
16	2	6887354	U-profile	
17	1	6881684	Plate, left	
18	1	6881694	Plate, right	
19	24	31496	Tight-fitting bolt	M16 x 40
20	48	31103	Washer, 16 mm	16 mm
21	24	30892	Lock nut	M16

2820K-RCS

68 88 130
66 68 960
Internal ref. 68 88 030

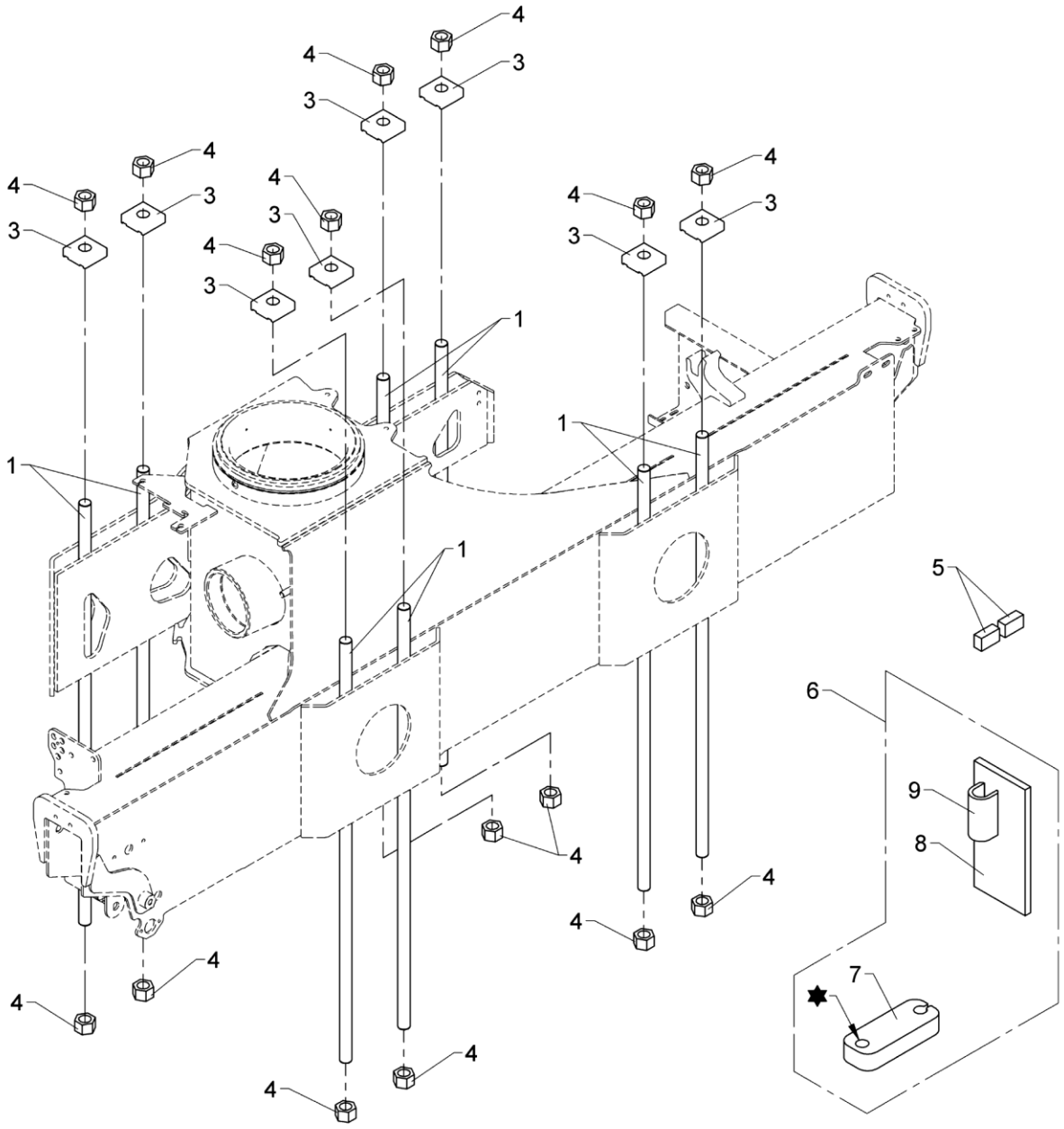

565 07 140

From loader 1440001
To loader

Created 03-02-2014
Modified

Mounting kit (8 M24 x 2 pins)

An Oshkosh Corporation Company

Pos	Qty	Part no.	Description	Remarks
1	8	6888011	Mouting bolt, M24 x 2 x 1000	
2	1	6888130	Nut/washer/stop - kit	Pos. 3, 4, 5
3	8	6340496	Mounting plate	
4	16	31051	Lock nut	M24 x 2
5	6	6644084	Stop block	
6	1	6668960	Mounting bracket	Pos. 7, 8, 9
7	4	6887384	Clamp	
8	4	6659924	Spacer	
9	4	6659914	U-section	

2820K-RCS

63 63 730
63 65 730
63 46 730
Internal ref. 63 42 730

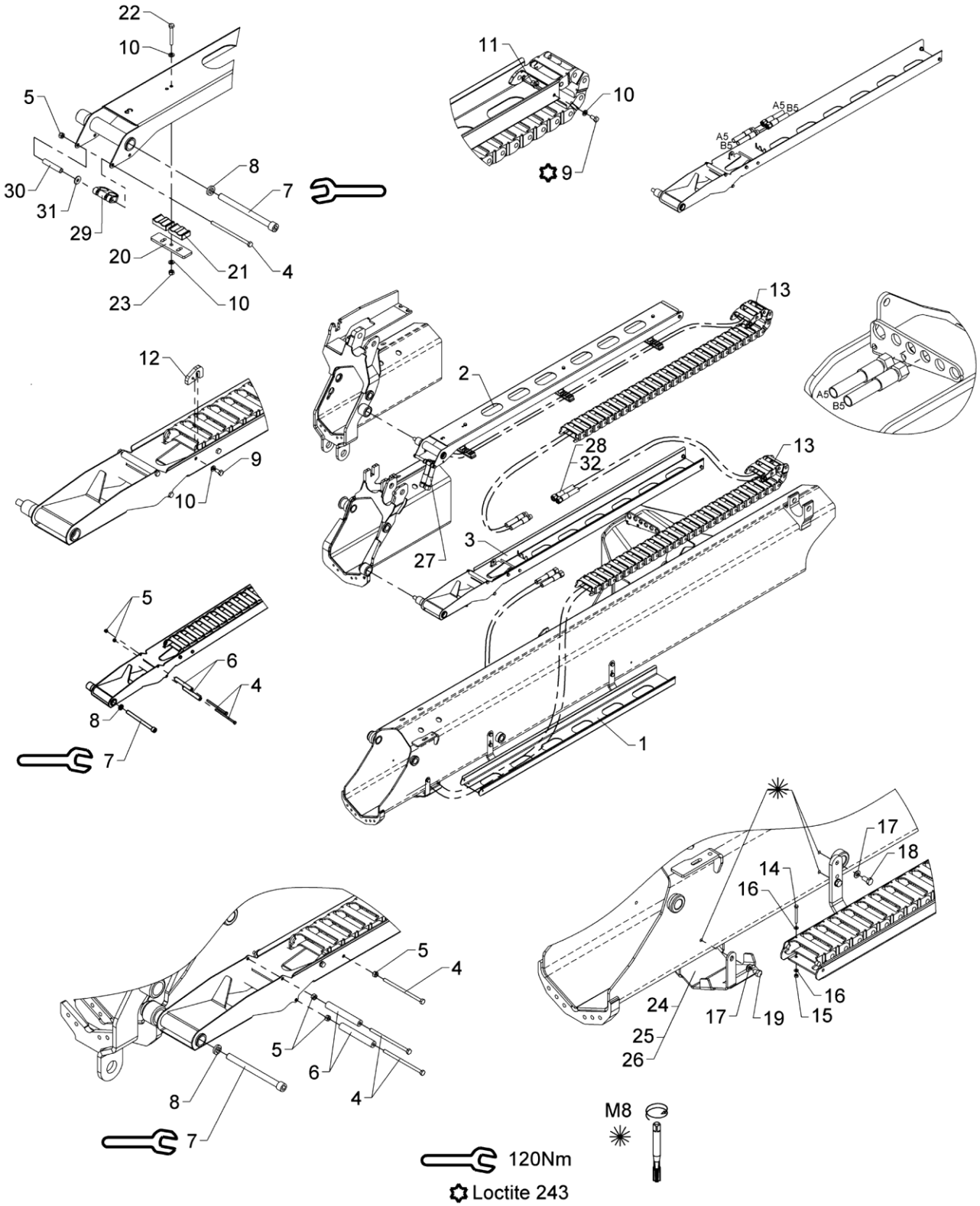

Hose guides, K2-1EXV.

An Oshkosh Corporation Company

Pos	Qty	Part no.	Description	Remarks
		6342730	Hose guide, K2-1 EXV	
		6346730	Hose guide, K2-1 EXV	
		6365730	Hose guide, K2-1 EXV.	
		6363730	Hose guide, K2-1 EXV.	
1	1	6340721	Guide (jib)	
2	1	6340748	Guide (extension K3)	
3	1	6341731	Hose guide (Extension I)	
4	4	30167	Steel bolt	M6 x 60
5	4	30884	Lock nut, stainless	M6
6	2	56513	Hose	
7	2	32488	Screw	MC12 x 150
8	2	6340717	Washer	
9	5	30111	Set screw, stainless	
10	11	32302	Face washer, stainless	6 mm
11	4	6340719	Nut	
12	1	6340718	Bracket	
13	2	28712	Nylon drag chain, 30 links	
14	2	30128	Set screw	M4 x 40
15	2	30857	Lock nut	M4
16	4	31188	Washer, stainless	4 mm
17	6	31147	Face washer, 8 mm	
18	4	30131	Set screw, stainless	M8 x 16
19	2	30105	Set screw, stainless	M8 x 10
20	3	6340769	Adaptor	
21	6	63561	Clamp	
22	3	30118	Steel pin, stainless	M6 x 45
23	3	30854	Nut, stainless	M6
24	1	6340299	Protective guard	Serie 1300/1620
25	1	6344299	Protective guard	Serie 1800/2820
26	1	6365299	Hose shield	Serie 1100/1110
27	2	56568	Hose	
28	2	56569	Hose	1100K - 2820K
29	1	68028	Clamp	
30	1	6340724	Distance pipe	
31	1	31134	Washer, stainless	
32	2	56458	Hose 3/8 x 3750 mm L/L	Serie 900/910/1100KS/1221KS

2820K-RCS

63 63 740
63 65 740
63 46 740
Internal ref. 63 42 740

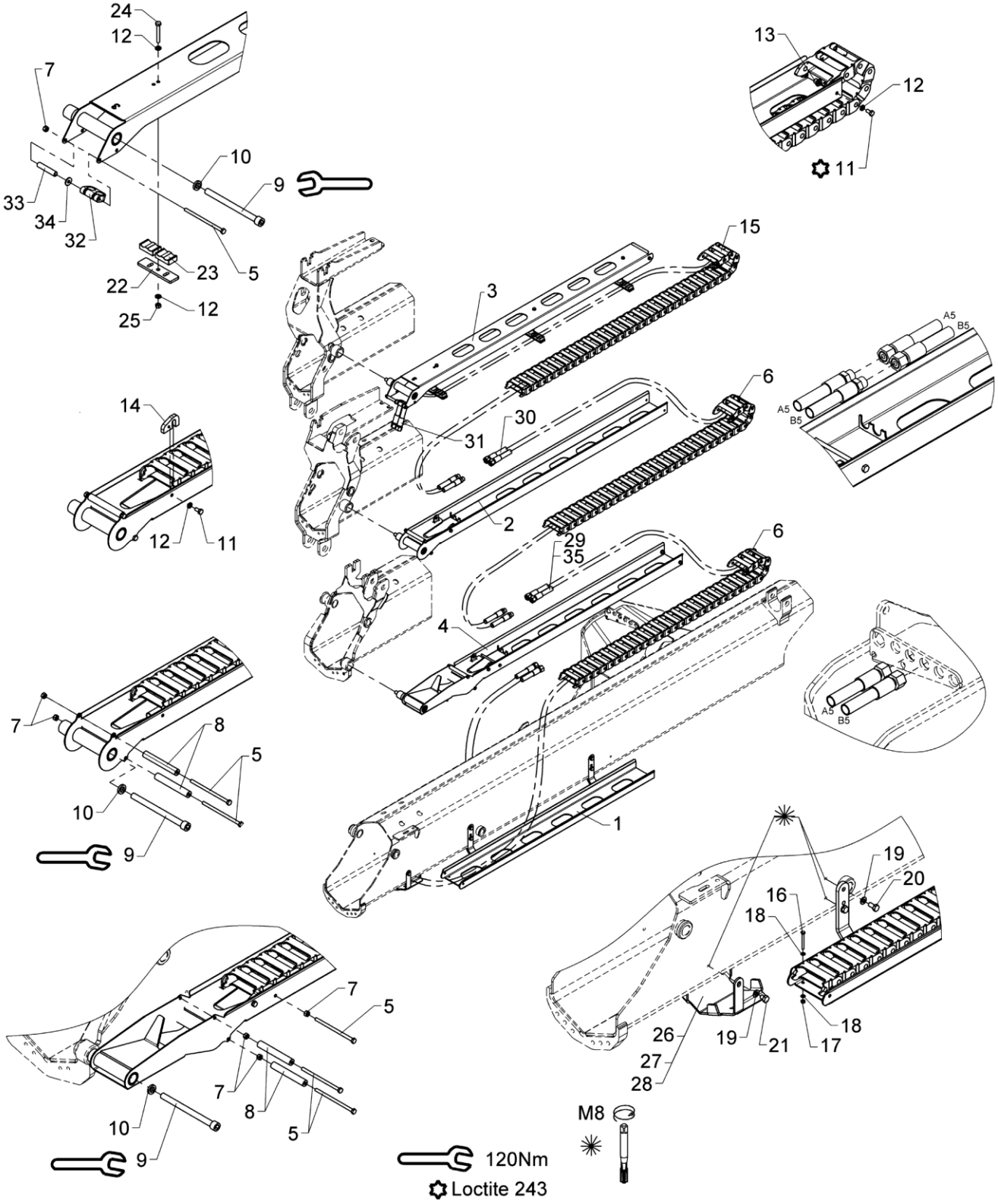

Hose guides, K3-1 EXV.

An Oshkosh Corporation Company

Pos	Qty	Part no.	Description	Remarks
		6342740	Hose guide, K3-1 EXV	
		6346740	Hose guide, K3-1 EXV	
		6365740	Hose guide, K3-1 EXV.	
		6363740	Hose guide, K3-1 EXV.	
1	1	6340721	Guide (jib)	
2	1	6340741	Guide (Extension II)	
3	1	6340748	Guide (extension K3)	
4	1	6341731	Hose guide (Extension I)	
5	6	30167	Steel bolt	M6 x 60
6	2	28712	Nylon drag chain, 30 links	
7	6	30884	Lock nut, stainless	M6
8	4	56513	Hose	
9	3	32488	Screw	MC12 x 150
10	3	6340717	Washer	
11	8	30111	Set screw, stainless	
12	14	32302	Face washer, stainless	6 mm
13	6	6340719	Nut	
14	2	6340718	Bracket	
15	1	28713	Nylon drag chain, 33 links	
16	2	30128	Set screw	M4 x 40
17	2	30857	Lock nut	M4
18	4	31188	Washer, stainless	4 mm
19	6	31147	Face washer, 8 mm	
20	4	30131	Set screw, stainless	M8 x 16
21	2	30105	Set screw, stainless	M8 x 10
22	3	6340769	Adaptor	
23	6	63561	Clamp	
24	3	30118	Steel pin, stainless	M6 x 45
25	3	30854	Nut, stainless	M6
26	1	6340299	Protective guard	Serie 1300/1500
27	1	6344299	Protective guard	Serie 1800/2200
28	1	6365299	Hose shield	Serie 1100/1110
29	2	56569	Hose	
30	2	56564	Hose	
31	2	56565	Hose	
32	1	68028	Clamp	
33	1	6340724	Distance pipe	
34	1	31134	Washer, stainless	
35	2	56458	Hose 3/8 x 3750 mm L/L	Serie 900/910

2820K-RCS

63 63 750
63 65 750
63 46 750
Internal ref. 63 42 750

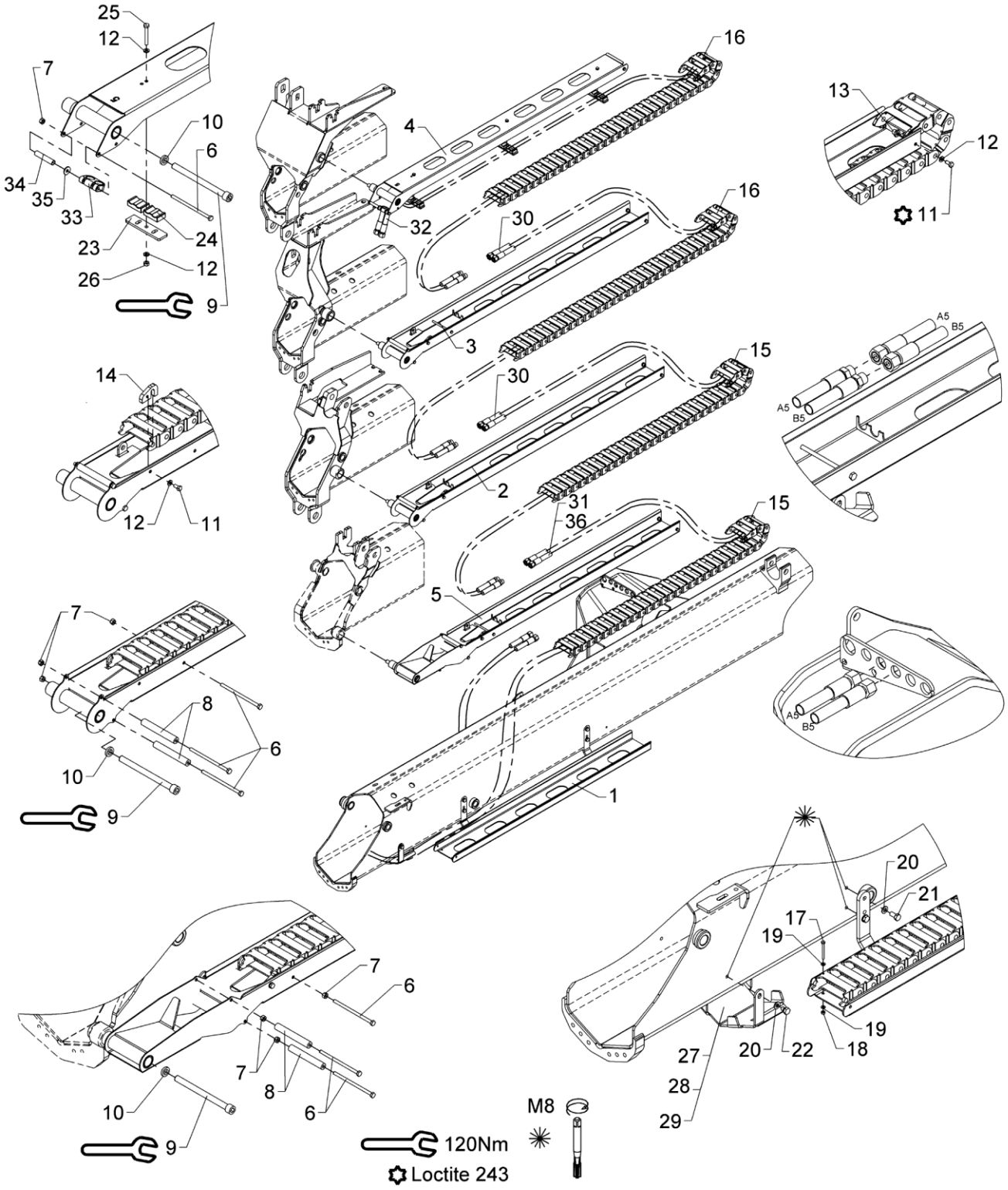

Hose guides, K4-1 EXV.

An Oshkosh Corporation Company

Pos	Qty	Part no.	Description	Remarks
		6342750	Hose guides, K4-1 EXV	
		6346750	Hose guides, K4-1 EXV	
		6365750	Hose guide, K4-1 EXV.	
		6363750	Hose guide, K4-1 EXV.	
1	1	6340721	Guide (jib)	
2	1	6340741	Guide (Extension II)	
3	1	6340751	Guide (Extension III)	
4	1	6340758	Guide (extension K5)	
5	1	6341731	Hose guide (Extension I)	
6	9	30167	Steel bolt	M6 x 60
7	9	30884	Lock nut, stainless	M6
8	6	56513	Hose	
9	4	32488	Screw	MC12 x 150
10	4	6340717	Washer	
11	11	30111	Set screw, stainless	
12	17	32302	Face washer, stainless	6 mm
13	8	6340719	Nut	
14	3	6340718	Bracket	
15	2	28712	Nylon drag chain, 30 links	
16	2	28713	Nylon drag chain, 33 links	
17	2	30128	Set screw	M4 x 40
18	2	30857	Lock nut	M4
19	4	31188	Washer, stainless	4 mm
20	6	31147	Face washer, 8 mm	
21	4	30131	Set screw, stainless	M8 x 16
22	2	30105	Set screw, stainless	M8 x 10
23	3	6340769	Adaptor	
24	6	63561	Clamp	
25	3	30118	Steel pin, stainless	M6 x 45
26	3	30854	Nut, stainless	M6
27	1	6340299	Protective guard	Serie 1300/1500
28	1	6344299	Protective guard	Serie 1800/2200
29	1	6365299	Hose shield	Serie 1100/1110
30	4	56564	Hose	
31	2	56569	Hose	
32	2	56565	Hose	
33	1	68028	Clamp	
34	1	6340724	Distance pipe	
35	1	31134	Washer, stainless	
36	2	56458	Hose 3/8 x 3750 mm L/L	Serie 900/910

2820K-RCS

63 63 760
63 65 760
63 46 760
Internal ref. 63 42 760

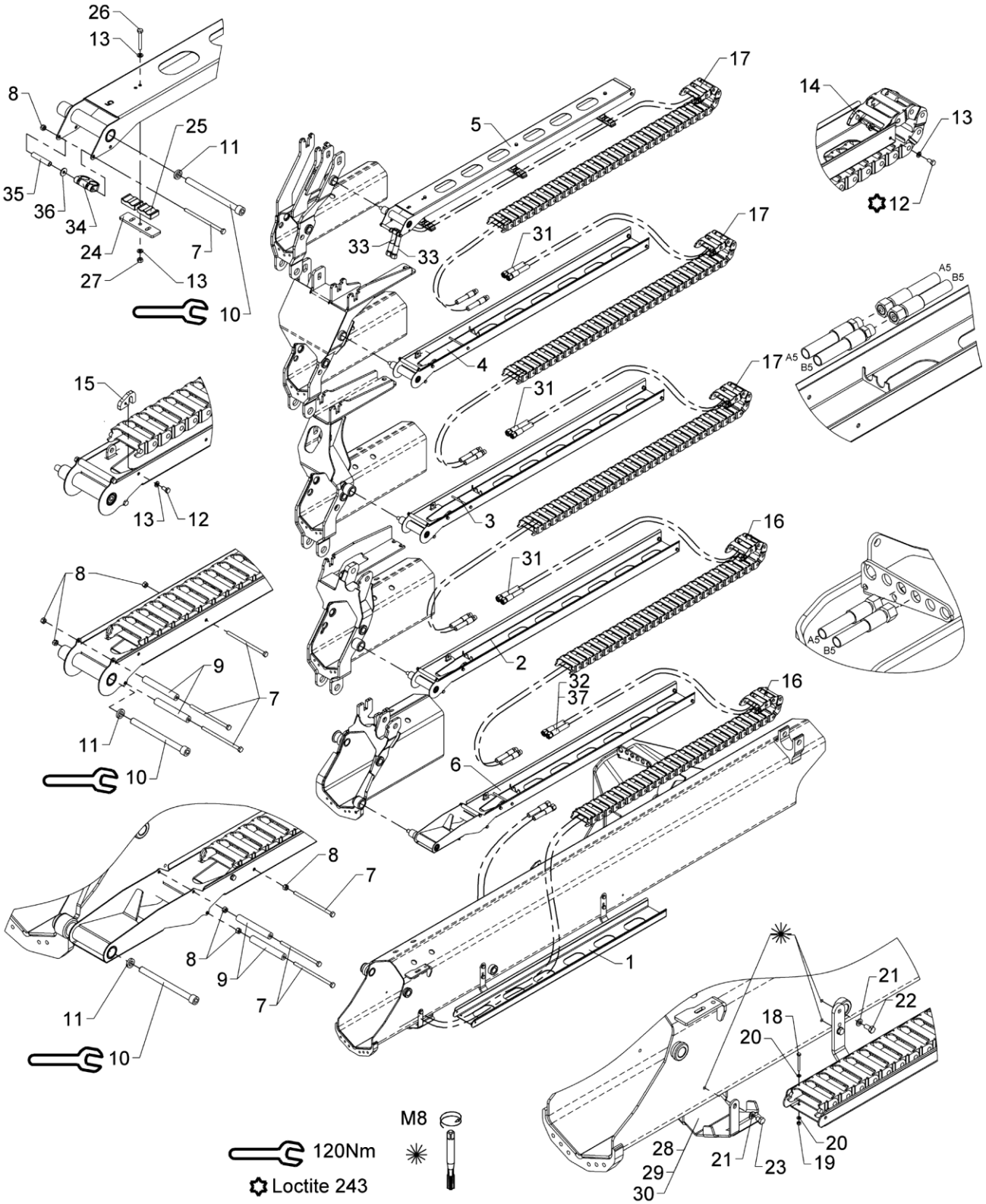

Hose guides, K5-1 EXV.

An Oshkosh Corporation Company

Pos	Qty	Part no.	Description	Remarks
		6342760	Hose guides, K5-1 EXV	
		6346760	Hose guides, K5-1 EXV	
		6365760	Hose guide, K5-1 EXV.	
		6363760	Hose guide, K5-1 EXV.	
1	1	6340721	Guide (jib)	
2	1	6340741	Guide (Extension II)	
3	1	6340751	Guide (Extension III)	
4	1	6340755	Guide (Extension IV)	
5	1	6340758	Guide (extension K5)	
6	1	6341731	Hose guide (Extension I)	
7	12	30167	Steel bolt	M6 x 60
8	12	30884	Lock nut, stainless	M6
9	8	56513	Hose	
10	5	32488	Screw	MC12 x 150
11	5	6340717	Washer	
12	14	30111	Set screw, stainless	
13	20	32302	Face washer, stainless	6 mm
14	10	6340719	Nut	
15	4	6340718	Bracket	
16	2	28712	Nylon drag chain, 30 links	
17	3	28713	Nylon drag chain, 33 links	
18	2	30128	Set screw	M4 x 40
19	2	30857	Lock nut	M4
20	4	31188	Washer, stainless	4 mm
21	6	31147	Face washer, 8 mm	
22	4	30131	Set screw, stainless	M8 x 16
23	2	30105	Set screw, stainless	M8 x 10
24	3	6340769	Adaptor	
25	6	63561	Clamp	
26	3	30118	Steel pin, stainless	M6 x 45
27	3	30854	Nut, stainless	M6
28	1	6340299	Protective guard	Serie 1300/1620
29	1	6344299	Protective guard	Serie 1800/2820
30	1	6365299	Hose shield	Serie 1100/1110
31	6	56564	Hose	
32	2	56569	Hose	
33	2	56565	Hose	
34	1	68028	Clamp	
35	1	6340724	Distance pipe	
36	1	31134	Washer, stainless	
37	2	56458	Hose 3/8 x 3750 mm L/L	Serie 900/910

2820K-RCS

63 46 770
Internal ref. 63 42 770

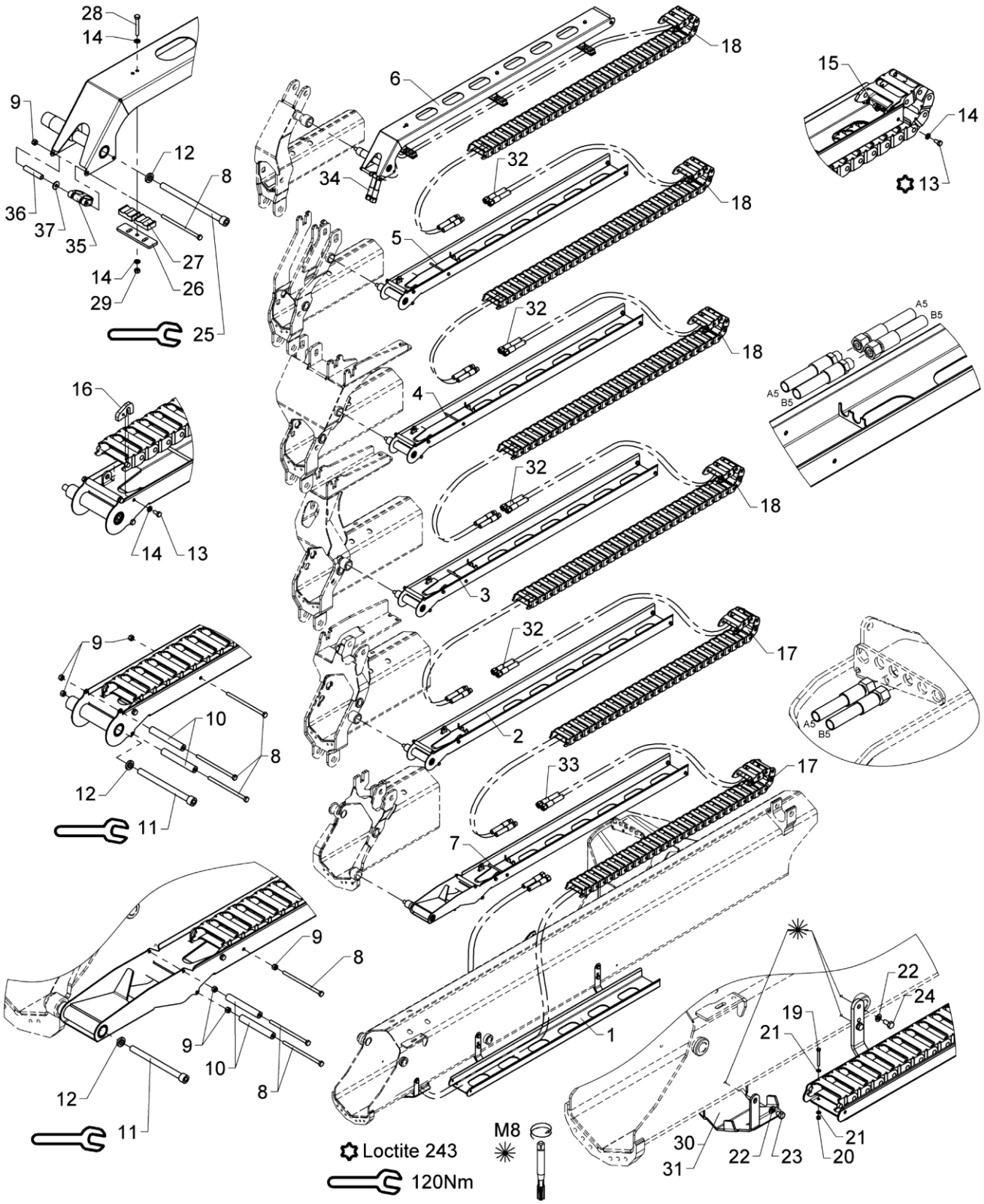

Hose guides, K6-1 EXV.

An Oshkosh Corporation Company

Pos	Qty	Part no.	Description	Remarks
		6342770	Hose guides, K6-1 EXV	
		6346770	Hose guides, K6-1 EXV	
1	1	6340721	Guide (jib)	
2	1	6340741	Guide (Extension II)	
3	1	6340751	Guide (Extension III)	
4	1	6340755	Guide (Extension IV)	
5	1	6340761	Guide (Extension V)	
6	1	6340765	Guide (Extension VI)	
7	1	6341731	Hose guide (Extension I)	
8	15	30167	Steel bolt	M6 x 60
9	15	30884	Lock nut, stainless	M6
10	10	56513	Hose	
11	5	32488	Screw	MC12 x 150
12	6	6340717	Washer	
13	17	30111	Set screw, stainless	
14	23	32302	Face washer, stainless	6 mm
15	12	6340719	Nut	
16	5	6340718	Bracket	
17	2	28712	Nylon drag chain, 30 links	
18	4	28713	Nylon drag chain, 33 links	
19	2	30128	Set screw	M4 x 40
20	2	30857	Lock nut	M4
21	4	31188	Washer, stainless	4 mm
22	6	31147	Face washer, 8 mm	
23	2	30105	Set screw, stainless	M8 x 10
24	4	30131	Set screw, stainless	M8 x 16
25	1	32489	Screw	MC12 x 180
26	3	6340769	Adaptor	
27	6	63561	Clamp	
28	3	30118	Steel pin, stainless	M6 x 45
29	3	30854	Nut, stainless	M6
30	1	6340299	Protective guard	Serie 1300/1500
31	1	6344299	Protective guard	Serie 1800/2200
32	8	56564	Hose	
33	2	56569	Hose	
34	2	56565	Hose	
35	1	68028	Clamp	
36	1	6340724	Distance pipe	
37	1	31134	Washer, stainless	

2820K-RCS

63 55 780
63 63 830
63 65 830
63 45 730
Internal ref. 63 40 730

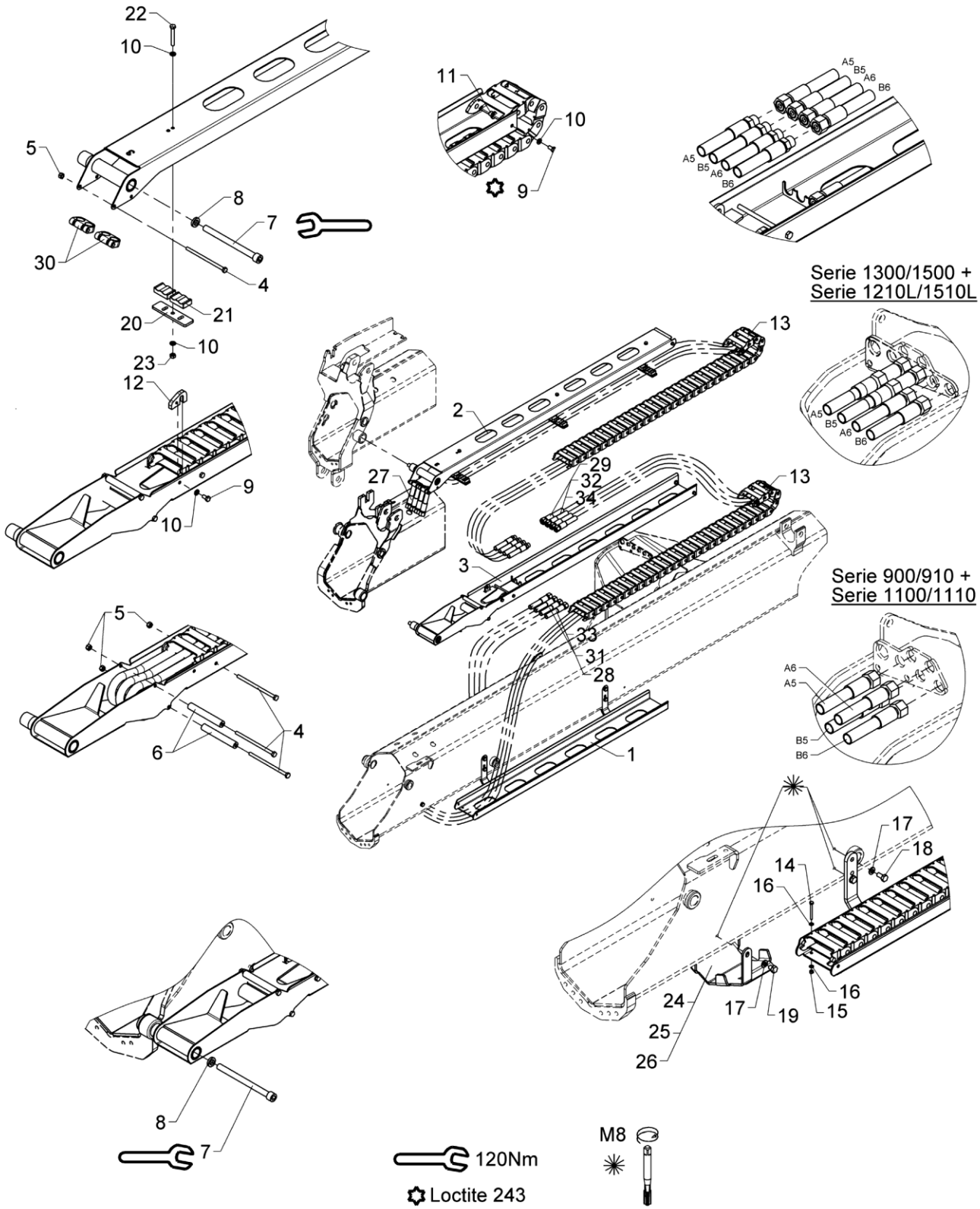

Hose guides, K2-2 EXV.

An Oshkosh Corporation Company

Pos	Qty	Part no.	Description	Remarks
		6340730	Hose guide, K2-1 EXV	S.1300K/1500K
		6345730	Hose guide, K2-2 EXV	S.1800K/2200K
		6365830	Hose guide, K2-2 EXV.	S.1100K/1110K
		6363830	Hose guide, K2-2 EXV.	S.900K/910K
		6355780		S.1210L/1510L
1	1	6340721	Guide (jib)	
2	1	6340748	Guide (extension K3)	
3	1	6341731	Hose guide (Extension I)	
4	4	30167	Steel bolt	M6 x 60
5	4	30884	Lock nut, stainless	M6
6	2	56513	Hose	
7	2	32488	Screw	MC12 x 150
8	2	6340717	Washer	
9	5	30111	Set screw, stainless	
10	11	32302	Face washer, stainless	6 mm
11	4	6340719	Nut	
12	1	6340718	Bracket	
13	2	28712	Nylon drag chain, 30 links	
14	2	30128	Set screw	M4 x 40
15	2	30857	Lock nut	M4
16	4	31188	Washer, stainless	4 mm
17	6	31147	Face washer, 8 mm	
18	4	30131	Set screw, stainless	M8 x 16
19	2	30105	Set screw, stainless	M8 x 10
20	3	6340769	Adaptor	
21	6	63561	Clamp	
22	3	30118	Steel pin, stainless	M6 x 45
23	3	30854	Nut, stainless	M6
24	1	6340299	Protective guard	S. 1300/1500/1210L/1510L
25	1	6344299	Protective guard	S. 1800/2200
26	1	6365299	Hose shield	S. 1100/1110
27	4	56568	Hose	
28	2	56563	Hose	S. 1300-2200/1100/1110
29	2	56569	Hose	S. 1300-2200/1100/1110
30	2	68028	Clamp	
31	2	56462	Hose 3/8 x 3850 mm	S. 900/910/1100KS/1221KS
32	2	56458	Hose 3/8 x 3750 mm L/L	S. 900/910/1100KS/1221KS
33	2	56916	Hose	S. 1210L/1510L
34	2	56993	Hydraulic hose	S. 1210L/1510L

565 09 220

2820K-RCS

63 63 840
63 65 840
63 45 530
63 55 860 63 45 740
Internal ref. 63 40 740

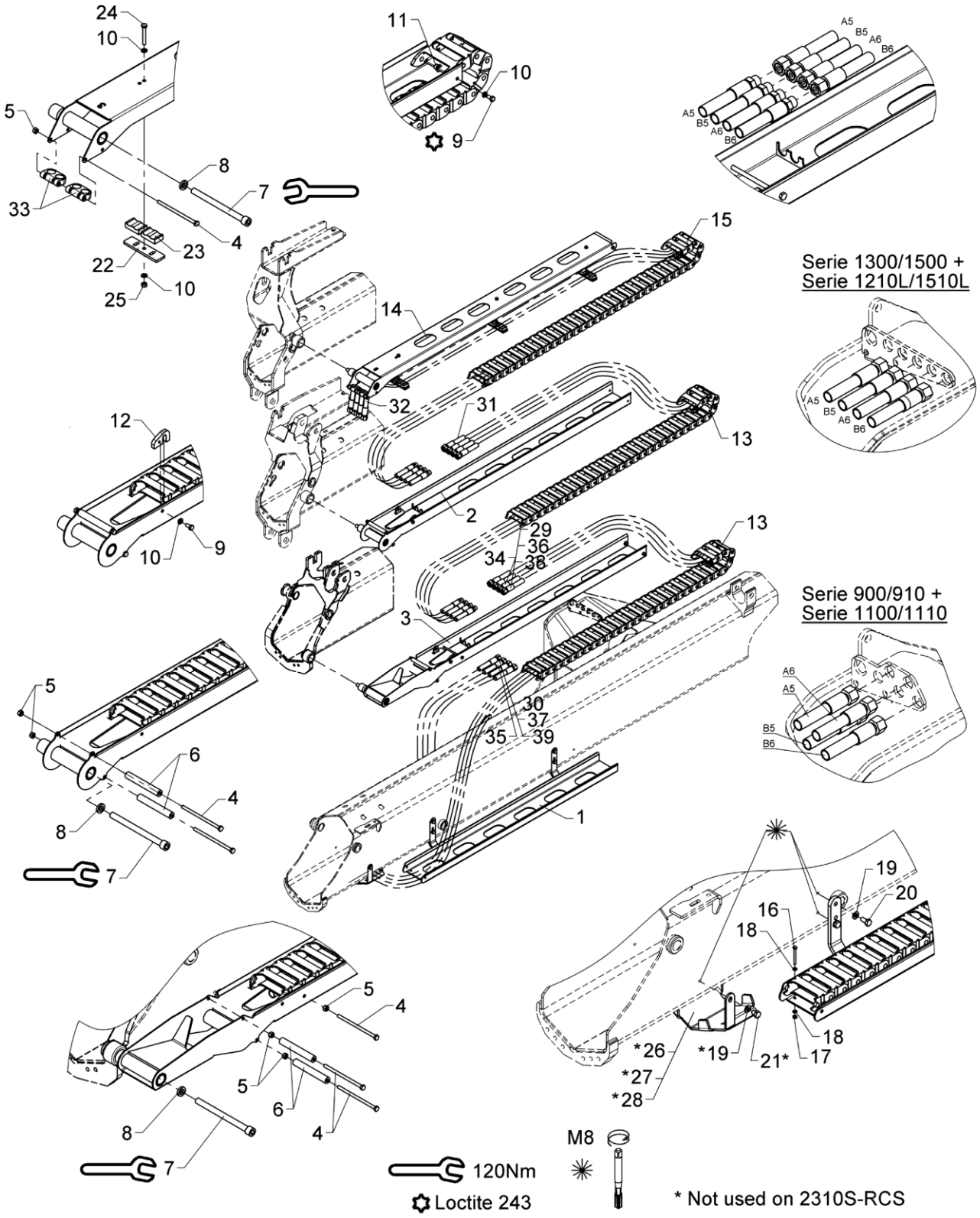

Hose guides, K3-2 EXV.

An Oshkosh Corporation Company

Pos	Qty	Part no.	Description	Remarks
		6340740	Hose guide, K3-2 EXV	S.1300/1500
		6345740	Hose guides, K3-2 EXV	S.1100/1110
		6345530	Hose guide, K3-2 EXV.	S.2310S-RCS
		6365840	Hose guide, K3-2 EXV.	S.1100/1110
		6363840	Hose guide, K3-2 EXV.	S.900/910
		6355860		S.1210L/1510L
1	1	6340721	Guide (jib)	
2	1	6340741	Guide (Extension II)	
3	1	6341731	Hose guide (Extension I)	
4	6	30167	Steel bolt	M6 x 60
5	6	30884	Lock nut, stainless	M6
6	4	56513	Hose	
7	3	32488	Screw	MC12 x 150
8	3	6340717	Washer	
9	8	30111	Set screw, stainless	
10	14	32302	Face washer, stainless	6 mm
11	6	6340719	Nut	
12	2	6340718	Bracket	
13	2	28712	Nylon drag chain, 30 links	
14	1	6340748	Guide (extension K3)	
15	1	28713	Nylon drag chain, 33 links	
16	2	30128	Set screw	M4 x 40
17	2	30857	Lock nut	M4
18	4	31188	Washer, stainless	4 mm
19	6	31147	Face washer, 8 mm	
20	4	30131	Set screw, stainless	M8 x 16
21	2	30105	Set screw, stainless	M8 x 10
22	3	6340769	Adaptor	
23	6	63561	Clamp	
24	3	30118	Steel pin, stainless	M6 x 45
25	3	30854	Nut, stainless	M6
26	1	6340299	Protective guard	S. 1300/1500/1210L/1510L
27	1	6344299	Protective guard	S. 1800/2200
28	1	6365299	Hose shield	S. 1100/1110
29	2	56569	Hose	S. 1300-2200/1100/1110
30	2	56563	Hose	S. 1300-2200/1100/1110
31	4	56564	Hose	
32	4	56565	Hose	
33	2	68028	Clamp	
34	2	56458	Hose 3/8 x 3750 mm L/L	S. 900/910
35	2	56462	Hose 3/8 x 3850 mm	S.900/910

565 09 220

2820K-RCS

63 63 840
63 65 840
63 45 530
63 55 860 63 45 740
Internal ref. 63 40 740

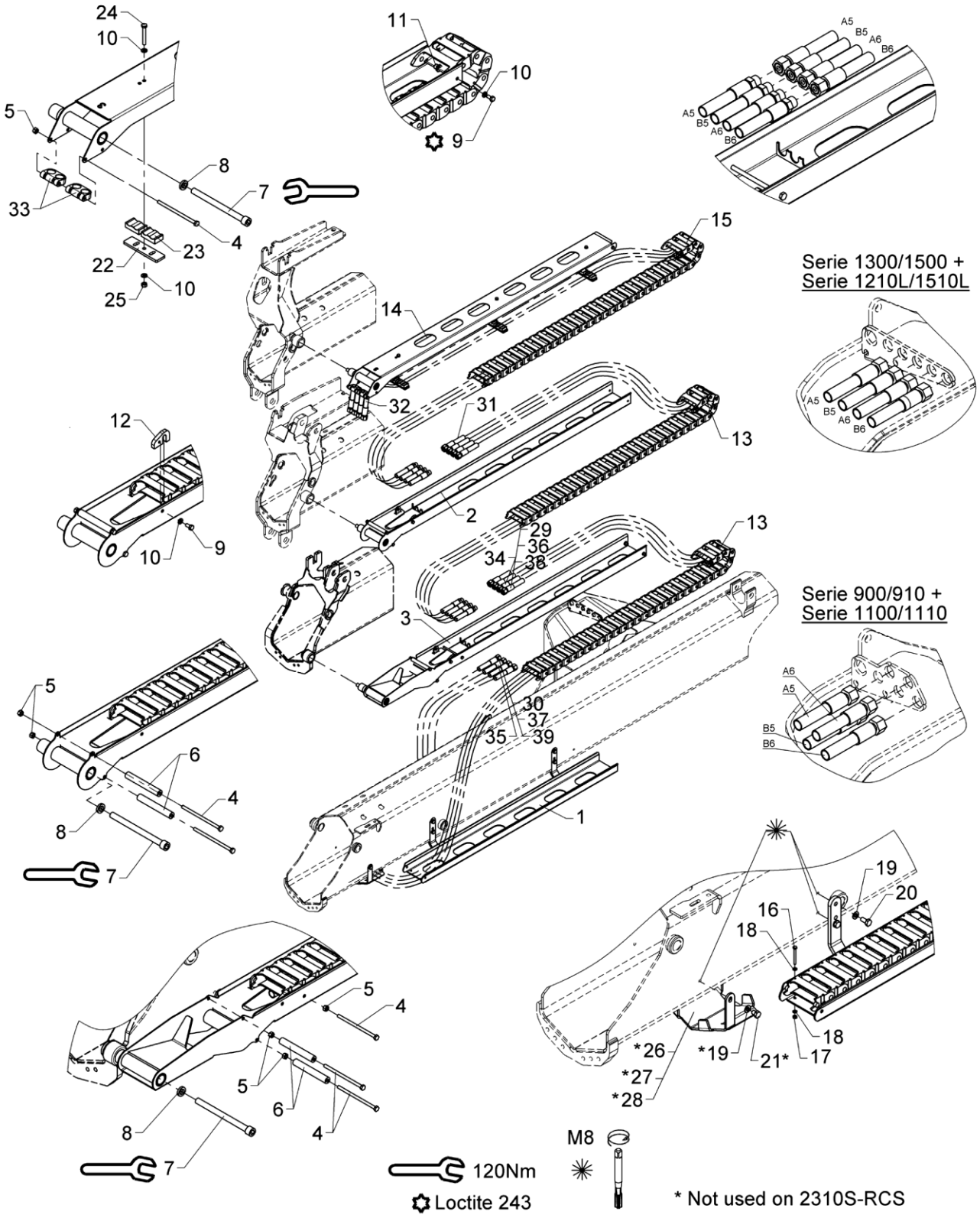

Hose guides, K3-2 EXV.

An Oshkosh Corporation Company

Pos	Qty	Part no.	Description	Remarks
36	2	56986	Hose 3/8" x 3200 mm L/L	Serie 2310S-RCS
37	2	56987	Hose 3/8" x 3300 mm L/L	Serie 2310S-RCS
38	2	56993	Hydraulic hose	S. 1210L/1510L
39	2	56916	Hose	S. 1210L/1510L

565 09 230

2820K-RCS

63 63 850
63 65 850
63 45 550
63 55 870 63 45 750
Internal ref. 63 40 750

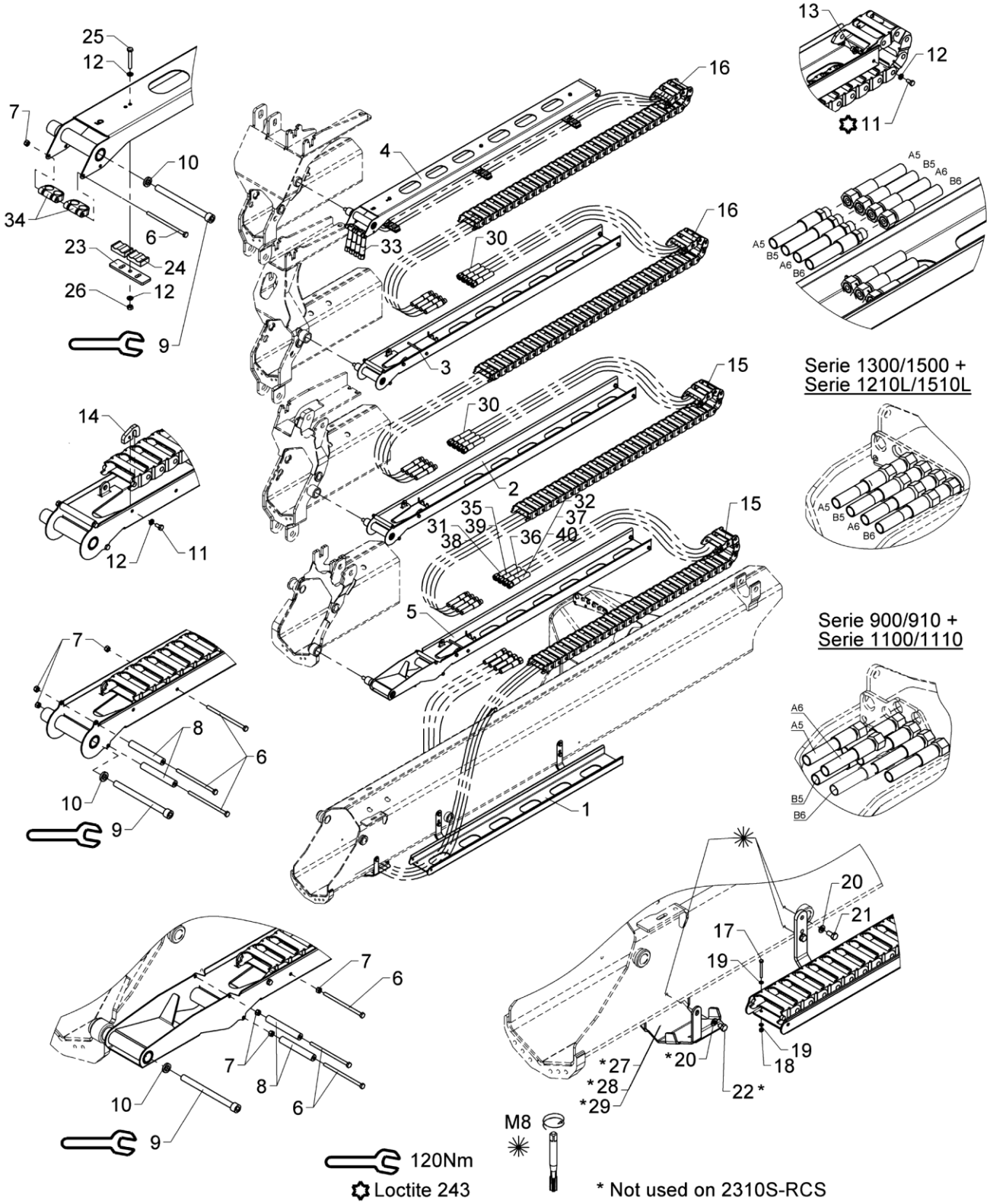

Hose guides, K4-2 EXV.

An Oshkosh Corporation Company

Pos	Qty	Part no.	Description	Remarks
		6340750	Hose guides, K4-2 EXV	S. 1300/1500
		6345750	Hose guides, K4-2 EXV	S. 1800/2200
		6345550	Hose guide, K4-2 EXV.	S. 2310S-RCS
		6365850	Hose guide, K4-2 EXV.	S. 1100/1110
		6363850	Hose guide, K4-2 EXV.	S. 900/910
		6355870		S. 1210L/1510L
1	1	6340721	Guide (jib)	
2	1	6340741	Guide (Extension II)	
3	1	6340751	Guide (Extension III)	
4	1	6340758	Guide (extension K5)	
5	1	6341731	Hose guide (Extension I)	
6	9	30167	Steel bolt	M6 x 60
7	9	30884	Lock nut, stainless	M6
8	6	56513	Hose	
9	4	32488	Screw	MC12 x 150
10	4	6340717	Washer	
11	11	30111	Set screw, stainless	
12	17	32302	Face washer, stainless	6 mm
13	8	6340719	Nut	
14	3	6340718	Bracket	
15	2	28712	Nylon drag chain, 30 links	
16	2	28713	Nylon drag chain, 33 links	
17	2	30128	Set screw	M4 x 40
18	2	30857	Lock nut	M4
19	4	31188	Washer, stainless	4 mm
20	6	31147	Face washer, 8 mm	
21	4	30131	Set screw, stainless	M8 x 16
22	2	30105	Set screw, stainless	M8 x 10
23	3	6340769	Adaptor	
24	6	63561	Clamp	
25	3	30118	Steel pin, stainless	M6 x 45
26	3	30854	Nut, stainless	M6
27	1	6340299	Protective guard	S. 1300/1500/1210L/1510L
28	1	6344299	Protective guard	S. 1800/2200
29	1	6365299	Hose shield	S. 1100/1110
30	8	56564	Hose	
31	2	56563	Hose	S. 1300-2200/1100/1110
32	2	56569	Hose	S. 1300-2200/1100/1110
33	4	56565	Hose	
34	2	68028	Clamp	
35	2	56462	Hose 3/8 x 3850 mm	S. 900/910

565 09 230

2820K-RCS

63 63 850
63 65 850
63 45 550
63 55 870 63 45 750
Internal ref. 63 40 750

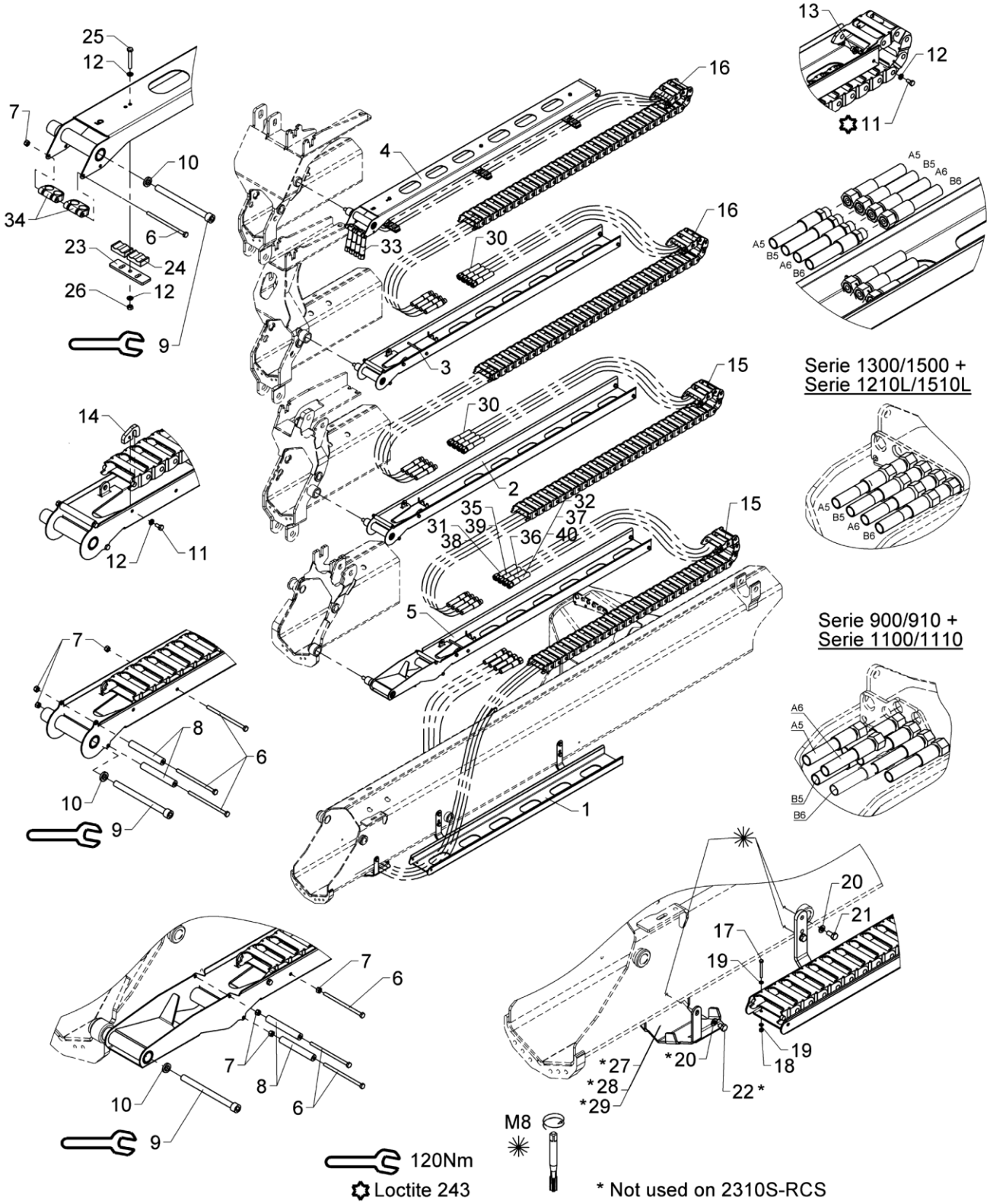

Hose guides, K4-2 EXV.

An Oshkosh Corporation Company

Pos	Qty	Part no.	Description	Remarks
36	2	56458	Hose 3/8 x 3750 mm L/L	S. 900/910
37	2	56986	Hose 3/8" x 3200 mm L/L	S. 2310S-RCS
38	2	56987	Hose 3/8" x 3300 mm L/L	S. 2310S-RCS
39	2	56916	Hose	S. 1210L/1510L
40	2	56993	Hydraulic hose	S. 1210L/1510L

2820K-RCS

63 63 860
63 65 860
63 45 760
Internal ref. 63 40 760

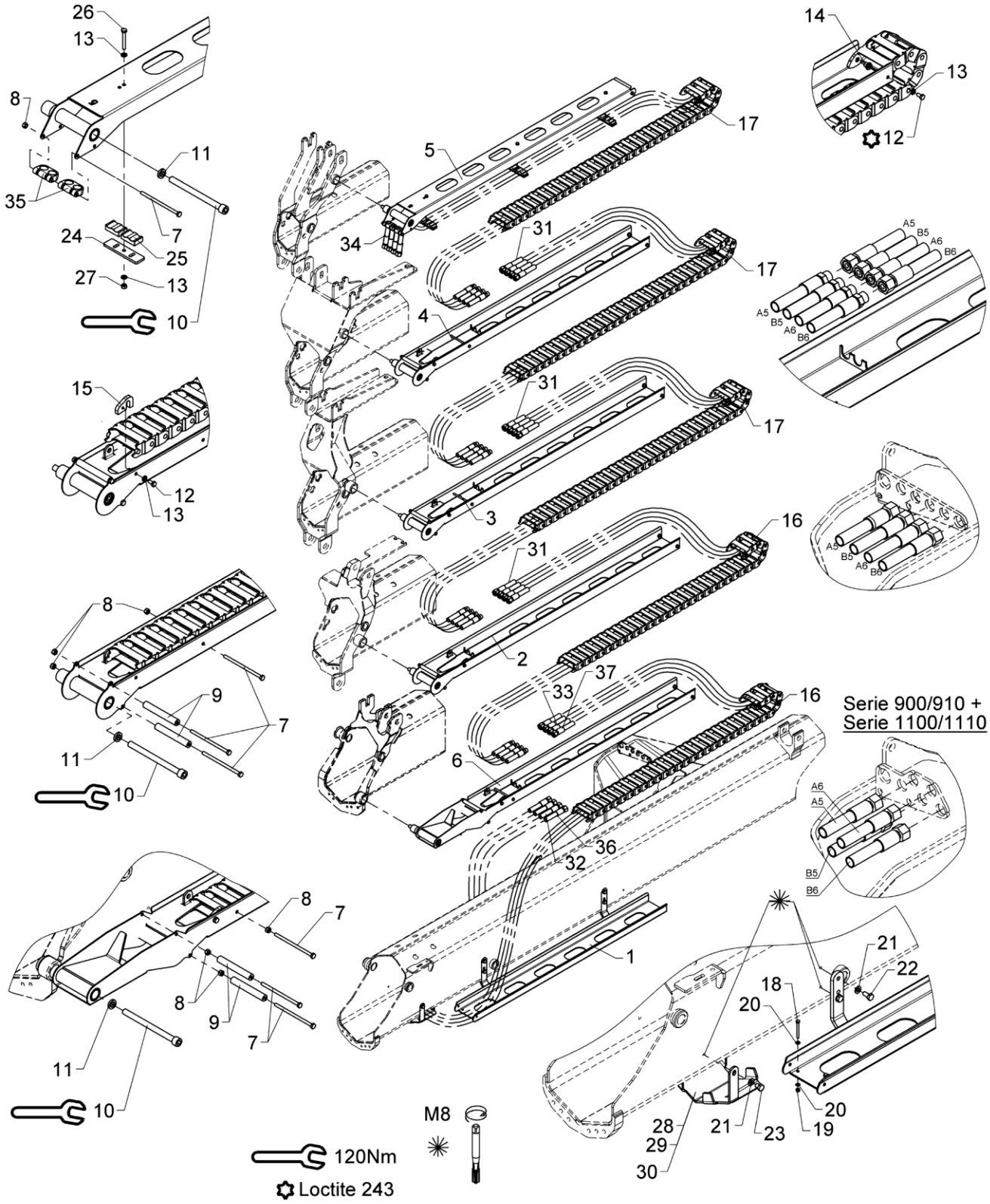

Hose guides, K5-2 EXV.

An Oshkosh Corporation Company

Pos	Qty	Part no.	Description	Remarks
		6340760	Hose guides, K5-2 EXV	
		6345760	Hose guides, K5-2 EXV	
		6365860	Hose guide, K5-2 EXV.	
		6363860	Hose guide, K5-2 EXV.	
1	1	6340721	Guide (jib)	
2	1	6340741	Guide (Extension II)	
3	1	6340751	Guide (Extension III)	
4	1	6340755	Guide (Extension IV)	
5	1	6340758	Guide (extension K5)	
6	1	6341731	Hose guide (Extension I)	
7	12	30167	Steel bolt	M6 x 60
8	12	30884	Lock nut, stainless	M6
9	8	56513	Hose	
10	5	32488	Screw	MC12 x 150
11	5	6340717	Washer	
12	14	30111	Set screw, stainless	
13	20	32302	Face washer, stainless	6 mm
14	10	6340719	Nut	
15	4	6340718	Bracket	
16	2	28712	Nylon drag chain, 30 links	
17	3	28713	Nylon drag chain, 33 links	
18	2	30128	Set screw	M4 x 40
19	2	30857	Lock nut	M4
20	4	31188	Washer, stainless	4 mm
21	6	31147	Face washer, 8 mm	
22	4	30131	Set screw, stainless	M8 x 16
23	2	30105	Set screw, stainless	M8 x 10
24	3	6340769	Adaptor	
25	6	63561	Clamp	
26	3	30118	Steel pin, stainless	M6 x 45
27	3	30854	Nut, stainless	M6
28	1	6340299	Protective guard	Serie 1300/1620
29	1	6344299	Protective guard	Serie 1800/2820
30	1	6365299	Hose shield	Serie 1100/1110
31	12	56564	Hose	
32	2	56563	Hose	
33	2	56569	Hose	
34	4	56565	Hose	
35	2	68028	Clamp	
36	2	56462	Hose 3/8 x 3850 mm	Serie 900/910
37	2	56458	Hose 3/8 x 3750 mm L/L	Serie 900/910

2820K-RCS

63 45 770
Internal ref. 63 40 770

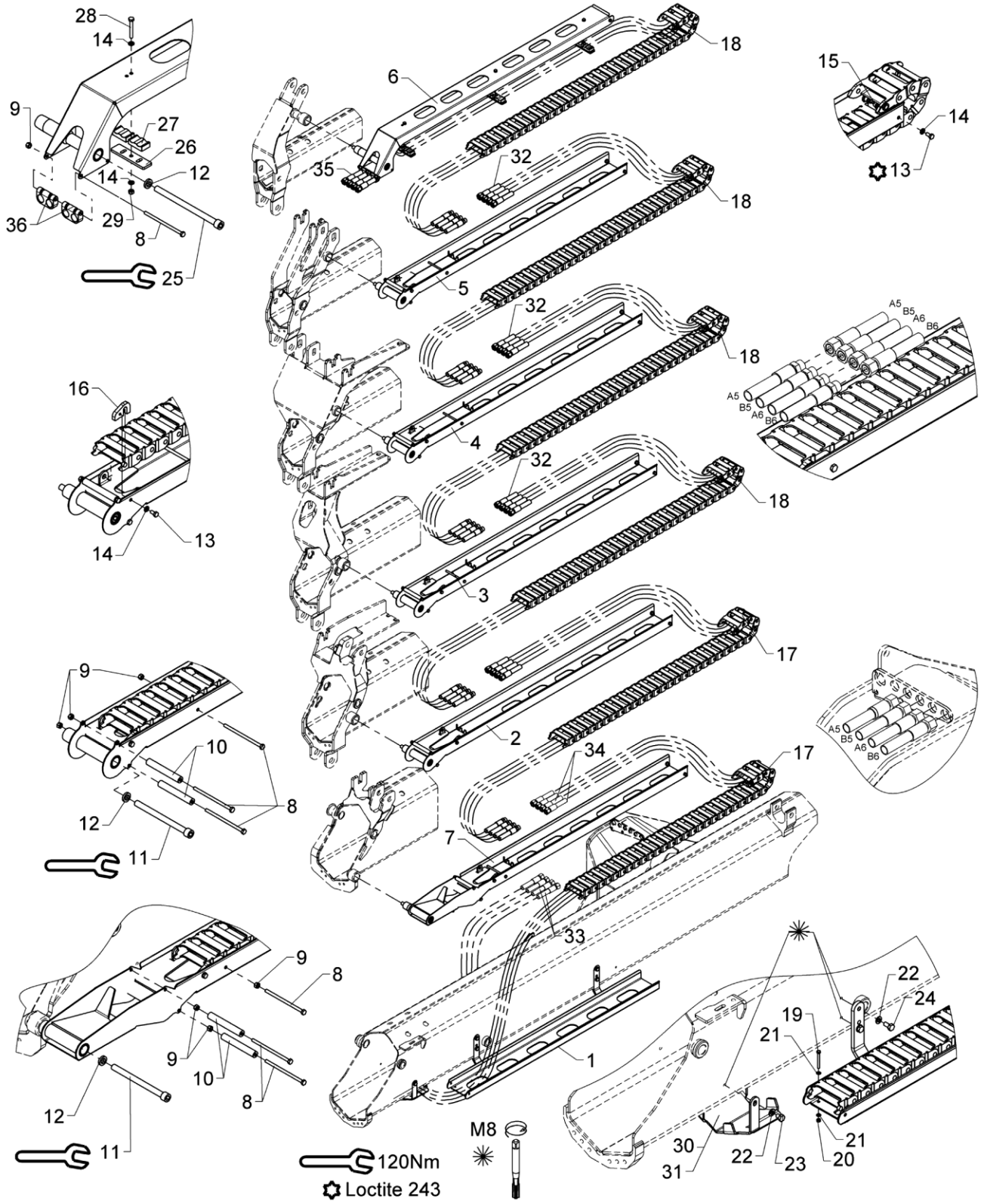

Hose guides, K6-2 EXV.

An Oshkosh Corporation Company

Pos	Qty	Part no.	Description	Remarks
		6340770	Hose guides, K6-2 EXV	
		6345770	Hose guides, K6-2 EXV	
1	1	6340721	Guide (jib)	
2	1	6340741	Guide (Extension II)	
3	1	6340751	Guide (Extension III)	
4	1	6340755	Guide (Extension IV)	
5	1	6340761	Guide (Extension V)	
6	1	6340765	Guide (Extension VI)	
7	1	6341731	Hose guide (Extension I)	
8	15	30167	Steel bolt	M6 x 60
9	15	30884	Lock nut, stainless	M6
10	10	56513	Hose	
11	5	32488	Screw	MC12 x 150
12	6	6340717	Washer	
13	17	30111	Set screw, stainless	
14	23	32302	Face washer, stainless	6 mm
15	12	6340719	Nut	
16	5	6340718	Bracket	
17	2	28712	Nylon drag chain, 30 links	
18	4	28713	Nylon drag chain, 33 links	
19	2	30128	Set screw	M4 x 40
20	2	30857	Lock nut	M4
21	4	31188	Washer, stainless	4 mm
22	6	31147	Face washer, 8 mm	
23	2	30105	Set screw, stainless	M8 x 10
24	4	30131	Set screw, stainless	M8 x 16
25	1	32489	Screw	MC12 x 180
26	3	6340769	Adaptor	
27	6	63561	Clamp	
28	3	30118	Steel pin, stainless	M6 x 45
29	3	30854	Nut, stainless	M6
30	1	6340299	Protective guard	Serie 1300/1500
31	1	6344299	Protective guard	Serie 1800/2200
32	16	56564	Hose	3/8 X 2900 mm L/S
33	2	56563	Hose	3/8 X 4170 mm L/L
34	2	56569	Hose	
35	4	56565	Hose	3/8 x 3420 mm L/S 12L
36	2	68028	Clamp	

2820K-RCS

63 47 730
Internal ref. 63 43 730

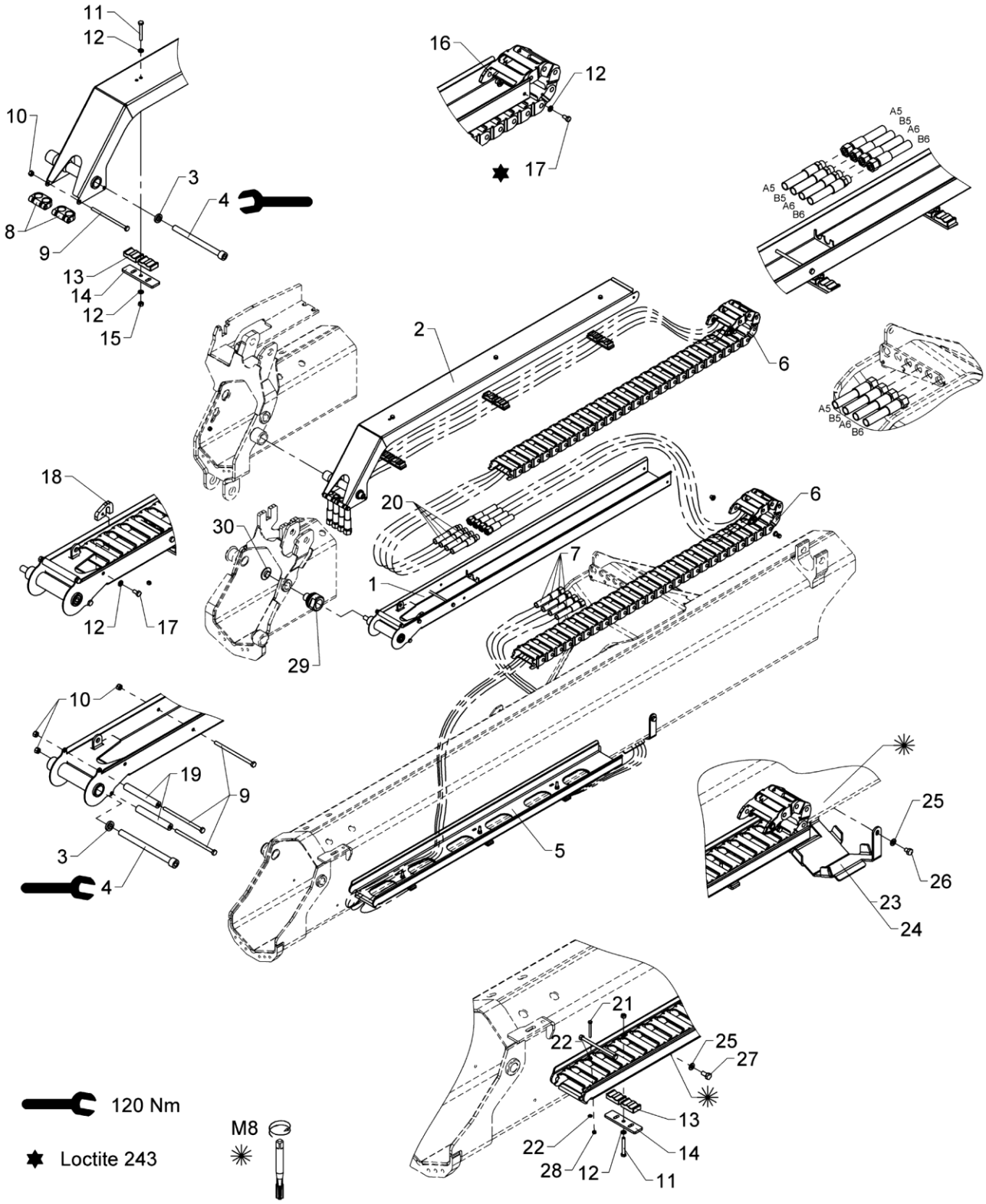

From loader 1440001
To loader

Created 21-03-2012
Modified 05-01-2017

Hose guides, K2-2 EXV-raised

An Oshkosh Corporation Company

Pos	Qty	Part no.	Description	Remarks
		6343730	Hose guides, K2-2 EXV-raised	
		6347730	Hose guides, K2-2 EXV-raised	
1	1	6340746	Hose guide (Extension II)	
2	1	6340768	Hose guide (Extension II)	
3	2	6340717	Washer	
4	2	32488	Screw	MC12 x 150
5	1	6340705	Hose guide (Jib)	
6	2	28712	Nylon drag chain, 30 links	
7	4	56569	Hose	
8	2	68028	Clamp	
9	4	30167	Steel bolt	M6 x 60
10	4	30884	Lock nut, stainless	M6
11	6	30118	Steel pin, stainless	M6 x 45
12	17	32302	Face washer, stainless	6 mm
13	12	63561	Clamp	
14	6	6340769	Adaptor	
15	6	30854	Nut, stainless	M6
16	4	6340719	Nut	
17	5	30111	Set screw, stainless	
18	1	6340718	Bracket	
19	2	56513	Hose	
20	4	56568	Hose	
21	2	30128	Set screw	M4 x 40
22	4	31188	Washer, stainless	4 mm
23	1	6340299	Protective guard	Serie 1300/1500
24	1	6344299	Protective guard	Serie 1800/2200
25	6	31147	Face washer, 8 mm	
26	2	30105	Set screw, stainless	M8 x 10
27	4	30131	Set screw, stainless	M8 x 16
28	2	30857	Lock nut	M4
29	1	6340417	Pin for hose guide	
30	1	6381484	Guide	

2820K-RCS

Internal ref. 63 40 900

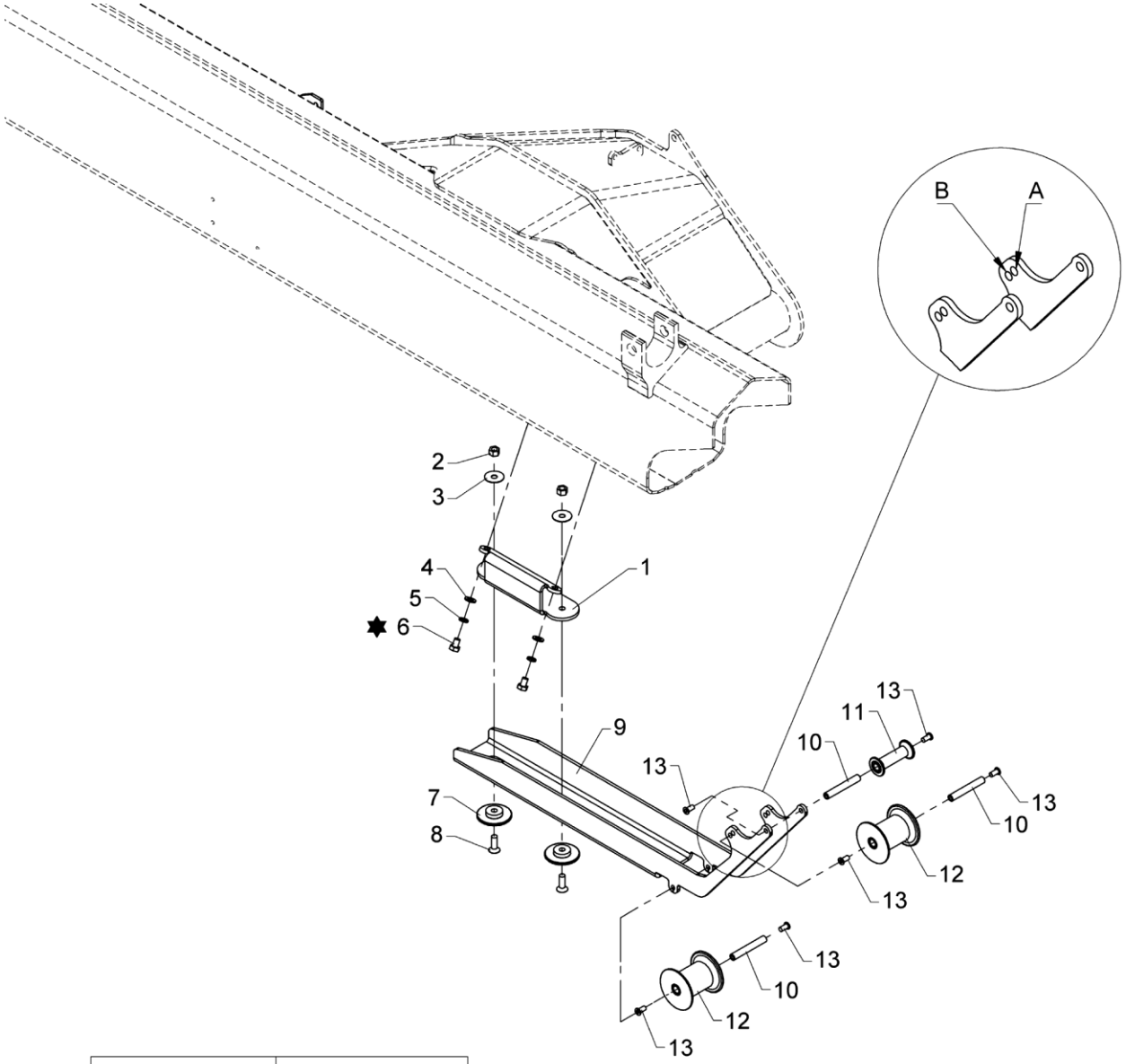

A	B
1800K - 1810K	1300K - 1310K
2020K - 2030K	1410K - 1420K
2120K - 2130K	1500K - 1510K
2200K - 2210K	1520K - 1530K
2310K - 2320K	1610K - 1620K
2420K - 2430K	1720K - 1730K
2620K - 2630K	1820K - 1830K
2810K - 2820K	1910K - 1920K
1910L	1210L
2030L	1430L
2110L	1510L
2530L	1730L

Loctite 243

565 09 280

From loader 1440001
To loader

Created 26-01-2016
Modified 06-12-2018

Bracket for hose reel, cpl. (jib)

An Oshkosh Corporation Company

Pos	Qty	Part no.	Description	Remarks
1	1	6340623		
2	2	30888	Lock nut	M10
3	2	31141	Washer	10 mm
4	2	31565	Washer, stainless	10 mm
5	2	31156	Spring washer	10 mm
6	2	30152	Set screw	M10 x 14
7	2	6340624	Guide shoe	
8	2	30581	Counter-sunk screw	MK10 x 30
9	1	6340847	Bracket for guide roller	
10	3	6301042	Pin	
11	1	63579	Guide roller	
12	2	63547	Guide roller	
13	6	32481	Screw	MC8 x 16

2820K-RCS

Internal ref. 63 45 910

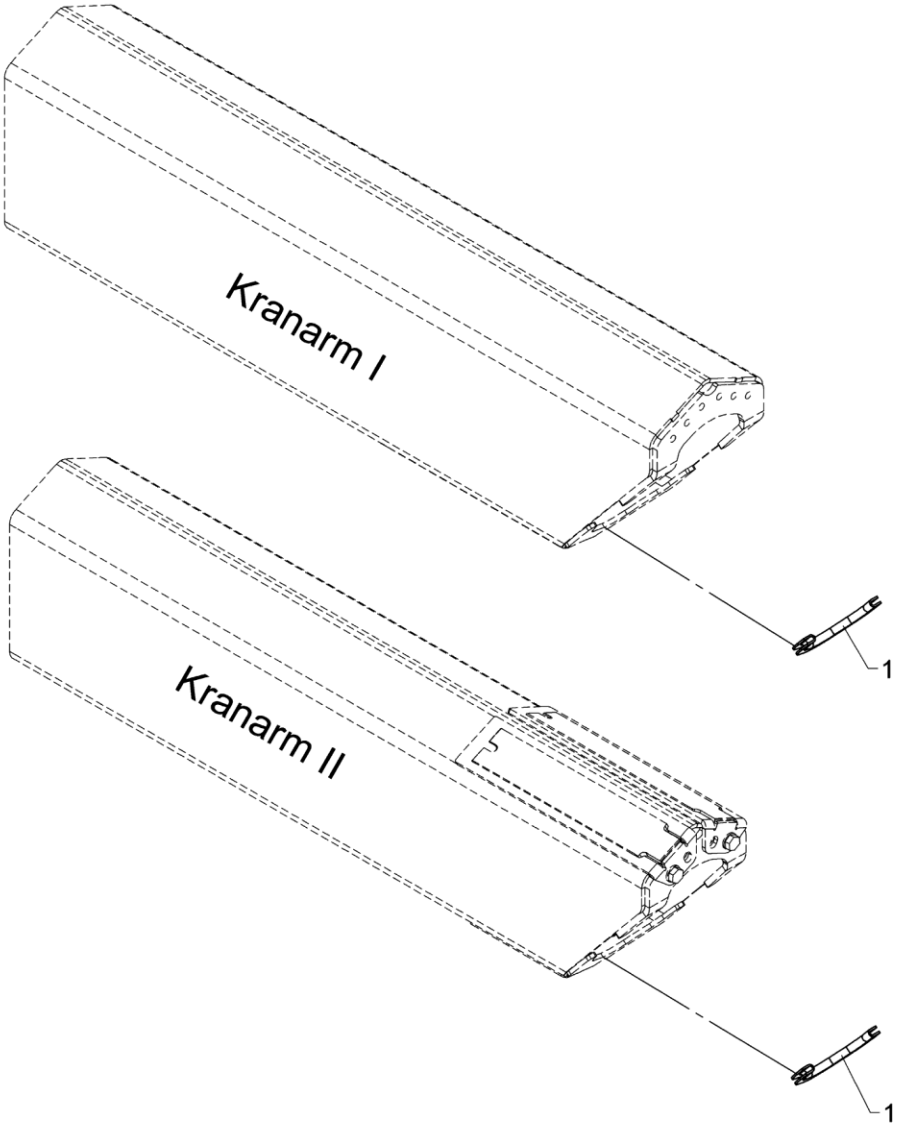

565 09 290

From loader 1440001
To loader

Created 26-01-2016
Modified

Attachment for hose reel, cpl. (extension 2)

Pos	Qty	Part no.	Description	Remarks
1	2	46596	Rubber protection	190 mm

An Oshkosh Corportation Company

2820K-RCS

Internal ref. 63 44 920

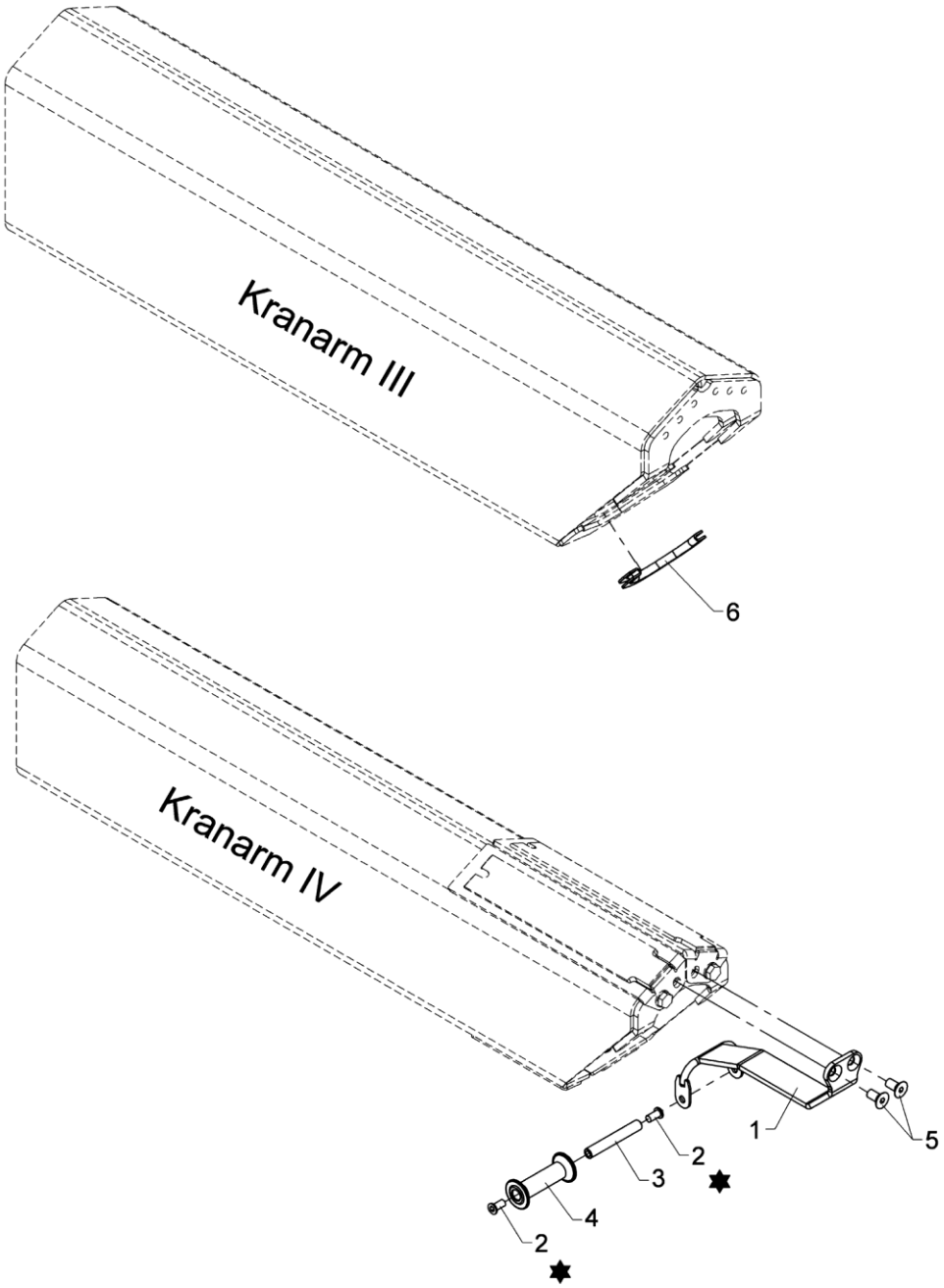

✸ Loctite 243

Attachment for hose reel, cpl. (extension 4)

An Oshkosh Corporation Company

Pos	Qty	Part no.	Description	Remarks
1	1	6344627	Roller bracket (extension 4)	
2	2	32481	Screw	MCL8 x 16
3	1	6301042	Pin	
4	1	63579	Guide roller	
5	2	30545	Countersunk screw	MK10 x 20
6	1	46596	Rubber protection	190 mm

2820K-RCS

63 45 990
Internal ref. 63 45 980

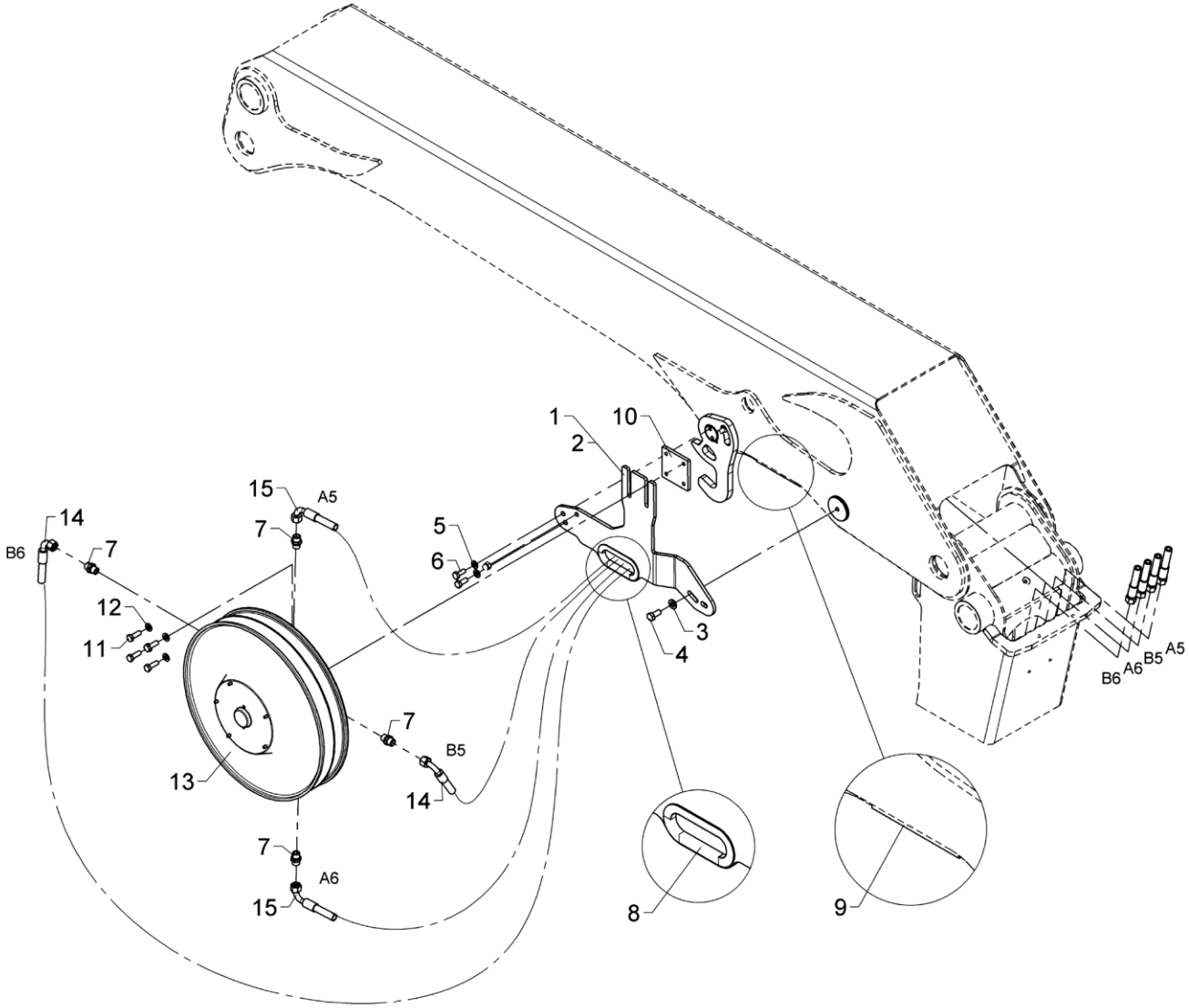

NB: This page is only avalible at **2120, 2820** with K2, K3 or K4.

From loader 1440001
To loader

Created 03-01-2018
Modified 17-08-2018

Hydr. system, hose reels, 2 EXV.

An Oshkosh Corporation Company

Pos	Qty	Part no.	Description	Remarks
		6345980	Hydr. syst. hose reels 2 EXV	
		6345990	Hydr. syst. hose reels 2 EXV	
1	1	6340618	Bracket for hose reel (1EXV)	2 ledarme
2	1	6340619	Bracket for hose reel (1EXV)	1 ledarm
3	1	31131	Washer	12 mm
4	1	30176	Set screw	M12 x 25
5	2	31177	Washer	10 mm
6	2	31513	Set screw, stainless	M10 x 25
7	4	25127	Connection	P-GEV 12 LR-WD
8	1	46587	Rubber protection	180 mm
9	1	46587	Rubber protection	205 mm
10	1	6352024	Threaded plate	
11	4	30156	Set screw, stainless	M10 x 30
12	4	31565	Washer, stainless	10 mm
13	1	56205	Hose reel	Dobbelt
14	2	0015020	Hose	
15	2	0017530	Hose	

2820K-RCS

63 45 930
Internal ref. 63 45 920

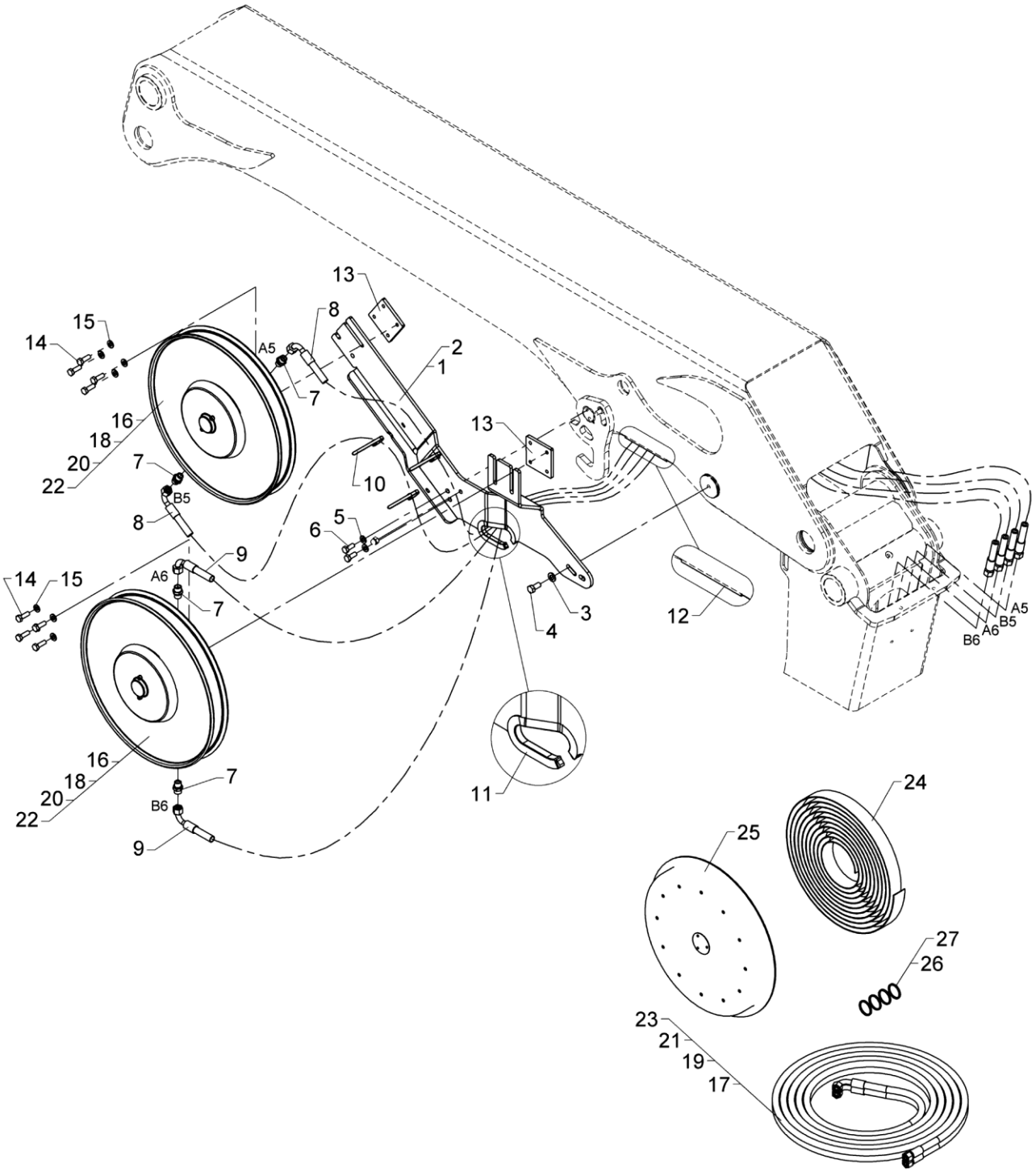

2120, 2820: This page is only at K5 and K6.

From loader 1440001
To loader

Created 12-01-2010
Modified 03-01-2018

Hydr. system, hose reels, 2 EXV.

An Oshkosh Corporation Company

Pos	Qty	Part no.	Description	Remarks
		6345920	Hydr. syst. hose reels 2 EXV	
		6345930	Hydr.syst., hose reels 2 EXV	
1	1	6340621	Bracket for hose reel	2 ledarme
2	1	6340622	Bracket for hose reel	1 ledarm
3	1	31131	Washer	12 mm
4	1	30176	Set screw	M12 x 25
5	2	31177	Washer	10 mm
6	2	31513	Set screw, stainless	M10 x 25
7	4	25127	Connection	P-GEV 12 LR-WD
8	2	0017540	Hose	
9	2	0015020	Hose	
10	3	27275	Cable tie, black, 7.6x385mm	7,6 x 390mm
11	1	46587	Rubber protection	210 mm
12	1	46587	Rubber protection	150 mm
13	2	6352024	Threaded plate	
14	8	30156	Set screw, stainless	M10 x 30
15	8	31565	Washer, stainless	10 mm
16	2	56371	Hose reel	K1, K2, K3
17	1	56375	Double hose	(Til 56371)
18	2	56372	Hose reel	K4
19	1	56376	Double hose	(Til 56372)
20	2	56373	Hose reel	K5
21	1	56377	Double hose	(Til 56373)
22	2	56374	Hose reel	K6
23	1	56378	Double hose	(Til 56374)
24	1	56345	Spring	56371 - 56372 - 56373 - 53374
25	1	56486	Spring housing	56371 - 56372 - 56373 - 53374
26	1	56340	Seal kit	Slangerl. med serienr. før 51514
27	1	56336	Seal kit	Slangerl. med serienr. fra 51514

2820K-RCS

Internal ref. 63 40 910

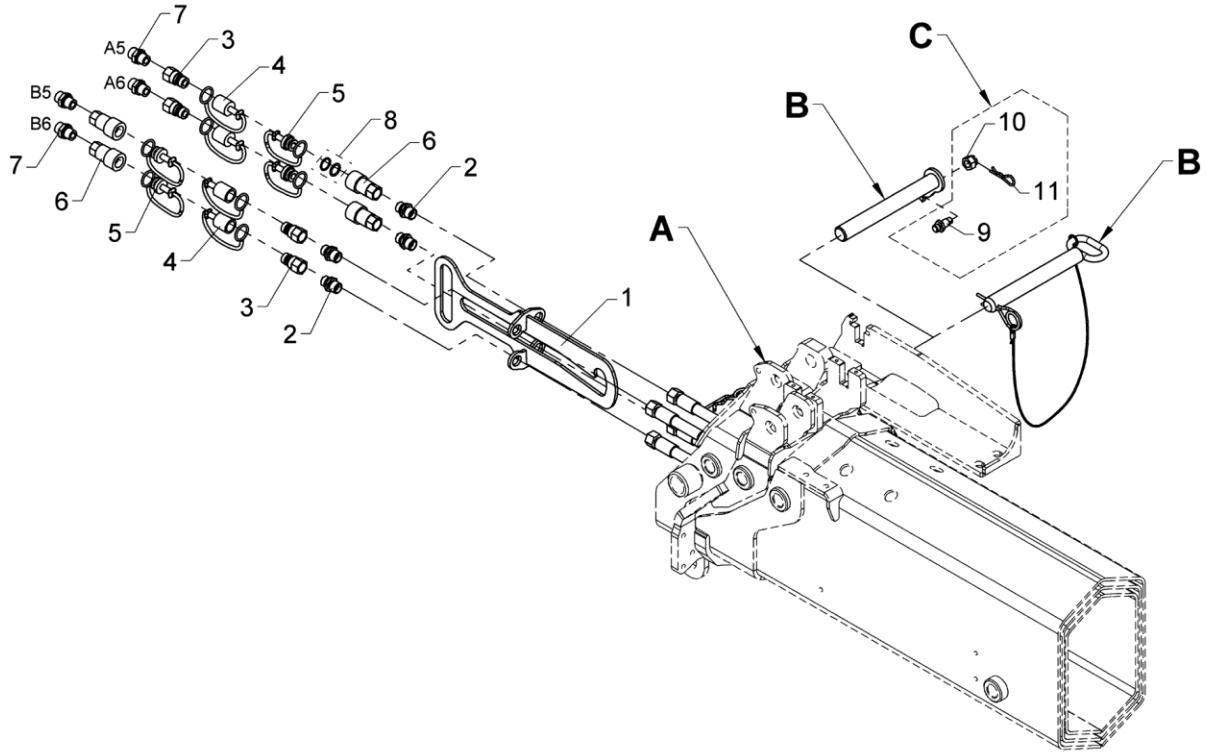

1300K/1310K/1420K/1430K/ 1500K/1510K/1720K/1730K

A	B	C
K1	63 40 657	X
K2	63 40 677	X
K3	60 92 454	
K4	63 40 397	
K5	63 40 397	
K6	63 01 166	

1800K/1810K/2020K/2030K/ 2200K/2210K/2420K/2430K

A	B	C
K2	63 40 657	X
K3	63 40 657	X
K4	60 92 454	
K5	63 40 397	
K6	63 40 397	

Kit, quick-release coupling for internal hose

An Oshkosh Corporation Company

Pos	Qty	Part no.	Description	Remarks
		6340910	Quick-release coupl. int, 2EXV	
1	1	6340631	Bracket	
2	4	6661444	Socket	
3	4	60620	Quick-release coupling,M	3/8"
4	4	60622	Dust cap, F	3/8"
5	4	60621	Dust cap, M	3/8"
6	4	60619	Quick-release coupling,F	3/8"
7	4	25127	Connection	P-GEV 12 LR-WD
8	1	60635	Seal kit	
9	1	6340359	Lock pin	
10	1	32127	Nut	M12
11	1	33379	Spring	
12	1	6340657	Pin	
13	1	6340677	Pin	
14	1	6092454	Lock pin with chain	
15	1	6301166	Lock pin with split pin	
16	1	6340397	Lock pin with lock spring	

2820K-RCS

63 45 630
Internal ref. 63 45 620

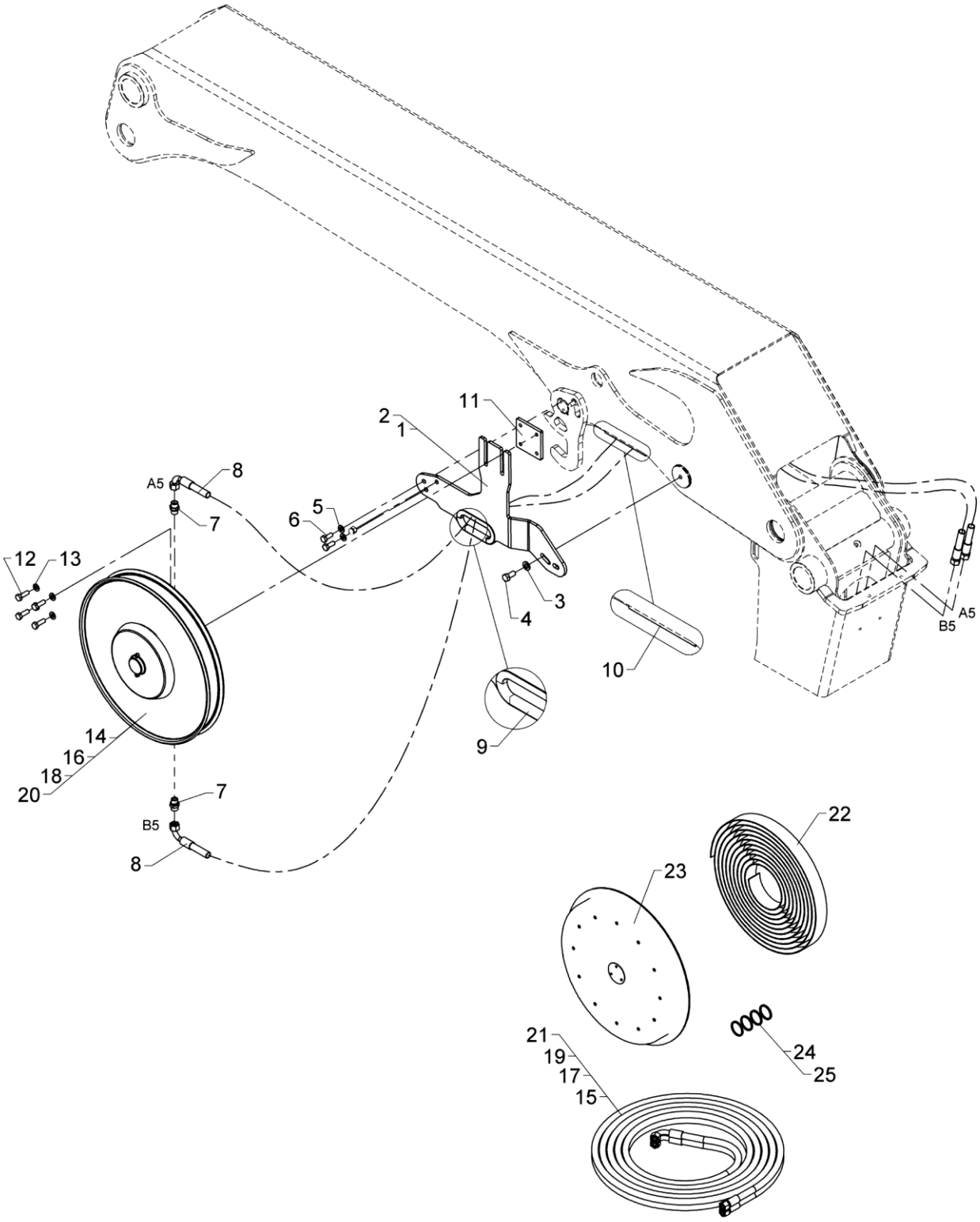

From loader 1440001
To loader

Created 12-01-2010
Modified 22-01-2015

Hydr. system, hose reels, 1 EXV.

An Oshkosh Corporation Company

Pos	Qty	Part no.	Description	Remarks
		6345620	Hydr. syst. hose reels 1 EXV	
		6345630	Hydr. syst. hose reels 1 EXV	
1	1	6340618	Bracket for hose reel (1EXV)	2 Ledarm
2	1	6340619	Bracket for hose reel (1EXV)	1 Ledarm
3	1	31131	Washer	12 mm
4	1	30176	Set screw	M12 x 25
5	2	31177	Washer	10 mm
6	2	31513	Set screw, stainless	M10 x 25
7	2	25127	Connection	P-GEV 12 LR-WD
8	2	0015020	Hose	
9	1	46587	Rubber protection	175 mm
10	1	46587	Rubber protection	150 mm
11	1	6352024	Threaded plate	
12	4	30156	Set screw, stainless	M10 x 30
13	4	31565	Washer, stainless	10 mm
14	1	56371	Hose reel	K1, K2, K3
15	1	56375	Double hose	(Til 56371)
16	1	56372	Hose reel	K4
17	1	56376	Double hose	(Til 56372)
18	1	56373	Hose reel	K5
19	1	56377	Double hose	(Til 56373)
20	1	56374	Hose reel	K6
21	1	56378	Double hose	(Til 56374)
22	1	56345	Spring	56371 - 56372 - 56373 - 56374
23	1	56486	Spring housing	56371 - 56372 - 56373 - 56374
24	1	56340	Seal kit	Slangerl. med serienr. før 51514
25	1	56336	Seal kit	Slangerl. med serienr. fra 51514

2820K-RCS

Internal ref. 63 40 610

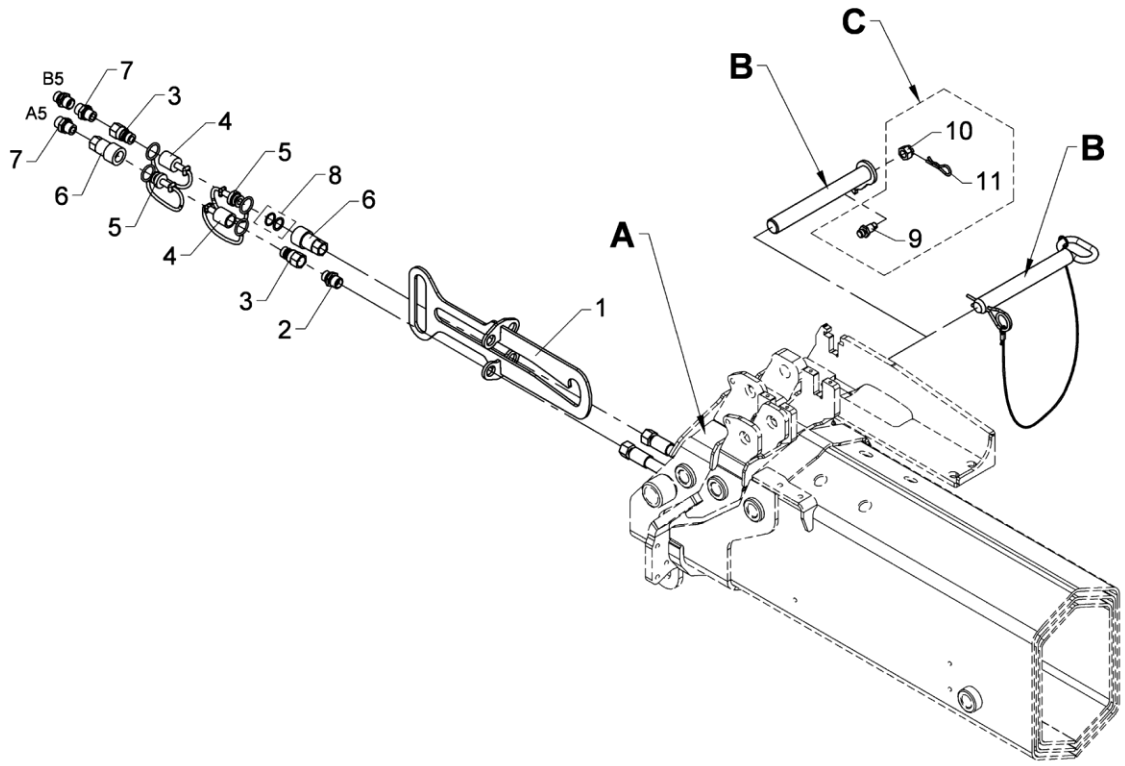

1300K/1310K/1420K/1430K/ 1500K/1510K/1720K/1730K

A	B	C
K1	63 40 657	X
K2	63 40 677	X
K3	60 92 454	
K4	63 40 397	
K5	63 40 397	
K6	63 01 166	

1800K/1810K/2020K/2030K/ 2200K/2210K/2420K/2430K

A	B	C
K2	63 40 657	X
K3	63 40 657	X
K4	60 92 454	
K5	63 40 397	
K6	63 40 397	

565 09 340

From loader 1440001
To loader

Created 23-04-2009
Modified

Kit, quick-release coupling for internal hose

An Oshkosh Corporation Company

Pos	Qty	Part no.	Description	Remarks
		6340610	Kit, quick-release coupl.,1EXV	
1	1	6340631	Bracket	
2	2	6661444	Socket	
3	2	60620	Quick-release coupling,M	3/8"
4	2	60622	Dust cap, F	3/8"
5	2	60621	Dust cap, M	3/8"
6	2	60619	Quick-release coupling,F	3/8"
7	2	25127	Connection	P-GEV 12 LR-WD
8	1	60635	Seal kit	
9	1	6340359	Lock pin	
10	1	32127	Nut	M12
11	1	33379	Spring	
12	1	6340657	Pin	
13	1	6340677	Pin	
14	1	6092454	Lock pin with chain	
15	1	6301166	Lock pin with split pin	
16	1	6340397	Lock pin with lock spring	

2820K-RCS

Internal ref. 63 42 950

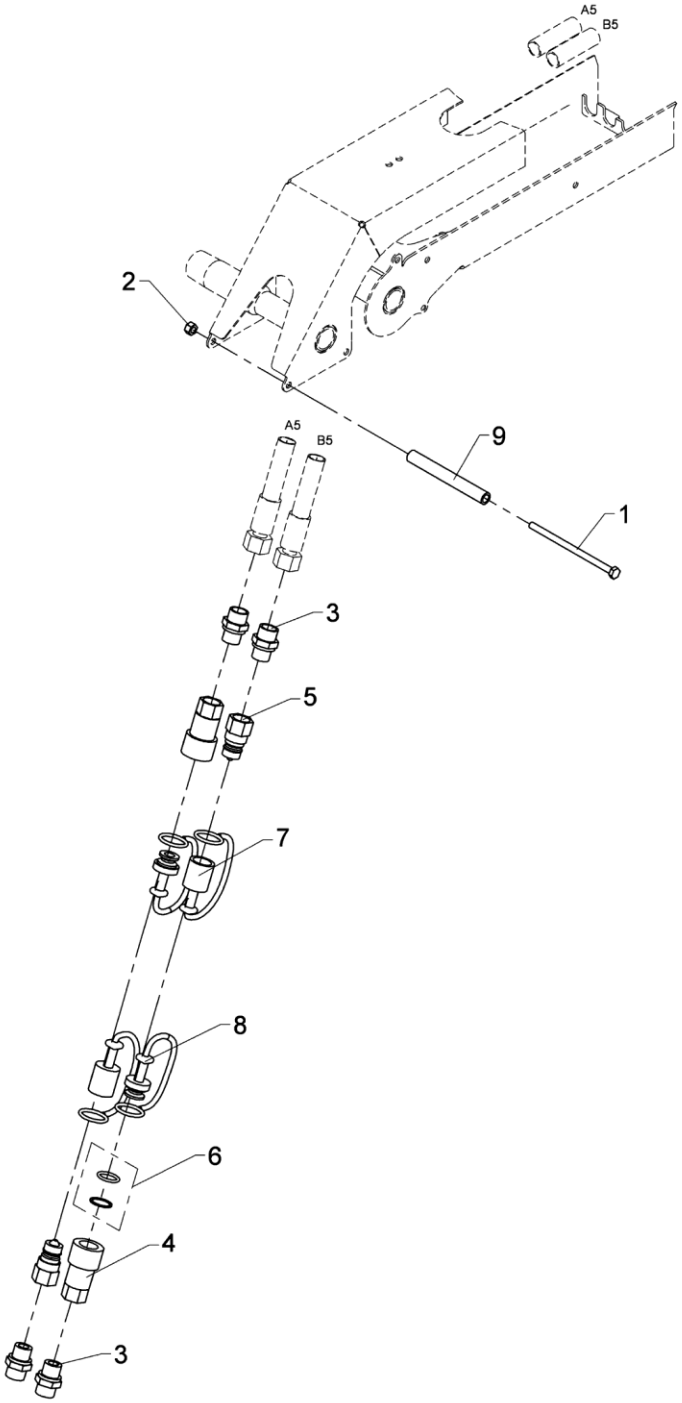

565 09 390

From loader 1440001
To loader

Created 23-09-2009
Modified 14-03-2011

Quick-release coupling for 1 extra valve

An Oshkosh Corporation Company

Pos	Qty	Part no.	Description	Remarks
1	1	30167	Steel bolt	M6 x 60
2	1	30884	Lock nut, stainless	M6
3	4	25127	Connection	P-GEV 12 LR-WD
4	2	60619	Quick-release coupling,F	3/8"
5	2	60620	Quick-release coupling,M	3/8"
6	1	60635	Seal kit	
7	2	60622	Dust cap, F	3/8"
8	2	60621	Dust cap, M	3/8"
9	1	62511	Plastic hose	100 mm

2820K-RCS

Internal ref. 63 42 960

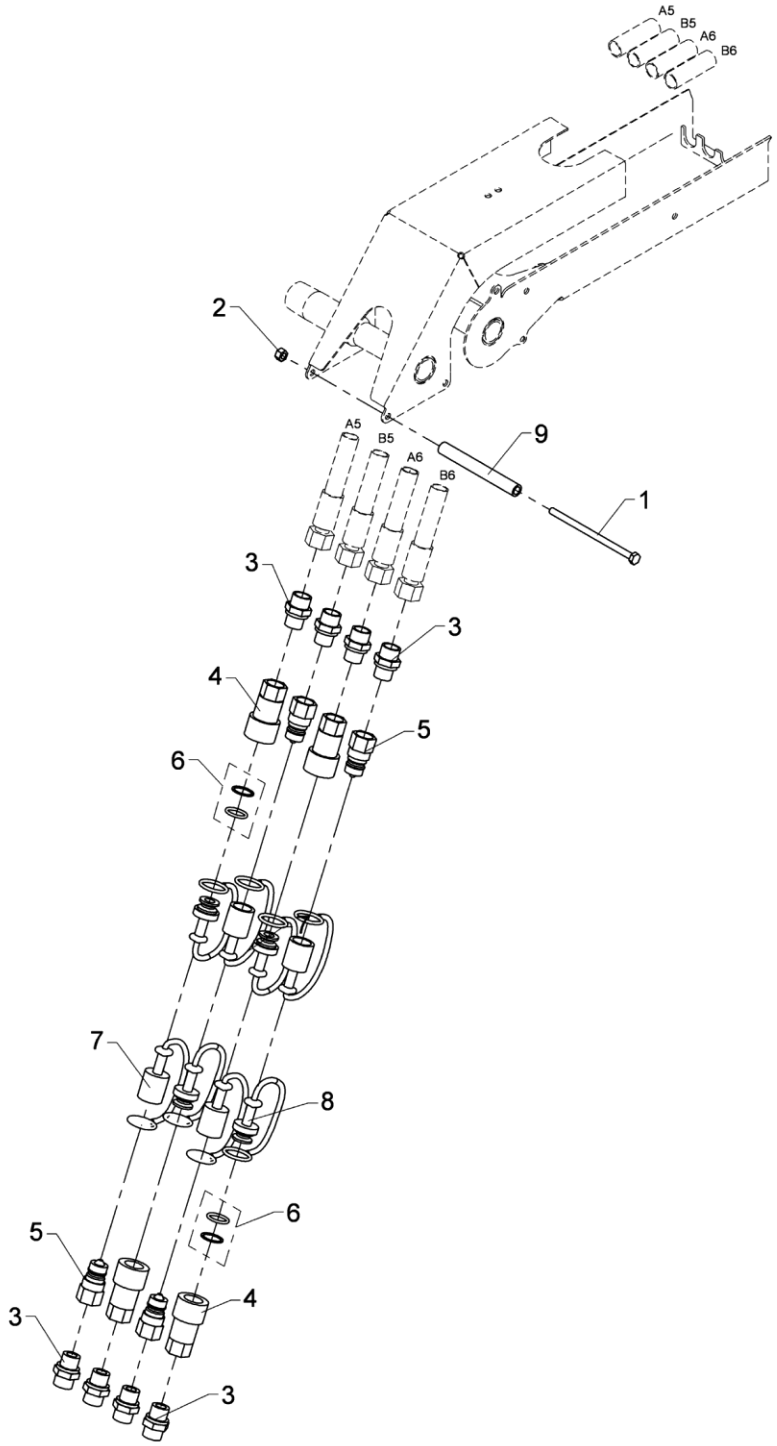

565 09 400

From loader 1440001
To loader

Created 23-09-2009
Modified 02-05-2014

Quick-release coupling for 2 extra valves

An Oshkosh Corporation Company

Pos	Qty	Part no.	Description	Remarks
1	1	30167	Steel bolt	M6 x 60
2	1	30884	Lock nut, stainless	M6
3	8	25127	Connection	P-GEV 12 LR-WD
4	4	60619	Quick-release coupling,F	3/8"
5	4	60620	Quick-release coupling,M	3/8"
6	2	60635	Seal kit	
7	4	60622	Dust cap, F	3/8"
8	4	60621	Dust cap, M	3/8"
9	1	62511	Plastic hose	100 mm

2820K-RCS

Internal ref. 63 42 970

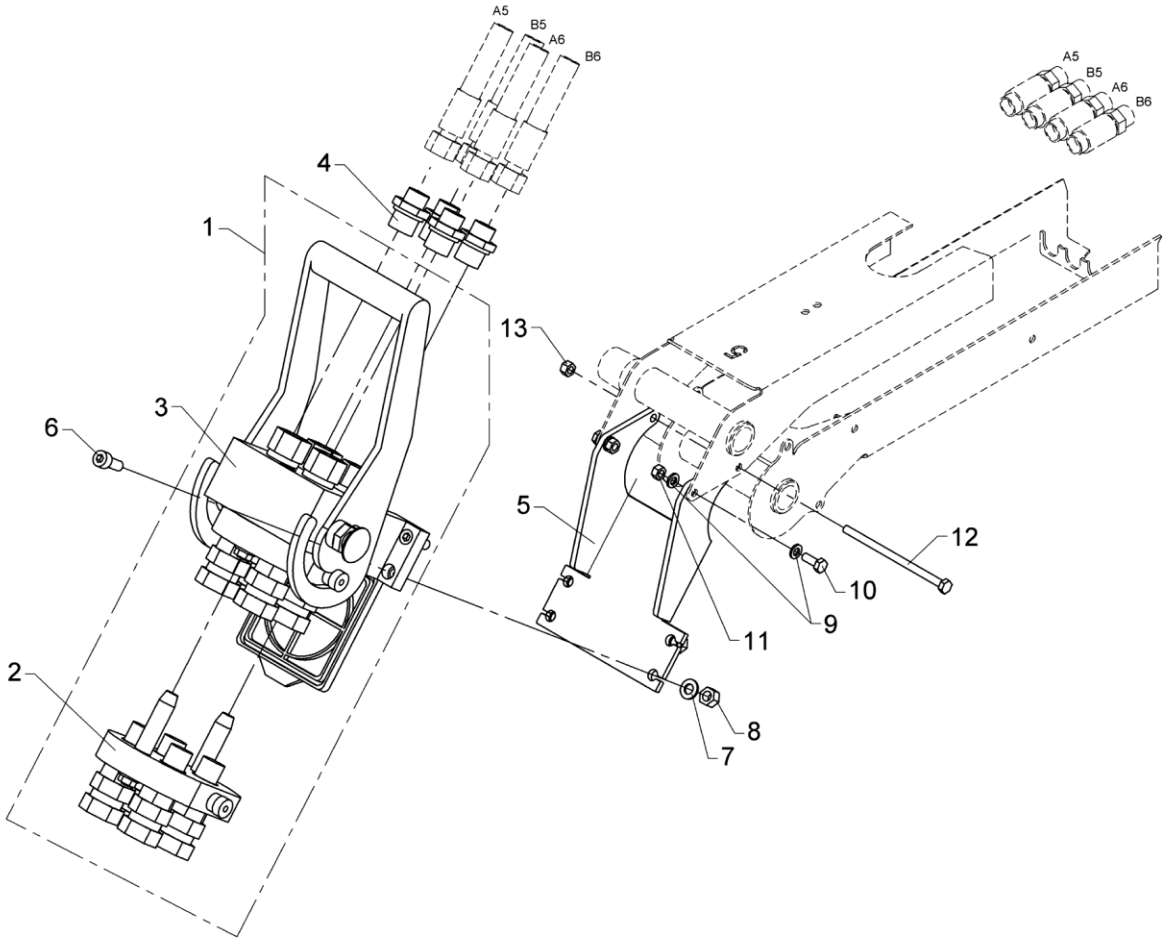

565 09 430

From loader 1440001
To loader

Created 12-01-2010
Modified 01-11-2018

Multi-coupling for 2 extra valves K1-K5/T3-T4

An Oshkosh Corporation Company

Pos	Qty	Part no.	Description	Remarks
1	1	58430	Multifaster coupling	1/2"
2	1	58431	Multifaster coupling	
3	1	58432	Multifaster coupling	
4	4	25108	Connection	GES 12 LR 1/2-WD
5	1	6340771	Adapter	
6	4	30438	Screw	MC8 x 20
7	4	31147	Face washer, 8 mm	8 mm
8	4	30886	Lock nut, stainless	M8
9	4	32302	Face washer, stainless	6 mm
10	2	30112	Set screw, stainless	M6 x 16
11	2	30854	Nut, stainless	M6
12	1	30167	Steel bolt	M6 x 60
13	1	30884	Lock nut, stainless	M6

2820K-RCS

Internal ref. 63 42 980

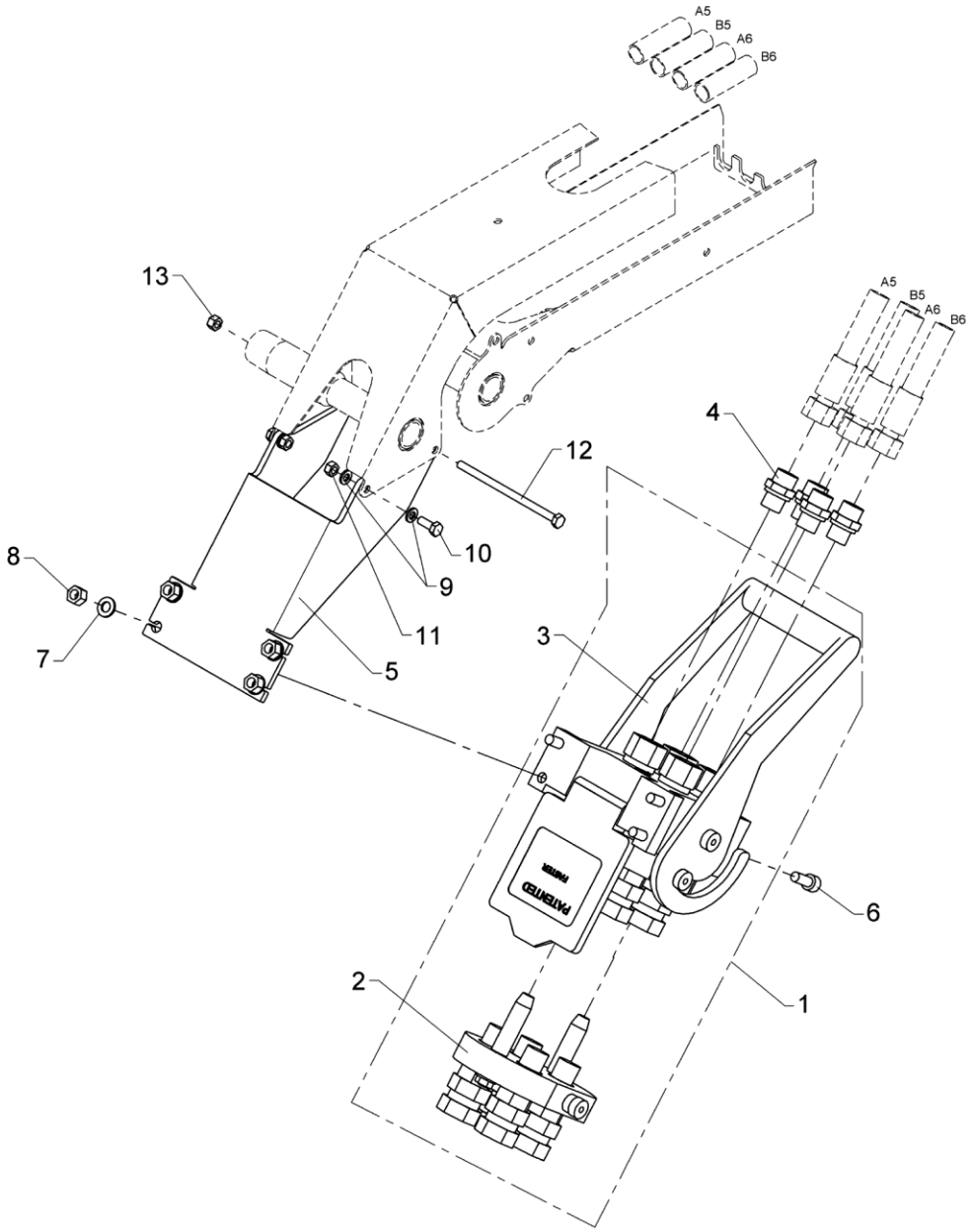

565 09 440

From loader 1440001
To loader

Created 12-01-2010
Modified 05-04-2011

Multi-coupling for 2 extra valves K6/T5

An Oshkosh Corporation Company

Pos	Qty	Part no.	Description	Remarks
1	1	58430	Multifaster coupling	1/2"
2	1	58431	Multifaster coupling	
3	1	58432	Multifaster coupling	
4	4	25127	Connection	P-GEV 12 LR-WD
5	1	6340772	Adapter	
6	4	30438	Screw	MC8 x 20
7	4	31147	Face washer, 8 mm	8 mm
8	4	30886	Lock nut, stainless	M8
9	4	32302	Face washer, stainless	6 mm
10	2	30112	Set screw, stainless	M6 x 16
11	2	30854	Nut, stainless	M6
12	1	30167	Steel bolt	M6 x 60
13	1	30884	Lock nut, stainless	M6

2820K-RCS

Internal ref. 63 42 870

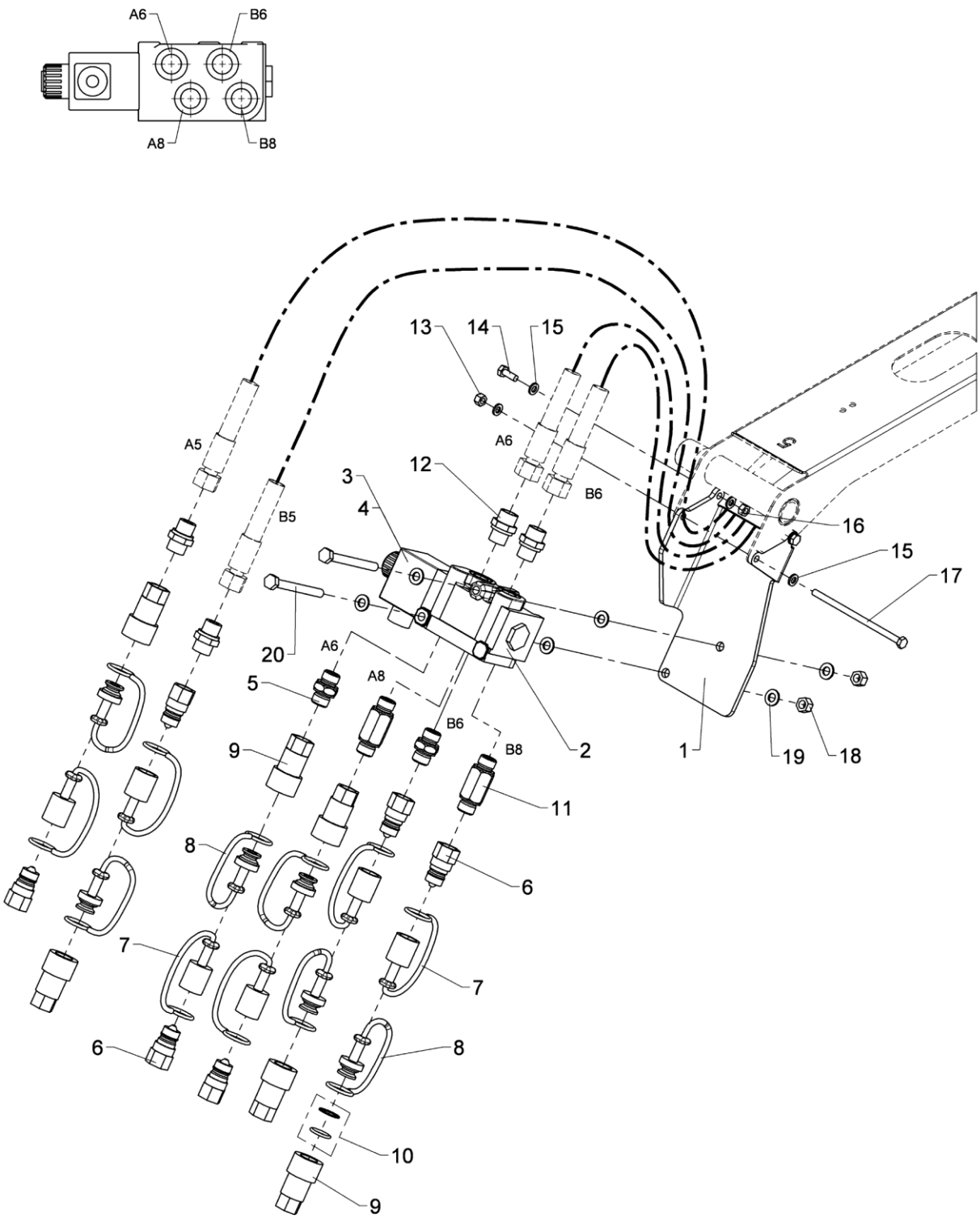

565 09 460

From loader 1440001
To loader

Created 15-12-2008
Modified 31-08-2009

Kit for 2 extra valves (K1-K5)

An Oshkosh Corporation Company

Pos	Qty	Part no.	Description	Remarks
1	1	6340773	Adaptor	
2	1	59062	Change-over valve	
3	1	59063	Solenoid 24 V	
4	1	59078	Solenoid 12V	
5	2	6340775	Connection	
6	6	60620	Quick-release coupling,M	3/8"
7	6	60622	Dust cap, F	3/8"
8	6	60621	Dust cap, M	3/8"
9	6	60619	Quick-release coupling,F	3/8"
10	1	60635	Seal kit	
11	2	6340776	Connection	
12	4	25127	Connection	P-GEV 12 LR-WD
13	1	30884	Lock nut, stainless	M6
14	2	30112	Set screw, stainless	M6 x 16
15	6	32302	Face washer, stainless	6 mm
16	2	30854	Nut, stainless	M6
17	1	32107	Steel bolt, stainless	M6 x 120
18	2	30886	Lock nut, stainless	M8
19	6	31147	Face washer, 8 mm	8 mm
20	2	30143	Steel bolt, stainless	M8 x 80

2820K-RCS

Internal ref. 63 42 880

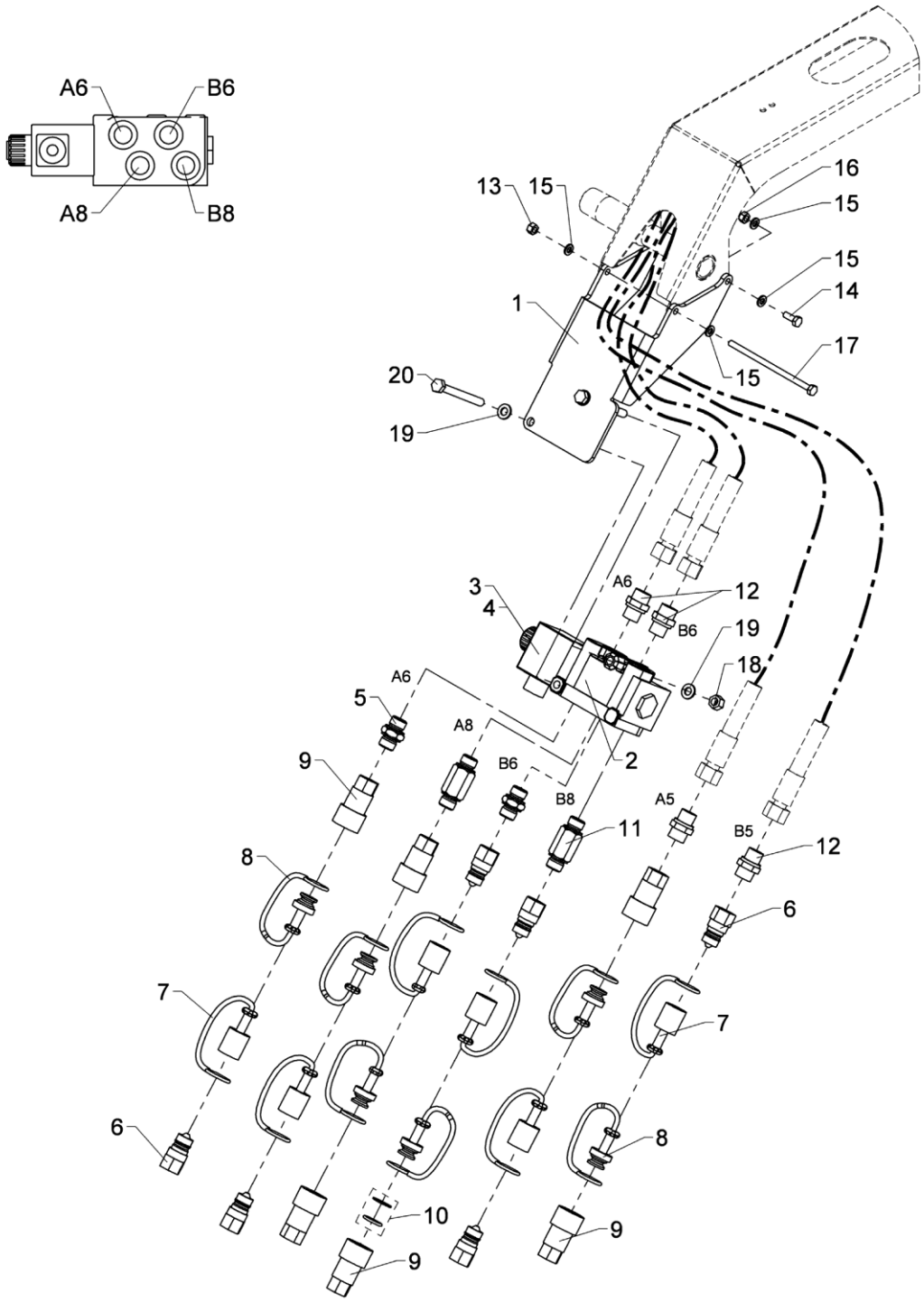

565 09 470

From loader 1440001
To loader

Created 11-03-2009
Modified 31-08-2009

Kit for 2 extra valves (K6)

An Oshkosh Corporation Company

Pos	Qty	Part no.	Description	Remarks
1	1	6340774	Adapter (change-over valve K6)	
2	1	59062	Change-over valve	
3	1	59063	Solenoid 24 V	
4	1	59078	Solenoid 12V	
5	2	6340775	Connection	
6	6	60620	Quick-release coupling,M	3/8"
7	6	60622	Dust cap, F	3/8"
8	6	60621	Dust cap, M	3/8"
9	6	60619	Quick-release coupling,F	3/8"
10	1	60635	Seal kit	
11	2	6340776	Connection	
12	4	25127	Connection	P-GEV 12 LR-WD
13	1	30884	Lock nut, stainless	M6
14	2	30112	Set screw, stainless	M6 x 16
15	6	32302	Face washer, stainless	6 mm
16	2	30854	Nut, stainless	M6
17	1	32107	Steel bolt, stainless	M6 x 120
18	2	30886	Lock nut, stainless	M8
19	4	31147	Face washer, 8 mm	8 mm
20	2	30143	Steel bolt, stainless	M8 x 80

2820K-RCS

63 45 690
Internal ref. 63 45 680

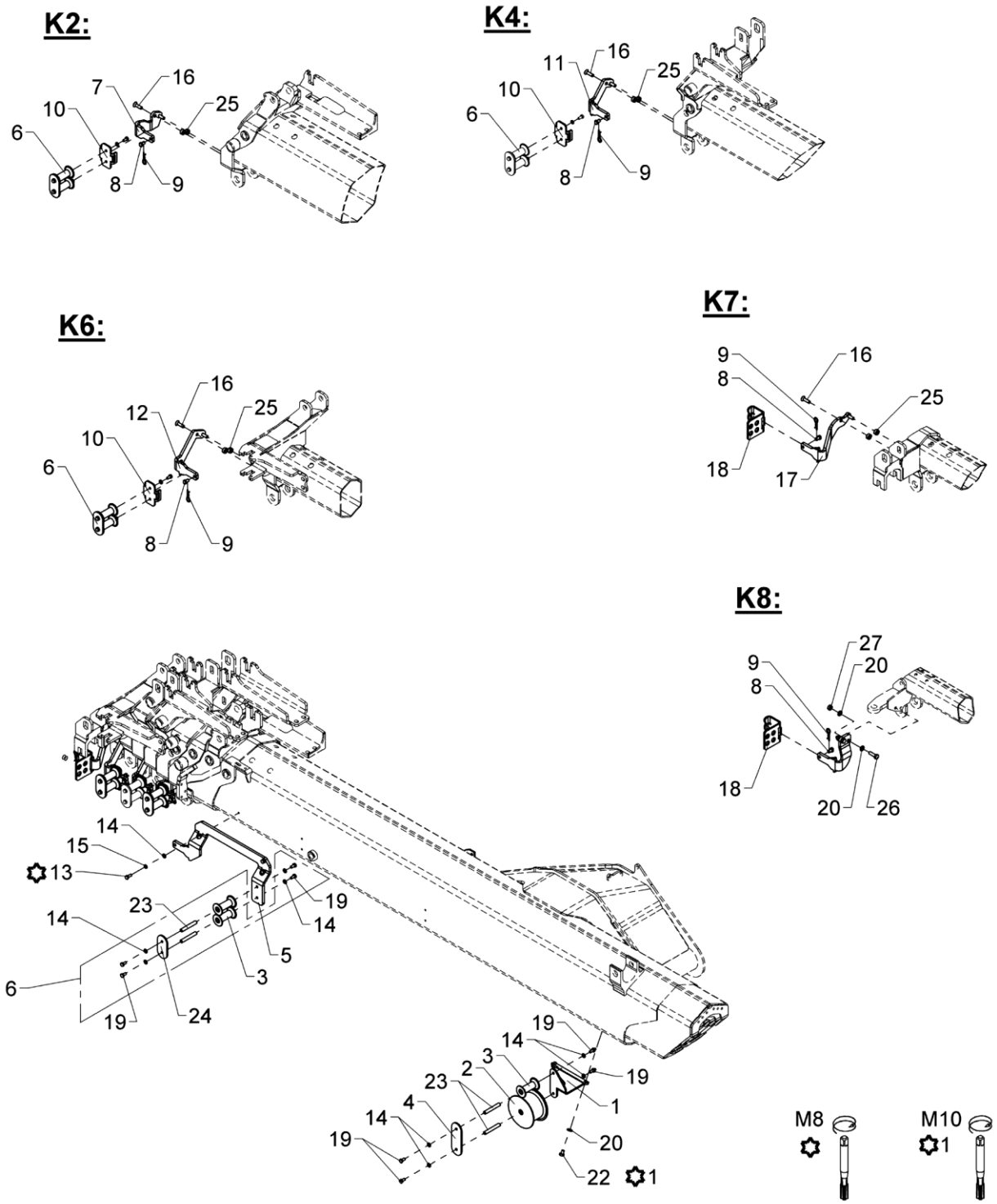

Hose clamps, complete (K7-K8)

An Oshkosh Corporation Company

Pos	Qty	Part no.	Description	Remarks
		6345680	Clamp, complete (K7)	
		6345690	Clamp, complete (K8)	
1	1	6344742	Attachment (jib)	
2	1	63404	Roller	
3	3	63546	Guide roller	
4	1	6344743	End plate	
5	1	6344741	Attachment	
6	4	6345090	Guide rollers and pins	
7	1	6344744	Attachment (K2)	
8	4	6302896	Lock pin	
9	4	33379	Spring	
10	3	6302881	Plate	
11	1	6344745	Attachment (K4)	
12	1	6344746	Attachment (K6)	
13	3	30132	Set screw, stainless	M8 x 20
14	11	31147	Face washer, 8 mm	8 mm
15	3	31155	Spring washer	8 mm
16	8	30526	Countersunk screw	MK10 x 35
17	1	6344758	Adapter (K7)	
18	1	6370863	Bracket	
19	8	30131	Set screw, stainless	M8 x 16
20	6	31565	Washer, stainless	10 mm
21	1	6344759	Adapter (K8)	
22	2	30152	Set screw	M10 x 14
23	4	6301042	Pin	
24	1	6302882	End plate	
25	8	6344747	Spacer	
26	2	30157	Set screw	M10 x 35
27	2	31551	Nut, stainless	M10

2820K-RCS

63 45 660
Internal ref. 63 45 640

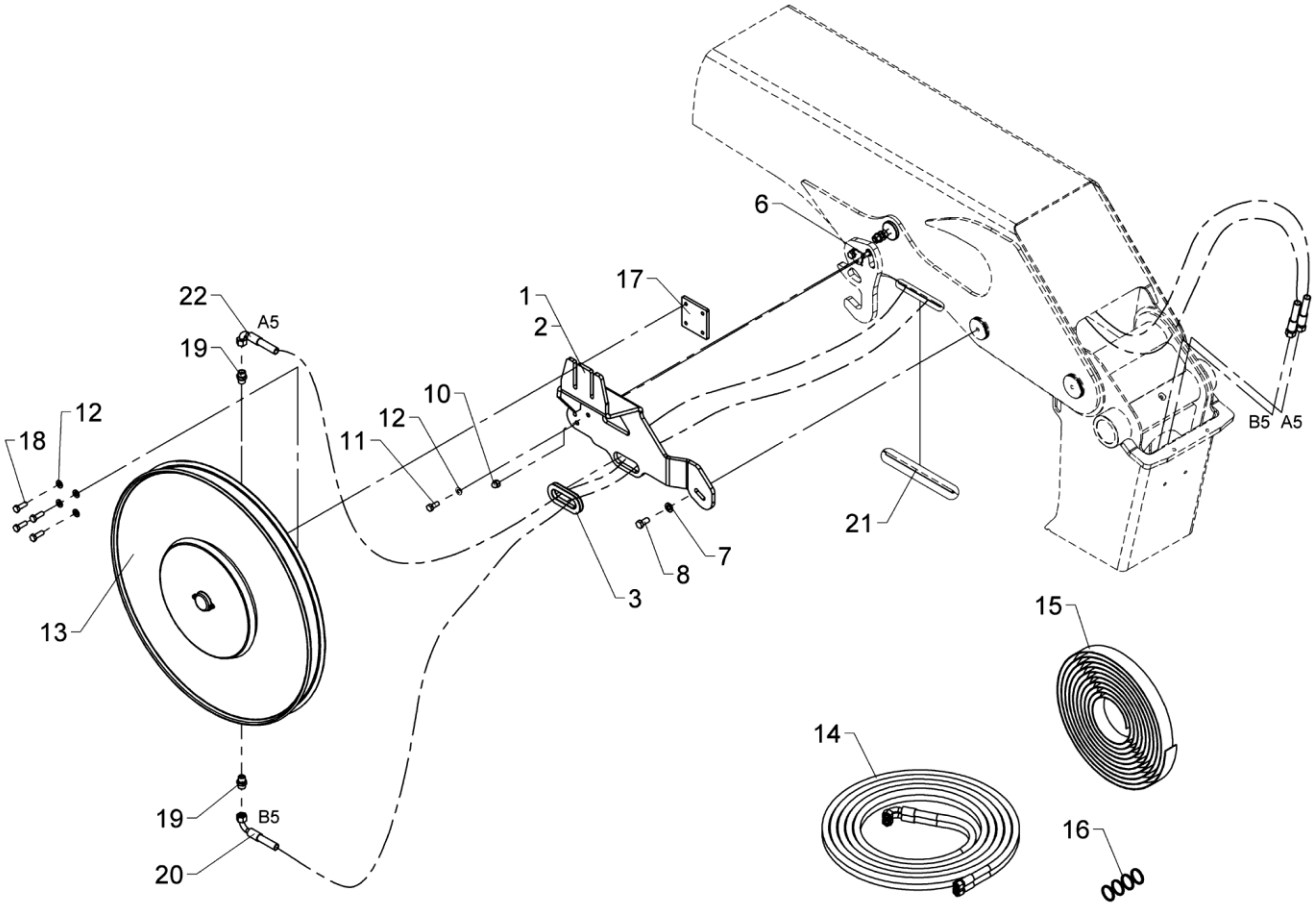

Nedenfor viste dele medsendes løse.
Dele monteres efter placering af kran på køretøj.

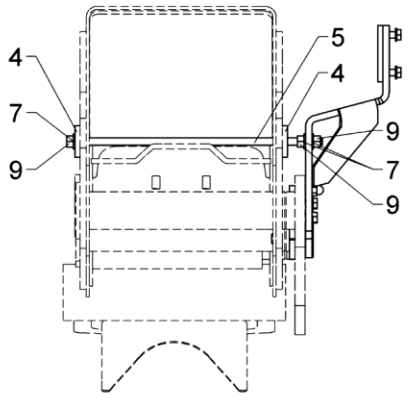

Hose reels (K7 - K8), 1 EXV.

An Oshkosh Corporation Company

Pos	Qty	Part no.	Description	Remarks
		6345640	Hose reels (K7-K8), 1 EXV	
		6345660	Hose reels (K7-K8), 1 EXV	
1	1	6344751	Bracket for hose reel (K7/K8)	1800K / 2200K
2	1	6344752	Bracket for hose reel (K7/K8)	1810K / 2210K
3	1	46587	Rubber protection	360 mm
4	2	6344748	Spacer	
5	1	6344749	Threaded pin	
6	1	30451	Screw	MC10 x 20
7	4	32338	Washer	12 mm
8	1	30176	Set screw	M12 x 25
9	3	30860	Nut, stainless	M12
10	1	30902	Nut	M10
11	2	30155	Set screw	M10 x 25
12	6	31565	Washer, stainless	10 mm
13	1	56313	Hose reel	3/8" x 22000 mm
14	1	56314	Hose	
15	1	56335	Spring	
16	1	56336	Seal kit	
17	1	6352024	Threaded plate	
18	4	30156	Set screw, stainless	M10 x 30
19	2	25127	Connection	P-GEV 12 LR-WD
20	1	0015020	Hose	
21	1	46587	Rubber protection	150 mm
22	1	0017530	Hose	

565 09 520

2820K-RCS

63 47 990
63 47 890
63 45 670
Internal ref. 63 45 650

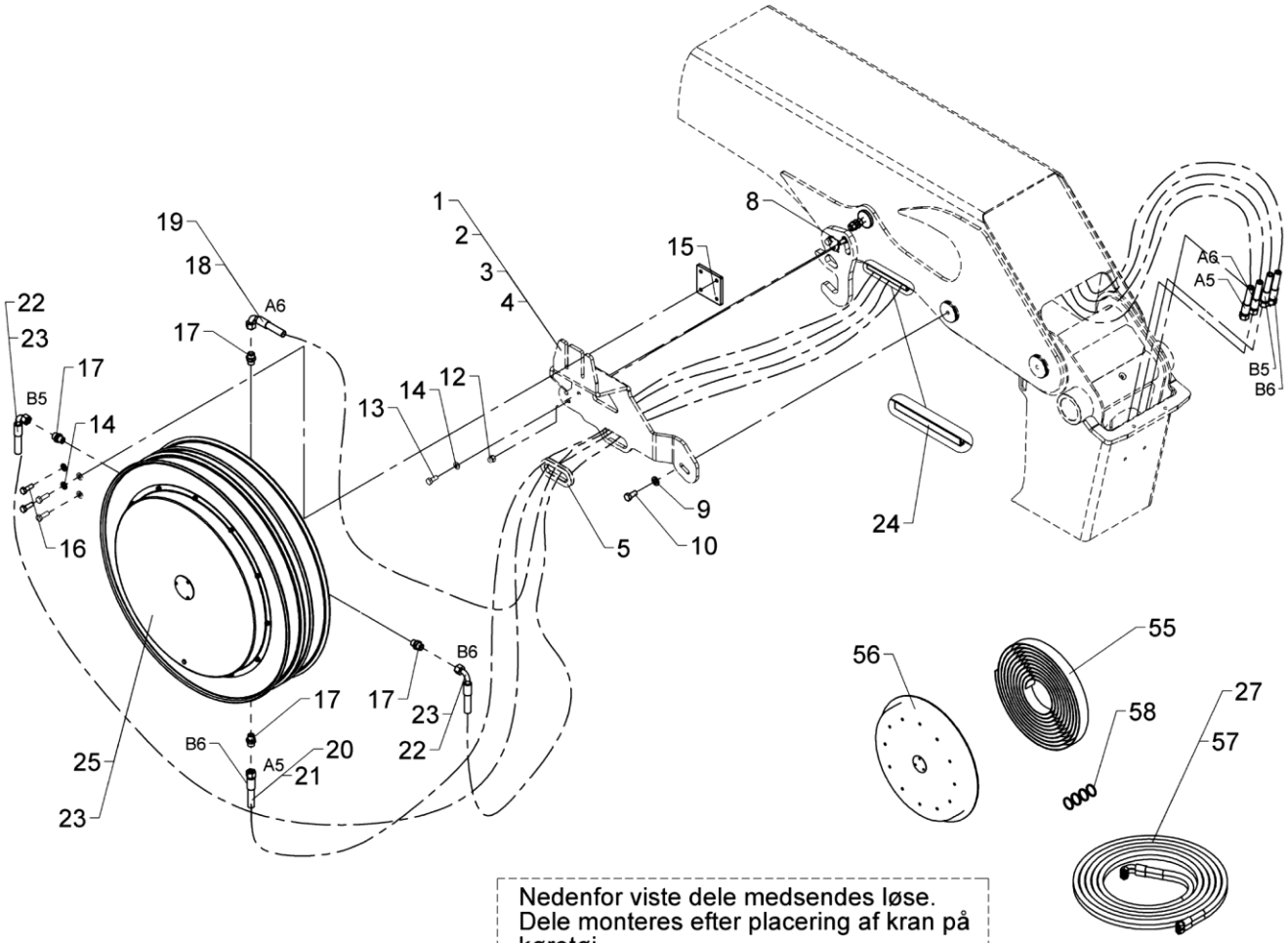

Nedenfor viste dele medsendes løse.
Dele monteres efter placering af kran på køretøj.

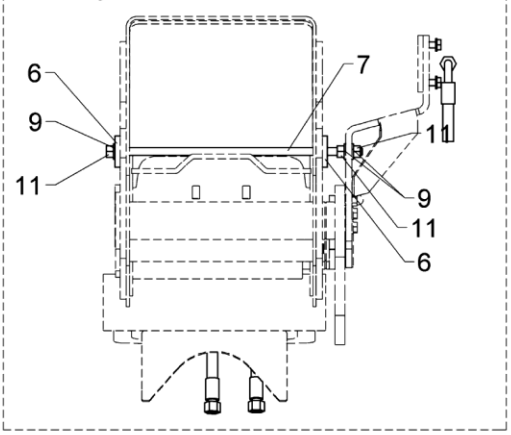

Hose reels (K5 - K8), 2 EXV.

An Oshkosh Corporation Company

Pos	Qty	Part no.	Description	Remarks
		6345650	Hose reels (K7-K8), 2 EXV	
		6345670	Hose reels (K7-K8), 2 EXV	
		6347890		
		6347990		
1	1	6344751	Bracket for hose reel (K7/K8)	1800K / 2200K
2	1	6340615	Bracket for hose reel (1EXV)	
3	1	6340616	Bracket for hose reel (1EXV)	
4	1	6344752	Bracket for hose reel (K7/K8)	1810K / 2210K
5	1	46587	Rubber protection	150 mm
6	2	6344748	Spacer	
7	1	6344749	Threaded pin	
8	1	30451	Screw	MC10 x 20
9	4	32338	Washer	12 mm
10	1	30176	Set screw	M12 x 25
11	3	30860	Nut, stainless	M12
12	1	30902	Nut	M10
13	2	30155	Set screw	M10 x 25
14	6	31565	Washer, stainless	10 mm
15	1	6352024	Threaded plate	
16	4	30156	Set screw, stainless	M10 x 30
17	4	25127	Connection	P-GEV 12 LR-WD
18	1	0017700	Hose	3/8" x 1800 mm L/90°
19	1	0017530	Hose	K5-K6
20	1	0017130	Hose	
21	1	0015190	Hose	K5-K6
22	2	0015020	Hose	
23	2	0015030	Hose	K5-K6
24	1	46587	Rubber protection	360 mm
25	1	56320	Hose reel, double	3/8" x 22000 mm
26	1	56295	Hose reel, double	3/8" x 17000 mm
27	1	56335	Spring	
28	1	56481	Spring cover	
29	1	56314	Hose	
30	1	56312	Double hose	3/8"B2 x 17000 mm
31	1	56482	Seal kit	

2820K-RCS

Internal ref. 63 45 700

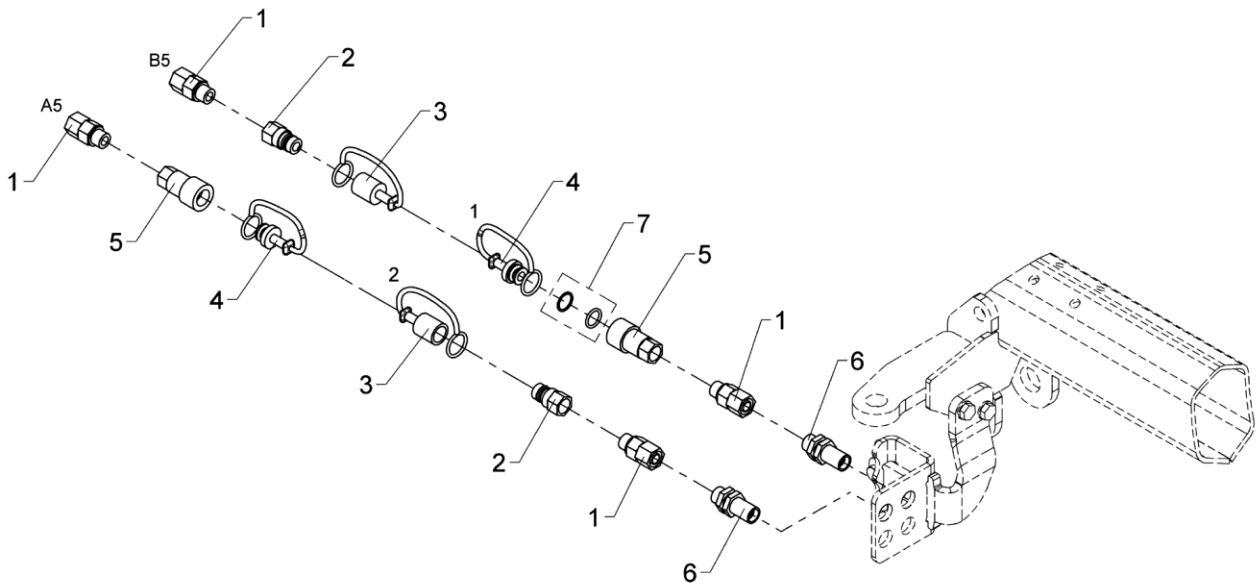

565 09 530

From loader 1440001
To loader

Created 15-09-2008
Modified

Kit, quick-release coupling for hose reel, (K7-

An Oshkosh Corporation Company

Pos	Qty	Part no.	Description	Remarks
1	4	25240	Connection	EGESD 12 LR-WD
2	2	60620	Quick-release coupling,M	3/8"
3	2	60622	Dust cap, F	3/8"
4	2	60621	Dust cap, M	3/8"
5	2	60619	Quick-release coupling,F	3/8"
6	2	25201	Bulkhead connection	GSS 12 L
7	1	60635	Seal kit	

2820K-RCS

Internal ref. 63 45 710

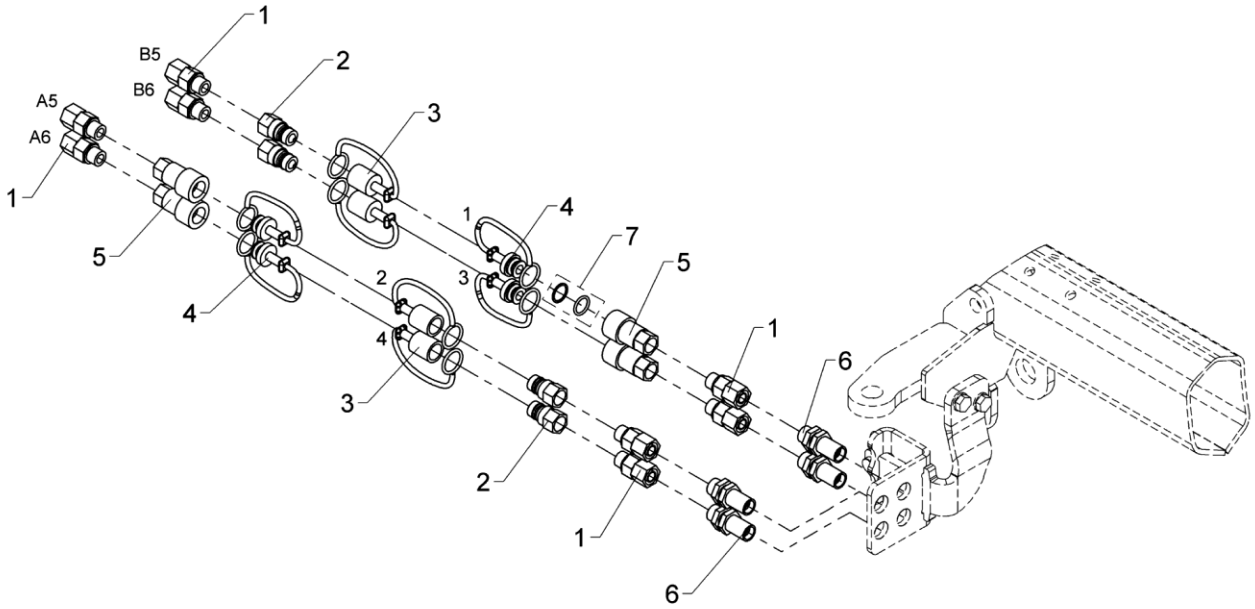

565 09 540

From loader 1440001
To loader

Created 15-09-2008
Modified

Kit, quick-release coupling for hose reel, (K7-K8)

An Oshkosh Corporation Company

Pos	Qty	Part no.	Description	Remarks
1	8	25240	Connection	EGESD 12 LR-WD
2	4	60620	Quick-release coupling,M	3/8"
3	4	60622	Dust cap, F	3/8"
4	4	60621	Dust cap, M	3/8"
5	4	60619	Quick-release coupling,F	3/8"
6	4	25201	Bulkhead connection	GSS 12 L
7	1	60635	Seal kit	

2820K-RCS

Internal ref. 63 47 240

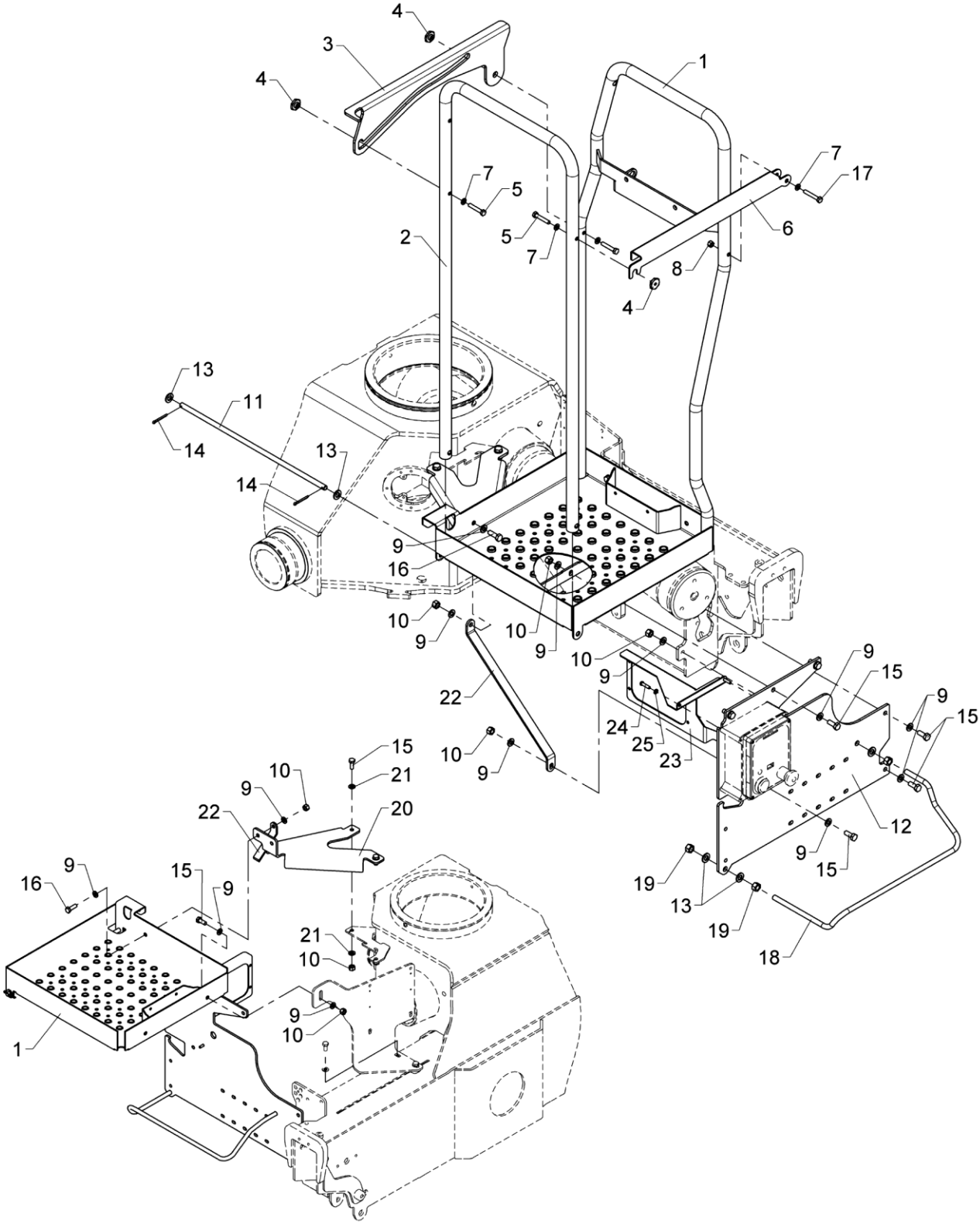

Stand-up controls

An Oshkosh Corporation Company

Pos	Qty	Part no.	Description	Remarks
1	1	6342461	Platform	
2	1	6340471	Safety guard	
3	1	6342474	Railing	
4	3	6340475	Nut	
5	3	31511	Set screw, stainless	M8 x 45
6	1	6340473	Railing	
7	4	31147	Face washer, 8 mm	
8	1	30886	Lock nut, stainless	M8
9	16	31565	Washer, stainless	10 mm
10	10	31564	Lock nut, stainless	M10
11	1	6340472	Pin	
12	1	6347242	Valve bracket	
13	6	32338	Washer	12 mm
14	2	31638	Split pin	ø4 x 40
15	9	31513	Set screw, stainless	M10 x 25
16	1	30156	Set screw, stainless	M10 x 30
17	1	30139	Steel bolt, stainless	M8 x 50
18	1	6347973	Clamp	
19	4	30860	Nut, stainless	M12
20	1	6344453	Bracket, stand-up controls	
21	4	31177	Washer	10 mm
22	1	6347469	Reinforcement	
23	1	6347495	Mounting bracket,Scanreco/Hetr	
24	3	30340	Screw, stainless	6,0 x 25
25	3	32302	Face washer, stainless	6 mm

2820K-RCS

Internal ref. 63 43 140

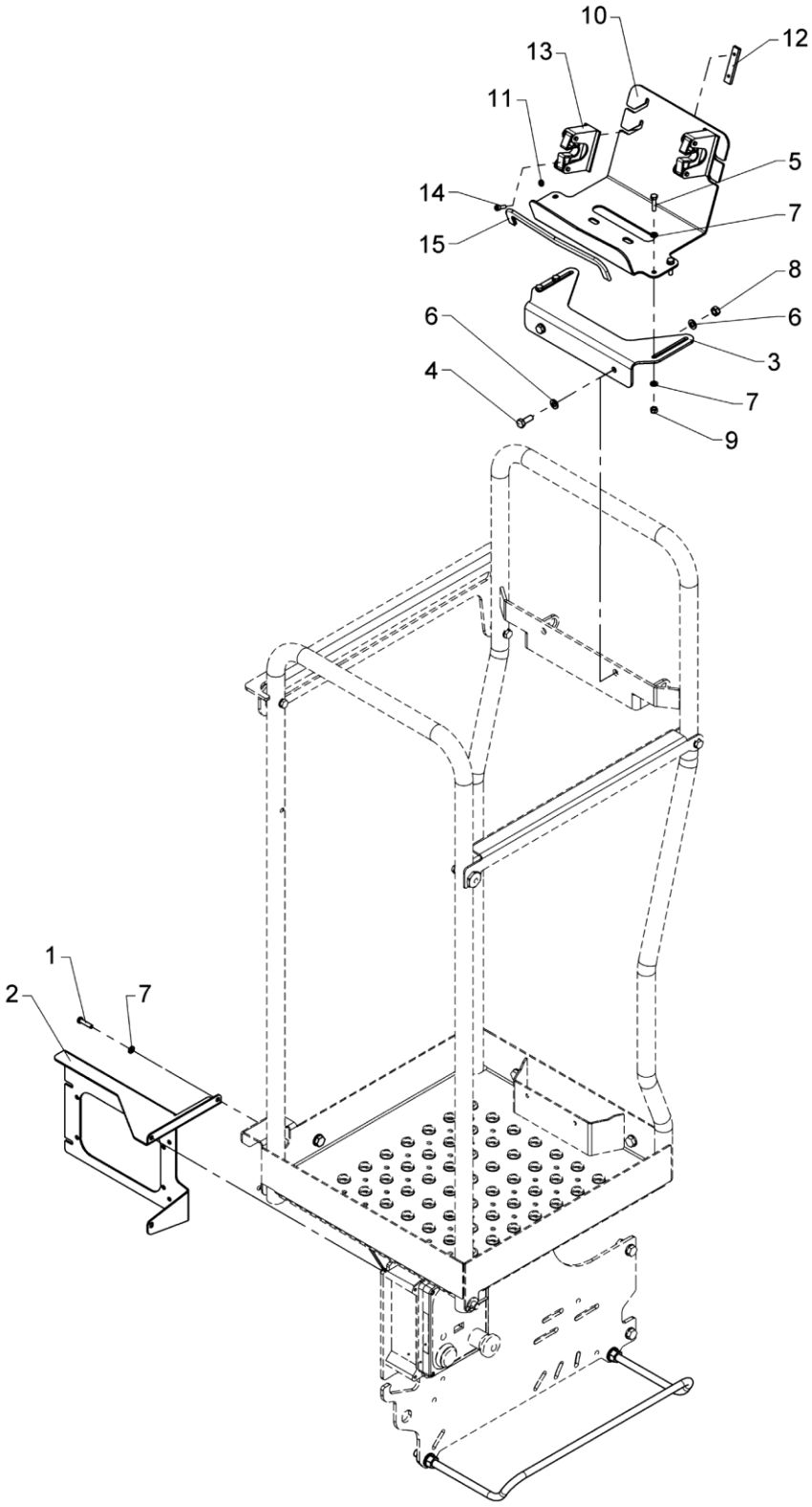

Mounting fittings, HSRC

An Oshkosh Corporation Company

Pos	Qty	Part no.	Description	Remarks
		6343140	Mouting fittings, HSRC (SR-G2)	
1	4	30340	Screw, stainless	6,0 x 25
2	1	6340495	Mounting bracket,Scanreco/Hetr	
3	1	6340498	Fitting	
4	2	30133	Set screw, stainless	
5	4	30114	Set screw, stainless	M6 x 25
6	4	31147	Face washer, 8 mm	
7	12	32302	Face washer, stainless	6 mm
8	2	30856	Nut, stainless	M8
9	4	30854	Nut, stainless	M6
10	1	6340901	Bracket, Scanreco RC box	
11	4	31189	Washer	5 mm
12	2	8507104	Threaded plate	
13	2	46453	Bracket	
14	4	30433	Screw	MC5 x 16
15	1	46596	Rubber protection	0,3 m.

2820K-RCS

63 44 990
63 44 760
63 41 990
Internal ref. 63 41 980

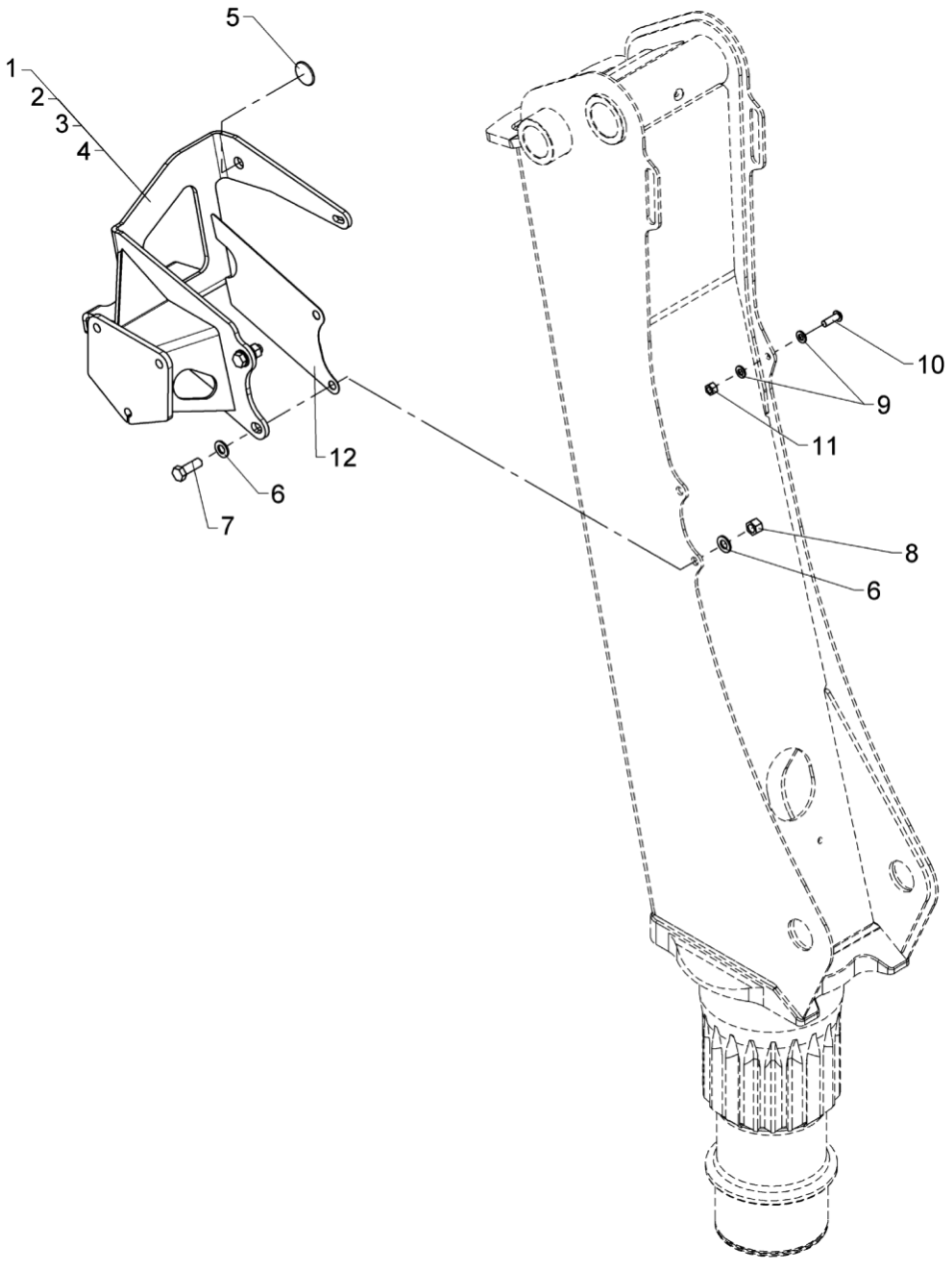

565 11 010

From loader 1440001
To loader

Created 19-08-2014
Modified

Mounting fittings, TS

An Oshkosh Corporation Company

Pos	Qty	Part no.	Description	Remarks
		6341980	Fittings, TS 1300/1500	
		6341990	Fittings, TS 1310/1510	
		6344760	Fittings, TS, 1800/2200	
		6344990	Fittings, TS, 1810/2210	
1	1	6340685	Top seat bracket (TS)	1300/1500
2	1	6340687	TS bracket	1310/1510
3	1	6344685	TS bracket	1800/2200
4	1	6344687	TS bracket	1810/2210/1710L/2030L/2110L/253
5	1	6381484	Guide	
6	4	31178	Washer	14 mm
7	2	30207	Set screw	M14 x 40
8	2	30891	Lock nut	M14
9	2	31177	Washer	10 mm
10	1	30649	Screw	M10 x 30
11	1	30888	Lock nut	M10
12	1	6340087	Division plate	

2820K-RCS

Internal ref. 63 41 940

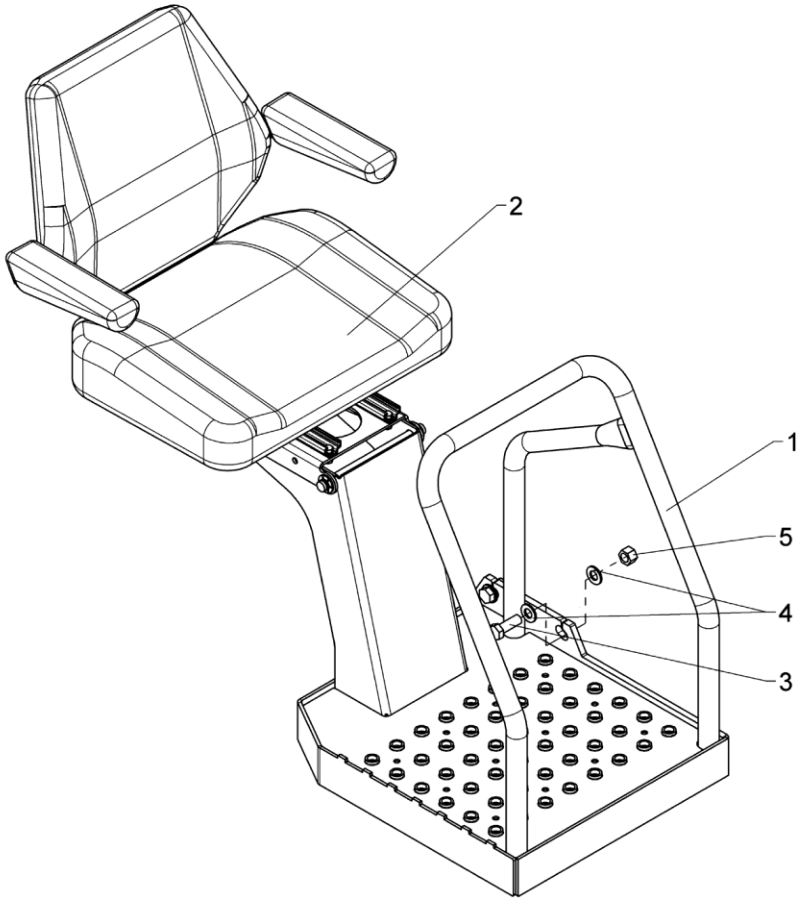

565 11 030

From loader 1440001
To loader

Created 24-02-2009
Modified 08-02-2012

Top seat (RC), cpl.

An Oshkosh Corporation Company

Pos	Qty	Part no.	Description	Remarks
1	1	6340911	Platform, (TSRC)	
2	1	6341950	Seat, complete	
3	3	32248	Set screw	M14 x 40
4	6	31178	Washer	14 mm
5	3	32317	Lock nut	M14

2820K-RCS

63 41 970
Internal ref. 63 41 960

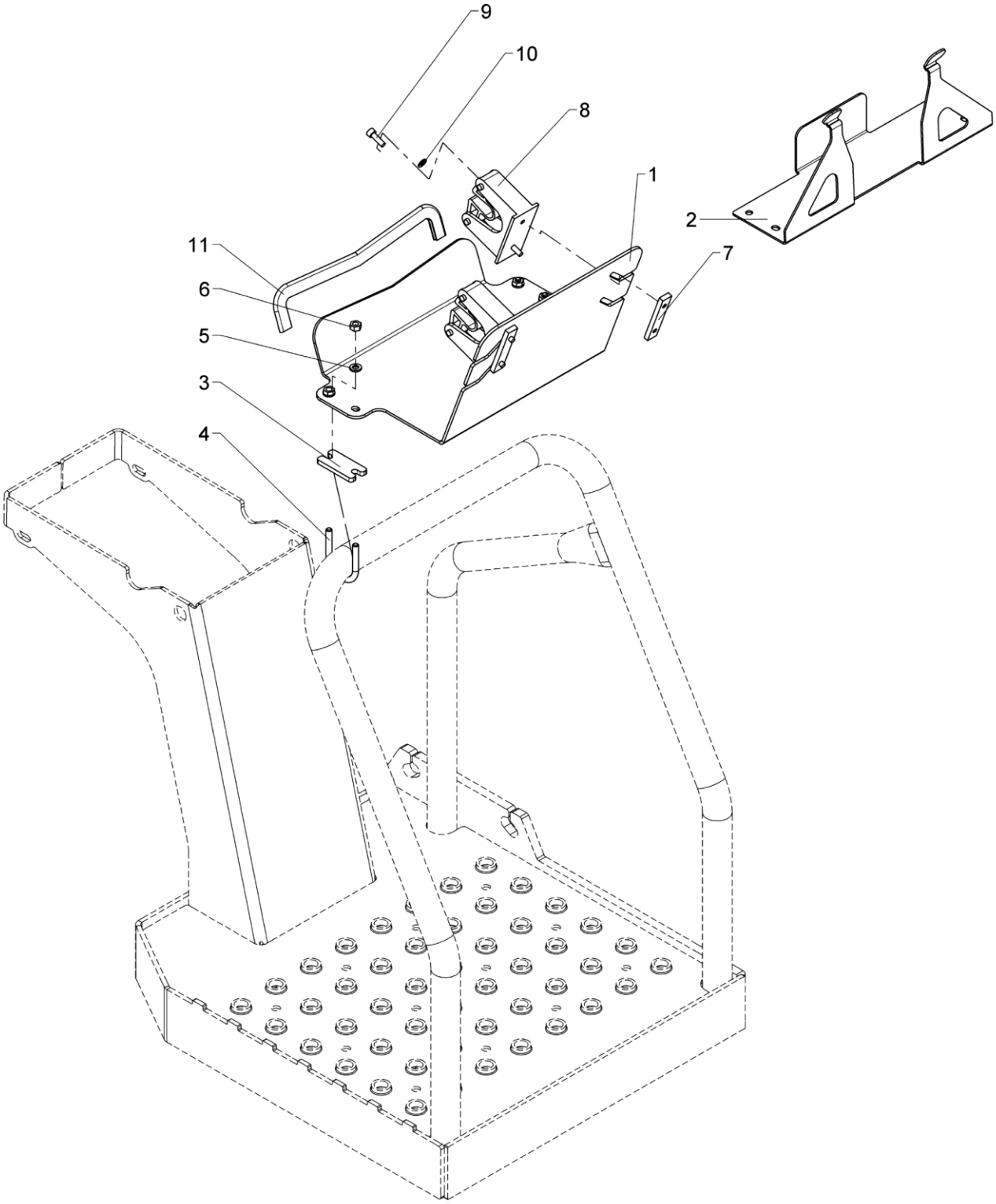

From loader 1440001
To loader

Created 24-02-2009
Modified 08-02-2012

Mounting fittings, TS RC

An Oshkosh Corporation Company

Pos	Qty	Part no.	Description	Remarks
		6341960	Fittings, TS RC (SR)	
		6341970	Fittings, TS RC (HETR)	
1	1	6340901	Bracket, Scanreco RC box	
2	1	6340902	Bracket(HETR.remote ctrl. box)	
3	2	6340904	Division plate	
4	2	6340903	Clamp	
5	4	32302	Face washer, stainless	6 mm
6	4	30854	Nut, stainless	M6
7	2	8507104	Threaded plate	
8	2	46453	Bracket	
9	4	30433	Screw	MC5 x 16
10	4	31189	Washer	5 mm
11	1	46596	Rubber protection	0,3 m.

2820K-RCS

Internal ref. 63 42 360

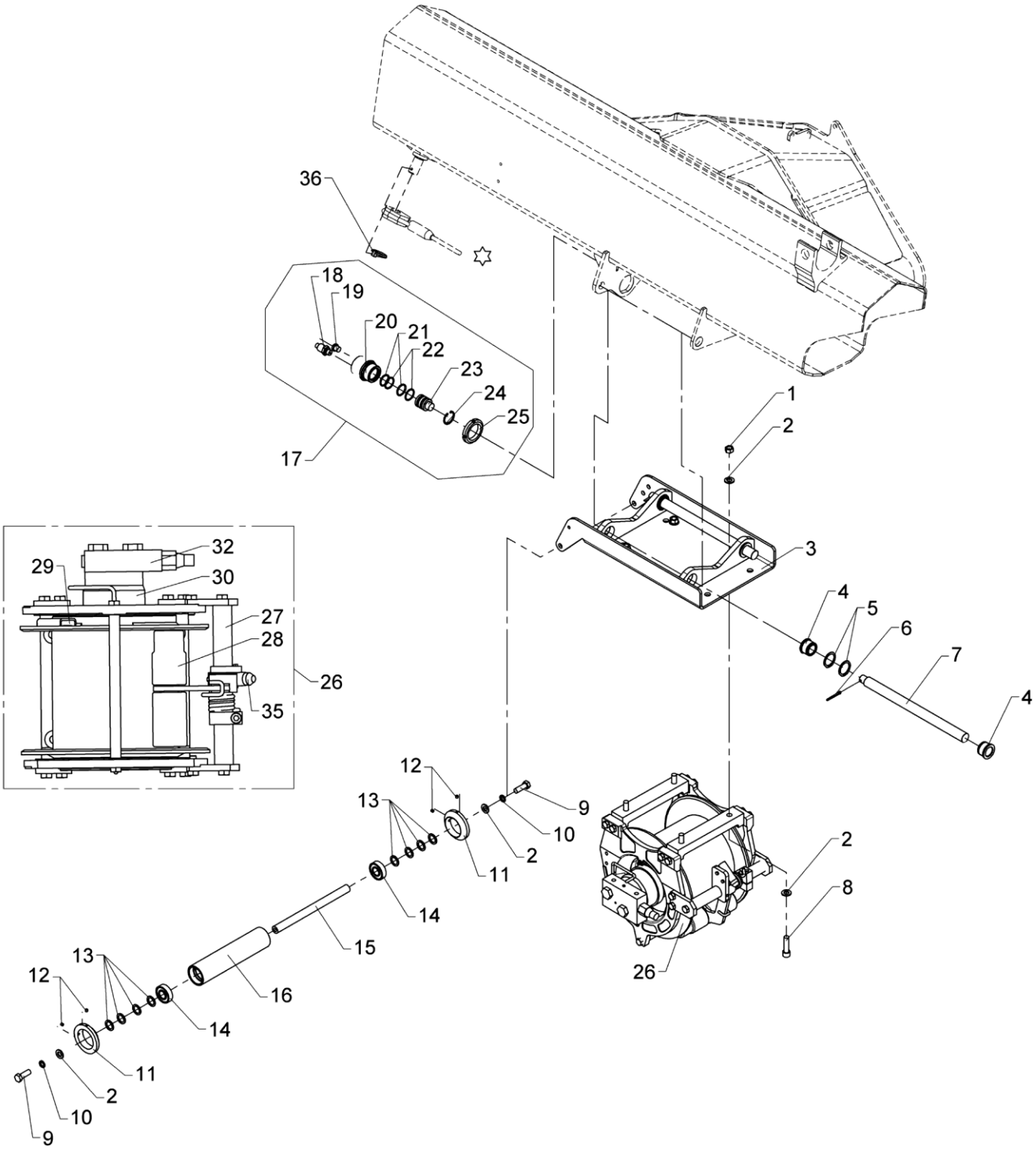

☆ 63 193

Winch 1.5 T + mounting fittings and weighing cell

An Oshkosh Corporation Company

Pos	Qty	Part no.	Description	Remarks
		6342360	Hoist 1.5t, fittings/load cyl.	
1	4	32372	Nut	M12
2	10	31131	Washer	12 mm
3	1	6340977	Winch bracket	
4	4	63485	Slide bearing	
5	4	33117	Circlip	35U
6	2	31638	Split pin	ø4 x 40
7	2	6340987	Pin	
8	4	30428	Sockethead screw	MC12 x 45
9	2	30178	Set screw	M12 x 35
10	2	31158	Spring washer	12 mm
11	2	6886764	Guide roller	
12	4	31548	Pointed screw, stainless	MSP6 x 6
13	8	33227	Back ring	SS 20 x 28 x 2
14	2	23178	Ball bearing	
15	1	6371254	Pin	
16	1	6290984	Guide roller	
17	1	6342350	Weighing cell, complete	
18	1	28850	Pressure transducer	
19	1	25197	Plug	VS-R-1/4 WD
20	1	6340988	Housing	
21	2	20175	O-ring	OR 26,2 x 3
22	2	20898	Back ring	STR 27 x 32 x 1,3
23	1	6340989	Piston	
24	1	33103	Circlip	34 I
25	1	23163	Nut	M45 x 1,5
26	1	56607	Winch	
27	1	58593	Wire guide	
28	1	58594	Complete arm for P9 winch	
29	1	58589	Thimble	
30	1	58596	Motor	
	1	58598	Seal kit for motor	
32	1	58597	Valve	
	1	58238	Washers	
	1	61288	Seal kit P9E	
35	1	49298	Micro switch 6000	
36	1	33386	Ring split	ø6 x 45

2820K-RCS

Internal ref. 63 42 340

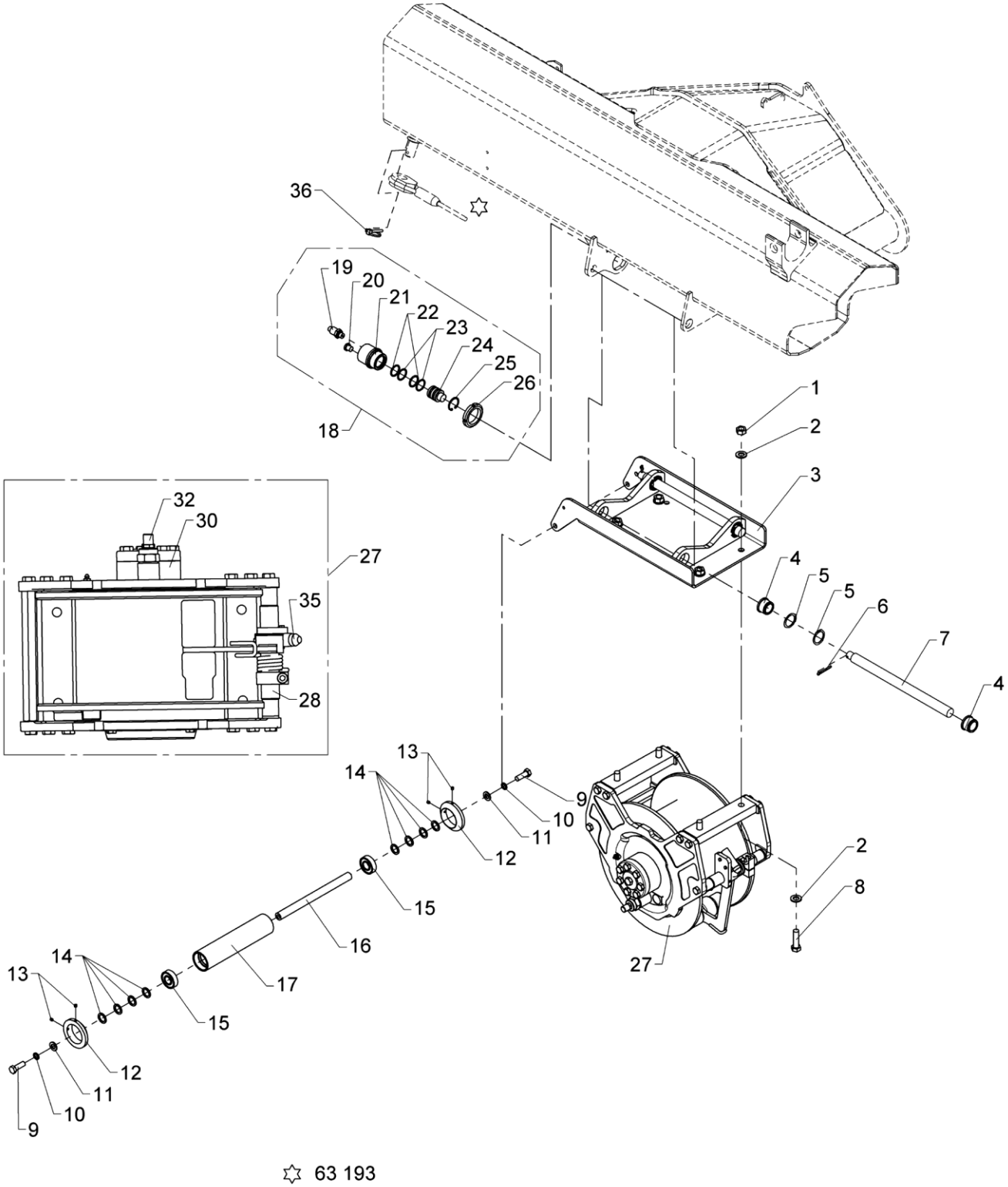

From loader 1440001
To loader

Created 25-06-2007
Modified 30-08-2018

Winch 2.5 T + mounting fittings and weighing cell

An Oshkosh Corporation Company

Pos	Qty	Part no.	Description	Remarks
		6342340	Hoist2.5t, fittings/load cyl.	
1	4	30862	Nut	M14
2	8	31178	Washer	14 mm
3	1	6340977	Winch bracket	
4	4	63485	Slide bearing	
5	4	33117	Circlip	35U
6	2	31638	Split pin	ø4 x 40
7	2	6340987	Pin	
8	4	30210	Steel bolt	M14 x 50
9	2	30178	Set screw	M12 x 35
10	2	31158	Spring washer	12 mm
11	2	31131	Washer	12 mm
12	2	6886764	Guide roller	
13	4	31548	Pointed screw, stainless	MSP6 x 6
14	8	33227	Back ring	SS 20 x 28 x 2
15	2	23178	Ball bearing	
16	1	6371254	Pin	
17	1	6290984	Guide roller	
18	1	6342350	Weighing cell, complete	
19	1	28850	Pressure transducer	
20	1	25197	Plug	VS-R-1/4 WD
21	1	6340988	Housing	
22	2	20175	O-ring	OR 26,2 x 3
23	2	20898	Back ring	STR 27 x 32 x 1,3
24	1	6340989	Piston	
25	1	33103	Circlip	34 I
26	1	23163	Nut	M45 x 1,5
27	1	58285	Winch	P15E
28	1	56606	Complete arm for P15/P15Ewinch	
29	1	69251	Thimble	
30	1	69252	Motor	
31	1	69253	Seal kit for motor	
32	1	59397	Load-holding valve	
33	1	58237	Strips	
34	1	58262	Seal kit P15	
35	1	49298	Micro switch 6000	
36	1	33386	Ring split	ø6 x 45

2820K-RCS

Internal ref. 63 42 300

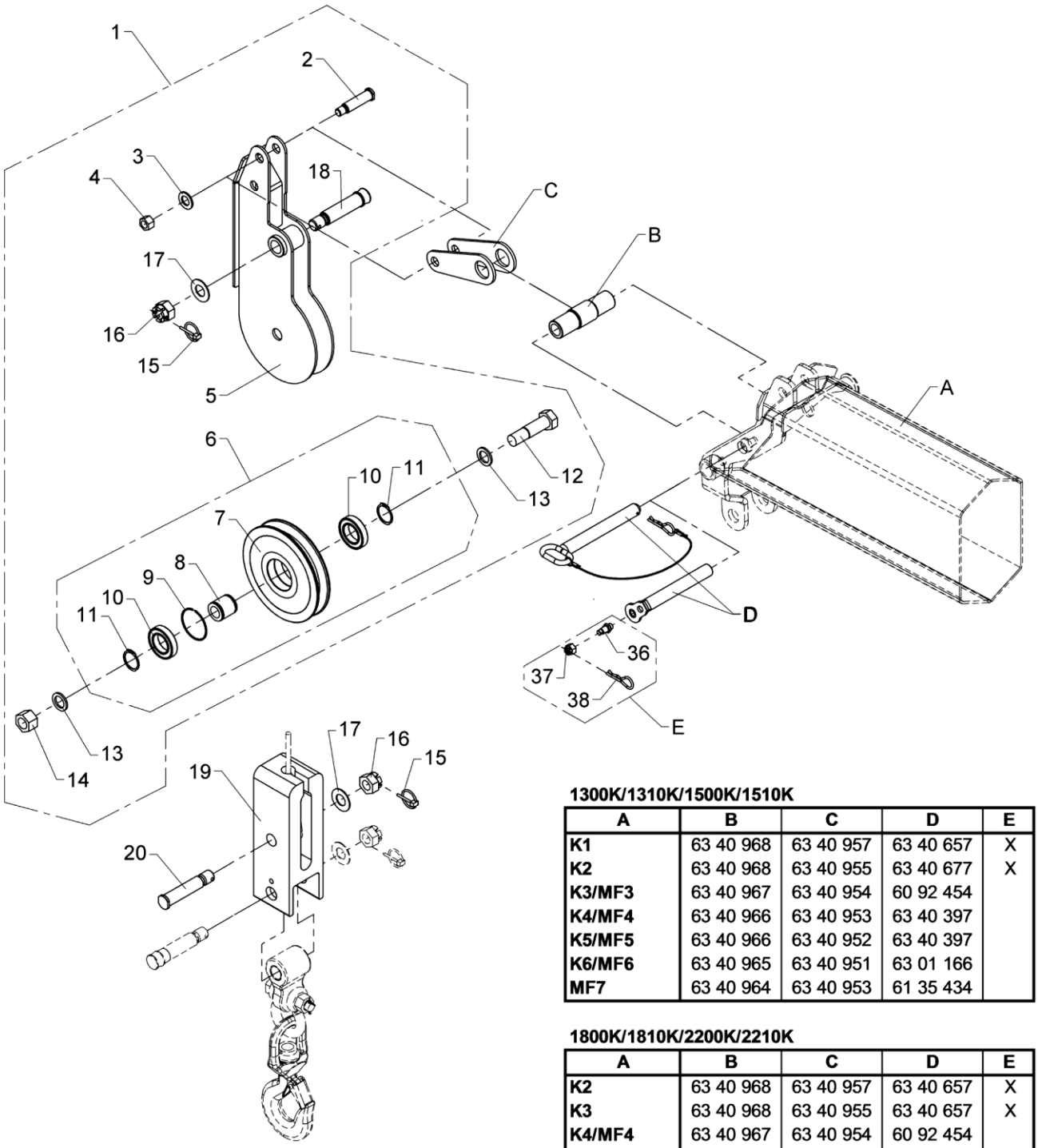

1300K/1310K/1500K/1510K

A	B	C	D	E
K1	63 40 968	63 40 957	63 40 657	X
K2	63 40 968	63 40 955	63 40 677	X
K3/MF3	63 40 967	63 40 954	60 92 454	
K4/MF4	63 40 966	63 40 953	63 40 397	
K5/MF5	63 40 966	63 40 952	63 40 397	
K6/MF6	63 40 965	63 40 951	63 01 166	
MF7	63 40 964	63 40 953	61 35 434	

1800K/1810K/2200K/2210K

A	B	C	D	E
K2	63 40 968	63 40 957	63 40 657	X
K3	63 40 968	63 40 955	63 40 657	X
K4/MF4	63 40 967	63 40 954	60 92 454	
K5/MF5	63 40 966	63 40 952	63 40 397	
K6/MF6	63 40 966	63 40 951	63 40 397	
K7	63 40 965	63 40 951	63 44 727	X
MF7	63 40 965	63 40 951	63 01 166	
K8/MF8	63 40 964	63 40 953	61 35 434	
MF9	---	63 40 956	61 35 434	

Wire pulley, single snatch block

An Oshkosh Corporation Company

Pos	Qty	Part no.	Description	Remarks
1	1	6342310	Wire sheave	
2	1	6340982	Pin	
3	1	31179	Washer	20 mm
4	1	30892	Lock nut	M16
5	1	6340991	Wire pulley	
6	1	6342290	Wire sheave with bearing	
7	1	63484	Wire sheave	
8	1	6887304	Hub	
9	1	23904	Spring ring	BR 68
10	2	23150	Ball bearing	
11	2	33121	Circlip	40U
12	1	32476	Steel bolt	M24 x 95
13	2	30929	Nordlock washer	24 mm
14	1	30897	Lock nut	M24
15	2	31967	Ring split	ø4,5 x 40
16	2	30837	Nut	M24
17	2	31128	Washer	24 mm
18	1	6304458	Pin for suspension	
19	1	6340958	Counterweight	
20	1	6340959	Pin	
21	2	6340957	Link	
22	2	6340955	Link	
23	2	6340954	Link	
24	2	6340953	Link	
25	2	6340952	Link	
26	2	6340951	Link	
27	2	6340956	Link	
28	1	6340968	Hub	
29	1	6340967	Hub	
30	1	6340966	Hub	
31	1	6340965	Hub	
32	1	6340964	Hub	
33	1	6340657	Pin	
34	1	6340677	Pin	
35	1	6344727	Pin	
36	1	6340359	Lock pin	
37	1	32127	Nut	M12
38	1	33399	Lock spring	
39	1	6092454	Lock pin with chain	
40	1	6340397	Lock pin with lock spring	
41	1	6301166	Lock pin with split pin	

2820K-RCS

Internal ref. 63 42 300

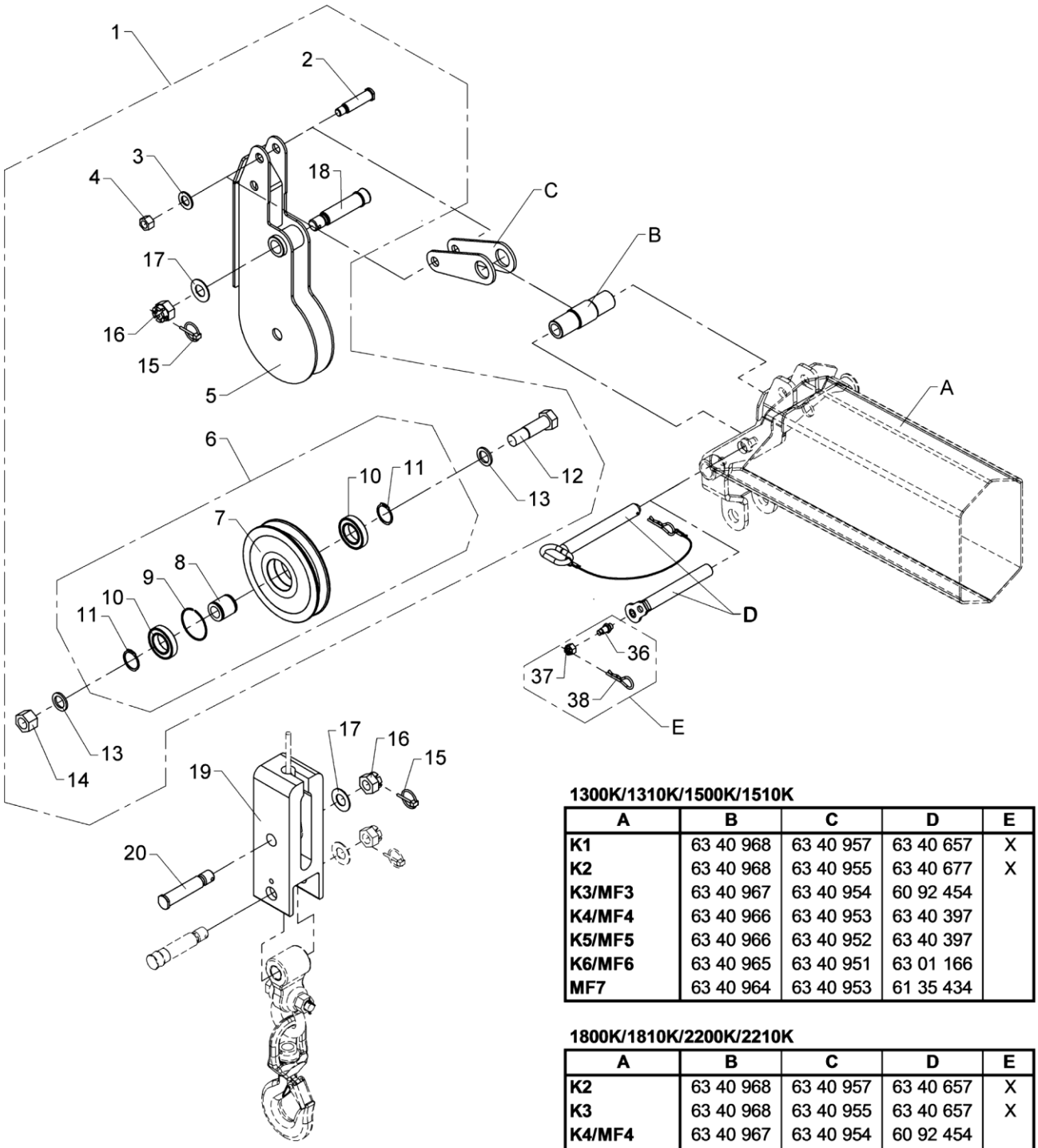

1300K/1310K/1500K/1510K

A	B	C	D	E
K1	63 40 968	63 40 957	63 40 657	X
K2	63 40 968	63 40 955	63 40 677	X
K3/MF3	63 40 967	63 40 954	60 92 454	
K4/MF4	63 40 966	63 40 953	63 40 397	
K5/MF5	63 40 966	63 40 952	63 40 397	
K6/MF6	63 40 965	63 40 951	63 01 166	
MF7	63 40 964	63 40 953	61 35 434	

1800K/1810K/2200K/2210K

A	B	C	D	E
K2	63 40 968	63 40 957	63 40 657	X
K3	63 40 968	63 40 955	63 40 657	X
K4/MF4	63 40 967	63 40 954	60 92 454	
K5/MF5	63 40 966	63 40 952	63 40 397	
K6/MF6	63 40 966	63 40 951	63 40 397	
K7	63 40 965	63 40 951	63 44 727	X
MF7	63 40 965	63 40 951	63 01 166	
K8/MF8	63 40 964	63 40 953	61 35 434	
MF9	---	63 40 956	61 35 434	

565 13 040

From loader 1440001
To loader

Created 26-06-2007
Modified 22-02-2017

Wire pulley, single snatch block

Pos	Qty	Part no.	Description	Remarks
42	1	6135434	Lock pin	

An Oshkosh Corportation Company

2820K-RCS

63 42 320
Internal ref. 63 42 280

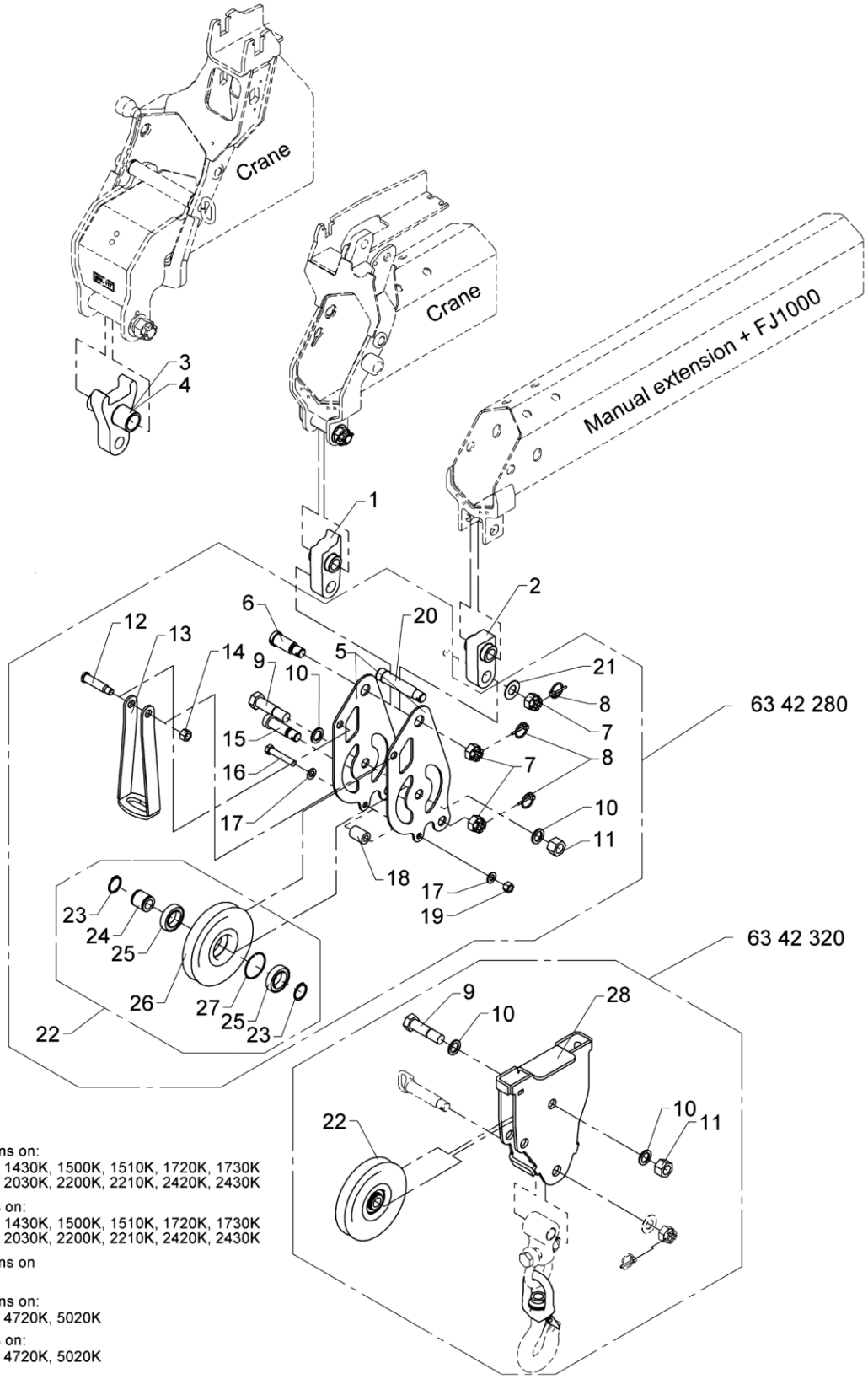

Pos 1: For Hydraulic extensions on:
1300K, 1310K, 1420K, 1430K, 1500K, 1510K, 1720K, 1730K
1800K, 1810K, 2020K, 2030K, 2200K, 2210K, 2420K, 2430K

Pos 2: For Manual extensions on:
1300K, 1310K, 1420K, 1430K, 1500K, 1510K, 1720K, 1730K
1800K, 1810K, 2020K, 2030K, 2200K, 2210K, 2420K, 2430K

For Hydraulic extensions on
FJ1000

Pos 3: For Hydraulic extensions on:
3220K, 3820K, 4020K, 4720K, 5020K

Pos 4: For Manual extensions on:
3220K, 3820K, 4020K, 4720K, 5020K

Wire pulley, double snatch block

An Oshkosh Corporation Company

Pos	Qty	Part no.	Description	Remarks
		6342280	Wire sheave	
		6342320	Snatch block	
1	1	6304414	Wire pulley	Til kranarme
2	1	6340995	Wire pulley	Til man. forlængerarme
3	1	6302615	Wire pulley	
4	1	6394891	Wire pulley, manual extension	
5	2	6340981	Side plate	
6	1	6256324	Pin	
7	3	30837	Nut	M24
8	3	31967	Ring split	ø4,5 x 40
9	2	32476	Steel bolt	M24 x 95
10	4	30929	Nordlock washer	24 mm
11	2	30897	Lock nut	M24
12	1	6340982	Pin	
13	1	6340983	Wire safety device	
14	1	30892	Lock nut	M16
15	1	6300558	Pin	
16	1	30214	Steel bolt	M14 x 80
17	2	31178	Washer	14 mm
18	1	6885504	Distance pipe	
19	1	30891	Lock nut	M14
20	1	6304458	Pin for suspension	
21	1	31128	Washer	24 mm
22	2	6342290	Wire sheave with bearing	
23	2	33121	Circlip	40U
24	1	6887304	Hub	
25	2	23150	Ball bearing	
26	1	63484	Wire sheave	
27	1	23904	Spring ring	BR 68
28	1	6340997	Snatch block	

2820K-RCS

Internal ref. 63 04 410

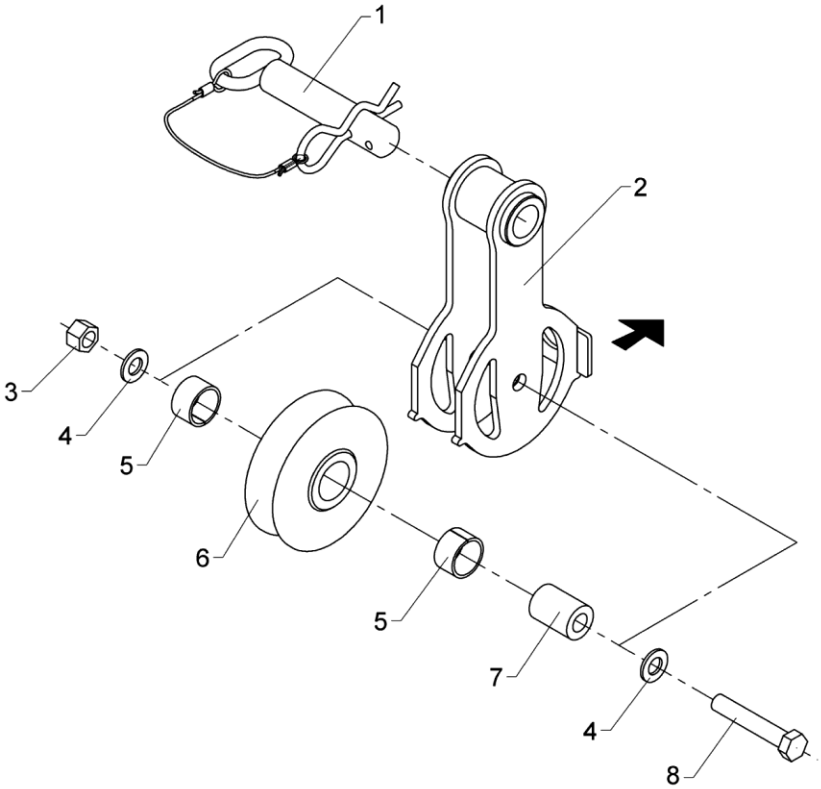

Orientering i forhold til last.
Orientation in relation to the load.
Orientierung im Verhältnis zur Last.
L`orientation par rapport á la charge.
Orientación en relación con la carga.

Wire roller guide

An Oshkosh Corporation Company

Pos	Qty	Part no.	Description	Remarks
1	1	6304266	Lock pin with split pin	
2	1	6304411	Suspension for roller guide	
3	1	30891	Lock nut	M14
4	2	31178	Washer	14 mm
5	2	23302	Bushing	MB 3020 DU
6	1	63513	Wire roller guide	
7	1	6885504	Distance pipe	
8	1	30214	Steel bolt	M14 x 80

2820K-RCS

Internal ref. 63 42 370

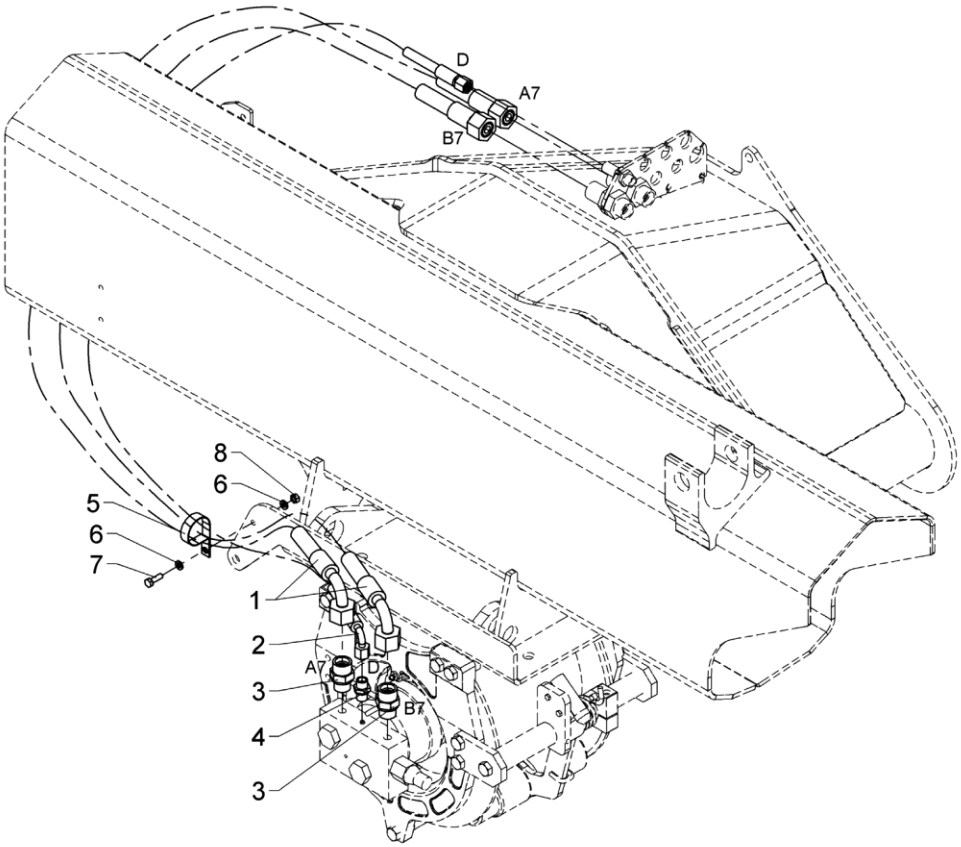

Hydraulic system, winch

An Oshkosh Corporation Company

Pos	Qty	Part no.	Description	Remarks
1	2	62687	Hose	1/2 X 1600 M24X1.5 L/90
2	1	62561	Hose	1/4X1600M14X1.5L/90RUSTF
3	2	26334	Connection	P-GEV 16 SR-WD
4	1	25109	Connection	GES 8 LR-WD
5	1	31869	Rubber clip Ø 38 mm	
6	2	32302	Face washer, stainless	6 mm
7	1	30113	Set screw, stainless	M6 x 20
8	1	30854	Nut, stainless	M6

2820K-RCS

63 45 380
Internal ref. 63 42 380

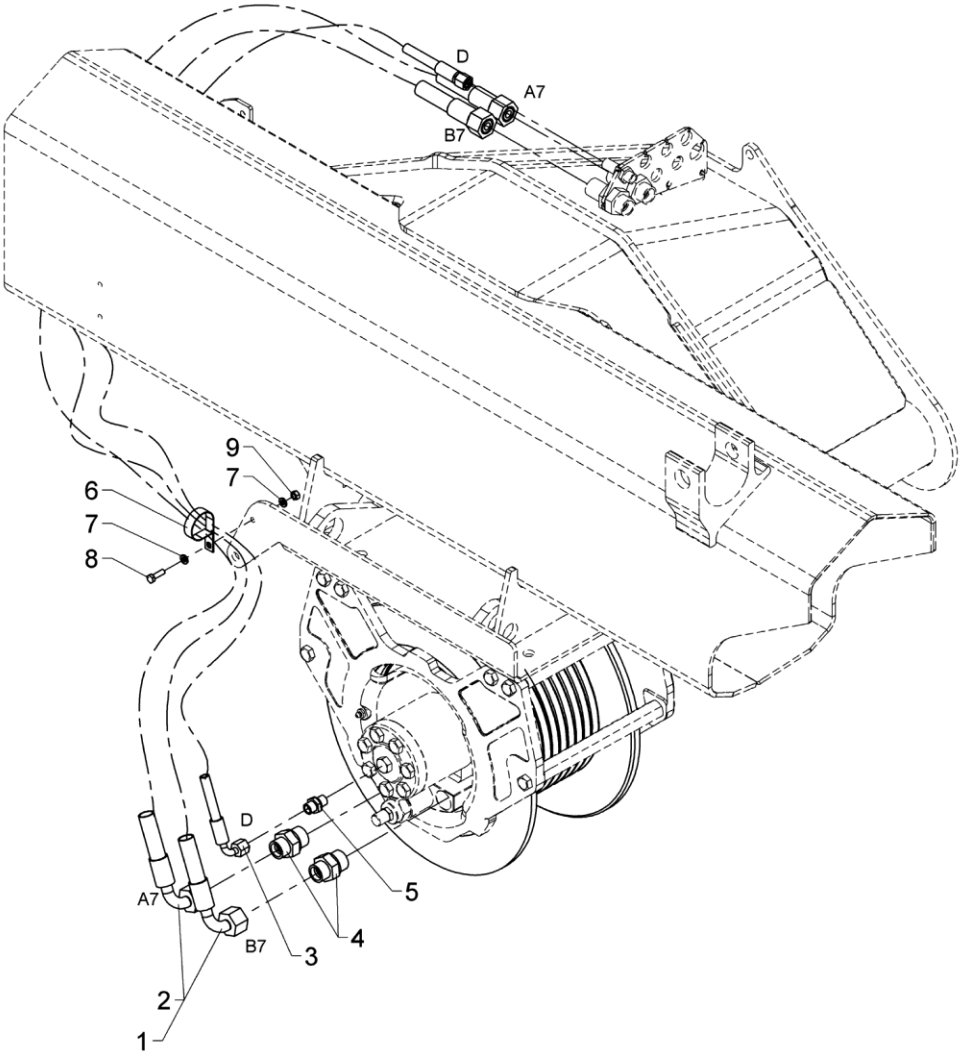

Hydraulic system, P15E

An Oshkosh Corporation Company

Pos	Qty	Part no.	Description	Remarks
		6342380	Hydraulic system, P15E	1300K - 1730K
		6345380	Hydraulic system, P15E	1800K - 2430K
1	2	62687	Hose	1/2" x 1600 1300K - 1730K
2	2	62682	Hose	1/2" x 1700 1800K - 2430K
3	1	62501	Hose	1/4X1600M14X1.5L/90RUSTF
4	2	26390	Connection	P-GEV 16 SR 3/4-WD
5	1	25109	Connection	GES 8 LR-WD
6	1	31869	Rubber clip Ø 38 mm	
7	2	32302	Face washer, stainless	6 mm
8	1	30113	Set screw, stainless	M6 x 20
9	1	30854	Nut, stainless	M6

2820K-RCS

Internal ref. 63 46 980

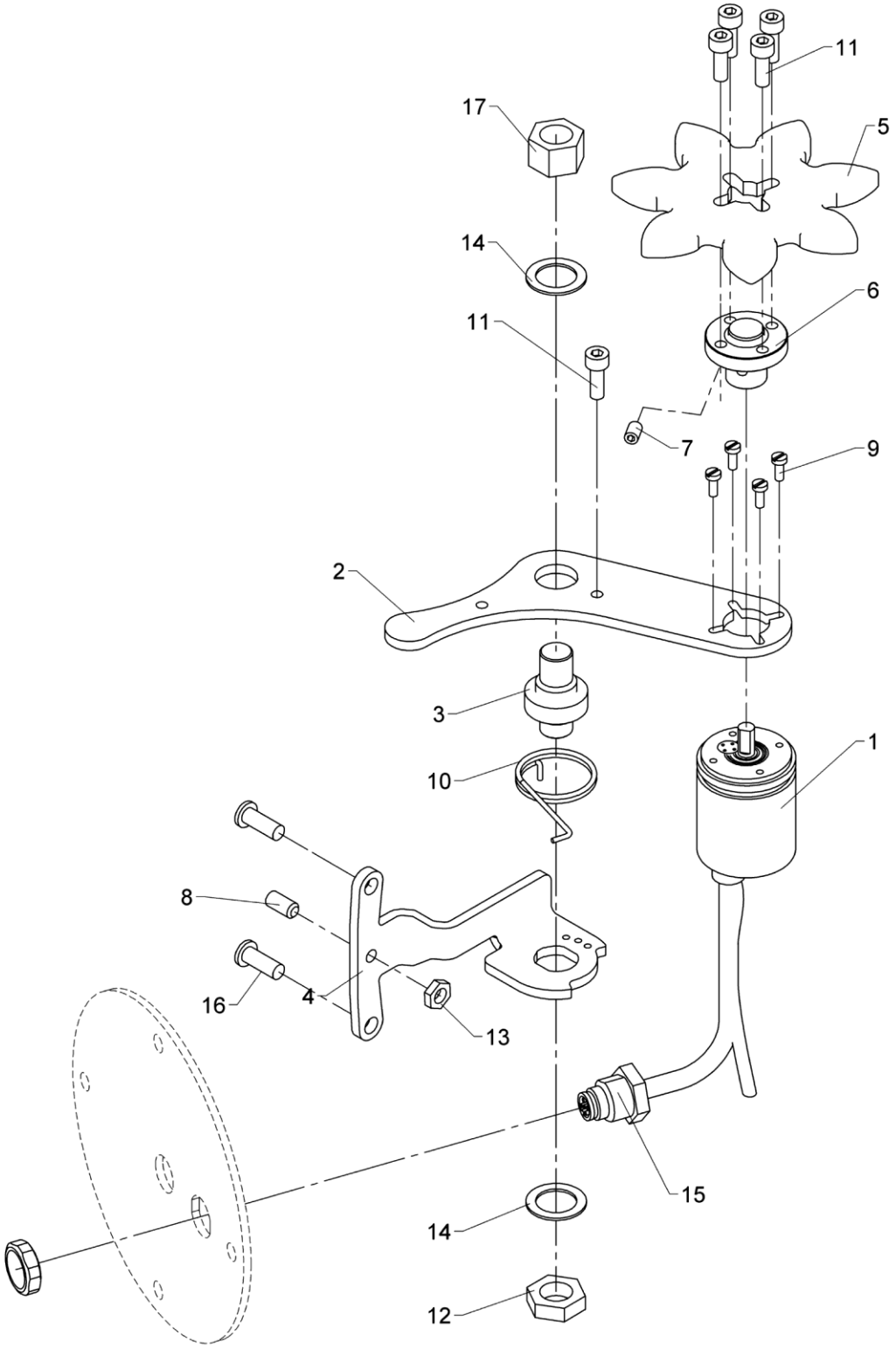

565 16 030

From loader 1440001
To loader

Created 14-05-2018
Modified 10-12-2018

Slewing sensor

An Oshkosh Corporation Company

Pos	Qty	Part no.	Description	Remarks
1	1	29870	Encoder 36A	
2	1	6346044		
3	1	6346048		
4	1	6346045		
5	1	6346046		
6	1	6367389		
7	1	30565	Pointed screw	MSP5 x 8
8	1	32256	Pointed screw	MSP6 x 12
9	4	30784	Screw	M3 x 8
10	1	33476	Spring	6247194
11	5	30420	Screw	MC5 x 14
12	1	31078		M12 x 1,5
13	1	32281	Counter nut, stainless	M6
14	2	31777	Washer Dacromet	PS 15 x 22 x 1
15	1	28791		
16	2	32490	Screw	MC6 x 16
17	1	32216	Lock nut, stainless	M12

2820K-RCS

63 46 890
Internal ref. 63 44 890

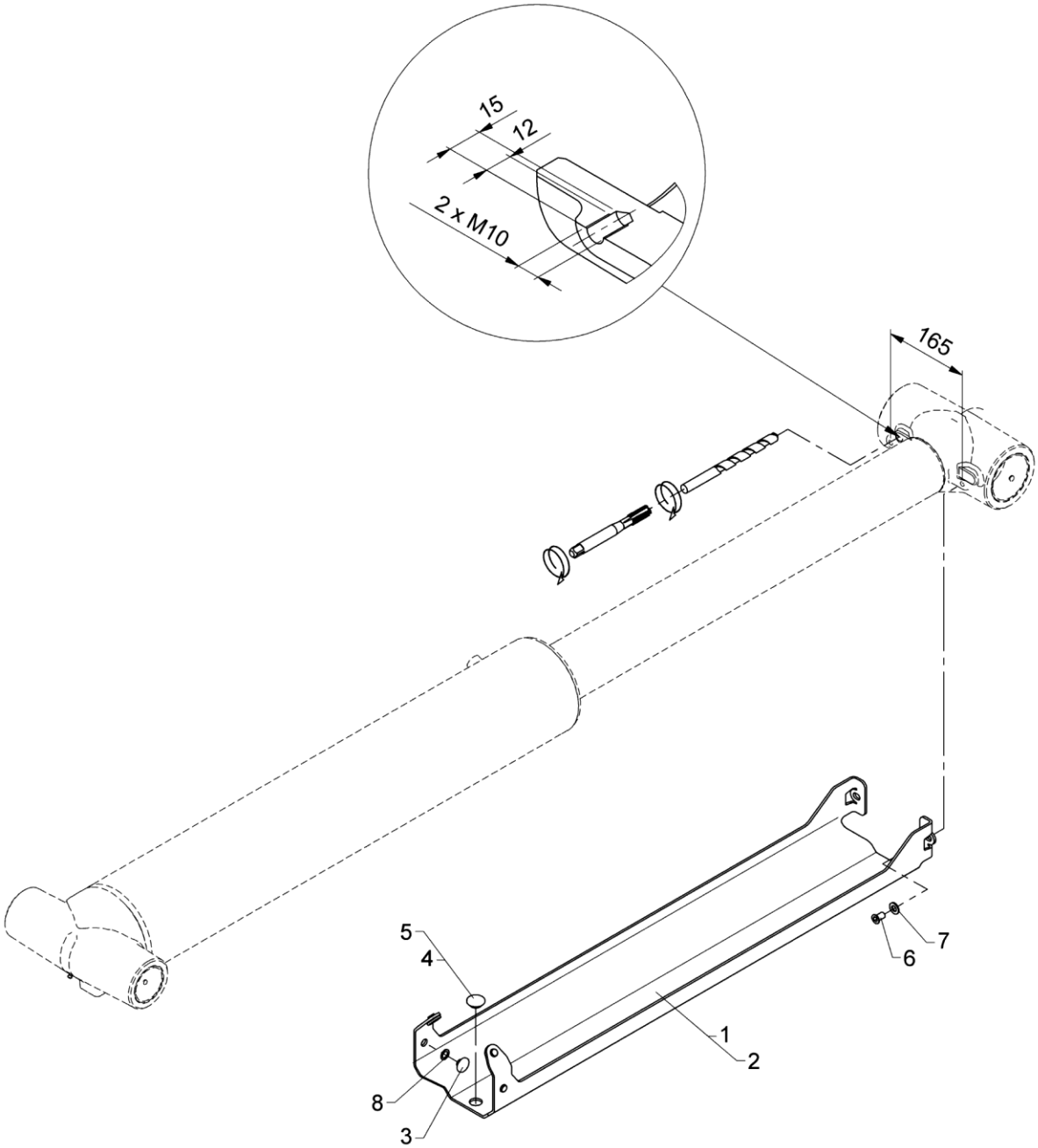

From loader 1440001
To loader

Created 13-01-2010
Modified 15-04-2015

Protective guard, jib cylinder, cpl.

An Oshkosh Corporation Company

Pos	Qty	Part no.	Description	Remarks
		6344890	Protective guard, jib cylinder	
		6346890	Protective guard, jib cylinder	
1	1	6344159	Protective guard	Serie 1800
2	1	6346159	Protective guard	Serie 2200
3	4	63569	Guide shoe	3 mm
4	1	63429	Guide	ø30 x 3 mm
5	1	63460	Spacer	5 mm
6	2	32423	Sockethead screw	MC10 x 16
7	2	31565	Washer, stainless	10 mm
8	4	33219	Back ring	PS 12 x 18 x 1,0

2820K-RCS

Internal ref. 63 41 050

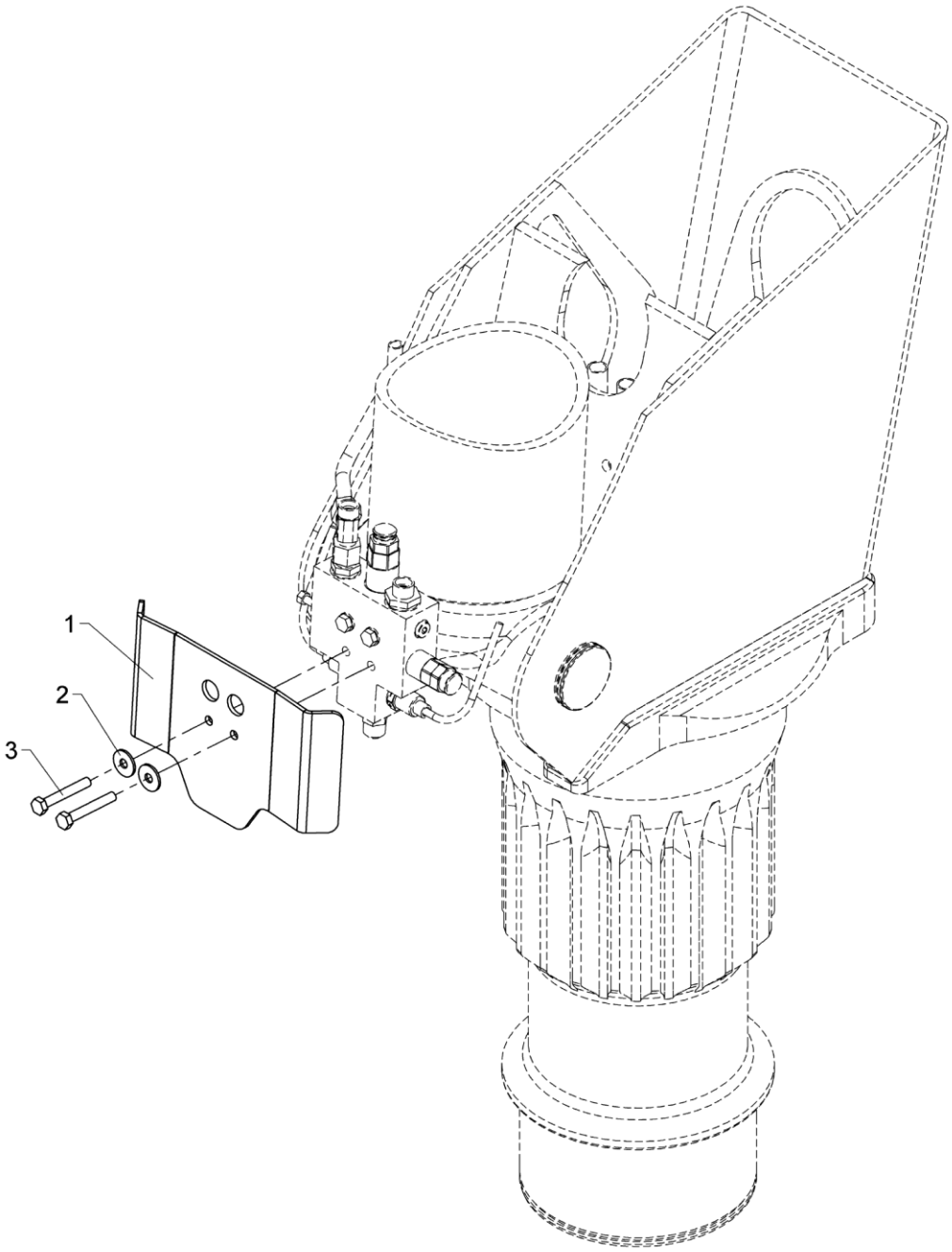

From loader 1440001
To loader

Created 13-01-2010
Modified 14-08-2018

Protective guard (LHV boom), cpl.

An Oshkosh Corporation Company

Pos	Qty	Part no.	Description	Remarks
1	1	6340949	Protective guard (LHV boom)	
2	2	31136	Washer, stainless	8 mm
3	2	30140	Steel bolt, stainless	M8 x 55

2820K-RCS

Internal ref. 70 04 120

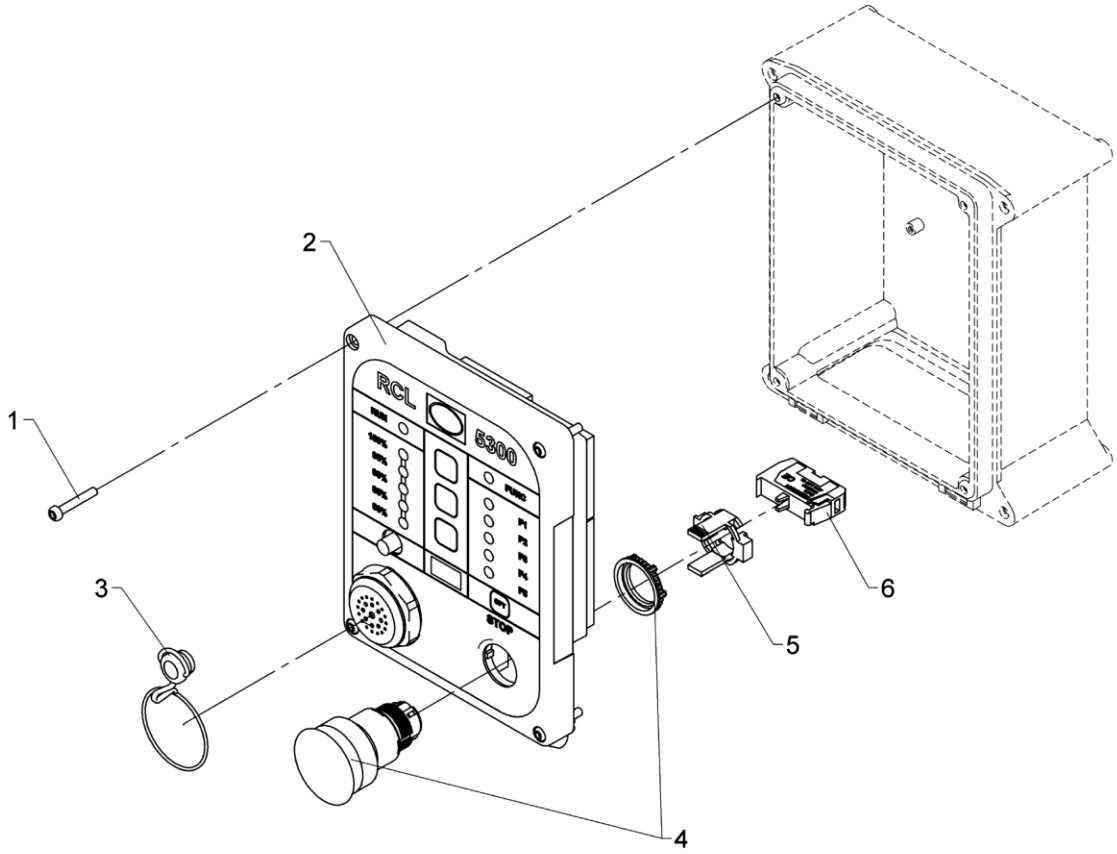

RCL 5300

An Oshkosh Corporation Company

Pos	Qty	Part no.	Description	Remarks
1	4	30347	Screw, stainless	4,0 x 25
2	1	29301	Front complete, RCL 5300	
3	1	29306	Plug	
4	1	29196	Stop button	
5	1	29198	Attachment, stop button	
6	1	29197	Switch element, stop button	

2820K-RCS

Internal ref. 70 03 920

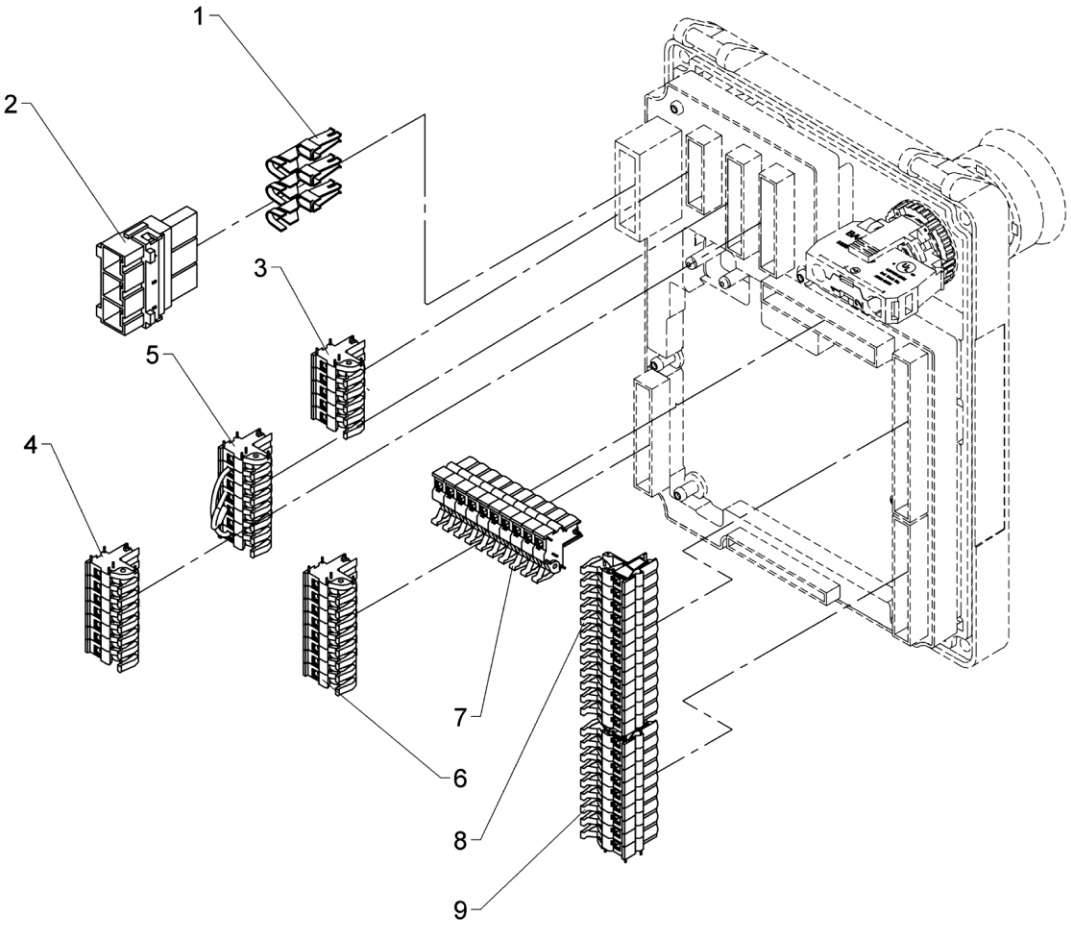

Plugs in RCL

An Oshkosh Corporation Company

Pos	Qty	Part no.	Description	Remarks
1	3	29316	Pin	
2	1	29315	Plug, 3-polar for RCL 53XX	
3	1	29317	Plug, 5-polar for RCL 53XX	
4	1	29318	Plug, 7-polar for RCL 53XX	
5	1	29340	CAN termination/RCL53xx	
6	1	29319	Plug, 8-polar for RCL 53XX	
7	1	29321	Plug, 10-polar for RCL 53XX	
8	1	29322	Plug, 12-polar for RCL 53XX	
9	1	29320	Plug, 9-polar for RCL 53XX	

2820K-RCS

Internal ref. 63 41 740

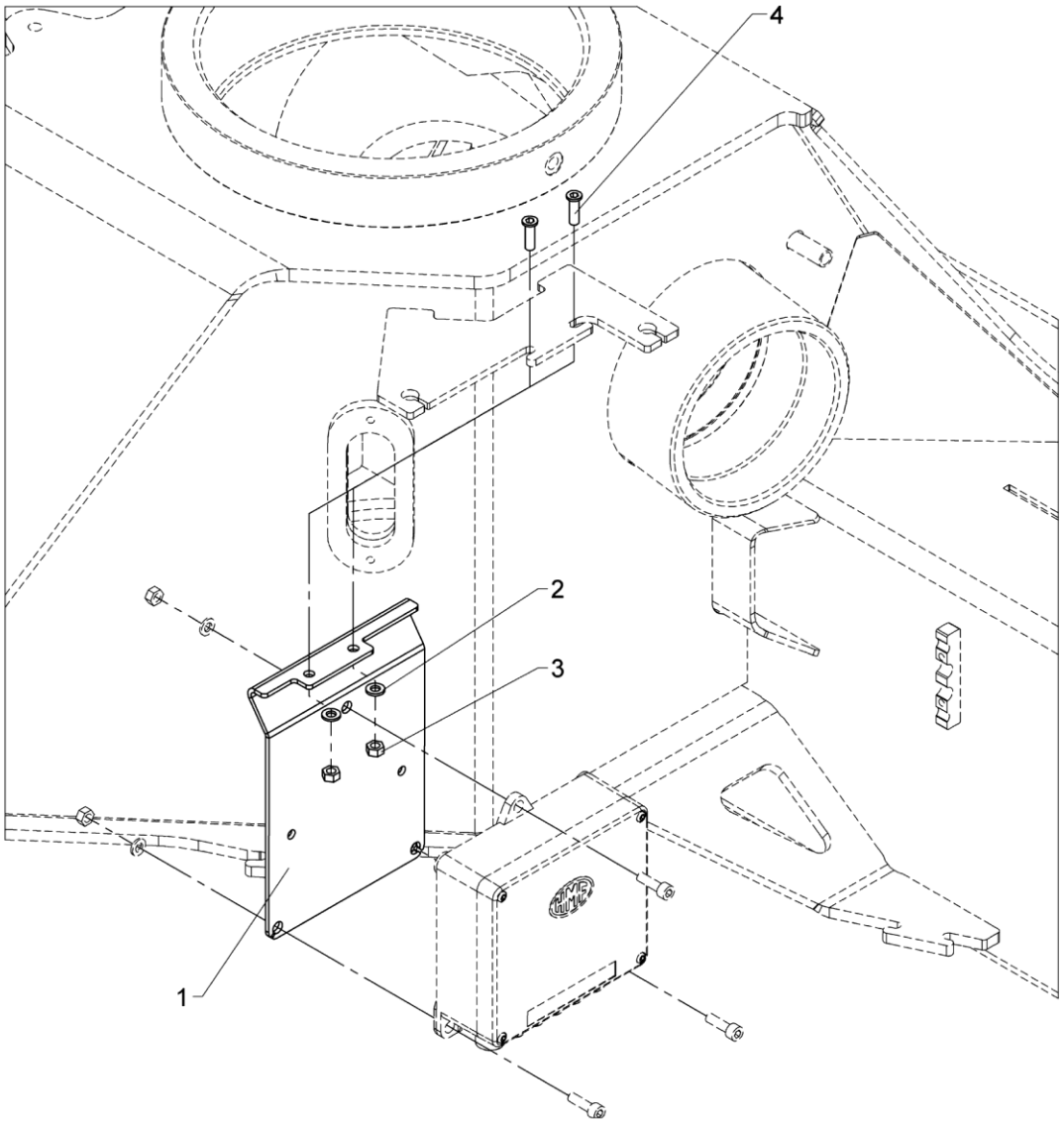

From loader 1440001
To loader

Created 04-03-2009
Modified 22-07-2010

Mounting fittings for junction box (FJC 5330)

An Oshkosh Corporation Company

Pos	Qty	Part no.	Description	Remarks
1	1	6340899	Mounting fittings (FJC 5330)	
2	2	32302	Face washer, stainless	6 mm
3	2	30854	Nut, stainless	M6
4	2	32483	Screw	MCL6 x 20

2820K-RCS

Internal ref. 70 05 490

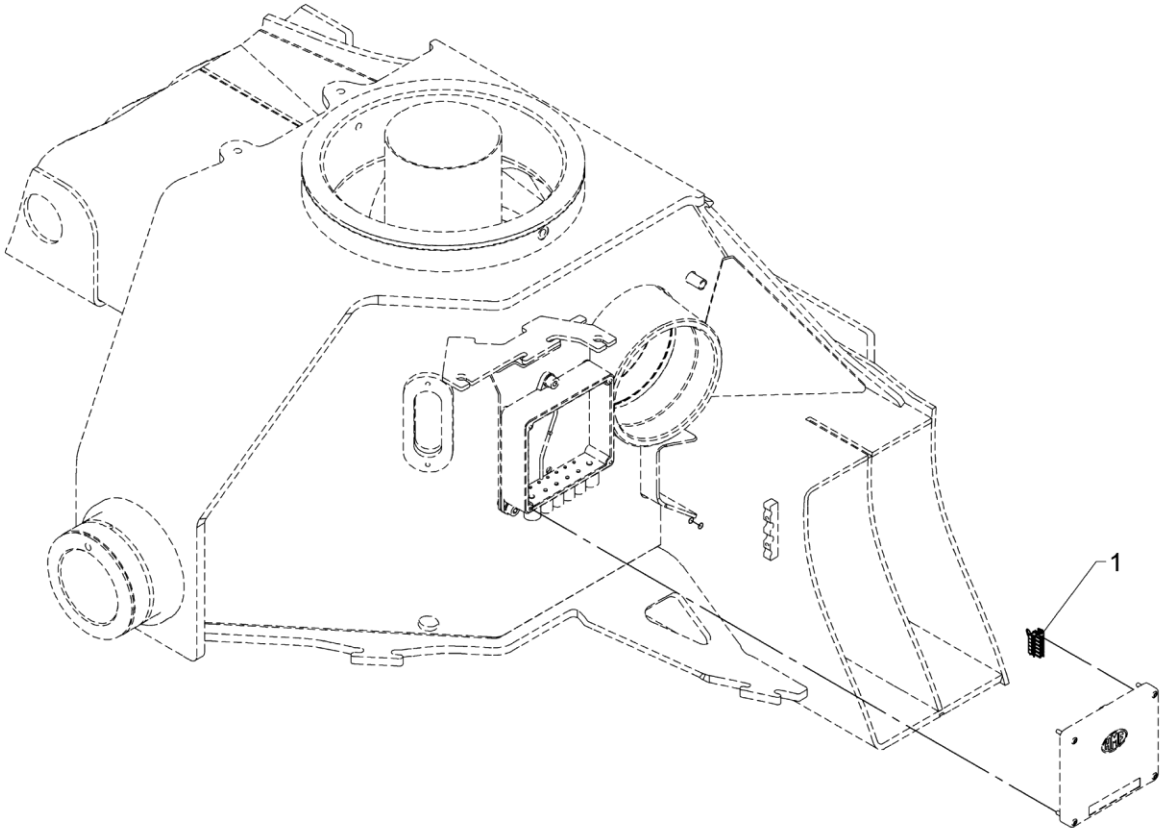

565 20 040

From loader 1440001
To loader

Created 13-02-2013
Modified

CAN termination, CIO5376

Pos	Qty	Part no.	Description	Remarks
1	1	29341	CAN termination FJC	

An Oshkosh Corportation Company

2820K-RCS

Internal ref. 70 06 306

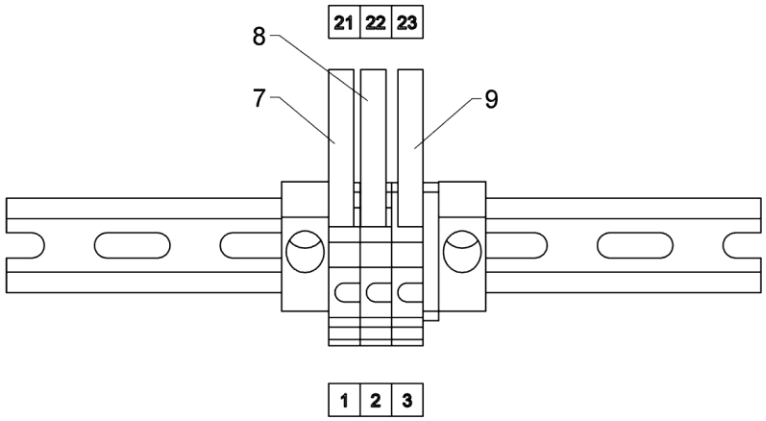

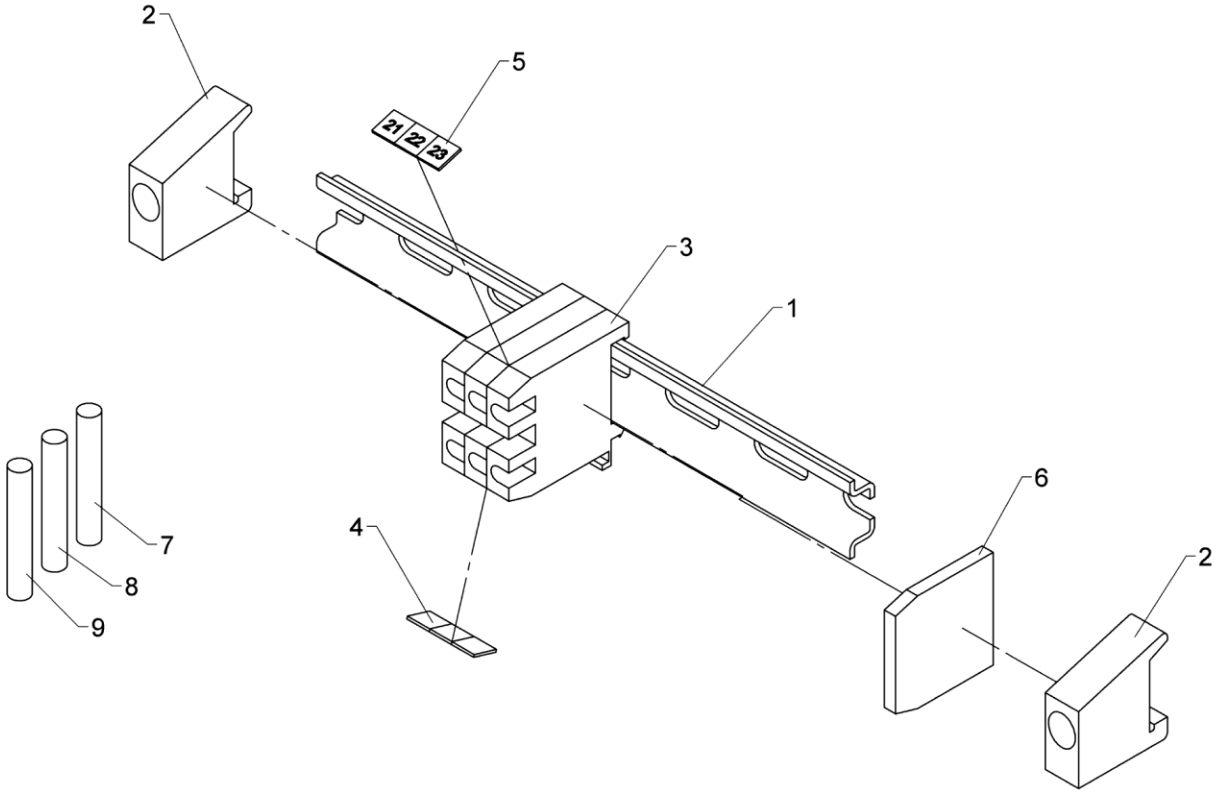

565 20 050

From loader 1440001
To loader

Created 17-04-2013
Modified 08-07-2014

Terminal block for RCL box with RC

An Oshkosh Corporation Company

Pos	Qty	Part no.	Description	Remarks
1	1	28013	Guide rail	120 mm.
2	2	28012	End angle	
3	3	28010	Terminal	
4	1	28019	Labels nos. 1-10	
5	1	28965	Dekafix labels 21-30	
6	1	28011	End plate	
7	1	27202	Cable	0,3 m
8	1	27204	Wire, 1 x1.5mm2	0,3 m
9	1	27120	Cable	0,3 m

2820K-RCS

Internal ref. 70 08 250

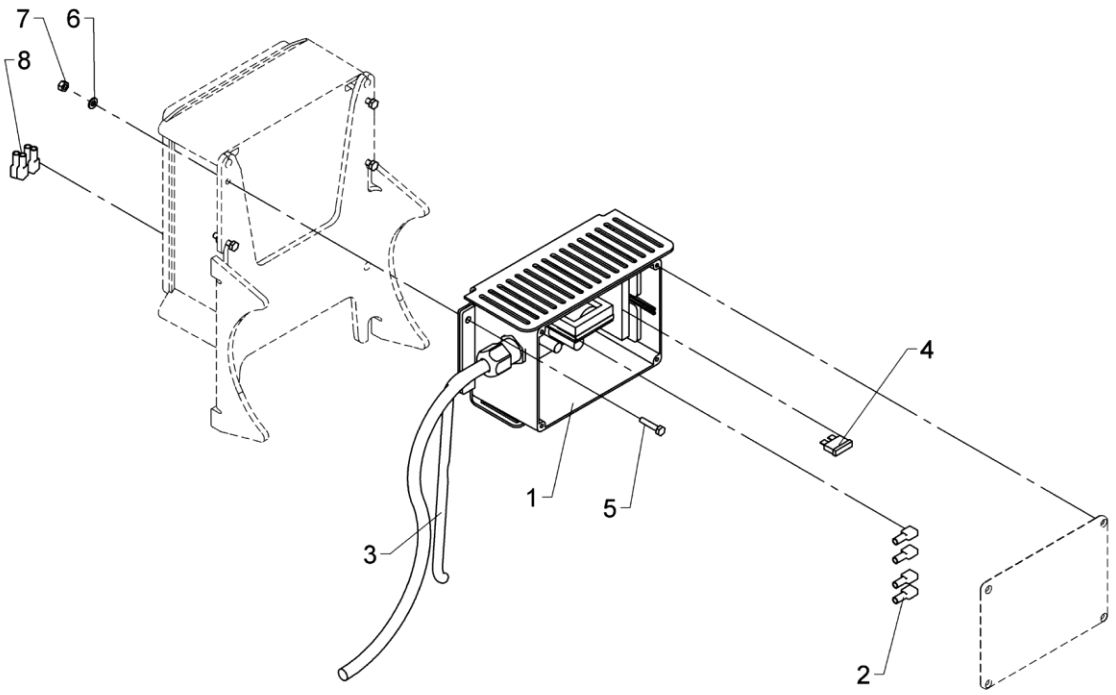

565 20 055

From loader 1440001
To loader

Created 03-06-2013
Modified 11-05-2018

12 V Converter

An Oshkosh Corporation Company

Pos	Qty	Part no.	Description	Remarks
1	1	29478	Converter, 12-24 V, complete	
2	4	27428	Clip	
3	1	28278	Cable 4 x 2.5	
4	1	27378	Fuse 25 Amp	
5	4	30126	Set screw	M4 x 20
6	4	31188	Washer, stainless	4 mm
7	4	30857	Lock nut	M4
8	4	27428	Clip	

2820K-RCS

Internal ref. 70 06 310

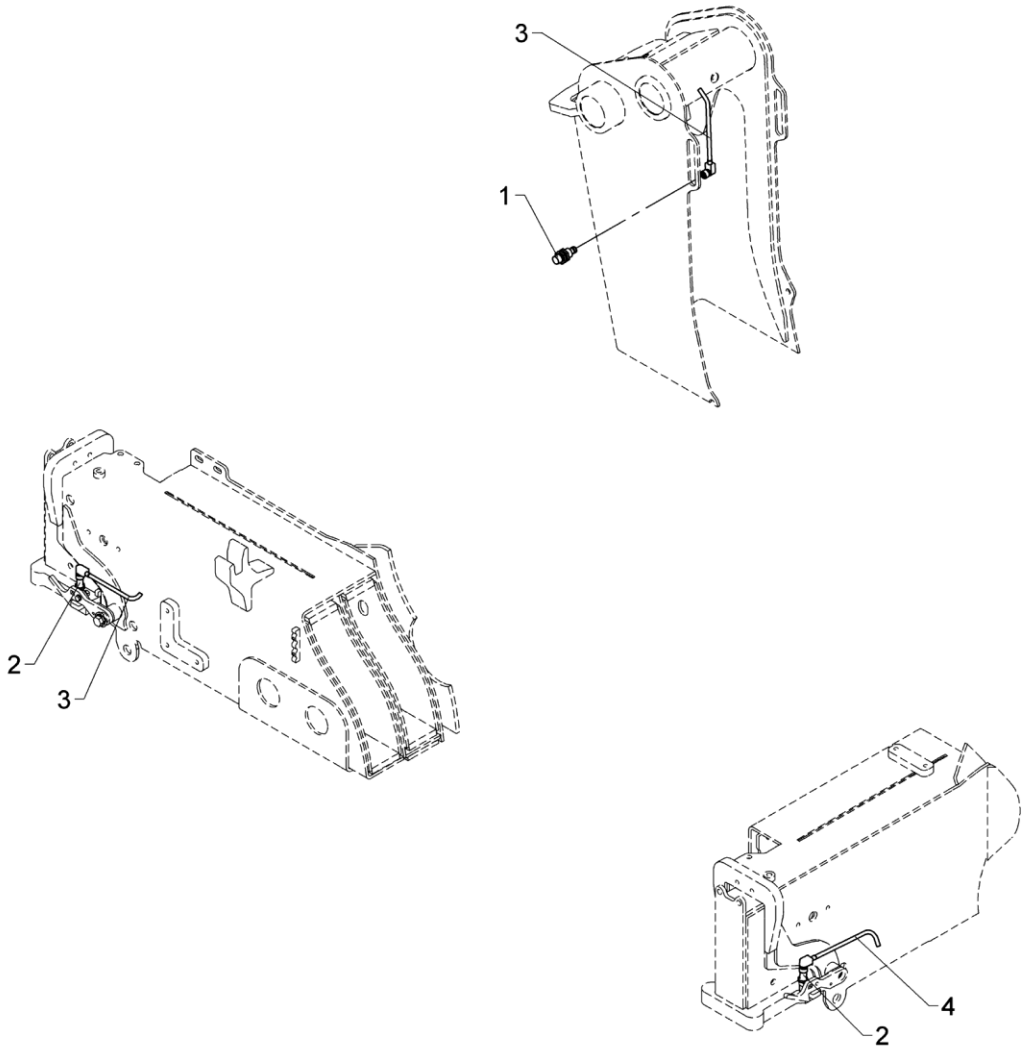

565 20 060

From loader 1440001
To loader

Created 20-05-2013
Modified

BEHEW

An Oshkosh Corporation Company

Pos	Qty	Part no.	Description	Remarks
1	1	28980	Proximity switch	
2	2	29257	Proximity switch M12x44, 4mm	
3	2	28077	Cable with plug	
4	1	28117	Cable with plug	

2820K-RCS

Internal ref. 70 09 870

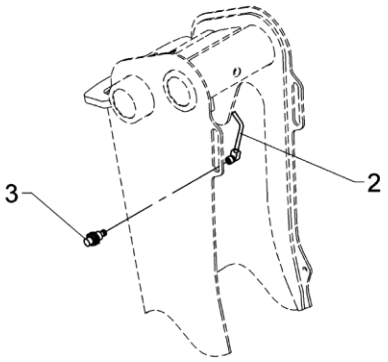

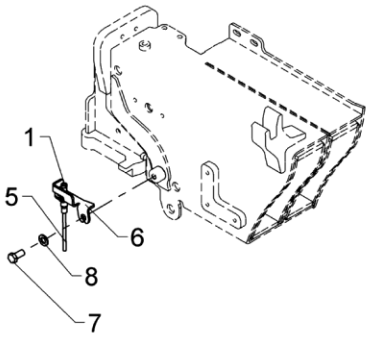

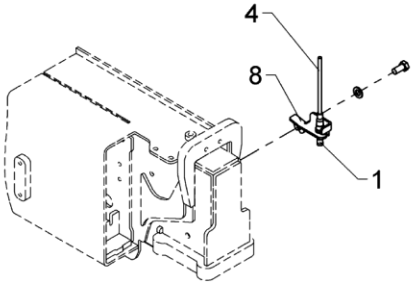

565 20 061

From loader 1440001
To loader

Created 11-01-2017
Modified 19-06-2018

BEHEW

An Oshkosh Corporation Company

Pos	Qty	Part no.	Description	Remarks
1	2	29447	Proximity switchM12 8mm PNP-NO	
2	1	28077	Cable with plug	
3	1	28980	Proximity switch	
4	1	29223	Cable with socket, 2 m	
5	1	29224	Cable with socket, 5 m	
6	2	6354755	Fitting for sensor, BEHEW	
7	2	30176	Set screw	M12 x 25
8	2	32338	Washer	12 mm

2820K-RCS

Internal ref. 70 06 610

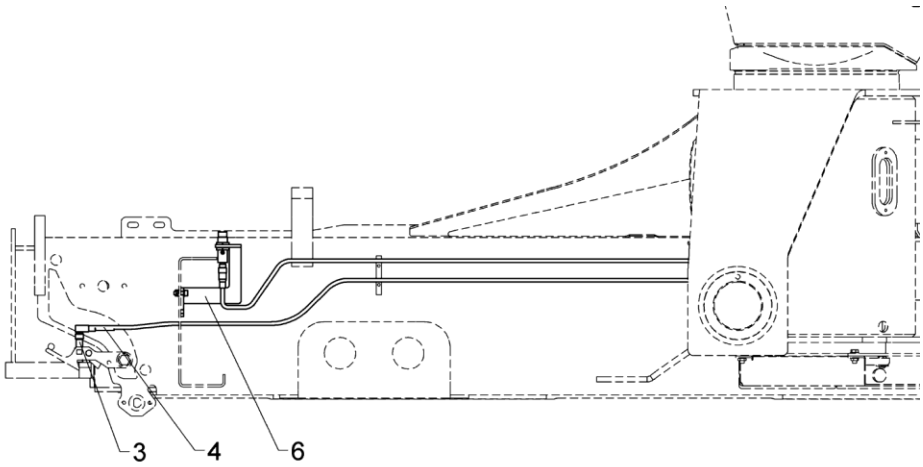

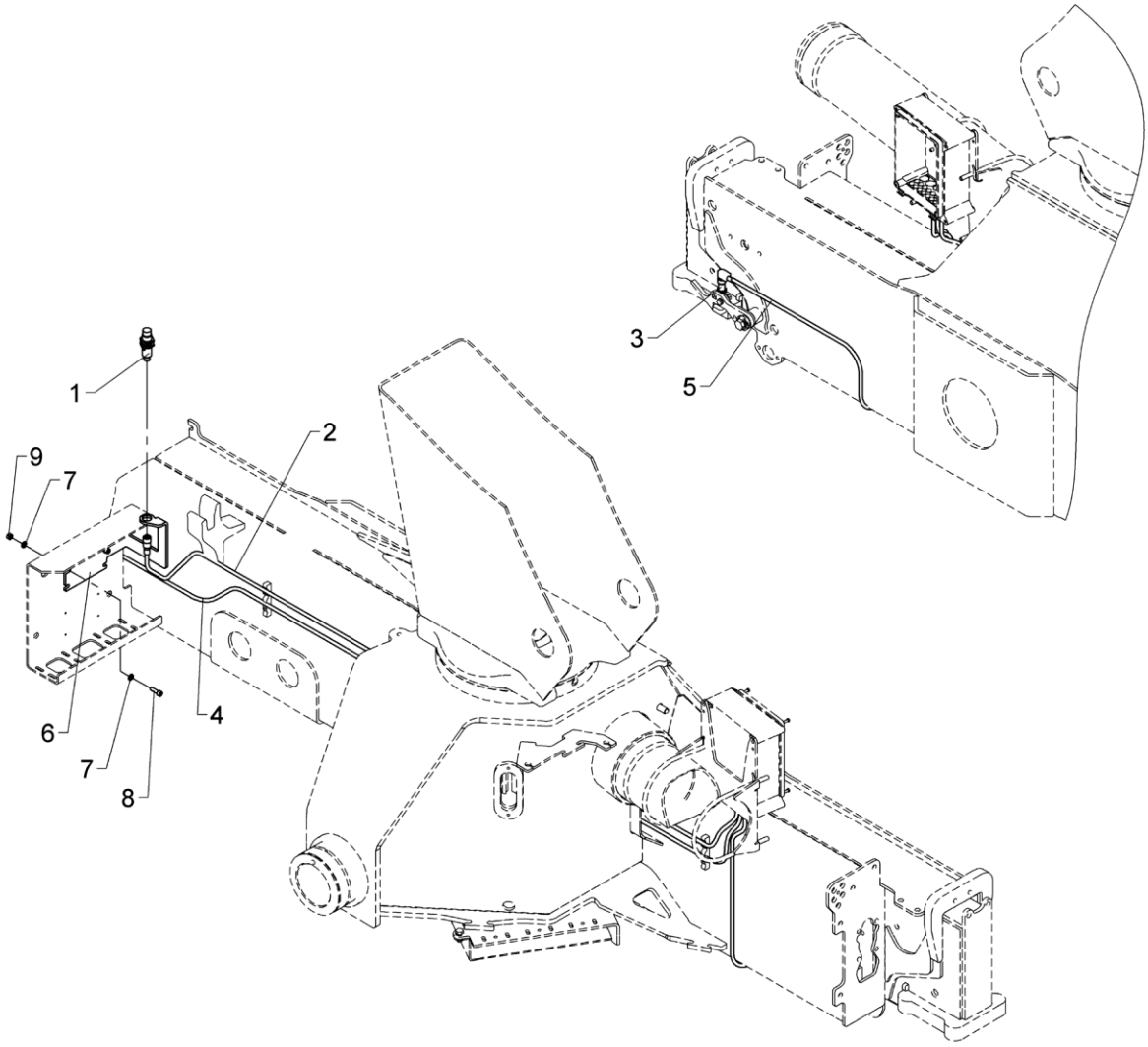

565 20 070

From loader 1440001
To loader

Created 20-05-2013
Modified 10-10-2017

BEPAW 12_23

An Oshkosh Corporation Company

Pos	Qty	Part no.	Description	Remarks
1	1	28210	Proximity switch	
2	1	29224	Cable with socket, 5 m	
3	2	29257	Proximity switch M12x44, 4mm	
4	1	28077	Cable with plug	
5	1	28117	Cable with plug	
6	1	6340947	Mounting fittings, trans.alarm	
7	4	32302	Face washer, stainless	6 mm
8	2	30427	Screw	MC6 x 20
9	2	30854	Nut, stainless	M6

2820K-RCS

Internal ref. 70 09 470

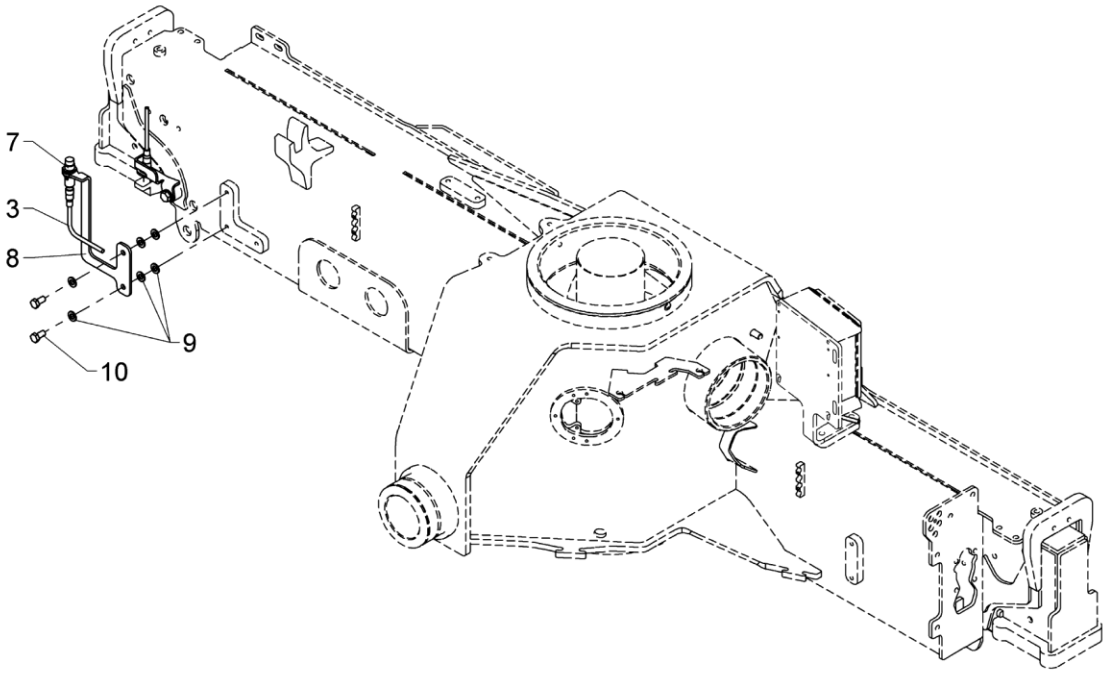

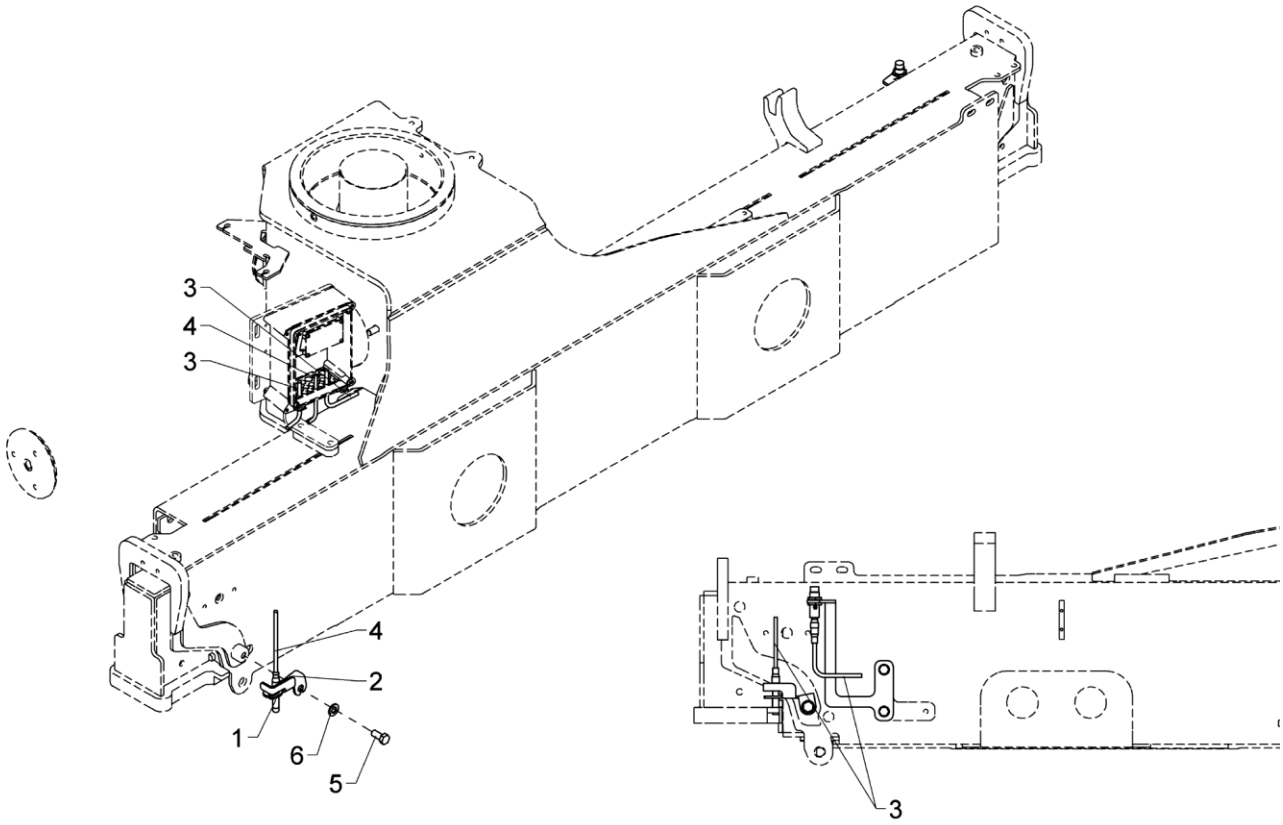

BEPAW

An Oshkosh Corporation Company

Pos	Qty	Part no.	Description	Remarks
1	2	29447	Proximity switchM12 8mm PNP-NO	
2	2	6354755	Fitting for sensor, BEHEW	
3	2	29224	Cable with socket, 5 m	
4	1	29223	Cable with socket, 2 m	
5	2	30176	Set screw	M12 x 25
6	2	32338	Washer	12 mm
7	1	28210	Proximity switch M18x83 NO/NC 8m	
8	1	6340589	Mounting fittings (BEPAW)	
9	6	31177	Washer	10 mm
10	2	31517	Set screw, stainless	M10 x 20

2820K-RCS

Internal ref. 70 06 330

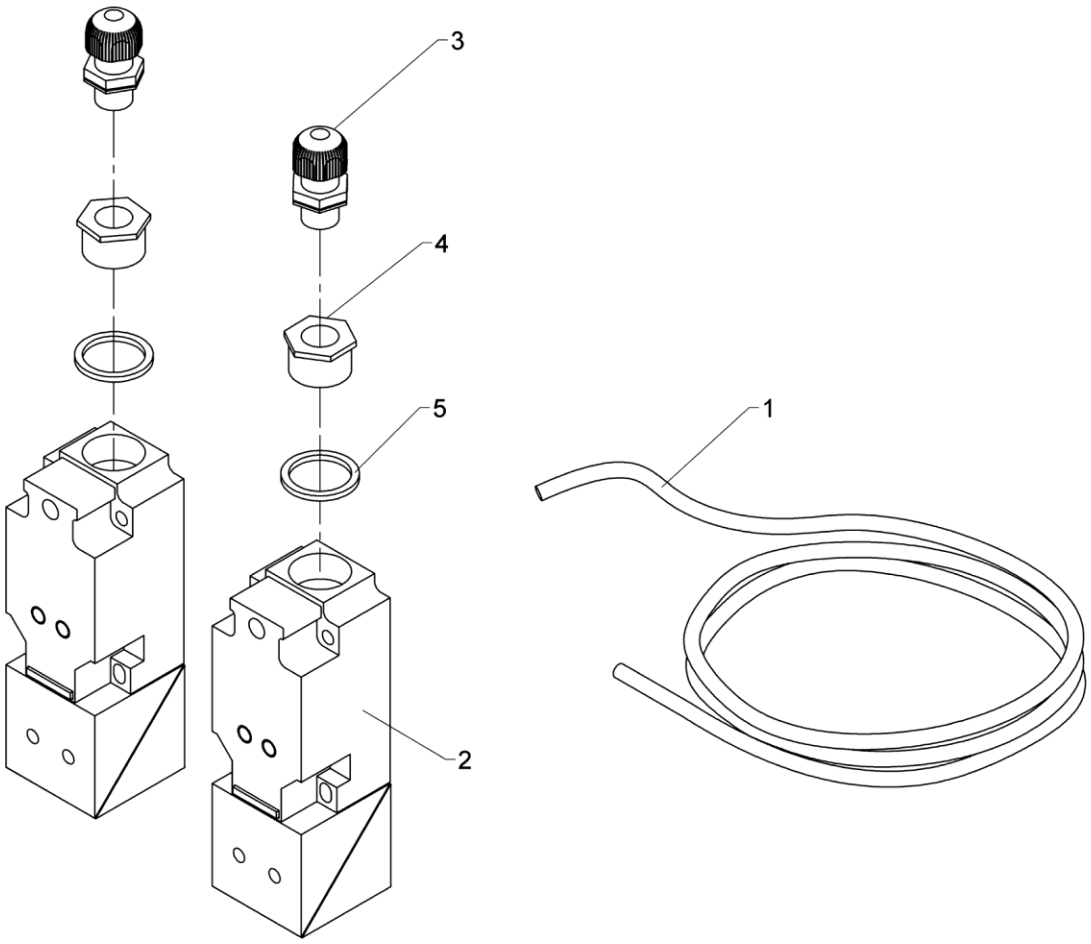

565 20 080

From loader 1440001
To loader

Created 21-02-2013
Modified 13-07-2016

CYW

An Oshkosh Corporation Company

Pos	Qty	Part no.	Description	Remarks
1	1	28262	Cable 4 x 0.75	8 m
2	2	27598	Proximity switch	
3	2	28459	Connection	
4	2	29200	Socket M12/M20	
5	2	28402	Sealing ring	

2820K-RCS

Internal ref. 70 06 190

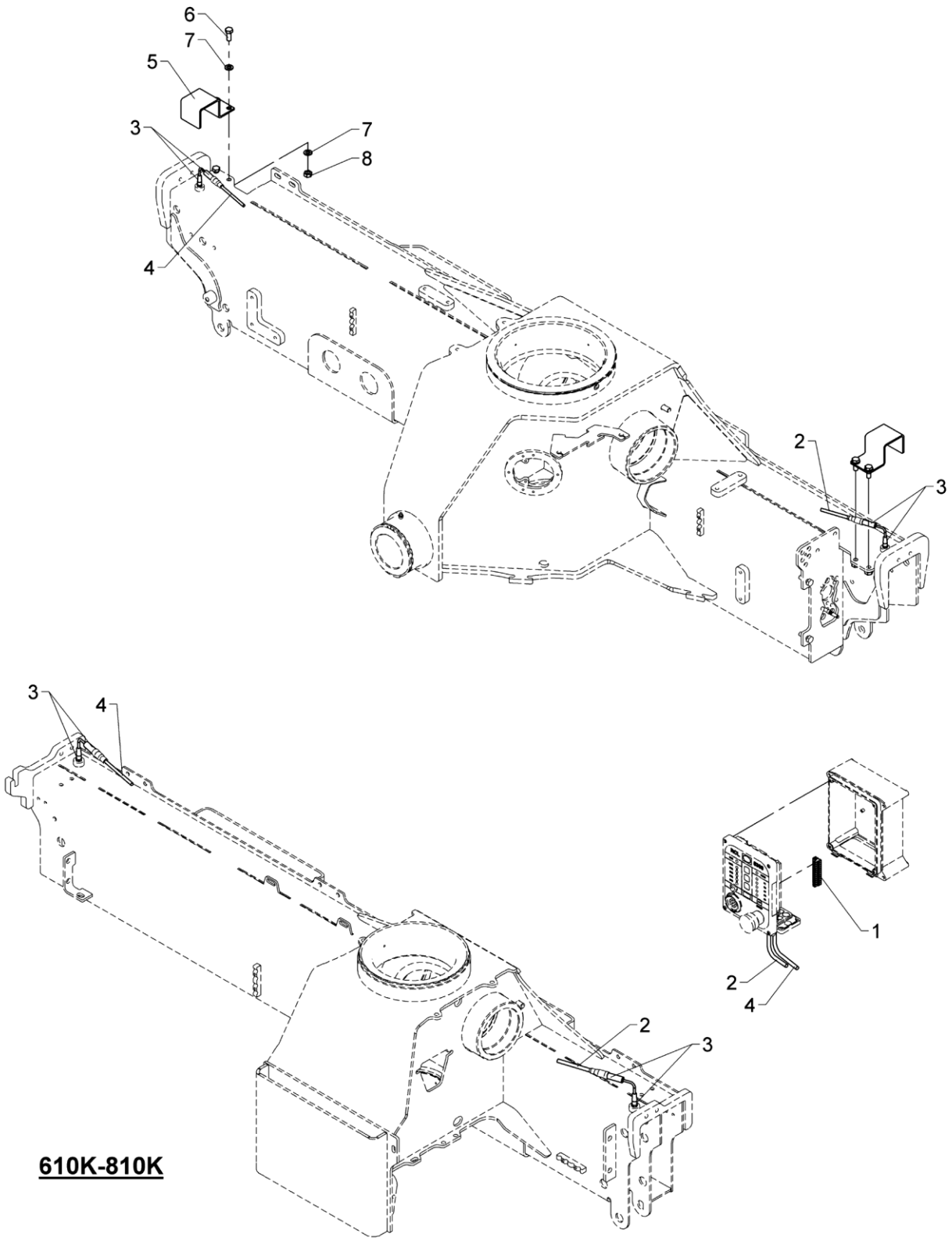

565 20 085

From loader 1440001
To loader

Created 01-03-2016
Modified 23-10-2017

CYL

An Oshkosh Corporation Company

Pos	Qty	Part no.	Description	Remarks
1	1	29322	Plug, 12-polar for RCL 53XX	
2	1	29223	Cable with socket, 2 m	
3	2	29282	Proximity switch M12-4mm NO	
4	1	29224	Cable with socket, 5 m	
5	2	6340654	Protective guard	
6	4	30155	Set screw	M10 x 25
7	8	31565	Washer, stainless	10 mm
8	4	30858	Nut	M10

2820K-RCS

Internal ref. 70 06 370

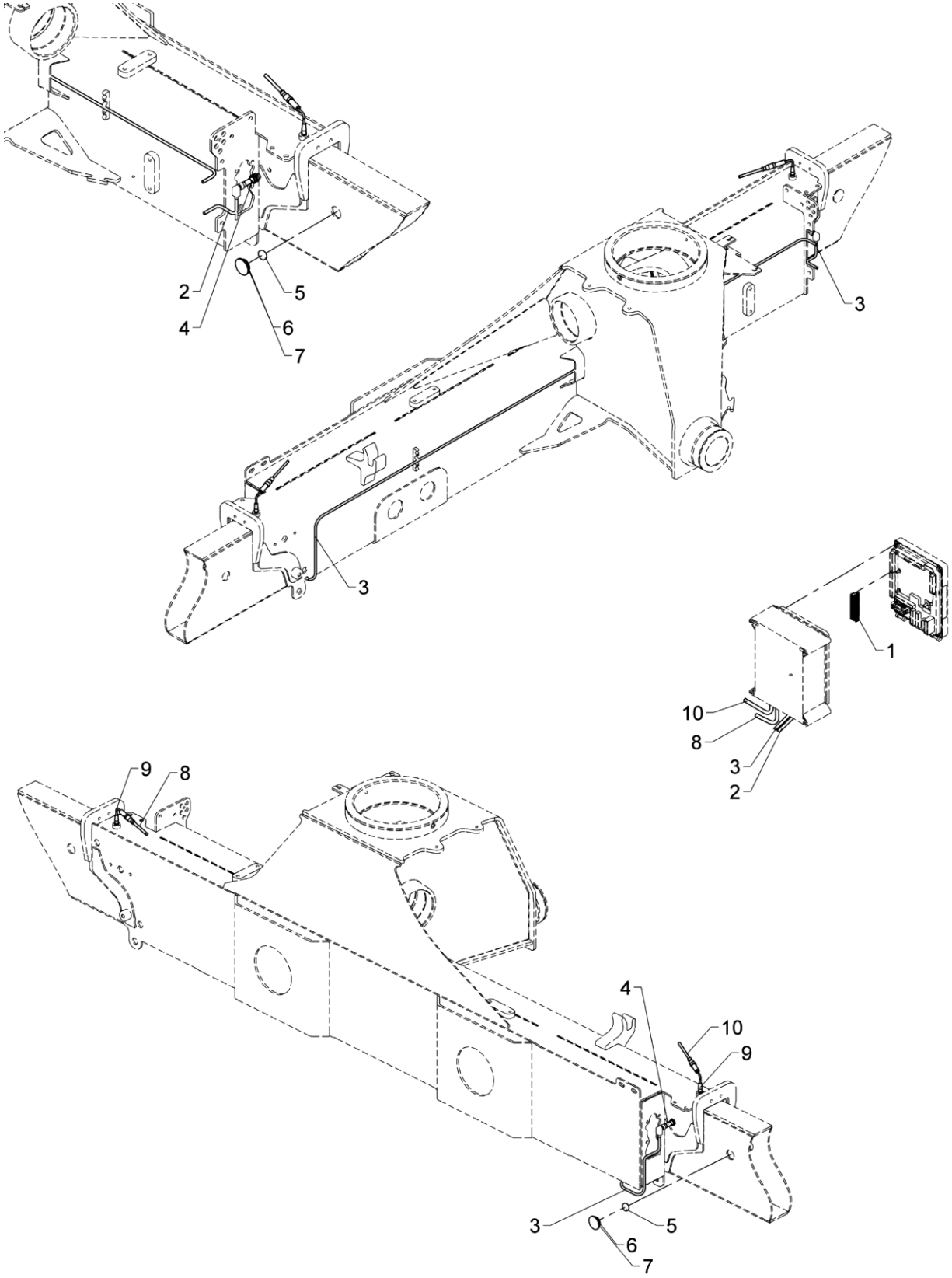

565 20 090

From loader 1440001
To loader

Created 26-02-2016
Modified

CYBELEC single extension

An Oshkosh Corporation Company

Pos	Qty	Part no.	Description	Remarks
1	1	29322	Plug, 12-polar for RCL 53XX	
2	1	28117	Cable with plug	
3	1	28077	Cable with plug	3,3
4	2	29259	Magnet proximity switch M12	
5	2	29262	Solenoid Ø22x5	
6	2	64424	Slide block	2 mm
7	2	63681	Slide block	3 mm
8	1	29223	Cable with socket, 2 m	
9	2	29282	Proximity switch M12-4mm NO	
10	1	29224	Cable with socket, 5 m	

2820K-RCS

Internal ref. 70 06 450

Position of 29253		
	CYBEL	CYBEL-I
A=4600	- - - - -	15
A=5570	- - - - -	22
A=6450	7	29

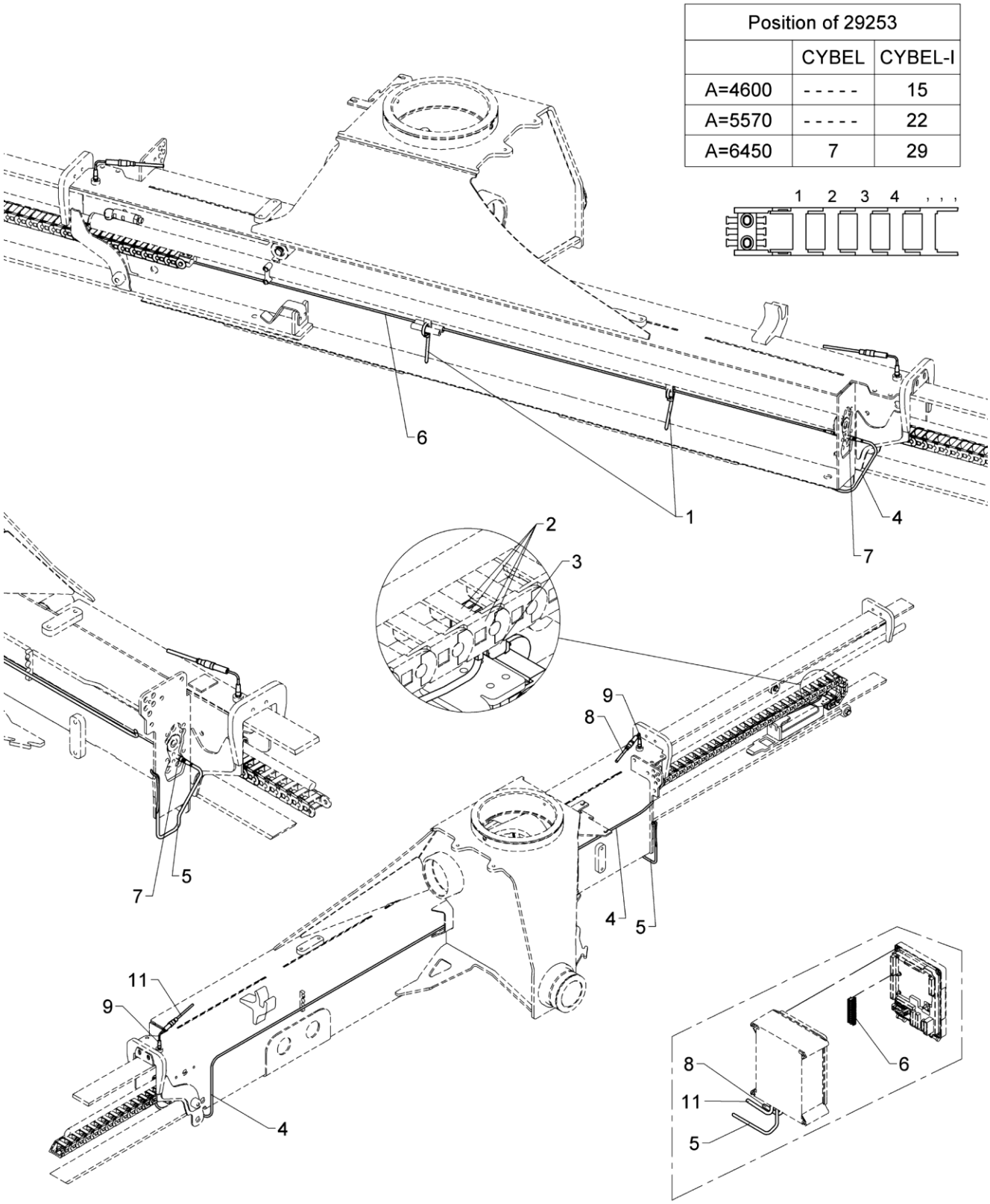

565 20 100

From loader 1440001
To loader

Created 26-02-2016
Modified 15-05-2017

CYBEL double extension

An Oshkosh Corporation Company

Pos	Qty	Part no.	Description	Remarks
1	4	27275	Cable tie, black, 7.6x385mm	
2	8	27274	Clip	
3	2	29253	Tilt switch, nylon drag chain	
4	1	29264	Cable 5 m, M8 socket	
5	1	29265	Cable 2 m, M8 socket	
6	1	29322	Plug, 12-polar for RCL 53XX	
7	2	29443	Panel lead-in M8 - 3-polar	
8	1	29223	Cable with socket, 2 m	
9	2	29282	Proximity switch M12-4mm NO	
10	1	29223	Cable with socket, 2 m	
11	1	29224	Cable with socket, 5 m	

2820K-RCS

Internal ref. 70 06 260

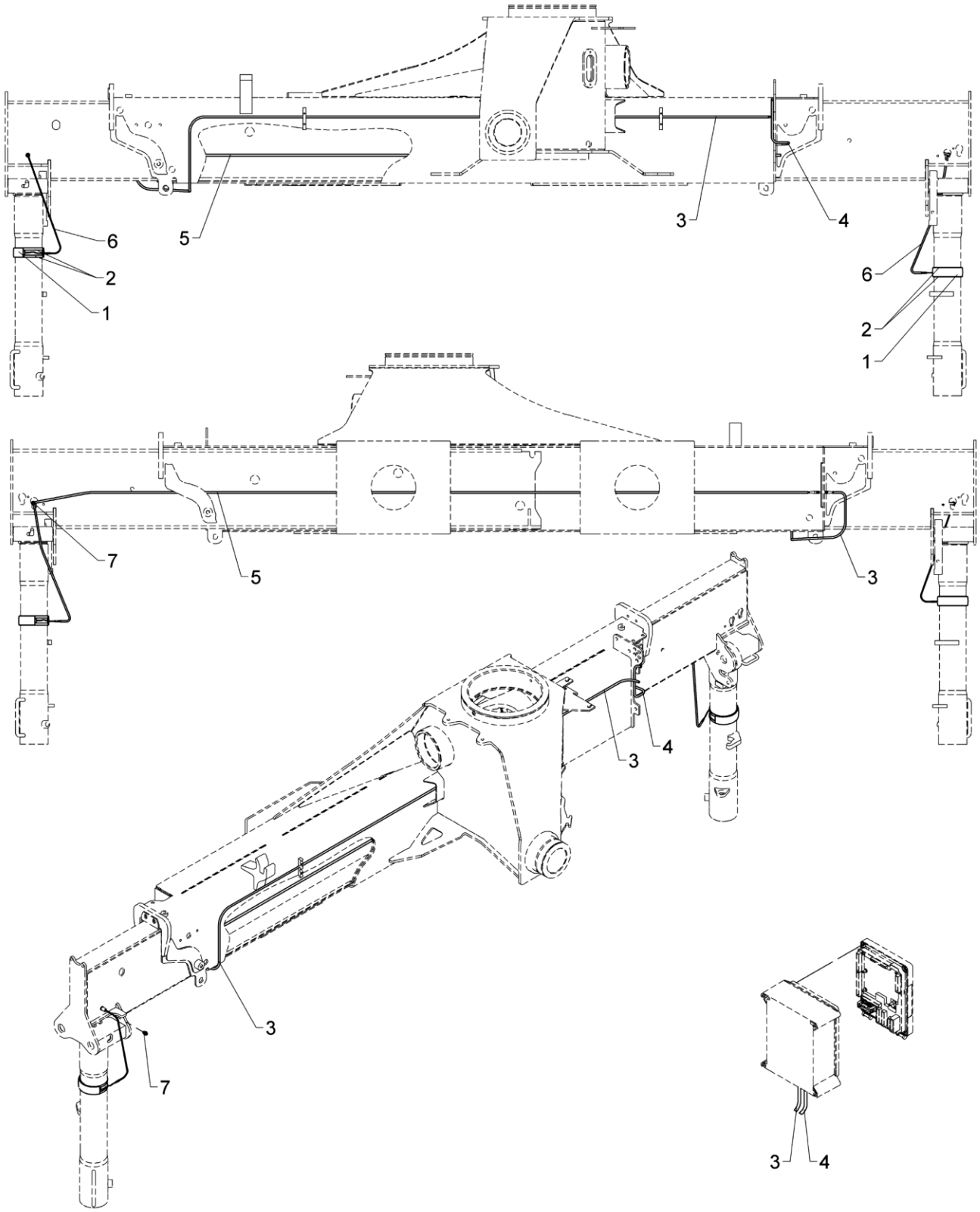

From loader 1440001
To loader

Created 18-02-2013
Modified

Alarm flash on stabilizer legs

An Oshkosh Corporation Company

Pos	Qty	Part no.	Description	Remarks
1	2	29432	Alarm flash, yellow 24V, 24 cm	
2	4	27275	Cable tie, black, 7.6x385mm	
3	1	29483	Cable M8, 5 m, female, 3 polar	
4	1	29482	Cable M8, 2 m, female, 3 polar	
5	2	29436	Cable M8, socket and plug 6.3m	
6	2	29444	Cable M8 - 3-polar	
7	2	29437	Safety plug M8x1, socket	

2820K-RCS

Internal ref. 70 06 590

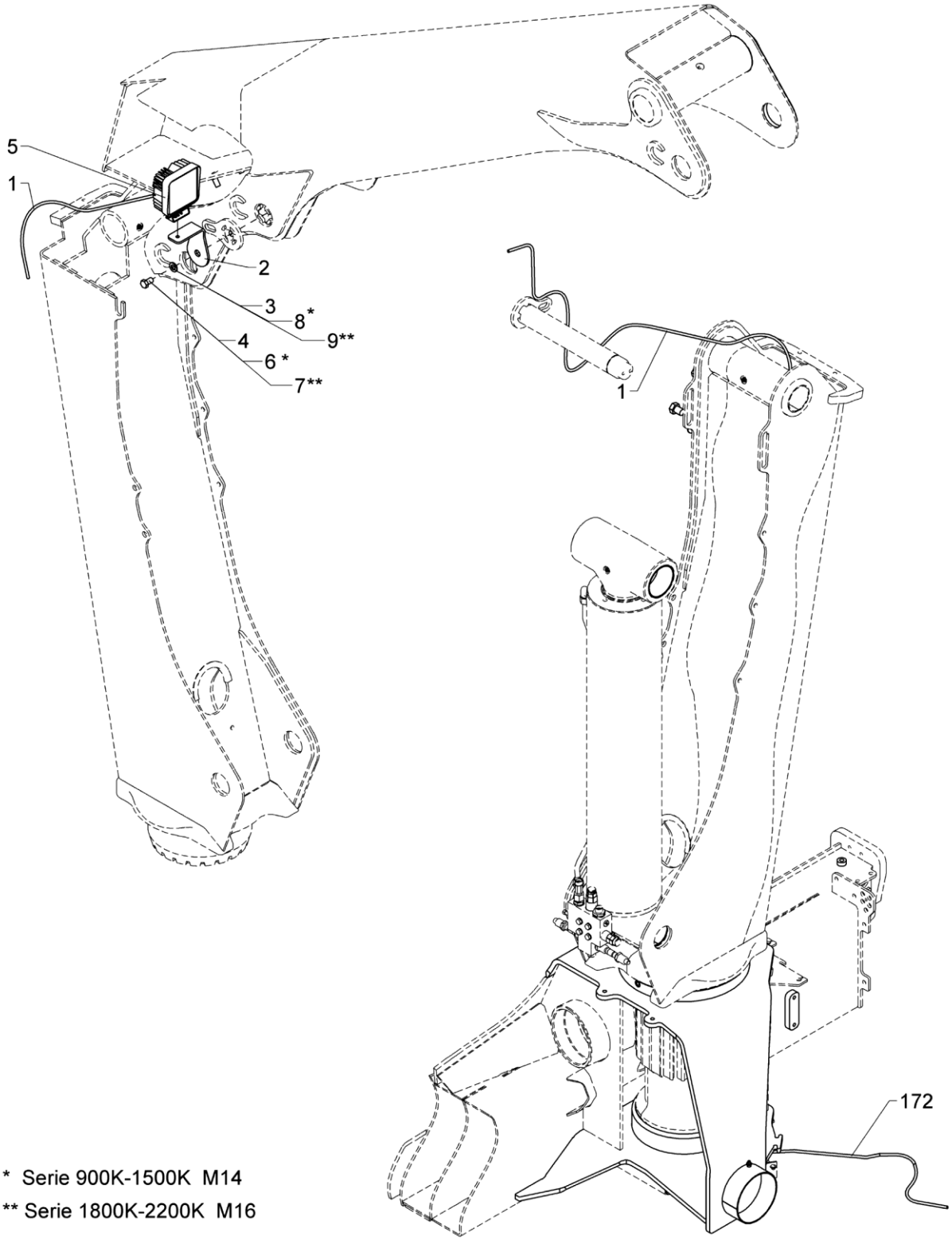

* Serie 900K-1500K M14

** Serie 1800K-2200K M16

565 20 150

From loader 1440001
To loader

Created 26-11-2012
Modified 26-06-2018

Spotlight, boom

An Oshkosh Corporation Company

Pos	Qty	Part no.	Description	Remarks
1	1	29462	Cable, LED spotlight, 9.0m	
2	1	6340219	Fittings	
3	1	32338	Washer	12 mm
4	1	30175	Set screw	M12 x 20
5	1	29400	Spotlight LED 27 W	
6	1	30204	Set screw	M14 x 20
7	1	32120	Set screw	M16 x 20
8	1	31195	Washer	14 mm
9	1	31196	Washer	16 mm

2820K-RCS

Internal ref. 70 06 580

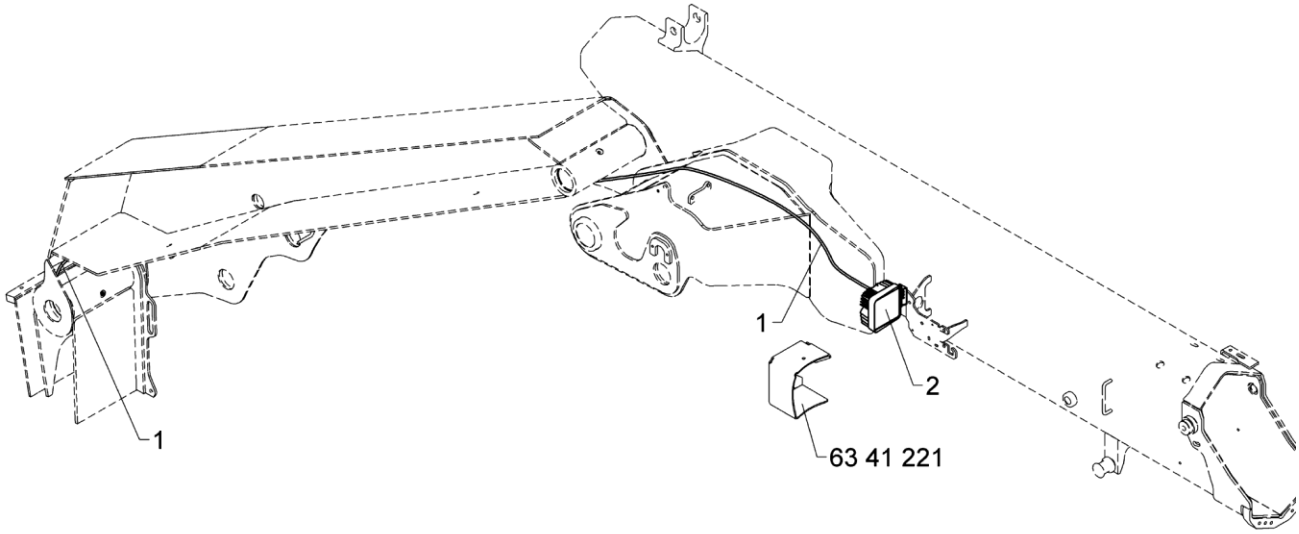

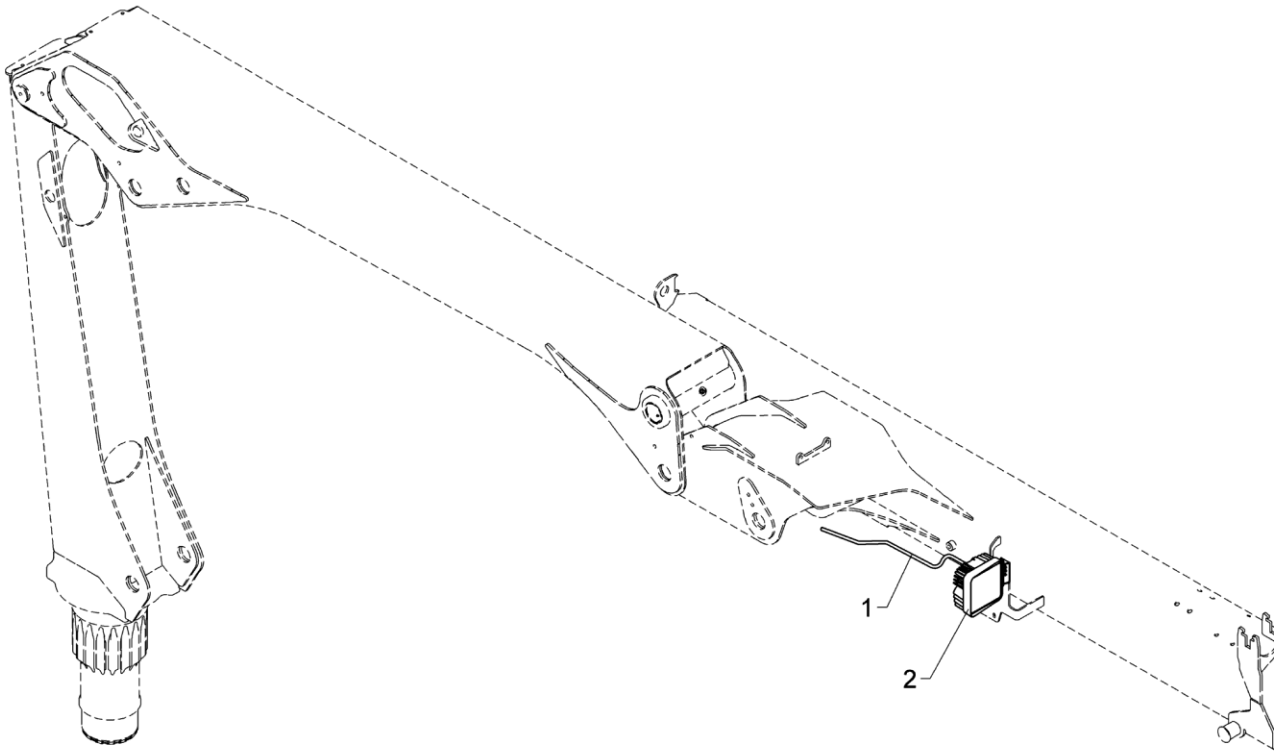

610K, 810K

565 20 160

From loader 1440001
To loader

Created 26-11-2012
Modified 25-11-2016

Spotlight, jib

Pos	Qty	Part no.	Description	Remarks
1	1	29462	Cable, LED spotlight, 9.0m	
2	1	29400	Spotlight LED 27 W	

An Oshkosh Corporation Company

2820K-RCS

Internal ref. 70 03 290

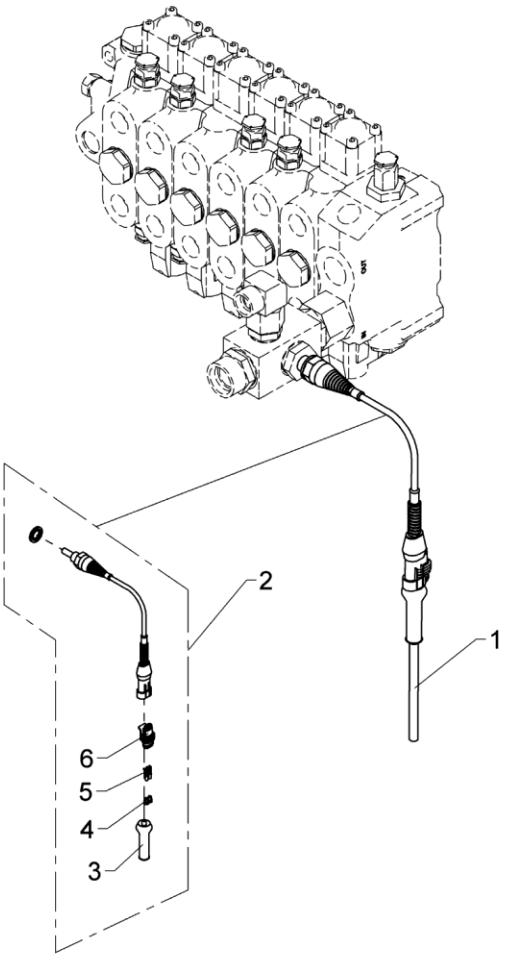

From loader 1440001
To loader

Created 20-02-2013
Modified 01-10-2015

Temperature monitoring without oil cooler

An Oshkosh Corporation Company

Pos	Qty	Part no.	Description	Remarks
1	1	28249	Cable 2 x 0.75	2 m
2	1	49652	Thermostat for RCL5300	
3	1	29888	Cover plate, 2-polar plug	
4	2	29159	Cable lead-in, AMP	
5	2	28844	Socket, AMP	
6	1	28843	Bipolar socket, AMP	

2820K-RCS

Internal ref. 70 03 300

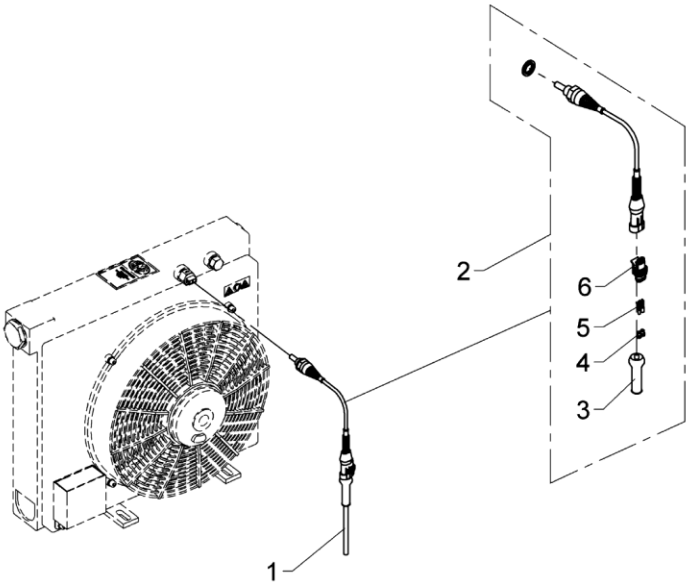

Temperature monitoring for oil cooler

An Oshkosh Corporation Company

Pos	Qty	Part no.	Description	Remarks
1	1	28249	Cable 2 x 0.75	3 m
2	1	49652	Thermostat for RCL5300	
3	1	29888	Cover plate, 2-polar plug	
4	2	29159	Cable lead-in, AMP	
5	2	28844	Socket, AMP	
6	1	28843	Bipolar socket, AMP	

2820K-RCS

70 09 000
Internal ref. 70 08 990

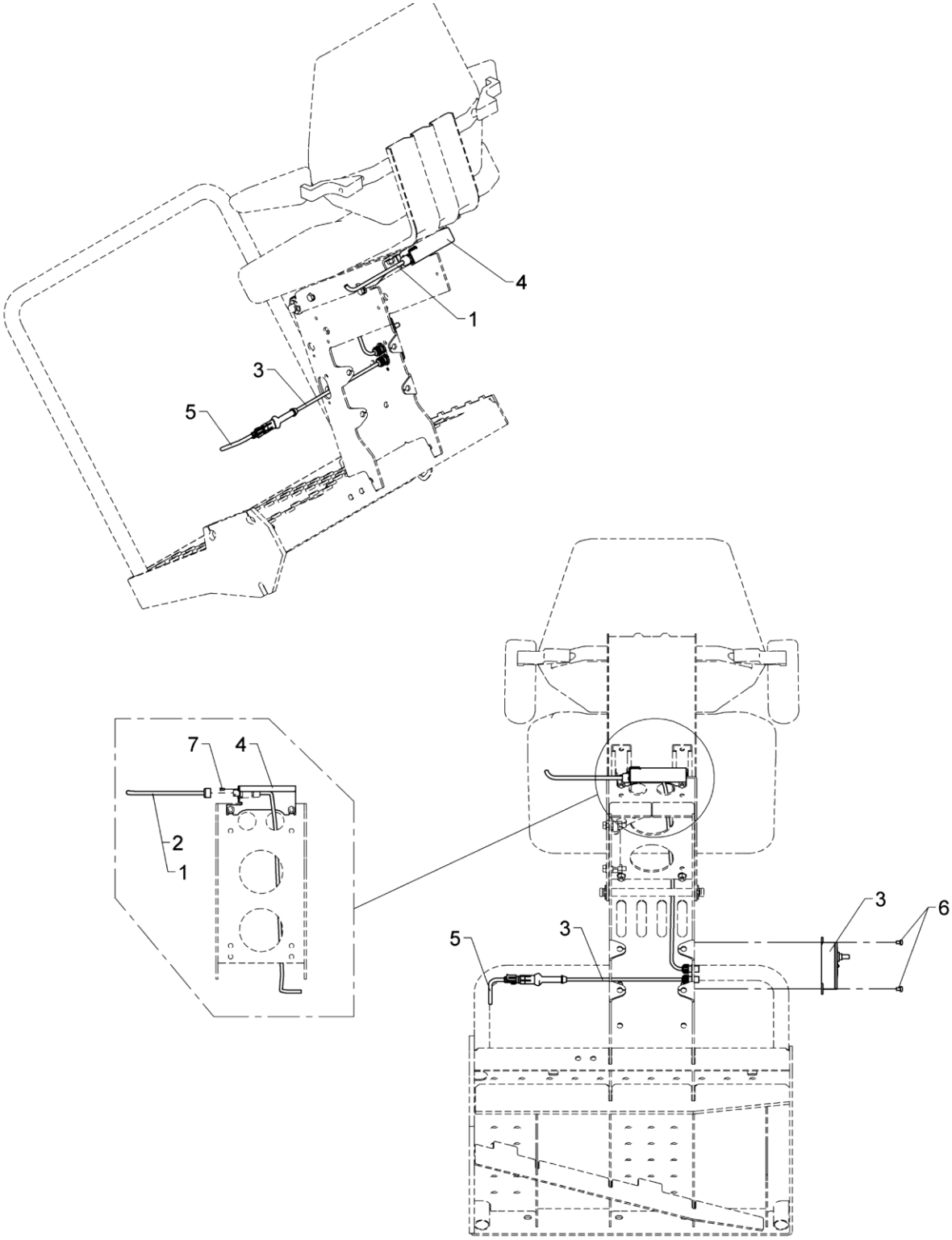

Heated seating 12V/24V

An Oshkosh Corporation Company

Pos	Qty	Part no.	Description	Remarks
		7008990		
		7009000		
1	1	24135	Heating cover 24 v.	
2	1	24137	Seat cover 12 V	
3	1	29588	Control box, heated seat	
4	1	7004026	Fittings, plug for heated seat	
5	1	29462	Cable, LED spotlight, 9.0m	
6	2	31032	Screw, stainless M 5 x 8	
7	3	31048	Taptite screw M3 x 6	M3 x 6

2820K-RCS

Internal ref. 70 02 390

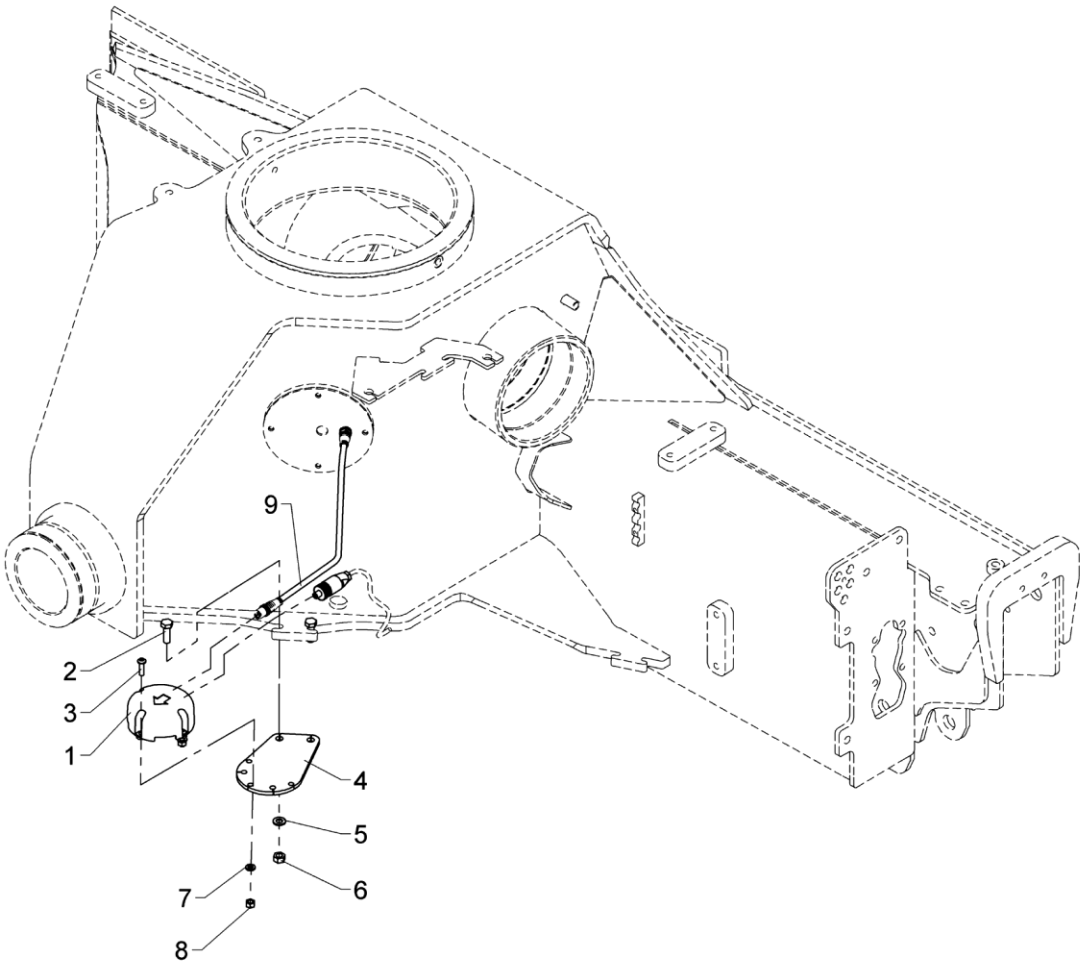

EVS

An Oshkosh Corporation Company

Pos	Qty	Part no.	Description	Remarks
1	1	29426	Electronic inclinometer,single	
2	2	30134	Set screw, stainless	M8 x 25
3	3	32491	Round-head screw	M6 x 20
4	1	6340274	Mounting fittings (AIC 5062)	
5	2	31147	Face washer, 8 mm	
6	2	30856	Nut, stainless	M8
7	3	32302	Face washer, stainless	6 mm
8	3	30884	Lock nut, stainless	M6
9	1	29735	CAN cable extension 0.6m	

2820K-RCS

Internal ref. 70 07 990

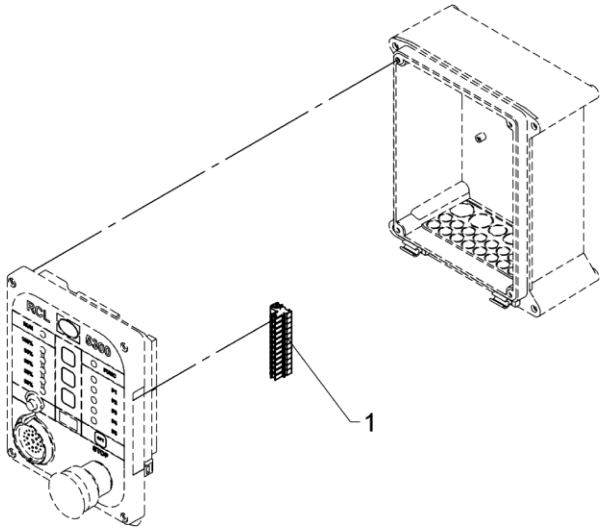

565 20 220

From loader 1440001
To loader

Created 24-05-2013
Modified

PAS

Pos	Qty	Part no.	Description	Remarks
1	1	29322	Plug, 12-polar for RCL 53XX	

An Oshkosh Corportation Company

2820K-RCS

63 47 230
Internal ref. 63 47 210

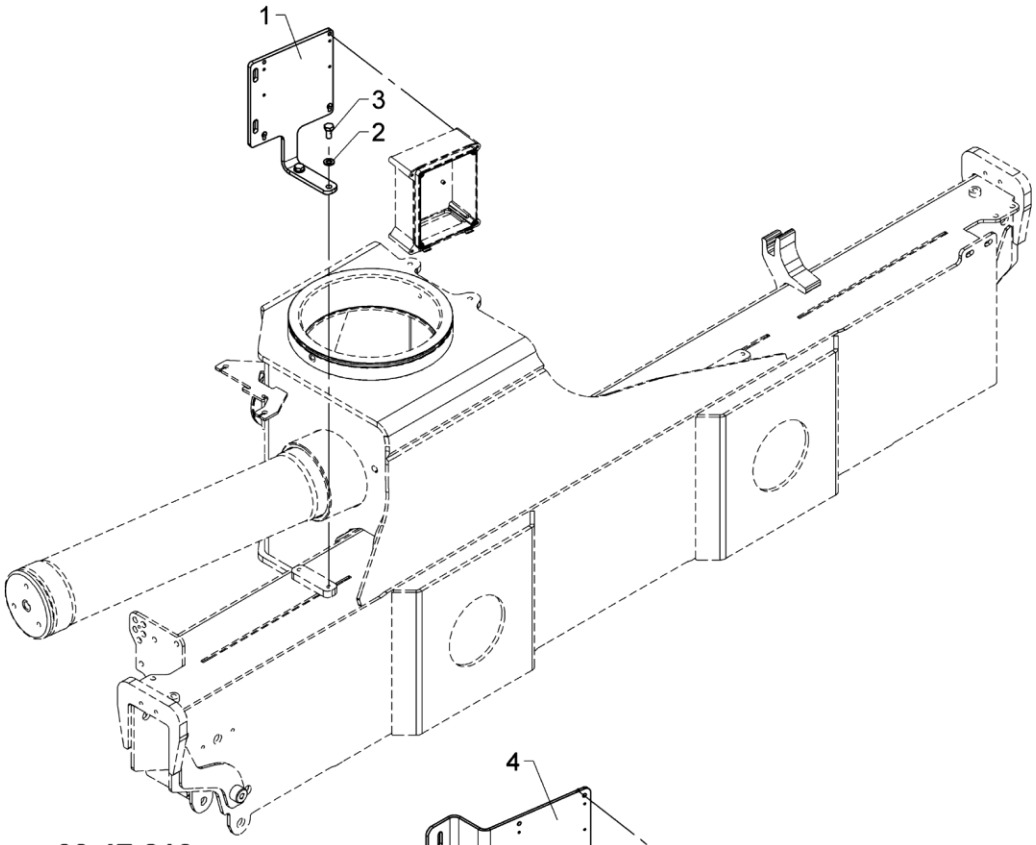

63 47 210

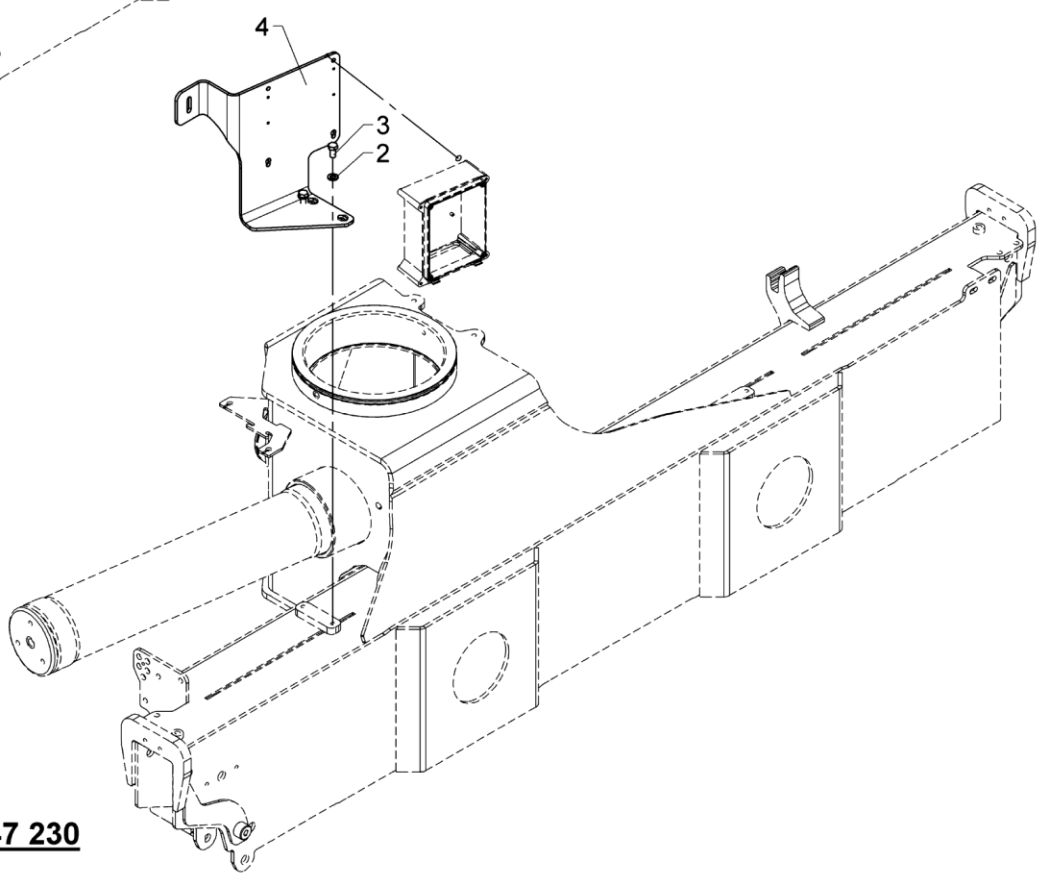

63 47 230

565 20 250

From loader 1440001
To loader

Created 22-09-2017
Modified

Mounting fittings for junction box, RCS

An Oshkosh Corporation Company

Pos	Qty	Part no.	Description	Remarks
		6347210		
		6347230		
1	1	6340939	Fittings, connection box	
2	2	31177	Washer	10 mm
3	2	31517	Set screw, stainless	M10 x 20
4	1	6344454	Mount. bracket,stand-up ctrls	

2820K-RCS

Internal ref. 70 04 210

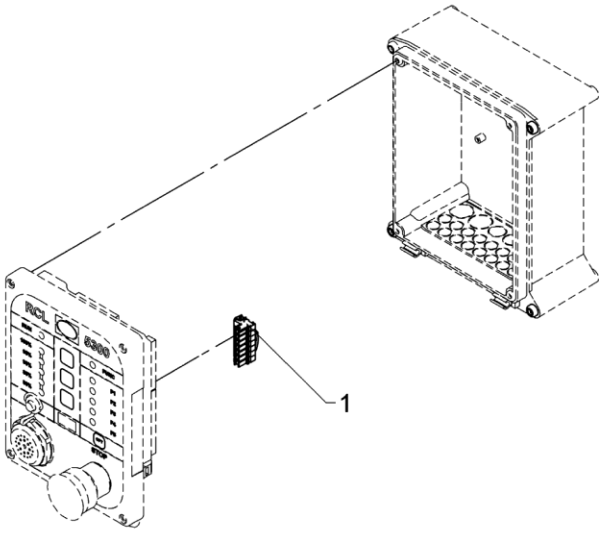

565 20 340

From loader 1440001
To loader

Created 15-01-2013
Modified

CAN termination, RCL53xx

Pos	Qty	Part no.	Description	Remarks
1	1	29340	CAN termination/RCL53xx	

An Oshkosh Corportation Company

2820K-RCS

70 03 210
70 04 340
70 04 220
Internal ref. 70 05 310

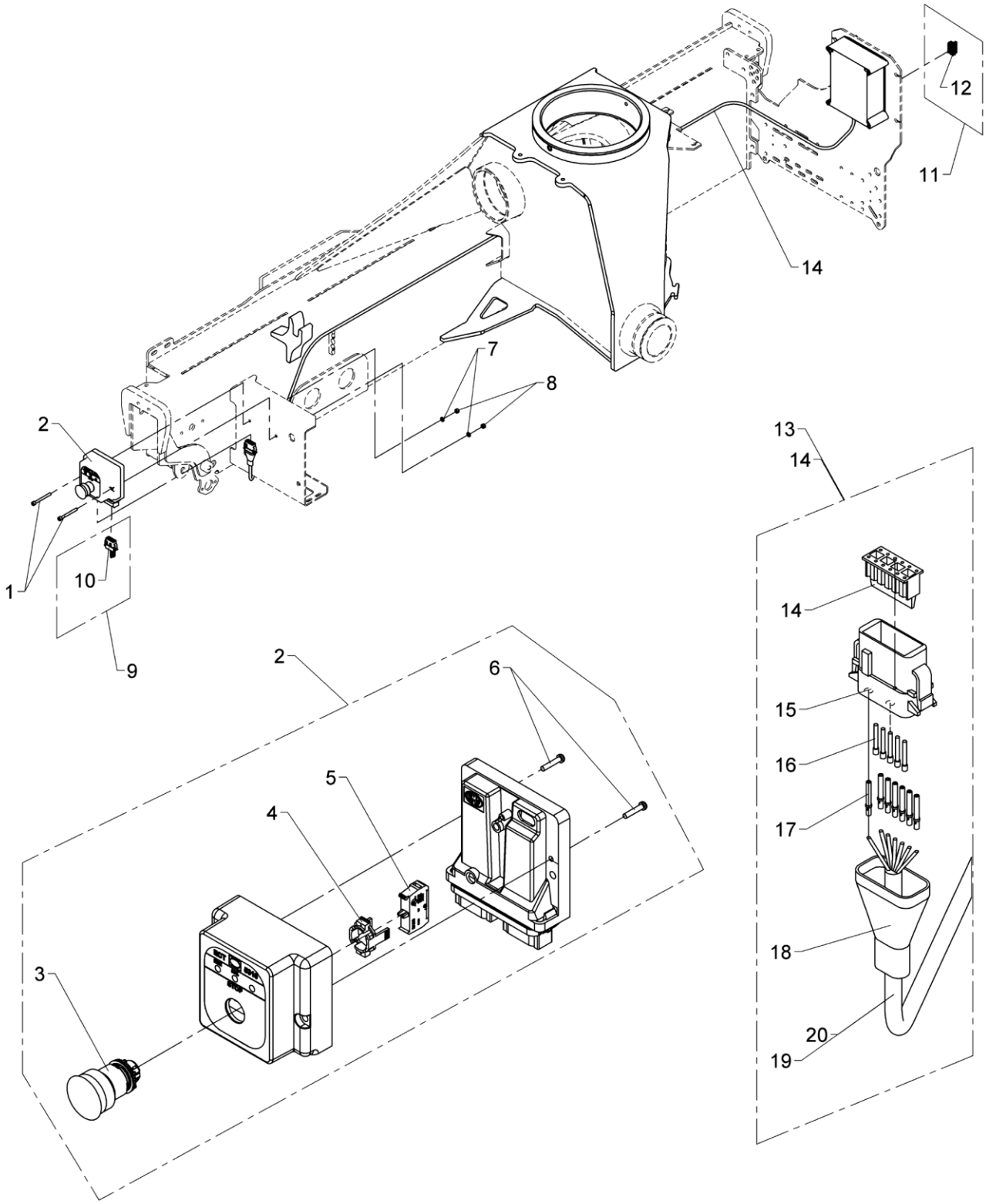

ECT 5310 on the side of the dual controls.

An Oshkosh Corporation Company

Pos	Qty	Part no.	Description	Remarks
		7005310	ECT 5310, opposite valve block	
		7004220	CAN termination ECT5310	
		7004340	Plug, 7-polar for RCL	
		7003210		900K,.1130,,..1100K,..1330K
1	2	30441	Screw	MC6 x 60
2	1	29335	ECT5310 external stop button	
3	1	29196	Stop button	
4	1	29198	Attachment, stop button	
5	1	29197	Switch element, stop button	
6	2	30346	Screw, stainless	4,0 x 20
7	2	32302	Face washer, stainless	6 mm
8	2	30884	Lock nut, stainless	M6
9	1	7004220	CAN termination ECT5310	
10	1	29342	CAN termination ECT	
11	1	7004340	Plug, 7-polar for RCL	
12	1	29318	Plug, 7-polar for RCL 53XX	
13	1	7003040	4.5 m CAN+STOP cable ECT5310	900K,.1130,,..1100K,..1330K
14	1	7003030	3.5 m CAN+STOP cable ECT5310	
14	1	29328	Lock for plug for ECT5310	
15	1	29326	Plug, type A for ECT5310	
16	5	29339	Sealing for plug for ECT5310	
17	7	29329	Pin for plug for ECT5310	
18	1	28566	Insulation, black	10 cm
19	1	28263	CAN BUS cable	3,5 m
20	1	28263	CAN BUS cable	4,5 m / 900K,.1130,,..1100K,..1330

2820K-RCS

70 07 940
70 07 930
Internal ref. 70 06 300

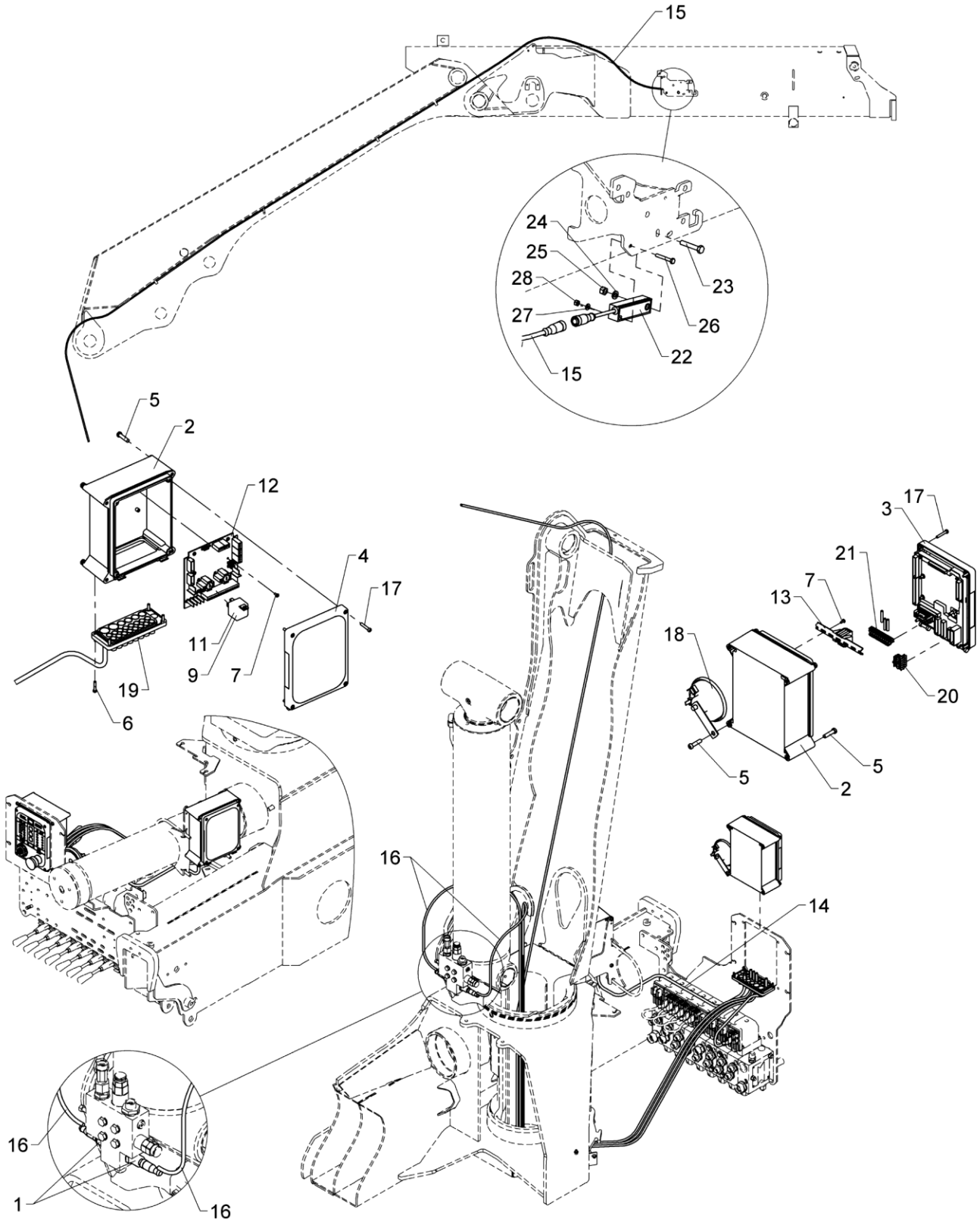

Basic electronic parts, crane with RC

An Oshkosh Corporation Company

Pos	Qty	Part no.	Description	Remarks
		7006300	Basic parts, crane + RC	
		7007930	Relay, 12 V	
		7007940	Relay, 24 V	
1	2	28850	Pressure transducer	
2	2	29304	Bottom f. RCL-box incl. hinge	
3	1	29301	Front complete, RCL 5300	
4	1	29347	RCL 5300 indicator panel	
5	9	30340	Screw, stainless	6,0 x 25
6	8	30346	Screw, stainless	4,0 x 20
7	8	30361	Screw, stainless	3,0 x 8
8	1	7007940	Relay, 24 V	
9	1	27342	Relay, 24V	
10	1	7007930	Relay, 12 V	
11	1	27340	Relay, 12 V	
12	1	29473	EJB5380	
13	1	7006306	Terminal block for RCL + RC	
14	1	28751	Wiring, PVSK-M	
15	1	28730	Cable + socket, 10 m	9,0 m
16	2	29224	Cable with socket, 5 m	6,0 m
17	8	30347	Screw, stainless	4,0 x 25
18	1	28971	Horn, 24 V, 2.5 Amp.	
19	1	29307	Cable lead-in	
20	1	29341	CAN termination FJC	
21	1	29321	Plug, 10-polar for RCL 53XX	
22	1	29295	Tilt sensor + 0.25 m cable	
23	1	30116	Steel pin, stainless	M6 x 35
24	1	32302	Face washer, stainless	6 mm
25	1	30884	Lock nut, stainless	M6
26	1	31790	Set screw M4 x 30	M4 x 30
27	1	31188	Washer, stainless	4 mm
28	1	30857	Lock nut	M4

2820K-RCS

Internal ref. 70 09 460

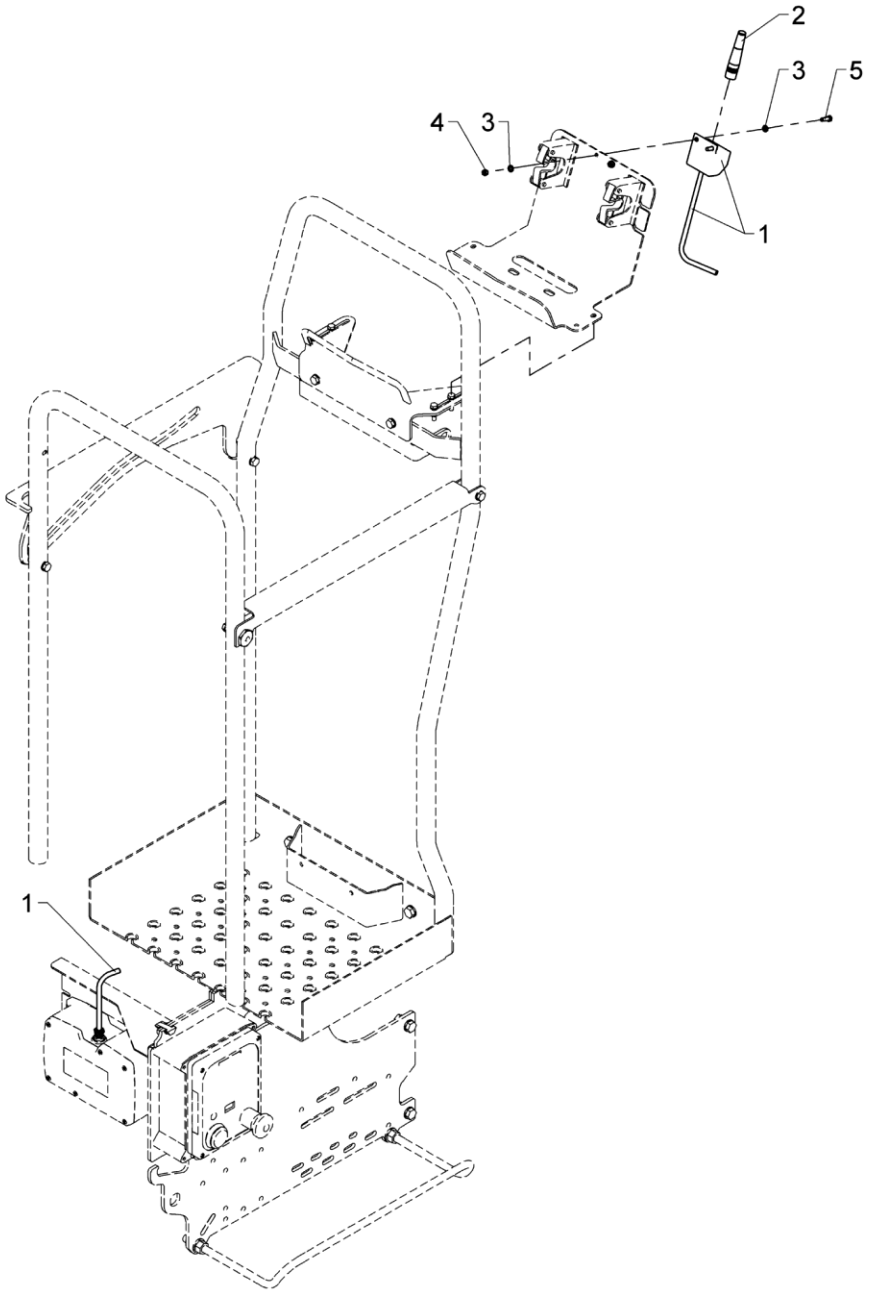

565 22 025

From loader 1440001
To loader

Created 11-05-2017
Modified

Antenna HSRC

An Oshkosh Corporation Company

Pos	Qty	Part no.	Description	Remarks
1	1	56724	Antenna cable 2.5 m	
2	1	58136	Antenna	
3	4	32308	Washer	5 mm
4	2	30853	Nut, stainless	M5
5	2	30121	Set screw	M5 x 16

2820K-RCS

Internal ref. 70 02 350

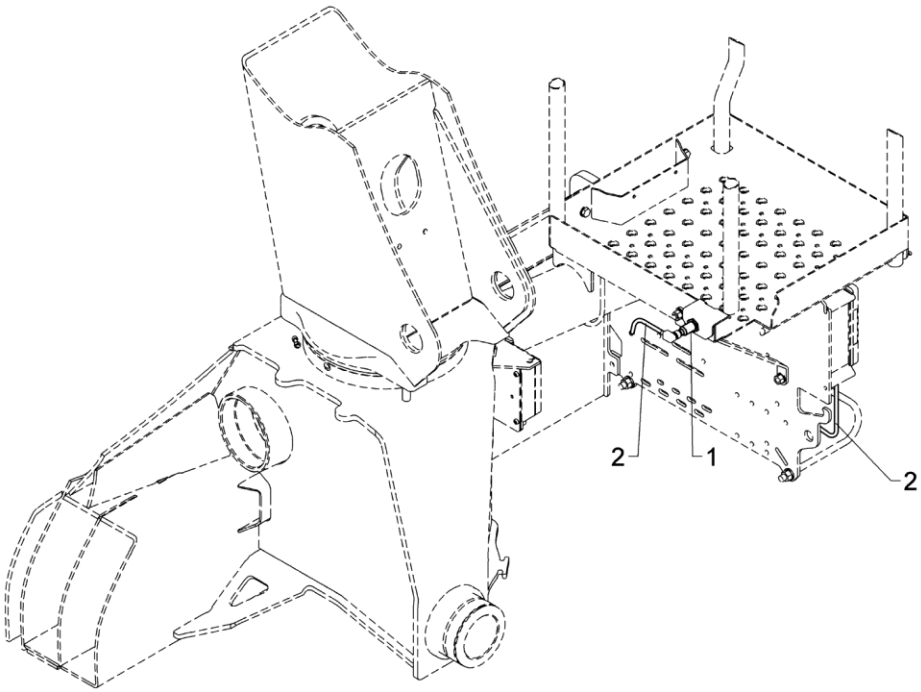

565 22 070

From loader 1440001
To loader

Created 26-09-2018
Modified

Pos	Qty	Part no.	Description	Remarks
1	1	28210	Proximity switch	
2	1	28117	Cable with plug	

An Oshkosh Corporation Company

2820K-RCS

Internal ref. 70 02 360

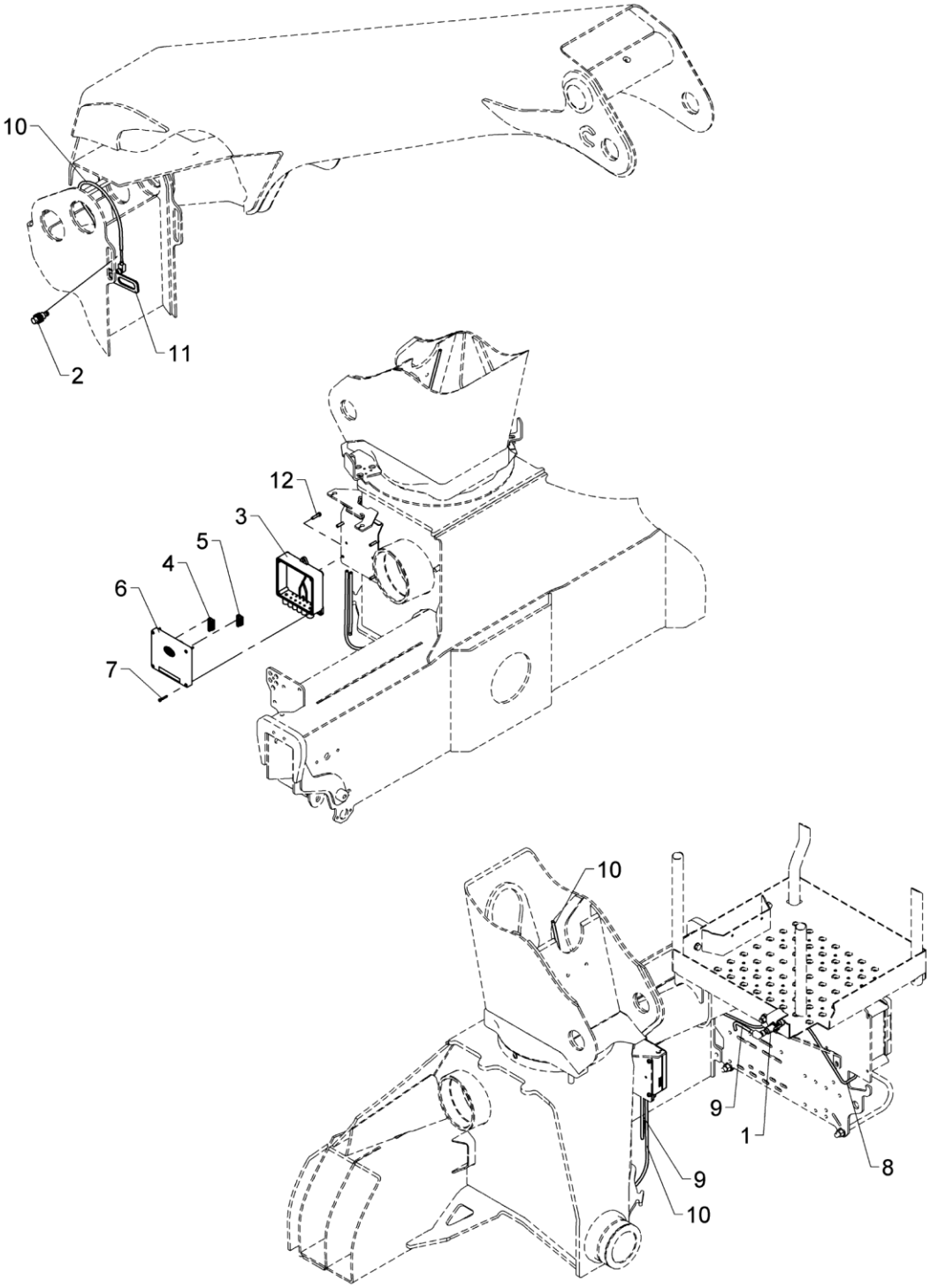

HSL-E 24

An Oshkosh Corporation Company

Pos	Qty	Part no.	Description	Remarks
1	1	28210	Proximity switch	
2	1	28980	Proximity switch	
3	1	29313	Bottom f. Fly-Jib box	
4	1	29324	Plug, 6-polar for RCL 53XX	
5	1	29317	Plug, 5-polar for RCL 53XX	
6	1	29346	CIO5376 controller cover cpl.	
7	4	30347	Screw, stainless	4,0 x 25
8	1	28263	CAN BUS cable	2 m
9	1	28117	Cable with plug	
10	1	28077	Cable with plug	
11	1	6306803	Bracket for proximity switch	
12	4	30340	Screw, stainless	6,0 x 25

2820K-RCS

Internal ref. 70 02 370

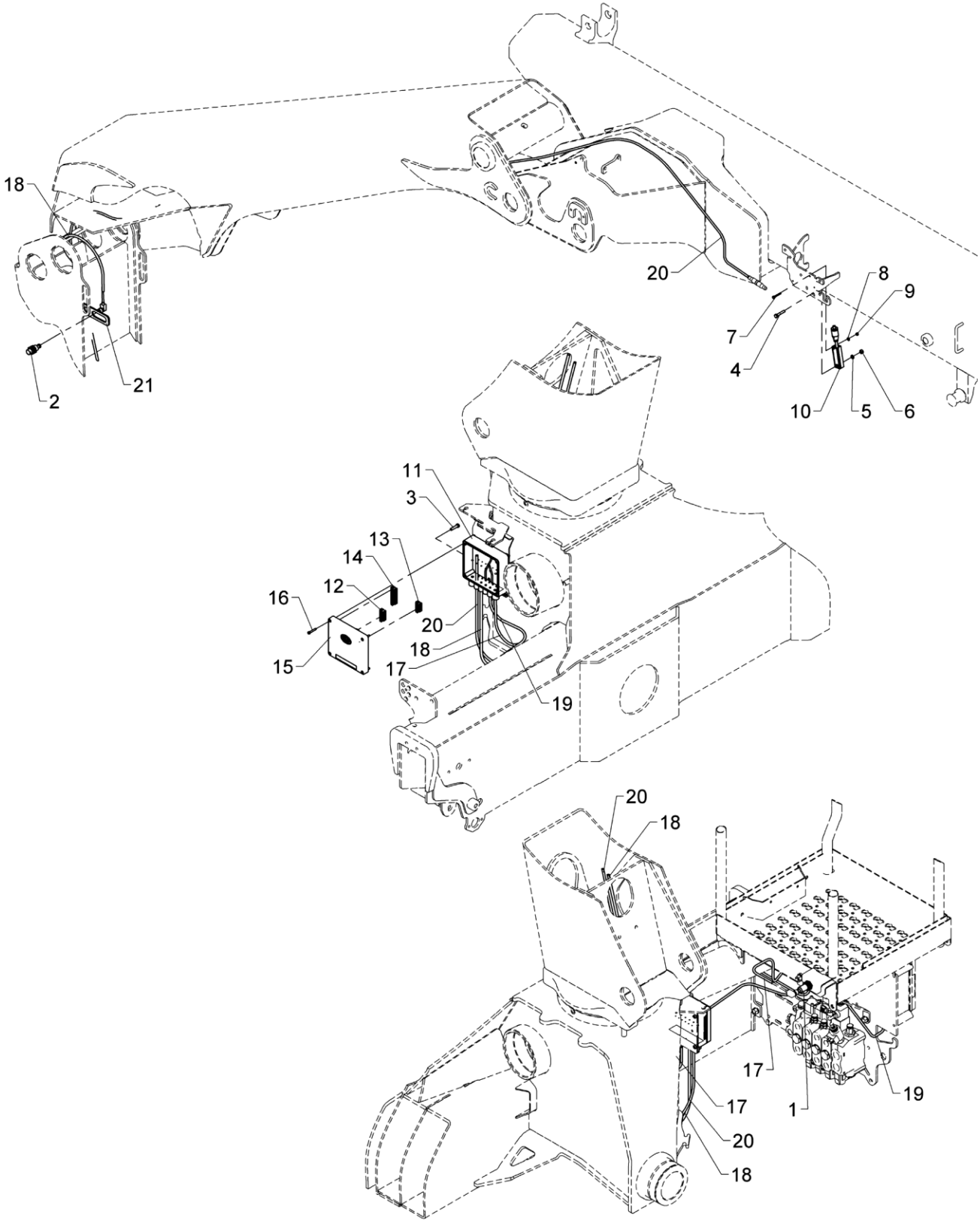

HSL-O RC G4

An Oshkosh Corporation Company

Pos	Qty	Part no.	Description	Remarks
1	1	28210	Proximity switch	
2	1	28980	Proximity switch	
3	4	30340	Screw, stainless	6,0 x 25
4	1	30116	Steel pin, stainless	M6 x 35
5	1	32302	Face washer, stainless	6 mm
6	1	30884	Lock nut, stainless	M6
7	1	31790	Set screw M4 x 30	M4 x 30
8	1	31188	Washer, stainless	4 mm
9	1	30857	Lock nut	M4
10	1	29295	Tilt sensor + 0.25 m cable	
11	1	29313	Bottom f. Fly-Jib box	
12	1	29324	Plug, 6-polar for RCL 53XX	
13	1	29317	Plug, 5-polar for RCL 53XX	
14	1	29321	Plug, 10-polar for RCL 53XX	
15	1	29346	CIO5376 controller cover cpl.	
16	4	30347	Screw, stainless	4,0 x 25
17	1	28117	Cable with plug	
18	1	28077	Cable with plug	
19	1	28263	CAN BUS cable	2 m
20	1	28730	Cable + socket, 10 m	
21	1	6306803	Bracket for proximity switch	

2820K-RCS

Internal ref. 70 06 390

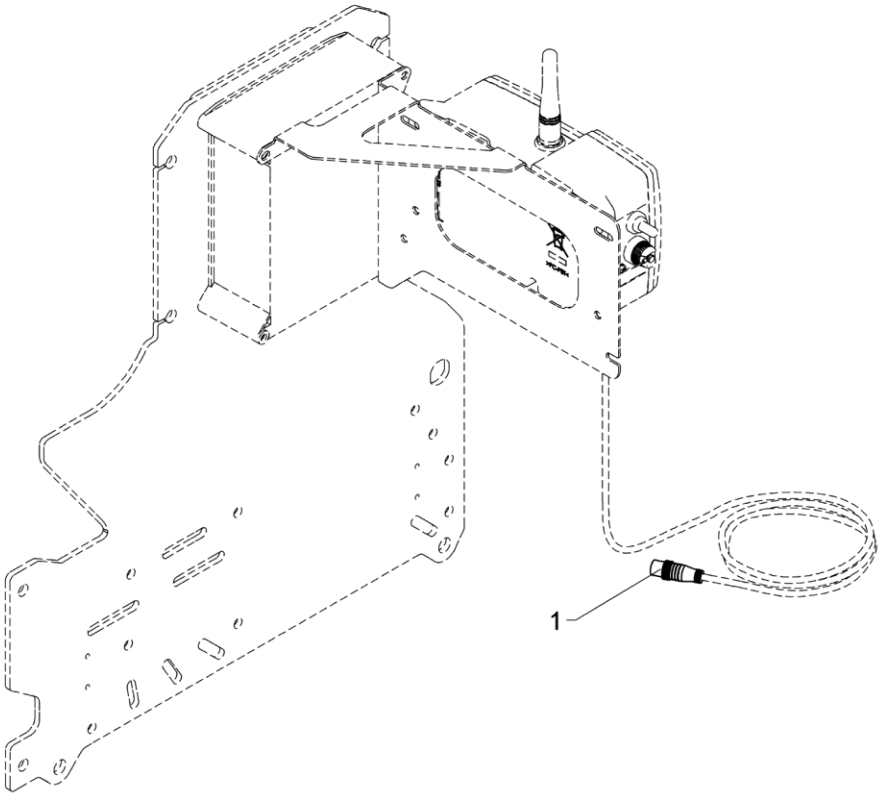

565 22 120

From loader 1440001
To loader

Created 03-09-2012
Modified

Termination, G2

Pos	Qty	Part no.	Description	Remarks
1	1	29486	Plug M12, termination	

An Oshkosh Corportation Company

2820K-RCS

70 06 490
Internal ref. 70 06 480

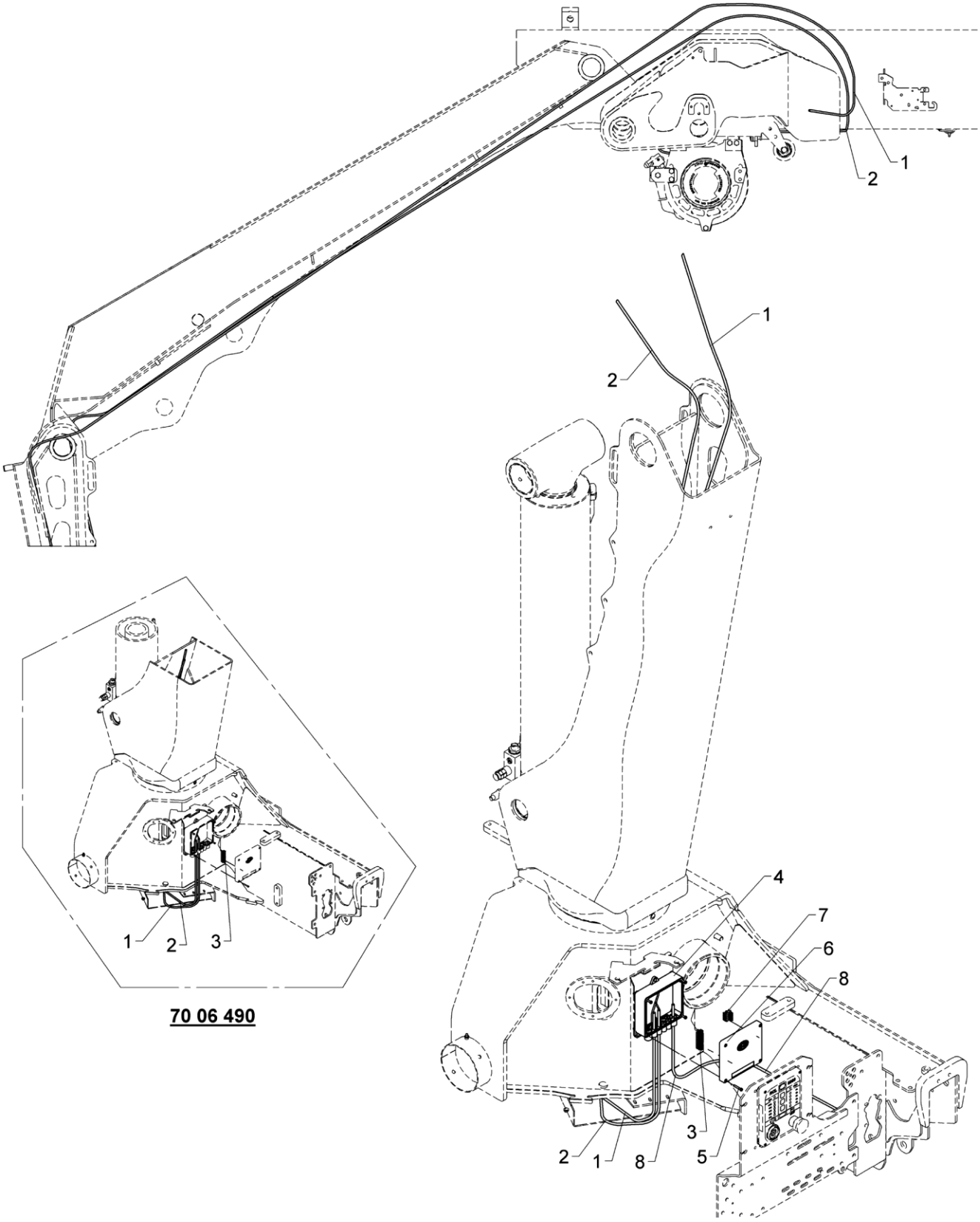

565 22 130

From loader 1440001
To loader

Created 13-06-2012
Modified

Winch electric parts

An Oshkosh Corporation Company

Pos	Qty	Part no.	Description	Remarks
1	1	28249	Cable 2 x 0.75	10 m
2	1	28730	Cable + socket, 10 m	
3	1	29321	Plug, 10-polar for RCL 53XX	
4	1	29313	Bottom f. Fly-Jib box	
5	4	30347	Screw, stainless	4,0 x 25
6	1	29346	CIO5376 controller cover cpl.	
7	1	29317	Plug, 5-polar for RCL 53XX	
8	1	28263	CAN BUS cable	2,0 m
9	4	30340	Screw, stainless	6,0 x 25

2820K-RCS

Internal ref. 70 03 630

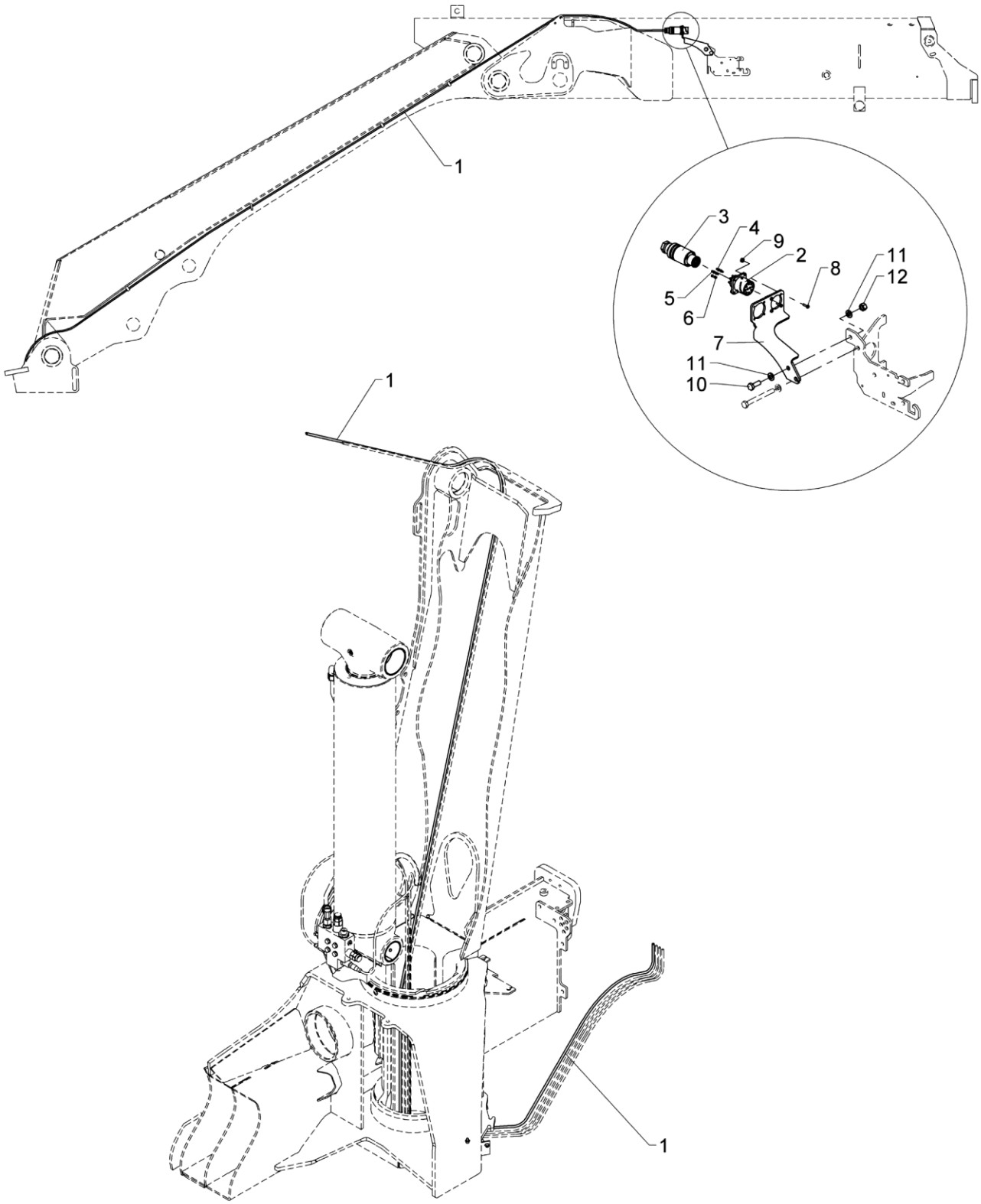

565 22 140

From loader 1440001
To loader

Created 12-01-2016
Modified

Column Fly-Jib

An Oshkosh Corporation Company

Pos	Qty	Part no.	Description	Remarks
1	1	28263	CAN BUS cable	9 m
2	1	29628	Socket 10-polar	
3	1	29635	Housing, Socket, short	
4	5	29633	Pin, female, 0,75mm² - 1,5mm²	
5	2	29631	Pin, female, 0,32-0,52 mm²	
6	3	29638	Sealing	
7	1	7004032	Bracket, FJ + MEWP plug	
8	4	32386	Screw M3 x 12 stainless	M3 x 12
9	4	32387	Lock nut M3 stainless	M3
10	1	30133	Set screw, stainless	
11	2	31147	Face washer, 8 mm	
12	1	30886	Lock nut, stainless	M8

2820K-RCS

Internal ref. 70 02 410

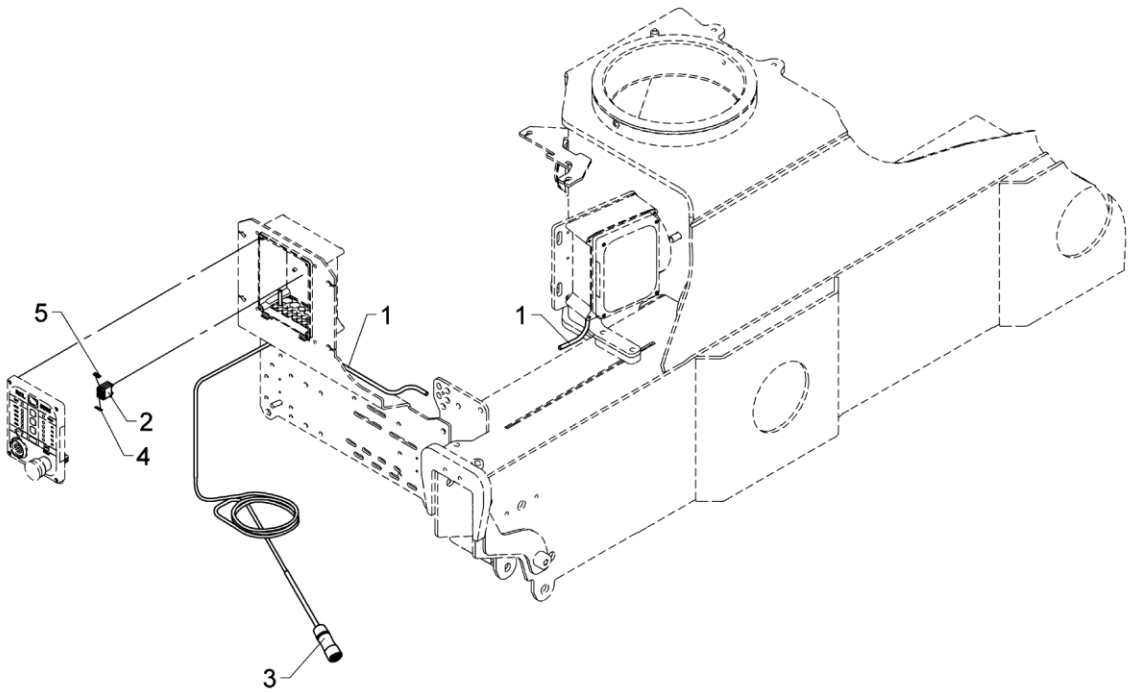

565 22 150

From loader 1440001
To loader

Created 01-10-2018
Modified

Supply separate traverse

An Oshkosh Corporation Company

Pos	Qty	Part no.	Description	Remarks
1	1	28262	Cable 4 x 0.75	2,0 m
2	3	28010	Terminal	
3	1	7002312		
4	1	28019	Labels nos. 1-10	
5	1	28965	Dekafix labels 21-30	

2820K-RCS

Internal ref. 70 06 560

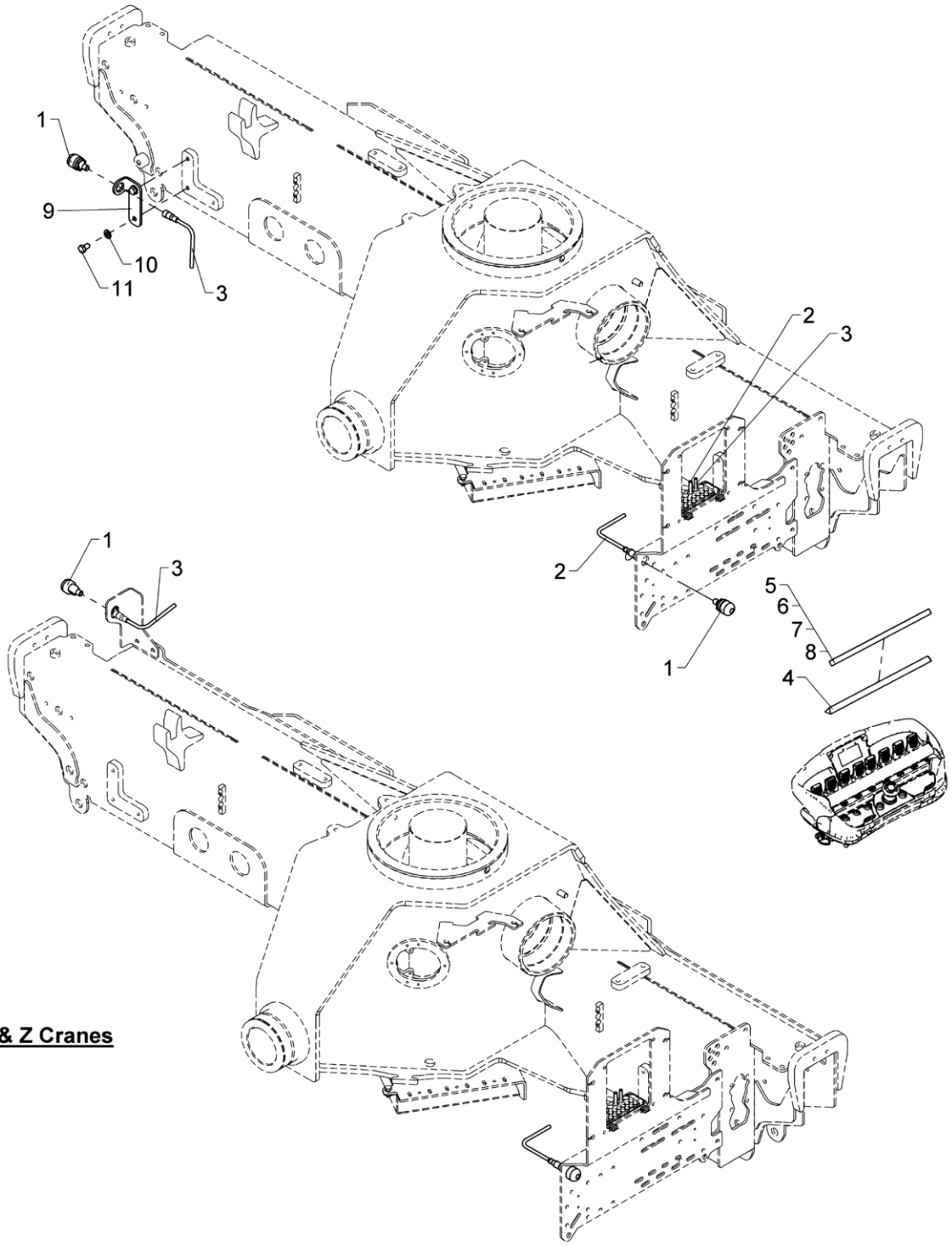

T & Z Cranes

Stabilizer operation via RC (without CIO)

An Oshkosh Corporation Company

Pos	Qty	Part no.	Description	Remarks
1	2	29498	Touch button with light	
2	1	29223	Cable with socket, 2 m	
3	1	29224	Cable with socket, 5 m	
4	1	63512	Rail for label	
5	1	66454	Operating label	8 funk.
6	1	68901	Operating label	2 funk.
7	1	68902	Operating label	6 funk.
8	1	68903	Operating label	4 funk.
9	1	6340639	Mounting fittings (light)	
10	2	31565	Washer, stainless	10 mm
11	2	31510	Set screw, stainless	M10 x 16

2820K-RCS

70 04 330
70 04 320
70 04 310
Internal ref. 70 04 300

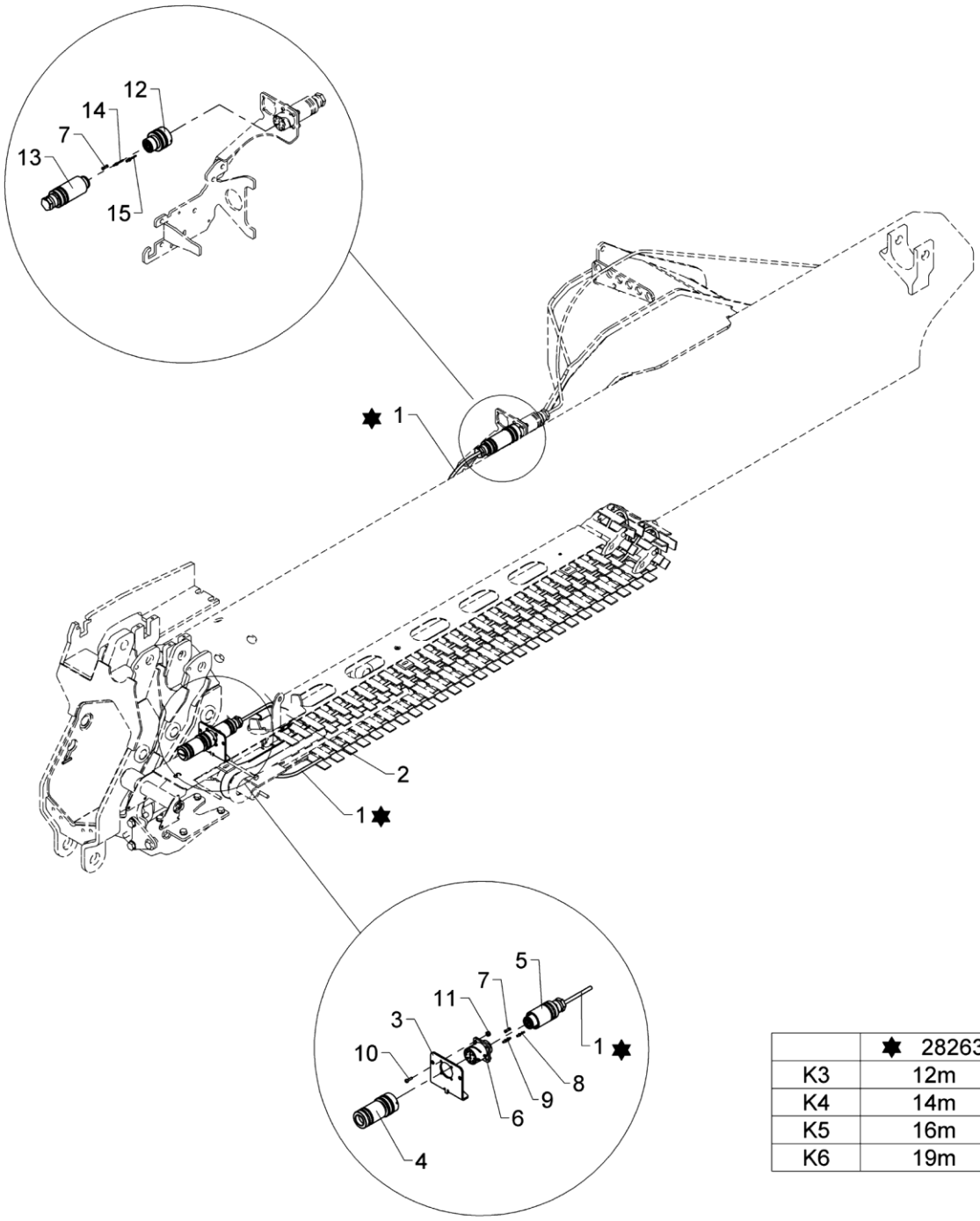

	✸ 28263
K3	12m
K4	14m
K5	16m
K6	19m

Fly-Jib supply

An Oshkosh Corporation Company

Pos	Qty	Part no.	Description	Remarks
		7004300	Electric cable, FJ K3	
		7004310	Electric cable, FJ K4	
		7004320	Electric cable, FJ K5	
		7004330	Electric cable, FJ K6	
1	1	28263	CAN BUS cable	
2	1	22122	PVC protection	
3	1	7004028	Bracket, FJ plug	
4	1	7009999	Dummy plug for Fly-Jib	
5	1	29635	Housing, Socket, short	
6	1	29628	Socket 10-polar	
7	6	29638	Sealing	
8	2	29631	Pin, female, 0,32-0,52 mm²	
9	5	29633	Pin, female, 0,75mm² - 1,5mm²	
10	4	32386	Screw M3 x 12 stainless	M3 x 12
11	4	32387	Lock nut M3 stainless	M3
12	1	29629	Plug, 10-polar	
13	1	29634	Housing, plug, long	
14	5	29632	Pin, 0,75-1,5 mm²	
15	2	29630	Pin, male, 0,32mm² - 0,52mm²	

2820K-RCS

Internal ref. 70 06 340

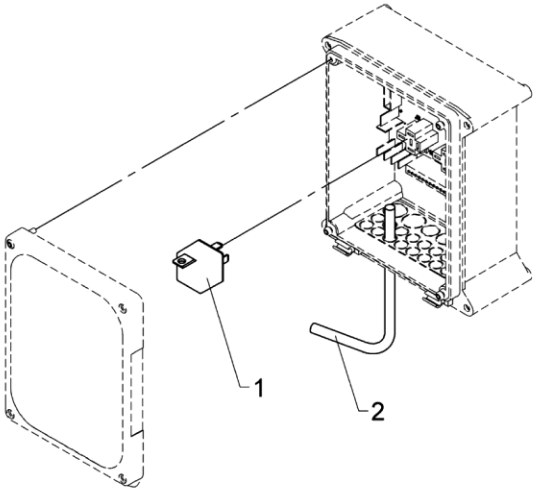

565 22 170

From loader 1440001
To loader

Created 20-05-2013
Modified 21-10-2016

Spotlight, radio remote controlled.

Pos	Qty	Part no.	Description	Remarks
1	1	27342	Relay, 24V	
2	1	28262	Cable 4 x 0.75	2 m

An Oshkosh Corporation Company

2820K-RCS

Internal ref. 70 05 240

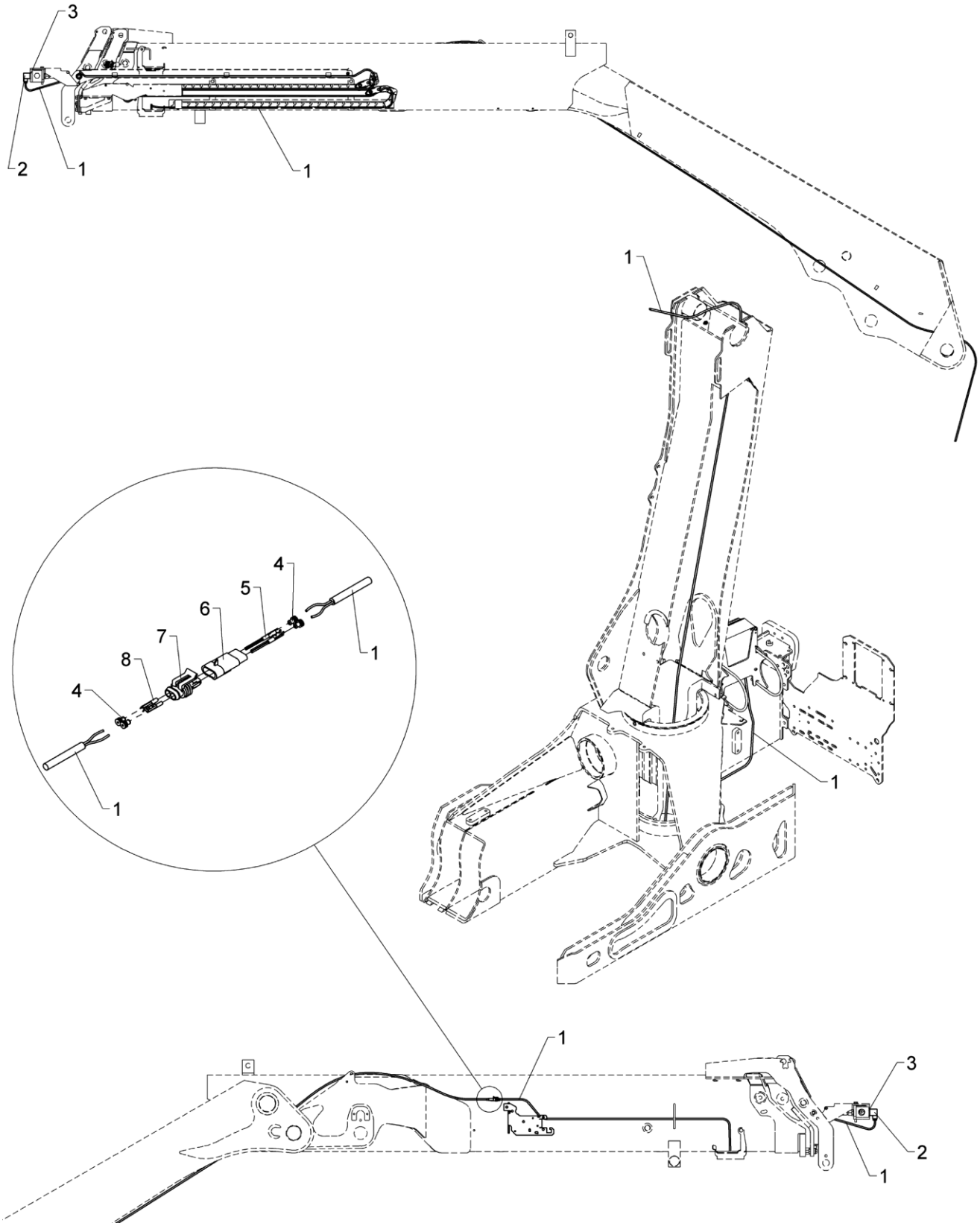

565 22 190

From loader 1440001
To loader

Created 24-09-2018
Modified

3rd extra valve

An Oshkosh Corporation Company

Pos	Qty	Part no.	Description	Remarks
1	1	28249	Cable 2 x 0.75	30 m
2	1	28258	Plug, solenoid valve	
3	1	28840	Seal	
4	4	29159	Cable lead-in, AMP	
5	2	29161	Plug, AMP	
6	1	29160	Socket, 2-polar, AMP	
7	1	28843	Bipolar socket, AMP	
8	2	28844	Socket, AMP	

2820K-RCS

Internal ref. 70 02 380

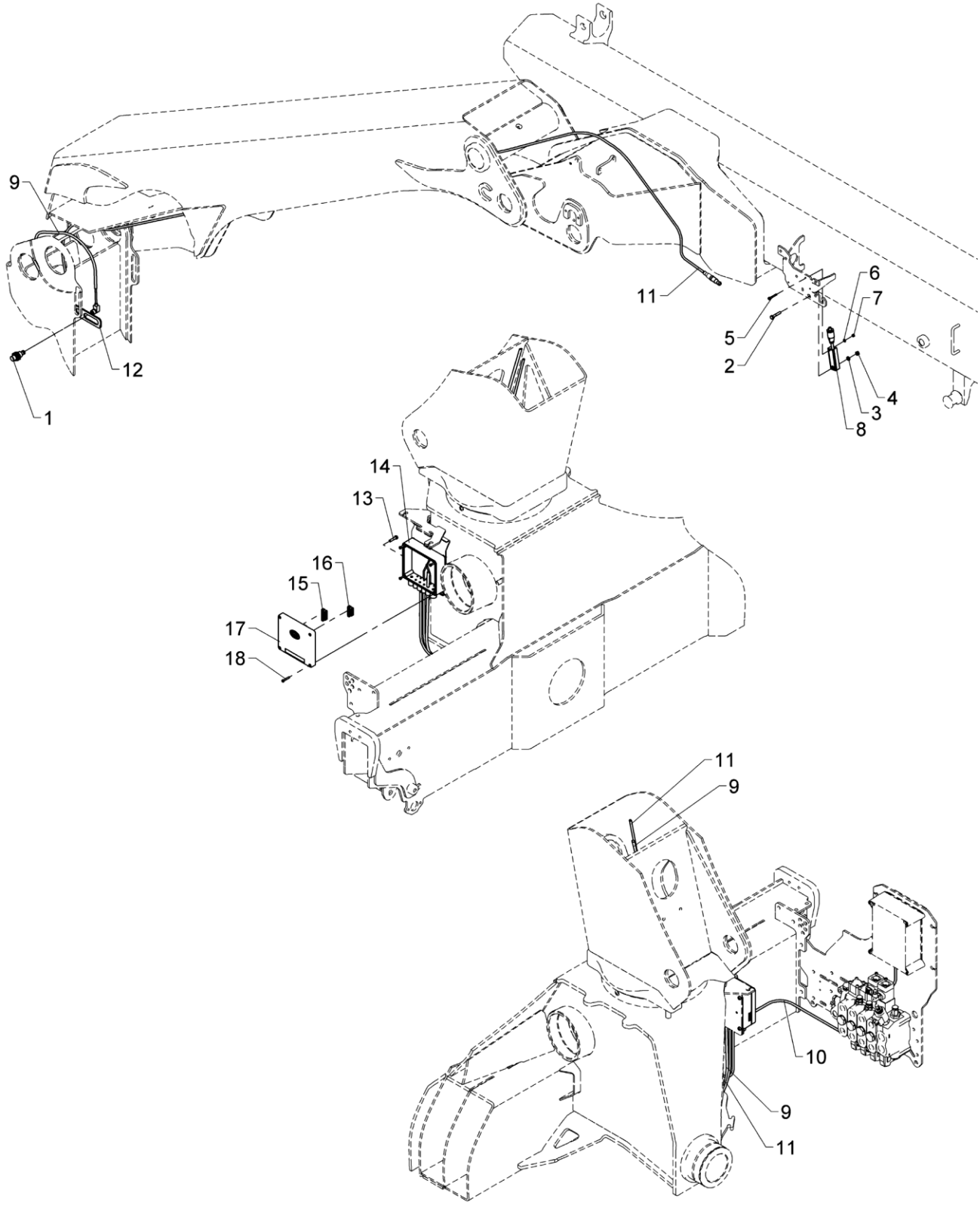

QOPS PS G4

An Oshkosh Corporation Company

Pos	Qty	Part no.	Description	Remarks
1	1	28980	Proximity switch	
2	1	30116	Steel pin, stainless	M6 x 35
3	1	32302	Face washer, stainless	6 mm
4	1	30884	Lock nut, stainless	M6
5	1	31790	Set screw M4 x 30	M4 x 30
6	1	31188	Washer, stainless	4 mm
7	1	30857	Lock nut	M4
8	1	29295	Tilt sensor + 0.25 m cable	
9	1	28077	Cable with plug	
10	1	28263	CAN BUS cable	2 m
11	1	28730	Cable + socket, 10 m	
12	1	6306803	Bracket for proximity switch	
13	4	30340	Screw, stainless	6,0 x 25
14	1	29313	Bottom f. Fly-Jib box	
15	1	29324	Plug, 6-polar for RCL 53XX	
16	1	29317	Plug, 5-polar for RCL 53XX	
17	1	29346	CIO5376 controller cover cpl.	
18	4	30347	Screw, stainless	4,0 x 25

2820K-RCS

Internal ref. 70 08 840

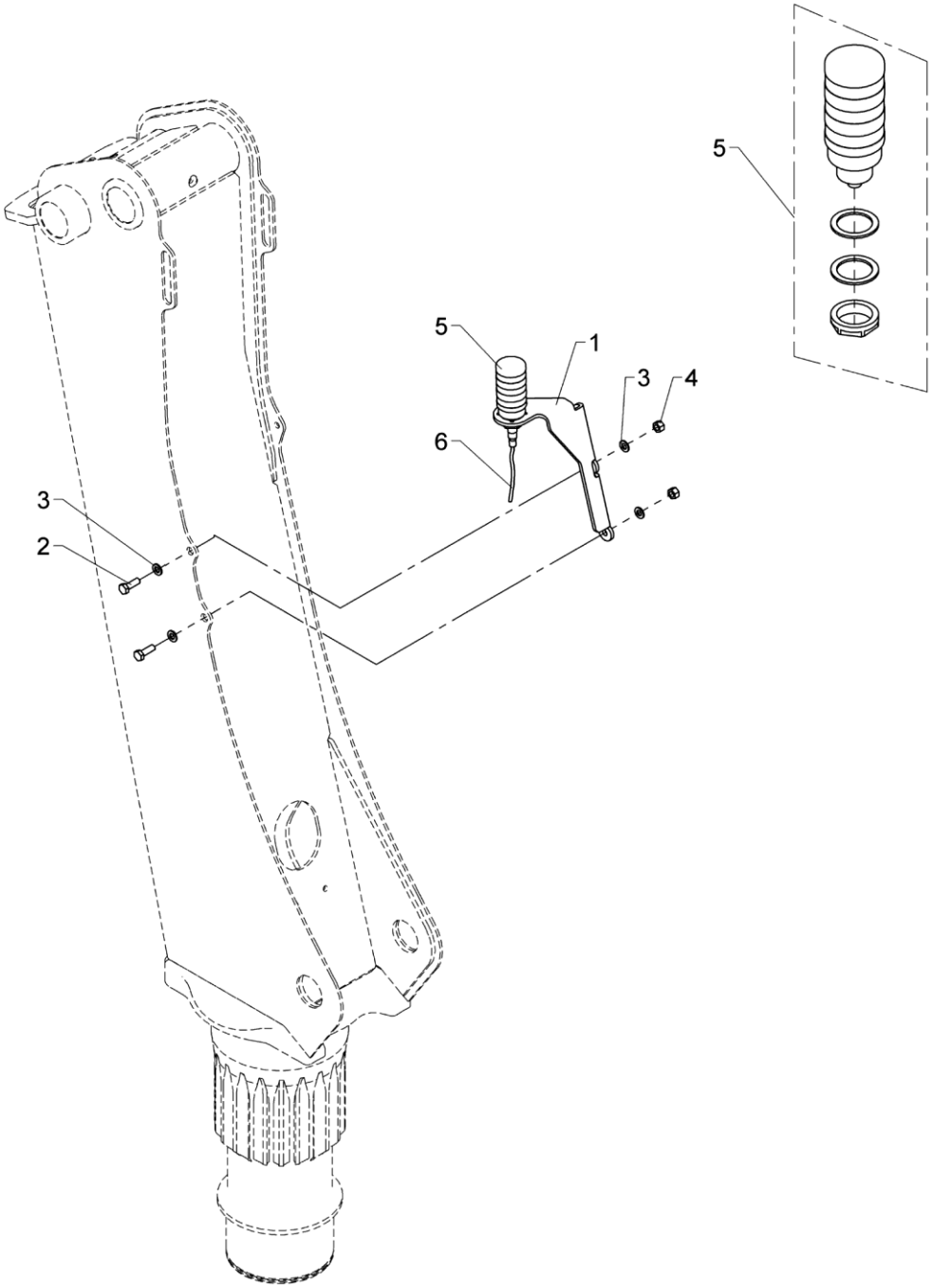

565 22 230

From loader 1440001
To loader

Created 01-09-2014
Modified

Light tower

An Oshkosh Corporation Company

Pos	Qty	Part no.	Description	Remarks
1	1	6340069	Bracket (light tower)	
2	2	30156	Set screw, stainless	M10 x 30
3	4	31565	Washer, stainless	10 mm
4	2	31564	Lock nut, stainless	M10
5	1	29542	Light tower	
6	1	29224	Cable with socket, 5 m	

2820K-RCS

Internal ref. 70 07 500

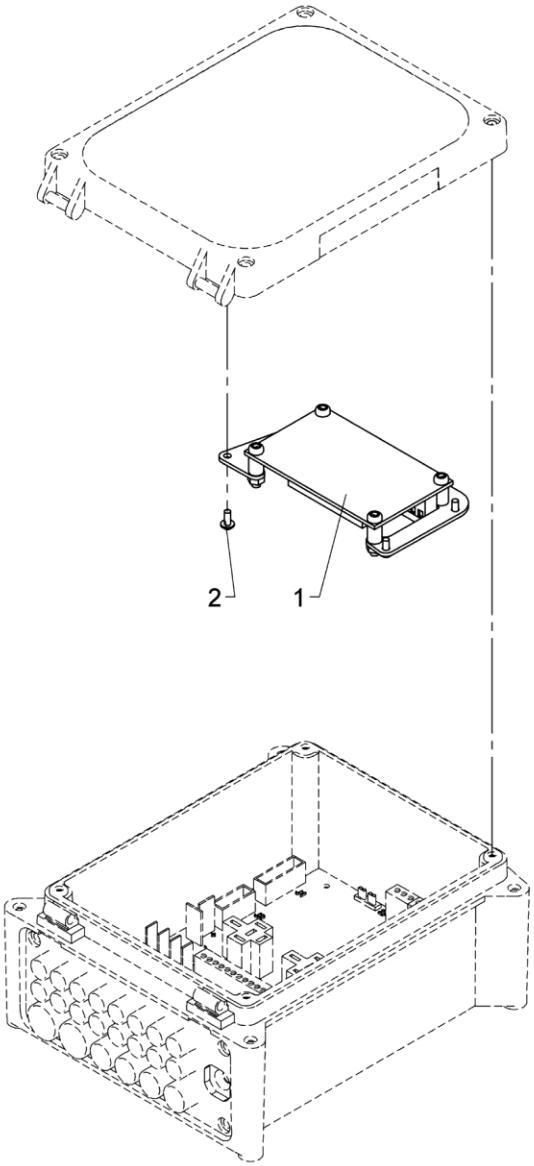

565 22 460

From loader 1440001
To loader

Created 28-01-2013
Modified

EJB5385 installation

Pos	Qty	Part no.	Description	Remarks
1	1	29474	EJB5385	
2	4	30361	Screw, stainless	3,0 x 8

An Oshkosh Corporation Company