IOWA MOLD TOOLING CO., INC.

P.O. Box 189
Garner, IA 50438
Tel: 641.923.3711
Fax: 641.923.2424
www.imt.com

Manual 99906498

1730 MCS Parts Manual

Revised: August 13, 2019

Copyright © 2019 Iowa Mold Tooling Co., Inc.
All rights reserved

No part of this publication may be reproduced, stored in a retrieval system, or transmitted in any form or by any means, electronic, mechanical, photocopying, recording or otherwise without the prior written permission of Iowa Mold Tooling Co., Inc.

Iowa Mold Tooling Co., Inc. is an Oshkosh Corporation Company

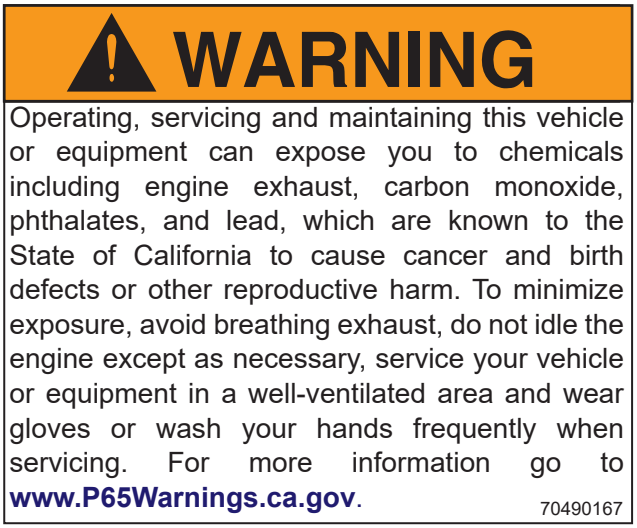
WARNING
Operating, servicing and maintaining this vehicle or equipment can expose you to chemicals including engine exhaust, carbon monoxide, phthalates, and lead, which are known to the State of California to cause cancer and birth defects or other reproductive harm. To minimize exposure, avoid breathing exhaust, do not idle the engine except as necessary, service your vehicle or equipment in a well-ventilated area and wear gloves or wash your hands frequently when servicing. For more information go to www.P65Warnings.ca.gov.
70490167

1500K, 1510K, 1720K, 1730K, 1820K, 1830K

Description	Page no.	From loader	To loader
Basic loader			
Base, complete	534 01 010	1060001	1061113
Base, complete	534 01 010 A	1061114	1061996
Base, complete	534 01 010 B	1061997	
Support for cylinder K5/K6/K7/K8	534 01 040	1060001	1061904
Protection plate, cpl. (std.)	534 01 050	1060001	
Protection plate, complete (TS)	534 01 060	1060001	
Central lubrication and lubricating brush	534 01 080	1060001	1060521
Central lubrication and lubricating brush	534 01 080 A	1060522	1061996
Central lubrication and lubricating brush	534 01 080 B	1061997	
Slewing system, 400°	534 01 100	1060001	1060840
Slewing system, 400°	534 01 100 A	1060841	1061182
Slewing system, 400°	534 01 100 B	1061183	1061909
Slewing system, 400°	534 01 100 C	1061910	
Column, cpl. for link arm system, boom	534 01 300	1060001	1060386
Column, cpl. for link arm system, boom	534 01 300 A	1060387	
Column, cpl. excl. link arm system, boom	534 01 350	1060001	1060386
Column, cpl. excl. link arm system, boom	534 01 350 A	1060387	
Main boom, cpl. for link arm system, boom	534 01 400	1060001	1060386
Main boom, cpl. for link arm system, boom	534 01 400 A	1060387	
Main boom, cpl. for link arm system, boom	534 01 400 B		
Main boom, cpl., no link arm system, boom	534 01 420	1060001	1060386
Main boom, cpl., no link arm system, boom	534 01 420 A	1060387	
Main boom, cpl., no link arm system, boom	534 01 420 B		
Stowing hook, complete	534 01 450	1060001	
Stowing hook, complete	534 01 450 A		
Boom cylinder C150 x 722 (1500K, 1720K, 1820K)	534 01 480	1060001	1060386

1500K, 1510K, 1720K, 1730K, 1820K, 1830K

Description	Page no.	From loader	To loader
Boom cylinder C150 x 722 (for link arm system)	534 01 480 A	1060387	
Boom cylinder C150 x 722 with LHV (for link arm system)	534 01 490	1060001	
Boom cylinder, C140 x 726 (1510K, 1730K, 1830K)	534 01 500	1060001	
Boom cylinder, C140 x 726 (no link arm system)	534 01 500 A	1060387	
Boom cylinder C140 x 726 with LHV (no link arm system)	534 01 510	1060001	
Jib cylinder C140 x 848	534 01 600	1060001	1060386
Jib cylinder C140 x 848	534 01 600 A	1060387	
Jib cylinder with LHV	534 01 610	1060001	
Link arm system, boom	534 01 700	1060001	
Mounting fittings, basic loader incl. link arm system	534 01 720	1060001	
Mounting fittings, basic loader excl. link arm system	534 01 750	1060001	
Hose shield, cpl.	534 01 760	1060001	
Link arm system, jib	534 01 800	1060001	1060386
Link arm system, jib	534 01 800 A	1060387	
Stabilizers			
Stabilizer beam, type SV - 5570	534 02 010	1060001	1060305
Stabilizer beam, type SV - 5570	534 02 010 A	1060306	1061536
Stabilizer beam, type SV - 5570	534 02 010 B	1061537	
Stabilizer beam, type SR-20° - 5570	534 02 020	1060001	1060233
Stabilizer beam, type SR-60°, 5570	534 02 021	1060234	1060275
Stabilizer beam, type SR-60°, 5570	534 02 021 A	1060276	1061536
Stabilizer beam, type SR-60°, 5570	534 02 021 B	1061537	
Stabilizer beam, type SH - 5570	534 02 030	1060001	1060275
Stabilizer beam, type SH - 5570	534 02 030 A	1060276	1061536
Stabilizer beam, type SH - 5570	534 02 030 B	1061537	
Stabilizer beam, type DV - 6450	534 02 040	1060001	1060275
Stabilizer beam, type DV - 6450	534 02 040 A	1060276	1061536

1500K, 1510K, 1720K, 1730K, 1820K, 1830K

Description	Page no.	From loader	To loader
Stabilizer beam, type DV - 6450	534 02 040 B	1061537	
Stabilizer beam, type DR-20° - 6450	534 02 050	1060001	1060233
Stabilizer beam, type DR-60°, 6450	534 02 051	1060234	1060275
Stabilizer beam, type DR-60°, 6450	534 02 051 A	1060276	1061536
Stabilizer beam, type DR-60°, 6450	534 02 051 B	1061537	
Stabilizer beam, type DH - 6450	534 02 060	1060001	1060275
Stabilizer beam, type DH - 6450	534 02 060 A	1060276	1061536
Stabilizer beam, type DH - 6450	534 02 060 B	1061537	
Stabilizer beam, type SV - 4600	534 02 070	1060001	1060275
Stabilizer beam, type SV - 4600	534 02 070 A	1060276	1061536
Stabilizer beam, type SV - 4600	534 02 070 B	1061537	
Stabilizer beam, type SR-20° - 4600	534 02 080	1060001	1060233
Stabilizer beam, type SR-60°, 4600	534 02 081	1060234	1060275
Stabilizer beam, type SR-60°, 4600	534 02 081 A	1060276	1061536
Stabilizer beam, type SR-60°, 4600	534 02 081 B	1061537	
Stabilizer beam, type SH - 4600	534 02 090	1060001	1060275
Stabilizer beam, type SH - 4600	534 02 090 A	1060276	1061536
Stabilizer beam, type SH - 4600	534 02 090 B	1061537	
Detection, stabilizer down (CYL/CYBEL)	534 02 130	1060001	
Stabilizer lock and lever	534 02 140	1060001	
Stabilizer safety lock	534 02 150	1060001	
Safety lock (CE, manual extension)	534 02 160	1060001	
Safety lock (CE, manual extension)	534 02 165	1060001	
Stabilizer cylinder, C80-520, type V	534 02 200	1060001	1061045
Stabilizer cylinder, C80-520, type V	534 02 200 A	1061046	
Stabilizer cylinder with check valve, C80-520, type V	534 02 210	1060001	
Stabilizer cylinder, C80-520, type R-20°	534 02 220	1060001	1060233

1500K, 1510K, 1720K, 1730K, 1820K, 1830K

Description	Page no.	From loader	To loader
Stabilizer cylinder, C80-520, type R-60°	534 02 221	1060234	1061045
Stabilizer cylinder, C80-520, type R-60°	534 02 221 A	1061046	
Stabilizer cylinder, C80-520, type R-180°	534 02 222	1060001	1061045
Stabilizer cylinder, C80-520, type R-180°	534 02 222 A	1061046	
Stabilizer cylinder with check valve, type R-20°	534 02 230	1060001	1060233
Stabilizer cylinder with check valve, type R-60°	534 02 231	1060234	
Foot plate with ball joint, cpl. (ø160)	534 02 235	1060001	1061045
Foot plate with ball joint, cpl. (ø160)	534 02 235 A	1061046	
Foot plate, cpl.	534 02 236	1061046	
Stabilizer cylinder, C80-520, type HR	534 02 240	1060001	
Stabilizer cylinder incl. swing-up mechanism, type HR	534 02 245	1060001	1061029
Stabilizer cylinder incl. swing-up mechanism, type HR	534 02 245 A	1061030	
Stabilizer cylinder with check valve, C80-520, Type R-180°	534 02 250	1060001	
Stabilizer cylinder, C80-440, type V	534 02 260	1060001	
Stabilizer cylinder with check valve, C80-440, type V	534 02 270	1060001	
Beam cylinder C32 - 1625	534 02 300	1060001	
Beam cylinder C32 - 2065	534 02 310	1060001	
Beam cylinder C32 - 1137	534 02 320	1060001	
Boom System			
Jib, complete	534 03 010	1060001	1060386
Jib, complete	534 03 010 A	1060001	
Jib, complete (winch)	534 03 020	1060001	1060386
Jib, complete (winch)	534 03 020 A	1060387	
Fitting of jib and jib cylinder	534 03 030	1060001	
Jib extension I incl. fittings	534 03 100	1060001	1060924
Jib extension I incl. fittings	534 03 100 A	1060925	
Jib extension K1 incl. fittings	534 03 105	1060001	

1500K, 1510K, 1720K, 1730K, 1820K, 1830K

Description	Page no.	From loader	To loader
Jib extension K2 incl. fittings	534 03 110	1060001	
Jib extension K3 incl. fittings	534 03 120	1060001	
Jib extension K4 incl. fittings	534 03 130	1060001	
Jib extension K5 incl. fittings	534 03 140	1060001	
Jib extension K6 incl. fittings	534 03 150	1060001	
Hook suspension	534 03 290	1060001	1061307
Hook suspension	534 03 290 A	1060001	1062039
Hook suspension	534 03 290 B	1062040	
Extension cylinder I (C63/50 x 1935)	534 03 300	1060001	
Extension cylinder II (C63/45 x 2000)	534 03 310	1060001	
Extension cylinder III (C63/45 x 2100)	534 03 320	1060001	
Extension cylinder IV (C60/40 x 2200)	534 03 330	1060001	
Extension cylinder IV (C60/40 x 2200)	534 03 330 A	1060001	
Extension cylinder V (C60/40 x 2150)	534 03 340	1060001	
Extension cylinder V (C60/40 x 2150)	534 03 340 A	1060001	
Extension cylinder VI (C55/35S x 2200)	534 03 350	1060001	
Extension cylinder I incl. fittings	534 03 500	1060001	
Extension cylinder II incl. fittings	534 03 510	1060001	
Extension cylinder III incl. fittings	534 03 520	1060001	
Extension cylinder IV incl. fittings	534 03 530	1060001	
Extension cylinder V incl. fittings	534 03 540	1060001	
Extension cylinder VI incl. fittings	534 03 550	1060001	
Manual extension, F3	534 03 720	1060001	
Manual extension, F4	534 03 730	1060001	
Manual extension, F5	534 03 740	1060001	
Manual extension, F6	534 03 750	1060001	
Manual extension, F7	534 03 760	1060001	

1500K, 1510K, 1720K, 1730K, 1820K, 1830K

Description	Page no.	From loader	To loader
Hydraulic systems, valve brackets and dual controls			
Valve brackets - RC	534 05 010	1060001	
Valve brackets (excl. CE)	534 05 015	1060001	
Valve brackets (with CE)	534 05 020	1060001	
NEM-RC kit	534 05 110	1060001	
NEM-RC kit (for external tank)	534 05 115	1060001	
Dual control, 4 functions	534 05 120	1060001	1061516
Dual control, 4 functions	534 05 120 A	1061517	
Dual control, 5 functions	534 05 130	1060001	1061516
Dual control, 5 functions	534 05 130 A	1061517	
Dual control, 6 functions	534 05 140	1060001	1061516
Dual control, 6 functions	534 05 140 A	1061517	
Counter-balance valve	534 05 190	1060001	
Valve bracket, cpl. 2 fcts.	534 05 200	1060001	
Valve bracket, cpl. 2 fcts.	534 05 200 A		
Valve bracket, cpl., 2 fcts. + 2 available fcts.	534 05 205	1060001	
Valve bracket, cpl., 2 fcts. + 2 available fcts.	534 05 205 A		
Valve bracket, cpl. 4 fcts.	534 05 210	1060001	
Valve bracket, cpl. 4 fcts.	534 05 210 A		
Valve bracket, cpl. 4 fcts. + 4 available	534 05 220	1060001	
Valve bracket, cpl. 4 fcts. + 4 available	534 05 220 A		
Valve bracket, cpl., 2 fcts. + 2 available fcts. - RC	534 05 225	1060001	
Valve bracket, cpl. 4 fcts. - RC	534 05 230	1060001	
Valve bracket, cpl. 4 fcts. + 2 available fcts. - RC	534 05 235	1060001	
Valve bracket, cpl. 4 fcts. + 4 available - RC	534 05 240	1060001	
Pilot controlled oil supply for NEM/stabilizer valve block	534 05 250	1060001	
Valve bracket, cpl. 2 functions - RC	534 05 252	1060837	

1500K, 1510K, 1720K, 1730K, 1820K, 1830K

Description	Page no.	From loader	To loader
Valve bracket, cpl. 4 fcts. - RC	534 05 254	1060837	
Valve bracket, cpl. 4 fcts. + 2 available - RC	534 05 256	1060837	
Valve bracket, cpl. 4 fcts. + 4 available - RC	534 05 258	1060837	
Valve bracket, cpl. 2 functions + 2 available functions - RC	534 05 260	1060837	
Dual control, 2 fcts. std.	534 05 270	1060001	
Dual control, 4 fcts. std.	534 05 280	1060001	
Dual control, 4 fcts., hydr. swing-up stabilizer legs	534 05 290	1060001	
Dual control.4 fcts. + 4 available functions (std.)	534 05 300	1060001	
Dual control, 4 fcts. + 4 available fcts. (hydr. swing-up stabilizer legs)	534 05 310	1060001	
Kit for HDL-2 (std.)	534 05 350	1060001	
Kit for HDL-2 (std.)	534 05 350 A	1060001	
Cross-over controls, 4 functions	534 05 370	1060001	
Cross-over controls, 4 functions	534 05 370 A		
Cross-over controls, 5 functions	534 05 380	1060001	
Cross-over controls, 5 functions	534 05 380 A		
Cross-over controls, 6 functions	534 05 390	1060001	
Cross-over controls, 6 functions	534 05 390 A		
Hydraulic systems, loader functions			
Hose kit, loader functions, std.	534 05 400	1060001	1062121
Hose kit, loader functions, std.	534 05 400 A	1062122	
Hose kit, loader functions, 1 EXV.	534 05 410	1060001	1062121
Hose kit, loader functions, 1 EXV.	534 05 410 A	1062122	
Hose kit, loader functions, 2 EXV.	534 05 420	1060001	1062121
Hose kit, loader functions, 2 EXV.	534 05 420 A	1062122	
Hose kit, loader functions, std./winch	534 05 430	1060001	1062121
Hose kit, loader functions, std./winch	534 05 430 A	1062122	
Hose kit, loader functions, 2 EXV/winch	534 05 440	1060001	1062121

1500K, 1510K, 1720K, 1730K, 1820K, 1830K

Description	Page no.	From loader	To loader
Hose kit, loader functions, 2 EXV/winch	534 05 440 A	1062122	
Hose kit, loader functions, TS (1-circuit fixed)	534 05 450	1060001	
Hose kit, loader functions TS (HC, 1 circuit, fixed flow, excl. CE)	534 05 455	1060001	
Hose kit, loader functions, TS (1-circuit variable)	534 05 460	1060001	
Hose kit, loader functions, TS (2-circuits, fixed)	534 05 470	1060001	
Hydraulic system, slewing	534 05 500	1060001	1061030
Hydraulic system, slewing	534 05 500 A	1061031	
Hydraulic system, slewing	534 05 500 B		
Hydraulic system, slewing	534 05 501 B		
One-way restrictor valve, slew PVG16	534 05 540	1060001	
Hydraulic systems, stabilizer beams			
Hydr. syst., stabilizers, manual extension	534 05 700	1060001	
Hydr. syst., stabilizers, hydr. extension	534 05 710	1060001	
Hydraulic system, SV (+ SR-20° -Obsolete) 4600, manual extension	534 05 750	1060001	
Hydraulic system, SR-60°/180°, 4600, manual extension	534 05 755	1060001	
Hydraulic system, SV (+ SR-20° -Obsolete) 4600, hydr. extension	534 05 760	1060001	
Hydraulic system, SH + SR-60°/180° - 4600, hydr. extension	534 05 770	1060001	
Hydraulic system, SV (+ SR-20° -Obsolete) 5570, manual extension	534 05 780	1060001	
Hydraulic system, SR-60°/180°, 5570, manual extension	534 05 785	1060001	
Hydraulic system, SV (+ SR-20° -Obsolete) 5570, hydr. extension	534 05 790	1060001	
Hydraulic system, SH + SR-60°/180° - 5570, hydr. extension	534 05 800	1060001	
Hydraulic system, DV (+ DR-20° -Obsolete) 6450, hydr. extension	534 05 810	1060001	
Hydraulic system, DH + DR-60°/180° - 6450, hydr. extension	534 05 820	1060001	
Hydraulic systems, pump and tank			
Hydr. syst. pump + return hoses	534 06 020	1060001	
Hydr. syst. pump + return hoses (TS)	534 06 030	1060001	
Hydraulic system, pump and return hoses (TS, excl. CE)	534 06 040	1060001	
Hydr. syst. pump + return hoses	534 06 050		

1500K, 1510K, 1720K, 1730K, 1820K, 1830K

Description	Page no.	From loader	To loader
Tank, cpl.	534 06 070	1060001	
Tank incl. fittings	534 06 080	1060001	1061998
Tank incl. fittings, (90L)	534 06 080 A	1061999	
Tank bracket	534 06 095	1061997	
Oil cooler	534 06 100	1060001	1062067
Oil cooler	534 06 100 A	1062068	
High-pressure filter	534 06 120	1060001	
Hydraulic systems, valve blocks			
Valve block, 4 sects. HC-D4	534 06 200	1060001	1061516
Valve block, 4 sects. NH-RS210	534 06 200 A	1061517	
Valve block, 5 sects. HC-D4	534 06 210	1060001	1061758
Valve block, 5 sects. NH-RS210	534 06 210 A	1061759	
Valve block, 6 sects. HC-D4	534 06 220	1060001	1061566
Valve block, 6 sects. NH-RS210	534 06 220 A	1061567	
Valve block, 4 sects. HC-D4 NEM	534 06 230	1060001	
Valve block, 5 sects. HC-D4 NEM	534 06 240	1060001	
Valve block, 6 sects. HC-D4 NEM	534 06 250	1060001	
Valve block, 6 sect./HCD4/2+4 CE	534 06 260	1060001	
Valve block, 6 sect./HCD4/2+4 CE2.1	534 06 270	1060001	
Valve block, 6 sect. HC-D4	534 06 280	1060001	1061566
Valve block, 6 sects. NH-RS210	534 06 280 A	1061567	
Valve block left, 3 sects. HC-D4 TS	534 06 290	1060001	
Valve block right, 3 sects. HC-D4 TS	534 06 300	1060001	
Control valves, Danfoss, 4 sections, fixed/variable flow (std./QOPS)	534 06 310	1060001	
Control valves, Danfoss, 4 sections, fixed/variable flow (std./QOPS)	534 06 310 A		
Control valves, Danfoss, 4 sections, fixed/variable flow (std./QOPS)	534 06 310 B		
Control valves, Danfoss, 4 sections, fixed/variable flow (std.)	534 06 310 C		

1500K, 1510K, 1720K, 1730K, 1820K, 1830K

Description	Page no.	From loader	To loader
Control valves, Danfoss, 5 sections, fixed/variable flow with rotator (std./QOPS)	534 06 320	1060001	
Control valves, Danfoss, 5 sections, fixed/variable flow with rotator (std./QOPS)	534 06 320 A		
Control valves, Danfoss, 5 sections, fixed/variable flow with rotator (std.)	534 06 320 B		
Control valves, Danfoss, 5 sections, fixed/variable flow with winch (std./QOPS)	534 06 330	1060001	
Control valves, Danfoss, 5 sections, fixed/variable flow with winch (std./QOPS)	534 06 330 A		
Control valves, Danfoss, 5 sections, fixed/variable flow with winch (Std.)	534 06 330 B		
Control valves, Danfoss, 6 sections, fixed/variable flow with rotator and grab (std./QOPS)	534 06 340	1060001	1061488
Control valves, Danfoss, 6 sections, fixed/variable flow with rotator and grab (std./QOPS)	534 06 340 A	1061489	
Control valves, Danfoss, 6 sections, fixed/variable flow with rotator and grab (std./QOPS)	534 06 340 B		
Control valves, Danfoss, 6 sections, fixed/variable flow with Fly-Jib (std./QOPS)	534 06 350	1060001	
Control valves, Danfoss, 6 sections, fixed/variable flow with Fly-Jib (std./QOPS)	534 06 350 A		
Control valves, Danfoss, 7 sections, fixed/variable flow with winch and Fly-Jib (std./QOPS)	534 06 360	1060001	
Control valves, Danfoss, 7 sections, fixed/variable flow with winch and Fly-Jib (std./QOPS)	534 06 360 A		
Control valves, Danfoss, 7 sections, fixed/variable flow with rotator, grab and winch (std./QOPS)	534 06 370	1060001	
Control valves, Danfoss, 7 sections, fixed/variable flow with rotator, grab and winch (std./QOPS)	534 06 370 A		
Control valves, Danfoss, 7 sections, fixed/variable flow with rotator, grab and winch (std.)	534 06 370 B		
	534 06 380	1060001	
Valve block, 6 sect./PVG16	534 06 390	1060001	
Valve block (stabilizer control valve)	534 06 400	1060001	
Control valves, Danfoss, 6 sections, variable, Manual	534 06 440	1061548	
Control valve, Danfoss, 3 sections, 1 circuit, fixed flow, left	534 06 450	1060001	
Control valve, Danfoss, 3 sections, 1 circuit, fixed flow, right	534 06 460	1060001	
Control valve, Danfoss, 3 sections, 1 circuit, variable flow, left	534 06 470	1060001	
Control valve, Danfoss, 3 sections, 1 circuit, variable flow, right	534 06 480	1060001	
Danfoss control valve PVG32, 4-7 sections	534 06 490	1060001	
HC - M50 stabilizer valve section	534 06 493	1060001	
HC-D4 electro-hydraulic NEM-kit, NEM radio remote control	534 06 495	1060001	

1500K, 1510K, 1720K, 1730K, 1820K, 1830K

Description	Page no.	From loader	To loader
HC - M50 electro-hydraulic NEM-kit NEM radio remote control	534 06 497	1060001	
HC-D4 valve block, 4-6 sections	534 06 499	1060001	
Labels and mounting kits			
Standard labels	534 07 010	1060001	
Operating labels	534 07 020	1060001	
Labels for emergency operation	534 07 025	1060001	
Type plates, marking tape, warning signs	534 07 030	1060001	
Lifting capacity diagrams	534 07 040	1060001	
Mounting kit (8 M24 x 2 pins)	534 07 100	1060001	
Mounting kit (4 M30 x 2 pins)	534 07 110	1060001	
Mounting kit (4 M30 x 2 pins) - 50 mm.	534 07 115	1060001	
Mounting kit (4 M30 x 2 pins) - 150 mm.	534 07 120	1060001	
Mounting kit (4 M30 x 2 pins) - 250 mm.	534 07 130	1060001	
Mounting kit (8 M24 x 2 pins)	534 07 140	1060001	
Accessories, extra valves			
Hose guides, K1-1EXV.	534 09 100	1060001	
Hose guides, K2-1EXV.	534 09 110	1060001	1060924
Hose guides, K2-1EXV.	534 09 110 A	1060925	
Hose guides, K3-1 EXV.	534 09 120	1060001	1060924
Hose guides, K3-1 EXV.	534 09 120 A	1060925	
Hose guides, K4-1 EXV.	534 09 130	1060001	1060924
Hose guides, K4-1 EXV.	534 09 130 A	1060925	
Hose guides, K5-1 EXV.	534 09 140	1060001	1060924
Hose guides, K5-1 EXV.	534 09 140 A	1060925	
Hose guides, K6-1 EXV.	534 09 150	1060001	1060924
Hose guides, K6-1 EXV.	534 09 150 A	1060925	
Hose guides, K1-2 EXV.	534 09 200	1060001	
Hose guides, K2-2 EXV.	534 09 210	1060001	1060924

1500K, 1510K, 1720K, 1730K, 1820K, 1830K

Description	Page no.	From loader	To loader
Hose guides, K2-2 EXV.	534 09 210 A	1060925	
Hose guides, K3-2 EXV.	534 09 220	1060001	1060924
Hose guides, K3-2 EXV.	534 09 220 A	1060925	
Hose guides, K4-2 EXV.	534 09 230	1060001	1060924
Hose guides, K4-2 EXV.	534 09 230 A	1060925	
Hose guides, K5-2 EXV.	534 09 240	1060001	1060924
Hose guides, K5-2 EXV.	534 09 240 A	1060925	
Hose guides, K6-2 EXV.	534 09 250	1060001	1060924
Hose guides, K6-2 EXV.	534 09 250 A	1060925	
Hose guides, K2-2 EXV-raised	534 09 260	1060001	
Bracket for hose reel, cpl. (jib)	534 09 280	1060001	1061535
Bracket for hose reel, cpl. (jib)	534 09 280 A	1061536	
Attachment for hose reel, cpl. (extension 2)	534 09 290	1060001	1061535
Attachment for hose reel, cpl. (extension 2)	534 09 290 A	1060001	1061536
Attachment for hose reel, cpl. (extension 4)	534 09 300	1060001	
Hydr. system, hose reels, 2 EXV.	534 09 310	1060001	
Kit, quick-release coupling for internal hose routing, 2 EXV.	534 09 320	1060001	
Hydr. system, hose reels, 1 EXV.	534 09 330	1060001	
Kit, quick-release coupling for internal hose routing, 1 EXV.	534 09 340	1060001	
Quick-release coupling for 1 extra valve + bracket, K1-K5/T3-T4	534 09 370		
Quick-release coupling for 2 extra valves + bracket, K1-K5/T3-T4	534 09 380		
Quick-release coupling for 1 extra valve	534 09 390	1060001	
Quick-release coupling for 2 extra valves	534 09 400	1060001	
Multi-coupling for 2 extra valves K1-K5/T3-T4	534 09 410	1060001	
Multi-coupling for 2 extra valves K6/T5	534 09 420	1060001	
Quick-release coupling for 1 extra valve + bracket, K6/T5	534 09 430		
Quick-release coupling for 2 extra valves + bracket, K6/T5	534 09 440		

1500K, 1510K, 1720K, 1730K, 1820K, 1830K

Description	Page no.	From loader	To loader
Kit for 3 extra valves (K1-K5)	534 09 460	1060001	
Kit for 3 extra valves (K6)	534 09 470	1060001	
Accessories, stand-up controls, HS			
Stand-up controls, standard	534 10 010	1060001	1061942
Stand-up controls, standard	534 10 010 A	1061943	
Rod control, HS std. - 4 functions	534 10 020	1060001	1061834
Rod control, HS std. - 4 functions	534 10 020 A	1061835	
Rod control, HS std. - 5 functions	534 10 030	1060001	1061834
Rod control, HS std. - 5 functions	534 10 030 A	1061835	
Rod control, HS std. - 6 functions	534 10 040	1060001	1061834
Rod control, HS std. - 6 functions	534 10 040 A	1061835	
Stabilizer operation, HS std. - 2/4 fcts.	534 10 060	1060001	
Valve bracket - HS 2 fcts./4 fcts. (oper. from HS)	534 10 070	1060001	1061386
Valve bracket - HS 2 fcts./4 fcts. (oper. from HS)	534 10 070 A	1061387	
Stabilizer operation, HS std. - 4 fcts. + 4 available fcts.	534 10 090	1060001	
Stand-up controls, direct valve control	534 10 200	1060001	
Stand-up controls, direct valve control	534 10 200 A		
Stand-up controls, direct valve control	534 10 200 B		
Rod control, HS, direct valve control (Danfoss)	534 10 210	1060001	1060978
Rod control, HS, direct valve control (Danfoss)	534 10 210 A	1061484	1061548
Rod control, HS, direct valve control (Danfoss)	534 10 210 B		
Rod control, HS, direct valve control (Hydrocontrol) - 4 fcts.	534 10 220	1060001	
Rod control, HS, direct valve control (Hydrocontrol) - 4 fcts.	534 10 220 A		
Rod control, HS, direct valve control (Hydrocontrol) - 5 fcts.	534 10 230	1060001	
Rod control, HS, direct valve control (Hydrocontrol) - 5 fcts.	534 10 230 A		
Rod control, HS, direct valve control (Hydrocontrol) - 6 fcts.	534 10 240	1060001	
Rod control, HS, direct valve control (Hydrocontrol) - 6 fcts.	534 10 240 A		

1500K, 1510K, 1720K, 1730K, 1820K, 1830K

Description	Page no.	From loader	To loader
Rod control, HS, direct valve control (Nordhydraulik) - 4 fcts.	534 10 242		
Rod control, HS, direct valve control (Nordhydraulik) - 5 fcts.	534 10 244		
Rod control, HS, direct valve control (Nordhydraulik) - 6 fcts.	534 10 246		
Rod control, HS, direct valve control (Nordhydraulik) - 6 fcts. - 2 circuits	534 10 248		
Stabilizer operation, HS, direct valve control	534 10 250	1060001	
Dual control, HS, direct valve control - 4 fcts.	534 10 300	1060001	
Dual control, HS, direct valve control - 5 fcts.	534 10 310	1060001	
Dual control, HS, direct valve control - 6 fcts.	534 10 320	1060001	
Valve bracket, cpl., direct valve control - 2 fcts.	534 10 350	1060001	
Valve bracket, cpl., direct valve control - 2 fcts.	534 10 350 A		
Valve bracket, cpl., direct valve control - 2 fcts. + 2 available fcts.	534 10 355	1060001	
Valve bracket, cpl., direct valve control - 2 fcts. + 2 available fcts.	534 10 355 A		
Valve bracket, cpl., direct valve control - 4 fcts.	534 10 360	1060001	
Valve bracket, cpl., direct valve control - 4 fcts.	534 10 360 A		
Valve bracket, cpl., direct valve control - 4 fcts. + 4 available fcts.	534 10 370	1060001	
Valve bracket, cpl., direct valve control - 4 fcts. + 4 available fcts.	534 10 370 A		
Pump and return hoses - HC - 1-circuit - HS direct valve control	534 10 460	1060001	
Pump and return hoses - HC - 2-circuit - HS direct valve control	534 10 470	1060001	
Pump and return hoses - Danfoss - HS - direct valve control	534 10 480	1060001	
Kit for HDL - HS direct valve control	534 10 485	1060001	
Hydraulic system, slewing, HS, direct valve control	534 10 490	1060001	1061030
Hydraulic system, slewing, HS, direct valve control	534 10 490 A	1061031	
Hose kit, 4 fcts. Hydrocontrol	534 10 500	1060001	
Hose kit, 5 fcts. Hydrocontrol	534 10 510	1060001	
Hose kit, HS dir. valve ctrl. (HC 6 fcts.)	534 10 520	1060001	
Mounting fittings, HSRC	534 10 800	1060001	
Mounting fittings, HSRC	534 10 800 A	1060762	

1500K, 1510K, 1720K, 1730K, 1820K, 1830K

Description	Page no.	From loader	To loader
Accessories, top seat, TS			
Mounting fittings, TS	534 11 010	1060001	
Mounting fittings, TS	534 11 010 A		
Seat, cpl.	534 11 020	1060001	
Top seat (RC), cpl.	534 11 030	1060001	
Mounting fittings, TS RC	534 11 040	1060001	
Top seat (HC or RS 210 linear controls), cpl.	534 11 050	1060001	
Top seat (HC X), cpl.	534 11 060	1060001	
Top seat (Danfoss X), cpl.	534 11 070	1060001	1060001
Top seat (Danfoss X), cpl.	534 11 070 A	1060001	
Bracket, complete (ECT 5320 - TS)	534 11 080	1060001	
Bracket, complete (change-over valve, TS, excl. CE)	534 11 085	1060001	
Ladder for TS, cpl.	534 11 090	1060001	1061909
Ladder for TS, cpl.	534 11 090 A	1061910	
Hose kit, 6 fcts., (TSHC linear)	534 11 100	1060001	
Hose kit, 6 functions (TSHC, linear, excl. CE)	534 11 105	1060001	
Hose kit, loader functions (TS HC joystick)	534 11 110	1060001	
Hose kit for pump and tank, (TS HC joystick)	534 11 120	1060001	
Hose kit, loader functions (TS Danfoss 1 circuit, fixed and variable flow)	534 11 130	1060001	
Hose kit, loader functions (TS Danfoss 1 circuit, fixed and variable flow)	534 11 130 A	1060001	
Hose kit for pump and tank (TS, Danfoss 1 circuit, fixed flow)	534 11 140	1060001	
Hose kit for pump and tank (TS, Danfoss 1 circuit, variable flow)	534 11 150	1060001	
Stabilizer operation (TS HC linear)	534 11 180	1060001	
Stabilizer operation (TS joystick)	534 11 190	1060001	
Hose shield (TS), cpl.	534 11 200	1060001	
Hose shield (TS), cpl.	534 11 200 A		
Accessories, winch			
Winch 1.5 T + mounting fittings and weighing cell	534 13 020	1060001	1061095

1500K, 1510K, 1720K, 1730K, 1820K, 1830K

Description	Page no.	From loader	To loader
Winch 1.5 T + mounting fittings and weighing cell	534 13 020 A	1061096	
Winch 2.5 T + mounting fittings and weighing cell	534 13 030	1060001	
Wire pulley, single snatch block	534 13 040	1060001	
Wire pulley, double snatch block	534 13 050	1060001	
Wire roller guide	534 13 060	1060001	
Hydraulic system, winch	534 13 100	1060001	1061095
Hydraulic system, winch	534 13 100 A	1061096	
Hydraulic system, P15E	534 13 110	1060001	
Accessories, personnel basket			
Basket, PB 800 Hy	534 15 000	1060001	1060447
Basket, PB 800 Hy	534 15 000 A	1060448	
Basket, PB 800 E	534 15 005	1060001	
Emergency pump, basket loader	534 15 010	1060001	1060522
Emergency pump, basket loader	534 15 010 A	1060523	
Accessories, miscellaneous			
Cam disc kit (Stand-up controls)	534 16 010	1060001	1060823
Cam disc kit (2-stage LMB)	534 16 020	1060001	1060712
Cam disc kit (QOPS, std.), cpl.	534 16 030	1060001	1060674
Cam disc kit (QOPS, RC), cpl.	534 16 040	1060001	1060424
Cam disc kit (HS + 2-stage LMB)	534 16 050	1060001	1060468
Mounting fittings, light tower	534 16 060	1060001	1060001
Cam disc kit	534 16 070	1060001	
Protective guard, jib cylinder, cpl.	534 16 090	1060001	
Protective guard (LHV boom), cpl.	534 16 100	1060001	
Equipment for glass container	534 16 110	1060001	
Electronic parts, in general			
RCL 5300	534 20 010	1060001	
EJB5380	534 20 015	1060001	

1500K, 1510K, 1720K, 1730K, 1820K, 1830K

Description	Page no.	From loader	To loader
EJB5380	534 20 015 A	1060001	
Plugs in RCL	534 20 020	1060001	
Mounting fittings for junction box (FJC 5330)	534 20 030	1060001	
CAN termination, CIO5376	534 20 040	1060001	
Terminal block, Box 1	534 20 049	1060001	
Terminal block for RCL box with RC	534 20 050	1060001	
12 V Converter	534 20 055	1060001	
BEHEW	534 20 060	1060001	1061004
BEHEW	534 20 060 A	1061005	1061996
BEHEW	534 20 061 B	1061997	
BEPAW, 12_23	534 20 070	1060001	1061004
BEPAW, 12_23	534 20 070 A	1061005	
BEPAW	534 20 072	1061997	
CYW	534 20 080	1060001	
CYW	534 20 080 A		
CYL	534 20 085	1060001	
CYL	534 20 085 A		
CYBEL, single extension	534 20 090	1060001	
CYBEL, single extension	534 20 090 A		
CYBEL double extension	534 20 100	1060001	
CYBEL double extension	534 20 100 A		
2CYBEL, single extension (2LMB)	534 20 110	1060001	
2CYBEL, single extension (2LMB)	534 20 110 A		
2CYBEL, double extension (2LMB)	534 20 120	1060001	
2CYBEL, double extension (2LMB)	534 20 120 A		
2-CYBEL, single extension with CIO (RC, RCS)	534 20 137		
2-CYBEL, single extension with CIO (RC, RCS)	534 20 137 A		

1500K, 1510K, 1720K, 1730K, 1820K, 1830K

Description	Page no.	From loader	To loader
2CYBEL, double extension with CIO (RC, RCS)	534 20 138		
2CYBEL, double extension with CIO (RC, RCS)	534 20 138 A		
Alarm flash on stabilizer legs	534 20 140	1060001	
Spotlight, boom	534 20 150	1060001	
Spotlight, boom	534 20 150 A	1060001	
Spotlight, jib	534 20 160	1060001	
Spotlight, jib	534 20 160 A	1060001	
Spotlight, jib	534 20 160 B		
Temperature monitoring without oil cooler	534 20 170	1060001	
Temperature monitoring for oil cooler	534 20 180	1060001	
Heated seating 12V/24V	534 20 200		
EVS, G2	534 20 210	1060001	
PAS	534 20 220	1060001	
CBS - Calibrate Bypass Sensor	534 20 230	1060001	
Mounting fittings for junction box	534 20 250	1060001	1061929
Mounting fittings for junction box, RCS	534 20 250 A	1061930	
Electronic parts, manual crane			
Basic electronic parts, crane without RC	534 20 510	1060001	
Basic electronic parts, crane without RC	534 20 510 A	1060001	
Horn, no RC	534 20 520	1060001	
ECT 5310 on the side of the dual controls.	534 20 525	1060001	
Mounting fittings for ECT 5320 (HS std.)	534 20 530	1060001	
ECT 5320 on stand-up platform (HS)	534 20 540	1060001	
ECT 5320 on stand-up platform (HS)	534 20 540 A	1060001	
HSL	534 20 550	1060001	
HSL	534 20 550 A	1060001	
HSL-E	534 20 560	1060001	

1500K, 1510K, 1720K, 1730K, 1820K, 1830K

Description	Page no.	From loader	To loader
HSL-E	534 20 560 A	1060001	
HSL-Q, single	534 20 570	1060001	
HSL-Q, single	534 20 570 A		
HSL-Q, double	534 20 580	1060001	
HSL-Q, double	534 20 580 A	1060001	
QOPS, STD.	534 20 590	1060001	
QOPS, STD.	534 20 590 A	1060001	
EVS, G2 + HDL	534 20 600	1060001	
EVS, knuckle boom crane without RC with HS or QOPS	534 20 610	1060001	
EVS, knuckle boom crane without RC with HS or QOPS	534 20 610 A		
HDL without RC	534 20 620	1060001	
2-stage LMB, without RC	534 20 630	1060001	
2CYBEL, single extension (manual)	534 20 650	1060001	
2CYBEL, single extension (manual)	534 20 650 A		
2CYBEL, double extension (man.)	534 20 660	1060001	
2CYBEL, double extension (man.)	534 20 660 A		
Electronic parts, HS-10 crane			
Bottom for RCL box, no RC	534 21 040	1060001	
Wiring, base, standard	534 21 050	1060001	
Base, warning over stand-up controls (HS10)	534 21 060	1060001	
Base, warning over stand-up controls (HS10), variable flow pump	534 21 070	1060001	
Base, electronic slewing limitation (HS10)	534 21 080	1060001	
Base, electronic slewing limitation (HS10), variable flow pump	534 21 090	1060001	
Column, HS10	534 21 100	1060001	
HS10 sensor on platform	534 21 110	1060001	
ECT 5320 compl. + 3.5m cable	534 21 120	1060001	
CYBEW Transport alarm stabilizer leg and beam	534 21 130	1060001	
Electronic parts, HS-10 and TS crane			

1500K, 1510K, 1720K, 1730K, 1820K, 1830K

Description	Page no.	From loader	To loader
PAW, transport alarm - stowing of loader	534 21 330	1060001	
Junction box, various electric parts	534 21 350	1060001	
Oil cooler supply	534 21 360	1060001	
CYL, 12-23	534 21 380	1060001	
CYBEL, single extension, 12-23	534 21 390	1060001	
CYBEL double extension 12-23	534 21 400	1060001	
Height indicateur	534 21 420	1060001	
Electronic parts, TS crane			
TS platform, 1-circuit fixed flow pump	534 21 700	1060001	
TS platform, 1-circuit fixed flow pump, 2-stage LMB	534 21 710	1060001	
TS platform, 2-circuit fixed flow pump, CE basic system	534 21 720	1060001	
Mounting fittings RCL 5300 (TSRC linear)	534 21 730	1060001	
Column, TS incl. CE	534 21 740	1060001	
ECT 5320 in the valve block side, TS	534 21 750	1060001	
Electronic parts, TS, base	534 21 760	1060001	
Electronic parts, TS, Danfoss	534 21 780	1060001	
2CYBEL, single extension, TS	534 21 800	1060001	
2CYBEL, single extension, TS	534 21 800 A		
2CYBEL, double extension, TS	534 21 810	1060001	
2CYBEL, double extension, TS	534 21 810 A		
2-stage LMB, TS, Danfoss	534 21 840	1060001	
EVS-H, TS, Danfoss	534 21 870	1060001	
Electronic parts, RC crane			
Basic electronic parts, crane with RC	534 22 010	1060001	
Basic electronic parts, crane with RC	534 22 010 A		
Basic electronic parts, crane with RC	534 22 010 B		
Terminal block for RC, 24 V	534 22 015	1060001	
Basic electronic parts, RC, BMS-1	534 22 020	1060001	

1500K, 1510K, 1720K, 1730K, 1820K, 1830K

Description	Page no.	From loader	To loader
Antenna, HSRC	534 22 025	1060001	
Antenna extension, Hetronic HSRC	534 22 030	1060001	
Basic electronic parts, RC, PVG16	534 22 040		
Basic electronic parts, NEMRC with CE	534 22 045	1060001	
Basic electronic parts, NEMRC with CE	534 22 045 A	1060001	
Basic electronic parts, NEMRC without CE	534 22 050	1060001	
Basic electronic parts, NEMRC without CE	534 22 050 A	1060001	
2-stage LMB, RC	534 22 060	1060001	
HSL, HSRC	534 22 070	1060001	
HSL, HSRC	534 22 070 A	1060001	
HSL, HS NEMRC	534 22 080	1060001	
HSL-E, HS NEMRC	534 22 090	1060001	
HSL-E, HSRC	534 22 095	1060001	
HSL-E, HSRC	534 22 095 A	1060001	
HSL-Q, HSRC	534 22 100	1060001	
HSL-Q, HSRC	534 22 100 A	1060001	
Termination, G2	534 22 120	1060001	
Winch, electric parts	534 22 130	1060001	
Column, Fly-Jib	534 22 140	1060001	
Column, Fly-Jib	534 22 140 A	1060001	
Column, Fly-Jib	534 22 140 B	1060001	
Stabilizer operation via RC	534 22 150	1060001	
Stabilizer operation via RC	534 22 150 A	1060001	
Stabilizer operation via RC	534 22 150 B		
Stabilizer operation via RC (without CIO)	534 22 154	1060001	1061169
Stabilizer operation via RC (without CIO)	534 22 154 A	1061170	1061996
Stabilizer operation via RC (without CIO)	534 22 154 B	1061997	

1500K, 1510K, 1720K, 1730K, 1820K, 1830K

Description	Page no.	From loader	To loader
Stabilizer operation via RC (with winch)	534 22 156	1060001	1061169
Stabilizer operation via RC (with winch)	534 22 156 A	1061170	1061996
Stabilizer operation via RC (with winch)	534 22 156 B	1061997	
Fly-Jib supply, K2	534 22 160	1060001	
Fly-Jib supply	534 22 160 A		
Spotlight, radio remote controlled.	534 22 170	1060001	
Spotlight, radio remote controlled.	534 22 170 A	1060001	
Light tower for BMS-1	534 22 180	1060001	
3rd extra valve	534 22 190	1060001	
3rd extra valve	534 22 190 A	1060001	
Junction box 2, G2	534 22 200	1060001	
QOPS, STDRC	534 22 220	1060001	
QOPS, STDRC	534 22 220 A	1060001	
Light tower	534 22 230	1060001	
Tools			
Lifting yoke, cpl.	534 25 010	1060001	
Hydraulic accessories	534 25 020	1060001	
Dismounting tools, cpl.(EXV)	534 25 030	1060001	
Lifting tools cpl. (Change of hoses inside the column)	534 25 040	1060001	
Holding kit (pin in hydr. extension)	534 25 050	1060001	
Spanner wrench, footplate + ball joint	534 25 060	1060001	
Lifting yoke, cpl.	534 25 070	1060001	
Kit for replacement of load-holding valve	534 25 080	1060001	

1500K, 1510K, 1720K, 1730K, 1820K, 1830K

Internal ref. 63 40 000

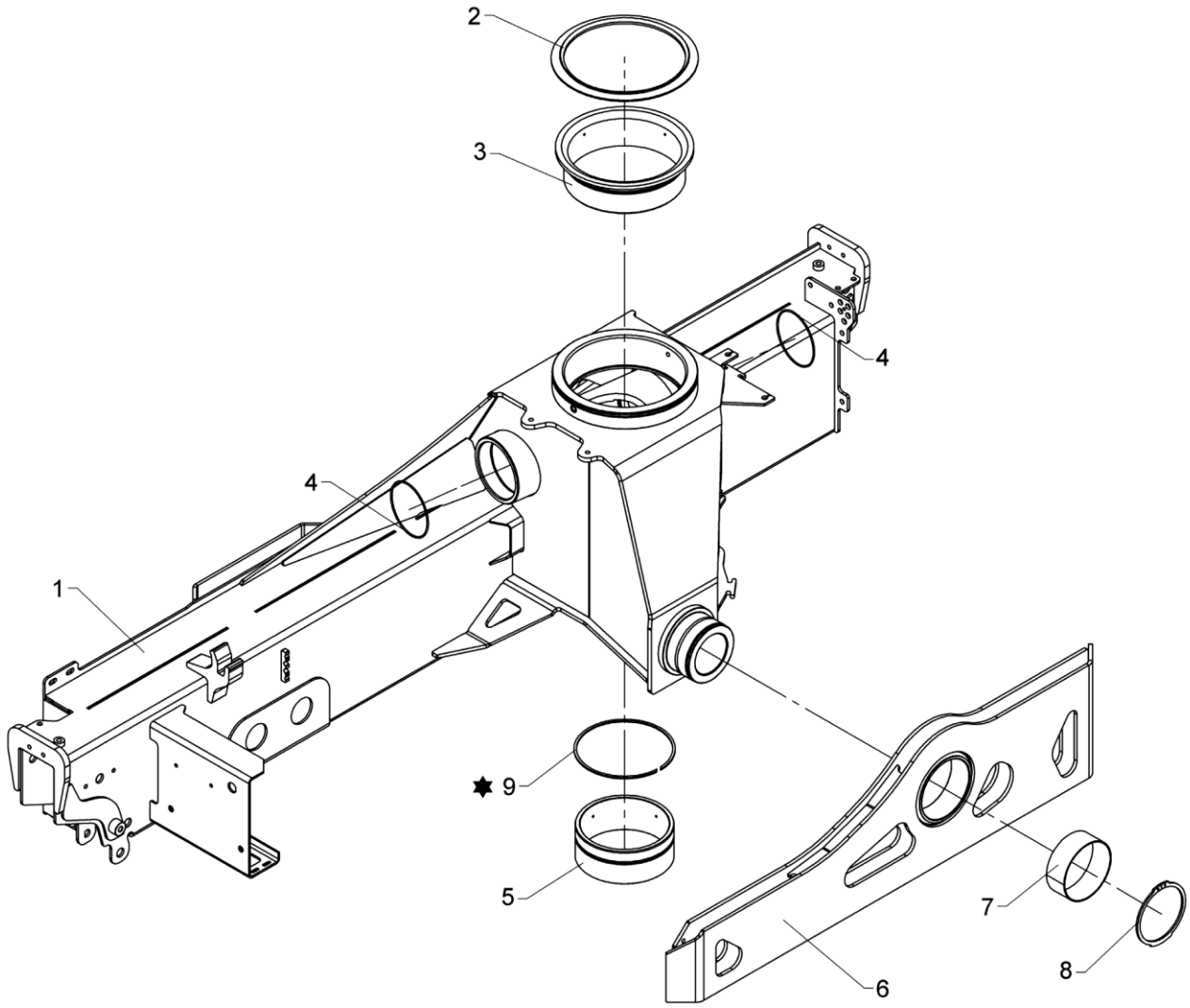

✸ Only initial cranes build.

Obsolete

534 01 010

Base, complete

From loader 1060001
To loader 1061113

Created 12-03-2009
Modified

Pos	Qty.	Part no.	Description	Remarks
1	1	6340010	Base	6340001
2	1	21937	V-ring	VL-0275
3	1	63557	Top bearing	
4	2	20197	O-ring	OR 118 x 3
5	1	63558	Bottom bearing	
6	1	6306135	Suspension traverse	
7	1	23362	Bushing	PM 13050 DX
8	1	33151	Circlip	130U
9	1	33246	Spring ring	SB 200

1500K, 1510K, 1720K, 1730K, 1820K, 1830K

Internal ref. 63 40 000

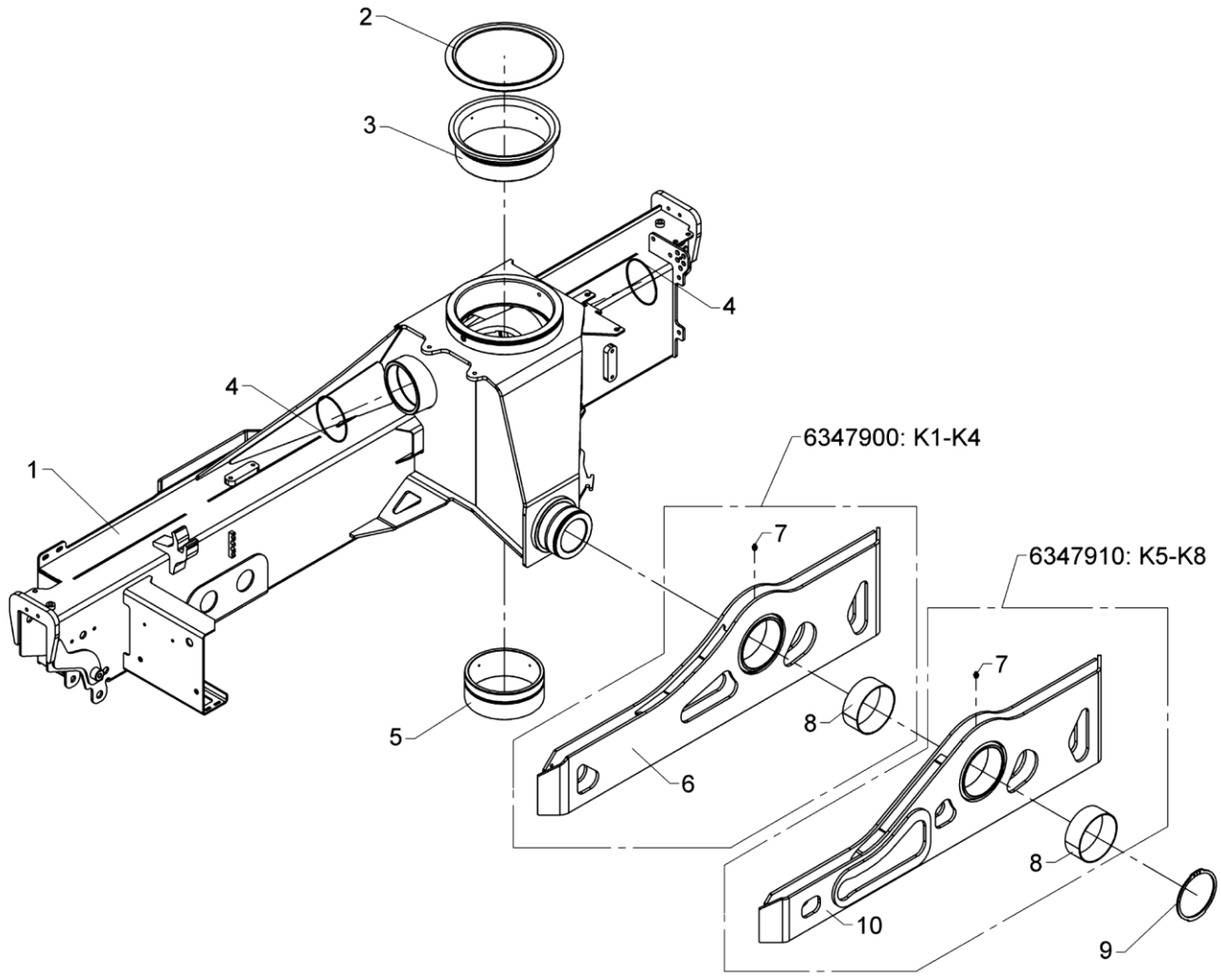

Obsolete

534 01 010 A

From loader 1061114
To loader 1061996

Created 10-01-2013
Modified 15-11-2017

Base, complete

Pos	Qty.	Part no.	Description	Remarks
1	1	6340010	Base	6340001
2	1	21937	V-ring	VL-0275
3	1	63557	Top bearing	
4	2	20197	O-ring	OR 118 x 3
5	1	63558	Bottom bearing	
6	1	6306135	Suspension traverse	
7	1	31318	Lubricator	1/8" RG
8	1	23362	Bushing	PM 13050 DX
9	1	33151	Circlip	130U
10	1	6345135	Suspension traverse	

1500K, 1510K, 1720K, 1730K, 1820K, 1830K

63 47 910
63 47 900
Internal ref. 63 40 000

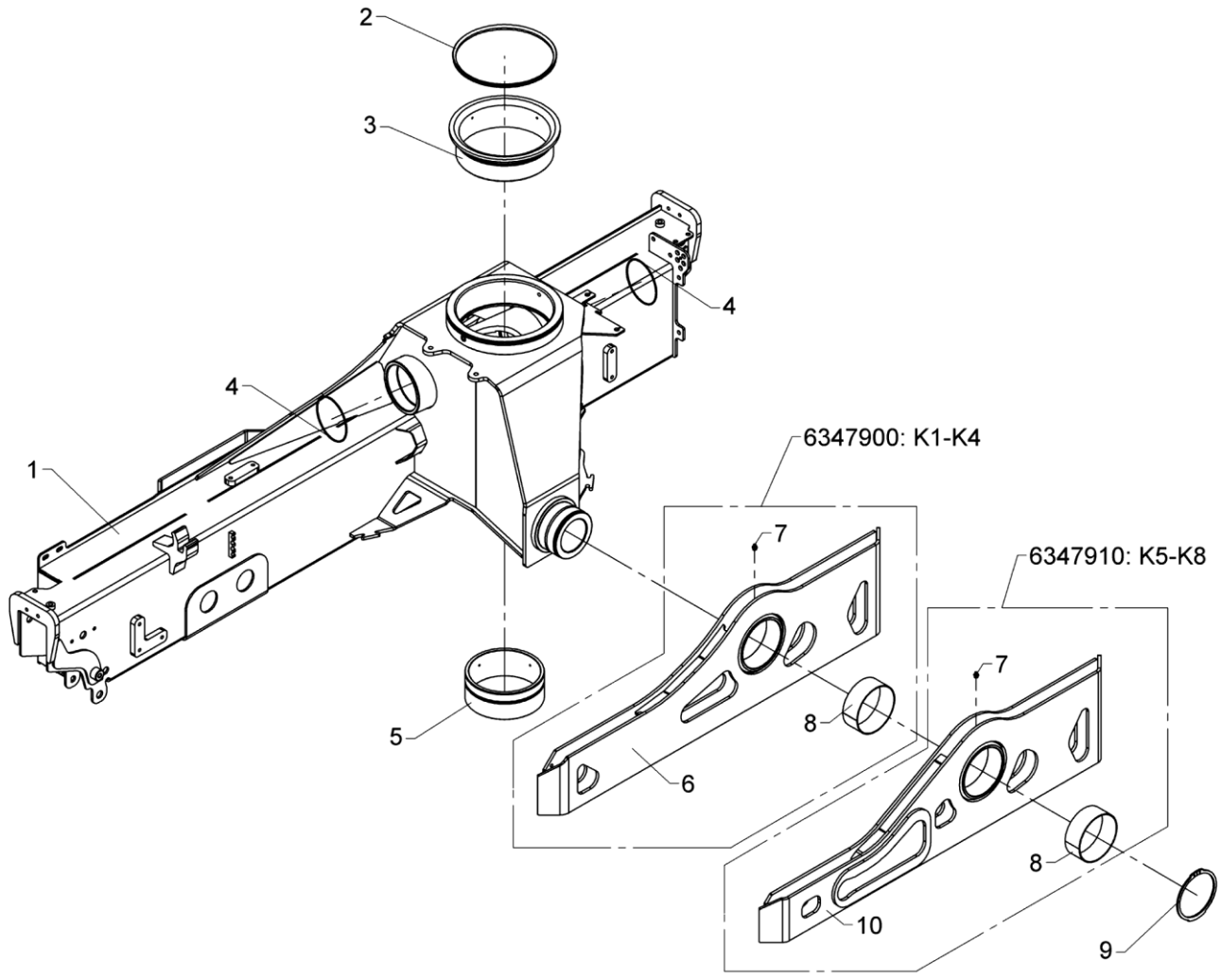

534 01 010 B

From loader 1061997
To loader

Created 09-04-2018
Modified

Base, complete

Pos	Qty.	Part no.	Description	Remarks
1	1	6340010	Base	6342101
2	1	21937	V-ring	VL-0275
3	1	63557	Top bearing	
4	2	20197	O-ring	OR 118 x 3
5	1	63558	Bottom bearing	
6	1	6306135	Suspension traverse	
7	1	31318	Lubricator	1/8" RG
8	1	23362	Bushing	PM 13050 DX
9	1	33151	Circlip	130U
10	1	6345135	Suspension traverse	

1500K, 1510K, 1720K, 1730K, 1820K, 1830K

Internal ref. 63 44 020

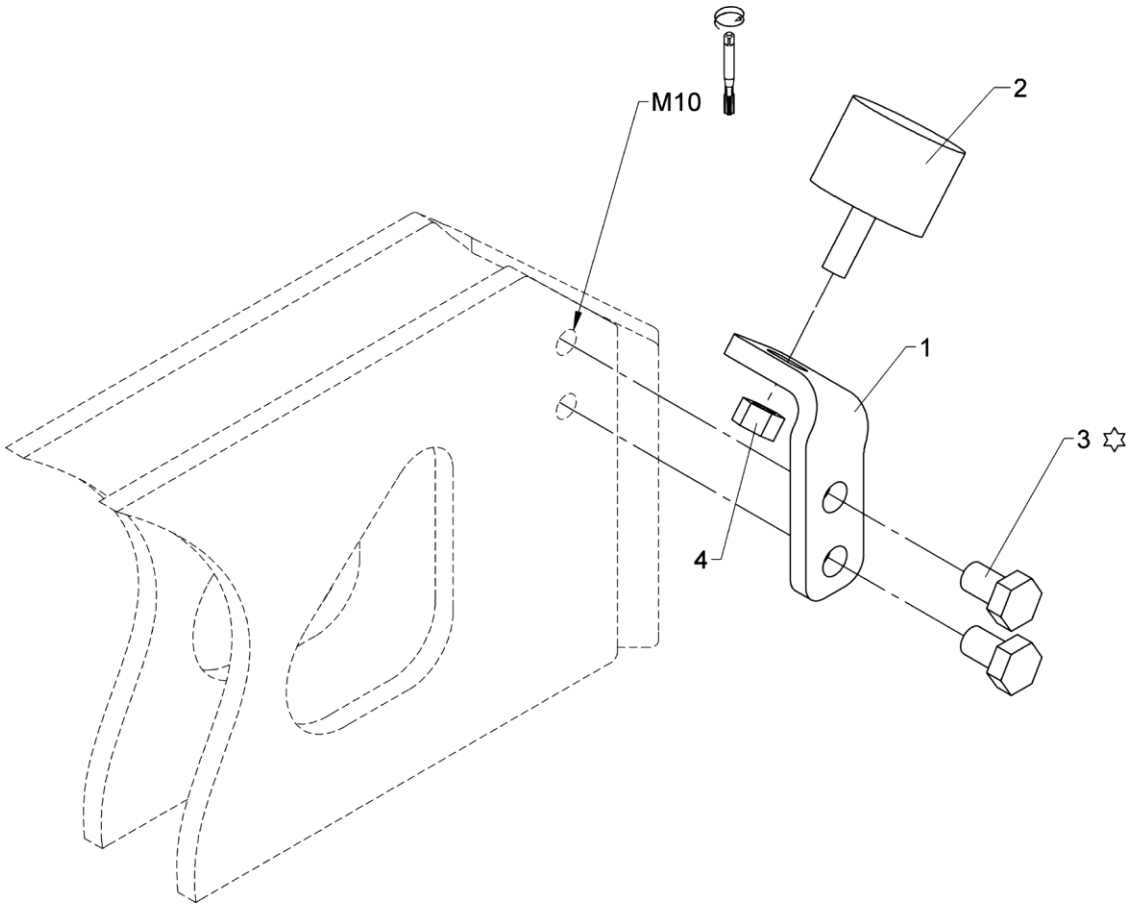

✡ Loctite 243

Obsolete

Support for cylinder K5/K6/K7/K8

534 01 040

From loader 1060001
To loader 1061904

Created 19-02-2014
Modified 21-01-2015

Pos	Qty.	Part no.	Description	Remarks
1	1	6346007	Bracket	
2	1	63295	Torsion balancer Type 2	
3	2	30153	Set screw	M10 x 16
4	1	30886	Lock nut, stainless	M8

1500K, 1510K, 1720K, 1730K, 1820K, 1830K

Internal ref. 63 40 260

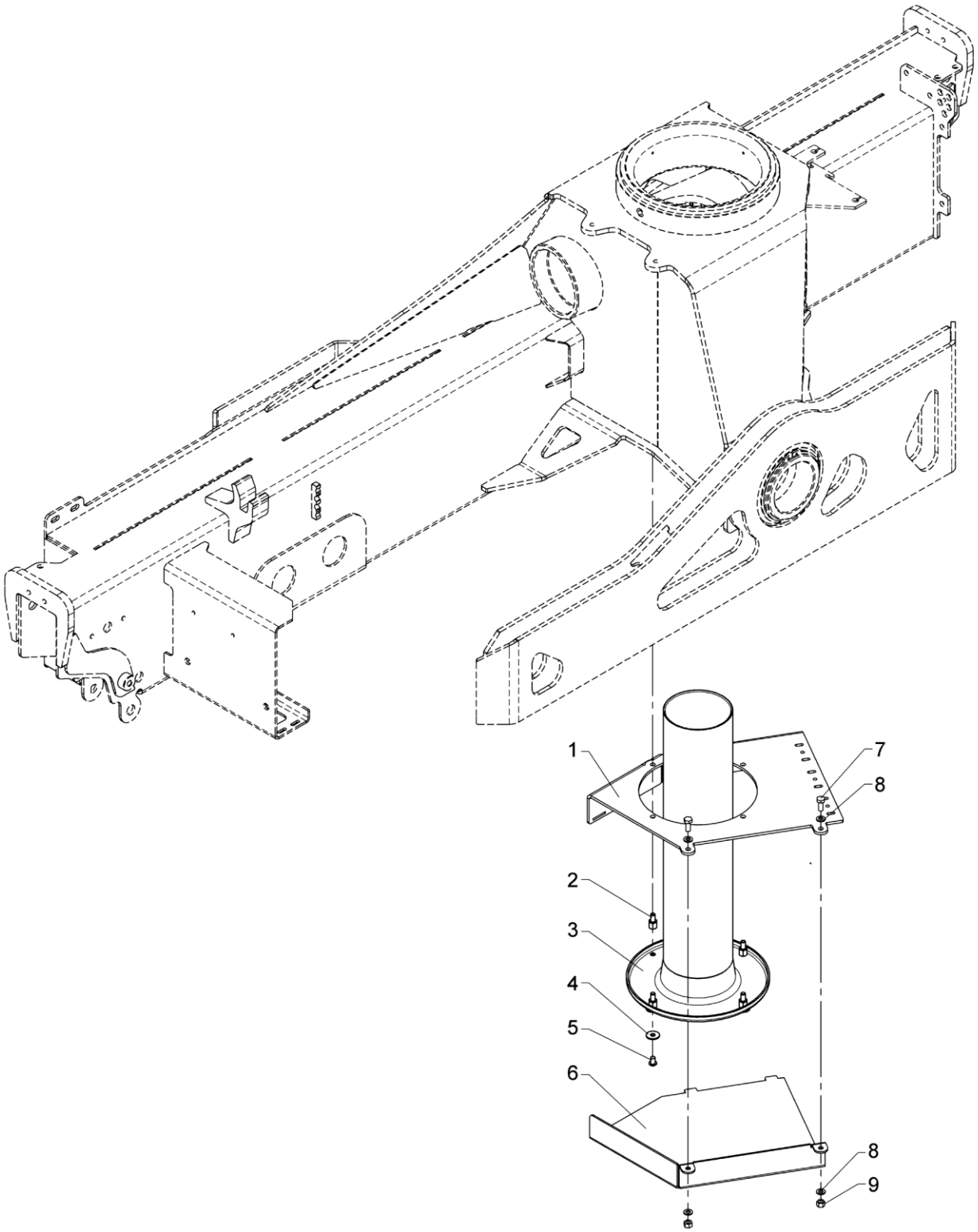

Protection plate, cpl. (std.)

534 01 050

From loader 1060001
To loader

Created 11-11-2008
Modified

Pos	Qty.	Part no.	Description	Remarks
1	1	6340231	Cover	
2	4	6340223	Spacer	
3	1	63490	Bushing	
4	4	31136	Washer, stainless	8 mm
5	4	30924	Screw	M8 x 12
6	1	6340233	Hose shield	
7	2	30132	Set screw, stainless	M8 x 20
8	4	31147	Face washer, 8 mm	8 mm
9	2	30886	Lock nut, stainless	M8

1500K, 1510K, 1720K, 1730K, 1820K, 1830K

Internal ref. 63 41 570

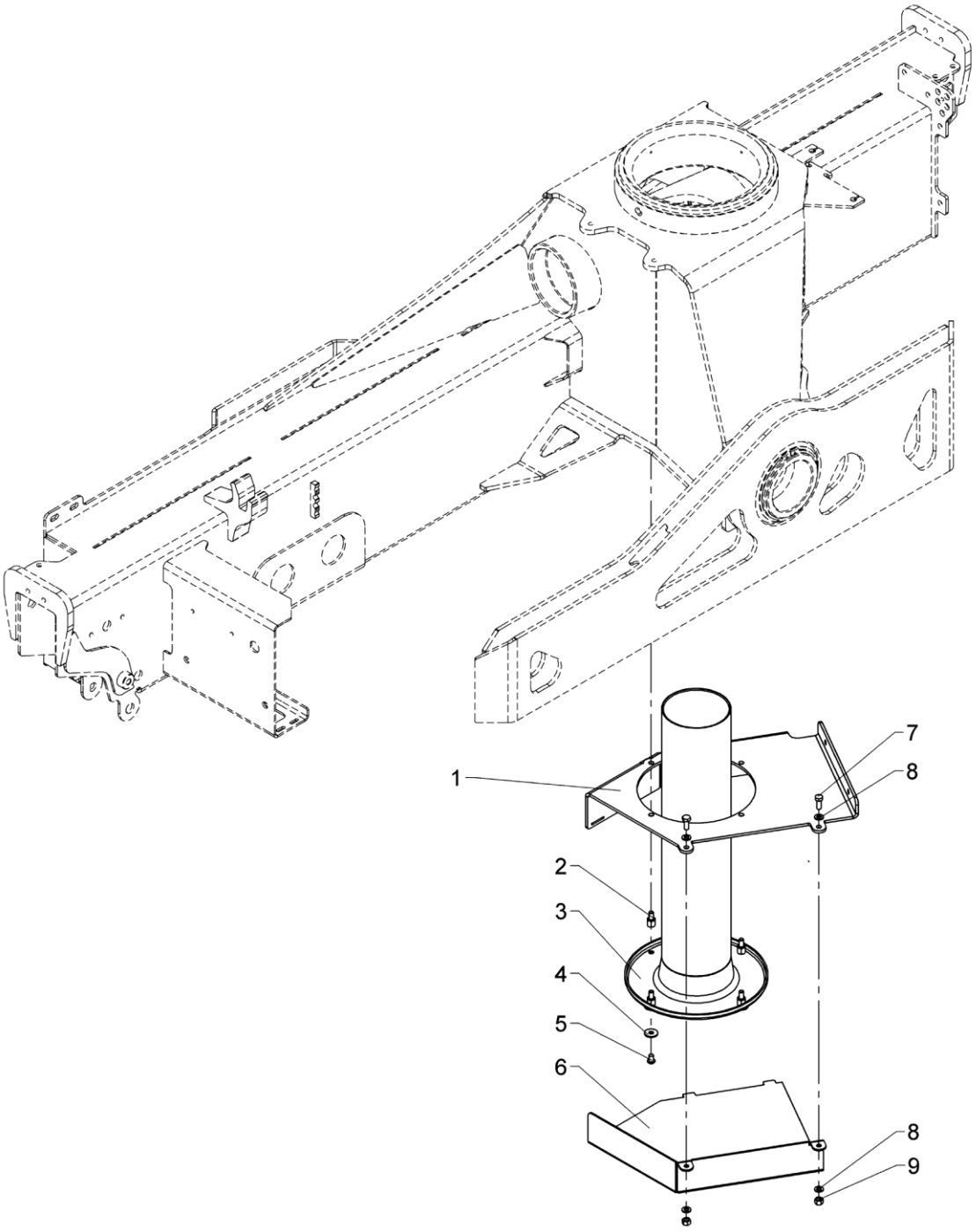

Protection plate, complete (TS)

534 01 060

From loader 1060001
To loader

Created 21-11-2008
Modified

Pos	Qty.	Part no.	Description	Remarks
1	1	6340841	Cover (TS)	
2	4	6340223	Spacer	
3	1	63490	Bushing	
4	4	31136	Washer, stainless	8 mm
5	4	30924	Screw	M8 x 12
6	1	6340843	Protection plate (TS)	
7	2	30132	Set screw, stainless	M8 x 20
8	4	31147	Face washer, 8 mm	8 mm
9	2	30886	Lock nut, stainless	M8

1500K, 1510K, 1720K, 1730K, 1820K, 1830K

Internal ref. 63 40 020

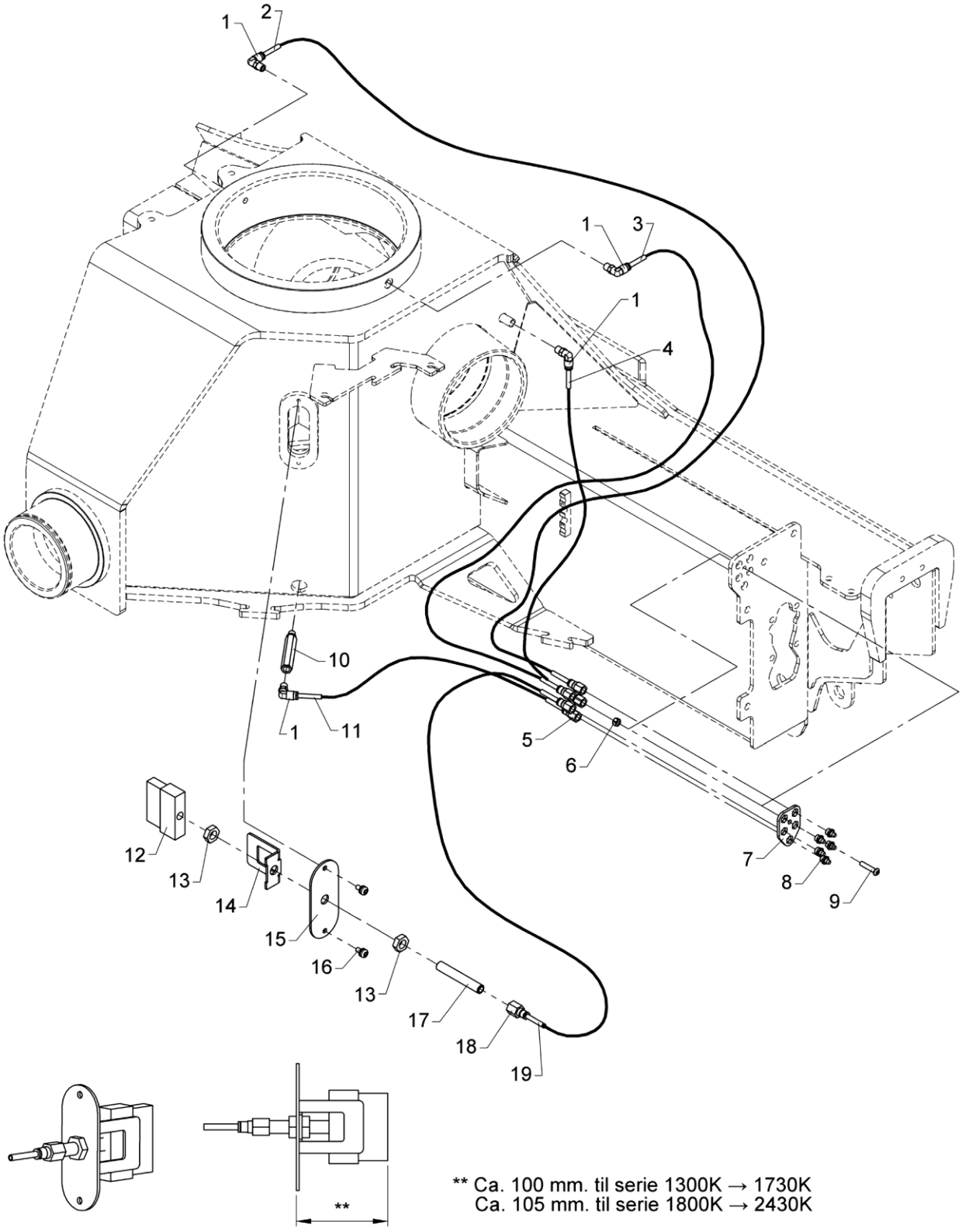

** Ca. 100 mm. til serie 1300K → 1730K
Ca. 105 mm. til serie 1800K → 2430K

Obsolete

Central lubrication and lubricating brush

534 01 080

From loader 1060001
To loader 1060521

Created 11-11-2008
Modified 01-02-2011

Pos	Qty.	Part no.	Description	Remarks
1	4	25532	Elbow connection	
2	1	41712	Cable lead-in	1260 mm
3	1	41712	Cable lead-in	970 mm
4	1	41712	Cable lead-in	640 mm
5	5	25579	Union nut	
6	1	30884	Lock nut, stainless	M6
7	1	6306038	Lock plate	
8	5	31318	Lubricator	1/8" RG
9	1	32458	Screw	M6 x 30
10	1	6340046	Nipple (1/8" RG - 90 mm)	
11	1	41712	Cable lead-in	880 mm
12	1	31395	Brush	
13	2	25354	Counter nut	1/4"
14	1	6306047	Safety device, lubrica. brush	
15	1	6306046	Cover for lubricating brush	
16	2	32479	Screw	M6 x 12
17	1	6306048	Threaded pipe	
18	1	25580	Union nut	
19	1	41712	Cable lead-in	1200 mm

1500K, 1510K, 1720K, 1730K, 1820K, 1830K

Internal ref. 63 40 020

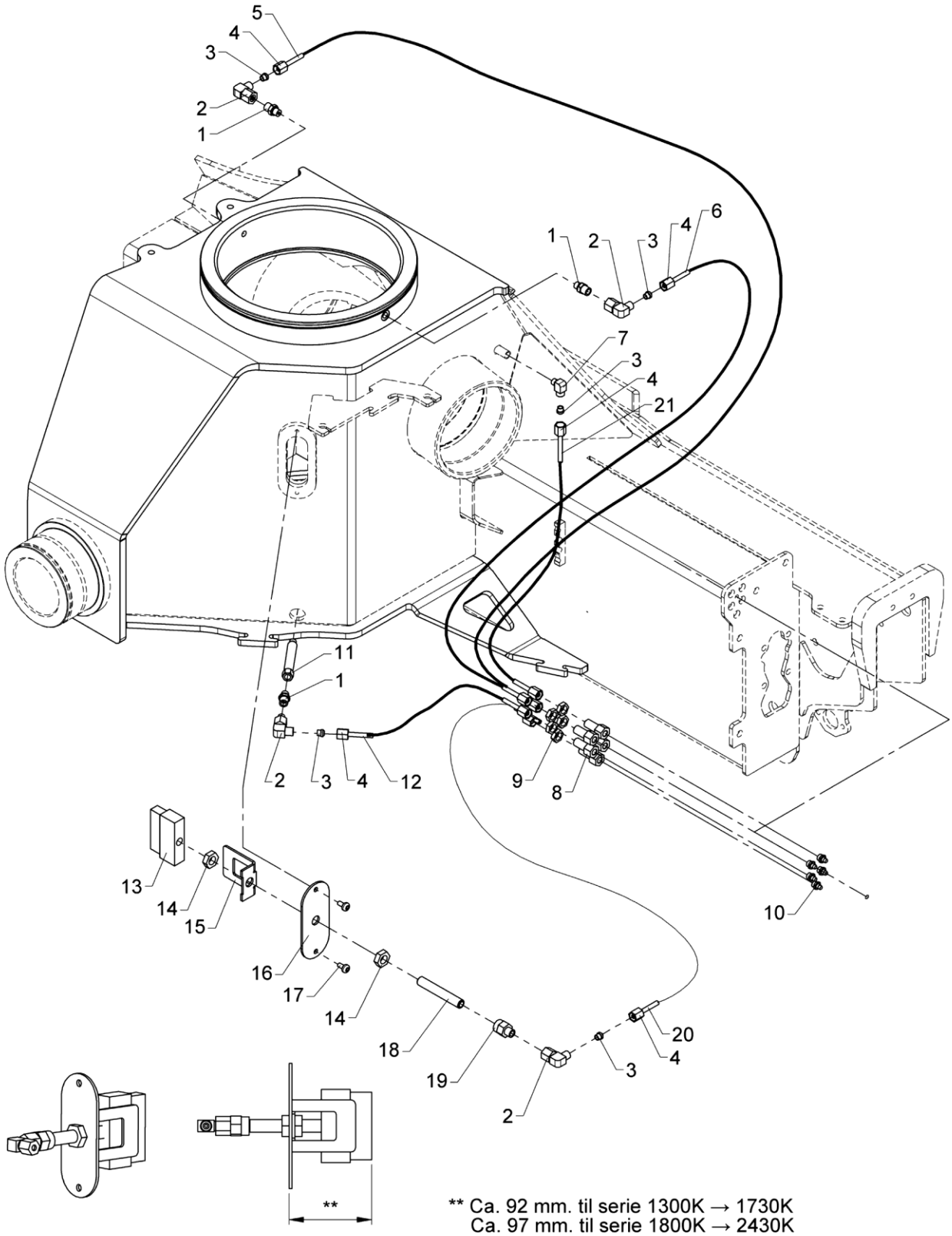

Obsolete

Central lubrication and lubricating brush

534 01 080 A

From loader 1060522
To loader 1061996

Created 01-02-2011
Modified 22-09-2016

Pos	Qty.	Part no.	Description	Remarks
1	3	26189	Connection	P-GEV 6 LR-WD
2	4	26174	Elbow connection	EWSD 6 L
3	10	26114	Profile ring	P-R 6 L/S
4	10	26164	Coupling nut	M 6 L
5	1	62821	Nylon pipe	1260 mm
6	1	62821	Nylon pipe	970 mm
7	1	26186	Elbow connection	WEV 6 LRK
8	5	26891	Bulkhead connection	
9	5	26890	Counter nut	M12 x 1,5
10	5	31318	Lubricator	1/8" RG
11	1	6340046	Nipple (1/8" RG - 90 mm)	
12	1	62821	Nylon pipe	880 mm
13	1	31395	Brush	
14	2	25354	Counter nut	1/4"
15	1	6306047	Safety device, lubrica. brush	
16	1	6306046	Cover for lubricating brush	
17	2	32479	Screw	M6 x 12
18	1	6306048	Threaded pipe	
19	1	26372	Pressure gauge connection	P-MAV 6 LR
20	1	62821	Nylon pipe	1200 mm
21	1	62821	Nylon pipe	640 mm

1500K, 1510K, 1720K, 1730K, 1820K, 1830K

Internal ref. 63 47 020

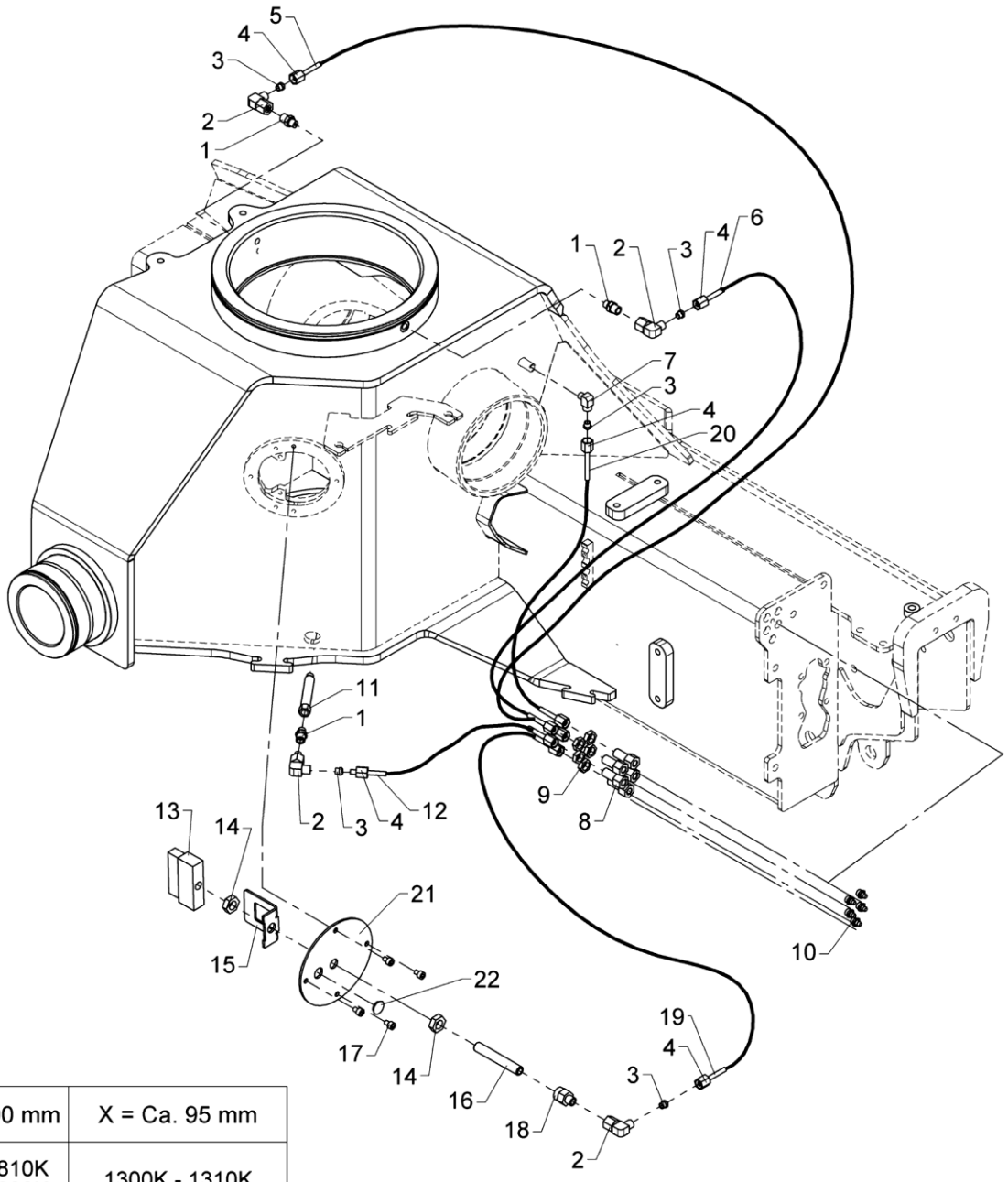

X = Ca. 100 mm	X = Ca. 95 mm
1800K - 1810K 2020K - 2030K 2120K - 2130K 2200K - 2210K 2310K - 2320K 2420K - 2430K 2620K - 2630K 2810K - 2820K 1943Z 2243Z 2310S	1300K - 1310K 1420K - 1430K 1500K - 1510K 1520K - 1530K 1610K - 1620K 1720K - 1730K 1820K - 1830K 1410T - 1530T 1630T - 1910T 2030T - 2130T

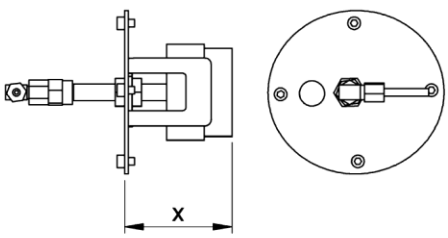

Central lubrication and lubricating brush

Pos	Qty.	Part no.	Description	Remarks
1	3	26189	Connection	P-GEV 6 LR-WD
2	4	26174	Elbow connection	EWSD 6 L
3	10	26114	Profile ring	P-R 6 L/S
4	10	26164	Coupling nut	M 6 L
5	1	62821	Nylon pipe	1260 mm
6	1	62821	Nylon pipe	970 mm
7	1	26186	Elbow connection	WEV 6 LRK
8	5	26891	Bulkhead connection	
9	5	26890	Counter nut	M12 x 1,5
10	5	31318	Lubricator	1/8" RG
11	1	6340046	Nipple (1/8" RG - 90 mm)	
12	1	62821	Nylon pipe	1200 mm
13	1	31395	Brush	
14	2	25354	Counter nut	1/4"
15	1	6306047	Safety device, lubrica. brush	
16	1	6306048	Threaded pipe	
17	4	30454	Screw	MC6 x 8
18	1	26372	Pressure gauge connection	P-MAV 6 LR
19	1	62821	Nylon pipe	640 mm
20	1	62821	Nylon pipe	1200 mm
21	1	6346047	Cover	
22	1	64360	Plug	

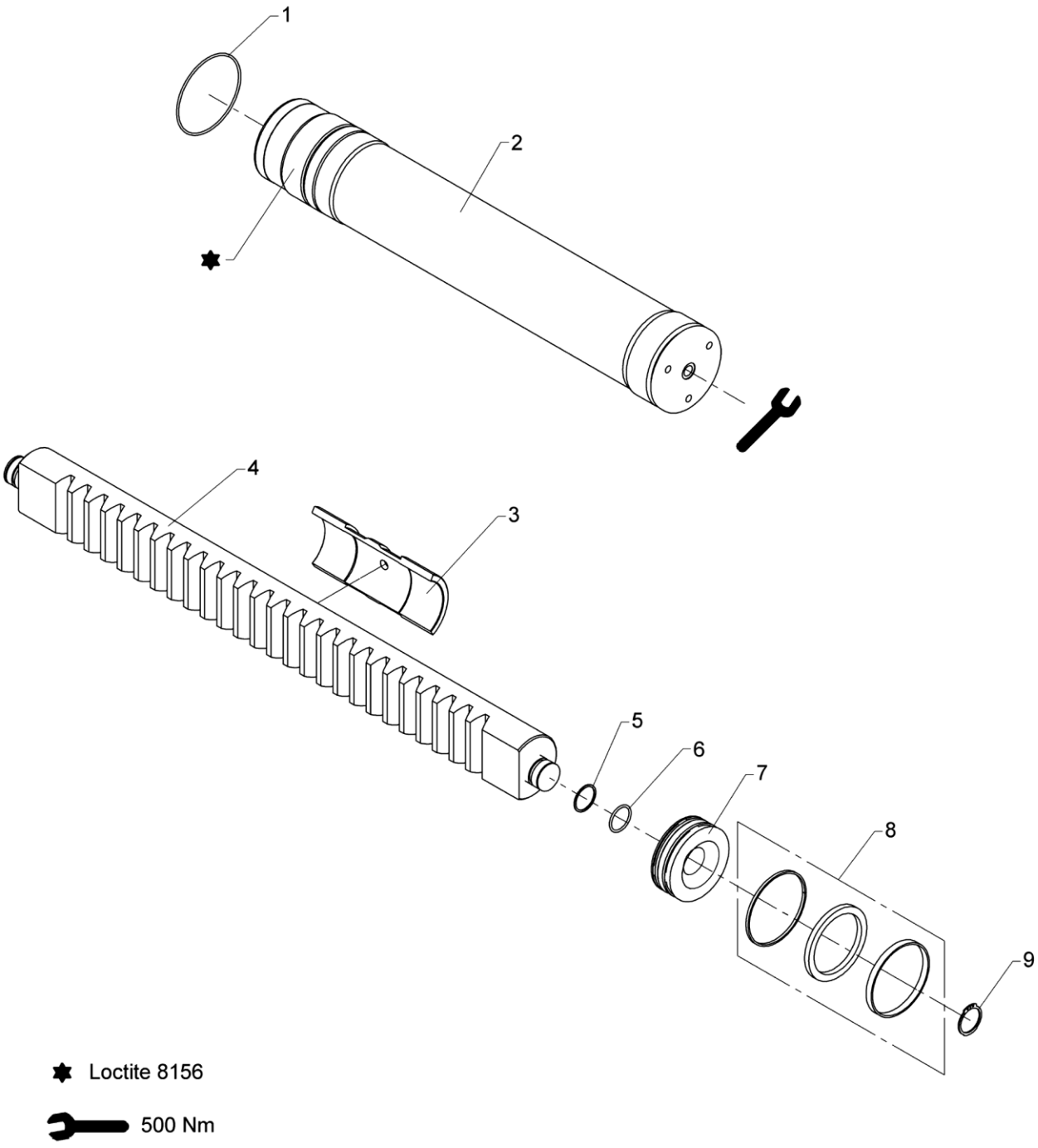
1
2
4
3
5
6
7
8
9
Loctite 8156
500 Nm

Obsolete

Slewing system, 400°

534 01 100

From loader 1060001
To loader 1060840

Created 11-11-2008
Modified 12-06-2012

Pos	Qty.	Part no.	Description	Remarks
1	2	20208	O-ring	OR 114,5 x 3
2	2	6340041	Slewing cylider	
3	1	63559	Guide block	
4	1	6340044	Rack (ø95-M10-400)	
5	2	20705	Back ring	STR 35 x 40 x 1,3
6	2	20177	O-ring	OR 34,2 x 3
7	2	6340045	Piston	
8	2	6894250	Seal kit	
9	2	33121	Circlip	40U

1500K, 1510K, 1720K, 1730K, 1820K, 1830K

Internal ref. 63 40 030

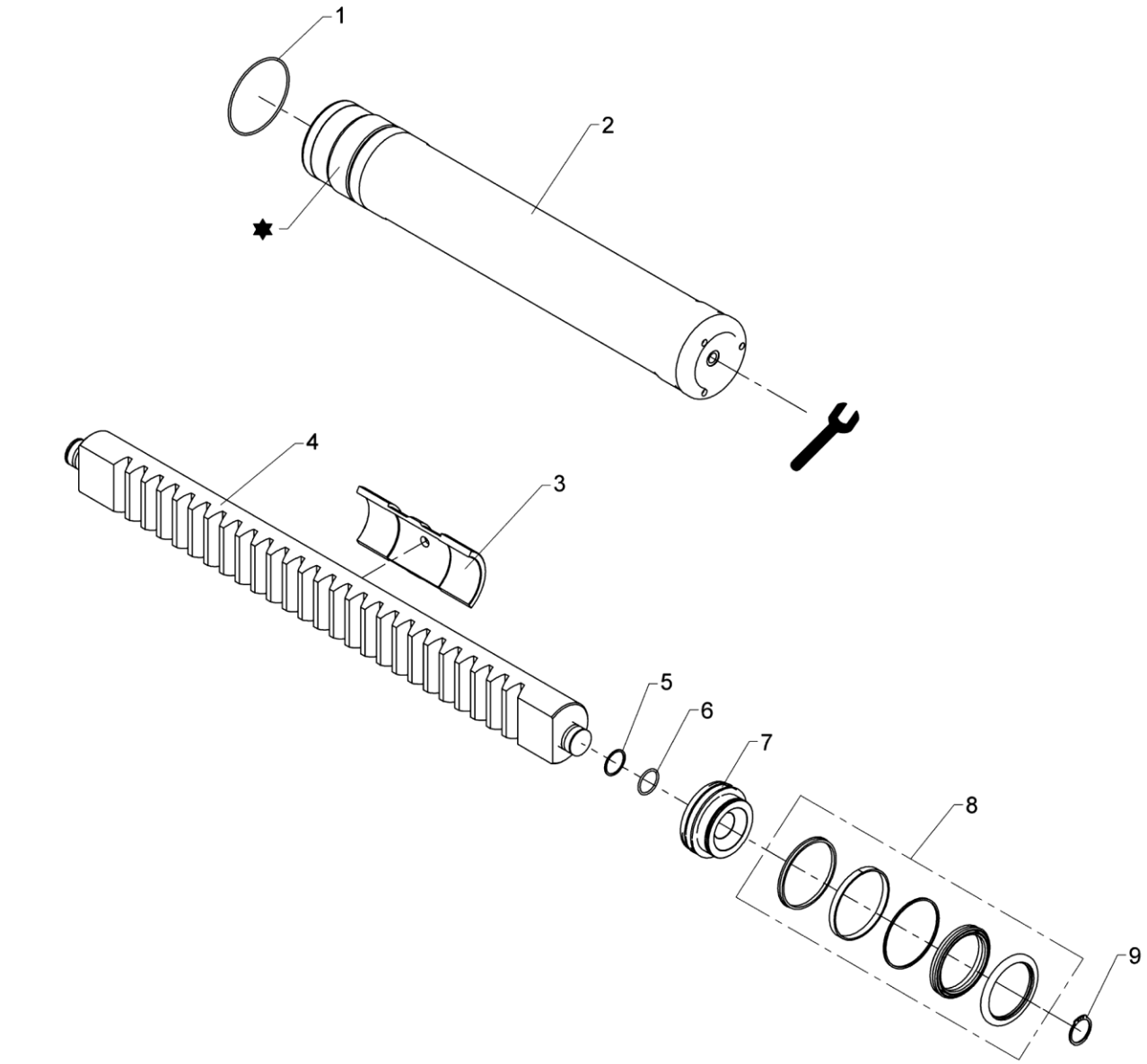

Loctite 8156

500 Nm

Obsolete

Slewing system, 400°

534 01 100 A

From loader 1060841
To loader 1061182

Created 12-06-2012
Modified

Pos	Qty.	Part no.	Description	Remarks
1	2	20208	O-ring	OR 114,5 x 3
2	2	6342041	Slewing cylinder	
3	1	63559	Guide block	
4	1	6340044	Rack (ø95-M10-400)	
5	2	20705	Back ring	STR 35 x 40 x 1,3
6	2	20177	O-ring	OR 34,2 x 3
7	2	6341085	Piston	
8	2	6894680	Seal kit f. slewing cyl.(ø110)	
9	2	33121	Circlip	40U

1500K, 1510K, 1720K, 1730K, 1820K, 1830K

Internal ref. 63 40 030

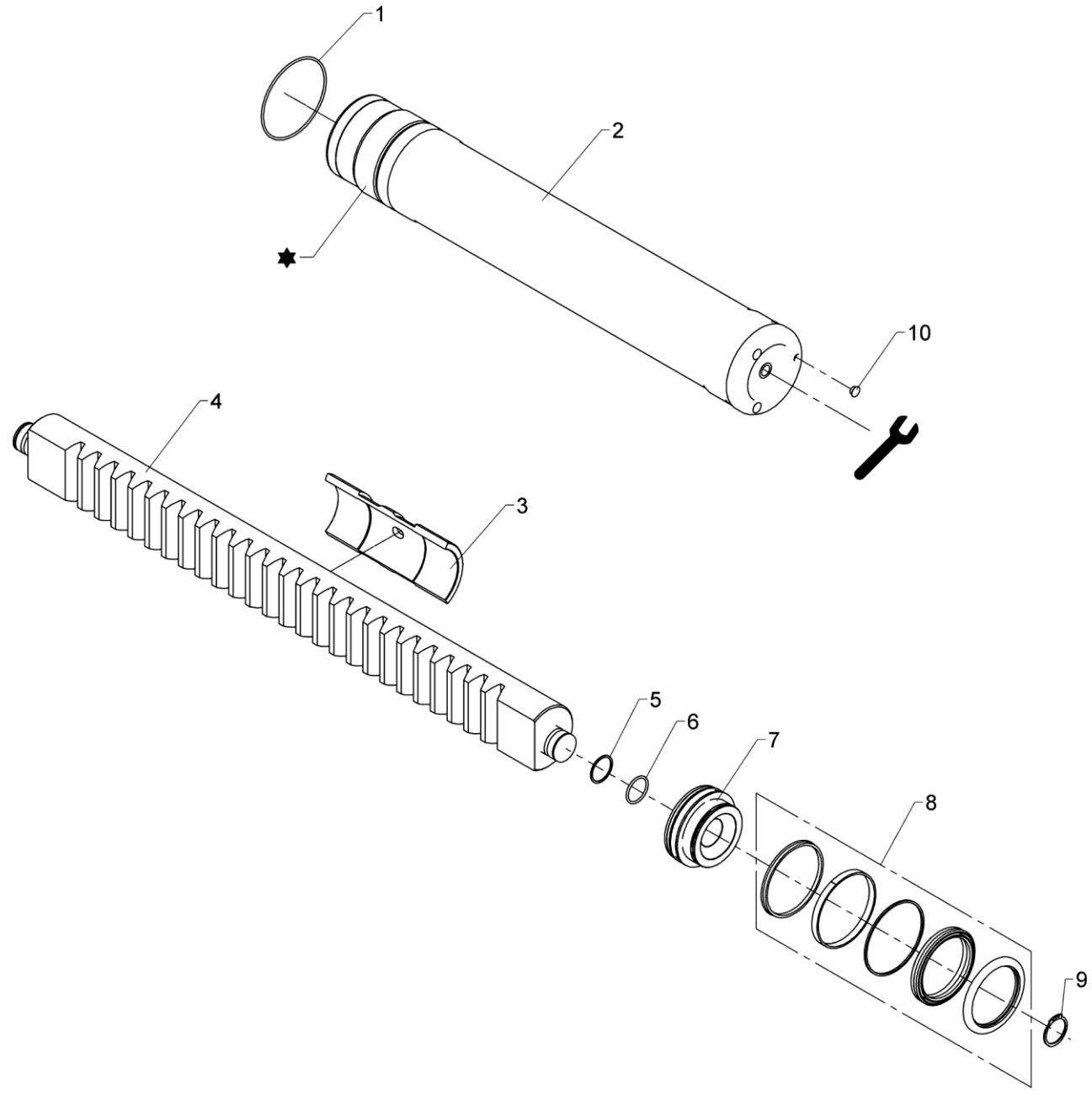

Loctite 8156

500 Nm

Slewing system, 400°

Pos	Qty.	Part no.	Description	Remarks
1	2	20208	O-ring	OR 114,5 x 3
2	2	6342241	Slewing cylinder	
3	1	63559	Guide block	
4	1	6340044	Rack (ø95-M10-400)	
5	2	20705	Back ring	STR 35 x 40 x 1,3
6	2	20177	O-ring	OR 34,2 x 3
7	2	6341085	Piston	
8	2	6894680	Seal kit f. slewing cyl.(ø110)	
9	2	33121	Circlip	40U
10	6	64371	Plug	

1500K, 1510K, 1720K, 1730K, 1820K, 1830K

Internal ref. 63 43 300

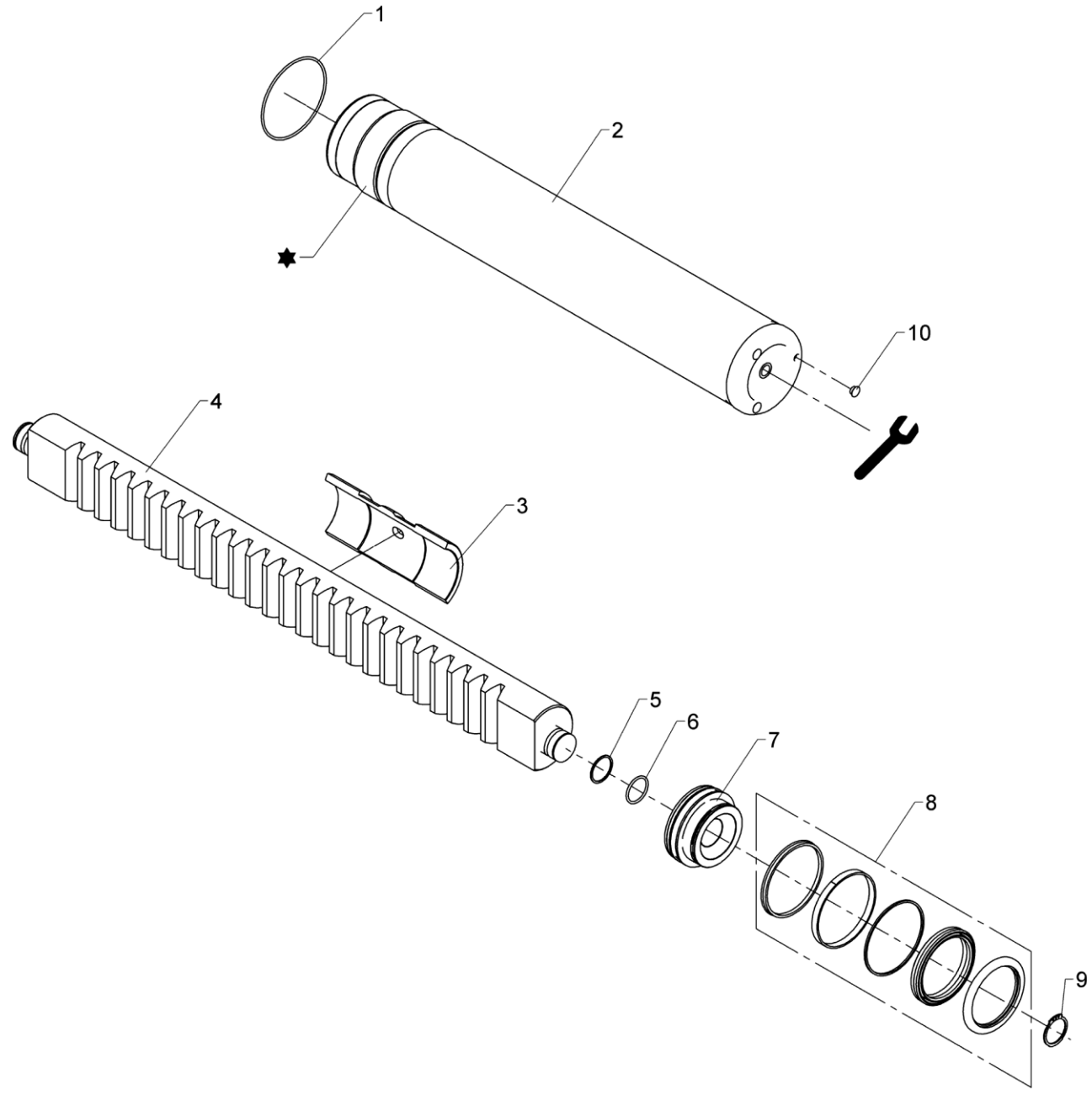

✸ Loctite 8156

500 Nm

Slewing system, 400°

Pos	Qty.	Part no.	Description	Remarks
1	2	20208	O-ring	OR 114,5 x 3
2	2	6343241	Slewing cylinder	
3	1	63559	Guide block	
4	1	6340044	Rack (ø95-M10-400)	
5	2	20705	Back ring	STR 35 x 40 x 1,3
6	2	20177	O-ring	OR 34,2 x 3
7	2	6341085	Piston	
8	2	6894680	Seal kit f. slewing cyl.(ø110)	
9	2	33121	Circlip	40U
10	6	64371	Plug	

1500K, 1510K, 1720K, 1730K, 1820K, 1830K

Internal ref. 63 42 050

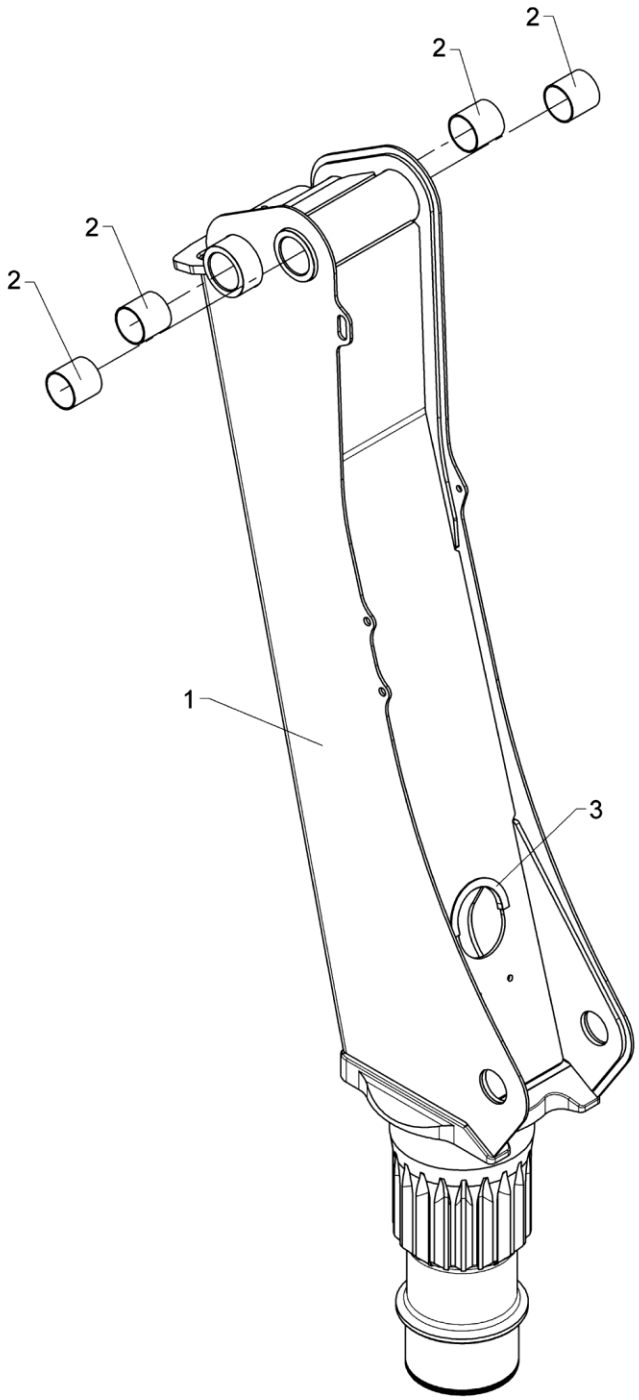

Obsolete

Column, cpl. for link arm system, boom

534 01 300

From loader 1060001
To loader 1060386

Created 14-11-2008
Modified

Pos	Qty.	Part no.	Description	Remarks
1	1	6342040	Column, painted	6342051
2	4	23431	Composite bearing	ø60/65 x 60
3	1	46587	Rubber protection	180 mm

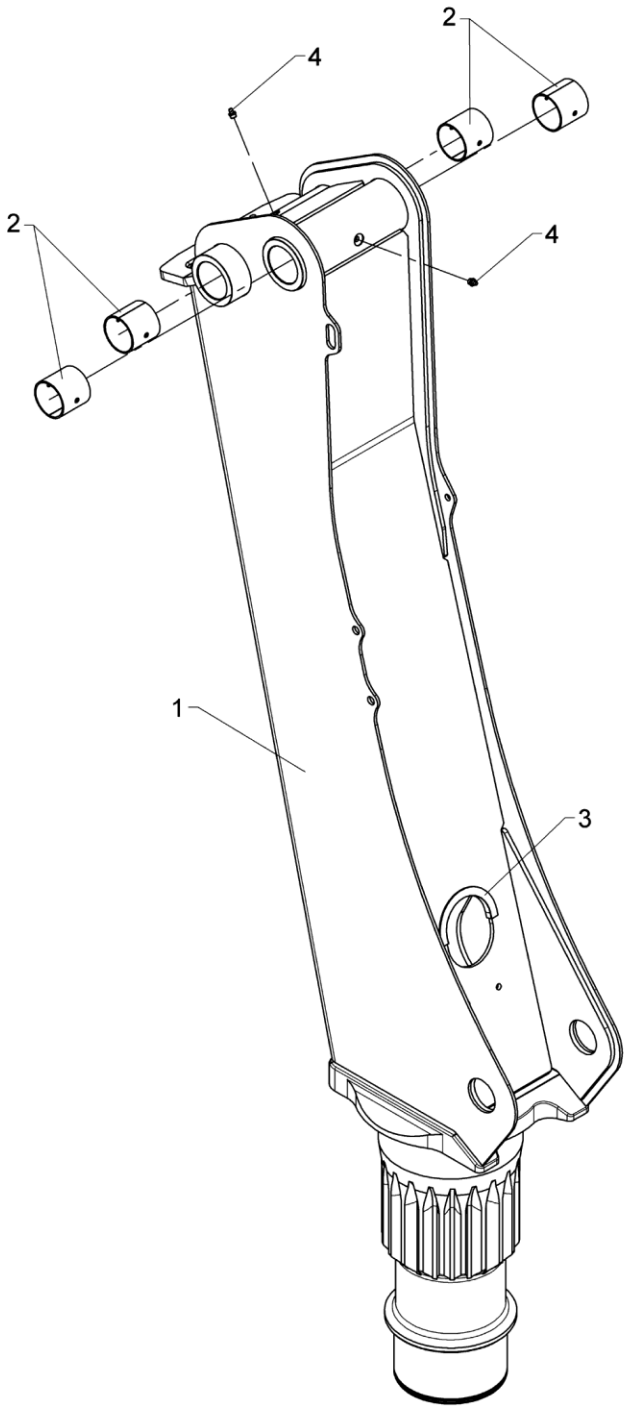
2
4
2
4
1
3

534 01 300 A

From loader 1060387
To loader

Created 19-07-2010
Modified

Column, cpl. for link arm system, boom

Pos	Qty.	Part no.	Description	Remarks
1	1	6342040	Column, painted	6342051
2	4	23330	Bushing	PM 6060 DX
3	1	46587	Rubber protection	180 mm
4	2	31318	Lubricator	1/8" RG

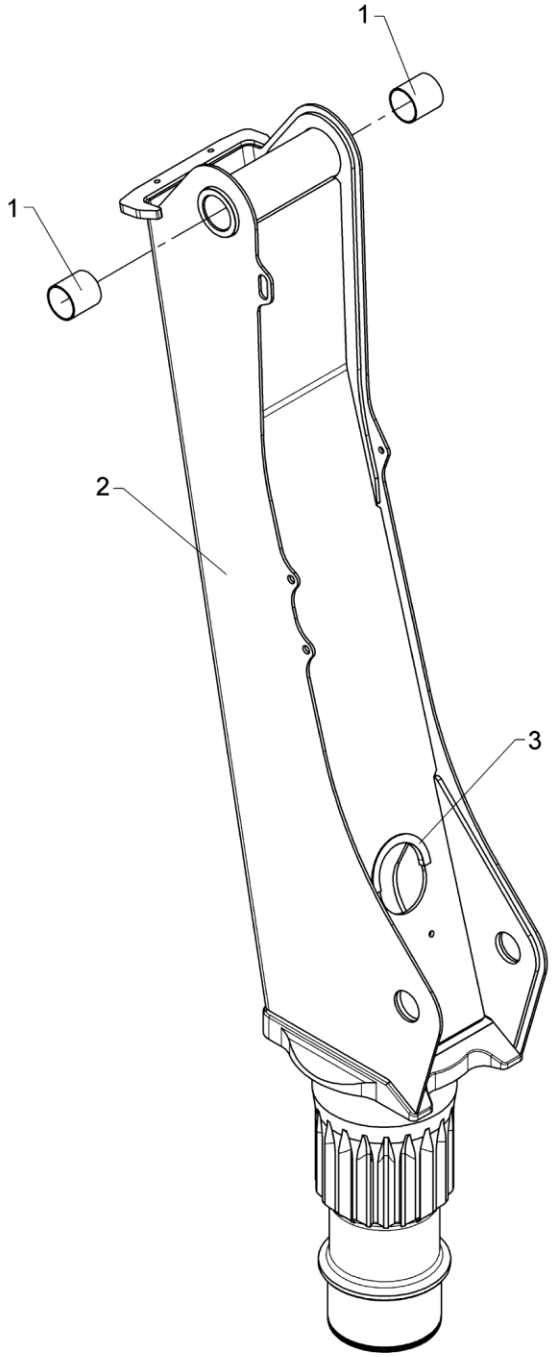
1
1
2
3

Obsolete

Column, cpl. excl. link arm system, boom

534 01 350

From loader 1060001
To loader 1060386

Created 14-11-2008
Modified

Pos	Qty.	Part no.	Description	Remarks
1	2	23410	Composite bearing	ø55/60 x 60
2	1	6342080	Column, painted	6342071
3	1	46587	Rubber protection	180 mm

1500K, 1510K, 1720K, 1730K, 1820K, 1830K

Internal ref. 63 42 070

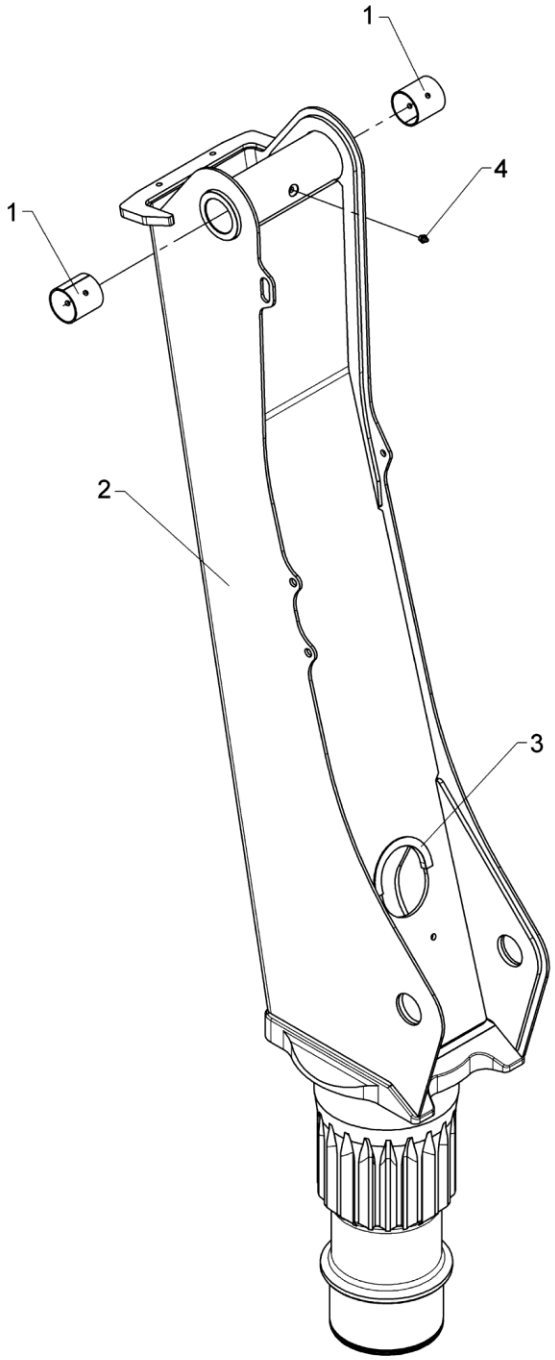

534 01 350 A

From loader 1060387
To loader

Column, cpl. excl. link arm system, boom

Created 19-07-2010
Modified 06-12-2012

Pos	Qty.	Part no.	Description	Remarks
1	2	23419	Bushing	PM 5560 DX
2	1	6342080	Column, painted	6342071
3	1	46587	Rubber protection	180 mm
4	1	31318	Lubricator	1/8" RG

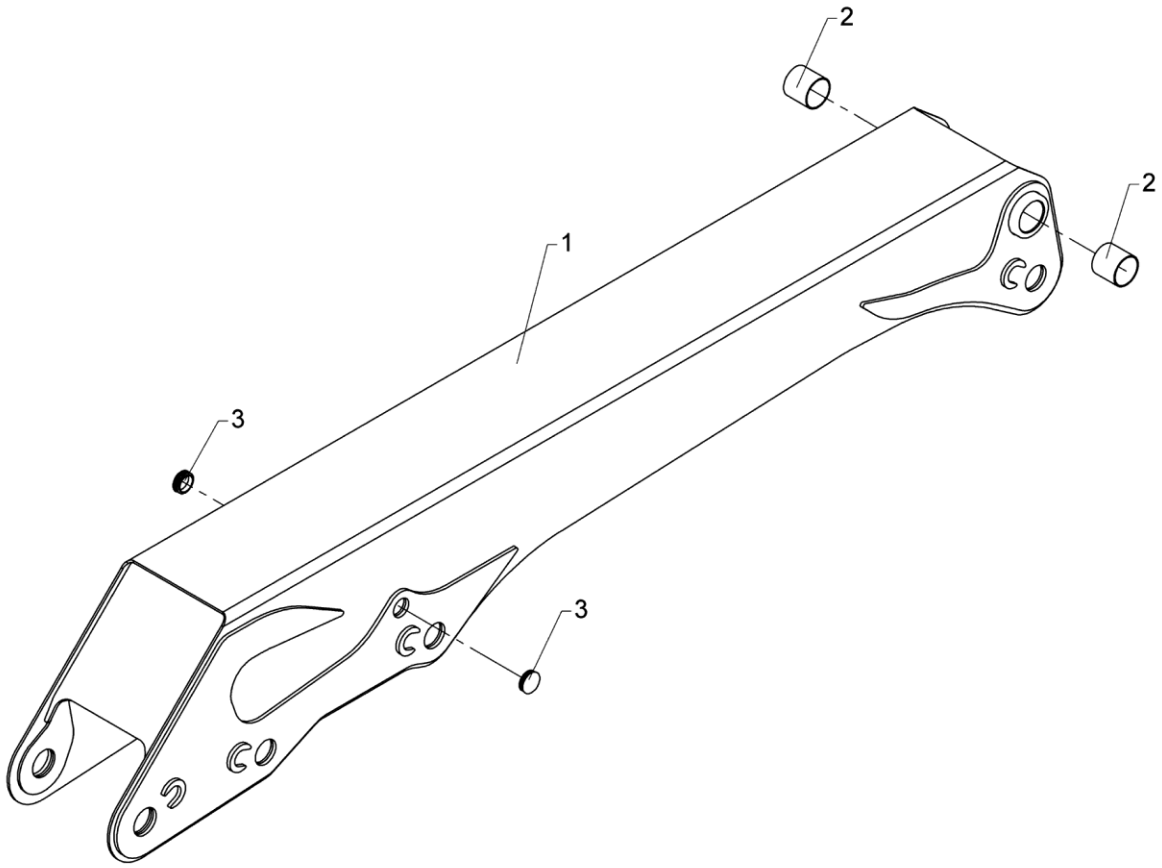
2
2
1
3
3

Obsolete

Main boom, cpl. for link arm system, boom

534 01 400

From loader 1060001
To loader 1060386

Created 14-11-2008
Modified

Pos	Qty.	Part no.	Description	Remarks
1	1	6342230	Main boom, painted	6342181
2	2	23431	Composite bearing	ø60/65 x 60
3	2	64381	Ferrule	

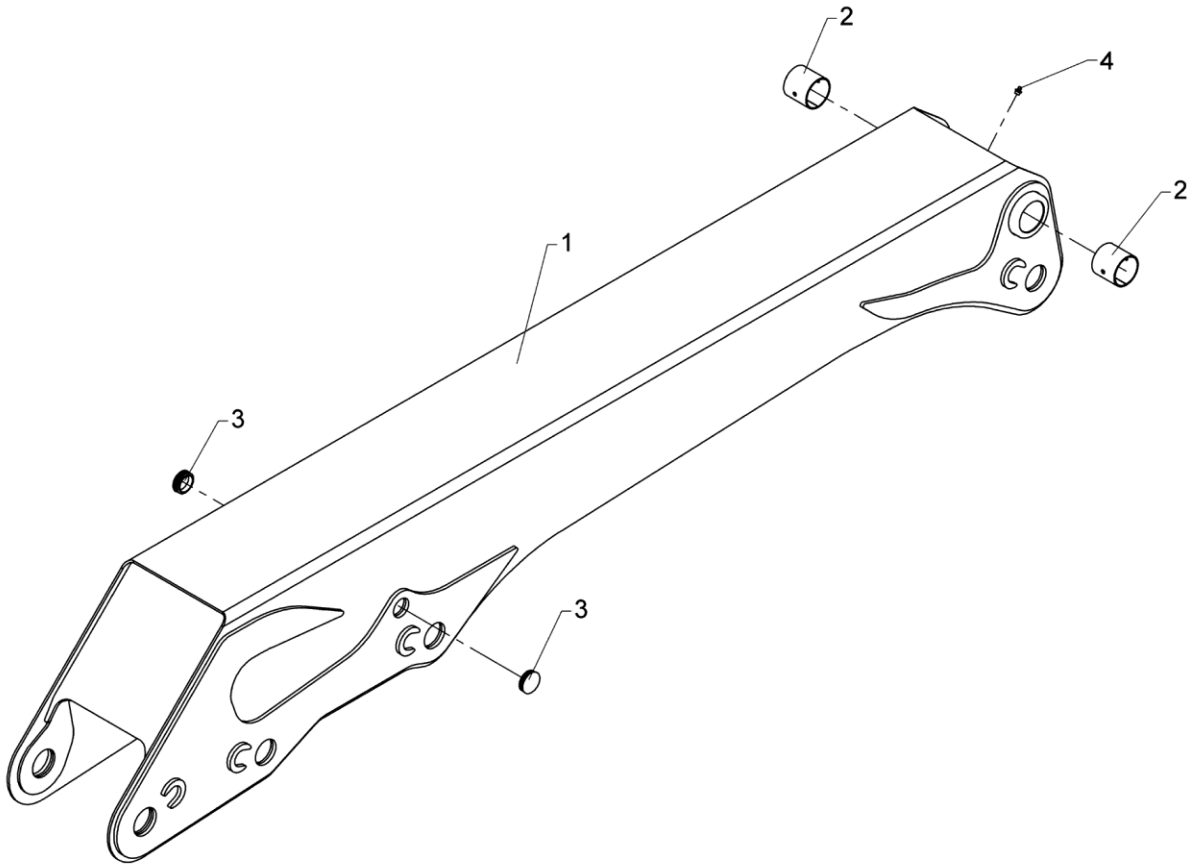
2
4
2
1
3
3

Obsolete

Main boom, cpl. for link arm system, boom

534 01 400 A

From loader 1060387
To loader

Created 19-07-2010
Modified

Pos	Qty.	Part no.	Description	Remarks
1	1	6342230	Main boom, painted	6342181
2	2	23330	Bushing	PM 6060 DX
3	2	64381	Ferrule	
4	1	31318	Lubricator	1/8" RG

1500K, 1510K, 1720K, 1730K, 1820K, 1830K

Internal ref. 63 42 180

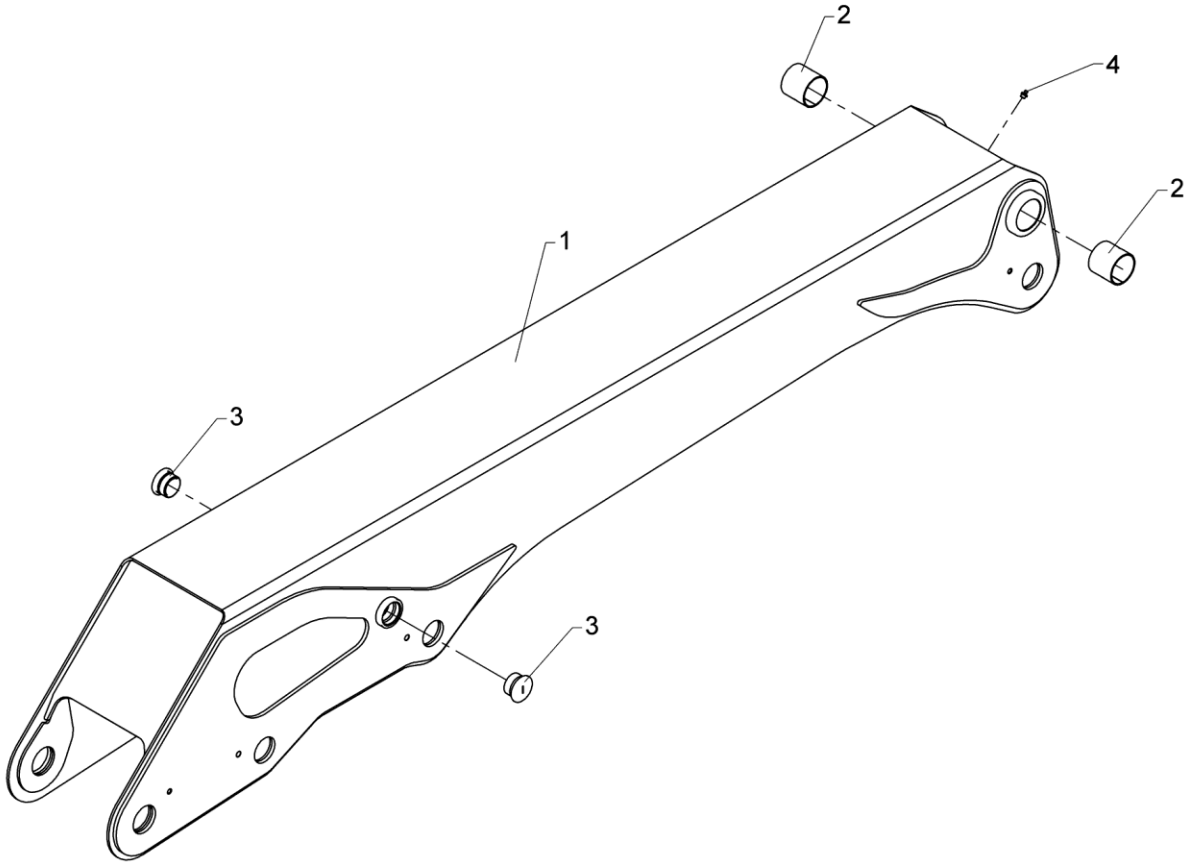

Main boom, cpl. for link arm system, boom

Pos	Qty.	Part no.	Description	Remarks
1	1	6342230	Main boom, painted	6343181
2	2	23330	Bushing	PM 6060 DX
3	2	68114	Threaded plug PA6 G black	M44 x 2
4	1	31318	Lubricator	1/8" RG

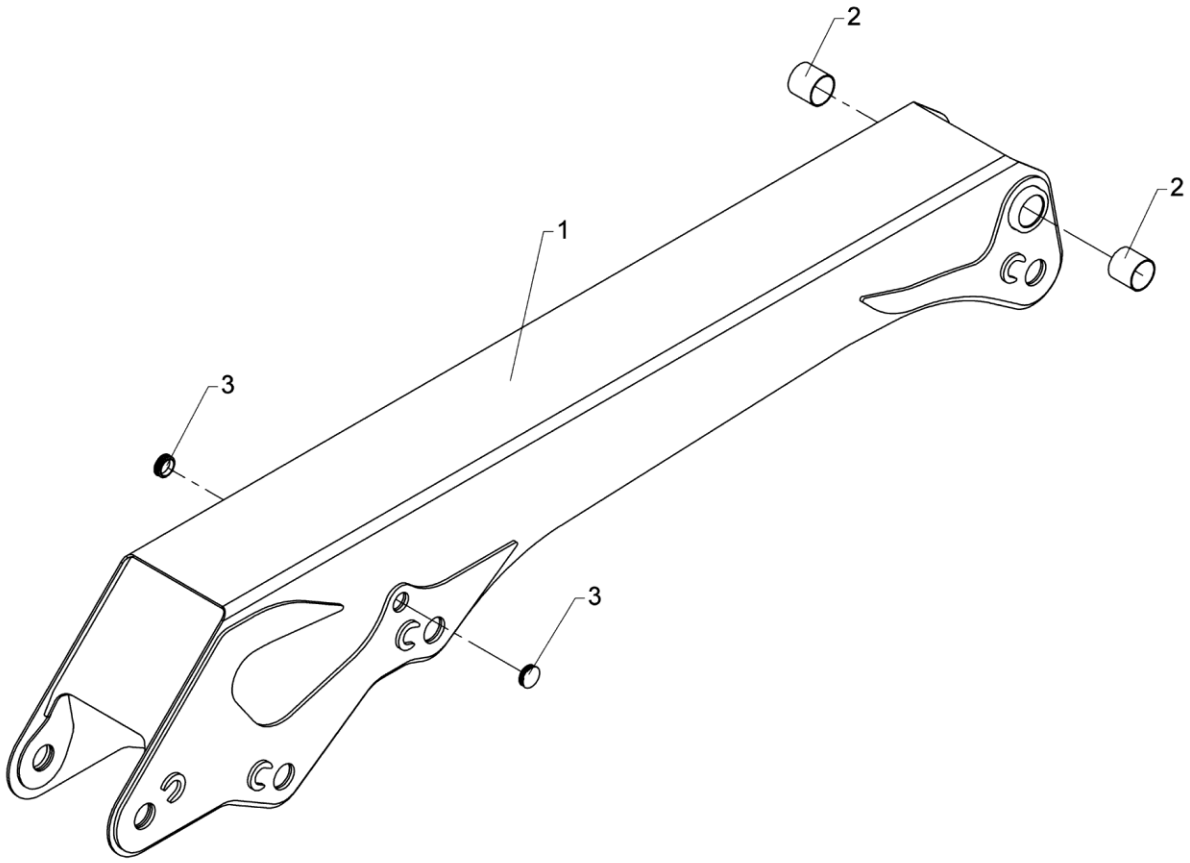
2
2
1
3
3

Obsolete

Main boom, cpl., no link arm system, boom

534 01 420

From loader 1060001
To loader 1060386

Created 14-11-2008
Modified

Pos	Qty.	Part no.	Description	Remarks
1	1	6342240	Main boom, painted	6342191
2	2	23431	Composite bearing	ø60/65 x 60
3	2	64381	Ferrule	

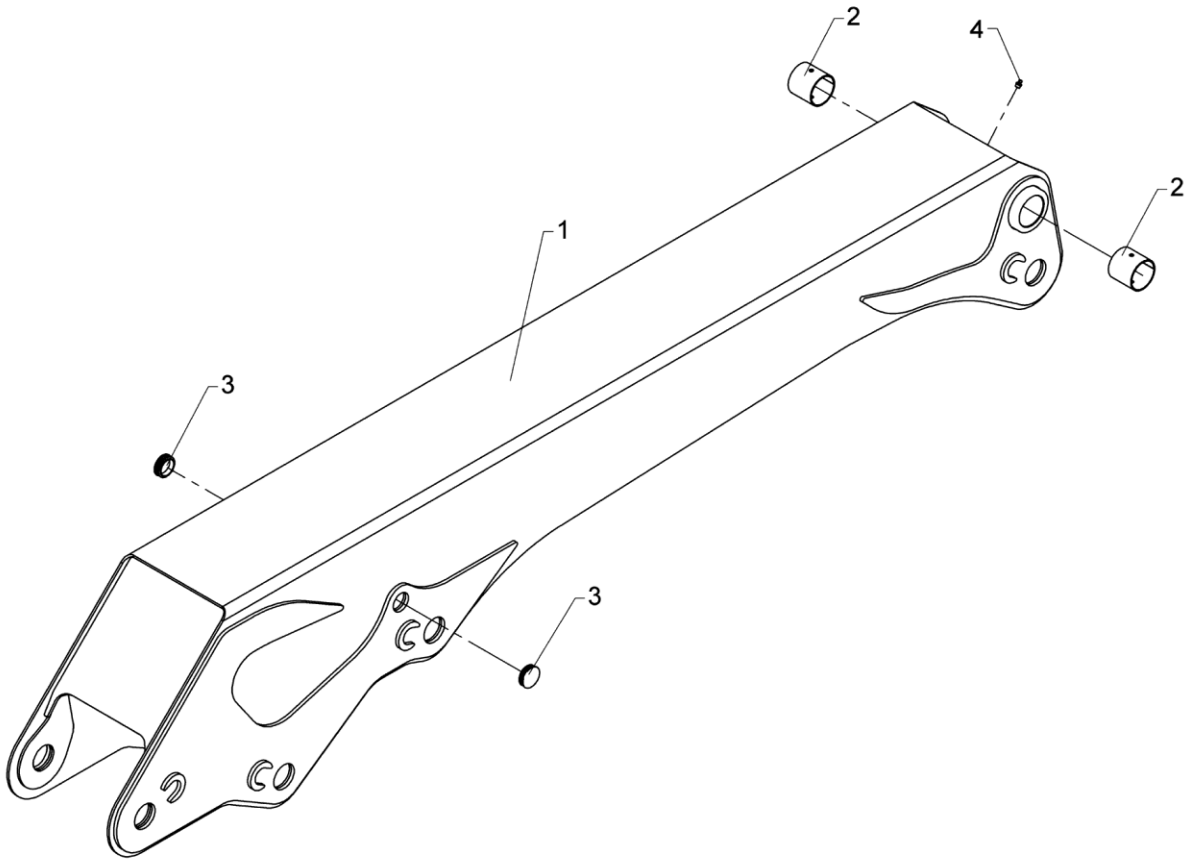
2
4
2
1
3
3

Obsolete

Main boom, cpl., no link arm system, boom

534 01 420 A

From loader 1060387
To loader

Created 19-07-2010
Modified

Pos	Qty.	Part no.	Description	Remarks
1	1	6342240	Main boom, painted	6342191
2	2	23330	Bushing	PM 6060 DX
3	2	64381	Ferrule	
4	1	31318	Lubricator	1/8" RG

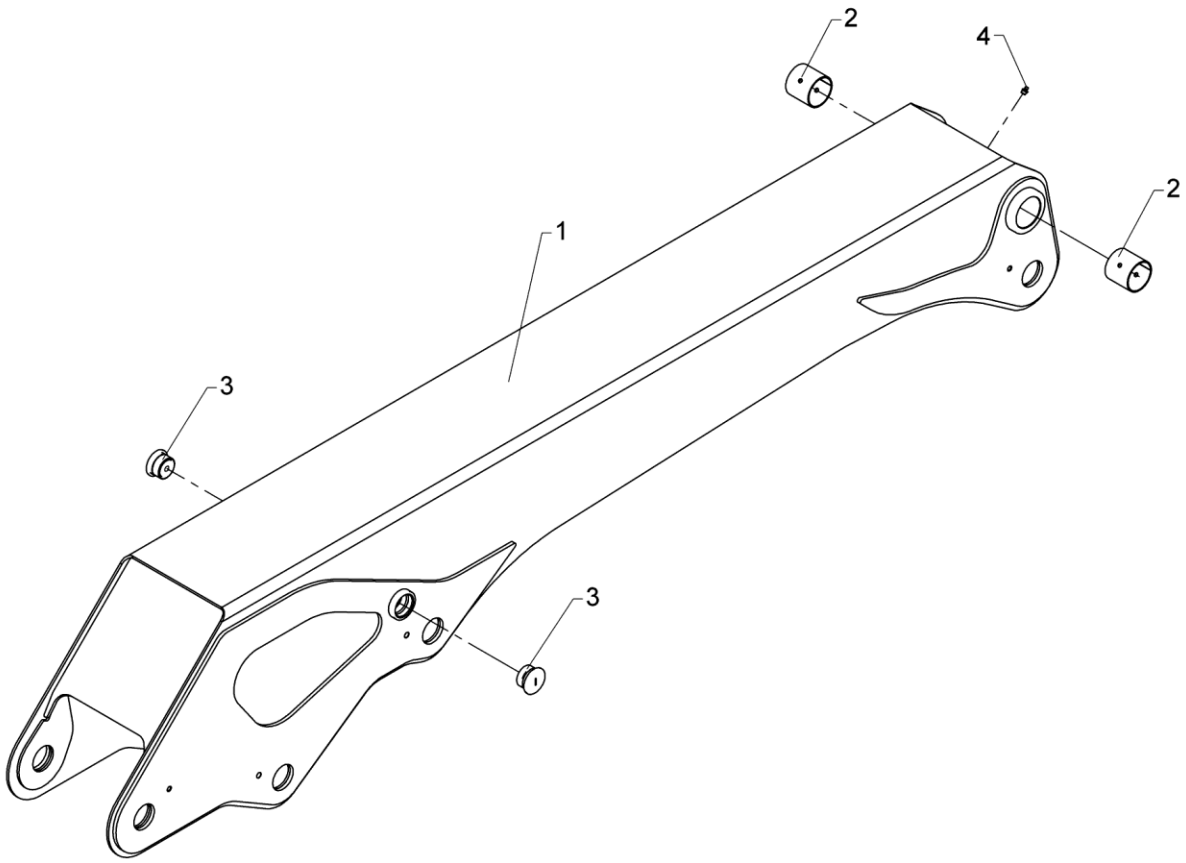
2
4
2
1
3
3

Main boom, cpl., no link arm system, boom

Pos	Qty.	Part no.	Description	Remarks
1	1	6342240	Main boom, painted	6343191
2	2	23330	Bushing	PM 6060 DX
3	2	68114	Threaded plug PA6 G black	M44 x 2
4	1	31318	Lubricator	1/8" RG

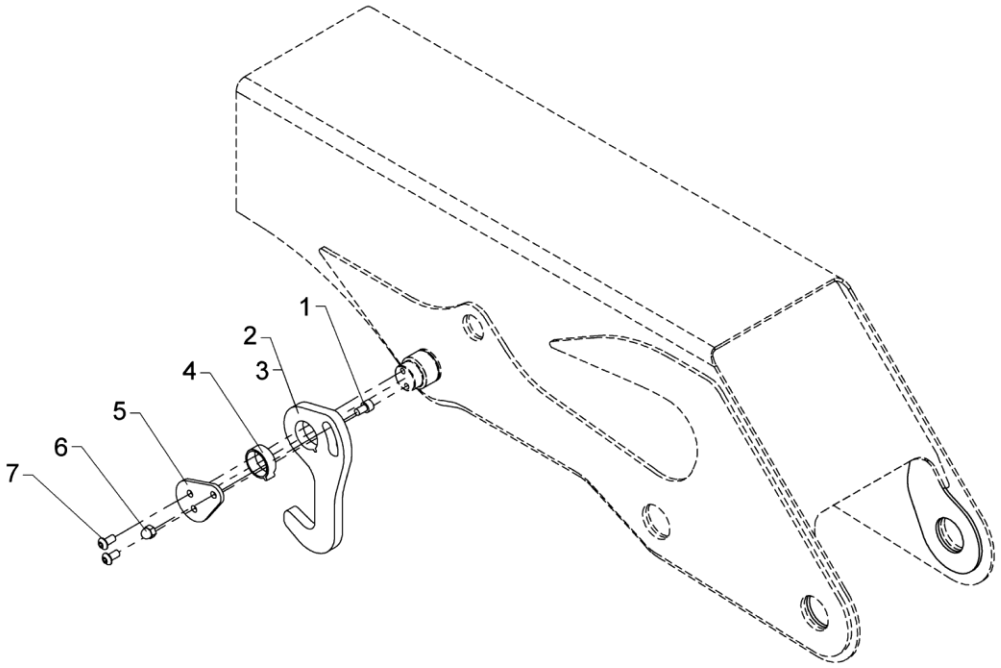
1
2
3
4
5
6
7

Obsolete

Stowing hook, complete

534 01 450

From loader 1060001
To loader

Created 11-11-2008
Modified 10-09-2013

Pos	Qty.	Part no.	Description	Remarks
		6340210	Stowing hook	
		6342210	Stowing hook, cpl. (+FJ)	
1	1	30964	Screw	MC10 x 16
2	1	6340208	Stowing hook	
3	1	6340948	Stowing hook (loader + FJ)	
4	1	63565	Bearing	
5	1	6340209	End plate	
6	1	30902	Nut	M10
7	2	30926	Steel bolt	M10 x 20

1500K, 1510K, 1720K, 1730K, 1820K, 1830K

63 46 600
63 42 210
Internal ref. 63 40 210

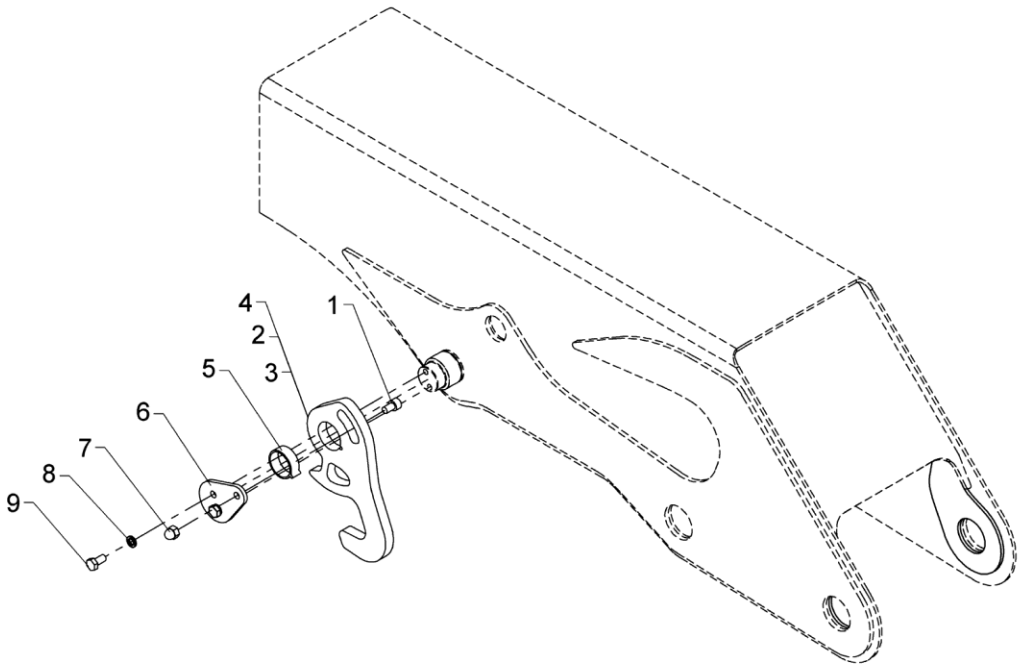

Stowing hook, complete

Pos	Qty.	Part no.	Description	Remarks
		6340210	Stowing hook	
		6342210	Stowing hook, cpl. (+FJ)	
		6346600		
1	1	30964	Screw	MC10 x 16
2	1	6340208	Stowing hook	
3	1	6340948	Stowing hook (loader + FJ)	
4	2	6340985	Stowing hook (K5-K6)	
5	1	63565	Bearing	
6	1	6340209	End plate	
7	1	30902	Nut	M10
8	2	30933	Nordlock washer	
9	2	31517	Set screw, stainless	M10 x 20

1500K, 1510K, 1720K, 1730K, 1820K, 1830K

Internal ref. 63 42 140

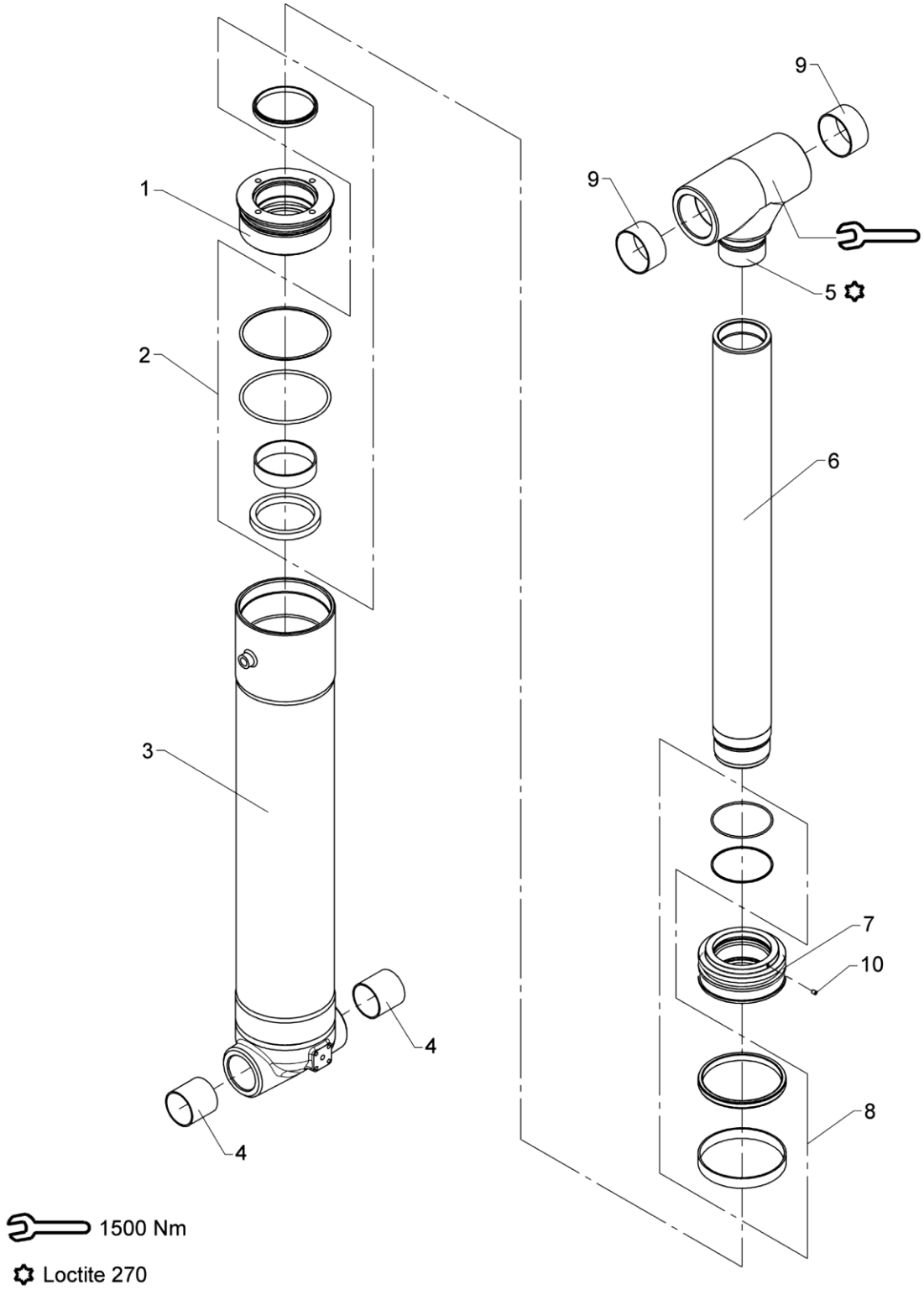

Obsolete

Boom cylinder C150 x 722 (1500K, 1720K, 1820K)

534 01 480

From loader 1060001
To loader 1060386

Created 14-11-2008
Modified

Pos	Qty.	Part no.	Description	Remarks
1	1	6342146	Guide	
2	1	6894070	Seal kit	
3	1	6342141	Cylinder tube	
4	2	23431	Composite bearing	ø60/65 x 60
5	1	6342147	Piston rod head	
6	1	6342144	Piston rod	
7	1	6342145	Piston	
8	1	6894020	Seal kit	
9	2	23413	Composite bearing	ø75/80 x 40
10	1	30903	Screw	MSP6 x 8

1500K, 1510K, 1720K, 1730K, 1820K, 1830K

Internal ref. 63 42 140

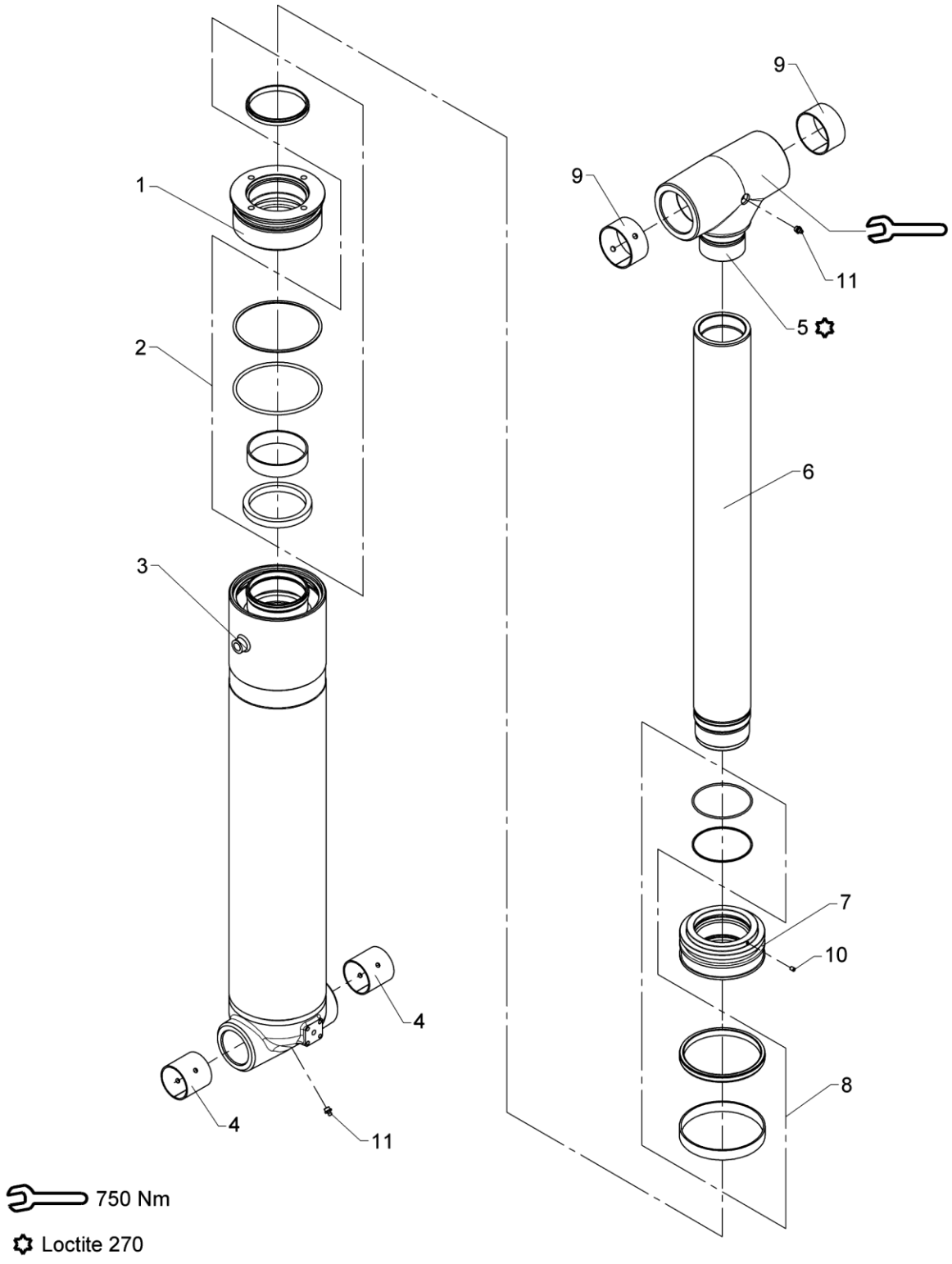

534 01 480 A

From loader 1060387
To loader

Boom cylinder C150 x 722 (for link arm system)

Created 16-07-2010
Modified 18-12-2018

Pos	Qty.	Part no.	Description	Remarks
1	1	6342146	Guide	
2	1	6894070	Seal kit	
3	1	6342141	Cylinder tube	
4	2	23330	Bushing	PM 6060 DX
5	1	6342147	Piston rod head	
6	1	6342144	Piston rod	
7	1	6342145	Piston	
8	1	6894020	Seal kit	
9	2	23341	Bushing	PM 7540 DX
10	1	30903	Screw	MSP6 x 8
11	2	31318	Lubricator	1/8" RG

1500K, 1510K, 1720K, 1730K, 1820K, 1830K

Internal ref. 63 42 440

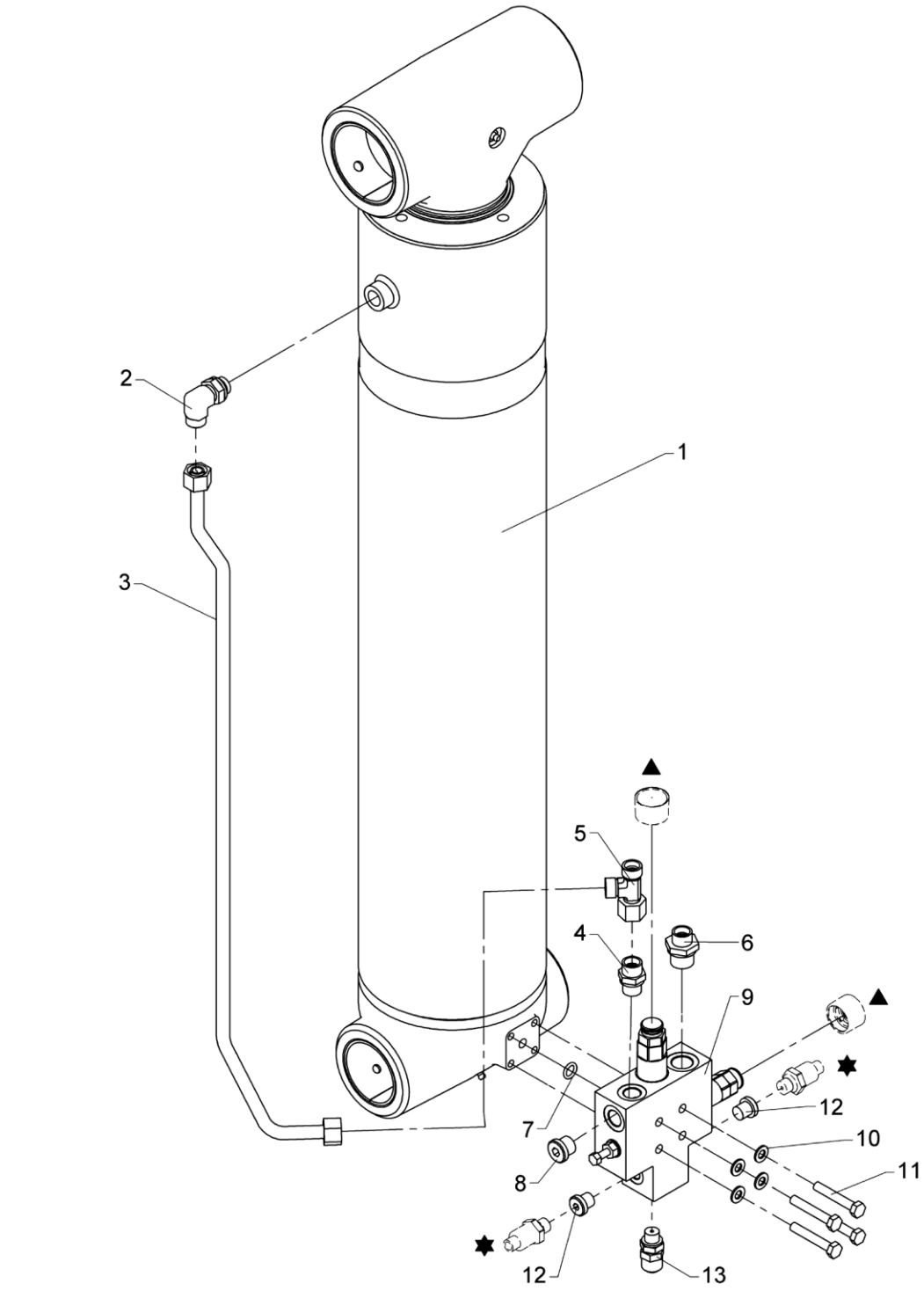

▲ 55369
✸ 28850

Boom cylinder C150 x 722 with LHV (for link arm system)

Pos	Qty.	Part no.	Description	Remarks
1	1	6342140	Boom cylinder	
2	1	26897	Elbow connection	12 mm - 3/8"
3	1	6342148	Pipe, boom retract	
4	1	25127	Connection	P-GEV 12 LR-WD
5	1	25270	Connection	ELSD 12 L
6	1	25108	Connection	GES 12 LR 1/2-WD
7	1	20138	O-ring	OR 10,77 x 2,62
8	1	25277	Plug	VS-R-3/8 WD
9	1	55227	Valve	
10	4	31147	Face washer, 8 mm	8 mm
11	4	30139	Steel bolt, stainless	M8 x 50
12	2	25197	Plug	VS-R-1/4 WD
13	1	26103	Pressure-gauge connect.	

1500K, 1510K, 1720K, 1730K, 1820K, 1830K

Internal ref. 63 42 200

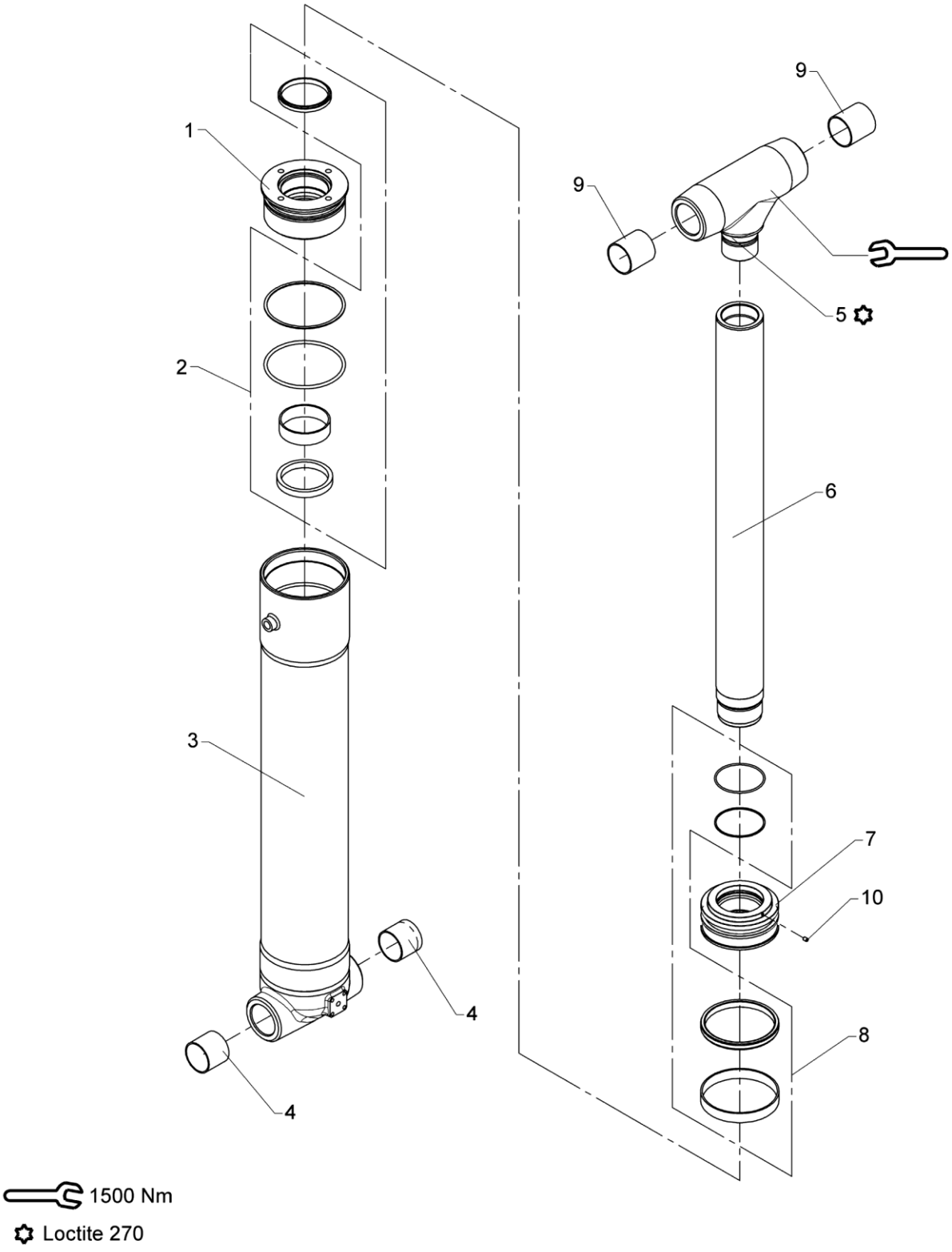

Obsolete

Boom cylinder, C140 x 726 (1510K, 1730K, 1830K)

534 01 500

From loader 1060001
To loader

Created 21-07-2010
Modified 21-07-2010

Pos	Qty.	Part no.	Description	Remarks
1	1	6340146	Guide (ø140/85)	
2	1	6894060	Seal kit f. guide	
3	1	6342195	Cylinder tube	
4	2	23409	Composite bearing	ø55/60 x 50
5	1	6340199	Piston rod head	
6	1	6342198	Piston rod	
7	1	6340145	Piston	
8	1	6894010	Seal kit f. piston	
9	2	23410	Composite bearing	ø55/60 x 60
10	1	30903	Screw	MSP6 x 8

1500K, 1510K, 1720K, 1730K, 1820K, 1830K

Internal ref. 63 42 200

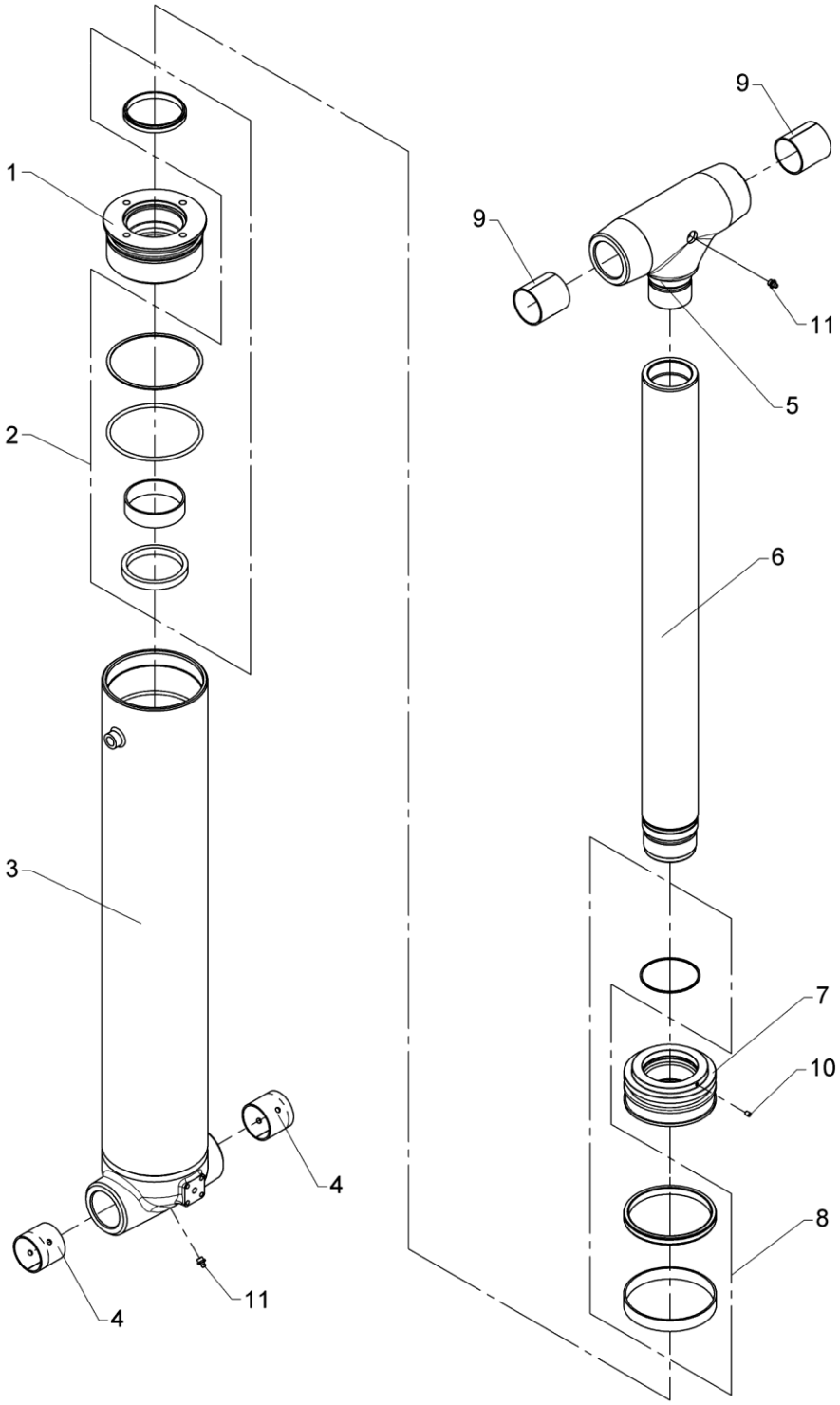

534 01 500 A

From loader 1060387
To loader

Boom cylinder, C140 x 726 (no link arm system)

Created 21-07-2010
Modified 14-01-2019

Pos	Qty.	Part no.	Description	Remarks
1	1	6340146	Guide (ø140/85)	
2	1	6894060	Seal kit f. guide	
3	1	6342195	Cylinder tube	
4	2	23424	Bushing	PM 5550 DX
5	1	6340199	Piston rod head	
6	1	6342198	Piston rod	
7	1	6340145	Piston	
8	1	6894010	Seal kit f. piston	
9	2	23419	Bushing	PM 5560 DX
10	1	30903	Screw	MSP6 x 8
11	2	31318	Lubricator	1/8" RG

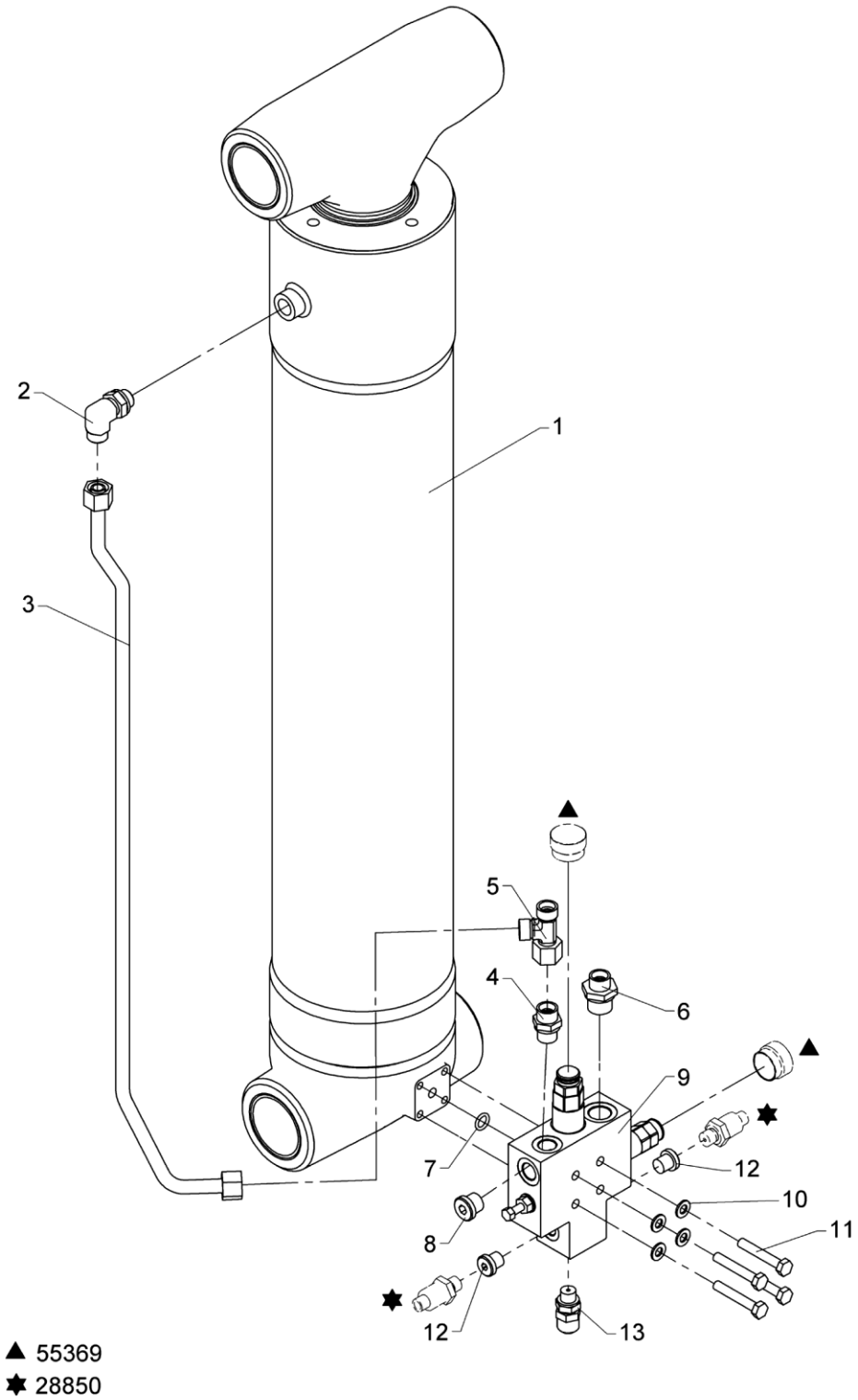
1
2
3
4
5
6
7
8
9
10
11
12
12
13
▲ 55369
✸ 28850

Boom cylinder C140 x 726 with LHV (no link arm system)

Pos	Qty.	Part no.	Description	Remarks
1	1	6342200	Boom cylinder	
2	1	26897	Elbow connection	12 mm - 3/8"
3	1	6342176	Pipe, boom retract	
4	1	25127	Connection	P-GEV 12 LR-WD
5	1	25270	Connection	ELSD 12 L
6	1	25108	Connection	GES 12 LR 1/2-WD
7	1	20138	O-ring	OR 10,77 x 2,62
8	1	25277	Plug	VS-R-3/8 WD
9	1	55227	Valve	
10	4	31147	Face washer, 8 mm	8 mm
11	4	30139	Steel bolt, stainless	M8 x 50
12	2	25197	Plug	VS-R-1/4 WD
13	1	26103	Pressure-gauge connect.	

1500K, 1510K, 1720K, 1730K, 1820K, 1830K

Internal ref. 63 42 150

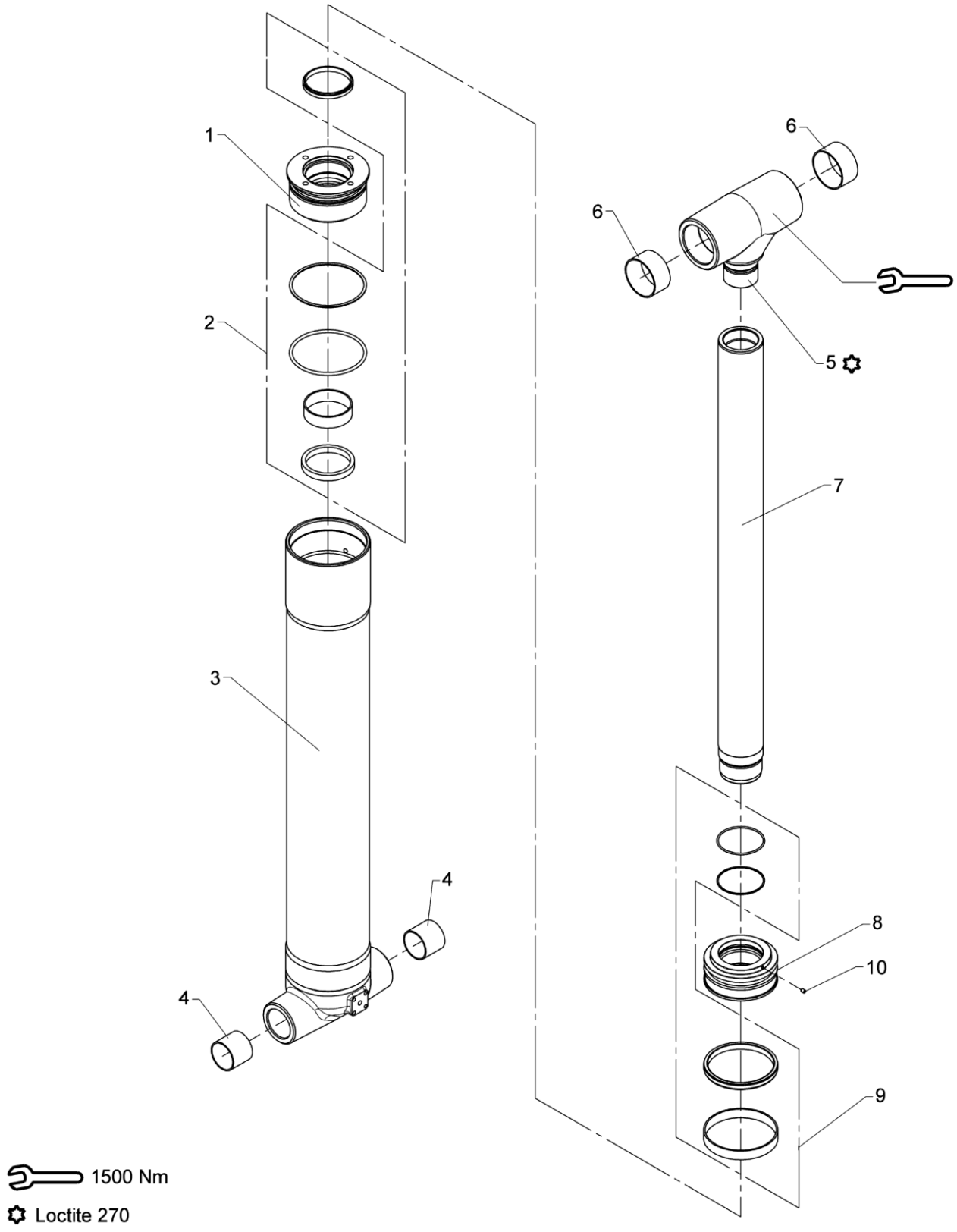

Obsolete

Jib cylinder C140 x 848

534 01 600

From loader 1060001
To loader 1060386

Created 11-10-2008
Modified

Pos	Qty.	Part no.	Description	Remarks
1	1	6340146	Guide (ø140/85)	
2	1	6894060	Seal kit f. guide	
3	1	6342151	Cylinder tube	
4	2	23409	Composite bearing	ø55/60 x 50
5	1	6342157	Piston rod head	
6	2	23413	Composite bearing	ø75/80 x 40
7	1	6342154	Piston rod	
8	1	6340145	Piston	
9	1	6894010	Seal kit f. piston	
10	1	30903	Screw	MSP6 x 8

1500K, 1510K, 1720K, 1730K, 1820K, 1830K

Internal ref. 63 42 150

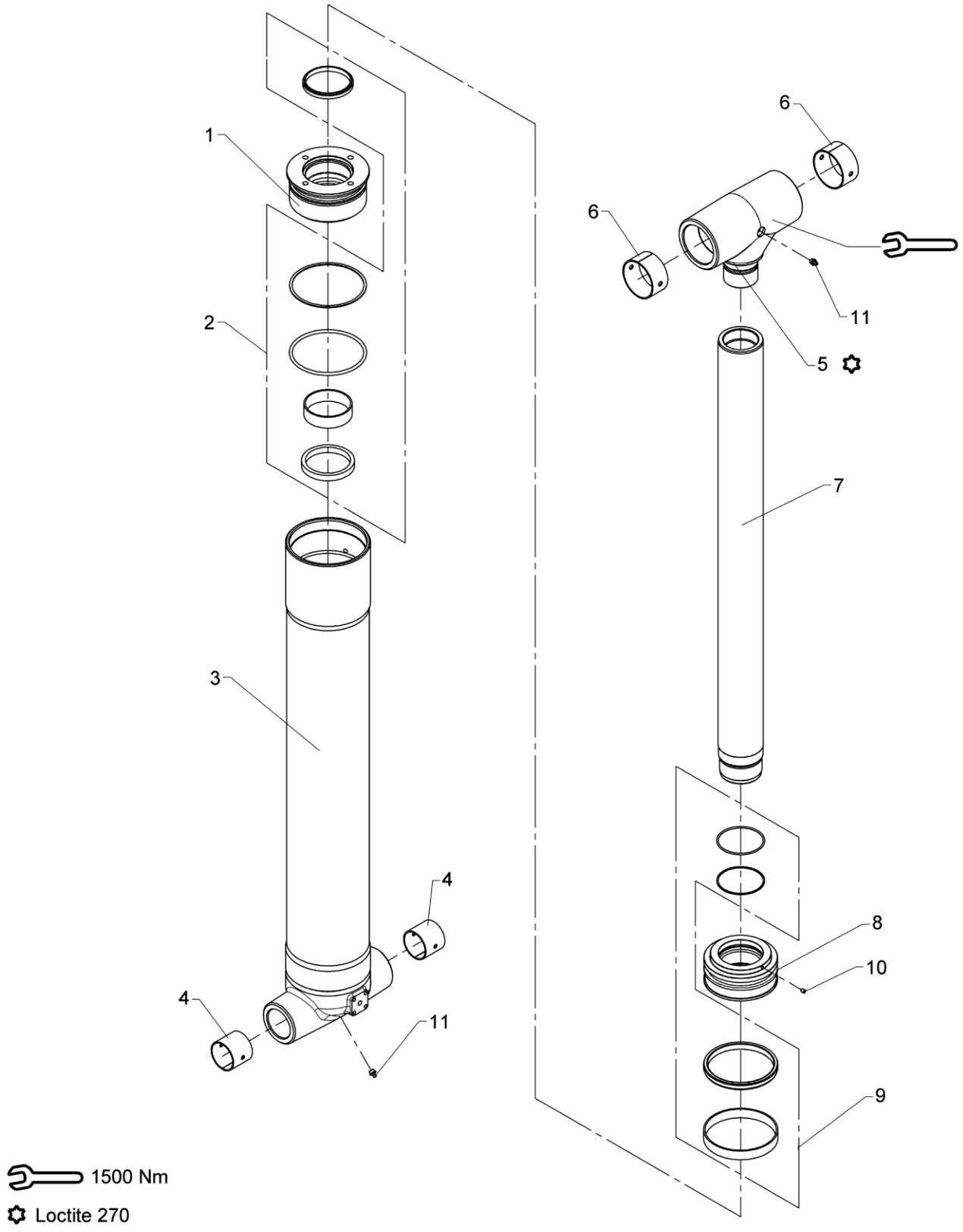

534 01 600 A

From loader 1060387
To loader

Jib cylinder C140 x 848

Created 11-08-2010
Modified 14-09-2010

Pos	Qty.	Part no.	Description	Remarks
1	1	6340146	Guide (ø140/85)	
2	1	6894060	Seal kit f. guide	
3	1	6342151	Cylinder tube	
4	2	23424	Bushing	PM 5540 DX
5	1	6342157	Piston rod head	
6	2	23341	Bushing	PM 7540 DX
7	1	6342154	Piston rod	
8	1	6340145	Piston	
9	1	6894010	Seal kit f. piston	
10	1	30903	Screw	MSP6 x 8
11	2	31318	Lubricator	1/8" RG

1500K, 1510K, 1720K, 1730K, 1820K, 1830K

Internal ref. 63 42 270

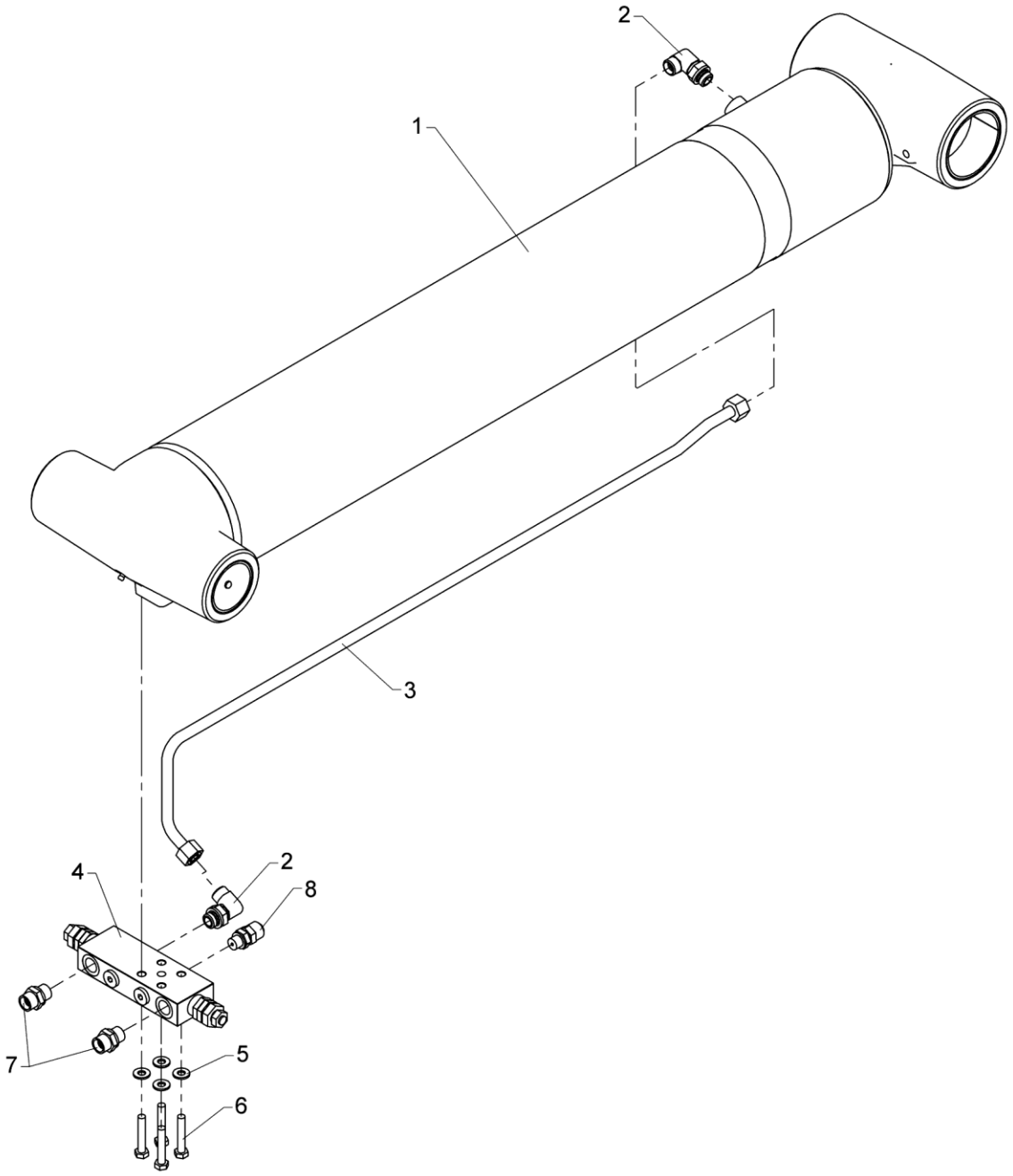

534 01 610

From loader 1060001
To loader

Created 14-11-2008
Modified 06-05-2019

Jib cylinder with LHV

Pos	Qty.	Part no.	Description	Remarks
1	1	6342150	Jib cylinder	
2	2	26897	Elbow connection	12 mm - 3/8"
3	1	6342158	Pipe	
4	1	66162	Load holding valve	
5	4	31754	Washer	8 mm
6	4	30138	Steel bolt, stainless	M8 x 45
7	2	25127	Connection	P-GEV 12 LR-WD
8	1	26103	Pressure-gauge connect.	

1500K, 1510K, 1720K, 1730K, 1820K, 1830K

Internal ref. 63 42 060

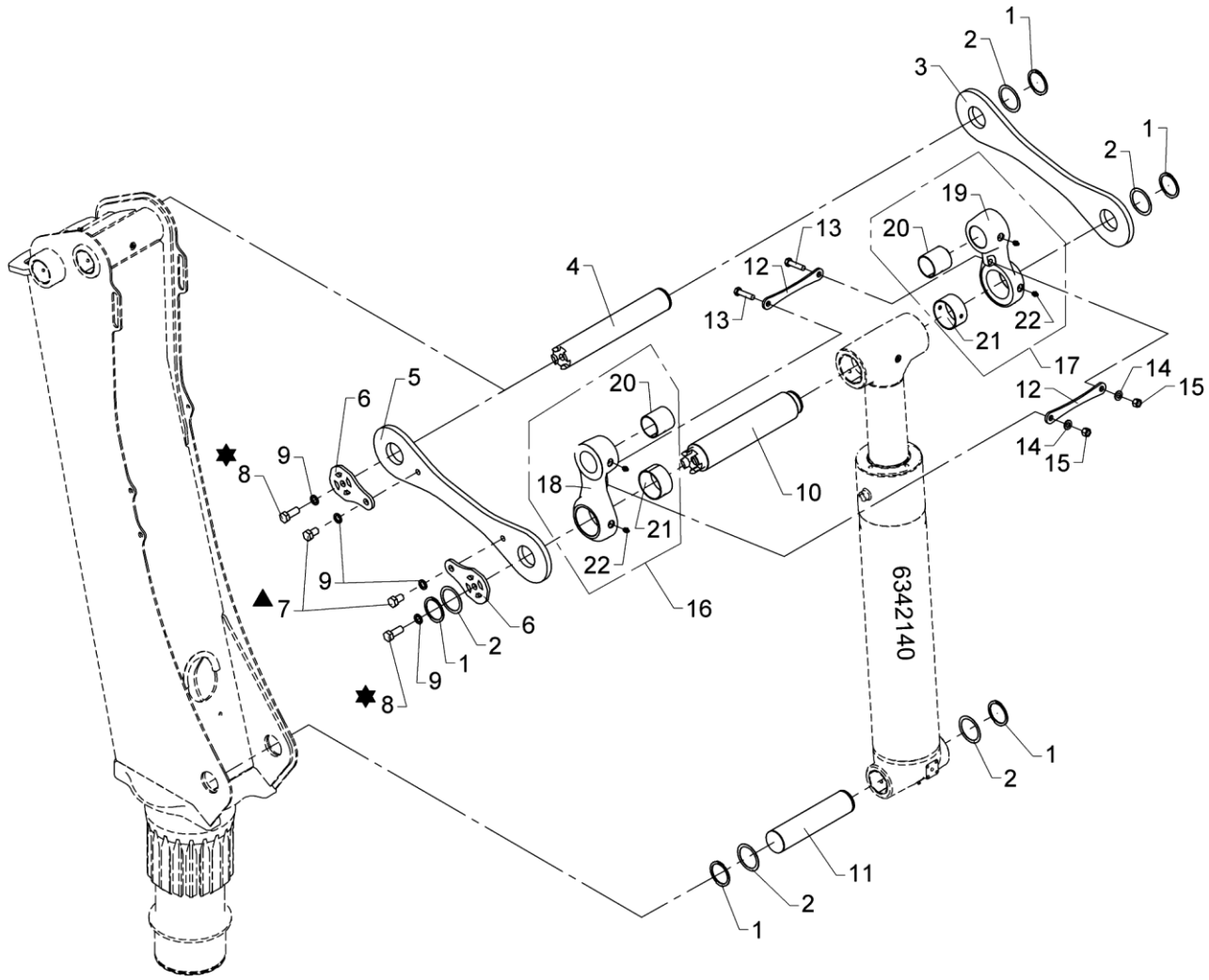

★ 230 Nm

▲ 170 Nm

534 01 700

From loader 1060001
To loader

Created 14-11-2008
Modified 09-04-2019

Link arm system, boom

Pos	Qty.	Part no.	Description	Remarks
1	5	33135	Circlip	60U
2	5	33266	Washer	PS 60 x 75 x 1,0
3	1	6340178	Link arm, left	
4	1	6340167	Link arm pin	
5	1	6340177	Link arm, right	
6	2	6340179	Lock plate	
7	2	30266	Set screw	M16 x 25
8	2	30222	Set screw	M16 x 40
9	4	31098	Washer, 16 mm	16 mm
10	1	6342166	Pin	
11	1	6342149	Pin	
12	2	6342163	Link between push rod	
13	2	31588	Steel bolt	M12 x 50
14	2	32338	Washer	12 mm
15	2	32216	Lock nut, stainless	M12
16	1	6342160	Push rod, right	
17	1	6342460	Push rod, left	
18	1	6342161	Push rod, right	
19	1	6342162	Push rod, left	
20	2	23419	Bushing	PM 5560 DX
21	2	23341	Bushing	PM 7540 DX
22	4	31318	Lubricator	1/8" RG

1500K, 1510K, 1720K, 1730K, 1820K, 1830K

Internal ref. 63 42 090

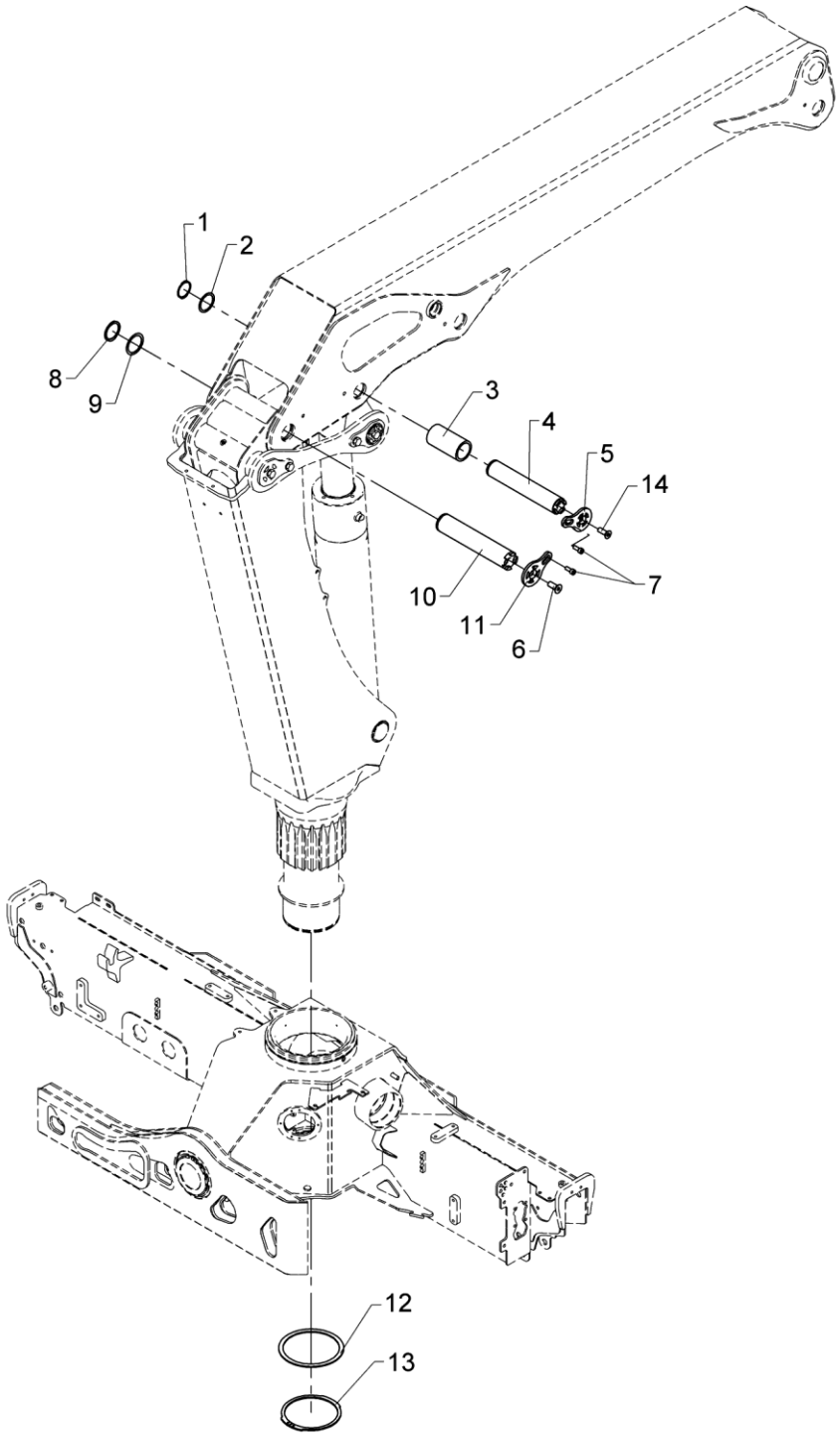

Mounting fittings, basic loader incl. link arm system

Pos	Qty.	Part no.	Description	Remarks
1	1	33132	Circlip Din 471	55U
2	1	33277	Washer	PS 55 x 68 x 1,0
3	1	63480	Distance pipe	
4	1	6341801	Pin (ø5 x 309)	
5	1	6341802	Lock plate ø50	
6	1	32360	Countersunk screw	MK16 x 40
7	2	30453	Screw	MC10 x 25
8	1	33135	Circlip	
9	1	33266	Washer	PS 60 x 75 x 1,0
10	1	6343801	Pin (ø60 x 294 with susp.)	
11	1	6345802	Lock plate ø60	
12	1	6340049	Supporting washer	
13	1	33275	Circlip	180U
14	1	30515	Countersunk screw	MK14 x 40

1500K, 1510K, 1720K, 1730K, 1820K, 1830K

Internal ref. 63 42 100

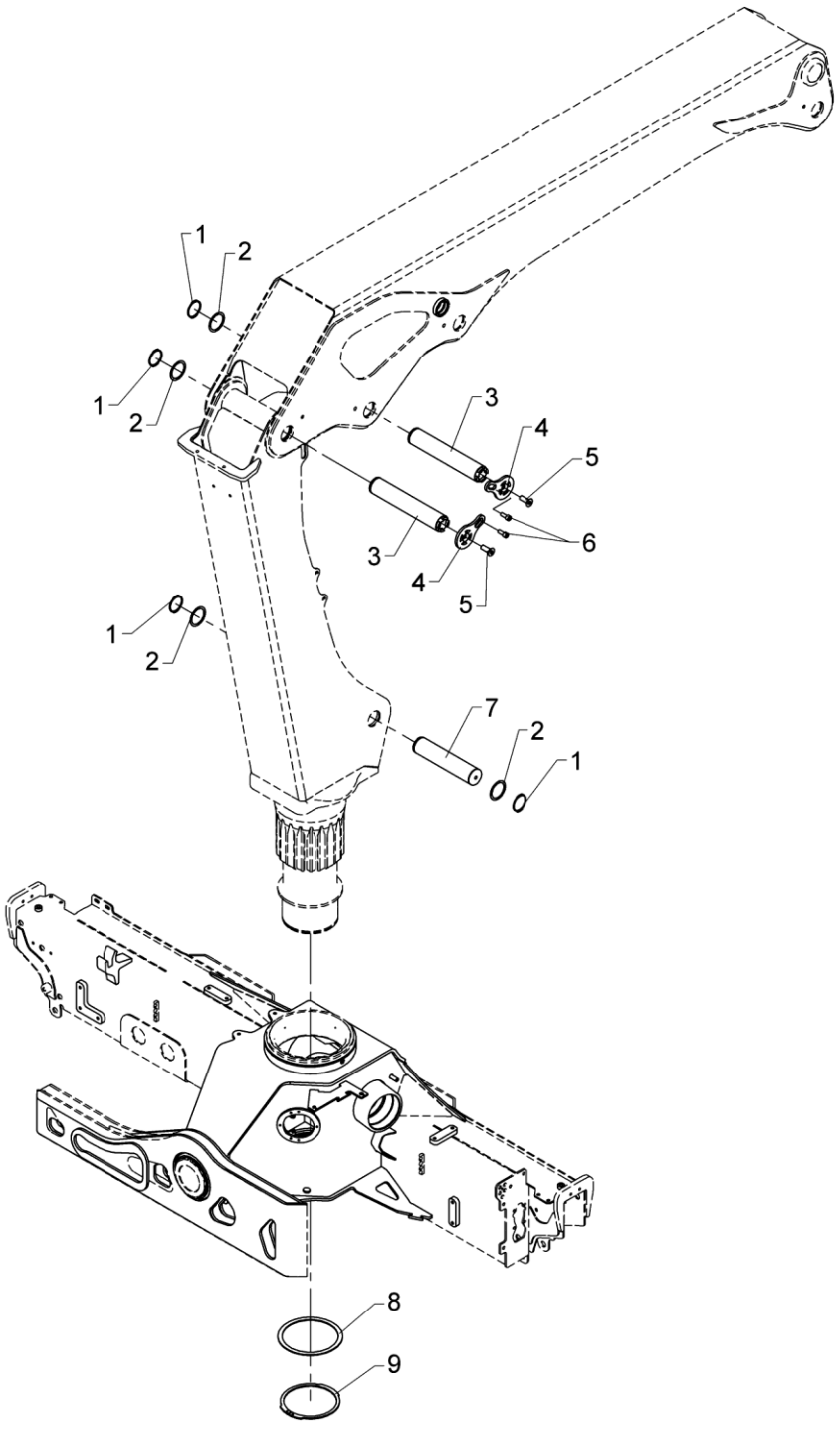

Mounting fittings, basic loader excl. link arm system

Pos	Qty.	Part no.	Description	Remarks
1	4	33132	Circlip Din 471	55U
2	4	33277	Washer	PS 55 x 68 x 1,0
3	2	6341801	Pin (ø5 x 309)	
4	2	6341802	Lock plate ø50	
5	2	30515	Countersunk screw	MK14 x 40
6	2	30453	Screw	MC10 x 25
7	1	6340149	Pin	
8	1	6340049	Supporting washer	
9	1	33275	Circlip	180U

1500K, 1510K, 1720K, 1730K, 1820K, 1830K

63 43 230
63 43 210
Internal ref. 63 43 200

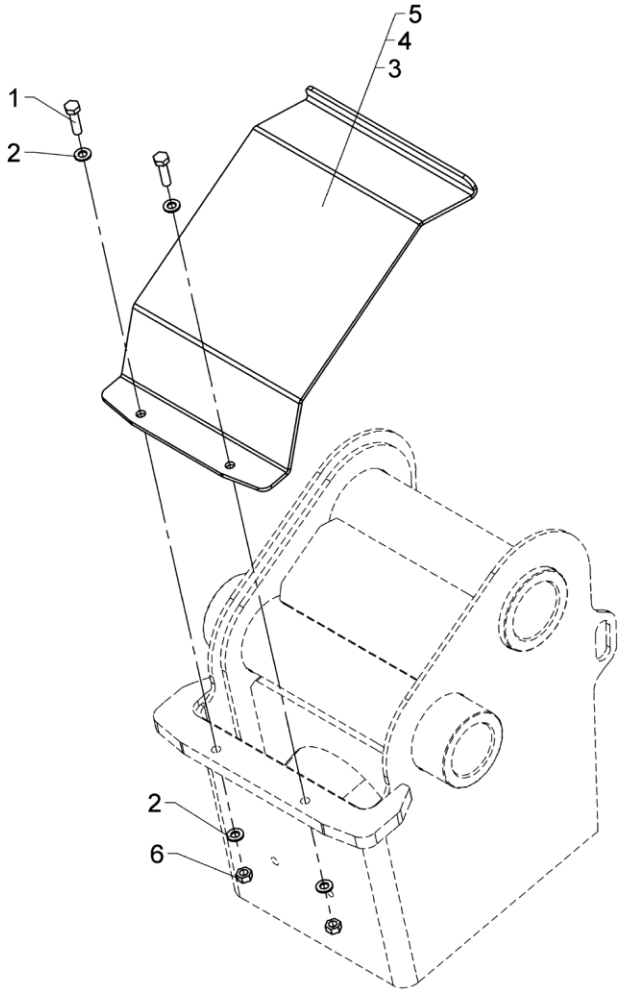

Hose shield, cpl.

534 01 760

From loader 1060001
To loader

Created 14-11-2008
Modified

Pos	Qty.	Part no.	Description	Remarks
		6343200	Protective plate	
		6343210	Protective plate	
		6343230	Protective plate	
1	2	30135	Set screw, stainless	M8 x 30
2	4	31147	Face washer, 8 mm	8 mm
3	1	6340089	Hose shield	1300K
4	1	6342089	Hose shield	1500K
5	1	6340079	Hose shield	1310K/1510K/1410T/1530T
6	2	30856	Nut, stainless	M8

1500K, 1510K, 1720K, 1730K, 1820K, 1830K

Internal ref. 63 42 250

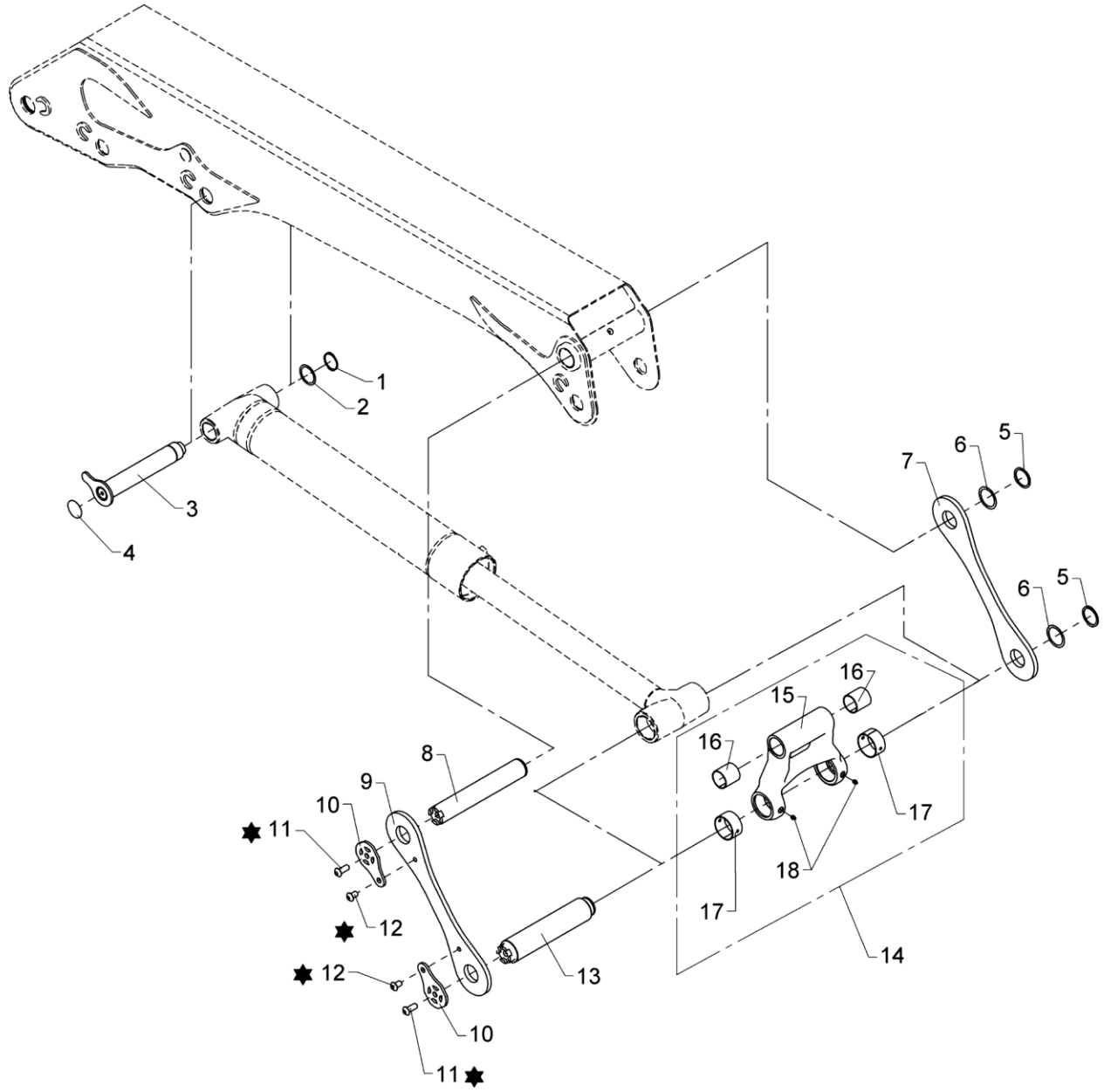

✸ Loctite 243

Obsolete

Link arm system, jib

534 01 800

From loader 1060001
To loader 1060386

Created 14-11-2008
Modified 12-08-2009

Pos	Qty.	Part no.	Description	Remarks
1	1	33132	Circlip Din 471	55U
2	1	33277	Washer	PS 55 x 68 x 1,0
3	1	6342204	Pin	
4	1	63473	Plug	
5	2	33135	Circlip	60U
6	2	33266	Washer	PS 60 x 75 x 1,0
7	1	6340178	Link arm, left	
8	1	6340167	Link arm pin	
9	1	6340177	Link arm, right	
10	2	6340179	Lock plate	
11	2	32371	Screw	M16 x 40
12	2	32370	Screw	M16 x 25
13	1	6342166	Pin	
14	1	6342170	Push rod	
15	1	6342171	Push rod	
16	2	23410	Composite bearing	ø55/60 x 60
17	2	23341	Bushing	PM 7540 DX
18	2	31318	Lubricator	1/8" RG

1500K, 1510K, 1720K, 1730K, 1820K, 1830K

Internal ref. 63 42 250

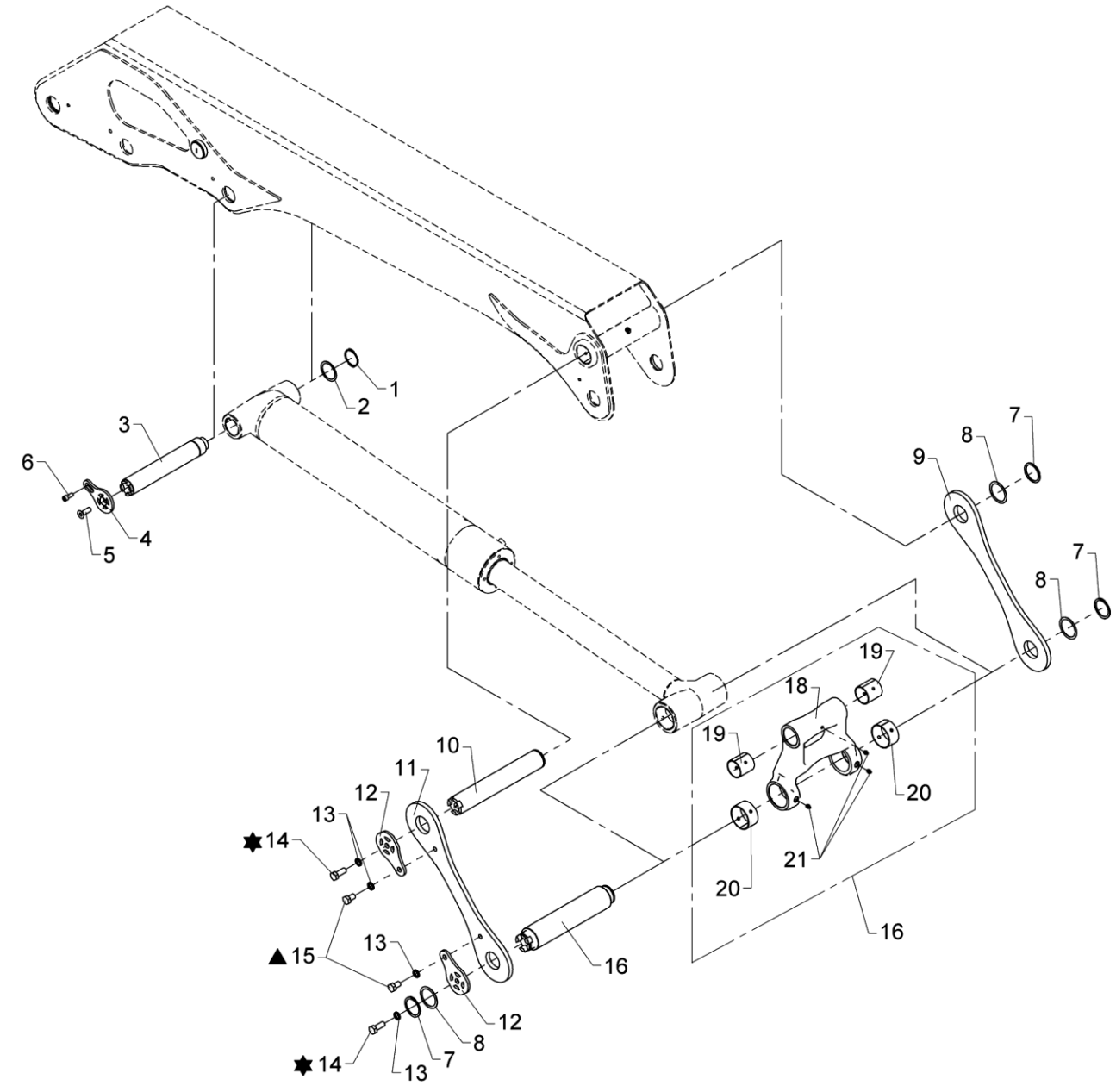

✸ 230 Nm

▲ 170 Nm

Link arm system, jib

Pos	Qty.	Part no.	Description	Remarks
1	1	33132	Circlip Din 471	55U
2	1	33277	Washer	PS 55 x 68 x 1,0
3	1	6343804	Pin (ø55 x 294 with susp.)	
4	1	6341802	Lock plate ø50	
5	1	30515	Countersunk screw	MK14 x 40
6	1	30453	Screw	MC10 x 25
7	3	33135	Circlip	
8	3	33266	Washer	PS 60 x 75 x 1,0
9	1	6340178	Link arm, left	
10	1	6340167	Link arm pin	
11	1	6340177	Link arm, right	
12	2	6340179	Lock plate	
13	4	31098	Washer, 16 mm	16 mm
14	2	30222	Set screw	M16 x 40
15	2	30266	Set screw	M16 x 25
16	1	6342166	Pin	
17	1	6342170	Push rod	
18	1	6342171	Push rod	
19	2	23419	Bushing	PM 5560 DX
20	2	23341	Bushing	PM 7540 DX
21	3	31318	Lubricator	1/8" RG

1500K, 1510K, 1720K, 1730K, 1820K, 1830K

Internal ref. 63 41 100

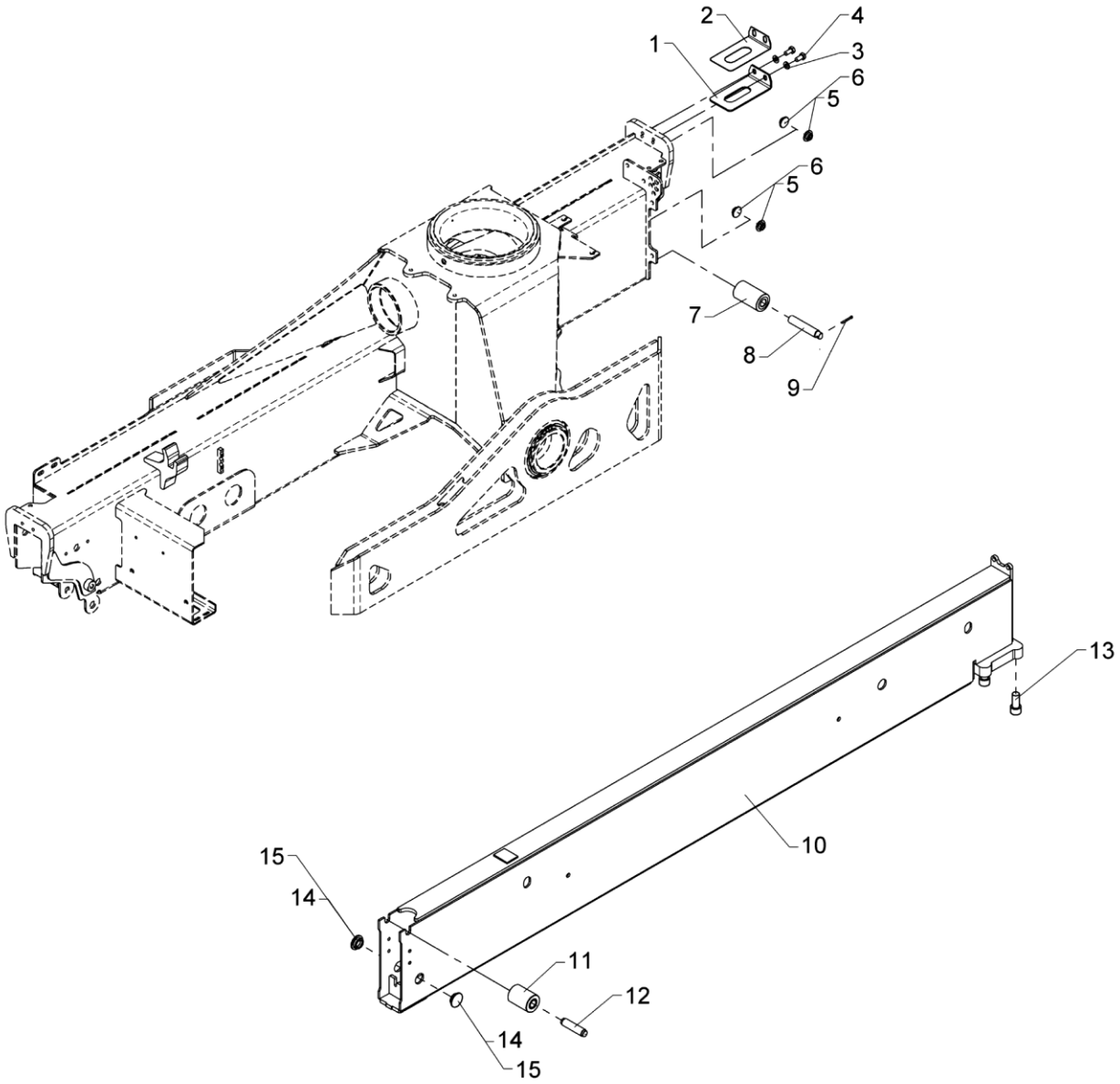

Obsolete

Stabilizer beam, type SV - 5570

534 02 010

From loader 1060001
To loader 1060305

Created 14-11-2008
Modified

Pos	Qty.	Part no.	Description	Remarks
1	1	6306156	Spacer	
2	1	6306722	Adjusting plate	
3	2	31565	Washer, stainless	10 mm
4	2	31517	Set screw, stainless	M10 x 20
5	4	63429	Guide	ø30 x 3 mm
6	4	63430	Guide	ø30 x 2 mm
7	1	63470	Guide roller	
8	1	6340048	Pin for guide roller	
9	1	31615	Split pin	ø4 x 32
10	1	6340121	Stabilizer beam I	
11	1	63469	Guide roller	
12	1	6340098	Pin for guide roller	
13	4	30339	Cylinder screw	MC18 x 40
14	2	63681	Slide block	3 mm
15	2	64424	Slide block	3 mm

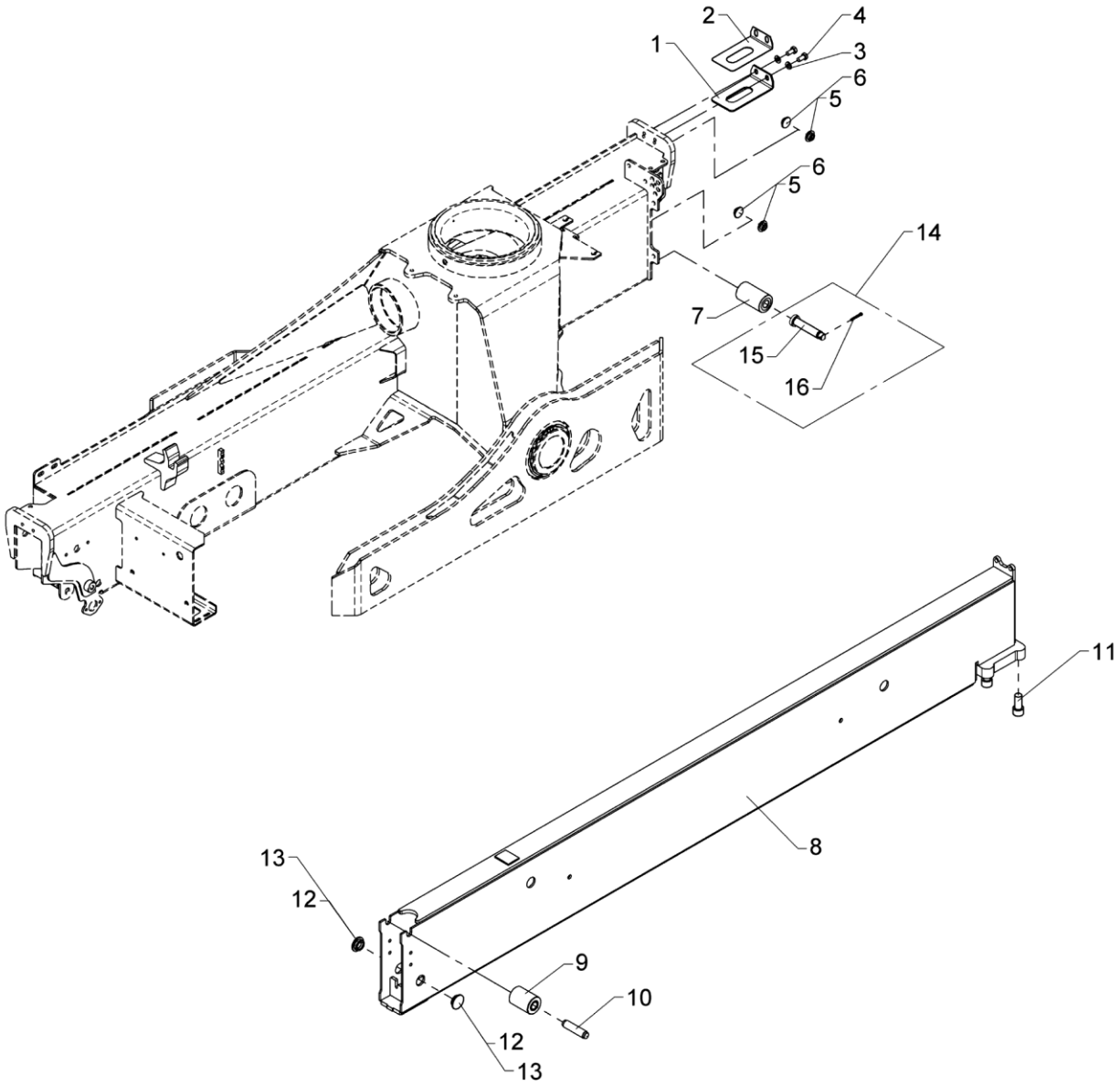
2
4
1
3
6
5
6
5
14
7
15
16
11
8
13
12
9
10
12
13

Obsolete

534 02 010 A

From loader 1060306
To loader 1061536

Created 14-11-2008
Modified 13-11-2009

Stabilizer beam, type SV - 5570

Pos	Qty.	Part no.	Description	Remarks
		6341100	Stabilizer beam, type SV	
		6342030	No detection, legs down	
1	1	6306156	Spacer	
2	1	6306722	Adjusting plate	
3	2	31565	Washer, stainless	10 mm
4	2	31517	Set screw, stainless	M10 x 20
5	4	63429	Guide	ø30 x 3 mm
6	4	63430	Guide	ø30 x 2 mm
7	1	63470	Guide roller	
8	1	6340121	Stabilizer beam I	
9	1	63469	Guide roller	
10	1	6340098	Pin for guide roller	
11	4	30339	Cylinder screw	MC18 x 40
12	2	63681	Slide block	3 mm
13	2	64424	Slide block	3 mm
14	1	6342030	No detection, legs down	
15	1	6341982	Pin for guide roller	
16	1	31615	Split pin	ø4 x 32

1500K, 1510K, 1720K, 1730K, 1820K, 1830K

63 42 030
Internal ref. 63 41 100

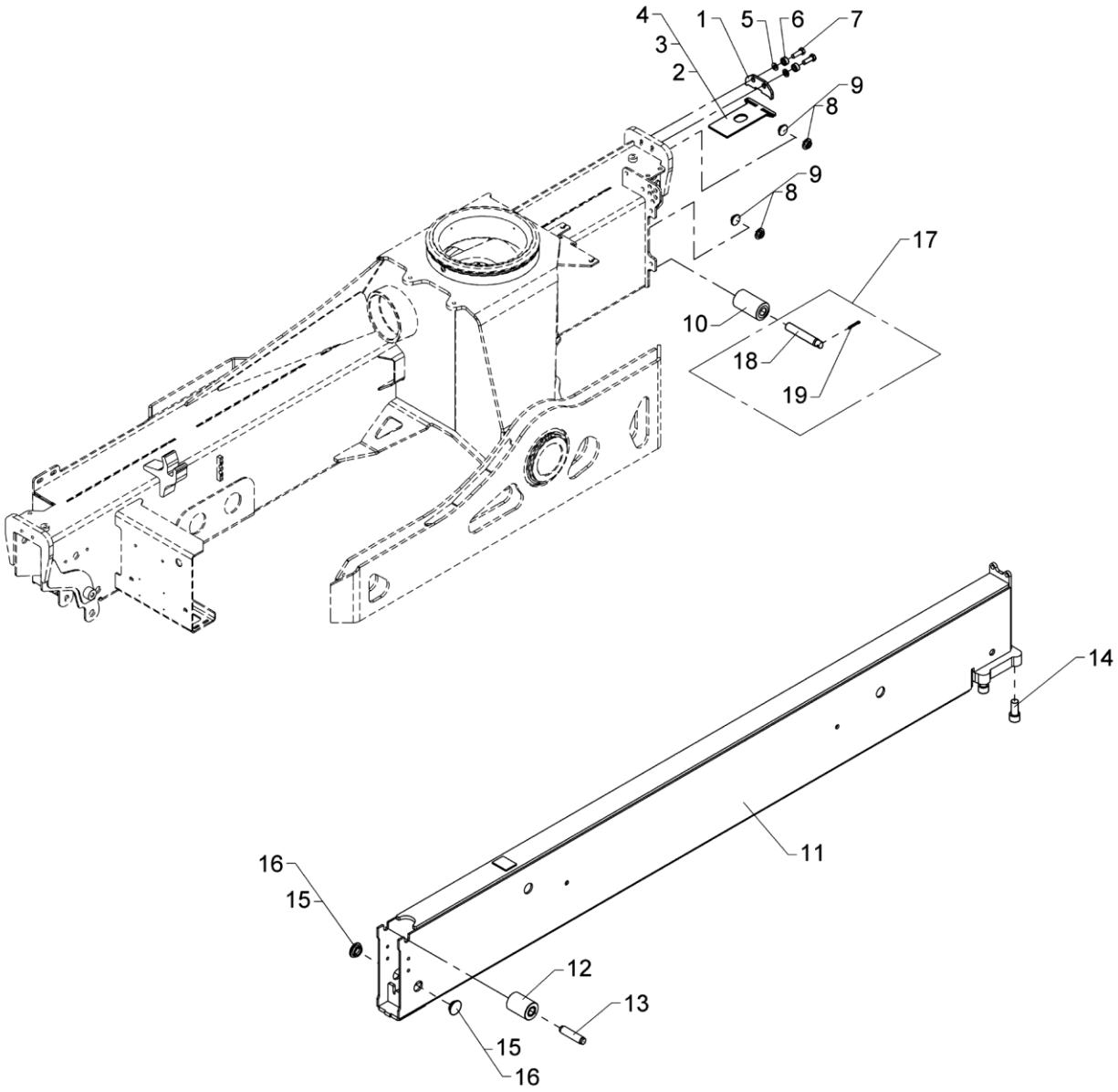

Stabilizer beam, type SV - 5570

Pos	Qty.	Part no.	Description	Remarks
		6341100	Stabilizer beam, type SV	
		6342030	No detection, legs down	
1	1	6353091	Bracket	
2	1	6353092	Spacer, 4 mm	4 mm
3	1	6353093	Spacer, 5 mm	5 mm
4	1	6353099	Spacer, 6 mm	6 mm
5	2	31565	Washer, stainless	10 mm
6	2	6344747	Spacer	
7	2	30156	Set screw, stainless	M10 x 30
8	4	63429	Guide	ø30 x 3 mm
9	4	63430	Guide	ø30 x 2 mm
10	1	63470	Guide roller	
11	1	6340121	Stabilizer beam I	
12	1	63469	Guide roller	
13	1	6340098	Pin for guide roller	
14	4	30339	Cylinder screw	MC18 x 40
15	2	63681	Slide block	3 mm
16	2	64424	Slide block	2 mm
17	1	6342030	No detection, legs down	
18	1	6344048	Pin for guide roller	
19	1	31615	Split pin	ø4 x 32

1500K, 1510K, 1720K, 1730K, 1820K, 1830K

Internal ref. 63 41 110

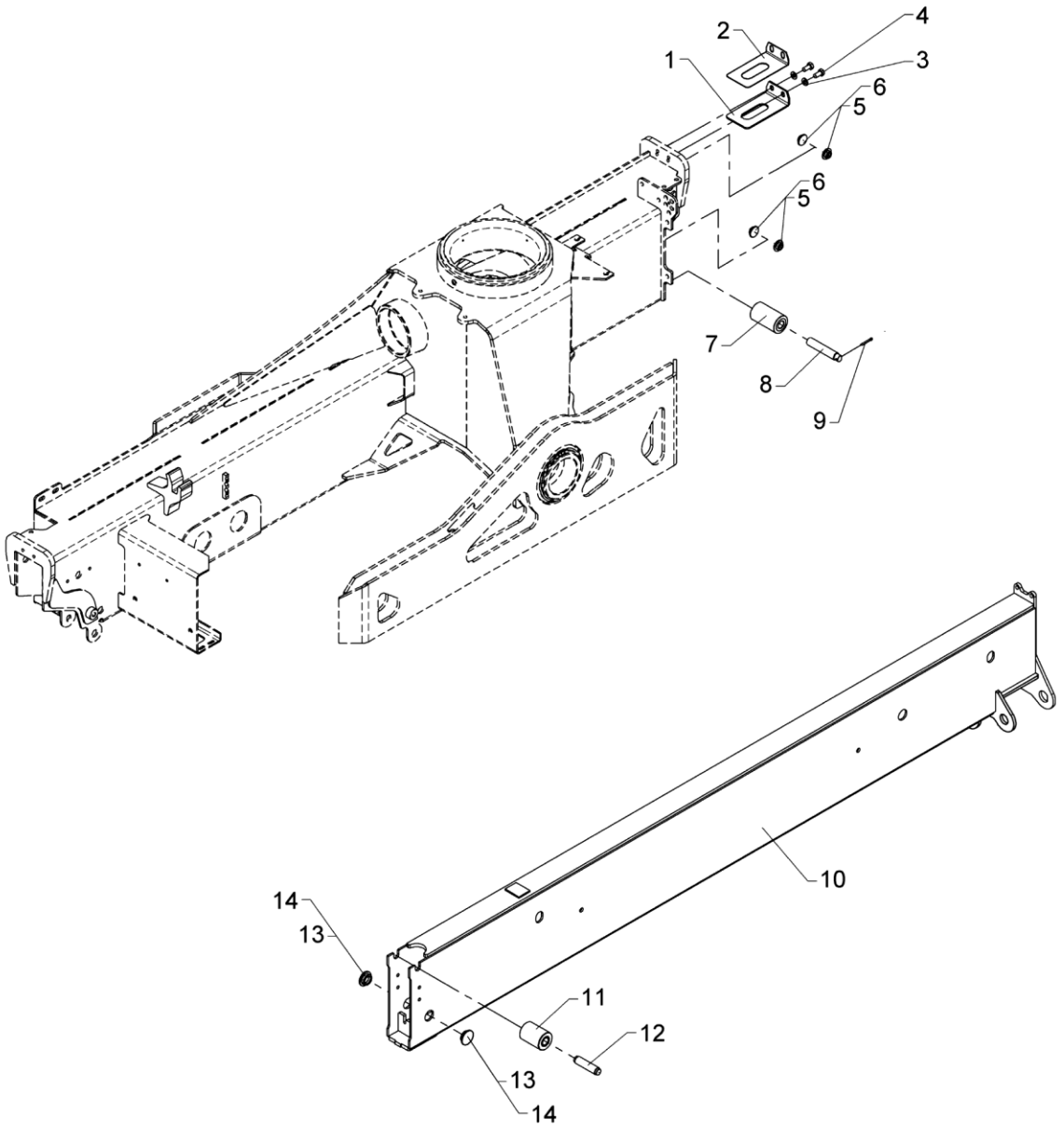

Obsolete

Stabilizer beam, type SR-20° - 5570

534 02 020

From loader 1060001
To loader 1060233

Created 14-11-2008
Modified 06-07-2009

Pos	Qty.	Part no.	Description	Remarks
1	1	6306156	Spacer	
2	1	6306722	Adjusting plate	
3	2	31565	Washer, stainless	10 mm
4	2	31517	Set screw, stainless	M10 x 20
5	4	63429	Guide	ø30 x 3 mm
6	4	63430	Guide	ø30 x 2 mm
7	1	63470	Guide roller	
8	1	6340048	Pin for guide roller	
9	1	31615	Split pin	ø4 x 32
10	1	6340131	Stabilizer beam	
11	1	63469	Guide roller	
12	1	6340098	Pin for guide roller	
13	2	63681	Slide block	3 mm
14	2	64424	Slide block	3 mm

1500K, 1510K, 1720K, 1730K, 1820K, 1830K

Internal ref. 63 43 820

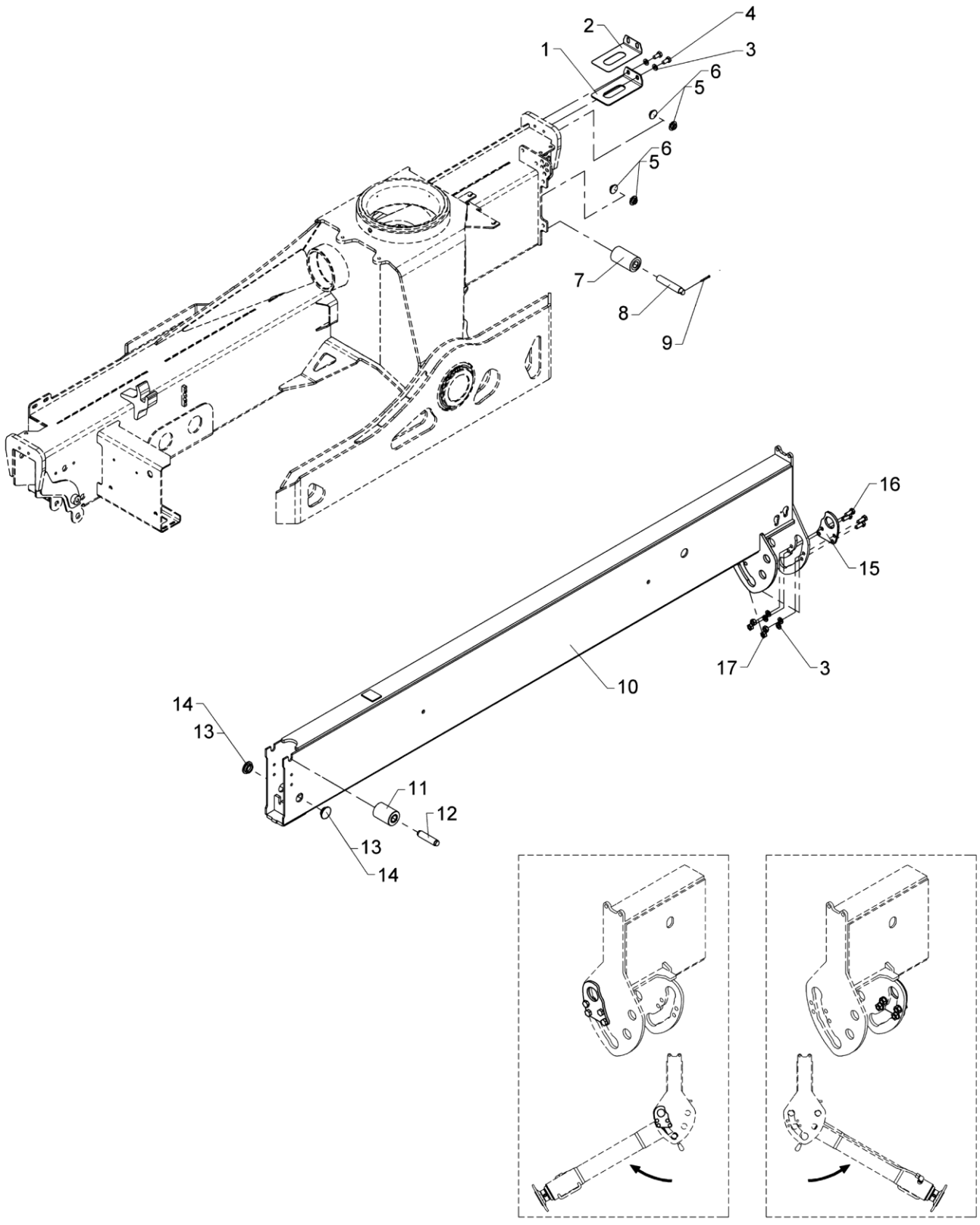

Obsolete

Stabilizer beam, type SR-60°, 5570

534 02 021

From loader 1060234
To loader 1060275

Created 10-07-2009
Modified

Pos	Qty.	Part no.	Description	Remarks
1	1	6306156	Spacer	
2	1	6306722	Adjusting plate	
3	6	31565	Washer, stainless	10 mm
4	2	31517	Set screw, stainless	M10 x 20
5	4	63429	Guide	ø30 x 3 mm
6	4	63430	Guide	ø30 x 2 mm
7	1	63470	Guide roller	
8	1	6340048	Pin for guide roller	
9	1	31615	Split pin	ø4 x 32
10	1	6342861	Stabilizer beam, SR	
11	1	63469	Guide roller	
12	1	6340098	Pin for guide roller	
13	2	63681	Slide block	3 mm
14	2	64424	Slide block	3 mm
15	1	6342855	Plate	
16	4	30155	Set screw	M10 x 25
17	4	31551	Nut, stainless	M10

1500K, 1510K, 1720K, 1730K, 1820K, 1830K

63 42 030
Internal ref. 63 43 820

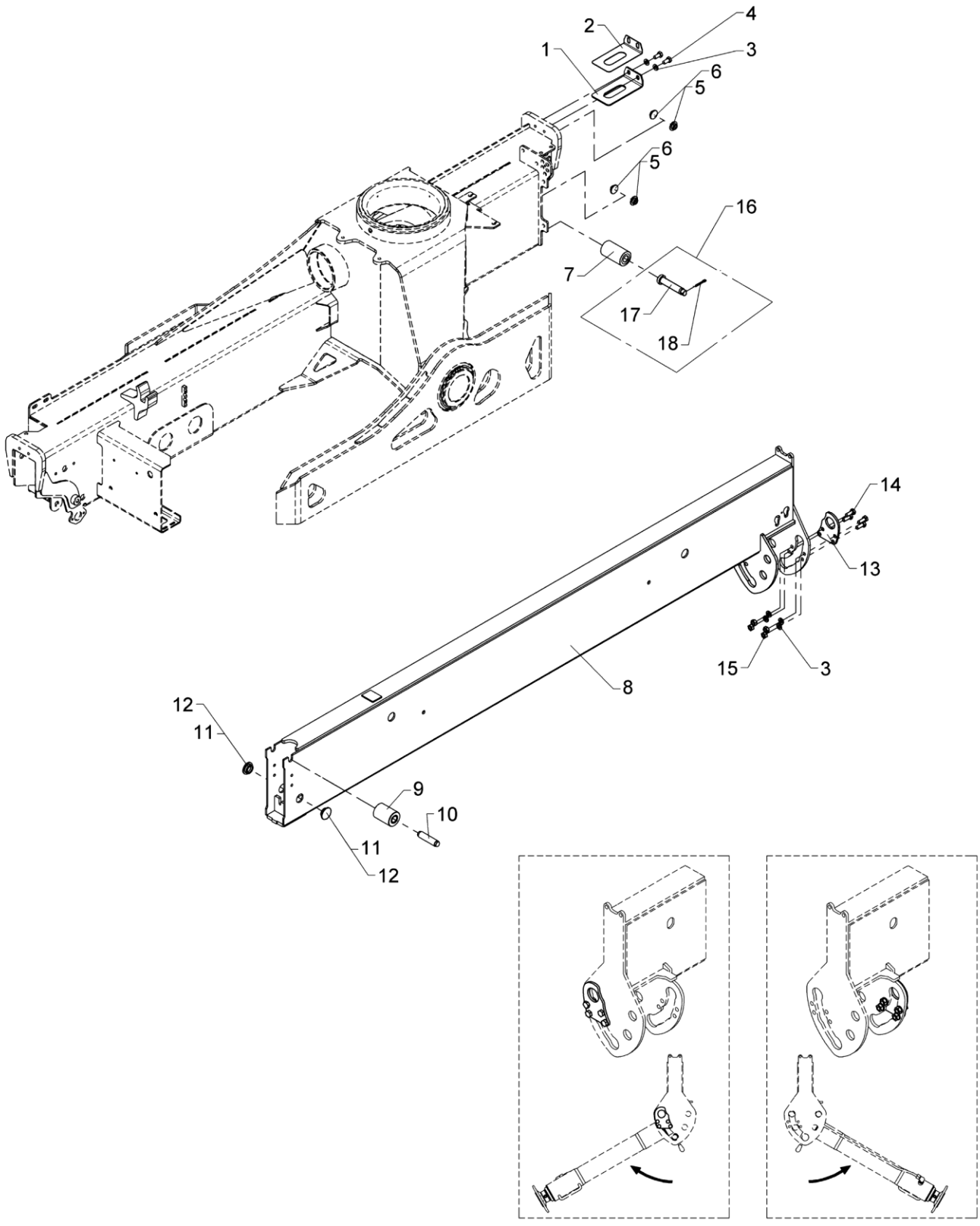

Obsolete

Stabilizer beam, type SR-60°, 5570

534 02 021 A

From loader 1060276
To loader 1061536

Created 10-07-2009
Modified 13-11-2009

Pos	Qty.	Part no.	Description	Remarks
		6343820	Stabilizer beam, type SR-60°	
		6342030	No detection, legs down	
1	1	6306156	Spacer	
2	1	6306722	Adjusting plate	
3	6	31565	Washer, stainless	10 mm
4	2	31517	Set screw, stainless	M10 x 20
5	4	63429	Guide	ø30 x 3 mm
6	4	63430	Guide	ø30 x 2 mm
7	1	63470	Guide roller	
8	1	6342861	Stabilizer beam, SR	
9	1	63469	Guide roller	
10	1	6340098	Pin for guide roller	
11	2	63681	Slide block	3 mm
12	2	64424	Slide block	3 mm
13	1	6342855	Plate	
14	4	30155	Set screw	M10 x 25
15	4	31551	Nut, stainless	M10
16	1	6342030	No detection, legs down	
17	1	6341982	Pin for guide roller	
18	1	31615	Split pin	ø4 x 32

1500K, 1510K, 1720K, 1730K, 1820K, 1830K

63 42 030
Internal ref. 63 43 820

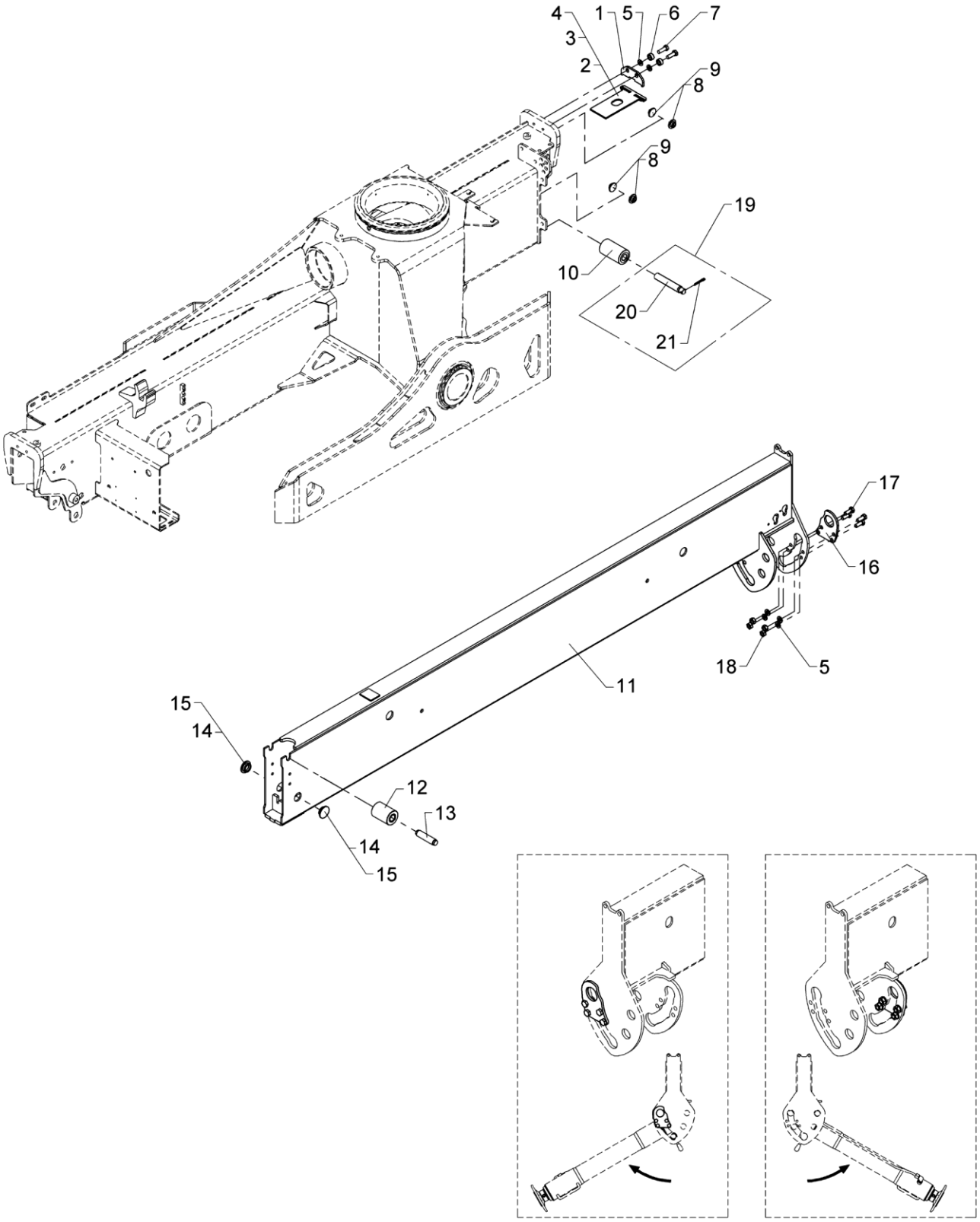

Stabilizer beam, type SR-60°, 5570

Pos	Qty.	Part no.	Description	Remarks
		6343820	Stabilizer beam, type SR-60°	
		6342030	No detection, legs down	
1	1	6353091	Bracket	
2	1	6353092	Spacer, 4 mm	4 mm
3	1	6353093	Spacer, 5 mm	5 mm
4	1	6353099	Spacer, 6 mm	6 mm
5	6	31565	Washer, stainless	10 mm
6	2	6344747	Spacer	
7	2	30156	Set screw, stainless	M10 x 30
8	4	63429	Guide	ø30 x 3 mm
9	4	63430	Guide	ø30 x 2 mm
10	1	63470	Guide roller	
11	1	6342861	Stabilizer beam, SR	
12	1	63469	Guide roller	
13	1	6340098	Pin for guide roller	
14	2	63681	Slide block	3 mm
15	2	64424	Slide block	2 mm
16	1	6342855	Plate	
17	4	30155	Set screw	M10 x 25
18	4	31551	Nut, stainless	M10
19	1	6342030	No detection, legs down	
20	1	6344048	Pin for guide roller	
21	1	31615	Split pin	ø4 x 32

1500K, 1510K, 1720K, 1730K, 1820K, 1830K

Internal ref. 63 41 120

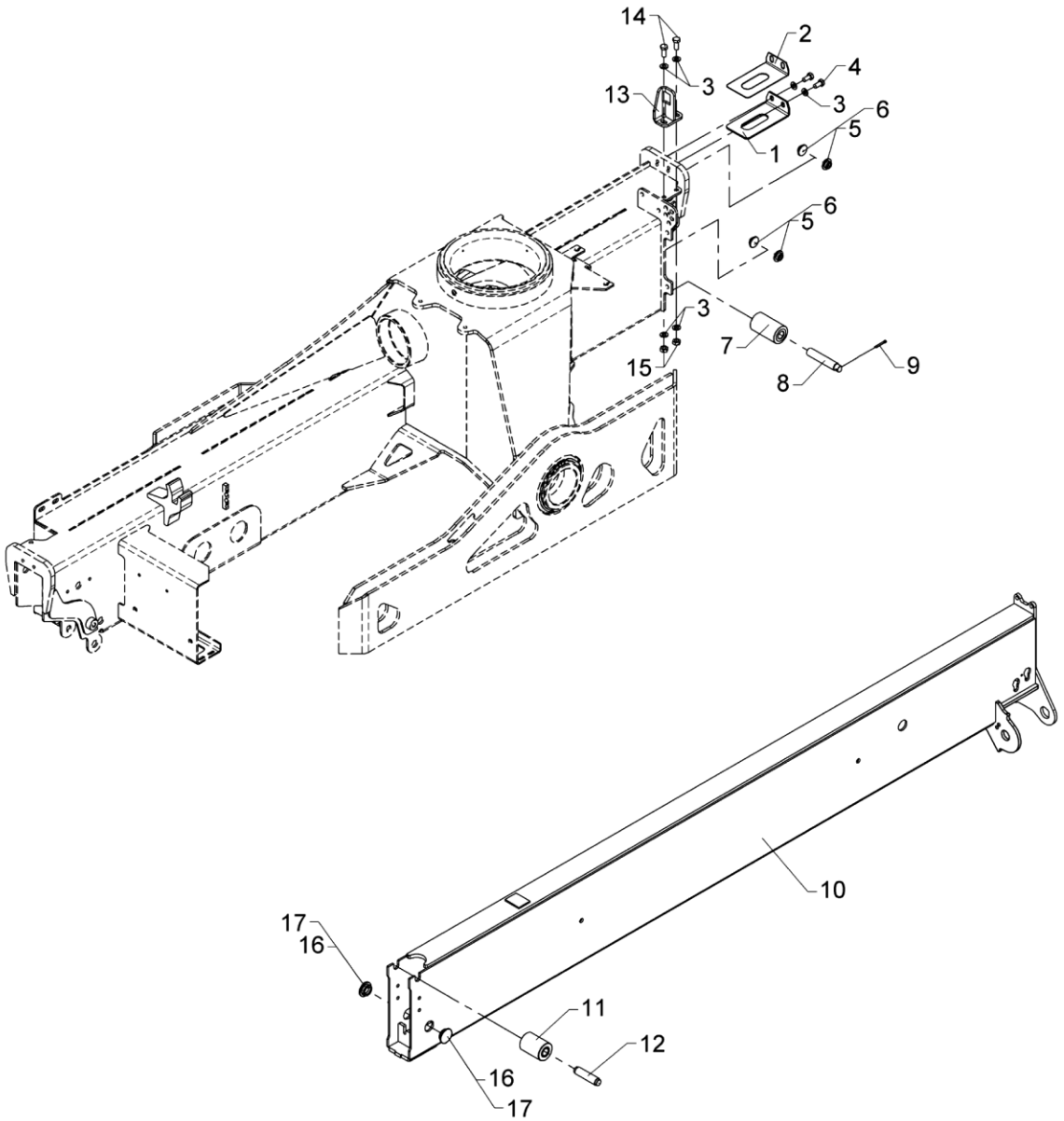

Obsolete

Stabilizer beam, type SH - 5570

534 02 030

From loader 1060001
To loader 1060275

Created 14-11-2008
Modified

Pos	Qty.	Part no.	Description	Remarks
1	1	6306156	Spacer	
2	1	6306722	Adjusting plate	
3	6	31565	Washer, stainless	10 mm
4	2	31517	Set screw, stainless	M10 x 20
5	4	63429	Guide	ø30 x 3 mm
6	4	63430	Guide	ø30 x 2 mm
7	1	63470	Guide roller	
8	1	6340048	Pin for guide roller	
9	1	31615	Split pin	ø4 x 32
10	1	6340135	Stabilizer beam	
11	1	63469	Guide roller	
12	1	6340098	Pin for guide roller	
13	1	6340817	Bracket	
14	2	30155	Set screw	M10 x 25
15	3	30858	Nut	M10
16	2	63681	Slide block	3 mm
17	2	64424	Slide block	3 mm

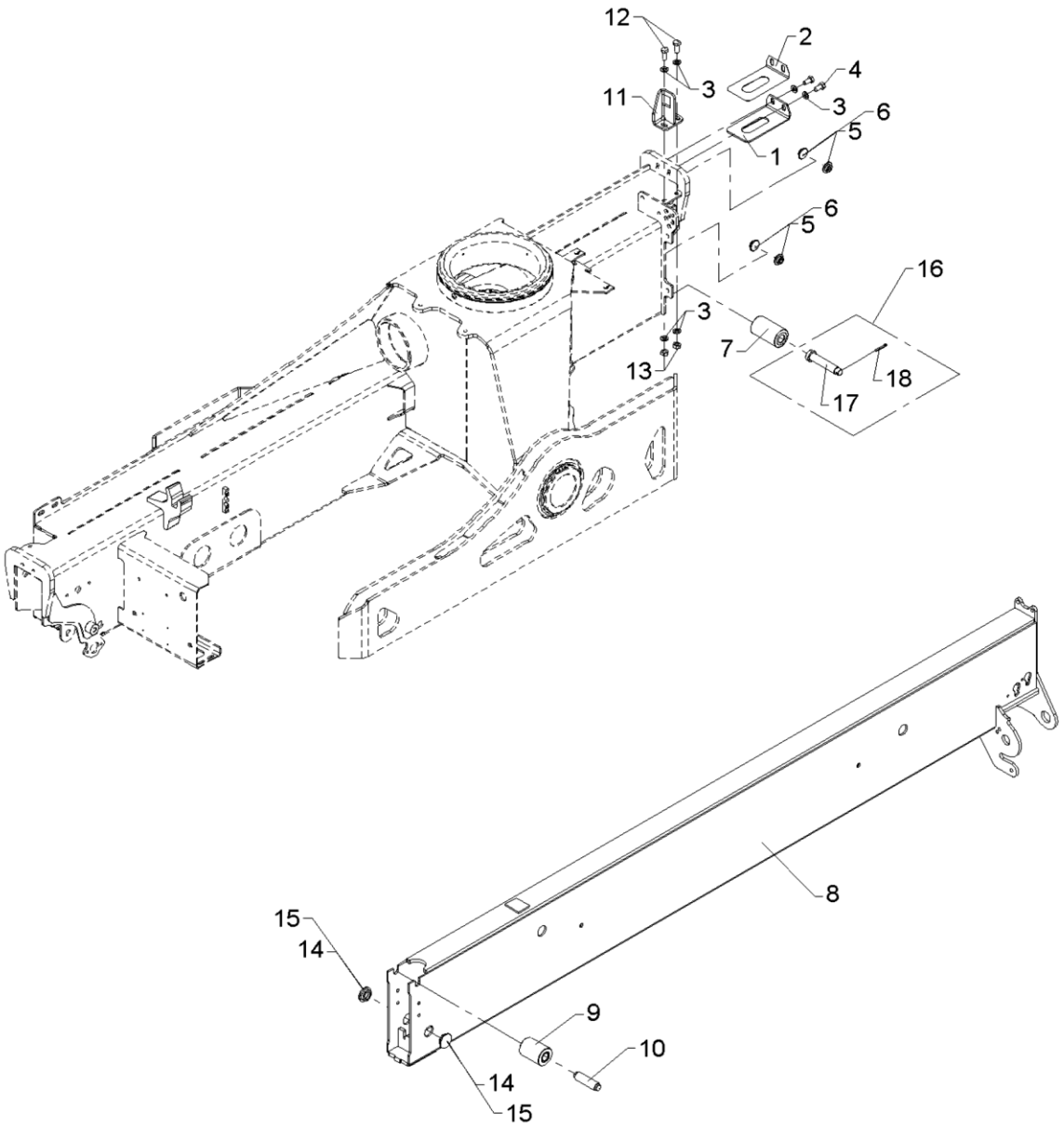
12
2
4
3
11
3
6
5
1
6
5
16
3
7
13
18
17
8
15
14
9
10
14
15

Obsolete

Stabilizer beam, type SH - 5570

534 02 030 A

From loader 1060276
To loader 1061536

Created 14-11-2008
Modified 17-10-2011

Pos	Qty.	Part no.	Description	Remarks
		6341120	Stabilizer beam, type SH	
		6342030	No detection, legs down	
1	1	6306156	Spacer	
2	1	6306722	Adjusting plate	
3	6	31565	Washer, stainless	10 mm
4	2	31517	Set screw, stainless	M10 x 20
5	4	63429	Guide	ø30 x 3 mm
6	4	63430	Guide	ø30 x 2 mm
7	1	63470	Guide roller	
8	1	6340135	Stabilizer beam	
9	1	63469	Guide roller	
10	1	6340098	Pin for guide roller	
11	1	6340817	Bracket	
12	2	30155	Set screw	M10 x 25
13	3	30858	Nut	M10
14	2	63681	Slide block	3 mm
15	2	64424	Slide block	2 mm
16	1	6342030	No detection, legs down	
17	1	6341982	Pin for guide roller	
18	1	31615	Split pin	ø4 x 32

1500K, 1510K, 1720K, 1730K, 1820K, 1830K

63 42 030
Internal ref. 63 41 120

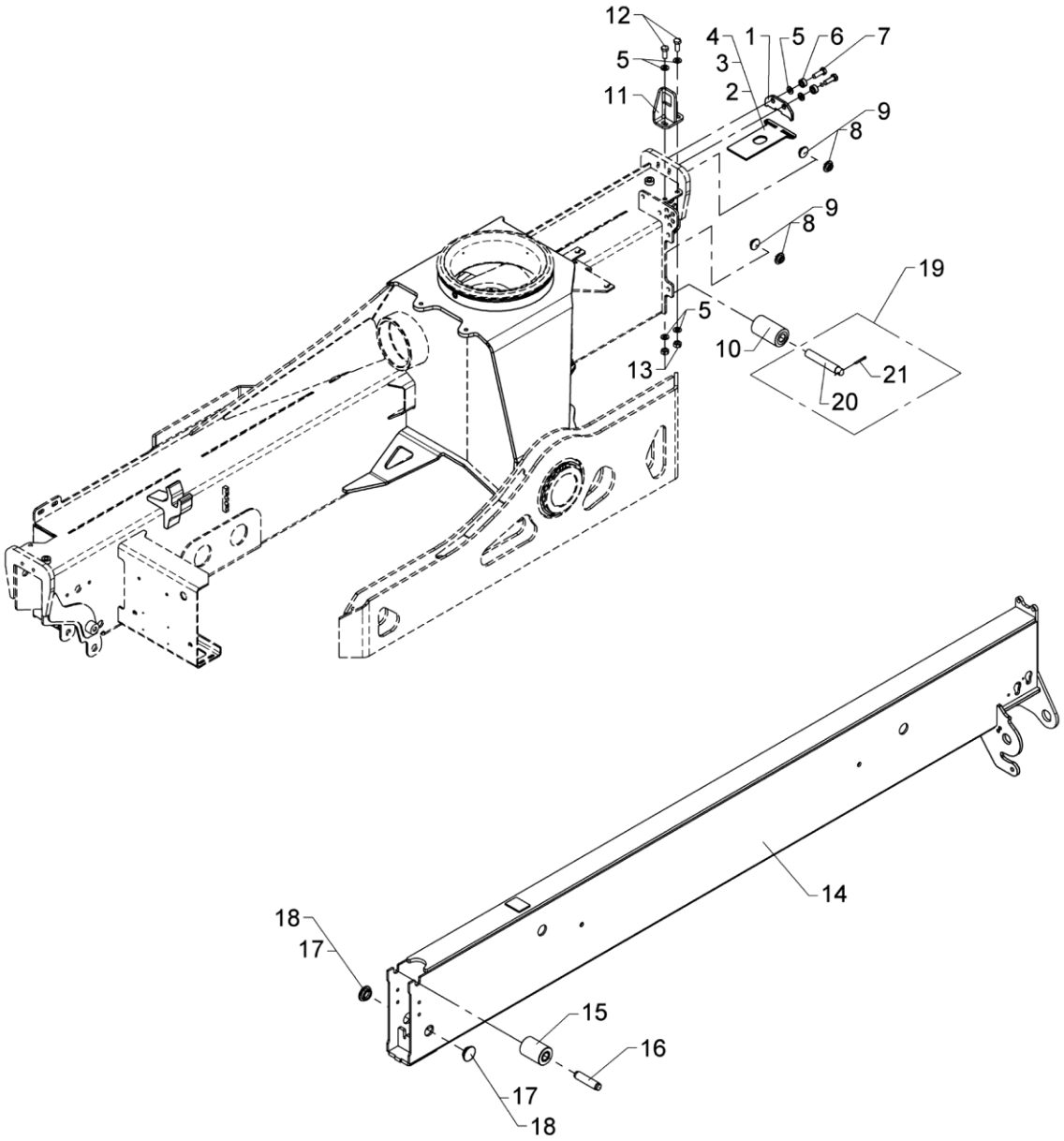

Stabilizer beam, type SH - 5570

Pos	Qty.	Part no.	Description	Remarks
		6341120	Stabilizer beam, type SH	
		6342030	No detection, legs down	
1	1	6353091	Bracket	
2	1	6353092	Spacer, 4 mm	4 mm
3	1	6353093	Spacer, 5 mm	5 mm
4	1	6353099	Spacer, 6 mm	6 mm
5	6	31565	Washer, stainless	10 mm
6	2	6344747	Spacer	
7	2	30156	Set screw, stainless	M10 x 30
8	4	63429	Guide	ø30 x 3 mm
9	4	63430	Guide	ø30 x 2 mm
10	1	63470	Guide roller	
11	1	6340817	Bracket	
12	2	30155	Set screw	M10 x 25
13	2	30858	Nut	M10
14	1	6340135	Stabilizer beam	
15	1	63469	Guide roller	
16	1	6340098	Pin for guide roller	
17	2	63681	Slide block	3 mm
18	2	64424	Slide block	2 mm
19	1	6342030	No detection, legs down	
20	1	6344048	Pin for guide roller	
21	1	31615	Split pin	ø4 x 32

1500K, 1510K, 1720K, 1730K, 1820K, 1830K

Internal ref. 63 41 130

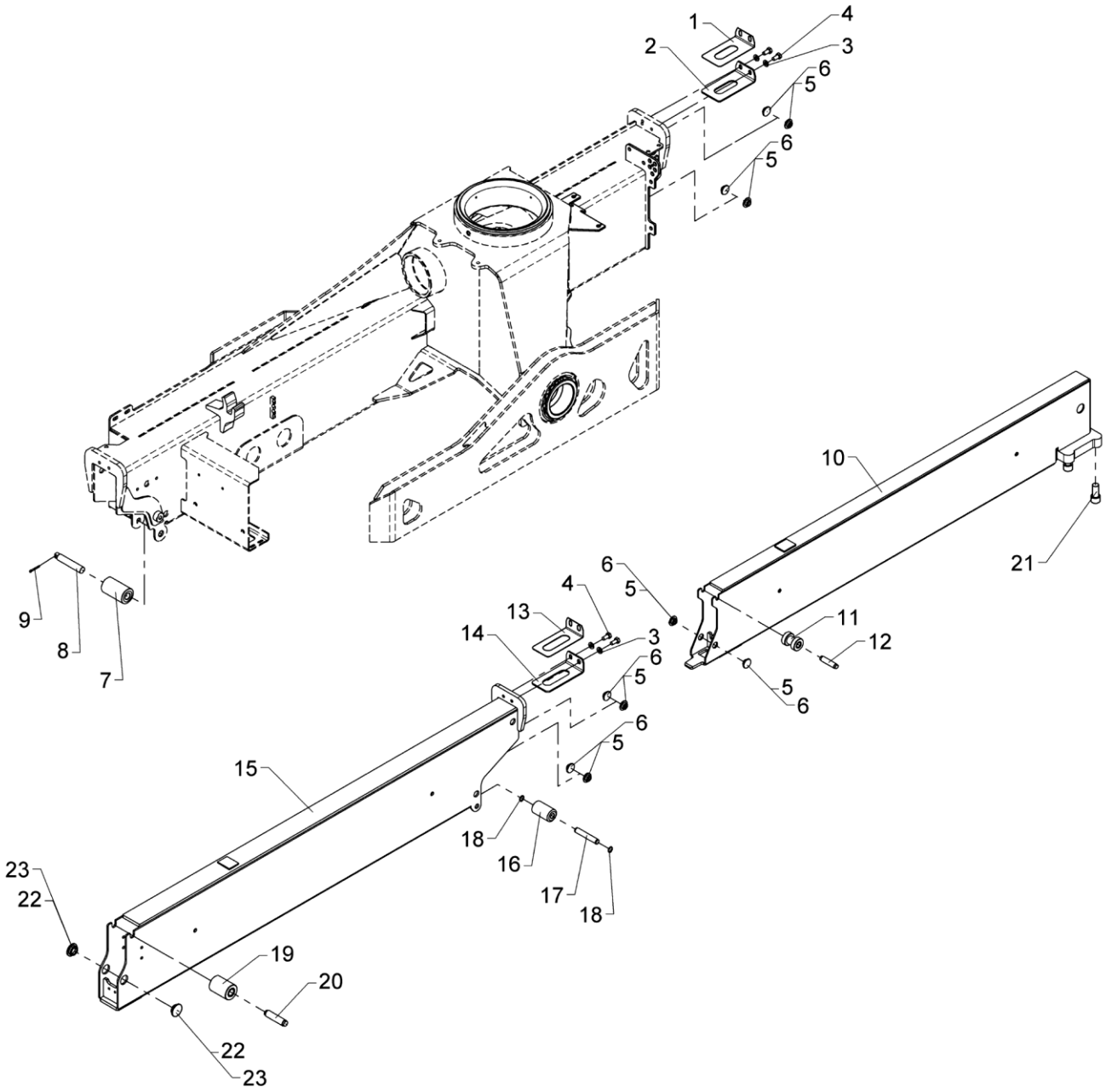

Obsolete

Stabilizer beam, type DV - 6450

534 02 040

From loader 1060001
To loader 1060275

Created 13-11-2008
Modified

Pos	Qty.	Part no.	Description	Remarks
1	1	6306722	Adjusting plate	
2	1	6306156	Spacer	
3	4	31565	Washer, stainless	10 mm
4	4	31517	Set screw, stainless	M10 x 20
5	10	63429	Guide	ø30 x 3 mm
6	10	63430	Guide	ø30 x 2 mm
7	1	63470	Guide roller	
8	1	6340048	Pin for guide roller	
9	1	31615	Split pin	ø4 x 32
10	1	6340101	Stabilizer beam II	
11	1	63426	Guide roller	
12	1	6306168	Pin for guide roller	
13	1	6306721	Adjusting plate	
14	1	6306157	Spacer	
15	1	6340091	Stabilizer beam I	
16	1	63471	Guide roller	
17	1	6340097	Pin for guide roller	
18	2	33104	Circlip	15U
19	1	63469	Guide roller	
20	1	6340098	Pin for guide roller	
21	4	30339	Cylinder screw	MC18 x 40
22	2	63681	Slide block	3 mm
23	2	64424	Slide block	3 mm

1500K, 1510K, 1720K, 1730K, 1820K, 1830K

63 42 030
Internal ref. 63 41 130

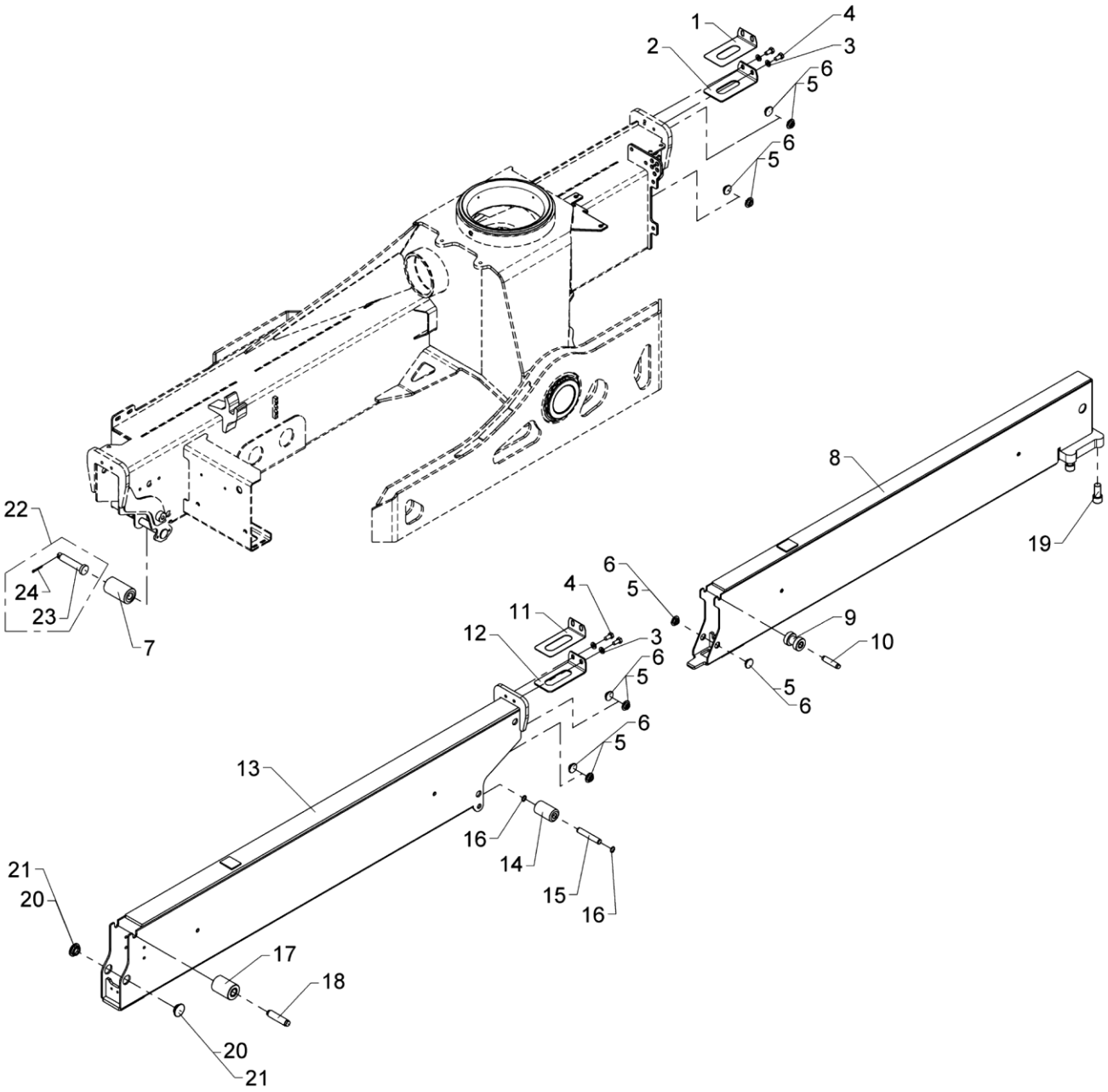

Obsolete

Stabilizer beam, type DV - 6450

534 02 040 A

From loader 1060276
To loader 1061536

Created 13-11-2008
Modified 16-11-2009

Pos	Qty.	Part no.	Description	Remarks
		6341130	Stabilizer beam, type DV	
		6342030	No detection, legs down	
1	1	6306722	Adjusting plate	
2	1	6306156	Spacer	
3	4	31565	Washer, stainless	10 mm
4	4	31517	Set screw, stainless	M10 x 20
5	10	63429	Guide	ø30 x 3 mm
6	10	63430	Guide	ø30 x 2 mm
7	1	63470	Guide roller	
8	1	6340101	Stabilizer beam II	
9	1	63426	Guide roller	
10	1	6306168	Pin for guide roller	
11	1	6306721	Adjusting plate	
12	1	6306157	Spacer	
13	1	6340091	Stabilizer beam I	
14	1	63471	Guide roller	
15	1	6340097	Pin for guide roller	
16	2	33104	Circlip	15U
17	1	63469	Guide roller	
18	1	6340098	Pin for guide roller	
19	4	30339	Cylinder screw	MC18 x 40
20	2	63681	Slide block	3 mm
21	2	64424	Slide block	3 mm
22	1	6342030	No detection, legs down	
23	1	6341982	Pin for guide roller	
24	1	31615	Split pin	ø4 x 32

1500K, 1510K, 1720K, 1730K, 1820K, 1830K

63 42 030
Internal ref. 63 41 130

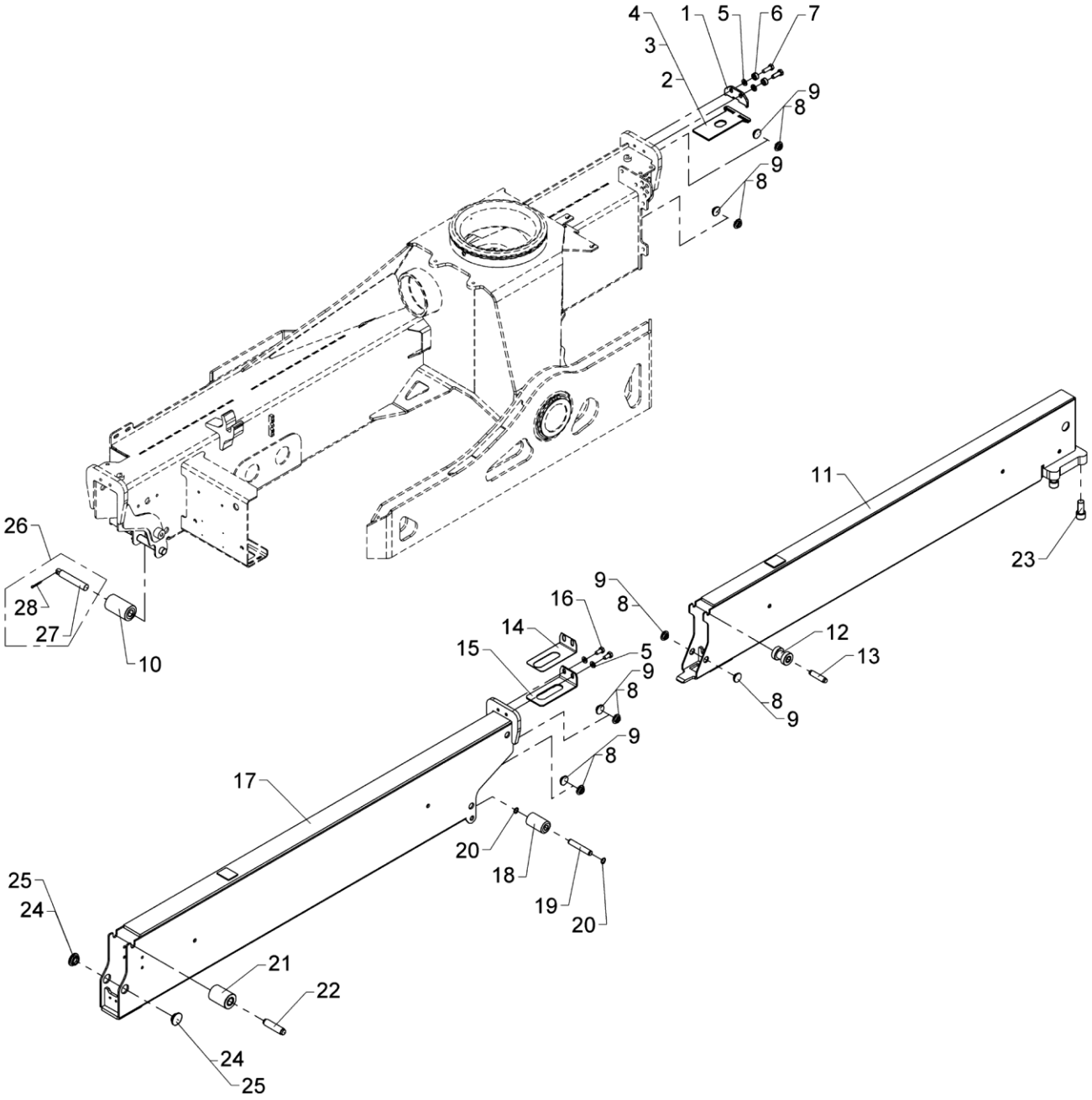

Stabilizer beam, type DV - 6450

Pos	Qty.	Part no.	Description	Remarks
		6341130	Stabilizer beam, type DV	
		6342030	No detection, legs down	
1	1	6353091	Bracket	
2	1	6353092	Spacer, 4 mm	4 mm
3	1	6353093	Spacer, 5 mm	5 mm
4	1	6353099	Spacer, 6 mm	6 mm
5	4	31565	Washer, stainless	10 mm
6	2	6344747	Spacer	
7	2	30156	Set screw, stainless	M10 x 30
8	10	63429	Guide	ø30 x 3 mm
9	10	63430	Guide	ø30 x 2 mm
10	1	63470	Guide roller	
11	1	6340101	Stabilizer beam II	
12	1	63426	Guide roller	
13	1	6306168	Pin for guide roller	
14	1	6306721	Adjusting plate	
15	1	6306157	Spacer	
16	2	31517	Set screw, stainless	M10 x 20
17	1	6340091	Stabilizer beam I	
18	1	63471	Guide roller	
19	1	6340097	Pin for guide roller	
20	2	33104	Circlip	15U
21	1	63469	Guide roller	
22	1	6340098	Pin for guide roller	
23	4	30339	Cylinder screw	MC18 x 40
24	2	63681	Slide block	3 mm
25	2	64424	Slide block	2 mm
26	1	6342030	No detection, legs down	
27	1	6344048	Pin for guide roller	
28	1	31615	Split pin	ø4 x 32

1500K, 1510K, 1720K, 1730K, 1820K, 1830K

Internal ref. 63 41 140

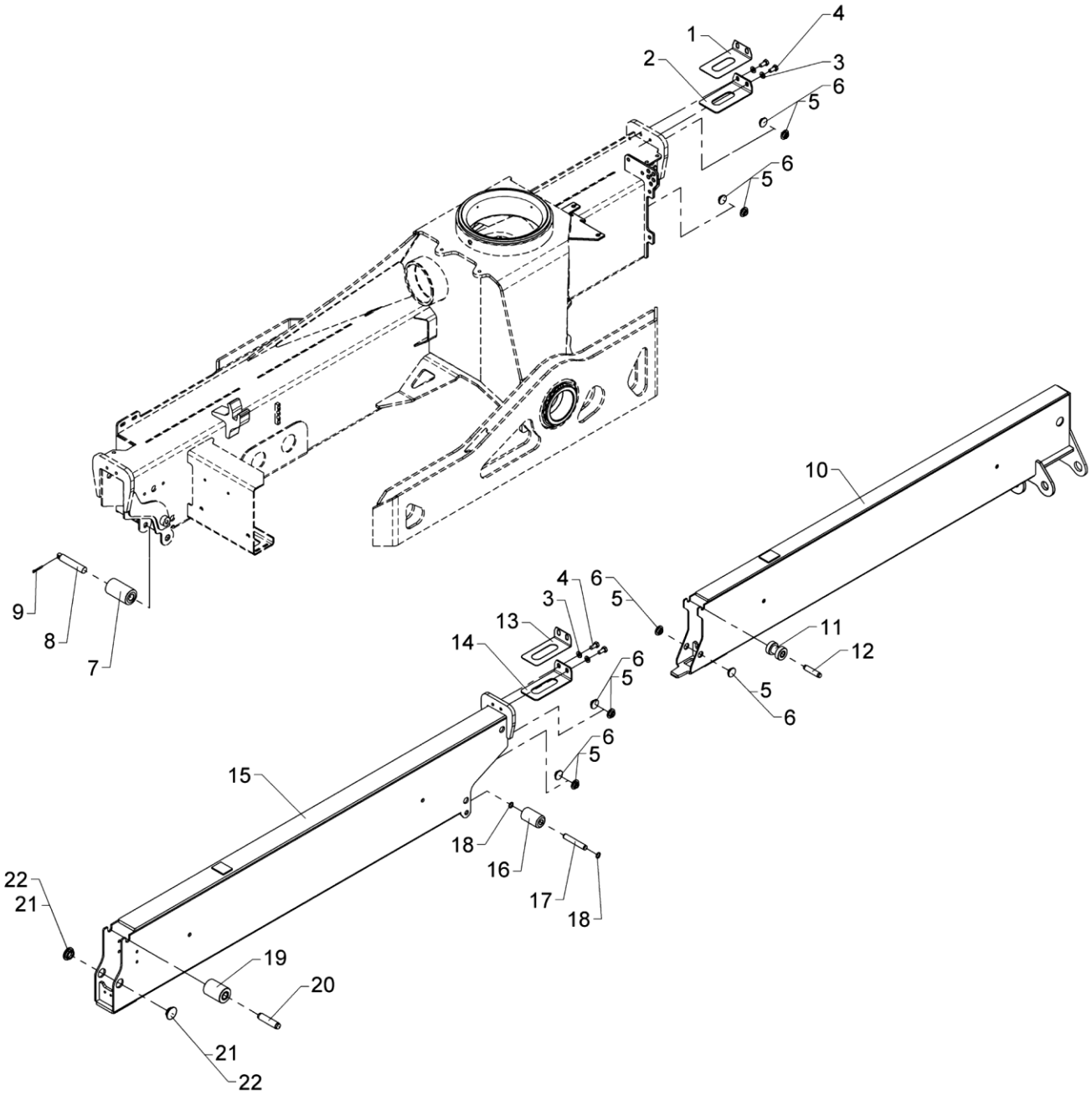

Obsolete

534 02 050

From loader 1060001
To loader 1060233

Created 13-11-2008
Modified 07-07-2009

Stabilizer beam, type DR-20° - 6450

Pos	Qty.	Part no.	Description	Remarks
1	1	6306722	Adjusting plate	
2	1	6306156	Spacer	
3	4	31565	Washer, stainless	10 mm
4	4	31517	Set screw, stainless	M10 x 20
5	10	63429	Guide	ø30 x 3 mm
6	10	63430	Guide	ø30 x 2 mm
7	1	63470	Guide roller	
8	1	6340048	Pin for guide roller	
9	1	31615	Split pin	ø4 x 32
10	1	6340111	Stabilizer beam	
11	1	63426	Guide roller	
12	1	6306168	Pin for guide roller	
13	1	6306721	Adjusting plate	
14	1	6306157	Spacer	
15	1	6340091	Stabilizer beam I	
16	1	63471	Guide roller	
17	1	6340097	Pin for guide roller	
18	2	33104	Circlip	15U
19	1	63469	Guide roller	
20	1	6340098	Pin for guide roller	
21	2	63681	Slide block	3 mm
22	2	64424	Slide block	3 mm

1500K, 1510K, 1720K, 1730K, 1820K, 1830K

Internal ref. 63 43 830

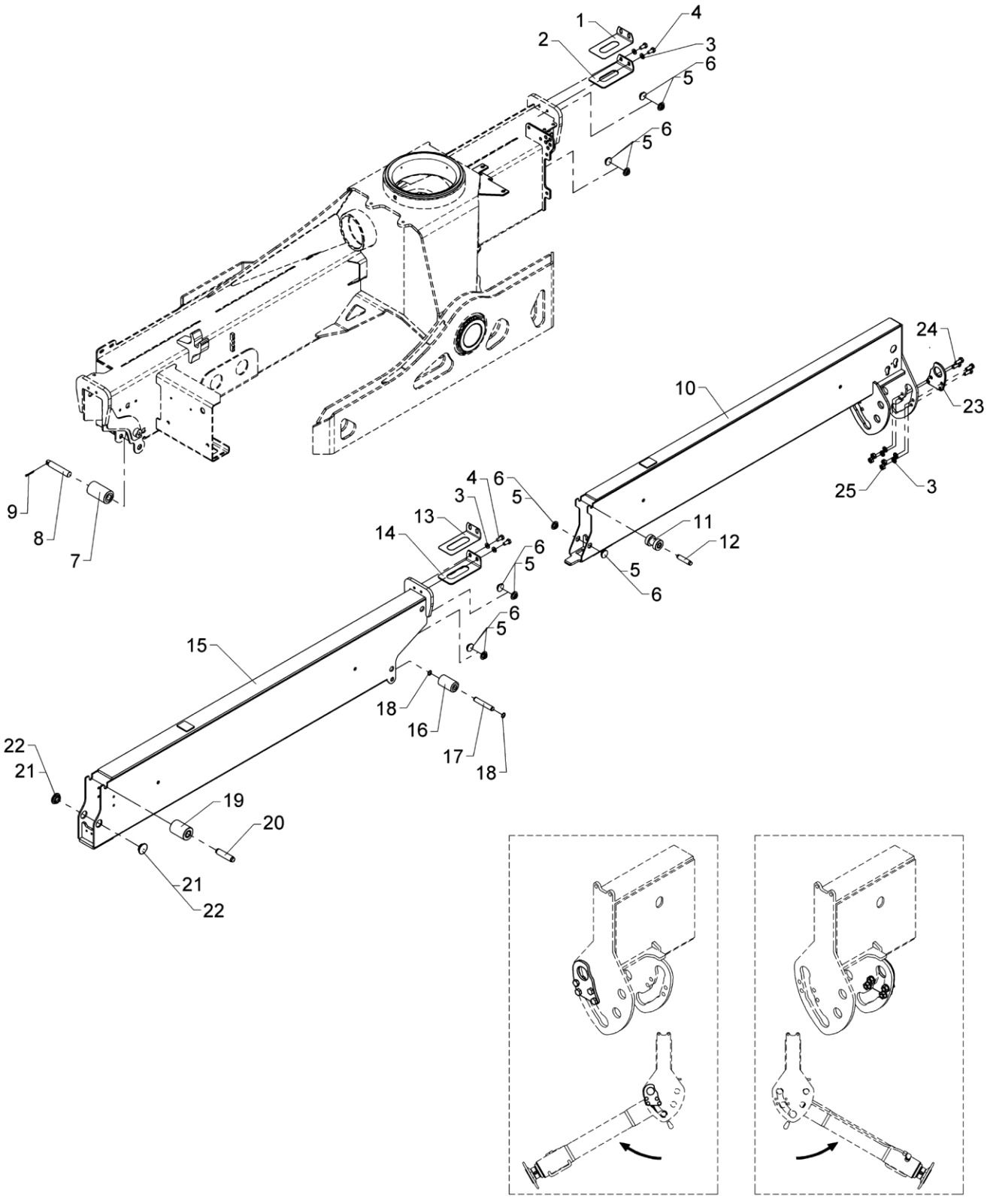

Obsolete

Stabilizer beam, type DR-60°, 6450

534 02 051

From loader 1060234
To loader 1060275

Created 10-07-2009
Modified

Pos	Qty.	Part no.	Description	Remarks
1	1	6306722	Adjusting plate	
2	1	6306156	Spacer	
3	8	31565	Washer, stainless	10 mm
4	4	31517	Set screw, stainless	M10 x 20
5	10	63429	Guide	ø30 x 3 mm
6	10	63430	Guide	ø30 x 2 mm
7	1	63470	Guide roller	
8	1	6340048	Pin for guide roller	
9	1	31615	Split pin	ø4 x 32
10	1	6342851	Stabilizer beam, DR	
11	1	63426	Guide roller	
12	1	6306168	Pin for guide roller	
13	1	6306721	Adjusting plate	
14	1	6306157	Spacer	
15	1	6340091	Stabilizer beam I	
16	1	63471	Guide roller	
17	1	6340097	Pin for guide roller	
18	2	33104	Circlip	15U
19	1	63469	Guide roller	
20	1	6340098	Pin for guide roller	
21	2	63681	Slide block	3 mm
22	2	64424	Slide block	3 mm
23	1	6342855	Plate	
24	4	30155	Set screw	M10 x 25
25	4	31551	Nut, stainless	M10

1500K, 1510K, 1720K, 1730K, 1820K, 1830K

63 42 030
Internal ref. 63 43 830

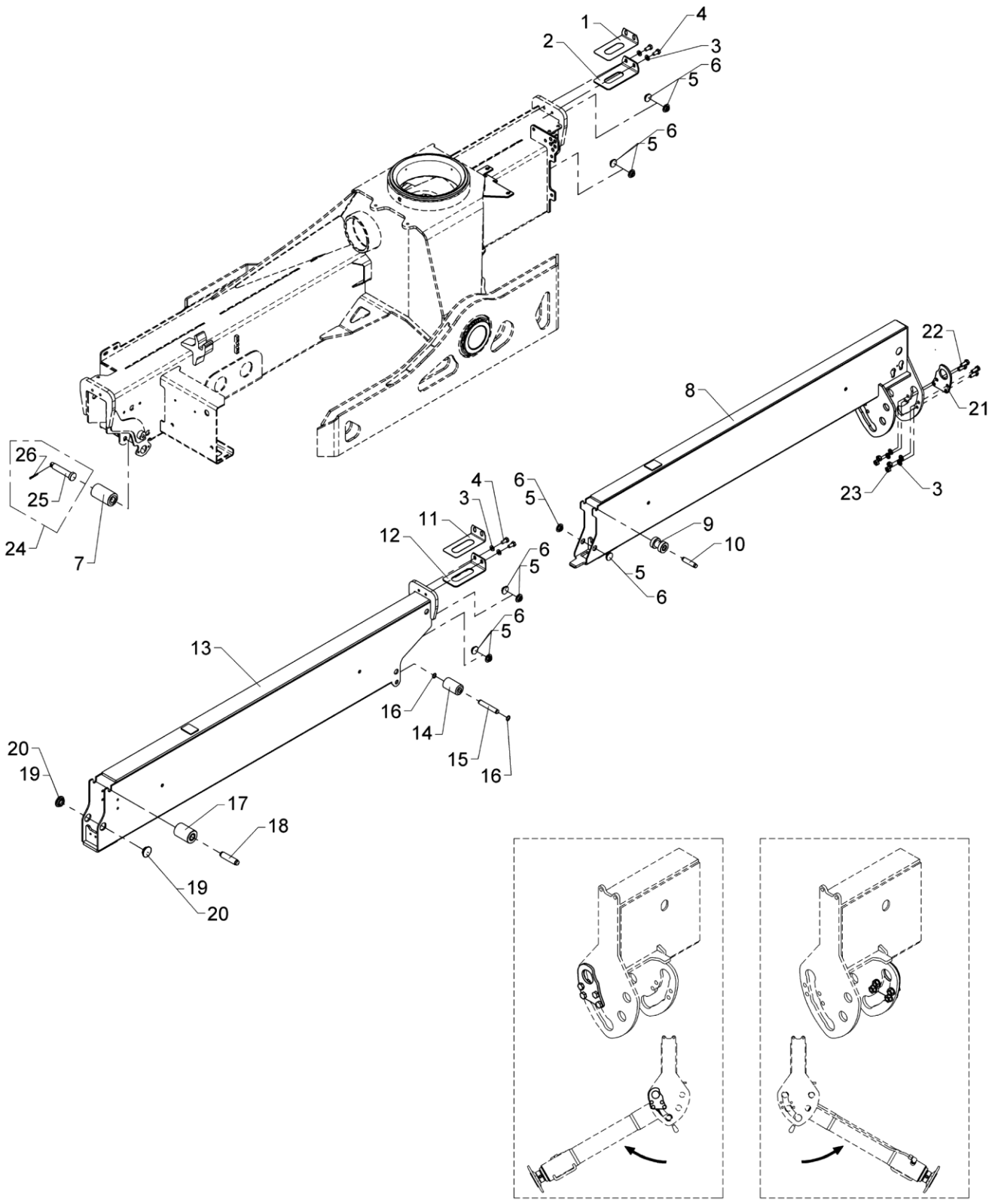

Obsolete

Stabilizer beam, type DR-60°, 6450

534 02 051 A

From loader 1060276
To loader 1061536

Created 10-07-2009
Modified 13-11-2009

Pos	Qty.	Part no.	Description	Remarks
		6343830	Stabilizer beam, type DR-60°	
		6342030	No detection, legs down	
1	1	6306722	Adjusting plate	
2	1	6306156	Spacer	
3	8	31565	Washer, stainless	10 mm
4	4	31517	Set screw, stainless	M10 x 20
5	10	63429	Guide	ø30 x 3 mm
6	10	63430	Guide	ø30 x 2 mm
7	1	63470	Guide roller	
8	1	6342851	Stabilizer beam, DR	
9	1	63426	Guide roller	
10	1	6306168	Pin for guide roller	
11	1	6306721	Adjusting plate	
12	1	6306157	Spacer	
13	1	6340091	Stabilizer beam I	
14	1	63471	Guide roller	
15	1	6340097	Pin for guide roller	
16	2	33104	Circlip	15U
17	1	63469	Guide roller	
18	1	6340098	Pin for guide roller	
19	2	63681	Slide block	3 mm
20	2	64424	Slide block	3 mm
21	1	6342855	Plate	
22	4	30155	Set screw	M10 x 25
23	4	31551	Nut, stainless	M10
24	1	6342030	No detection, legs down	
25	1	6341982	Pin for guide roller	
26	1	31615	Split pin	ø4 x 32

1500K, 1510K, 1720K, 1730K, 1820K, 1830K

63 42 030
Internal ref. 63 43 830

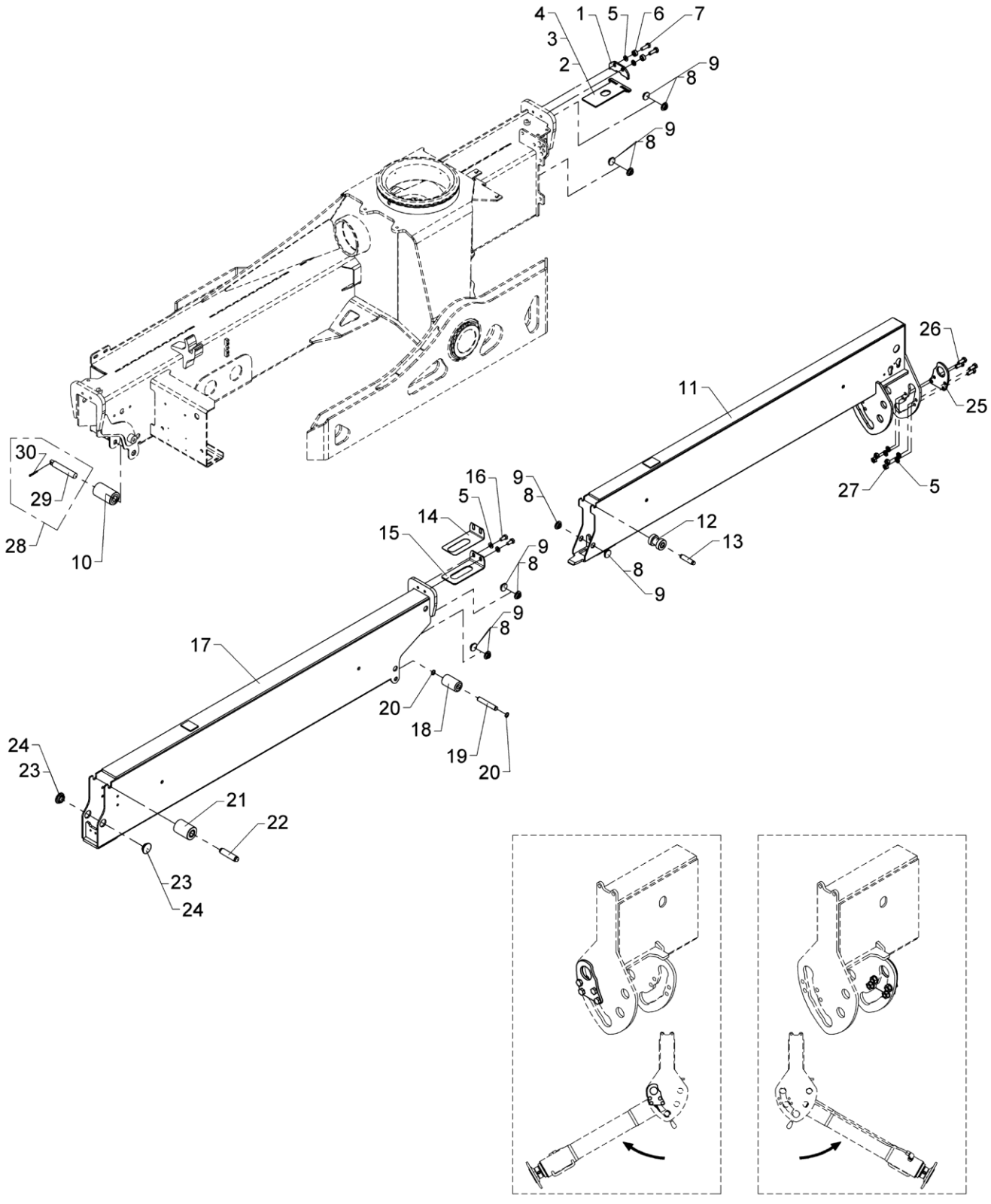

Stabilizer beam, type DR-60°, 6450

Pos	Qty.	Part no.	Description	Remarks
		6343830	Stabilizer beam, type DR-60°	
		6342030	No detection, legs down	
1	1	6353091	Bracket	
2	1	6353092	Spacer, 4 mm	4 mm
3	1	6353093	Spacer, 5 mm	5 mm
4	1	6353099	Spacer, 6 mm	6 mm
5	8	31565	Washer, stainless	10 mm
6	2	6344747	Spacer	
7	2	30156	Set screw, stainless	M10 x 30
8	10	63429	Guide	ø30 x 3 mm
9	10	63430	Guide	ø30 x 2 mm
10	1	63470	Guide roller	
11	1	6342851	Stabilizer beam, DR	
12	1	63426	Guide roller	
13	1	6306168	Pin for guide roller	
14	1	6306721	Adjusting plate	
15	1	6306157	Spacer	
16	2	31517	Set screw, stainless	M10 x 20
17	1	6340091	Stabilizer beam I	
18	1	63471	Guide roller	
19	1	6340097	Pin for guide roller	
20	2	33104	Circlip	15U
21	1	63469	Guide roller	
22	1	6340098	Pin for guide roller	
23	2	63681	Slide block	3 mm
24	2	64424	Slide block	2 mm
25	1	6342855	Plate	
26	4	30155	Set screw	M10 x 25
27	4	31551	Nut, stainless	M10
28	1	6342030	No detection, legs down	
29	1	6344048	Pin for guide roller	
30	1	31615	Split pin	ø4 x 32

1500K, 1510K, 1720K, 1730K, 1820K, 1830K

Internal ref. 63 41 150

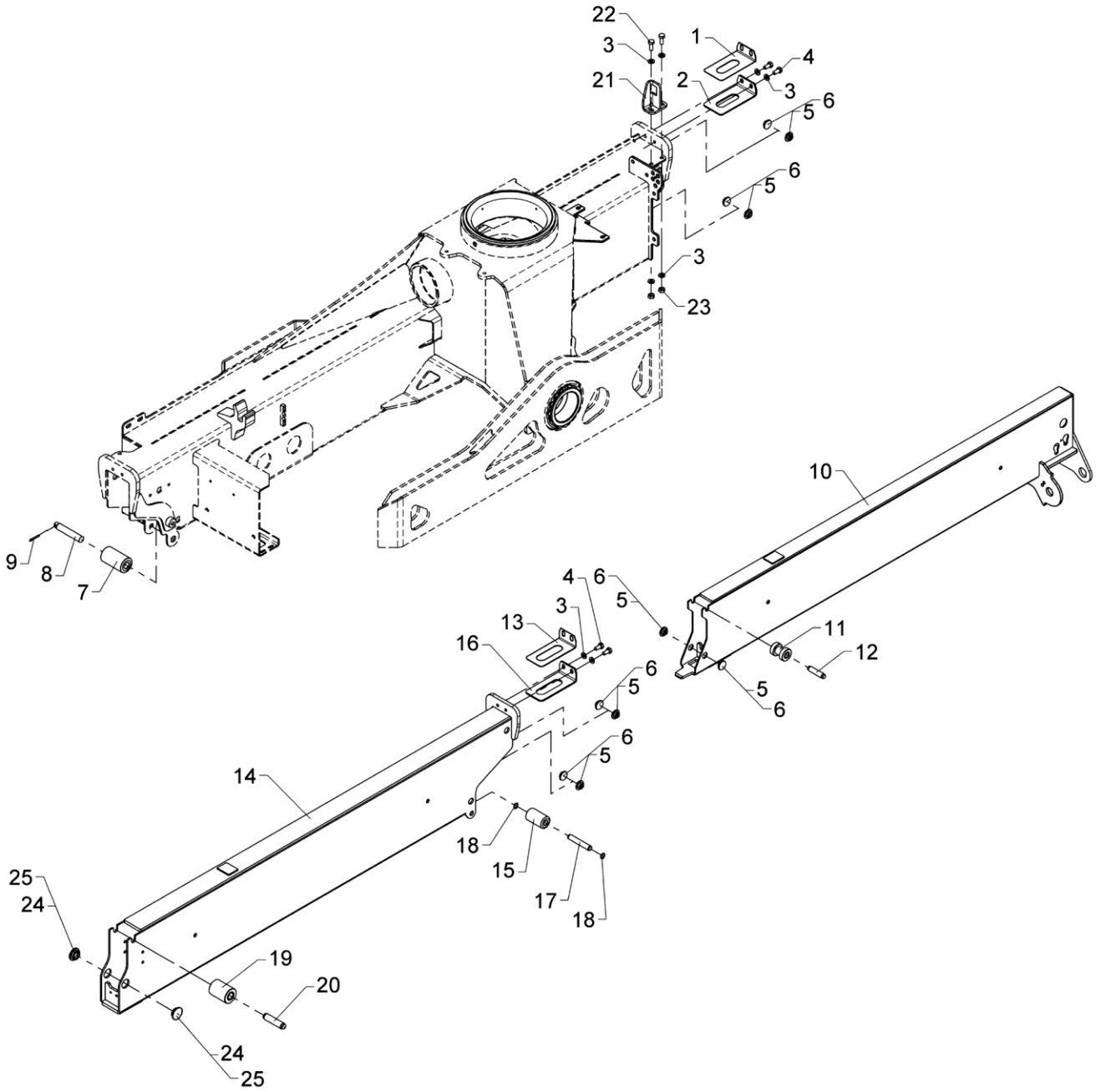

Obsolete

534 02 060

From loader 1060001
To loader 1060275

Created 13-11-2008
Modified

Stabilizer beam, type DH - 6450

Pos	Qty.	Part no.	Description	Remarks
1	1	6306722	Adjusting plate	
2	1	6306156	Spacer	
3	8	31565	Washer, stainless	10 mm
4	4	31517	Set screw, stainless	M10 x 20
5	10	63429	Guide	ø30 x 3 mm
6	10	63430	Guide	ø30 x 2 mm
7	1	63470	Guide roller	
8	1	6340048	Pin for guide roller	
9	1	31615	Split pin	ø4 x 32
10	1	6340115	Stabilizer beam II	
11	1	63426	Guide roller	
12	1	6306168	Pin for guide roller	
13	1	6306721	Adjusting plate	
14	1	6340091	Stabilizer beam I	
15	1	63471	Guide roller	
16	1	6306157	Spacer	
17	1	6340097	Pin for guide roller	
18	2	33104	Circlip	15U
19	1	63469	Guide roller	
20	1	6340098	Pin for guide roller	
21	1	6340817	Bracket	
22	2	30155	Set screw	M10 x 25
23	2	30858	Nut	M10
24	2	63681	Slide block	3 mm
25	2	64424	Slide block	3 mm

1500K, 1510K, 1720K, 1730K, 1820K, 1830K

63 42 030
Internal ref. 63 41 150

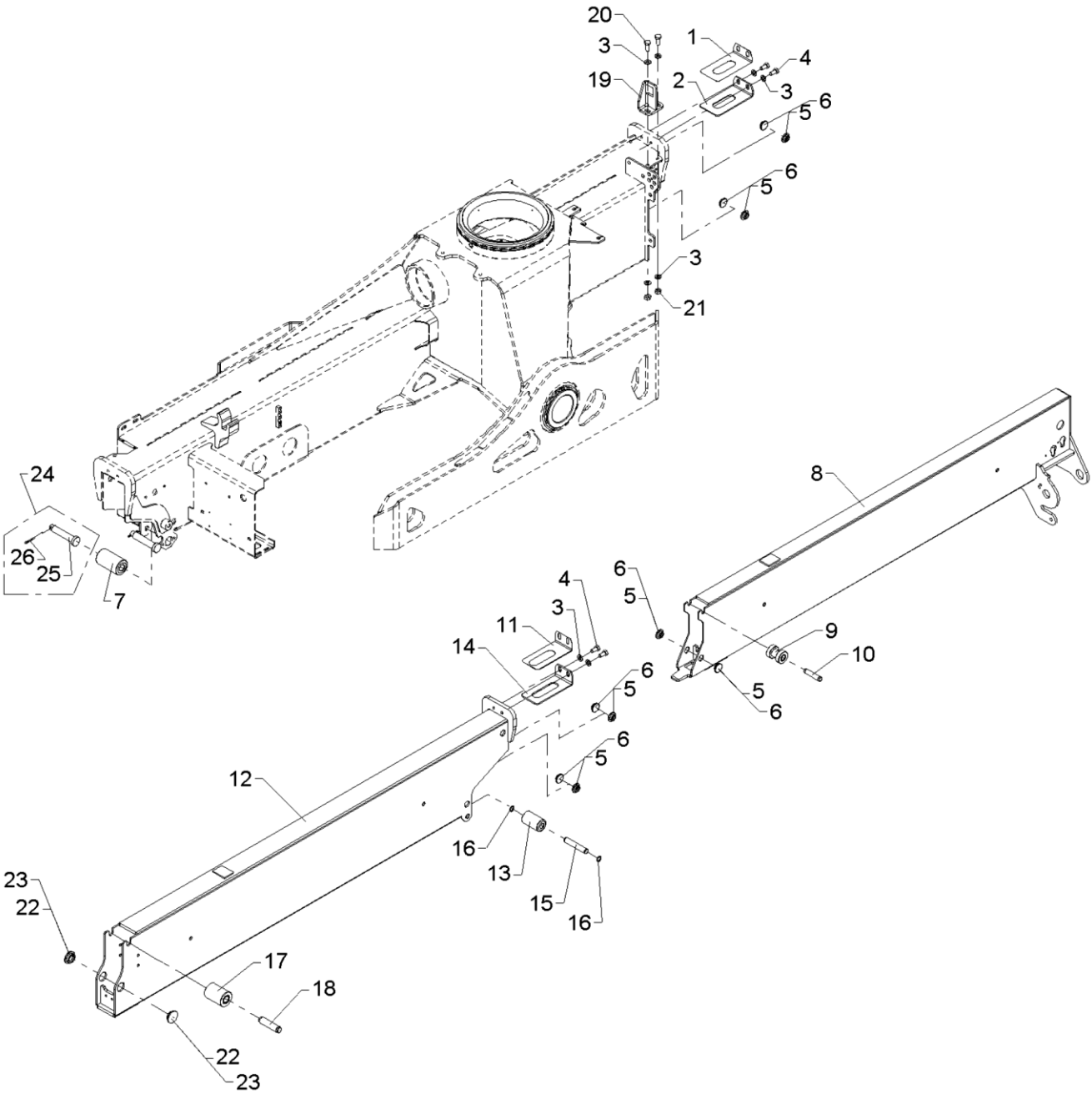

Obsolete

Stabilizer beam, type DH - 6450

534 02 060 A

From loader 1060276
To loader 1061536

Created 13-11-2008
Modified 17-10-2011

Pos	Qty.	Part no.	Description	Remarks
		6341150	Stabilizer beam, type DH	
		6342030	No detection, legs down	
1	1	6306722	Adjusting plate	
2	1	6306156	Spacer	
3	8	31565	Washer, stainless	10 mm
4	4	31517	Set screw, stainless	M10 x 20
5	10	63429	Guide	ø30 x 3 mm
6	10	63430	Guide	ø30 x 2 mm
7	1	63470	Guide roller	
8	1	6340115	Stabilizer beam II	
9	1	63426	Guide roller	
10	1	6306168	Pin for guide roller	
11	1	6306721	Adjusting plate	
12	1	6340091	Stabilizer beam I	
13	1	63471	Guide roller	
14	1	6306157	Spacer	
15	1	6340097	Pin for guide roller	
16	2	33104	Circlip	15U
17	1	63469	Guide roller	
18	1	6340098	Pin for guide roller	
19	1	6340817	Bracket	
20	2	30155	Set screw	M10 x 25
21	2	30858	Nut	M10
22	2	63681	Slide block	3 mm
23	2	64424	Slide block	2 mm
24	1	6342030	No detection, legs down	
25	1	6341982	Pin for guide roller	
26	1	31615	Split pin	ø4 x 32

1500K, 1510K, 1720K, 1730K, 1820K, 1830K

63 42 030
Internal ref. 63 41 150

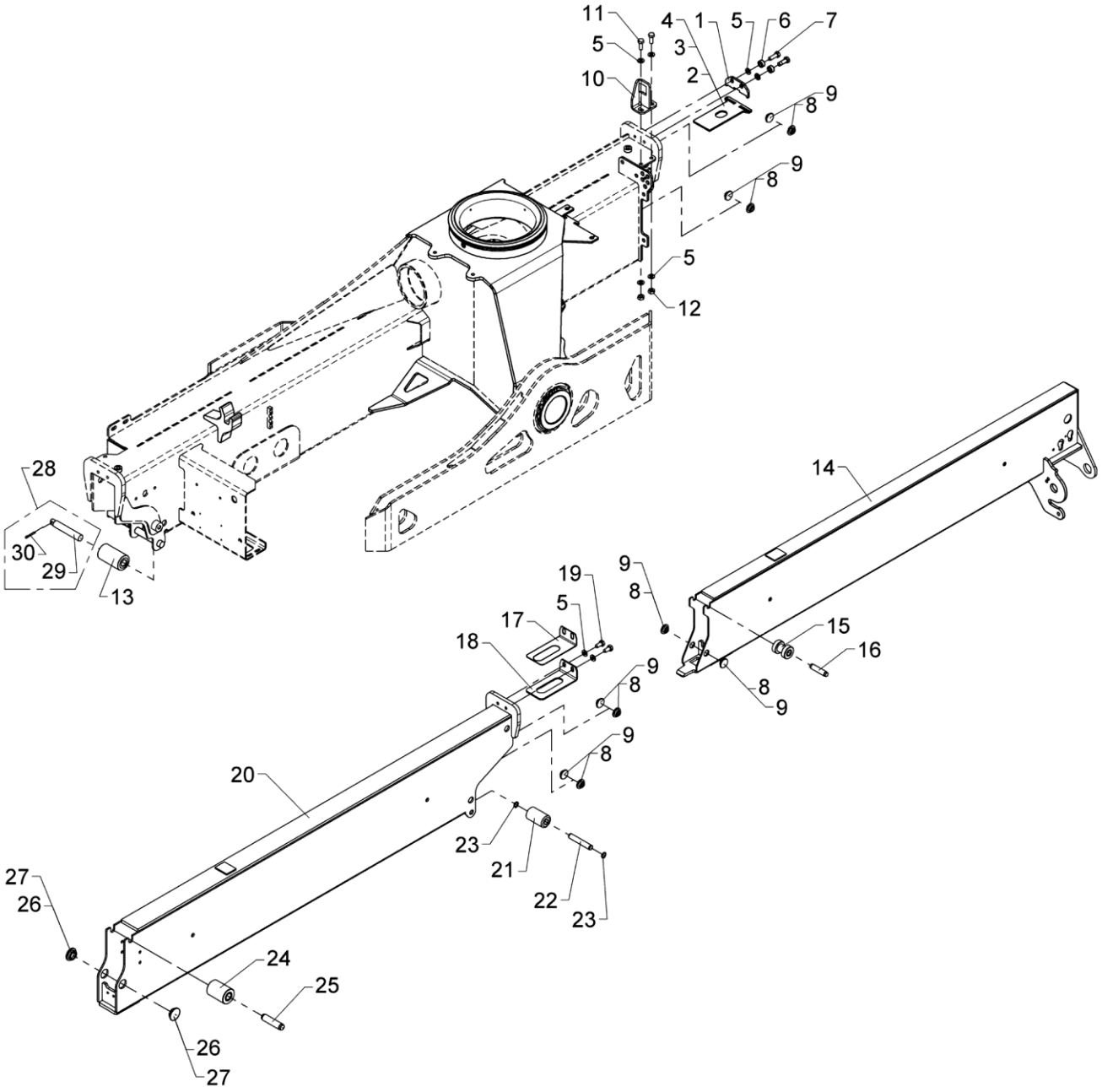

Stabilizer beam, type DH - 6450

Created 13-11-2008
Modified 01-02-2016

Pos	Qty.	Part no.	Description	Remarks
		6341150	Stabilizer beam, type DH	
		6342030	No detection, legs down	
1	1	6353091	Bracket	
2	1	6353092	Spacer, 4 mm	4 mm
3	1	6353093	Spacer, 5 mm	5 mm
4	1	6353099	Spacer, 6 mm	6 mm
5	8	31565	Washer, stainless	10 mm
6	2	6344747	Spacer	
7	2	30156	Set screw, stainless	M10 x 30
8	10	63429	Guide	ø30 x 3 mm
9	10	63430	Guide	ø30 x 2 mm
10	1	6340817	Bracket	
11	2	30155	Set screw	M10 x 25
12	2	30858	Nut	M10
13	1	63470	Guide roller	
14	1	6340115	Stabilizer beam II	
15	1	63426	Guide roller	
16	1	6306168	Pin for guide roller	
17	1	6306721	Adjusting plate	
18	1	6306157	Spacer	
19	2	31517	Set screw, stainless	M10 x 20
20	1	6340091	Stabilizer beam I	
21	1	63471	Guide roller	
22	1	6340097	Pin for guide roller	
23	2	33104	Circlip	15U
24	1	63469	Guide roller	
25	1	6340098	Pin for guide roller	
26	2	63681	Slide block	3 mm
27	2	64424	Slide block	2 mm
28	1	6342030	No detection, legs down	
29	1	6344048	Pin for guide roller	
30	1	31615	Split pin	ø4 x 32

1500K, 1510K, 1720K, 1730K, 1820K, 1830K

Internal ref. 63 41 160

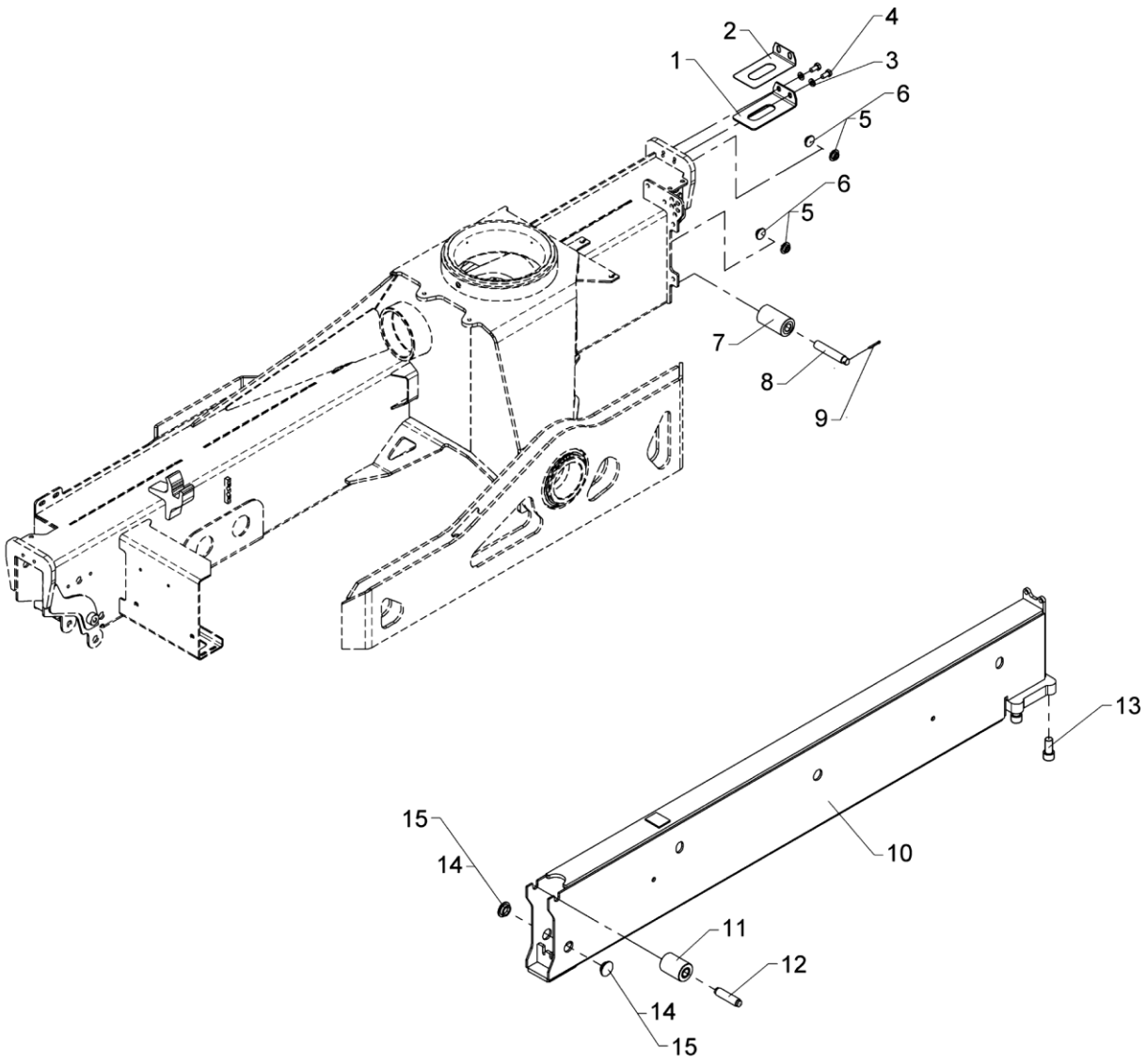

Obsolete

Stabilizer beam, type SV - 4600

534 02 070

From loader 1060001
To loader 1060275

Created 19-11-2008
Modified

Pos	Qty.	Part no.	Description	Remarks
1	1	6306156	Spacer	
2	1	6306722	Adjusting plate	
3	2	31565	Washer, stainless	10 mm
4	2	31517	Set screw, stainless	M10 x 20
5	4	63429	Guide	ø30 x 3 mm
6	4	63430	Guide	ø30 x 2 mm
7	1	63470	Guide roller	
8	1	6340048	Pin for guide roller	
9	1	31615	Split pin	ø4 x 32
10	1	6340781	Stabilizer beam I	
11	1	63469	Guide roller	
12	1	6340098	Pin for guide roller	
13	4	30339	Cylinder screw	MC18 x 40
14	2	63681	Slide block	3 mm
15	2	64424	Slide block	3 mm

1500K, 1510K, 1720K, 1730K, 1820K, 1830K

63 42 030
Internal ref. 63 41 160

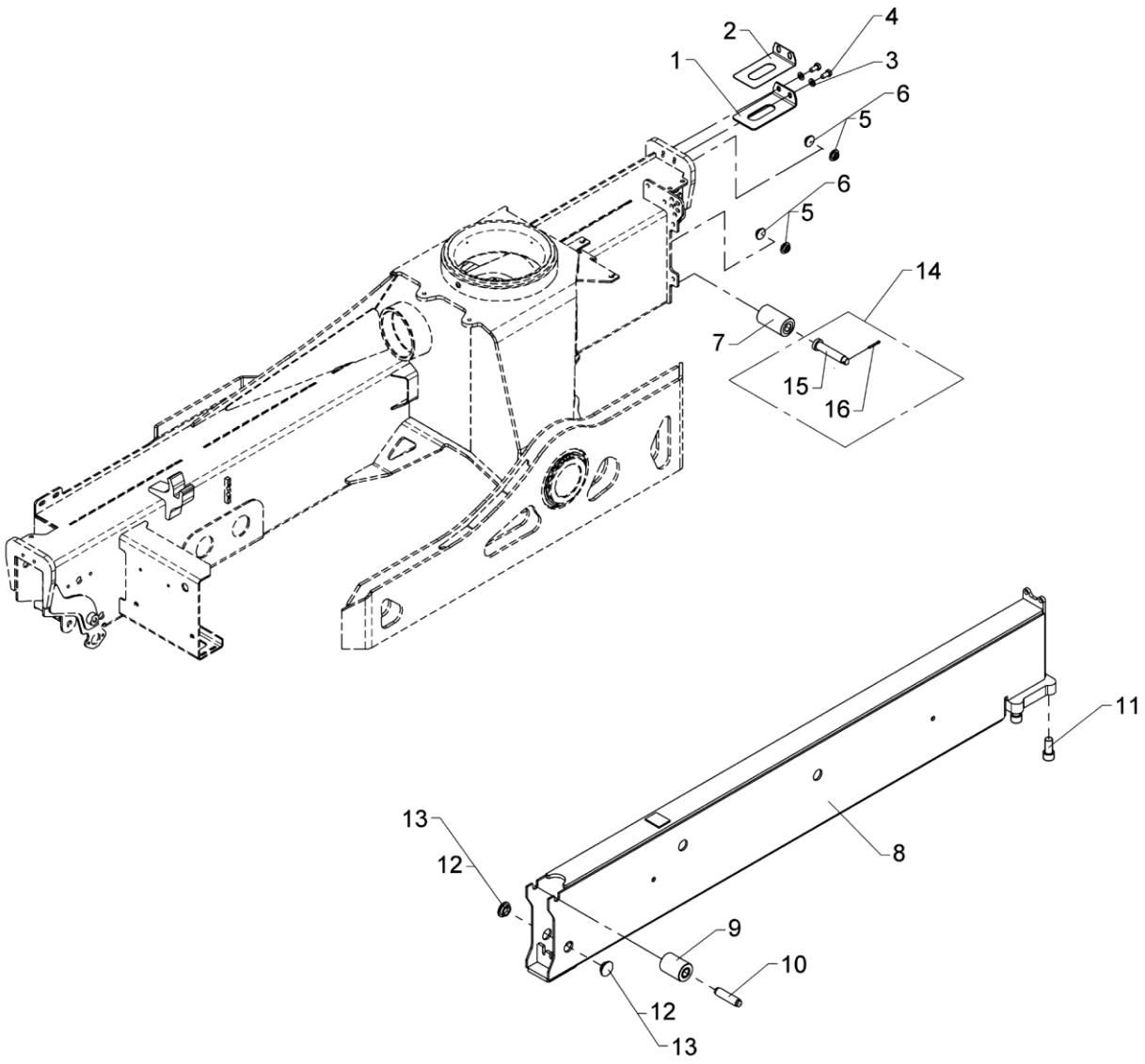

Obsolete

Stabilizer beam, type SV - 4600

534 02 070 A

From loader 1060276
To loader 1061536

Created 19-11-2008
Modified 16-11-2009

Pos	Qty.	Part no.	Description	Remarks
		6341160	Stabilizer beam, type SV	
		6342030	No detection, legs down	
1	1	6306156	Spacer	
2	1	6306722	Adjusting plate	
3	2	31565	Washer, stainless	10 mm
4	2	31517	Set screw, stainless	M10 x 20
5	4	63429	Guide	ø30 x 3 mm
6	4	63430	Guide	ø30 x 2 mm
7	1	63470	Guide roller	
8	1	6340781	Stabilizer beam I	
9	1	63469	Guide roller	
10	1	6340098	Pin for guide roller	
11	4	30339	Cylinder screw	MC18 x 40
12	2	63681	Slide block	3 mm
13	2	64424	Slide block	3 mm
14	1	6342030	No detection, legs down	
15	1	6341982	Pin for guide roller	
16	1	31615	Split pin	ø4 x 32

1500K, 1510K, 1720K, 1730K, 1820K, 1830K

63 42 030
Internal ref. 63 41 160

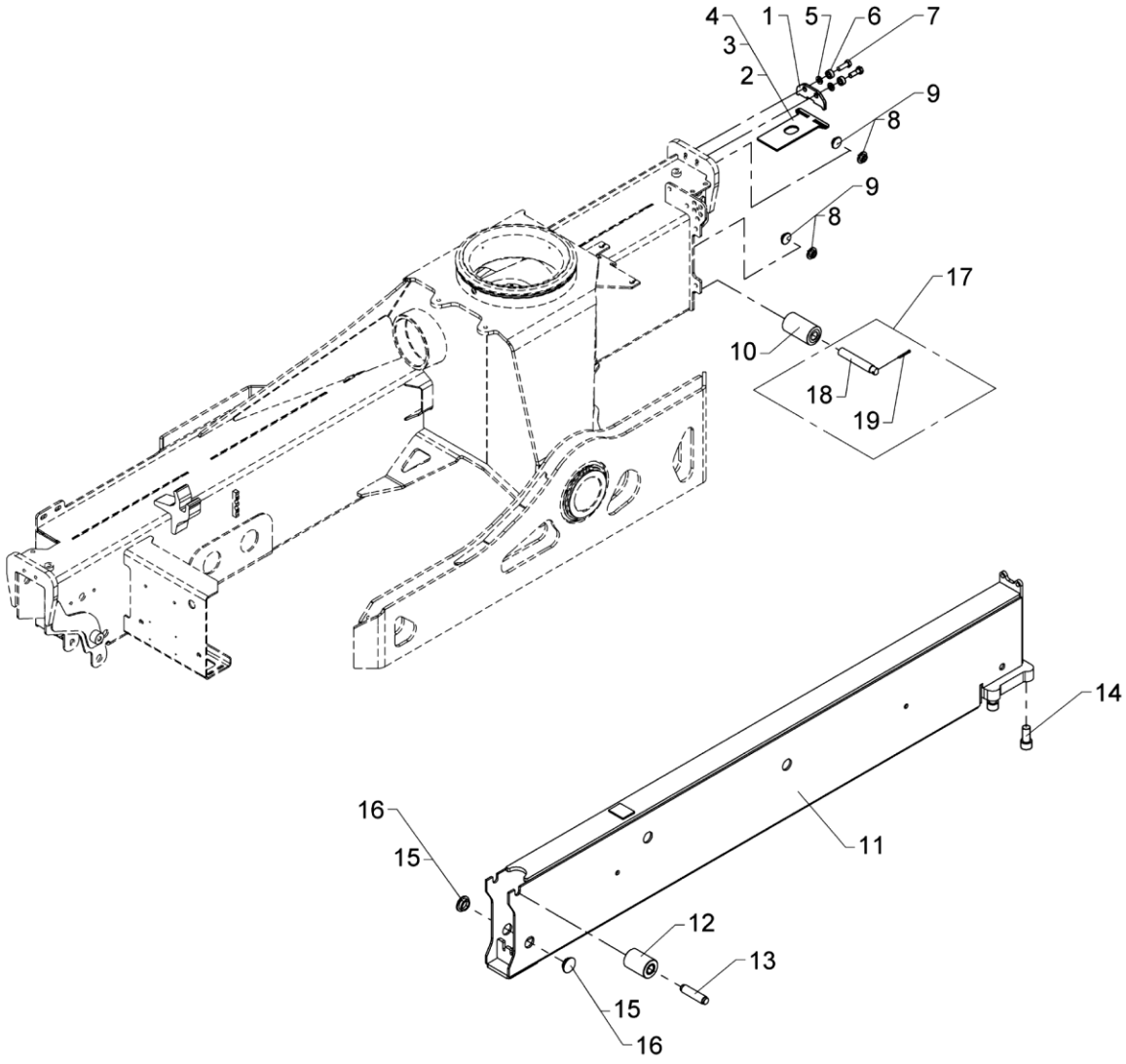

Stabilizer beam, type SV - 4600

Pos	Qty.	Part no.	Description	Remarks
		6341160	Stabilizer beam, type SV	
		6342030	No detection, legs down	
1	1	6353091	Bracket	
2	1	6353092	Spacer, 4 mm	4 mm
3	1	6353093	Spacer, 5 mm	5 mm
4	1	6353099	Spacer, 6 mm	6 mm
5	2	31565	Washer, stainless	10 mm
6	2	6344747	Spacer	
7	2	30156	Set screw, stainless	M10 x 30
8	4	63429	Guide	ø30 x 3 mm
9	4	63430	Guide	ø30 x 2 mm
10	1	63470	Guide roller	
11	1	6340781	Stabilizer beam I	
12	1	63469	Guide roller	
13	1	6340098	Pin for guide roller	
14	4	30339	Cylinder screw	MC18 x 40
15	2	63681	Slide block	3 mm
16	2	64424	Slide block	2 mm
17	1	6342030	No detection, legs down	
18	1	6344048	Pin for guide roller	
19	1	31615	Split pin	ø4 x 32

1500K, 1510K, 1720K, 1730K, 1820K, 1830K

Internal ref. 63 41 170

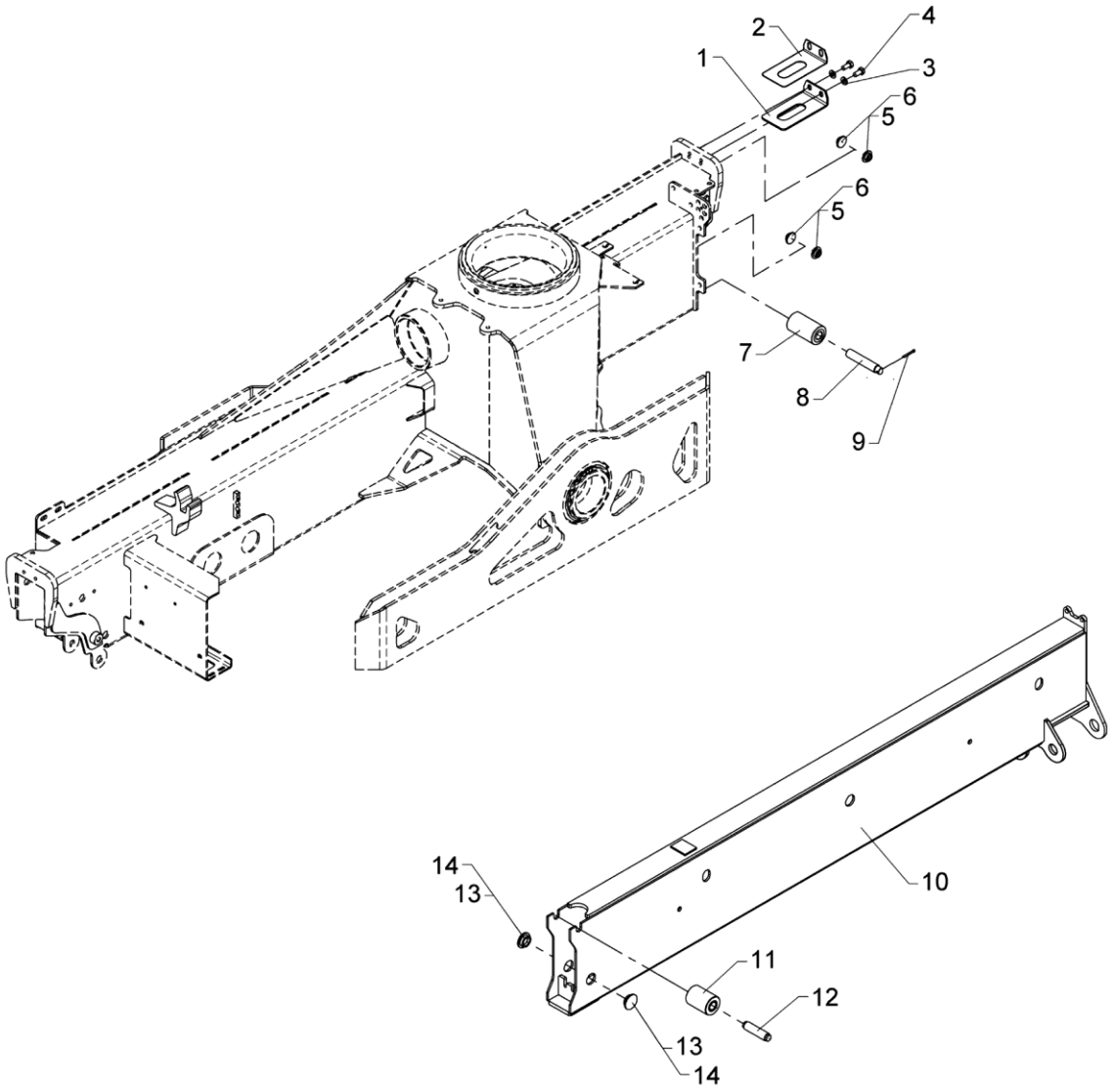

Obsolete

Stabilizer beam, type SR-20° - 4600

534 02 080

From loader 1060001
To loader 1060233

Created 19-11-2008
Modified 07-07-2009

Pos	Qty.	Part no.	Description	Remarks
1	1	6306156	Spacer	
2	1	6306722	Adjusting plate	
3	2	31565	Washer, stainless	10 mm
4	2	31517	Set screw, stainless	M10 x 20
5	4	63429	Guide	ø30 x 3 mm
6	4	63430	Guide	ø30 x 2 mm
7	1	63470	Guide roller	
8	1	6340048	Pin for guide roller	
9	1	31615	Split pin	ø4 x 32
10	1	6340788	Stabilizer beam	
11	1	63469	Guide roller	
12	1	6340098	Pin for guide roller	
13	2	63681	Slide block	3 mm
14	2	64424	Slide block	3 mm

1500K, 1510K, 1720K, 1730K, 1820K, 1830K

Internal ref. 63 43 840

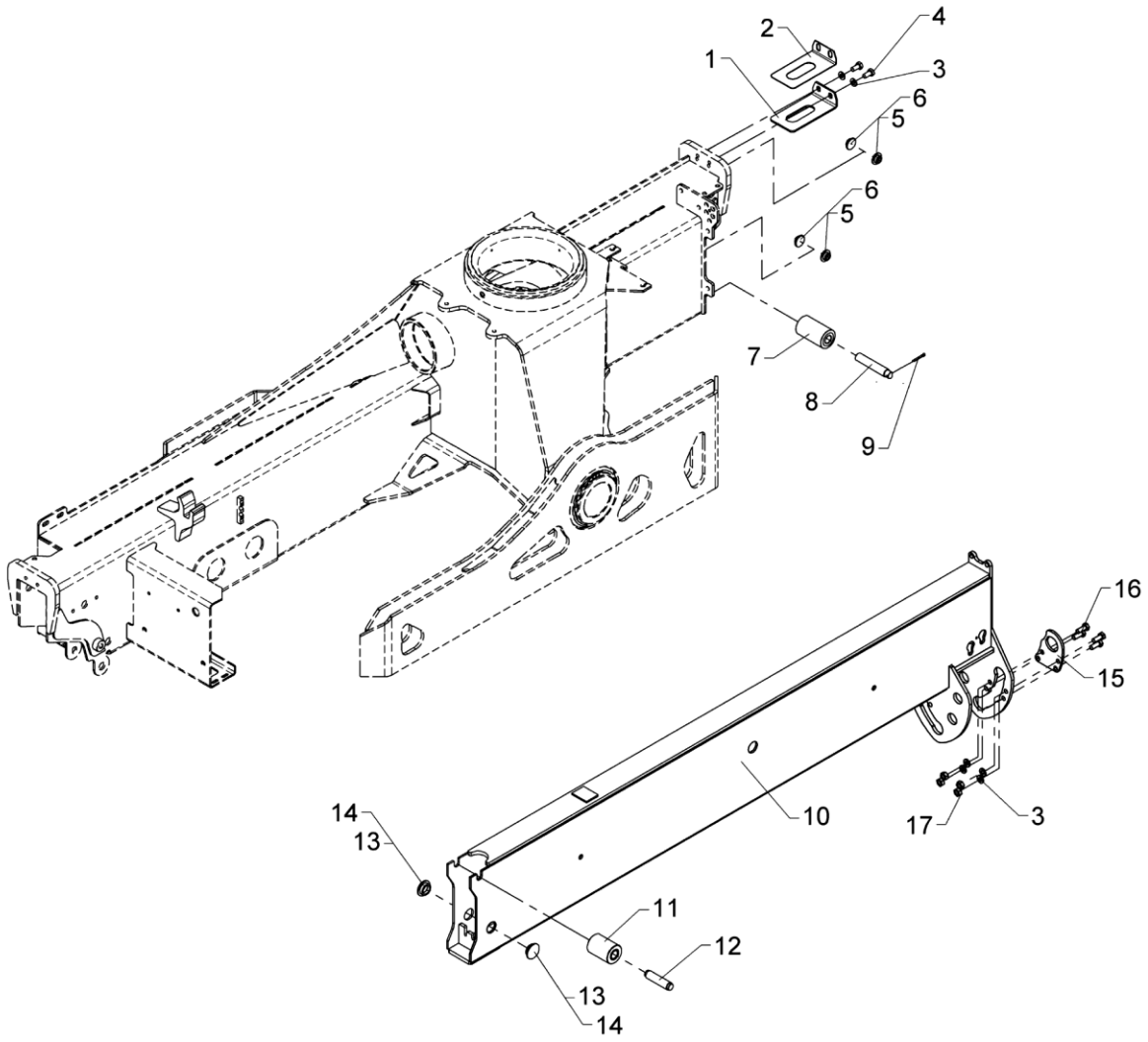

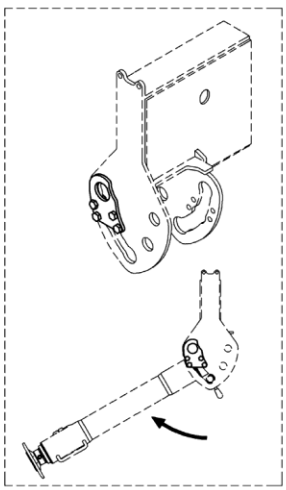

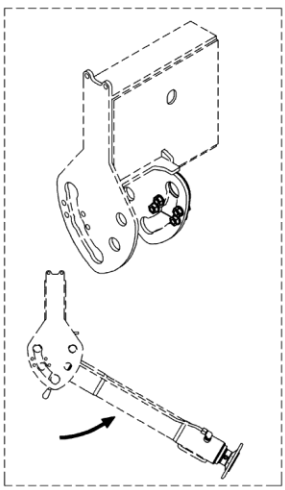

Obsolete

Stabilizer beam, type SR-60°, 4600

534 02 081

From loader 1060234
To loader 1060275

Created 10-07-2009
Modified

Pos	Qty.	Part no.	Description	Remarks
1	1	6306156	Spacer	
2	1	6306722	Adjusting plate	
3	6	31565	Washer, stainless	10 mm
4	2	31517	Set screw, stainless	M10 x 20
5	4	63429	Guide	ø30 x 3 mm
6	4	63430	Guide	ø30 x 2 mm
7	1	63470	Guide roller	
8	1	6340048	Pin for guide roller	
9	1	31615	Split pin	ø4 x 32
10	1	6342871	Stabilizer beam, SR,reversible	
11	1	63469	Guide roller	
12	1	6340098	Pin for guide roller	
13	2	63681	Slide block	3 mm
14	2	64424	Slide block	3 mm
15	1	6342855	Plate	
16	4	30155	Set screw	M10 x 25
17	4	31551	Nut, stainless	M10

1500K, 1510K, 1720K, 1730K, 1820K, 1830K

63 42 030
Internal ref. 63 43 840

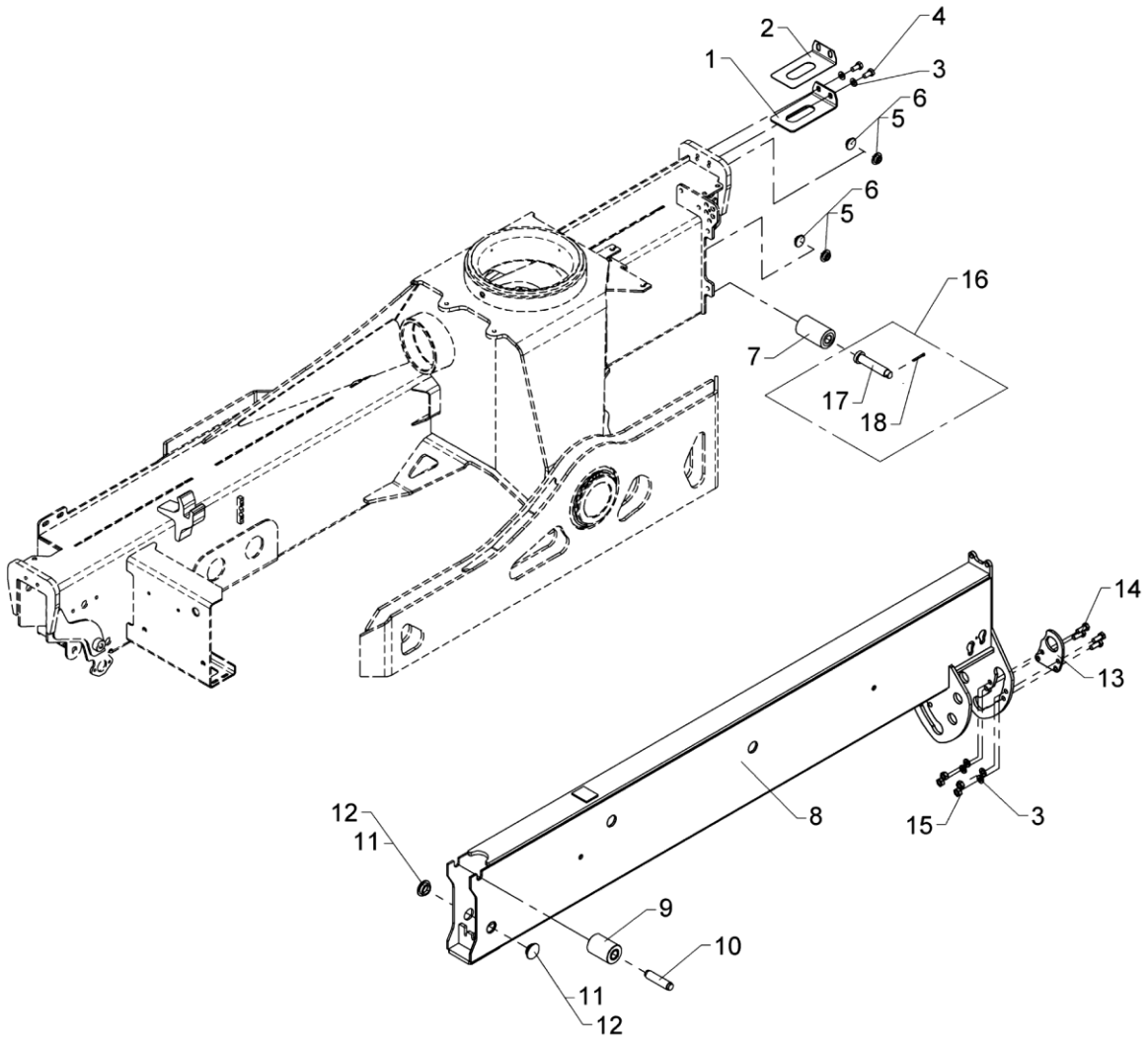

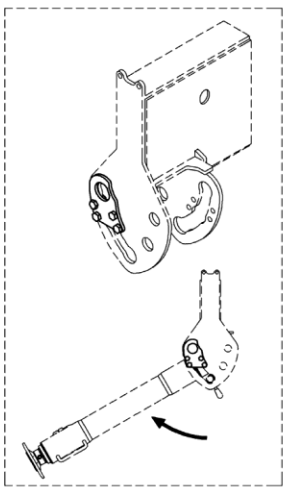

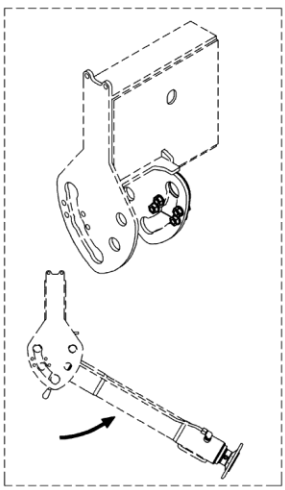

Obsolete

Stabilizer beam, type SR-60°, 4600

534 02 081 A

From loader 1060276
To loader 1061536

Created 10-07-2009
Modified 16-11-2009

Pos	Qty.	Part no.	Description	Remarks
		6343840	Stabilizer beam, type SR-60°	
		6342030	No detection, legs down	
1	1	6306156	Spacer	
2	1	6306722	Adjusting plate	
3	6	31565	Washer, stainless	10 mm
4	2	31517	Set screw, stainless	M10 x 20
5	4	63429	Guide	ø30 x 3 mm
6	4	63430	Guide	ø30 x 2 mm
7	1	63470	Guide roller	
8	1	6342871	Stabilizer beam, SR,reversible	
9	1	63469	Guide roller	
10	1	6340098	Pin for guide roller	
11	2	63681	Slide block	3 mm
12	2	64424	Slide block	3 mm
13	1	6342855	Plate	
14	4	30155	Set screw	M10 x 25
15	4	31551	Nut, stainless	M10
16	1	6342030	No detection, legs down	
17	1	6341982	Pin for guide roller	
18	1	31615	Split pin	ø4 x 32

1500K, 1510K, 1720K, 1730K, 1820K, 1830K

63 42 030
Internal ref. 63 43 840

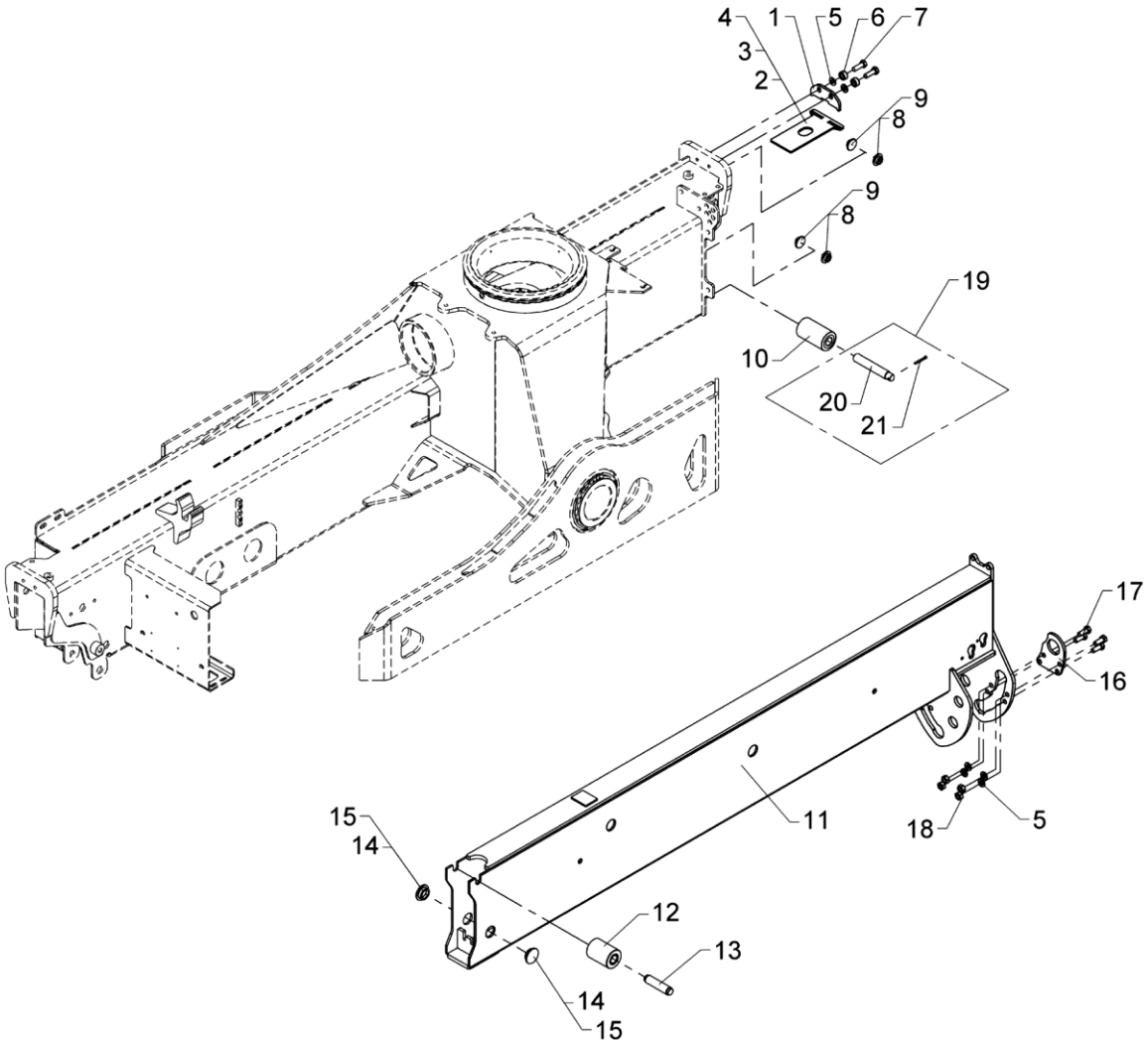

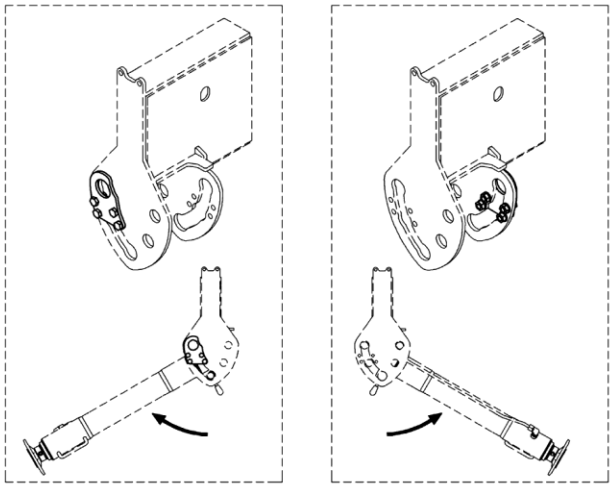

Stabilizer beam, type SR-60°, 4600

Pos	Qty.	Part no.	Description	Remarks
		6343840	Stabilizer beam, type SR-60°	
		6342030	No detection, legs down	
1	1	6353091	Bracket	
2	1	6353092	Spacer, 4 mm	4 mm
3	1	6353093	Spacer, 5 mm	5 mm
4	1	6353099	Spacer, 6 mm	6 mm
5	6	31565	Washer, stainless	10 mm
6	2	6344747	Spacer	
7	2	30156	Set screw, stainless	M10 x 30
8	4	63429	Guide	ø30 x 3 mm
9	4	63430	Guide	ø30 x 2 mm
10	1	63470	Guide roller	
11	1	6342871	Stabilizer beam, SR,reversible	
12	1	63469	Guide roller	
13	1	6340098	Pin for guide roller	
14	2	63681	Slide block	3 mm
15	2	64424	Slide block	2 mm
16	1	6342855	Plate	
17	4	30155	Set screw	M10 x 25
18	4	31551	Nut, stainless	M10
19	1	6342030	No detection, legs down	
20	1	6344048	Pin for guide roller	
21	1	31615	Split pin	ø4 x 32

1500K, 1510K, 1720K, 1730K, 1820K, 1830K

Internal ref. 63 41 180

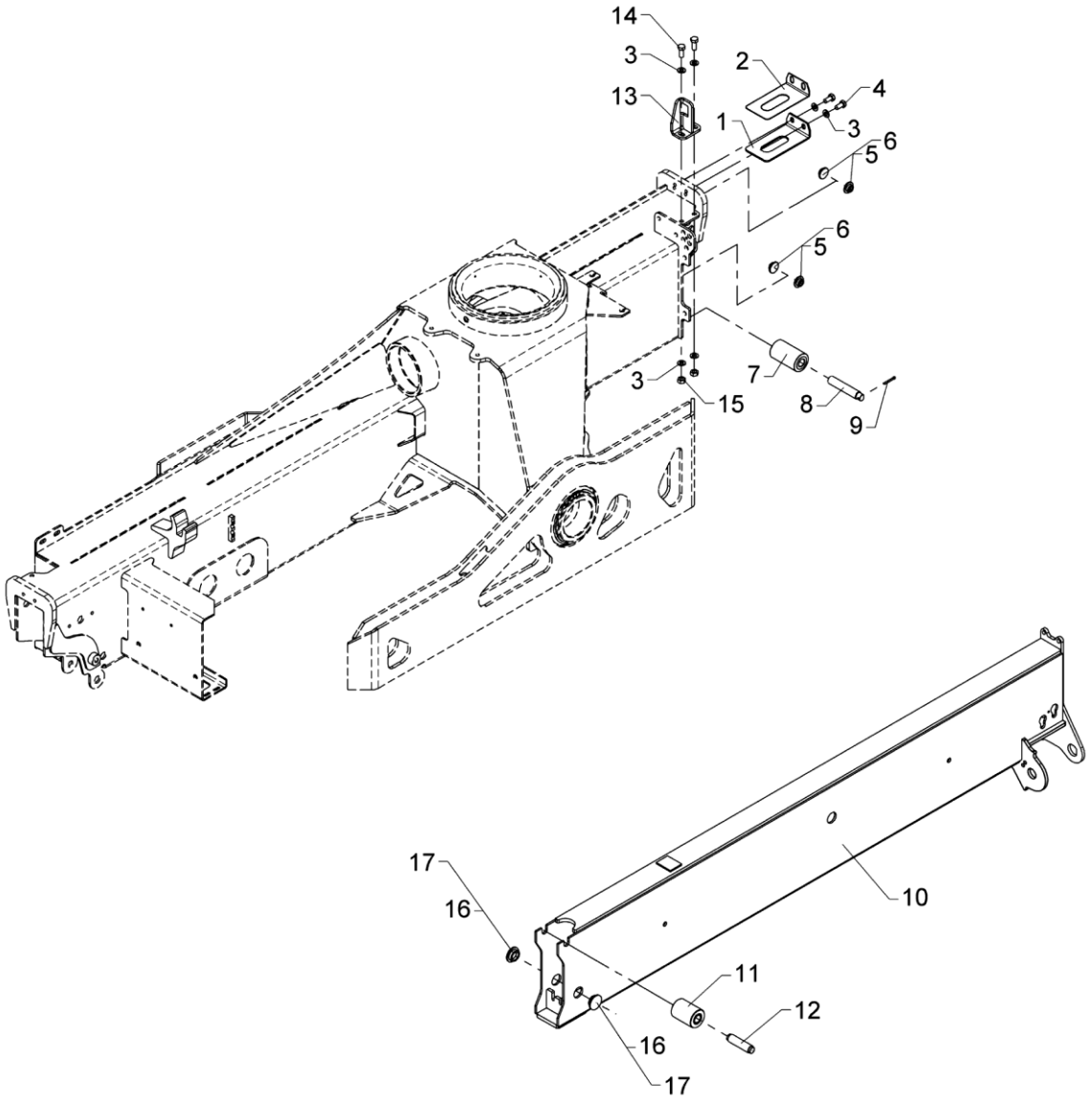

Obsolete

Stabilizer beam, type SH - 4600

534 02 090

From loader 1060001
To loader 1060275

Created 19-11-2008
Modified

Pos	Qty.	Part no.	Description	Remarks
1	1	6306156	Spacer	
2	1	6306722	Adjusting plate	
3	6	31565	Washer, stainless	10 mm
4	2	31517	Set screw, stainless	M10 x 20
5	4	63429	Guide	ø30 x 3 mm
6	4	63430	Guide	ø30 x 2 mm
7	1	63470	Guide roller	
8	1	6340048	Pin for guide roller	
9	1	31615	Split pin	ø4 x 32
10	1	6340789	Stabilizer beam	
11	1	63469	Guide roller	
12	1	6340098	Pin for guide roller	
13	1	6340817	Bracket	
14	2	30155	Set screw	M10 x 25
15	2	30858	Nut	M10
16	2	63681	Slide block	3 mm
17	2	64424	Slide block	3 mm

1500K, 1510K, 1720K, 1730K, 1820K, 1830K

63 42 030
Internal ref. 63 41 180

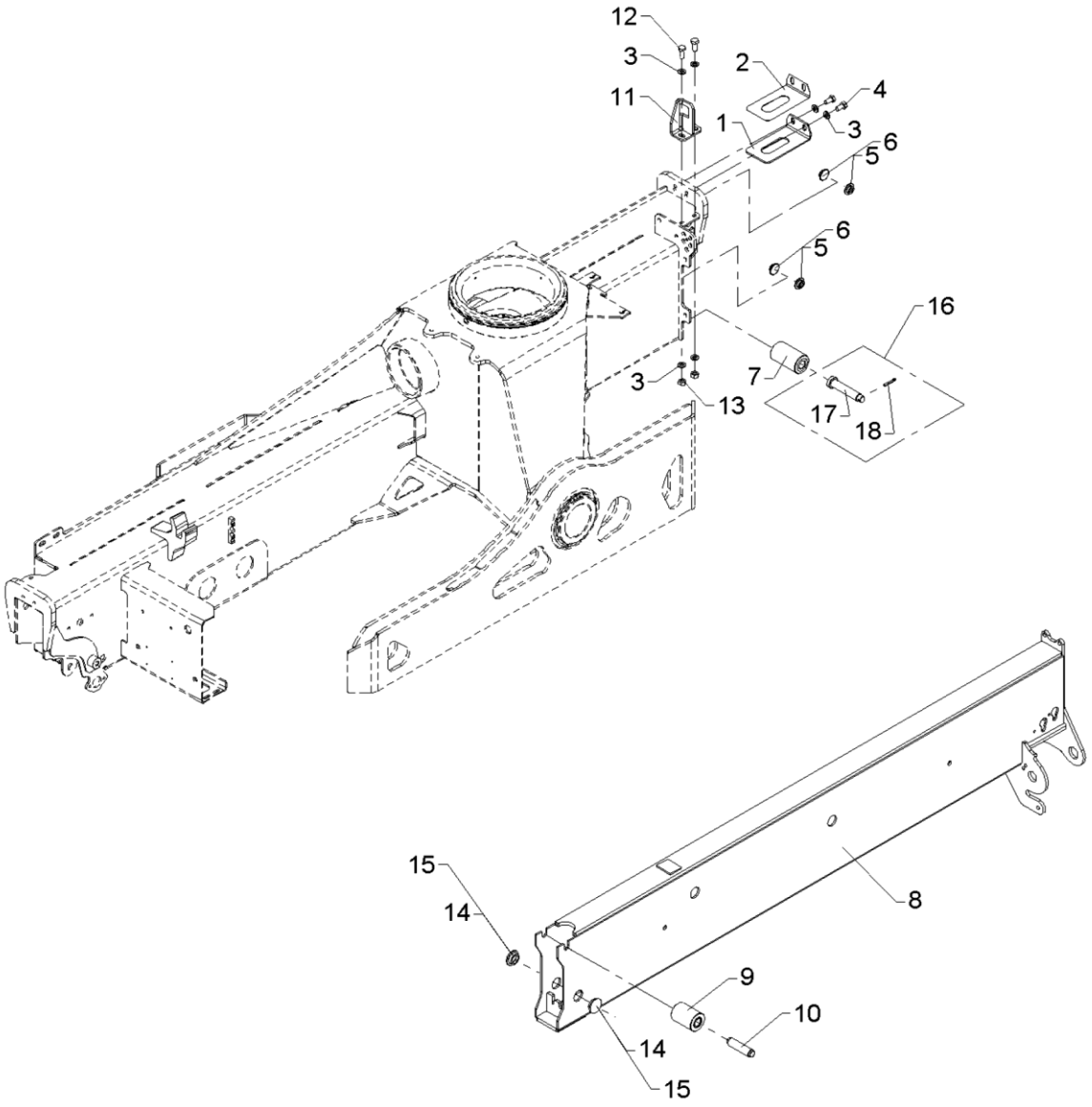

Obsolete

Stabilizer beam, type SH - 4600

534 02 090 A

From loader 1060276
To loader 1061536

Created 19-11-2008
Modified 17-10-2011

Pos	Qty.	Part no.	Description	Remarks
		6341180	Stabilizer beam, type SH	
		6342030	No detection, legs down	
1	1	6306156	Spacer	
2	1	6306722	Adjusting plate	
3	6	31565	Washer, stainless	10 mm
4	2	31517	Set screw, stainless	M10 x 20
5	4	63429	Guide	ø30 x 3 mm
6	4	63430	Guide	ø30 x 2 mm
7	1	63470	Guide roller	
8	1	6340789	Stabilizer beam	
9	1	63469	Guide roller	
10	1	6340098	Pin for guide roller	
11	1	6340817	Bracket	
12	2	30155	Set screw	M10 x 25
13	2	30858	Nut	M10
14	2	63681	Slide block	3 mm
15	2	64424	Slide block	2 mm
16	1	6342030	No detection, legs down	
17	1	6341982	Pin for guide roller	
18	1	31615	Split pin	ø4 x 32

1500K, 1510K, 1720K, 1730K, 1820K, 1830K

63 42 030
Internal ref. 63 41 180

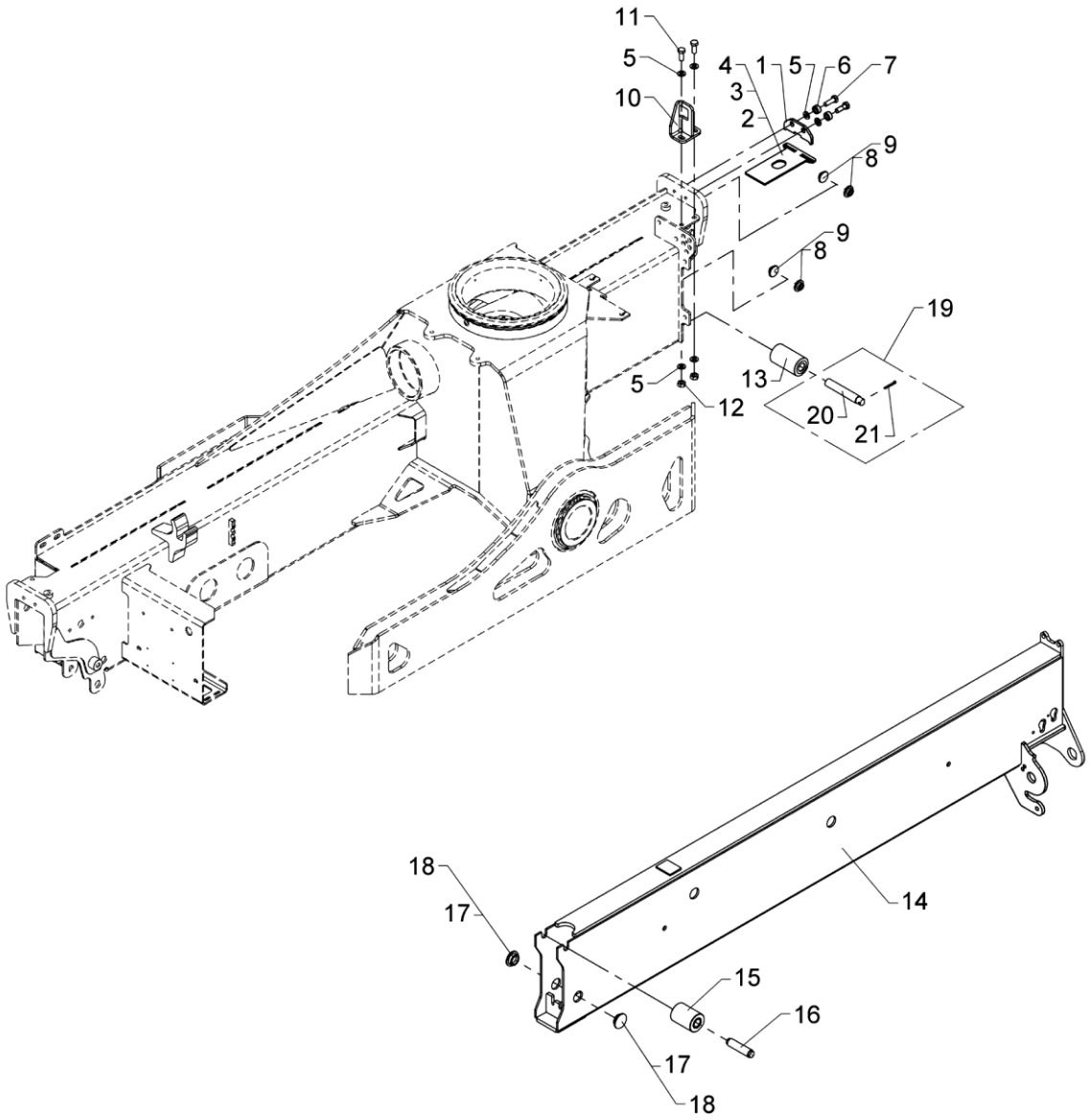

Stabilizer beam, type SH - 4600

Pos	Qty.	Part no.	Description	Remarks
		6341180	Stabilizer beam, type SH	
		6342030	No detection, legs down	
1	1	6353091	Bracket	
2	1	6353092	Spacer, 4 mm	4 mm
3	1	6353093	Spacer, 5 mm	5 mm
4	1	6353099	Spacer, 6 mm	6 mm
5	6	31565	Washer, stainless	10 mm
6	2	6344747	Spacer	
7	2	30156	Set screw, stainless	M10 x 30
8	4	63429	Guide	ø30 x 3 mm
9	4	63430	Guide	ø30 x 2 mm
10	1	6340817	Bracket	
11	2	30155	Set screw	M10 x 25
12	2	30858	Nut	M10
13	1	63470	Guide roller	
14	1	6340789	Stabilizer beam	
15	1	63469	Guide roller	
16	1	6340098	Pin for guide roller	
17	2	63681	Slide block	3 mm
18	2	64424	Slide block	2 mm
19	1	6342030	No detection, legs down	
20	1	6344048	Pin for guide roller	
21	1	31615	Split pin	ø4 x 32

1500K, 1510K, 1720K, 1730K, 1820K, 1830K

63 46 020
Internal ref. 63 42 020

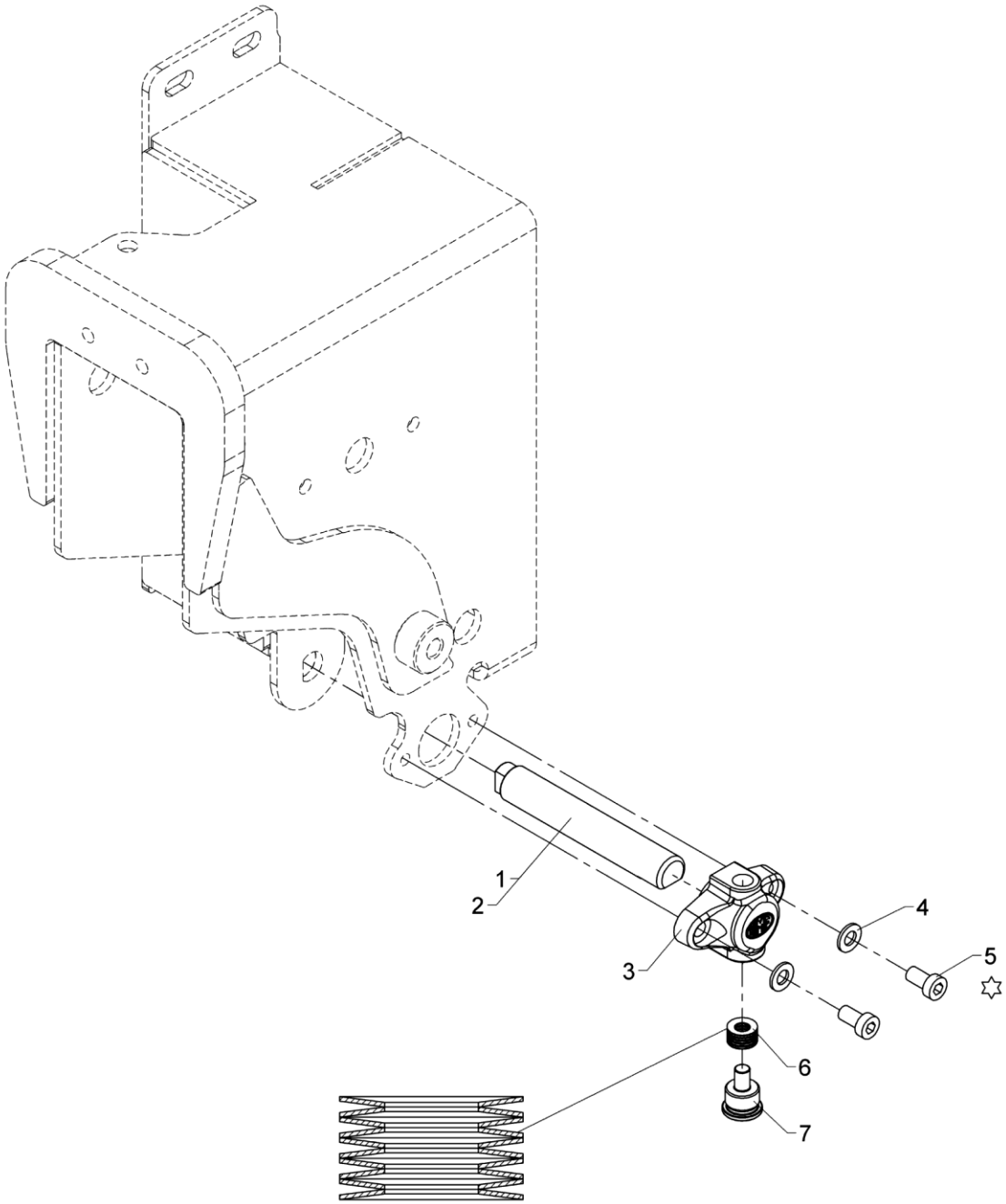

☆ Loctite 243

Obsolete

Detection, stabilizer down (CYL/CYBEL)

534 02 130

From loader 1060001
To loader

Created 18-11-2009
Modified 06-05-2014

Pos	Qty.	Part no.	Description	Remarks
		6342020	Detection, legs down CYL/CYBEL	
		6346020	Detection, legs down CYL/CYBEL	
1	1	6341981	Pin for guide roller	1300/1730
2	1	6345981	Pin for guide roller	1800/2430
3	1	64575	Housing	
4	2	31147	Face washer, 8 mm	8 mm
5	2	32478	Screw	M8 x 15
6	10	33496	Disc spring washer	
7	1	6341979	Pin	

1500K, 1510K, 1720K, 1730K, 1820K, 1830K

Internal ref. 63 40 520

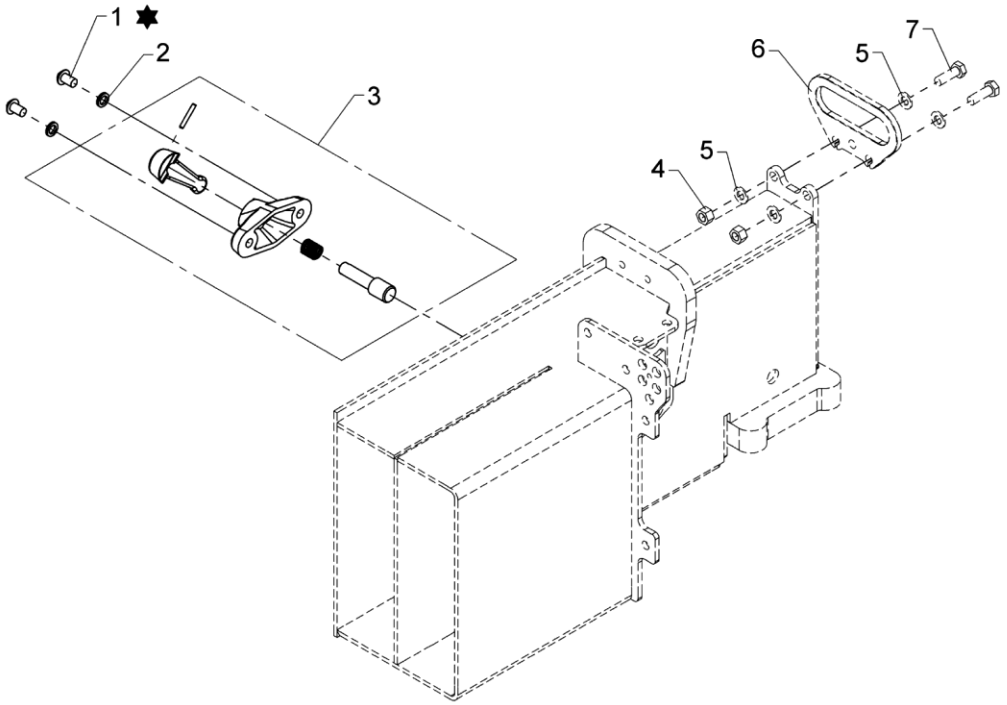

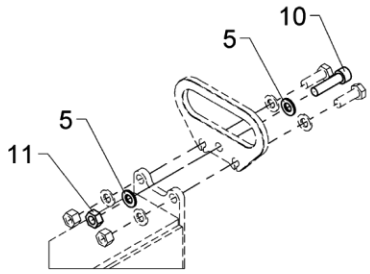

900K til 1230K

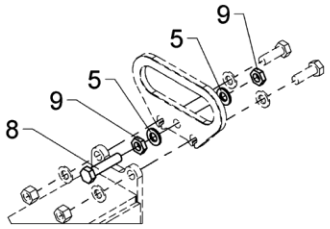

Kun til A = 4600

✸ Loctite 243

Stabilizer lock and lever

Pos	Qty.	Part no.	Description	Remarks
		6340520	Stabilizer lock + handle	
1	2	31081	Screw	M10 x 16
2	2	30933	Nordlock washer	
3	1	63451	Stabilizer lock	
4	2	30888	Lock nut	
5	8	31565	Washer, stainless	10 mm
6	1	6306169	Lever, stabilizer beam	
7	2	30156	Set screw, stainless	M10 x 30
8	1	30377	Set screw	M10 x 45
9	2	32111	Counter nut	M10
10	1	30456	Screw	MC10 x 40
11	1	30858	Nut	M10

1500K, 1510K, 1720K, 1730K, 1820K, 1830K

Internal ref. 63 41 810

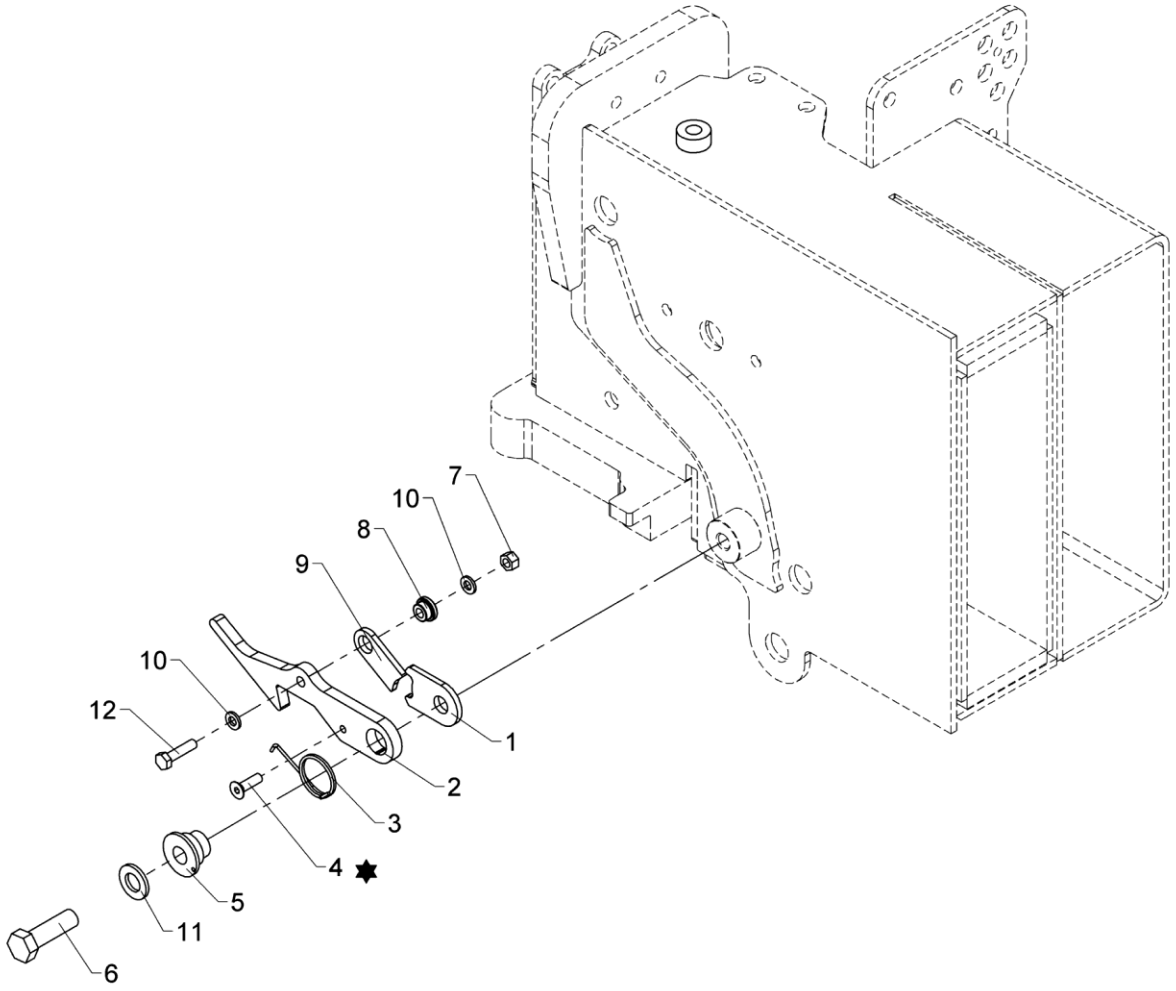

✸ Loctite 243

Stabilizer safety lock

Pos	Qty.	Part no.	Description	Remarks
1	1	6236044	Plate	
2	1	6245244	Hook	
3	1	33476	Spring	6247194
4	1	30579	Countersunk screw	MK6 x 20
5	1	6245264	Bushing	
6	1	30179	Set screw	M12 x 40
7	1	30884	Lock nut, stainless	M6
8	1	63440	Washer	
9	1	6236054	Click	
10	2	32302	Face washer, stainless	6 mm
11	1	32338	Washer	12 mm
12	1	30114	Set screw, stainless	M6 x 25

1500K, 1510K, 1720K, 1730K, 1820K, 1830K

Internal ref. 63 42 810

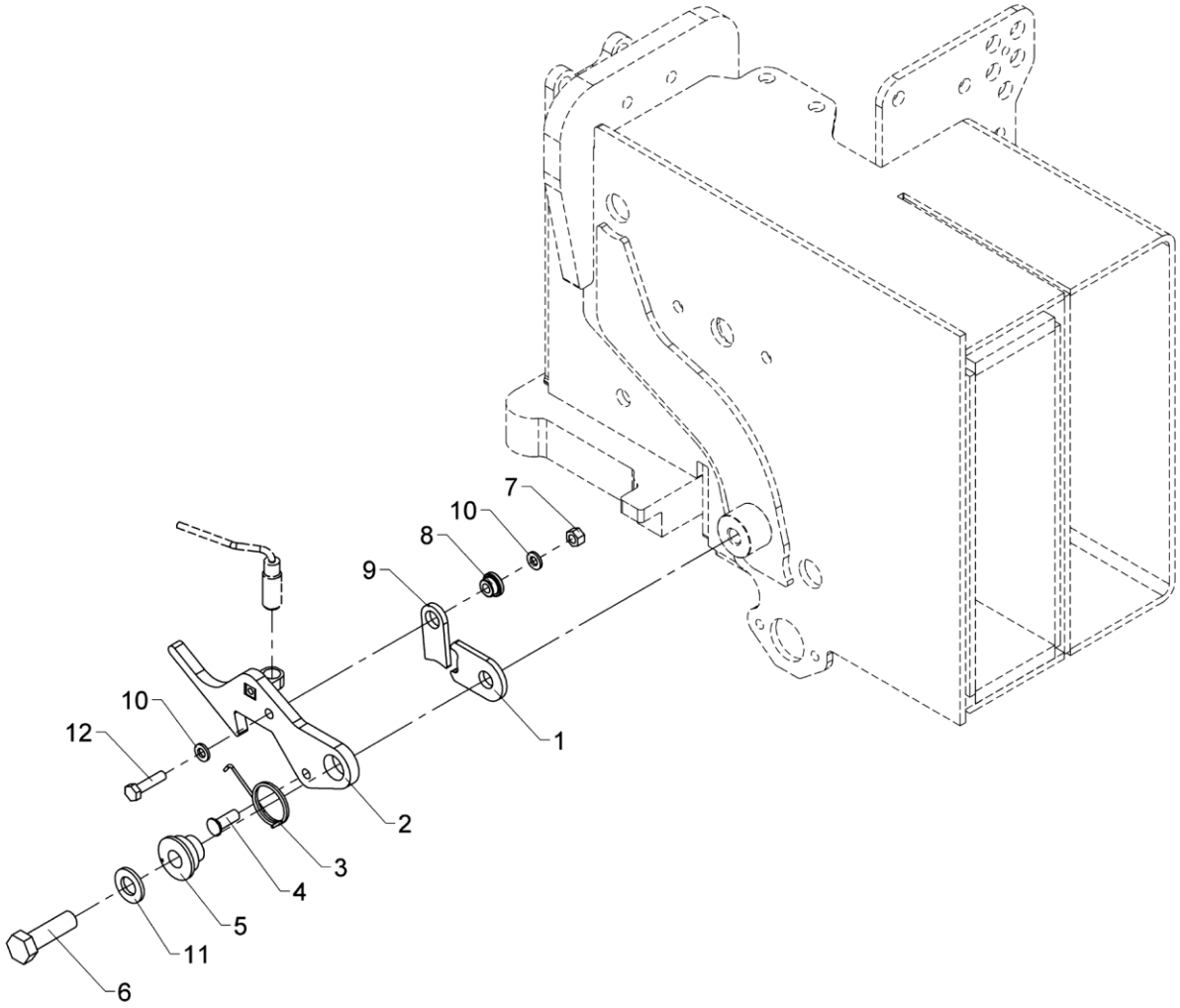

Obsolete

Safety lock (CE, manual extension)

534 02 160

From loader 1060001
To loader

Created 08-01-2010
Modified 15-02-2012

Pos	Qty.	Part no.	Description	Remarks
1	1	6236044	Plate	
2	1	6341091	Latch	
3	1	33476	Spring	6247194
4	1	31290	Spike, galvanized	7 x 20
5	1	6245264	Bushing	
6	1	30179	Set screw	M12 x 40
7	1	30884	Lock nut, stainless	M6
8	1	63440	Washer	
9	1	6236054	Click	
10	2	32302	Face washer, stainless	6 mm
11	1	32338	Washer	12 mm
12	1	30114	Set screw, stainless	M6 x 25

1500K, 1510K, 1720K, 1730K, 1820K, 1830K

Internal ref. 63 43 880

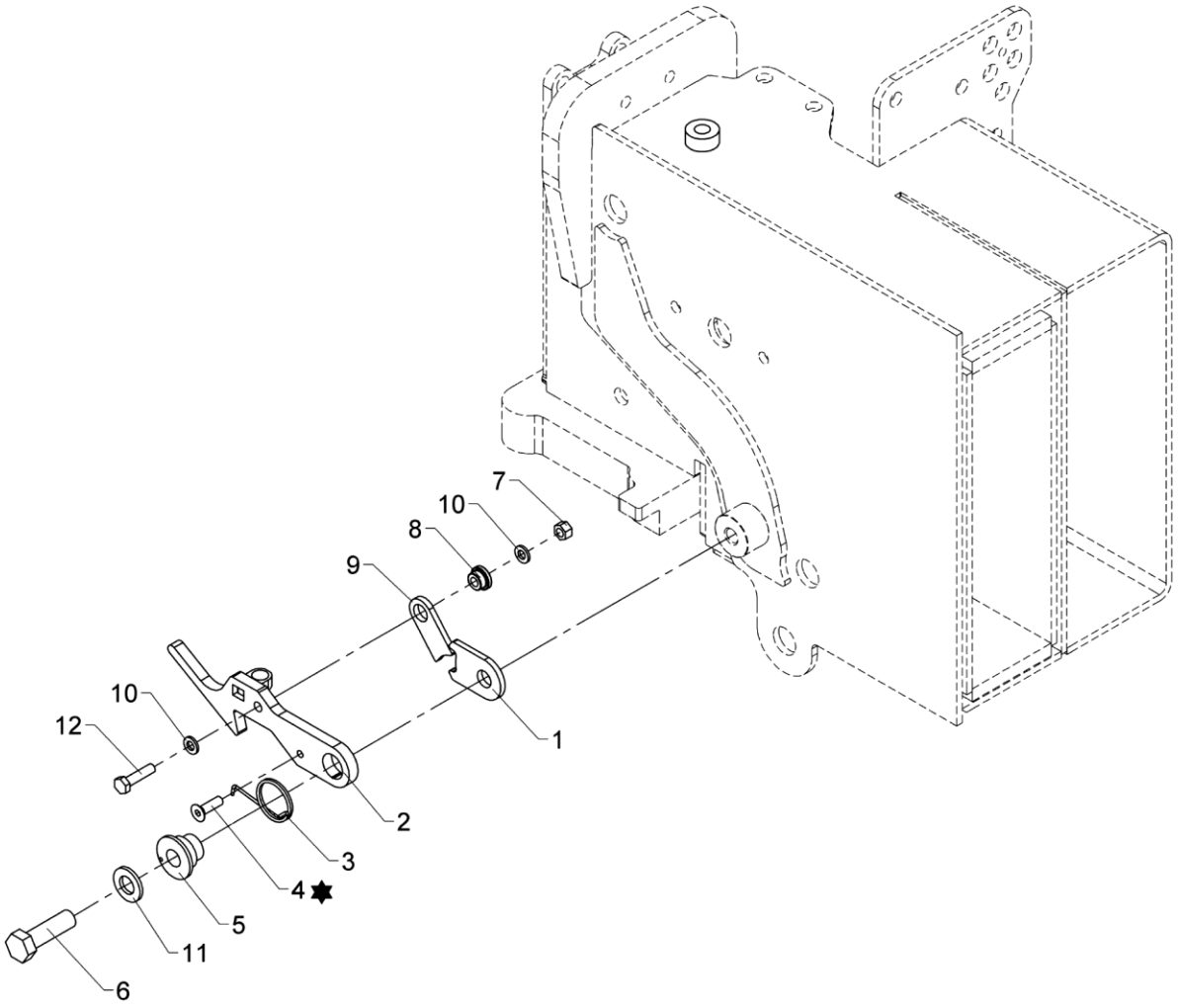

✸ Loctite 243

Safety lock (CE, manual extension)

Pos	Qty.	Part no.	Description	Remarks
1	1	6236044	Plate	
2	1	6341091	Latch	
3	1	33476	Spring	6247194
4	1	30579	Countersunk screw	MK6 x 20
5	1	6245264	Bushing	
6	1	30179	Set screw	M12 x 40
7	1	30884	Lock nut, stainless	M6
8	1	63440	Washer	
9	1	6236054	Click	
10	2	32302	Face washer, stainless	6 mm
11	1	32338	Washer	12 mm
12	1	30114	Set screw, stainless	M6 x 25

1500K, 1510K, 1720K, 1730K, 1820K, 1830K

Internal ref. 63 40 500

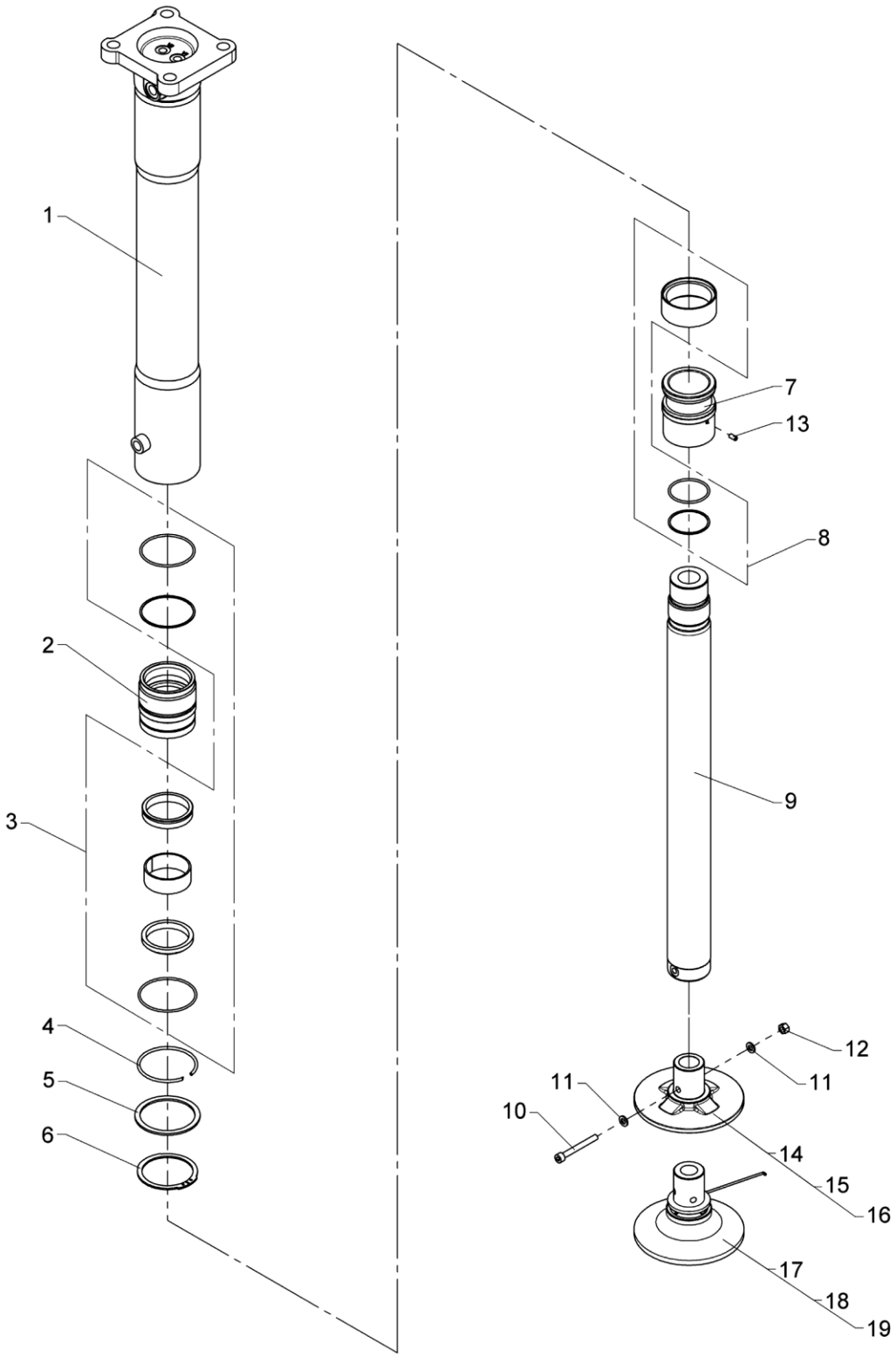

Obsolete

Stabilizer cylinder, C80-520, type V

534 02 200

From loader 1060001
To loader 1061045

Created 21-11-2008
Modified 25-10-2013

Pos	Qty.	Part no.	Description	Remarks
		6340500	Stabilizer cylinder	
1	1	6340504	Cylinder pipe, fixed leg	
2	1	6340501	Guide	
3	1	6894110	Seal kit f. guide	
4	1	33400	Lock ring	
5	1	6340515	Back ring	
6	1	33143	Circlip	80U
7	1	6340516	Piston	
8	1	6894100	Seal kit f. piston	
9	1	6340503	Piston rod	
10	1	32428	Sockethead screw	MC8 x 70
11	2	31147	Face washer, 8 mm	
12	1	30886	Lock nut, stainless	M8
13	1	32256	Pointed screw	MSP6 x 12
14	1	6340506	Footplate, standard	
15	1	6340509	Footplate, 100 mm extension	
16	1	6340512	Footplate, 200 mm extension	
17	1	6342680	Footplate + ball joint std.	
18	1	6342690	Footplate + ball joint 100 mm	
19	1	6342700	Footplate + ball joint 200 mm	

1500K, 1510K, 1720K, 1730K, 1820K, 1830K

Internal ref. 63 40 500

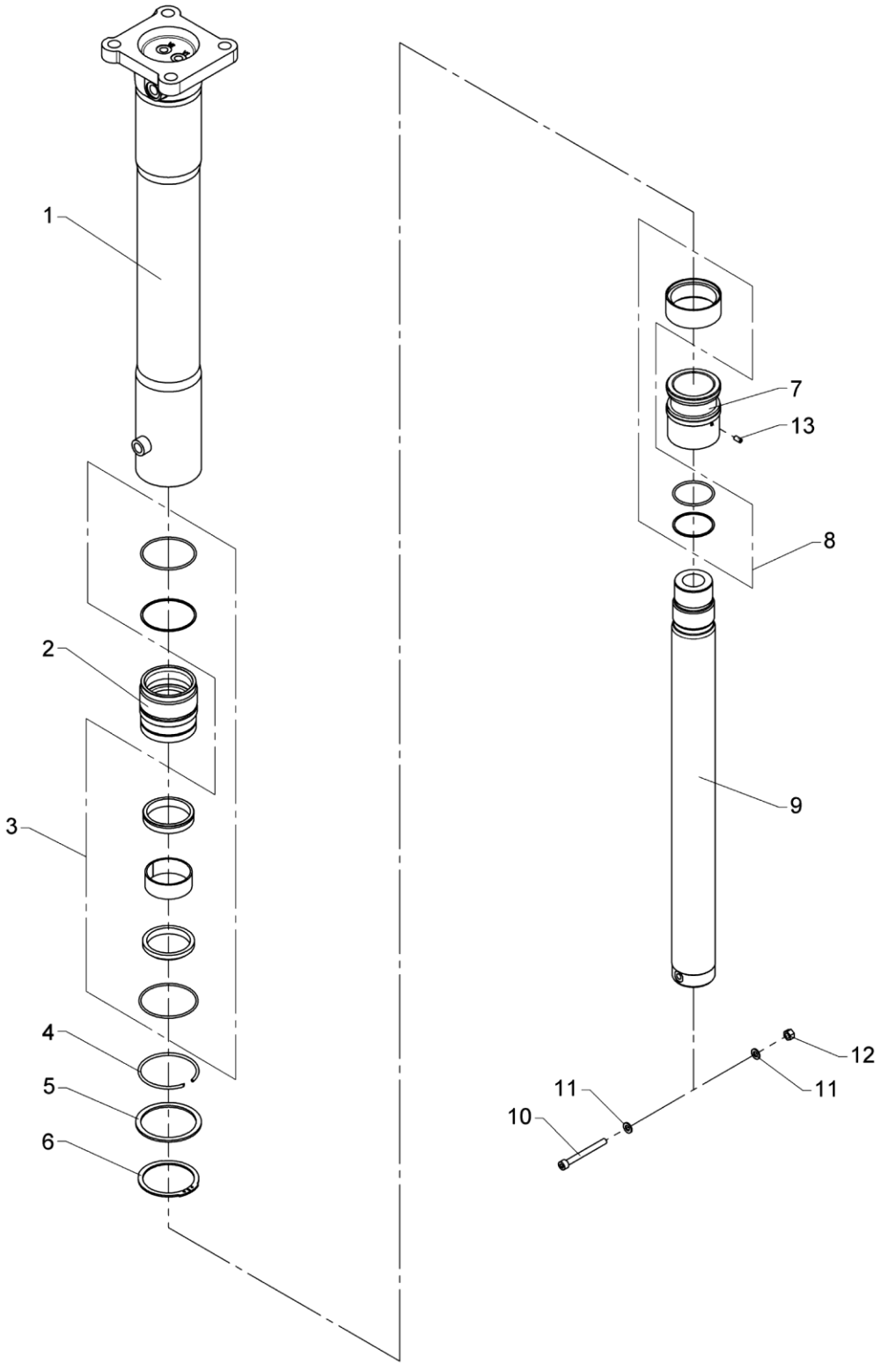

Stabilizer cylinder, C80-520, type V

Pos	Qty.	Part no.	Description	Remarks
1	1	6340504	Cylinder pipe, fixed leg	
2	1	6340501	Guide	
3	1	6894110	Seal kit f. guide	
4	1	33400	Lock ring	
5	1	6340515	Back ring	
6	1	33143	Circlip	80U
7	1	6340516	Piston	
8	1	6894100	Seal kit f. piston	
9	1	6340503	Piston rod	
10	1	30965	Screw	MC8 x 80
11	2	31147	Face washer, 8 mm	
12	1	30886	Lock nut, stainless	M8
13	1	32256	Pointed screw	MSP6 x 12

1500K, 1510K, 1720K, 1730K, 1820K, 1830K

Internal ref. 63 40 510

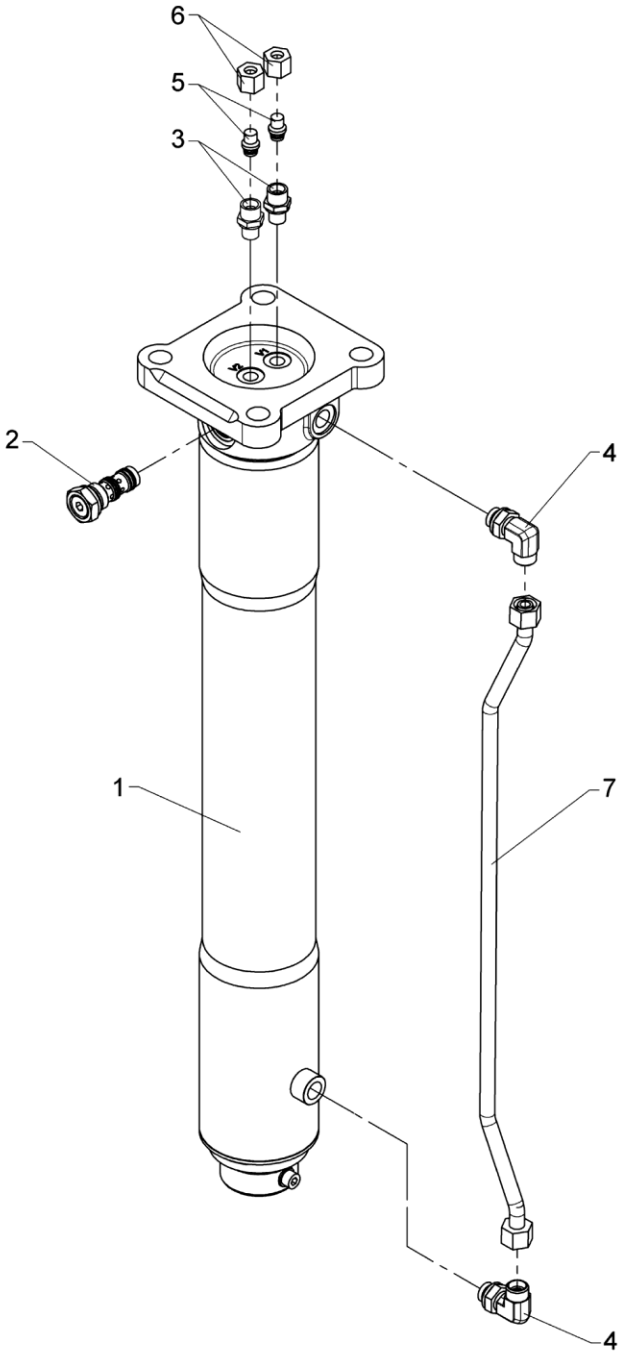

Stabilizer cylinder with check valve, C80-520, type V

Pos	Qty.	Part no.	Description	Remarks
1	1	6340500	Stabilizer cylinder	
2	1	58496	Cartridge	
3	2	25121	Connection	P-GEV 10 LR-WD
4	2	26897	Elbow connection	12 mm - 3/8"
5	2	25202	Blanking plug	VSD 10 L
6	2	25182	Coupling nut	M 10 L
7	1	6344514	Pipe	

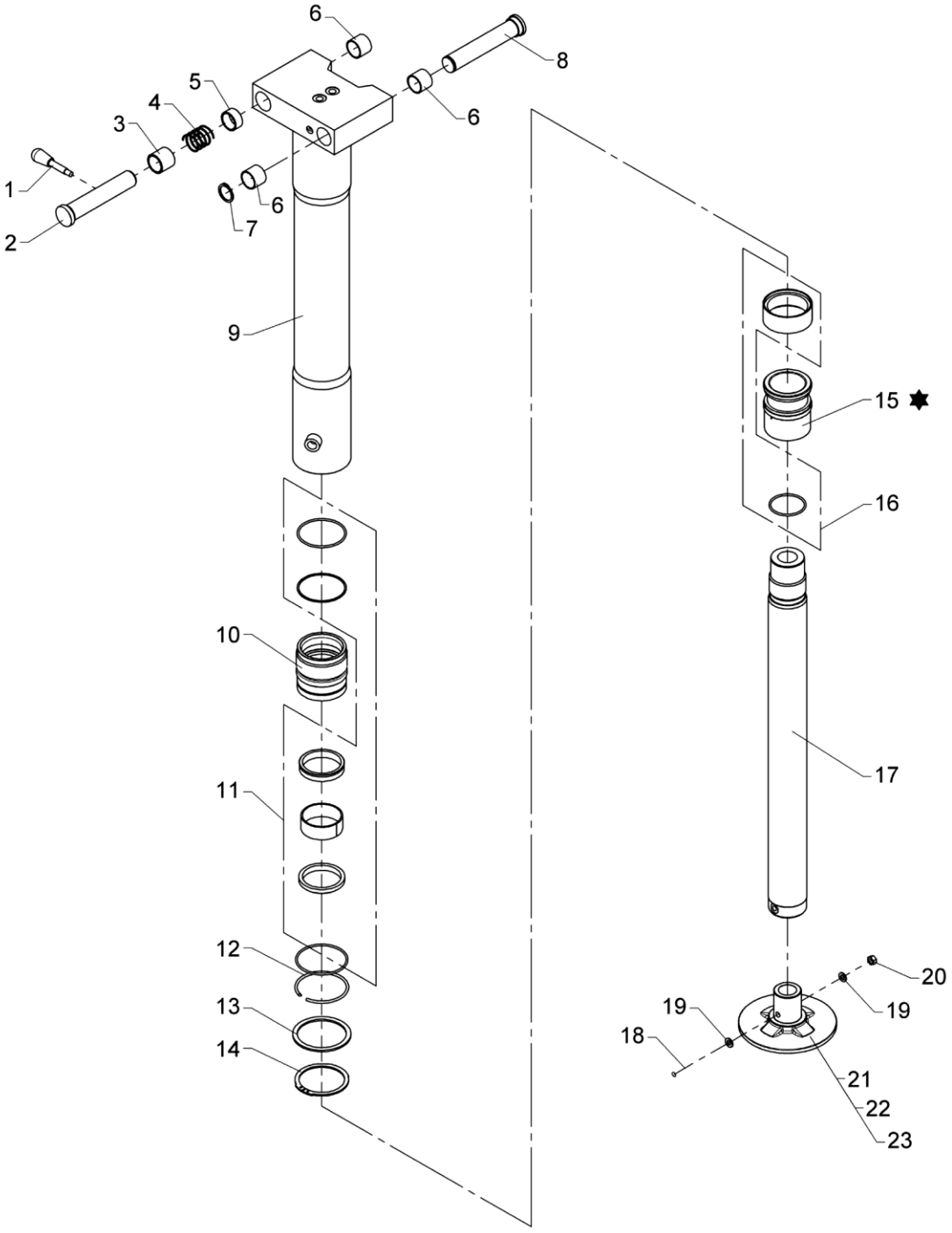

✸ Loctite 243

Obsolete

Stabilizer cylinder, C80-520, type R-20°

534 02 220

From loader 1060001
To loader 1060233

Created 12-11-2008
Modified 30-06-2009

Pos	Qty.	Part no.	Description	Remarks
		6340830	Stabilizer cylinder, type R	
1	1	64352	Lever with knob	
2	1	6340812	Pin	
3	1	6340824	Bushing	
4	1	33490	Compression spring	
5	1	6340811	Distance ring	
6	3	23417	Composite bearing	ø28/32 x 25
7	1	33122	Circlip	28U
8	1	6340813	Pin	
9	1	6340821	Cylinder pipe, R	
10	1	6340501	Guide	
11	1	6894110	Seal kit f. guide	
12	1	33400	Lock ring	
13	1	6340515	Back ring	
14	1	33143	Circlip	80U
15	1	6340516	Piston	
16	1	6894100	Seal kit f. piston	
17	1	6340503	Piston rod	
18	1	32428	Sockethead screw	MC8 x 70
19	2	31147	Face washer, 8 mm	8 mm
20	1	30856	Nut, stainless	M8
21	1	6340506	Footplate, standard	
22	1	6340509	Footplate, 100 mm extension	
23	1	6340512	Footplate, 200 mm extension	

1500K, 1510K, 1720K, 1730K, 1820K, 1830K

Internal ref. 63 43 800

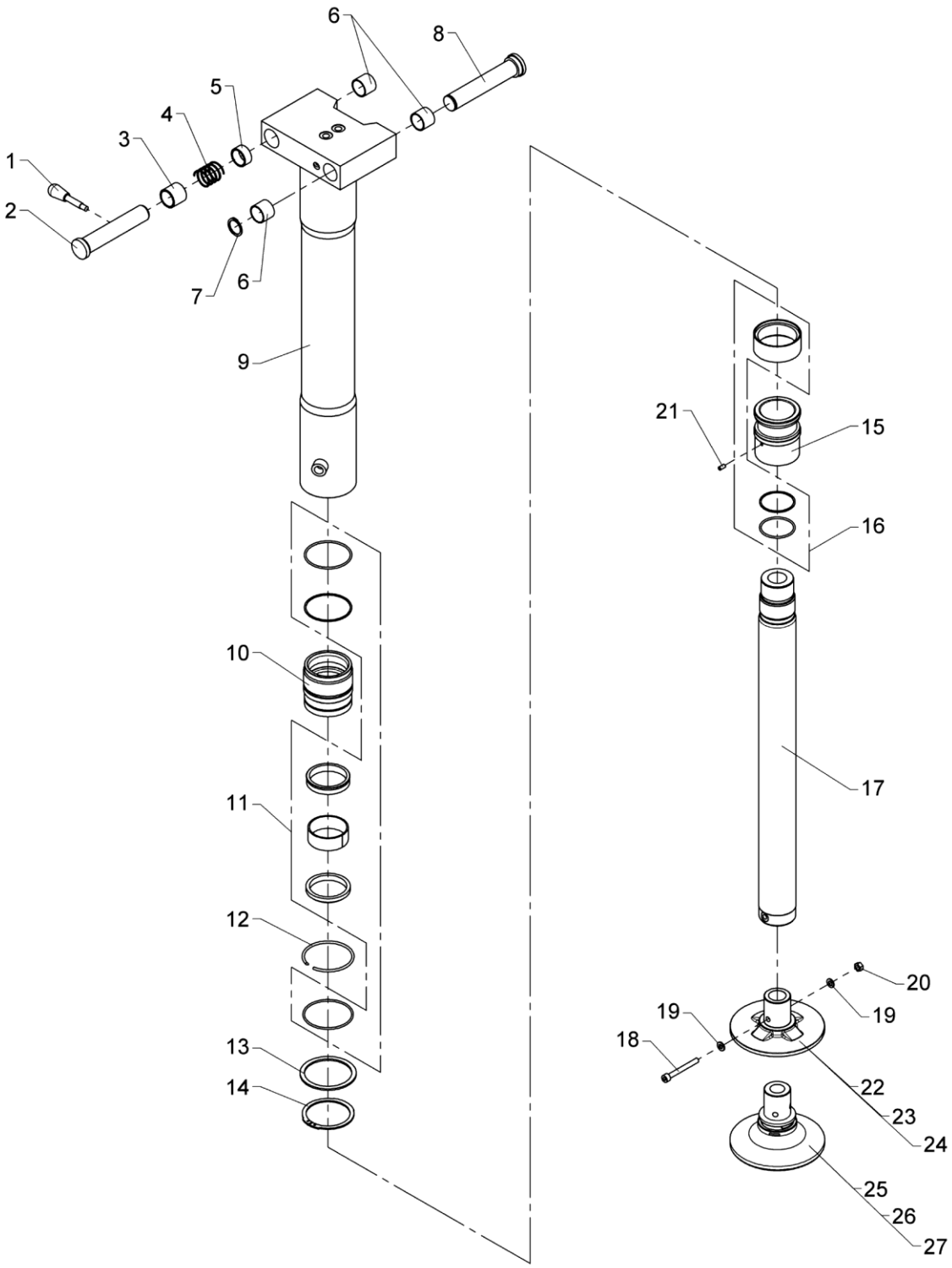

Obsolete

Stabilizer cylinder, C80-520, type R-60°

534 02 221

From loader 1060234
To loader 1061045

Created 30-06-2009
Modified

Pos	Qty.	Part no.	Description	Remarks
		6343800	Stab. cylinder, C80-520, typeR	
1	1	64352	Lever with knob	
2	1	6340812	Pin	
3	1	6340824	Bushing	
4	1	33490	Compression spring	
5	1	6340811	Distance ring	
6	3	23417	Composite bearing	ø28/32 x 25
7	1	33122	Circlip	28U
8	1	6340827	Pin	
9	1	6340821	Cylinder pipe, R	
10	1	6340501	Guide	
11	1	6894110	Seal kit f. guide	
12	1	33400	Lock ring	
13	1	6340515	Back ring	
14	1	33143	Circlip	80U
15	1	6340516	Piston	
16	1	6894100	Seal kit f. piston	
17	1	6340503	Piston rod	
18	1	32428	Sockethead screw	MC8 x 70
19	2	31147	Face washer, 8 mm	
20	1	30856	Nut, stainless	M8
21	1	32256	Pointed screw	MSP6 x 12
22	1	6340506	Footplate, standard	
23	1	6340509	Footplate, 100 mm extension	
24	1	6340512	Footplate, 200 mm extension	
25	1	6342680	Footplate + ball joint std.	
26	1	6342690	Footplate + ball joint 100 mm	
27	1	6342700	Footplate + ball joint 200 mm	

1500K, 1510K, 1720K, 1730K, 1820K, 1830K

Internal ref. 63 43 800

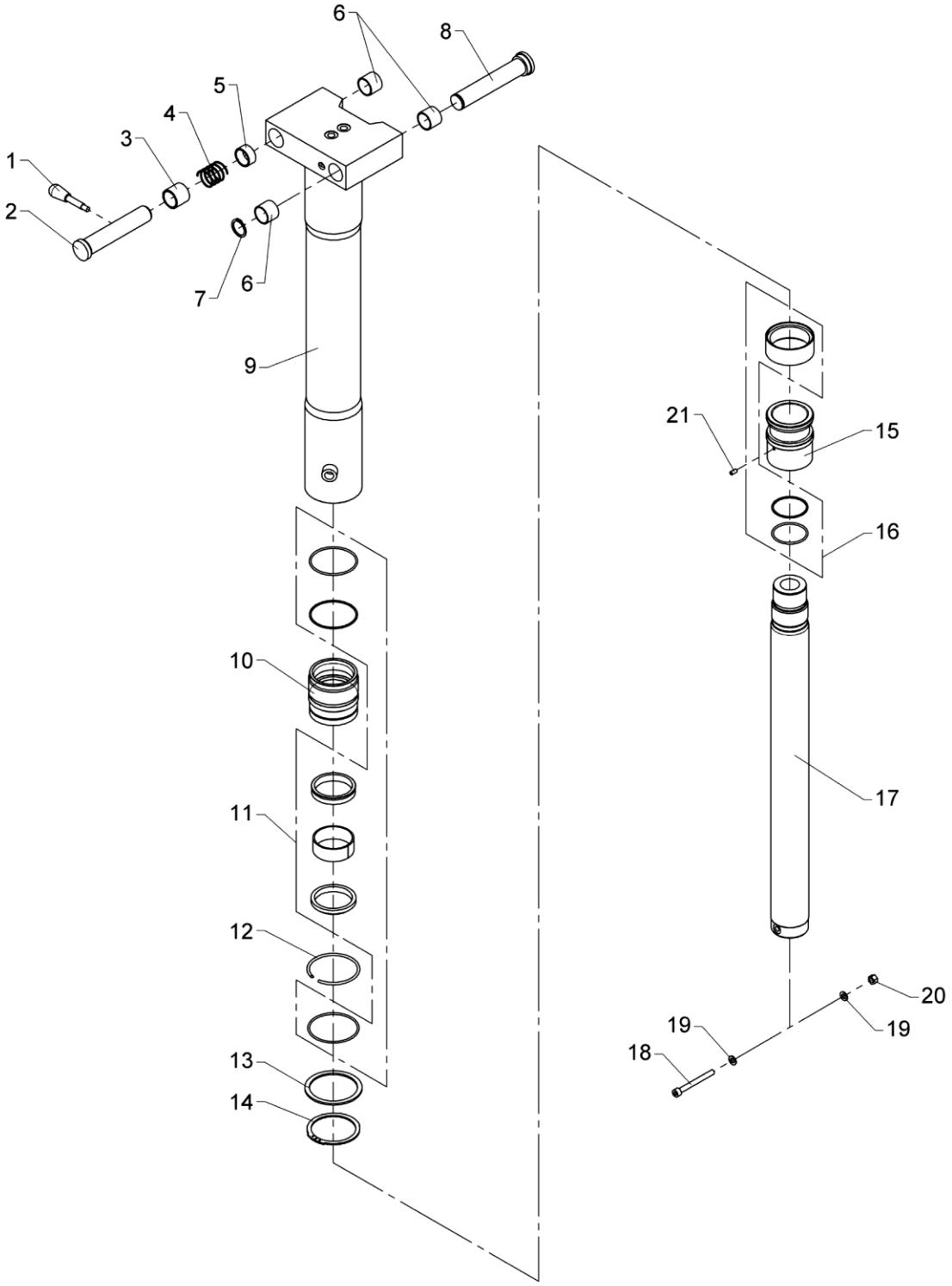

Stabilizer cylinder, C80-520, type R-60°

Pos	Qty.	Part no.	Description	Remarks
1	1	64352	Lever with knob	
2	1	6340812	Pin	
3	1	6340824	Bushing	
4	1	33490	Compression spring	
5	1	6340811	Distance ring	
6	3	23417	Composite bearing	ø28/32 x 25
7	1	33122	Circlip	28U
8	1	6340827	Pin	
9	1	6340821	Cylinder pipe, R	
10	1	6340501	Guide	
11	1	6894110	Seal kit f. guide	
12	1	33400	Lock ring	
13	1	6340515	Back ring	
14	1	33143	Circlip	80U
15	1	6340516	Piston	
16	1	6894100	Seal kit f. piston	
17	1	6340503	Piston rod	
18	1	30965	Screw	MC8 x 80
19	2	31147	Face washer, 8 mm	
20	1	30886	Lock nut, stainless	M8
21	1	32256	Pointed screw	MSP6 x 12

1500K, 1510K, 1720K, 1730K, 1820K, 1830K

Internal ref. 63 43 170

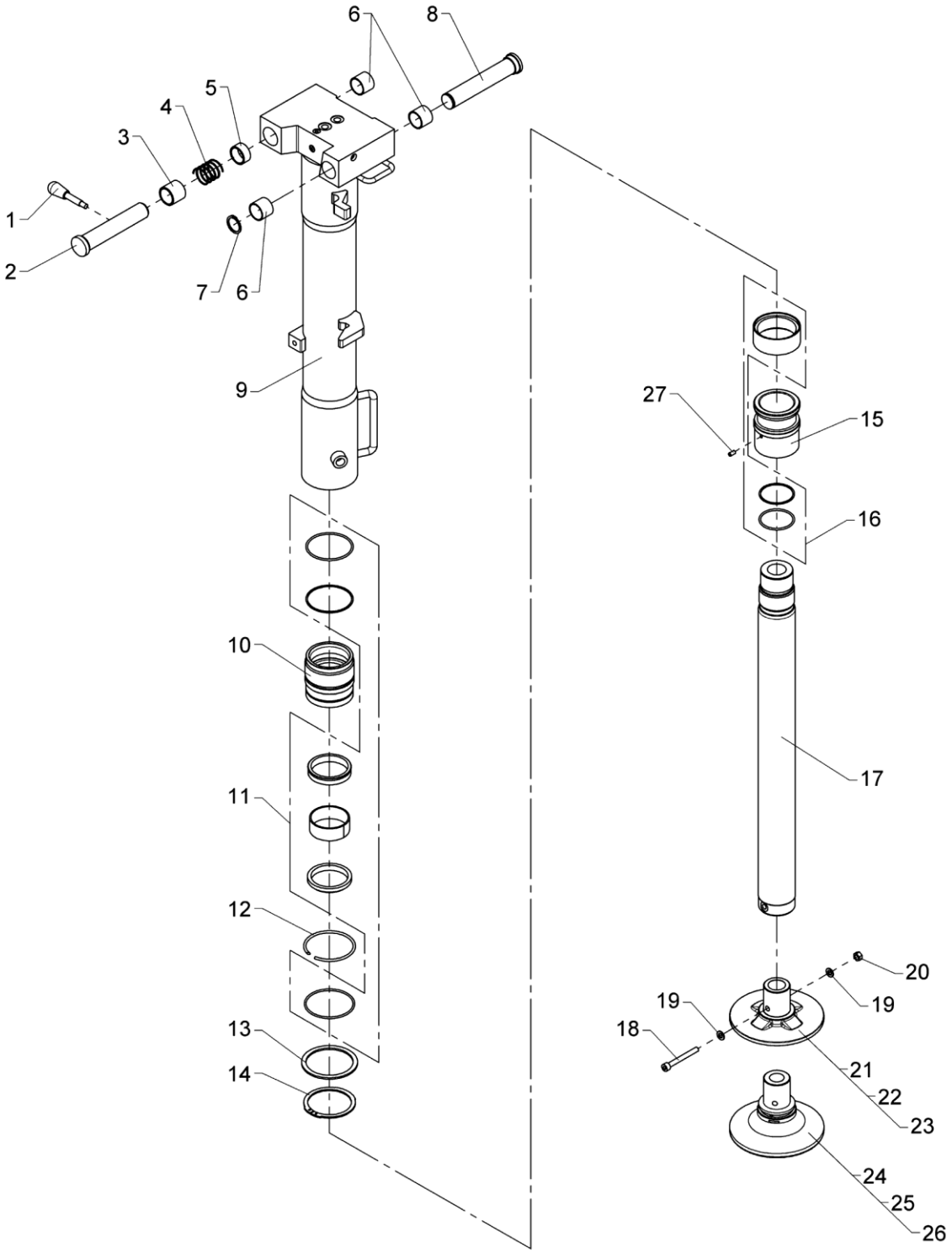

Obsolete

Stabilizer cylinder, C80-520, type R-180°

534 02 222

From loader 1060001
To loader 1061045

Created 06-10-2011
Modified

Pos	Qty.	Part no.	Description	Remarks
		6343170	Stab. cyl., C80-520, type R	
1	1	64352	Lever with knob	
2	1	6340812	Pin	
3	1	6340824	Bushing	
4	1	33490	Compression spring	
5	1	6340811	Distance ring	
6	3	23417	Composite bearing	ø28/32 x 25
7	1	33122	Circlip	28U
8	1	6340813	Pin	
9	1	6340828	Cylinder tube R180	
10	1	6340501	Guide	
11	1	6894110	Seal kit f. guide	
12	1	33400	Lock ring	
13	1	6340515	Back ring	
14	1	33143	Circlip	80U
15	1	6340516	Piston	
16	1	6894100	Seal kit f. piston	
17	1	6340503	Piston rod	
18	1	32428	Sockethead screw	MC8 x 70
19	2	31147	Face washer, 8 mm	
20	1	30856	Nut, stainless	M8
21	1	6340506	Footplate, standard	
22	1	6340509	Footplate, 100 mm extension	
23	1	6340512	Footplate, 200 mm extension	
24	1	6342680	Footplate + ball joint std.	
25	1	6342690	Footplate + ball joint 100 mm	
26	1	6342700	Footplate + ball joint 200 mm	
27	1	32256	Pointed screw	MSP6 x 12

1500K, 1510K, 1720K, 1730K, 1820K, 1830K

Internal ref. 63 43 170

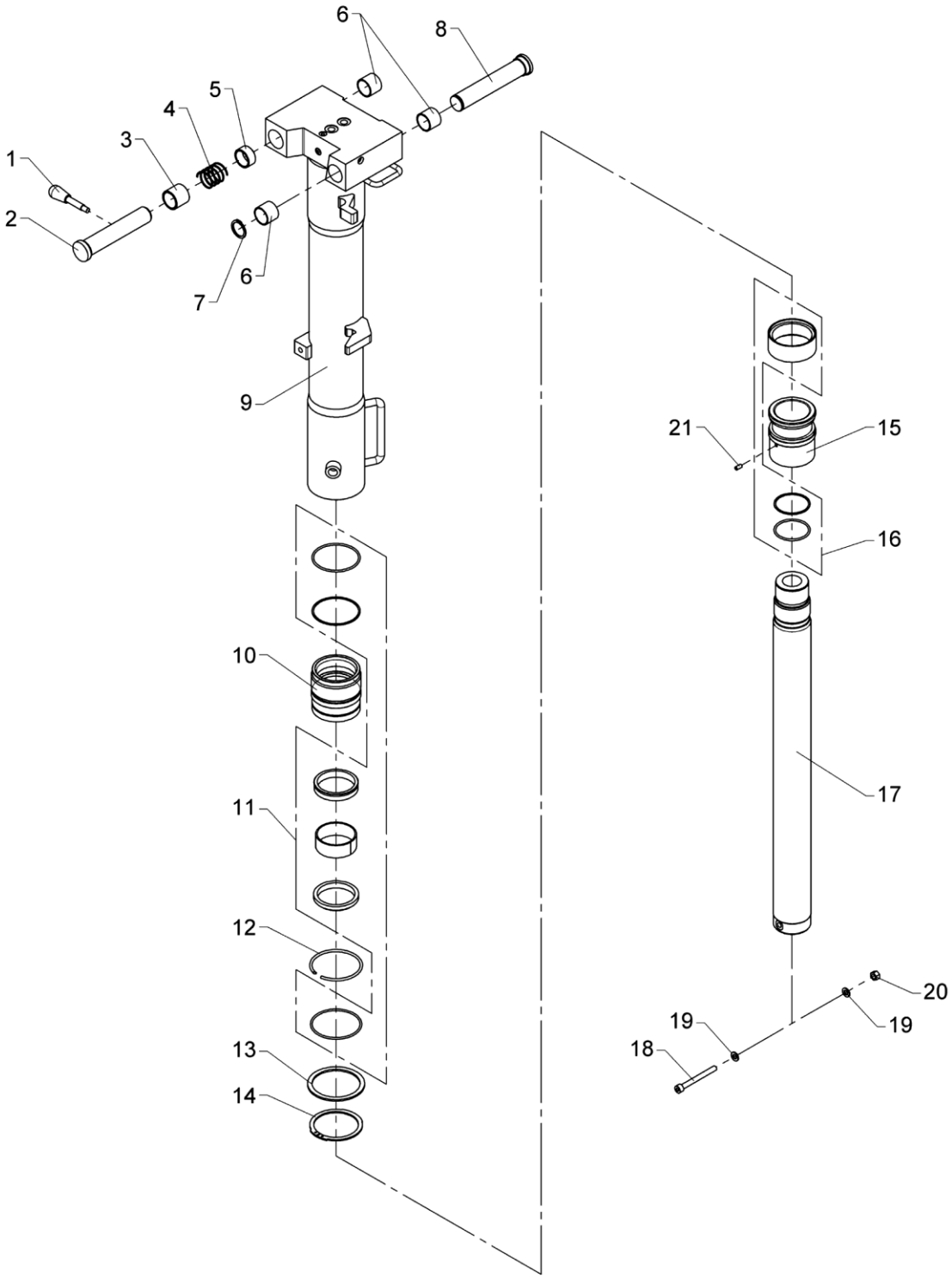

Stabilizer cylinder, C80-520, type R-180°

Pos	Qty.	Part no.	Description	Remarks
1	1	64352	Lever with knob	
2	1	6340812	Pin	
3	1	6340824	Bushing	
4	1	33490	Compression spring	
5	1	6340811	Distance ring	
6	3	23417	Composite bearing	ø28/32 x 25
7	1	33122	Circlip	28U
8	1	6340813	Pin	
9	1	6340828	Cylinder tube R180	
10	1	6340501	Guide	
11	1	6894110	Seal kit f. guide	
12	1	33400	Lock ring	
13	1	6340515	Back ring	
14	1	33143	Circlip	80U
15	1	6340516	Piston	
16	1	6894100	Seal kit f. piston	
17	1	6340503	Piston rod	
18	1	30965	Screw	MC8 x 80
19	2	31147	Face washer, 8 mm	
20	1	30886	Lock nut, stainless	M8
21	1	32256	Pointed screw	MSP6 x 12

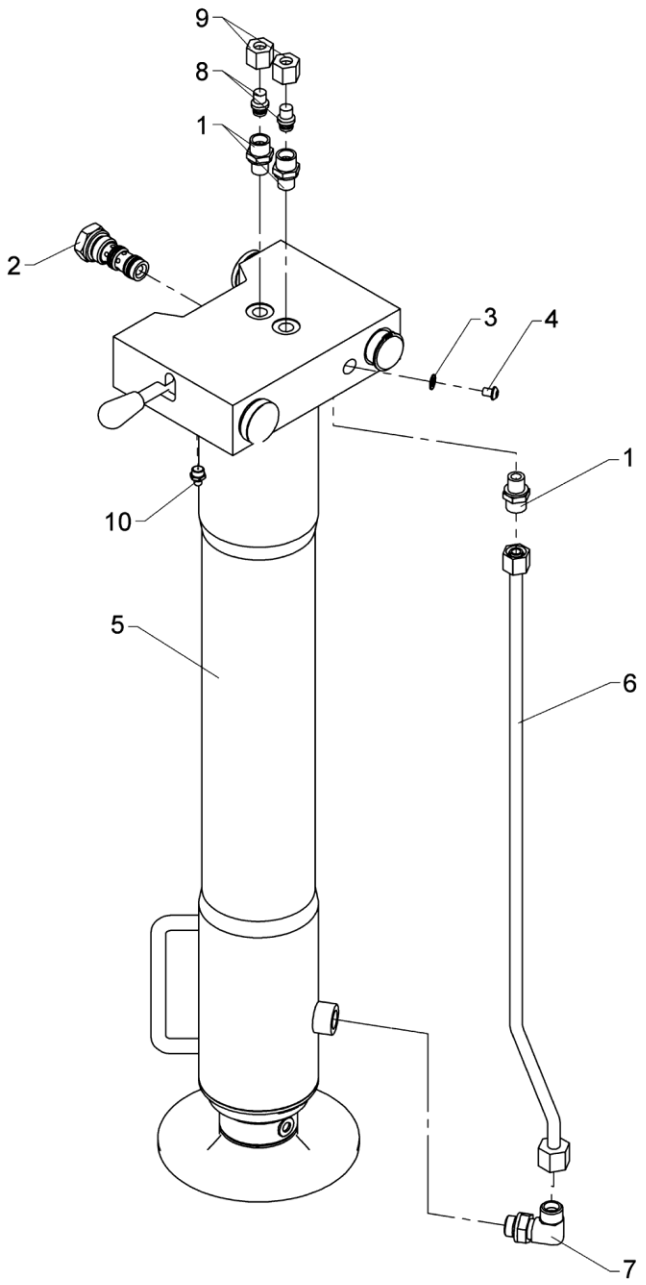
9
8
1
2
3
4
1
10
5
6
7

Obsolete

Stabilizer cylinder with check valve, type R-20°

534 02 230

From loader 1060001
To loader 1060233

Created 12-11-2008
Modified 30-06-2009

Pos	Qty.	Part no.	Description	Remarks
1	3	25121	Connection	P-GEV 10 LR-WD
2	1	58496	Cartridge	
3	1	21109	Seal washer	ø7,1 x 12 x 1
4	1	31778	Screw, stainless	M6 x 8
5	1	6340830	Stabilizer cylinder, type R	
6	1	6340823	Pipe, R	
7	1	26899	Elbow connection	10 mm - 3/8"
8	2	25202	Blanking plug	VSD 10 L
9	2	25182	Coupling nut	M 10 L
10	1	31318	Lubricator	1/8" RG

1500K, 1510K, 1720K, 1730K, 1820K, 1830K

Internal ref. 63 43 810

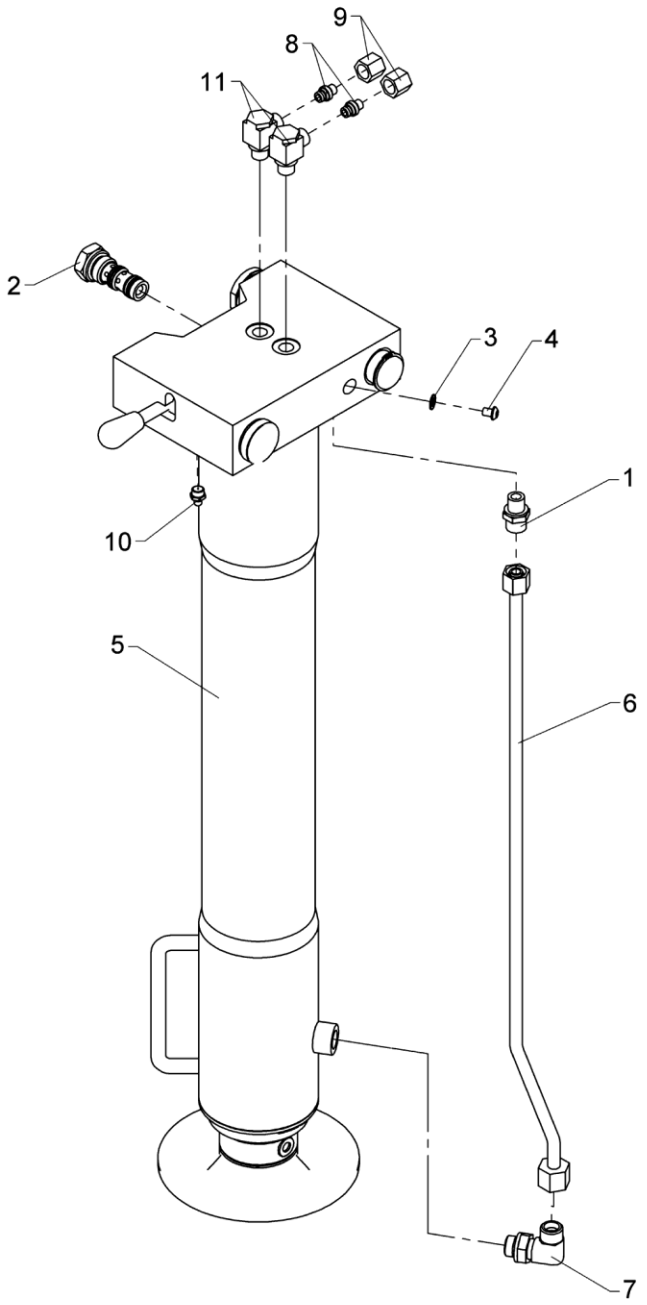

534 02 231

From loader 1060234
To loader

Created 30-06-2009
Modified

Stabilizer cylinder with check valve, type R-60°

Pos	Qty.	Part no.	Description	Remarks
1	1	25121	Connection	P-GEV 10 LR-WD
2	1	58496	Cartridge	
3	1	21109	Seal washer	ø7,1 x 12 x 1
4	1	31778	Screw, stainless	M6 x 8
5	1	6343800	Stab. cylinder, C80-520, typeR	
6	1	6340823	Pipe, R	
7	1	26899	Elbow connection	10 mm - 3/8"
8	2	26166	Blanking plug	VSD 8 L
9	2	25181	Coupling nut	M 8 L
10	1	31318	Lubricator	1/8" RG
11	2	25113	Banjo connection	RSWV 8 LR

1500K, 1510K, 1720K, 1730K, 1820K, 1830K

63 43 500
63 43 490
Internal ref. 63 42 680

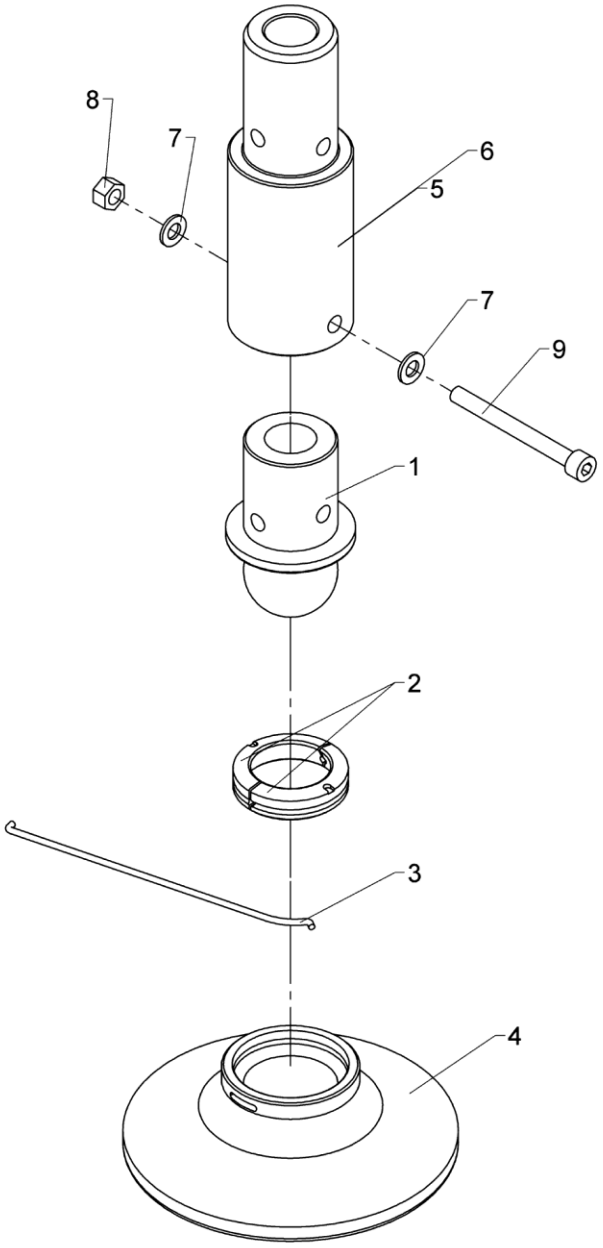

Mounting tool available, See sect. 533 25 060

Obsolete

Foot plate with ball joint, cpl. (ø160)

534 02 235

From loader 1060001
To loader 1061045

Created 05-12-2011
Modified 29-01-2014

Pos	Qty.	Part no.	Description	Remarks
		6342680	Footplate + ball joint std.	
		6343490	Foot plate with ball joint,100	
		6343500	Foot plate with ball joint,200	
1	1	6341517	Ball joint, std.	
2	2	6341516	Ball seat catch	
3	1	33926	Locking wire	
4	1	68025	Footplate ø 160 mm	
5	1	6340518	Extension piece 100 mm	
6	1	6340519	Extension piece 200 mm	
7	2	31147	Face washer, 8 mm	
8	1	30886	Lock nut, stainless	M8
9	1	30965	Screw	MC8 x 80

1500K, 1510K, 1720K, 1730K, 1820K, 1830K

63 47 650
63 47 640
Internal ref. 63 47 630

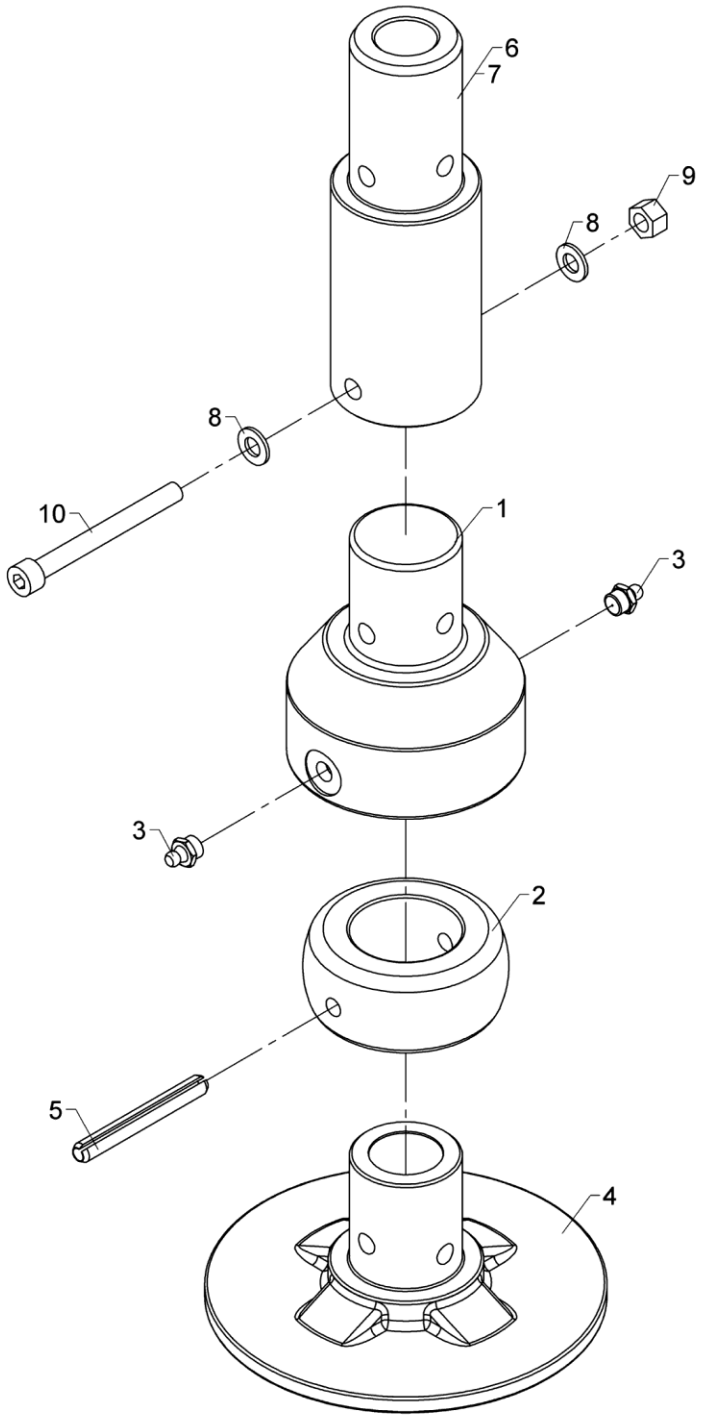

Foot plate with ball joint, cpl. (ø160)

534 02 235 A

From loader 1061046
To loader

Created 01-02-2016
Modified

Pos	Qty.	Part no.	Description	Remarks
		6347630	Footplate with ball joint	Pos. 1, 2, 3, 4, 5
		6347640	Footplate with ball joint100mm	Pos. 1 - 6, 8 - 10
		6347650		Pos. 1 - 5, 7, 8 - 10
1	1	6343531	Pin	
2	1	6343532	Ball joint	
3	2	31318	Lubricator	1/8" RG
4	1	6340506	Footplate, standard	
5	1	31229	Retaining pin	ø8 x 70
6	1	6340518	Extension piece 100 mm	
7	1	6340519	Extension piece 200 mm	
8	2	31147	Face washer, 8 mm	
9	1	30886	Lock nut, stainless	M8
10	1	30965	Screw	MC8 x 80

1500K, 1510K, 1720K, 1730K, 1820K, 1830K

63 43 520
Internal ref. 63 43 510

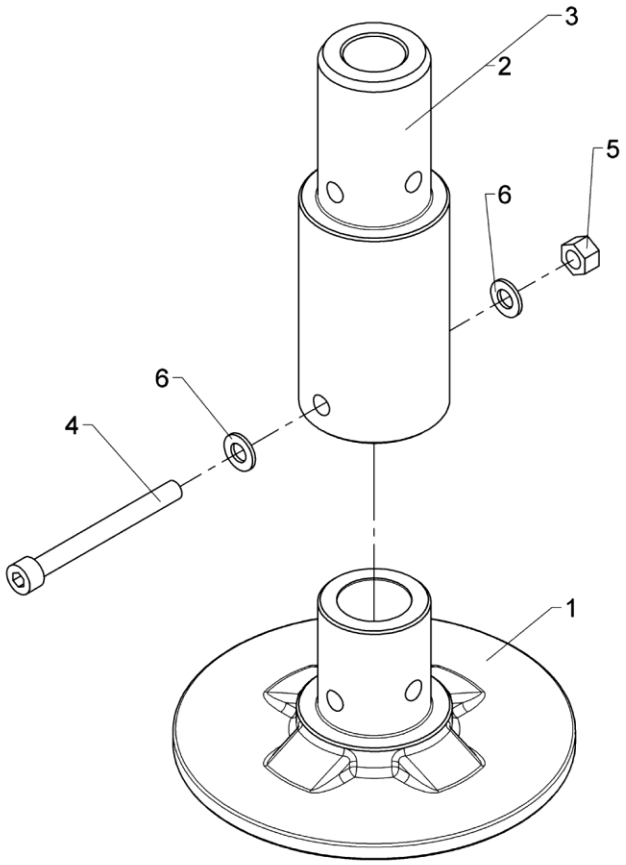

534 02 236

From loader 1061046
To loader

Created 04-04-2013
Modified 29-01-2014

Foot plate, cpl.

Pos	Qty.	Part no.	Description	Remarks
1	1	6340506	Footplate, standard	
2	1	6340518	Extension piece 100 mm	
3	1	6340519	Extension piece 200 mm	
4	1	30965	Screw	MC8 x 80
5	1	30886	Lock nut, stainless	M8
6	2	31147	Face washer, 8 mm	

1500K, 1510K, 1720K, 1730K, 1820K, 1830K

Internal ref. 63 40 800

Patentanmeldt.
Patent pending.
Patentangemeldet.
La demande de brêvet a été déposée.
Solicitud de patente.

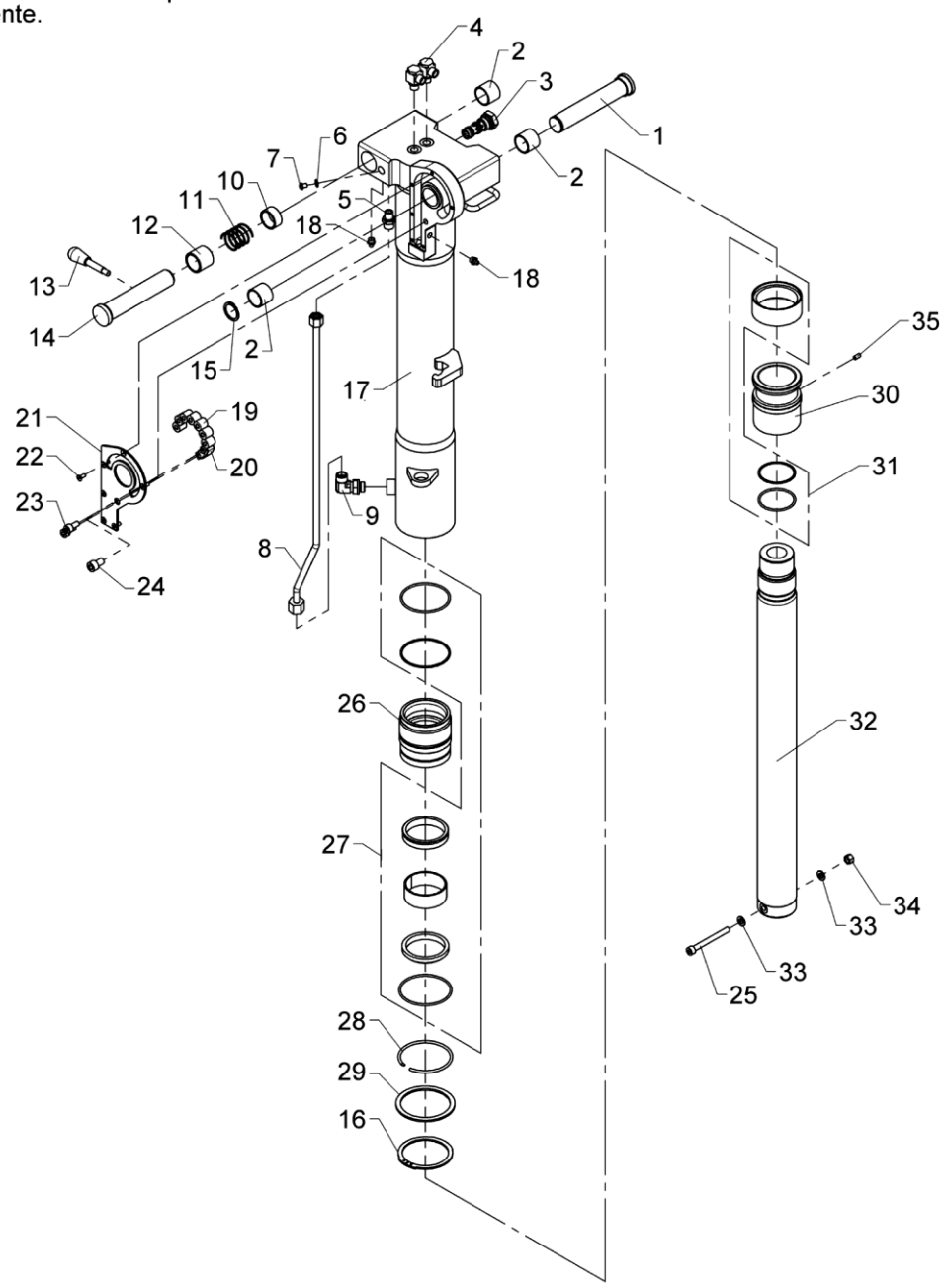

Stabilizer cylinder, C80-520, type HR

Pos	Qty.	Part no.	Description	Remarks
1	1	6340813	Pin	
2	3	23417	Composite bearing	ø28/32 x 25
3	1	58496	Cartridge	
4	2	25113	Banjo connection	RSWV 8 LR
5	1	25121	Connection	P-GEV 10 LR-WD
6	1	21109	Seal washer	ø7,1 x 12 x 1
7	1	31778	Screw, stainless	M6 x 8
8	1	6340825	Pipe	
9	1	26899	Elbow connection	10 mm - 3/8"
10	1	6340811	Distance ring	
11	1	33490	Compression spring	
12	1	6340824	Bushing	
13	1	64352	Lever with knob	
14	1	6340812	Pin	
15	1	33122	Circlip	28U
16	1	33143	Circlip	80U
17	1	6340801	Cylinder pipe, HR	
18	2	31318	Lubricator	1/8" RG
19	7	23120	Cylindrical roller	RC 16 x 16 CD
20	1	6340808	Stop	
21	1	6340807	Cover	
22	6	32405	Sockethead screw	MK5 x 12
23	2	30449	Screw	MC8 x 16
24	1	30964	Screw	MC10 x 16
25	1	30965	Screw	MC8 x 80
26	1	6340501	Guide	
27	1	6894110	Seal kit f. guide	
28	1	33400	Lock ring	
29	1	6340515	Back ring	
30	1	6340516	Piston	
31	1	6894100	Seal kit f. piston	
32	1	6340503	Piston rod	
33	2	31147	Face washer, 8 mm	
34	1	30886	Lock nut, stainless	M8
35	1	32256	Pointed screw	MSP6 x 12

1500K, 1510K, 1720K, 1730K, 1820K, 1830K

63 40 930
63 40 820
Internal ref. 63 40 810

Patentanmeldt.
Patent pending.
Patentangemeldet.
La demande de brêvet a été déposée.
Solicitud de patente.

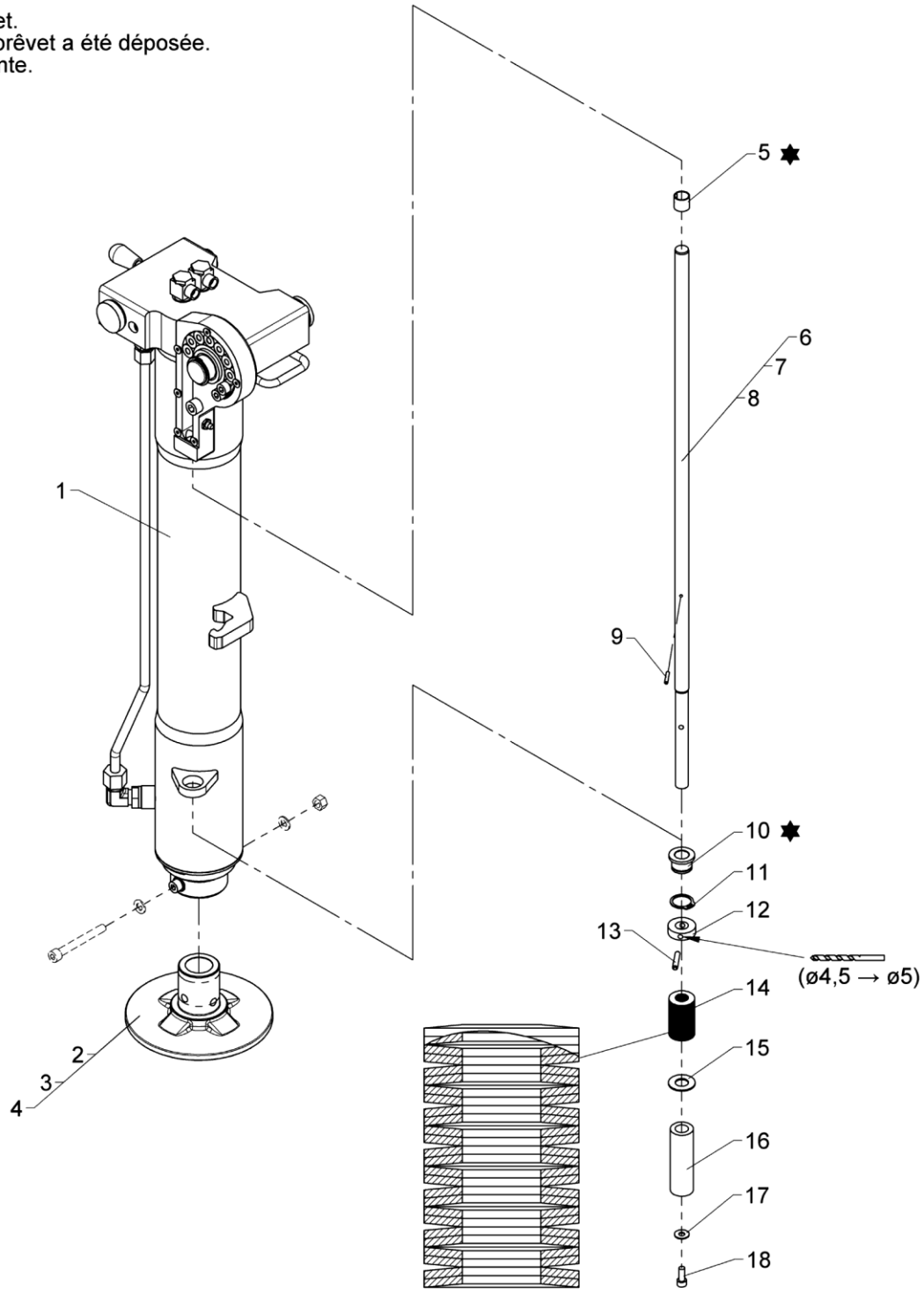

✸ Loctite 601

Obsolete

534 02 245

From loader 1060001
To loader 1061029

Created 07-11-2006
Modified 25-10-2013

Stabilizer cylinder incl. swing-up mechanism, type HR

Pos	Qty.	Part no.	Description	Remarks
		6340810	Stabilizer cylinder cpl. - std	
		6340820	Stabilizer cylinder,cpl.-100mm	
		6340930	Stabilizer cylinder,cpl.-200mm	
1	1	6340800	Stabilizer cylinder, type HR	
2	1	6340506	Footplate, standard	
3	1	6340509	Footplate, 100 mm extension	
4	1	6340512	Footplate, 200 mm extension	
5	1	23948	Bushing	PM 1515 DX
6	1	6340809	Compression rod, standard	
7	1	6340818	Compression rod, 100 mm	
8	1	6340819	Compression rod, 200 mm	
9	1	31202	Retaining pin	ø3 x 20
10	1	63597	Bushing	
11	1	33110	Circlip	22U
12	1	6340816	Washer	
13	1	31586	Retaining pin, stainless	ø5 x 30
14	26	33489	Disc spring	
15	1	31111	Washer	14 mm
16	1	6340815	Pipe	
17	1	32306	Washer	6 mm
18	1	30424	Screw	MC6 x 16

1500K, 1510K, 1720K, 1730K, 1820K, 1830K

Internal ref. 63 43 920

Patentanmeldt.
Patent pending.
Patentangemeldet.
La demande de brêvet a été déposée.
Solicitud de patente.

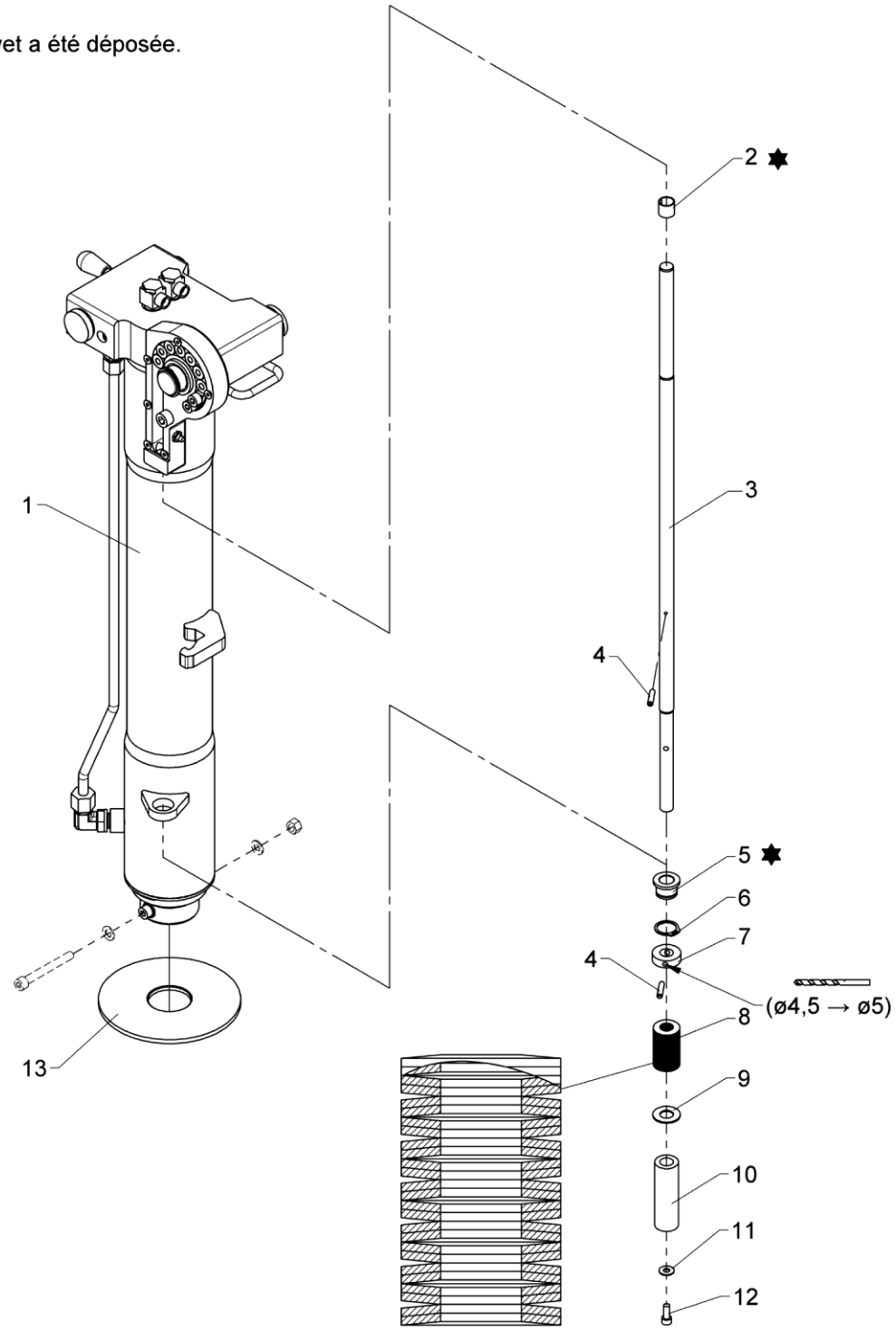

✸ Loctite 601

Stabilizer cylinder incl. swing-up mechanism, type HR

Pos	Qty.	Part no.	Description	Remarks
1	1	6340800	Stabilizer cylinder, type HR	
2	1	23948	Bushing	PM 1515 DX
3	1	6340539	Compression rod, std.	
4	2	31209	Retaining pin	ø5 x 26
5	1	63597	Bushing	
6	1	33110	Circlip	22U
7	1	6340816	Washer	
8	26	33489	Disc spring	
9	1	31111	Washer	14 mm
10	1	6340815	Pipe	
11	1	32306	Washer	6 mm
12	1	30424	Screw	MC6 x 16
13	1	6340538	Compression plate, HR	

1500K, 1510K, 1720K, 1730K, 1820K, 1830K

63 43 190
Internal ref. 63 43 180

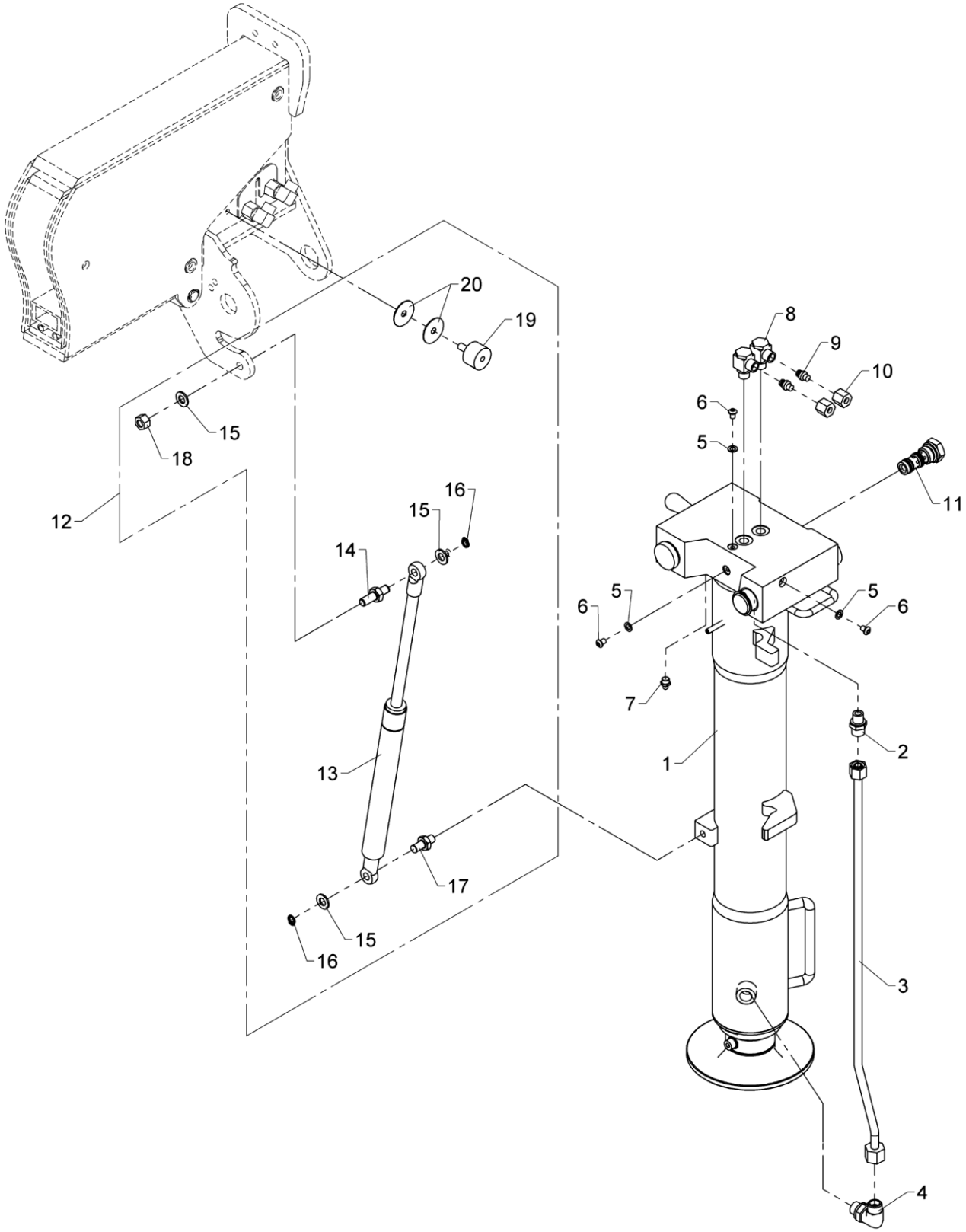

Stabilizer cylinder with check valve, C80-520, Type R-180°

Created 08-01-2014
Modified 05-03-2015

Pos	Qty.	Part no.	Description	Remarks
		6343180	Stab. cyl. w. check valve C80	
		6343190	Gas spring with fittings	
1	1	6343170	Stab. cyl., C80-520, type R	
2	1	25121	Connection	P-GEV 10 LR-WD
3	1	6340823	Pipe, R	
4	1	26899	Elbow connection	10 mm - 3/8"
5	3	21109	Seal washer	ø7,1 x 12 x 1
6	3	31778	Screw, stainless	M6 x 8
7	1	31318	Lubricator	1/8" RG
8	2	25113	Banjo connection	RSWV 8 LR
9	2	26166	Blanking plug	VSD 8 L
10	2	25181	Coupling nut	M 8 L
11	1	58496	Cartridge	
12	1	6343190	Gas spring with fittings	
13	1	48487	Gas spring	
14	1	6344067	Screw for gas spring, long	
15	3	31565	Washer, stainless	10 mm
16	2	33101	Circlip	10U
17	1	6344068	Screw for gas spring, short	
18	1	31564	Lock nut, stainless	M10
19	1	44263	Torsion balancer Type 2	
20	2	31150	Washer	8 mm

1500K, 1510K, 1720K, 1730K, 1820K, 1830K

Internal ref. 63 41 500

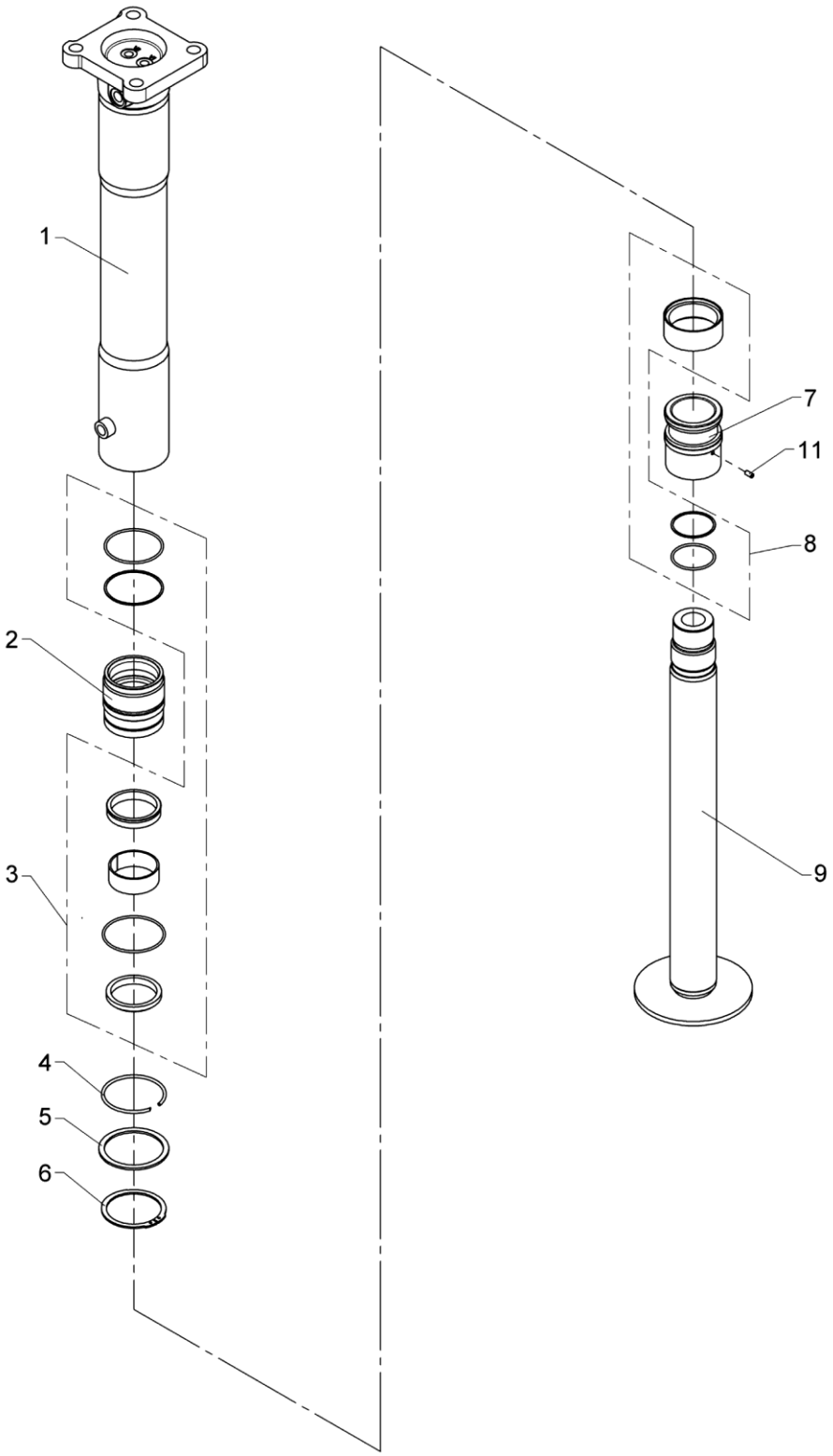

Stabilizer cylinder, C80-440, type V

Created 12-11-2008
Modified 22-03-2012

Pos	Qty.	Part no.	Description	Remarks
1	1	6340941	Cylinder tube, fixed leg	
2	1	6340501	Guide	
3	1	6894110	Seal kit f. guide	
4	1	33400	Lock ring	
5	1	6340515	Back ring	
6	1	33143	Circlip	80U
7	1	6340516	Piston	
8	1	6894100	Seal kit f. piston	
9	1	6340943	Piston rod	
10	1	22175	Back ring	STR 55 x 60 x 1,3-Y95A
11	1	32256	Pointed screw	MSP6 x 12

1500K, 1510K, 1720K, 1730K, 1820K, 1830K

Internal ref. 63 41 510

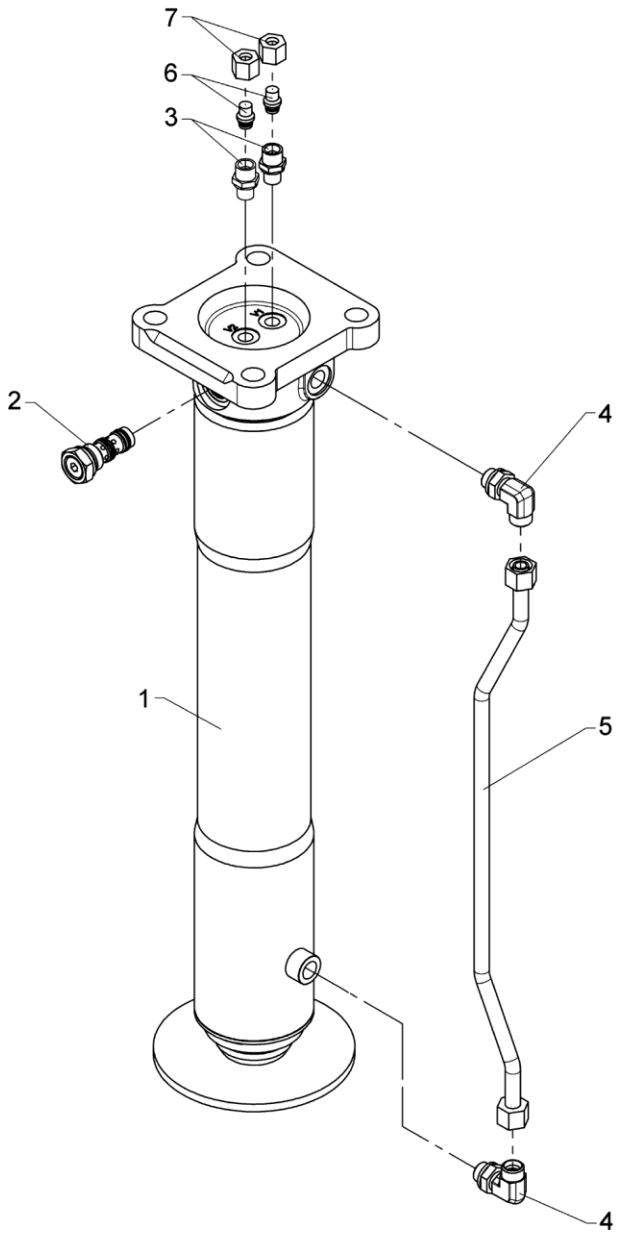

Stabilizer cylinder with check valve, C80-440, type V

Pos	Qty.	Part no.	Description	Remarks
1	1	6341500	Stabilizer cylinder	
2	1	58496	Cartridge	
3	2	25121	Connection	P-GEV 10 LR-WD
4	2	26897	Elbow connection	12 mm - 3/8"
5	1	6340945	Pipe	
6	2	25202	Blanking plug	VSD 10 L
7	2	25182	Coupling nut	M 10 L

1500K, 1510K, 1720K, 1730K, 1820K, 1830K

Internal ref. 63 44 210

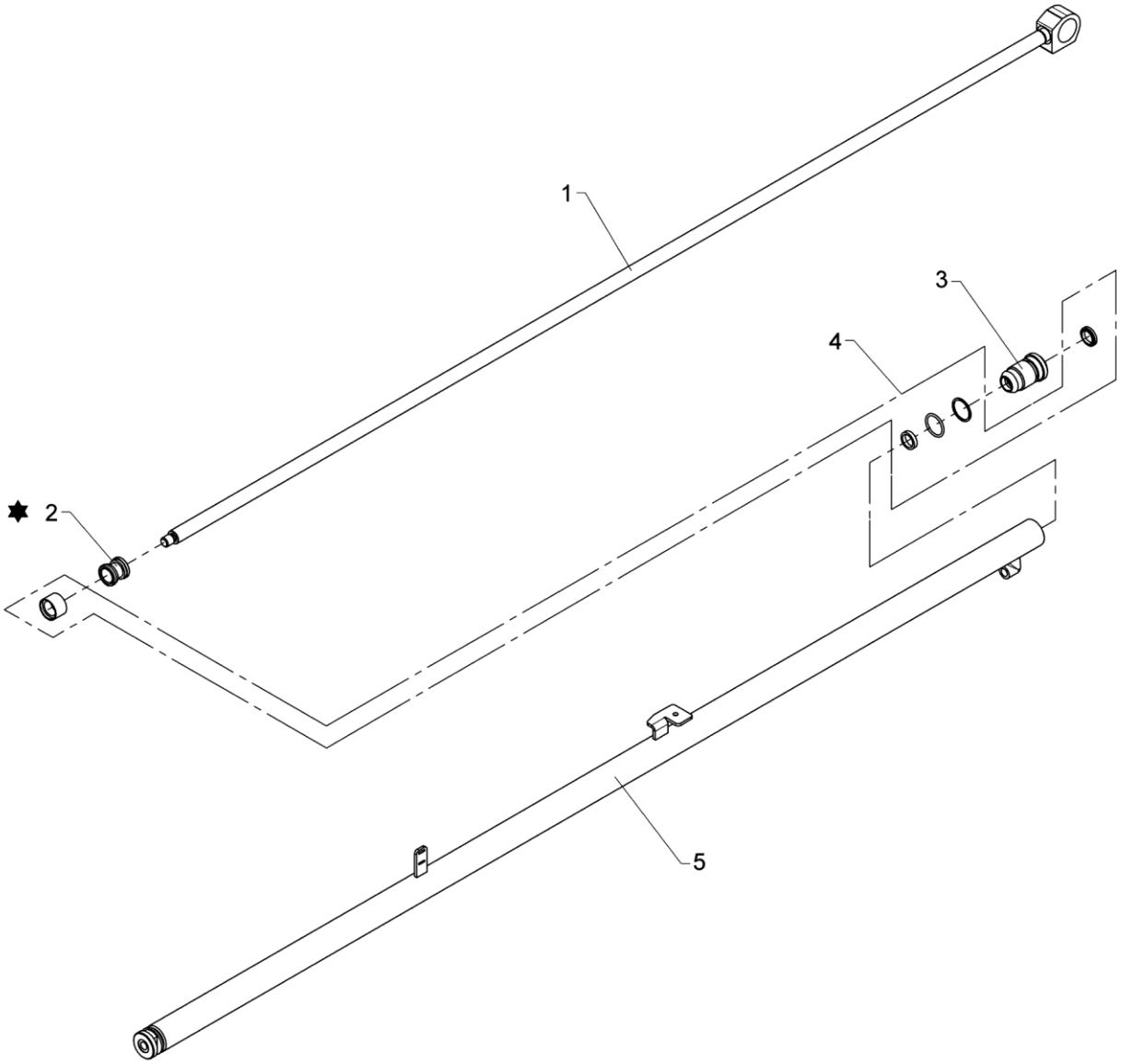

✸ Loctite 243

534 02 300

From loader 1060001
To loader

Created 12-11-2008
Modified 08-02-2012

Beam cylinder C32 - 1625

Pos	Qty.	Part no.	Description	Remarks
1	1	6344214	Piston rod	
2	1	6306242	Piston	
3	1	6043034	Guide	
4	1	6892290	Seal kit	
5	1	6344211	Cylinder pipe	

1500K, 1510K, 1720K, 1730K, 1820K, 1830K

Internal ref. 63 44 220

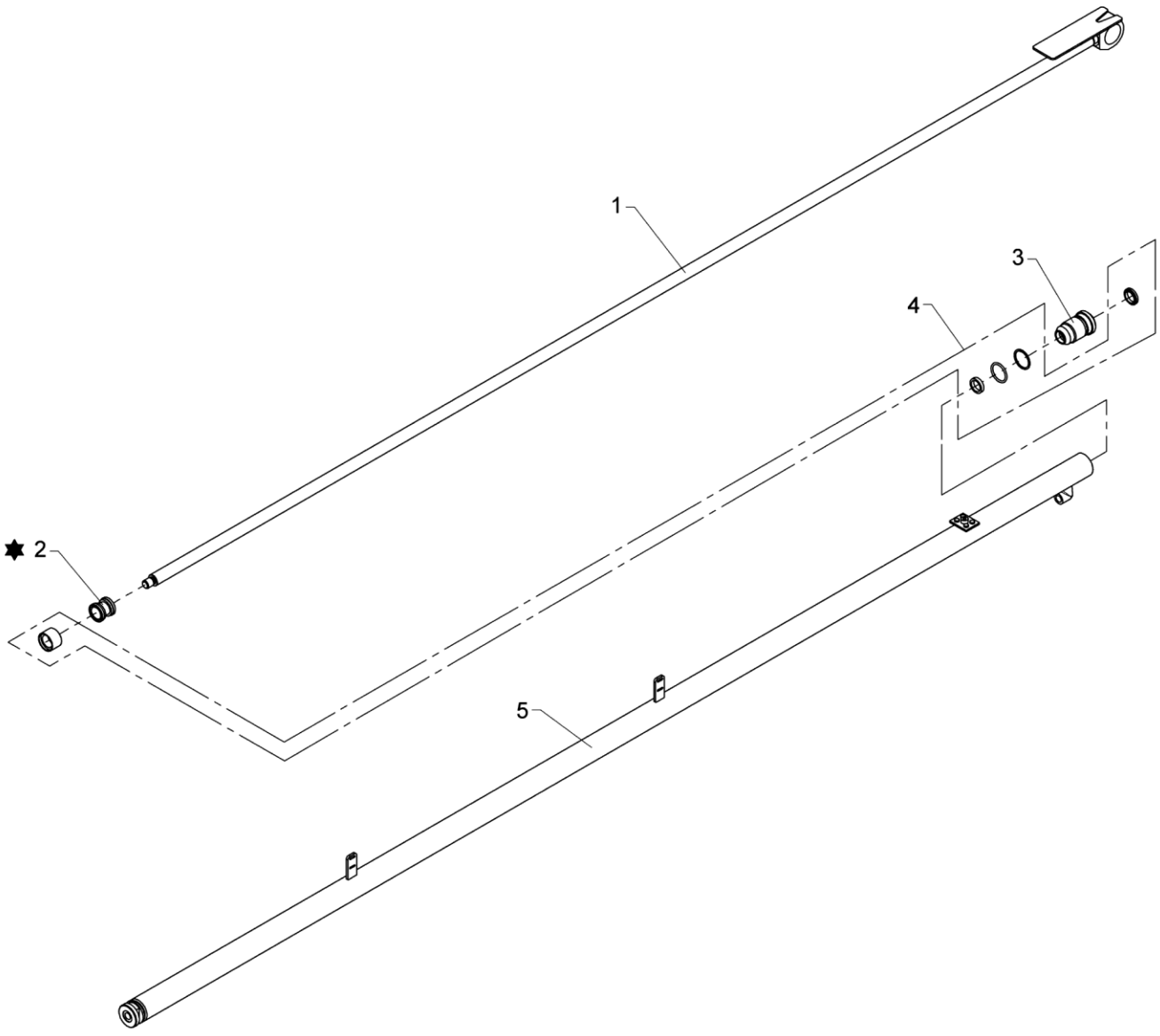

✸ Loctite 243

534 02 310

From loader 1060001
To loader

Created 12-11-2008
Modified 05-03-2010

Beam cylinder C32 - 2065

Pos	Qty.	Part no.	Description	Remarks
1	1	6344223	Piston rod	
2	1	6306242	Piston	
3	1	6043034	Guide	
4	1	6892290	Seal kit	
5	1	6344221	Cylinder pipe	

1500K, 1510K, 1720K, 1730K, 1820K, 1830K

Internal ref. 63 40 790

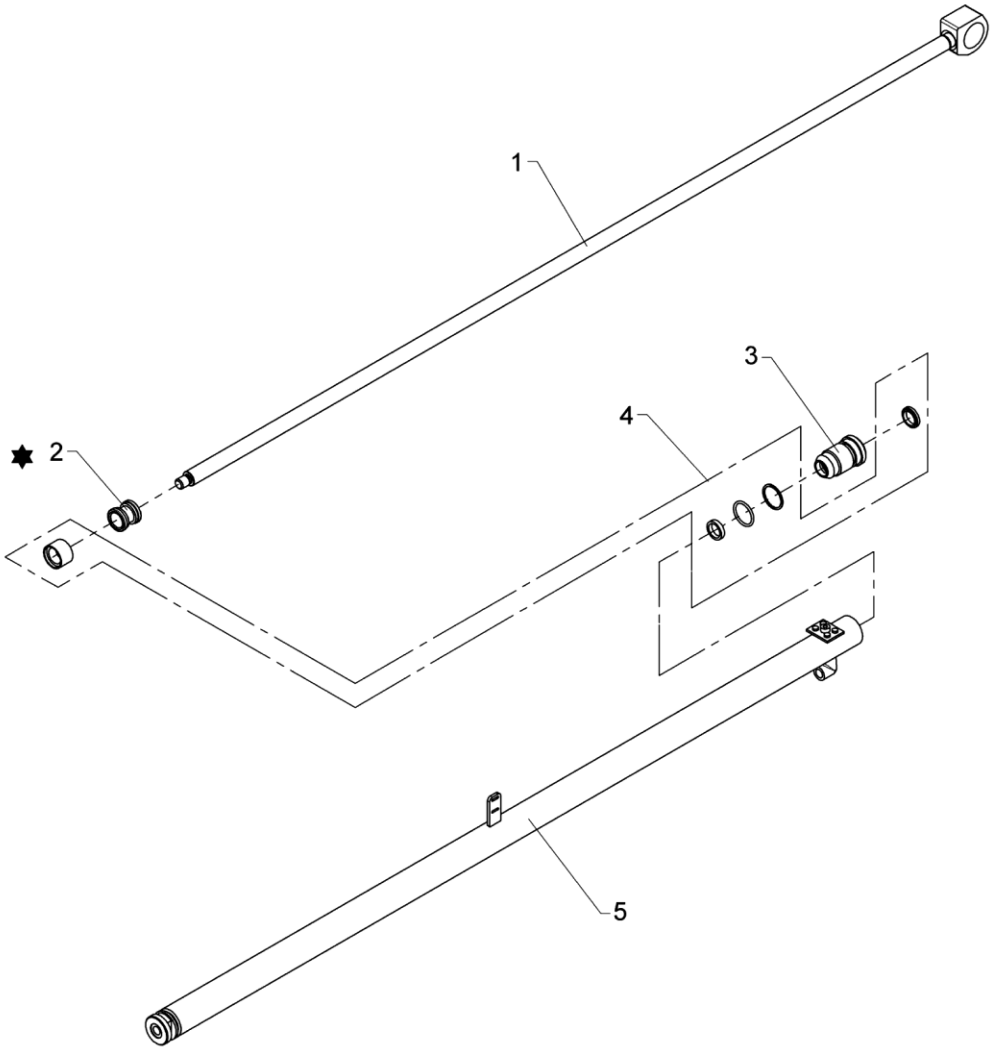

✸ Loctite 243

Beam cylinder C32 - 1137

534 02 320

From loader 1060001
To loader

Created 12-11-2008
Modified 08-02-2012

Pos	Qty.	Part no.	Description	Remarks
1	1	6340792	Piston rod	
2	1	6306242	Piston	
3	1	6043034	Guide	
4	1	6892290	Seal kit	
5	1	6340791	Cylinder tube	

1500K, 1510K, 1720K, 1730K, 1820K, 1830K

Internal ref. 63 40 290

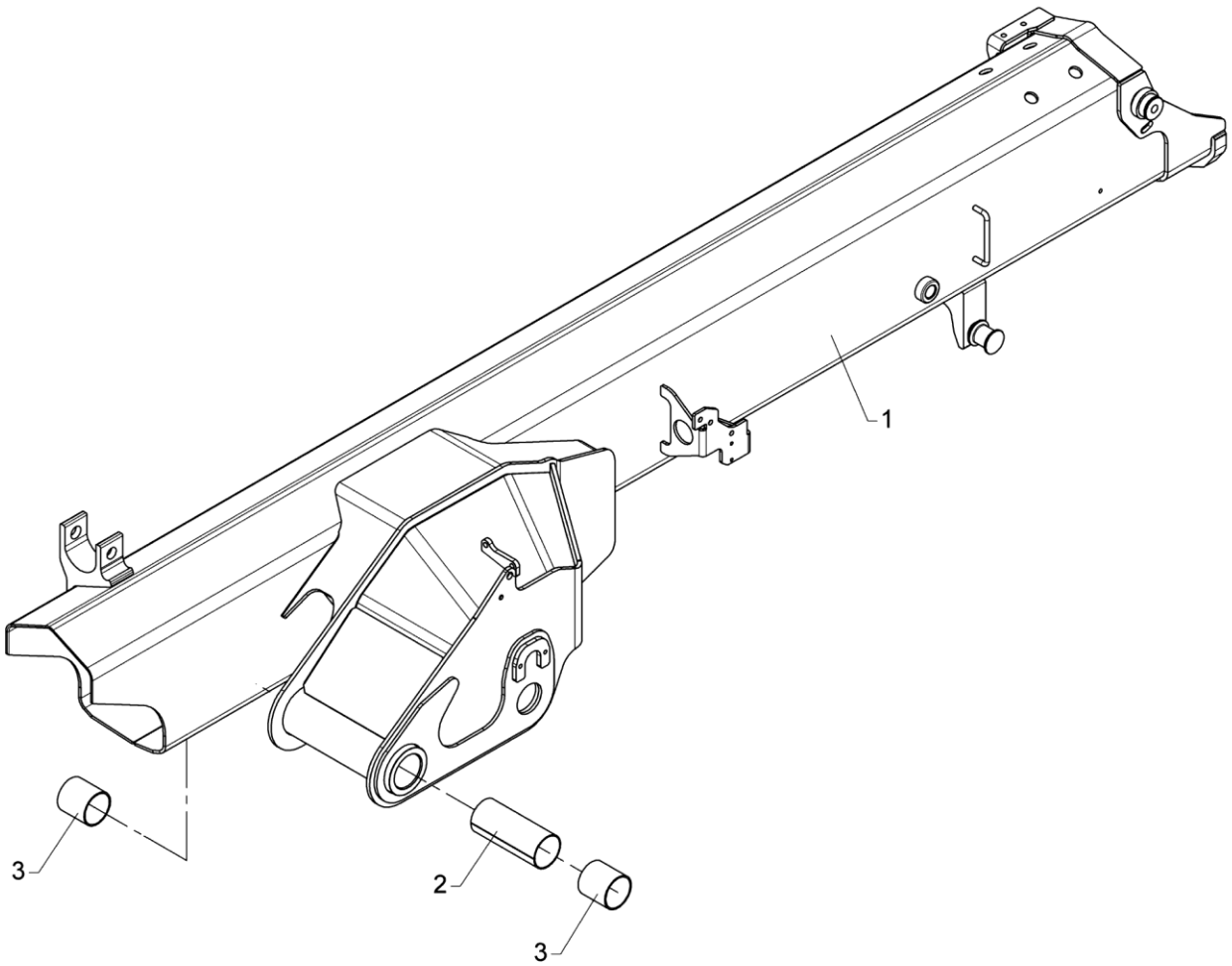

Obsolete

Jib, complete

534 03 010

From loader 1060001
To loader 1060386

Created 12-11-2008
Modified

Pos	Qty.	Part no.	Description	Remarks
1	1	6340280	Jib	6340281
2	1	63475	Plate	
3	2	23410	Composite bearing	ø55/60 x 60

1500K, 1510K, 1720K, 1730K, 1820K, 1830K

Internal ref. 63 40 290

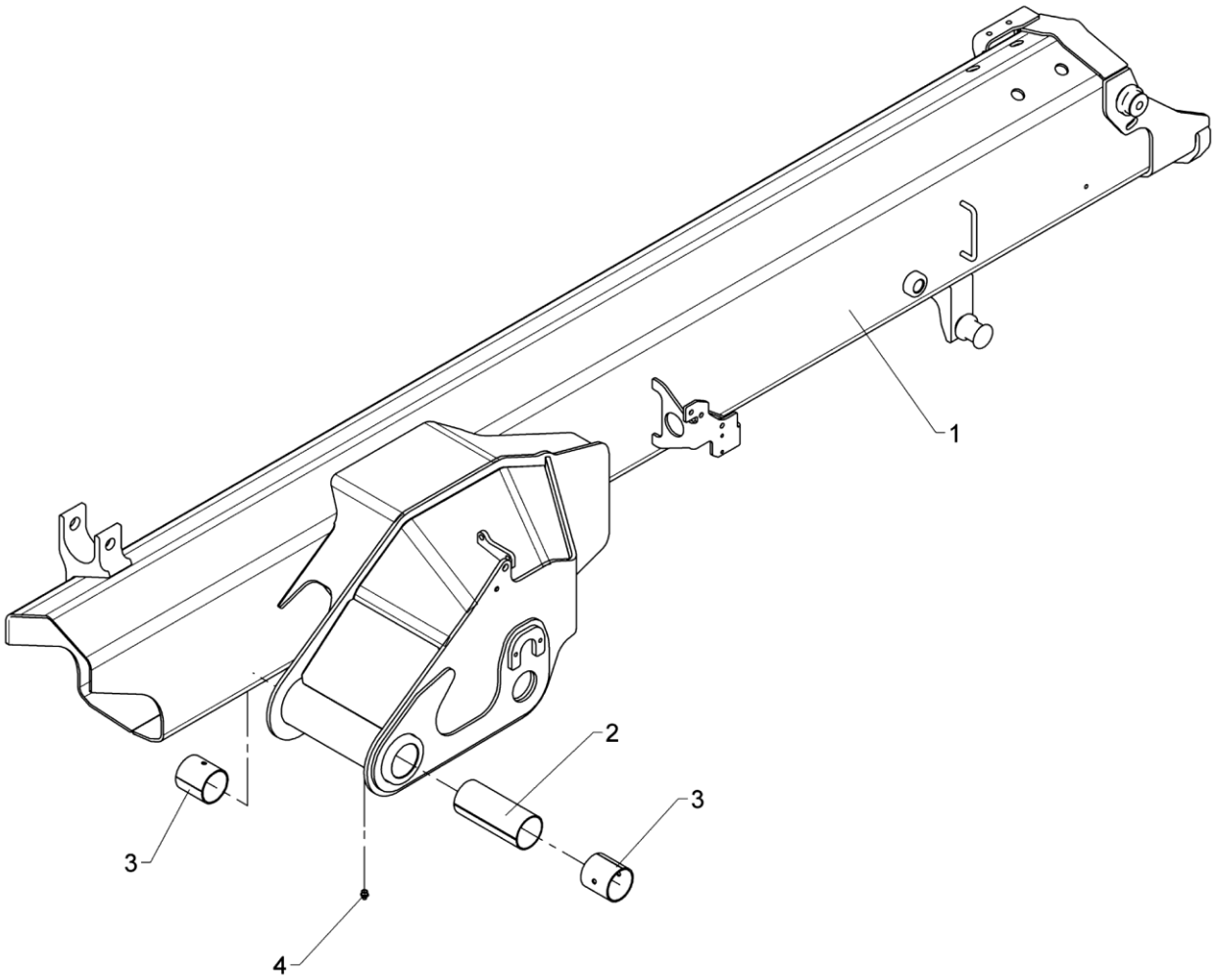

534 03 010 A

From loader 1060001
To loader

Created 15-07-2010
Modified

Jib, complete

Pos	Qty.	Part no.	Description	Remarks
1	1	6340280	Jib	6340281
2	1	63475	Plate	
3	2	23419	Bushing	PM 5560 DX
4	1	31318	Lubricator	1/8" RG

1500K, 1510K, 1720K, 1730K, 1820K, 1830K

Internal ref. 63 40 980

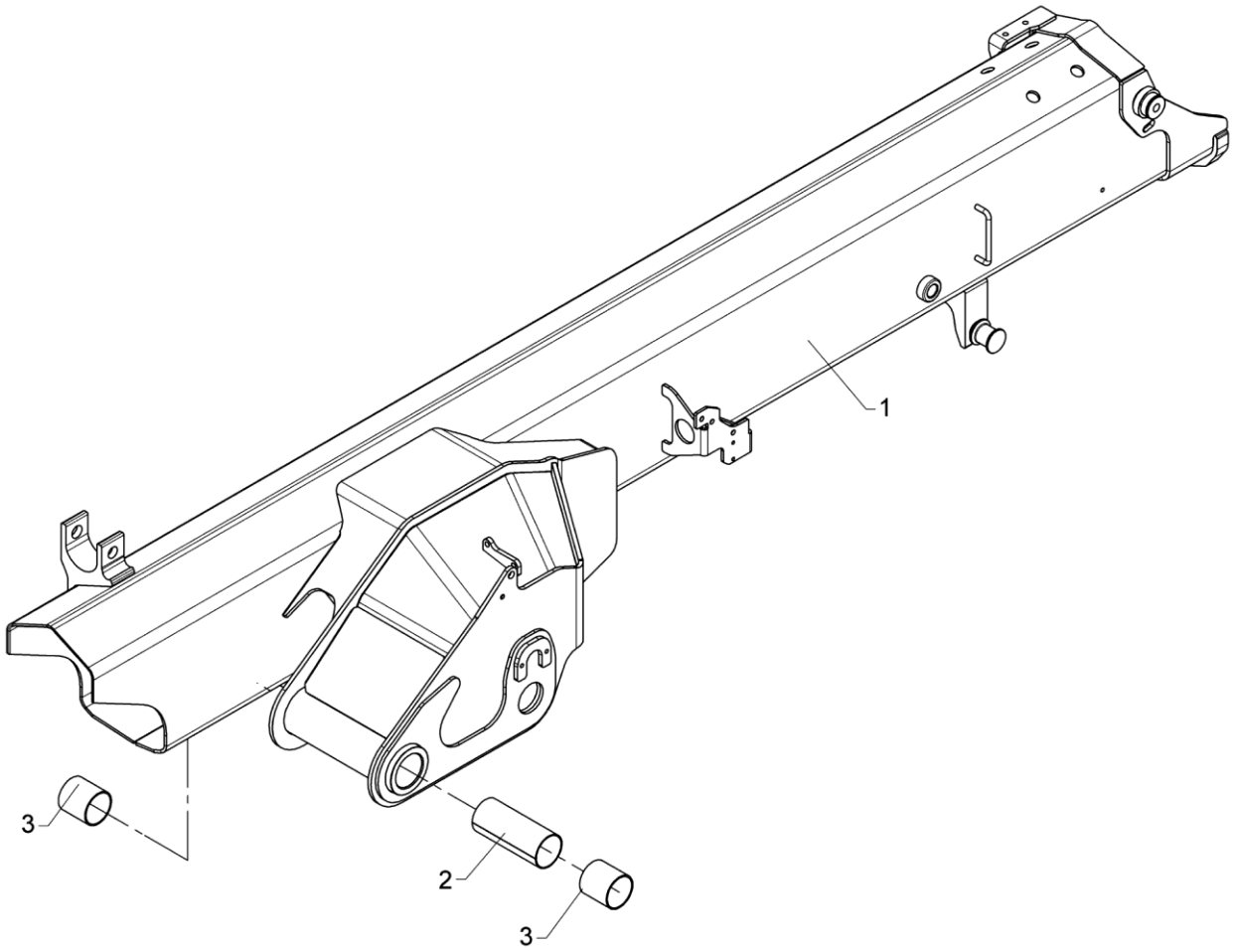

Obsolete

Jib, complete (winch)

534 03 020

From loader 1060001
To loader 1060386

Created 12-11-2008
Modified

Pos	Qty.	Part no.	Description	Remarks
1	1	6340970	Jib (winch)	6340971
2	1	63475	Plate	
3	2	23410	Composite bearing	ø55/60 x 60

1500K, 1510K, 1720K, 1730K, 1820K, 1830K

Internal ref. 63 40 980

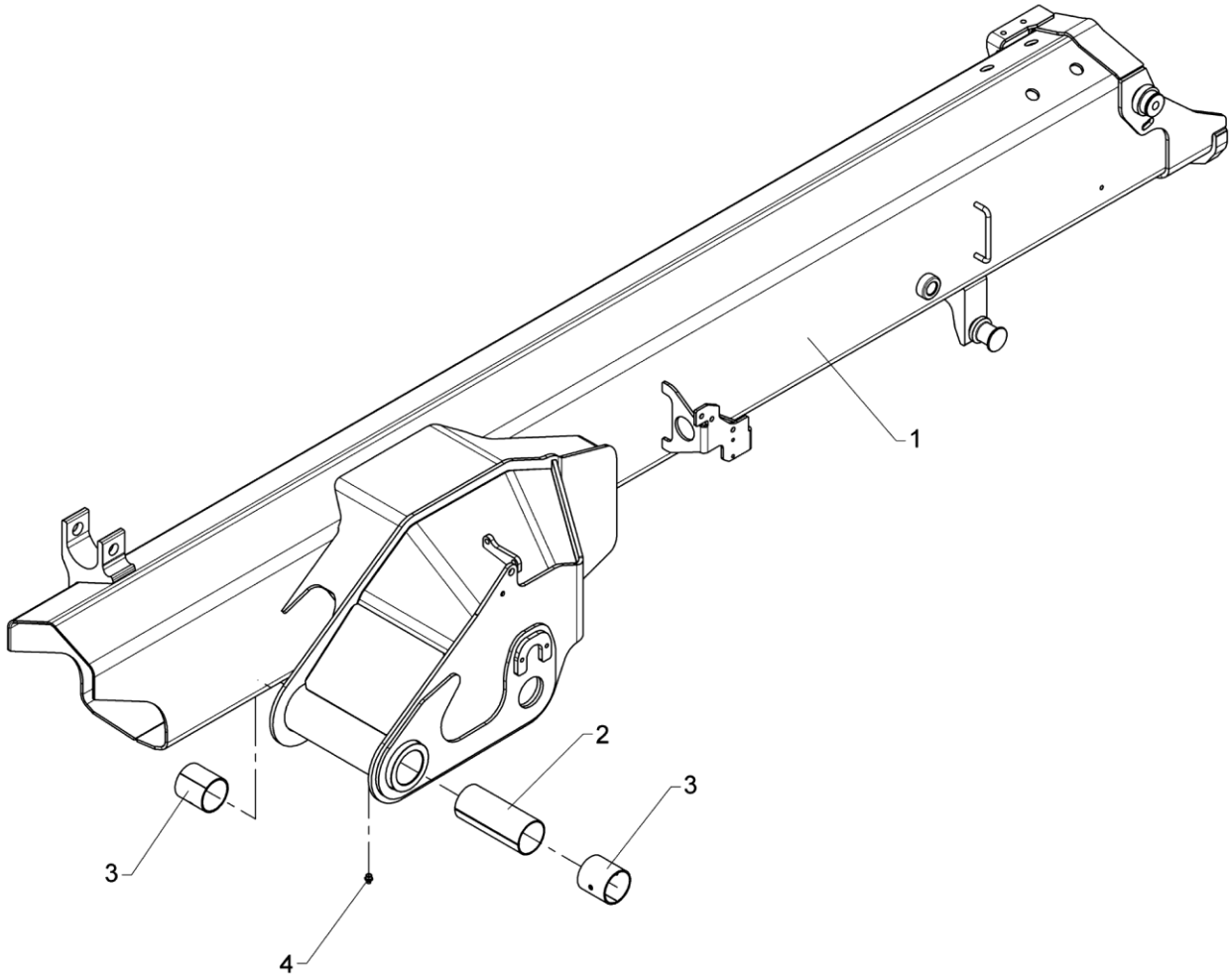

534 03 020 A

From loader 1060387
To loader

Created 15-07-2010
Modified

Jib, complete (winch)

Pos	Qty.	Part no.	Description	Remarks
1	1	6340970	Jib (winch)	6340971
2	1	63475	Plate	
3	2	23419	Bushing	PM 5560 DX
4	1	31318	Lubricator	1/8" RG

1500K, 1510K, 1720K, 1730K, 1820K, 1830K

Internal ref. 63 40 300

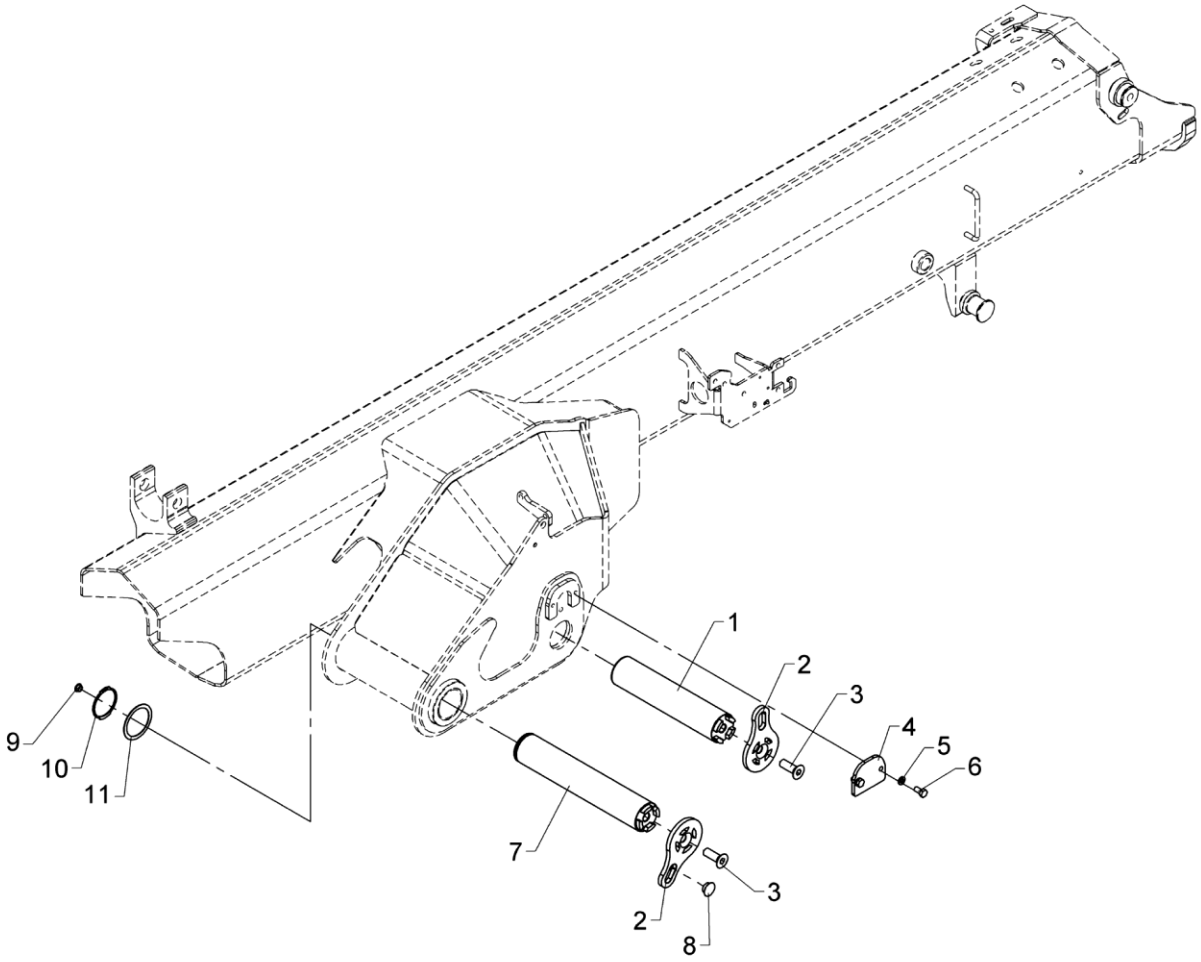

Fitting of jib and jib cylinder

Pos	Qty.	Part no.	Description	Remarks
1	1	6341806	Pin (ø55 X 260)	
2	2	6341802	Lock plate ø50	
3	2	30515	Countersunk screw	MK14 x 40
4	1	6340318	Lock plate	
5	2	31155	Spring washer	8 mm
6	2	30131	Set screw, stainless	M8 x 16
7	1	6341801	Pin (ø5 x 309)	
8	1	68034	Plug	
9	1	64371	Plug	
10	1	33132	Circlip Din 471	55U
11	1	33277	Washer	PS 55 x 68 x 1,0

1500K, 1510K, 1720K, 1730K, 1820K, 1830K

Internal ref. 63 40 320

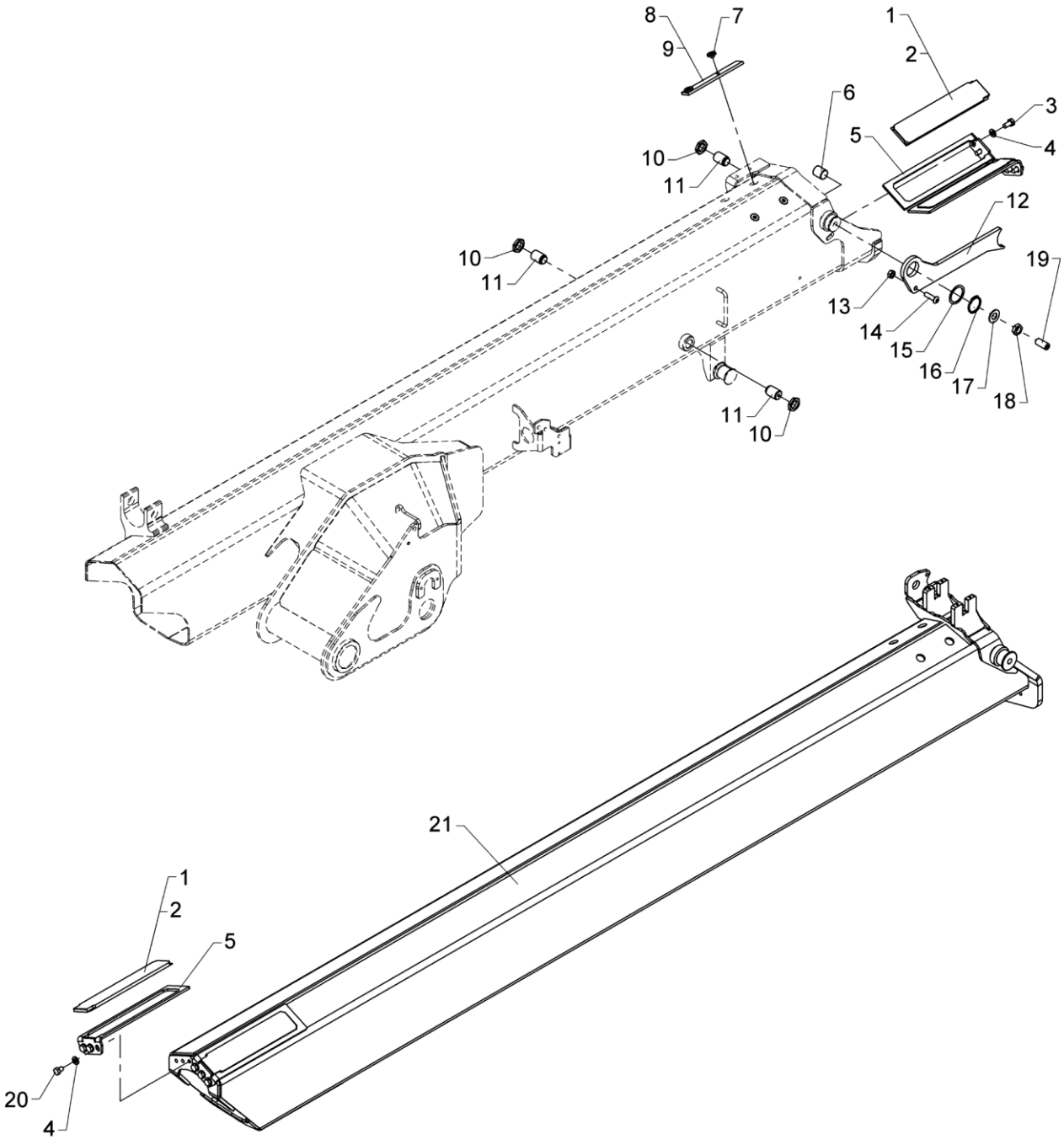

Obsolete

Jib extension I incl. fittings

534 03 100

From loader 1060001
To loader 1060924

Created 21-11-2008
Modified 07-01-2013

Pos	Qty.	Part no.	Description	Remarks
1	4	63585	Slide block	8 mm
2	4	63586	Slide block	9 mm
3	6	31517	Set screw, stainless	M10 x 20
4	12	31177	Washer	10 mm
5	4	6300399	Bracket for slide block	
6	1	6340335	Guide	
7	4	31865	Torx screw M8 x 6 m	M8 x 6
8	2	6243004	Wear plate	6 mm
9	2	6244064	Wear plate	7 mm
10	3	32364	Counter nut	M24 x 2
11	3	6304409	Guide	
12	1	6340319	Stop	
13	1	30858	Nut	M10
14	1	31772	Screw	M10 x 35
15	1	31102	Washer Ø40 x 50x 1,0	ø40 x 50 x 1,0
16	1	33121	Circlip	40U
17	1	31196	Washer	16 mm
18	1	30821	Counter nut	M16
19	1	30567	Pointed screw	MSP16 x 35
20	6	30152	Set screw	M10 x 14
21	1	6340321	Extension I	

1500K, 1510K, 1720K, 1730K, 1820K, 1830K

Internal ref. 63 40 320

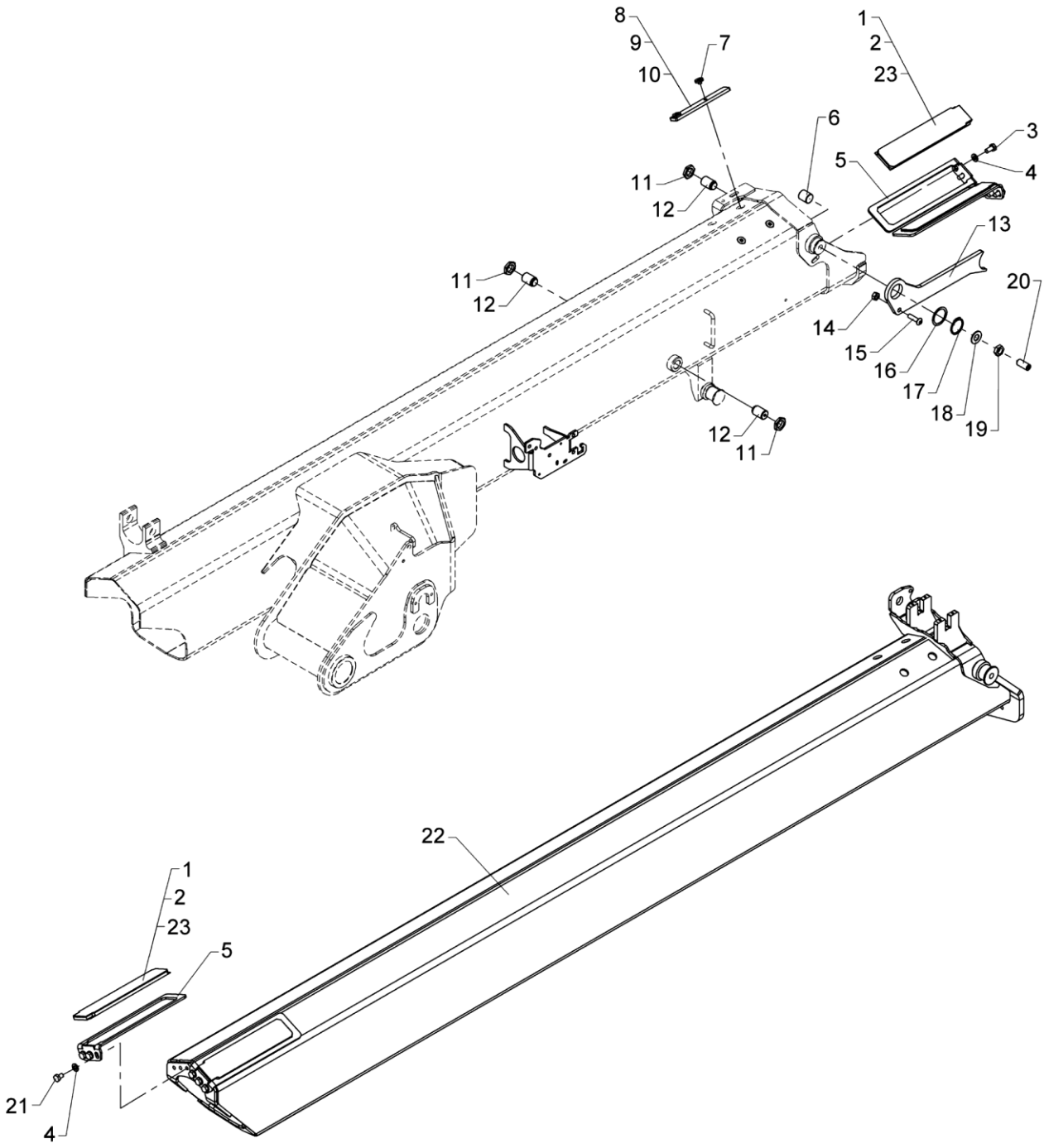

Jib extension I incl. fittings

Pos	Qty.	Part no.	Description	Remarks
1	4	63585	Slide block	8 mm
2	4	63586	Slide block	9 mm
3	6	31517	Set screw, stainless	M10 x 20
4	12	31177	Washer	10 mm
5	4	6300399	Bracket for slide block	
6	1	6340335	Guide	
7	4	31865	Torx screw M8 x 6 m	M8 x 6
8	2	6243004	Wear plate	6 mm
9	2	6342011	Wear plate, 5 mm	5 mm
10	2	6244064	Wear plate	7 mm
11	3	32364	Counter nut	M24 x 2
12	3	6304409	Guide	
13	1	6340319	Stop	
14	1	30858	Nut	M10
15	1	31772	Screw	M10 x 35
16	1	31102	Washer Ø40 x 50x 1,0	ø40 x 50 x 1,0
17	1	33121	Circlip	40U
18	1	31196	Washer	16 mm
19	1	30821	Counter nut	M16
20	1	30567	Pointed screw	MSP16 x 35
21	6	30152	Set screw	M10 x 14
22	1	6341321	Jib extension I	
23	4	63587	Slide block	10 mm

1500K, 1510K, 1720K, 1730K, 1820K, 1830K

Internal ref. 63 40 660

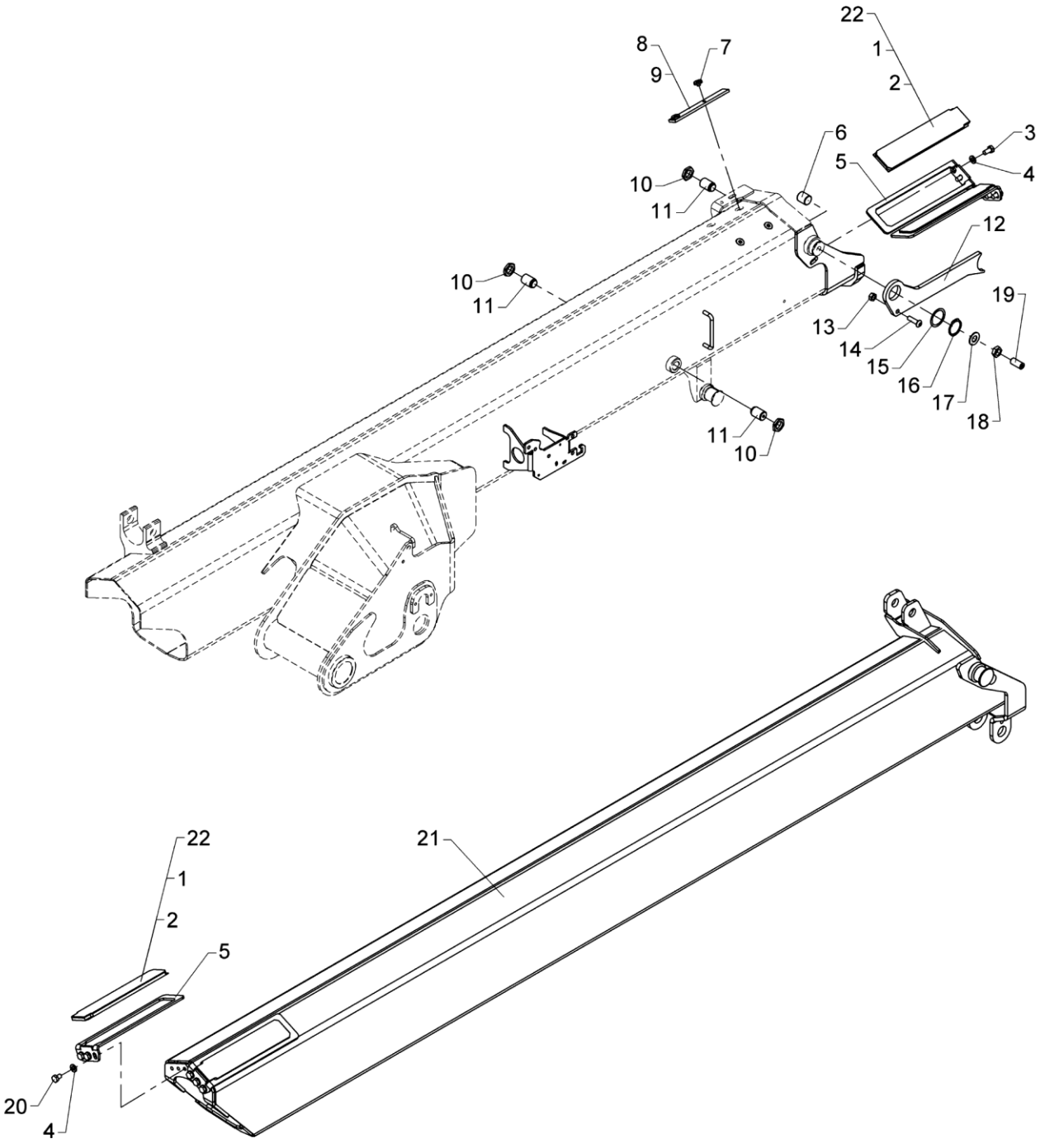

Jib extension K1 incl. fittings

Created 21-11-2008
Modified 24-10-2014

Pos	Qty.	Part no.	Description	Remarks
1	4	63585	Slide block	8 mm
2	4	63586	Slide block	9 mm
3	6	31517	Set screw, stainless	M10 x 20
4	12	31177	Washer	10 mm
5	4	6300399	Bracket for slide block	
6	1	6340335	Guide	
7	4	31865	Torx screw M8 x 6 m	M8 x 6
8	2	6243004	Wear plate	6 mm
9	2	6244064	Wear plate	7 mm
10	3	32364	Counter nut	M24 x 2
11	3	6304409	Guide	
12	1	6340319	Stop	
13	1	30858	Nut	M10
14	1	31772	Screw	M10 x 35
15	1	31102	Washer Ø40 x 50x 1,0	ø40 x 50 x 1,0
16	1	33121	Circlip	40U
17	1	31196	Washer	16 mm
18	1	30821	Counter nut	M16
19	1	30567	Pointed screw	MSP16 x 35
20	6	30152	Set screw	M10 x 14
21	1	6340661	Extension K1	
22	4	63587	Slide block	10 mm

1500K, 1510K, 1720K, 1730K, 1820K, 1830K

Internal ref. 63 40 340

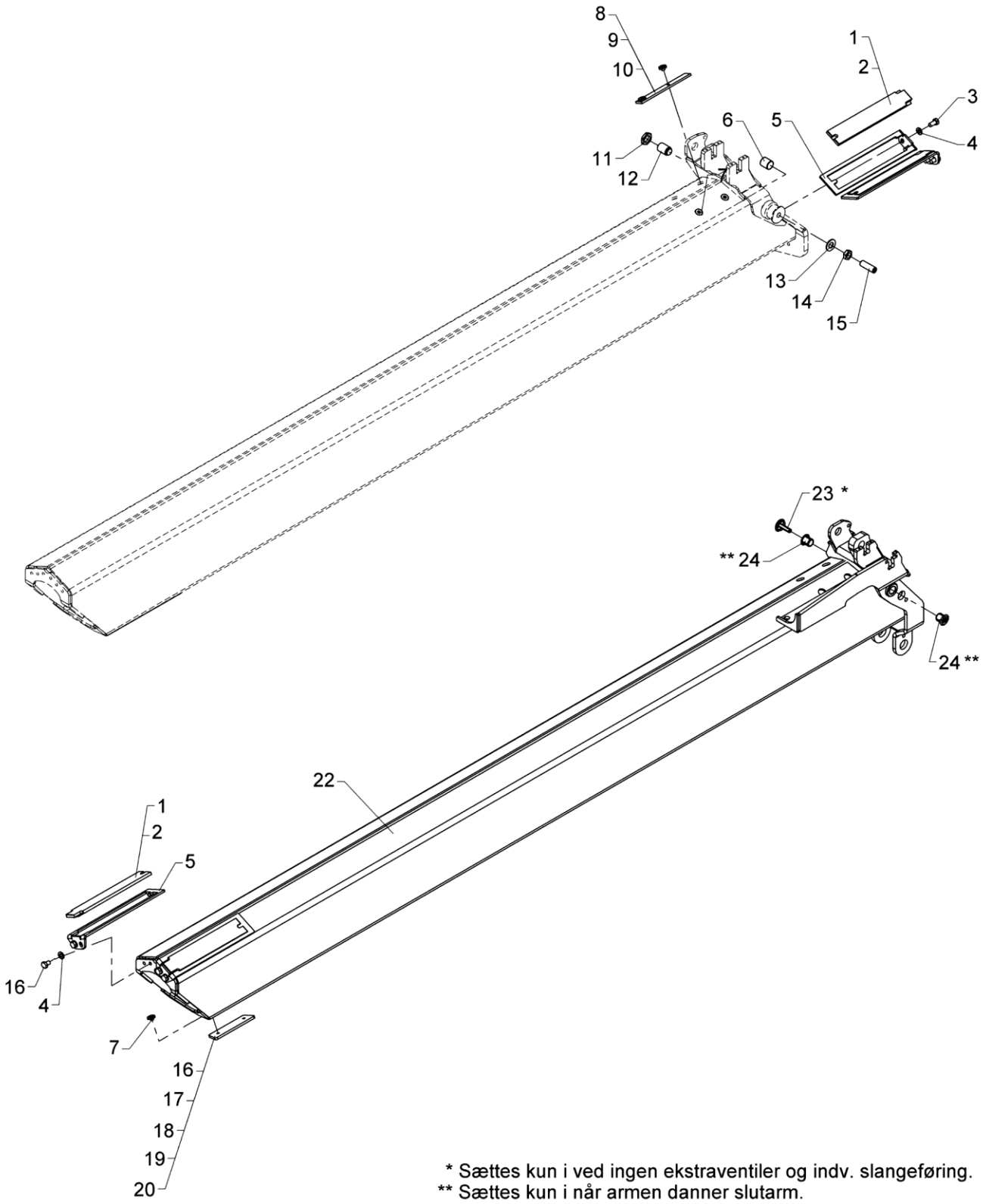

* Sættes kun i ved ingen ekstraventiler og indv. slangeføring.
** Sættes kun i når armen danner slutarm.

Jib extension K2 incl. fittings

Created 23-05-2006
Modified 07-12-2017

Pos	Qty.	Part no.	Description	Remarks
		6340340	Jib extension K2 incl.fittings	
1	4	63588	Slide block	8 mm
2	4	63589	Slide block	9 mm
3	4	31517	Set screw, stainless	M10 x 20
4	8	31177	Washer	10 mm
5	4	6300368	Bracket for slide block	
6	1	6340335	Guide	
7	8	31865	Torx screw M8 x 6 m	M8 x 6
8	2	6243004	Wear plate	6 mm
9	2	6244064	Wear plate	7 mm
10	2	6342011	Wear plate, 5 mm	5 mm
11	1	32364	Counter nut	M24 x 2
12	1	6304409	Guide	
13	1	31196	Washer	16 mm
14	1	30821	Counter nut	M16
15	1	32495	Pointed screw	MSP16 x 50
16	4	30152	Set screw	M10 x 14
17	2	6340396	Spacer, 1.5mm	1,5 mm
18	2	6340416	Spacer	5 mm
19	2	6340377	Spacer	6 mm
20	2	6340378	Spacer	7 mm
21	2	6340379	Spacer	8 mm
22	1	6340341	Extension II	
23	1	63568	Plastic plug with logo	
24	2	63487	Plug	

1500K, 1510K, 1720K, 1730K, 1820K, 1830K

63 43 550
Internal ref. 63 40 360

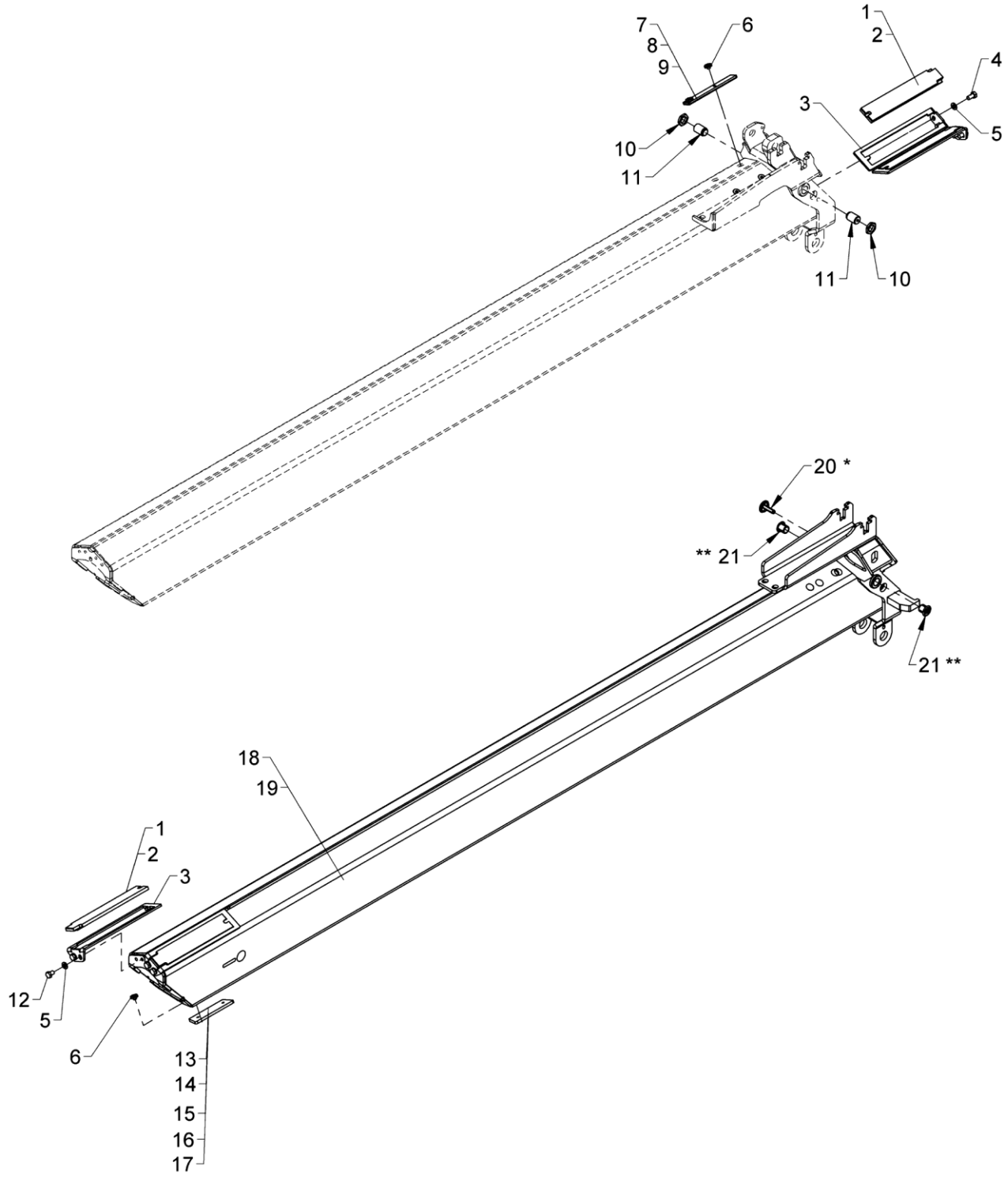

* Sættes kun i ved ingen ekstraventiler og indv. slangeføring.
** Sættes kun i når armen danner slutarm.

Jib extension K3 incl. fittings

Created 23-06-2006
Modified 28-12-2017

Pos	Qty.	Part no.	Description	Remarks
		6340360	Jib extension K3 incl.fittings	
		6343550	Jib extension K3i + fittings	
1	4	63588	Slide block	8 mm
2	4	63589	Slide block	9 mm
3	4	6300368	Bracket for slide block	
4	4	31517	Set screw, stainless	M10 x 20
5	8	31177	Washer	10 mm
6	8	31865	Torx screw M8 x 6 m	M8 x 6
7	2	6243004	Wear plate	6 mm
8	2	6342011	Wear plate, 5 mm	5 mm
9	2	6244064	Wear plate	7 mm
10	2	32364	Counter nut	M24 x 2
11	2	6304409	Guide	
12	4	30152	Set screw	M10 x 14
13	2	6340396	Spacer, 1.5mm	1,5 mm
14	2	6340416	Spacer	5 mm
15	2	6340377	Spacer	6 mm
16	2	6340378	Spacer	7 mm
17	2	6340379	Spacer	8 mm
18	1	6340361	Extension III	
19	1	6341361	Jib extension III-i	
20	1	63568	Plastic plug with logo	
21	2	63487	Plug	

1500K, 1510K, 1720K, 1730K, 1820K, 1830K

Internal ref. 63 40 380

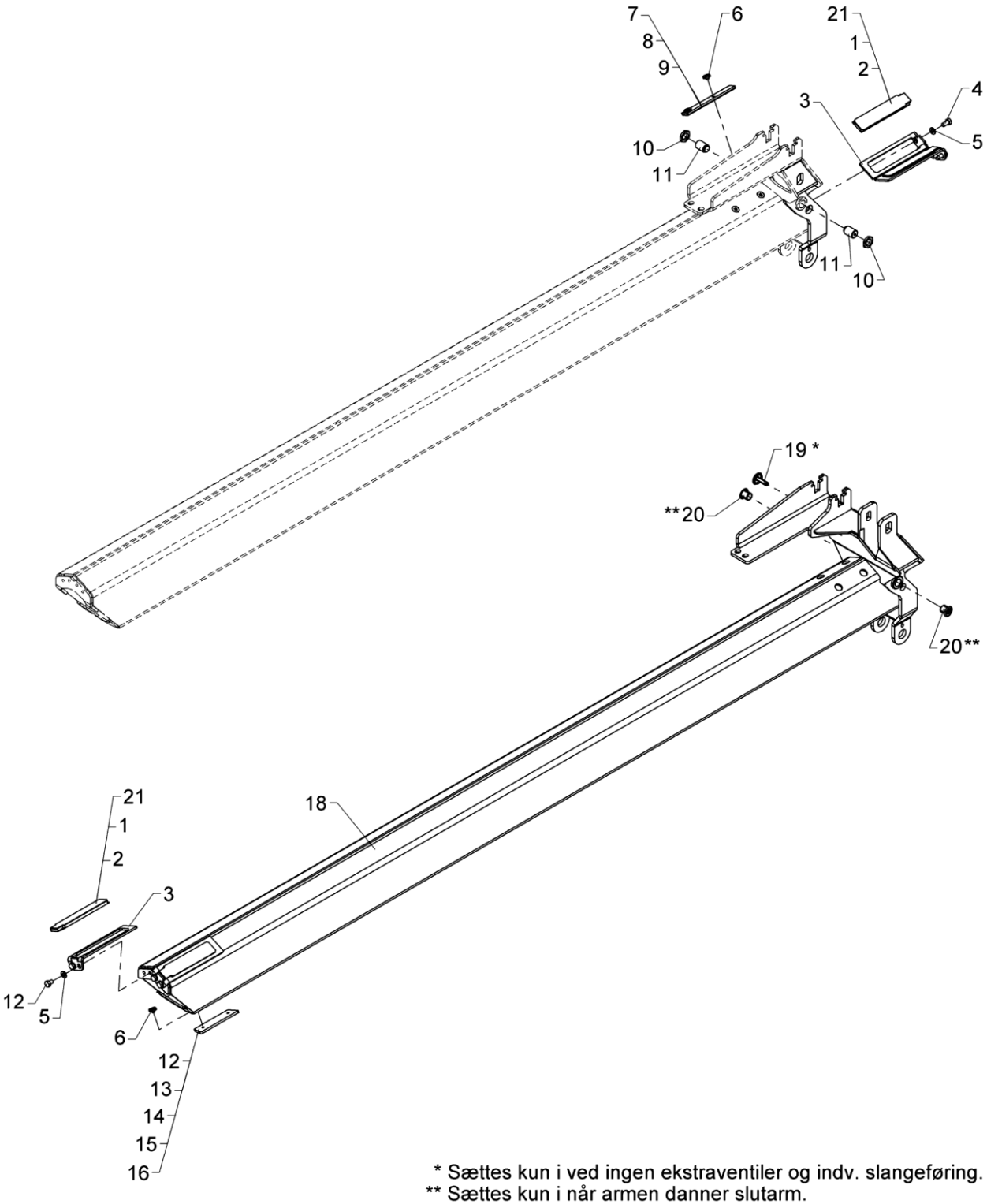

* Sættes kun i ved ingen ekstraventiler og indv. slangeføring.
** Sættes kun i når armen danner slutarm.

Jib extension K4 incl. fittings

Created 24-05-2006
Modified 29-12-2017

Pos	Qty.	Part no.	Description	Remarks
		6340380	Jib extension K4 incl.fittings	
1	4	63518	Slide block	8 mm
2	4	63762	Slide block	6299074, 9 mm
3	4	6340441	Bracket for slide block	
4	4	31517	Set screw, stainless	M10 x 20
5	8	31177	Washer	10 mm
6	8	31865	Torx screw M8 x 6 m	M8 x 6
7	2	6243004	Wear plate	6 mm
8	2	6342011	Wear plate, 5 mm	5 mm
9	2	6244064	Wear plate	7 mm
10	2	32364	Counter nut	M24 x 2
11	2	6304409	Guide	
12	4	30152	Set screw	M10 x 14
13	2	6340396	Spacer, 1.5mm	1,5 mm
14	2	6340416	Spacer	5 mm
15	2	6340377	Spacer	6 mm
16	2	6340378	Spacer	7 mm
17	2	6340379	Spacer	8 mm
18	1	6340381	Extension IV	
19	1	63568	Plastic plug with logo	
20	2	63487	Plug	
21	4	63593	Slide block	10 mm

1500K, 1510K, 1720K, 1730K, 1820K, 1830K

Internal ref. 63 40 400

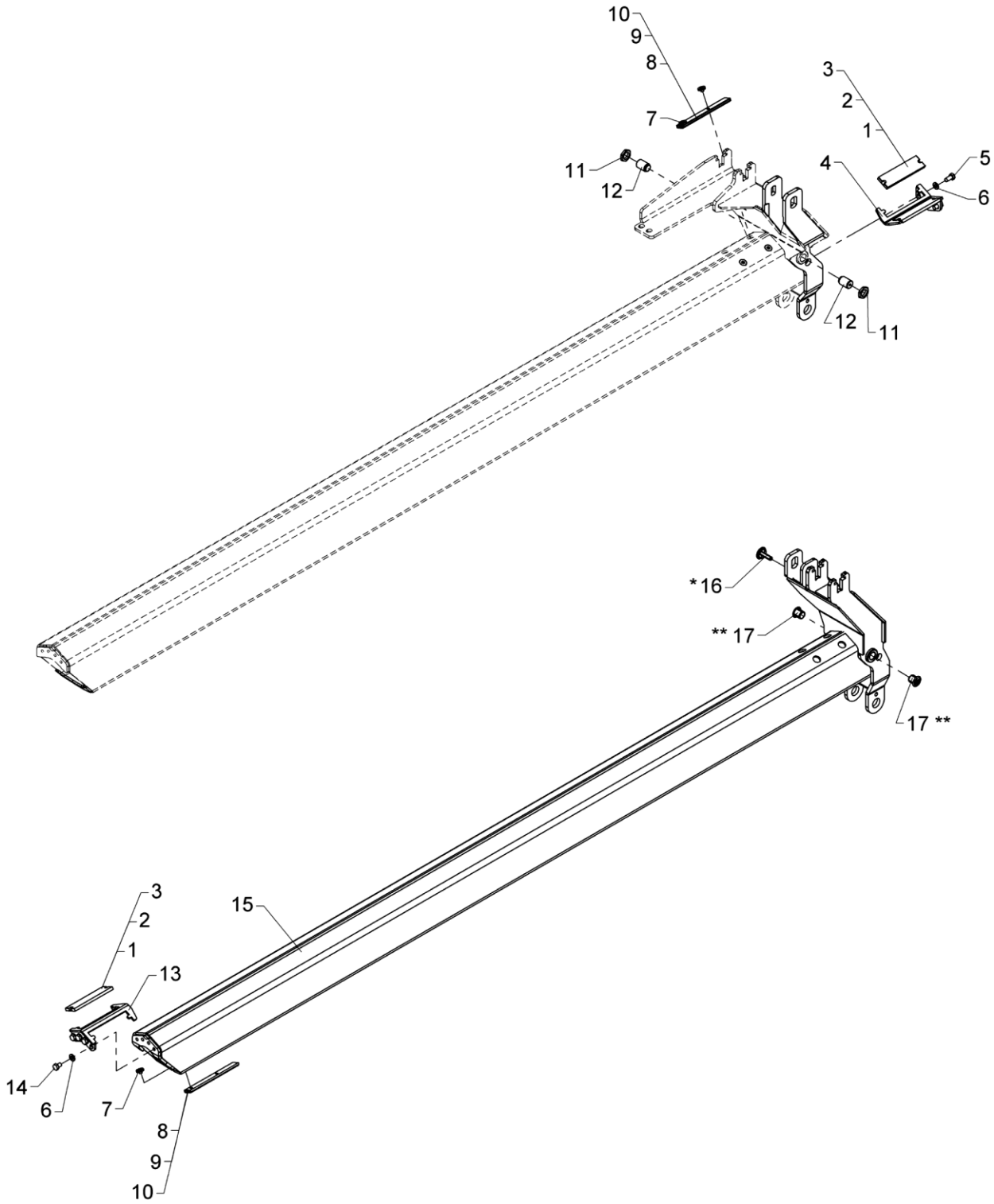

* Sættes kun i ved ingen ekstraventiler og indv. slangeføring.
** Sættes kun i når armen danner slutarm.

Jib extension K5 incl. fittings

Pos	Qty.	Part no.	Description	Remarks
		6340400	Jib extension K5 incl.fittings	
1	4	63573	Slide block	8 mm
2	4	63574	Slide block	9 mm
3	4	63575	Side block	10 mm
4	1	6340442	Bracket for slide block	
5	3	31517	Set screw, stainless	M10 x 20
6	7	31177	Washer	10 mm
7	8	31865	Torx screw M8 x 6 m	M8 x 6
8	4	6243004	Wear plate	6 mm
9	4	6342011	Wear plate, 5 mm	5 mm
10	4	6244064	Wear plate	7 mm
11	2	32364	Counter nut	M24 x 2
12	2	6304409	Guide	
13	1	6340445	Bracket for slide block	
14	4	30152	Set screw	M10 x 14
15	1	6340401	Extension V	
16	1	63568	Plastic plug with logo	
17	2	63487	Plug	

1500K, 1510K, 1720K, 1730K, 1820K, 1830K

Internal ref. 63 40 420

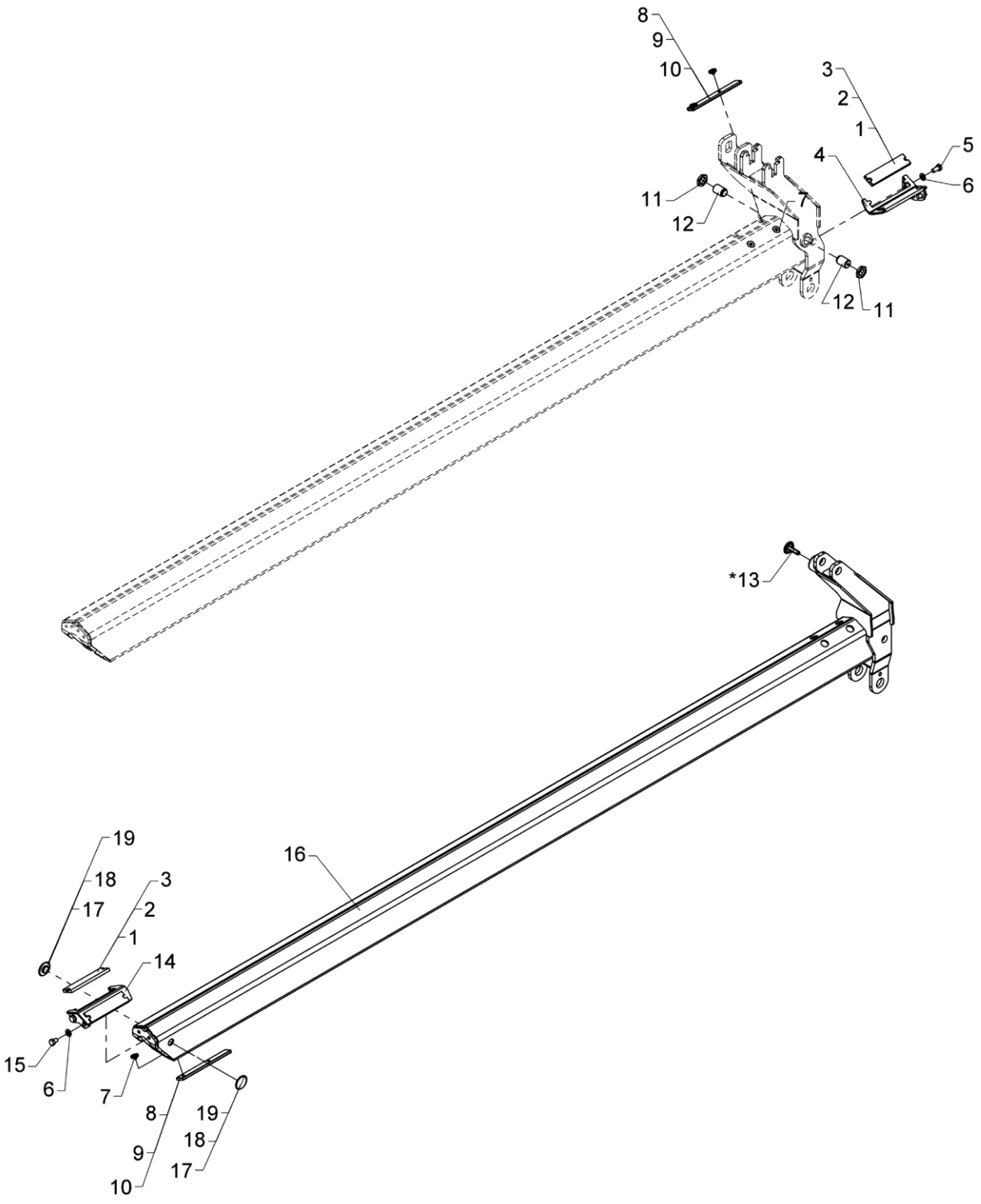

* Sættes kun i ved ingen ekstraventiler og indv. slangeføring.

Jib extension K6 incl. fittings

534 03 150

From loader 1060001
To loader

Created 18-05-2006
Modified 02-01-2018

Pos	Qty.	Part no.	Description	Remarks
1	4	63570	Slide block	8 mm
2	4	63571	Slide block	9 mm
3	4	63572	Slide block	10 mm
4	1	6340447	Bracket for slide block	
5	3	31517	Set screw, stainless	M10 x 20
6	5	31177	Washer	10 mm
7	8	31865	Torx screw M8 x 6 m	M8 x 6
8	4	6243004	Wear plate	6 mm
9	4	6244064	Wear plate	7 mm
10	4	6342011	Wear plate, 5 mm	5 mm
11	2	32364	Counter nut	M24 x 2
12	2	6304409	Guide	
13	1	63568	Plastic plug with logo	
14	1	6340451	Bracket for slide block	
15	2	30152	Set screw	M10 x 14
16	1	6340421	Extension VI	
17	2	6394632	Guide, 5 + 1.75 mm	5 + 1,75mm
18	2	6394631	Guide, 5 + 2.5 mm	5 + 2,5mm
19	2	6394636	Guide	5 + 1mm

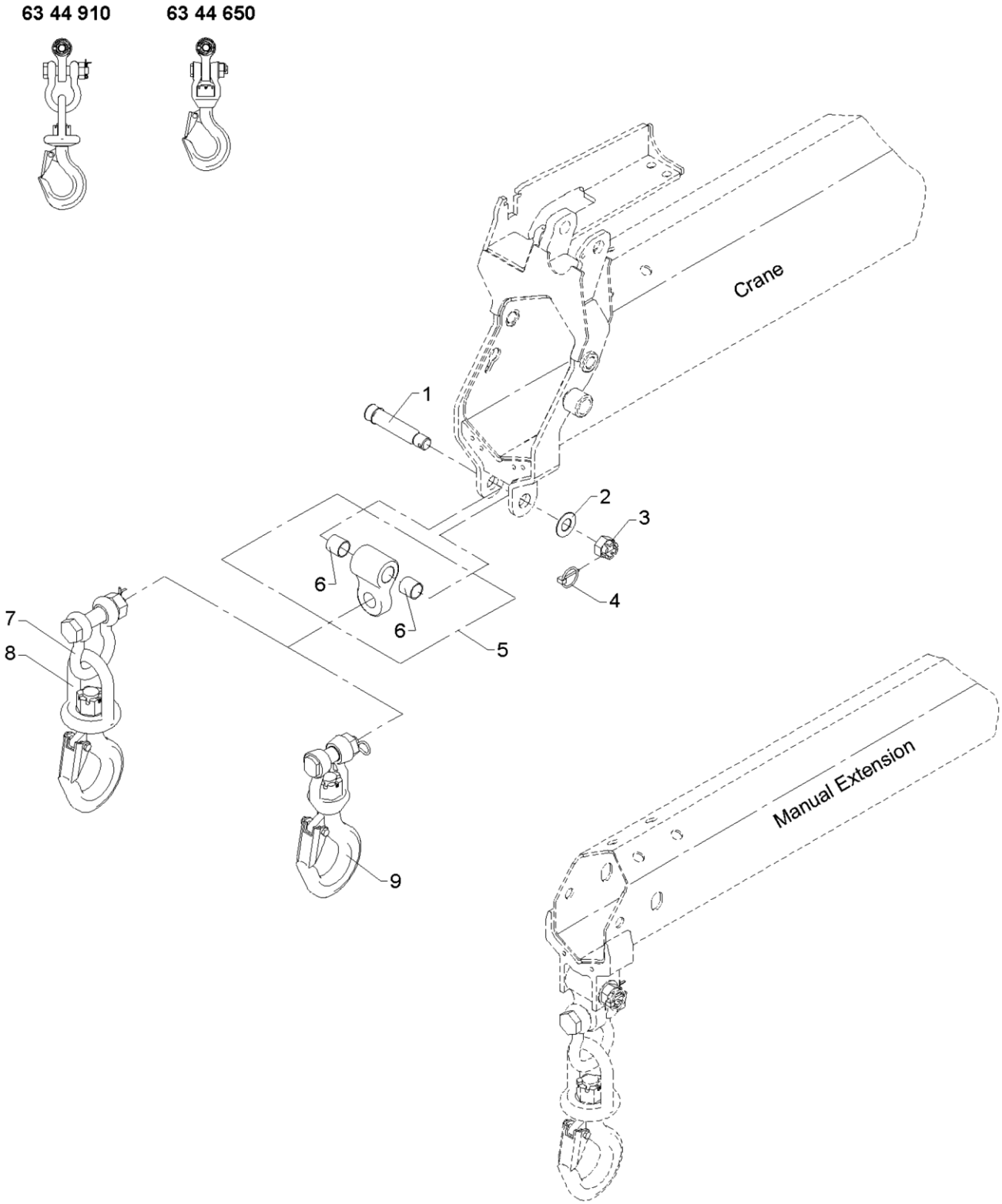
63 44 910
63 44 650
Crane
1
2
3
4
5
6
6
7
8
9
Manual Extension

Obsolete

Hook suspension

534 03 290

From loader 1060001
To loader 1061307

Created 03-06-2009
Modified 20-12-2011

Pos	Qty.	Part no.	Description	Remarks
		6344910	Hook suspension	
		6344650	Hook suspension	Serie 2020K, 2420K
1	1	6304458	Pin for suspension	
2	1	31128	Washer	24 mm
3	1	30837	Nut	M24
4	1	31967	Ring split	ø4,5 x 40
5	1	6292853	Hook suspension	
6	2	23945	Composite bearing	ø28/32 x 30
7	1	62118	Shackle	
8	1	63282	Hook, SWL 8 t. black	
9	1	62100	Hook with suspension	Serie 2020K, 2420K

1500K, 1510K, 1720K, 1730K, 1820K, 1830K

Internal ref. 63 44 910

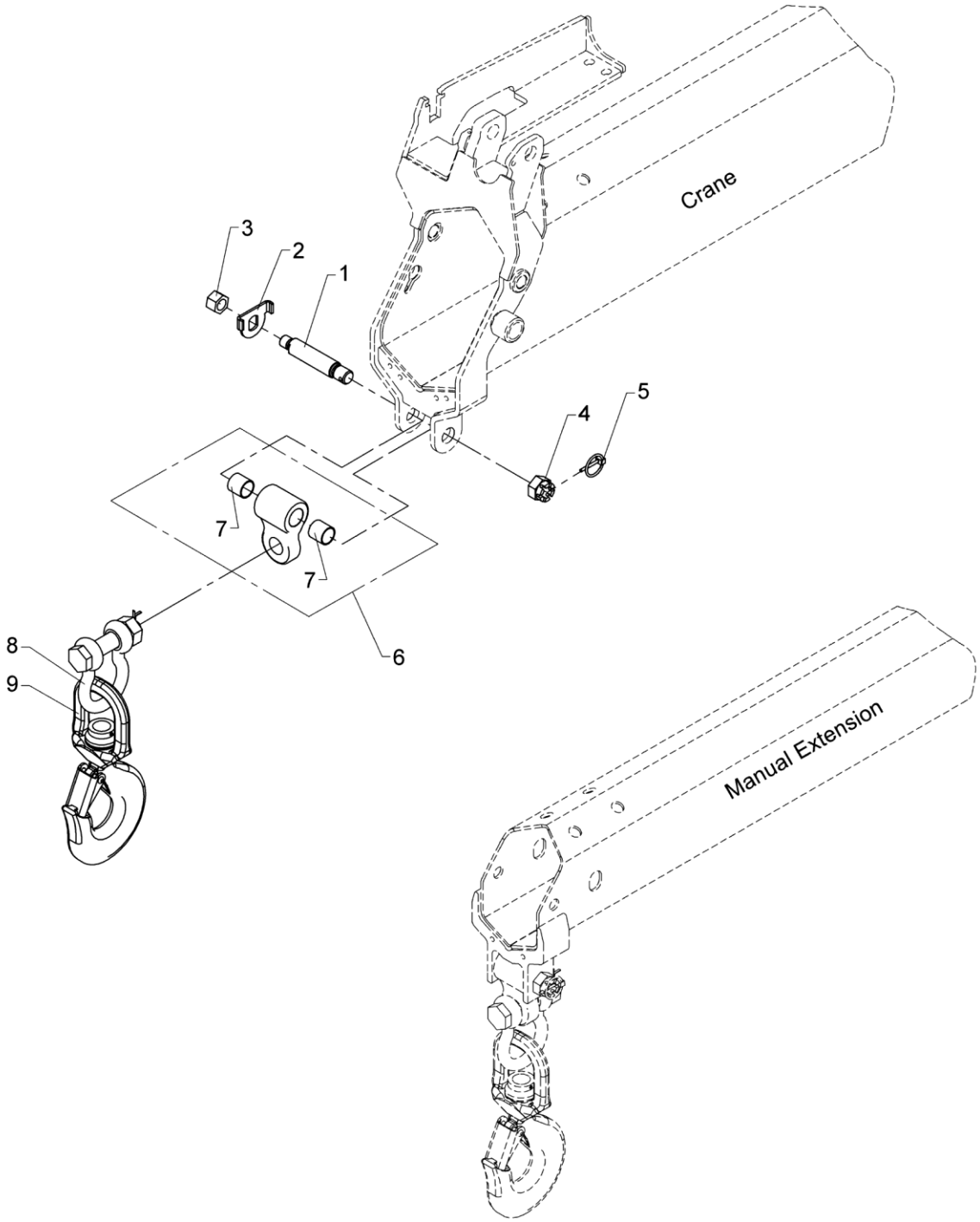

Obsolete

Hook suspension

534 03 290 A

From loader 1060001
To loader 1062039

Created 19-02-2015
Modified 25-10-2016

Pos	Qty.	Part no.	Description	Remarks
1	1	6662114	Pin	
2	1	6662104	Plate	
3	1	30894	Lock nut	M20
4	1	30837	Nut	M24
5	1	31967	Ring split	ø4,5 x 40
6	1	6292853	Hook suspension	
7	2	23945	Composite bearing	ø28/32 x 30
8	1	62118	Shackle	
9	1	63292	Hook, 8 t incl. bearing	

1500K, 1510K, 1720K, 1730K, 1820K, 1830K

63 46 900
Internal ref. 63 44 910

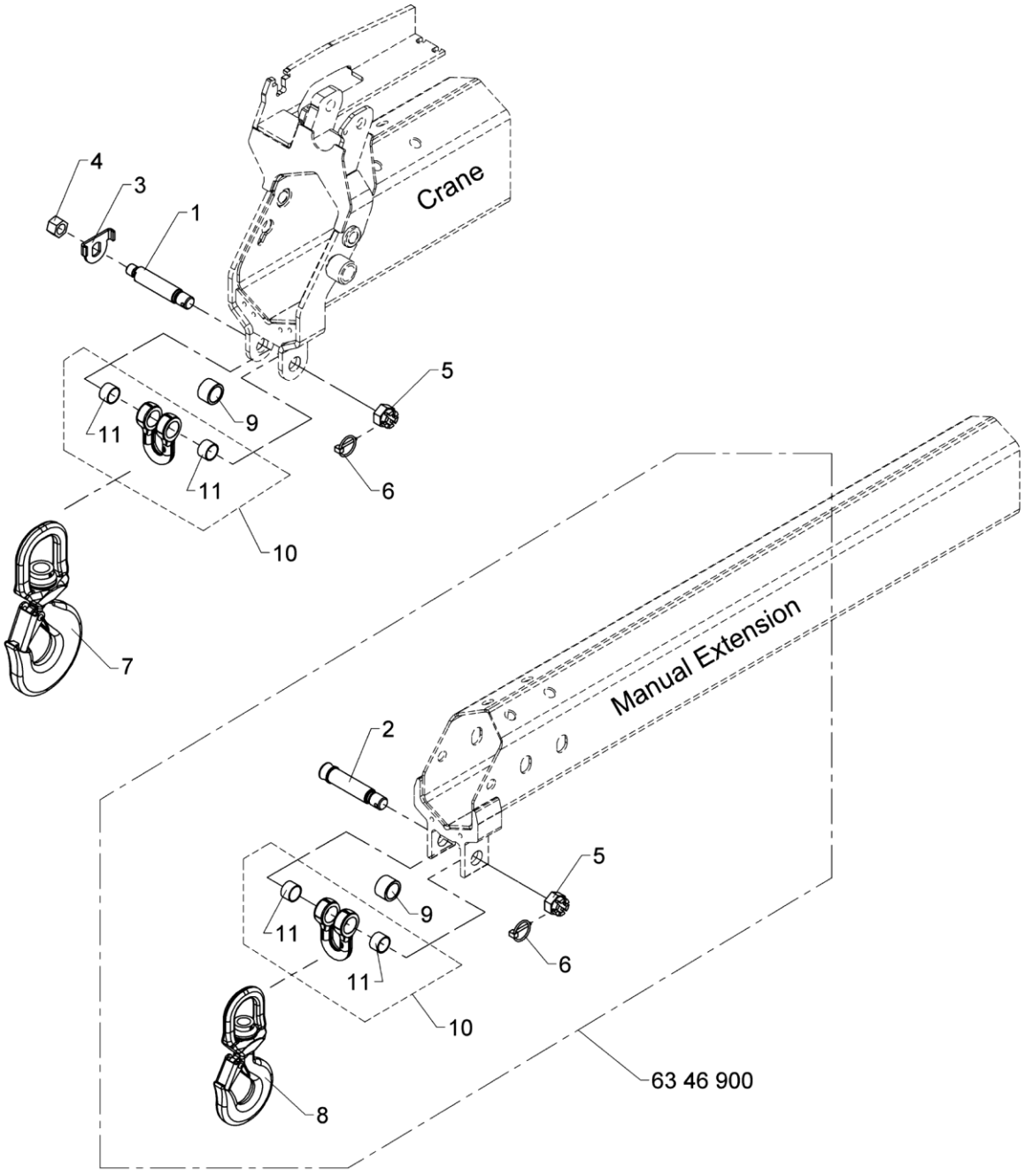

Hook suspension

Pos	Qty.	Part no.	Description	Remarks
		6344910	Hook suspension	
		6346900		
1	1	6662114	Pin	Til 6344910
2	1	6304458	Pin for suspension	Til 6346900
3	1	6662104	Plate	
4	1	30894	Lock nut	M20
5	2	30837	Nut	M24
6	2	31967	Ring split	ø4,5 x 40
7	1	63292	Hook, 8 t incl. bearing	Til 6344910
8	1	62169	Hook with ball bearing	Til 6346900
9	2	68094	Spacer, ø40 / 30 x 26	
10	2	6395541	Shackle 8 t	
11	4	23426	Bushing	ø28/32 x 20

1500K, 1510K, 1720K, 1730K, 1820K, 1830K

Internal ref. 63 40 540

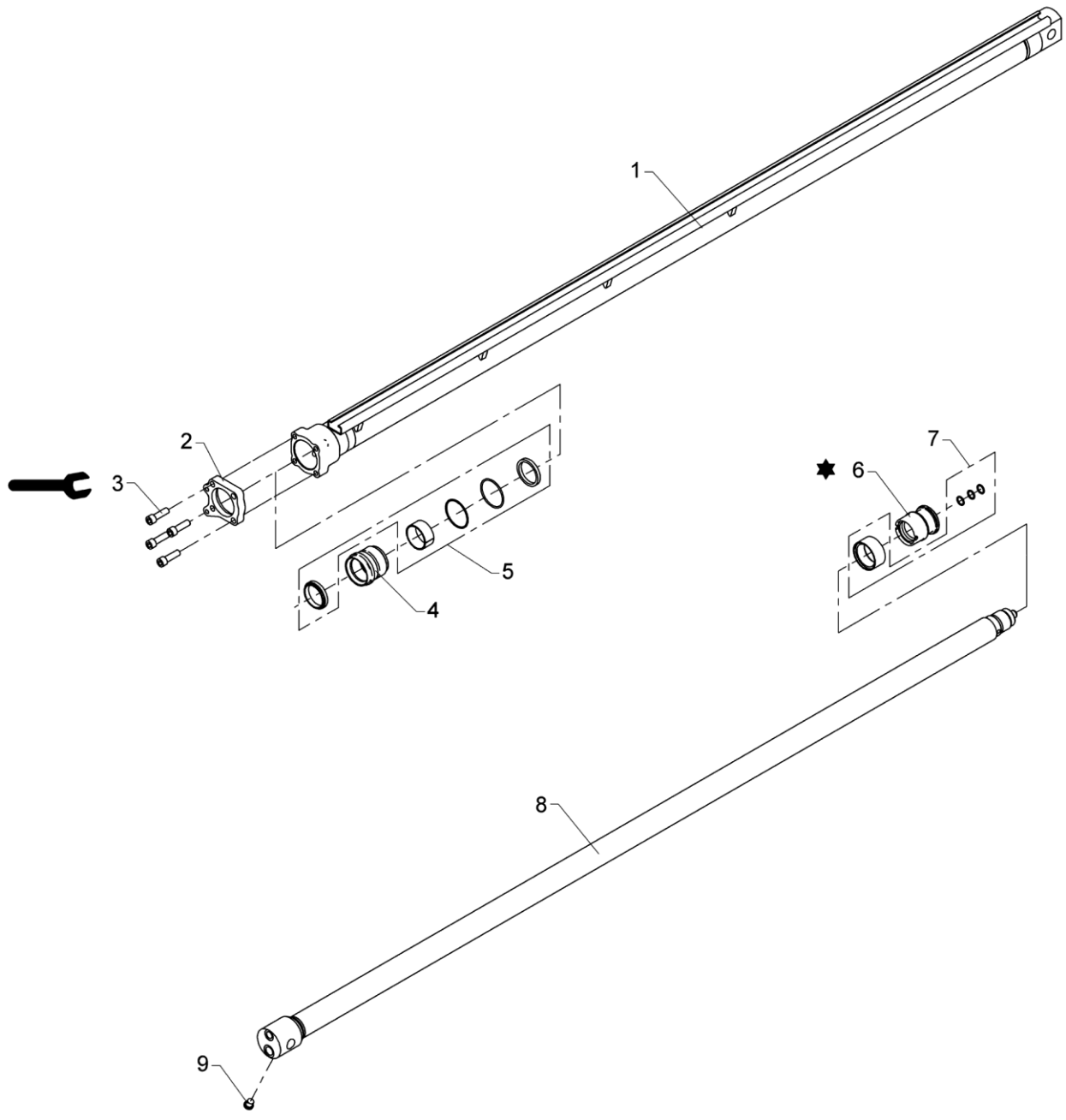

Extension cylinder I (C63/50 x 1935)

Pos	Qty.	Part no.	Description	Remarks
1	1	6340545	Cylinder pipe	
2	1	6340553	Mounting flange	
3	4	30475	Screw	MC12 x 40
4	1	6340551	Guide	
5	1	6894130	Seal kit f. guide	
6	1	6340552	Piston	
7	1	6894120	Seal kit f. piston	
8	1	6340541	Piston rod	
9	1	25197	Plug	VS-R-1/4 WD

1500K, 1510K, 1720K, 1730K, 1820K, 1830K

Internal ref. 63 40 560

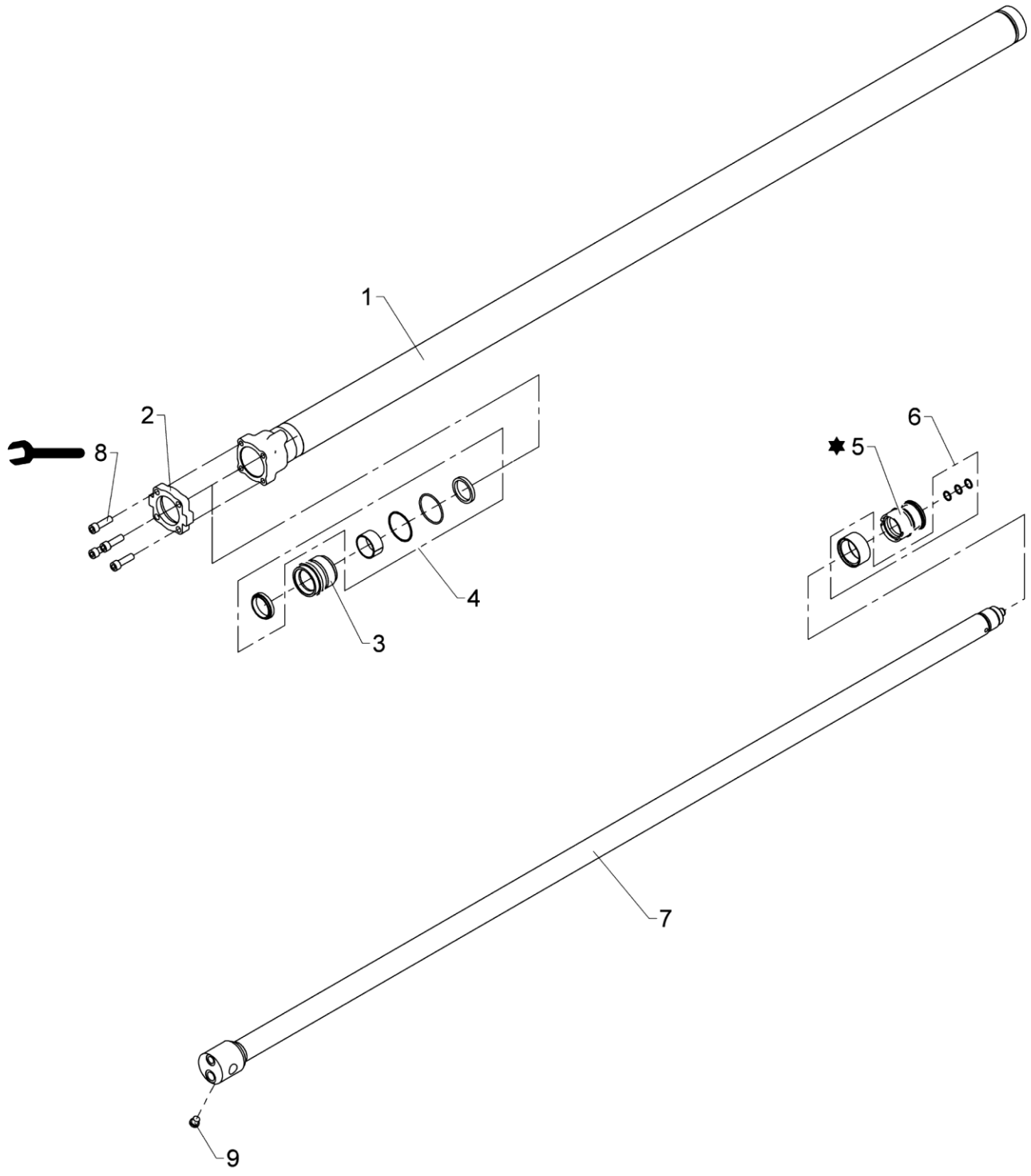

Extension cylinder II (C63/45 x 2000)

Created 09-06-2009
Modified 18-06-2014

Pos	Qty.	Part no.	Description	Remarks
1	1	6340565	Cylinder pipe	
2	1	6340567	Mounting flange	
3	1	6340554	Guide	
4	1	6894140	Seal kit f. guide	
5	1	6340552	Piston	
6	1	6894120	Seal kit f. piston	
7	1	6340561	Piston rod	
8	4	30475	Screw	MC12 x 40
9	1	25197	Plug	VS-R-1/4 WD

1500K, 1510K, 1720K, 1730K, 1820K, 1830K

Internal ref. 63 40 570

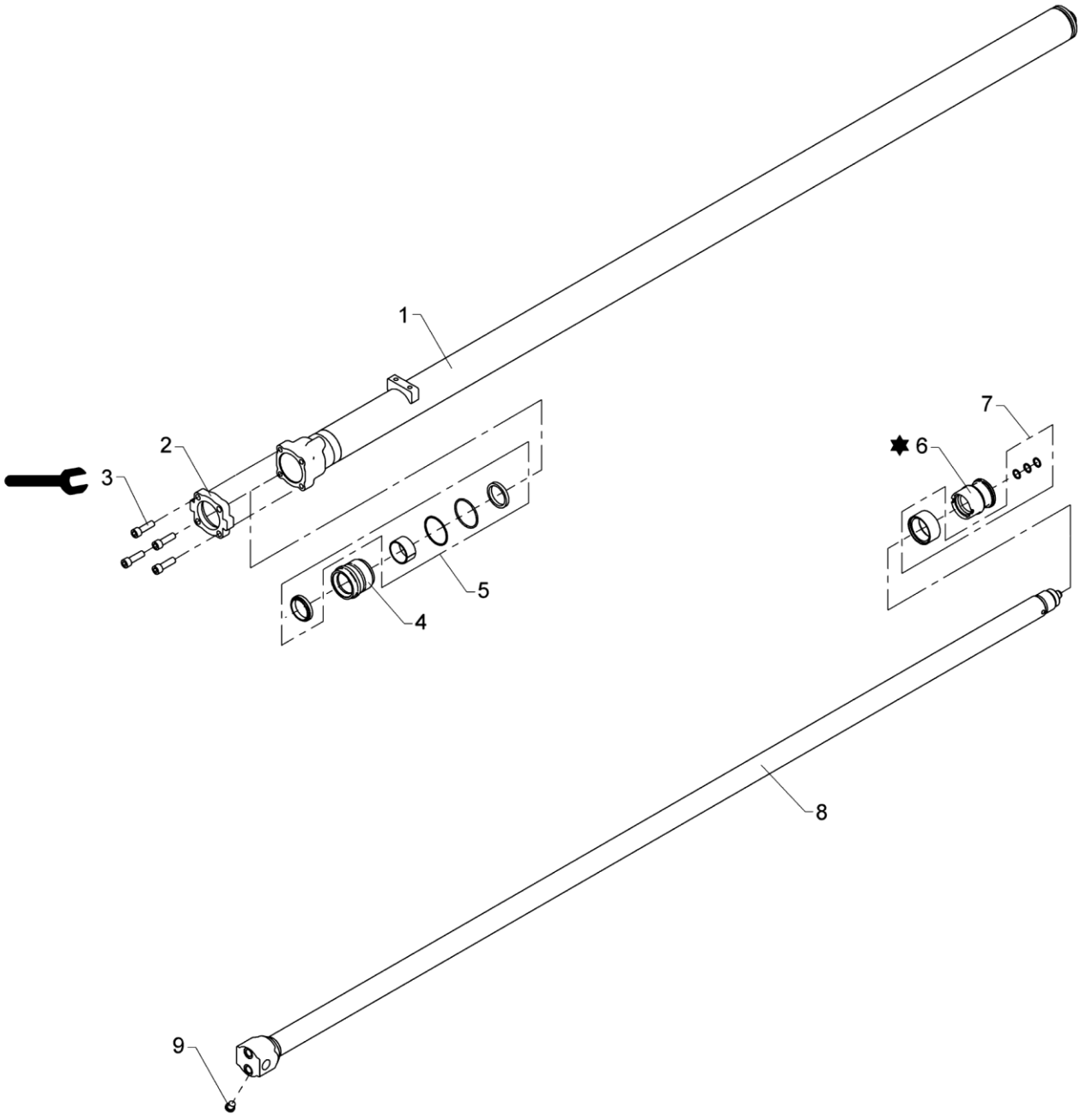

140 Nm

Loctite 243

Extension cylinder III (C63/45 x 2100)

534 03 320

From loader 1060001
To loader

Created 09-06-2009
Modified 18-06-2014

Pos	Qty.	Part no.	Description	Remarks
1	1	6340575	Cylinder pipe	
2	1	6340567	Mounting flange	
3	4	30475	Screw	MC12 x 40
4	1	6340554	Guide	
5	1	6894140	Seal kit f. guide	
6	1	6340552	Piston	
7	1	6894120	Seal kit f. piston	
8	1	6340571	Piston rod	
9	1	25197	Plug	VS-R-1/4 WD

1500K, 1510K, 1720K, 1730K, 1820K, 1830K

Internal ref. 63 40 580

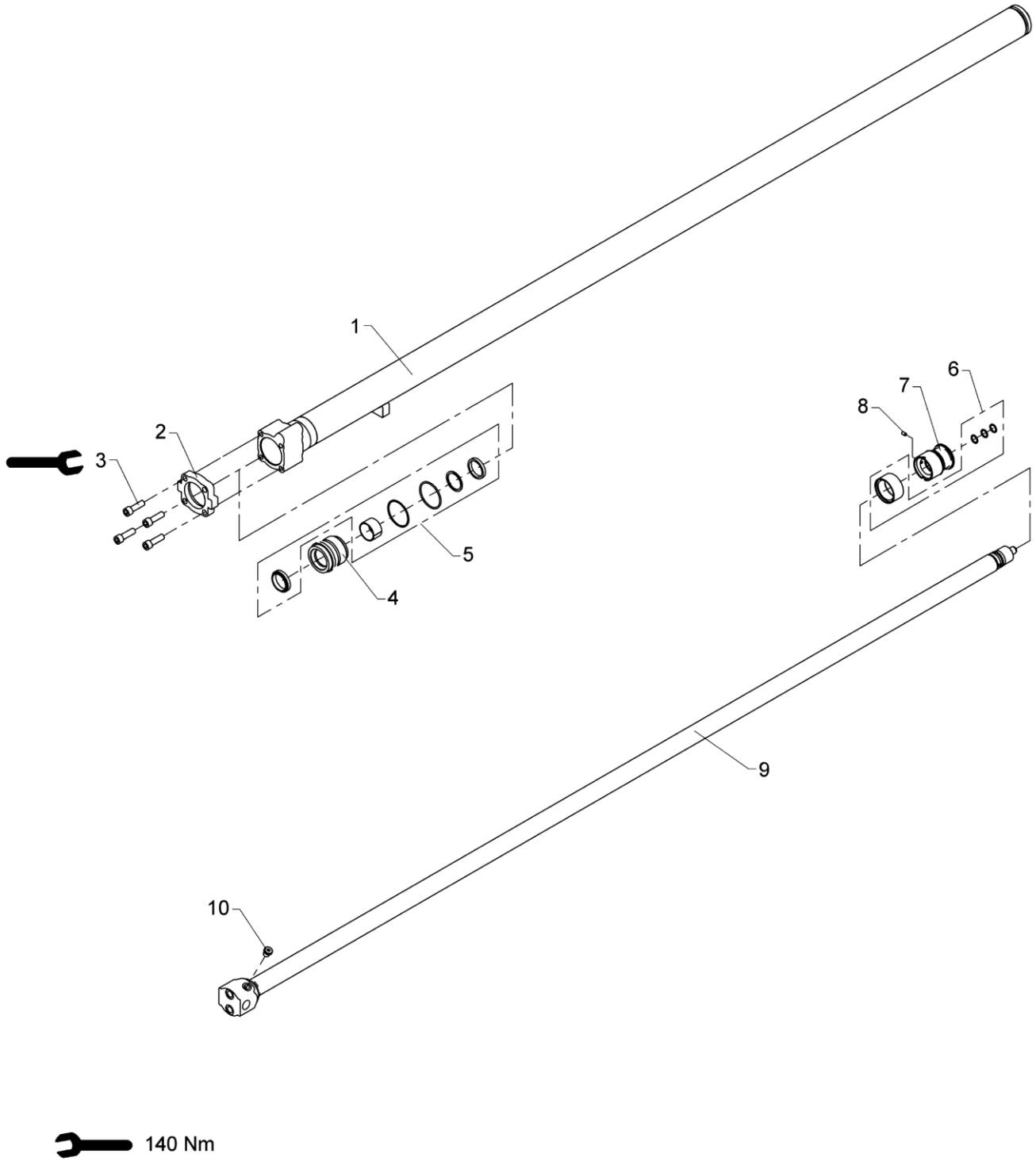

Obsolete

Extension cylinder IV (C60/40 x 2200)

534 03 330

From loader 1060001
To loader

Created 09-06-2009
Modified

Pos	Qty.	Part no.	Description	Remarks
1	1	6340585	Cylinder pipe	
2	1	6340567	Mounting flange	
3	4	30475	Screw	MC12 x 40
4	1	6340555	Guide	
5	1	6894150	Seal kit, guide	
6	1	6893790	Seal kit, piston	
7	1	6306741	Piston	
8	1	30556	Pointed screw	MSP6 x 10
9	1	6340581	Piston rod	
10	1	25197	Plug	VS-R-1/4 WD

1500K, 1510K, 1720K, 1730K, 1820K, 1830K

Internal ref. 63 40 580

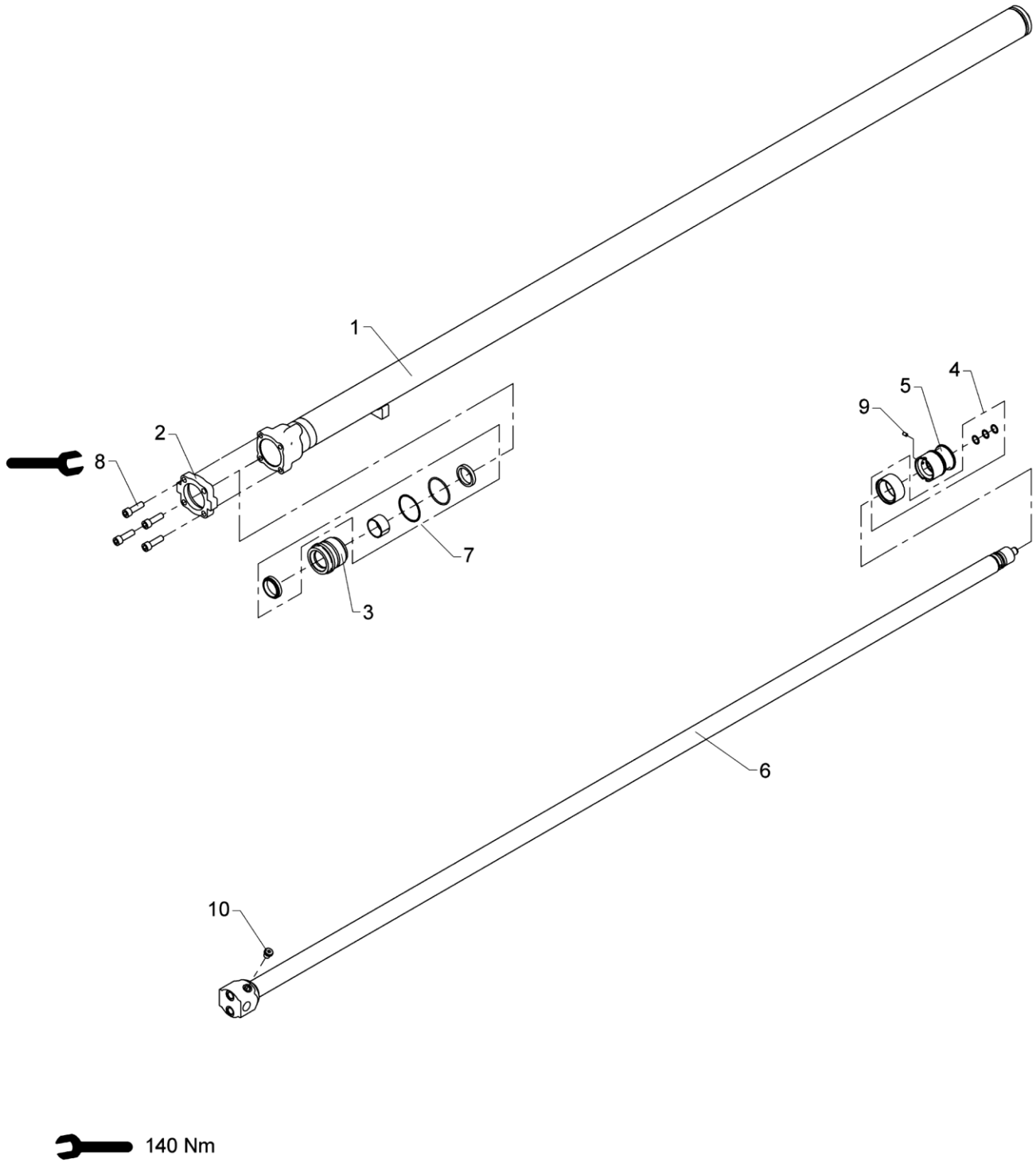

Extension cylinder IV (C60/40 x 2200)

534 03 330 A

From loader 1060001
To loader

Created 12-06-2014
Modified

Pos	Qty.	Part no.	Description	Remarks
1	1	6340585	Cylinder pipe	
2	1	6340567	Mounting flange	
3	1	6340556	Guide (C60/40)	
4	1	6893790	Seal kit, piston	
5	1	6306741	Piston	
6	1	6340581	Piston rod	
7	1	6894830	Seal kit for guide (C60)	
8	4	30475	Screw	MC12 x 40
9	1	30556	Pointed screw	MSP6 x 10
10	1	25197	Plug	VS-R-1/4 WD

1500K, 1510K, 1720K, 1730K, 1820K, 1830K

Internal ref. 63 40 590

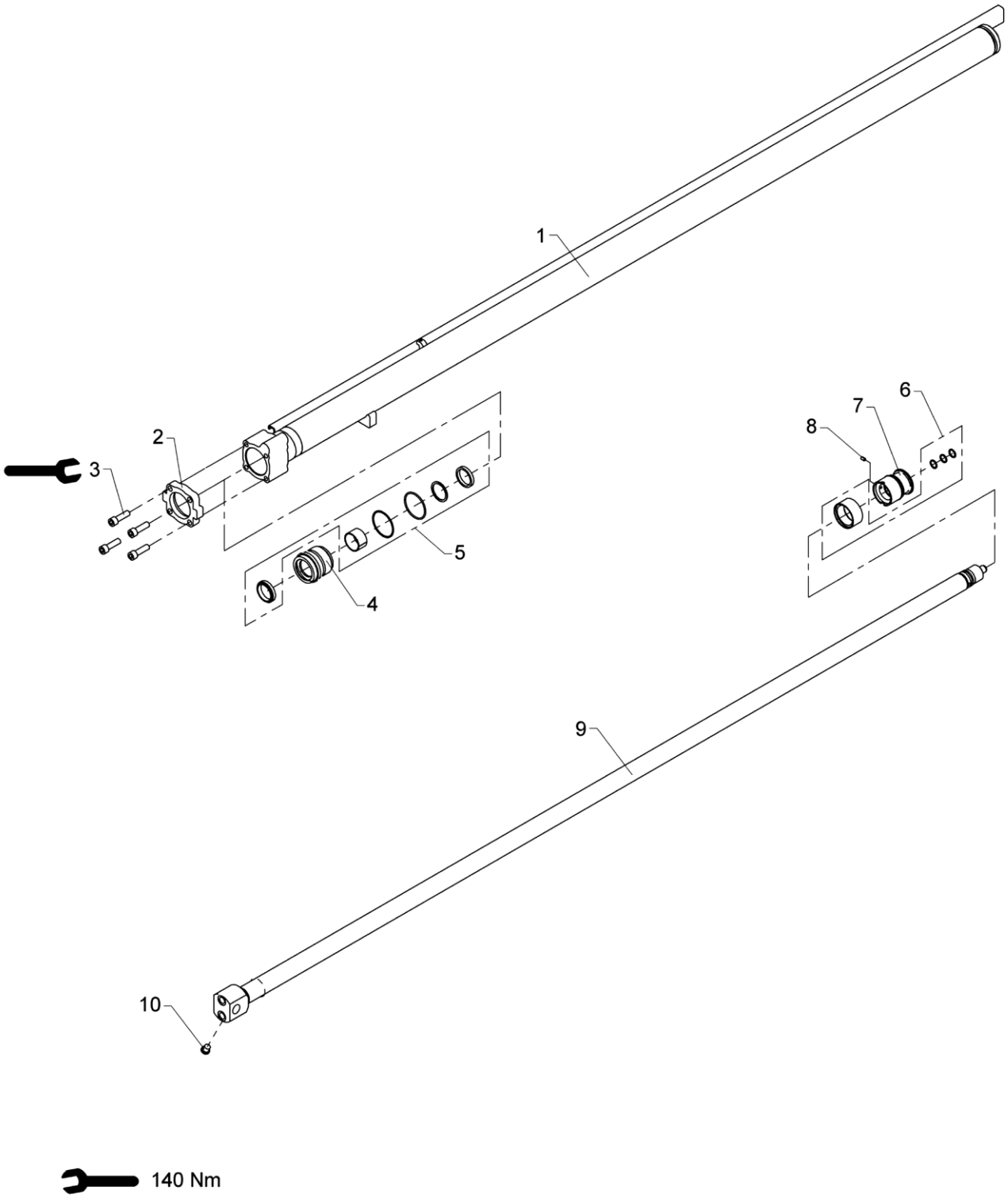

Obsolete

Extension cylinder V (C60/40 x 2150)

534 03 340

From loader 1060001
To loader

Created 09-06-2009
Modified

Pos	Qty.	Part no.	Description	Remarks
1	1	6340595	Cylinder pipe	
2	1	6340567	Mounting flange	
3	4	30475	Screw	MC12 x 40
4	1	6340555	Guide	
5	1	6894150	Seal kit, guide	
6	1	6893790	Seal kit, piston	
7	1	6306741	Piston	
8	1	30556	Pointed screw	MSP6 x 10
9	1	6340591	Piston rod	
10	1	25197	Plug	VS-R-1/4 WD

1500K, 1510K, 1720K, 1730K, 1820K, 1830K

Internal ref. 63 40 590

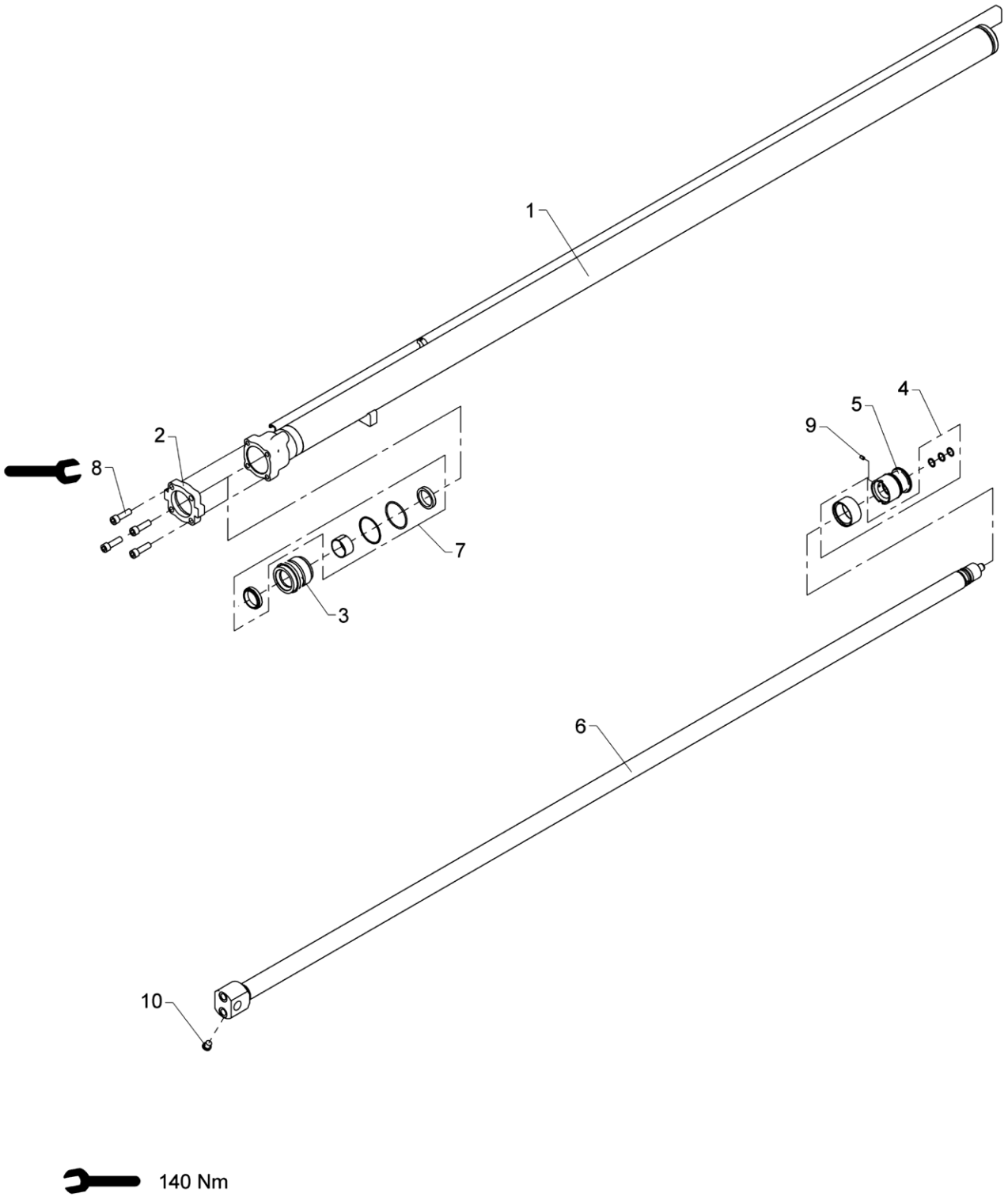

Extension cylinder V (C60/40 x 2150)

Pos	Qty.	Part no.	Description	Remarks
1	1	6340595	Cylinder pipe	
2	1	6340567	Mounting flange	
3	1	6340556	Guide (C60/40)	
4	1	6893790	Seal kit, piston	
5	1	6306741	Piston	
6	1	6340591	Piston rod	
7	1	6894830	Seal kit for guide (C60)	
8	4	30475	Screw	MC12 x 40
9	1	30556	Pointed screw	MSP6 x 10
10	1	25197	Plug	VS-R-1/4 WD

1500K, 1510K, 1720K, 1730K, 1820K, 1830K

Internal ref. 63 40 600

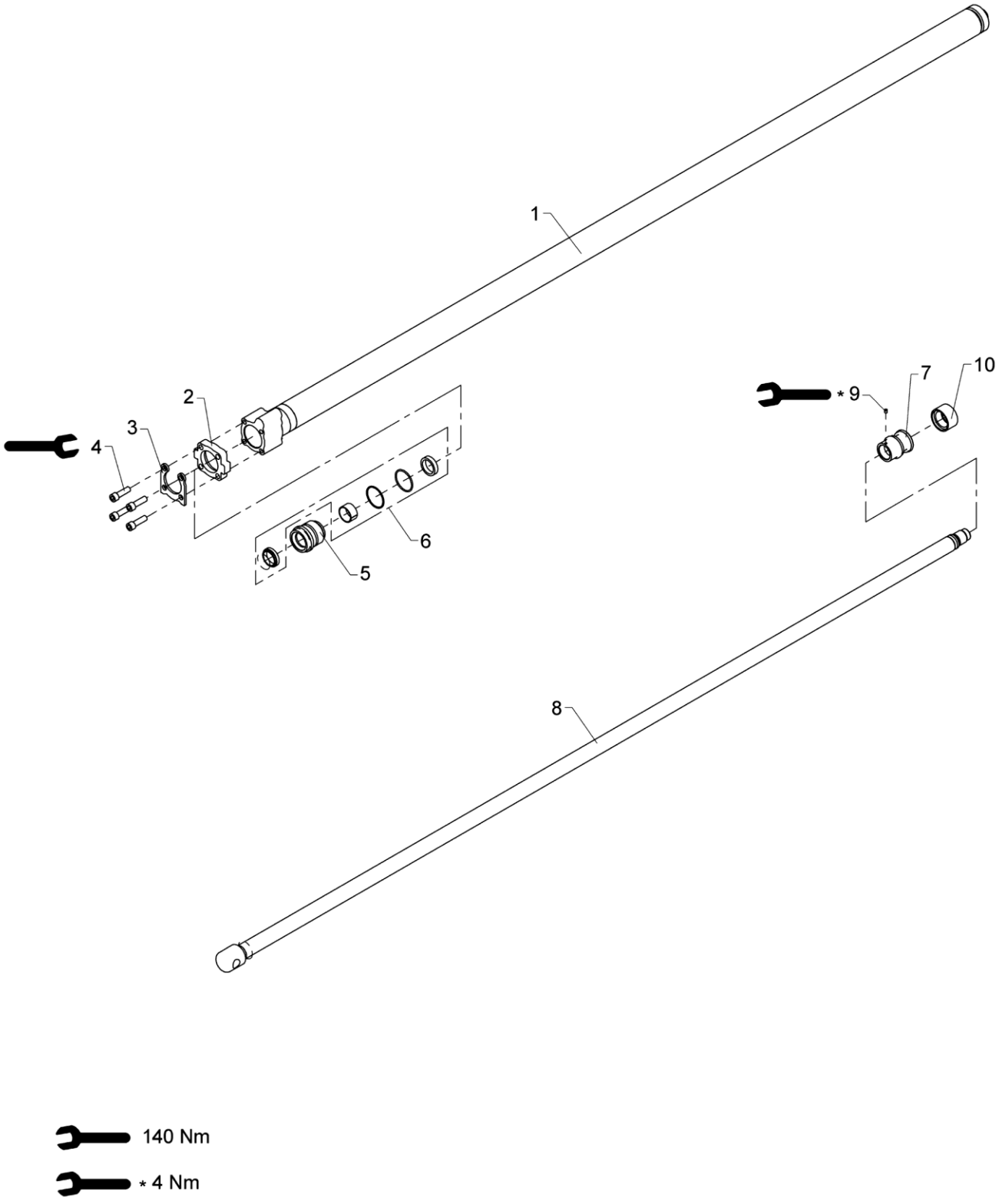

Extension cylinder VI (C55/35S x 2200)

Created 09-06-2009
Modified 25-06-2014

Pos	Qty.	Part no.	Description	Remarks
1	1	6340605	Cylinder pipe	
2	1	6340613	Mounting flange	
3	1	6340528	Safety device	
4	4	30475	Screw	MC12 x 40
5	1	6340611	Guide	
6	1	6894160	Seal kit, guide	
7	1	6340612	Piston	
8	1	6340601	Piston rod	
9	1	30903	Screw	MSP6 x 8
10	1	20776	Seal	MD 55 X 39 X 18

1500K, 1510K, 1720K, 1730K, 1820K, 1830K

63 43 330
63 41 730
Internal ref. 63 40 330

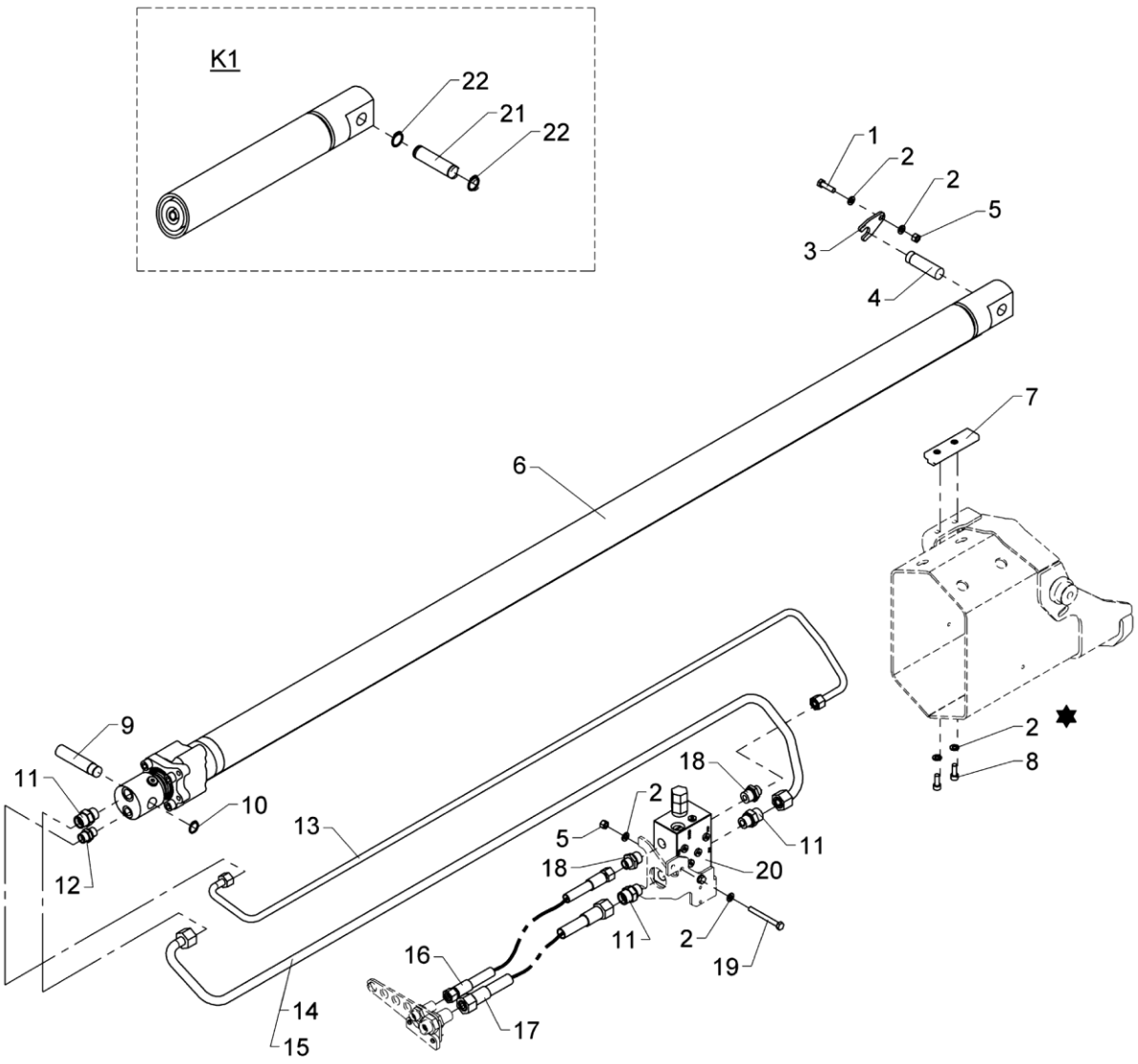

✸ Loctite 243

Extension cylinder I incl. fittings

Created 12-11-2008
Modified 16-05-2011

Pos	Qty.	Part no.	Description	Remarks
		6340330	Extension cylinder I +fittings	
		6341730	Extension cylinder I +fittings	
		6343330	Ext. cyl. I +fittings, basket	
1	1	30135	Set screw, stainless	M8 x 30
2	8	31147	Face washer, 8 mm	8 mm
3	1	6340337	Lock plate	
4	1	6340522	Pin	
5	3	30886	Lock nut, stainless	M8
6	1	6340540	Extension cylinder I	
7	1	63689	Slide block with bushing	
8	2	30460	Sockethead screw	MC8 x 22
9	1	6340521	Pin	
10	1	33108	Circlip	20U
11	3	26334	Connection	P-GEV 16 SR-WD
12	1	25127	Connection	P-GEV 12 LR-WD
13	1	6340642	Pipe CI retract	
14	1	6340641	Pipe CI	
15	1	6341641	Pipe, CI extend	Kurvekran/Man basket
16	1	56383	Hose	3/8" x 650 mm L/L
17	1	56384	Hose	1/2" x 680 mm L/L
18	2	25108	Connection	GES 12 LR 1/2-WD
19	2	30812	Steel bolt, stainless	M8 x 75
20	1	59044	Load holding valve	
21	1	6304229	Pin	K1
22	2	33110	Circlip	K1

1500K, 1510K, 1720K, 1730K, 1820K, 1830K

63 43 350
Internal ref. 63 40 350

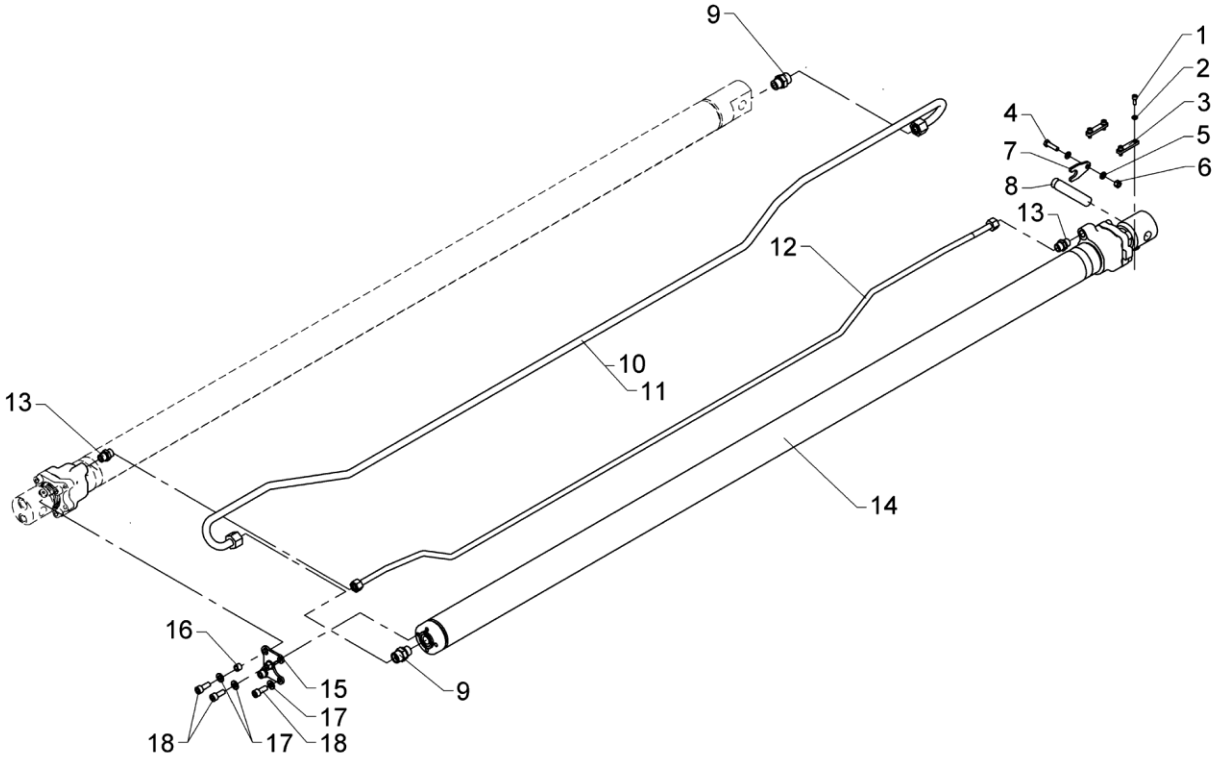

Extension cylinder II incl. fittings

Created 12-11-2008
Modified 16-05-2011

Pos	Qty.	Part no.	Description	Remarks
		6340350	Extension cylinder II+fittings	
		6343350	Ext. cyl. II+fittings, basket	
1	4	31539	Screw, stainless	MC6 x 16
2	4	31154	Spring washer, stainless	6 mm
3	2	6340336	Lock plate	
4	1	30135	Set screw, stainless	M8 x 30
5	2	31147	Face washer, 8 mm	8 mm
6	1	30886	Lock nut, stainless	M8
7	1	6340337	Lock plate	
8	1	6340523	Pin	
9	2	26334	Connection	P-GEV 16 SR-WD
10	1	6340643	Pipe CII extend	
11	1	6341643	Pipe, CII extend	Kurvekran/Man basket
12	1	6340644	Pipe CII retract	
13	2	25127	Connection	P-GEV 12 LR-WD
14	1	6340560	Extension cylinder II	
15	1	6340524	Connecting plate	
16	2	6302369	Spacer	
17	5	31177	Washer	10 mm
18	5	30453	Screw	MC10 x 25

1500K, 1510K, 1720K, 1730K, 1820K, 1830K

63 43 370
Internal ref. 63 40 370

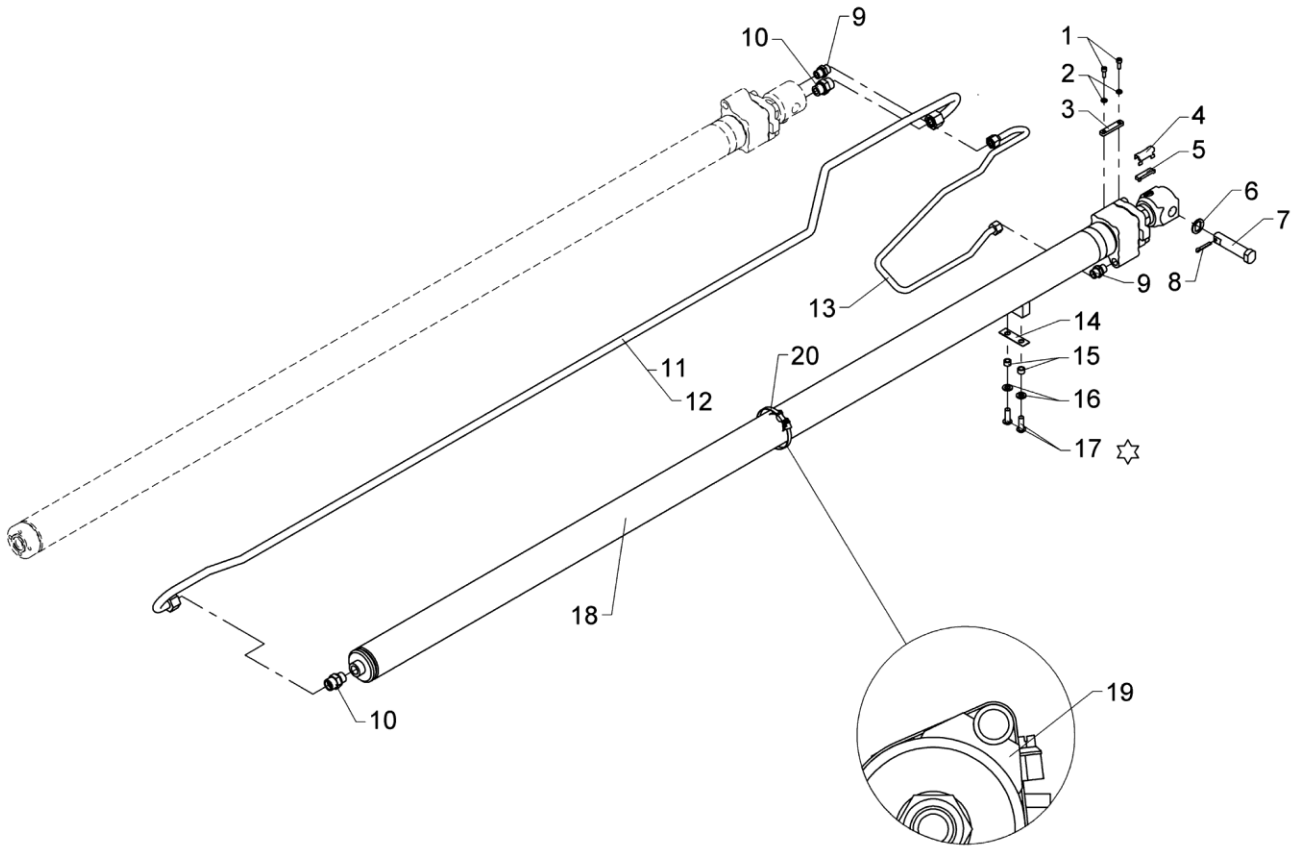

✡ Loctite 243

Extension cylinder III incl. fittings

Created 12-11-2008
Modified 16-05-2011

Pos	Qty.	Part no.	Description	Remarks
		6340370	Extension cylinderIII+fittings	
		6343370	Ext. cyl. III+fittings, basket	
1	2	31539	Screw, stainless	MC6 x 16
2	2	31154	Spring washer, stainless	6 mm
3	1	6340336	Lock plate	
4	1	31920	Clip, stainless, 10mm	
5	1	6340317	Lock plate (10 mm)	
6	1	6340526	Spacer	
7	1	6344525	Pin	
8	1	31634	Split pin	ø5 x 32
9	2	25127	Connection	P-GEV 12 LR-WD
10	2	26334	Connection	P-GEV 16 SR-WD
11	1	6340645	Pipe CIII extend	
12	1	6341645	Pipe, CIII extend	Kurvekran/Man basket
13	1	6340646	Pipe CIII retract	
14	1	6304279	Shim	
15	2	6300799	Spacer	
16	2	31177	Washer	10 mm
17	2	30649	Screw	M10 x 30
18	1	6340570	Extension cylinder III	
19	1	64409	Clamp	
20	1	31406	Clip	

1500K, 1510K, 1720K, 1730K, 1820K, 1830K

63 43 390
Internal ref. 63 40 390

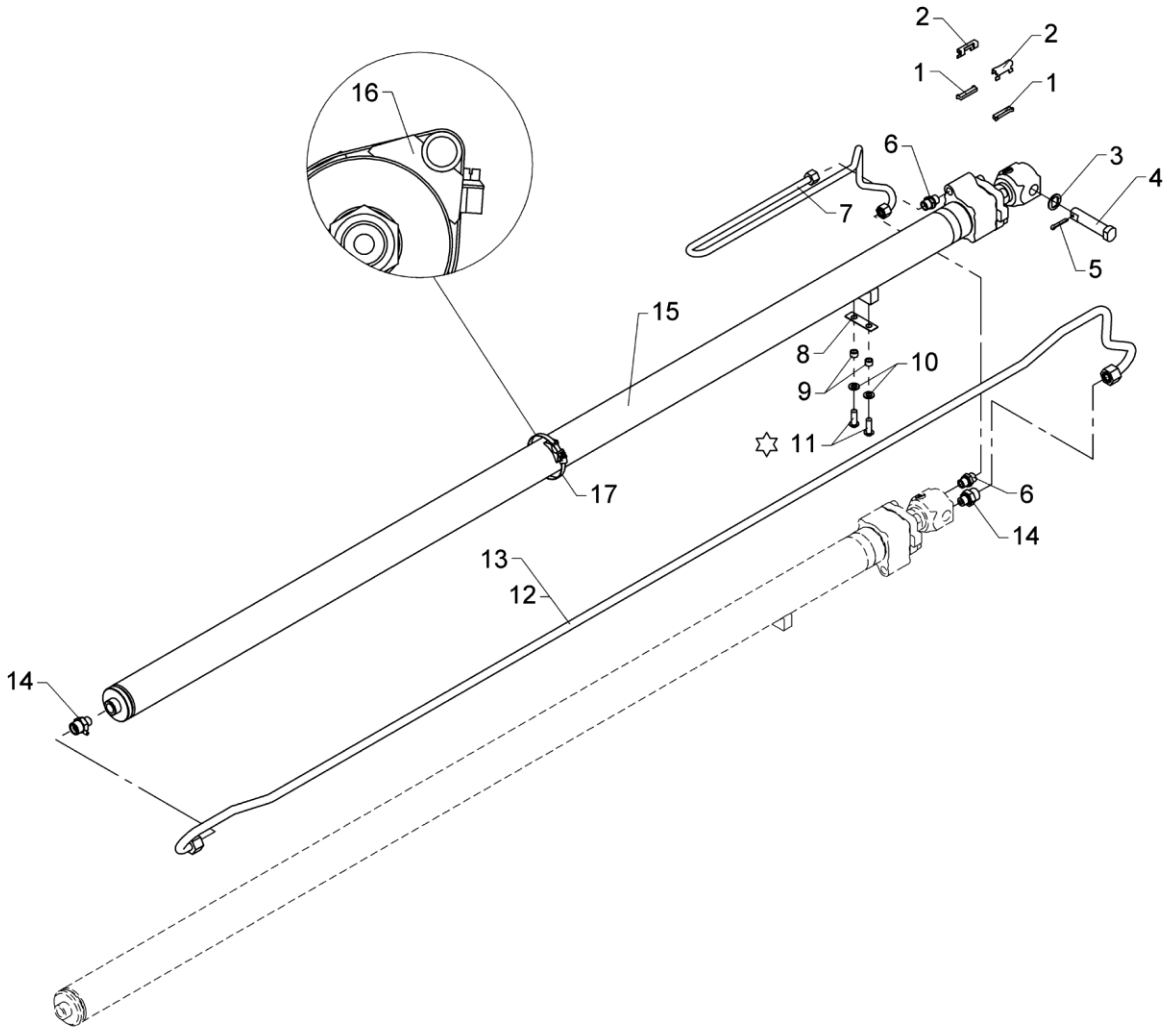

☆ Loctite 243

Extension cylinder IV incl. fittings

Created 12-11-2008
Modified 16-05-2011

Pos	Qty.	Part no.	Description	Remarks
		6340390	Extension cylinder IV+fittings	
		6343390	Ext. cyl. IV+fittings, basket	
1	2	6340316	Lock plate (8mm)	
2	2	31919	Clip, stainless, 8 mm	
3	1	6340526	Spacer	
4	1	6344525	Pin	
5	1	31634	Split pin	ø5 x 32
6	2	25127	Connection	P-GEV 12 LR-WD
7	1	6340648	Pipe CIV retract	
8	1	6304279	Shim	
9	2	6300799	Spacer	
10	2	31177	Washer	10 mm
11	2	30649	Screw	M10 x 30
12	1	6340647	Pipe CIV extend	
13	1	6341647	Pipe, CIV extend	Kurvekran/Man basket
14	2	26368	Straight connection	P-GEV 16 SR 3/8-WD
15	1	6340580	Extension cylinder IV	
16	1	64409	Clamp	
17	1	31406	Clip	

1500K, 1510K, 1720K, 1730K, 1820K, 1830K

63 43 410
Internal ref. 63 40 410

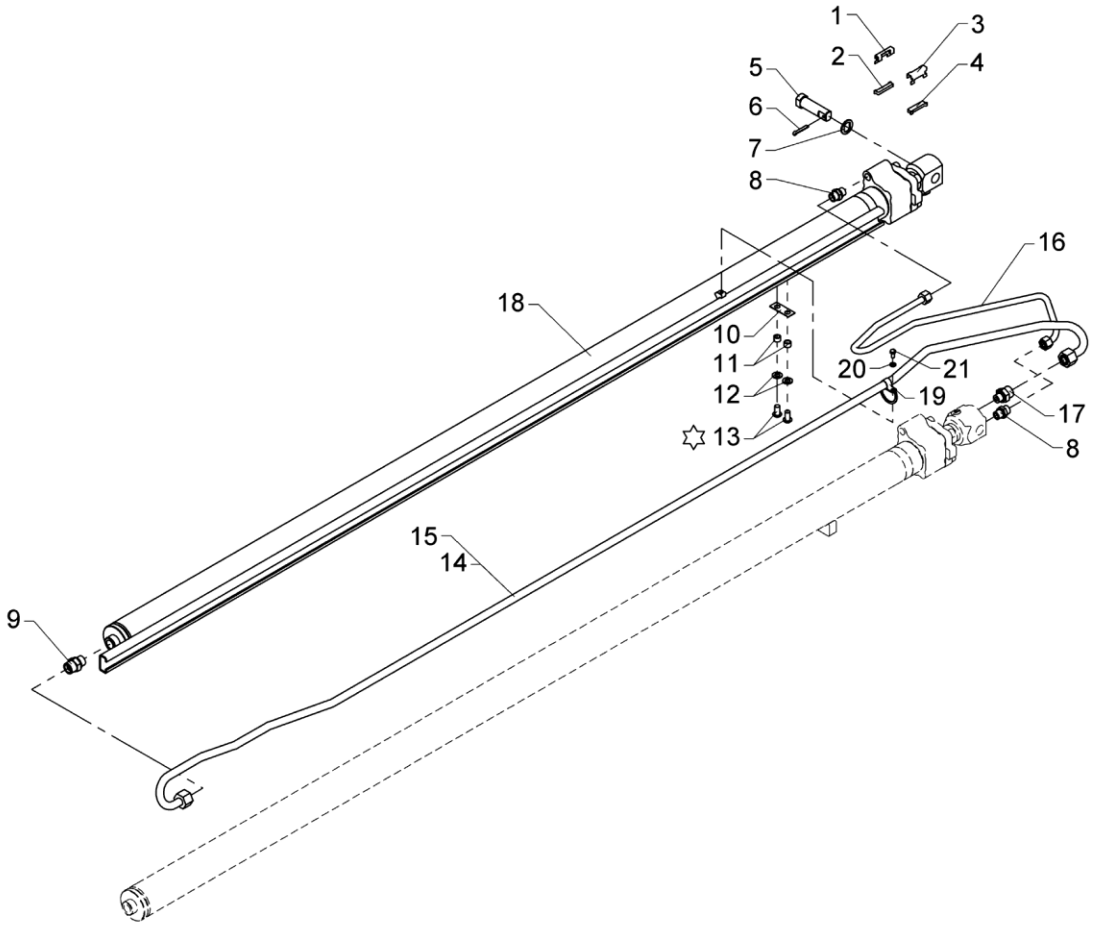

☆ Loctite 243

Extension cylinder V incl. fittings

Pos	Qty.	Part no.	Description	Remarks
		6340410	Extension cylinder V+fittings	
		6343410	Ext. cyl. V+fittings, basket	
1	1	31919	Clip, stainless, 8 mm	
2	1	6340316	Lock plate (8mm)	
3	1	31920	Clip, stainless, 10mm	
4	1	6340317	Lock plate (10 mm)	
5	1	6340525	Pin	
6	1	31634	Split pin	ø5 x 32
7	1	6340526	Spacer	
8	2	25127	Connection	P-GEV 12 LR-WD
9	1	26334	Connection	P-GEV 16 SR-WD
10	1	6340527	Shim	
11	2	6300799	Spacer	
12	2	31177	Washer	10 mm
13	2	30926	Steel bolt	M10 x 20
14	1	6340649	Pipe CV extend	
15	1	6341649	Pipe, CV extend	Kurvekran/Man basket
16	1	6340651	Pipe CV retract	
17	1	26368	Straight connection	P-GEV 16 SR 3/8-WD
18	1	6340590	Extension cylinder V	
19	1	33493	Clamp	
20	1	32302	Face washer, stainless	6 mm
21	1	30111	Set screw, stainless	M6 x 12

1500K, 1510K, 1720K, 1730K, 1820K, 1830K

63 43 430
Internal ref. 63 40 430

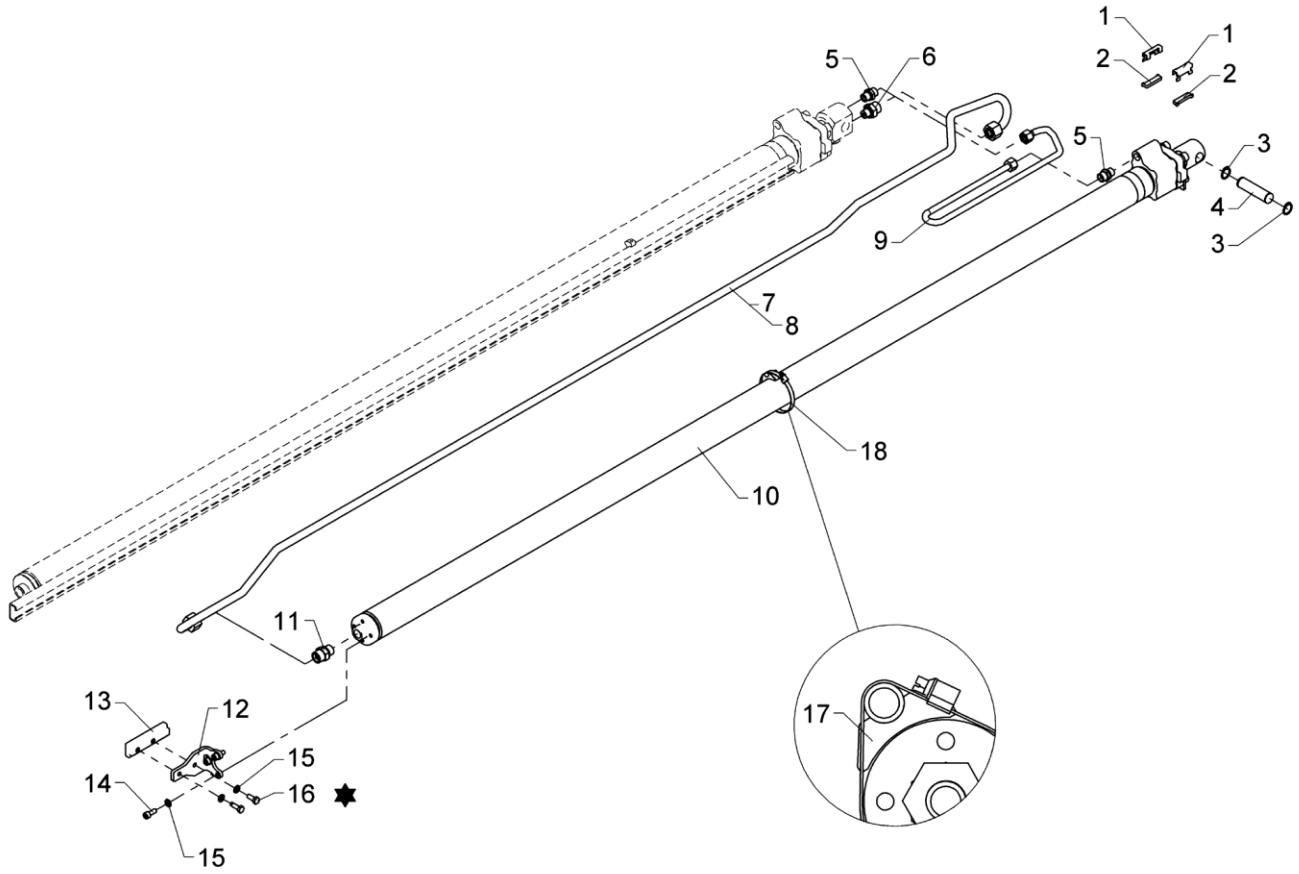

✸ Loctite 243

Extension cylinder VI incl. fittings

534 03 550

From loader 1060001
To loader

Created 12-11-2008
Modified 17-05-2011

Pos	Qty.	Part no.	Description	Remarks
		6340430	Extension cylinder VI+fittings	
		6343430	Ext. cyl. VI+fittings, basket	
1	2	31920	Clip, stainless, 10mm	
2	2	6340317	Lock plate (10 mm)	
3	2	33110	Circlip	22U
4	1	6304229	Pin	
5	2	25127	Connection	P-GEV 12 LR-WD
6	1	26368	Straight connection	P-GEV 16 SR 3/8-WD
7	1	6340652	Pipe CVI extend	
8	1	6341652	Pipe, CVI extend	Kurvekran/Man basket
9	1	6340653	Pipe CVI retract	
10	1	6340600	Extension cylinder VI	
11	1	26334	Connection	P-GEV 16 SR-WD
12	1	6340529	Bracket for slide block (C6)	
13	1	63689	Slide block with bushing	
14	3	30438	Screw	MC8 x 20
15	5	31147	Face washer, 8 mm	8 mm
16	2	30132	Set screw, stainless	M8 x 20
17	1	64409	Clamp	
18	1	31406	Clip	

1500K, 1510K, 1720K, 1730K, 1820K, 1830K

Internal ref. 63 40 670

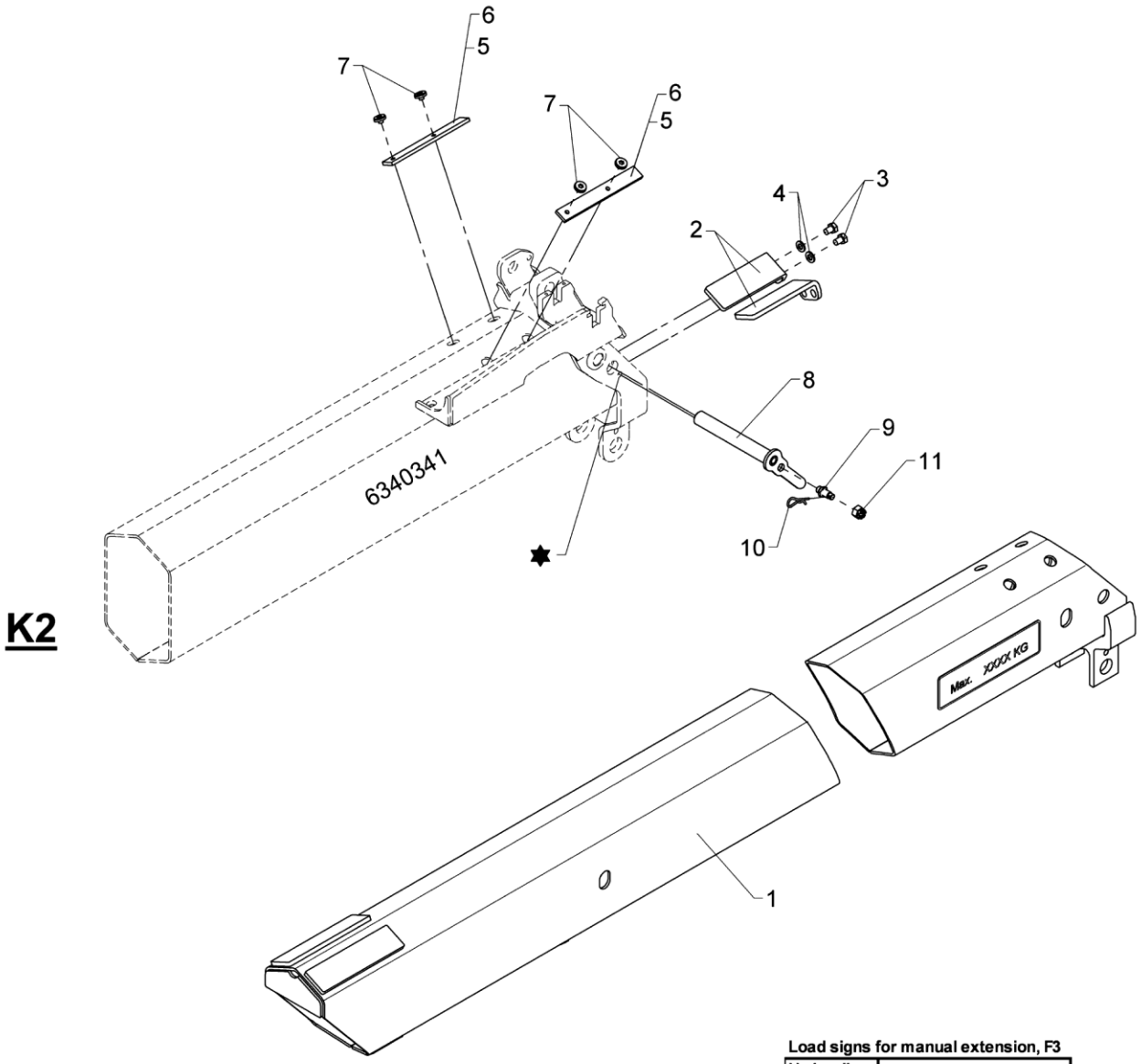

K2



Load signs for manual extension, F3

Hydraulic extensions		Manual extensions		
K2	Std.	**F3**	F4	F5
	HDL	**65578** **66525**		
K3	Std.	F4	F5	F6
	HDL			
K4	Std.	F5	F6	F7
	HDL			
K5	Std.	F6	F7	
	HDL			
K6	Std.	F7		
	HDL			

Manual extension, F3

Pos	Qty.	Part no.	Description	Remarks
		6340670	Manual extension F3	
1	1	6340671	Manual extension F3	
2	2	6340689	Shim	
3	4	30152	Set screw	M10 x 14
4	4	31177	Washer	10 mm
5	2	6243004	Wear plate	6 mm
6	2	6244064	Wear plate	7 mm
7	4	31865	Torx screw M8 x 6 m	M8 x 6
8	1	6340677	Pin	
9	1	6340359	Lock pin	
10	1	33379	Spring	
11	1	32127	Nut	M12

1500K, 1510K, 1720K, 1730K, 1820K, 1830K

Internal ref. 63 40 680

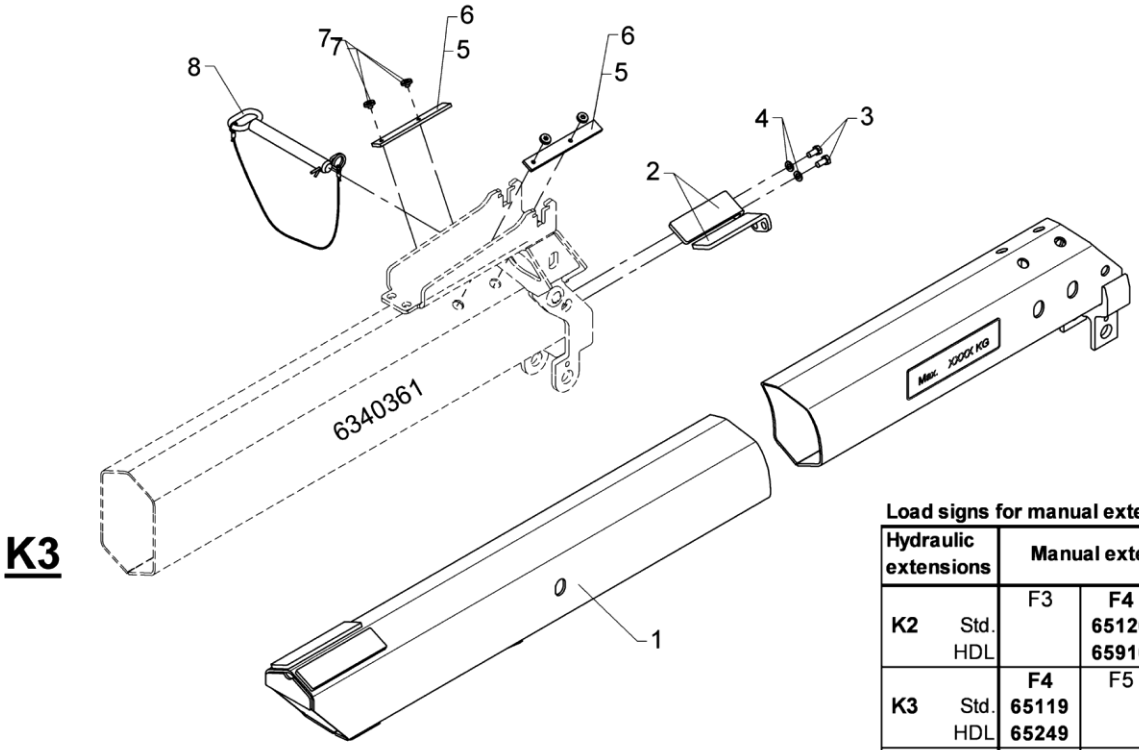

K3

Load signs for manual extension, F4

Hydraulic extensions	Manual extensions		
K2 Std. HDL	F3	**F4 65120 65916**	F5
K3 Std. HDL	**F4 65119 65249**	F5	F6
K4 Std. HDL	F5	F6	F7
K5 Std. HDL	F6	F7	
K6 Std. HDL	F7		

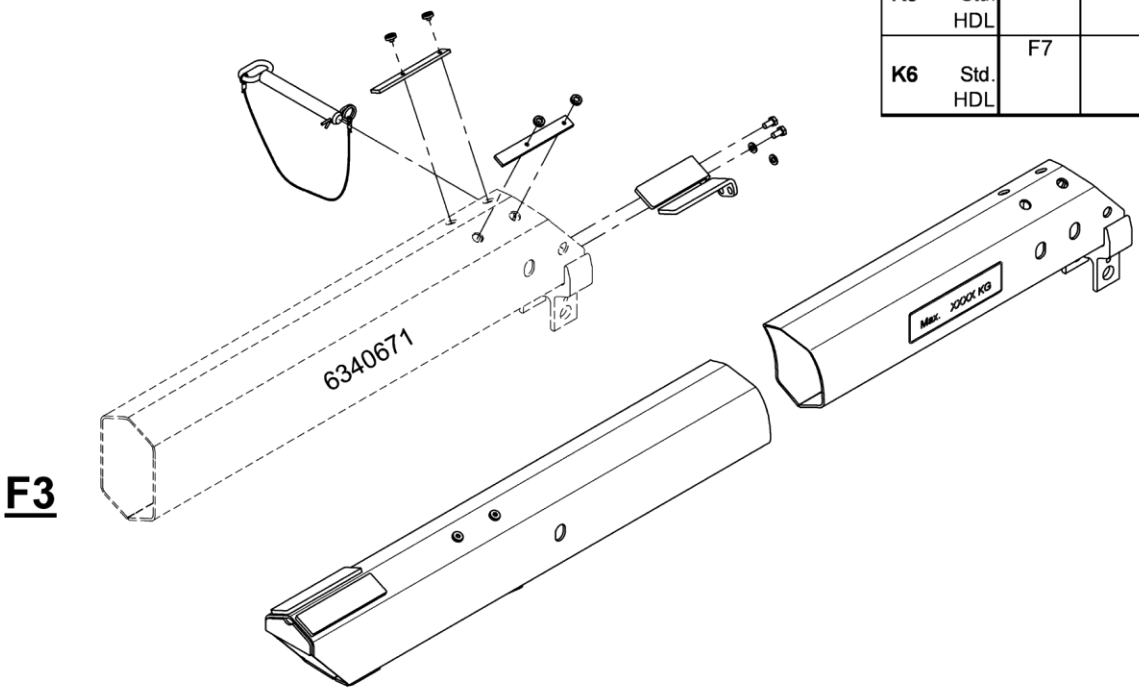

F3

Manual extension, F4

Pos	Qty.	Part no.	Description	Remarks
		6340680	Manual extension F4	
1	1	6340681	Manual extension F4	
2	2	6340689	Shim	
3	4	30154	Set screw	M10 x 20
4	4	31177	Washer	10 mm
5	2	6243004	Wear plate	6 mm
6	2	6244064	Wear plate	7 mm
7	4	31865	Torx screw M8 x 6 m	M8 x 6
8	1	6092454	Lock pin with chain	

1500K, 1510K, 1720K, 1730K, 1820K, 1830K

Internal ref. 63 40 690

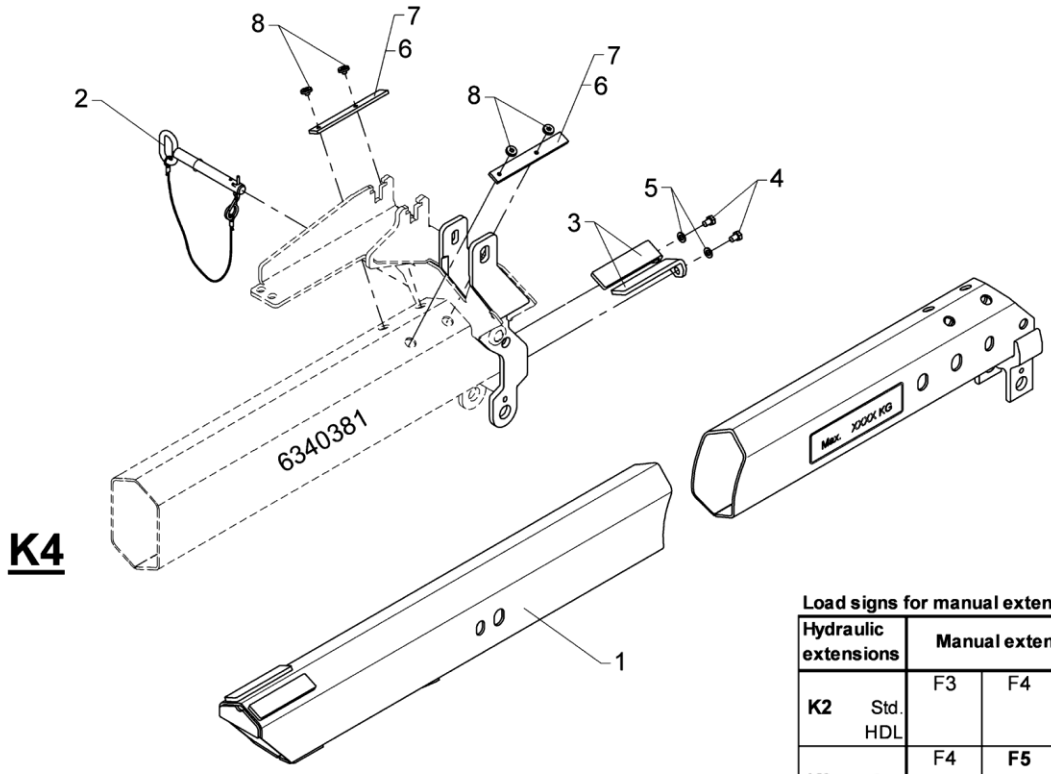

K4

Load signs for manual extension, F5

Hydraulic extensions		Manual extensions		
K2	Std.	F3	F4	**F5 66595 65491**
	HDL			
K3	Std.	F4	**F5 65118 65491**	F6
	HDL			
K4	Std.	**F5 65915 66460**	F6	F7
	HDL			
K5	Std.	F6	F7	
	HDL			
K6	Std.	F7		
	HDL			

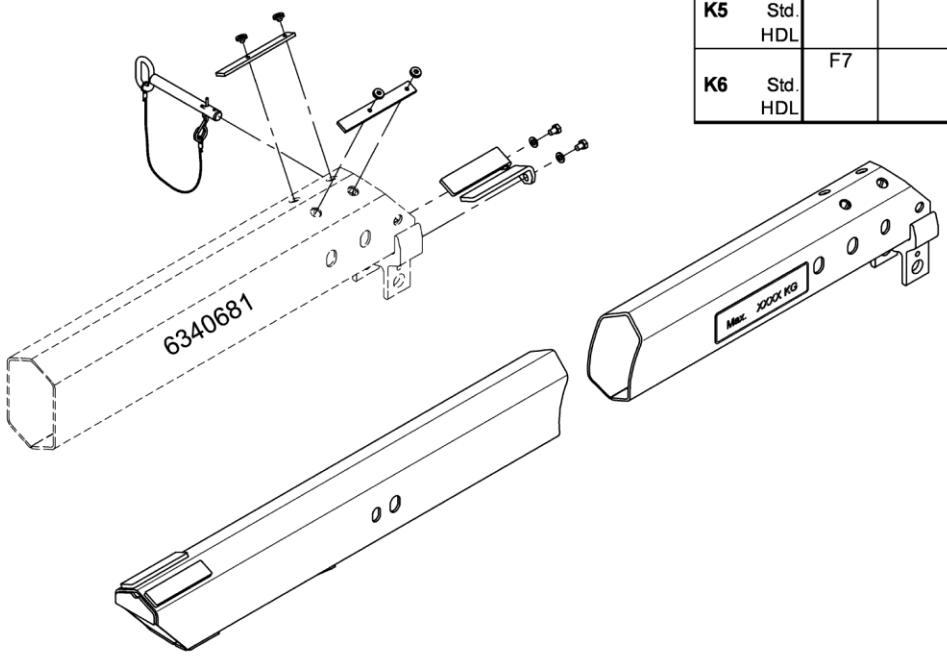

F4

Manual extension, F5

534 03 740

From loader 1060001
To loader

Created 27-11-2008
Modified

Pos	Qty.	Part no.	Description	Remarks
		6340690	Manual extension F5	
1	1	6340691	Manual extension F5	
2	1	6340397	Lock pin with lock spring	
3	2	6340699	Shim	
4	2	30152	Set screw	M10 x 14
5	2	31177	Washer	10 mm
6	2	6243004	Wear plate	6 mm
7	2	6244064	Wear plate	7 mm
8	4	31865	Torx screw M8 x 6 m	M8 x 6

1500K, 1510K, 1720K, 1730K, 1820K, 1830K

Internal ref. 63 40 700

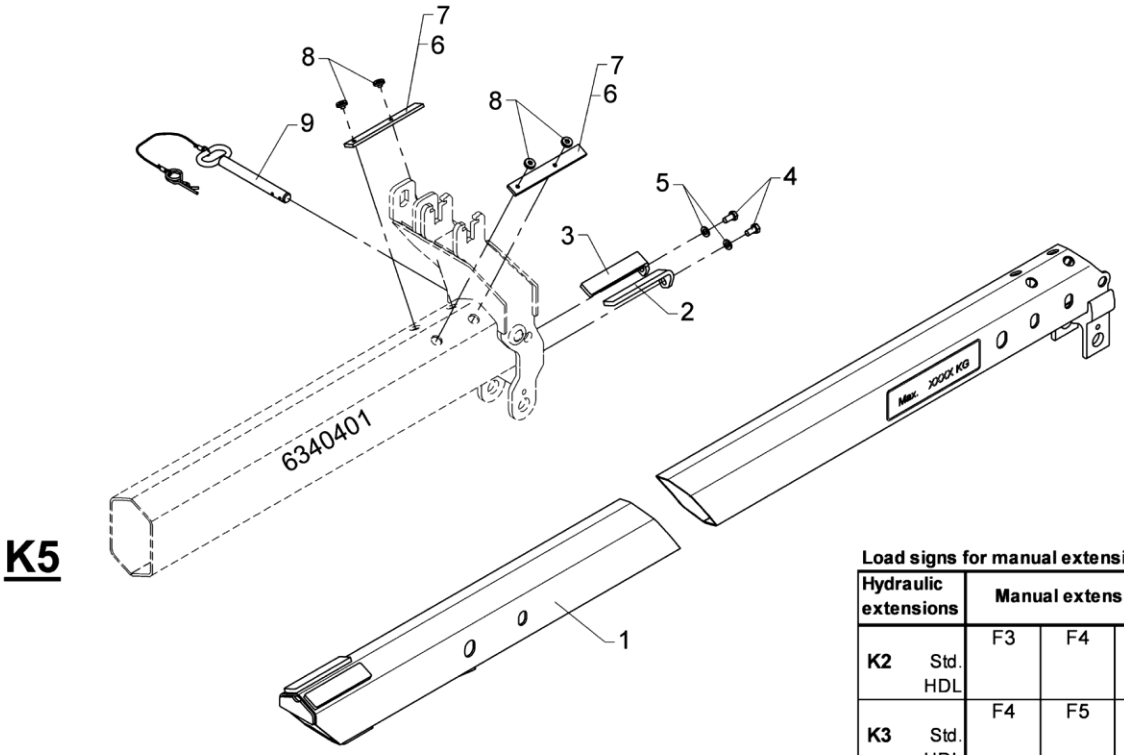

K5

Load signs for manual extension, F6

Hydraulic extensions		Manual extensions		
K2	Std.	F3	F4	F5
	HDL			
K3	Std.	F4	F5	**F6 65117 65552**
	HDL			
K4	Std.	F5	**F6 65490 65146**	F7
	HDL			
K5	Std.	**F6 65563 65146**	F7	
	HDL			
K6	Std.	F7		
	HDL			

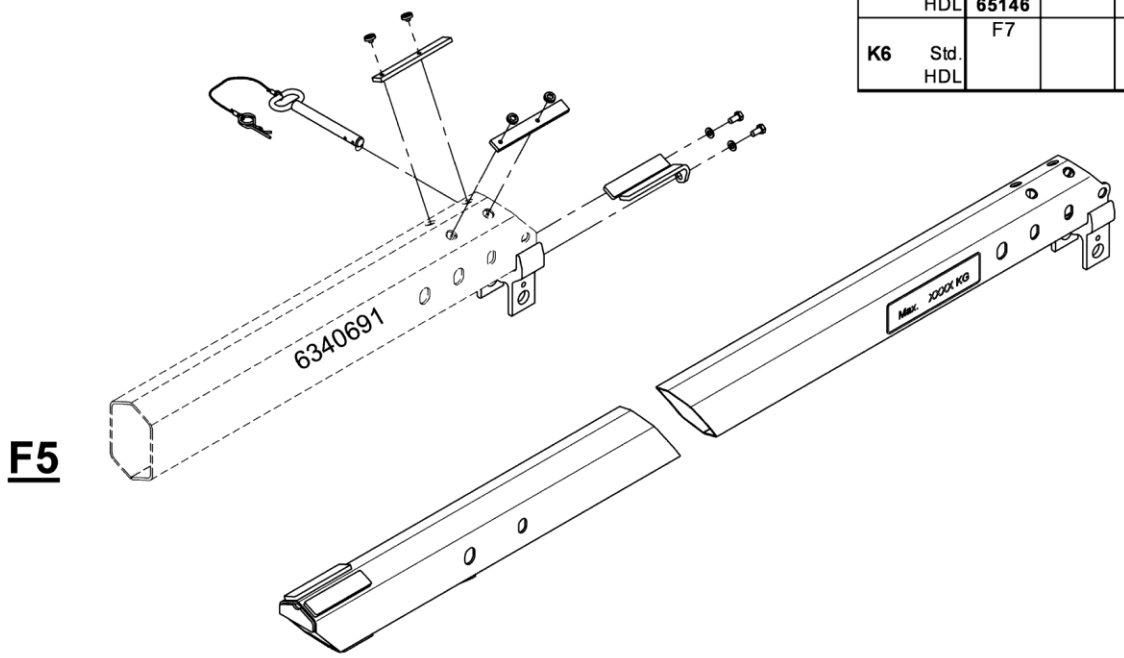

F5

Manual extension, F6

Pos	Qty.	Part no.	Description	Remarks
		6340700	Manual extension F6	
1	1	6340701	Manual extension F6	
2	1	6340708	Shim, right	
3	1	6340709	Shim, left	
4	2	30154	Set screw	M10 x 20
5	2	31177	Washer	10 mm
6	2	6243004	Wear plate	6 mm
7	2	6244064	Wear plate	7 mm
8	4	31865	Torx screw M8 x 6 m	M8 x 6
9	1	6340397	Lock pin with lock spring	

1500K, 1510K, 1720K, 1730K, 1820K, 1830K

Internal ref. 63 40 710

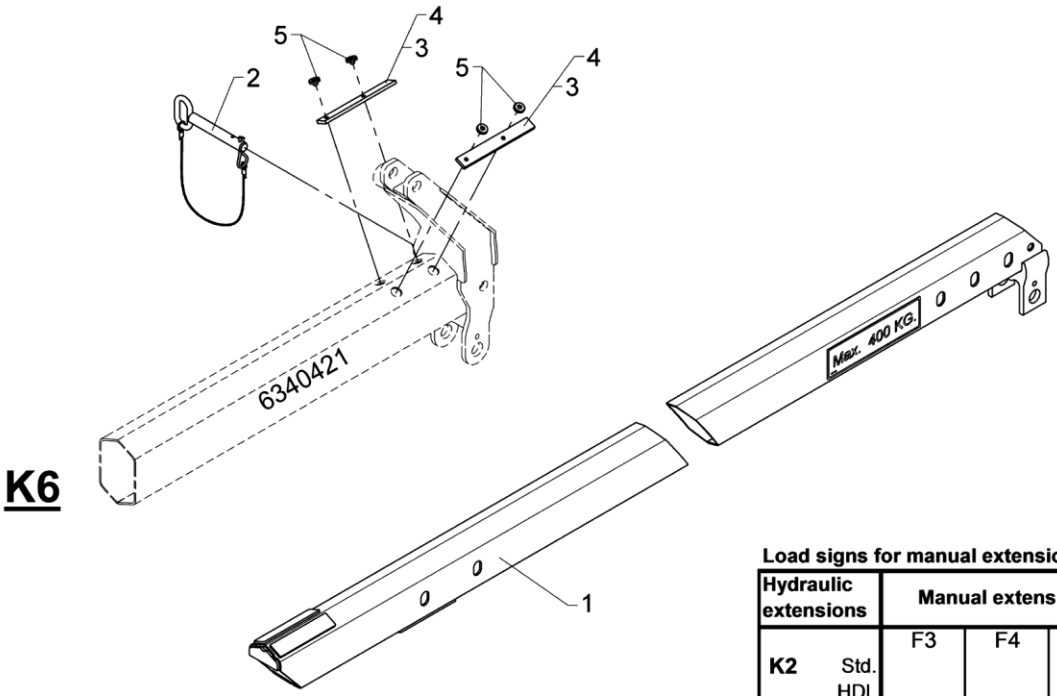

K6

Load signs for manual extension, F7

Hydraulic extensions		Manual extensions		
K2	Std.	F3	F4	F5
	HDL			
K3	Std.	F4	F5	F6
	HDL			
K4	Std.	F5	F6	**F7 65115**
	HDL			**65115**
K5	Std.	F6	**F7 65965**	
	HDL		**65115**	
K6	Std.	**F7 65114**		
	HDL	**65115**		

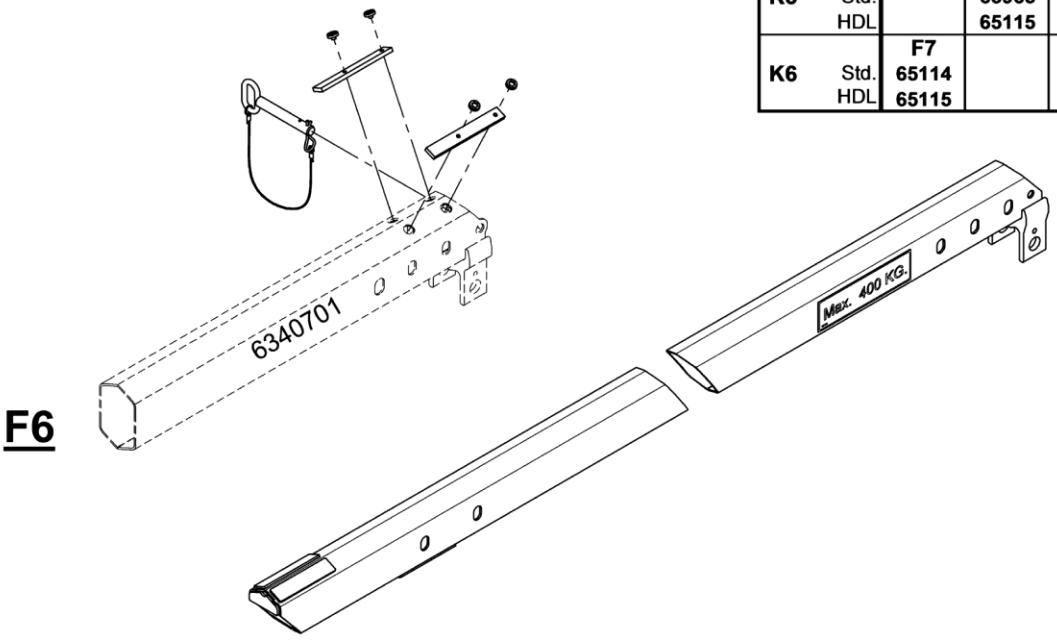

F6

Manual extension, F7

Pos	Qty.	Part no.	Description	Remarks
		6340710	Manual extension F7	
1	1	6340711	Manual extension F7	
2	1	6301166	Lock pin with split pin	
3	2	6243004	Wear plate	6 mm
4	2	6244064	Wear plate	7 mm
5	4	31865	Torx screw M8 x 6 m	M8 x 6

1500K, 1510K, 1720K, 1730K, 1820K, 1830K

63 40 940
Internal ref. 63 40 950

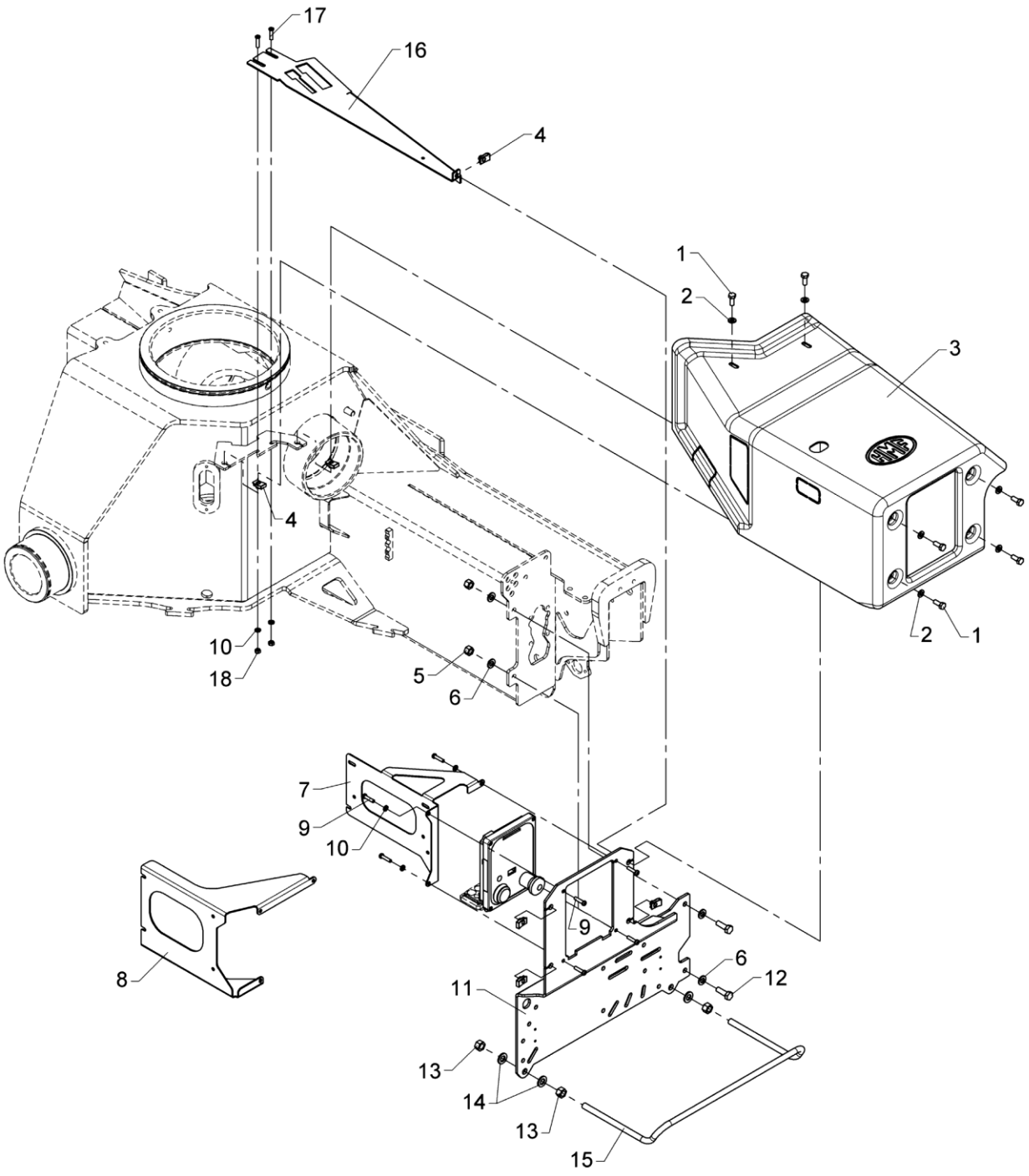

Valve brackets - RC

Pos	Qty.	Part no.	Description	Remarks
		6340950	Valve brackets	
		6340940	Valve brackets	
1	6	30132	Set screw, stainless	
2	6	31147	Face washer, 8 mm	
3	1	64407	Shield	
4	6	31069	Clip	M8 1,5 - 5,5 mm.
5	2	31564	Lock nut, stainless	M10
6	4	31565	Washer, stainless	10 mm
7	1	6340242	Mounting fittings	
8	1	6340243	Mounitng bracket	
9	7	30340	Screw, stainless	6,0 x 25
10	5	32302	Face washer, stainless	6 mm
11	1	6340241	Valve bracket	
12	2	30156	Set screw, stainless	M10 x 30
13	4	30860	Nut, stainless	M12
14	4	32338	Washer	12 mm
15	1	6239973	Clamp	
16	1	6340946	Reinforcement	
17	2	32509	Screw, 6 x 25	MC6 x 25
18	2	30854	Nut, stainless	M6

1500K, 1510K, 1720K, 1730K, 1820K, 1830K

63 41 780
Internal ref. 63 41 920

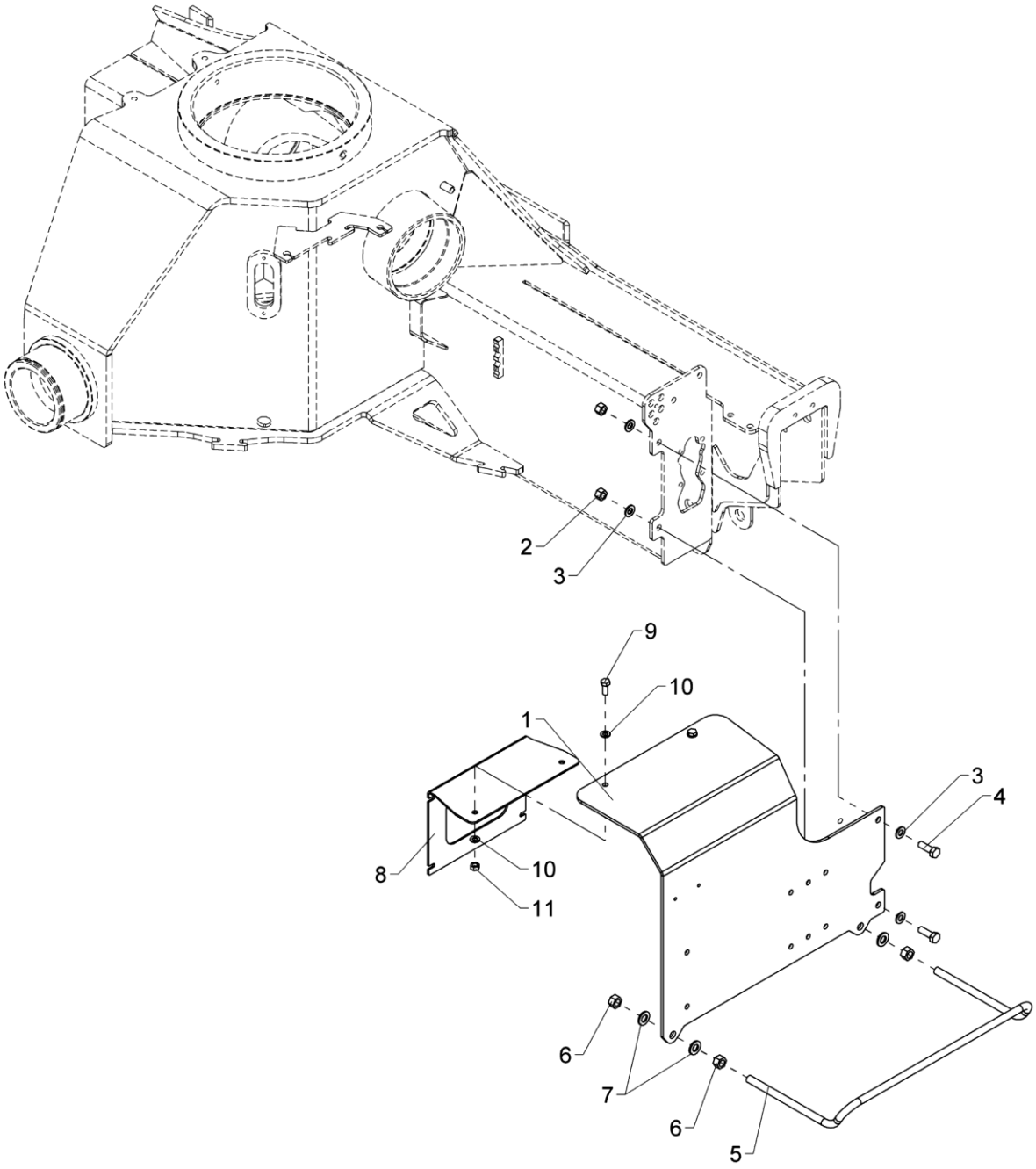

Valve brackets (excl. CE)

Pos	Qty.	Part no.	Description	Remarks
		6341920	Valve brackets, std.(no CE)	Pos.1 - 7
		6341780	Valve brackets, RC (no CE)	Pos.1 - 11
1	1	6340275	Valve bracket (excl. CE)	
2	2	31564	Lock nut, stainless	M10
3	4	31565	Washer, stainless	10 mm
4	2	30156	Set screw, stainless	M10 x 30
5	1	6239973	Clamp	
6	4	30860	Nut, stainless	M12
7	4	32338	Washer	12 mm
8	1	6340277	Mounting fittings	
9	2	30132	Set screw, stainless	M8 x 20
10	4	31147	Face washer, 8 mm	8 mm
11	2	30856	Nut, stainless	M8

1500K, 1510K, 1720K, 1730K, 1820K, 1830K

Internal ref. 63 41 930

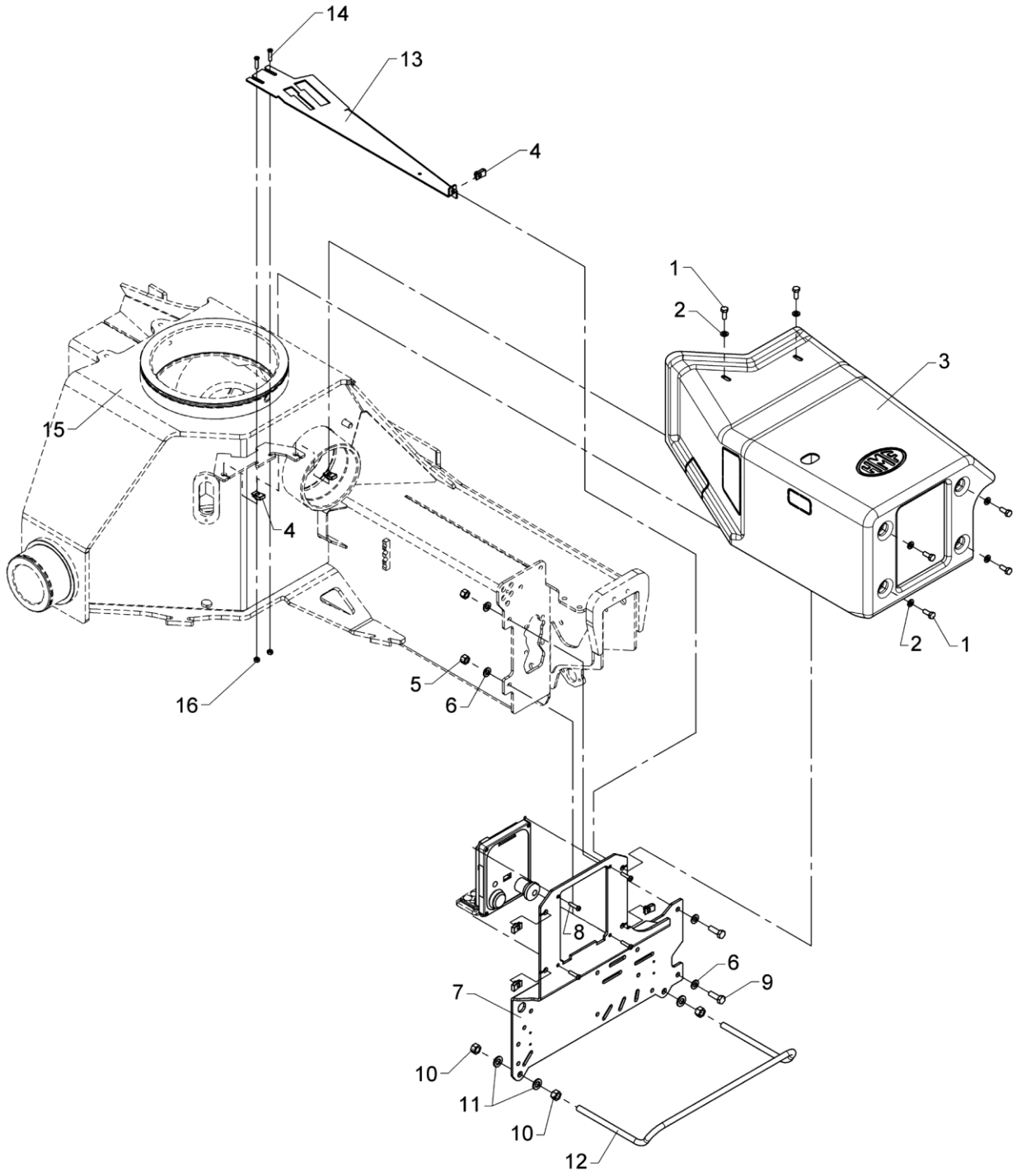

Valve brackets (with CE)

Pos	Qty.	Part no.	Description	Remarks
1	6	30132	Set screw, stainless	
2	6	31147	Face washer, 8 mm	
3	1	64407	Shield	
4	6	31069	Clip	M8 1,5 - 5,5 mm.
5	2	31564	Lock nut, stainless	M10
6	4	31565	Washer, stainless	10 mm
7	1	6340241	Valve bracket	
8	4	30340	Screw, stainless	6,0 x 25
9	2	30156	Set screw, stainless	M10 x 30
10	4	30860	Nut, stainless	M12
11	4	32338	Washer	12 mm
12	1	6239973	Clamp	
13	1	6340946	Reinforcement	
14	2	32509	Screw, 6 x 25	MC6 x 25
15	2	32302	Face washer, stainless	6 mm
16	2	30854	Nut, stainless	M6

1500K, 1510K, 1720K, 1730K, 1820K, 1830K

Internal ref. 63 40 650

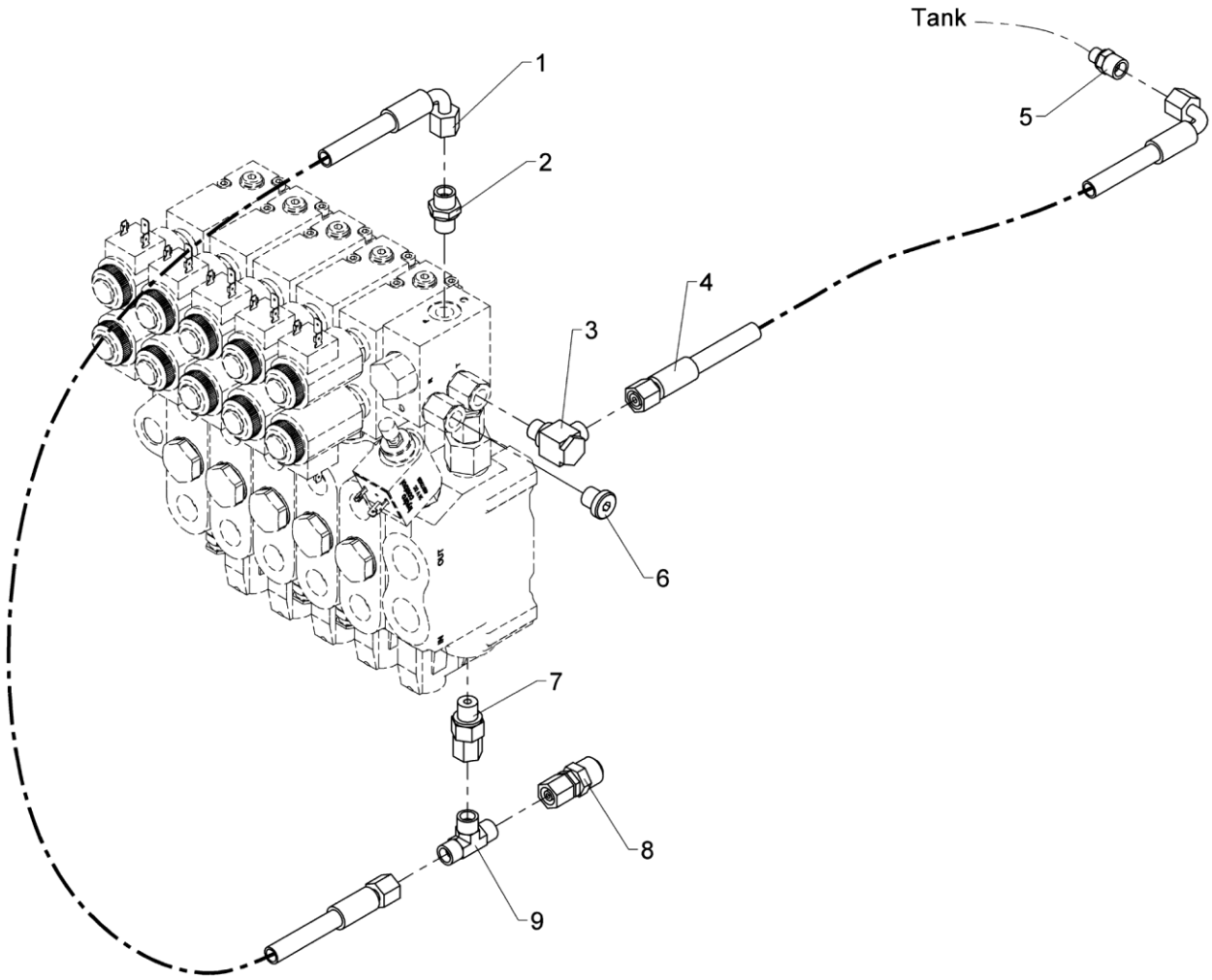

534 05 110

From loader 1060001
To loader

NEM-RC kit

Created 19-11-2008
Modified 09-05-2012

Pos	Qty.	Part no.	Description	Remarks
1	1	62526	Hose	1/4 X 550 M14 X 1.5 L/90
2	1	25109	Connection	GES 8 LR-WD
3	1	25113	Banjo connection	RSWV 8 LR
4	1	62540	Hose	1/4 X 2150 M14X1.5 L/90
5	1	25584	Connection	GES 8 LR 1-8 - 25584
6	1	25197	Plug	VS-R-1/4 WD
7	1	26104	Connection	EGESD 8 LR-WD
8	1	26148	Connection	
9	1	25114	T-connection	TV 8 L

1500K, 1510K, 1720K, 1730K, 1820K, 1830K

Internal ref. 63 41 680

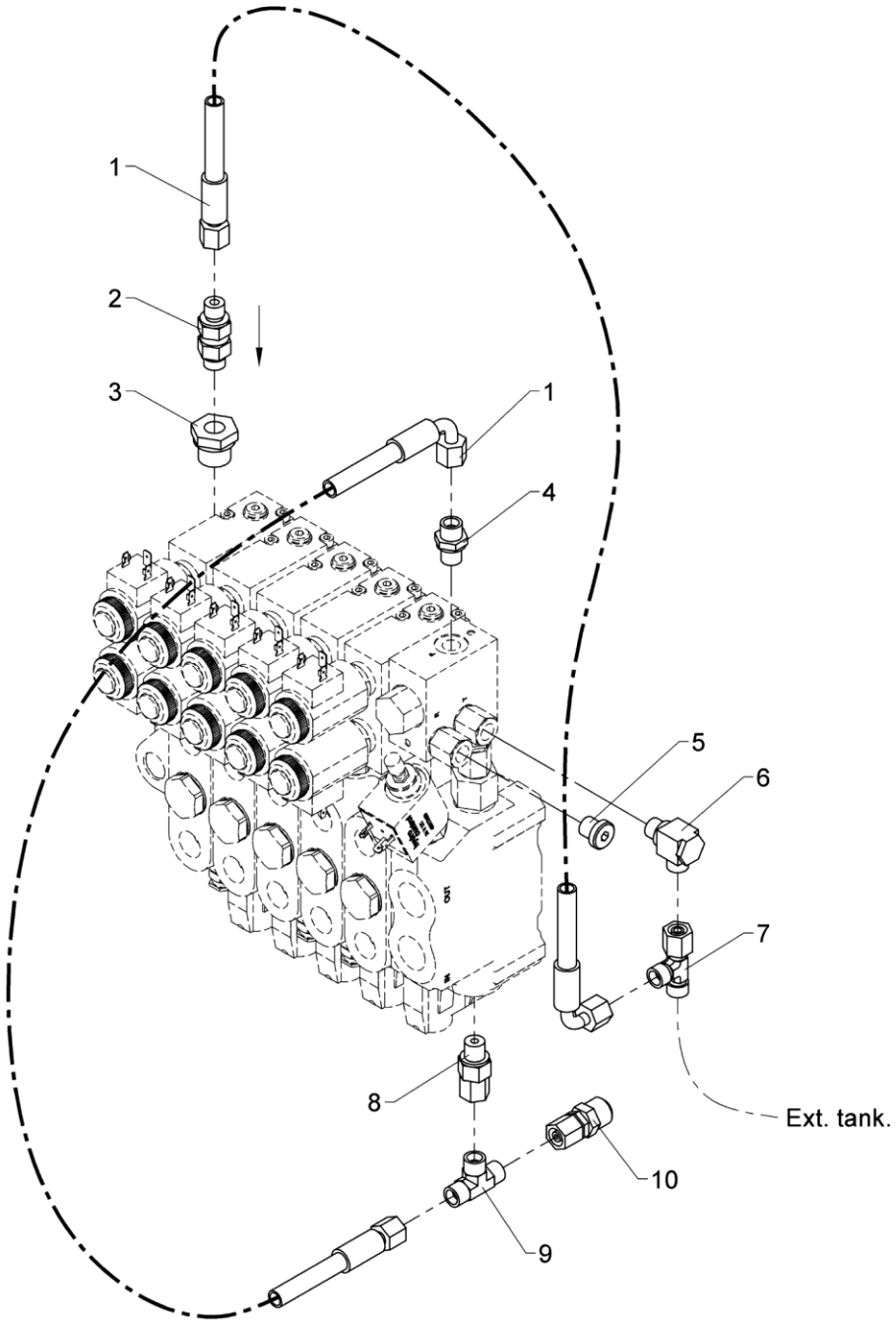

NEM-RC kit (for external tank)

Pos	Qty.	Part no.	Description	Remarks
1	2	62526	Hose	1/4 X 550 M14 X 1.5 L/90
2	1	60425	Check valve	RVZ 8 LR-WD
3	1	25180	Reducing connection	RED-R 1/2-WD/R 1/4
4	1	25109	Connection	GES 8 LR-WD
5	1	25197	Plug	VS-R-1/4 WD
6	1	25113	Banjo connection	RSWV 8 LR
7	1	25249	Connection	ELSD 8 L
8	1	26104	Connection	EGESD 8 LR-WD
9	1	25114	T-connection	TV 8 L
10	1	26148	Connection	

1500K, 1510K, 1720K, 1730K, 1820K, 1830K

Internal ref. 63 44 870

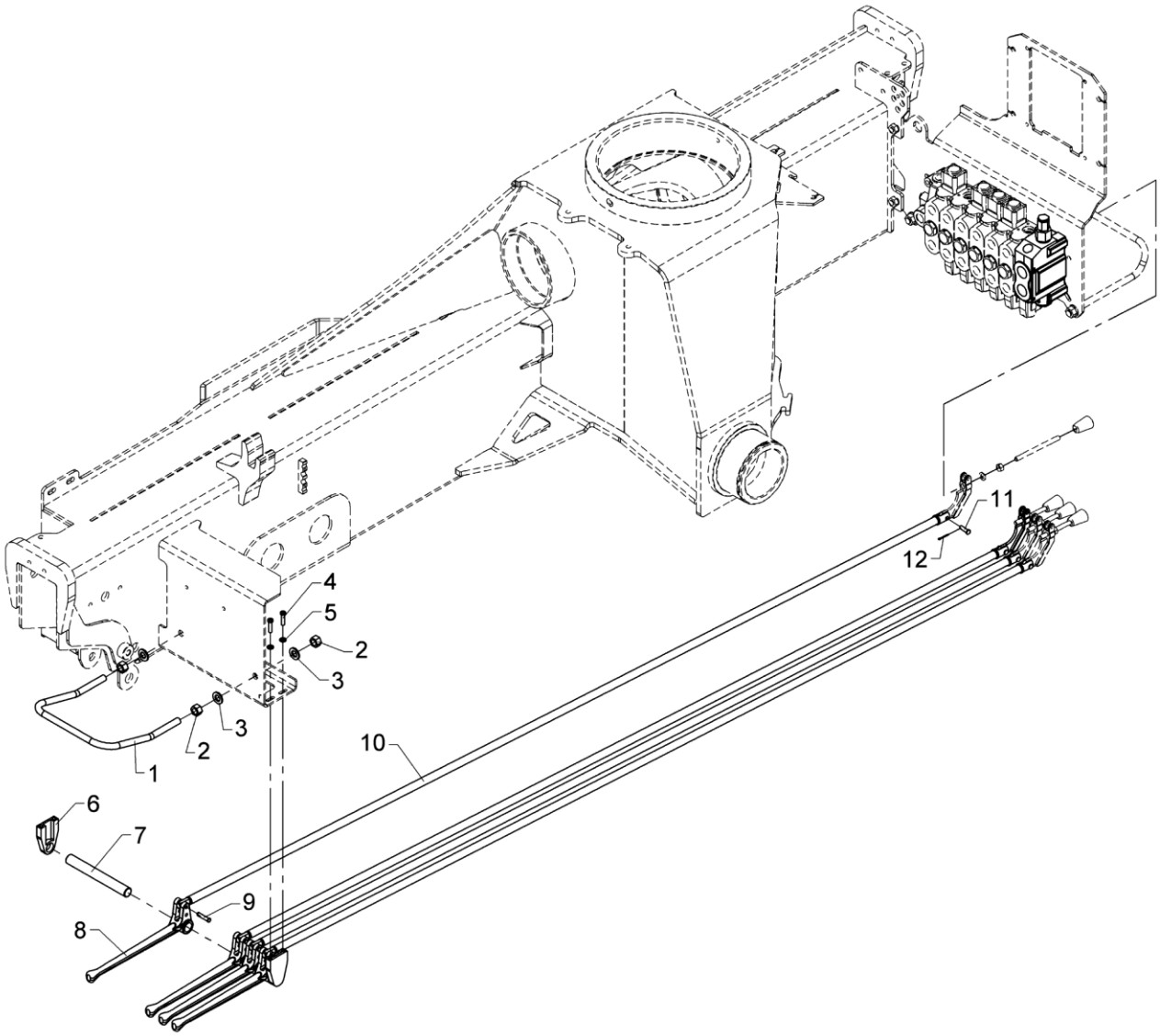

Obsolete

Dual control, 4 functions

534 05 120

From loader 1060001
To loader 1061516

Created 12-11-2008
Modified

Pos	Qty.	Part no.	Description	Remarks
1	1	6340247	Safety guard	
2	4	30860	Nut, stainless	M12
3	4	32338	Washer	12 mm
4	4	30340	Screw, stainless	6,0 x 25
5	4	32302	Face washer, stainless	6 mm
6	2	63564	Bracket for pin	
7	1	6340248	Pin	
8	4	63443	Lever for dual controls	
9	4	63468	Split pin with spring lock	
10	4	6340246	Connecting rod	
11	4	31271	Cotter bolt	ø6 x 21
12	4	31601	Split pin, stainless	ø1,6 x 20

1500K, 1510K, 1720K, 1730K, 1820K, 1830K

Internal ref. 63 44 110

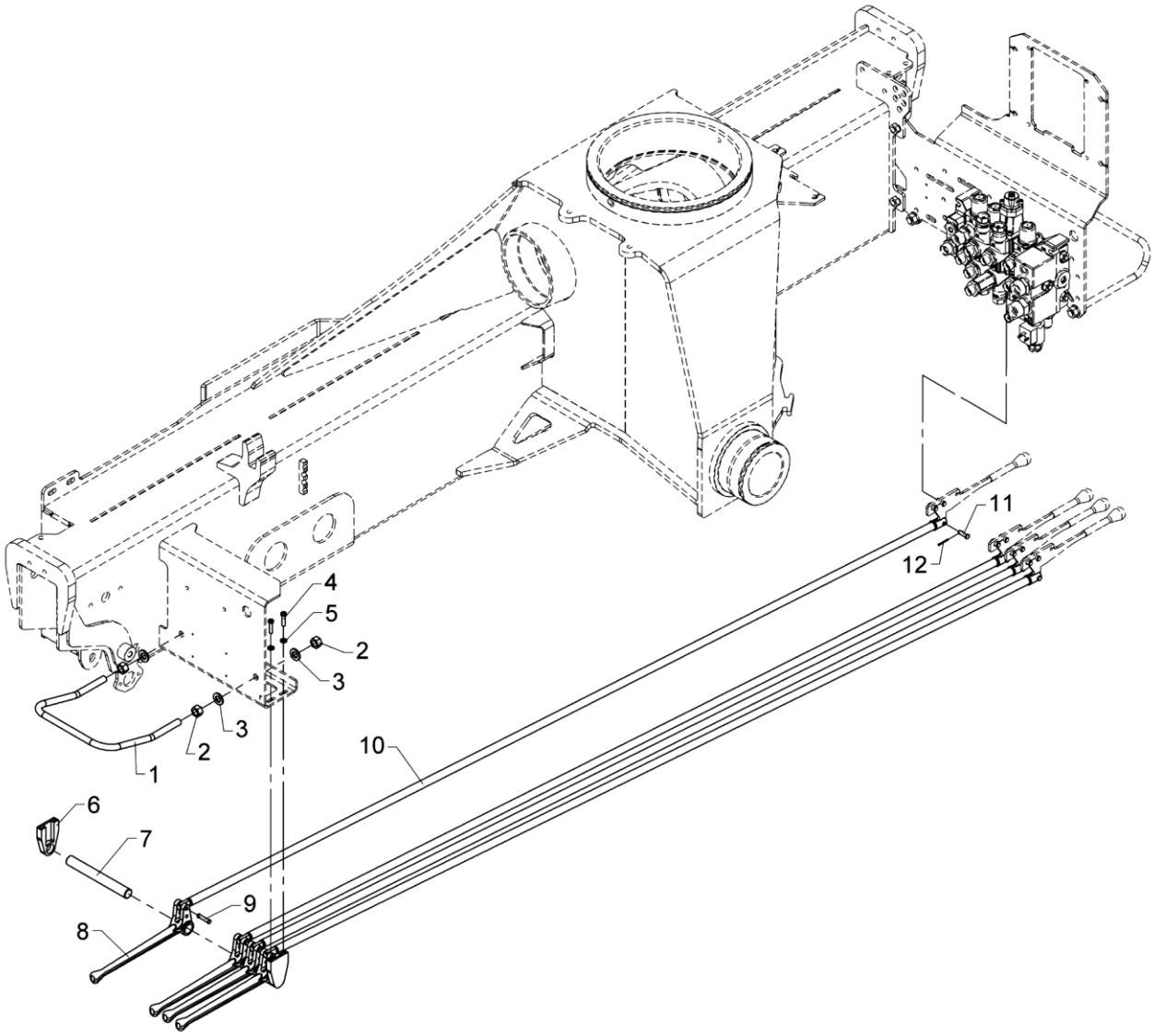

Dual control, 4 functions

534 05 120 A

From loader 1061517
To loader

Created 25-11-2015
Modified

Pos	Qty.	Part no.	Description	Remarks
1	1	6340247	Safety guard	
2	4	30860	Nut, stainless	M12
3	4	32338	Washer	12 mm
4	4	30340	Screw, stainless	6,0 x 25
5	4	32302	Face washer, stainless	6 mm
6	2	63564	Bracket for pin	
7	1	6340248	Pin	
8	4	63443	Lever for dual controls	
9	4	63468	Split pin with spring lock	
10	4	6341246	Connecting rod	
11	4	31271	Cotter bolt	
12	4	31601	Split pin, stainless	

1500K, 1510K, 1720K, 1730K, 1820K, 1830K

Internal ref. 63 44 770

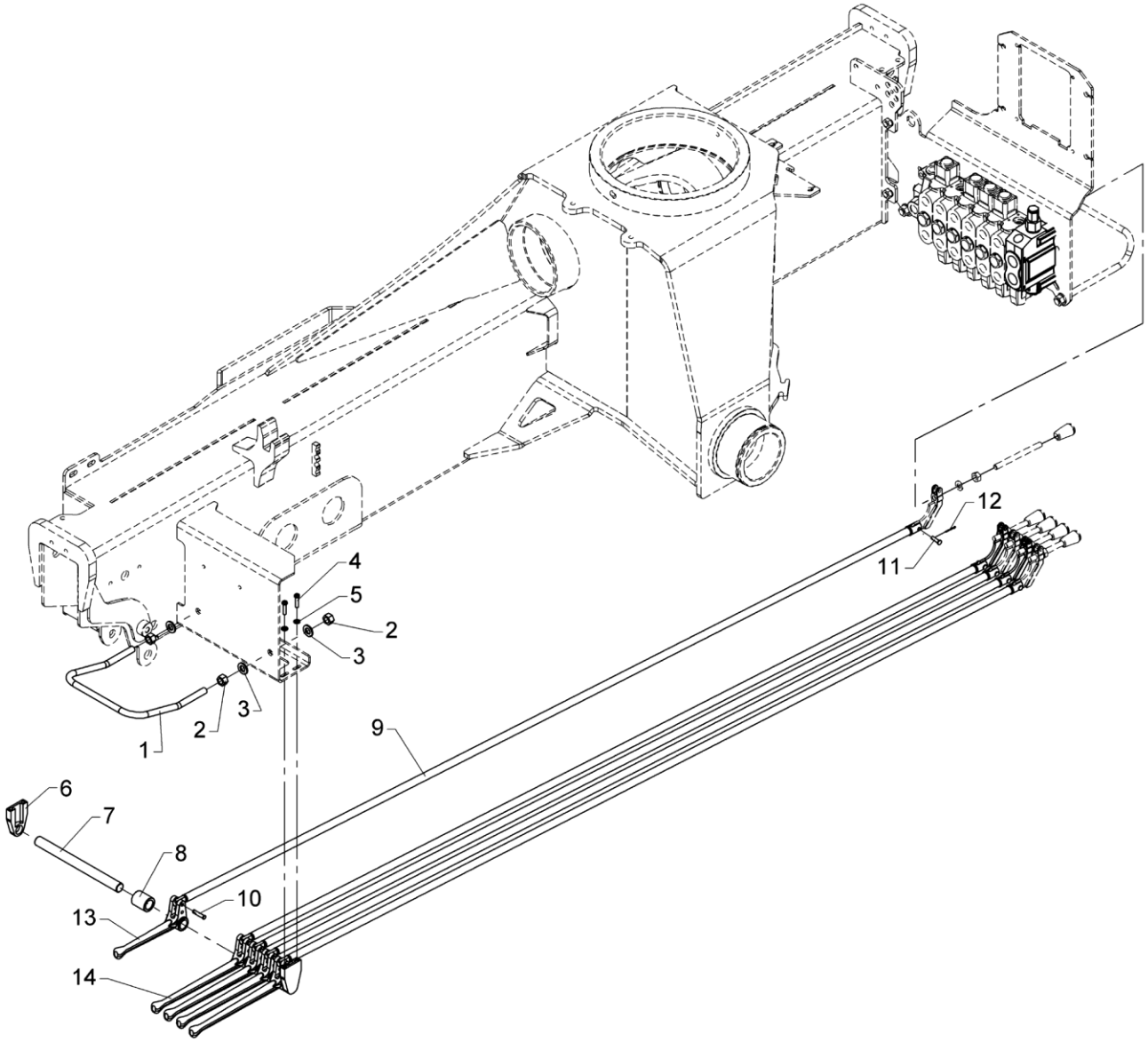

Obsolete

Dual control, 5 functions

534 05 130

From loader 1060001
To loader 1061516

Created 12-11-2008
Modified

Pos	Qty.	Part no.	Description	Remarks
1	1	6340247	Safety guard	
2	4	30860	Nut, stainless	M12
3	4	32338	Washer	12 mm
4	4	30340	Screw, stainless	6,0 x 25
5	4	32302	Face washer, stainless	6 mm
6	2	63564	Bracket for pin	
7	1	6340249	Pin	
8	1	63598	Bushing	
9	5	6340246	Connecting rod	
10	5	63468	Split pin with spring lock	
11	5	31271	Cotter bolt	ø6 x 21
12	5	31601	Split pin, stainless	ø1,6 x 20
13	1	63444	Lever for dual controls	
14	4	63443	Lever for dual controls	

1500K, 1510K, 1720K, 1730K, 1820K, 1830K

Internal ref. 63 44 120

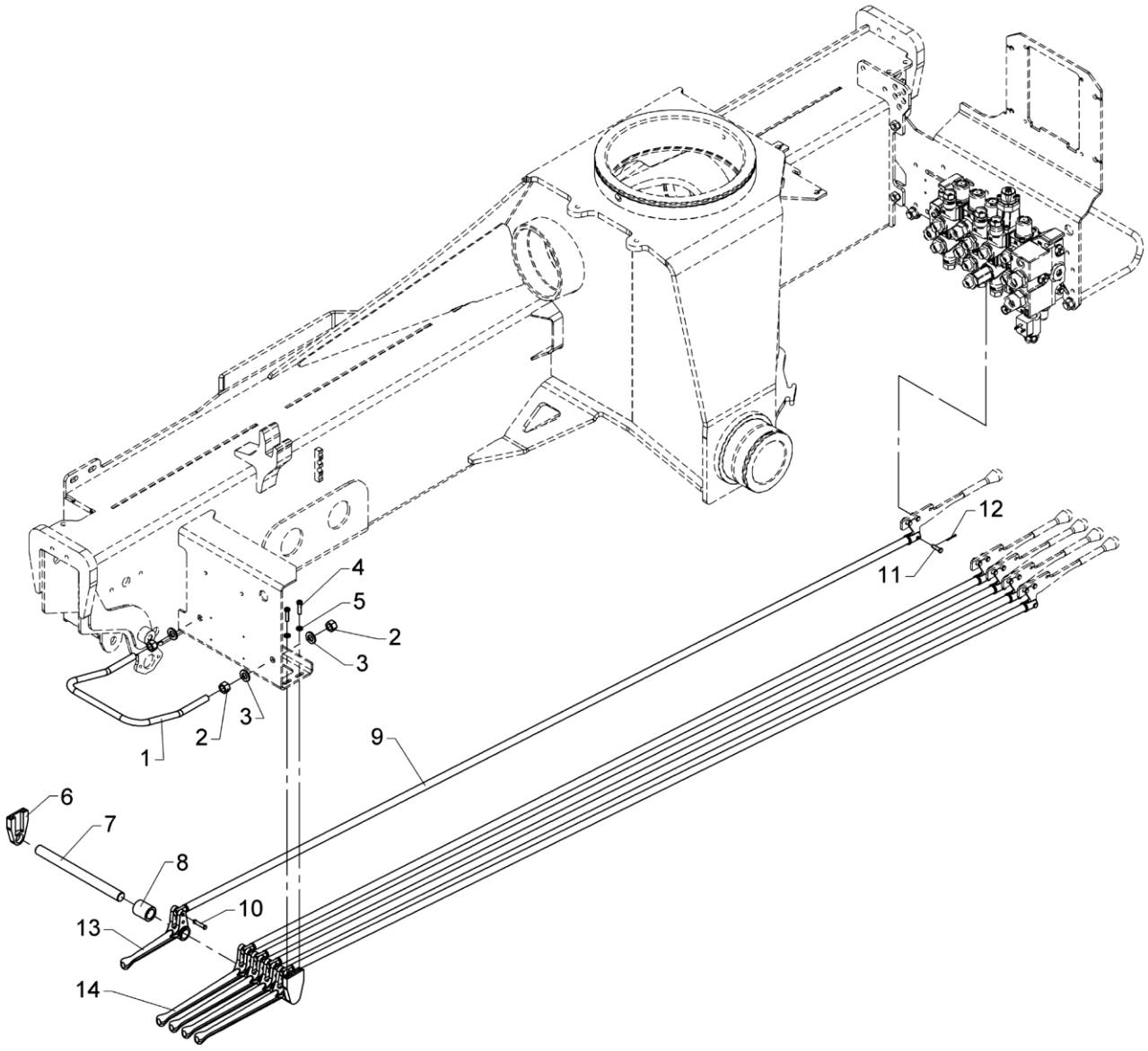

Dual control, 5 functions

534 05 130 A

From loader 1061517
To loader

Created 25-11-2015
Modified

Pos	Qty.	Part no.	Description	Remarks
1	1	6340247	Safety guard	
2	4	30860	Nut, stainless	M12
3	4	32338	Washer	12 mm
4	4	30340	Screw, stainless	6,0 x 25
5	4	32302	Face washer, stainless	6 mm
6	2	63564	Bracket for pin	
7	1	6340249	Pin	
8	1	63598	Bushing	ø30/ø20 x 35
9	5	6341246	Connecting rod	
10	5	63468	Split pin with spring lock	
11	5	31271	Cotter bolt	
12	5	31601	Split pin, stainless	
13	1	63444	Lever for dual controls	
14	4	63443	Lever for dual controls	

1500K, 1510K, 1720K, 1730K, 1820K, 1830K

Internal ref. 63 44 880

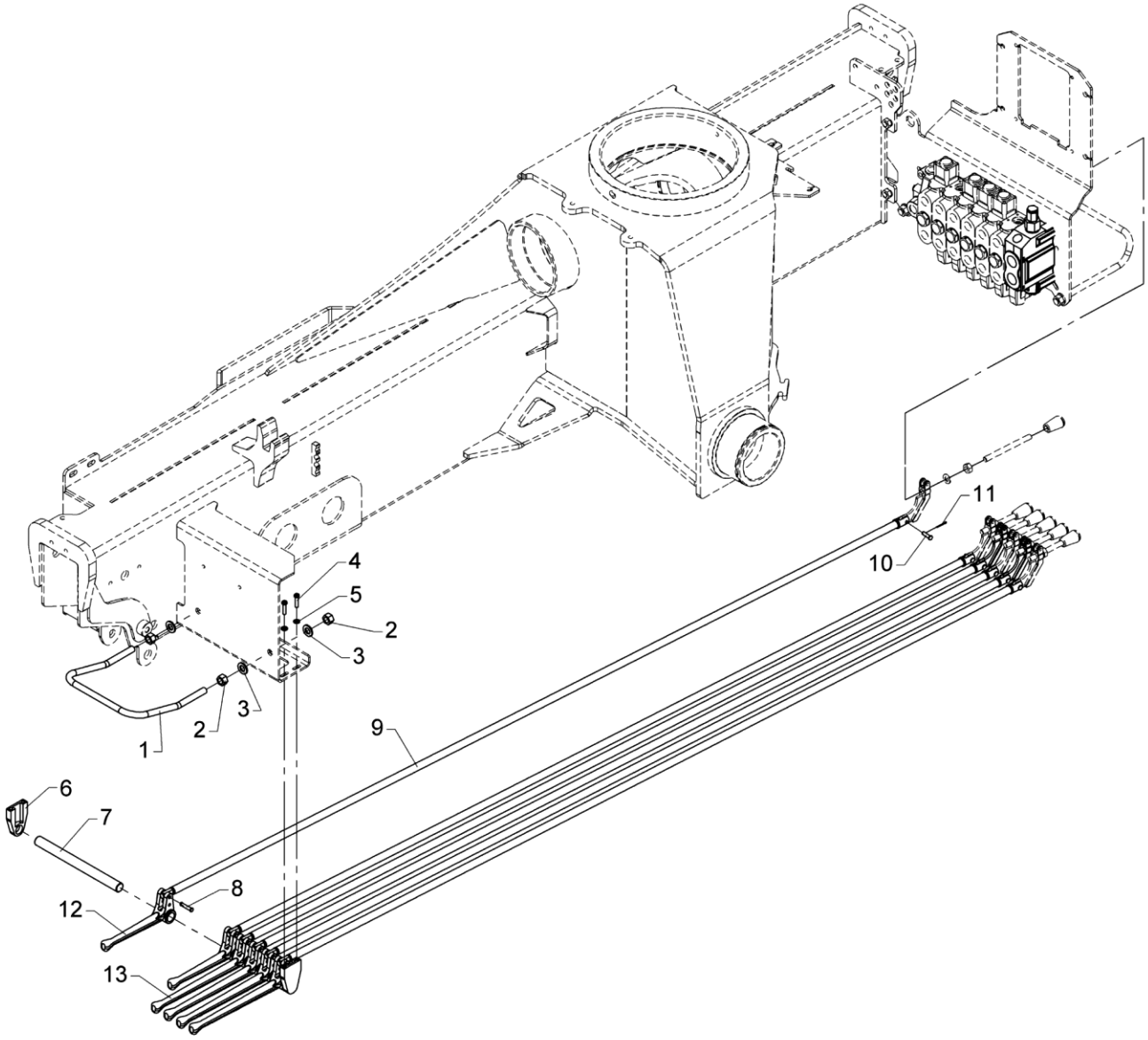

Obsolete

Dual control, 6 functions

534 05 140

From loader 1060001
To loader 1061516

Created 12-11-2008
Modified

Pos	Qty.	Part no.	Description	Remarks
1	1	6340247	Safety guard	
2	4	30860	Nut, stainless	M12
3	4	32338	Washer	12 mm
4	4	30340	Screw, stainless	6,0 x 25
5	4	32302	Face washer, stainless	6 mm
6	2	63564	Bracket for pin	
7	1	6340249	Pin	
8	6	63468	Split pin with spring lock	
9	6	6340246	Connecting rod	
10	6	31271	Cotter bolt	ø6 x 21
11	6	31601	Split pin, stainless	ø1,6 x 20
12	2	63444	Lever for dual controls	
13	4	63443	Lever for dual controls	

1500K, 1510K, 1720K, 1730K, 1820K, 1830K

Internal ref. 63 44 130

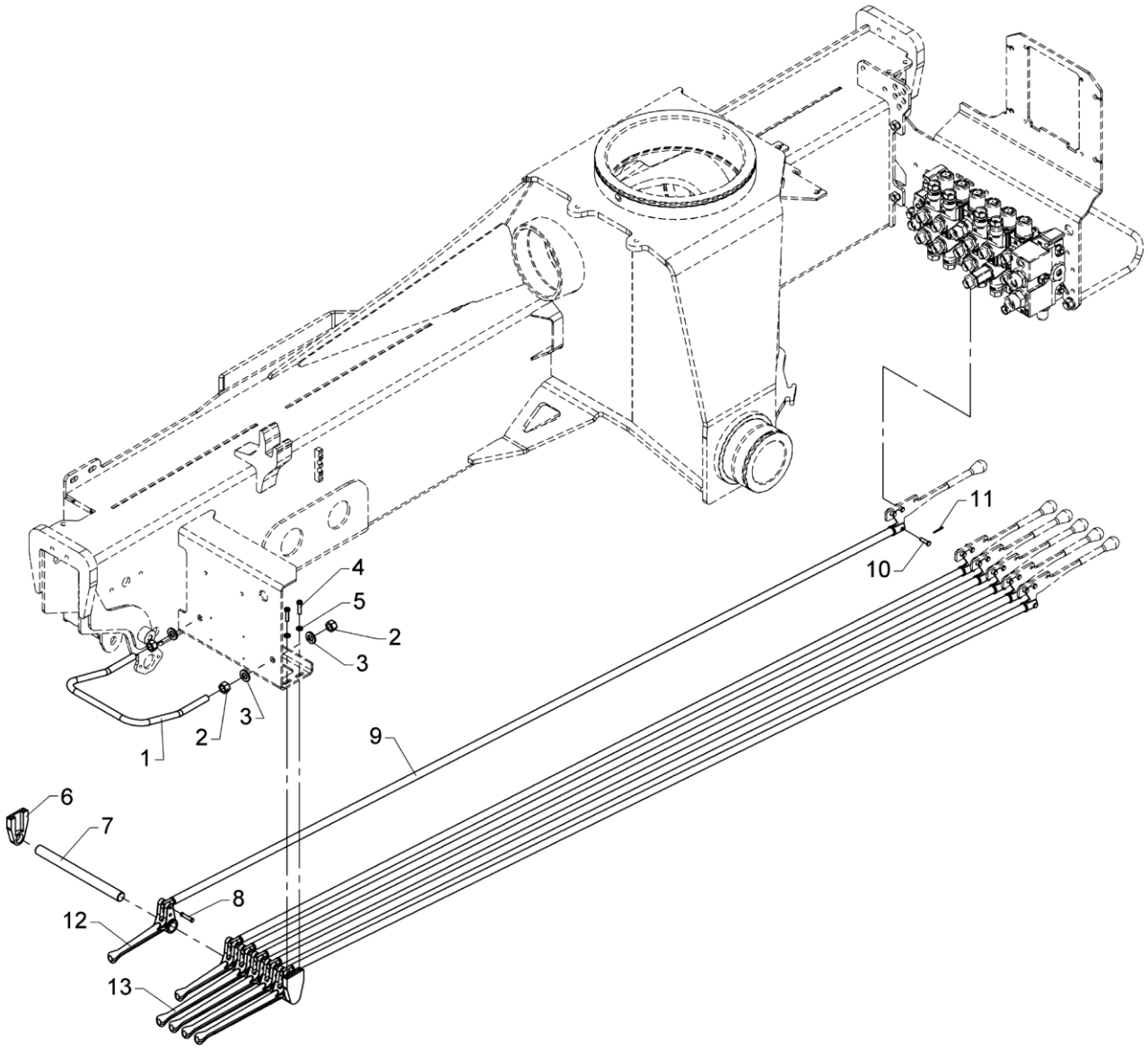

Dual control, 6 functions

534 05 140 A

From loader 1061517
To loader

Created 25-11-2015
Modified

Pos	Qty.	Part no.	Description	Remarks
1	1	6340247	Safety guard	
2	4	30860	Nut, stainless	M12
3	4	32338	Washer	12 mm
4	4	30340	Screw, stainless	6,0 x 25
5	4	32302	Face washer, stainless	6 mm
6	2	63564	Bracket for pin	
7	1	6340249	Pin	
8	6	63468	Split pin with spring lock	
9	6	6341246	Connecting rod	
10	6	31271	Cotter bolt	
11	6	31601	Split pin, stainless	
12	2	63444	Lever for dual controls	
13	4	63443	Lever for dual controls	

1500K, 1510K, 1720K, 1730K, 1820K, 1830K

Internal ref. 63 41 260

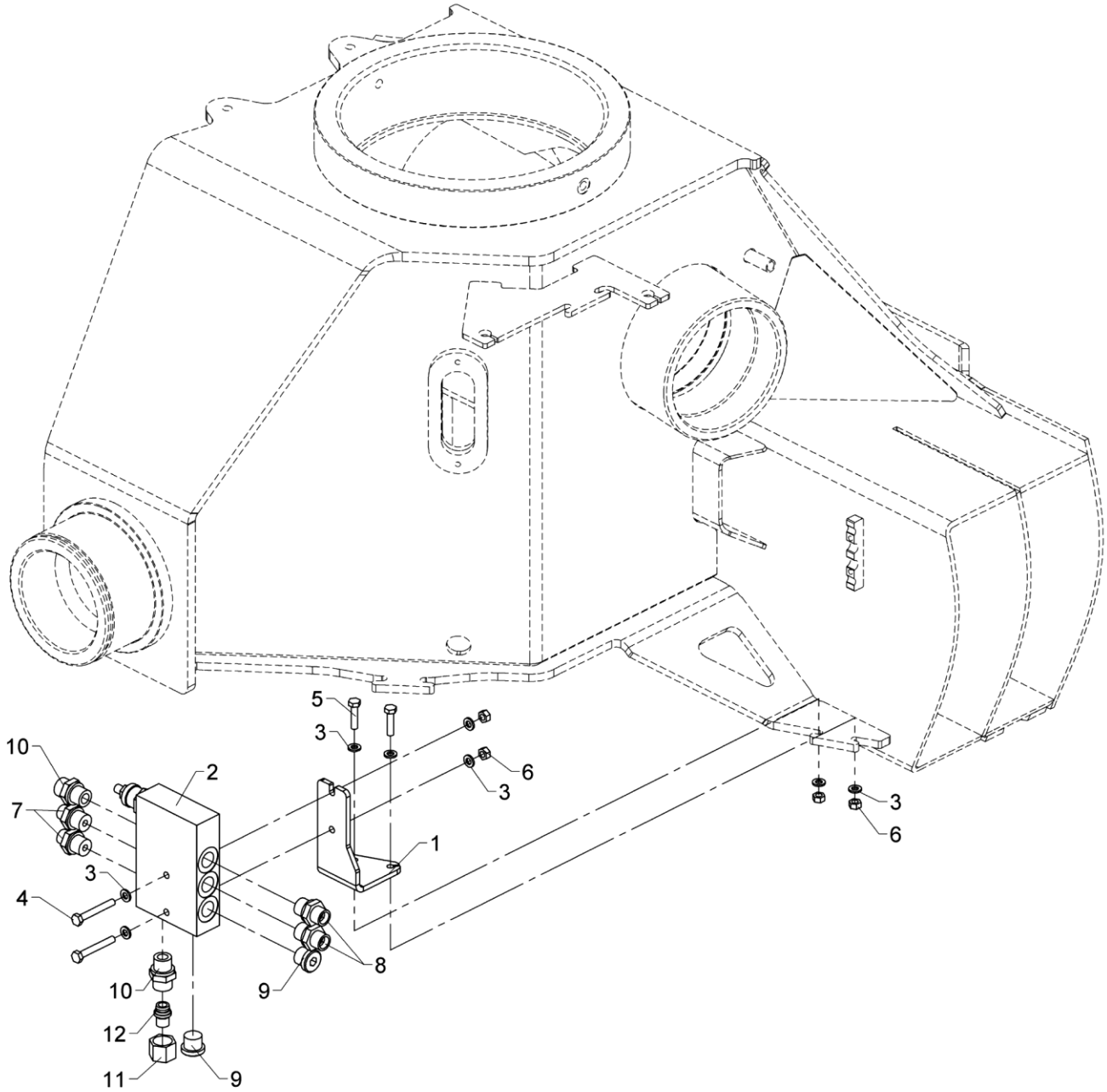

Counter-balance valve

Pos	Qty.	Part no.	Description	Remarks
1	1	6340273	Bracket (counter-balance valve	
2	1	50521	Sequence valve	
3	8	32302	Face washer, stainless	6 mm
4	2	30118	Steel pin, stainless	M6 x 45
5	2	30114	Set screw, stainless	M6 x 25
6	4	30854	Nut, stainless	M6
7	2	25244	Connection	GES 8 LR 3/8-WD
8	2	25253	Connection	P-GEV 10 LR 3/8-WD
9	2	25277	Plug	VS-R-3/8 WD
10	2	25127	Connection	P-GEV 12 LR-WD
11	1	25183	Coupling nut	M 12 L
12	1	26180	Blanking plug	VSD 12 L

1500K, 1510K, 1720K, 1730K, 1820K, 1830K

63 41 600
Internal ref. 63 41 210

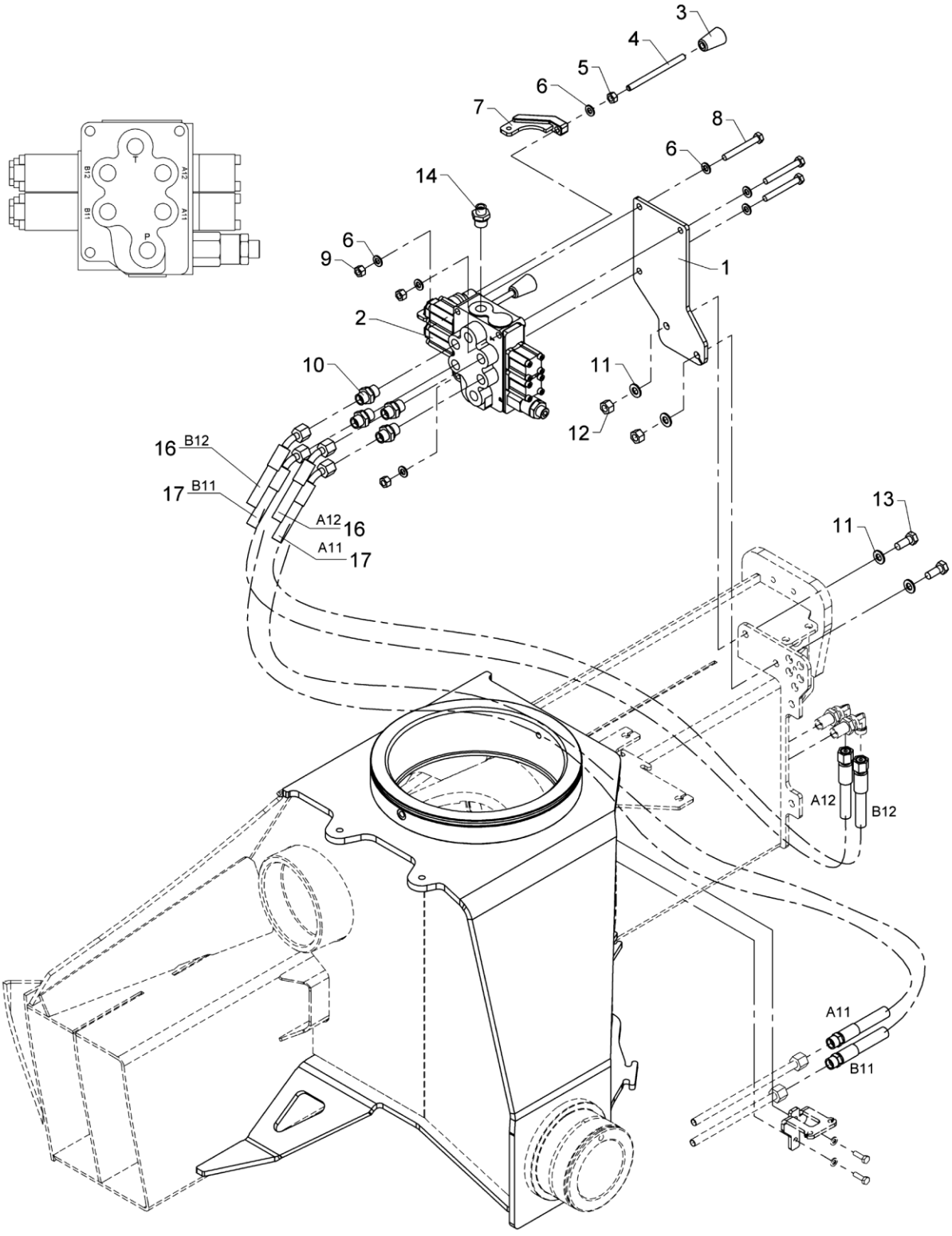

Obsolete

534 05 200

From loader 1060001
To loader

Created 20-11-2008
Modified 05-05-2014

Valve bracket, cpl. 2 fcts.

Pos	Qty.	Part no.	Description	Remarks
		6341210	Valve bracket, compl. 2 functs	
		6341600	Hose kit, 2 functions	
1	1	6340254	Valve bracket (2 functions)	
2	1	55225	Stabilizer valve	
3	2	59224	Knob for lever	
4	2	1330187	Control lever, long, straight	
5	2	30856	Nut, stainless	M8
6	8	31147	Face washer, 8 mm	8 mm
7	2	63450	Adapter for dual controls	
8	3	30259	Steel bolt, stainless	M8 x 65
9	3	30886	Lock nut, stainless	M8
10	4	25253	Connection	P-GEV 10 LR 3/8-WD
11	4	31565	Washer, stainless	10 mm
12	2	31564	Lock nut, stainless	M10
13	2	31513	Set screw, stainless	M10 x 25
14	1	25244	Connection	GES 8 LR 3/8-WD
15	1	6341600	Hose kit, 2 functions	
16	2	56393	Hose	5/16"x950mm L/V 10Let / vinkel 45
17	2	56394	Hose	5/16"x600mm S/V 10L studs / vinke

1500K, 1510K, 1720K, 1730K, 1820K, 1830K

63 41 600
Internal ref. 63 41 210

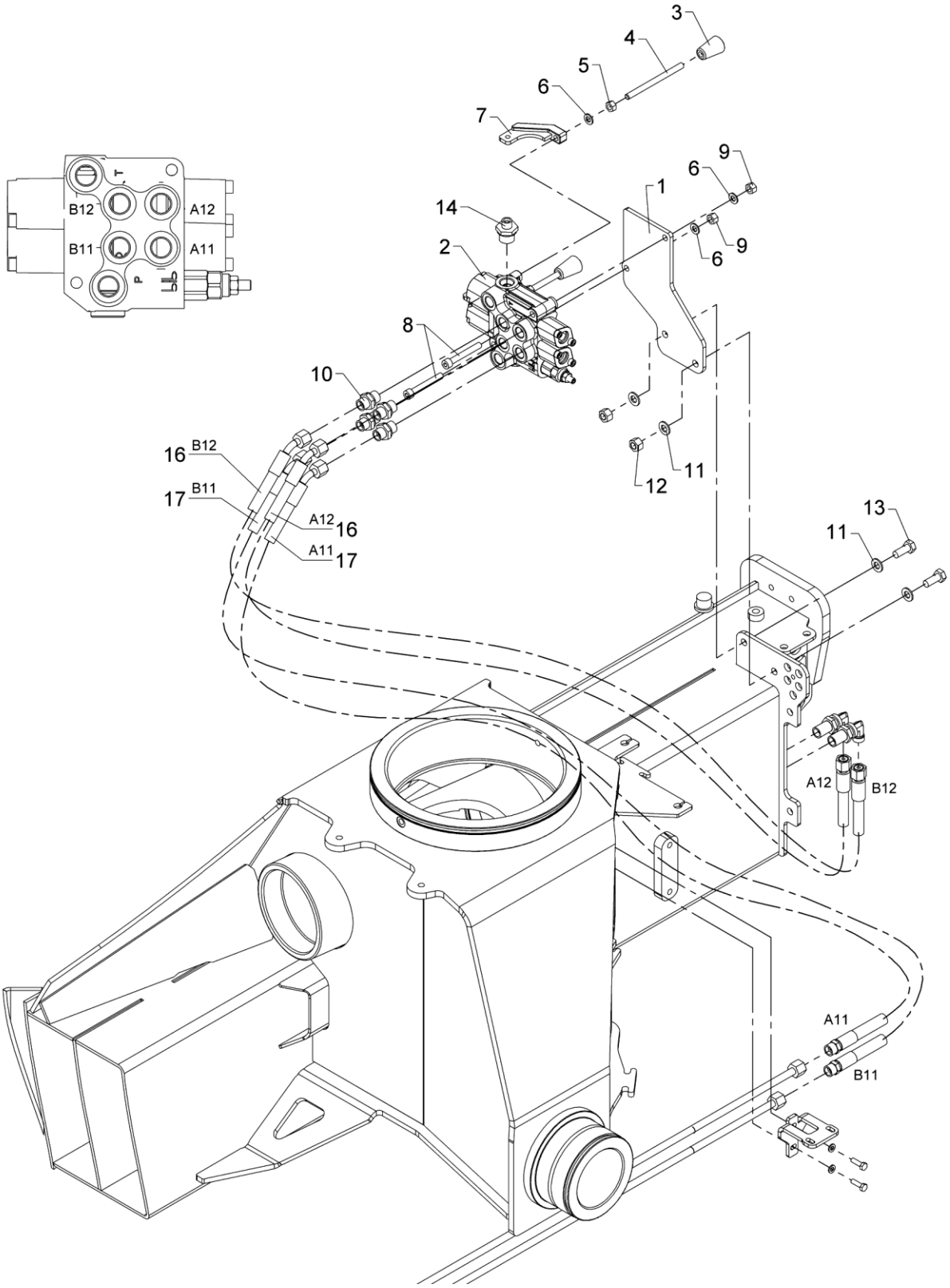

534 05 200 A

From loader
To loader

Valve bracket, cpl. 2 fcts.

Created 30-06-2019
Modified

Pos	Qty.	Part no.	Description	Remarks
		6341210	Valve bracket, compl. 2 functs	
		6341600	Hose kit, 2 functions	
1	1	6344871	Valve bracket (4 functions)	
2	1	55738	Stabilizer control valve	
3	2	59224	Knob for lever	
4	2	1330187	Control lever, long, straight	
5	2	30856	Nut, stainless	M8
6	4	31147	Face washer, 8 mm	8 mm
7	2	63450	Adapter for dual controls	
8	2	30469	Screw	MC8 x 60
9	2	30886	Lock nut, stainless	M8
10	4	25253	Connection	P-GEV 10 LR 3/8-WD
11	4	31565	Washer, stainless	10 mm
12	2	31564	Lock nut, stainless	M10
13	2	31513	Set screw, stainless	M10 x 25
14	1	25687	Straight connection 8l 182"	24-SDS-L8-G1/2E
15	1	6341600	Hose kit, 2 functions	
16	2	56393	Hose	5/16"x950mm L/V 10Let / vinkel 45
17	2	56394	Hose	5/16"x600mm S/V 10L studs / vinke

1500K, 1510K, 1720K, 1730K, 1820K, 1830K

63 41 600
Internal ref. 63 41 060

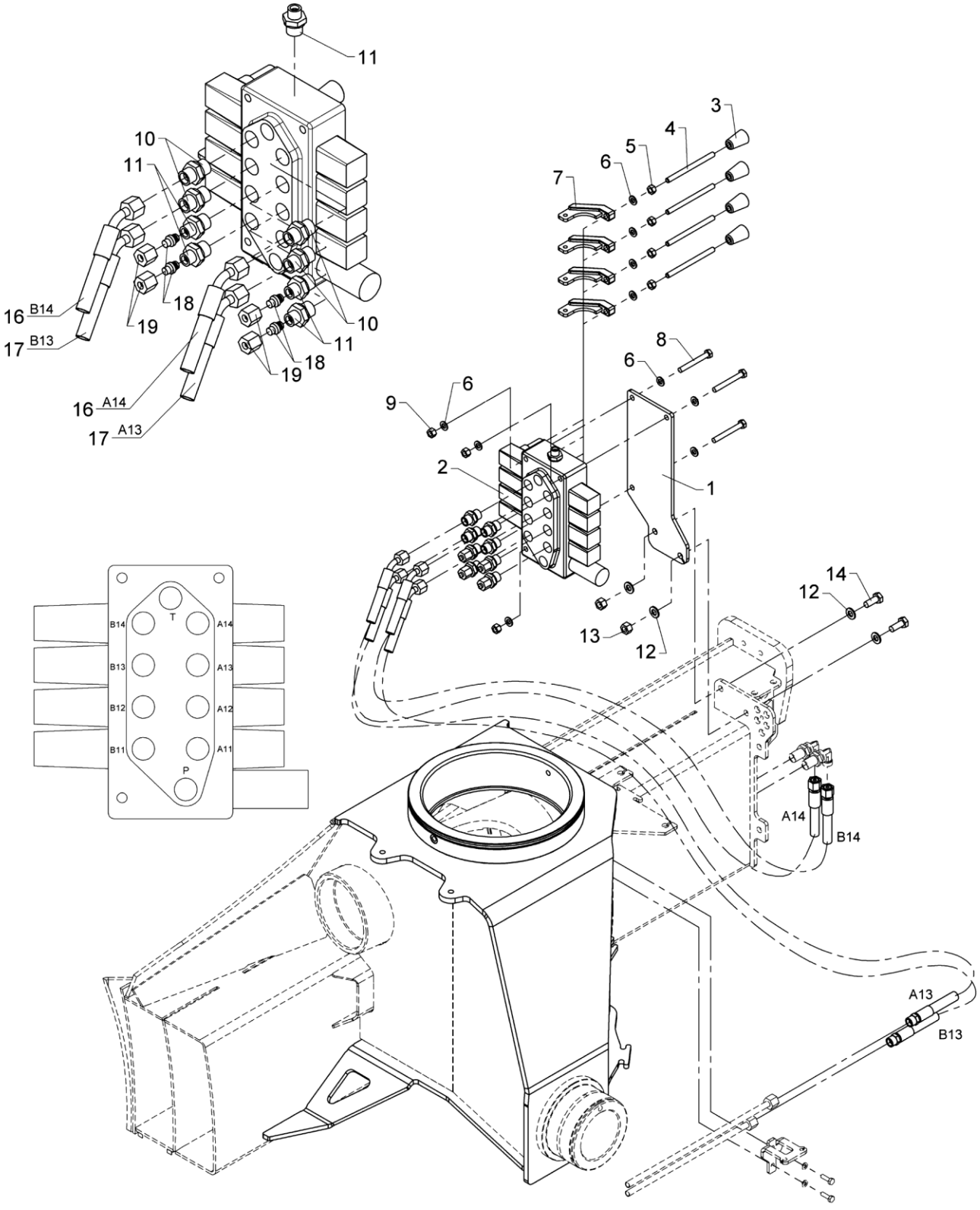

Obsolete

Valve bracket, cpl., 2 fcts. + 2 available fcts.

534 05 205

From loader 1060001
To loader

Created 10-04-2008
Modified 05-05-2014

Pos	Qty.	Part no.	Description	Remarks
		6341060	Valve br., cpl.2fcts.+2 avail.	
		6341600	Hose kit, 2 functions	
1	1	6340255	Valve bracket (4 functions)	
2	1	55226	Stabilizer valve	
3	4	59224	Knob for lever	
4	4	1330187	Control lever, long, straight	
5	4	30856	Nut, stainless	M8
6	10	31147	Face washer, 8 mm	8 mm
7	4	63450	Adapter for dual controls	
8	3	30259	Steel bolt, stainless	M8 x 65
9	3	30886	Lock nut, stainless	M8
10	4	25253	Connection	P-GEV 10 LR 3/8-WD
11	5	25244	Connection	GES 8 LR 3/8-WD
12	4	31565	Washer, stainless	10 mm
13	2	31564	Lock nut, stainless	M10
14	2	31513	Set screw, stainless	M10 x 25
15	1	6341600	Hose kit, 2 functions	
16	2	56393	Hose	5/16"x950mm L/V
17	2	56394	Hose	5/16"x600mm S/V
18	4	26166	Blanking plug	VSD 8 L
19	4	25181	Coupling nut	M 8 L

1500K, 1510K, 1720K, 1730K, 1820K, 1830K

63 41 600
Internal ref. 63 41 060

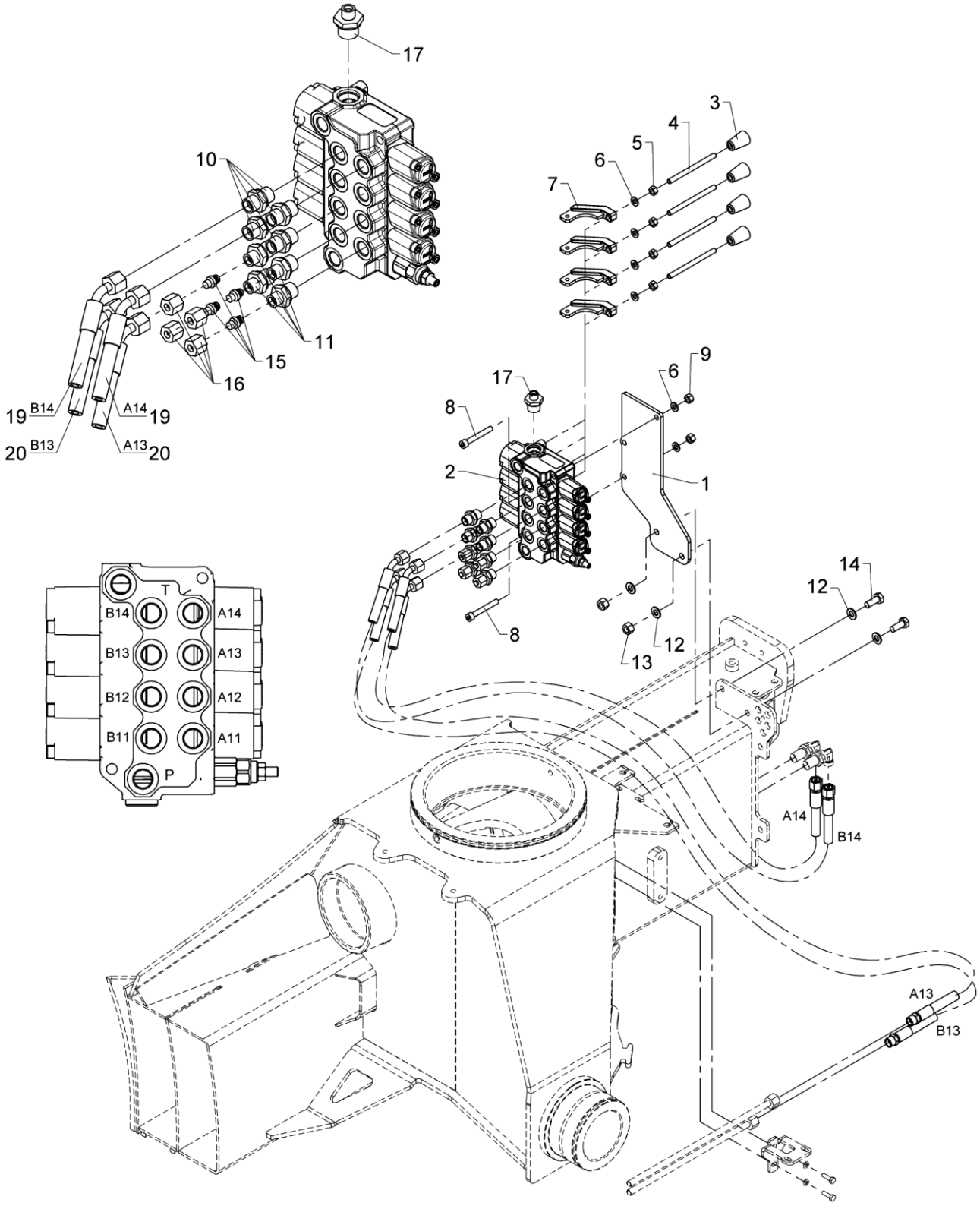

Valve bracket, cpl., 2 fcts. + 2 available fcts.

Pos	Qty.	Part no.	Description	Remarks
		6341060	Valve br., cpl.2fcts.+2 avail.	
		6341600	Hose kit, 2 functions	
1	1	6344872	Valve bracket (HS)	
2	1	55737	Stabilizer control valve	
3	4	59224	Knob for lever	
4	4	1330187	Control lever, long, straight	
5	4	30856	Nut, stainless	M8
6	6	31147	Face washer, 8 mm	8 mm
7	4	63450	Adapter for dual controls	
8	2	30469	Screw	MC8 x 60
9	2	30886	Lock nut, stainless	M8
10	4	25253	Connection	P-GEV 10 LR 3/8-WD
11	4	25244	Connection	GES 8 LR 3/8-WD
12	4	31565	Washer, stainless	10 mm
13	2	31564	Lock nut, stainless	M10
14	2	31513	Set screw, stainless	M10 x 25
15	4	26166	Blanking plug	VSD 8 L
16	4	25181	Coupling nut	M 8 L
17	1	25687	Straight connection 8l 182"	24-SDS-L8-G1/2E
18	1	6341600	Hose kit, 2 functions	
19	2	56393	Hose	5/16"x950mm L/V
20	2	56394	Hose	5/16"x600mm S/V

1500K, 1510K, 1720K, 1730K, 1820K, 1830K

63 41 610
Internal ref. 63 41 220

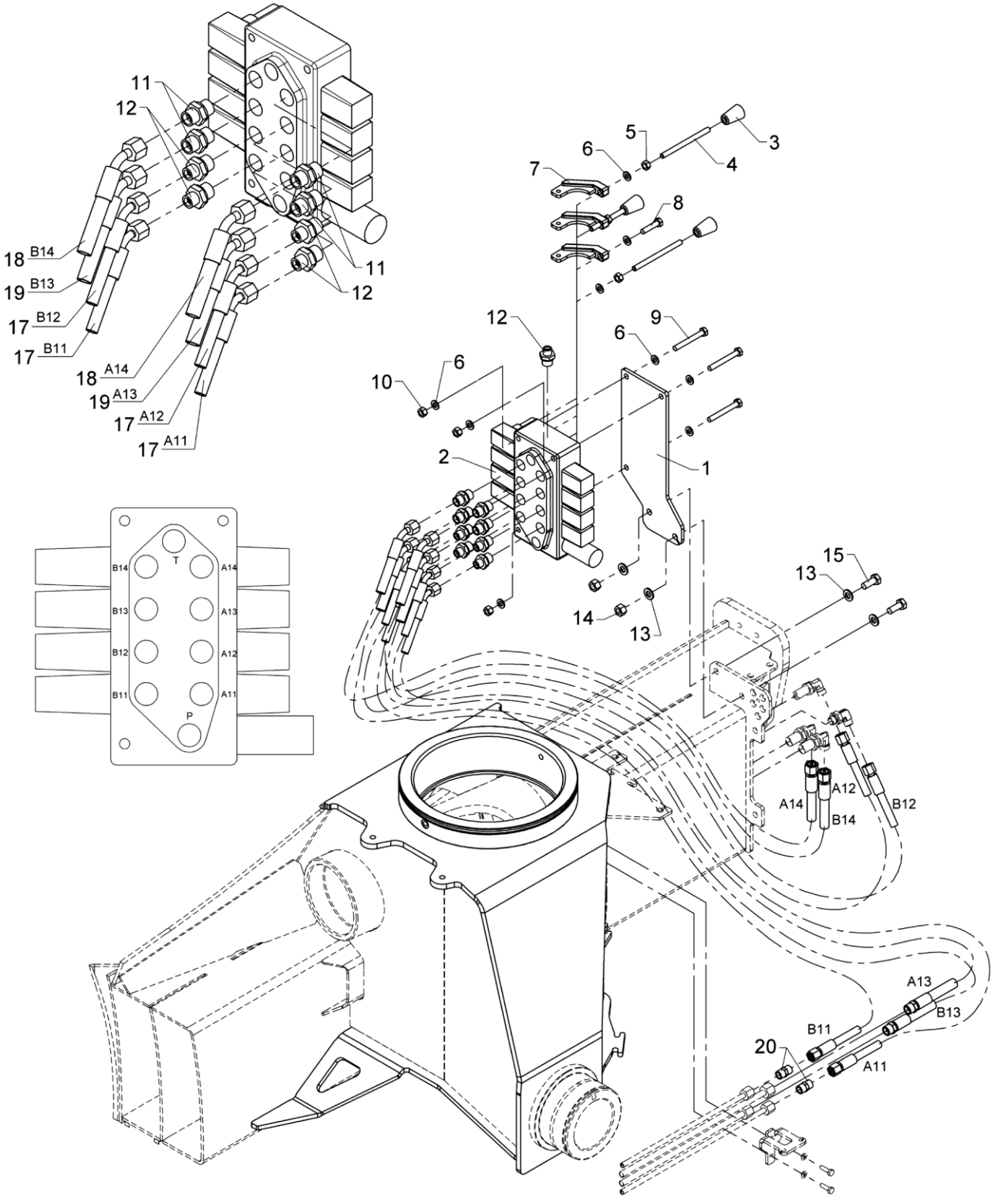

Obsolete

534 05 210

From loader 1060001
To loader

Created 20-11-2008
Modified 05-05-2014

Valve bracket, cpl. 4 fcts.

Pos	Qty.	Part no.	Description	Remarks
		6341220	Valve bracket, cpl., 4 funct.	
		6341610	Hose kit, 4 functions	
1	1	6340255	Valve bracket (4 functions)	
2	1	55226	Stabilizer valve	
3	3	59224	Knob for lever	
4	3	1330187	Control lever, long, straight	
5	3	30856	Nut, stainless	M8
6	10	31147	Face washer, 8 mm	8 mm
7	3	63450	Adapter for dual controls	
8	1	30136	Steel bolt, stainless	M8 x 35
9	3	30259	Steel bolt, stainless	M8 x 65
10	3	30886	Lock nut, stainless	M8
11	4	25253	Connection	P-GEV 10 LR 3/8-WD
12	5	25244	Connection	GES 8 LR 3/8-WD
13	4	31565	Washer, stainless	10 mm
14	2	31564	Lock nut, stainless	M10
15	2	31513	Set screw, stainless	M10 x 25
16	1	6341610	Hose kit, 4 functions	
17	4	56381	Hose	1/4"x600mm L/V 8Let / vinkel 45 gr.
18	2	56393	Hose	5/16"x950mm L/V 10Let / vinkel 45
19	2	56394	Hose	5/16"x600mm S/V 10L studs / vinke
20	2	25246	Double connection	GS 8 L

1500K, 1510K, 1720K, 1730K, 1820K, 1830K

63 41 610
Internal ref. 63 41 220

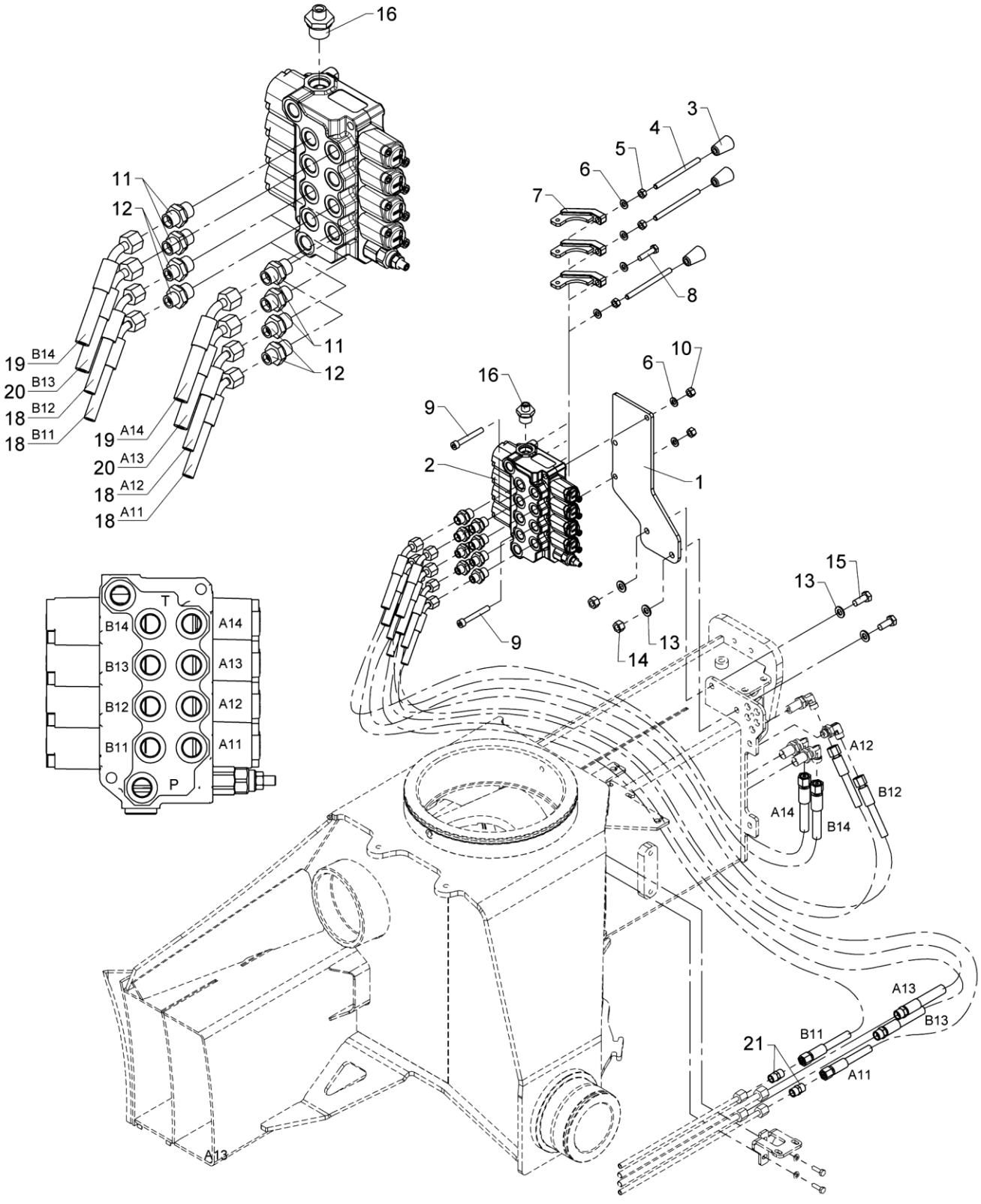

534 05 210 A

From loader
To loader

Valve bracket, cpl. 4 fcts.

Created 15-03-2019
Modified

Pos	Qty.	Part no.	Description	Remarks
		6341220	Valve bracket, cpl., 4 funct.	
		6341610	Hose kit, 4 functions	
1	1	6344872	Valve bracket (HS)	
2	1	55737	Stabilizer control valve	
3	3	59224	Knob for lever	
4	3	1330187	Control lever, long, straight	
5	3	30856	Nut, stainless	M8
6	6	31147	Face washer, 8 mm	8 mm
7	3	63450	Adapter for dual controls	
8	1	30136	Steel bolt, stainless	M8 x 35
9	2	30469	Screw	MC8 x 60
10	2	30886	Lock nut, stainless	M8
11	4	25253	Connection	P-GEV 10 LR 3/8-WD
12	4	25244	Connection	GES 8 LR 3/8-WD
13	4	31565	Washer, stainless	10 mm
14	2	31564	Lock nut, stainless	M10
15	2	31513	Set screw, stainless	M10 x 25
16	1	25687	Straight connection 8l 182"	24-SDS-L8-G1/2E
17	1	6341610	Hose kit, 4 functions	
18	4	56381	Hose	1/4"x600mm L/V 8Let / vinkel 45 gr.
19	2	56393	Hose	5/16"x950mm L/V 10Let / vinkel 45
20	2	56394	Hose	5/16"x600mm S/V 10L studs / vinke
21	2	25246	Double connection	GS 8 L

1500K, 1510K, 1720K, 1730K, 1820K, 1830K

63 41 620
Internal ref. 63 41 250

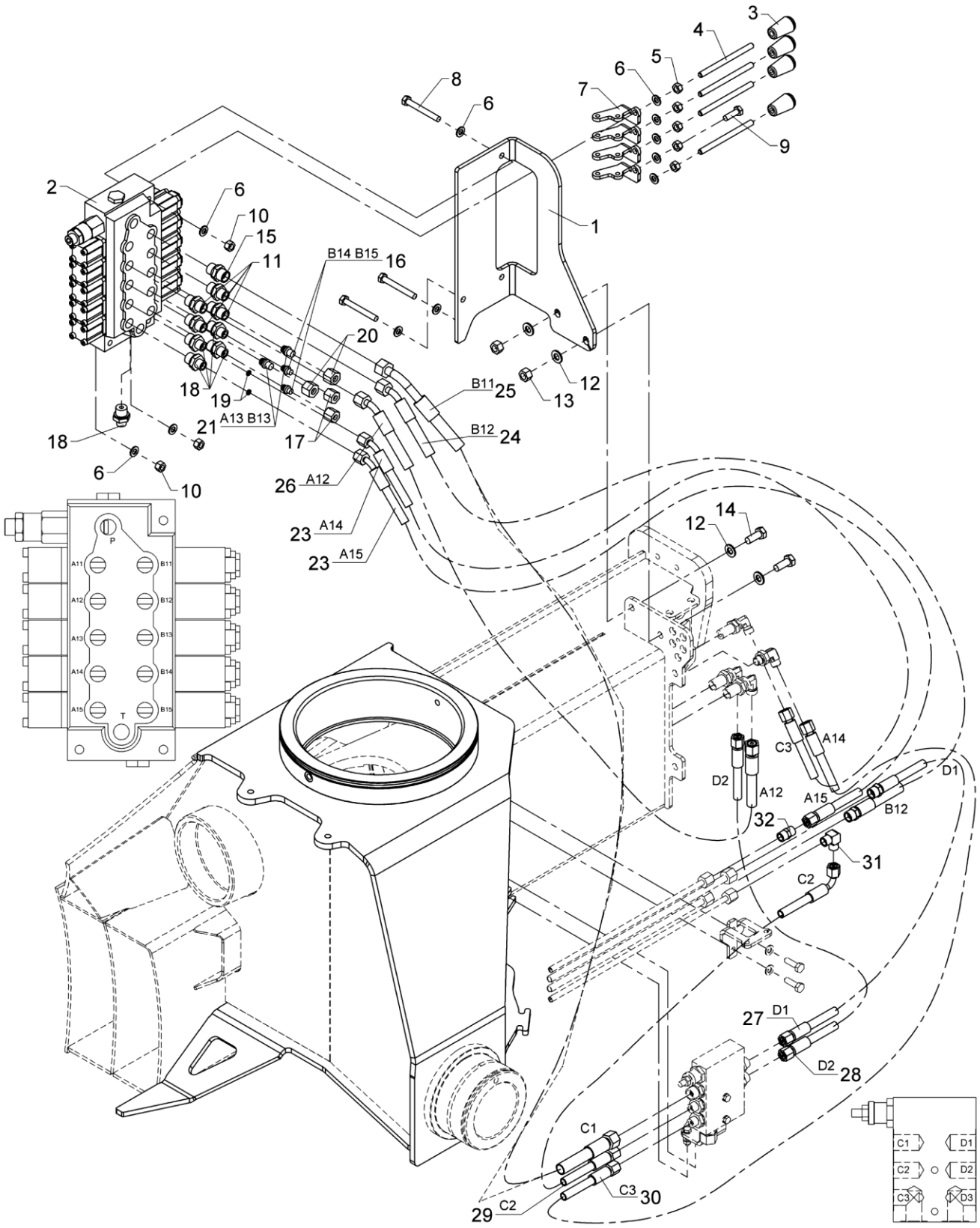

Obsolete

534 05 220

From loader 1060001
To loader

Created 20-11-2008
Modified 05-05-2014

Valve bracket, cpl. 4 fcts. + 4 available

Pos	Qty.	Part no.	Description	Remarks
		6341250	Valve br., cpl.4fcts.+4 avail.	
		6341620	Hose kit, 4 fcts + 4 available	
1	1	6340271	Valve bracket (4 + 4 fcts.)	
2	1	55277	Valve block, complete	
3	4	59224	Knob for lever	
4	4	1330187	Control lever, long, straight	
5	5	30856	Nut, stainless	M8
6	11	31147	Face washer, 8 mm	8 mm
7	4	6340229	Adapter	
8	3	30259	Steel bolt, stainless	M8 x 65
9	1	30134	Set screw, stainless	M8 x 25
10	3	30886	Lock nut, stainless	M8
11	4	25253	Connection	P-GEV 10 LR 3/8-WD
12	4	31565	Washer, stainless	10 mm
13	2	31564	Lock nut, stainless	M10
14	2	31513	Set screw, stainless	M10 x 25
15	1	25127	Connection	P-GEV 12 LR-WD
16	2	26166	Blanking plug	VSD 8 L
17	2	25181	Coupling nut	M 8 L
18	5	25244	Connection	GES 8 LR 3/8-WD
19	2	60963	Washer	
20	2	25182	Coupling nut	M 10 L
21	2	25202	Blanking plug	VSD 10 L
22	1	6341620	Hose kit, 4 fcts + 4 available	
23	2	56381	Hose	1/4"x600mm L/V 8Let / vinkel 45 gr.
24	1	56394	Hose	5/16"x600mm S/V 10L studs / vinke
25	1	56511	Hose	3/8 X 900 mm 45/L 12Let
26	1	56393	Hose	5/16"x950mm L/V 10Let / vinkel 45
27	1	56460	Hose	1/4" x 550mm L/S-10mm
28	1	56510	Hose	1/4 X 600 mm L/L 10Let
29	1	62525	Hose	1/4 X 400 M14 X 1.5 L/90
30	1	62569	Hose	1/4 X 800 M14 X 1.5 L/L
31	1	25247	Elbow connection	WV 8 L
32	1	25246	Double connection	GS 8 L

1500K, 1510K, 1720K, 1730K, 1820K, 1830K

63 41 620
Internal ref. 63 41 250

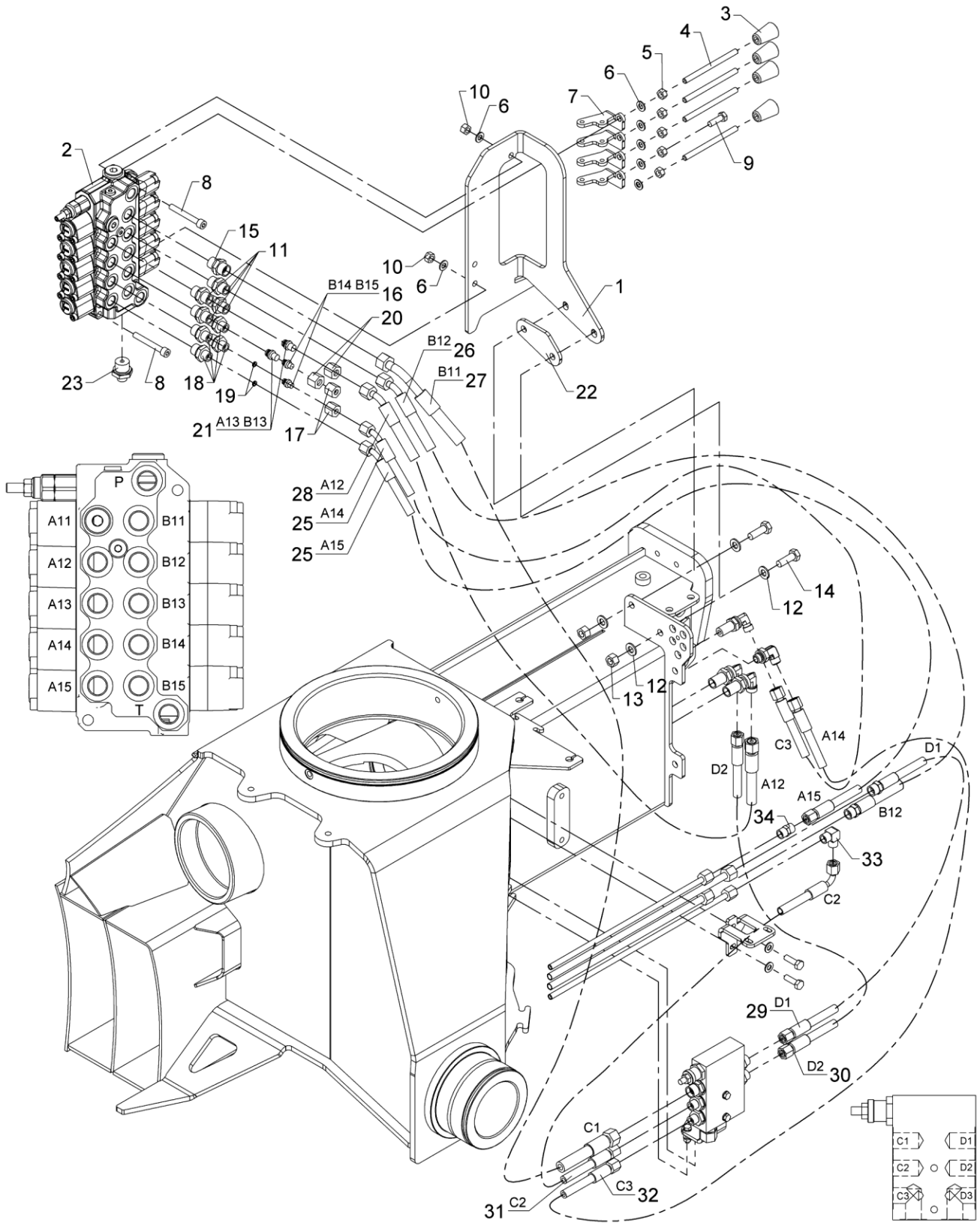

Valve bracket, cpl. 4 fcts. + 4 available

Pos	Qty.	Part no.	Description	Remarks
		6341250	Valve br., cpl.4fcts.+4 avail.	
		6341620	Hose kit, 4 fcts + 4 available	
1	1	6344875	Valve bracket (HS)	
2	1	55739	Stabilizer Valve	
3	4	59224	Knob for lever	
4	4	1330187	Control lever, long, straight	
5	5	30856	Nut, stainless	M8
6	7	31147	Face washer, 8 mm	8 mm
7	4	6340229	Adapter	
8	2	30469	Screw	MC8 x 60
9	1	30134	Set screw, stainless	M8 x 25
10	2	30886	Lock nut, stainless	M8
11	4	25253	Connection	P-GEV 10 LR 3/8-WD
12	4	31565	Washer, stainless	10 mm
13	2	31564	Lock nut, stainless	M10
14	2	30156	Set screw, stainless	M10 x 30
15	1	25127	Connection	P-GEV 12 LR-WD
16	2	26166	Blanking plug	VSD 8 L
17	2	25181	Coupling nut	M 8 L
18	4	25244	Connection	GES 8 LR 3/8-WD
19	2	60963	Washer	
20	2	25182	Coupling nut	M 10 L
21	2	25202	Blanking plug	VSD 10 L
22	1	6344879	Interm. flange / valve bracket	
23	1	25687	Straight connection 8l 182"	24-SDS-L8-G1/2E
24	1	6341620	Hose kit, 4 fcts + 4 available	
25	2	56381	Hose	1/4"x600mm L/V 8Let / vinkel 45 gr.
26	1	56394	Hose	5/16"x600mm S/V 10L studs / vinke
27	1	56511	Hose	3/8 X 900 mm 45/L 12Let
28	1	56393	Hose	5/16"x950mm L/V 10Let / vinkel 45
29	1	56460	Hose	1/4" x 550mm L/S-10mm
30	1	56510	Hose	1/4 X 600 mm L/L 10Let
31	1	62525	Hose	1/4 X 400 M14 X 1.5 L/90
32	1	62569	Hose	1/4 X 800 M14 X 1.5 L/L
33	1	25247	Elbow connection	WV 8 L
34	1	25246	Double connection	GS 8 L

1500K, 1510K, 1720K, 1730K, 1820K, 1830K

63 42 570
Internal ref. 63 42 550

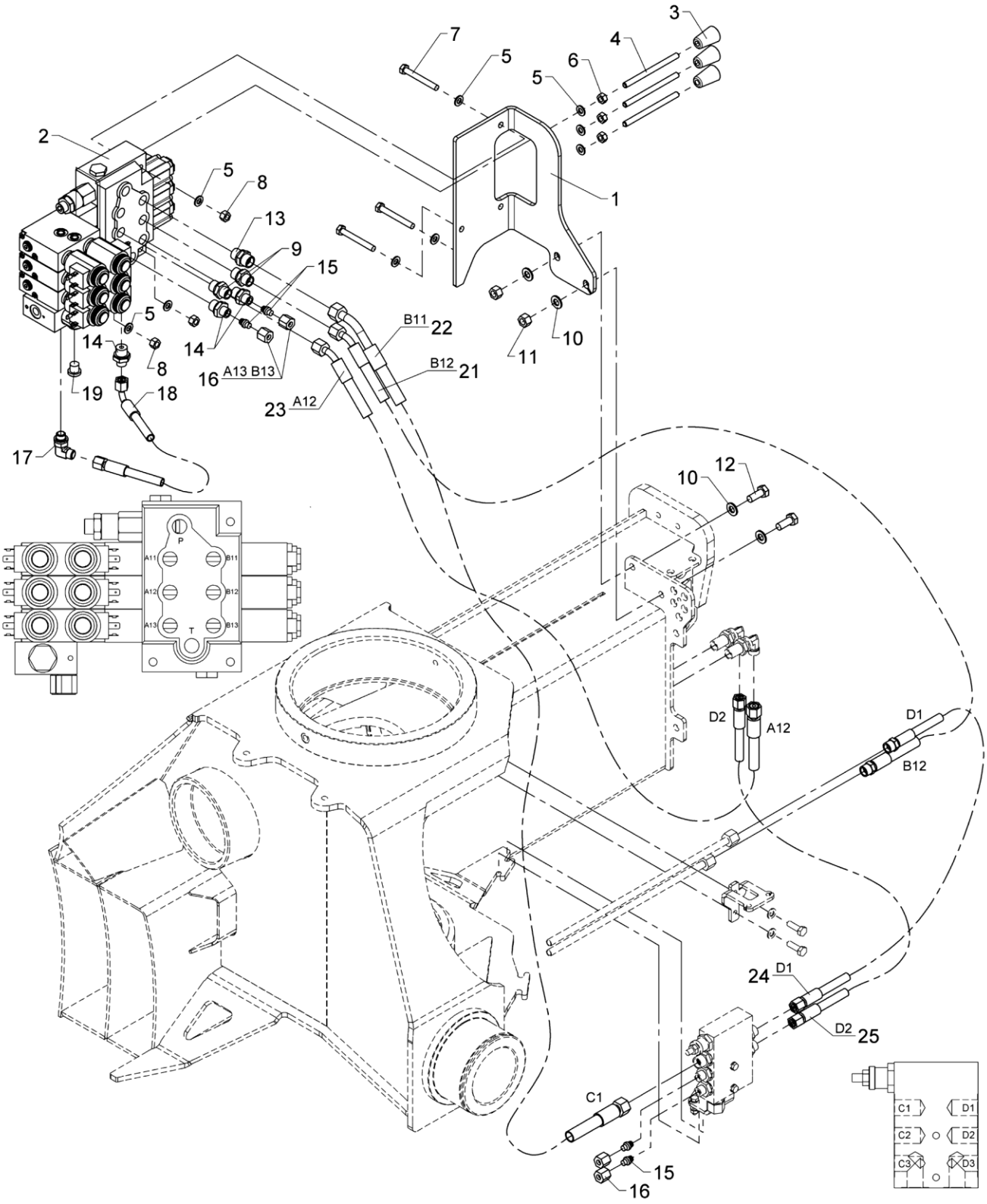

Valve bracket, cpl., 2 fcts. + 2 available fcts. - RC

Pos	Qty.	Part no.	Description	Remarks
		6342550	Valve br., cpl.2fcts.+2 avail.	
		6342570	Hose kit, 2 fcts + 2 avail. RC	
1	1	6340272	Valve bracket (4 fcts. RC)	
2	1	55276	Valve block, complete	
3	3	59224	Knob for lever	
4	3	1330187	Control lever, long, straight	
5	9	31147	Face washer, 8 mm	
6	3	30856	Nut, stainless	M8
7	3	30259	Steel bolt, stainless	M8 x 65
8	3	30886	Lock nut, stainless	M8
9	2	25253	Connection	P-GEV 10 LR 3/8-WD
10	4	31565	Washer, stainless	10 mm
11	2	31564	Lock nut, stainless	M10
12	2	31513	Set screw, stainless	M10 x 25
13	1	25127	Connection	P-GEV 12 LR-WD
14	3	25244	Connection	GES 8 LR 3/8-WD
15	4	26166	Blanking plug	VSD 8 L
16	4	25181	Coupling nut	M 8 L
17	1	26898	Elbow connection	8 mm - 1/4"
18	1	56531	Hose	1/4X200 M14X1.5 L/90
19	1	25197	Plug	VS-R-1/4 WD
20	1	6342570	Hose kit, 2 fcts + 2 avail. RC	
21	1	56394	Hose	5/16"x600mm S/V
22	1	56511	Hose	3/8"x900mm V/O 10L
23	1	56393	Hose	5/16"x950mm L/V
24	1	56460	Hose	1/4" x 550mm L/S-10mm
25	1	56510	Hose	1/4" x 600mm L/L 10Let

1500K, 1510K, 1720K, 1730K, 1820K, 1830K

63 41 520
63 41 620
Internal ref. 63 41 230

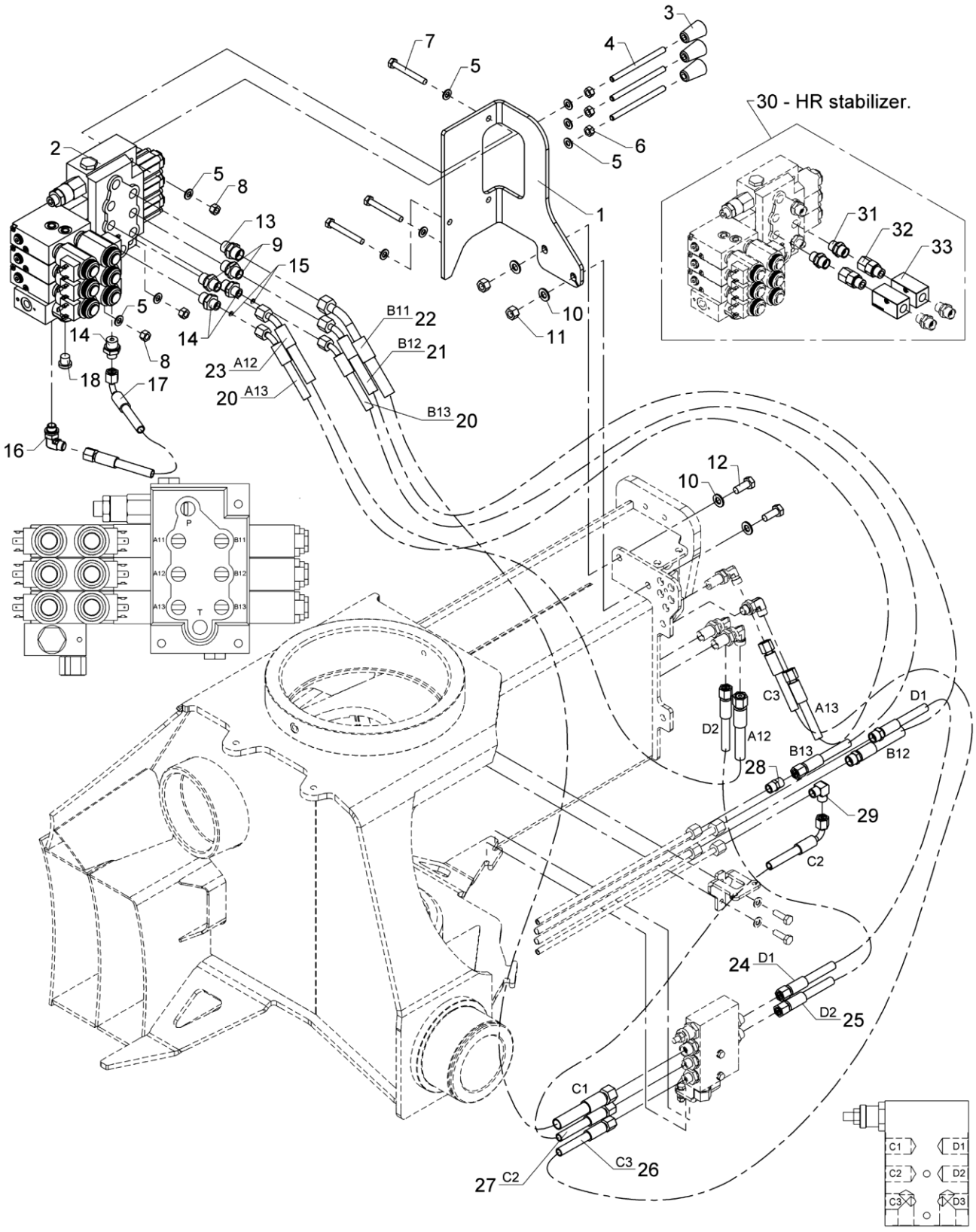

Valve bracket, cpl. 4 fcts. - RC

Pos	Qty.	Part no.	Description	Remarks
		6341230	Valve bracket, cpl. 4 fcts.RC	
1	1	6340272	Valve bracket (4 fcts. RC)	
2	1	55276	Valve block, complete	
3	3	59224	Knob for lever	
4	3	1330187	Control lever, long, straight	
5	9	31147	Face washer, 8 mm	8 mm
6	3	30856	Nut, stainless	M8
7	3	30259	Steel bolt, stainless	M8 x 65
8	3	30886	Lock nut, stainless	M8
9	2	25253	Connection	P-GEV 10 LR 3/8-WD
10	4	31565	Washer, stainless	10 mm
11	2	31564	Lock nut, stainless	M10
12	2	31513	Set screw, stainless	M10 x 25
13	1	25127	Connection	P-GEV 12 LR-WD
14	3	25244	Connection	GES 8 LR 3/8-WD
15	2	60963	Washer	
16	1	26898	Elbow connection	8 mm - 1/4"
17	1	56531	Hose	1/4 X 200 M14 X 1.5 L/90
18	1	25197	Plug	VS-R-1/4 WD
19	1	6341620	Hose kit, 4 fcts + 4 available	
20	2	56381	Hose	1/4"x600mm L/V 8Let / vinkel 45 gr.
21	1	56394	Hose	5/16"x600mm S/V 10L studs / vinke
22	1	56511	Hose	3/8 X 900 mm 45/L 12Let
23	1	56393	Hose	5/16"x950mm L/V 10Let / vinkel 45
24	1	56460	Hose	1/4" x 550mm L/S-10mm
25	1	56510	Hose	1/4 X 600 mm L/L 10Let
26	1	62569	Hose	1/4 X 800 M14 X 1.5 L/L
27	1	62525	Hose	1/4 X 400 M14 X 1.5 L/90
28	1	25246	Double connection	P-GV 8 L
29	1	25247	Elbow connection	WV 8 L
30	1	6341520	Restrictor valve, HR legs	
31	2	25127	Connection	P-GEV 12 LR-WD
32	2	25240	Connection	EGESD 12 LR-WD
33	2	49187	Restrictor/check valve 3/8"	

1500K, 1510K, 1720K, 1730K, 1820K, 1830K

63 41 520
63 41 620
Internal ref. 63 41 720

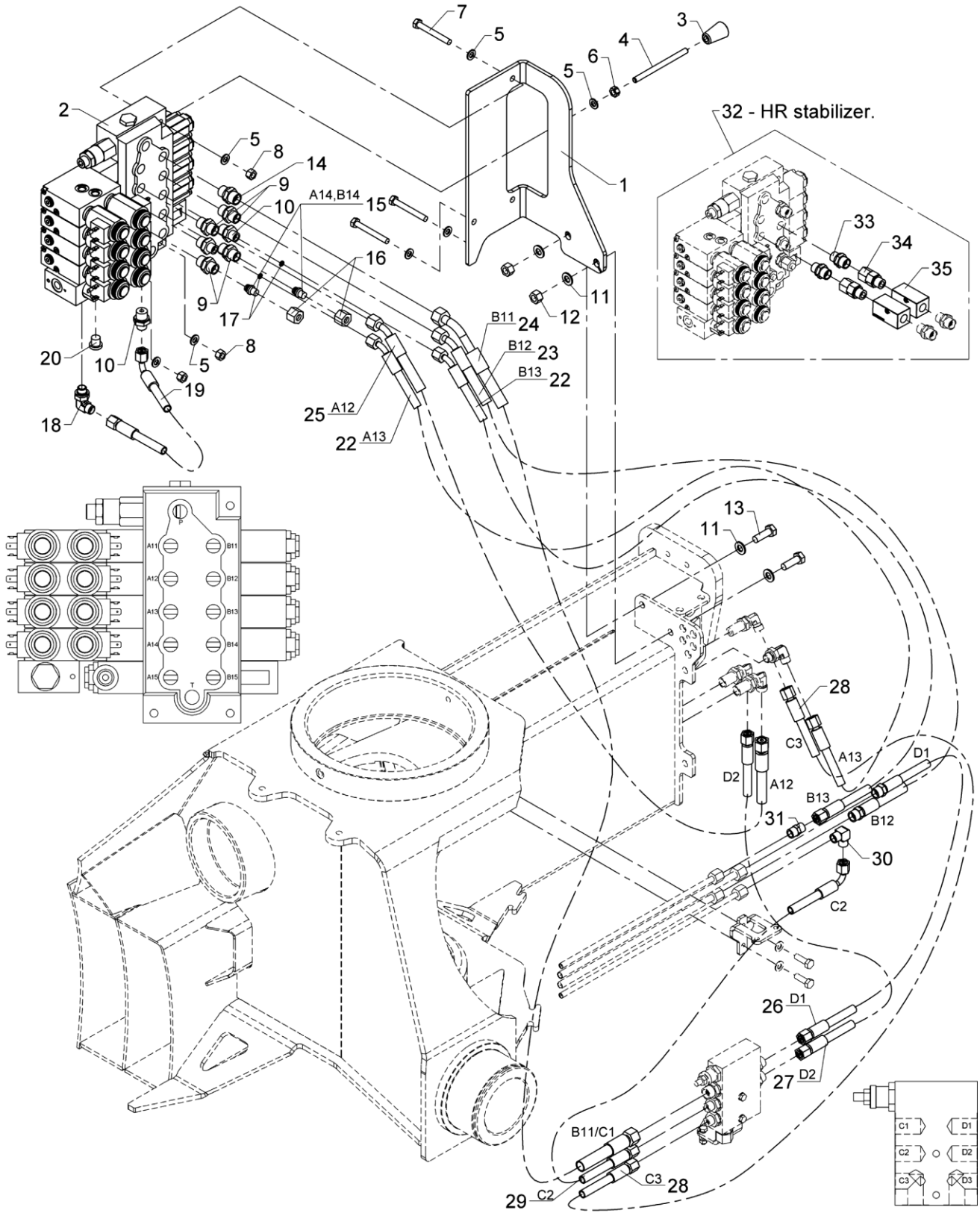

Valve bracket, cpl. 4 fcts. + 2 available fcts. - RC

Pos	Qty.	Part no.	Description	Remarks
		6341720	Valve bracket,cpl.4fct+2avail.	
1	1	6340271	Valve bracket (4 + 4 fcts.)	
2	1	55282	Valve block, complete	
3	4	59224	Knob for lever	
4	4	1330187	Control lever, long, straight	
5	11	31147	Face washer, 8 mm	8 mm
6	5	30856	Nut, stainless	M8
7	3	30259	Steel bolt, stainless	M8 x 65
8	3	30886	Lock nut, stainless	M8
9	4	25253	Connection	P-GEV 10 LR 3/8-WD
10	3	25244	Connection	GES 8 LR 3/8-WD
11	4	31565	Washer, stainless	10 mm
12	2	31564	Lock nut, stainless	M10
13	2	30156	Set screw, stainless	M10 x 30
14	1	25127	Connection	P-GEV 12 LR-WD
15	2	25202	Blanking plug	VSD 10 L
16	2	25182	Coupling nut	M 10 L
17	2	60963	Washer	
18	1	26898	Elbow connection	8 mm - 1/4"
19	1	56531	Hose	1/4X200 M14X1.5 L/90
20	1	25197	Plug	VS-R-1/4 WD
21	1	6341620	Hose kit, 4 fcts + 4 available	
22	2	56381	Hose	1/4"x600mm L/V
23	1	56394	Hose	5/16"x600mm S/V
24	1	56511	Hose	3/8"x900mm V/O 10L
25	1	56393	Hose	5/16"x950mm L/V
26	1	56460	Hose	1/4" x 550mm L/S-10mm
27	1	56510	Hose	1/4 X 600 mm L/L 10Let
28	1	62569	Hose	1/4 X 800 M14 X 1.5 L/L
29	1	62525	Hose	1/4 X 400 M14 X 1.5 L/90
30	1	25247	Elbow connection	WV 8 L
31	1	25246	Double connection	GS 8 L
32	1	6341520	Restrictor valve, HR legs	
33	2	25127	Connection	P-GEV 12 LR-WD
34	2	25240	Connection	EGESD 12 LR-WD
35	2	49187	Restrictor/check valve 3/8"	

1500K, 1510K, 1720K, 1730K, 1820K, 1830K

63 41 520
63 41 620
Internal ref. 63 41 270

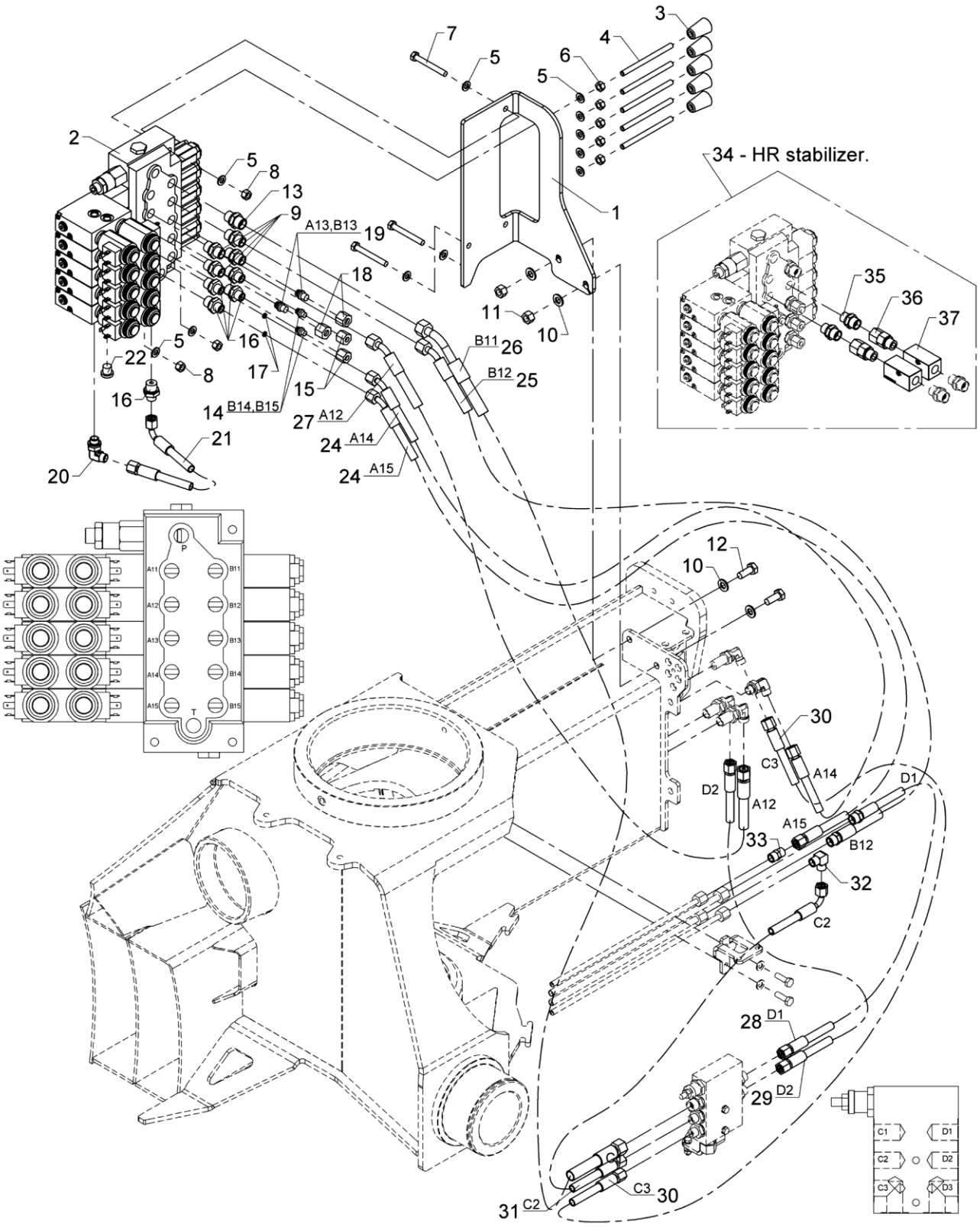

Valve bracket, cpl. 4 fcts. + 4 available - RC

Pos	Qty.	Part no.	Description	Remarks
		6341270	Valve br., cpl.4fcts.+4 avail.	
1	1	6340271	Valve bracket (4 + 4 fcts.)	
2	1	55275	Valve block, complete	
3	5	59224	Knob for lever	
4	5	1330187	Control lever, long, straight	
5	11	31147	Face washer, 8 mm	8 mm
6	5	30856	Nut, stainless	M8
7	3	30259	Steel bolt, stainless	M8 x 65
8	3	30886	Lock nut, stainless	M8
9	4	25253	Connection	P-GEV 10 LR 3/8-WD
10	4	31565	Washer, stainless	10 mm
11	2	31564	Lock nut, stainless	M10
12	2	31513	Set screw, stainless	M10 x 25
13	1	25127	Connection	P-GEV 12 LR-WD
14	2	26166	Blanking plug	VSD 8 L
15	2	25181	Coupling nut	M 8 L
16	5	25244	Connection	GES 8 LR 3/8-WD
17	2	60963	Washer	
18	2	25182	Coupling nut	M 10 L
19	2	25202	Blanking plug	VSD 10 L
20	1	26898	Elbow connection	8 mm - 1/4"
21	1	56531	Hose	1/4X200 M14X1.5 L/90
22	1	25197	Plug	VS-R-1/4 WD
23	1	6341620	Hose kit, 4 fcts + 4 available	
24	2	56381	Hose	1/4"x600mm L/V 8Let / vinkel 45 gr.
25	1	56394	Hose	5/16"x600mm S/V 10L studs / vinke
26	1	56511	Hose	3/8 X 900 mm 45/L 12Let
27	1	56393	Hose	5/16"x950mm L/V 10Let / vinkel 45
28	1	56460	Hose	1/4" x 550mm L/S-10mm
29	1	56510	Hose	1/4 X 600 mm L/L 10Let
30	1	62569	Hose	1/4 X 800 M14 X 1.5 L/L
31	1	62525	Hose	1/4 X 400 M14 X 1.5 L/90
32	1	25247	Elbow connection	WV 8 L
33	1	25246	Double connection	P-GV 8 L
34	1	6341520	Restrictor valve, HR legs	
35	2	25127	Connection	P-GEV 12 LR-WD
36	2	25240	Connection	EGESD 12 LR-WD
37	2	49187	Restrictor/check valve 3/8"	

1500K, 1510K, 1720K, 1730K, 1820K, 1830K

Internal ref. 63 41 710

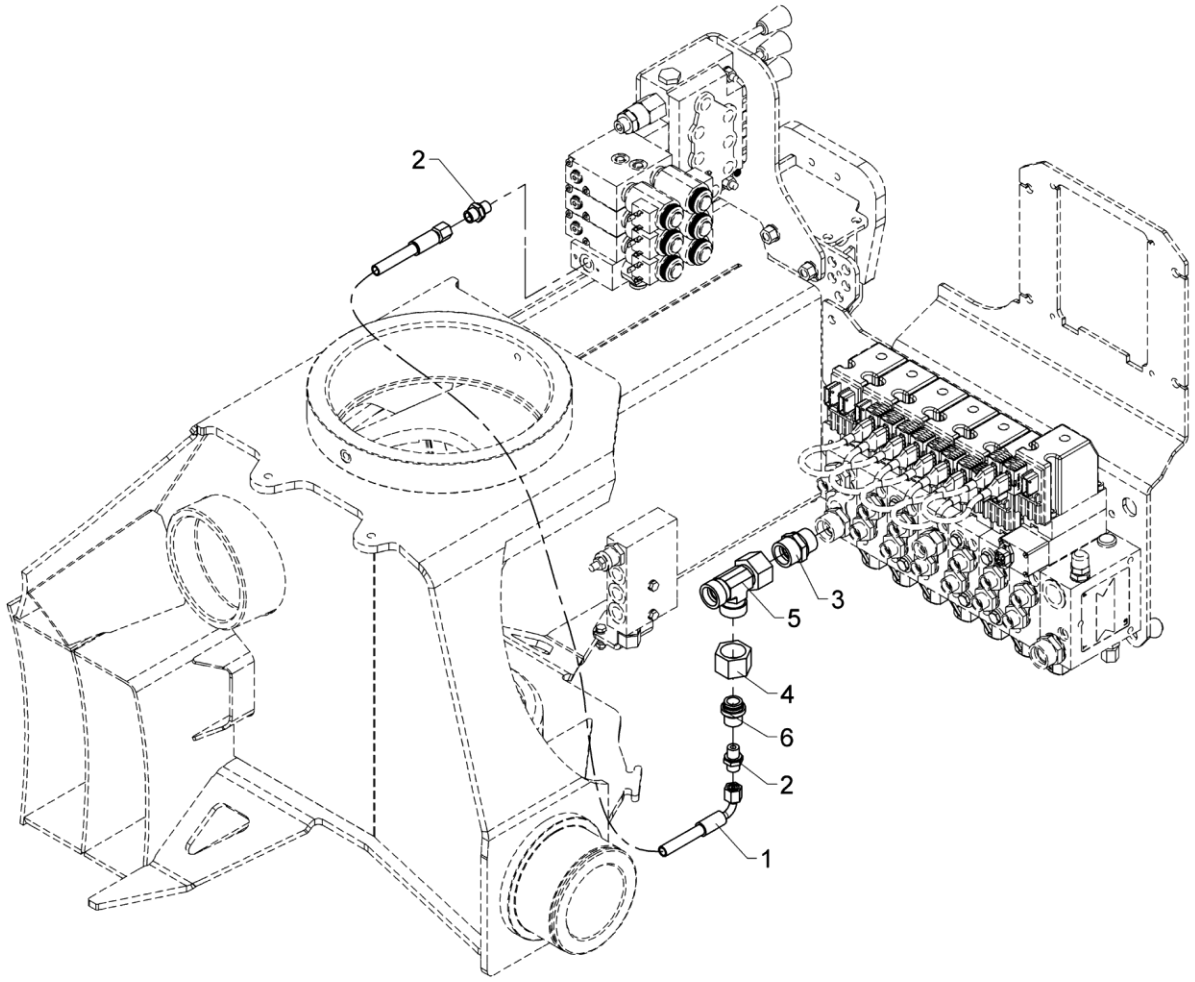

Pilot controlled oil supply for NEM/stabilizer valve block

Pos	Qty.	Part no.	Description	Remarks
1	1	56520	Hose	1/4 X 900 M14X1.5 L/90 (350 bar)
2	2	25109	Connection	GES 8 LR-WD
3	1	26197	Connection	P-GEV 20 SR-WD
4	1	26109	Coupling nut	M 20 S
5	1	26362	Connection	ELSD 20 S
6	1	25585	Plug	VSD 20 S

1500K, 1510K, 1720K, 1730K, 1820K, 1830K

63 53 600
63 41 520
63 53 740
Internal ref. 63 53 840

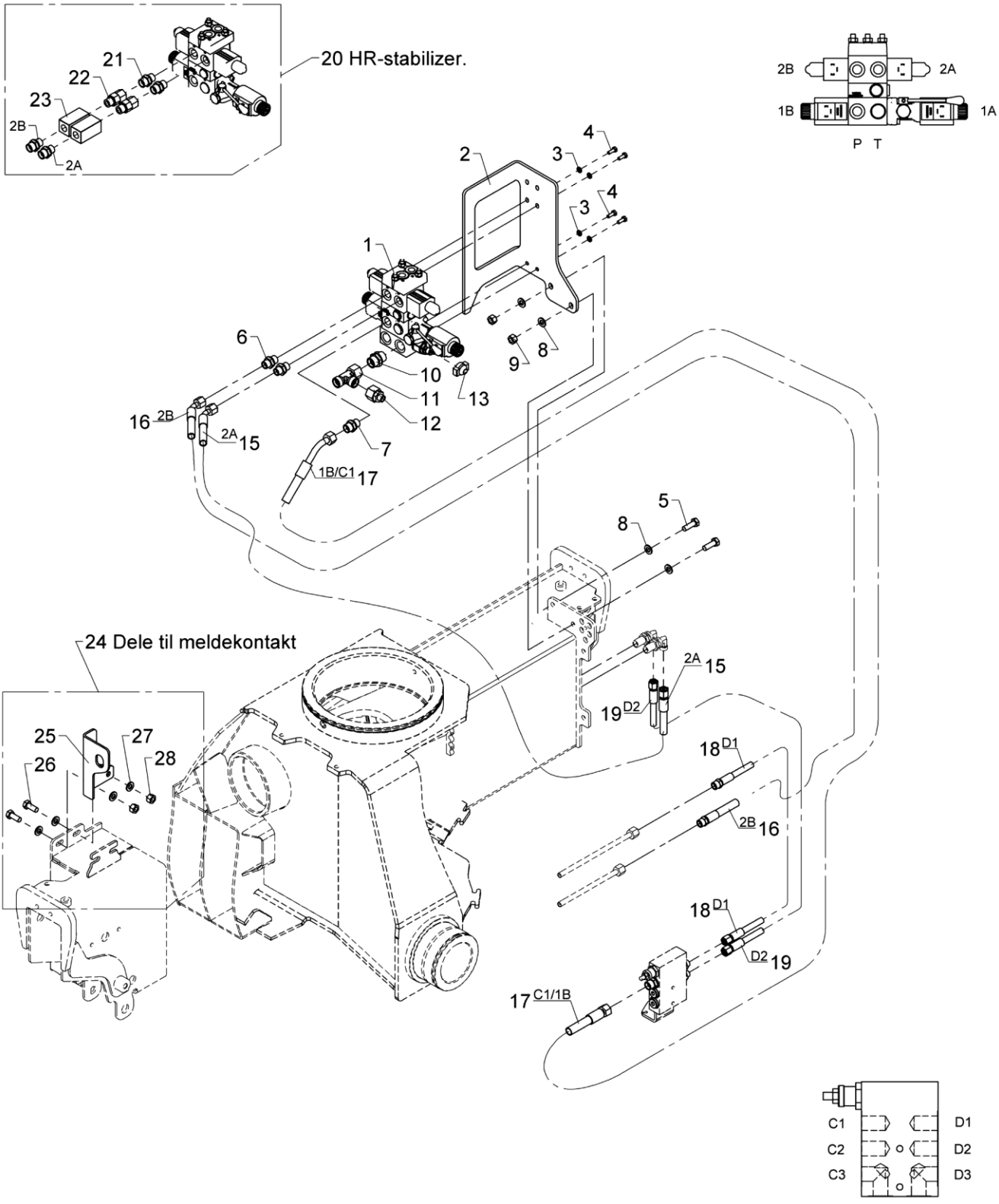

Valve bracket, cpl. 2 functions - RC

Pos	Qty.	Part no.	Description	Remarks
		6353840	Valve bracket,cpl. 2 fcts. RC	
		6353740	Hose kit, 2 functions	
		6341520	Restrictor valve, HR legs	
		6353600	Parts f.acknowledgement button	
1	1	50514	Stabilizer valve block	
2	1	6353272	Valve bracket, 2+4 functions	
3	4	32302	Face washer, stainless	6 mm
4	4	30112	Set screw, stainless	M6 x 16
5	2	30156	Set screw, stainless	M10 x 30
6	2	25253	Connection	P-GEV 10 LR 3/8-WD
7	1	25127	Connection	P-GEV 12 LR-WD
8	4	31565	Washer, stainless	10 mm
9	2	31564	Lock nut, stainless	M10
10	1	25143	Connection	P-GEV 15 LR-WD
11	1	26142	Connection	ELSD 15 L
12	1	25285	Connection	REDSDN 15/8 L
13	1	50542	Seal	
14	1	6353740	Hose kit, 2 functions	
15	1	56393	Hose	5/16"x950mm L/V
16	1	56394	Hose	5/16"x600mm S/V
17	1	56511	Hose	3/8"x900mm V/O 12L
18	1	56460	Hose	1/4" x 550mm L/S-10mm
19	1	56510	Hose	1/4 X 600 mm L/L 10Let
20	1	6341520	Restrictor valve, HR legs	
21	4	25127	Connection	P-GEV 12 LR-WD
22	2	25240	Connection	EGESD 12 LR-WD
23	2	49187	Restrictor/check valve 3/8"	
24	1	6353600	Parts f.acknowledgement button	
25	1	6353271	Bracket f. acknowledgemt butto	
26	2	31513	Set screw, stainless	M10 x 25
27	4	31565	Washer, stainless	10 mm
28	2	31564	Lock nut, stainless	M10

1500K, 1510K, 1720K, 1730K, 1820K, 1830K

63 53 600
63 41 520
63 53 670
Internal ref. 63 53 850

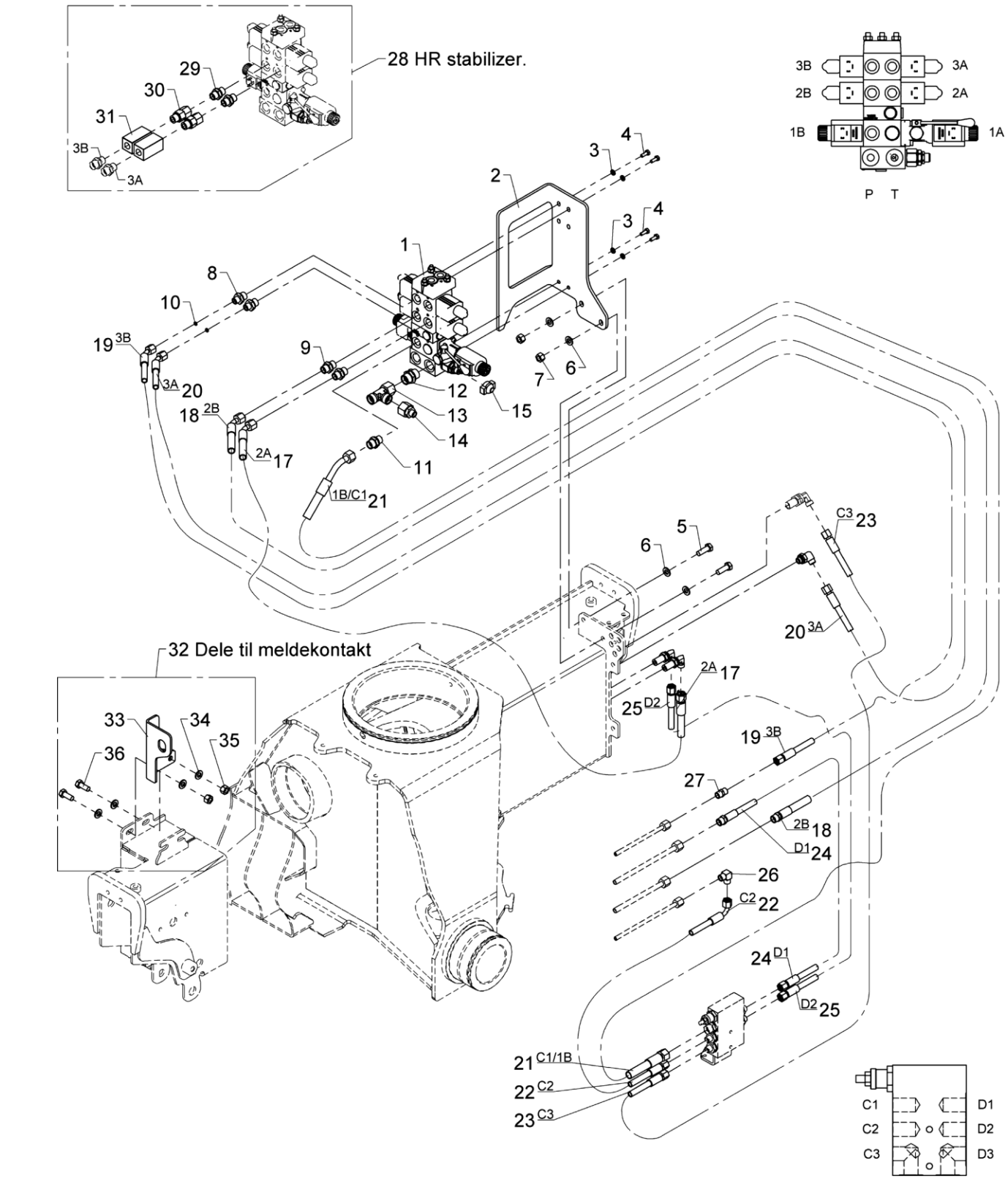

Valve bracket, cpl. 4 fcts. - RC

Pos	Qty.	Part no.	Description	Remarks
		6353850	Valve bracket,cpl. 4 fcts. RC	
		6353670	Hose kit, 4 functions+4/2avail	
		6341520	Restrictor valve, HR legs	
		6353600	Parts f.acknowledgement button	
1	1	50512	Stabilizer control valve	
2	1	6353272	Valve bracket, 2+4 functions	
3	4	32302	Face washer, stainless	6 mm
4	4	30112	Set screw, stainless	M6 x 16
5	2	30156	Set screw, stainless	M10 x 30
6	4	31565	Washer, stainless	10 mm
7	2	31564	Lock nut, stainless	M10
8	2	25244	Connection	GES 8 LR 3/8-WD
9	2	25253	Connection	P-GEV 10 LR 3/8-WD
10	2	60963	Washer	
11	1	25127	Connection	P-GEV 12 LR-WD
12	1	25143	Connection	P-GEV 15 LR-WD
13	1	26142	Connection	ELSD 15 L
14	1	25285	Connection	REDSDN 15/8 L
15	1	50542	Seal	
16	1	6353670	Hose kit, 4 functions+4/2avail	
17	1	56393	Hose	5/16"x950mm L/V
18	1	56394	Hose	5/16"x600mm S/V
19	1	56381	Hose	
20	1	56963	Hose 1/4"x700mm L/V	
21	1	56511	Hose	3/8"x900mm V/O 12L
22	1	62525	Hose	1/4 X 400 M14 X 1.5 L/90
23	1	62569	Hose	
24	1	56460	Hose	
25	1	56510	Hose	
26	1	25247	Elbow connection	WV 8 L
27	1	25246	Double connection	GS 8 L
28	1	6341520	Restrictor valve, HR legs	
29	2	25253	Connection	P-GEV 10 LR 3/8-WD
30	2	25240	Connection	EGESD 12 LR-WD
31	2	49187	Restrictor/check valve 3/8"	
32	1	6353600	Parts f.acknowledgement button	
33	1	6353271	Bracket f. acknowledgemt butto	
34	4	31565	Washer, stainless	10 mm
35	2	31564	Lock nut, stainless	M10
36	2	31513	Set screw, stainless	M10 x 25

1500K, 1510K, 1720K, 1730K, 1820K, 1830K

63 53 600
63 41 520
63 53 670
Internal ref. 63 53 860

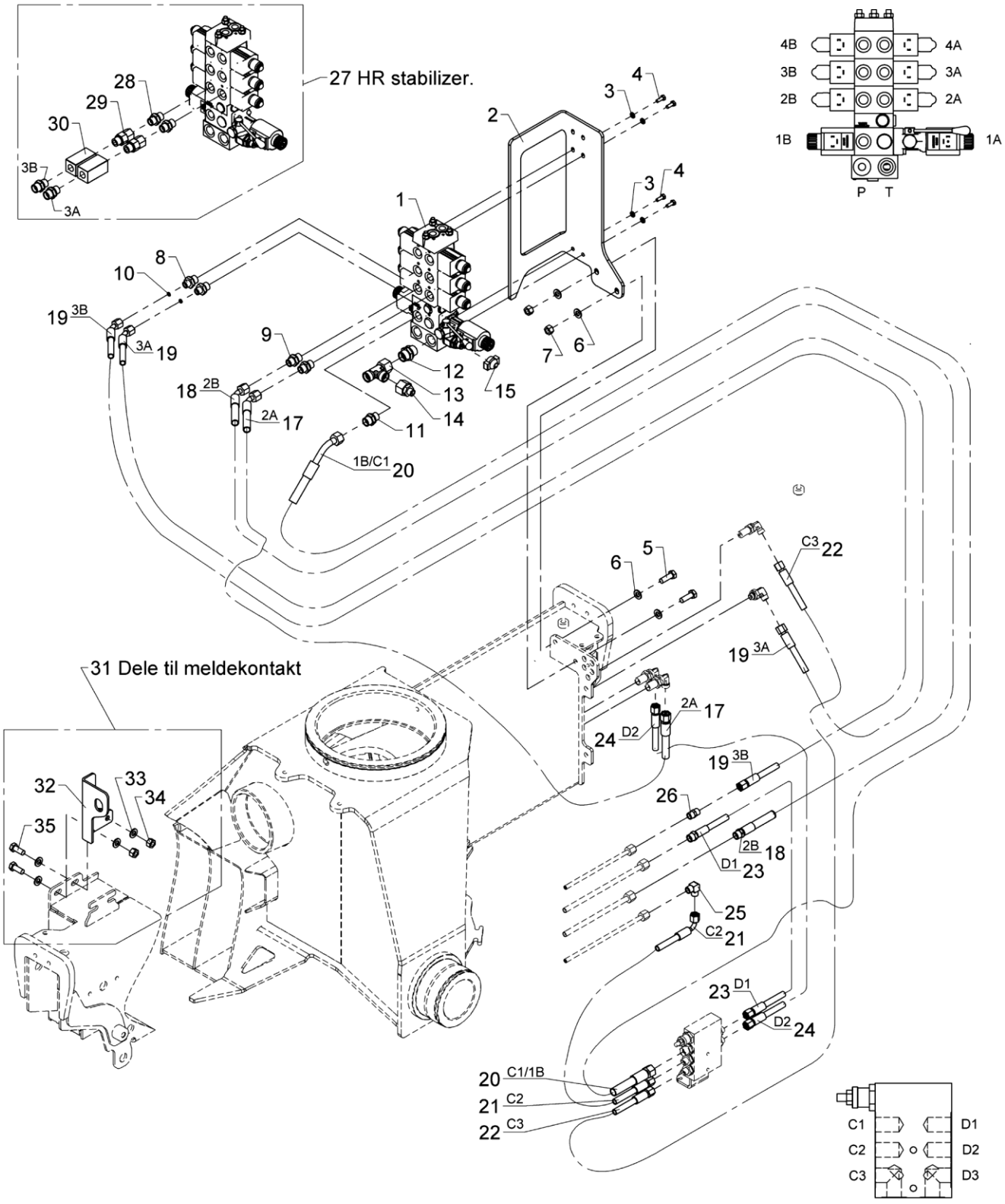

Valve bracket, cpl. 4 fcts. + 2 available - RC

Pos	Qty.	Part no.	Description	Remarks
		6353860	Valve bracket,cpl. 4 fcts. +2	
		6353670	Hose kit, 4 functions+4/2avail	
		6341520	Restrictor valve, HR legs	
		6353600	Parts f.acknowledgement button	
1	1	50513	Stabilizer valve block	
2	1	6353273	Valve bracket, 6+8 functions	
3	4	32302	Face washer, stainless	6 mm
4	4	30112	Set screw, stainless	M6 x 16
5	2	30156	Set screw, stainless	M10 x 30
6	4	31565	Washer, stainless	10 mm
7	2	31564	Lock nut, stainless	M10
8	2	25244	Connection	GES 8 LR 3/8-WD
9	2	25253	Connection	P-GEV 10 LR 3/8-WD
10	2	60963	Washer	
11	1	25127	Connection	P-GEV 12 LR-WD
12	1	25143	Connection	P-GEV 15 LR-WD
13	1	26142	Connection	ELSD 15 L
14	1	25285	Connection	REDSDN 15/8 L
15	1	50542	Seal	
16	1	6353670	Hose kit, 4 functions+4/2avail	
17	1	56393	Hose	5/16"x950mm L/V
18	1	56394	Hose	5/16"x600mm S/V
19	2	56963	Hose 1/4"x700mm L/V	
20	1	56511	Hose	3/8"x900mm V/O 12L
21	1	62525	Hose	1/4 X 400 M14 X 1.5 L/90
22	1	62569	Hose	1/4 X 800 M14 X 1.5 L/L
23	1	56460	Hose	1/4" x 550mm L/S-10mm
24	1	56510	Hose	1/4 X 600 mm L/L 10Let
25	1	25247	Elbow connection	WV 8 L
26	1	25246	Double connection	GS 8 L
27	1	6341520	Restrictor valve, HR legs	
28	2	25253	Connection	P-GEV 10 LR 3/8-WD
29	2	25240	Connection	EGESD 12 LR-WD
30	2	49187	Restrictor/check valve 3/8"	
31	1	6353600	Parts f.acknowledgement button	
32	1	6353271	Bracket f. acknowledgemt butto	
33	4	31565	Washer, stainless	10 mm
34	2	31564	Lock nut, stainless	M10
35	2	31513	Set screw, stainless	M10 x 25

1500K, 1510K, 1720K, 1730K, 1820K, 1830K

63 53 600
63 41 520
63 53 670
Internal ref. 63 53 870

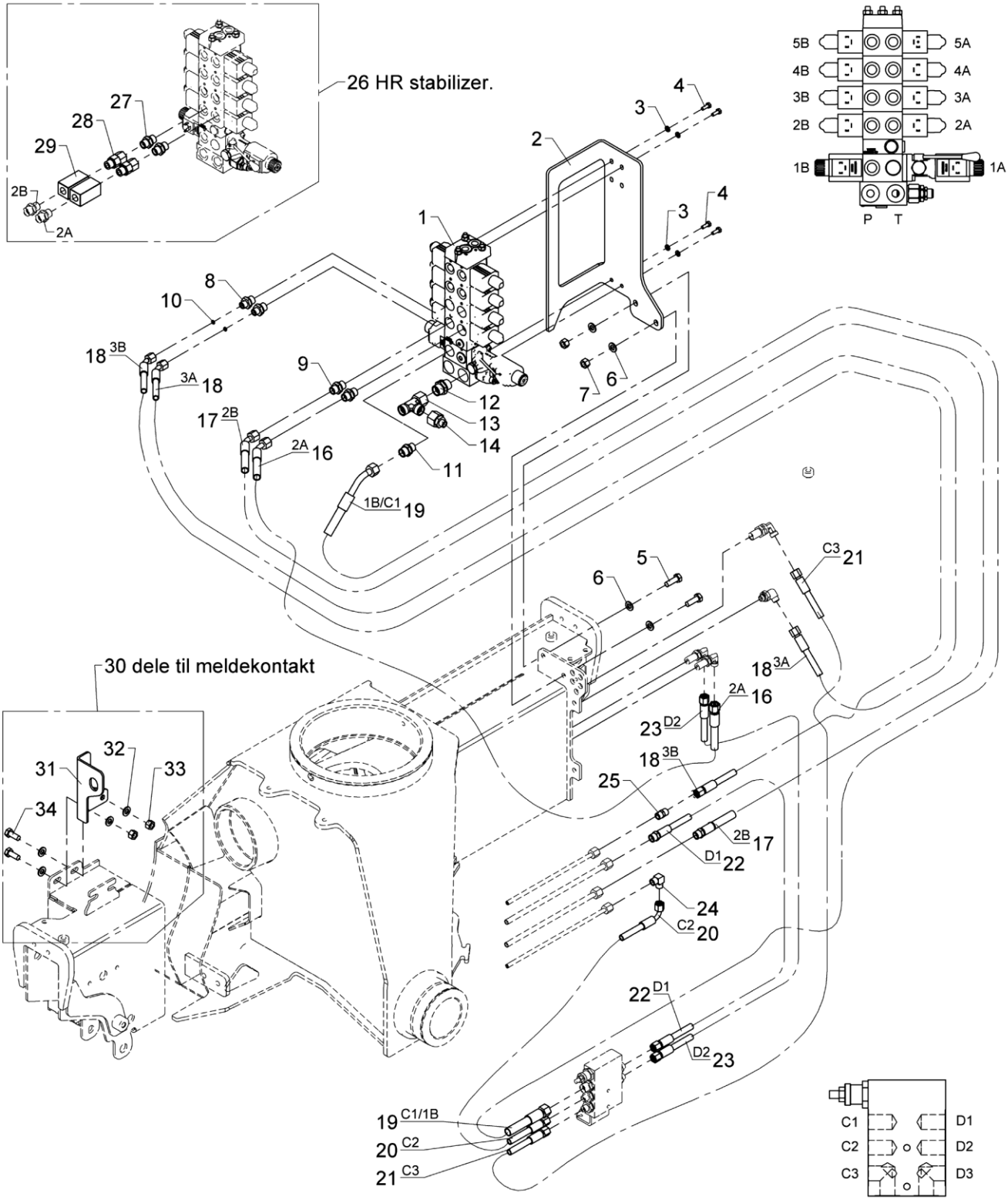

Valve bracket, cpl. 4 fcts. + 4 available - RC

Pos	Qty.	Part no.	Description	Remarks
		6353870	Valve br., cpl.4fcts.+4 avail.	
		6353670	Hose kit, 4 functions+4/2avail	
		6341520	Restrictor valve, HR legs	
		6353600	Parts f.acknowledgement button	
1	1	50510	Stabilizer valve	
2	1	6353273	Valve bracket, 6+8 functions	
3	4	32302	Face washer, stainless	6 mm
4	4	30112	Set screw, stainless	M6 x 16
5	2	30156	Set screw, stainless	M10 x 30
6	4	31565	Washer, stainless	10 mm
7	2	31564	Lock nut, stainless	M10
8	2	25244	Connection	GES 8 LR 3/8-WD
9	2	25253	Connection	P-GEV 10 LR 3/8-WD
10	2	60963	Washer	
11	1	25127	Connection	P-GEV 12 LR-WD
12	1	25143	Connection	P-GEV 15 LR-WD
13	1	26142	Connection	ELSD 15 L
14	1	25285	Connection	REDSDN 15/8 L
15	1	6353670	Hose kit, 4 functions+4/2avail	
16	1	56393	Hose	5/16"x950mm L/V
17	1	56394	Hose	5/16"x600mm S/V
18	2	56963	Hose 1/4"x700mm L/V	
19	1	56511	Hose	3/8"x900mm V/O 12L
20	1	62525	Hose	1/4 X 400 M14 X 1.5 L/90
21	1	62569	Hose	1/4 X 800 M14 X 1.5 L/L
22	1	56460	Hose	1/4" x 550mm L/S-10mm
23	1	56510	Hose	1/4 X 600 mm L/L 10Let
24	1	25247	Elbow connection	WV 8 L
25	1	25246	Double connection	GS 8 L
26	1	6341520	Restrictor valve, HR legs	
27	2	25253	Connection	P-GEV 10 LR 3/8-WD
28	2	25240	Connection	EGESD 12 LR-WD
29	2	49187	Restrictor/check valve 3/8"	
30	1	6353600	Parts f.acknowledgement button	
31	1	6353271	Bracket f. acknowledgemt butto	
32	4	31565	Washer, stainless	10 mm
33	2	31564	Lock nut, stainless	M10
34	2	31513	Set screw, stainless	M10 x 25

1500K, 1510K, 1720K, 1730K, 1820K, 1830K

63 53 600
63 41 520
63 53 740
Internal ref. 63 53 880

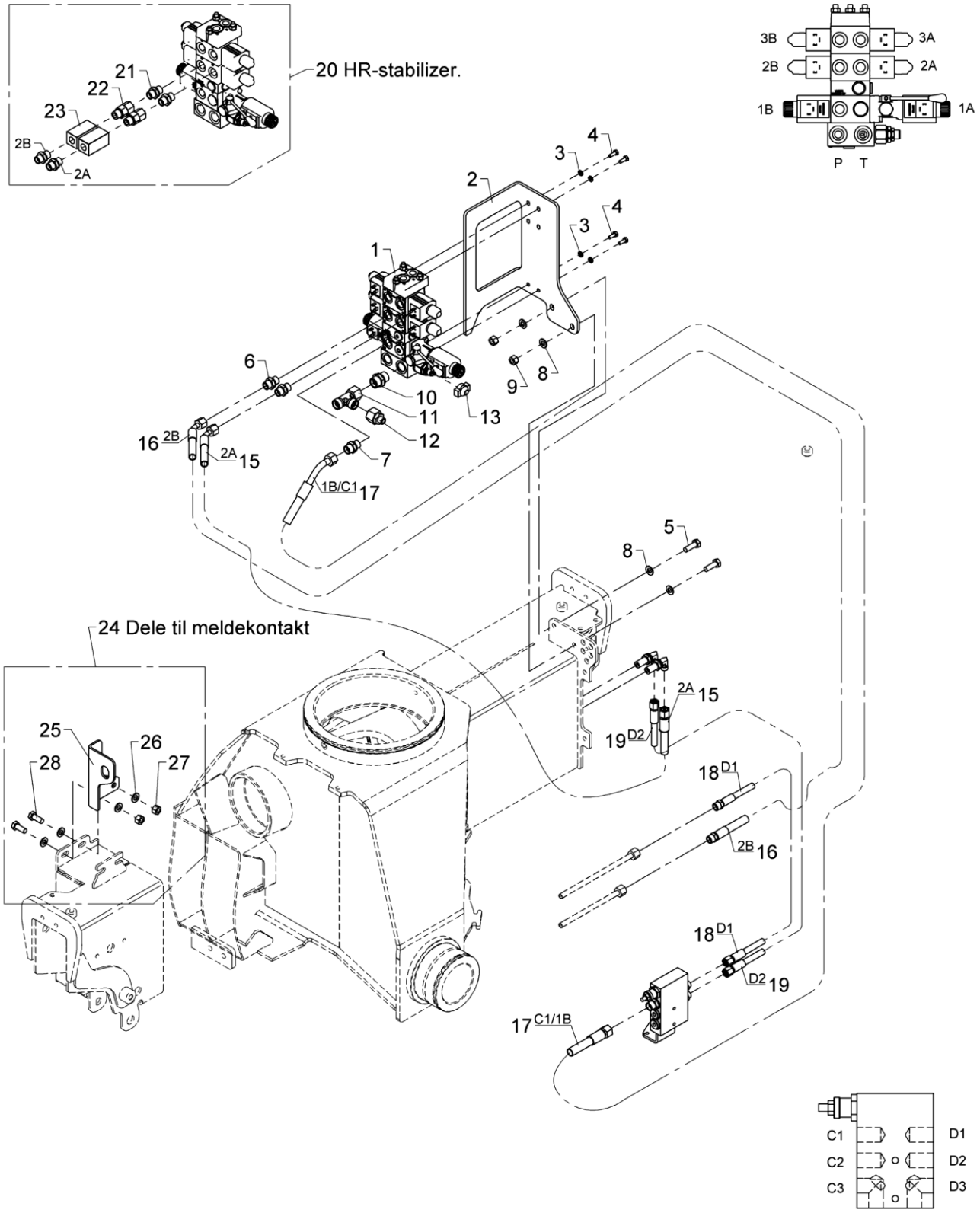

Valve bracket, cpl. 2 functions + 2 available functions - RC

Pos	Qty.	Part no.	Description	Remarks
		6353880	Valve bracket,cpl. 2+2avail.RC	
		6353740	Hose kit, 2 functions	
		6341520	Restrictor valve, HR legs	
		6353600	Parts f.acknowledgement button	
1	1	50512	Stabilizer control valve	
2	1	6353272	Valve bracket, 2+4 functions	
3	4	32302	Face washer, stainless	6 mm
4	4	30112	Set screw, stainless	M6 x 16
5	2	30156	Set screw, stainless	M10 x 30
6	2	25253	Connection	P-GEV 10 LR 3/8-WD
7	1	25127	Connection	P-GEV 12 LR-WD
8	4	31565	Washer, stainless	10 mm
9	2	31564	Lock nut, stainless	M10
10	1	25143	Connection	P-GEV 15 LR-WD
11	1	26142	Connection	ELSD 15 L
12	1	25285	Connection	REDSDN 15/8 L
13	1	50542	Seal	
14	1	6353740	Hose kit, 2 functions	
15	1	56393	Hose	5/16"x950mm L/V
16	1	56394	Hose	5/16"x600mm S/V
17	1	56511	Hose	3/8"x900mm V/O 12L
18	1	56460	Hose	1/4" x 550mm L/S-10mm
19	1	56510	Hose	1/4 X 600 mm L/L 10Let
20	1	6341520	Restrictor valve, HR legs	
21	4	25253	Connection	P-GEV 10 LR 3/8-WD
22	2	25240	Connection	EGESD 12 LR-WD
23	2	49187	Restrictor/check valve 3/8"	
24	1	6353600	Parts f.acknowledgement button	
25	1	6353271	Bracket f. acknowledgemt butto	
26	4	31565	Washer, stainless	10 mm
27	2	31564	Lock nut, stainless	M10
28	2	31513	Set screw, stainless	M10 x 25

1500K, 1510K, 1720K, 1730K, 1820K, 1830K

Internal ref. 63 44 790

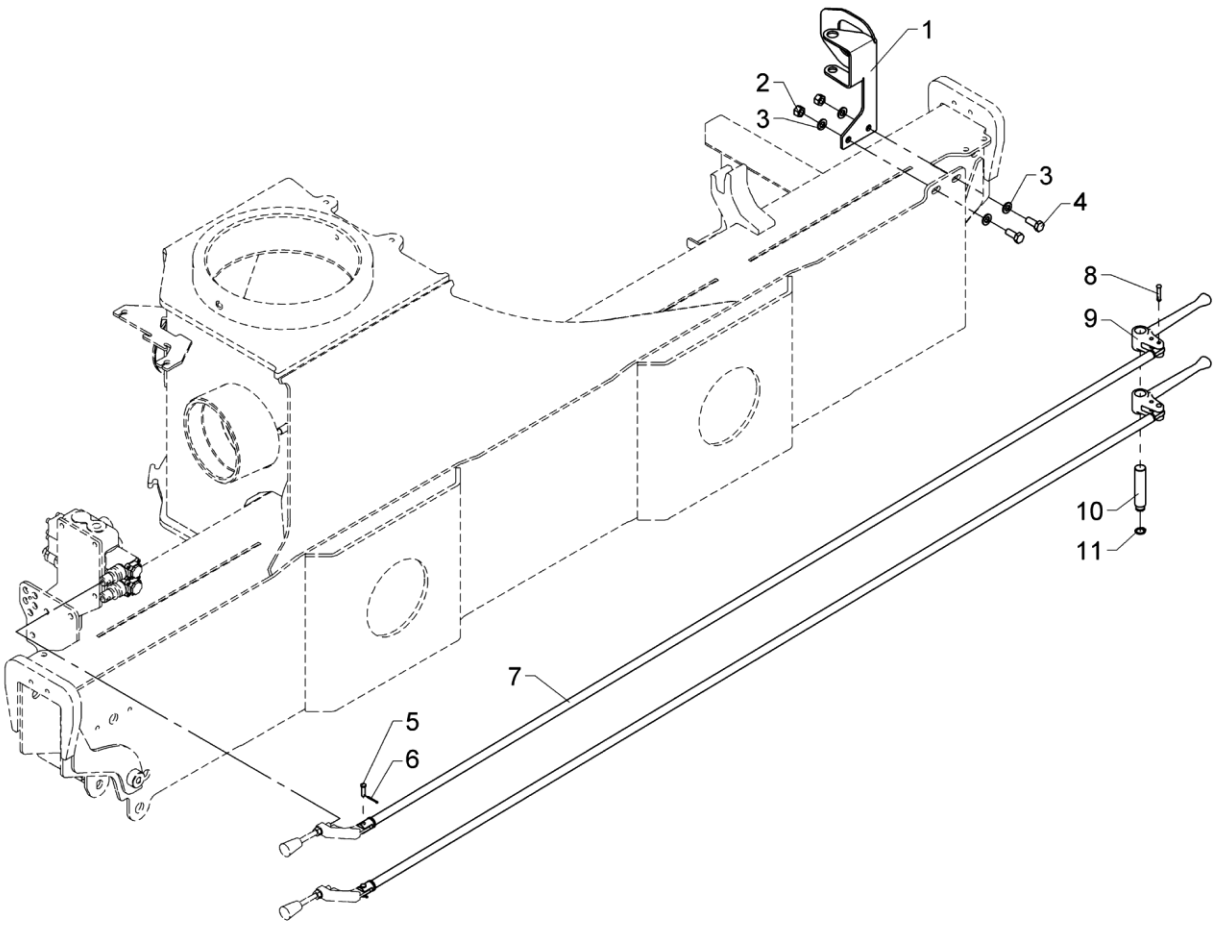

Dual control, 2 fcts. std.

534 05 270

From loader 1060001
To loader

Created 13-11-2008
Modified

Pos	Qty.	Part no.	Description	Remarks
1	1	6340256	Bracket for dual control	
2	2	31564	Lock nut, stainless	M10
3	4	31565	Washer, stainless	10 mm
4	2	31513	Set screw, stainless	M10 x 25
5	2	31271	Cotter bolt	ø6 x 21
6	2	31601	Split pin, stainless	ø1,6 x 20
7	2	6340263	Connecting rod	
8	2	63468	Split pin with spring lock	
9	2	63444	Lever for dual controls	
10	1	6340261	Pin (2 functions)	
11	1	33104	Circlip	15U

1500K, 1510K, 1720K, 1730K, 1820K, 1830K

Internal ref. 63 44 850

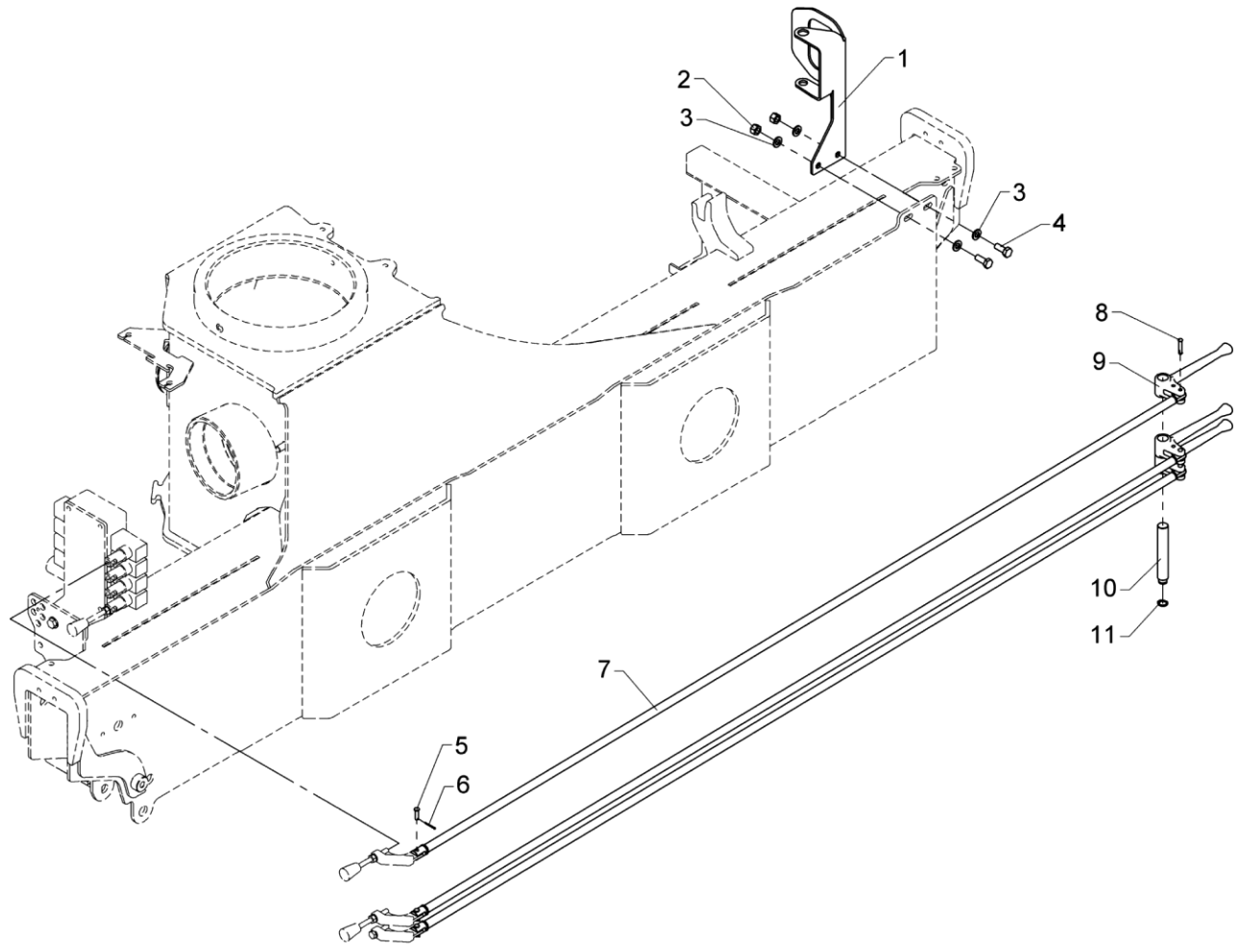

Dual control, 4 fcts. std.

534 05 280

From loader 1060001
To loader

Created 13-11-2008
Modified

Pos	Qty.	Part no.	Description	Remarks
1	1	6340257	Bracket for dual control	
2	2	31564	Lock nut, stainless	M10
3	4	31565	Washer, stainless	10 mm
4	2	31513	Set screw, stainless	M10 x 25
5	3	31271	Cotter bolt	ø6 x 21
6	3	31601	Split pin, stainless	ø1,6 x 20
7	3	6340263	Connecting rod	
8	3	63468	Split pin with spring lock	
9	3	63444	Lever for dual controls	
10	1	6340262	Pin (4 functions)	
11	1	33104	Circlip	15U

1500K, 1510K, 1720K, 1730K, 1820K, 1830K

Internal ref. 63 44 860

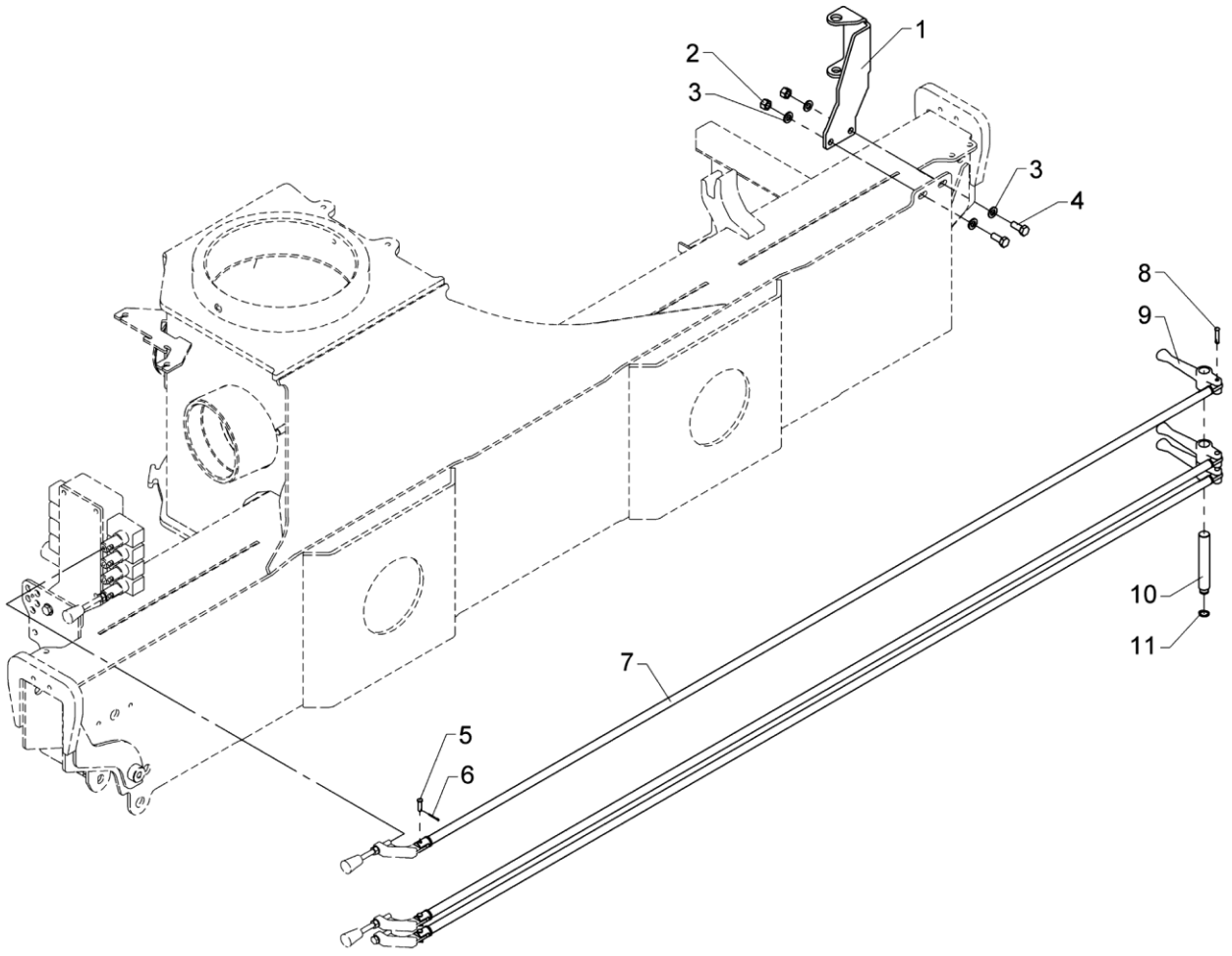

Dual control, 4 fcts., hydr. swing-up stabilizer legs

Pos	Qty.	Part no.	Description	Remarks
1	1	6340259	Bracket for dual control	
2	2	31564	Lock nut, stainless	M10
3	4	31565	Washer, stainless	10 mm
4	2	31513	Set screw, stainless	M10 x 25
5	3	31271	Cotter bolt	ø6 x 21
6	3	31601	Split pin, stainless	ø1,6 x 20
7	3	6340263	Connecting rod	
8	3	63468	Split pin with spring lock	
9	3	63483	Lever for dual control	
10	1	6340262	Pin (4 functions)	
11	1	33104	Circlip	15U

1500K, 1510K, 1720K, 1730K, 1820K, 1830K

Internal ref. 63 45 870

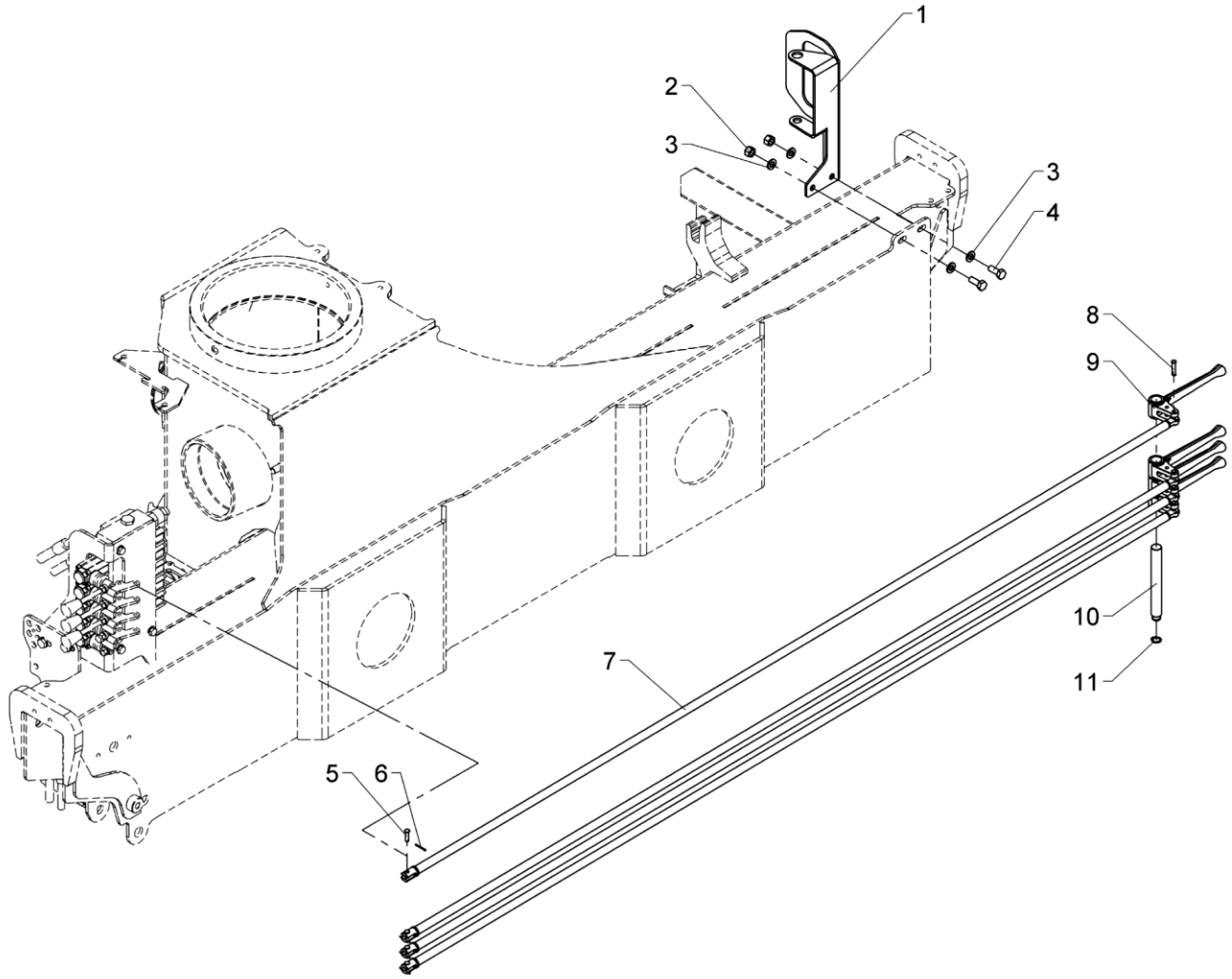

Dual control.4 fcts. + 4 available functions (std.)

Pos	Qty.	Part no.	Description	Remarks
1	1	6340258	Bracket, dual control (4 + 4)	
2	2	31564	Lock nut, stainless	M10
3	4	31565	Washer, stainless	10 mm
4	2	31513	Set screw, stainless	M10 x 25
5	4	31271	Cotter bolt	ø6 x 21
6	4	31601	Split pin, stainless	ø1,6 x 20
7	4	6340263	Connecting rod	
8	4	63468	Split pin with spring lock	
9	4	63444	Lever for dual controls	
10	1	6340264	Pin(4 fcts.+4 available fcts.)	
11	1	33104	Circlip	15U

1500K, 1510K, 1720K, 1730K, 1820K, 1830K

Internal ref. 63 45 880

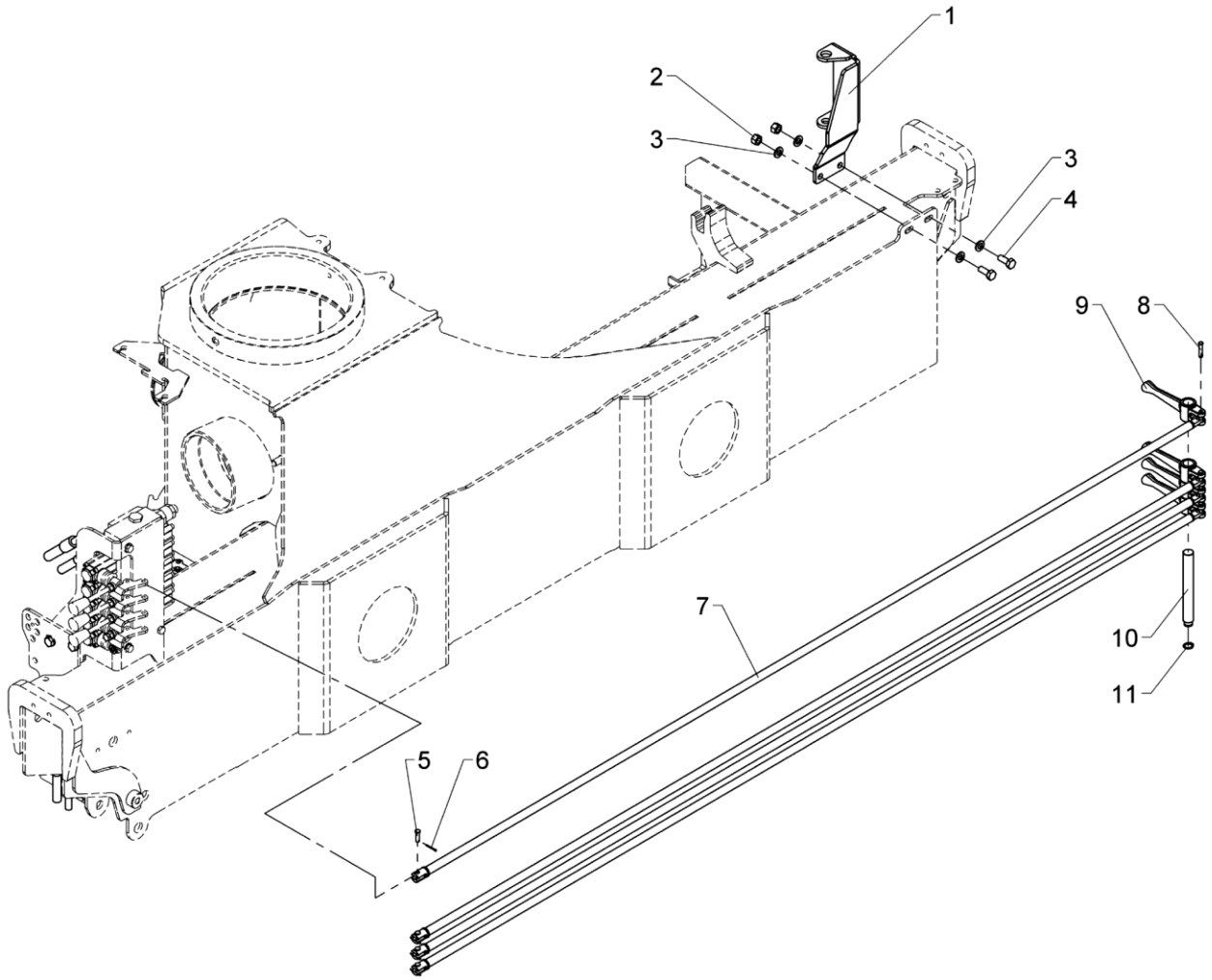

Dual control, 4 fcts. + 4 available fcts. (hydr. swing-up stabilizer legs)

Pos	Qty.	Part no.	Description	Remarks
1	1	6340269	Bracket for dual control	
2	2	31564	Lock nut, stainless	M10
3	4	31565	Washer, stainless	10 mm
4	2	31513	Set screw, stainless	M10 x 25
5	4	31271	Cotter bolt	ø6 x 21
6	4	31601	Split pin, stainless	ø1,6 x 20
7	4	6340263	Connecting rod	
8	4	63468	Split pin with spring lock	
9	4	63483	Lever for dual control	
10	1	6340264	Pin(4 fcts.+4 available fcts.)	
11	1	33104	Circlip	15U

1500K, 1510K, 1720K, 1730K, 1820K, 1830K

Internal ref. 63 40 640

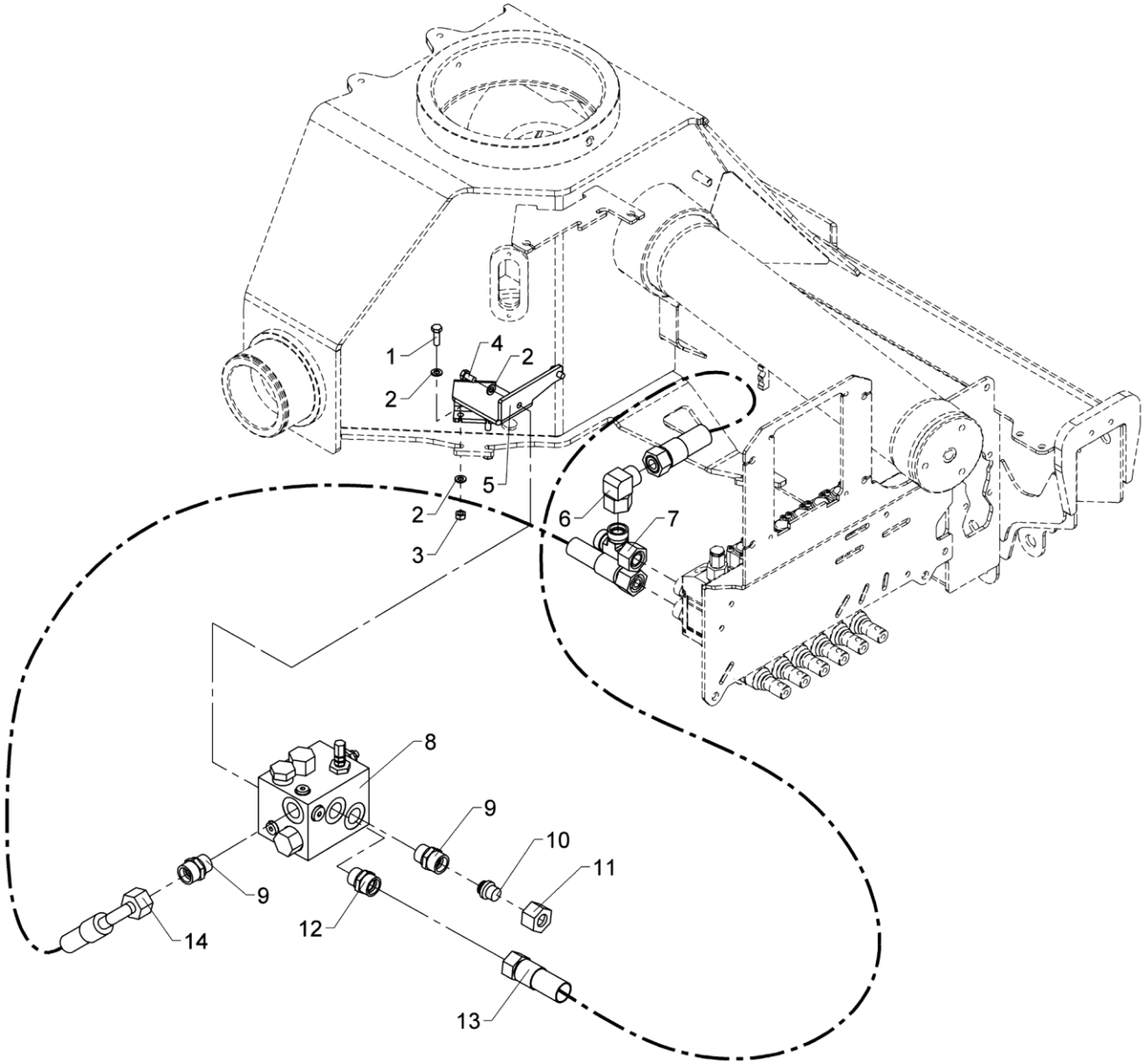

Obsolete

Kit for HDL-2 (std.)

534 05 350

From loader 1060001
To loader

Created 20-11-2008
Modified

Pos	Qty.	Part no.	Description	Remarks
1	2	30134	Set screw, stainless	M8 x 25
2	6	31147	Face washer, 8 mm	8 mm
3	2	30856	Nut, stainless	M8
4	2	30131	Set screw, stainless	M8 x 16
5	1	6340848	Bracket (HDL-2)	
6	1	25209	Elbow connection	EWSD 22 L
7	1	26149	Connection	ELSD 22 L
8	1	59018	HDL-2 valve	
9	2	26197	Connection	P-GEV 20 SR-WD
10	1	26361	Blanking plug	VSD 20 S
11	1	26109	Coupling nut	M 20 S
12	1	25169	Connection	P-GEV 22 LR-WD
13	1	62559	Hose	
14	1	62668	Hose	

1500K, 1510K, 1720K, 1730K, 1820K, 1830K

Internal ref. 63 40 640

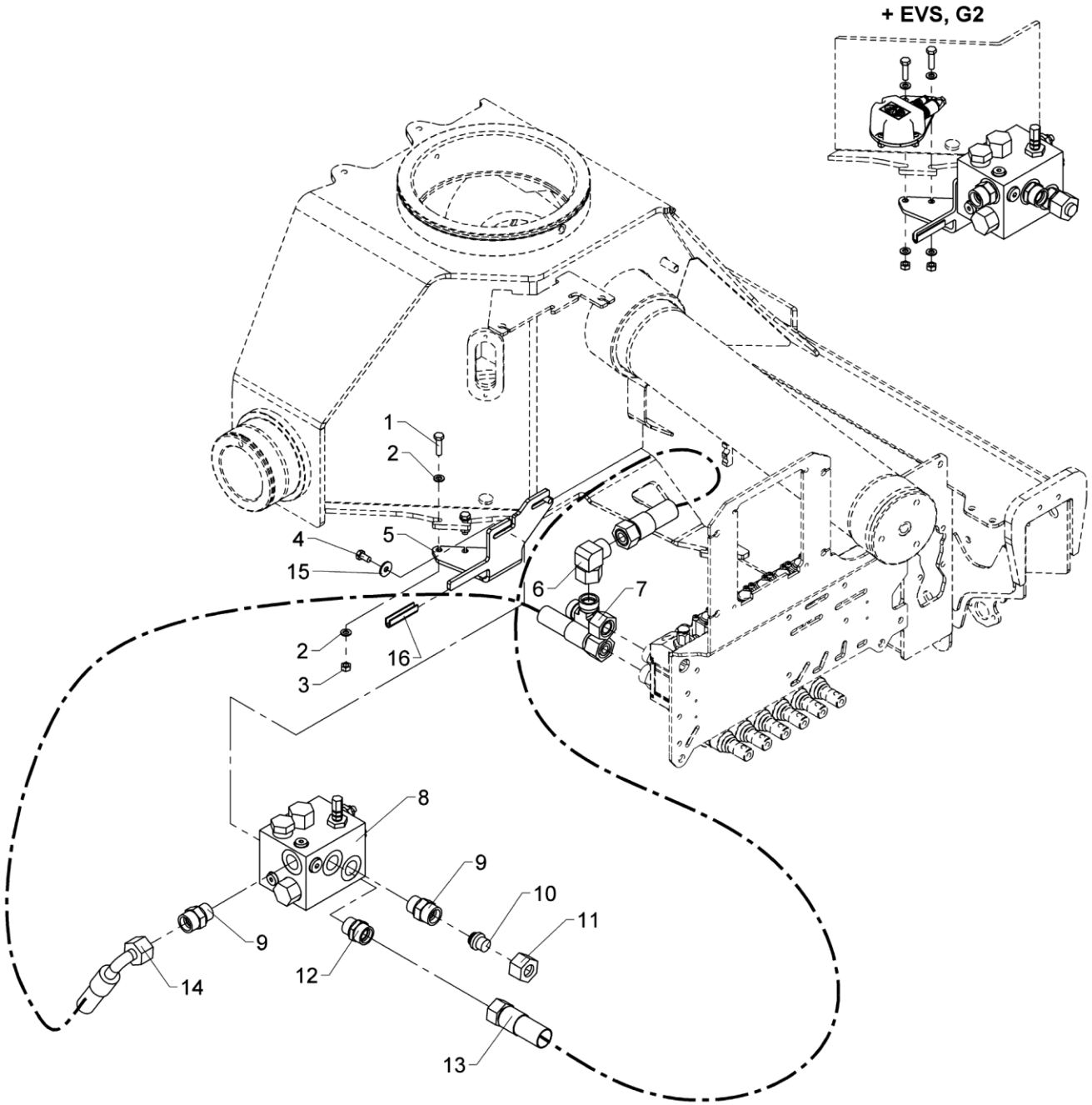

Kit for HDL-2 (std.)

534 05 350 A

From loader 1060001
To loader

Created 16-08-2012
Modified 28-08-2014

Pos	Qty.	Part no.	Description	Remarks
1	2	30135	Set screw, stainless	M8 x 30
2	4	31147	Face washer, 8 mm	
3	2	30856	Nut, stainless	M8
4	2	30131	Set screw, stainless	M8 x 16
5	1	6365274	Fittings (AIC 5062)	
6	1	25209	Elbow connection	EWSD 22 L
7	1	26149	Connection	ELSD 22 L
8	1	59018	HDL-2 valve	
9	2	26197	Connection	P-GEV 20 SR-WD
10	1	26361	Blanking plug	VSD 20 S
11	1	26109	Coupling nut	M 20 S
12	1	25169	Connection	P-GEV 22 LR-WD
13	1	62559	Hose	
14	1	62668	Hose	
15	2	31136	Washer, stainless	8 mm
16	1	46596	Rubber protection	60 mm

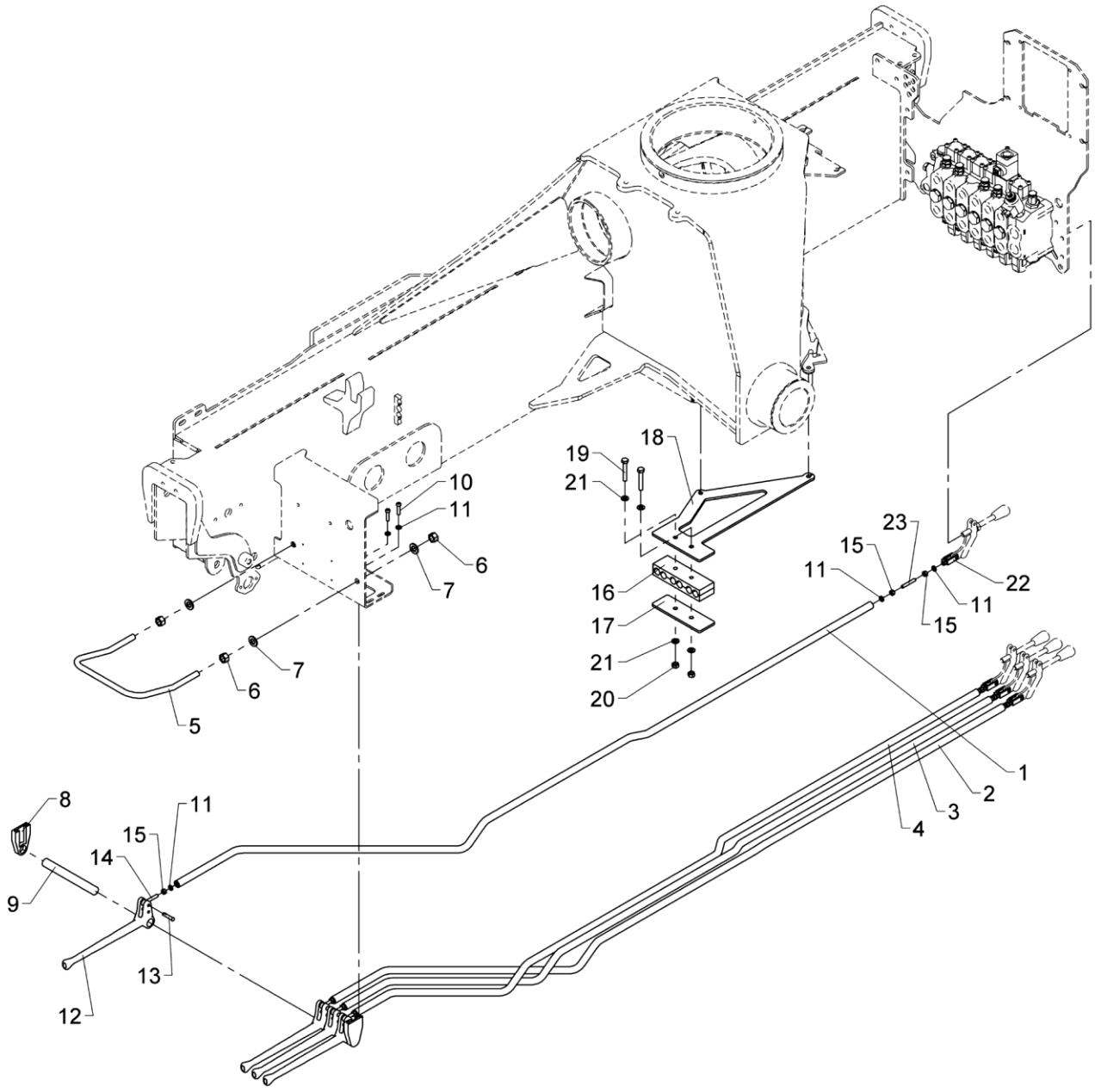
19
21
18
10
11
6
7
16
17
21
20
23
15
11
22
11
15
7
6
5
8
11
15
14
9
13
12
1
2
3
4

Obsolete

Cross-over controls, 4 functions

534 05 370

From loader 1060001
To loader

Created 09-08-2012
Modified

Pos	Qty.	Part no.	Description	Remarks
1	1	6341921	Connecting rod,cross-over ctrl	
2	1	6341922	Connecting rod,cross-over ctrl	
3	1	6341923	Connecting rod,cross-over ctrl	
4	1	6341924	Connecting rod,cross-over ctrl	
5	1	6340247	Safety guard	
6	4	30860	Nut, stainless	M12
7	4	32338	Washer	12 mm
8	2	63564	Bracket for pin	
9	1	6340248	Pin	
10	4	30340	Screw, stainless	6,0 x 25
11	16	32302	Face washer, stainless	6 mm
12	4	63443	Lever for dual controls	
13	4	63468	Split pin with spring lock	
14	4	32114	Pin	M6 x 40
15	12	30854	Nut, stainless	M6
16	2	68069	Guide	
17	1	6363248	Top plate	
18	1	6341247	Bracket f. cross controls	
19	2	30139	Steel bolt, stainless	M8 x 50
20	2	30856	Nut, stainless	M8
21	4	31147	Face washer, 8 mm	
22	4	48414	Clevis	
23	4	31007	Pointed screw	MSP6 x 40

1500K, 1510K, 1720K, 1730K, 1820K, 1830K

Internal ref. 63 46 500

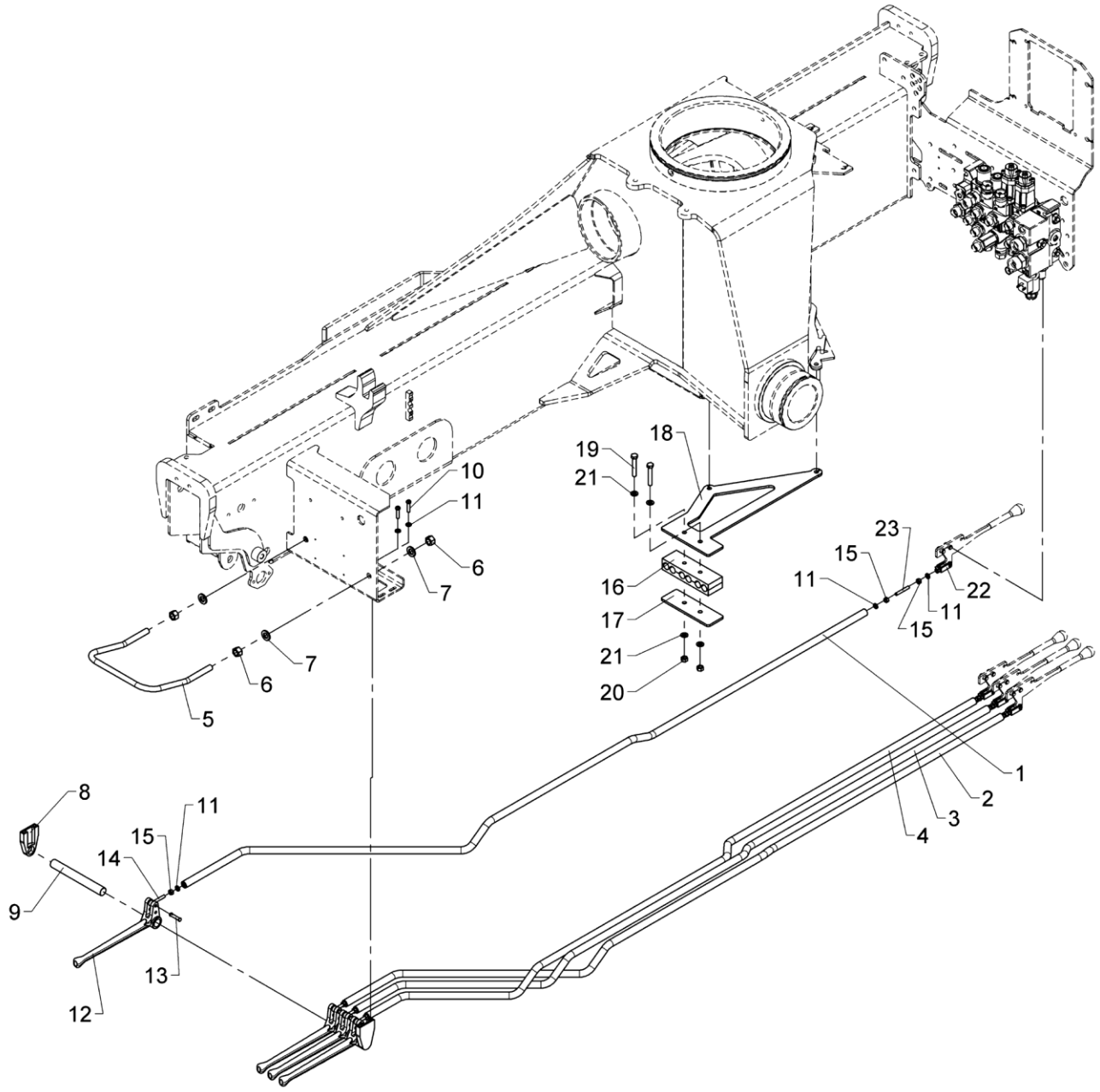

Cross-over controls, 4 functions

Pos	Qty.	Part no.	Description	Remarks
1	1	6342921	Connecting rod, cross controls	
2	1	6342922	Connecting rod, cross controls	
3	1	6342923	Connecting rod, cross controls	
4	1	6342924	Connecting rod, cross controls	
5	1	6340247	Safety guard	
6	4	30860	Nut, stainless	M12
7	4	32338	Washer	12 mm
8	2	63564	Bracket for pin	
9	1	6340248	Pin	
10	4	30340	Screw, stainless	6,0 x 25
11	16	32302	Face washer, stainless	6 mm
12	4	63443	Lever for dual controls	
13	4	63468	Split pin with spring lock	
14	4	32114	Pin	M6 x 40
15	12	30854	Nut, stainless	M6
16	2	68069	Guide	
17	1	6363248	Top plate	
18	1	6341247	Bracket f. cross controls	
19	2	30139	Steel bolt, stainless	M8 x 50
20	2	30856	Nut, stainless	M8
21	4	31147	Face washer, 8 mm	
22	4	48414	Clevis	
23	4	31007	Pointed screw	MSP6 x 40

1500K, 1510K, 1720K, 1730K, 1820K, 1830K

Internal ref. 63 45 600

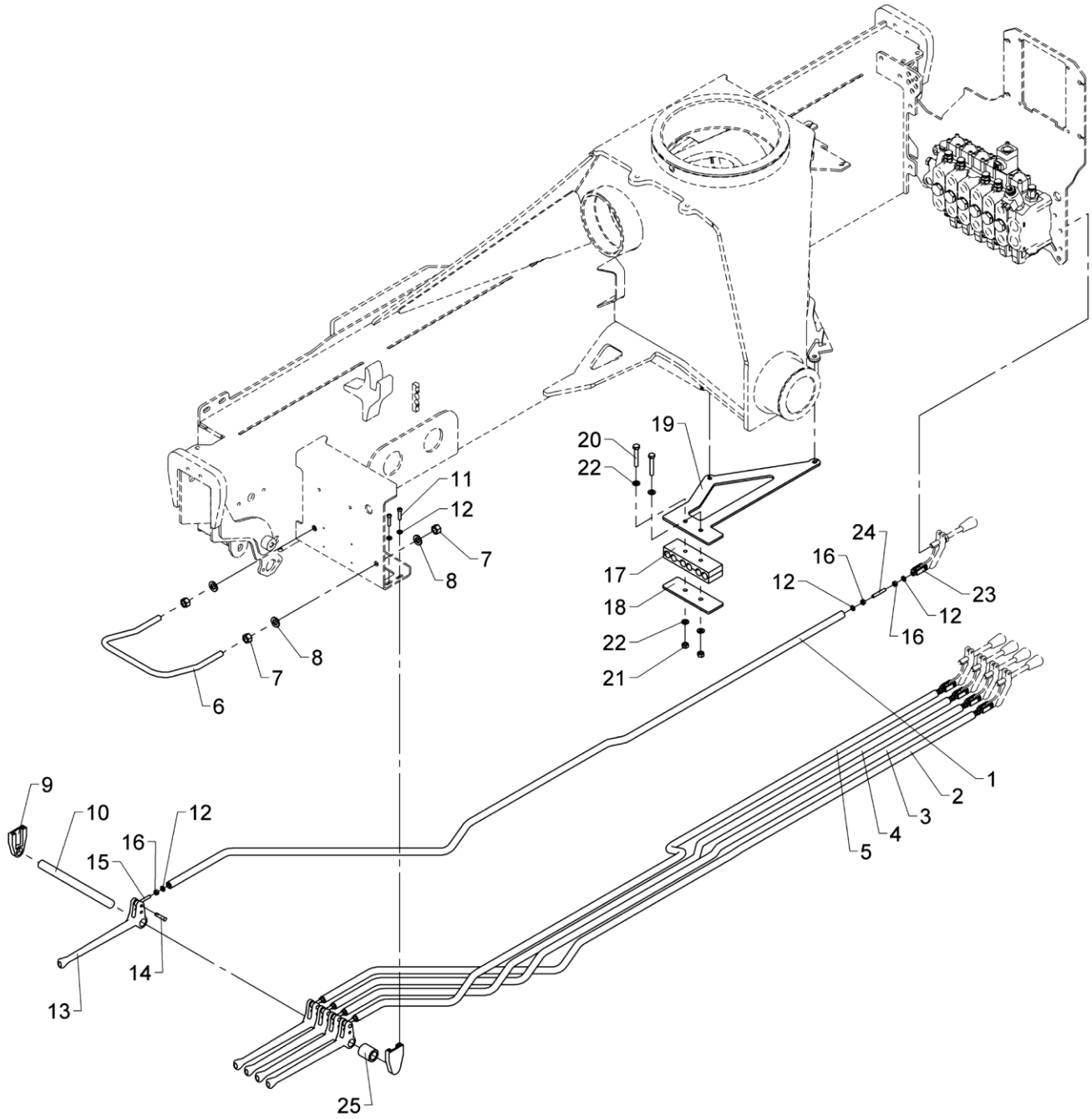

Obsolete

Cross-over controls, 5 functions

534 05 380

From loader 1060001
To loader

Created 09-08-2012
Modified

Pos	Qty.	Part no.	Description	Remarks
1	1	6341921	Connecting rod,cross-over ctrl	
2	1	6341922	Connecting rod,cross-over ctrl	
3	1	6341923	Connecting rod,cross-over ctrl	
4	1	6341924	Connecting rod,cross-over ctrl	
5	1	6341925	Connecting rod,cross-over ctrl	
6	1	6340247	Safety guard	
7	4	30860	Nut, stainless	M12
8	4	32338	Washer	12 mm
9	2	63564	Bracket for pin	
10	1	6340249	Pin	
11	4	30340	Screw, stainless	6,0 x 25
12	19	32302	Face washer, stainless	6 mm
13	5	63443	Lever for dual controls	
14	5	63468	Split pin with spring lock	
15	5	32114	Pin	M6 x 40
16	15	30854	Nut, stainless	M6
17	2	68069	Guide	
18	1	6363248	Top plate	
19	1	6341247	Bracket f. cross controls	
20	2	30139	Steel bolt, stainless	M8 x 50
21	2	30856	Nut, stainless	M8
22	4	31147	Face washer, 8 mm	
23	5	48414	Clevis	
24	5	31007	Pointed screw	MSP6 x 40
25	1	63598	Bushing	ø30/ø20 x 35

1500K, 1510K, 1720K, 1730K, 1820K, 1830K

Internal ref. 63 46 510

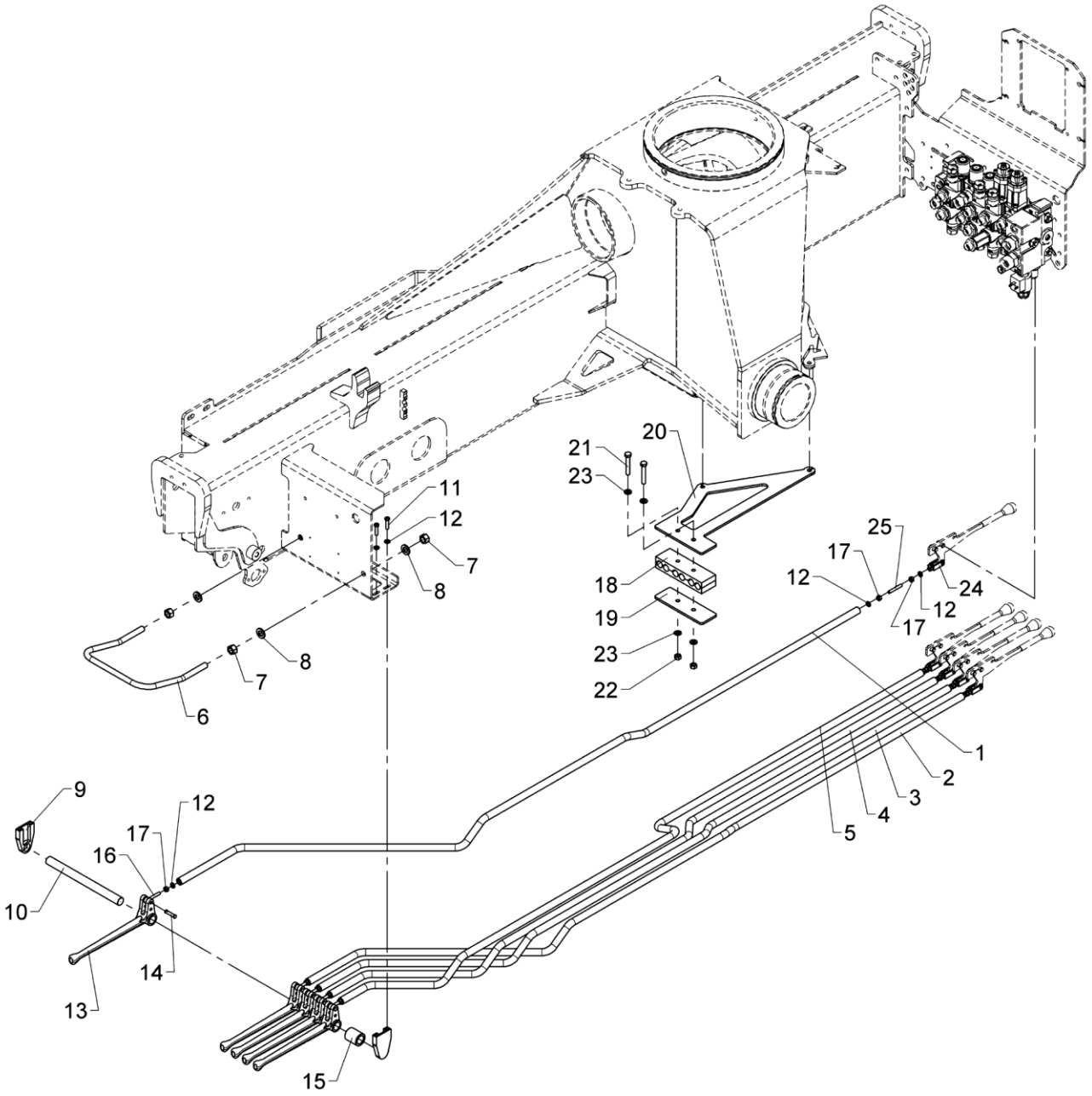

Cross-over controls, 5 functions

Pos	Qty.	Part no.	Description	Remarks
1	1	6342921	Connecting rod, cross controls	
2	1	6342922	Connecting rod, cross controls	
3	1	6342923	Connecting rod, cross controls	
4	1	6342924	Connecting rod, cross controls	
5	1	6342925	Connecting rod, cross controls	
6	1	6340247	Safety guard	
7	4	30860	Nut, stainless	M12
8	4	32338	Washer	12 mm
9	2	63564	Bracket for pin	
10	1	6340249	Pin	
11	4	30340	Screw, stainless	6,0 x 25
12	19	32302	Face washer, stainless	6 mm
13	5	63443	Lever for dual controls	
14	5	63468	Split pin with spring lock	
15	1	63598	Bushing	ø30/ø20 x 35
16	5	32114	Pin	M6 x 40
17	15	30854	Nut, stainless	M6
18	2	68069	Guide	
19	1	6363248	Top plate	
20	1	6341247	Bracket f. cross controls	
21	2	30139	Steel bolt, stainless	M8 x 50
22	2	30856	Nut, stainless	M8
23	4	31147	Face washer, 8 mm	
24	5	48414	Clevis	
25	5	31007	Pointed screw	MSP6 x 40

1500K, 1510K, 1720K, 1730K, 1820K, 1830K

Internal ref. 63 45 610

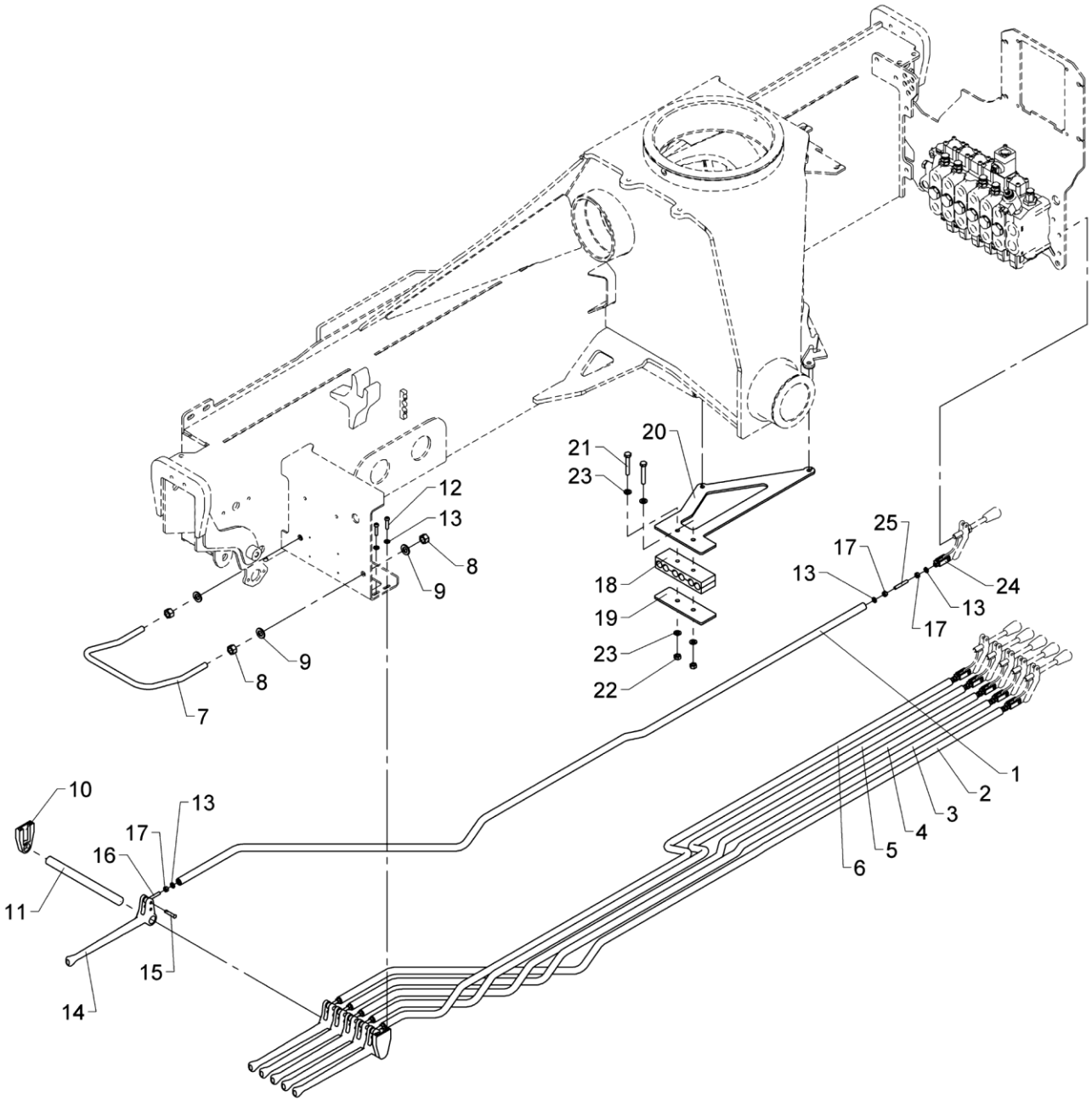

Obsolete

Cross-over controls, 6 functions

534 05 390

From loader 1060001
To loader

Created 09-08-2012
Modified

Pos	Qty.	Part no.	Description	Remarks
1	1	6341921	Connecting rod,cross-over ctrl	
2	1	6341922	Connecting rod,cross-over ctrl	
3	1	6341923	Connecting rod,cross-over ctrl	
4	1	6341924	Connecting rod,cross-over ctrl	
5	1	6341925	Connecting rod,cross-over ctrl	
6	1	6341926	Connecting rod,cross-over ctrl	
7	1	6340247	Safety guard	
8	4	30860	Nut, stainless	M12
9	4	32338	Washer	12 mm
10	2	63564	Bracket for pin	
11	1	6340249	Pin	
12	4	30340	Screw, stainless	6,0 x 25
13	22	32302	Face washer, stainless	6 mm
14	6	63443	Lever for dual controls	
15	6	63468	Split pin with spring lock	
16	6	32114	Pin	M6 x 40
17	18	30854	Nut, stainless	M6
18	2	68069	Guide	
19	1	6363248	Top plate	
20	1	6341247	Bracket f. cross controls	
21	2	30139	Steel bolt, stainless	M8 x 50
22	2	30856	Nut, stainless	M8
23	4	31147	Face washer, 8 mm	
24	6	48414	Clevis	
25	6	31007	Pointed screw	MSP6 x 40

1500K, 1510K, 1720K, 1730K, 1820K, 1830K

Internal ref. 63 46 520

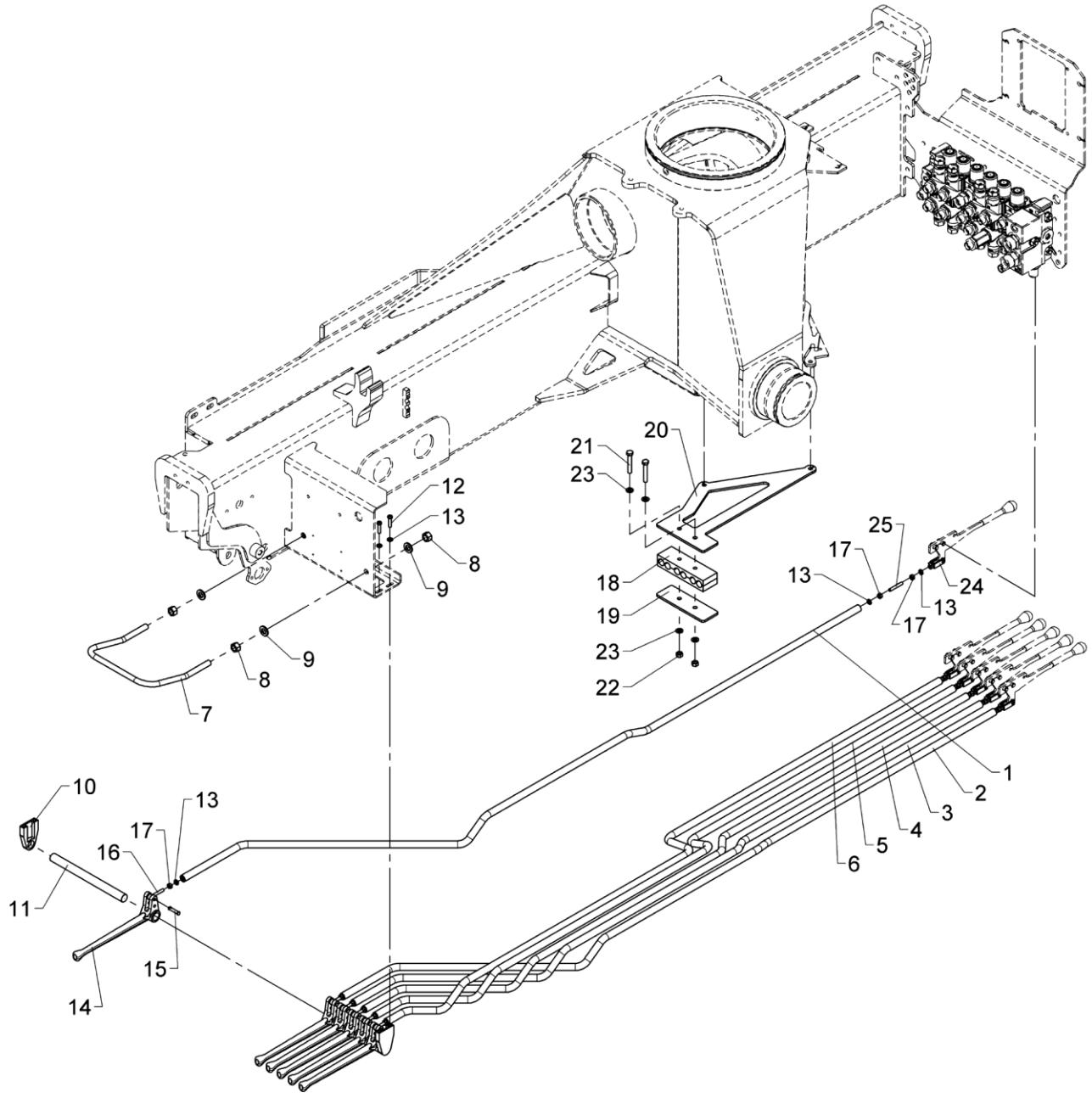

Cross-over controls, 6 functions

Pos	Qty.	Part no.	Description	Remarks
1	1	6342921	Connecting rod, cross controls	
2	1	6342922	Connecting rod, cross controls	
3	1	6342923	Connecting rod, cross controls	
4	1	6342924	Connecting rod, cross controls	
5	1	6342925	Connecting rod, cross controls	
6	1	6342926	Connecting rod, cross controls	
7	1	6340247	Safety guard	
8	4	30860	Nut, stainless	M12
9	4	32338	Washer	12 mm
10	2	63564	Bracket for pin	
11	1	6340249	Pin	
12	4	30340	Screw, stainless	6,0 x 25
13	22	32302	Face washer, stainless	6 mm
14	6	63443	Lever for dual controls	
15	6	63468	Split pin with spring lock	
16	6	32114	Pin	M6 x 40
17	18	30854	Nut, stainless	M6
18	2	68069	Guide	
19	1	6363248	Top plate	
20	1	6341247	Bracket f. cross controls	
21	2	30139	Steel bolt, stainless	M8 x 50
22	2	30856	Nut, stainless	M8
23	4	31147	Face washer, 8 mm	
24	6	48414	Clevis	
25	6	31007	Pointed screw	MSP6 x 40

1500K, 1510K, 1720K, 1730K, 1820K, 1830K

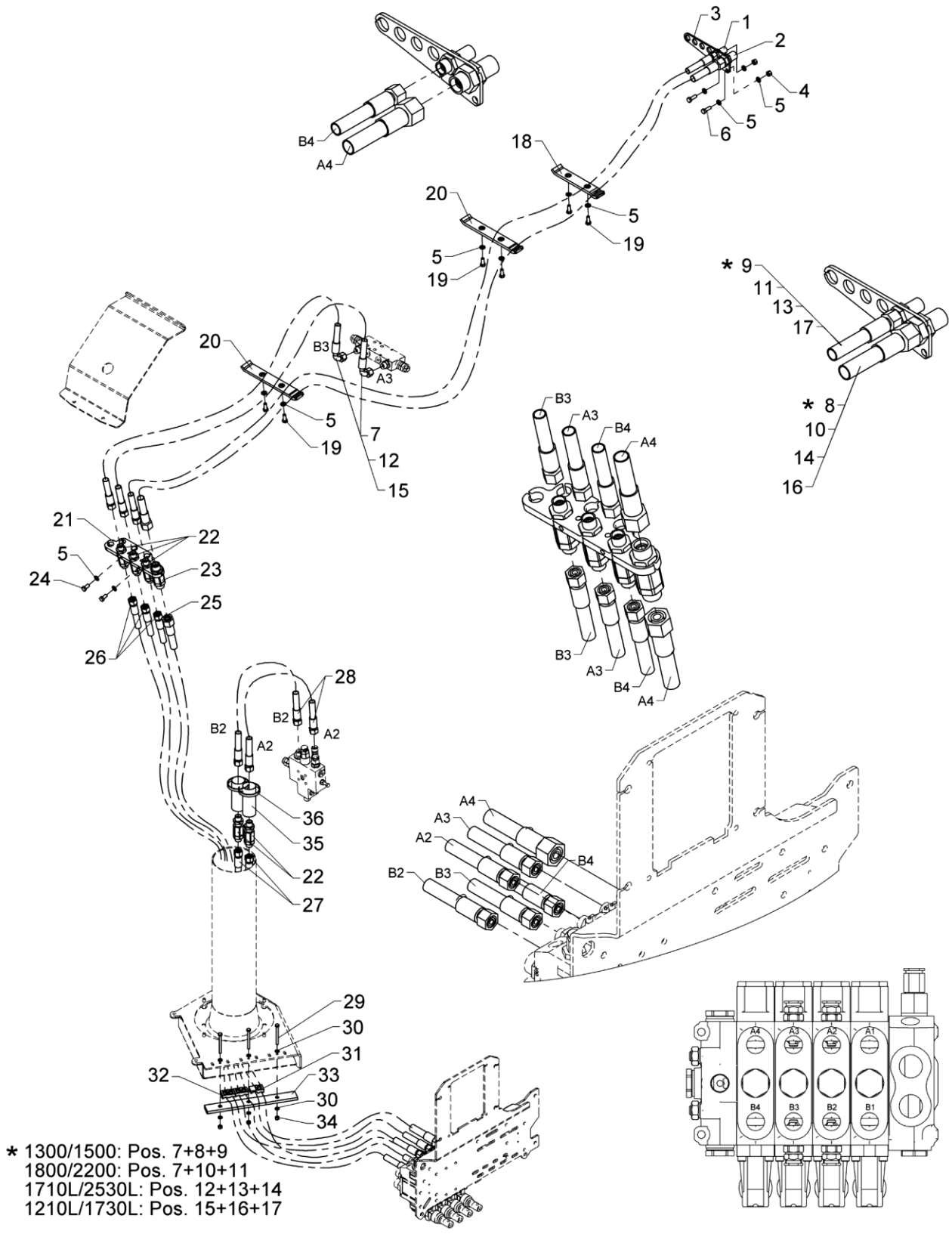

Obsolete

Hose kit, loader functions, std.

534 05 400

From loader 1060001
To loader 1062121

Created 24-11-2008
Modified 22-08-2017

Pos	Qty.	Part no.	Description	Remarks
		6343010	Hose kit, column, std.	
		6343080	Hose kit, boom cylinder	
		6343090	Hose kit, main boom, std.	
		6346450	Hose kit, main boom, std.V	
		6355110	Hose kit, main boom, std.	1210L/1730L
		6355470	Hose kit, main boom, std.	1710L/2530L
		6343250	Clamp kit, std.	
1	1	25201	Bulkhead connection	GSS 12 L
2	1	26335	Bulkhead connection	P-GSV 16 S
3	1	6340315	Bracket, bulkhead connections	
4	2	30886	Lock nut, stainless	M8
5	12	31147	Face washer, 8 mm	8 mm
6	2	30134	Set screw, stainless	M8 x 25
7	2	0017690	Hose	3/8" x 1300 mm V90/L
8	1	56382	Hose	
9	1	0017600	Hose	
10	1	56529	Hose	1/2 X 3500 mm L/L
11	1	0017770	Hose	
12	2	56950	Hose 3/8" x 2450 L/90 (12L)	
13	1	56951	Hose 3/8" x 4650 L/L (12L)	
14	1	56952	Hose 1/2" x 4650 L/L(16S)	
15	2	56917	Hose	
16	1	56918	Hose	
17	1	56916	Hose	
18	1	6340211	Clamp, complete	
19	6	30132	Set screw, stainless	
20	2	6340213	Clamp, complete	
21	1	6340252	Bracket for swivel coupling	
22	5	58478	Swivel coupling	M18 x 1,5 12L
23	1	58479	Swivel coupling	M24 x 1,5 16L
24	2	30131	Set screw, stainless	M8 x 16
25	1	62846	Hose	1/2" x 2750 L/L (16S, M24X1.5)
26	3	0015130	Hose	3/8" x 2750 L/L (12L)
27	2	0015120	Hose	3/8" x 1400 L/L (12L)
28	2	0015500	Hose	
29	3	30199	Steel bolt, stainless	M6 x 65
30	6	32302	Face washer, stainless	6 mm
31	1	63562	Clamp	
32	2	63561	Clamp	
33	1	6340238	Clamp, complete	
34	3	30884	Lock nut, stainless	M6

1500K, 1510K, 1720K, 1730K, 1820K, 1830K

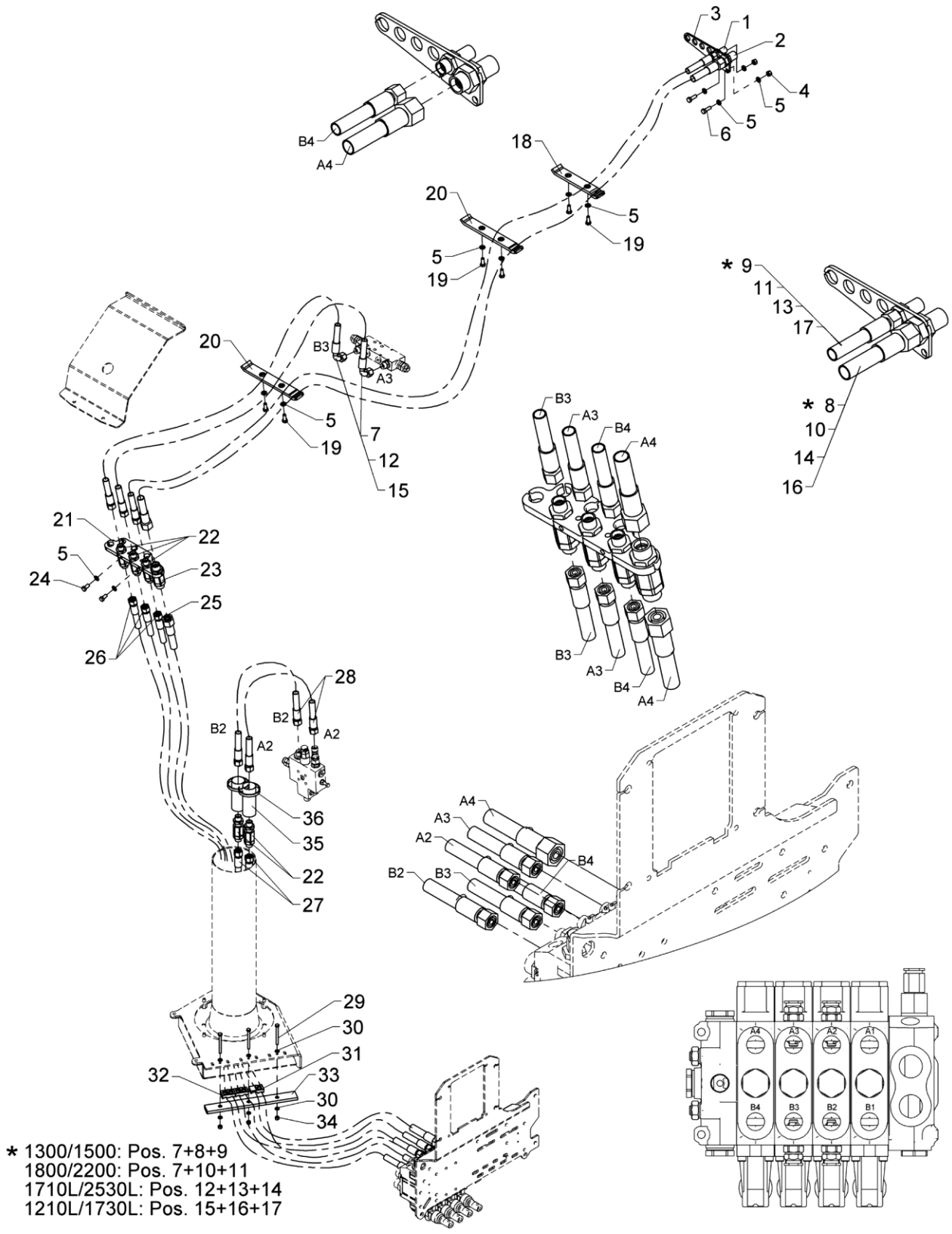

Obsolete

Hose kit, loader functions, std.

534 05 400

From loader 1060001
To loader 1062121

Created 24-11-2008
Modified 22-08-2017

Pos	Qty.	Part no.	Description	Remarks
35	2	29131	Protective cover	400 mm
36	2	27275	Cable tie, black, 7.6x385mm	

1500K, 1510K, 1720K, 1730K, 1820K, 1830K

63 55 110
63 46 450
63 43 250 63 43 090
63 55 470 63 43 080
Internal ref. 63 43 010

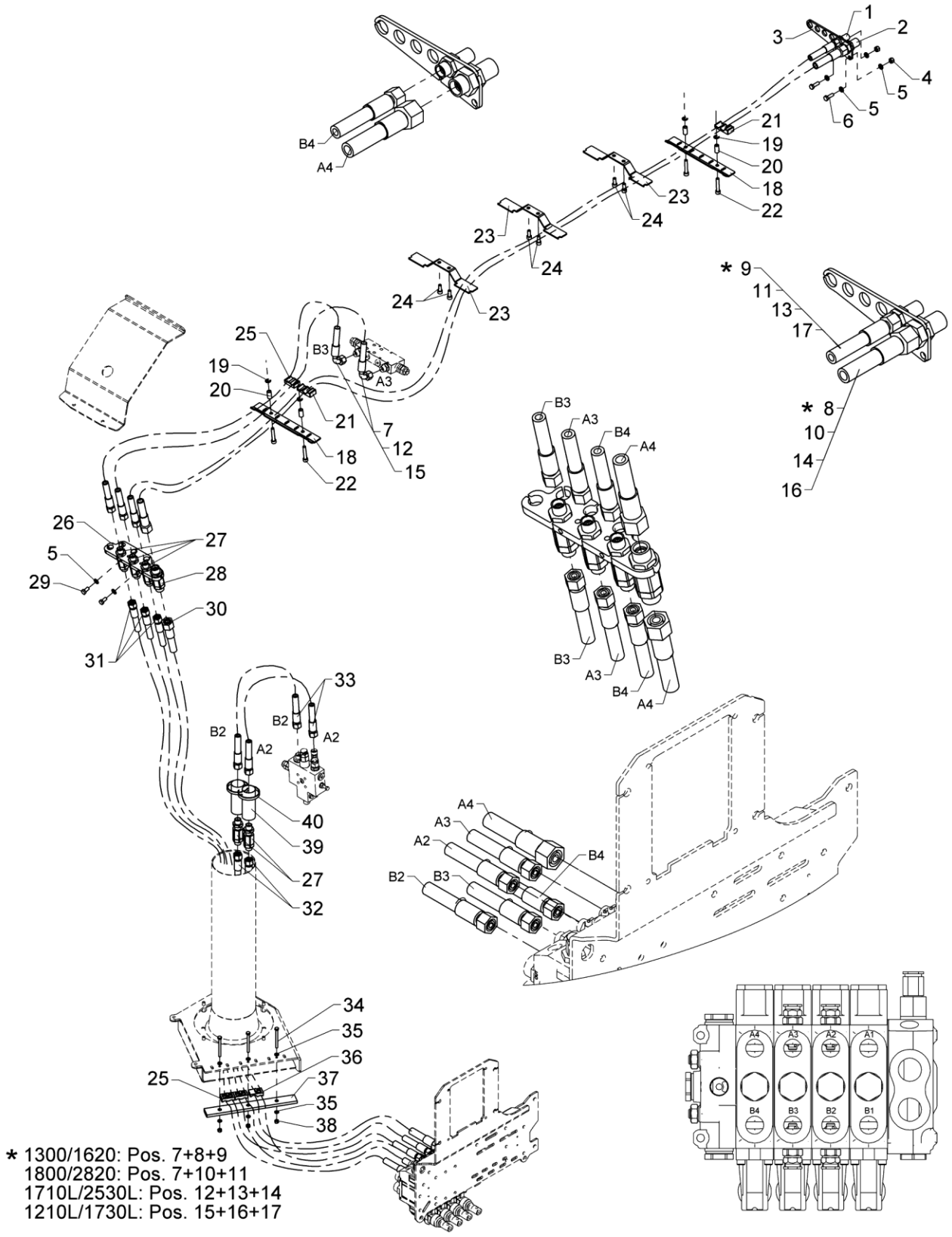

Hose kit, loader functions, std.

Pos	Qty.	Part no.	Description	Remarks
		6343010	Hose kit, column, std.	
		6343080	Hose kit, boom cylinder	
		6343090	Hose kit, main boom, std.	
		6346450	Hose kit, main boom, std.V	
		6355110	Hose kit, main boom, std.	1210L/1730L
		6355470	Hose kit, main boom, std.	1710L/2530L
		6343250	Clamp kit, std.	
1	1	25201	Bulkhead connection	GSS 12 L
2	1	26335	Bulkhead connection	P-GSV 16 S
3	1	6340315	Bracket, bulkhead connections	
4	2	30886	Lock nut, stainless	M8
5	6	31147	Face washer, 8 mm	8 mm
6	2	30134	Set screw, stainless	M8 x 25
7	2	0017690	Hose	3/8" x 1300 mm V90/L
8	1	56382	Hose	
9	1	0017600	Hose	
10	1	56529	Hose	1/2 X 3500 mm L/L
11	1	0017770	Hose	
12	2	56950	Hose 3/8" x 2450 L/90 (12L)	
13	1	56951	Hose 3/8" x 4650 L/L (12L)	
14	1	56952	Hose 1/2" x 4650 L/L(16S)	
15	2	56917	Hose	
16	1	56918	Hose	
17	1	56916	Hose	
18	2	6341002	Hose clamp, back plate	
19	4	33292	Circlip	
20	4	6341004	Distance pipe (Ø12/6,5x23,5)	
21	2	63563	Clamp	
22	4	30436	Screw	MC8 x 45
23	3	6341001	Hose clamp	
24	6	30438	Screw	MC8 x 20
25	3	63561	Clamp	
26	1	6340252	Bracket for swivel coupling	
27	5	58478	Swivel coupling	M18 x 1,5 12L
28	1	58479	Swivel coupling	M24 x 1,5 16L
29	2	30131	Set screw, stainless	M8 x 16
30	1	62846	Hose	1/2" x 2750 L/L (16S, M24X1.5)
31	3	0015130	Hose	3/8" x 2750 L/L (12L)
32	2	0015120	Hose	3/8" x 1400 L/L (12L)
33	2	0015500	Hose	
34	3	30199	Steel bolt, stainless	M6 x 65

1500K, 1510K, 1720K, 1730K, 1820K, 1830K

63 55 110
63 46 450
63 43 250 63 43 090
63 55 470 63 43 080
Internal ref. 63 43 010

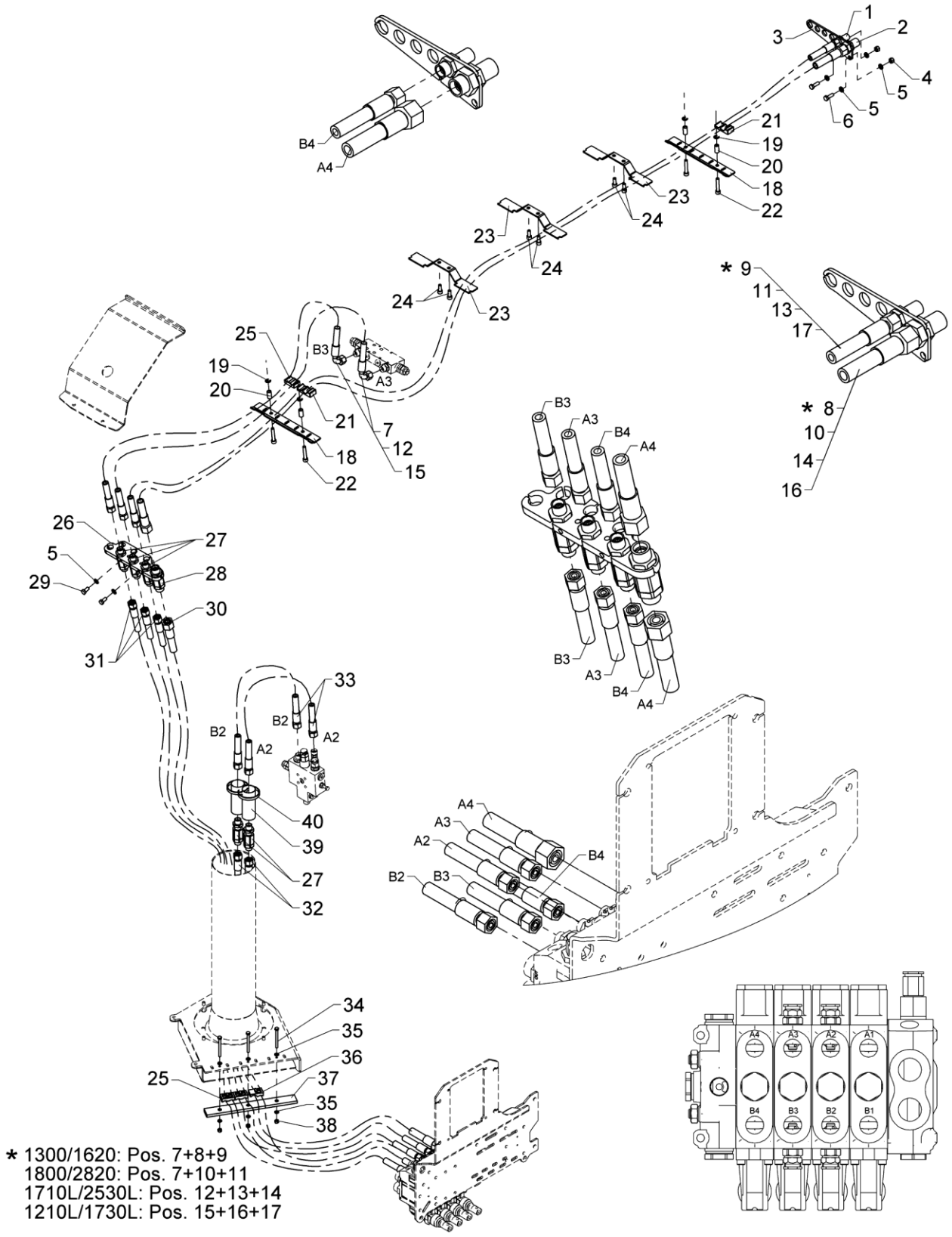

Hose kit, loader functions, std.

Pos	Qty.	Part no.	Description	Remarks
35	6	32302	Face washer, stainless	6 mm
36	1	63562	Clamp	
37	1	6340238	Clamp, complete	
38	3	30884	Lock nut, stainless	M6
39	2	29131	Protective cover	400 mm
40	2	27275	Cable tie, black, 7.6x385mm	

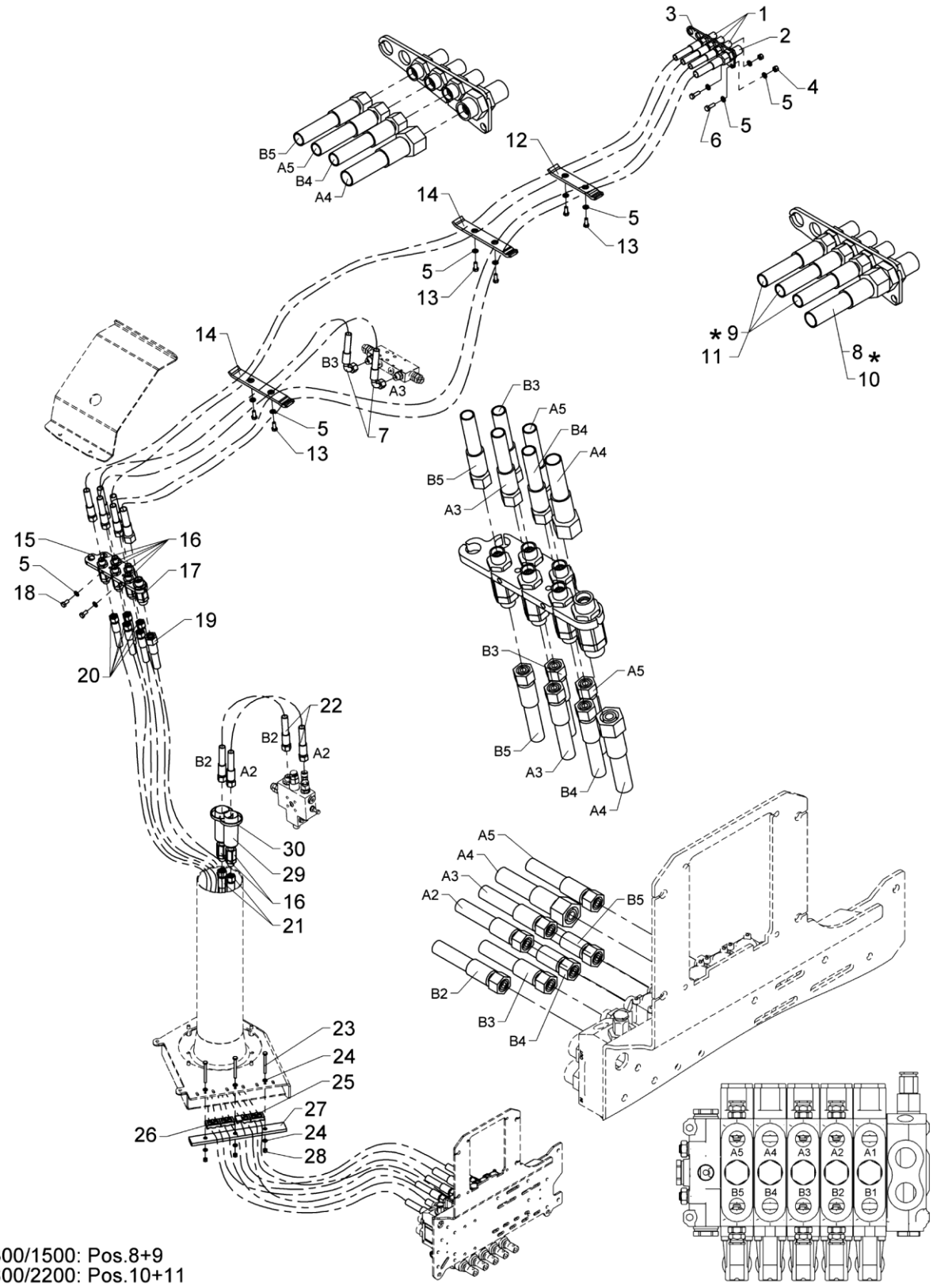

* 1300/1500: Pos.8+9
1800/2200: Pos.10+11

Obsolete

Hose kit, loader functions, 1 EXV.

534 05 410

From loader 1060001
To loader 1062121

Created 24-11-2008
Modified 23-08-2017

Pos	Qty.	Part no.	Description	Remarks
		6343040	Hose kit, column, 1 EXV	
		6343110	Hose kit, main boom, 1 EXV	
		6346470	Hose kit, main boom, 1 EXV	
		6343080	Hose kit, boom cylinder	
		6343260	Clamp, 1 EXV	
1	3	25201	Bulkhead connection	GSS 12 L
2	1	26335	Bulkhead connection	P-GSV 16 S
3	1	6340315	Bracket, bulkhead connections	
4	2	30886	Lock nut, stainless	M8
5	12	31147	Face washer, 8 mm	8 mm
6	2	30134	Set screw, stainless	M8 x 25
7	2	0017690	Hose	
8	1	56382	Hose	1/2 X 3400 mm L/L
9	3	0017600	Hose	
10	1	56529	Hose	1/2 X 3500 mm L/L
11	3	0017770	Hose	
12	1	6340211	Clamp, complete	
13	6	30132	Set screw, stainless	M8 x 20
14	2	6340213	Clamp, complete	
15	1	6340252	Bracket for swivel coupling	
16	7	58478	Swivel coupling	M18 x 1,5 12L
17	1	58479	Swivel coupling	M24 x 1,5 16L
18	2	30131	Set screw, stainless	M8 x 16
19	1	62846	Hose	1/2 X 2750 M24X1.5 L/L
20	5	0015130	Hose	
21	2	0015120	Hose	
22	2	0015500	Hose	
23	3	30199	Steel bolt, stainless	M6 x 65
24	6	32302	Face washer, stainless	6 mm
25	1	63562	Clamp	
26	3	63561	Clamp	
27	1	6340238	Clamp, complete	
28	3	30884	Lock nut, stainless	M6
29	2	29131	Protective cover	400 mm
30	2	27275	Cable tie, black, 7.6x385mm	

1500K, 1510K, 1720K, 1730K, 1820K, 1830K

63 43 260
63 43 080
63 46 470
63 43 110
Internal ref. 63 43 040

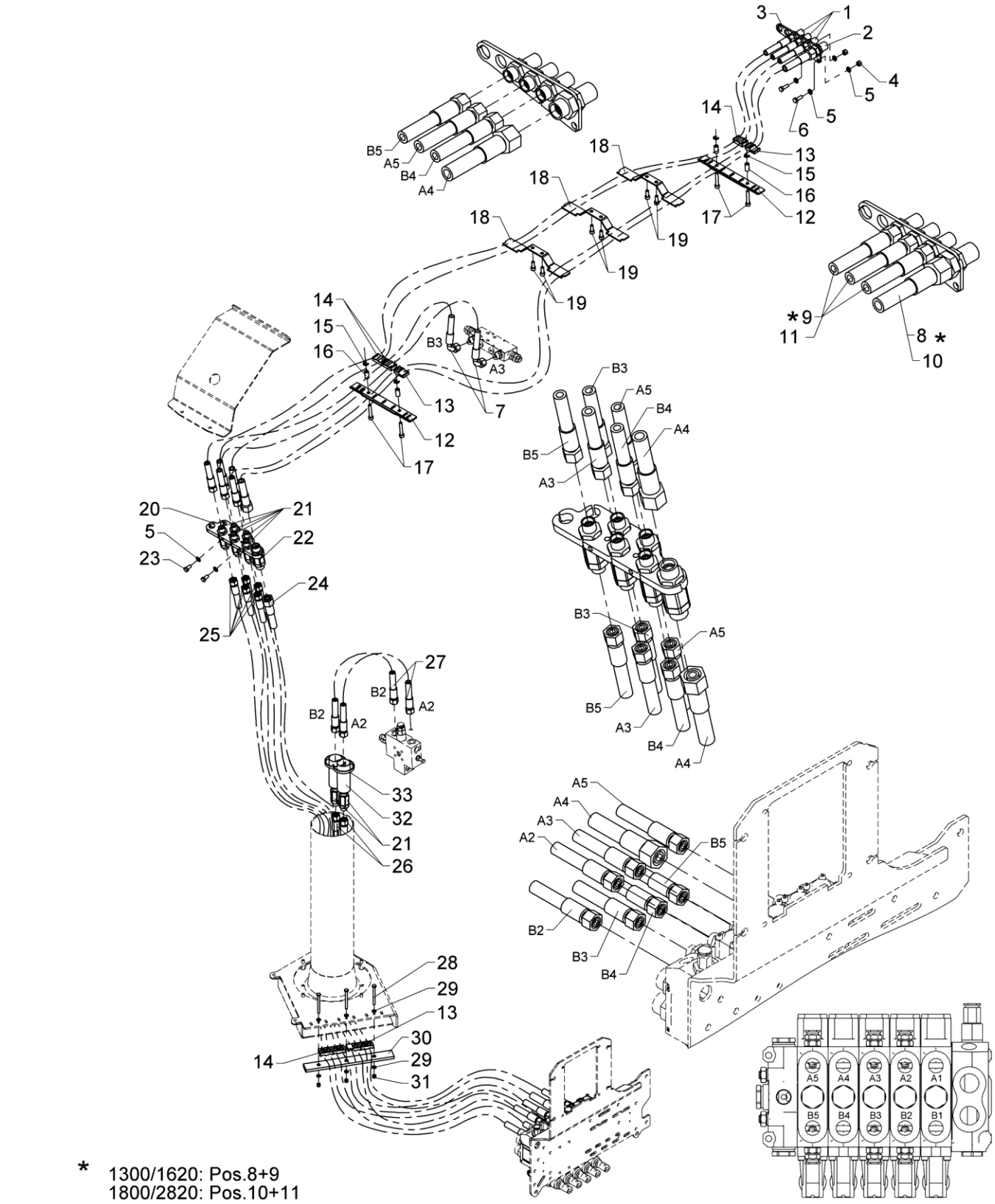

* 1300/1620: Pos.8+9
1800/2820: Pos.10+11

534 05 410 A

From loader 1062122
To loader

Created 11-01-2019
Modified 11-01-2019

Hose kit, loader functions, 1 EXV.

Pos	Qty.	Part no.	Description	Remarks
		6343040	Hose kit, column, 1 EXV	
		6343110	Hose kit, main boom, 1 EXV	
		6346470	Hose kit, main boom, 1 EXV	
		6343080	Hose kit, boom cylinder	
		6343260	Clamp, 1 EXV	
1	3	25201	Bulkhead connection	GSS 12 L
2	1	26335	Bulkhead connection	P-GSV 16 S
3	1	6340315	Bracket, bulkhead connections	
4	2	30886	Lock nut, stainless	M8
5	6	31147	Face washer, 8 mm	8 mm
6	2	30134	Set screw, stainless	M8 x 25
7	2	0017690	Hose	3/8" x 1300 mm V90/L
8	1	56382	Hose	
9	3	0017600	Hose	
10	1	56529	Hose	1/2 X 3500 mm L/L
11	3	0017770	Hose	
12	2	6341002	Hose clamp, back plate	
13	3	63562	Clamp	
14	6	63561	Clamp	
15	4	33292	Circlip	
16	4	6341004	Distance pipe (Ø12/6,5x23,5)	
17	4	30436	Screw	MC8 x 45
18	3	6341001	Hose clamp	
19	6	30438	Screw	MC8 x 20
20	1	6340252	Bracket for swivel coupling	
21	7	58478	Swivel coupling	M18 x 1,5 12L
22	1	58479	Swivel coupling	M24 x 1,5 16L
23	2	30131	Set screw, stainless	M8 x 16
24	1	62846	Hose	1/2" x 2750 L/L (16S, M24X1.5)
25	5	0015130	Hose	3/8" x 2750 L/L (12L)
26	2	0015120	Hose	3/8" x 1400 L/L (12L)
27	2	0015500	Hose	
28	3	30199	Steel bolt, stainless	M6 x 65
29	6	32302	Face washer, stainless	6 mm
30	1	6340238	Clamp, complete	
31	3	30884	Lock nut, stainless	M6
32	2	29131	Protective cover	400 mm
33	2	27275	Cable tie, black, 7.6x385mm	

1500K, 1510K, 1720K, 1730K, 1820K, 1830K

63 43 270
63 43 080
63 46 480
63 43 120
Internal ref. 63 43 050

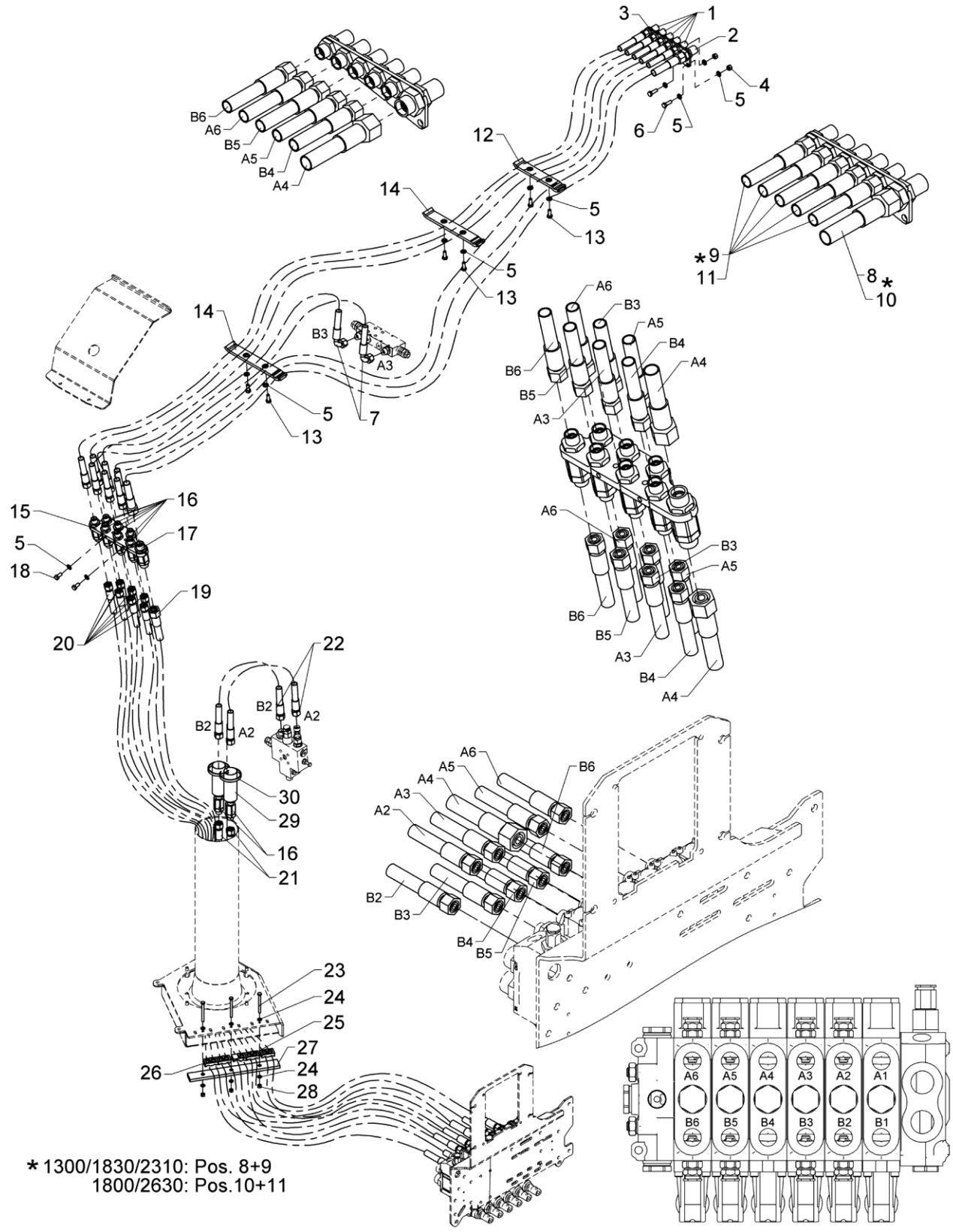

Obsolete

Hose kit, loader functions, 2 EXV.

534 05 420

From loader 1060001
To loader 1062121

Created 24-11-2008
Modified 23-08-2017

Pos	Qty.	Part no.	Description	Remarks
		6343050	Hose kit, column, 2 EXV	
		6343120	Hose kit, main boom, 2 EXV	1300K-1830K, 2310S
		6346480	Hose kit, main boom, 2 EXV	1800K-2630K
		6343080	Hose kit, boom cylinder	
		6343270	Clamp, 2 EXV	
1	5	25201	Bulkhead connection	GSS 12 L
2	1	26335	Bulkhead connection	P-GSV 16 S
3	1	6340315	Bracket, bulkhead connections	
4	2	30886	Lock nut, stainless	M8
5	12	31147	Face washer, 8 mm	8 mm
6	2	30134	Set screw, stainless	M8 x 25
7	2	0017690	Hose	
8	1	56382	Hose	1/2 X 3400 mm L/L
9	5	0017600	Hose	
10	1	56529	Hose	1/2 X 3500 mm L/L
11	5	0017770	Hose	
12	1	6340211	Clamp, complete	
13	6	30132	Set screw, stainless	M8 x 20
14	2	6340213	Clamp, complete	
15	1	6340252	Bracket for swivel coupling	
16	9	58478	Swivel coupling	M18 x 1,5 12L
17	1	58479	Swivel coupling	M24 x 1,5 16L
18	2	30131	Set screw, stainless	M8 x 16
19	1	62846	Hose	1/2 X 2750 M24X1.5 L/L
20	7	0015130	Hose	
21	2	0015120	Hose	
22	2	0015500	Hose	
23	3	30199	Steel bolt, stainless	M6 x 65
24	6	32302	Face washer, stainless	6 mm
25	1	63562	Clamp	
26	4	63561	Clamp	
27	1	6340238	Clamp, complete	
28	3	30884	Lock nut, stainless	M6
29	2	29131	Protective cover	400 mm
30	2	27275	Cable tie, black, 7.6x385mm	

1500K, 1510K, 1720K, 1730K, 1820K, 1830K

63 43 270
63 43 080
63 46 480
63 43 120
Internal ref. 63 43 050

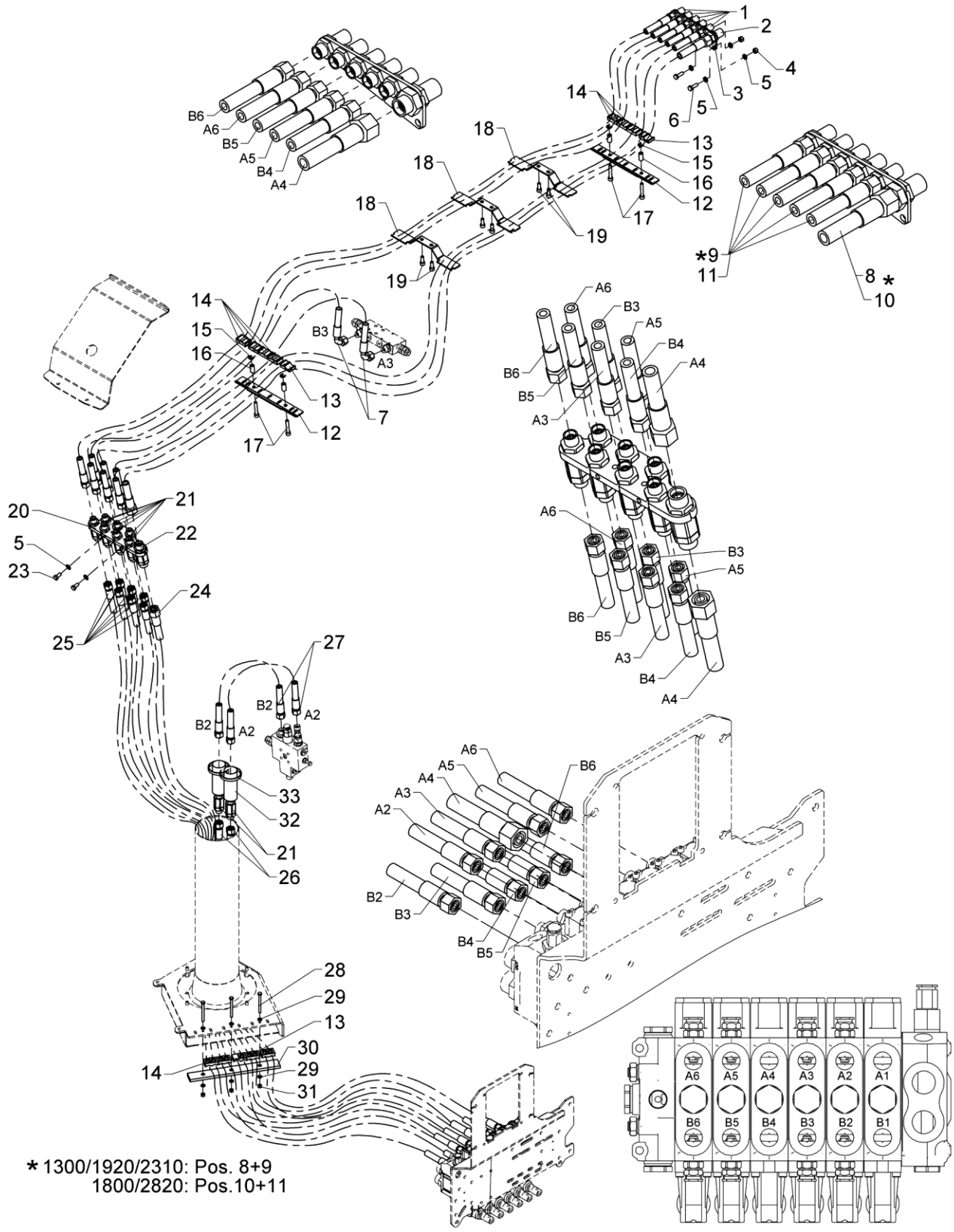

534 05 420 A

From loader 1062122
To loader

Created 11-01-2019
Modified

Hose kit, loader functions, 2 EXV.

Pos	Qty.	Part no.	Description	Remarks
		6343050	Hose kit, column, 2 EXV	
		6343120	Hose kit, main boom, 2 EXV	1300K-1830K, 2310S
		6346480	Hose kit, main boom, 2 EXV	1800K-2630K
		6343080	Hose kit, boom cylinder	
		6343270	Clamp, 2 EXV	
1	5	25201	Bulkhead connection	GSS 12 L
2	1	26335	Bulkhead connection	P-GSV 16 S
3	1	6340315	Bracket, bulkhead connections	
4	2	30886	Lock nut, stainless	M8
5	6	31147	Face washer, 8 mm	8 mm
6	2	30134	Set screw, stainless	M8 x 25
7	2	0017690	Hose	
8	1	56382	Hose	
9	5	0017600	Hose	
10	1	56529	Hose	1/2 X 3500 mm L/L
11	5	0017770	Hose	
12	2	6341002	Hose clamp, back plate	
13	3	63562	Clamp	
14	11	63561	Clamp	
15	4	33292	Circlip	
16	4	6341004	Distance pipe (Ø12/6,5x23,5)	
17	4	30436	Screw	MC8 x 45
18	3	6341001	Hose clamp	
19	6	30438	Screw	MC8 x 20
20	1	6340252	Bracket for swivel coupling	
21	9	58478	Swivel coupling	M18 x 1,5 12L
22	1	58479	Swivel coupling	M24 x 1,5 16L
23	2	30131	Set screw, stainless	M8 x 16
24	1	62846	Hose	1/2 X 2750 M24X1.5 L/L
25	7	0015130	Hose	
26	2	0015120	Hose	
27	2	0015500	Hose	
28	3	30199	Steel bolt, stainless	M6 x 65
29	6	32302	Face washer, stainless	6 mm
30	1	6340238	Clamp, complete	
31	3	30884	Lock nut, stainless	M6
32	2	29131	Protective cover	400 mm
33	2	27275	Cable tie, black, 7.6x385mm	

1500K, 1510K, 1720K, 1730K, 1820K, 1830K

63 43 290
63 46 460
63 43 100
63 43 080
Internal ref. 63 43 020

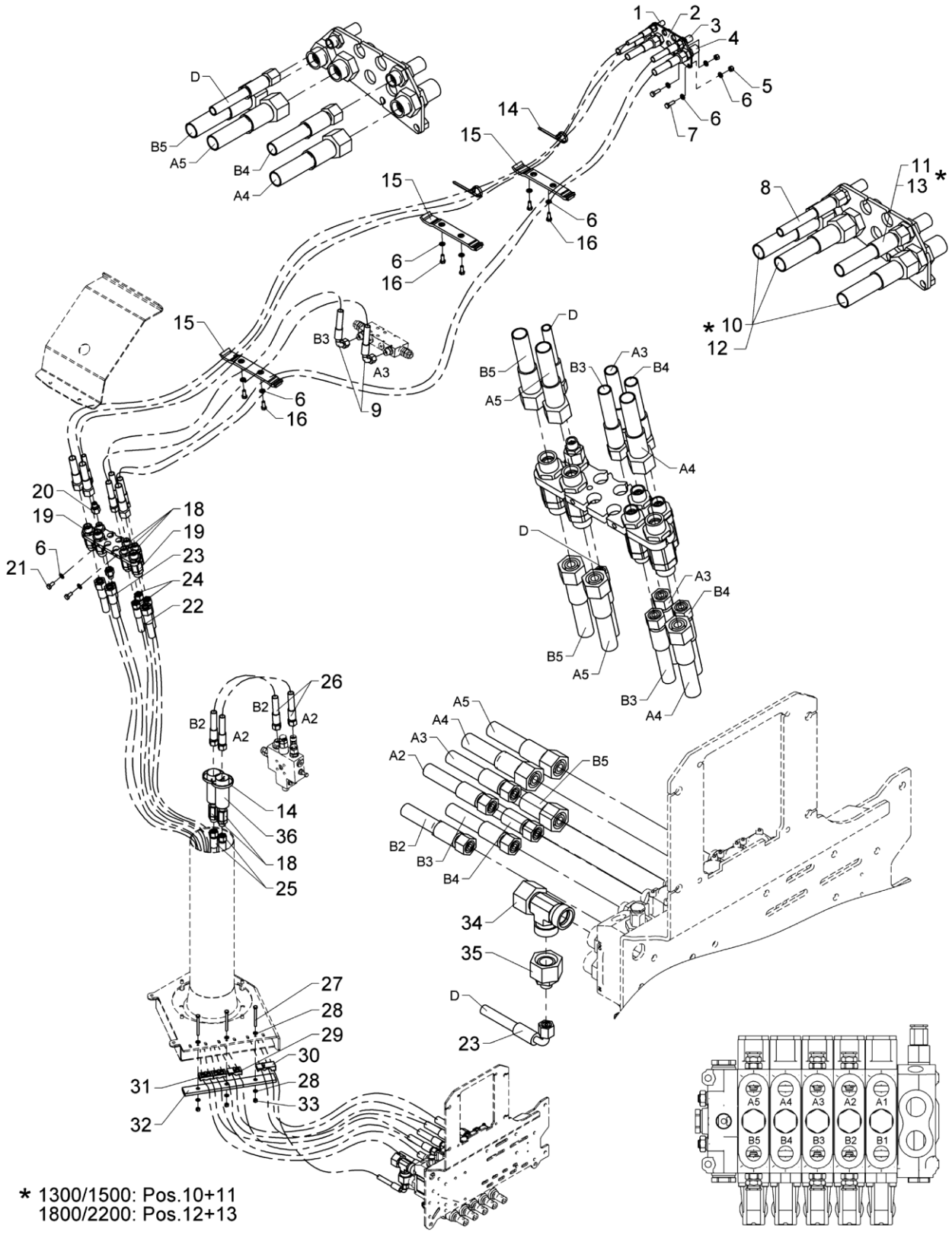

Obsolete

Hose kit, loader functions, std./winch

534 05 430

From loader 1060001
To loader 1062121

Created 24-11-2008
Modified 23-08-2017

Pos	Qty.	Part no.	Description	Remarks
		6343020	Hose kit, column, winch	
		6343080	Hose kit, boom cylinder	
		6343100	Hose kit, main boom, winch	
		6346460	Hose kit, main boom, winch	
		6343290	Clamp, winch	
1	1	25261	Bulkhead connection	P-GSV 8 L
2	1	6340986	Bracket, bulkhead connections	
3	1	25201	Bulkhead connection	GSS 12 L
4	3	26335	Bulkhead connection	P-GSV 16 S
5	2	30886	Lock nut, stainless	M8
6	12	31147	Face washer, 8 mm	8 mm
7	2	30134	Set screw, stainless	M8 x 25
8	1	62539	Hose	1/4 X 3430 M14 X 1.5 L/L
9	2	0017690	Hose	3/8" x 1300 mm V90/L
10	3	56382	Hose	1/2 X 3400 mm L/L
11	1	0017600	Hose	
12	3	56529	Hose	1/2 X 3500 mm L/L
13	1	0017770	Hose	
14	4	27275	Cable tie, black, 7.6x385mm	7,6 x 390mm
15	3	6340217	Clamp, complete	
16	6	30132	Set screw, stainless	M8 x 20
17	1	6340253	Bracket for swivel coupling	
18	6	58478	Swivel coupling	M18 x 1,5 12L
19	3	58479	Swivel coupling	M24 x 1,5 16L
20	2	26101	Reducing connection	REDSDN 12/8 L
21	2	30131	Set screw, stainless	M8 x 16
22	3	62846	Hose	1/2" x 2750 L/L (16S, M24X1.5)
23	1	56024	Hose	1/4X2800 M14X1.5 L/90
24	3	0015130	Hose	3/8" x 2750 L/L (12L)
25	2	0015120	Hose	3/8" x 1400 L/L (12L)
26	2	0015500	Hose	
27	3	30199	Steel bolt, stainless	M6 x 65
28	6	32302	Face washer, stainless	6 mm
29	1	63562	Clamp	
30	1	63563	Clamp	
31	2	63561	Clamp	
32	1	6340238	Clamp, complete	
33	3	30884	Lock nut, stainless	M6
34	1	26149	Connection	ELSD 22 L
35	1	25286	Reducing connection	REDSDN 22/8 L
36	2	29131	Protective cover	400 mm

1500K, 1510K, 1720K, 1730K, 1820K, 1830K

63 43 290
63 46 460
63 43 100
63 43 080
Internal ref. 63 43 020

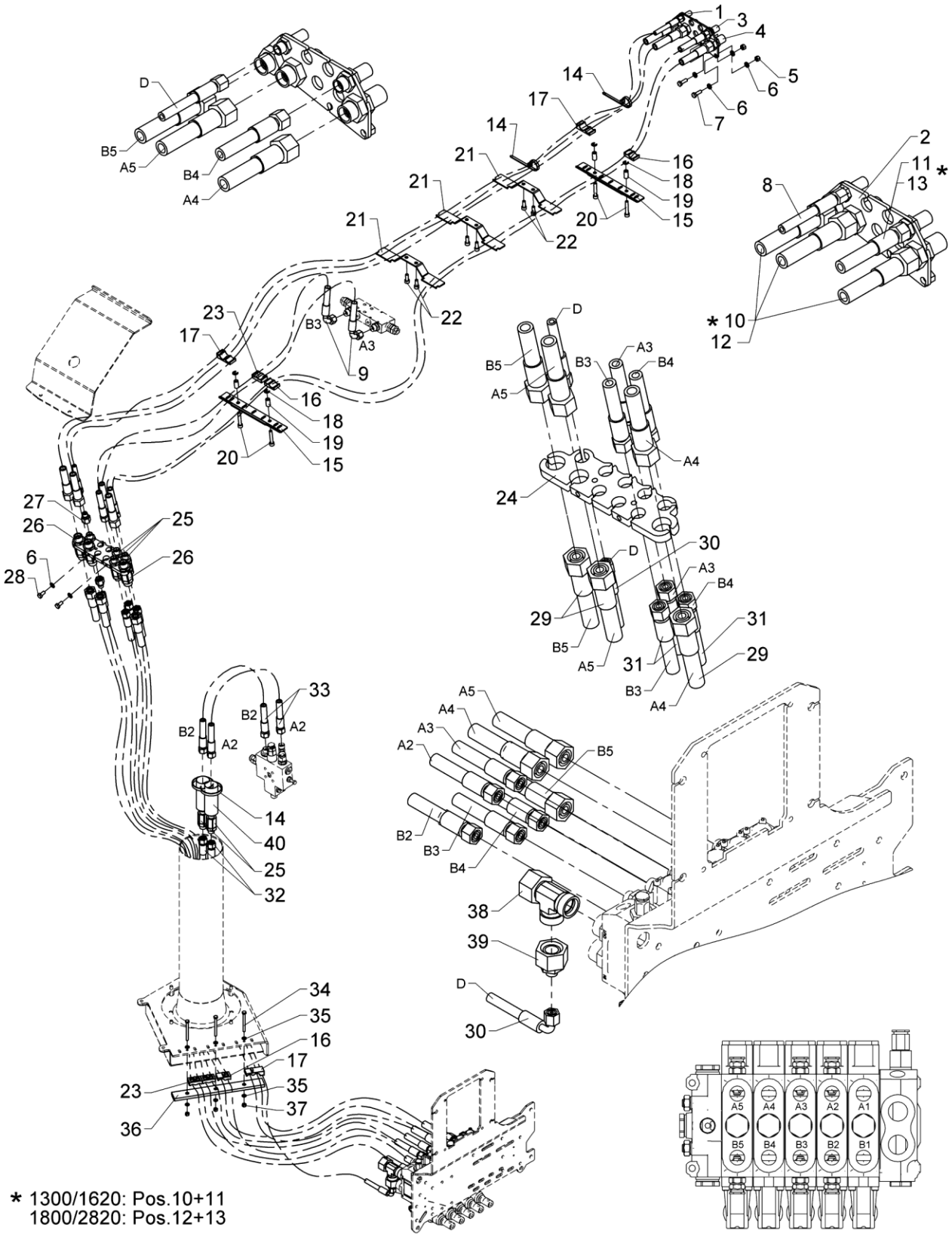

534 05 430 A

From loader 1062122
To loader

Created 11-01-2019
Modified

Hose kit, loader functions, std./winch

Pos	Qty.	Part no.	Description	Remarks
		6343020	Hose kit, column, winch	
		6343080	Hose kit, boom cylinder	
		6343100	Hose kit, main boom, winch	
		6346460	Hose kit, main boom, winch	
		6343290	Clamp, winch	
1	1	25261	Bulkhead connection	P-GSV 8 L
2	1	6340986	Bracket, bulkhead connections	
3	1	25201	Bulkhead connection	GSS 12 L
4	3	26335	Bulkhead connection	P-GSV 16 S
5	2	30886	Lock nut, stainless	M8
6	6	31147	Face washer, 8 mm	8 mm
7	2	30134	Set screw, stainless	M8 x 25
8	1	62539	Hose	1/4 X 3430 M14 X 1.5 L/L
9	2	0017690	Hose	3/8" x 1300 mm V90/L
10	3	56382	Hose	1/2 X 3400 mm L/L
11	1	0017600	Hose	
12	3	56529	Hose	1/2 X 3500 mm L/L
13	1	0017770	Hose	
14	4	27275	Cable tie, black, 7.6x385mm	
15	2	6341002	Hose clamp, back plate	
16	3	63562	Clamp	
17	3	63563	Clamp	
18	4	33292	Circlip	
19	4	6341004	Distance pipe (Ø12/6,5x23,5)	
20	4	30436	Screw	MC8 x 45
21	3	6341001	Hose clamp	
22	6	30438	Screw	MC8 x 20
23	3	63561	Clamp	
24	1	6340253	Bracket for swivel coupling	
25	6	58478	Swivel coupling	M18 x 1,5 12L
26	3	58479	Swivel coupling	M24 x 1,5 16L
27	2	26101	Reducing connection	REDSDN 12/8 L
28	2	30131	Set screw, stainless	M8 x 16
29	3	62846	Hose	1/2" x 2750 L/L (16S, M24X1.5)
30	1	56024	Hose	1/4X2800 M14X1.5 L/90
31	3	0015130	Hose	3/8" x 2750 L/L (12L)
32	2	0015120	Hose	3/8" x 1400 L/L (12L)
33	2	0015500	Hose	
34	3	30199	Steel bolt, stainless	M6 x 65
35	6	32302	Face washer, stainless	6 mm
36	1	6340238	Clamp, complete	

1500K, 1510K, 1720K, 1730K, 1820K, 1830K

63 43 290
63 46 460
63 43 100
63 43 080
Internal ref. 63 43 020

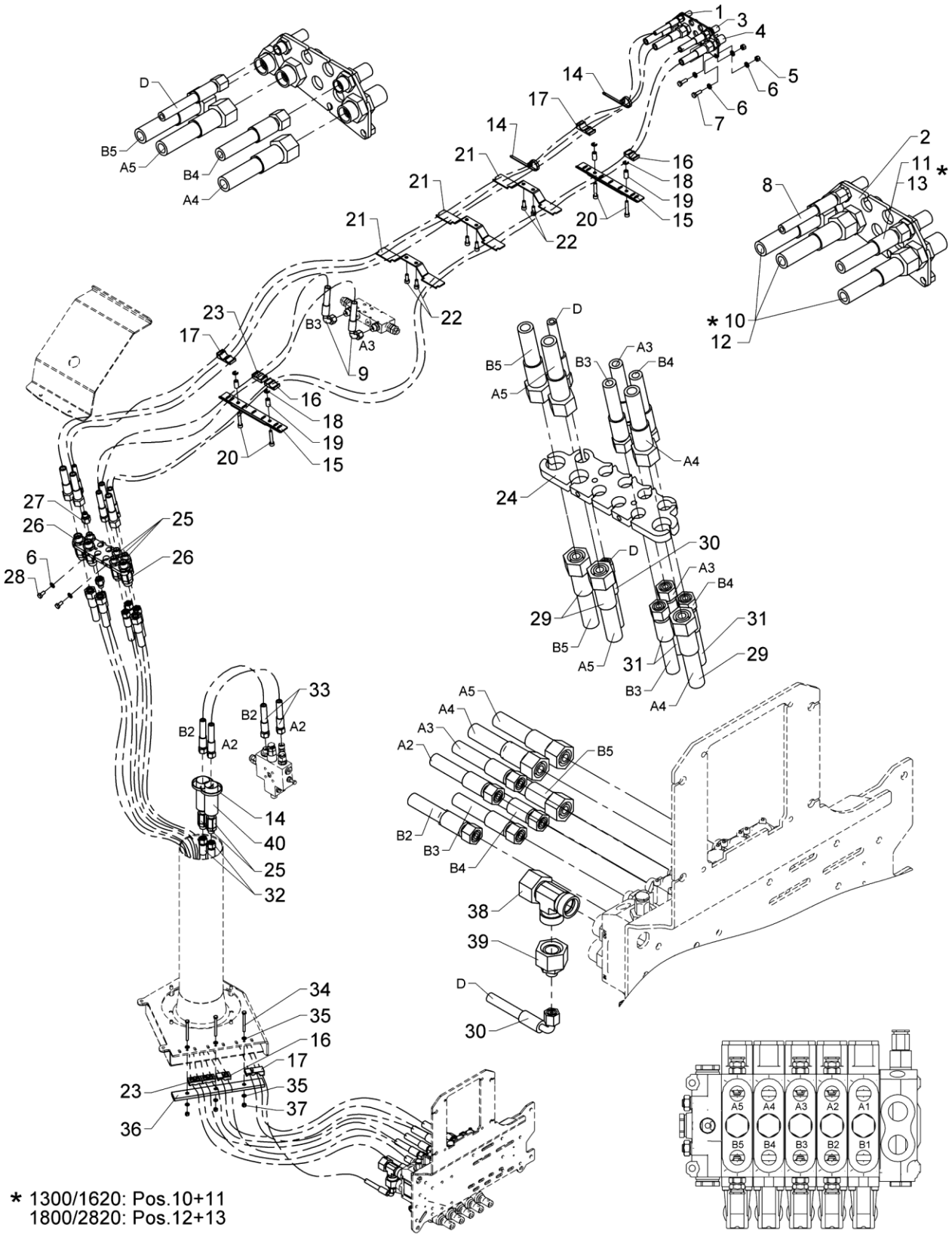

* 1300/1620: Pos.10+11
1800/2820: Pos.12+13

534 05 430 A

From loader 1062122
To loader

Created 11-01-2019
Modified

Hose kit, loader functions, std./winch

Pos	Qty.	Part no.	Description	Remarks
37	3	30884	Lock nut, stainless	M6
38	1	26149	Connection	ELSD 22 L
39	1	25286	Reducing connection	REDSDN 22/8 L
40	2	29131	Protective cover	400 mm

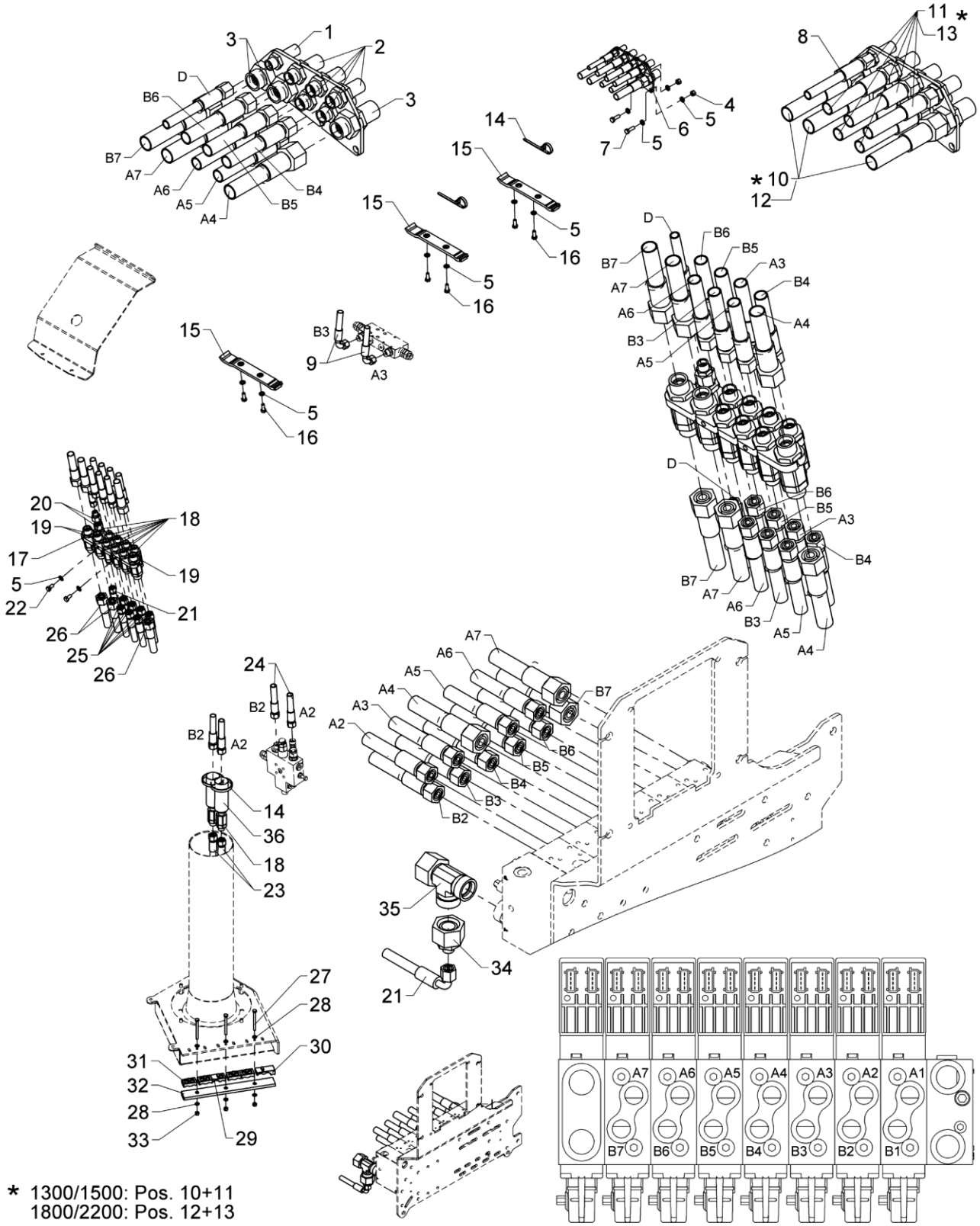
* 1300/1500: Pos. 10+11
1800/2200: Pos. 12+13

Obsolete

Hose kit, loader functions, 2 EXV/winch

534 05 440

From loader 1060001
To loader 1062121

Created 24-11-2008
Modified 23-08-2017

Pos	Qty.	Part no.	Description	Remarks
		6343030	Hose kit, column, 2 EXV/winch	
		6343130	Hose kit, main boom, 2 EXV/win	
		6346490	Hose kit, main boom, 2 EXV	
		6343080	Hose kit, boom cylinder	
		6343280	Clamp, 2 EXV/winch	
1	1	25261	Bulkhead connection	P-GSV 8 L
2	5	25201	Bulkhead connection	GSS 12 L
3	3	26335	Bulkhead connection	P-GSV 16 S
4	2	30886	Lock nut, stainless	M8
5	12	31147	Face washer, 8 mm	8 mm
6	1	6340986	Bracket, bulkhead connections	
7	2	30134	Set screw, stainless	M8 x 25
8	1	62539	Hose	1/4 X 3430 M14 X 1.5 L/L
9	2	0017690	Hose	3/8" x 1300 mm V90/L
10	3	56382	Hose	1/2 X 3400 mm L/L
11	5	0017600	Hose	
12	3	56529	Hose	1/2 X 3500 mm L/L
13	5	0017770	Hose	
14	4	27275	Cable tie, black, 7.6x385mm	7,6 x 390mm
15	3	6340217	Clamp, complete	
16	6	30132	Set screw, stainless	M8 x 20
17	1	6340253	Bracket for swivel coupling	
18	10	58478	Swivel coupling	M18 x 1,5 12L
19	3	58479	Swivel coupling	M24 x 1,5 16L
20	2	26101	Reducing connection	REDSDN 12/8 L
21	1	56024	Hose	1/4X2800 M14X1.5 L/90
22	2	30131	Set screw, stainless	M8 x 16
23	2	0015120	Hose	3/8" x 1400 L/L (12L)
24	2	0015500	Hose	
25	7	0015130	Hose	3/8" x 2750 L/L (12L)
26	3	62846	Hose	1/2" x 2750 L/L (16S, M24X1.5)
27	3	30199	Steel bolt, stainless	M6 x 65
28	6	32302	Face washer, stainless	6 mm
29	1	63562	Clamp	
30	1	63563	Clamp	
31	4	63561	Clamp	
32	1	6340238	Clamp, complete	
33	3	30884	Lock nut, stainless	M6
34	1	25286	Reducing connection	REDSDN 22/8 L
35	1	26149	Connection	ELSD 22 L
36	2	29131	Protective cover	400 mm

1500K, 1510K, 1720K, 1730K, 1820K, 1830K

63 43 280
63 43 080
63 46 490
63 43 130
Internal ref. 63 43 030

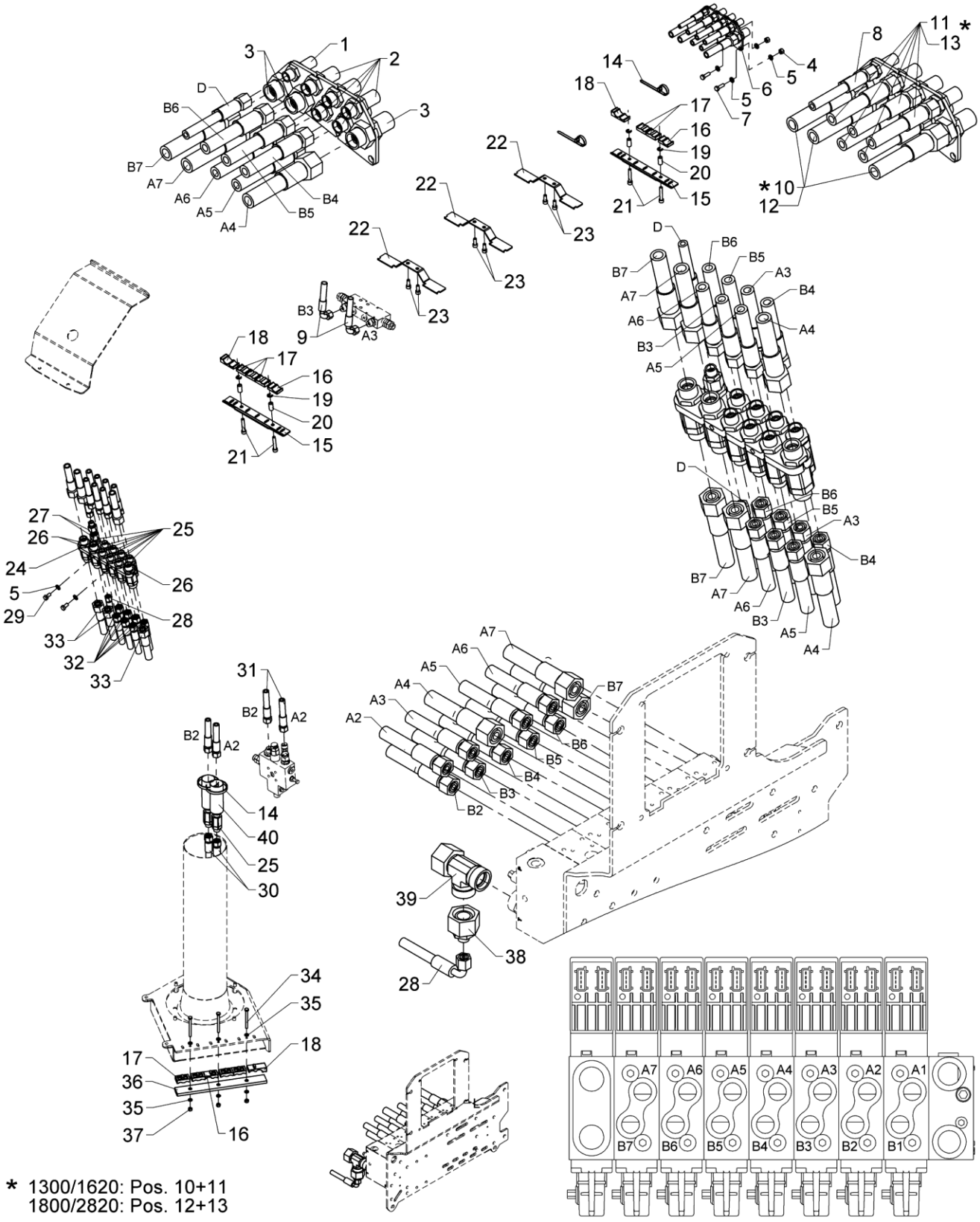

534 05 440 A

From loader 1062122
To loader

Created 11-01-2019
Modified

Hose kit, loader functions, 2 EXV/winch

Pos	Qty.	Part no.	Description	Remarks
		6343030	Hose kit, column, 2 EXV/winch	
		6343130	Hose kit, main boom, 2 EXV/win	
		6346490	Hose kit, main boom, 2 EXV	
		6343080	Hose kit, boom cylinder	
		6343280	Clamp, 2 EXV/winch	
1	1	25261	Bulkhead connection	P-GSV 8 L
2	5	25201	Bulkhead connection	GSS 12 L
3	3	26335	Bulkhead connection	P-GSV 16 S
4	2	30886	Lock nut, stainless	M8
5	6	31147	Face washer, 8 mm	8 mm
6	1	6340986	Bracket, bulkhead connections	
7	2	30134	Set screw, stainless	M8 x 25
8	1	62539	Hose	1/4 X 3430 M14 X 1.5 L/L
9	2	0017690	Hose	3/8" x 1300 mm V90/L
10	3	56382	Hose	1/2 X 3400 mm L/L
11	5	0017600	Hose	
12	3	56529	Hose	1/2 X 3500 mm L/L
13	5	0017770	Hose	
14	4	27275	Cable tie, black, 7.6x385mm	7,6 x 390mm
15	2	6341002	Hose clamp, back plate	
16	3	63562	Clamp	
17	9	63561	Clamp	
18	3	63563	Clamp	
19	4	33292	Circlip	
20	4	6341004	Distance pipe (Ø12/6,5x23,5)	
21	4	30436	Screw	MC8 x 45
22	3	6341001	Hose clamp	
23	6	30438	Screw	MC8 x 20
24	1	6340253	Bracket for swivel coupling	
25	10	58478	Swivel coupling	M18 x 1,5 12L
26	3	58479	Swivel coupling	M24 x 1,5 16L
27	2	26101	Reducing connection	REDSDN 12/8 L
28	1	56024	Hose	1/4X2800 M14X1.5 L/90
29	2	30131	Set screw, stainless	M8 x 16
30	2	0015120	Hose	3/8" x 1400 L/L (12L)
31	2	0015500	Hose	
32	7	0015130	Hose	3/8" x 2750 L/L (12L)
33	3	62846	Hose	1/2" x 2750 L/L (16S, M24X1.5)
34	3	30199	Steel bolt, stainless	M6 x 65
35	6	32302	Face washer, stainless	6 mm
36	1	6340238	Clamp, complete	

1500K, 1510K, 1720K, 1730K, 1820K, 1830K

63 43 280
63 43 080
63 46 490
63 43 130
Internal ref. 63 43 030

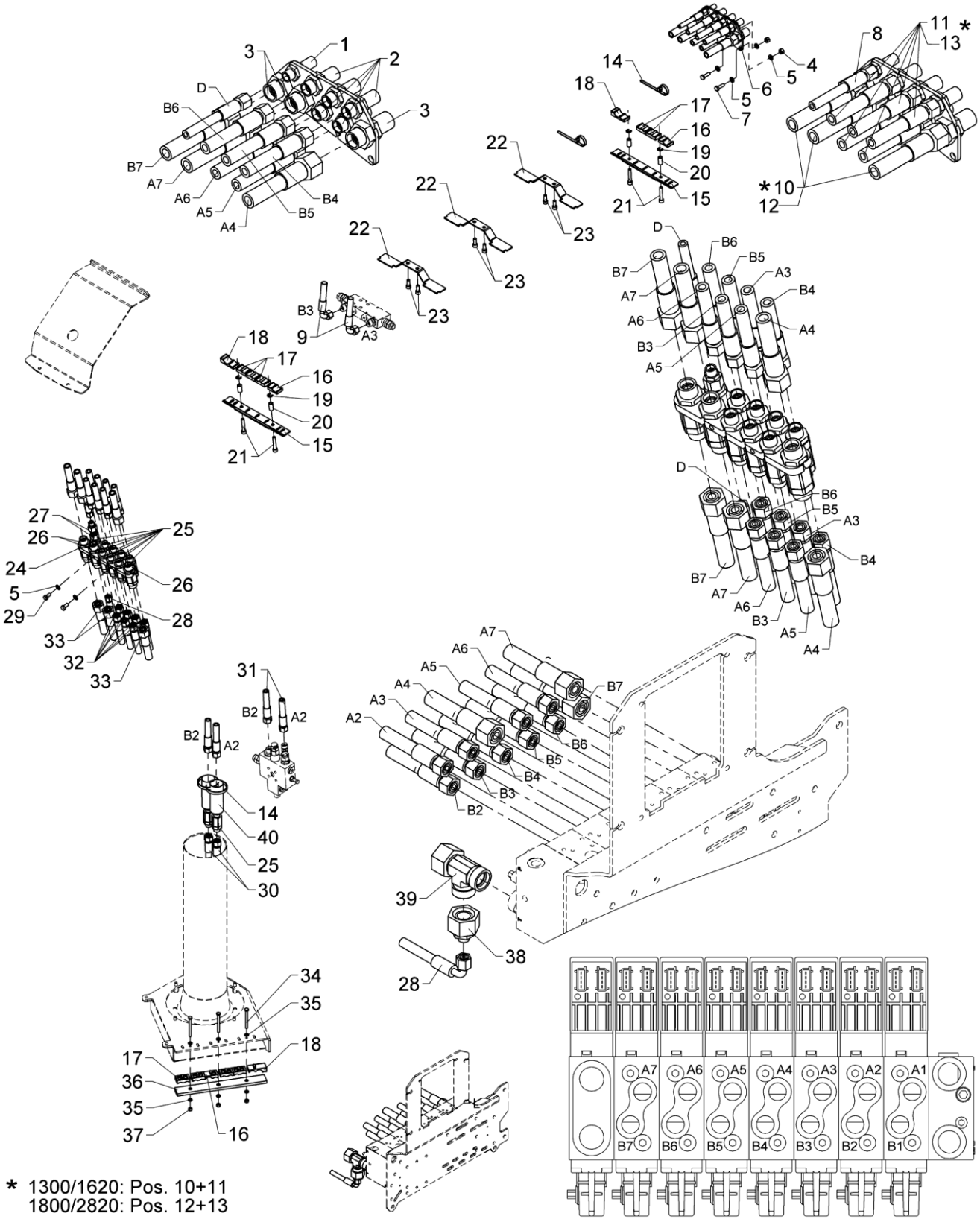

534 05 440 A

From loader 1062122
To loader

Created 11-01-2019
Modified

Hose kit, loader functions, 2 EXV/winch

Pos	Qty.	Part no.	Description	Remarks
37	3	30884	Lock nut, stainless	M6
38	1	25286	Reducing connection	REDSDN 22/8 L
39	1	26149	Connection	ELSD 22 L
40	2	29131	Protective cover	400 mm

1500K, 1510K, 1720K, 1730K, 1820K, 1830K

63 46 480
63 43 120
Internal ref. 63 41 750

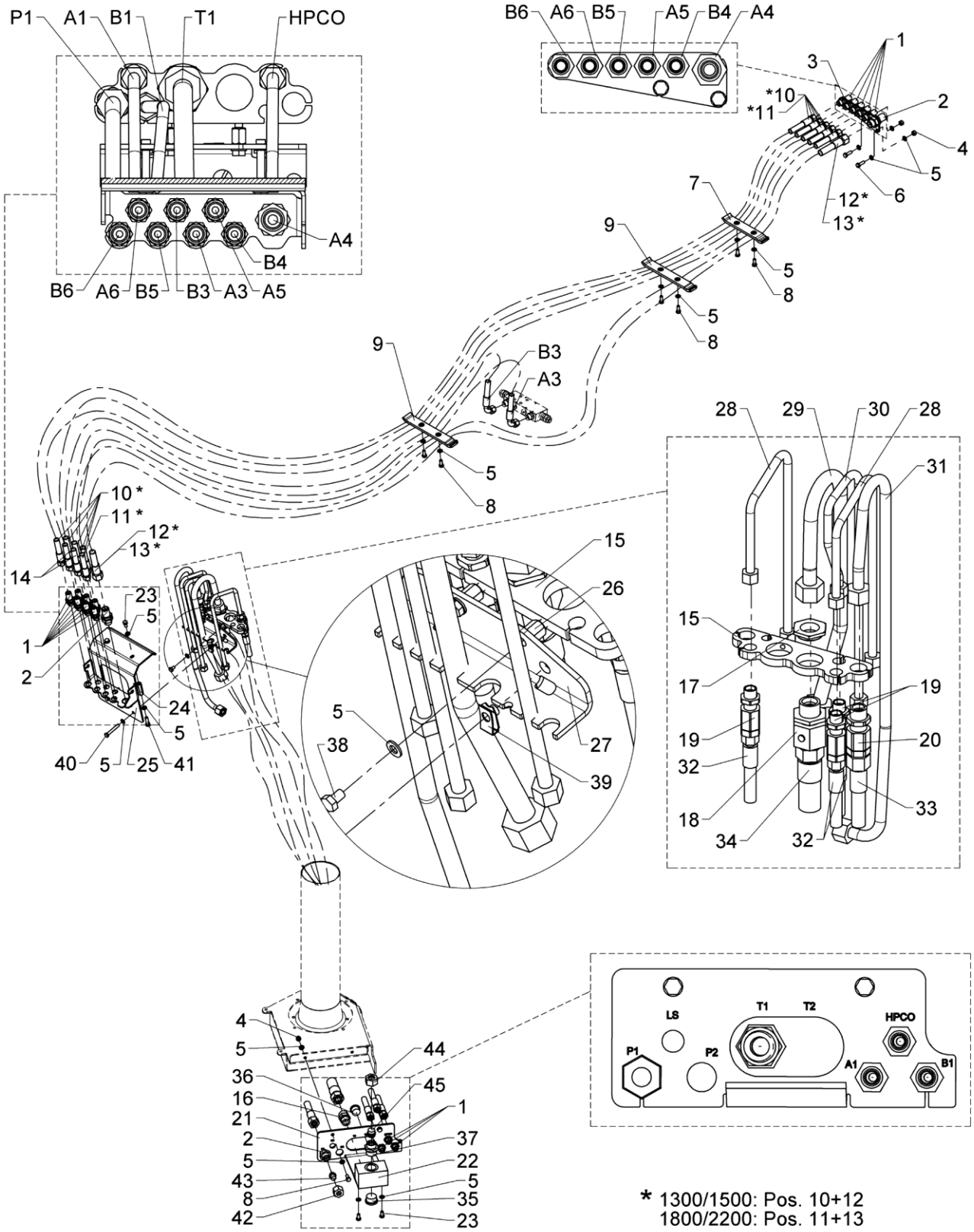

* 1300/1500: Pos. 10+12
1800/2200: Pos. 11+13

Hose kit, loader functions, TS (1-circuit fixed)

Pos	Qty.	Part no.	Description	Remarks
		6341750	Hose kit, loader functions, TS	1 kreds fast
		6343120	Hose kit, main boom, 2 EXV	1300K/1500K
		6346480	Hose kit, main boom, 2 EXV	1800K/2200K
1	15	25201	Bulkhead connection	GSS 12 L
2	3	26335	Bulkhead connection	P-GSV 16 S
3	1	6340315	Bracket, bulkhead connections	
4	4	30886	Lock nut, stainless	M8
5	28	31147	Face washer, 8 mm	8 mm
6	2	30134	Set screw, stainless	M8 x 25
7	1	6340211	Clamp, complete	
8	12	30132	Set screw, stainless	M8 x 20
9	4	6340213	Clamp, complete	
10	5	0017600	Hose	
11	5	0017770	Hose	
12	1	56382	Hose	
13	1	56529	Hose	1/2 X 3500 mm L/L
14	2	0017690	Hose	3/8" x 1300 mm V90/L
15	1	6340221	Bracket for swivel couplingTS	
16	1	26197	Connection	P-GEV 20 SR-WD
17	1	6340839	Nut	
18	1	59823	Swivel coupling	M30 x 2 20S
19	3	58478	Swivel coupling	M18 x 1,5 12L
20	1	58479	Swivel coupling	M24 x 1,5 16L
21	1	6340842	Plate (TS)	
22	1	6340844	Connecting block	
23	4	30131	Set screw, stainless	M8 x 16
24	2	6340222	Spacer	
25	1	6340224	Bracket (TS)	
26	2	6340223	Spacer	
27	1	6340225	Clamp	
28	2	6340837	Pipe (slewing - TS)	
29	1	6340833	Pipe (T1 - TS)	
30	1	6340836	Pipe (HPCO - TS)	
31	1	6340831	Pipe (P1 - TS)	
32	3	0017240	Hose	
33	1	56519	Hose	
34	1	56518	Hose	
35	1	26321	Plug	VS-R 1" WD
36	1	26355	Plug	VS-R-3/4 WD
37	1	26122	Connection	P-GEV 22 LR 1-WD
38	2	30130	Set screw, stainless	M8 x 12

1500K, 1510K, 1720K, 1730K, 1820K, 1830K

63 46 480
63 43 120
Internal ref. 63 41 750

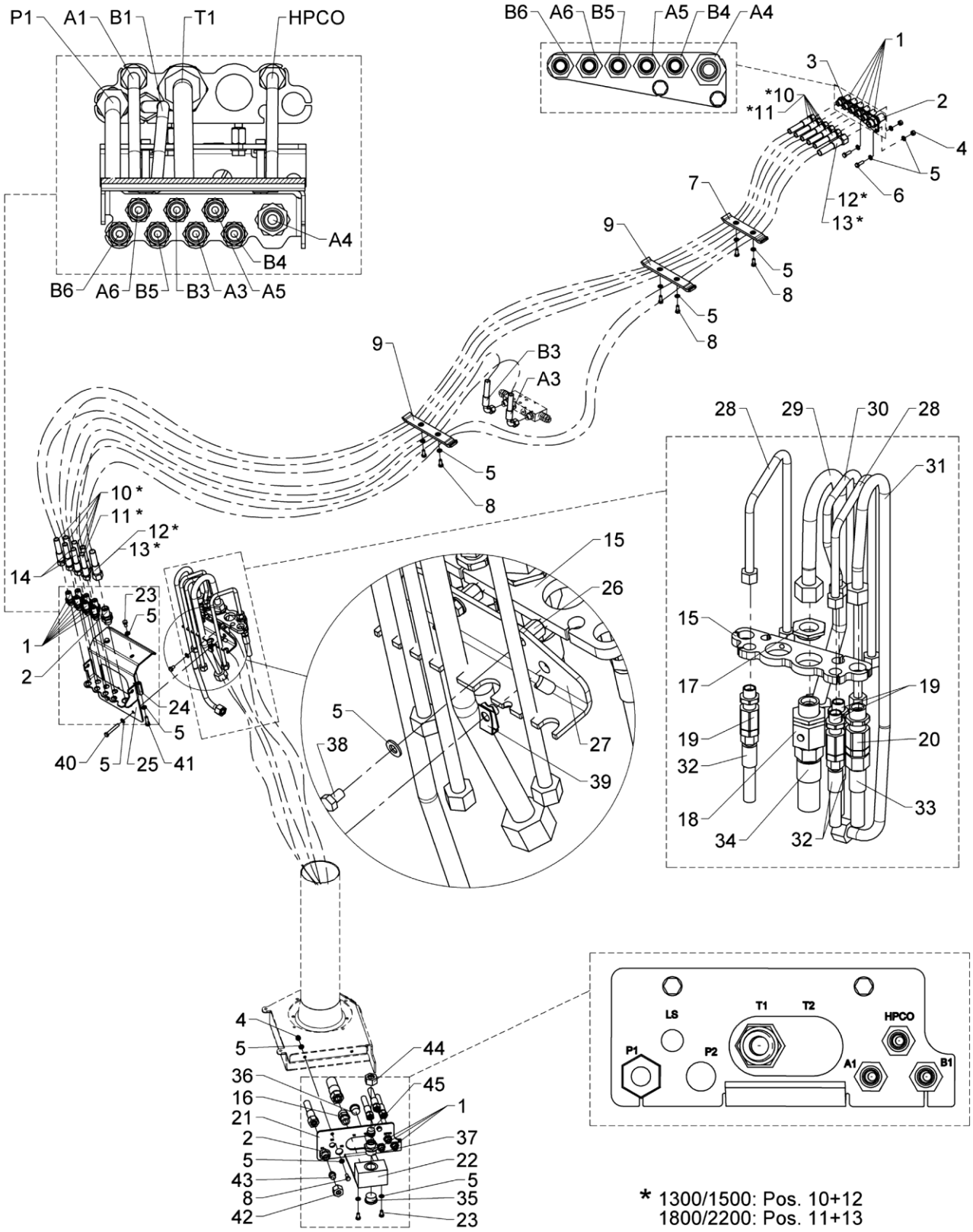

* 1300/1500: Pos. 10+12
1800/2200: Pos. 11+13

534 05 450

From loader 1060001
To loader

Hose kit, loader functions, TS (1-circuit fixed)

Created 24-11-2008
Modified 04-03-2016

Pos	Qty.	Part no.	Description	Remarks
39	2	31069	Clip	M8 1,5 - 5,5 mm.
40	2	30140	Steel bolt, stainless	M8 x 55
41	2	30135	Set screw, stainless	M8 x 30
42	1	26338	Coupling nut	M 16 S
43	1	26343	Blanking plug	VSD 16 S
44	1	25186	Coupling nut	M 22 L
45	1	26301	Blanking plug	VSD 22 L

1500K, 1510K, 1720K, 1730K, 1820K, 1830K

63 46 480
63 43 120
Internal ref. 63 41 690

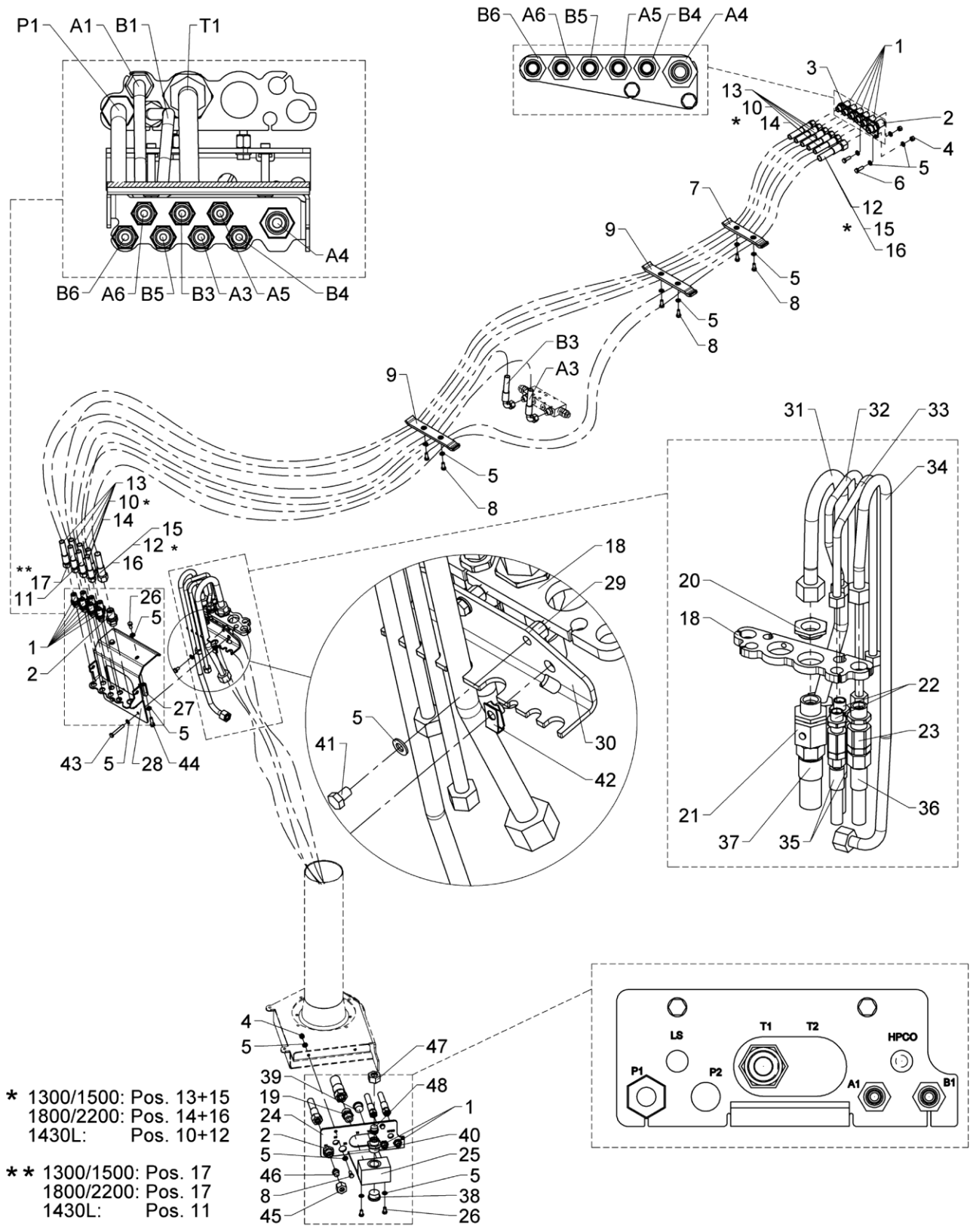

* 1300/1500: Pos. 13+15
1800/2200: Pos. 14+16
1430L: Pos. 10+12

** 1300/1500: Pos. 17
1800/2200: Pos. 17
1430L: Pos. 11

Hose kit, loader functions TS (HC, 1 circuit, fixed flow, excl. CE)

Pos	Qty.	Part no.	Description	Remarks
		6341690	Hose kit, loader fcts.TS	1 kreds fast, ekskl. CE
		6343120	Hose kit, main boom, 2 EXV	1300K/1500K
		6346480	Hose kit, main boom, 2 EXV	1800K/2200K
1	14	25201	Bulkhead connection	GSS 12 L
2	3	26335	Bulkhead connection	P-GSV 16 S
3	1	6340315	Bracket, bulkhead connections	
4	4	30886	Lock nut, stainless	M8
5	24	31147	Face washer, 8 mm	8 mm
6	2	30134	Set screw, stainless	M8 x 25
7	1	6340211	Clamp, complete	
8	8	30132	Set screw, stainless	M8 x 20
9	2	6340213	Clamp, complete	
10	5	56916	Hose	
11	2	56917	Hose	
12	1	56918	Hose	
13	5	0017600	Hose	
14	5	0017770	Hose	
15	1	56382	Hose	1/2 X 3400 mm L/L
16	1	56529	Hose	1/2 X 3500 mm L/L
17	2	0017690	Hose	
18	1	6340221	Bracket for swivel couplingTS	
19	1	26197	Connection	P-GEV 20 SR-WD
20	1	6340839	Nut	
21	1	59823	Swivel coupling	M30 x 2 20S
22	2	58478	Swivel coupling	M18 x 1,5 12L
23	1	58479	Swivel coupling	M24 x 1,5 16L
24	1	6340842	Plate (TS)	
25	1	6340844	Connecting block	
26	4	30131	Set screw, stainless	M8 x 16
27	2	6340222	Spacer	
28	1	6340224	Bracket (TS)	
29	2	6340223	Spacer	
30	1	6340225	Clamp	
31	1	6340833	Pipe (T1 - TS)	
32	1	6340836	Pipe (HPCO - TS)	
33	1	6340837	Pipe (slewing - TS)	
34	1	6340831	Pipe (P1 - TS)	
35	2	0017240	Hose	
36	1	56519	Hose	
37	1	56518	Hose	
38	1	26321	Plug	VS-R 1" WD

1500K, 1510K, 1720K, 1730K, 1820K, 1830K

63 46 480
63 43 120
Internal ref. 63 41 690

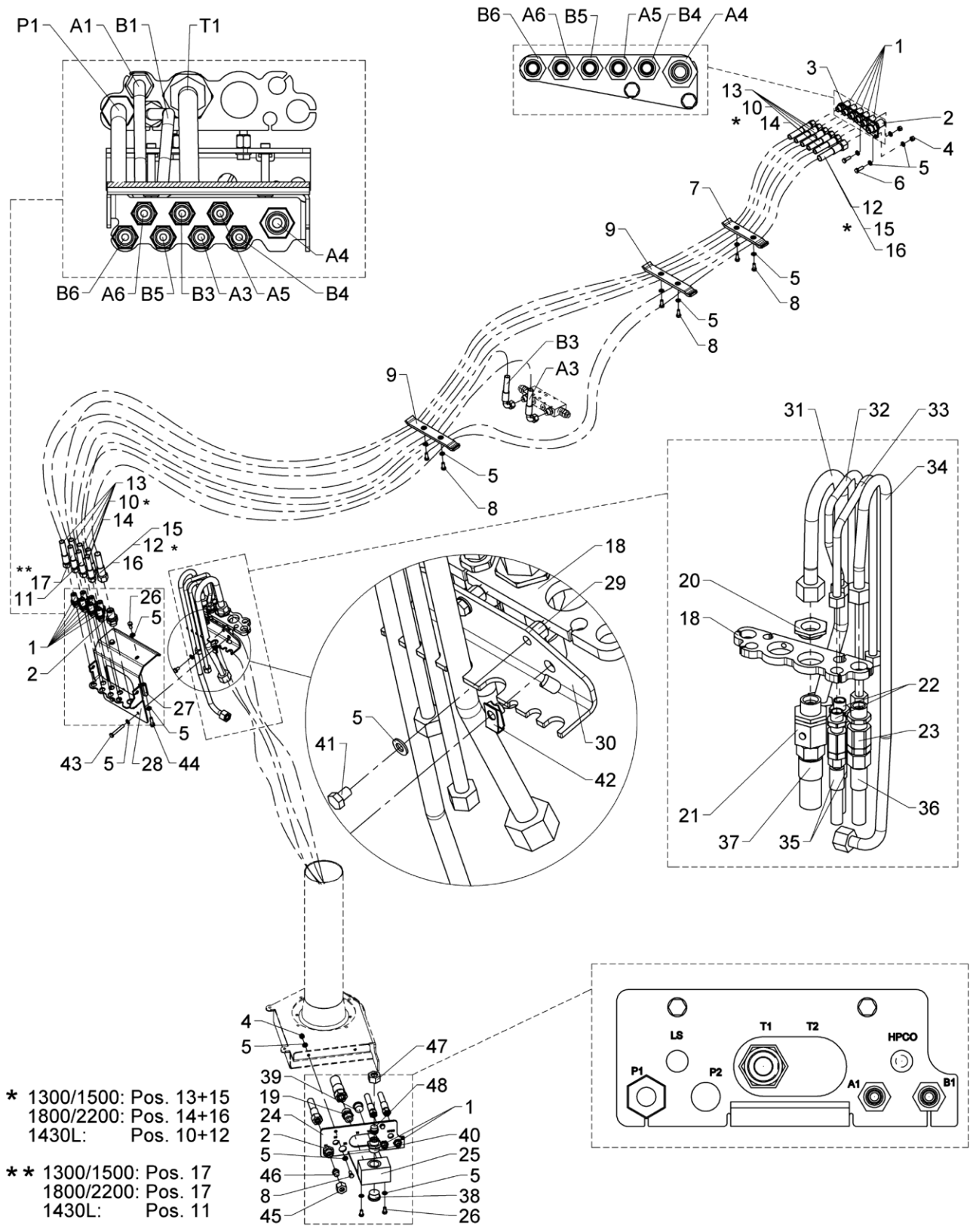

* 1300/1500: Pos. 13+15
1800/2200: Pos. 14+16
1430L: Pos. 10+12

** 1300/1500: Pos. 17
1800/2200: Pos. 17
1430L: Pos. 11

Hose kit, loader functions TS (HC, 1 circuit, fixed flow, excl. CE)

Pos	Qty.	Part no.	Description	Remarks
39	1	26355	Plug	VS-R-3/4 WD
40	1	26122	Connection	P-GEV 22 LR 1-WD
41	2	30130	Set screw, stainless	M8 x 12
42	2	31069	Clip	M8 1,5 - 5,5 mm.
43	2	30140	Steel bolt, stainless	M8 x 55
44	2	30135	Set screw, stainless	M8 x 30
45	1	26338	Coupling nut	M 16 S
46	1	26343	Blanking plug	VSD 16 S
47	1	25186	Coupling nut	M 22 L
48	1	26301	Blanking plug	VSD 22 L

1500K, 1510K, 1720K, 1730K, 1820K, 1830K

63 55 460
63 55 480
63 46 480
63 43 120
Internal ref. 63 41 760

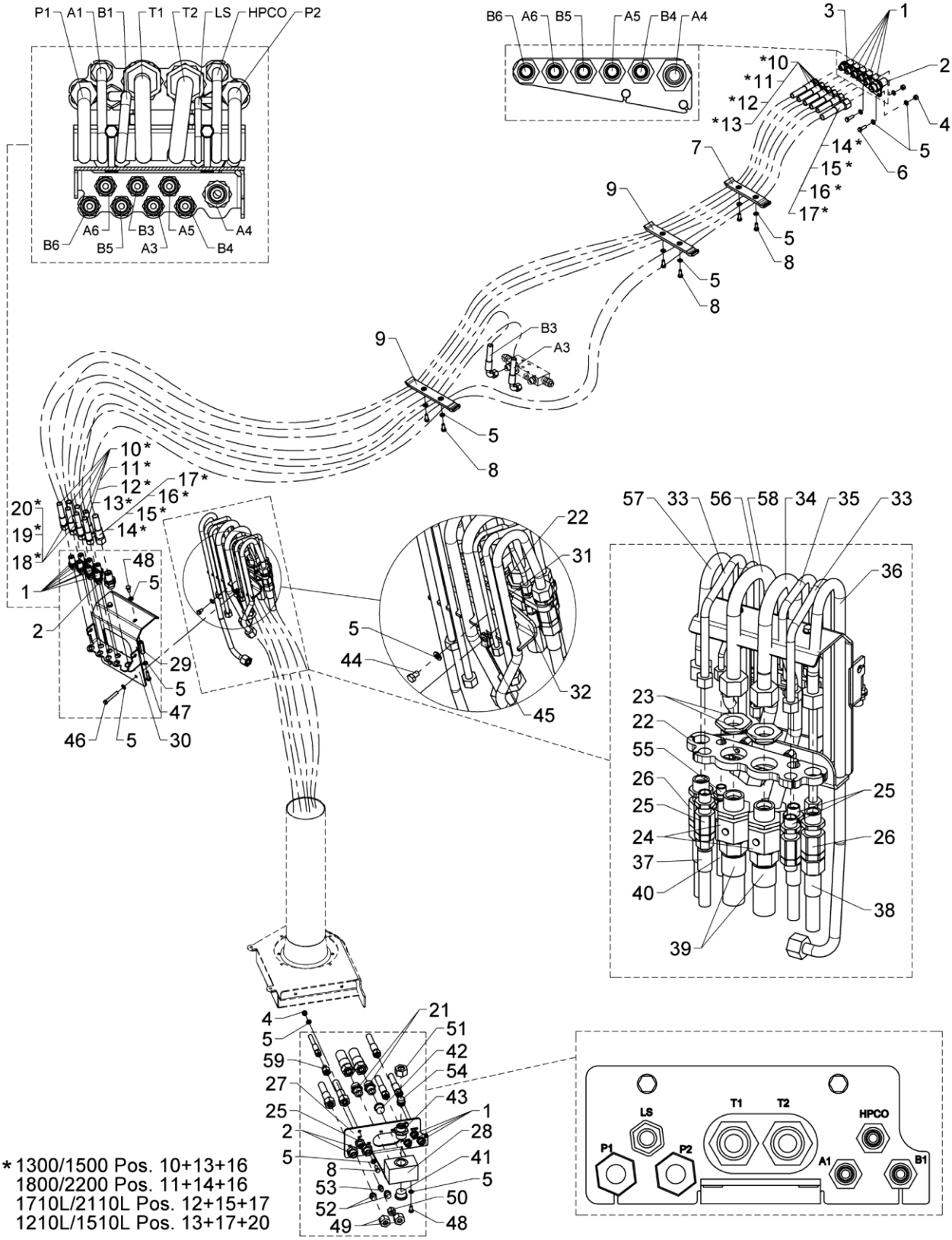

Hose kit, loader functions, TS (1-circuit variable)

Pos	Qty.	Part no.	Description	Remarks
		6341760	Hose kit, loader fcts.TS/1circ	1 kreds variabel
		6343120	Hose kit, main boom, 2 EXV	1300K/1500K
		6346480	Hose kit, main boom, 2 EXV	1800K/2200K
		6355480	Hose kit, main boom, 2EXV	1710L/2110L
		6355460	Hose kit, main boom 2 EXV	1210L/1510L
1	15	25201	Bulkhead connection	GSS 12 L
2	5	26335	Bulkhead connection	P-GSV 16 S
3	1	6340315	Bracket, bulkhead connections	
4	4	30886	Lock nut, stainless	M8
5	28	31147	Face washer, 8 mm	8 mm
6	2	30134	Set screw, stainless	M8 x 25
7	1	6340211	Clamp, complete	
8	12	30132	Set screw, stainless	M8 x 20
9	4	6340213	Clamp, complete	
10	5	0017600	Hose	
11	5	0017770	Hose	
12	5	56951	Hose 3/8" x 4650 L/L (12L)	
13	5	56916	Hose	
14	1	56382	Hose	
15	1	56529	Hose	1/2 X 3500 mm L/L
16	1	56952	Hose 1/2" x 4650 L/L(16S)	
17	1	56918	Hose	
18	2	0017690	Hose	3/8" x 1300 mm V90/L
19	2	56950	Hose 3/8" x 2450 L/90 (12L)	
20	2	56917	Hose	
21	2	26197	Connection	P-GEV 20 SR-WD
22	1	6340221	Bracket for swivel couplingTS	
23	2	6340839	Nut	
24	2	59823	Swivel coupling	M30 x 2 20S
25	4	58478	Swivel coupling	M18 x 1,5 12L
26	2	58479	Swivel coupling	M24 x 1,5 16L
27	1	6340842	Plate (TS)	
28	1	6340844	Connecting block	
29	2	6340222	Spacer	
30	1	6340224	Bracket (TS)	
31	2	6340223	Spacer	
32	1	6340225	Clamp	
33	2	6340837	Pipe (slewing - TS)	
34	1	6340833	Pipe (T1 - TS)	
35	1	6340836	Pipe (HPCO - TS)	
36	1	6340831	Pipe (P1 - TS)	

1500K, 1510K, 1720K, 1730K, 1820K, 1830K

63 55 460
63 55 480
63 46 480
63 43 120
Internal ref. 63 41 760

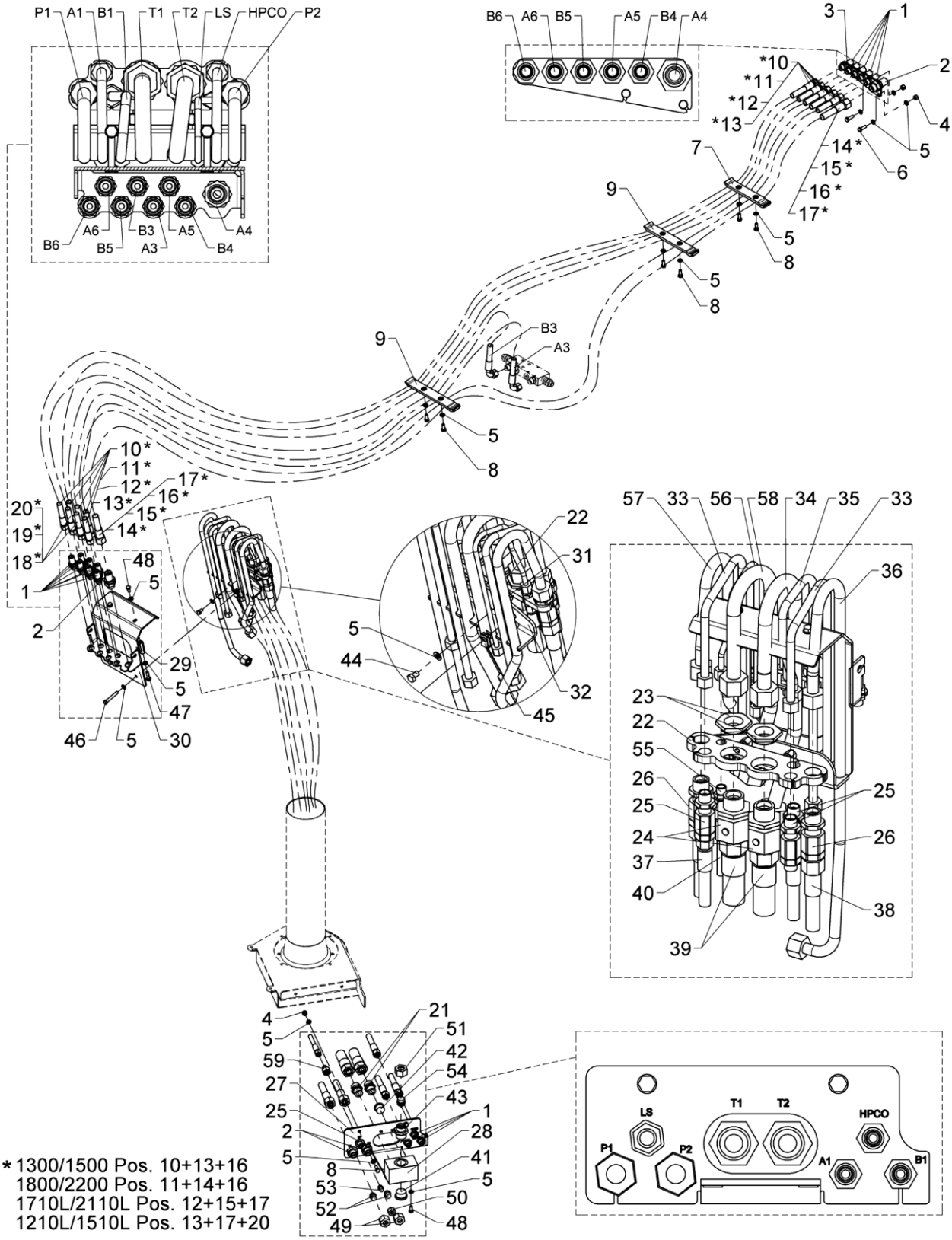

Hose kit, loader functions, TS (1-circuit variable)

Pos	Qty.	Part no.	Description	Remarks
37	3	0017240	Hose	
38	2	56519	Hose	
39	2	56518	Hose	
40	1	56517	Hose	
41	1	26321	Plug	VS-R 1" WD
42	1	26355	Plug	VS-R-3/4 WD
43	1	26122	Connection	P-GEV 22 LR 1-WD
44	2	30130	Set screw, stainless	M8 x 12
45	2	31069	Clip	M8 1,5 - 5,5 mm.
46	2	30140	Steel bolt, stainless	M8 x 55
47	2	30135	Set screw, stainless	M8 x 30
48	4	30131	Set screw, stainless	M8 x 16
49	2	26338	Coupling nut	M 16 S
50	1	25183	Coupling nut	M 12 L
51	1	25186	Coupling nut	M 22 L
52	2	26343	Blanking plug	VSD 16 S
53	1	26180	Blanking plug	VSD 12 L
54	1	26301	Blanking plug	VSD 22 L
55	1	25261	Bulkhead connection	P-GSV 8 L
56	1	6340835	Pipe (LS - TS)	
57	1	6340832	Pipe (P2 - TS)	
58	1	6340834	Pipe (T2 - TS)	
59	1	26101	Reducing connection	REDSDN 12/8 L

1500K, 1510K, 1720K, 1730K, 1820K, 1830K

63 55 460
63 55 480
63 46 480
63 43 120
Internal ref. 63 41 770

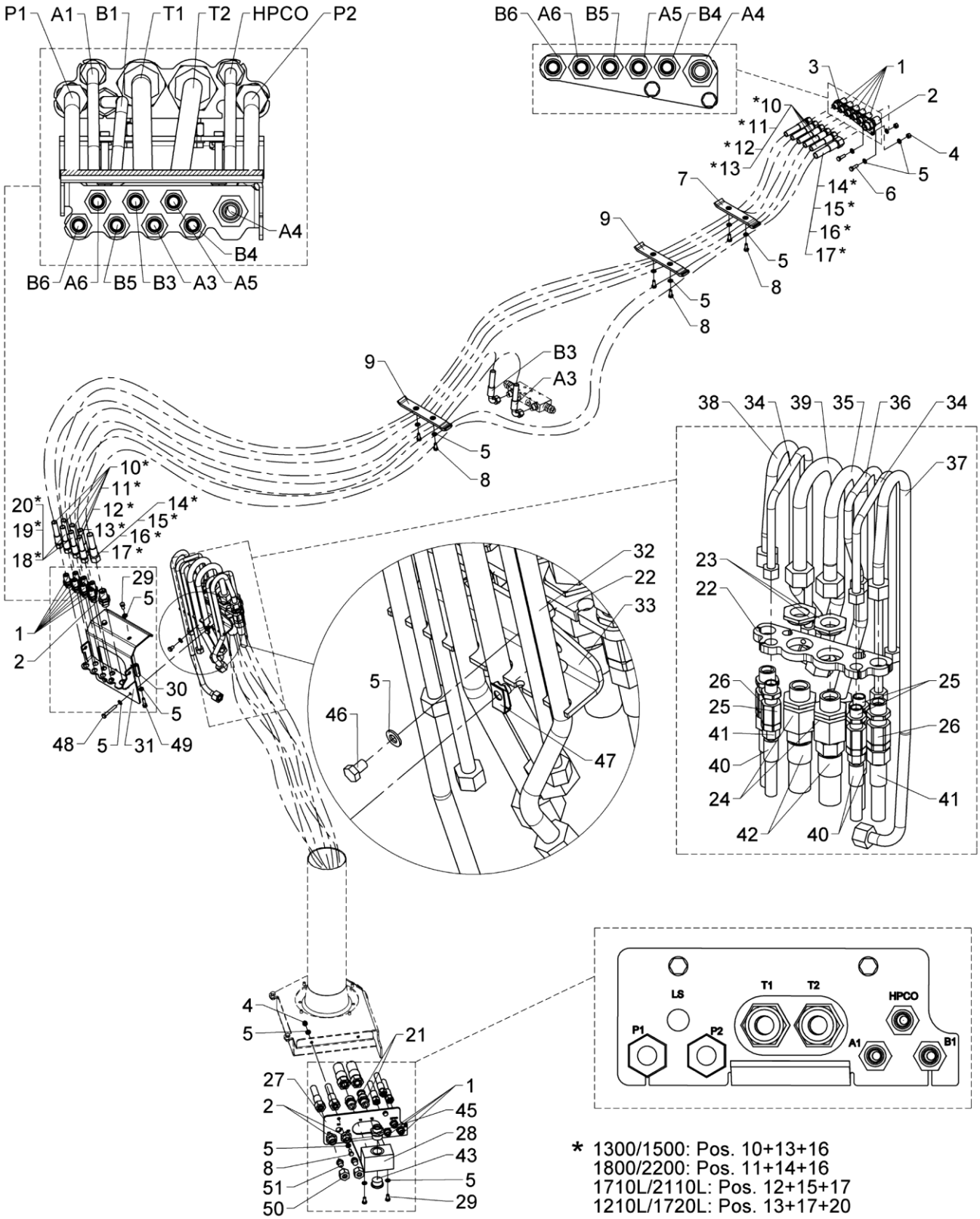

* 1300/1500: Pos. 10+13+16
1800/2200: Pos. 11+14+16
1710L/2110L: Pos. 12+15+17
1210L/1720L: Pos. 13+17+20

Hose kit, loader functions, TS (2-circuits, fixed)

Pos	Qty.	Part no.	Description	Remarks
		6341770	Hose kit, TS 2 circuits	Danfoss 1 kreds fast/HC 2 kreds fa
		6343120	Hose kit, main boom, 2 EXV	1300K/1500K
		6346480	Hose kit, main boom, 2 EXV	1800K/2200K
		6355480	Hose kit, main boom, 2EXV	1710L/2110L
		6355460	Hose kit, main boom 2 EXV	1210L/1510L
1	15	25201	Bulkhead connection	GSS 12 L
2	4	26335	Bulkhead connection	P-GSV 16 S
3	1	6340315	Bracket, bulkhead connections	
4	4	30886	Lock nut, stainless	M8
5	28	31147	Face washer, 8 mm	8 mm
6	2	30134	Set screw, stainless	M8 x 25
7	1	6340211	Clamp, complete	
8	12	30132	Set screw, stainless	M8 x 20
9	4	6340213	Clamp, complete	
10	5	0017600	Hose	
11	5	0017770	Hose	
12	5	56951	Hose 3/8" x 4650 L/L (12L)	
13	5	56916	Hose	
14	1	56382	Hose	
15	1	56529	Hose	1/2 X 3500 mm L/L
16	1	56952	Hose 1/2" x 4650 L/L(16S)	
17	1	56918	Hose	
18	2	0017690	Hose	3/8" x 1300 mm V90/L
19	2	56950	Hose 3/8" x 2450 L/90 (12L)	
20	2	56917	Hose	
21	2	26197	Connection	P-GEV 20 SR-WD
22	1	6340221	Bracket for swivel couplingTS	
23	2	6340839	Nut	
24	2	59823	Swivel coupling	M30 x 2 20S
25	3	58478	Swivel coupling	M18 x 1,5 12L
26	2	58479	Swivel coupling	M24 x 1,5 16L
27	1	6340842	Plate (TS)	
28	1	6340844	Connecting block	
29	4	30131	Set screw, stainless	M8 x 16
30	2	6340222	Spacer	
31	1	6340224	Bracket (TS)	
32	2	6340223	Spacer	
33	1	6340225	Clamp	
34	2	6340837	Pipe (slewing - TS)	
35	1	6340833	Pipe (T1 - TS)	
36	1	6340836	Pipe (HPCO - TS)	

1500K, 1510K, 1720K, 1730K, 1820K, 1830K

63 55 460
63 55 480
63 46 480
63 43 120
Internal ref. 63 41 770

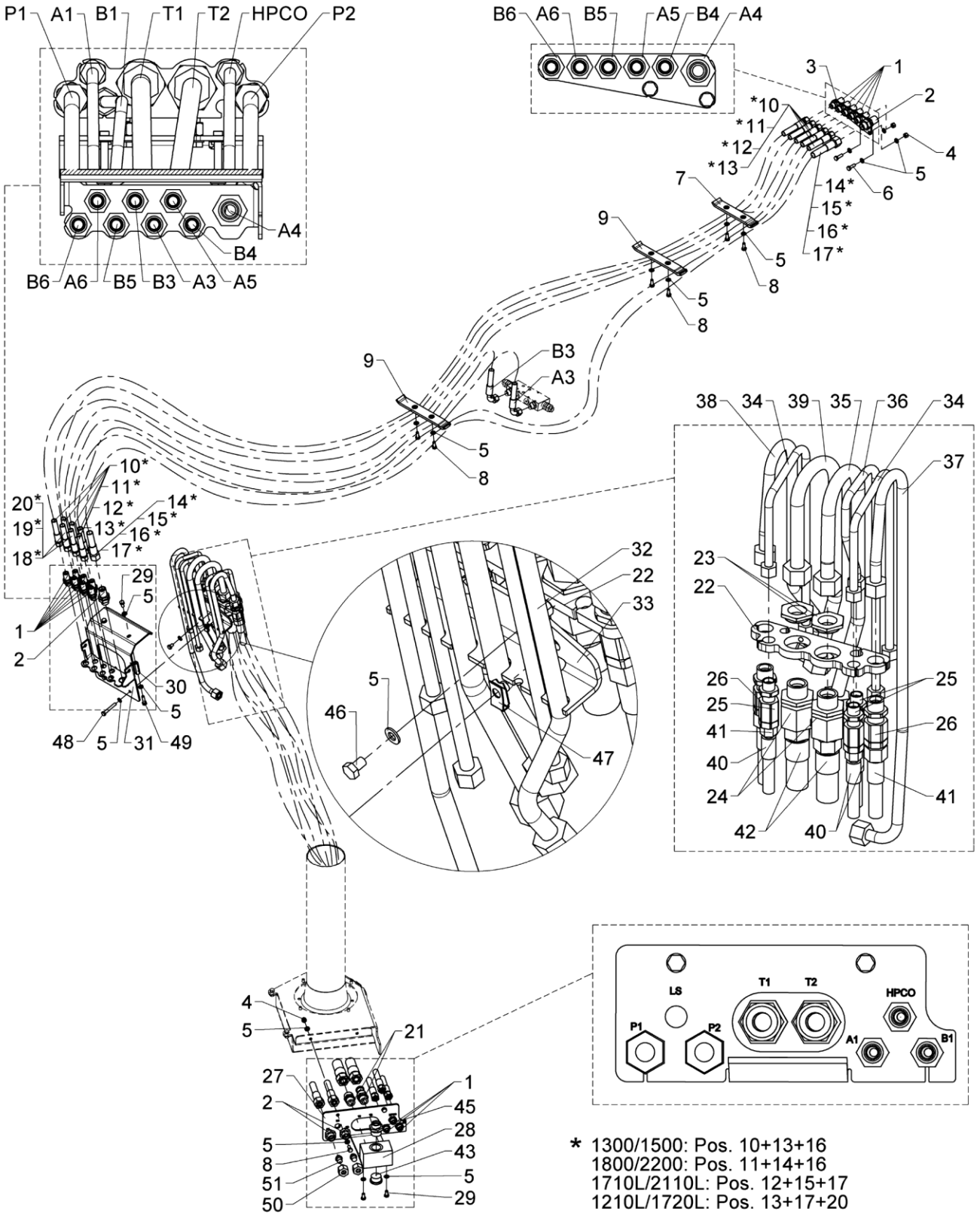

* 1300/1500: Pos. 10+13+16
1800/2200: Pos. 11+14+16
1710L/2110L: Pos. 12+15+17
1210L/1720L: Pos. 13+17+20

534 05 470

From loader 1060001
To loader

Hose kit, loader functions, TS (2-circuits, fixed)

Created 07-05-2009
Modified 06-01-2014

Pos	Qty.	Part no.	Description	Remarks
37	1	6340831	Pipe (P1 - TS)	
38	1	6340832	Pipe (P2 - TS)	
39	1	6340834	Pipe (T2 - TS)	
40	3	0017240	Hose	
41	2	56519	Hose	
42	2	56518	Hose	
43	1	26321	Plug	VS-R 1" WD
44	1	25103	Plug	VS-R-1/2 WD
45	1	26122	Connection	P-GEV 22 LR 1-WD
46	2	30130	Set screw, stainless	M8 x 12
47	2	31069	Clip	M8 1,5 - 5,5 mm.
48	2	30140	Steel bolt, stainless	M8 x 55
49	2	30135	Set screw, stainless	M8 x 30
50	2	26338	Coupling nut	M 16 S
51	2	26343	Blanking plug	VSD 16 S

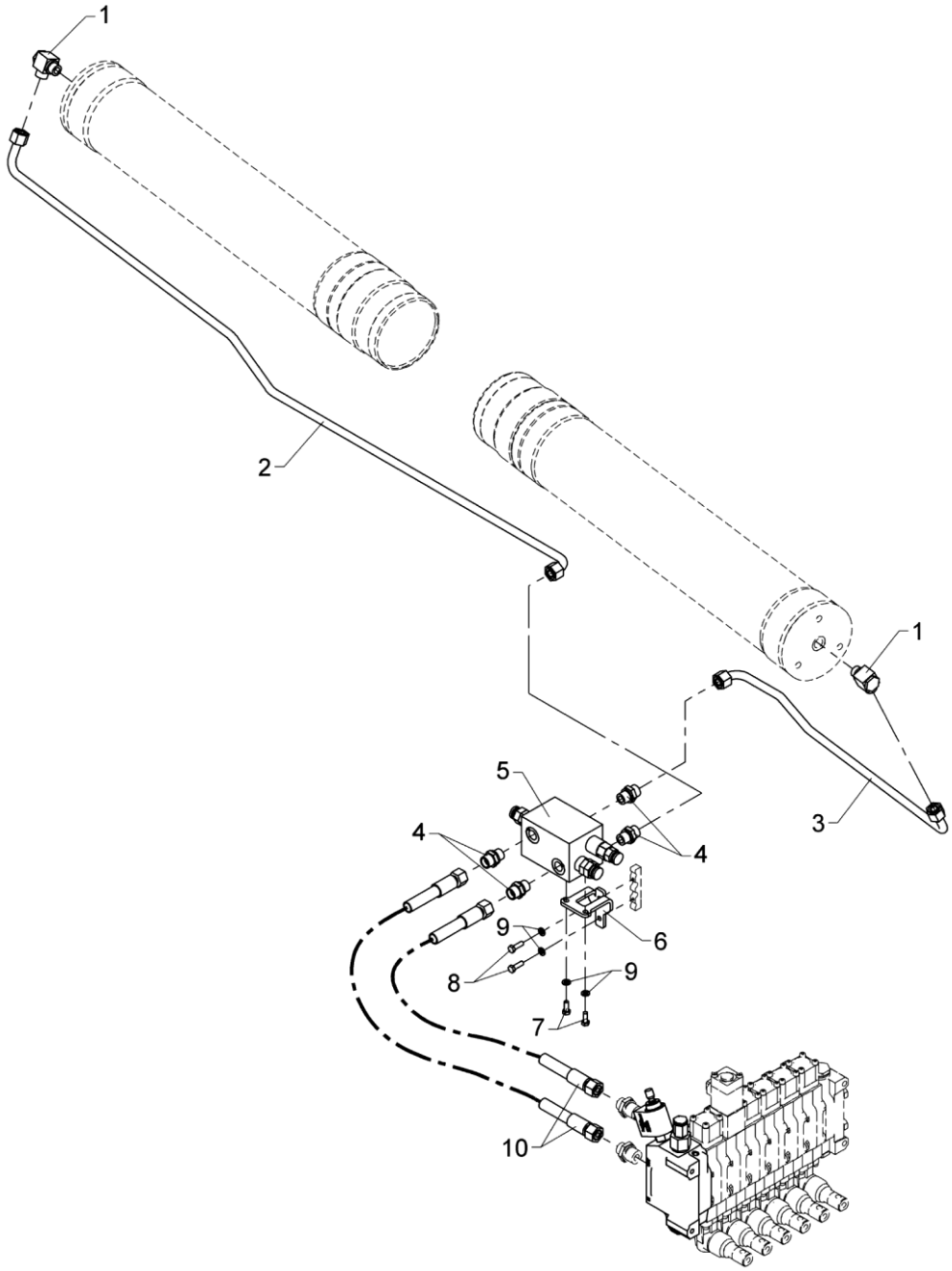
1
2
1
3
5
4
4
9
6
8
9
7
10

Obsolete

Hydraulic system, slewing

534 05 500

From loader 1060001
To loader 1061030

Created 13-11-2008
Modified 31-10-2013

Pos	Qty.	Part no.	Description	Remarks
1	2	25130	Banjo connection	RSWV 12 LR
2	1	6340279	Pipe	
3	1	6340278	Pipe	
4	4	25127	Connection	P-GEV 12 LR-WD
5	1	55262	Load-holding valve	
6	1	6340237	Bracket for load-holding valve	
7	2	30112	Set screw, stainless	M6 x 16
8	2	30113	Set screw, stainless	M6 x 20
9	4	32302	Face washer, stainless	6 mm
10	2	0017970	Hose	

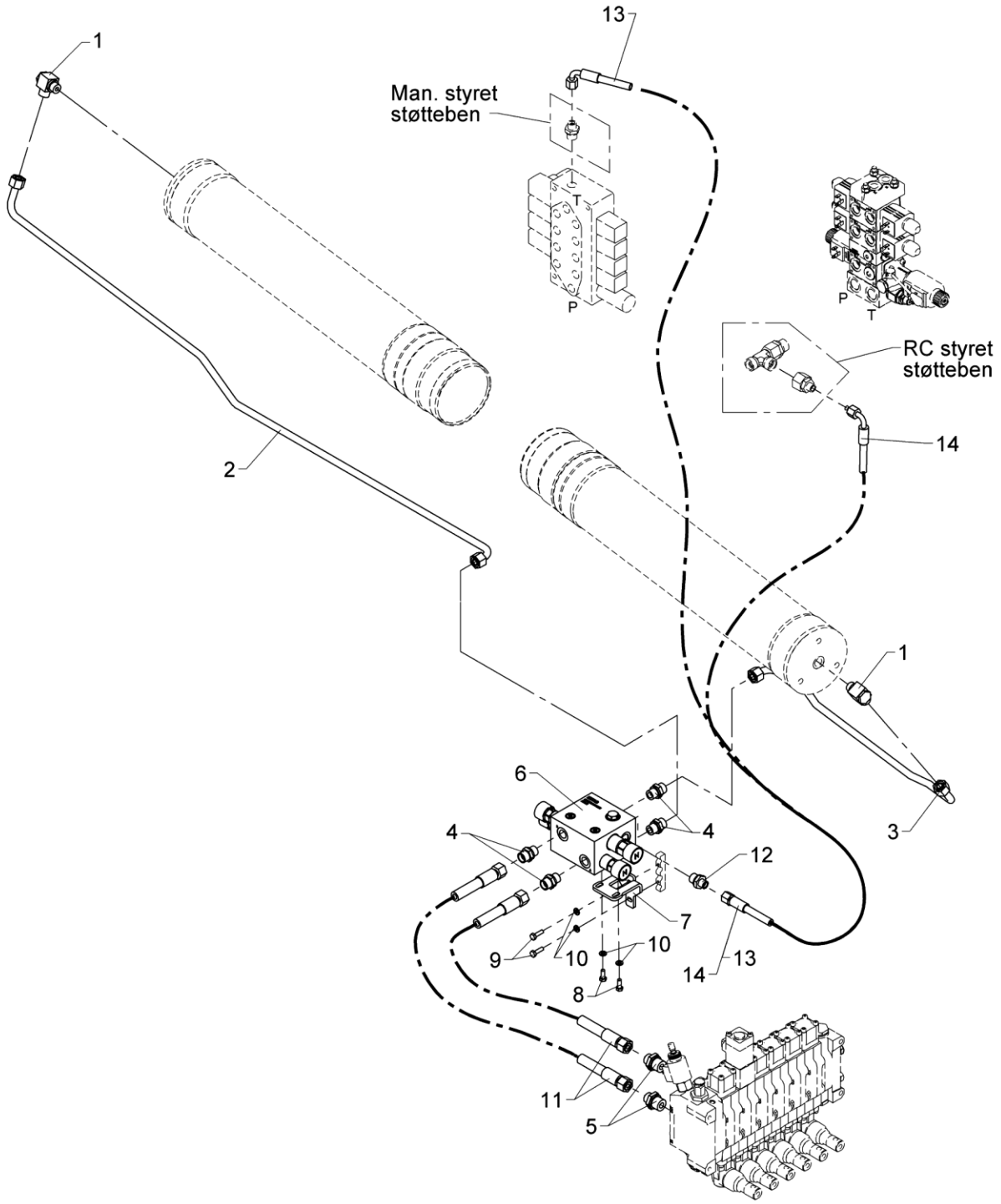
13
1
Man. styret støtteben
T
P
P
T
RC styret støtteben
14
2
1
3
6
4
4
12
7
9
10
10
13
14
8
11
5

Obsolete

Hydraulic system, slewing

534 05 500 A

From loader 1061031
To loader

Created 22-05-2013
Modified 10-01-2019

Pos	Qty.	Part no.	Description	Remarks
		6340310	Hydraulic system, slewing	
		6342010		
1	2	25130	Banjo connection	RSWV 12 LR
2	1	6340279	Pipe	
3	1	6340278	Pipe	
4	4	25127	Connection	P-GEV 12 LR-WD
5	2	25108	Connection	GES 12 LR 1/2-WD
6	1	55711	Load-holding valve	
7	1	6340237	Bracket for load-holding valve	
8	2	30112	Set screw, stainless	M6 x 16
9	2	30113	Set screw, stainless	M6 x 20
10	4	32302	Face washer, stainless	6 mm
11	2	0017970	Hose	
12	1	25244	Connection	GES 8 LR 3/8-WD
13	1	62526	Hose	6340310
14	1	62525	Hose	6342010

1500K, 1510K, 1720K, 1730K, 1820K, 1830K

Internal ref. 63 40 310

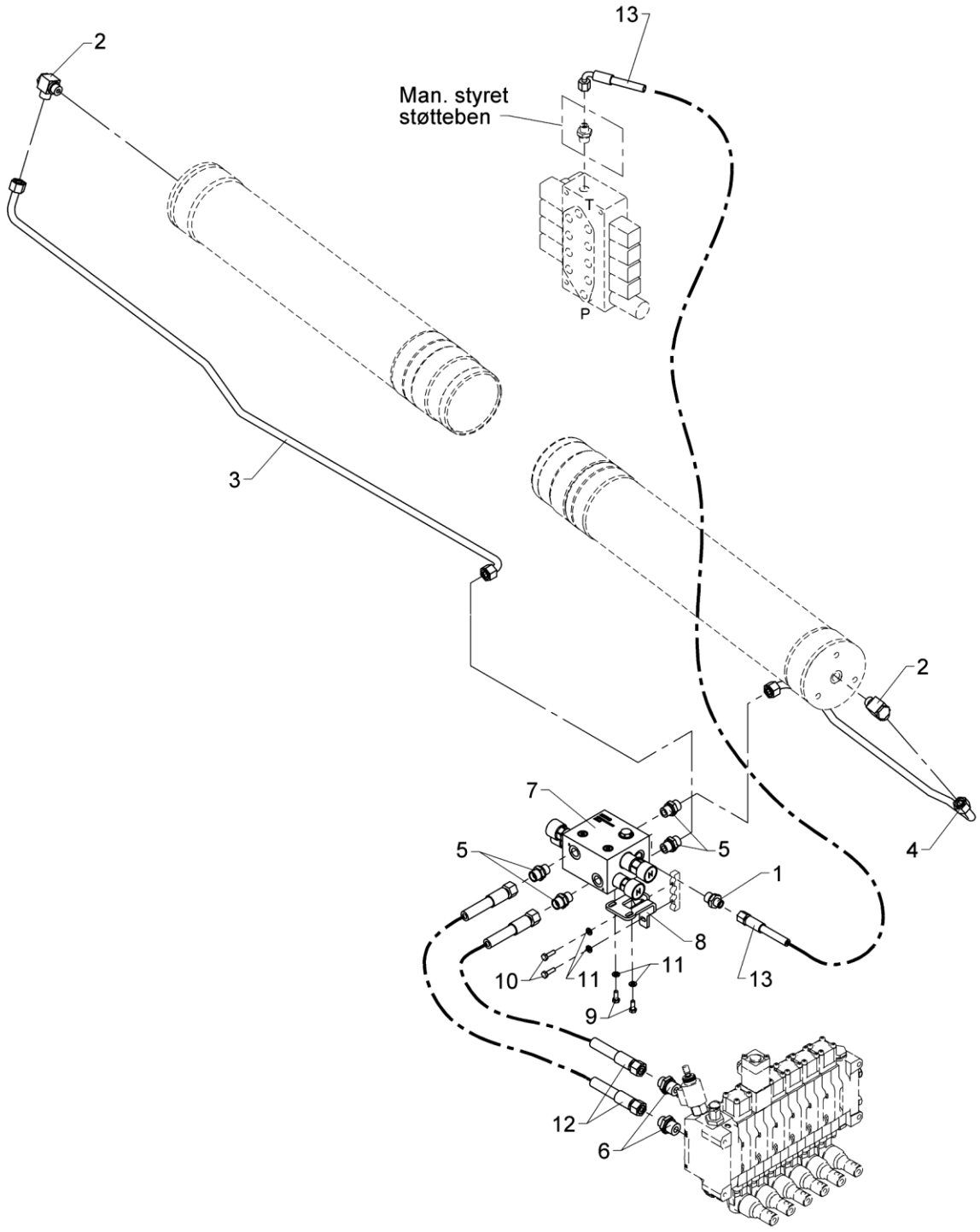

Hydraulic system, slewing

Pos	Qty.	Part no.	Description	Remarks
1	1	25244	Connection	GES 8 LR 3/8-WD
2	2	25130	Banjo connection	RSWV 12 LR
3	1	6340279	Pipe	
4	1	6340278	Pipe	
5	4	25127	Connection	P-GEV 12 LR-WD
6	2	25108	Connection	GES 12 LR 1/2-WD
7	1	55710	Load-holding valve	
8	1	6340237	Bracket for load-holding valve	
9	2	30112	Set screw, stainless	M6 x 16
10	2	30113	Set screw, stainless	M6 x 20
11	4	32302	Face washer, stainless	6 mm
12	2	0017970	Hose	
13	1	62526	Hose	

1500K, 1510K, 1720K, 1730K, 1820K, 1830K

63 43 530
Internal ref. 63 43 540

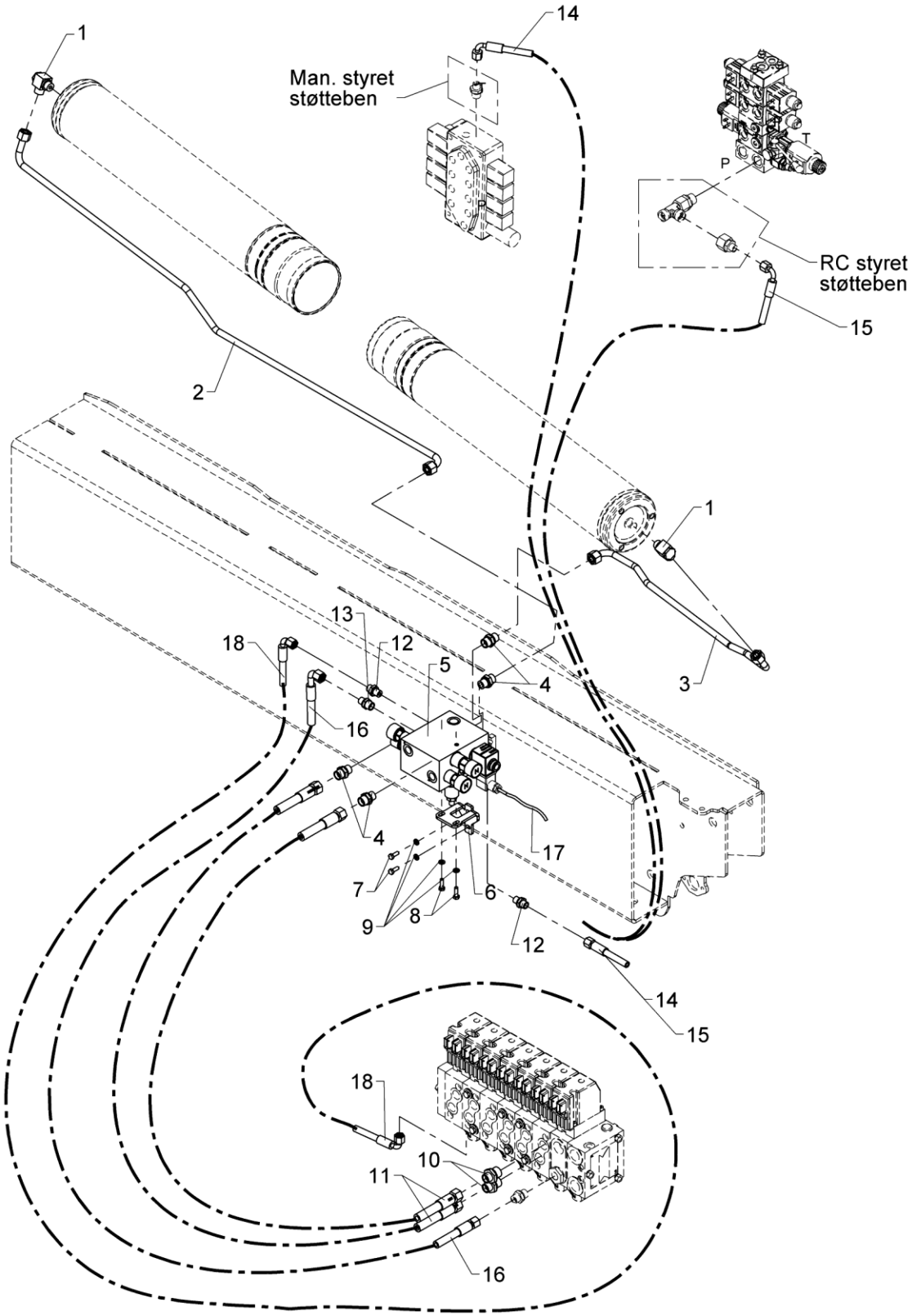

Hydraulic system, slewing

Pos	Qty.	Part no.	Description	Remarks
		6343540		
		6343530		
1	2	25130	Banjo connection	RSWV 12 LR
2	1	6340279	Pipe	
3	1	6340278	Pipe	
4	4	25127	Connection	P-GEV 12 LR-WD
5	1	55713	Load holding valve	
6	1	6340237	Bracket for load-holding valve	
7	2	30112	Set screw, stainless	M6 x 16
8	2	30113	Set screw, stainless	M6 x 20
9	4	32302	Face washer, stainless	6 mm
10	2	25108	Connection	GES 12 LR 1/2-WD
11	2	0017970	Hose	
12	2	25109	Connection	GES 8 LR-WD
13	1	25121	Connection	P-GEV 10 LR-WD
14	1	62526	Hose	63 43 540
15	1	62525	Hose	63 43 530
16	1	56668	Hose	5/16"x 650 mm L/V
17	1	29865	Cable, 5 m	
18	1	62614	Hose	1/4X600 M14X1.5 90/90

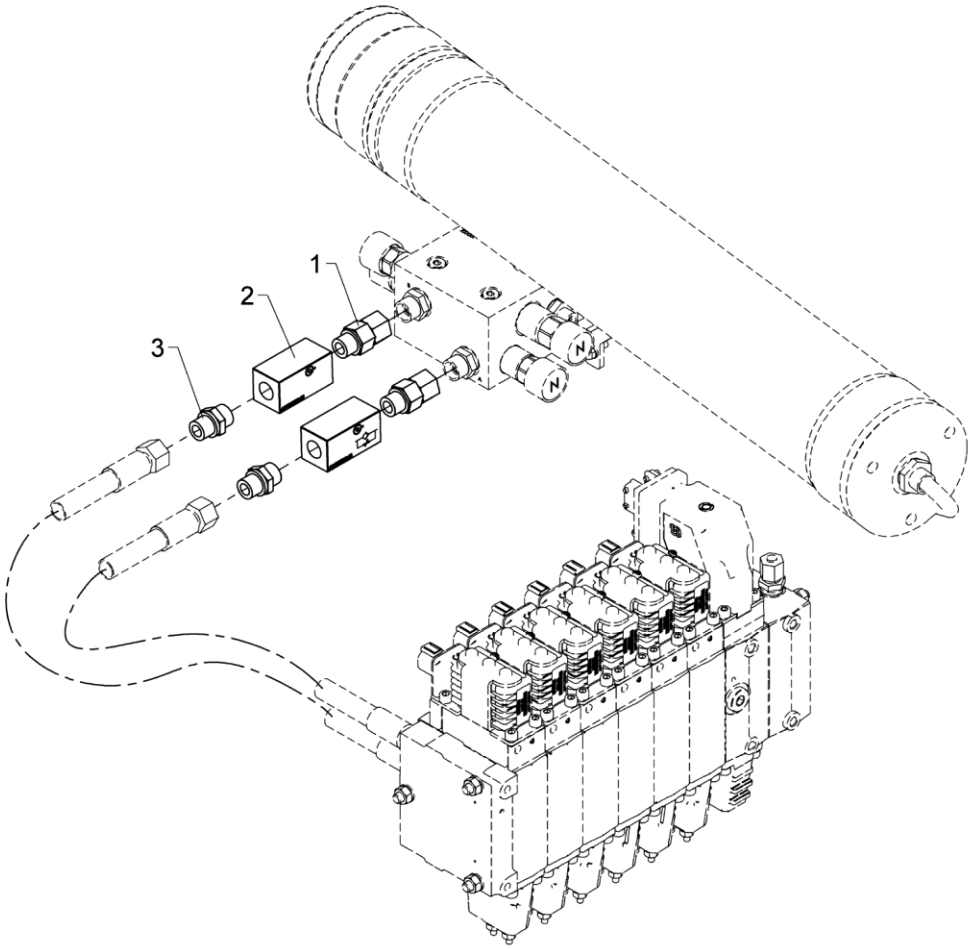
1
2
3

534 05 540

From loader 1060001
To loader

Created 30-01-2017
Modified

One-way restrictor valve, slew PVG16

Pos	Qty.	Part no.	Description	Remarks
1	2	25240	Connection	EGESD 12 LR-WD
2	2	49187	Restrictor/check valve 3/8"	
3	2	25127	Connection	P-GEV 12 LR-WD

1500K, 1510K, 1720K, 1730K, 1820K, 1830K

Internal ref. 63 41 190

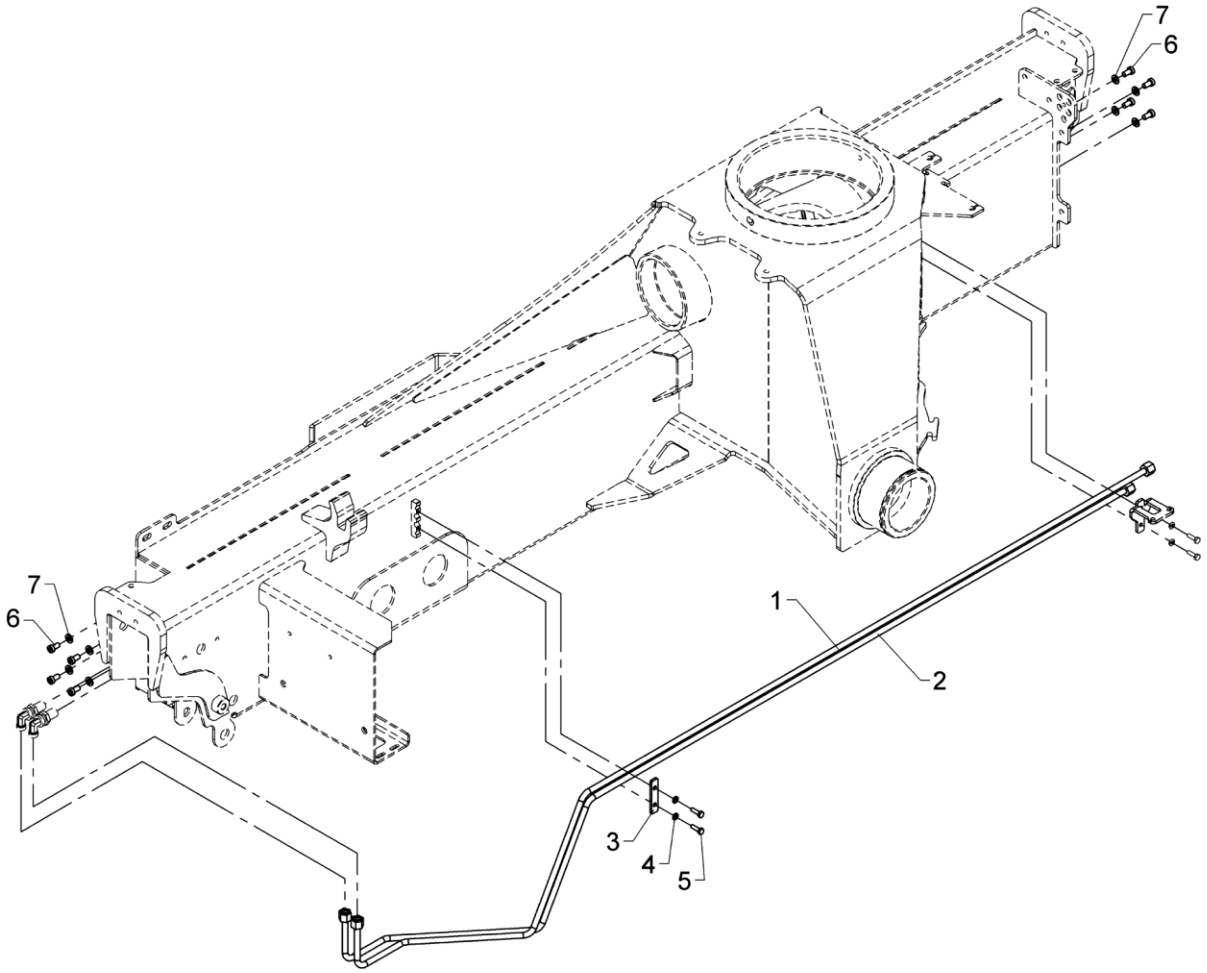

534 05 700

From loader 1060001
To loader

Created 13-11-2008
Modified 11-10-2011

Hydr. syst., stabilizers, manual extension

Pos	Qty.	Part no.	Description	Remarks
		6341190	Hydr. syst. stabilizers, 2 fct	
1	1	6340265	Pipe, stabilizers	
2	1	6340266	Pipe, stabilizers	
3	1	6340236	Plate	
4	2	32302	Face washer, stainless	6 mm
5	2	30113	Set screw, stainless	M6 x 20
6	8	32478	Screw	M8 x 15
7	8	31147	Face washer, 8 mm	8 mm

1500K, 1510K, 1720K, 1730K, 1820K, 1830K

Internal ref. 63 41 200

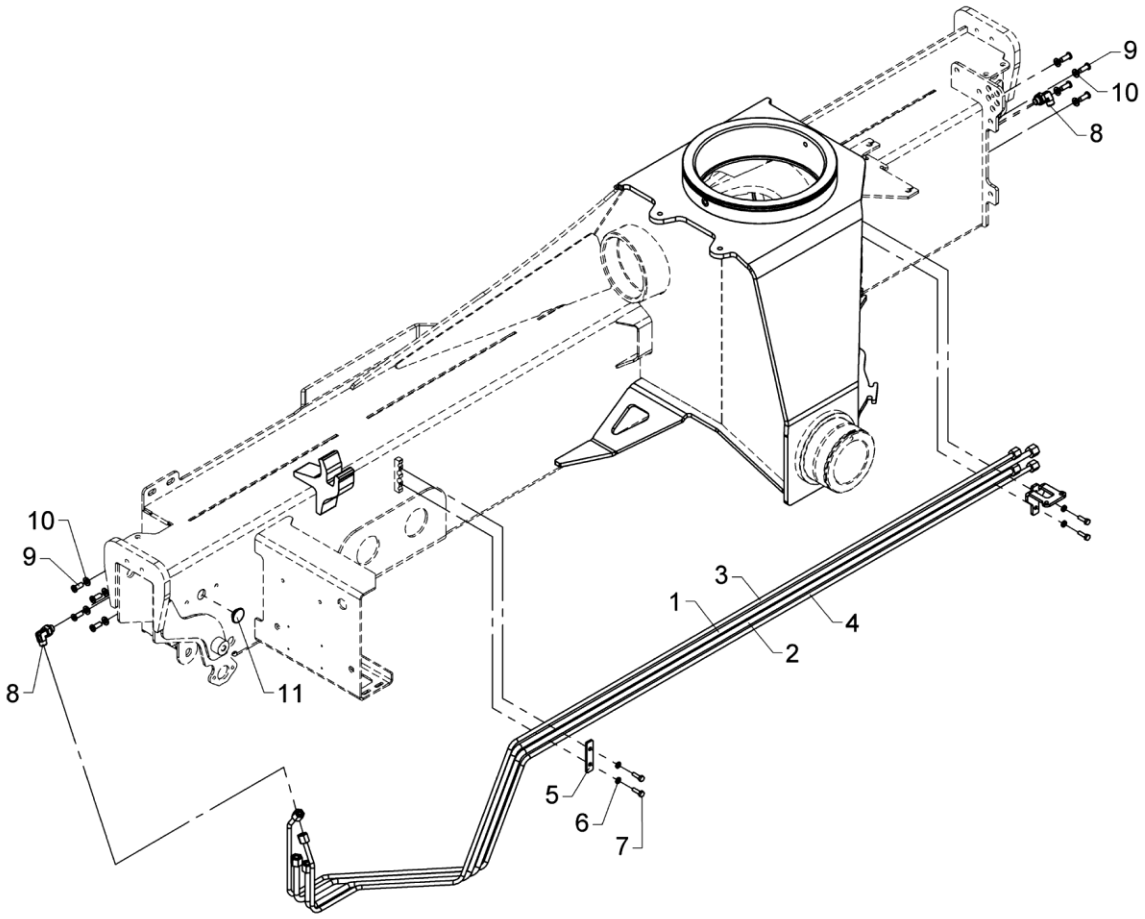

Hydr. syst., stabilizers, hydr. extension

Created 13-11-2008
Modified 24-04-2013

Pos	Qty.	Part no.	Description	Remarks
		6341200	Hydr. syst. stabilizers,4func.	
1	1	6340265	Pipe, stabilizers	
2	1	6340266	Pipe, stabilizers	
3	1	6340267	Pipe, stabilizers	
4	1	6340268	Pipe, stabilizers	
5	1	6340236	Plate	
6	2	32302	Face washer, stainless	6 mm
7	2	30113	Set screw, stainless	M6 x 20
8	2	26898	Elbow connection	8 mm - 1/4"
9	8	32486	Screw	MCL8 x 20
10	8	31147	Face washer, 8 mm	8 mm
11	2	63430	Guide	ø30 x 2 mm

1500K, 1510K, 1720K, 1730K, 1820K, 1830K

Internal ref. 63 40 850

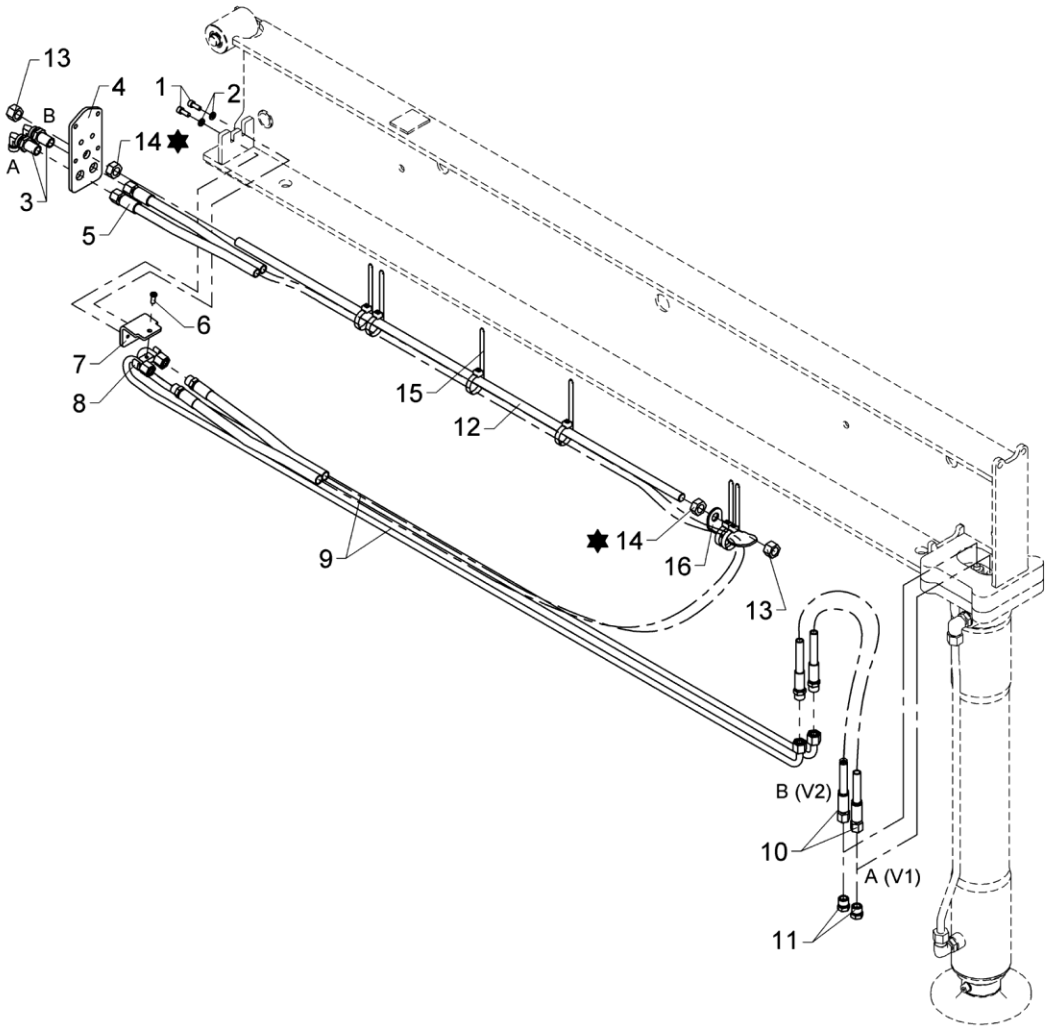

✸ Loctite 270

Hydraulic system, SV (+ SR-20° -Obsolete) 4600, manual extension

Pos	Qty.	Part no.	Description	Remarks
1	2	31539	Screw, stainless	MC6 x 16
2	2	32302	Face washer, stainless	6 mm
3	2	26894	Elbow connection	10mm - 90 gr.
4	1	6344095	End plate	
5	1	56279	Hose	
6	1	32490	Screw	MCL6 x 16
7	1	6344109	Clamp	
8	1	6306097	Clamp	
9	2	6340798	Pipe	
10	2	56460	Hose	1/4" x 550 mm L/S - 10
11	2	25635	Screw	VSK 10L
12	1	31262	Threaded pin	
13	2	32317	Lock nut	M14
14	2	32145	Nut, stainless	M14
15	6	27275	Cable tie, black, 7.6x385mm	7,6 x 390mm
16	1	6344107	Clamp	

1500K, 1510K, 1720K, 1730K, 1820K, 1830K

63 43 600
Internal ref. 63 43 850

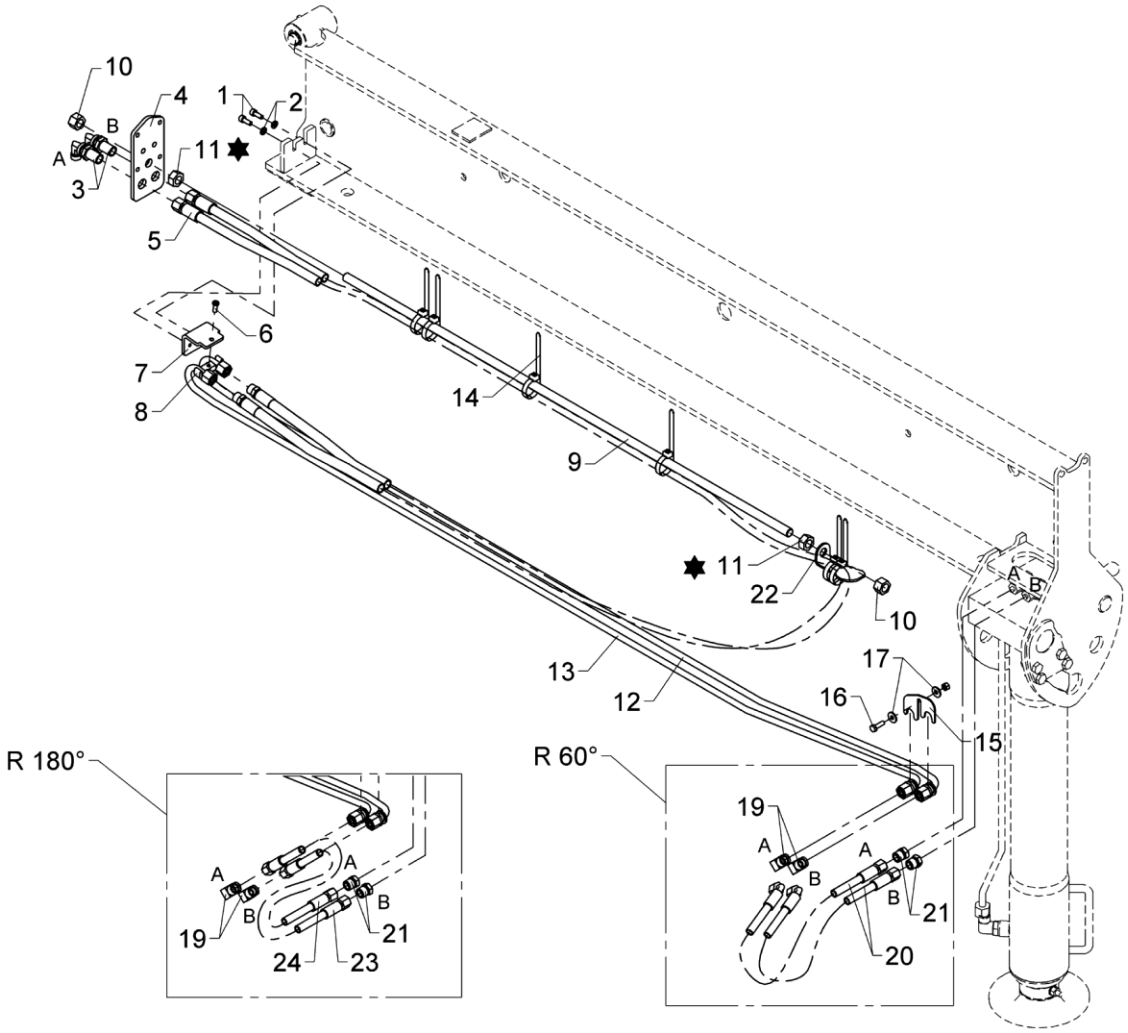

✸ Loctite 270

Hydraulic system, SR-60°/180°, 4600, manual extension

Pos	Qty.	Part no.	Description	Remarks
		6343850	Hydr. syst., SR-60°- 4600 man	
		6343600	Hydr.system, SR180°, 4600 man.	
1	2	31539	Screw, stainless	MC6 x 16
2	2	32302	Face washer, stainless	6 mm
3	2	26894	Elbow connection	10mm - 90 gr.
4	1	6344095	End plate	
5	1	56279	Hose	
6	1	32490	Screw	MCL6 x 16
7	1	6344109	Clamp	
8	1	6306097	Clamp	
9	1	31262	Threaded pin	
10	2	32317	Lock nut	M14
11	2	32145	Nut, stainless	M14
12	1	6340797	Pipe	
13	1	6340796	Pipe	
14	6	27275	Cable tie, black, 7.6x385mm	
15	1	6306164	Bracket	
16	1	30113	Set screw, stainless	M6 x 20
17	2	31134	Washer, stainless	6 mm
18	1	30884	Lock nut, stainless	M6
19	2	25125	Elbow connection	WV 10 L
20	2	56363	Hose	L=8mm / V=10 mm
21	2	25635	Screw	VSK 10L
22	1	6344107	Clamp	
23	1	56905	Hose 1/4 X 550 mm	L=8mm/L=10mm
24	1	56904	Hose 1/4 X 500 mm	L=8mm/L=10mm

1500K, 1510K, 1720K, 1730K, 1820K, 1830K

Internal ref. 63 40 860

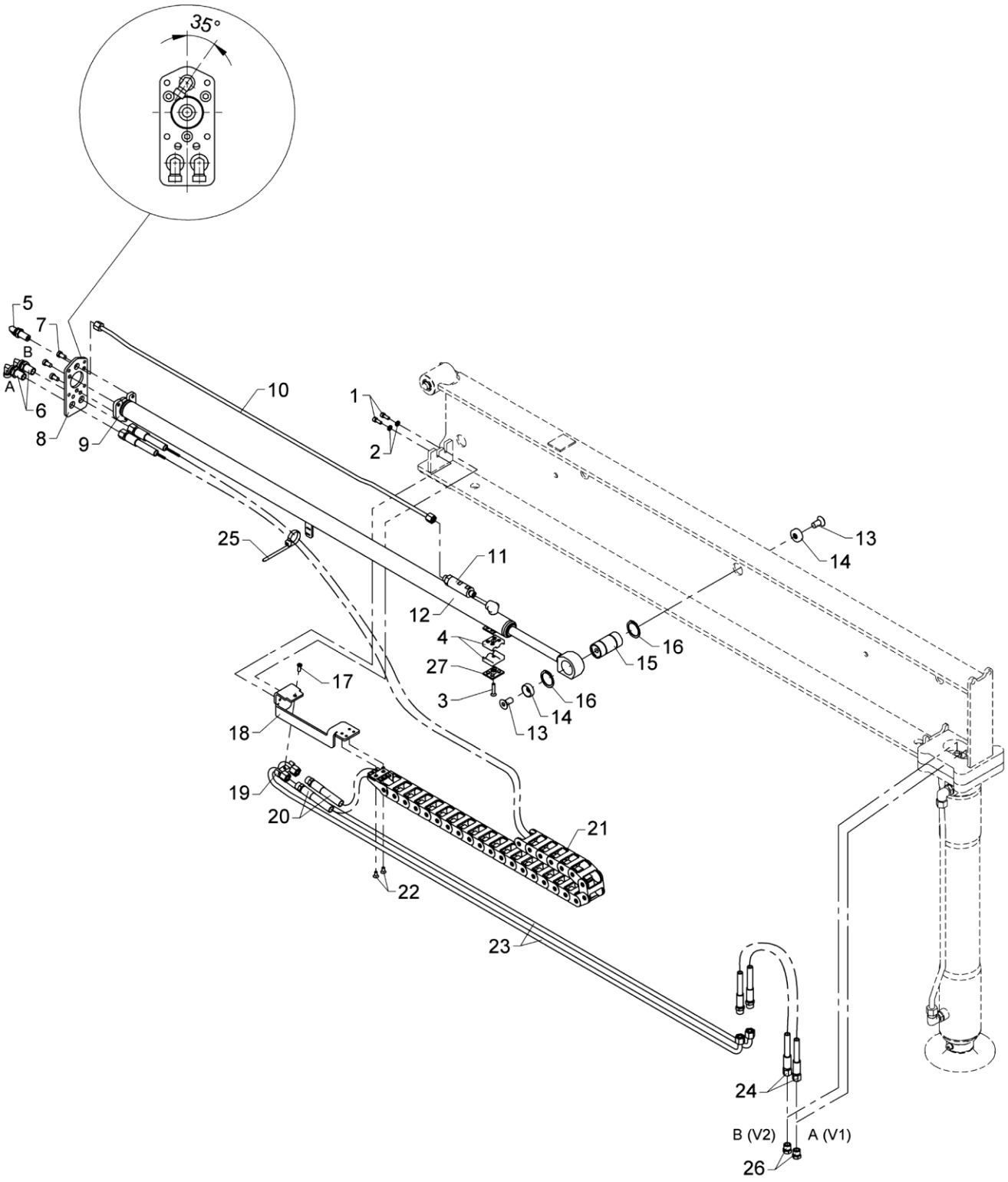

Hydraulic system, SV (+ SR-20° -Obsolete) 4600, hydr. extension

Pos	Qty.	Part no.	Description	Remarks
1	2	31539	Screw, stainless	MC6 x 16
2	2	32302	Face washer, stainless	6 mm
3	1	30585	Countersunk screw	MK6 x 30
4	2	64408	Clamp	
5	1	26864	Elbow connection	WSS 8L
6	2	26894	Elbow connection	10mm - 90 gr.
7	3	32478	Screw	M8 x 16
8	1	6344097	End plate	
9	1	6344098	Bracket	
10	1	6340799	Pipe, extension cylinder	
11	1	55228	Sequence valve	
12	1	6340790	Beam cylinder	
13	2	30586	Countersunk screw	MK12 x 25
14	2	6306241	Mounting plate	
15	1	6340118	Pin	Serie 1300/1500
16	2	33117	Circlip	35U
17	1	32490	Screw	MCL6 x 16
18	1	6344096	Clamp	
19	1	6306097	Clamp	
20	2	56364	Hose	5/16" x 2300 mm L/S - 10
21	1	28718	Nylon drag chain (26 links)	
22	2	30542	Counter-sunk screw	MK6 x 12
23	2	6340798	Pipe	
24	2	56460	Hose	1/4" x 550 mm L/S - 10
25	1	27275	Cable tie, black, 7.6x385mm	
26	2	25635	Screw	VSK 10L
27	1	6344106	Welding plate	

1500K, 1510K, 1720K, 1730K, 1820K, 1830K

63 43 590
Internal ref. 63 40 870

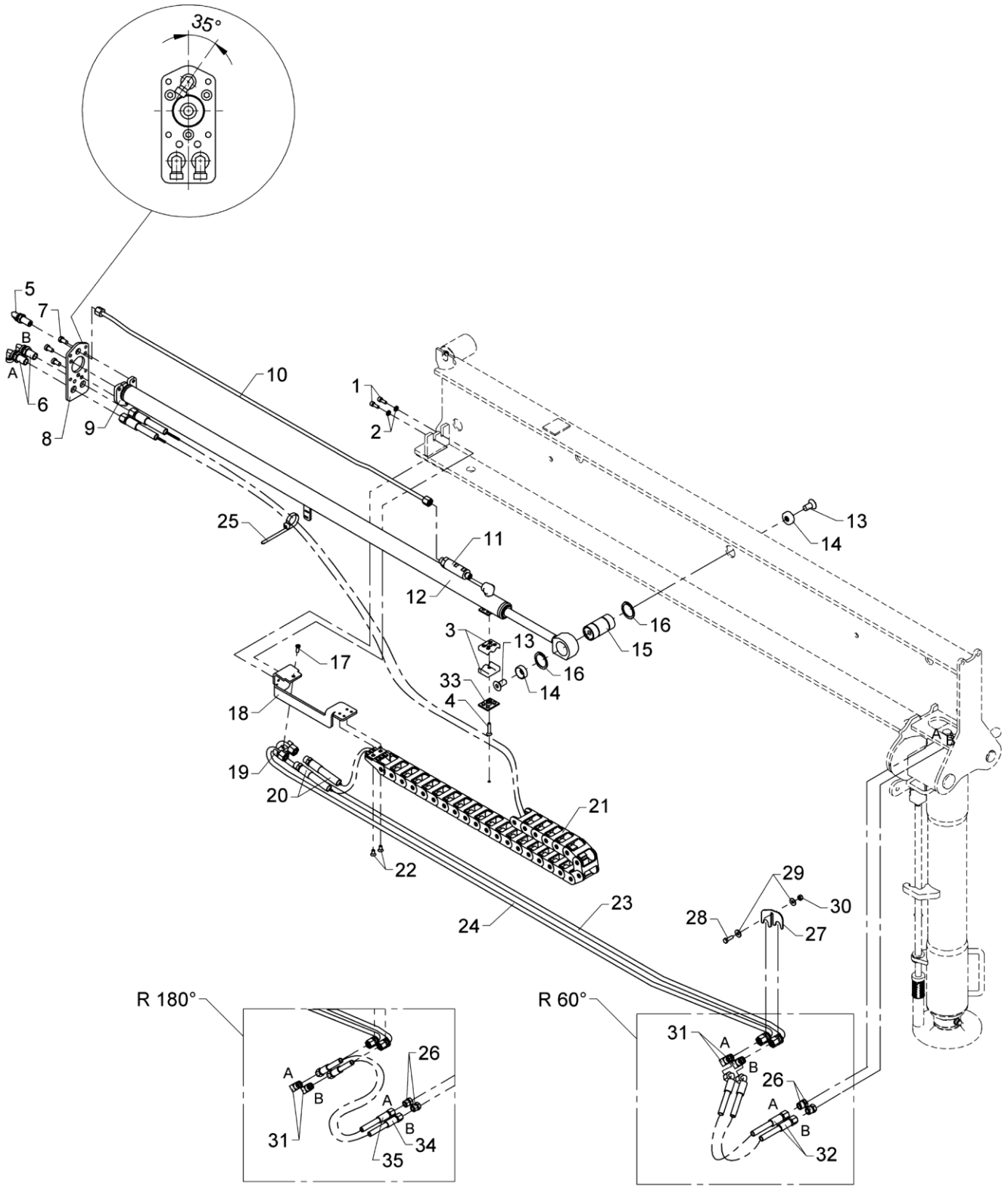

Hydraulic system, SH + SR-60°/180° - 4600, hydr. extension

Pos	Qty.	Part no.	Description	Remarks
		6340870	Hydraulic system, SH - 4600	
		6343590	Hydr.system, SR180°, 4600 hydr	
1	2	31539	Screw, stainless	MC6 x 16
2	2	32302	Face washer, stainless	6 mm
3	2	64408	Clamp	
4	1	30585	Countersunk screw	MK6 x 30
5	1	26864	Elbow connection	WSS 8L
6	2	26894	Elbow connection	10mm - 90 gr.
7	3	32478	Screw	M8 x 16
8	1	6344097	End plate	
9	1	6344098	Bracket	
10	1	6340799	Pipe, extension cylinder	
11	1	55228	Sequence valve	
12	1	6340790	Beam cylinder	
13	2	30586	Countersunk screw	MK12 x 25
14	2	6306241	Mounting plate	
15	1	6340118	Pin	Serie 1300/1500
16	2	33117	Circlip	35U
17	1	32490	Screw	MCL6 x 16
18	1	6344096	Clamp	
19	1	6306097	Clamp	
20	2	56364	Hose	5/16" x 2300 mm L/S - 10
21	1	28718	Nylon drag chain (26 links)	
22	2	30542	Counter-sunk screw	MK6 x 12
23	1	6340797	Pipe	
24	1	6340796	Pipe	
25	1	27275	Cable tie, black, 7.6x385mm	7,6 x 390mm
26	2	25635	Screw	VSK 10L
27	1	6306164	Bracket	
28	1	30113	Set screw, stainless	M6 x 20
29	2	31134	Washer, stainless	6 mm
30	1	30884	Lock nut, stainless	M6
31	2	25125	Elbow connection	WV 10 L
32	2	56363	Hose	1/4" x 450 L/V
33	1	6344106	Welding plate	
34	1	56905	Hose 1/4 X 550 mm	L=8mm/L=10mm
35	1	56904	Hose 1/4 X 500 mm	L=8mm/L=10mm

1500K, 1510K, 1720K, 1730K, 1820K, 1830K

Internal ref. 63 44 520

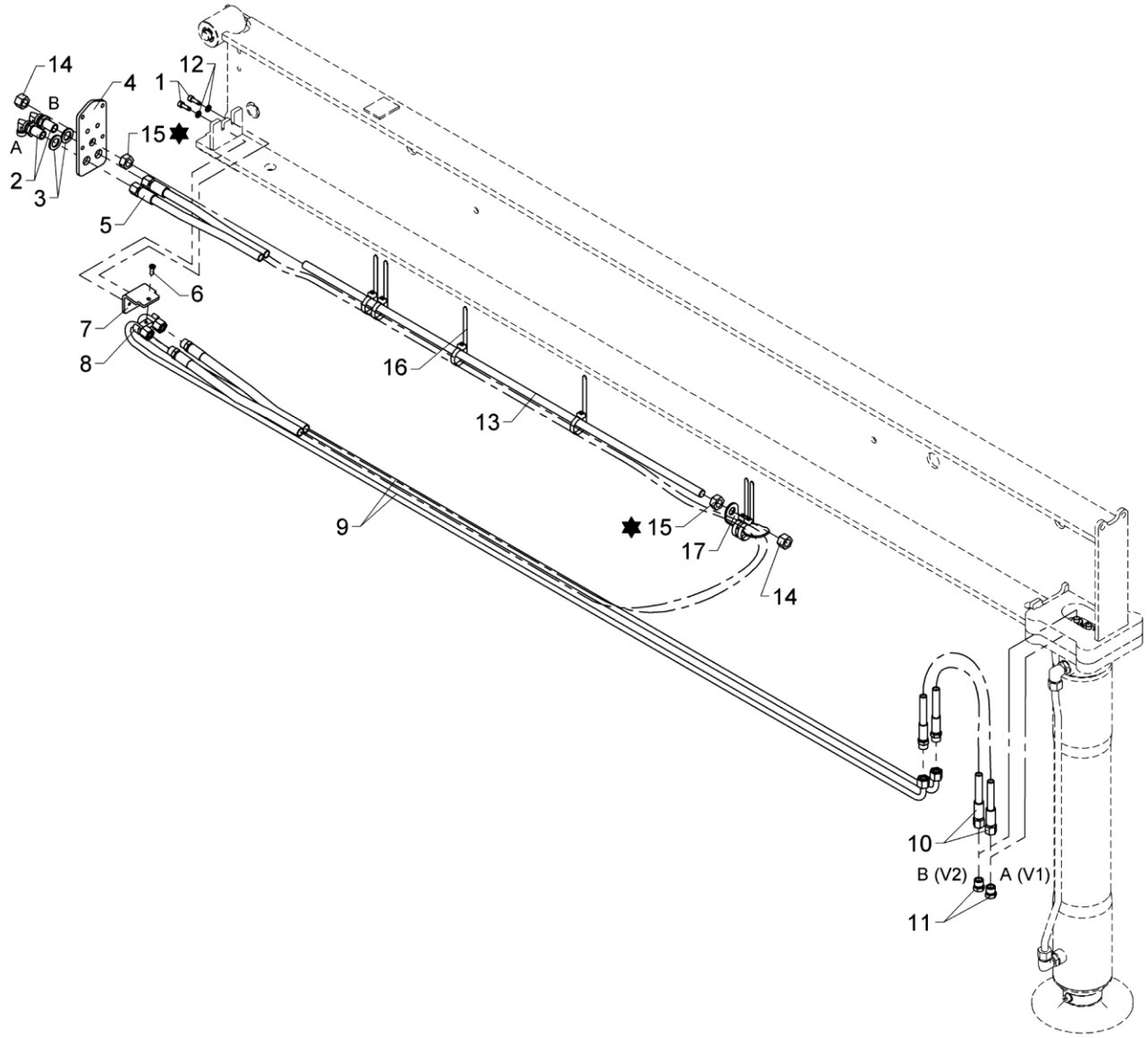

✸ Loctite 270

Hydraulic system, SV (+ SR-20° -Obsolete) 5570, manual extension

Pos	Qty.	Part no.	Description	Remarks
1	2	31539	Screw, stainless	MC6 x 16
2	2	26894	Elbow connection	10mm - 90 gr.
3	2	31791	Washer M16, stainless	16 mm
4	1	6344095	End plate	
5	1	56279	Hose	
6	1	32490	Screw	MC6 x 16
7	1	6344109	Clamp	
8	1	6306097	Clamp	
9	2	6344218	Pipe	
10	2	56460	Hose	1/4" x 550 mm L/S - 10
11	2	25635	Screw	VSK 10L
12	2	32302	Face washer, stainless	6 mm
13	1	31262	Threaded pin	
14	2	32317	Lock nut	M14
15	2	32145	Nut, stainless	M14
16	6	27275	Cable tie, black, 7.6x385mm	
17	1	6344107	Clamp	

1500K, 1510K, 1720K, 1730K, 1820K, 1830K

63 43 620
Internal ref. 63 45 520

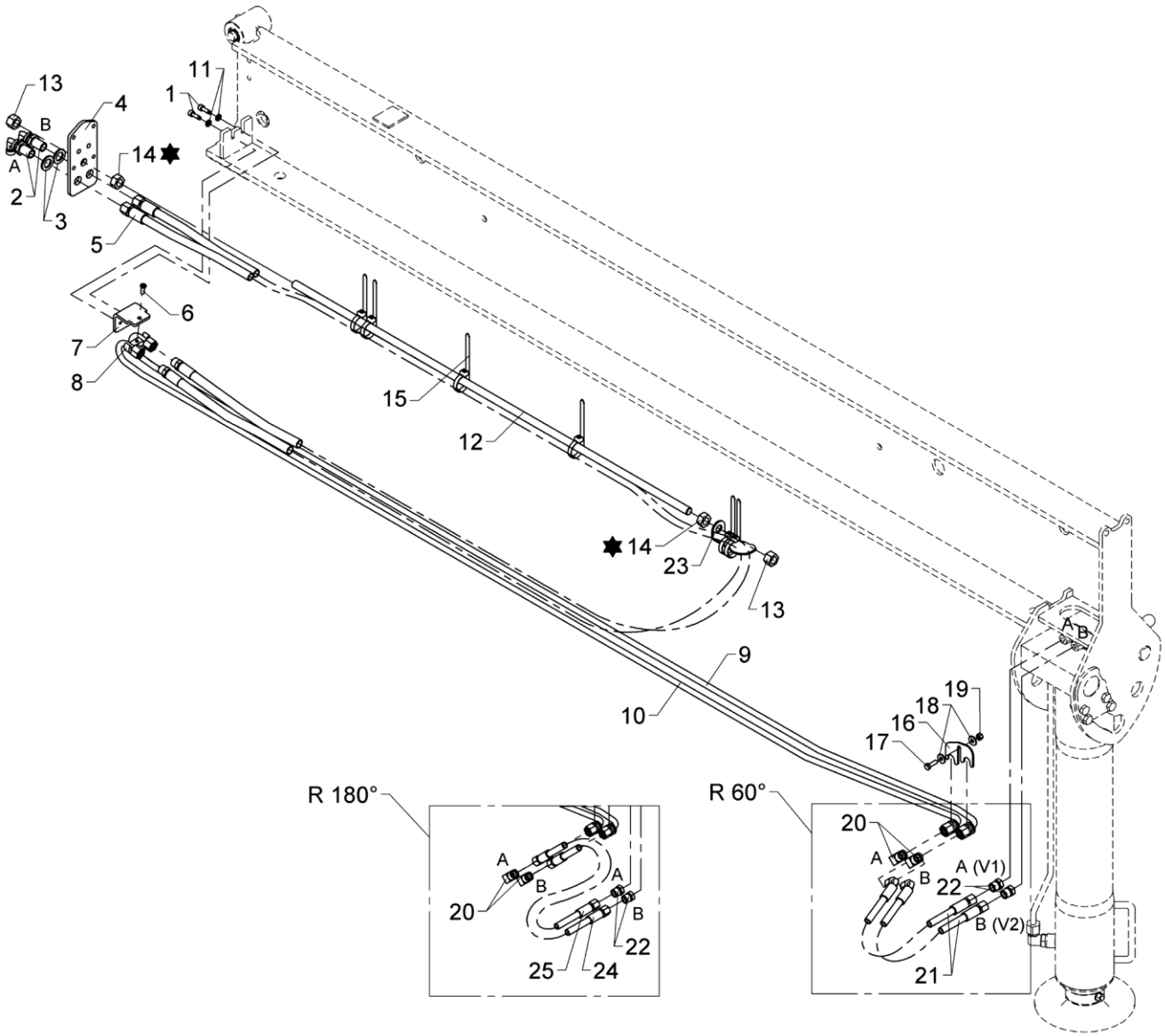

✸ Loctite 270

Hydraulic system, SR-60°/180°, 5570, manual extension

Pos	Qty.	Part no.	Description	Remarks
		6345520	Hydr. syst., SR-60°- 5570 man	
		6343620	Hydraulic syst.,SR180°,5570man	
1	2	31539	Screw, stainless	MC6 x 16
2	2	26894	Elbow connection	10mm - 90 gr.
3	2	31791	Washer M16, stainless	16 mm
4	1	6344095	End plate	
5	1	56279	Hose	
6	1	32490	Screw	MC6 x 16
7	1	6344109	Clamp	
8	1	6306097	Clamp	
9	1	6344234	Pipe	
10	1	6344233	Pipe	
11	2	32302	Face washer, stainless	6 mm
12	1	31262	Threaded pin	
13	2	32317	Lock nut	M14
14	2	32145	Nut, stainless	M14
15	6	27275	Cable tie, black, 7.6x385mm	
16	1	6306164	Bracket	
17	1	30113	Set screw, stainless	M6 x 20
18	2	31134	Washer, stainless	6 mm
19	1	30884	Lock nut, stainless	M6
20	2	25125	Elbow connection	WV 10 L
21	2	56363	Hose	L=8mm / V=10 mm
22	2	25635	Screw	VSK 10L
23	1	6344107	Clamp	
24	1	56905	Hose 1/4 X 550 mm	L=8mm/L=10mm
25	1	56904	Hose 1/4 X 500 mm	L=8mm/L=10mm

1500K, 1510K, 1720K, 1730K, 1820K, 1830K

63 44 530
Internal ref. 63 40 880

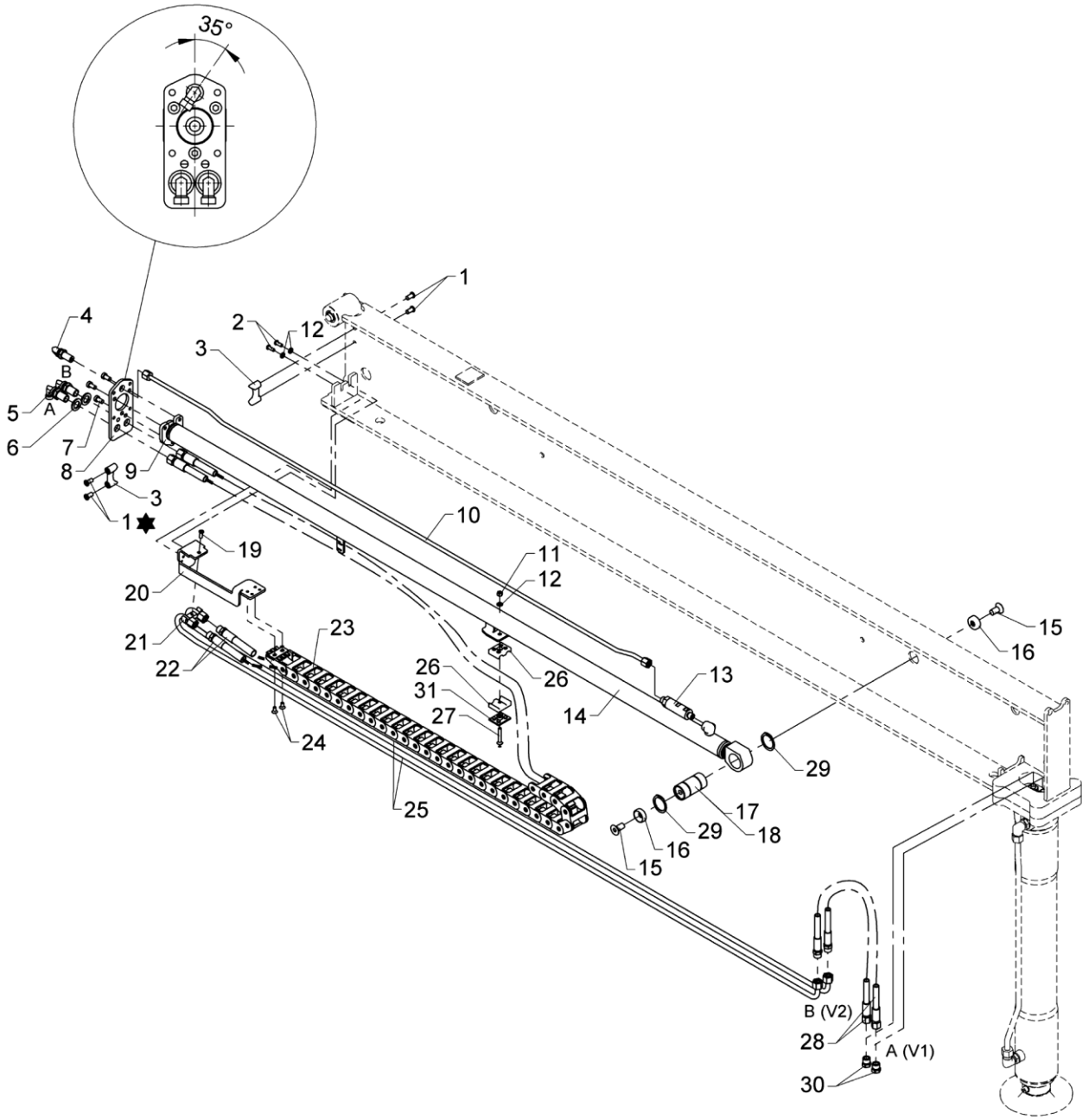

✸ Loctite 243

Hydraulic system, SV (+ SR-20° -Obsolete) 5570, hydr. extension

Pos	Qty.	Part no.	Description	Remarks
		6340880	Hydraulic system, SV-SR - 5570	
		6344530	Hydraulic system, SV-SR - 5570	
1	4	32481	Screw	MCL8 x 16
2	2	32222	Button head screw	M6 x 16
3	2	63556	Guide	
4	1	26864	Elbow connection	WSS 8L
5	2	26894	Elbow connection	10mm - 90 gr.
6	2	31791	Washer M16, stainless	16 mm
7	3	32478	Screw	M8 x 16
8	1	6344097	End plate	
9	1	6344098	Bracket	
10	1	6344219	Pipe	
11	1	30884	Lock nut, stainless	M6
12	3	32302	Face washer, stainless	6 mm
13	1	55228	Sequence valve	
14	1	6344210	Beam cylinder	
15	2	30586	Countersunk screw	MK12 x 25
16	2	6306241	Mounting plate	
17	1	6340118	Pin	Serie 1300/1500
18	1	6344118	Pin	Serie 1800/2200
19	1	32490	Screw	MCL6 x 16
20	1	6344096	Clamp	
21	1	6306097	Clamp	
22	2	56364	Hose	5/16" x 2300 mm L/S - 10
23	1	28886	Nylon drag chain	
24	2	30542	Counter-sunk screw	MK6 x 12
25	2	6344218	Pipe	
26	2	64408	Clamp	
27	1	32352	Countersunk screw	MK6 x 40
28	2	56460	Hose	1/4" x 550 mm L/S - 10
29	2	33117	Circlip	35U
30	2	25635	Screw	VSK 10L
31	1	6344106	Welding plate	

1500K, 1510K, 1720K, 1730K, 1820K, 1830K

63 43 740
63 43 610
63 46 530
Internal ref. 63 42 540

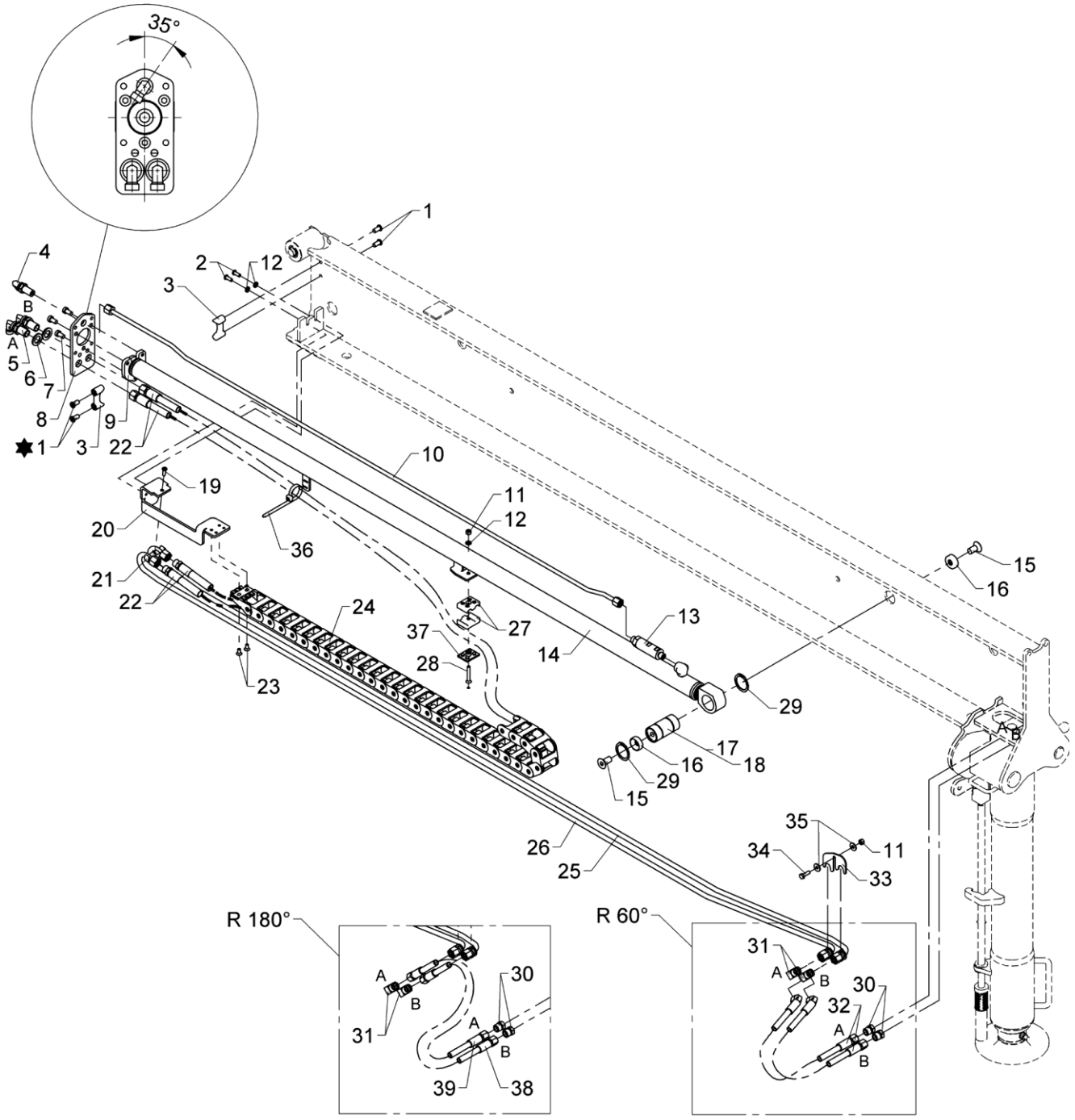

✸ Loctite 243

Hydraulic system, SH + SR-60°/180° - 5570, hydr. extension

Pos	Qty.	Part no.	Description	Remarks
		6342540	Hydraulic system, SH - 5570	1300/1500
		6346530	Hydraulic system, SH - 5570	1800/2200/2310S
		6343610	Hydr.system,SR180°, 5570 hydr	1300/1500
		6343740	Hydr.system,SR180°, 5570 hydr	1800/2200/2310S
1	4	32481	Screw	MCL8 x 16
2	2	32222	Button head screw	M6 x 16
3	2	63556	Guide	
4	1	26864	Elbow connection	WSS 8L
5	2	26894	Elbow connection	10mm - 90 gr.
6	2	31791	Washer M16, stainless	16 mm
7	3	32478	Screw	M8 x 16
8	1	6344097	End plate	
9	1	6344098	Bracket	
10	1	6344219	Pipe	
11	2	30884	Lock nut, stainless	M6
12	3	32302	Face washer, stainless	6 mm
13	1	55228	Sequence valve	
14	1	6344210	Beam cylinder	
15	2	30586	Countersunk screw	MK12 x 25
16	2	6306241	Mounting plate	
17	1	6340118	Pin	Serie 1300/1500
18	1	6344118	Pin	Serie 1800/2200
19	1	32490	Screw	MCL6 x 16
20	1	6344096	Clamp	
21	1	6306097	Clamp	
22	2	56364	Hose	5/16" x 2300 mm L/S - 10
23	2	30542	Counter-sunk screw	MK6 x 12
24	1	28886	Nylon drag chain	
25	1	6344234	Pipe	
26	1	6344233	Pipe	
27	2	64408	Clamp	
28	1	32352	Countersunk screw	MK6 x 40
29	2	33117	Circlip	35U
30	2	25635	Screw	VSK 10L
31	2	25125	Elbow connection	WV 10 L
32	2	56363	Hose	L=8mm / V=10 mm
33	1	6306164	Bracket	
34	1	30113	Set screw, stainless	M6 x 20
35	2	31134	Washer, stainless	6 mm
36	1	27275	Cable tie, black, 7.6x385mm	
37	1	6344106	Welding plate	

1500K, 1510K, 1720K, 1730K, 1820K, 1830K

63 43 740
63 43 610
63 46 530
Internal ref. 63 42 540

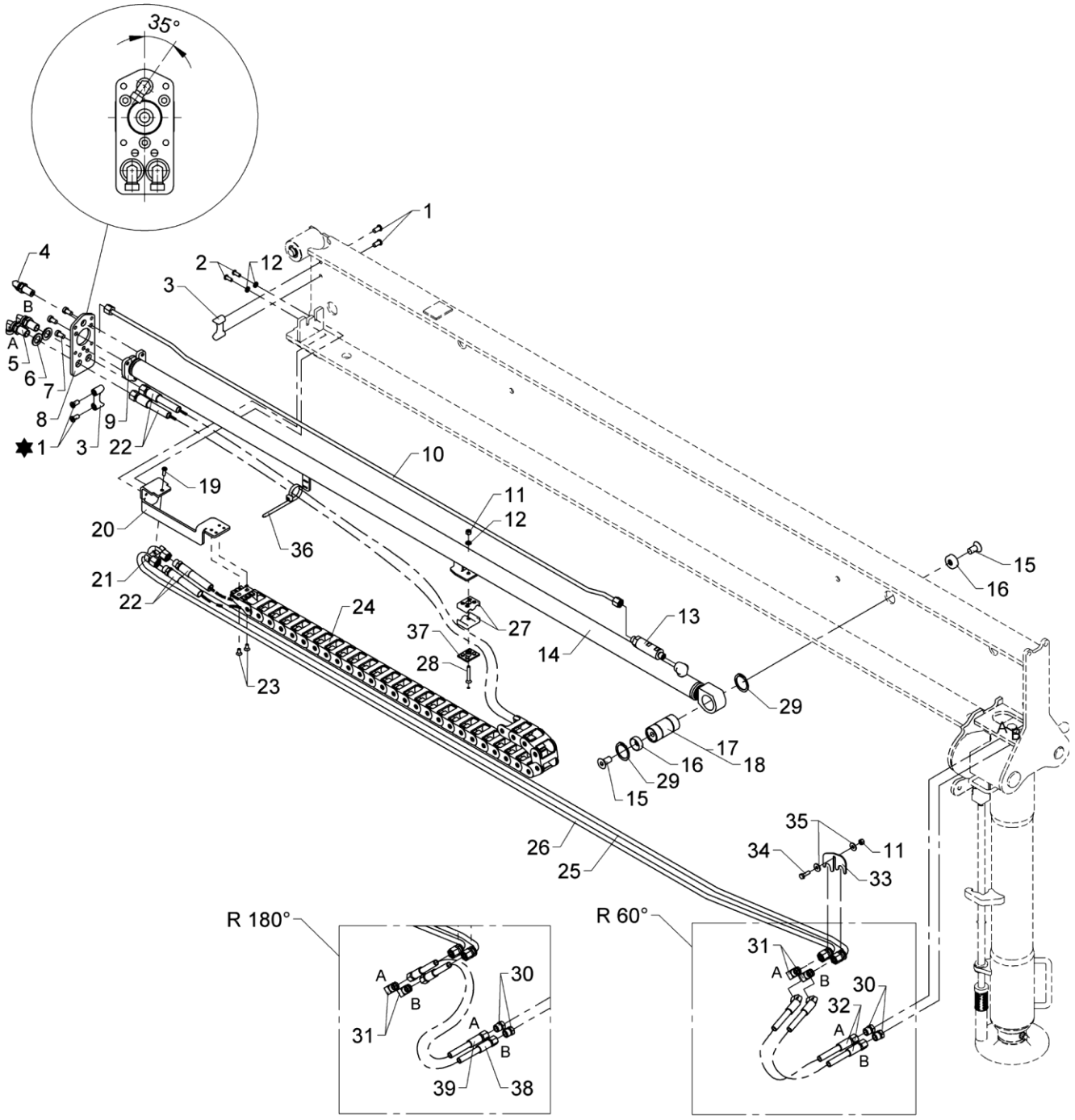

✸ Loctite 243

Hydraulic system, SH + SR-60°/180° - 5570, hydr. extension

Pos	Qty.	Part no.	Description	Remarks
38	1	56905	Hose 1/4 X 550 mm	L=8mm/L=10mm
39	1	56904	Hose 1/4 X 500 mm	L=8mm/L=10mm

1500K, 1510K, 1720K, 1730K, 1820K, 1830K

Internal ref. 63 44 550

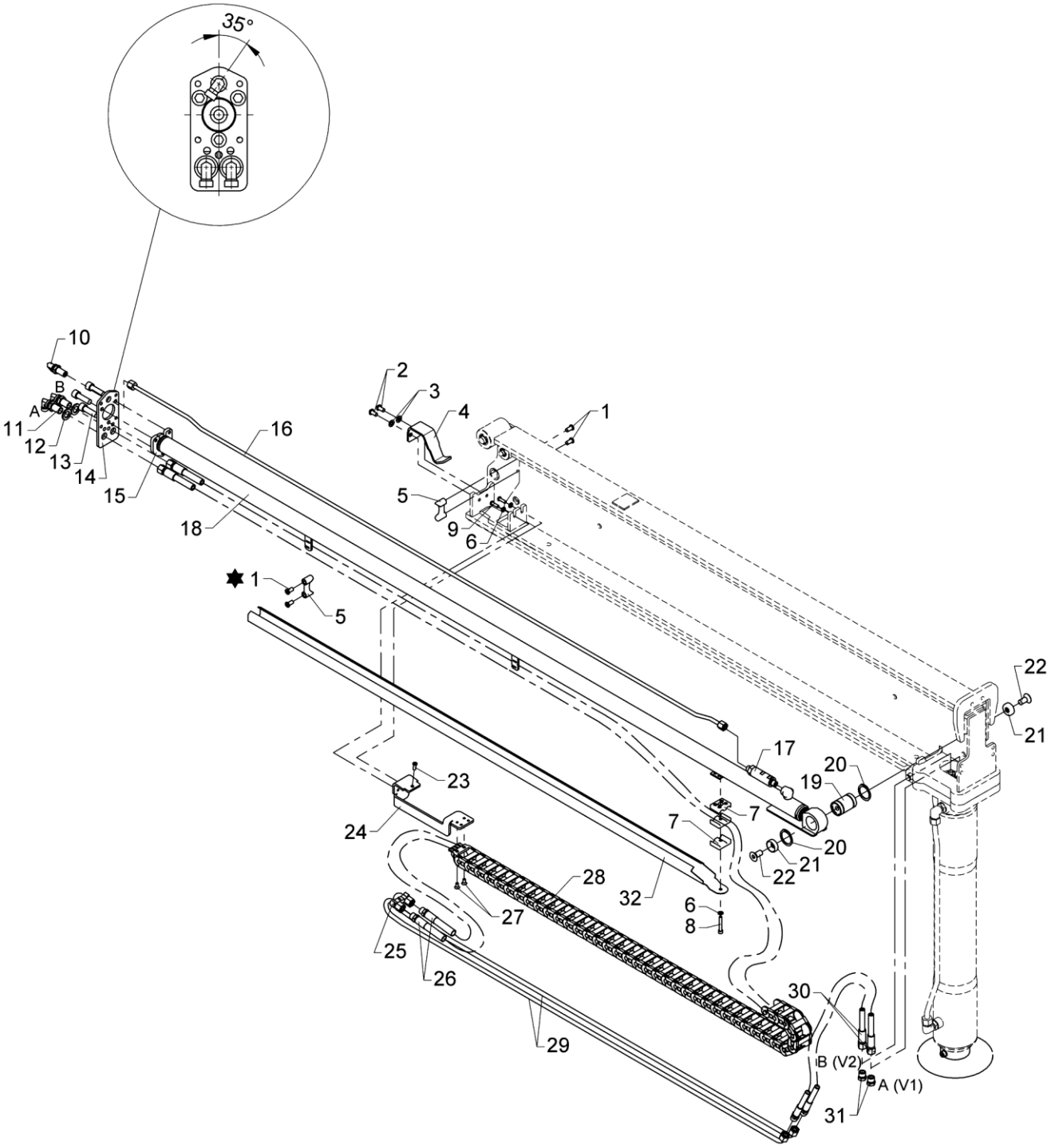

✸ Loctite 243

Hydraulic system, DV (+ DR-20° -Obsolete) 6450, hydr. extension

Pos	Qty.	Part no.	Description	Remarks
1	4	32481	Screw	MCL8 x 16
2	2	30925	Round-head screw	M8 x 16
3	2	31147	Face washer, 8 mm	
4	1	6306099	Spring holder	
5	2	63556	Guide	
6	3	32302	Face washer, stainless	6 mm
7	3	64408	Clamp	
8	1	32410	Screw	MC6 x 40
9	2	32491	Round-head screw	M6 x 20
10	1	26864	Elbow connection	WSS 8L
11	2	26894	Elbow connection	10mm - 90 gr.
12	2	31791	Washer M16, stainless	16 mm
13	3	30475	Screw	MC12 x 40
14	1	6344097	End plate	
15	1	6344098	Bracket	
16	1	6344229	Pipe	
17	1	55228	Sequence valve	
18	1	6344220	Beam cylinder	
19	1	6340119	Pin	
20	2	33117	Circlip	35U
21	2	6306241	Mounting plate	
22	2	30586	Countersunk screw	MK12 x 25
23	1	32490	Screw	MC6 x 16
24	1	6344096	Clamp	
25	1	6306097	Clamp	
26	2	56365	Hose	5/16" x 3340 mm L/S - 10
27	2	30542	Counter-sunk screw	MK6 x 12
28	1	28887	Nylon drag chain	
29	2	6344228	Pipe	
30	2	56366	Hose	1/4" x 260 mm L/S - 10
31	2	25635	Screw	VSK 10L
32	1	6342561	Guide rail	

1500K, 1510K, 1720K, 1730K, 1820K, 1830K

63 43 630
Internal ref. 63 42 560

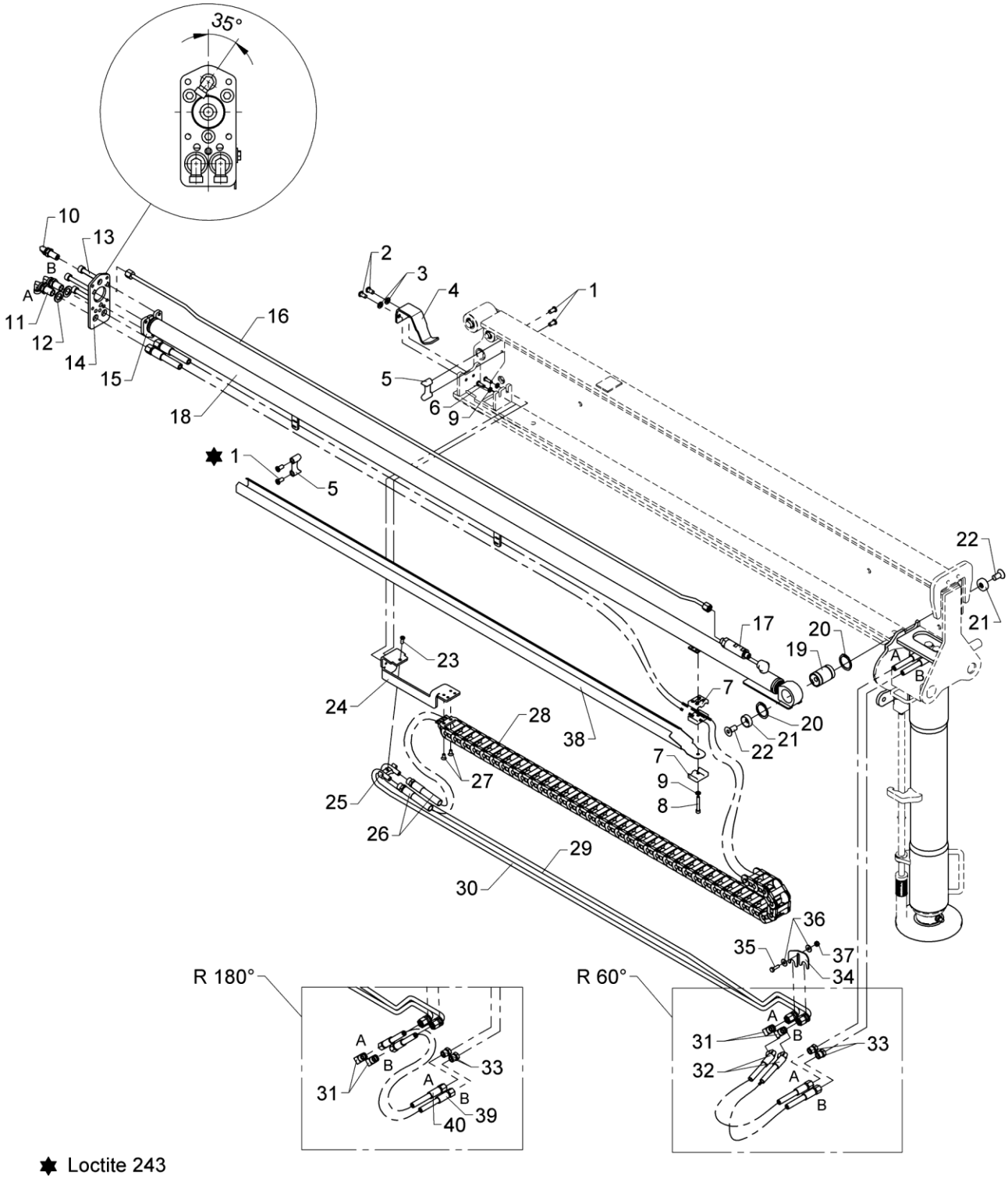

Hydraulic system, DH + DR-60°/180° - 6450, hydr. extension

Pos	Qty.	Part no.	Description	Remarks
		6342560	Hydraulic system, DH - 6450	
		6343630	Hydr.system, DR180°, 6450 hydr	
1	4	32481	Screw	MCL8 x 16
2	2	30925	Round-head screw	M8 x 16
3	2	31147	Face washer, 8 mm	
4	1	6306099	Spring holder	
5	2	63556	Guide	
6	2	32491	Round-head screw	M6 x 20
7	3	64408	Clamp	
8	1	32410	Screw	MC6 x 40
9	3	32302	Face washer, stainless	6 mm
10	1	26864	Elbow connection	WSS 8L
11	2	26894	Elbow connection	10mm - 90 gr.
12	2	31791	Washer M16, stainless	16 mm
13	3	32459	Screw	MC10 x 85
14	1	6344097	End plate	
15	1	6344098	Bracket	
16	1	6344229	Pipe	
17	1	55228	Sequence valve	
18	1	6344220	Beam cylinder	
19	1	6340119	Pin	
20	2	33117	Circlip	35U
21	2	6306241	Mounting plate	
22	2	30586	Countersunk screw	MK12 x 25
23	1	32490	Screw	MC6 x 16
24	1	6344096	Clamp	
25	1	6306097	Clamp	
26	2	56365	Hose	5/16" x 3340 mm L/S - 10
27	2	30542	Counter-sunk screw	MK6 x 12
28	1	28887	Nylon drag chain	
29	1	6344236	Pipe	
30	1	6344235	Pipe, stabilizers	
31	2	25125	Elbow connection	WV 10 L
32	2	56363	Hose	L=8mm / V=10 mm
33	2	25635	Screw	VSK 10L
34	1	6306164	Bracket	
35	1	30113	Set screw, stainless	M6 x 20
36	2	31134	Washer, stainless	
37	1	30884	Lock nut, stainless	M6
38	1	6342561	Guide rail	
39	1	56905	Hose 1/4 X 550 mm	L=8mm/L=10mm

1500K, 1510K, 1720K, 1730K, 1820K, 1830K

63 43 630
Internal ref. 63 42 560

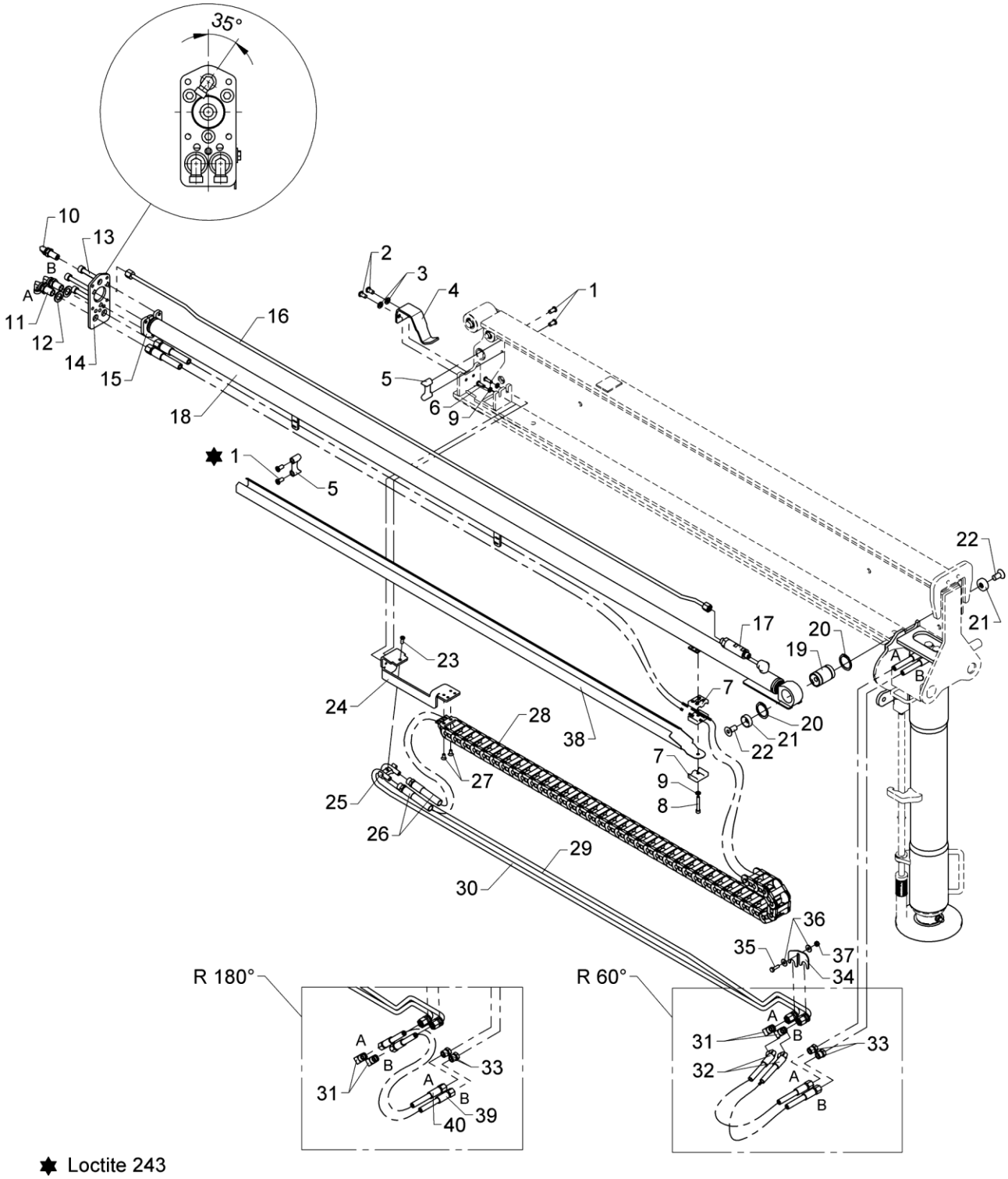

Loctite 243

Hydraulic system, DH + DR-60°/180° - 6450, hydr. extension

Pos	Qty.	Part no.	Description	Remarks
40	1	56904	Hose 1/4 X 500 mm	L=8mm/L=10mm

1500K, 1510K, 1720K, 1730K, 1820K, 1830K

63 54 810
63 54 820
63 42 390
Internal ref. 63 42 410

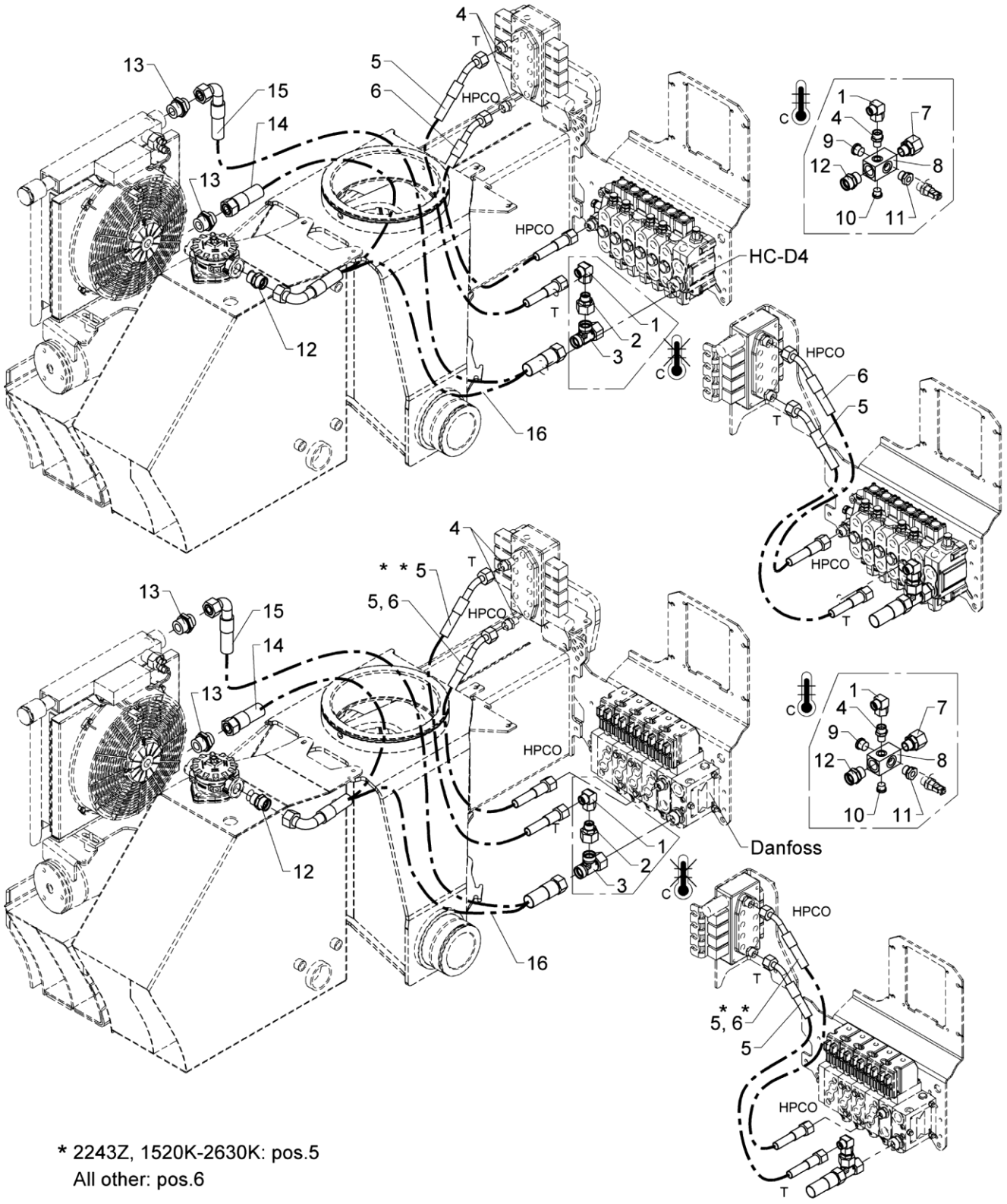

Hydr. syst. pump + return hoses

Created 02-06-2008
Modified 28-09-2015

Pos	Qty.	Part no.	Description	Remarks
		6342410	Pump+return hoses-Hydrocontrol	1300K-2210K, 1410T-2130T, 2310
		6342390	Pump+return hoses+temp.sensor	1300K-2210K, 1410T-2130T, 2310
		6354820		2243Z, 1520K-2630K
		6354810		2243Z, 1520K-2630K
1	1	25284	Elbow connection	EWSD 15 L
2	1	25298	Connection	REDSDN 22/15 L
3	1	26149	Connection	ELSD 22 L
4	3	25273	Connection	GES 15 LR 3-8 A3L
5	2	56503	Hose	1/2" x 1000mm v45/o
6	1	56504	Hose	1/2" x 600mm v45/o
7	1	25279	Connection	EGESD 22 LR-WD
8	1	59355	Return block	
9	1	25103	Plug	VS-R-1/2 WD
10	1	25277	Plug	VS-R-3/8 WD
11	1	25180	Reducing connection	RED-R 1/2-WD/R 1/4
12	1	25169	Connection	P-GEV 22 LR-WD
13	2	26122	Connection	P-GEV 22 LR 1-WD
14	1	56501	Hose	Til køler/tank
15	1	56502	Hose	Til køler
16	1	56395	Hose	Til tank

1500K, 1510K, 1720K, 1730K, 1820K, 1830K

63 55 150
Internal ref. 63 42 420

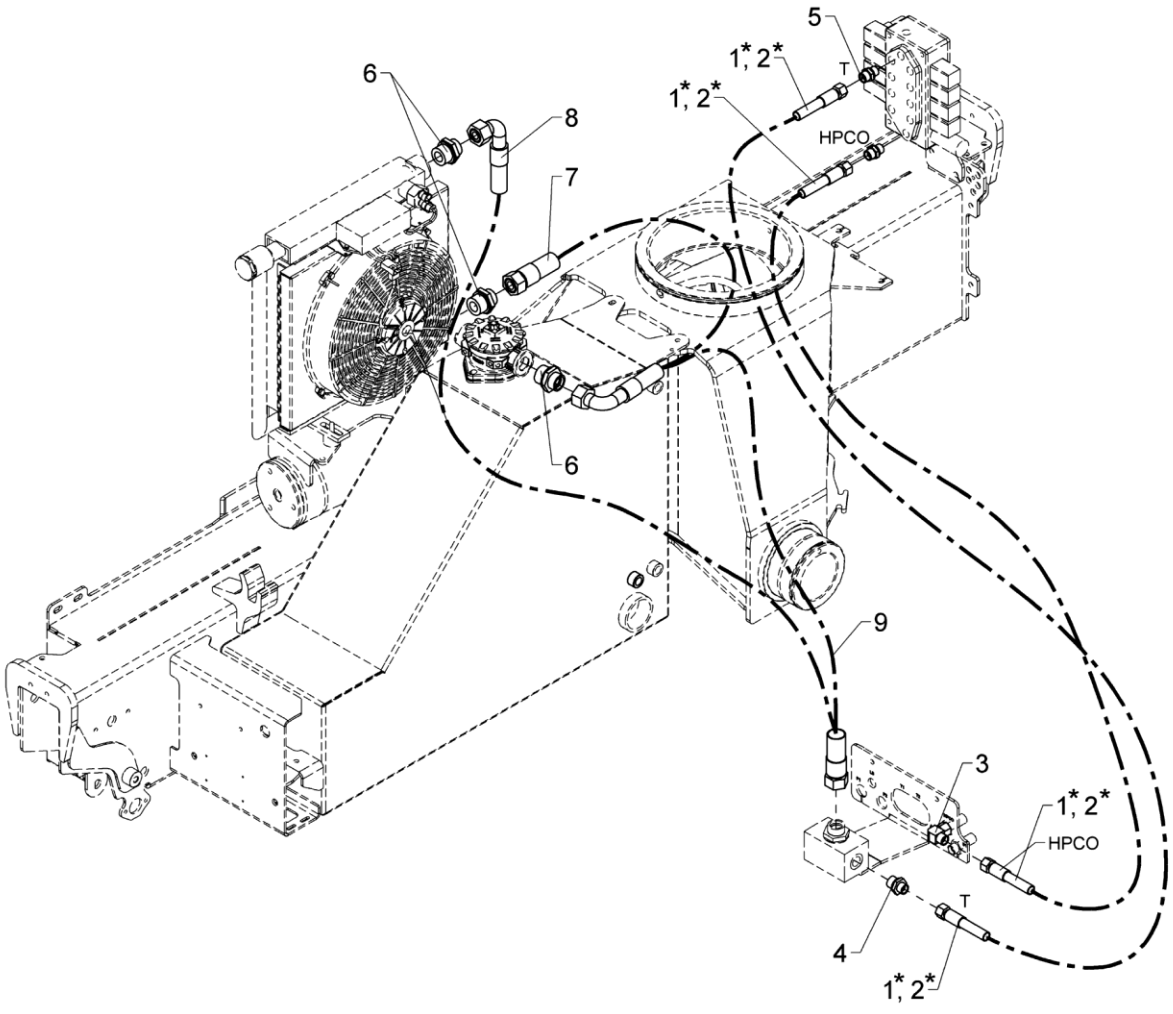

* 1300K-2630K: pos.1
1210L-2530L: pos.2

Hydr. syst. pump + return hoses (TS)

Created 24-11-2008
Modified 01-09-2014

Pos	Qty.	Part no.	Description	Remarks
		6342420	Hydr.syst.pump+return hoses TS	1300K - 2630K
		6355150	Hydr.syst.pump+return pipingTS	1210L - 2530L
1	2	0015500	Hose	1300K - 2630K
2	2	0017650	Hose	1210L - 2530L
3	1	25242	Elbow connection	EWSD 12 L
4	1	25108	Connection	GES 12 LR 1/2-WD
5	2	25127	Connection	P-GEV 12 LR-WD
6	3	26122	Connection	P-GEV 22 LR 1-WD
7	1	56501	Hose	Til køler/tank
8	1	56502	Hose	Til køler
9	1	56395	Hose	Til tank

1500K, 1510K, 1720K, 1730K, 1820K, 1830K

Internal ref. 63 42 400

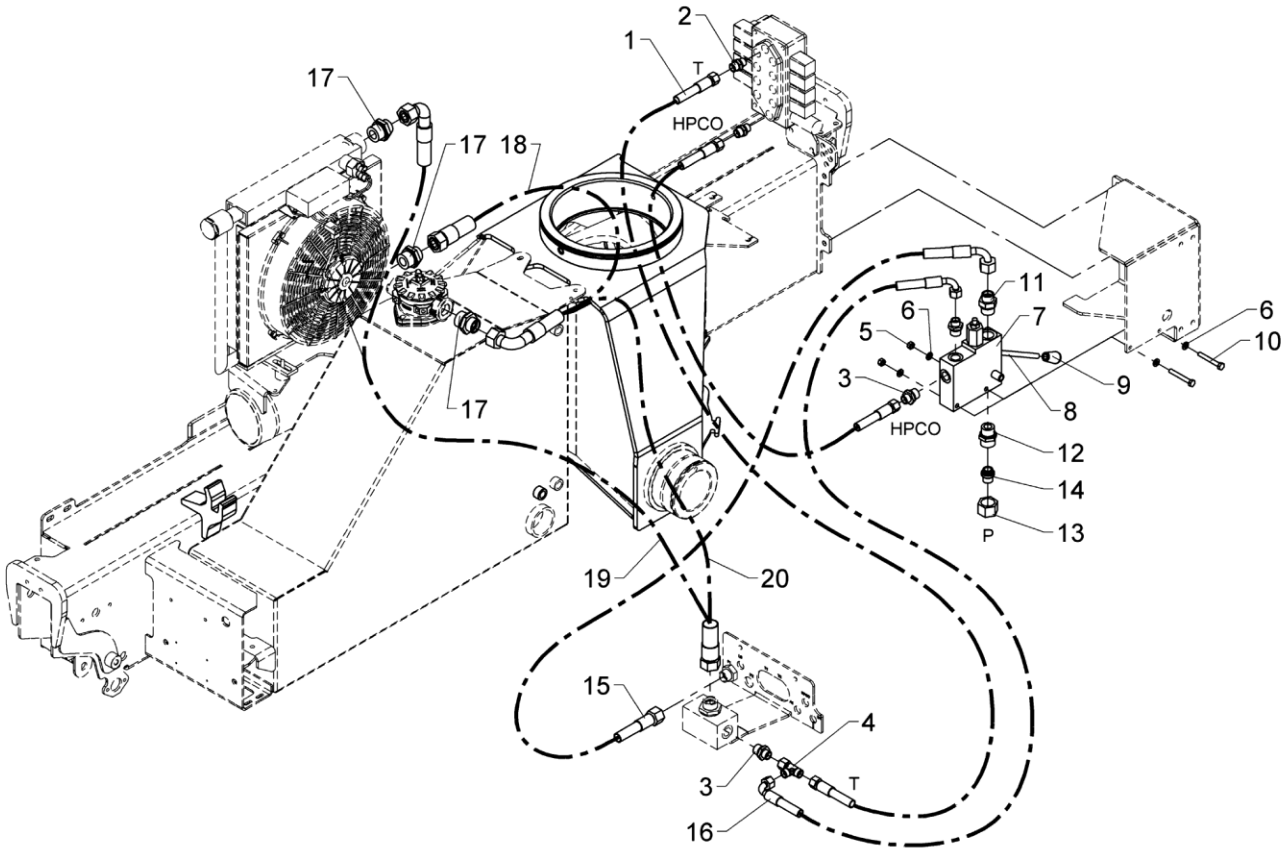

Hydraulic system, pump and return hoses (TS, excl. CE)

Pos	Qty.	Part no.	Description	Remarks
		6342400	Pump + return hoses - Danfoss	
1	2	0015500	Hose	
2	2	25127	Connection	P-GEV 12 LR-WD
3	3	25108	Connection	GES 12 LR 1/2-WD
4	1	25270	Connection	ELSD 12 L
5	2	30856	Nut, stainless	M8
6	4	31147	Face washer, 8 mm	8 mm
7	1	55292	Change-over valve+flowcontrol	
8	1	6340907	Lever	
9	1	64411	Knob for lever	
10	2	30141	Set screw, stainless	M8 x 60
11	1	26390	Connection	P-GEV 16 SR 3/4-WD
12	1	26197	Connection	P-GEV 20 SR-WD
13	1	26109	Coupling nut	M 20 S
14	1	26361	Blanking plug	VSD 20 S
15	1	56416	Hose	1/2 X 850 M24 X 1.5 L/90
16	1	0017460	Hose	
17	3	26122	Connection	P-GEV 22 LR 1-WD
18	1	56501	Hose	Til køler/tank
19	1	56502	Hose	Til køler
20	1	56395	Hose	Til tank

1500K, 1510K, 1720K, 1730K, 1820K, 1830K

63 63 490
Internal ref. 63 63 460

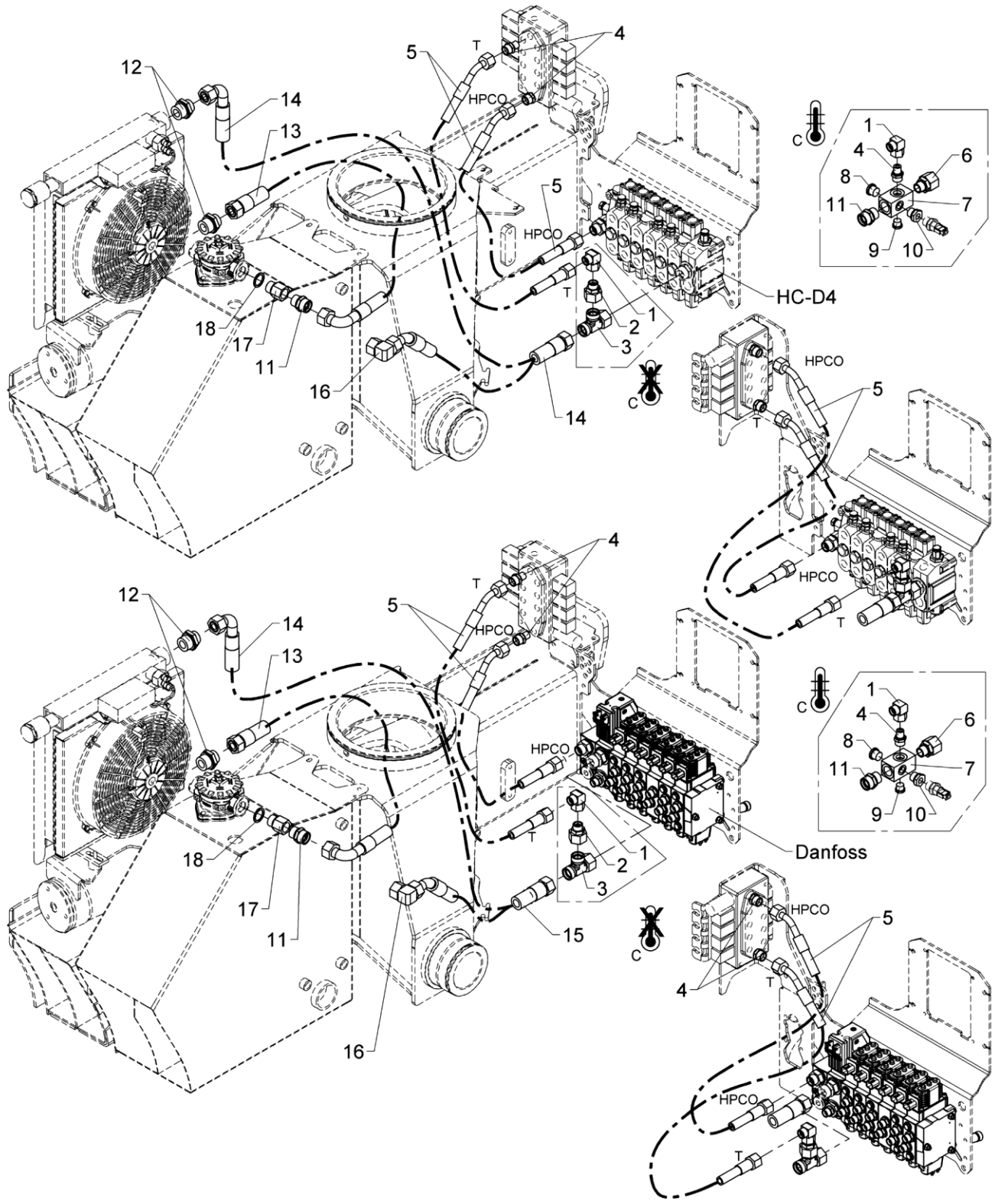

Hydr. syst. pump + return hoses

Created 08-12-2015
Modified 08-05-2018

Pos	Qty.	Part no.	Description	Remarks
		6363460		
		6363490		
1	1	25284	Elbow connection	EWSD 15 L
2	1	25298	Connection	REDSDN 22/15 L
3	1	26149	Connection	ELSD 22 L
4	3	25273	Connection	GES 15 LR 3-8 A3L
5	2	56504	Hose	
6	1	25279	Connection	EGESD 22 LR-WD
7	1	59355	Return block	
8	1	25103	Plug	VS-R-1/2 WD
9	1	25277	Plug	VS-R-3/8 WD
10	1	25180	Reducing connection	RED-R 1/2-WD/R 1/4
11	2	25169	Connection	P-GEV 22 LR-WD
12	2	26122	Connection	P-GEV 22 LR 1-WD
13	1	56501	Hose	Til køler/tank
14	1	56502	Hose	Til køler
15	1	62648	Hose	Til tank
16	1	25209	Elbow connection	EWSD 22 L
17	1	25949	Reducing nipple	3/4 BSP x 3/8 BSP
18	1	21108	Seal washer	ø27,05 x 34,93 x 2,34

1500K, 1510K, 1720K, 1730K, 1820K, 1830K

Internal ref. 63 41 580

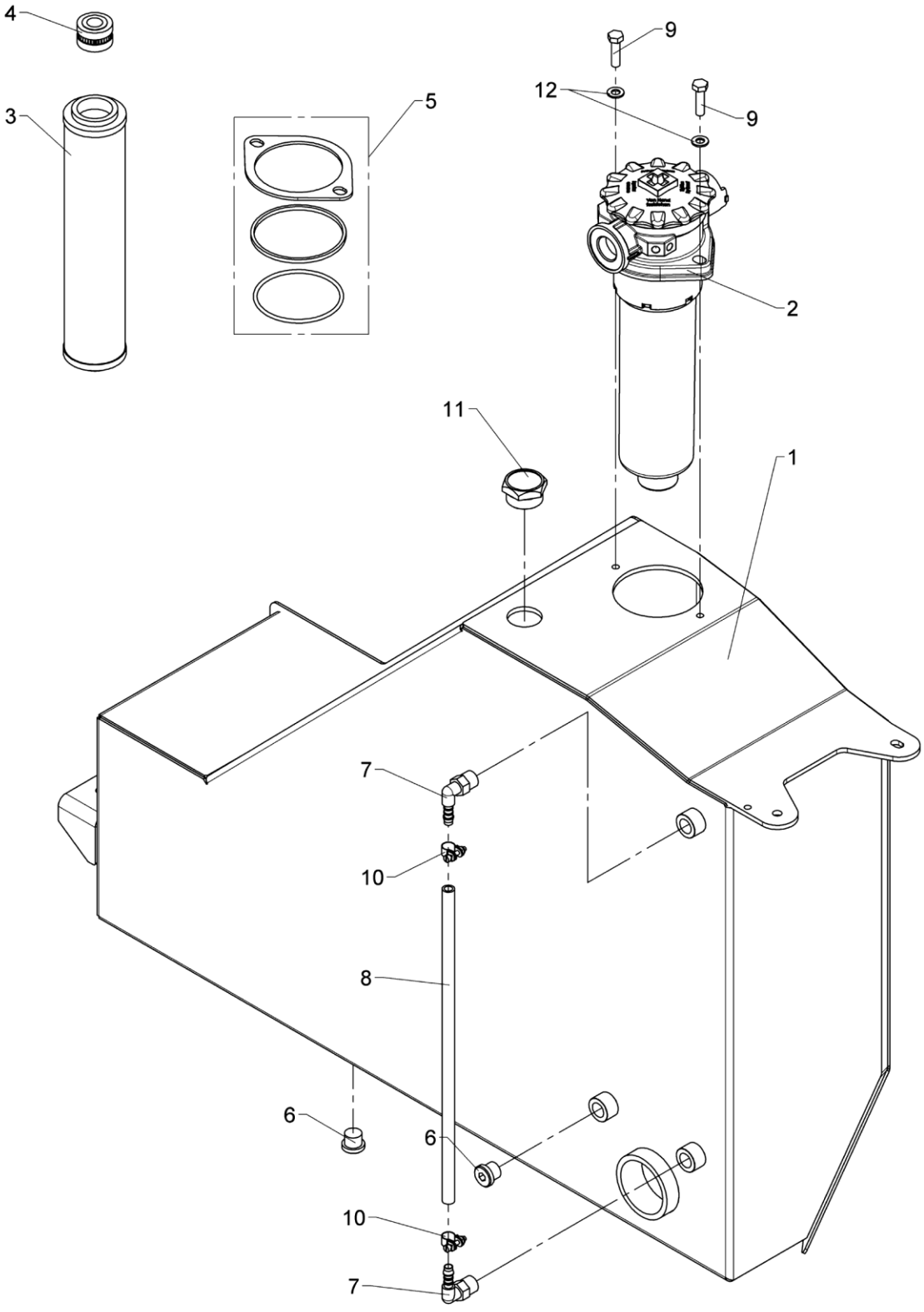

Tank, cpl.

534 06 070

From loader 1060001
To loader

Created 24-11-2008
Modified 12-11-2018

Pos	Qty.	Part no.	Description	Remarks
1	1	6340531	Tank	
2	1	49405	Return filter	
3	1	49406	Filter	
4	1	49407	Air filter	
5	1	49418	Seal kit	
6	2	25277	Plug	VS-R-3/8 WD
7	2	64500	Elbow	WES 8/R-3/8"
8	1	62511	Plastic hose	
9	2	30135	Set screw, stainless	M8 x 30
10	2	31452	Clamp	
11	1	64588	Plastic plug	
12	2	31147	Face washer, 8 mm	

1500K, 1510K, 1720K, 1730K, 1820K, 1830K

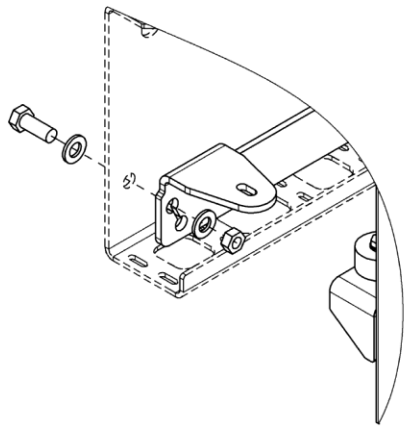

Placering af monteringsbeslag 6340537
1300K/1730K

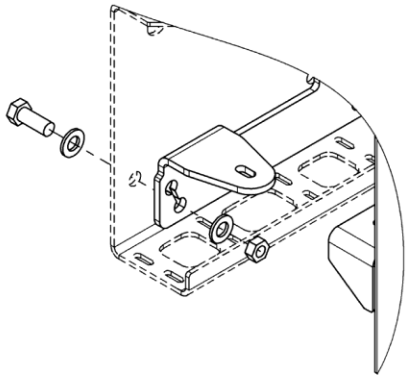

Placering af monteringsbeslag 6340537
1800K/2430K

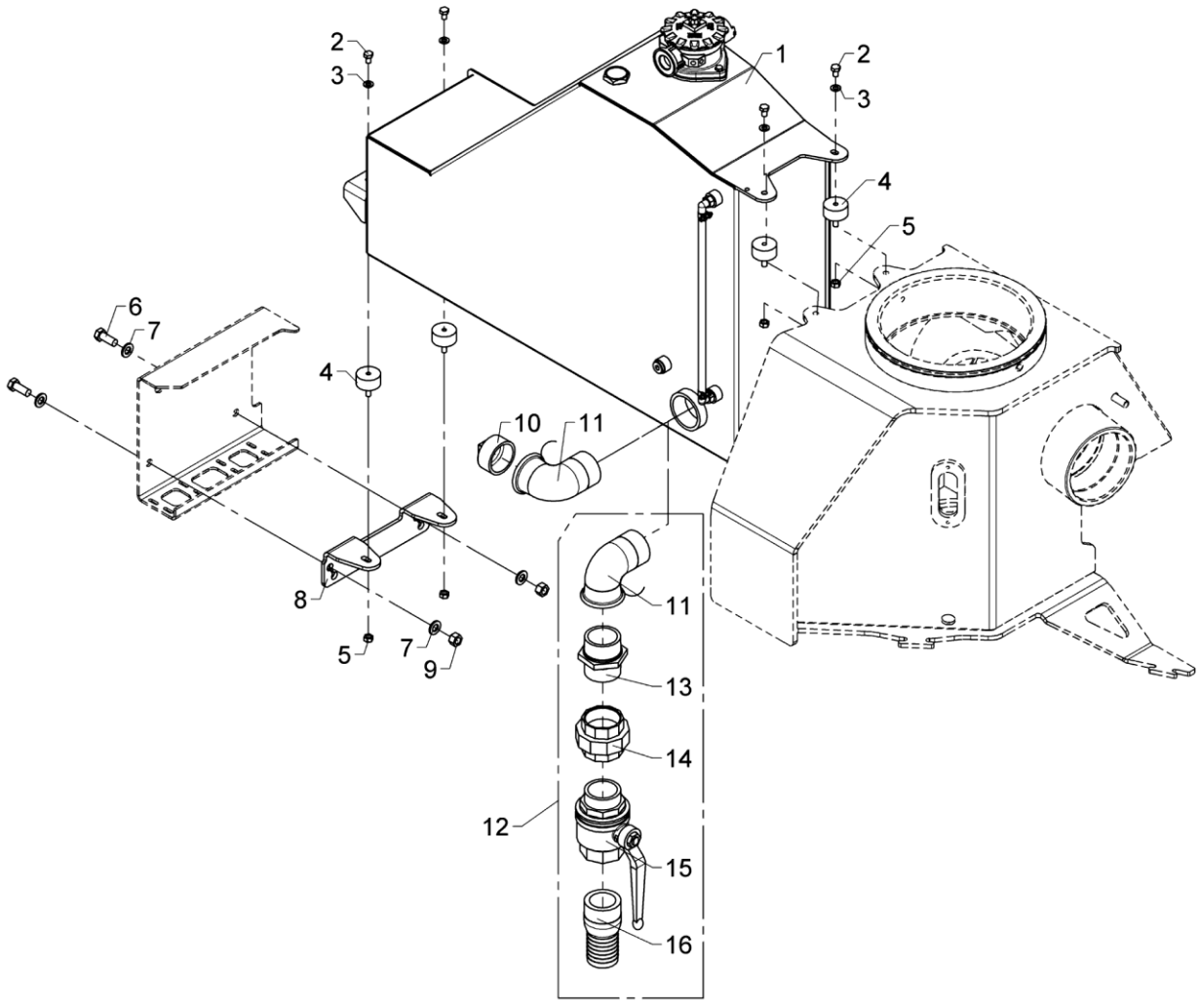

Obsolete

Tank incl. fittings

534 06 080

From loader 1060001
To loader 1061998

Created 19-01-2007
Modified 25-08-2008

Pos	Qty.	Part no.	Description	Remarks
1	1	6341580	Tank with fittings	
2	4	30130	Set screw, stainless	M8 x 12
3	4	31147	Face washer, 8 mm	8 mm
4	4	62000	Torsion balancer Type 2	
5	4	30856	Nut, stainless	M8
6	2	30177	Set screw	M12 x 30
7	4	32338	Washer	12 mm
8	1	6340537	Mounting fittings	
9	2	30860	Nut, stainless	M12
10	1	25398	Plug	
11	2	25430	Elbow	
12	1	6395290	Ball valve for tank	
13	1	25342	Hexagon nipple	2"
14	1	25595	Union nut 2"	
15	1	58787	3-way ball valve	2"
16	1	60991	Nipple	CN 200 / HMF

1500K, 1510K, 1720K, 1730K, 1820K, 1830K

63 95 290
Internal ref. 63 47 500

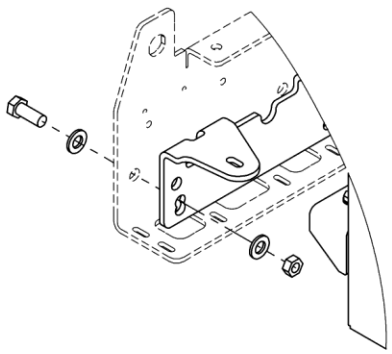

Placement of mounting brackets 6340557
1300K/1730K

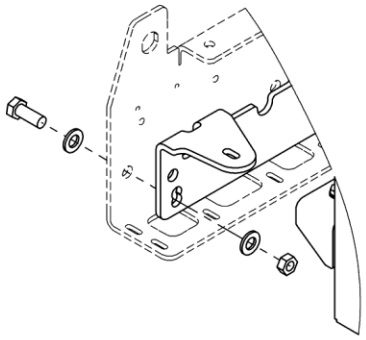

Placement of mounting brackets 6340557
1800K/2430K

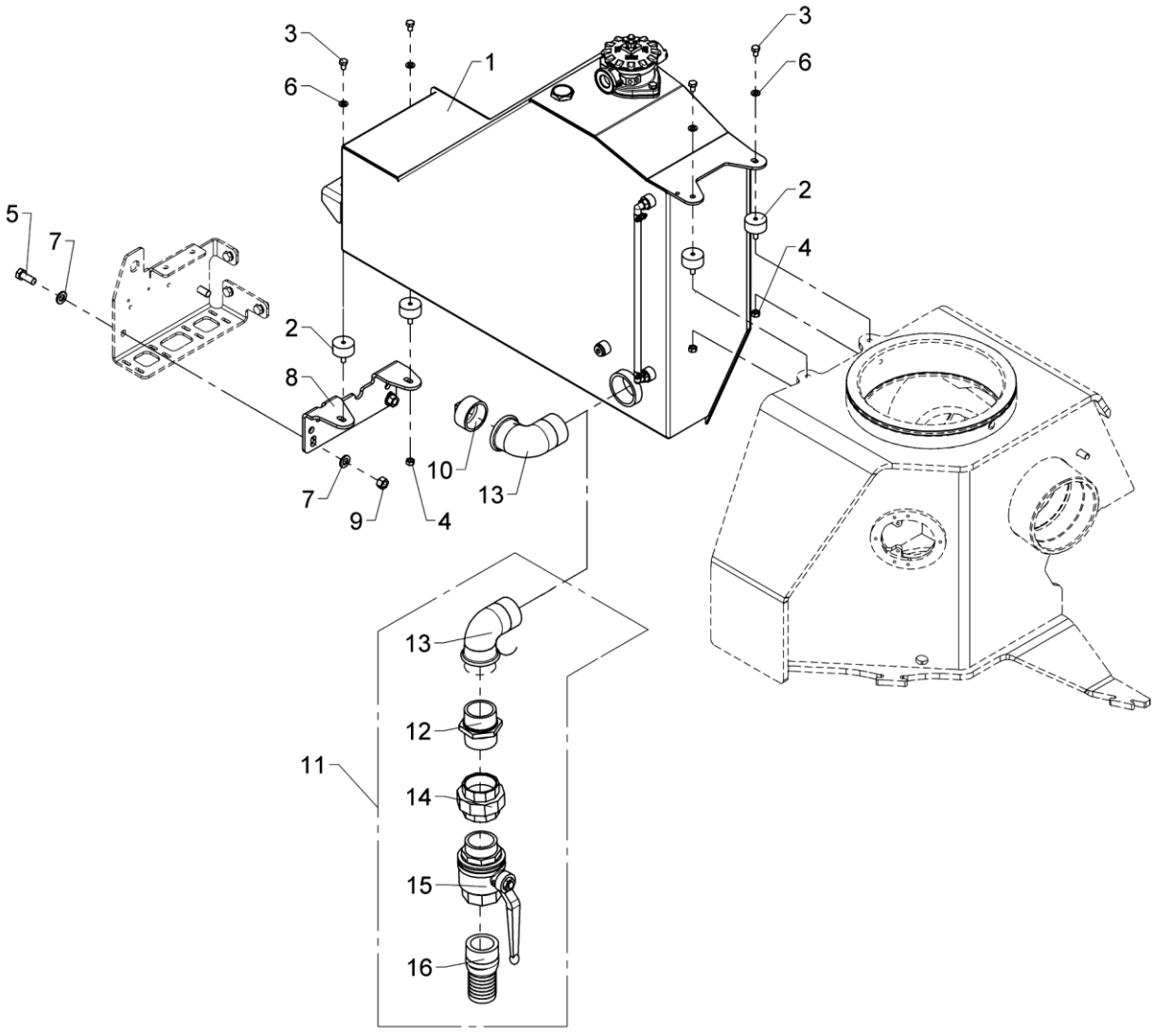

Tank incl. fittings, (90L)

534 06 080 A

From loader 1061999
To loader

Created 12-10-2017
Modified 05-04-2019

Pos	Qty.	Part no.	Description	Remarks
1	1	6341580	Tank with fittings	
2	4	62000	Torsion balancer Type 2	
3	4	30130	Set screw, stainless	M8 x 12
4	4	30856	Nut, stainless	M8
5	2	30177	Set screw	M12 x 30
6	4	31147	Face washer, 8 mm	
7	4	32338	Washer	12 mm
8	1	6340557	Mounting fittings	
9	2	30860	Nut, stainless	M12
10	1	25398	Plug	
11	1	6395290	Ball valve for tank	
12	1	25342	Hexagon nipple	2"
13	2	25430	Elbow	
14	1	25595	Union nut 2"	
15	1	58787	3-way ball valve	2"
16	1	60991	Nipple	CN 200 / HMF

1500K, 1510K, 1720K, 1730K, 1820K, 1830K

Internal ref. 63 47 540

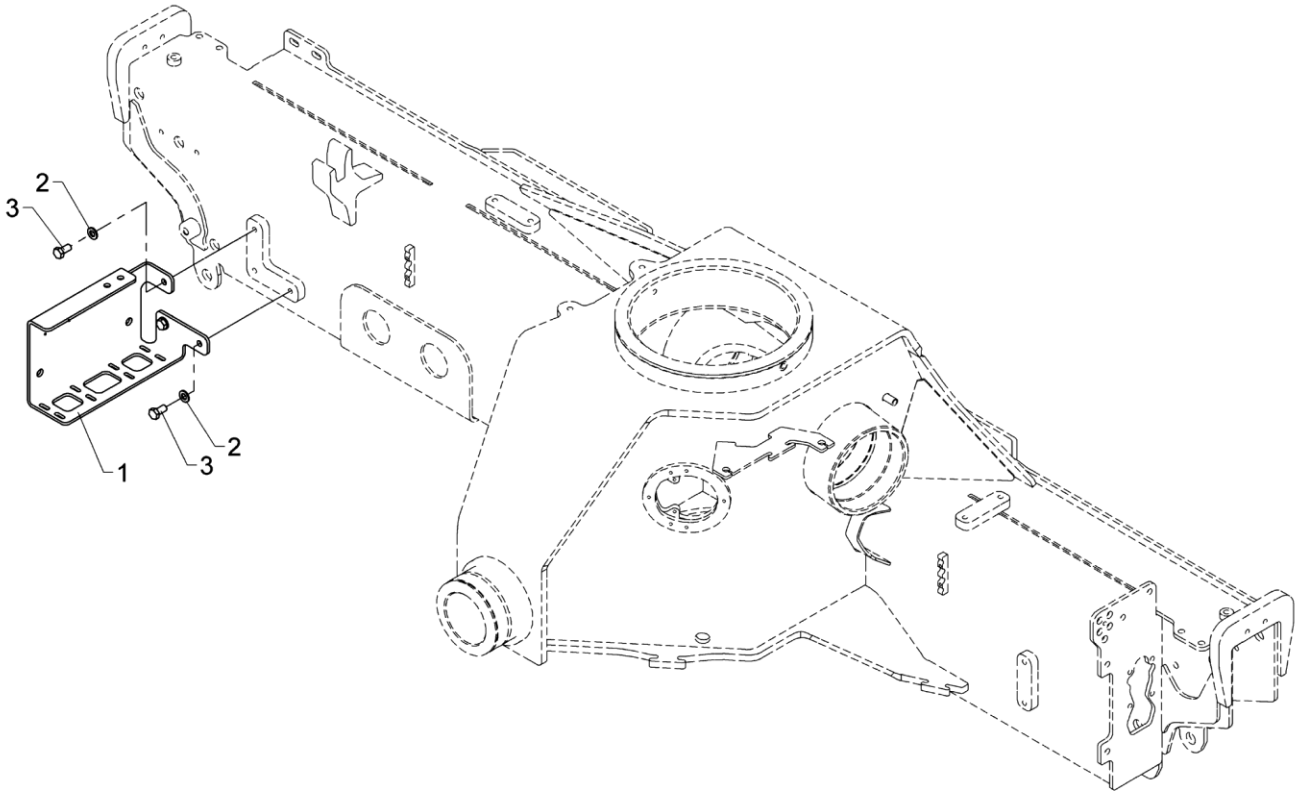

Tank bracket

534 06 095

From loader 1061997
To loader

Created 12-10-2017
Modified

Pos	Qty.	Part no.	Description	Remarks
1	1	6340587	Tank bracket	
2	3	31177	Washer	10 mm
3	3	31517	Set screw, stainless	M10 x 20

1500K, 1510K, 1720K, 1730K, 1820K, 1830K

63 42 220
Internal ref. 63 42 110

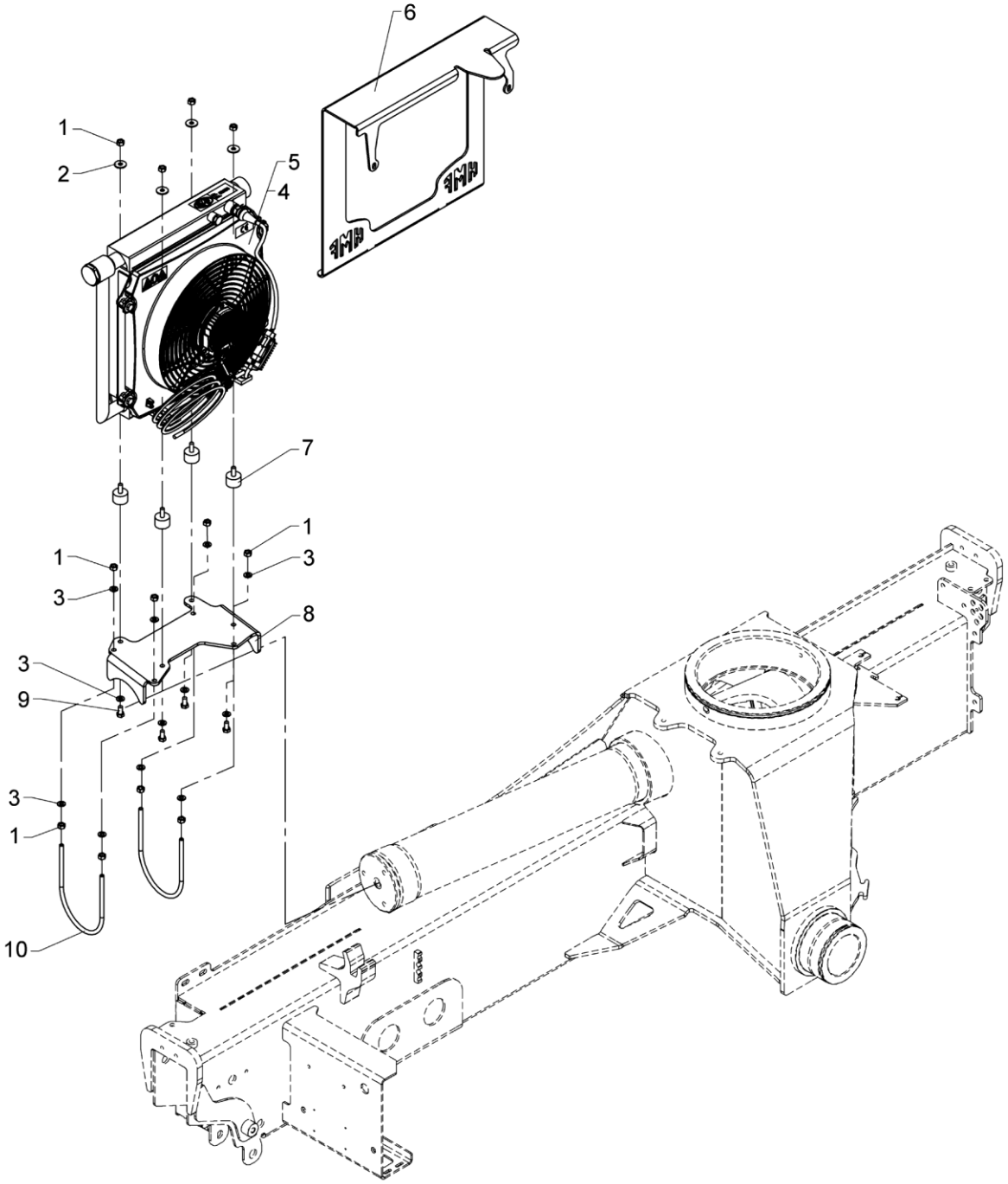

Obsolete

Oil cooler

534 06 100

From loader 1060001
To loader 1062067

Created 10-08-2007
Modified 02-03-2016

Pos	Qty.	Part no.	Description	Remarks
		6342110	Oil cooler, complete	
		6342220		
1	12	30856	Nut, stainless	M8
2	4	31136	Washer, stainless	8 mm
3	12	31147	Face washer, 8 mm	
4	1	50272	Oil cooler, 24 V + Smartdrive	
5	1	50273	Oil cooler 12 V + Smartdrive	
6	1	6340928	Protection plate	
7	4	44263	Torsion balancer Type 2	
8	1	6340047	Cooler bracket	
9	4	30131	Set screw, stainless	M8 x 16
10	2	6340458	Clamp	

1500K, 1510K, 1720K, 1730K, 1820K, 1830K

63 47 810
Internal ref. 63 47 800

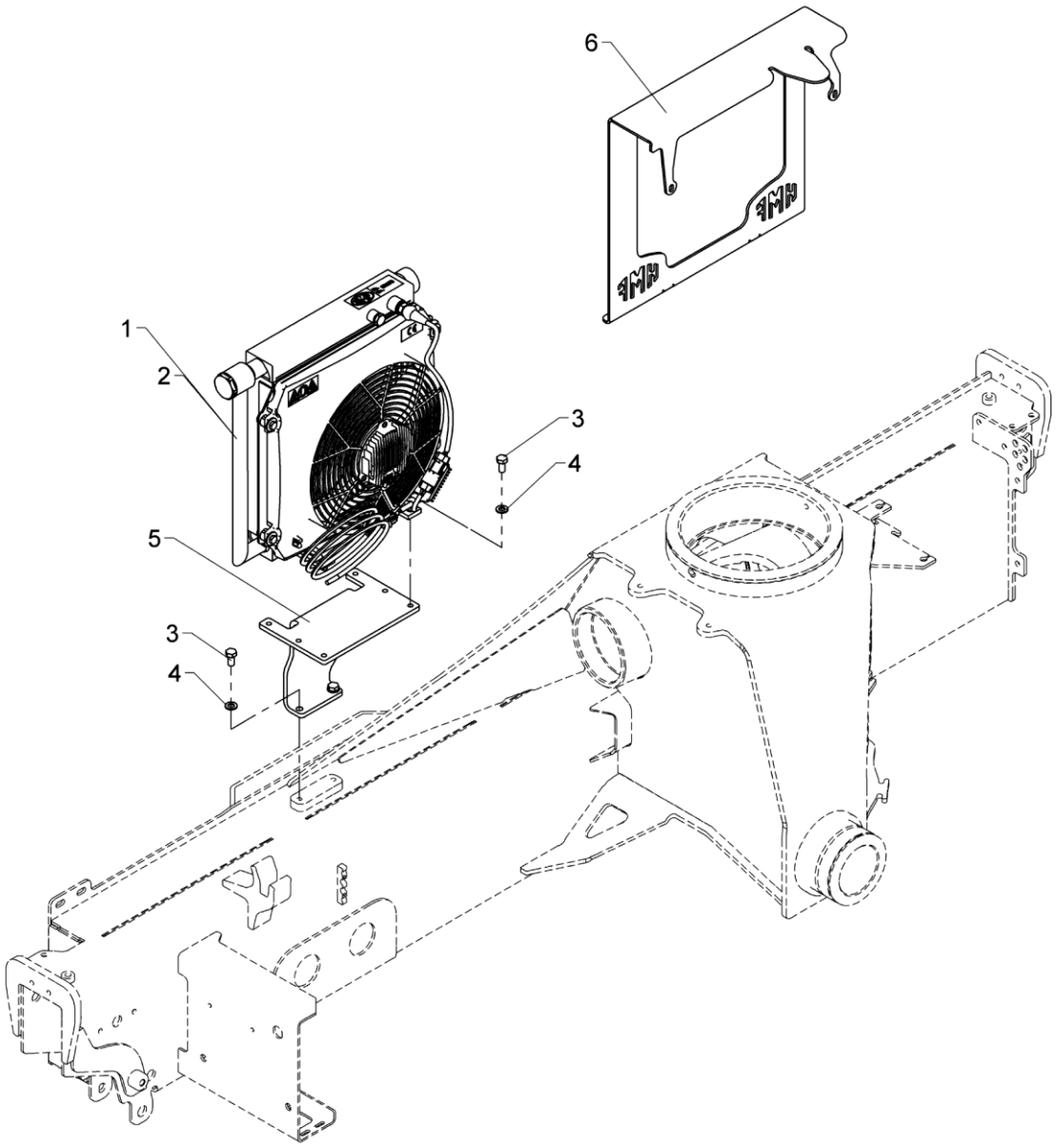

Oil cooler

Pos	Qty.	Part no.	Description	Remarks
		6347800		
		6347810		
1	1	50272	Oil cooler, 24 V + Smartdrive	63 47 810
2	1	50273	Oil cooler 12 V + Smartdrive	63 47 800
3	6	31517	Set screw, stainless	M10 x 20
4	6	31565	Washer, stainless	10 mm
5	1	6354757	Cooler bracket	
6	1	6340928	Protection plate	

1500K, 1510K, 1720K, 1730K, 1820K, 1830K

Internal ref. 63 40 550

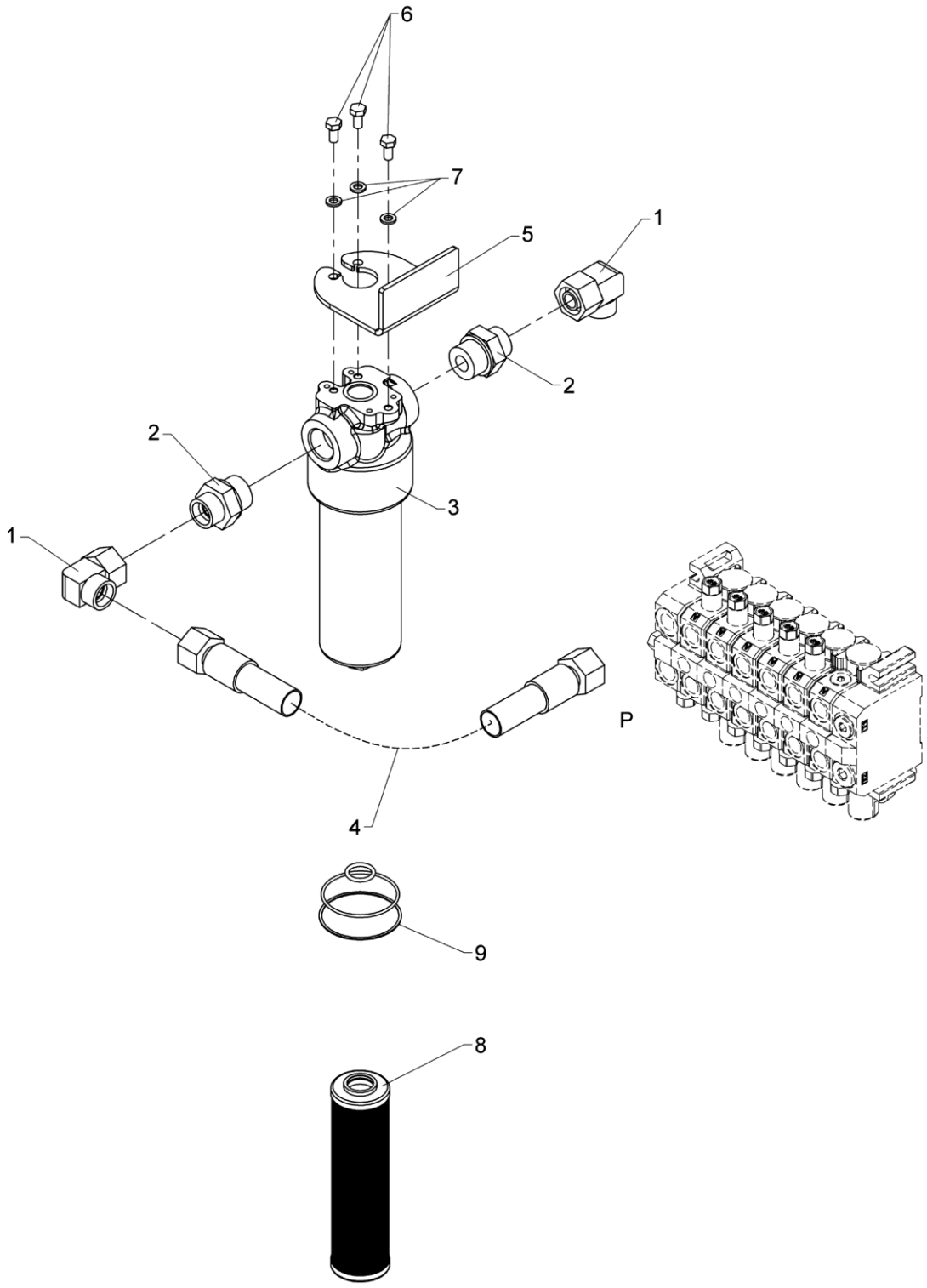

High-pressure filter

Pos	Qty.	Part no.	Description	Remarks
1	2	26198	Elbow connection	EWVD 20 S-SV
2	2	26851	Connection	GES 20 SR 1-WD
3	1	49401	High pressure filter	
4	1	62626	Hose	
5	1	6882974	Bracket, high pressure filter	
6	3	30131	Set screw, stainless	M8 x 16
7	3	31155	Spring washer	8 mm
8	1	49402	Filter	
9	1	49417	Seal kit	

1500K, 1510K, 1720K, 1730K, 1820K, 1830K

66 51 390
66 51 360
Internal ref. 66 51 330

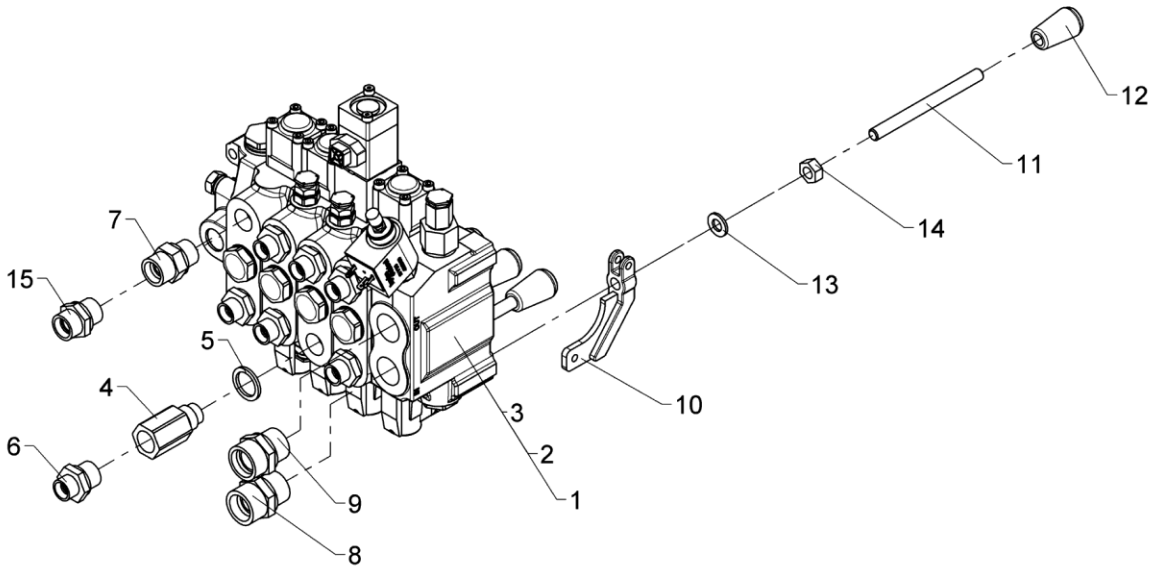

Obsolete

Valve block, 4 sects. HC-D4

534 06 200

From loader 1060001
To loader 1061516

Created 19-11-2008
Modified 08-02-2012

Pos	Qty.	Part no.	Description	Remarks
		6651330	Valve block, 4 sect./HCD4-CE	
		6651360	Valve block, 4 sect./HCD4	
		6651390	Valve block, 4 sect./HCD4_2.1	
1	1	55256	Valve block, complete	6651330
2	1	55259	Valve block, complete	6651360
3	1	55274	Valve block, complete	6651390
4	1	60295	Flow-control valve	
5	1	21106	Seal washer	ø21,5 x 28,7 x 2,5
6	7	25108	Connection	GES 12 LR 1/2-WD
7	1	26334	Connection	P-GEV 16 SR-WD
8	1	26197	Connection	P-GEV 20 SR-WD
9	1	25169	Connection	P-GEV 22 LR-WD
10	4	63499	Adapter	
11	4	6340245	Control valve lever	
12	4	64411	Knob for lever	
13	4	31565	Washer, stainless	10 mm
14	4	30858	Nut	M10
15	1	25143	Connection	P-GEV 15 LR-WD

1500K, 1510K, 1720K, 1730K, 1820K, 1830K

66 52 510
66 52 480
Internal ref. 66 52 450

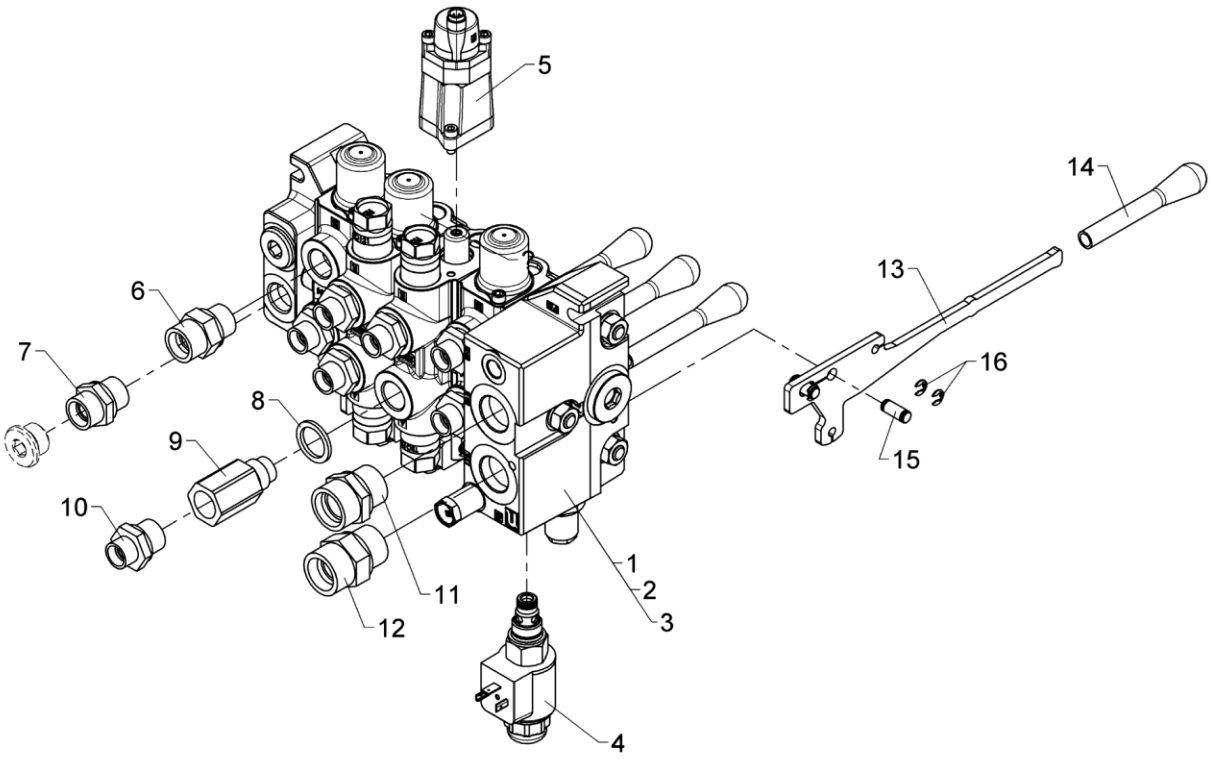

Valve block, 4 sects. NH-RS210

Pos	Qty.	Part no.	Description	Remarks
		6652450		
		6652480		
		6652510		
1	1	55129	Valve block, complete	6652450
2	1	55126	Valve block, complete	6652480
3	1	55132	Valve block, complete	6652510
4	1	69531	Relief valve	
5	1	69530	Spool sensor	
		69627	Repair kit SM 1/2/3/4/5	
6	1	26334	Connection	P-GEV 16 SR-WD
7	1	25143	Connection	P-GEV 15 LR-WD
8	1	21106	Seal washer	ø21,5 x 28,7 x 2,5
9	1	60295	Flow-control valve	
10	7	25108	Connection	GES 12 LR 1/2-WD
11	1	25169	Connection	P-GEV 22 LR-WD
12	1	26197	Connection	P-GEV 20 SR-WD
13	4	6882053	Control lever, long	
14	4	48406	Knob	
15	8	61364	Pin	
16	16	61320	Lock for pin	

1500K, 1510K, 1720K, 1730K, 1820K, 1830K

66 51 400
66 51 370
Internal ref. 66 51 340

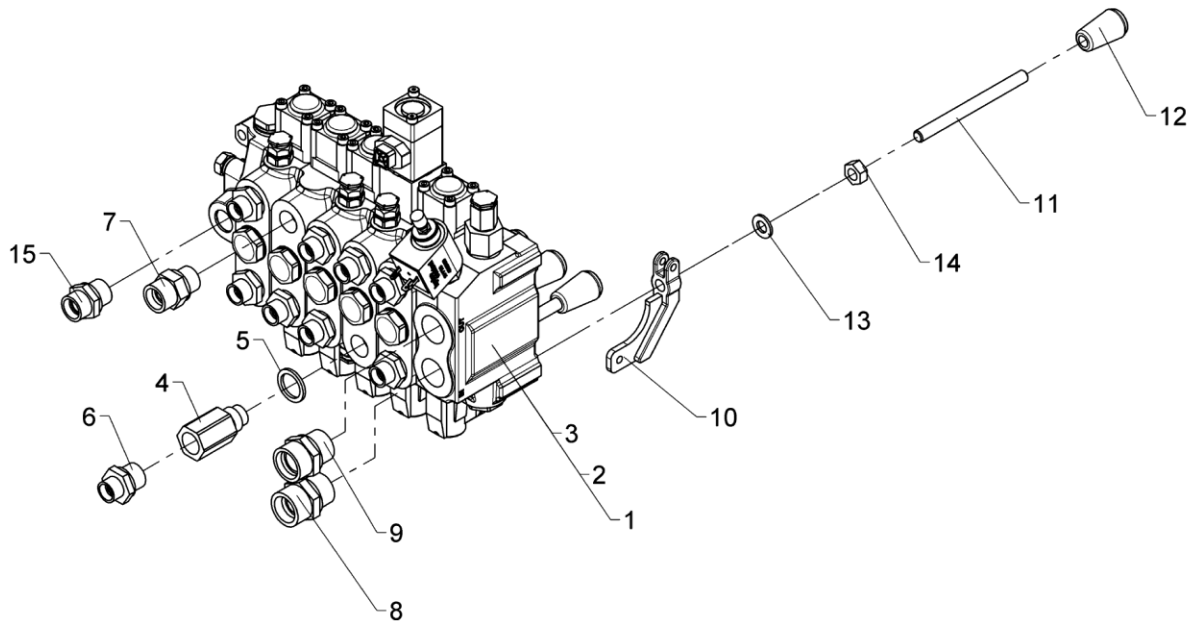

Obsolete

Valve block, 5 sects. HC-D4

534 06 210

From loader 1060001
To loader 1061758

Created 19-11-2008
Modified 08-02-2012

Pos	Qty.	Part no.	Description	Remarks
		6651340	Valve block, 5 sect./HCD4-CE	
		6651370	Valve block, 5 sect./HCD4	
		6651400	Valve block,5 sect./HCD4-CE2.1	
1	1	55257	Valve block, complete	6651340
2	1	55260	Valve block, complete	6651370
3	1	55272	Valve block, complete	6651400
4	1	60295	Flow-control valve	
5	1	21106	Seal washer	ø21,5 x 28,7 x 2,5
6	9	25108	Connection	GES 12 LR 1/2-WD
7	1	26334	Connection	P-GEV 16 SR-WD
8	1	26197	Connection	P-GEV 20 SR-WD
9	1	25169	Connection	P-GEV 22 LR-WD
10	5	63499	Adapter	
11	5	6340245	Control valve lever	
12	5	64411	Knob for lever	
13	5	31565	Washer, stainless	10 mm
14	5	30858	Nut	M10
15	1	25143	Connection	P-GEV 15 LR-WD

1500K, 1510K, 1720K, 1730K, 1820K, 1830K

66 52 520
66 52 490
Internal ref. 66 52 460

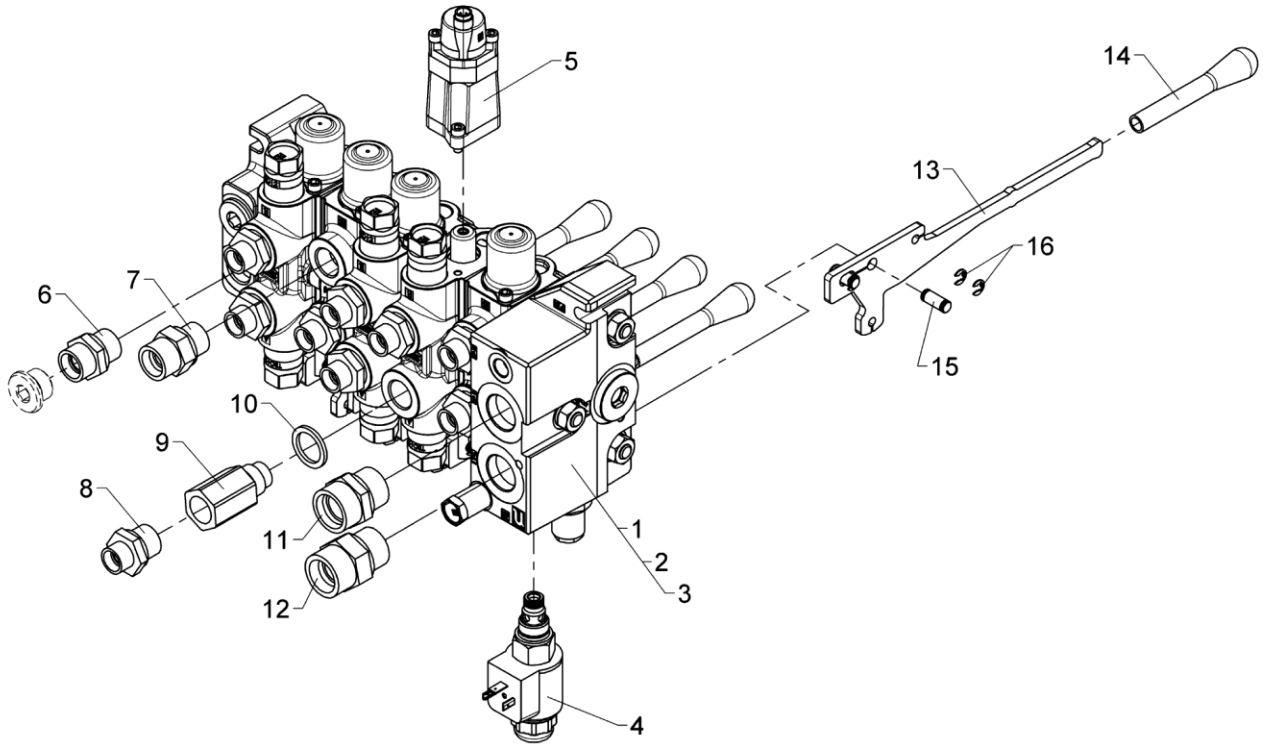

Valve block, 5 sects. NH-RS210

Pos	Qty.	Part no.	Description	Remarks
		6652460		
		6652490		
		6652520		
1	1	55130	Valve block, complete	
2	1	55127	Valve block, complete	
3	1	55133	Valve block, complete	
4	1	69531	Relief valve	
5	1	69530	Spool sensor	
		69627	Repair kit SM 1/2/3/4/5	
6	1	25143	Connection	P-GEV 15 LR-WD
7	1	26334	Connection	P-GEV 16 SR-WD
8	9	25108	Connection	GES 12 LR 1/2-WD
9	1	60295	Flow-control valve	
10	1	21106	Seal washer	ø21,5 x 28,7 x 2,5
11	1	25169	Connection	P-GEV 22 LR-WD
12	1	26197	Connection	P-GEV 20 SR-WD
13	5	6882053	Control lever, long	
14	5	48406	Knob	
15	10	61364	Pin	
16	20	61320	Lock for pin	

1500K, 1510K, 1720K, 1730K, 1820K, 1830K

66 51 380
66 51 350
Internal ref. 66 51 320

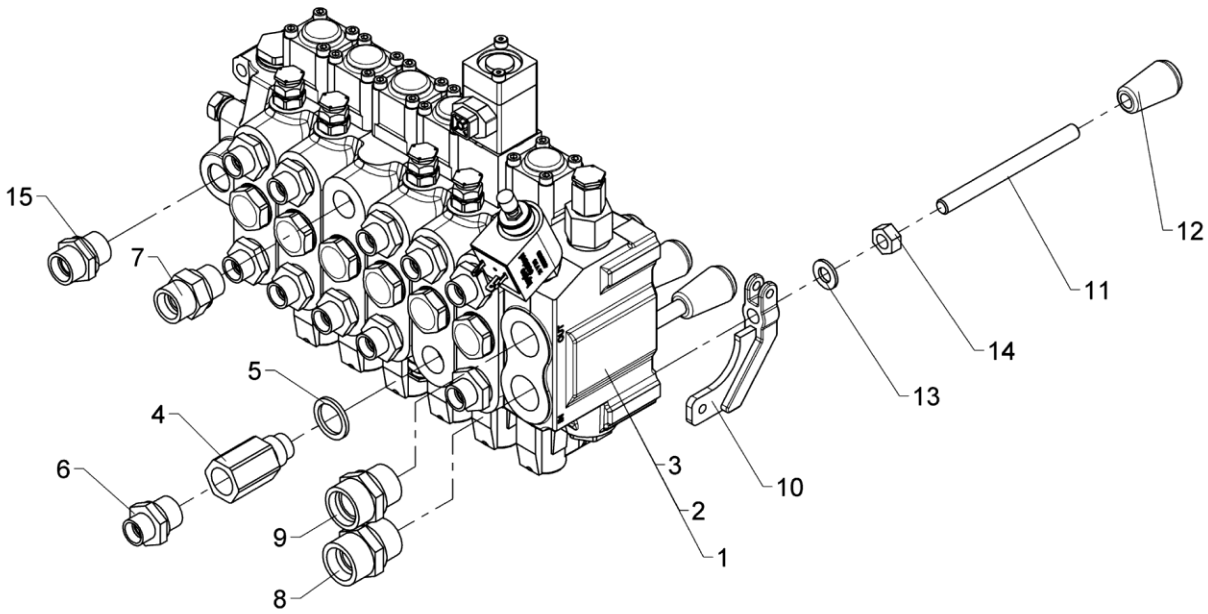

Obsolete

Valve block, 6 sects. HC-D4

534 06 220

From loader 1060001
To loader 1061566

Created 19-11-2008
Modified 08-02-2012

Pos	Qty.	Part no.	Description	Remarks
		6651320	Valve block, 6 sect./HCD4-CE	
		6651350	Valve block, 6 sect./HCD4	
		6651380	Valve block,6 sect./HCD4-CE2.1	
1	1	55255	Valve block, complete	6651320
2	1	55258	Valve block, complete	6651350
3	1	55273	Valve block, complete	6651380
4	1	60295	Flow-control valve	
5	1	21106	Seal washer	ø21,5 x 28,7 x 2,5
6	11	25108	Connection	GES 12 LR 1/2-WD
7	1	26334	Connection	P-GEV 16 SR-WD
8	1	26197	Connection	P-GEV 20 SR-WD
9	1	25169	Connection	P-GEV 22 LR-WD
10	6	63499	Adapter	
11	6	6340245	Control valve lever	
12	6	64411	Knob for lever	
13	6	31565	Washer, stainless	10 mm
14	6	30858	Nut	M10
15	1	25143	Connection	P-GEV 15 LR-WD

1500K, 1510K, 1720K, 1730K, 1820K, 1830K

66 52 530
66 52 500
Internal ref. 66 52 470

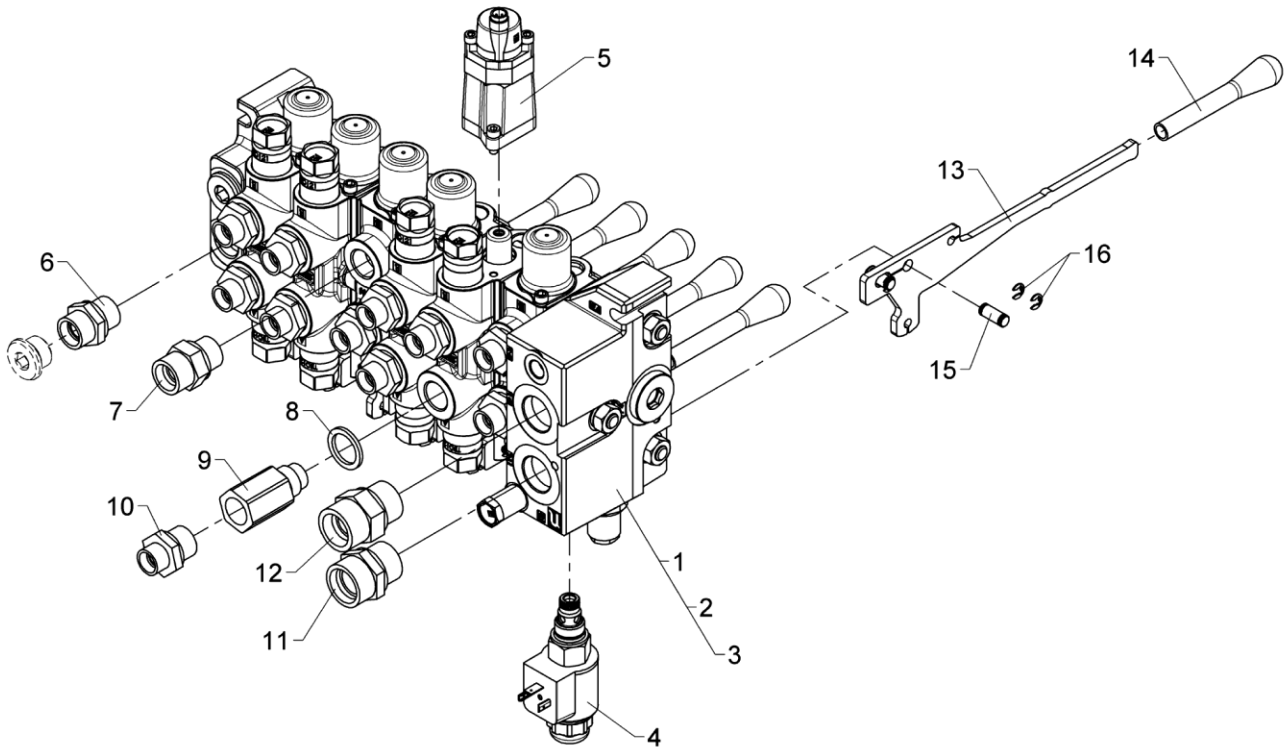

Valve block, 6 sects. NH-RS210

Pos	Qty.	Part no.	Description	Remarks
		6652470		
		6652500		
		6652530		
1	1	55131	Valve block, complete	6652470
2	1	55128	Valve block, complete	6652500
3	1	55134	Valve block, complete	6652530
4	1	69531	Relief valve	
5	1	69530	Spool sensor	
		69627	Repair kit SM 1/2/3/4/5	
6	1	25143	Connection	P-GEV 15 LR-WD
7	1	26334	Connection	P-GEV 16 SR-WD
8	1	21106	Seal washer	ø21,5 x 28,7 x 2,5
9	1	60295	Flow-control valve	
10	11	25108	Connection	GES 12 LR 1/2-WD
11	1	25169	Connection	P-GEV 22 LR-WD
12	1	26197	Connection	P-GEV 20 SR-WD
13	6	6882053	Control lever, long	
14	6	48406	Knob	
15	12	61364	Pin	
16	24	61320	Lock for pin	

1500K, 1510K, 1720K, 1730K, 1820K, 1830K

Internal ref. 66 51 420

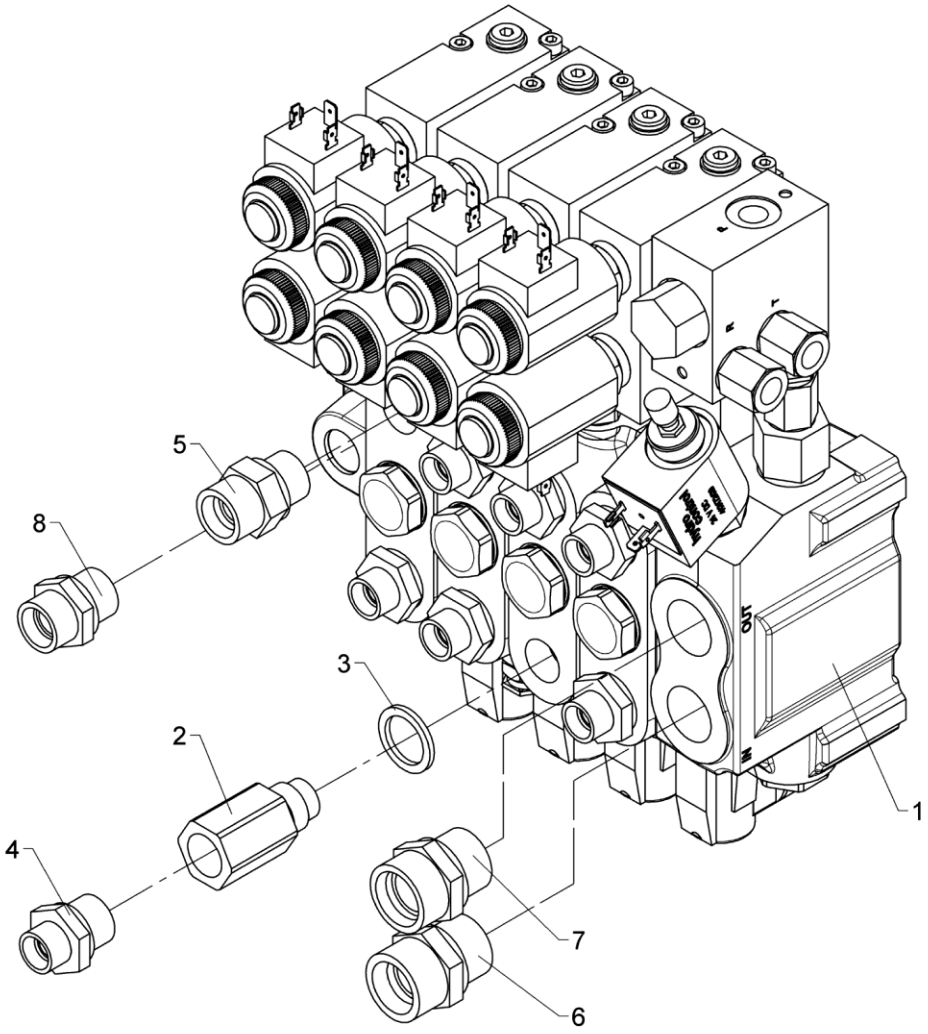

534 06 230

From loader 1060001
To loader

Valve block, 4 sects. HC-D4 NEM

Created 20-11-2008
Modified 08-02-2012

Pos	Qty.	Part no.	Description	Remarks
1	1	55266	Valve block, cpl. with NEM	
2	1	60295	Flow-control valve	
3	1	21106	Seal washer	ø21,5 x 28,7 x 2,5
4	7	25108	Connection	GES 12 LR 1/2-WD
5	1	26334	Connection	P-GEV 16 SR-WD
6	1	26197	Connection	P-GEV 20 SR-WD
7	1	25169	Connection	P-GEV 22 LR-WD
8	1	25143	Connection	P-GEV 15 LR-WD

1500K, 1510K, 1720K, 1730K, 1820K, 1830K

Internal ref. 66 51 430

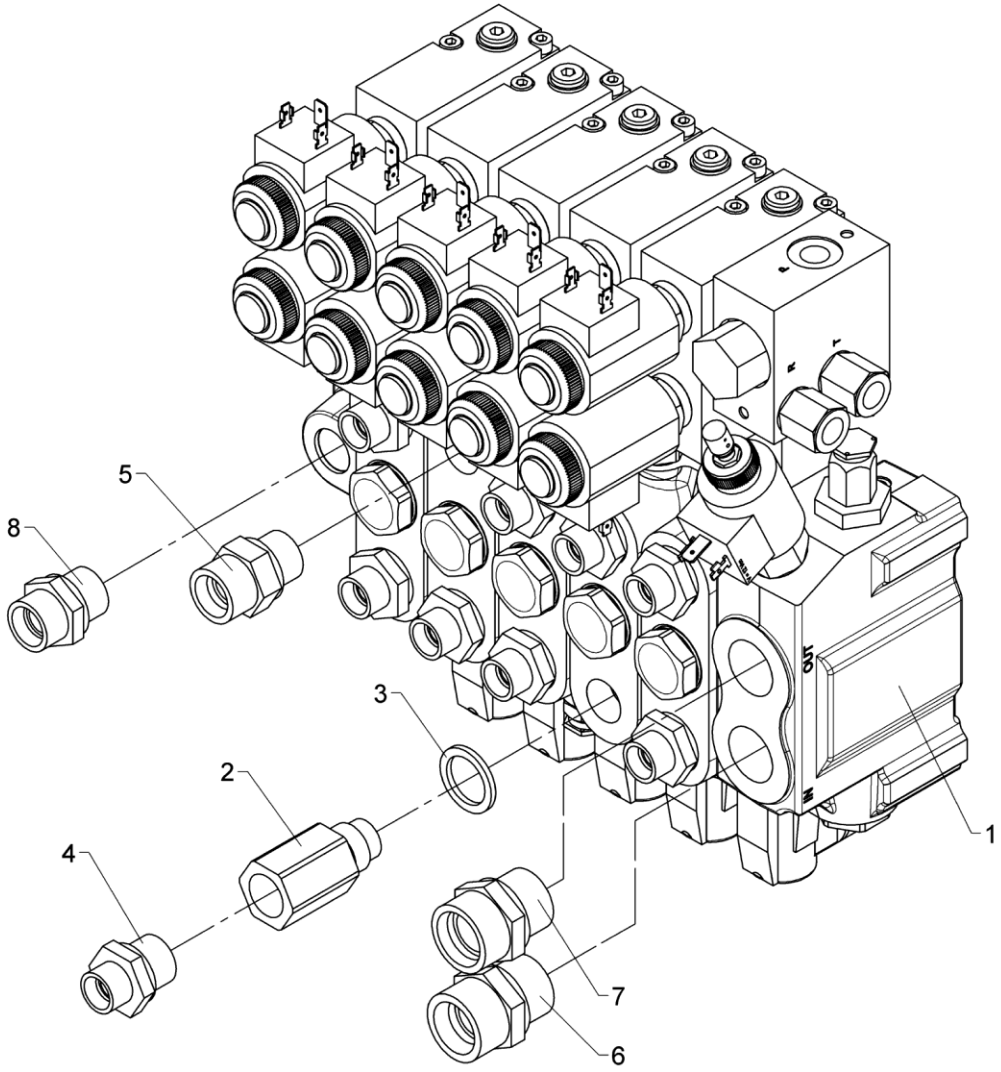

534 06 240

From loader 1060001
To loader

Valve block, 5 sects. HC-D4 NEM

Created 20-11-2008
Modified 08-02-2012

Pos	Qty.	Part no.	Description	Remarks
1	1	55267	Valve block, cpl. with NEM	
2	1	60295	Flow-control valve	
3	1	21106	Seal washer	ø21,5 x 28,7 x 2,5
4	9	25108	Connection	GES 12 LR 1/2-WD
5	1	26334	Connection	P-GEV 16 SR-WD
6	1	26197	Connection	P-GEV 20 SR-WD
7	1	25169	Connection	P-GEV 22 LR-WD
8	1	25143	Connection	P-GEV 15 LR-WD

1500K, 1510K, 1720K, 1730K, 1820K, 1830K

Internal ref. 66 51 410

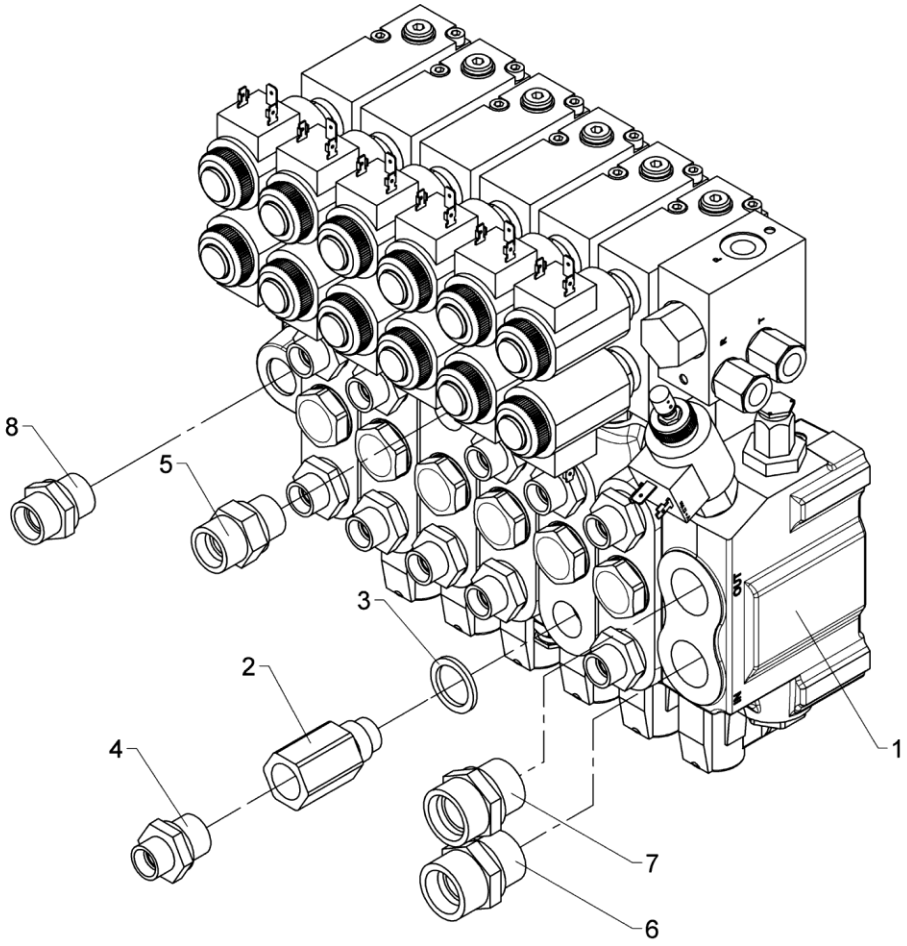

534 06 250

From loader 1060001
To loader

Valve block, 6 sects. HC-D4 NEM

Created 20-11-2008
Modified 08-02-2012

Pos	Qty.	Part no.	Description	Remarks
1	1	55265	Valve block, cpl. with NEM	
2	1	60295	Flow-control valve	
3	1	21106	Seal washer	ø21,5 x 28,7 x 2,5
4	11	25108	Connection	GES 12 LR 1/2-WD
5	1	26334	Connection	P-GEV 16 SR-WD
6	1	26197	Connection	P-GEV 20 SR-WD
7	1	25169	Connection	P-GEV 22 LR-WD
8	1	25143	Connection	P-GEV 15 LR-WD

1500K, 1510K, 1720K, 1730K, 1820K, 1830K

Internal ref. 66 51 440

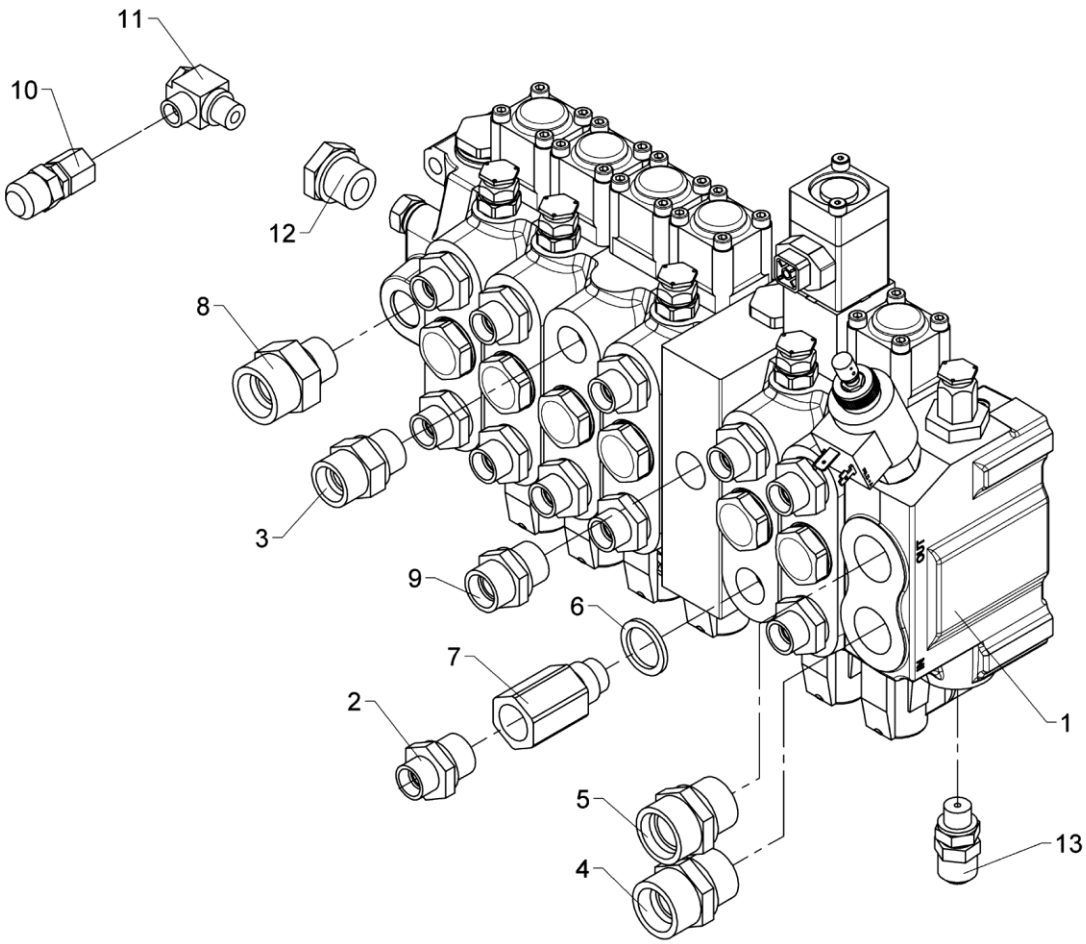

Valve block, 6 sect./HCD4/2+4 CE

Pos	Qty.	Part no.	Description	Remarks
1	1	55290	Valve black, dual circuit	
2	11	25108	Connection	GES 12 LR 1/2-WD
3	1	26334	Connection	P-GEV 16 SR-WD
4	1	26197	Connection	P-GEV 20 SR-WD
5	1	25169	Connection	P-GEV 22 LR-WD
6	1	21106	Seal washer	ø21,5 x 28,7 x 2,5
7	1	60295	Flow-control valve	
8	1	26221	Connection	P-GEV 20 SR 1/2-WD
9	1	25143	Connection	P-GEV 15 LR-WD
10	1	26148	Connection	
11	1	25113	Banjo connection	RSWV 8 LR
12	1	25180	Reducing connection	RED-R 1/2-WD/R 1/4
13	1	26103	Pressure-gauge connect.	

1500K, 1510K, 1720K, 1730K, 1820K, 1830K

Internal ref. 66 51 450

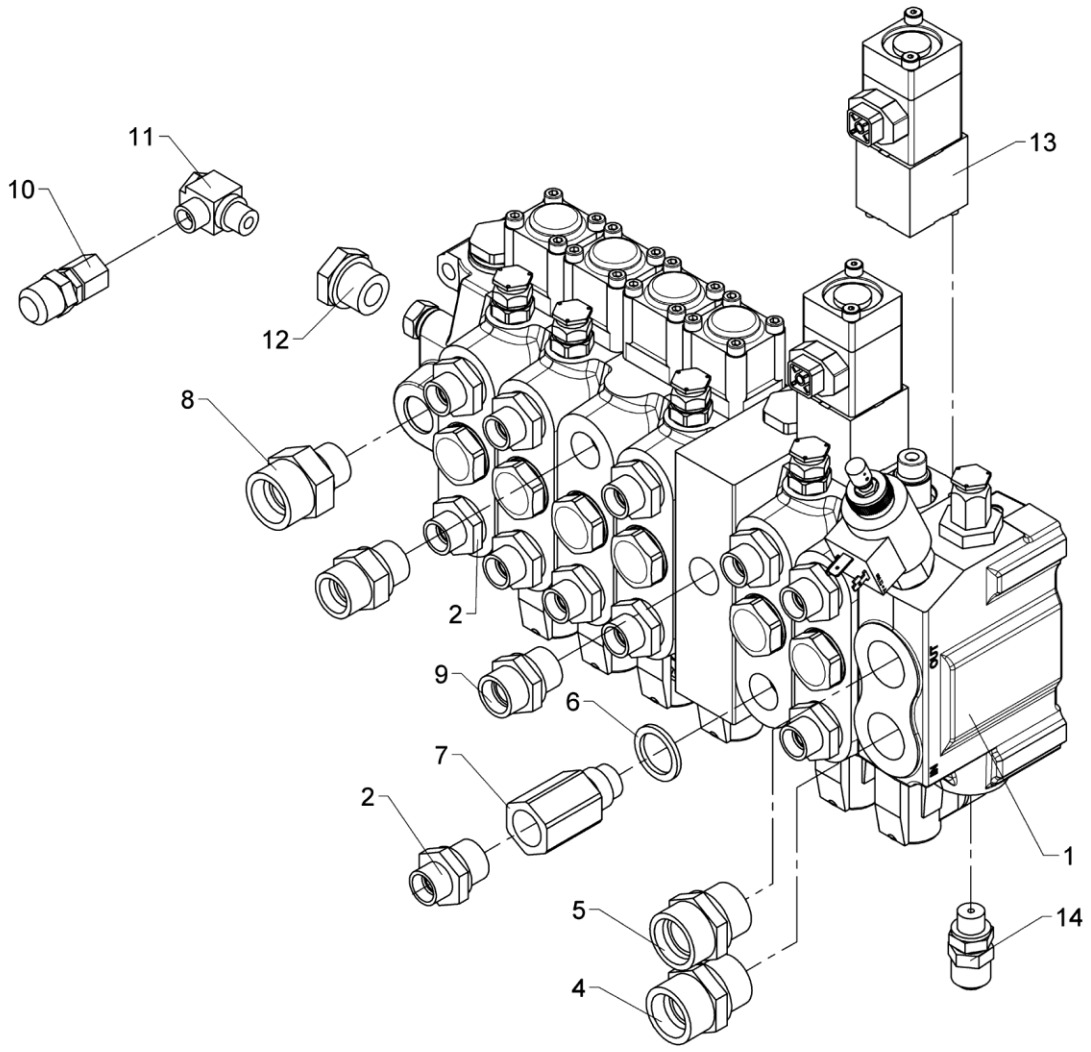

Valve block, 6 sect./HCD4/2+4 CE2.1

Pos	Qty.	Part no.	Description	Remarks
1	1	55290	Valve black, dual circuit	
2	11	25108	Connection	GES 12 LR 1/2-WD
3	1	26334	Connection	P-GEV 16 SR-WD
4	1	26197	Connection	P-GEV 20 SR-WD
5	1	25169	Connection	P-GEV 22 LR-WD
6	1	21106	Seal washer	ø21,5 x 28,7 x 2,5
7	1	60295	Flow-control valve	
8	1	26221	Connection	P-GEV 20 SR 1/2-WD
9	1	25143	Connection	P-GEV 15 LR-WD
10	1	26148	Connection	
11	1	25113	Banjo connection	RSWV 8 LR
12	1	25180	Reducing connection	RED-R 1/2-WD/R 1/4
13	1	55371	Spool sensor	
14	1	26103	Pressure-gauge connect.	

1500K, 1510K, 1720K, 1730K, 1820K, 1830K

66 52 440
66 51 560
66 51 550
Internal ref. 66 51 540

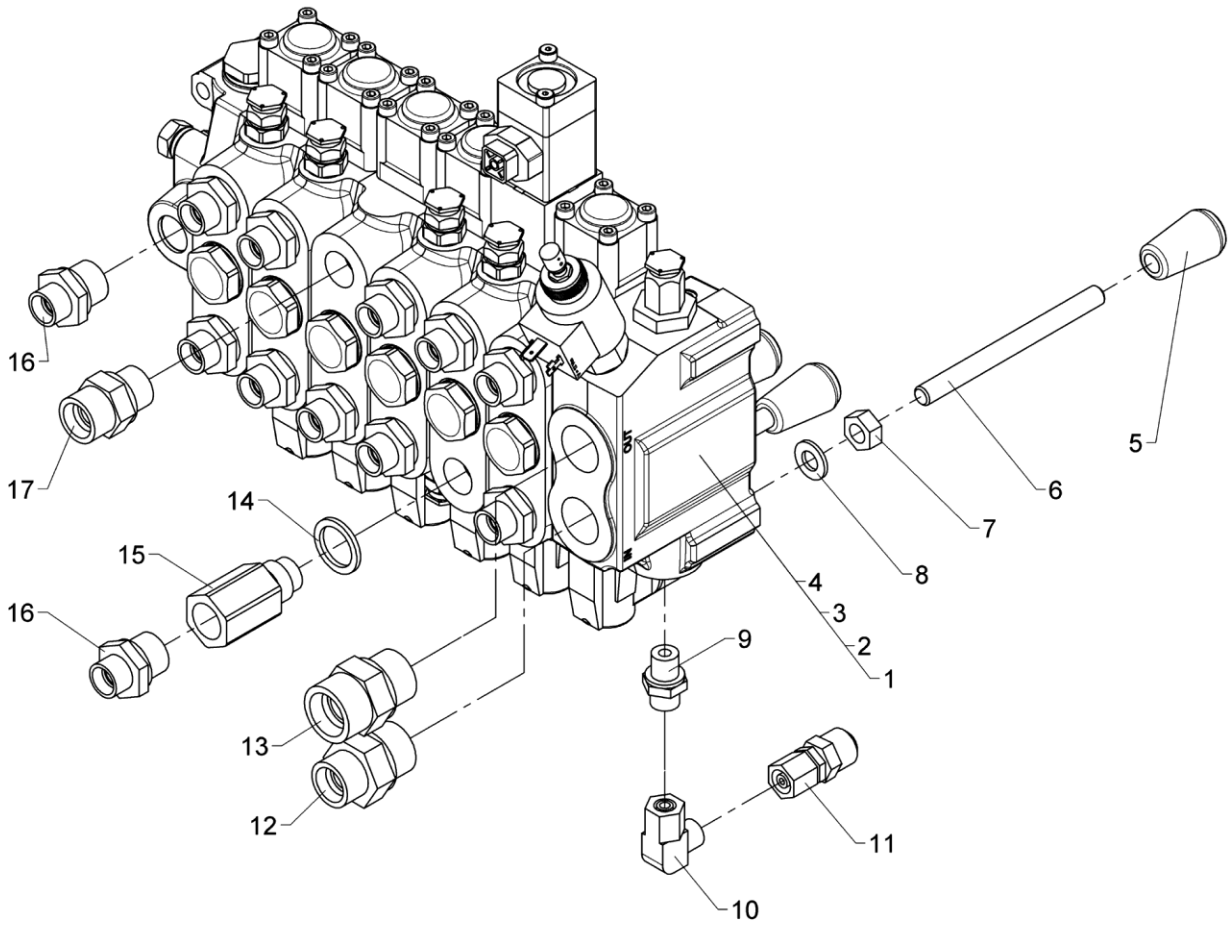

Obsolete

Valve block, 6 sect. HC-D4

534 06 280

From loader 1060001
To loader 1061566

Created 20-11-2008
Modified 11-02-2015

Pos	Qty.	Part no.	Description	Remarks
		6651540	Valve block, 6 sect./HCD4-CE	
		6651550	Valve block, 6 sect./HCD4	
		6651560	Valve bl., 6 sec./HCD4-CE2.1	
		6652440		
1	1	55255	Valve block, complete	
2	1	55258	Valve block, complete	
3	1	55273	Valve block, complete	
4	1	55721	Valve block, complete	
5	6	64411	Knob for lever	
6	6	6340245	Control valve lever	
7	6	30858	Nut	M10
8	6	31565	Washer, stainless	10 mm
9	1	25109	Connection	GES 8 LR-WD
10	1	26170	Elbow connection	EWSD 8 L
11	1	26148	Connection	
12	1	26390	Connection	P-GEV 16 SR 3/4-WD
13	1	26197	Connection	P-GEV 20 SR-WD
14	1	21106	Seal washer	ø21,5 x 28,7 x 2,5
15	1	60295	Flow-control valve	
16	12	25108	Connection	GES 12 LR 1/2-WD
17	1	26334	Connection	P-GEV 16 SR-WD

1500K, 1510K, 1720K, 1730K, 1820K, 1830K

66 52 710
66 52 700
66 52 690
Internal ref. 66 52 680

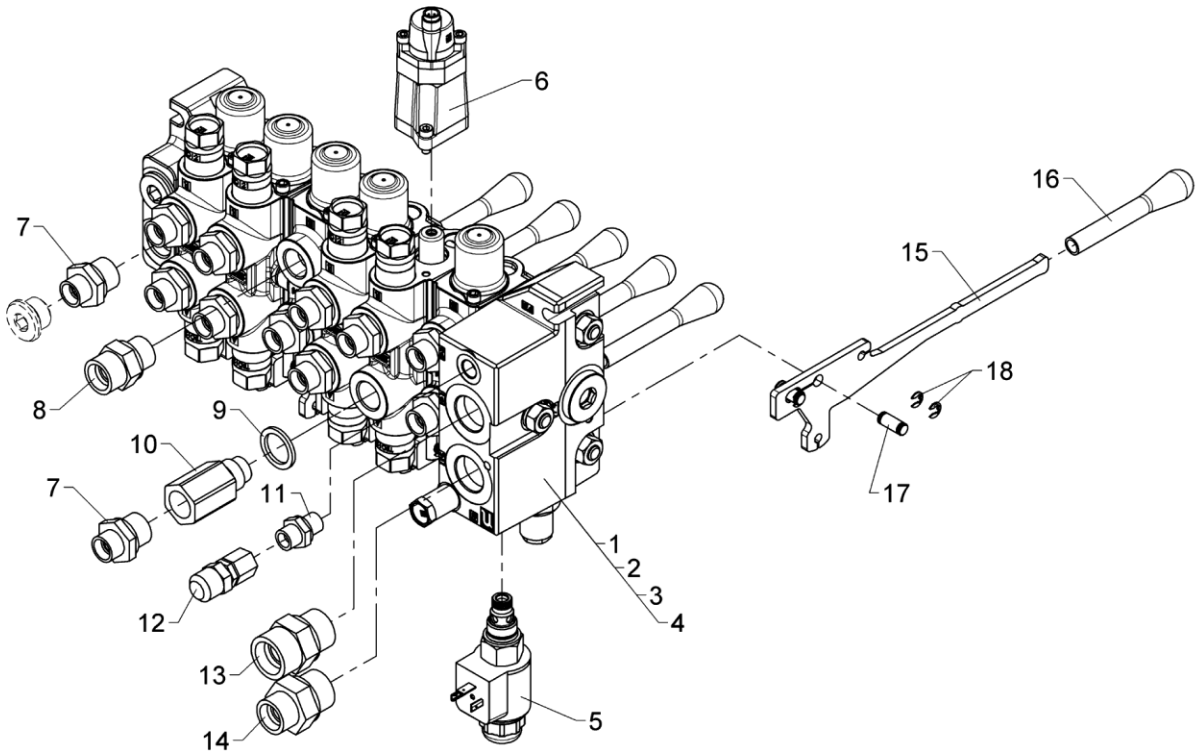

Valve block, 6 sects. NH-RS210

Pos	Qty.	Part no.	Description	Remarks
		6652680		
		6652690		
		6652700		
		6652710		
1	1	55131	Valve block, complete	6652680
2	1	55128	Valve block, complete	6652690
3	1	55134	Valve block, complete	6652700
4	1	55137	Valve block, complete	6652710
5	1	69531	Relief valve	
6	1	69530	Spool sensor	
		69627	Repair kit SM 1/2/3/4/5	
7	12	25108	Connection	GES 12 LR 1/2-WD
8	1	26334	Connection	P-GEV 16 SR-WD
9	1	21106	Seal washer	ø21,5 x 28,7 x 2,5
10	1	60295	Flow-control valve	
11	1	25109	Connection	GES 8 LR-WD
12	1	26148	Connection	
13	1	26197	Connection	P-GEV 20 SR-WD
14	1	26390	Connection	P-GEV 16 SR 3/4-WD
15	6	6882053	Control lever, long	
16	6	48406	Knob	
17	12	61364	Pin	
18	24	61320	Lock for pin	

1500K, 1510K, 1720K, 1730K, 1820K, 1830K

Internal ref. 66 51 570

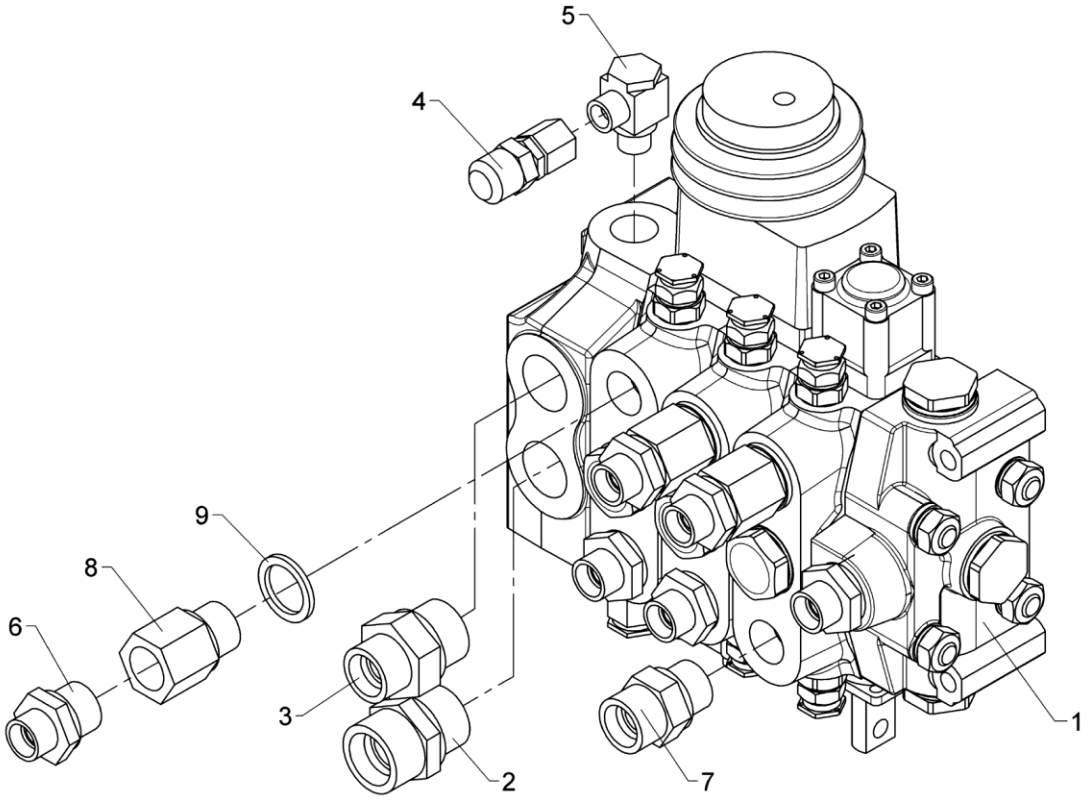

534 06 290

From loader 1060001
To loader
Created
Modified

Valve block left, 3 sects. HC-D4 TS

Pos	Qty.	Part no.	Description	Remarks
1	1	55280	Valve	
2	1	26197	Connection	P-GEV 20 SR-WD
3	1	26390	Connection	P-GEV 16 SR 3/4-WD
4	1	26148	Connection	
5	1	25113	Banjo connection	RSWV 8 LR
6	6	25108	Connection	GES 12 LR 1/2-WD
7	1	26334	Connection	P-GEV 16 SR-WD
8	3	26922	Reducing nipple	1/2 BSP x 1/" BSP
9	3	21106	Seal washer	ø21,5 x 28,7 x 2,5

1500K, 1510K, 1720K, 1730K, 1820K, 1830K

Internal ref. 66 51 580

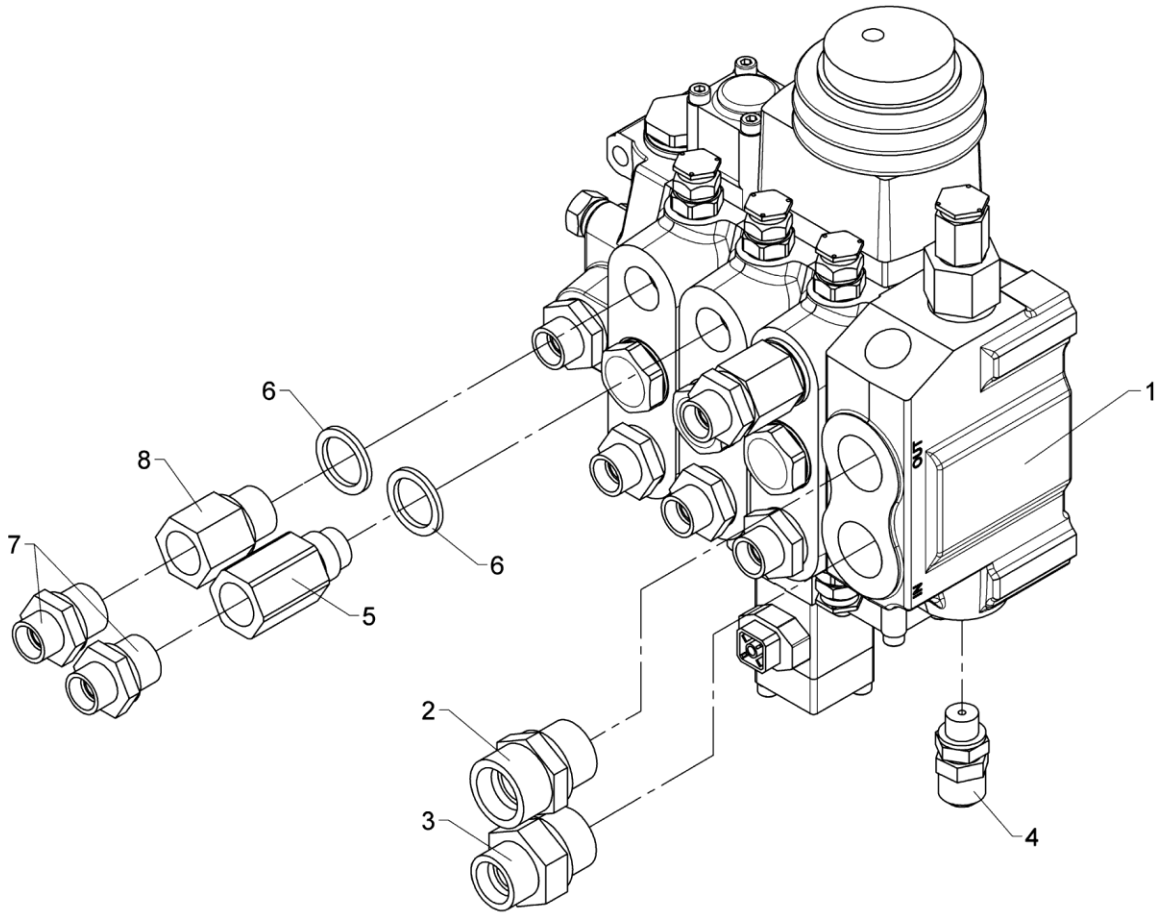

534 06 300

From loader 1060001
To loader
Created
Modified

Valve block right, 3 sects. HC-D4 TS

Pos	Qty.	Part no.	Description	Remarks
1	1	55279	Valve	
2	1	26197	Connection	P-GEV 20 SR-WD
3	1	26390	Connection	P-GEV 16 SR 3/4-WD
4	1	26103	Pressure-gauge connect.	
5	1	60295	Flow-control valve	
6	3	21106	Seal washer	ø21,5 x 28,7 x 2,5
7	7	25108	Connection	GES 12 LR 1/2-WD
8	2	26922	Reducing nipple	1/2 BSP x 1/" BSP

1500K, 1510K, 1720K, 1730K, 1820K, 1830K

66 50 570
66 50 560
66 50 430
Internal ref. 66 50 420

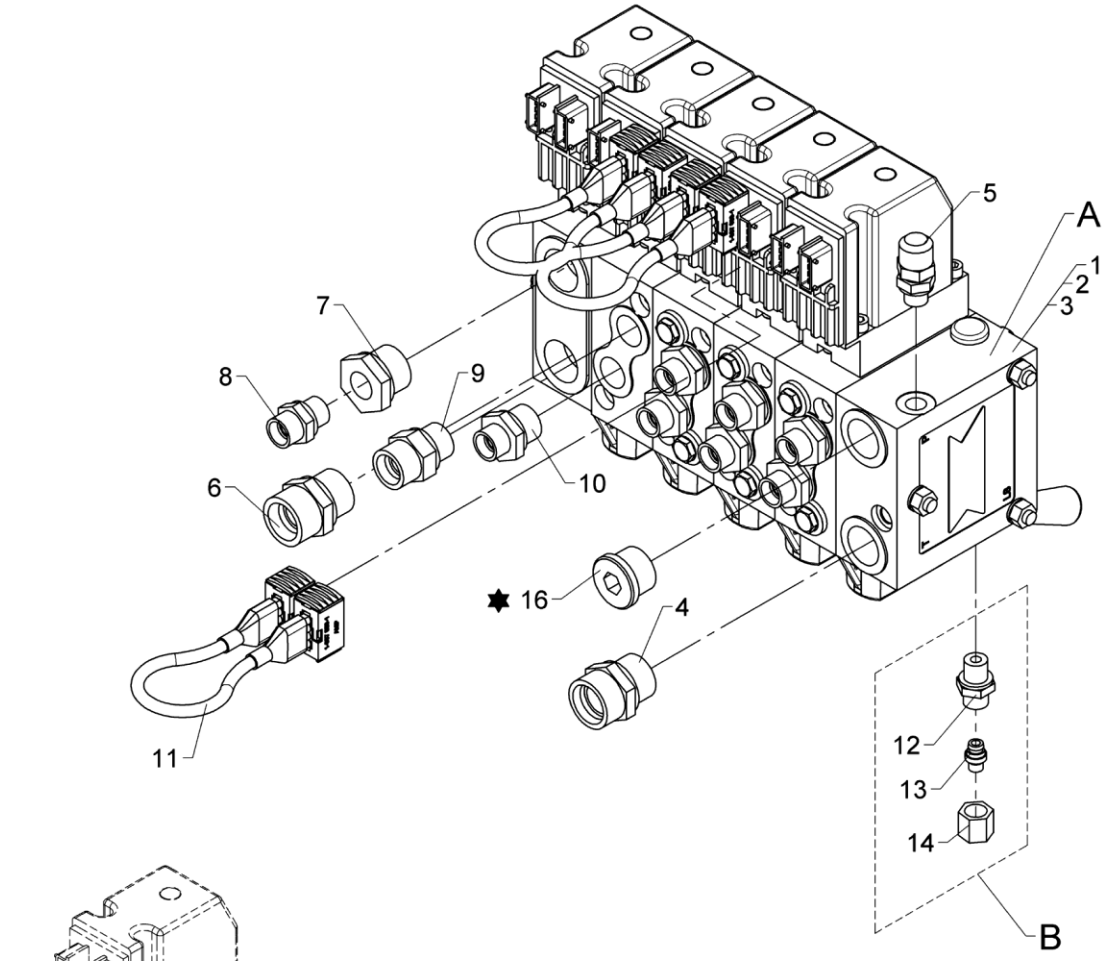

	A	B	C
66 50 420	63 301	■	
66 50 430	63 302		
66 50 560	63 301	■	■
66 50 570	63 319		

✸ Loctite 542

Obsolete

Control valves, Danfoss, 4 sections, fixed/variable flow (std./QOPS)

534 06 310

From loader 1060001
To loader

Created 08-01-2010
Modified 29-04-2013

Pos	Qty.	Part no.	Description	Remarks
		6650420	Valve block, 4 sect. variable	
		6650430	Valve block, 4 sect., fixed	
		6650560	Valve block, 4 sect.,var. QOPS	
		6650570	Valve block, 4 sect. fixedQOPS	
1	1	63301	Valve block	
2	1	63302	Valve block	
3	1	63319	Valve block	
4	1	25169	Connection	P-GEV 22 LR-WD
5	1	26103	Pressure-gauge connect.	
6	1	26197	Connection	P-GEV 20 SR-WD
7	1	26319	Reducing connection	RED-R 3/4-WD/R 3/8
8	1	25127	Connection	P-GEV 12 LR-WD
9	1	26334	Connection	P-GEV 16 SR-WD
10	7	25108	Connection	GES 12 LR 1/2-WD
11	3	62296	Connection cable	
12	1	25109	Connection	GES 8 LR-WD
13	1	26166	Blanking plug	VSD 8 L
14	1	25181	Coupling nut	M 8 L
15	1	59676	Sensor	
16	1	26355	Plug	VS-R-3/4 WD

1500K, 1510K, 1720K, 1730K, 1820K, 1830K

66 50 570
66 50 560
66 50 430
Internal ref. 66 50 420

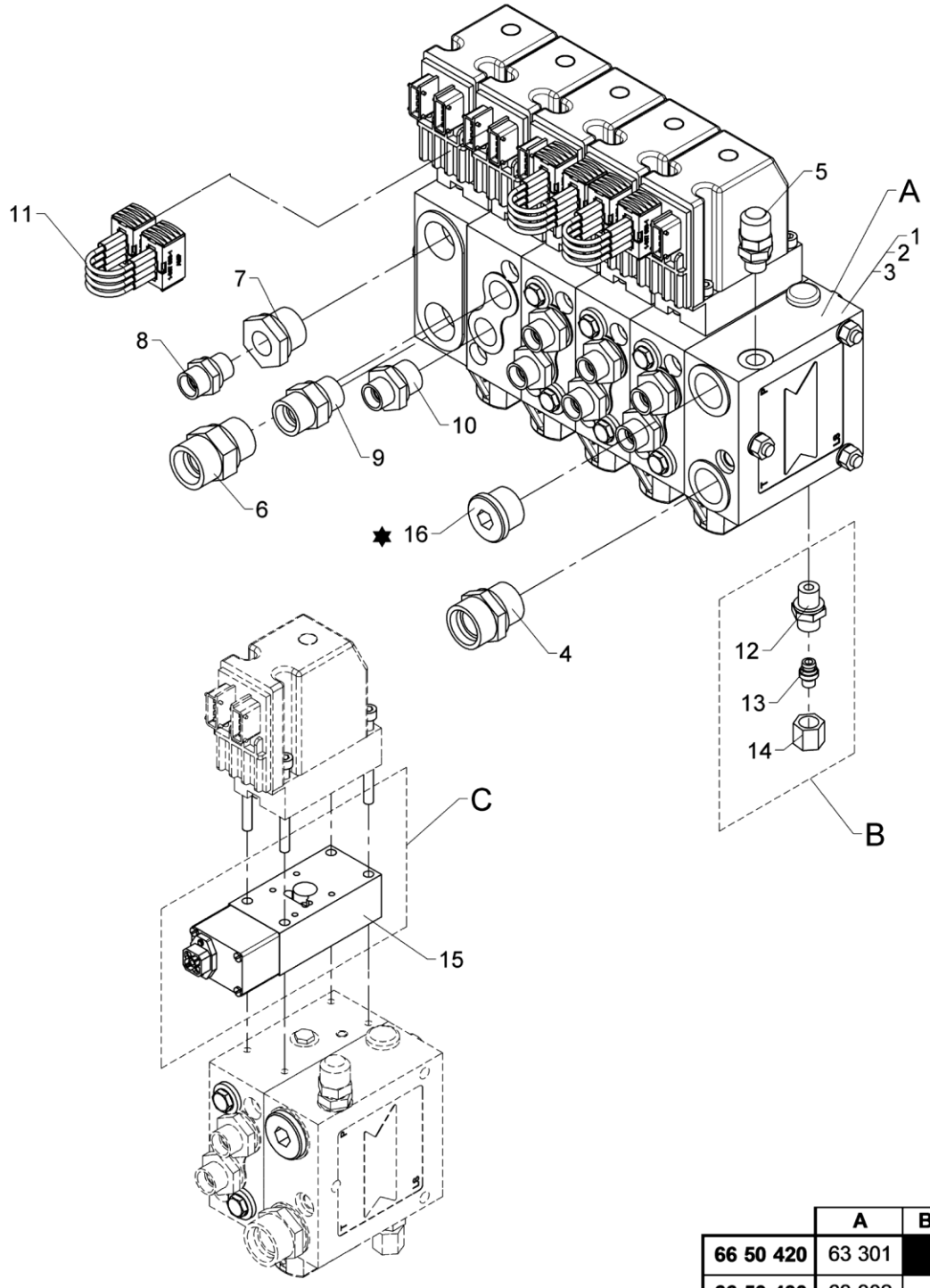

	A	B	C
66 50 420	63 301	■	
66 50 430	63 302		
66 50 560	63 301	■	■
66 50 570	63 319		

✸ Loctite 542

Obsolete

534 06 310 A

From loader

To loader

Created 02-11-2015

Modified

Control valves, Danfoss, 4 sections, fixed/variable flow (std./QOPS)

Pos	Qty.	Part no.	Description	Remarks
		6650420	Valve block, 4 sect. variable	
		6650430	Valve block, 4 sect., fixed	
		6650560	Valve block, 4 sect.,var. QOPS	
		6650570	Valve block, 4 sect. fixedQOPS	
1	1	63301	Valve block	
2	1	63302	Valve block	
3	1	63319	Valve block	
4	1	25169	Connection	P-GEV 22 LR-WD
5	1	26103	Pressure-gauge connect.	
6	1	26197	Connection	P-GEV 20 SR-WD
7	1	26319	Reducing connection	RED-R 3/4-WD/R 3/8
8	1	25127	Connection	P-GEV 12 LR-WD
9	1	26334	Connection	P-GEV 16 SR-WD
10	7	25108	Connection	GES 12 LR 1/2-WD
11	3	28771	Connection cable 0.75 mm2	
12	1	25109	Connection	GES 8 LR-WD
13	1	26166	Blanking plug	VSD 8 L
14	1	25181	Coupling nut	M 8 L
15	1	59676	Sensor	
16	1	26355	Plug	VS-R-3/4 WD

1500K, 1510K, 1720K, 1730K, 1820K, 1830K

66 50 570
66 50 560
66 50 430
Internal ref. 66 50 420

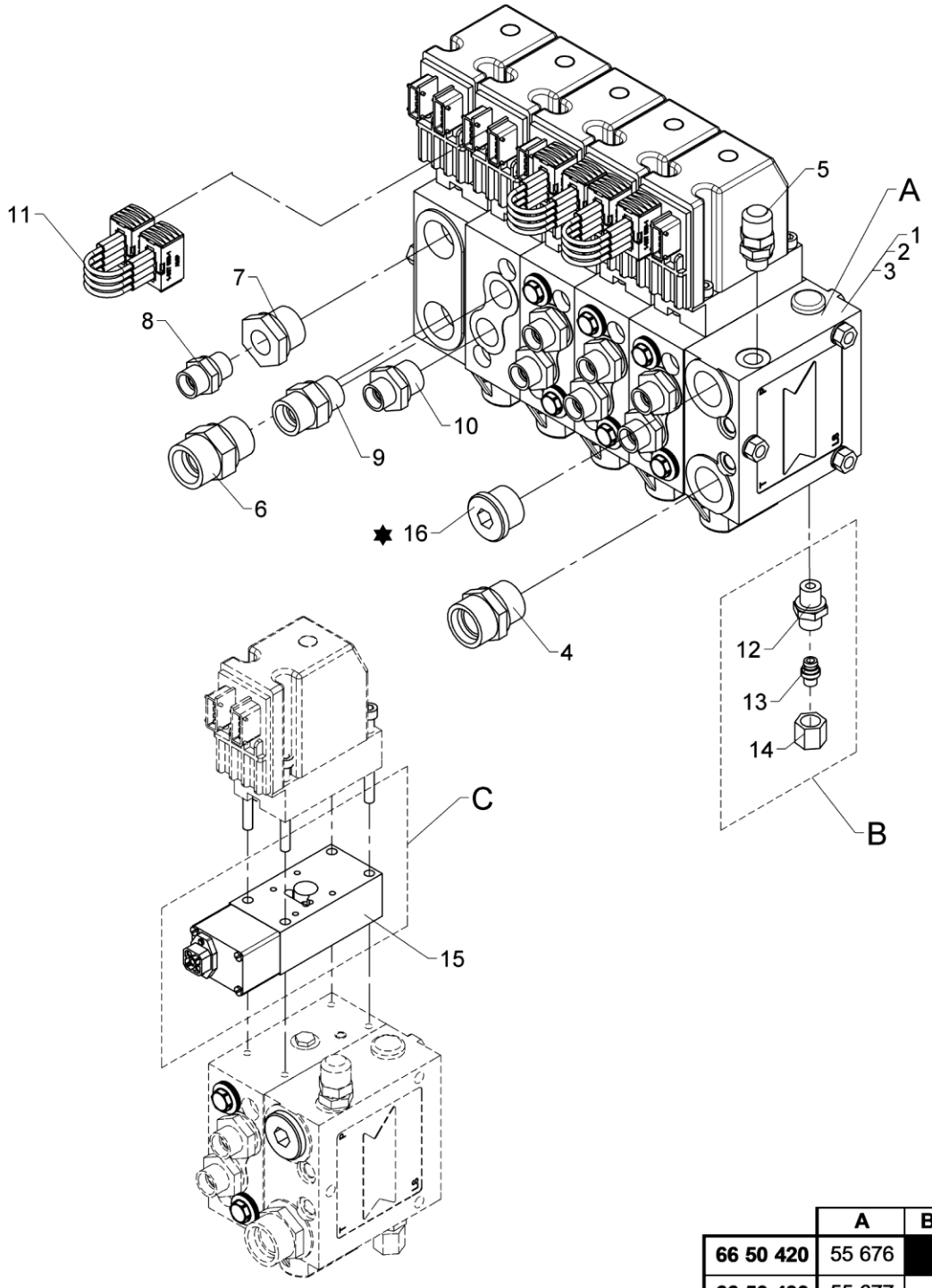

	A	B	C
66 50 420	55 676	■	
66 50 430	55 677		
66 50 560	55 676	■	■
66 50 570	66 319		

✸ Loctite 542

Obsolete

534 06 310 B

From loader

To loader

Created 01-04-2017

Modified 02-11-2017

Control valves, Danfoss, 4 sections, fixed/variable flow (std./QOPS)

Pos	Qty.	Part no.	Description	Remarks
		6650420	Valve block, 4 sect. variable	
		6650430	Valve block, 4 sect., fixed	
		6650560	Valve block, 4 sect.,var. QOPS	
		6650570	Valve block, 4 sect. fixedQOPS	
1	1	55676	Valve block	
2	1	55677	Valve block	
3	1	63319	Valve block	
4	1	25169	Connection	P-GEV 22 LR-WD
5	1	26103	Pressure-gauge connect.	
6	1	26197	Connection	P-GEV 20 SR-WD
7	1	26319	Reducing connection	RED-R 3/4-WD/R 3/8
8	1	25127	Connection	P-GEV 12 LR-WD
9	1	26334	Connection	P-GEV 16 SR-WD
10	7	25108	Connection	GES 12 LR 1/2-WD
11	3	28771	Connection cable 0.75 mm2	
12	1	25109	Connection	GES 8 LR-WD
13	1	26166	Blanking plug	VSD 8 L
14	1	25181	Coupling nut	M 8 L
15	1	59676	Sensor	
16	1	26355	Plug	VS-R-3/4 WD

1500K, 1510K, 1720K, 1730K, 1820K, 1830K

66 50 430
Internal ref. 66 50 420

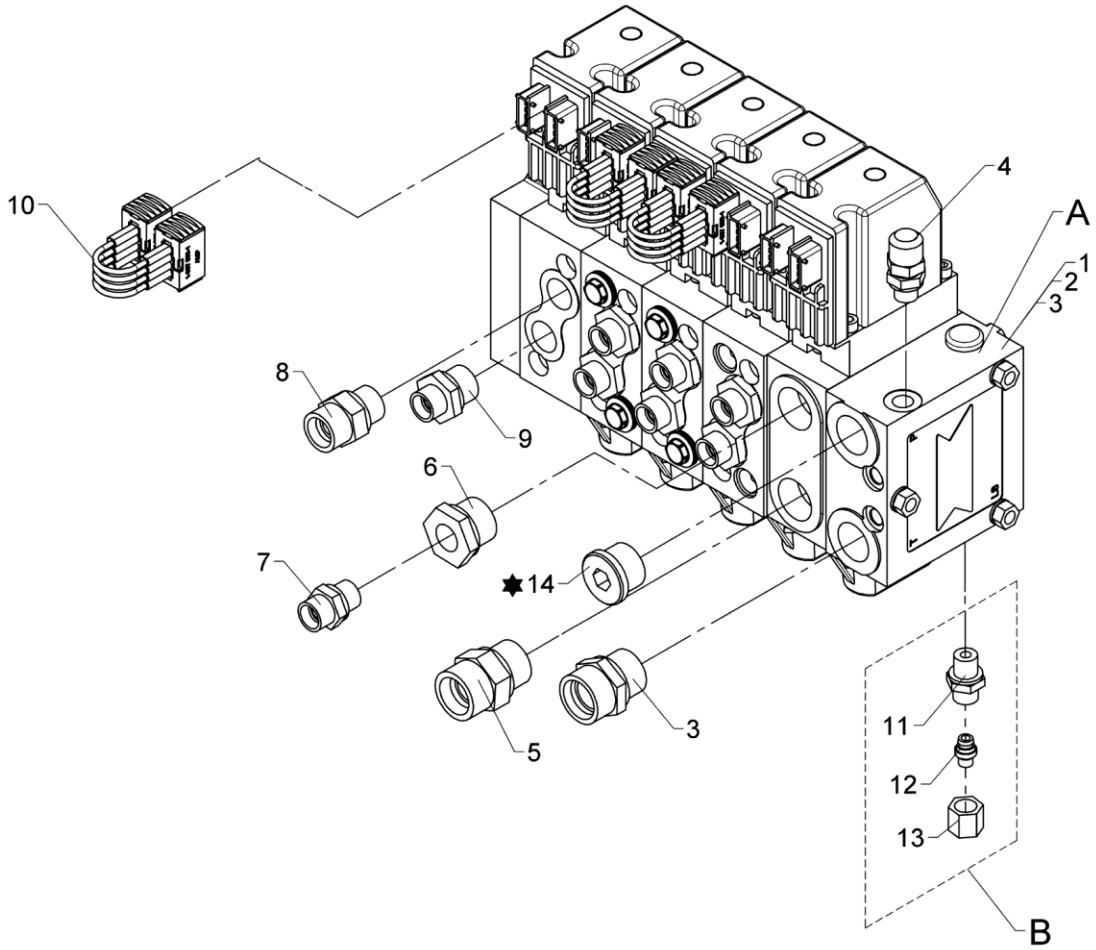

	A	B
66 50 420	55 857	■
66 50 430	55 858	

✸ Loctite 542

Control valves, Danfoss, 4 sections, fixed/variable flow (std.)

Pos	Qty.	Part no.	Description	Remarks
		6650420	Valve block, 4 sect. variable	
		6650430	Valve block, 4 sect., fixed	
1	1	55857	Valve block	
2	1	55858	Valve block	
3	1	25169	Connection	P-GEV 22 LR-WD
4	1	26103	Pressure-gauge connect.	
5	1	26197	Connection	P-GEV 20 SR-WD
6	1	26319	Reducing connection	RED-R 3/4-WD/R 3/8
7	1	25127	Connection	P-GEV 12 LR-WD
8	1	26334	Connection	P-GEV 16 SR-WD
9	7	25108	Connection	GES 12 LR 1/2-WD
10	3	28771	Connection cable 0.75 mm2	
11	1	25109	Connection	GES 8 LR-WD
12	1	26166	Blanking plug	VSD 8 L
13	1	25181	Coupling nut	M 8 L
14	1	26355	Plug	VS-R-3/4 WD

1500K, 1510K, 1720K, 1730K, 1820K, 1830K

66 50 590
66 50 580
66 50 450
Internal ref. 66 50 440

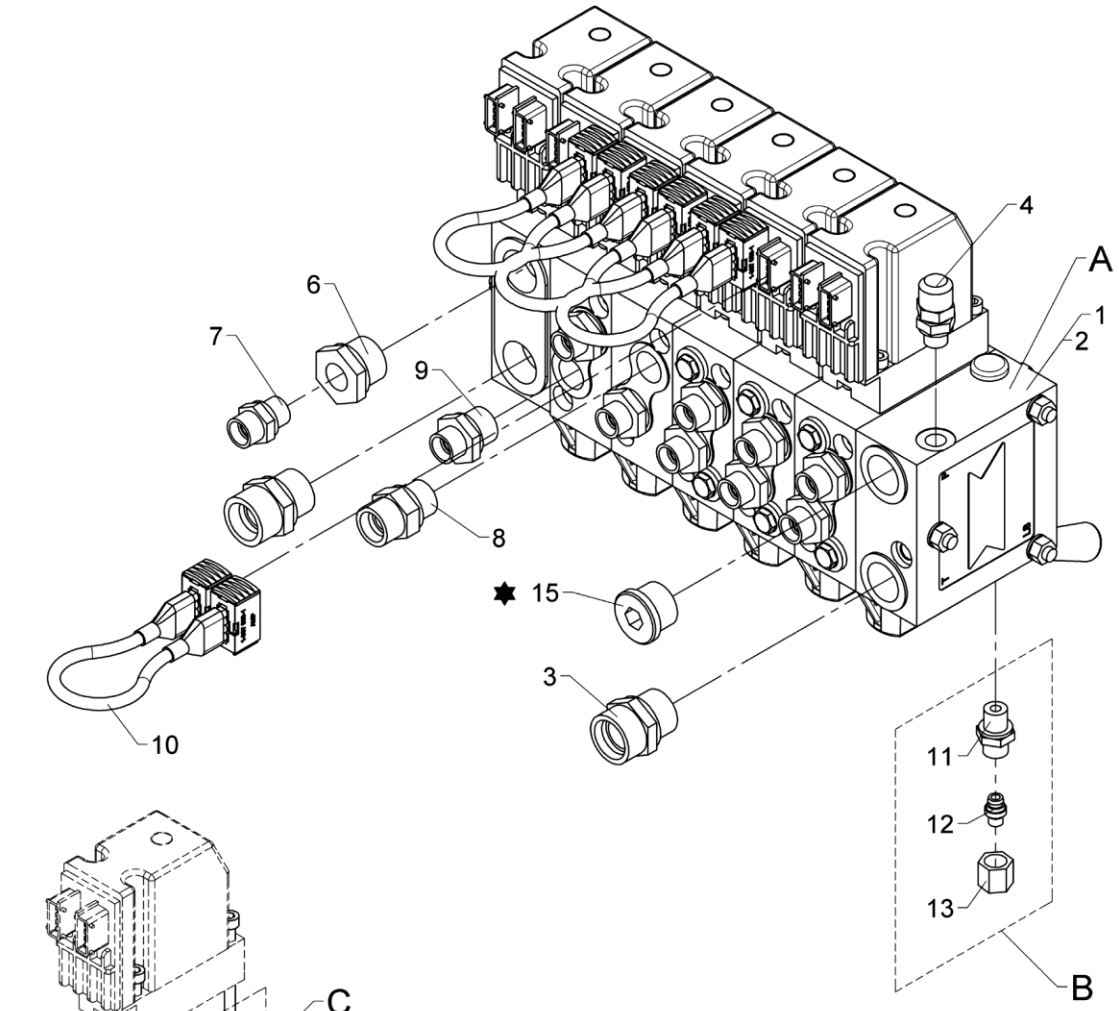

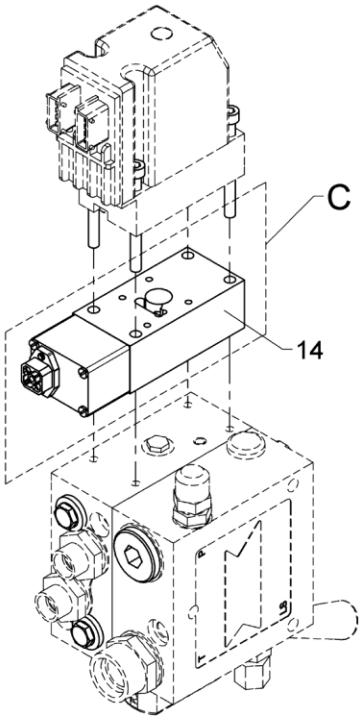

	A	B	C
66 50 440	63 303	■	
66 50 450	63 304		
66 50 580	63 303	■	■
66 50 590	63 304		■

✸ Loctite 542

Obsolete

534 06 320

From loader 1060001
To loader

Created 25-05-2007
Modified 29-04-2013

Control valves, Danfoss, 5 sections, fixed/variable flow with rotator (std./QOPS)

Pos	Qty.	Part no.	Description	Remarks
		6650440	Valve block, 5 sect., variable	
		6650450	Valve block, 5 sect., fixed	
		6650580	Valve block, 5 sect.,var. QOPS	
		6650590	Valve block, 5 sect.,fix. QOPS	
1	1	63303	Valve block	
2	1	63304	Valve block	
3	1	25169	Connection	P-GEV 22 LR-WD
4	1	26103	Pressure-gauge connect.	
5	1	26197	Connection	P-GEV 20 SR-WD
6	1	26319	Reducing connection	RED-R 3/4-WD/R 3/8
7	1	25127	Connection	P-GEV 12 LR-WD
8	1	26334	Connection	P-GEV 16 SR-WD
9	9	25108	Connection	GES 12 LR 1/2-WD
10	4	62296	Connection cable	
11	1	25109	Connection	GES 8 LR-WD
12	1	26166	Blanking plug	VSD 8 L
13	1	25181	Coupling nut	M 8 L
14	1	59676	Sensor	
15	1	26355	Plug	VS-R-3/4 WD

1500K, 1510K, 1720K, 1730K, 1820K, 1830K

66 50 590
66 50 580
66 50 450
Internal ref. 66 50 440

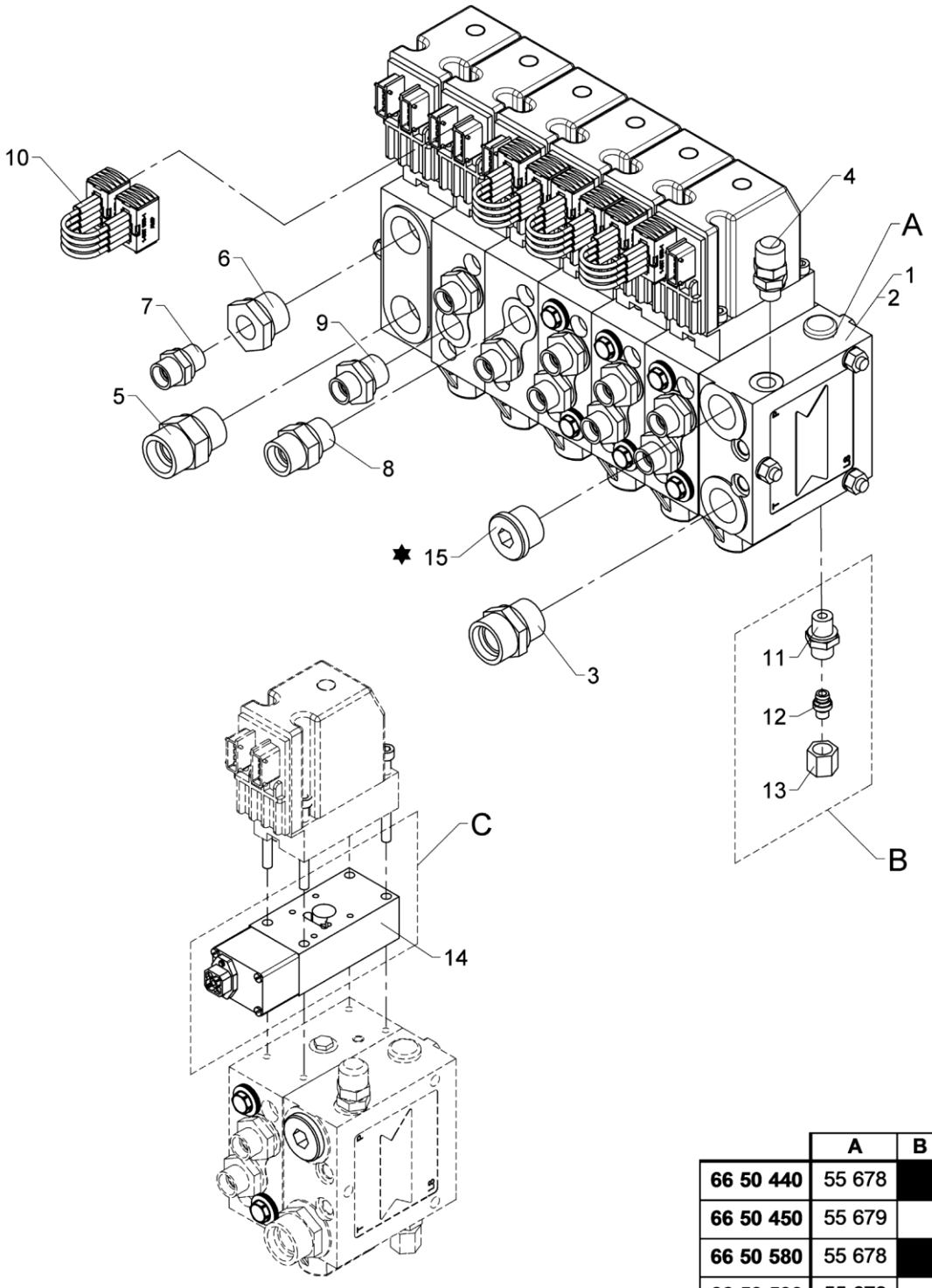

	A	B	C
66 50 440	55 678	■	
66 50 450	55 679		
66 50 580	55 678	■	■
66 50 590	55 679		■

✸ Loctite 542

Obsolete

534 06 320 A

From loader

To loader

Created 02-11-2015

Modified 20-10-2017

Control valves, Danfoss, 5 sections, fixed/variable flow with rotator (std./QOPS)

Pos	Qty.	Part no.	Description	Remarks
		6650440	Valve block, 5 sect., variable	
		6650450	Valve block, 5 sect., fixed	
		6650580	Valve block, 5 sect.,var. QOPS	
		6650590	Valve block, 5 sect.,fix. QOPS	
1	1	55678	Valve block	
2	1	55679	Valve block	
3	1	25169	Connection	P-GEV 22 LR-WD
4	1	26103	Pressure-gauge connect.	
5	1	26197	Connection	P-GEV 20 SR-WD
6	1	26319	Reducing connection	RED-R 3/4-WD/R 3/8
7	1	25127	Connection	P-GEV 12 LR-WD
8	1	26334	Connection	P-GEV 16 SR-WD
9	9	25108	Connection	GES 12 LR 1/2-WD
10	4	28771	Connection cable 0.75 mm2	
11	1	25109	Connection	GES 8 LR-WD
12	1	26166	Blanking plug	VSD 8 L
13	1	25181	Coupling nut	M 8 L
14	1	59676	Sensor	
15	1	26355	Plug	VS-R-3/4 WD

1500K, 1510K, 1720K, 1730K, 1820K, 1830K

66 50 450
Internal ref. 66 50 440

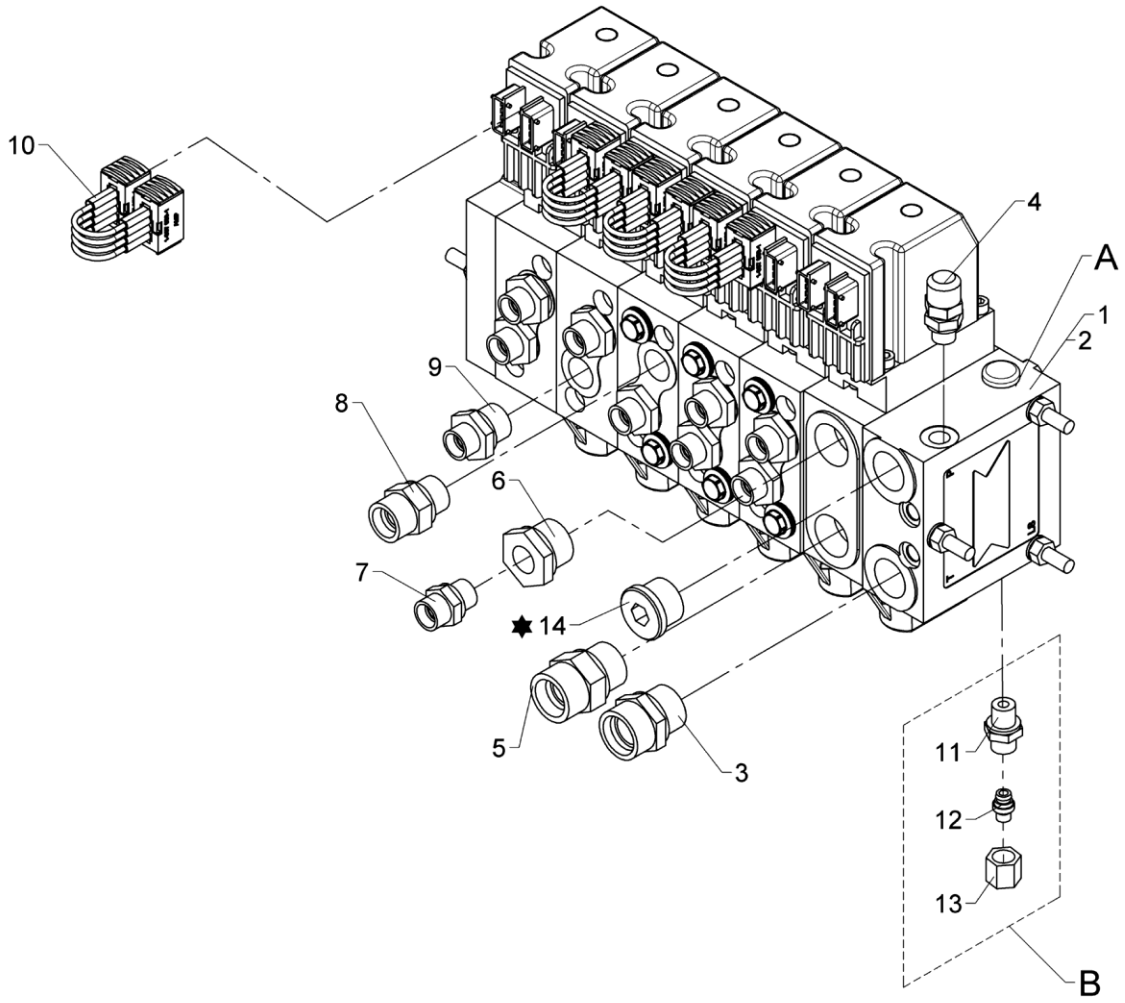

	A	B	C
66 50 440	55 859	■	
66 50 450	55 860		

✸ Loctite 542

Control valves, Danfoss, 5 sections, fixed/variable flow with rotator (std.)

Pos	Qty.	Part no.	Description	Remarks
		6650440	Valve block, 5 sect., variable	
		6650450	Valve block, 5 sect., fixed	
1	1	55859	Valve block	
2	1	55860	Valve block_RC_5_1x_F	
3	1	25169	Connection	P-GEV 22 LR-WD
4	1	26103	Pressure-gauge connect.	
5	1	26197	Connection	P-GEV 20 SR-WD
6	1	26319	Reducing connection	RED-R 3/4-WD/R 3/8
7	1	25127	Connection	P-GEV 12 LR-WD
8	1	26334	Connection	P-GEV 16 SR-WD
9	9	25108	Connection	GES 12 LR 1/2-WD
10	4	28771	Connection cable 0.75 mm2	
11	1	25109	Connection	GES 8 LR-WD
12	1	26166	Blanking plug	VSD 8 L
13	1	25181	Coupling nut	M 8 L
14	1	26355	Plug	VS-R-3/4 WD

1500K, 1510K, 1720K, 1730K, 1820K, 1830K

66 50 610
66 50 600
66 50 470
Internal ref. 66 50 460

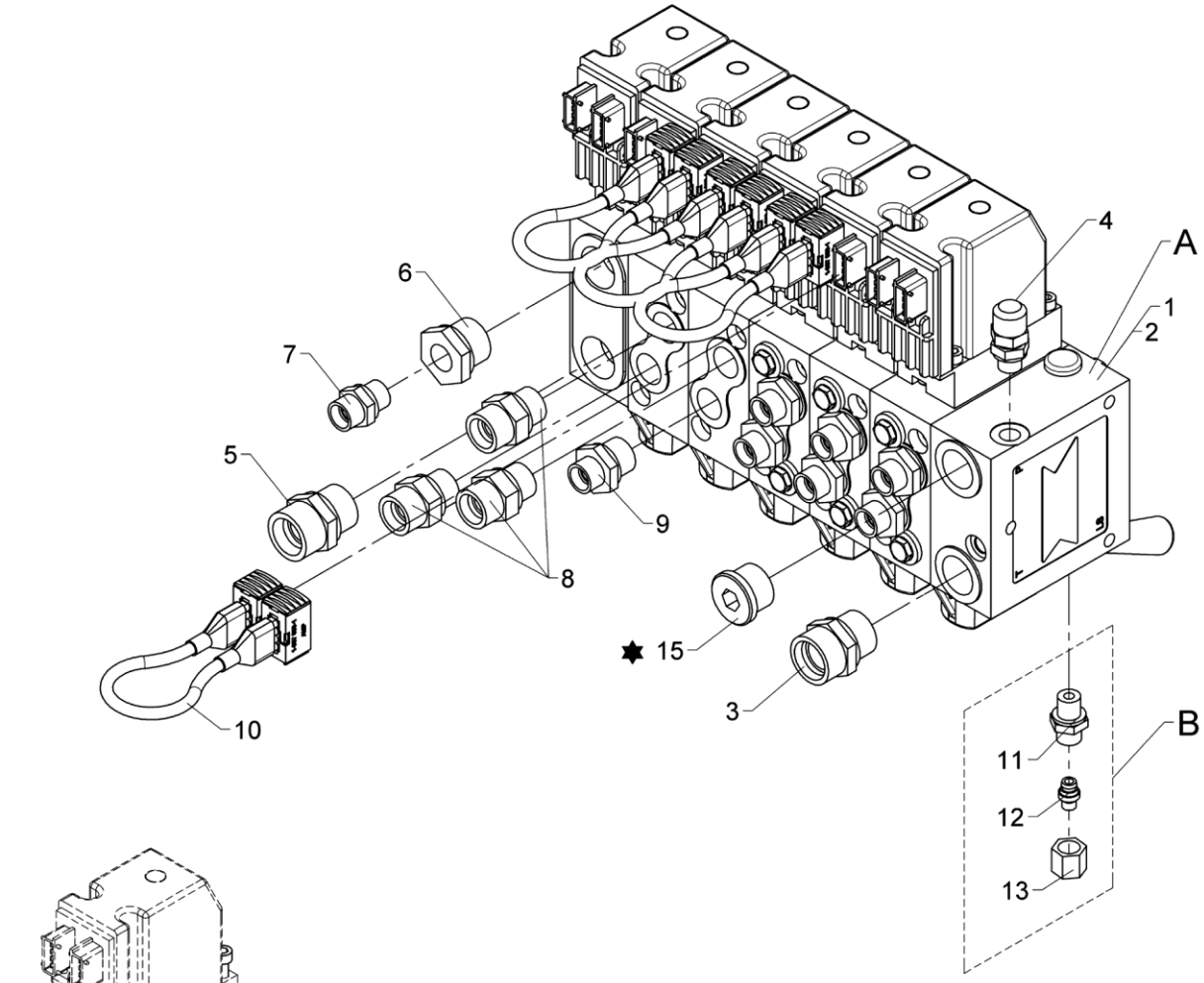

	A	B	C
66 50 460	63 305	■	
66 50 470	63 306		
66 50 600	63 305	■	■
66 50 610	63 306		■

✸ Loctite 542

Obsolete

534 06 330

From loader 1060001
To loader

Created 25-05-2007
Modified 29-04-2013

Control valves, Danfoss, 5 sections, fixed/variable flow with winch (std./QOPS)

Pos	Qty.	Part no.	Description	Remarks
		6650460	Valve block, 5 sect., variable	
		6650470	Valve block, 5 sect., fixed	
		6650600	Valve block, 5 sect.,var.QOPS	
		6650610	Valve block, 5 sect.,fixedQOPS	
1	1	63305	Valve block	
2	1	63306	Valve block	
3	1	25169	Connection	P-GEV 22 LR-WD
4	1	26103	Pressure-gauge connect.	
5	1	26197	Connection	P-GEV 20 SR-WD
6	1	26319	Reducing connection	RED-R 3/4-WD/R 3/8
7	1	25127	Connection	P-GEV 12 LR-WD
8	3	26334	Connection	P-GEV 16 SR-WD
9	7	25108	Connection	GES 12 LR 1/2-WD
10	4	62296	Connection cable	
11	1	25109	Connection	GES 8 LR-WD
12	1	26166	Blanking plug	VSD 8 L
13	1	25181	Coupling nut	M 8 L
14	1	59676	Sensor	
15	1	26355	Plug	VS-R-3/4 WD

1500K, 1510K, 1720K, 1730K, 1820K, 1830K

66 50 610
66 50 600
66 50 470
Internal ref. 66 50 460

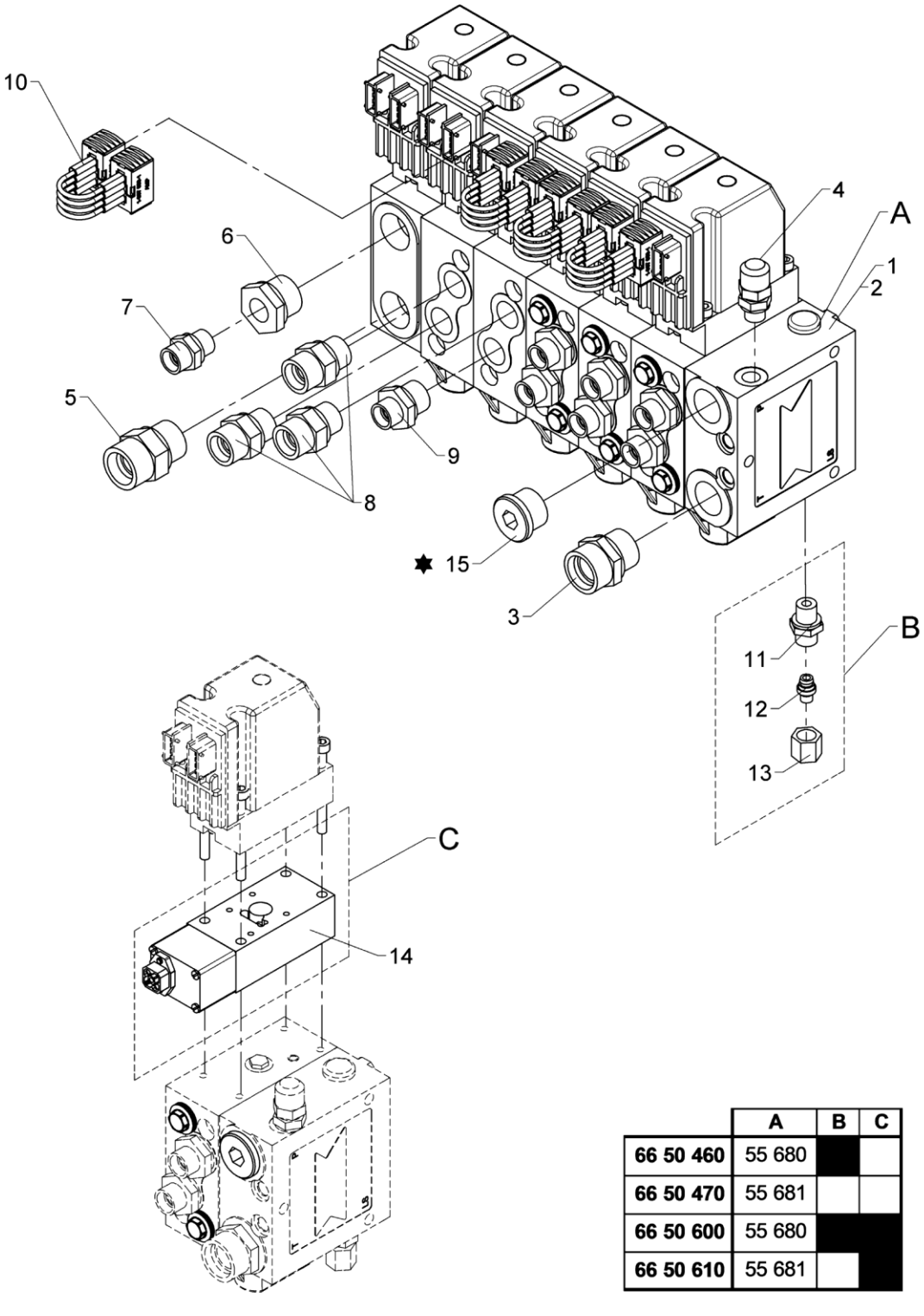

	A	B	C
66 50 460	55 680	■	
66 50 470	55 681		
66 50 600	55 680	■	■
66 50 610	55 681		■

✸ Loctite 542

Obsolete

534 06 330 A

From loader

To loader

Created 02-11-2015

Modified 20-10-2017

Control valves, Danfoss, 5 sections, fixed/variable flow with winch (std./QOPS)

Pos	Qty.	Part no.	Description	Remarks
		6650460	Valve block, 5 sect., variable	
		6650470	Valve block, 5 sect., fixed	
		6650600	Valve block, 5 sect.,var.QOPS	
		6650610	Valve block, 5 sect.,fixedQOPS	
1	1	55680	Valve block	
2	1	55681	Valve block	
3	1	25169	Connection	P-GEV 22 LR-WD
4	1	26103	Pressure-gauge connect.	
5	1	26197	Connection	P-GEV 20 SR-WD
6	1	26319	Reducing connection	RED-R 3/4-WD/R 3/8
7	1	25127	Connection	P-GEV 12 LR-WD
8	3	26334	Connection	P-GEV 16 SR-WD
9	7	25108	Connection	GES 12 LR 1/2-WD
10	4	28771	Connection cable 0.75 mm2	
11	1	25109	Connection	GES 8 LR-WD
12	1	26166	Blanking plug	VSD 8 L
13	1	25181	Coupling nut	M 8 L
14	1	59676	Sensor	
15	1	26355	Plug	VS-R-3/4 WD

1500K, 1510K, 1720K, 1730K, 1820K, 1830K

66 50 470
Internal ref. 66 50 460

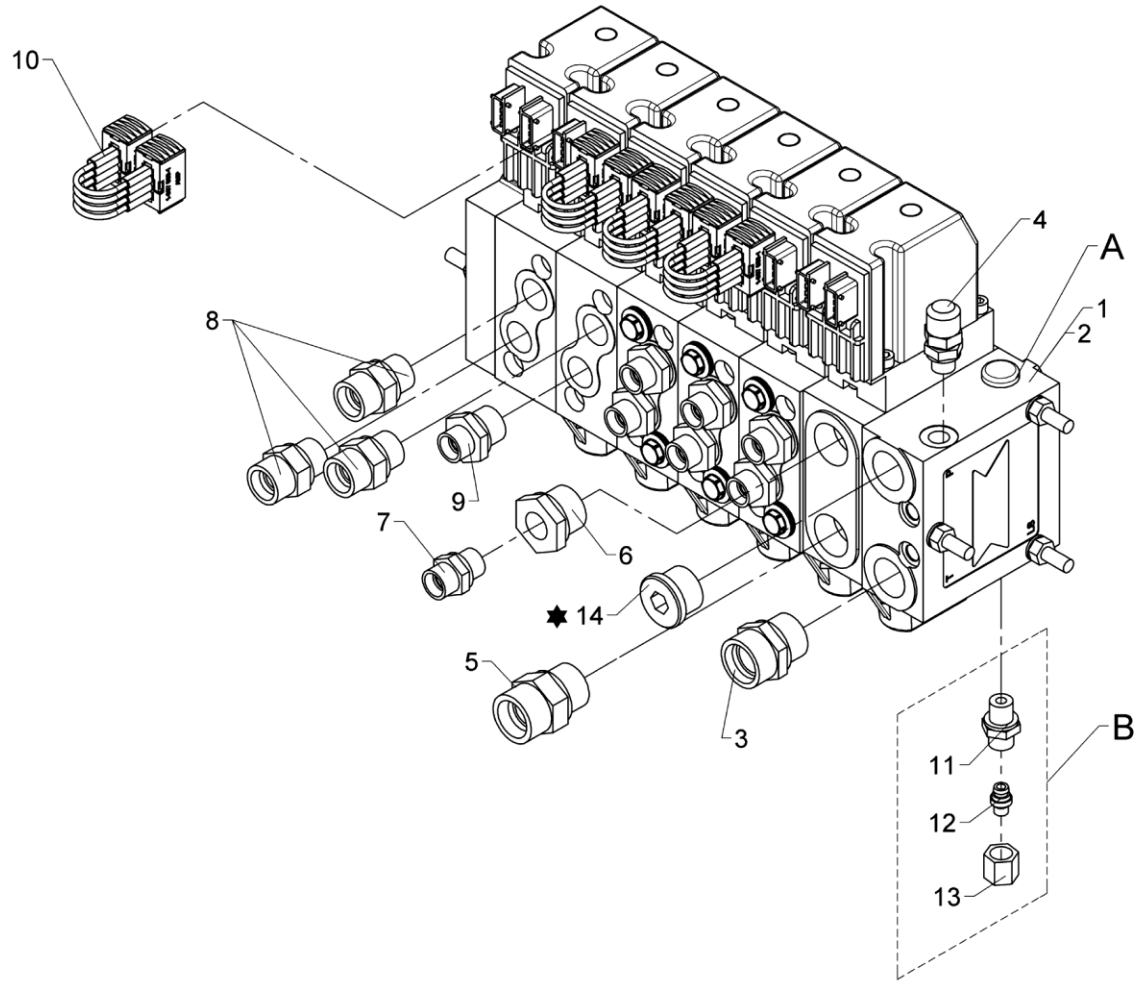

	A	B	C
66 50 460	55 861	■	
66 50 470	55 862		

✸ Loctite 542

Control valves, Danfoss, 5 sections, fixed/variable flow with winch (Std.)

Pos	Qty.	Part no.	Description	Remarks
		6650460	Valve block, 5 sect., variable	
		6650470	Valve block, 5 sect., fixed	
1	1	55861	Valve block_RC_5_Wi_V	
2	1	55862	Valve block_RC_5_Wi_F	
3	1	25169	Connection	P-GEV 22 LR-WD
4	1	26103	Pressure-gauge connect.	
5	1	26197	Connection	P-GEV 20 SR-WD
6	1	26319	Reducing connection	RED-R 3/4-WD/R 3/8
7	1	25127	Connection	P-GEV 12 LR-WD
8	3	26334	Connection	P-GEV 16 SR-WD
9	7	25108	Connection	GES 12 LR 1/2-WD
10	4	28771	Connection cable 0.75 mm2	
11	1	25109	Connection	GES 8 LR-WD
12	1	26166	Blanking plug	VSD 8 L
13	1	25181	Coupling nut	M 8 L
14	1	26355	Plug	VS-R-3/4 WD

1500K, 1510K, 1720K, 1730K, 1820K, 1830K

66 50 550
66 50 540
66 50 410
Internal ref. 66 50 400

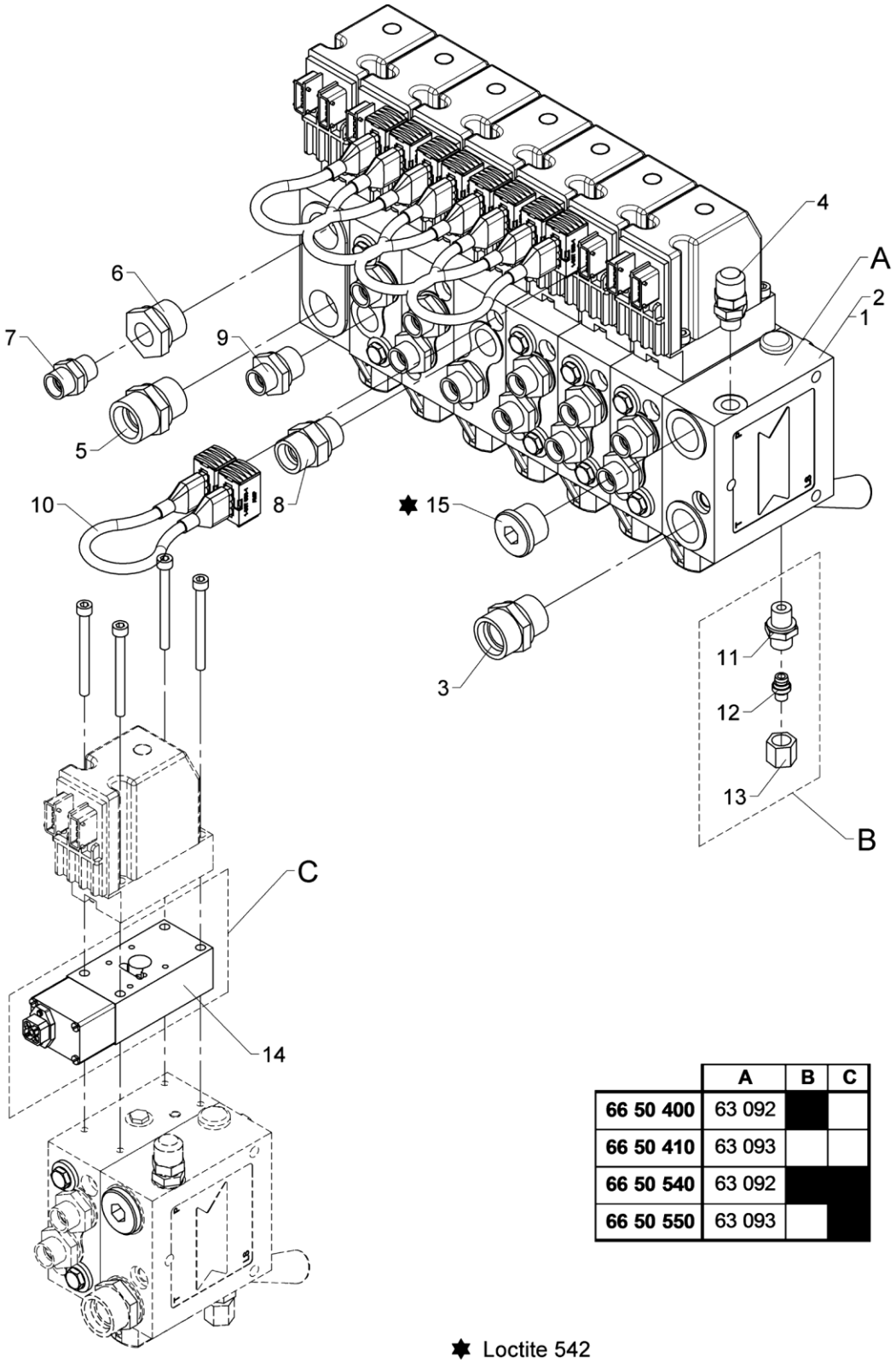

	A	B	C
66 50 400	63 092	■	
66 50 410	63 093		
66 50 540	63 092	■	■
66 50 550	63 093		■

✸ Loctite 542

Obsolete

534 06 340

From loader 1060001
To loader 1061488

Control valves, Danfoss, 6 sections, fixed/variable flow with rotator and grab

Created 25-05-2007
Modified 29-04-2013

Pos	Qty.	Part no.	Description	Remarks
		6650400	Valve block, 6 sect., variable	
		6650410	Valve block, 6 sect., fixed	
		6650540	Valve block, 6 sect.,var.QOPS	
		6650550	Valve block, 6 sect.,fix.QOPS	
1	1	63092	Valve block	
2	1	63093	Valve block	
3	1	25169	Connection	P-GEV 22 LR-WD
4	1	26103	Pressure-gauge connect.	
5	1	26197	Connection	P-GEV 20 SR-WD
6	1	26319	Reducing connection	RED-R 3/4-WD/R 3/8
7	1	25127	Connection	P-GEV 12 LR-WD
8	1	26334	Connection	P-GEV 16 SR-WD
9	11	25108	Connection	GES 12 LR 1/2-WD
10	5	62296	Connection cable	
11	1	25109	Connection	GES 8 LR-WD
12	1	26166	Blanking plug	VSD 8 L
13	1	25181	Coupling nut	M 8 L
14	1	59676	Sensor	
15	1	26355	Plug	VS-R-3/4 WD

1500K, 1510K, 1720K, 1730K, 1820K, 1830K

66 50 550
66 50 540
66 50 410
Internal ref. 66 50 400

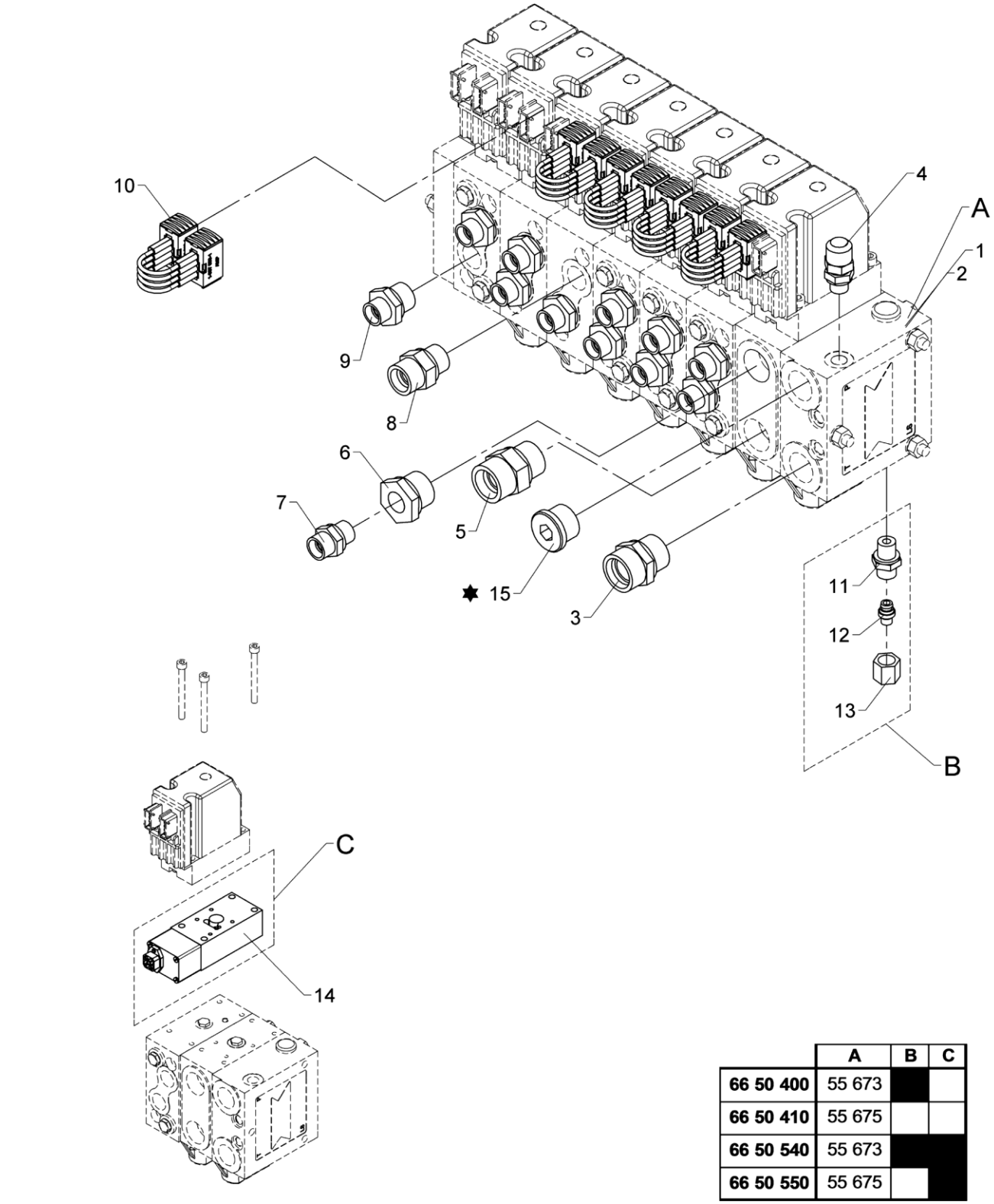

	A	B	C
66 50 400	55 673	■	
66 50 410	55 675		
66 50 540	55 673	■	■
66 50 550	55 675		■

✸ Loctite 542

Obsolete

534 06 340 A

From loader 1061489
To loader

Created 20-01-2017
Modified 20-10-2017

Control valves, Danfoss, 6 sections, fixed/variable flow with rotator and grab

Pos	Qty.	Part no.	Description	Remarks
		6650400	Valve block, 6 sect., variable	
		6650410	Valve block, 6 sect., fixed	
		6650540	Valve block, 6 sect.,var.QOPS	
		6650550	Valve block, 6 sect.,fix.QOPS	
1	1	55673	Valve block	
2	1	55675	Valve block	
3	1	25169	Connection	P-GEV 22 LR-WD
4	1	26103	Pressure-gauge connect.	
5	1	26197	Connection	P-GEV 20 SR-WD
6	1	26319	Reducing connection	RED-R 3/4-WD/R 3/8
7	1	25127	Connection	P-GEV 12 LR-WD
8	1	26334	Connection	P-GEV 16 SR-WD
9	11	25108	Connection	GES 12 LR 1/2-WD
10	5	28771	Connection cable 0.75 mm2	
11	1	25109	Connection	GES 8 LR-WD
12	1	26166	Blanking plug	VSD 8 L
13	1	25181	Coupling nut	M 8 L
14	1	59676	Sensor	
15	1	26355	Plug	VS-R-3/4 WD

1500K, 1510K, 1720K, 1730K, 1820K, 1830K

66 50 410
Internal ref. 66 50 400

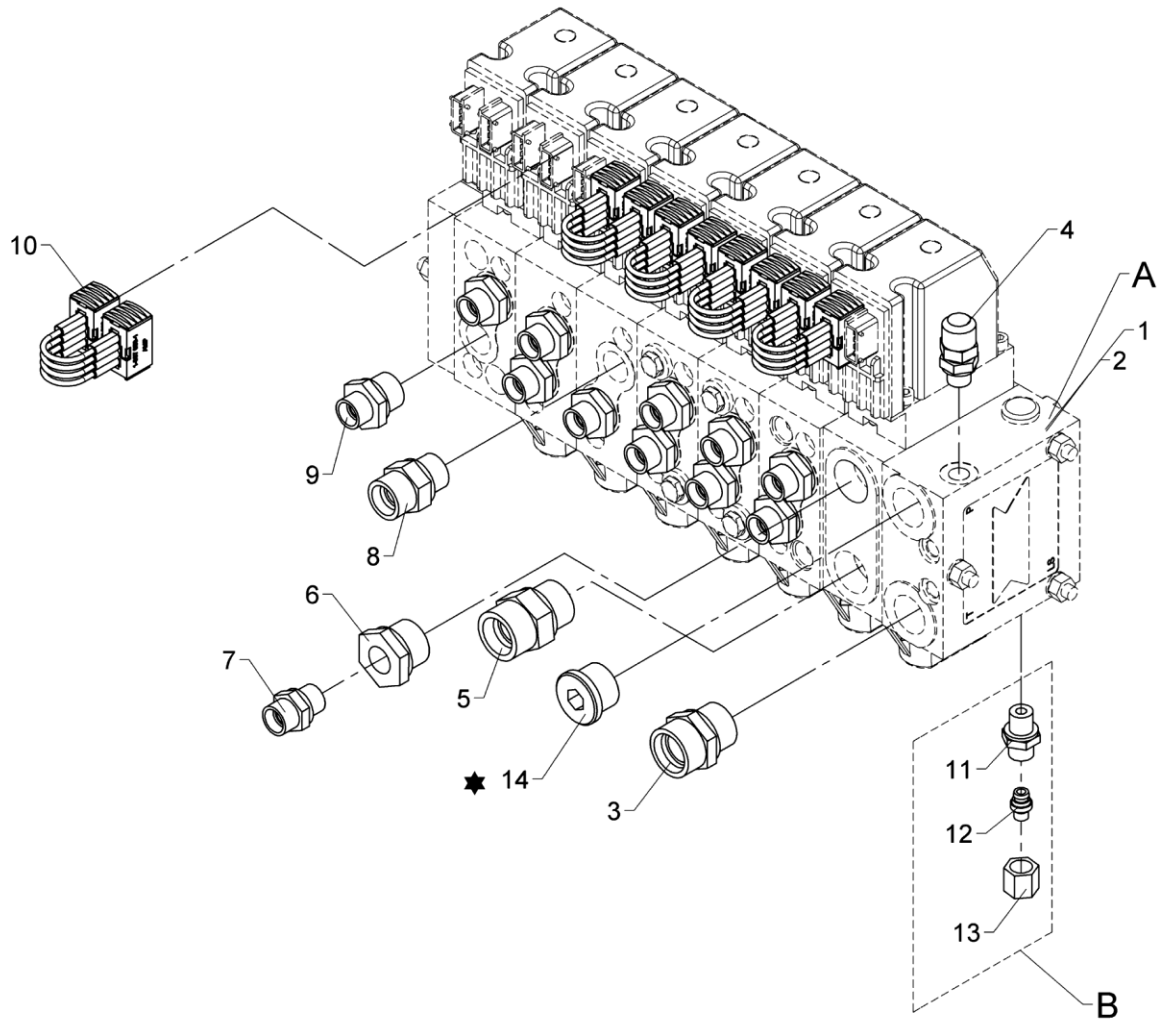

	A	B
66 50 400	55 855	X
66 50 410	55 856	

✸ Loctite 542

Control valves, Danfoss, 6 sections, fixed/variable flow with rotator and grab

Pos	Qty.	Part no.	Description	Remarks
		6650400	Valve block, 6 sect., variable	
		6650410	Valve block, 6 sect., fixed	
1	1	55855	Valve block	
2	1	55856	Valve block	
3	1	25169	Connection	P-GEV 22 LR-WD
4	1	26103	Pressure-gauge connect.	
5	1	26197	Connection	P-GEV 20 SR-WD
6	1	26319	Reducing connection	RED-R 3/4-WD/R 3/8
7	1	25127	Connection	P-GEV 12 LR-WD
8	1	26334	Connection	P-GEV 16 SR-WD
9	11	25108	Connection	GES 12 LR 1/2-WD
10	5	28771	Connection cable 0.75 mm2	
11	1	25109	Connection	GES 8 LR-WD
12	1	26166	Blanking plug	VSD 8 L
13	1	25181	Coupling nut	M 8 L
14	1	26355	Plug	VS-R-3/4 WD

1500K, 1510K, 1720K, 1730K, 1820K, 1830K

66 50 630
66 50 620
66 50 490
Internal ref. 66 50 480

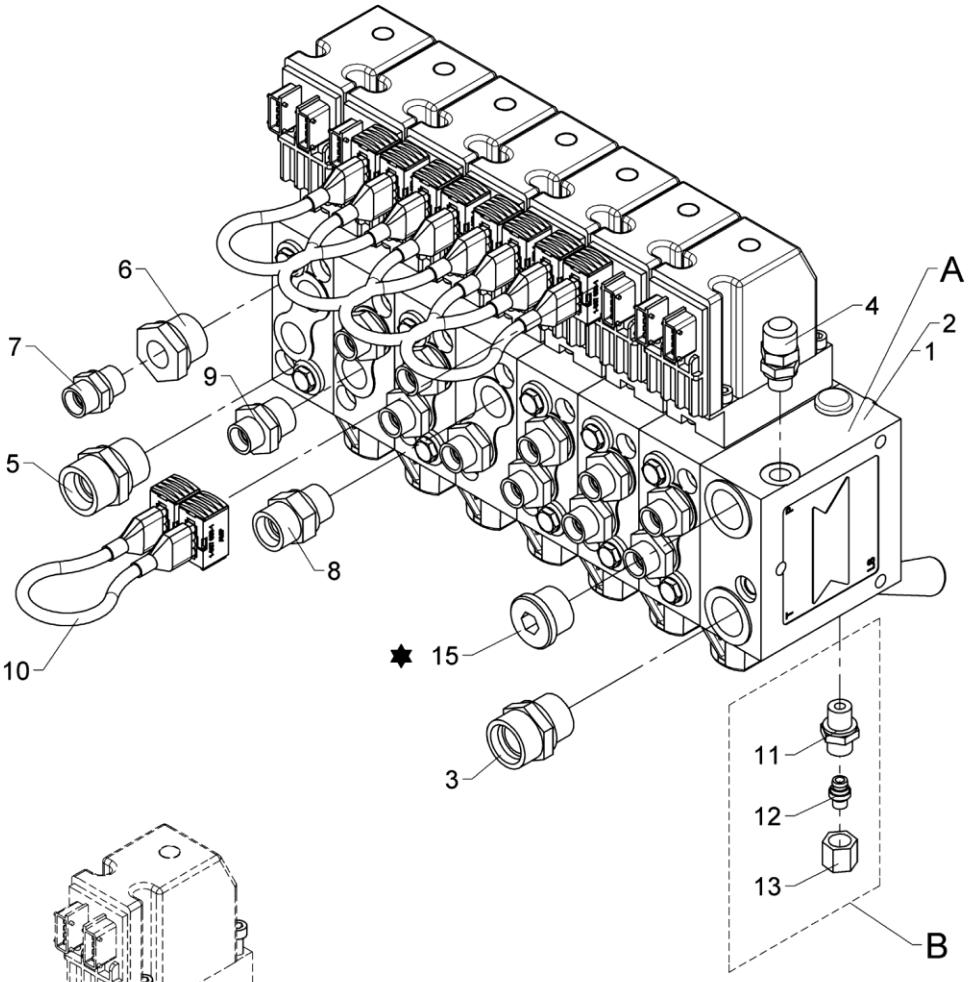

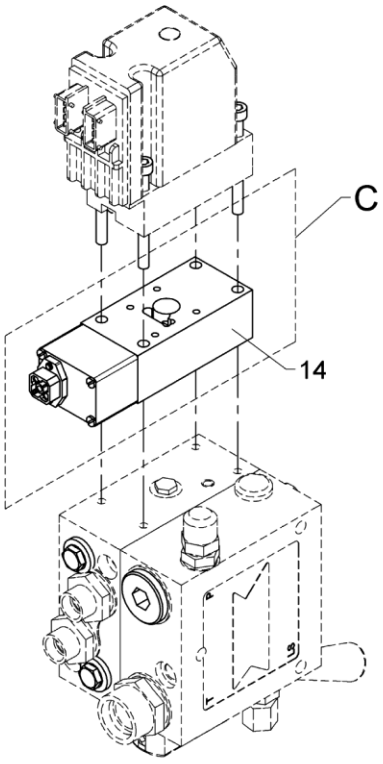

	A	B	C
66 50 480	63 307	■	
66 50 490	63 308		
66 50 620	63 307	■	■
66 50 630	63 308		■

✸ Loctite 542

Obsolete

534 06 350

From loader 1060001
To loader

Created 08-01-2010
Modified 29-04-2013

Control valves, Danfoss, 6 sections, fixed/variable flow with Fly-Jib (std./QOPS)

Pos	Qty.	Part no.	Description	Remarks
		6650480	Valve block, 6 sect., variable	
		6650490	Valve block, 6 sect., fixed	
		6650620	Valve block, 6 sect.,var. QOPS	
		6650630	Valve block, 6 sect.,fix.QOPS	
1	1	63307	Valve block	
2	1	63308	Valve block	
3	1	25169	Connection	P-GEV 22 LR-WD
4	1	26103	Pressure-gauge connect.	
5	1	26197	Connection	P-GEV 20 SR-WD
6	1	26319	Reducing connection	RED-R 3/4-WD/R 3/8
7	1	25127	Connection	P-GEV 12 LR-WD
8	1	26334	Connection	P-GEV 16 SR-WD
9	11	25108	Connection	GES 12 LR 1/2-WD
10	5	62296	Connection cable	
11	1	25109	Connection	GES 8 LR-WD
12	1	26166	Blanking plug	VSD 8 L
13	1	25181	Coupling nut	M 8 L
14	1	59676	Sensor	
15	1	26355	Plug	VS-R-3/4 WD

1500K, 1510K, 1720K, 1730K, 1820K, 1830K

66 50 630
66 50 620
66 50 490
Internal ref. 66 50 480

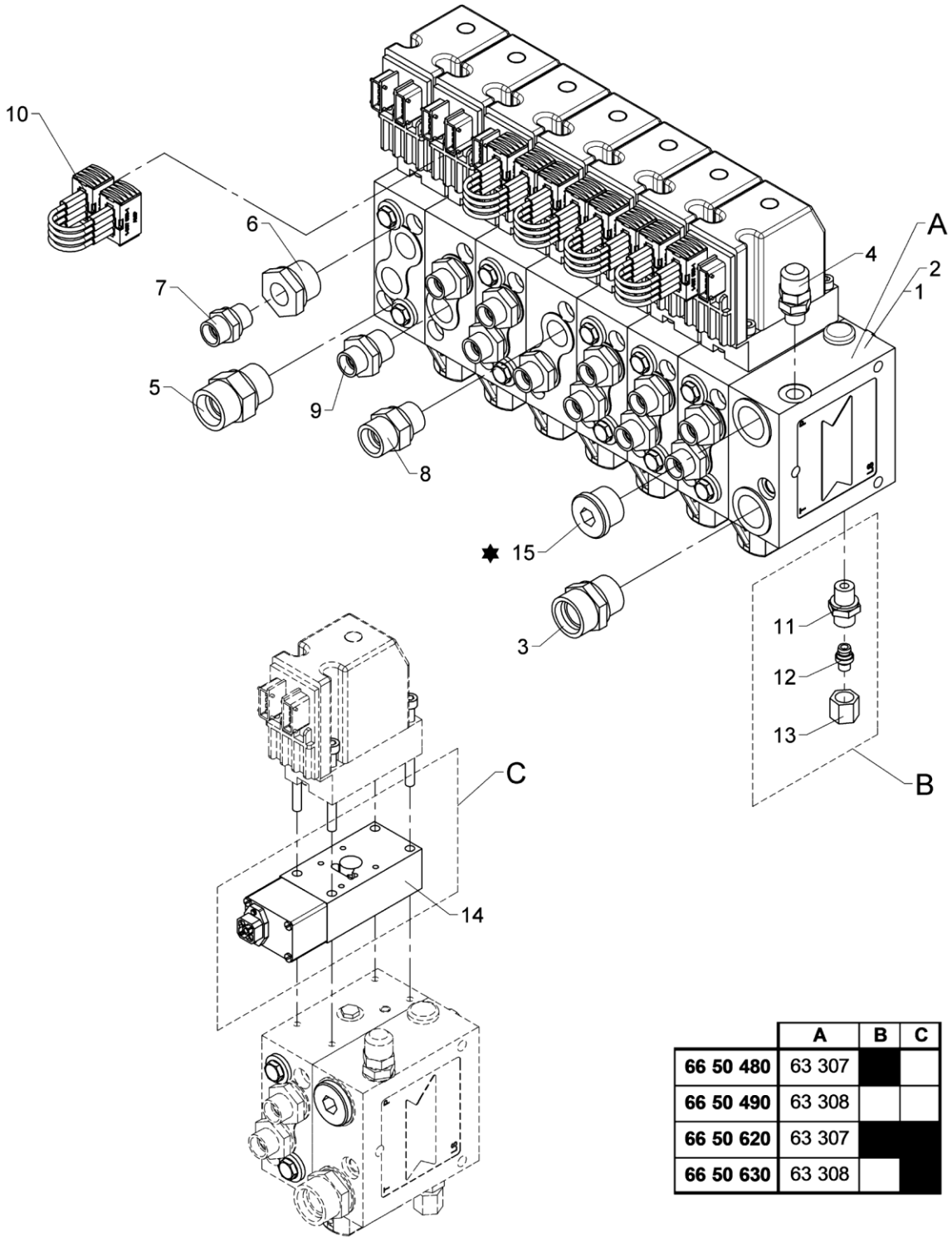

	A	B	C
66 50 480	63 307	■	
66 50 490	63 308		
66 50 620	63 307	■	■
66 50 630	63 308		■

✸ Loctite 542

Control valves, Danfoss, 6 sections, fixed/variable flow with Fly-Jib (std./QOPS)

Created 23-01-2017
Modified 20-10-2017

Pos	Qty.	Part no.	Description	Remarks
		6650480	Valve block, 6 sect., variable	
		6650490	Valve block, 6 sect., fixed	
		6650620	Valve block, 6 sect.,var. QOPS	
		6650630	Valve block, 6 sect.,fix.QOPS	
1	1	63307	Valve block	
2	1	63308	Valve block	
3	1	25169	Connection	P-GEV 22 LR-WD
4	1	26103	Pressure-gauge connect.	
5	1	26197	Connection	P-GEV 20 SR-WD
6	1	26319	Reducing connection	RED-R 3/4-WD/R 3/8
7	1	25127	Connection	P-GEV 12 LR-WD
8	1	26334	Connection	P-GEV 16 SR-WD
9	11	25108	Connection	GES 12 LR 1/2-WD
10	5	28771	Connection cable 0.75 mm2	
11	1	25109	Connection	GES 8 LR-WD
12	1	26166	Blanking plug	VSD 8 L
13	1	25181	Coupling nut	M 8 L
14	1	59676	Sensor	
15	1	26355	Plug	VS-R-3/4 WD

1500K, 1510K, 1720K, 1730K, 1820K, 1830K

66 50 650
66 50 640
66 50 510
Internal ref. 66 50 500

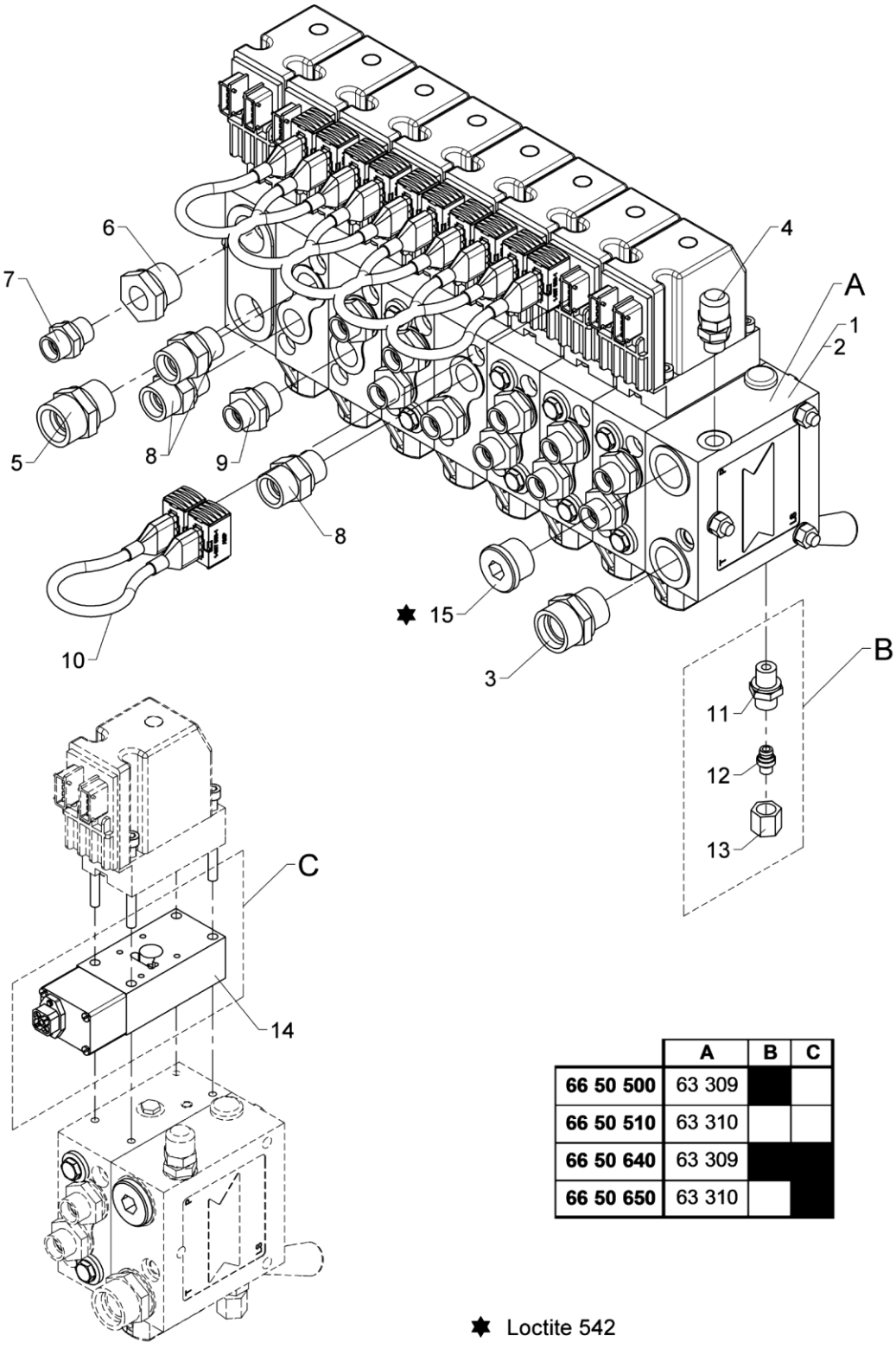

	A	B	C
66 50 500	63 309	■	
66 50 510	63 310		
66 50 640	63 309	■	■
66 50 650	63 310		■

✸ Loctite 542

Obsolete

534 06 360

From loader 1060001
To loader

Created 08-01-2010
Modified 30-04-2013

Control valves, Danfoss, 7 sections, fixed/variable flow with winch and Fly-Jib

Pos	Qty.	Part no.	Description	Remarks
		6650500	Valve block, 7 sect., variable	
		6650510	Valve block, 7 sect., fixed	
		6650640	Valve block, 7 sect.,var.QOPS	
		6650650	Valve block, 7 sect.,fix.QOPS	
1	1	63309	Valve block	
2	1	63310	Valve block	
3	1	25169	Connection	P-GEV 22 LR-WD
4	1	26103	Pressure-gauge connect.	
5	1	26197	Connection	P-GEV 20 SR-WD
6	1	26319	Reducing connection	RED-R 3/4-WD/R 3/8
7	1	25127	Connection	P-GEV 12 LR-WD
8	3	26334	Connection	P-GEV 16 SR-WD
9	11	25108	Connection	GES 12 LR 1/2-WD
10	6	62296	Connection cable	
11	1	25109	Connection	GES 8 LR-WD
12	1	26166	Blanking plug	VSD 8 L
13	1	25181	Coupling nut	M 8 L
14	1	59676	Sensor	
15	1	26355	Plug	VS-R-3/4 WD

1500K, 1510K, 1720K, 1730K, 1820K, 1830K

66 50 650
66 50 640
66 50 510
Internal ref. 66 50 500

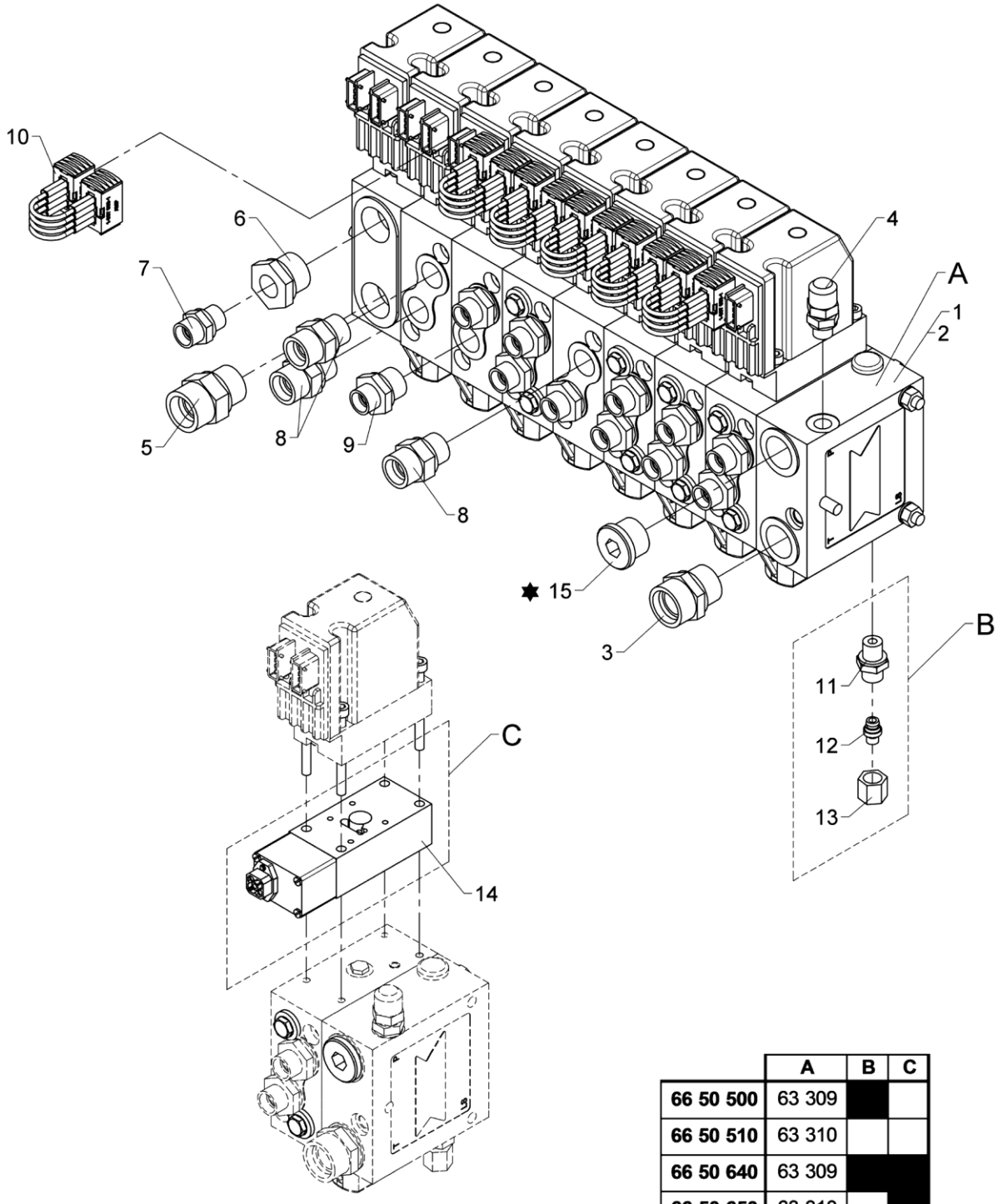

	A	B	C
66 50 500	63 309	■	
66 50 510	63 310		
66 50 640	63 309	■	■
66 50 650	63 310		■

✸ Loctite 542

Control valves, Danfoss, 7 sections, fixed/variable flow with winch and Fly-Jib

Pos	Qty.	Part no.	Description	Remarks
		6650500	Valve block, 7 sect., variable	
		6650510	Valve block, 7 sect., fixed	
		6650640	Valve block, 7 sect.,var.QOPS	
		6650650	Valve block, 7 sect.,fix.QOPS	
1	1	63309	Valve block	
2	1	63310	Valve block	
3	1	25169	Connection	P-GEV 22 LR-WD
4	1	26103	Pressure-gauge connect.	
5	1	26197	Connection	P-GEV 20 SR-WD
6	1	26319	Reducing connection	RED-R 3/4-WD/R 3/8
7	1	25127	Connection	P-GEV 12 LR-WD
8	3	26334	Connection	P-GEV 16 SR-WD
9	11	25108	Connection	GES 12 LR 1/2-WD
10	6	28771	Connection cable 0.75 mm2	
11	1	25109	Connection	GES 8 LR-WD
12	1	26166	Blanking plug	VSD 8 L
13	1	25181	Coupling nut	M 8 L
14	1	59676	Sensor	
15	1	26355	Plug	VS-R-3/4 WD

1500K, 1510K, 1720K, 1730K, 1820K, 1830K

66 50 670
66 50 660
66 50 530
Internal ref. 66 50 520

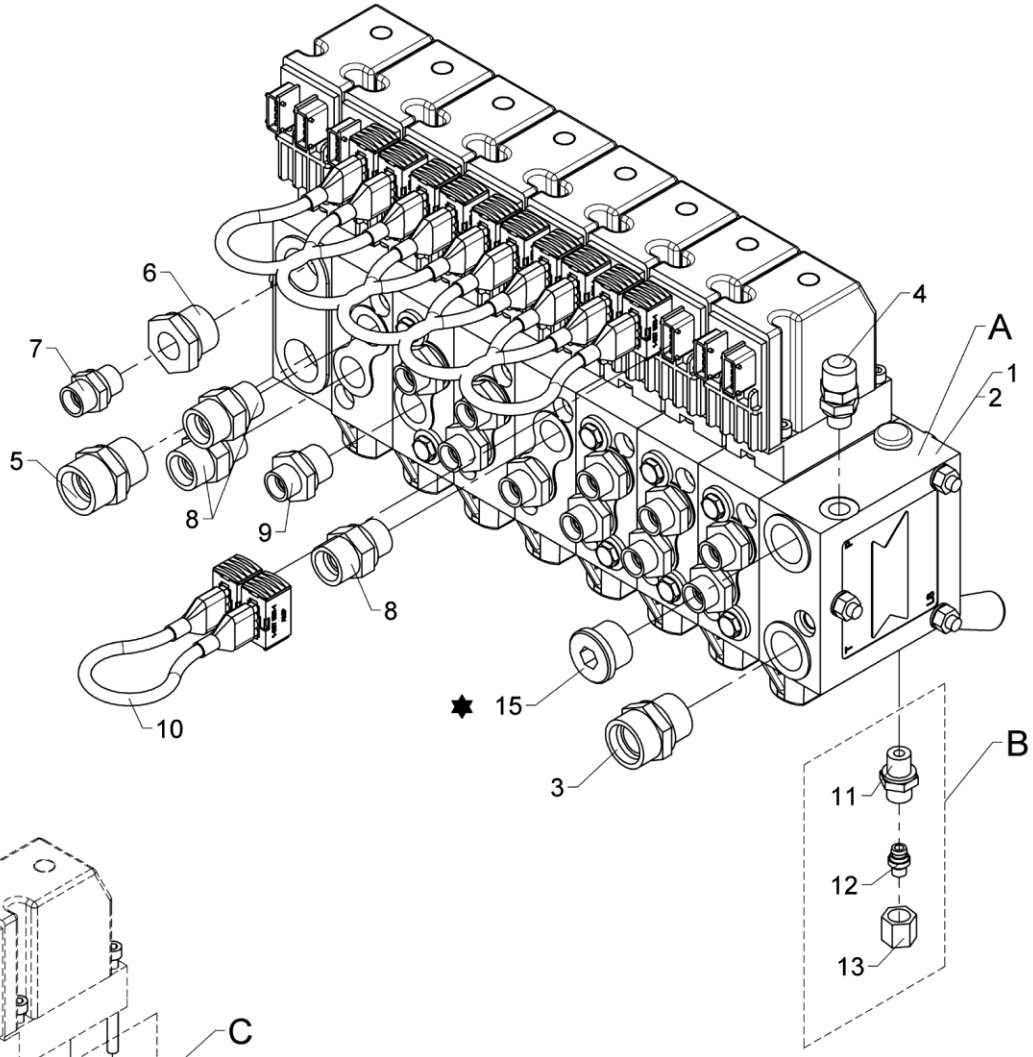

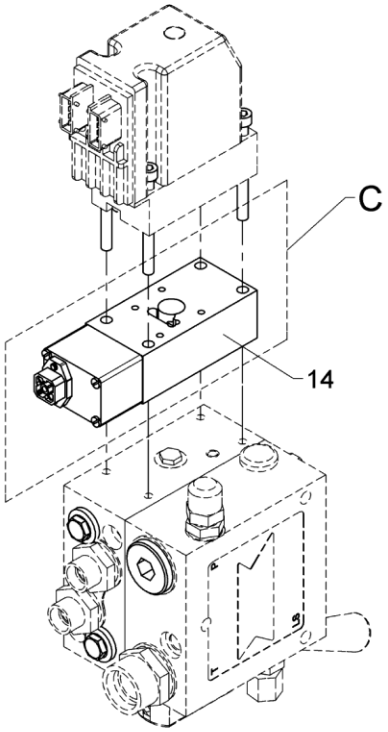

	A	B	C
66 50 520	63 311	■	
66 50 530	63 312		
66 50 660	63 311	■	■
66 50 670	63 312		■

✸ Loctite 542

Obsolete

534 06 370

From loader 1060001
To loader

Created 11-01-2010
Modified 30-04-2013

Control valves, Danfoss, 7 sections, fixed/variable flow with rotator, grab and winch

Pos	Qty.	Part no.	Description	Remarks
		6650520	Valve block, 7 sect., variable	
		6650530	Valve block, 7 sect., fixed	
		6650660	Valve block, 7 sect.,var.QOPS	
		6650670	Valve block, 7 sect.,fix.QOPS	
1	1	63311	Valve block	
2	1	63312	Valve block	
3	1	25169	Connection	P-GEV 22 LR-WD
4	1	26103	Pressure-gauge connect.	
5	1	26197	Connection	P-GEV 20 SR-WD
6	1	26319	Reducing connection	RED-R 3/4-WD/R 3/8
7	1	25127	Connection	P-GEV 12 LR-WD
8	3	26334	Connection	P-GEV 16 SR-WD
9	11	25108	Connection	GES 12 LR 1/2-WD
10	6	62296	Connection cable	
11	1	25109	Connection	GES 8 LR-WD
12	1	26166	Blanking plug	VSD 8 L
13	1	25181	Coupling nut	M 8 L
14	1	59676	Sensor	
15	1	26355	Plug	VS-R-3/4 WD

1500K, 1510K, 1720K, 1730K, 1820K, 1830K

66 50 670
66 50 660
66 50 530
Internal ref. 66 50 520

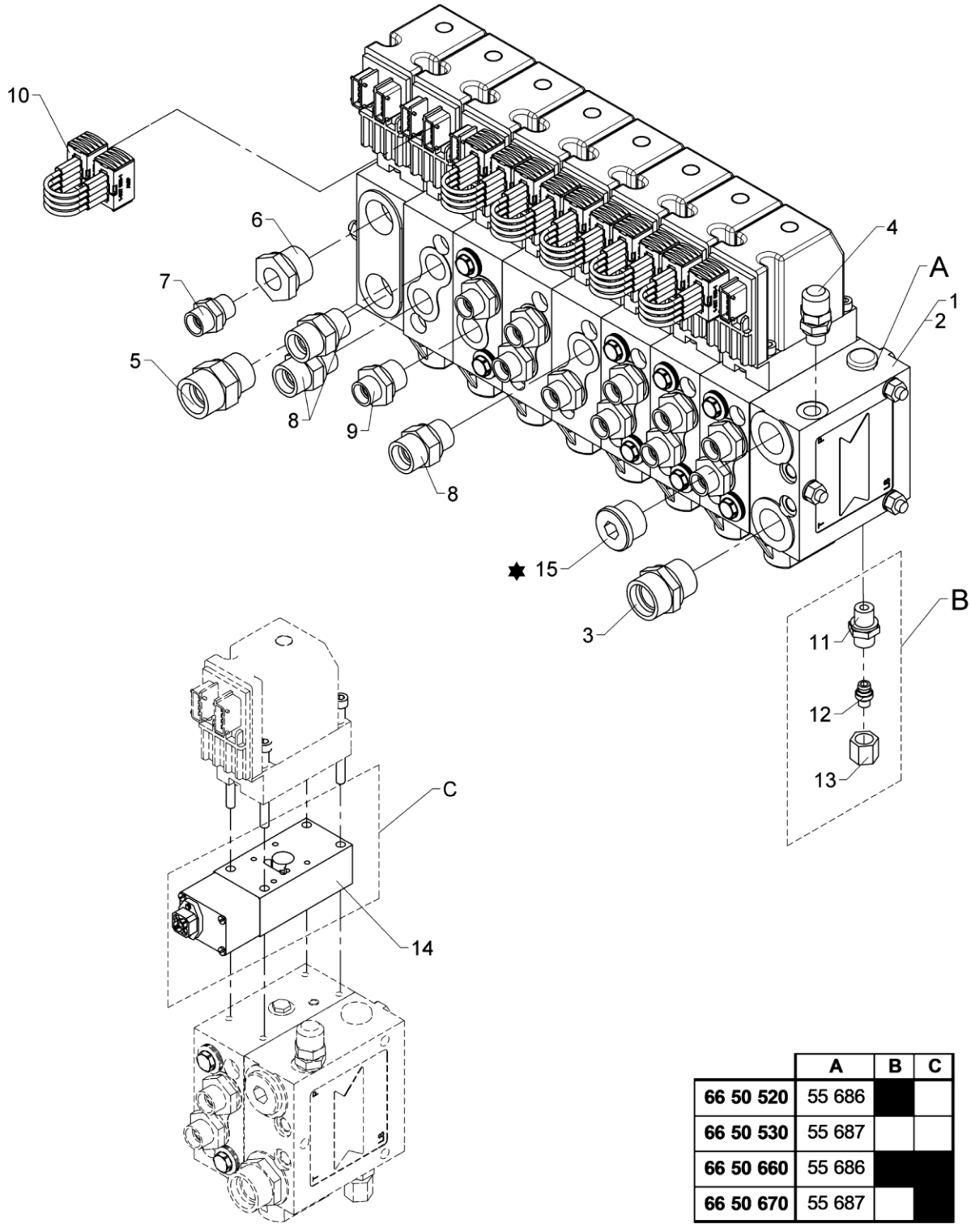

	A	B	C
66 50 520	55 686	■	
66 50 530	55 687		
66 50 660	55 686	■	■
66 50 670	55 687		■

✸ Loctite 542

Obsolete

534 06 370 A

From loader

To loader

Created 02-11-2015

Modified 01-04-2017

Control valves, Danfoss, 7 sections, fixed/variable flow with rotator, grab and winch

Pos	Qty.	Part no.	Description	Remarks
		6650520	Valve block, 7 sect., variable	
		6650530	Valve block, 7 sect., fixed	
		6650660	Valve block, 7 sect.,var.QOPS	
		6650670	Valve block, 7 sect.,fix.QOPS	
1	1	55686	Valve block	
2	1	55687	Valve block	
3	1	25169	Connection	P-GEV 22 LR-WD
4	1	26103	Pressure-gauge connect.	
5	1	26197	Connection	P-GEV 20 SR-WD
6	1	26319	Reducing connection	RED-R 3/4-WD/R 3/8
7	1	25127	Connection	P-GEV 12 LR-WD
8	3	26334	Connection	P-GEV 16 SR-WD
9	11	25108	Connection	GES 12 LR 1/2-WD
10	6	28771	Connection cable 0.75 mm2	
11	1	25109	Connection	GES 8 LR-WD
12	1	26166	Blanking plug	VSD 8 L
13	1	25181	Coupling nut	M 8 L
14	1	59676	Sensor	
15	1	26355	Plug	VS-R-3/4 WD

1500K, 1510K, 1720K, 1730K, 1820K, 1830K

66 50 530
Internal ref. 66 50 520

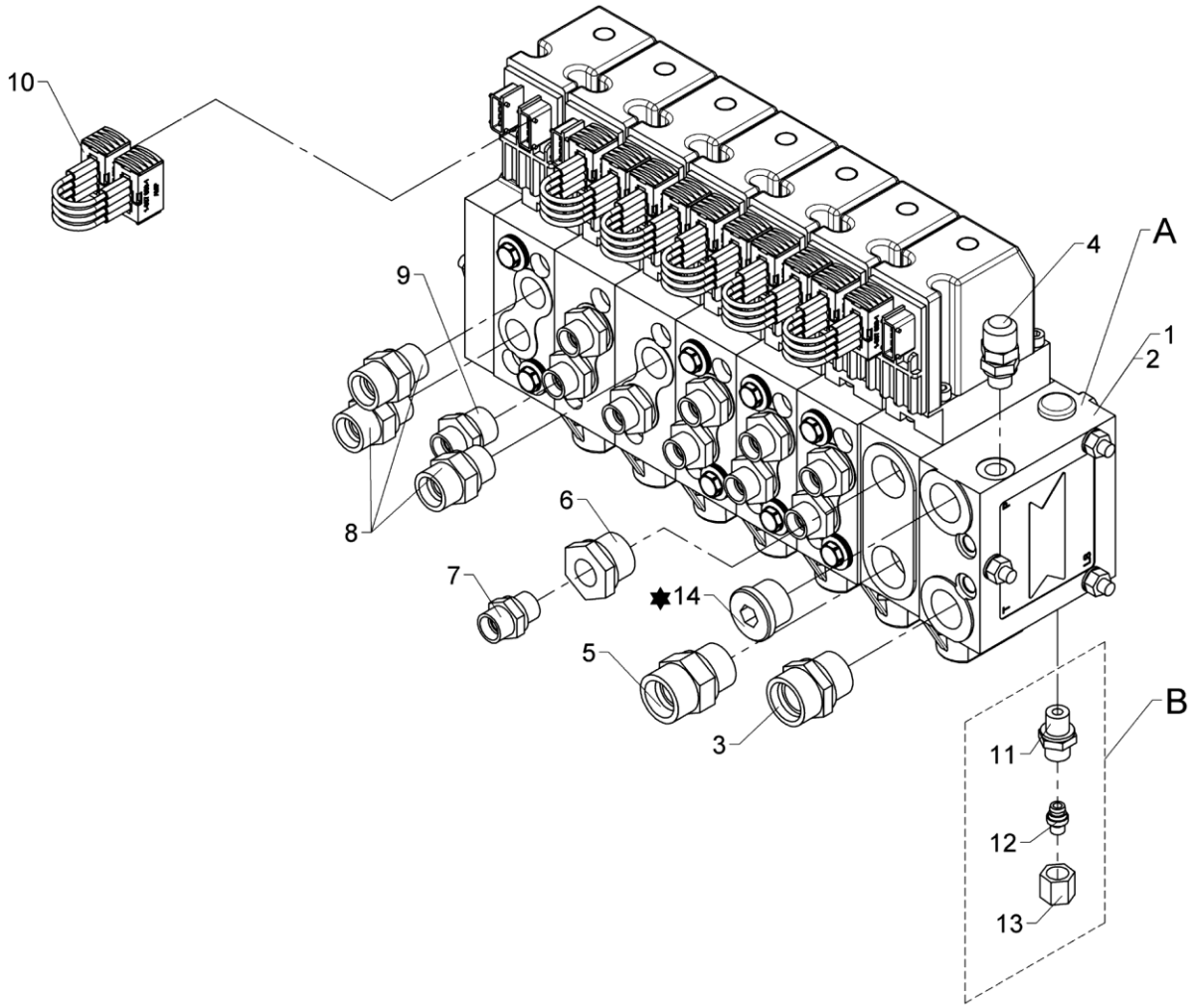

	A	B	C
66 50 520	55 863	■	
66 50 530	55 864		

✸ Loctite 542

Control valves, Danfoss, 7 sections, fixed/variable flow with rotator, grab and winch

Pos	Qty.	Part no.	Description	Remarks
		6650520	Valve block, 7 sect., variable	
		6650530	Valve block, 7 sect., fixed	
1	1	55863	Valve block_RC_7_2xWi_V	
2	1	55864	Valve block_RC_7_2xWi_F	
3	1	25169	Connection	P-GEV 22 LR-WD
4	1	26103	Pressure-gauge connect.	
5	1	26197	Connection	P-GEV 20 SR-WD
6	1	26319	Reducing connection	RED-R 3/4-WD/R 3/8
7	1	25127	Connection	P-GEV 12 LR-WD
8	3	26334	Connection	P-GEV 16 SR-WD
9	11	25108	Connection	GES 12 LR 1/2-WD
10	6	28771	Connection cable 0.75 mm2	
11	1	25109	Connection	GES 8 LR-WD
12	1	26166	Blanking plug	VSD 8 L
13	1	25181	Coupling nut	M 8 L
14	1	26355	Plug	VS-R-3/4 WD

1500K, 1510K, 1720K, 1730K, 1820K, 1830K

Internal ref. 99 99 380

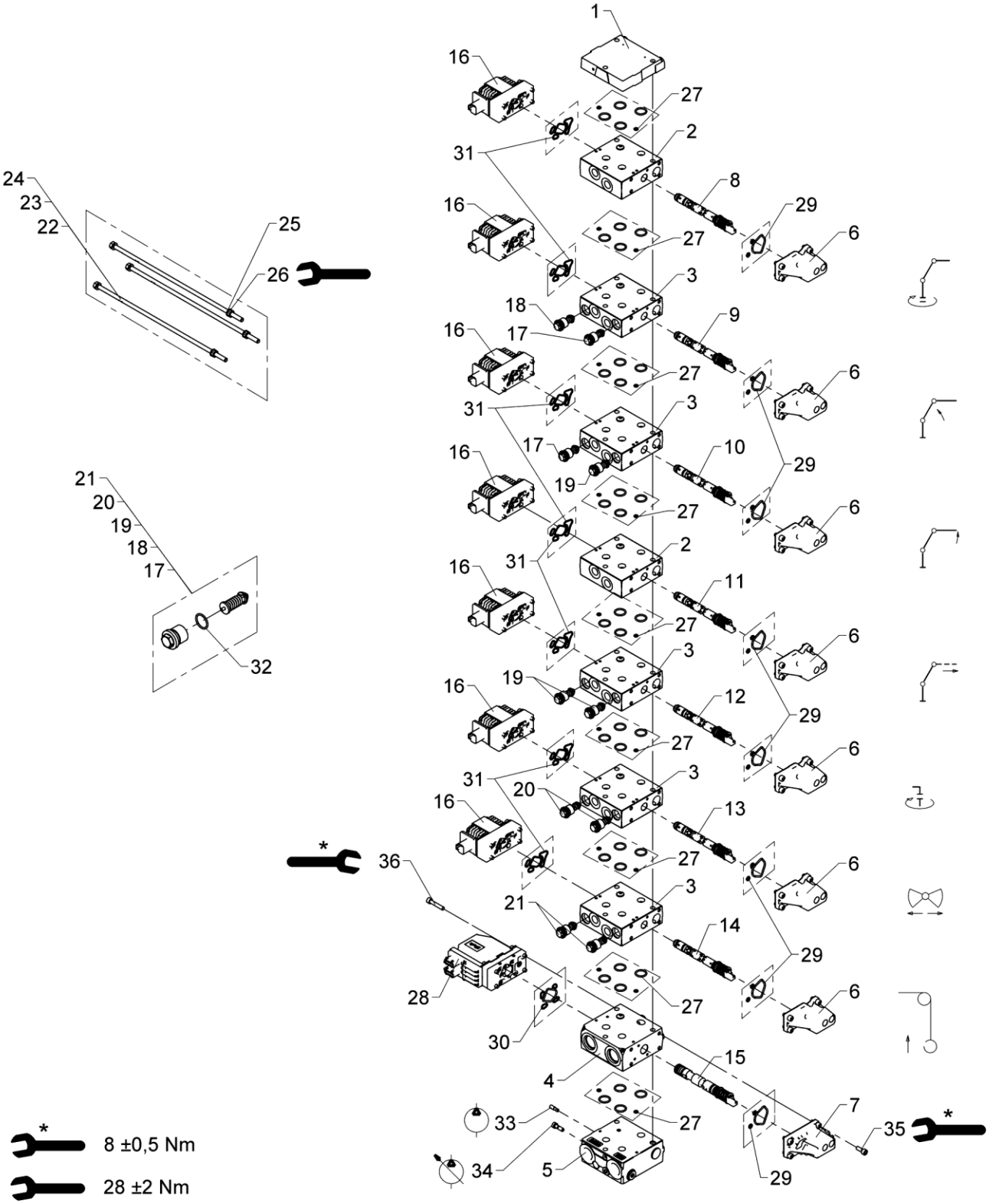

Pos	Qty.	Part no.	Description	Remarks
1		58921	End cover	
2		55816	Basic module	
3		55810	Basic module	
4		58999	PVSKM-section	
5		55800	Pump side module, damp. PVG OC	
6		55814	Lever module, excl. foot	
7		58919	Lever module	
8		55807	Spool	
9		55806		
10		55837		
11		55804	Spool	
12		55803	Spool	
13		55802	Spool	
14		55808		
15		55801	Spool, PVSKM	
16		55813	Electric module PVG16-PVEA	
17		58931	Port-relief valve	
18		55812	Port-relief valve 80 bar	
19		62278	Port-relief valve	
20		62280	Port-relief valve	
21		62276	Port-relief valve	
22		58966	Connecting kit, 5 sections	
23		58965	Connecting kit, 4 sections	
24		62017	Mounting kit	
25		62044	Washer	
26		30856	Nut, stainless	M8
27		58925	Seal kit	
28		58962	Electric activation	
29		62211	Seal kit	
30		62240	Seal kit	
31		55815	Seal kit, electric module	
32		62052	O-ring	
33		58941	Open centre kit	
34		62065	Closed center kit	
35		30424	Screw	MC6 x 16
36		62241	Screw	

1500K, 1510K, 1720K, 1730K, 1820K, 1830K

66 52 730
66 52 750 66 52 790
66 52 720 66 52 780
66 52 760 66 52 770
Internal ref. 66 52 740

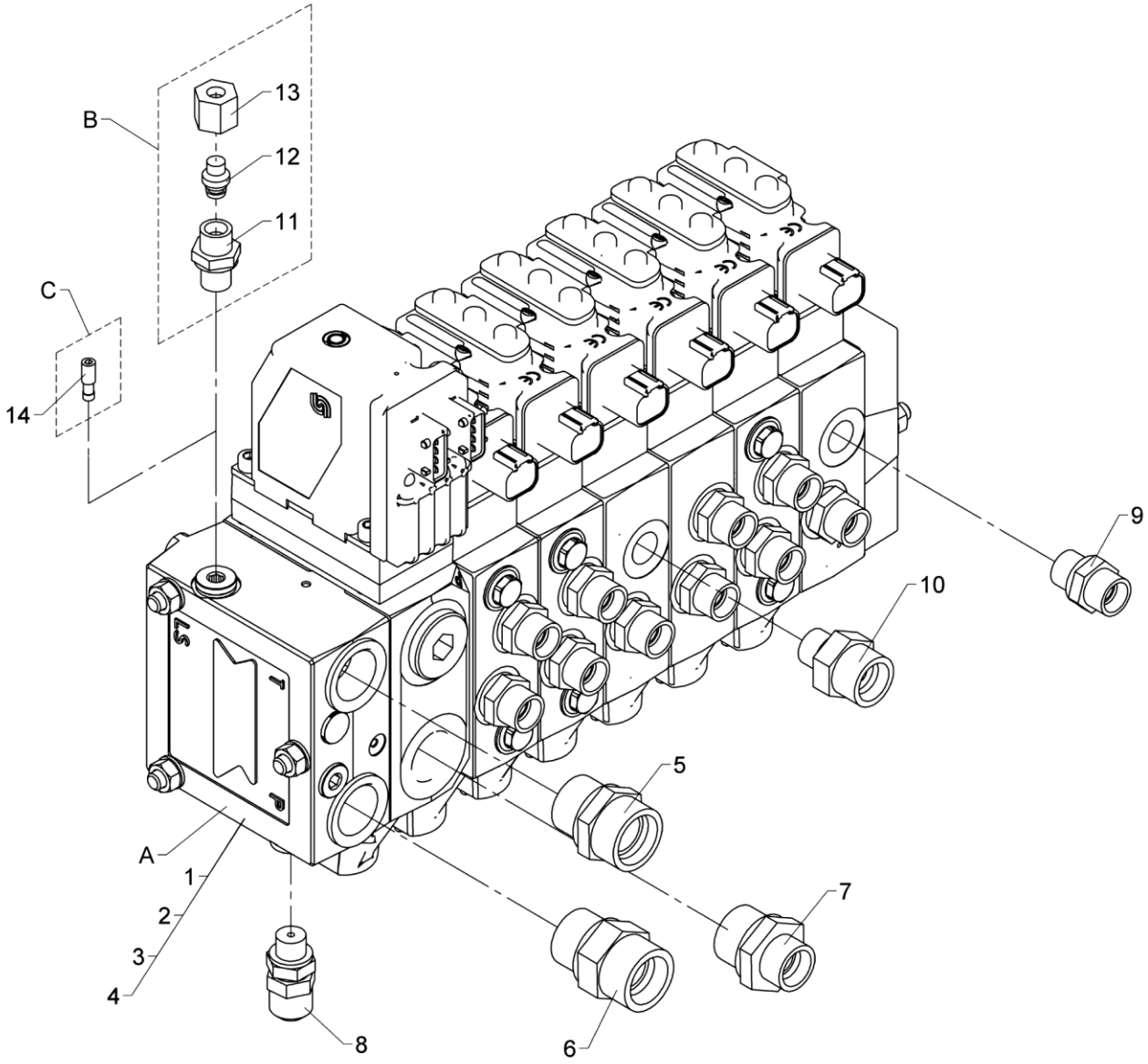

	A	B	C
66 52 720	55 690		
66 52 750	55 690	X	X
66 52 730	55 691		
66 52 760	55 691	X	X
66 52 780	55 692		
66 52 790	55 692	X	X
66 52 740	63 098		
66 52 770	63 098	X	X

Valve block, 6 sect./PVG16

Pos	Qty.	Part no.	Description	Remarks
		6652740		
		6652770		
		6652780		
		6652790		
		6652730		
		6652760		
		6652720		
		6652750		
1	1	55690	Valve block_4fct_F	
2	1	55691	Valve block_5fct_1X_F	
3	1	55692	Valve block_5fct_1W_F	
4	1	63098	PVG 16 control valve	
5	1	25169	Connection	P-GEV 22 LR-WD
6	1	26197	Connection	P-GEV 20 SR-WD
7	1	26947	Connection	24-SDS-L15-G 3-4 E
8	1	26103	Pressure-gauge connect.	
9	11	25127	Connection	P-GEV 12 LR-WD
10	1	26368	Straight connection	P-GEV 16 SR 3/8-WD
11	1	25109	Connection	GES 8 LR-WD
12	1	26166	Blanking plug	VSD 8 L
13	1	25181	Coupling nut	M 8 L
14	1	62065	Closed center kit	

1500K, 1510K, 1720K, 1730K, 1820K, 1830K

Internal ref. 99 99 700

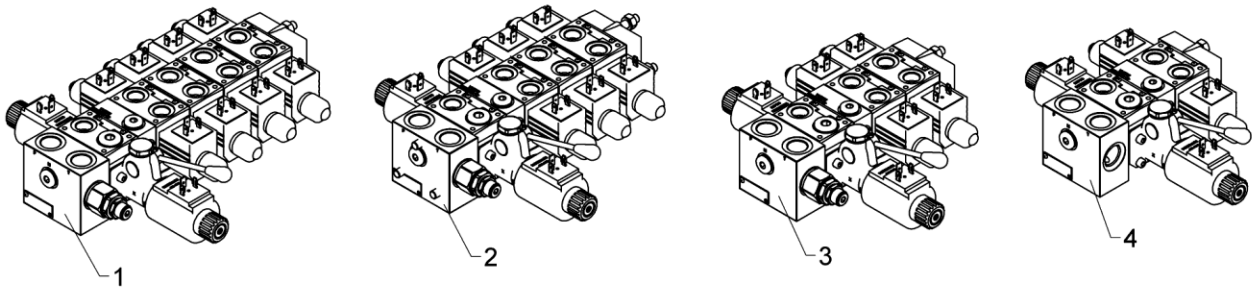

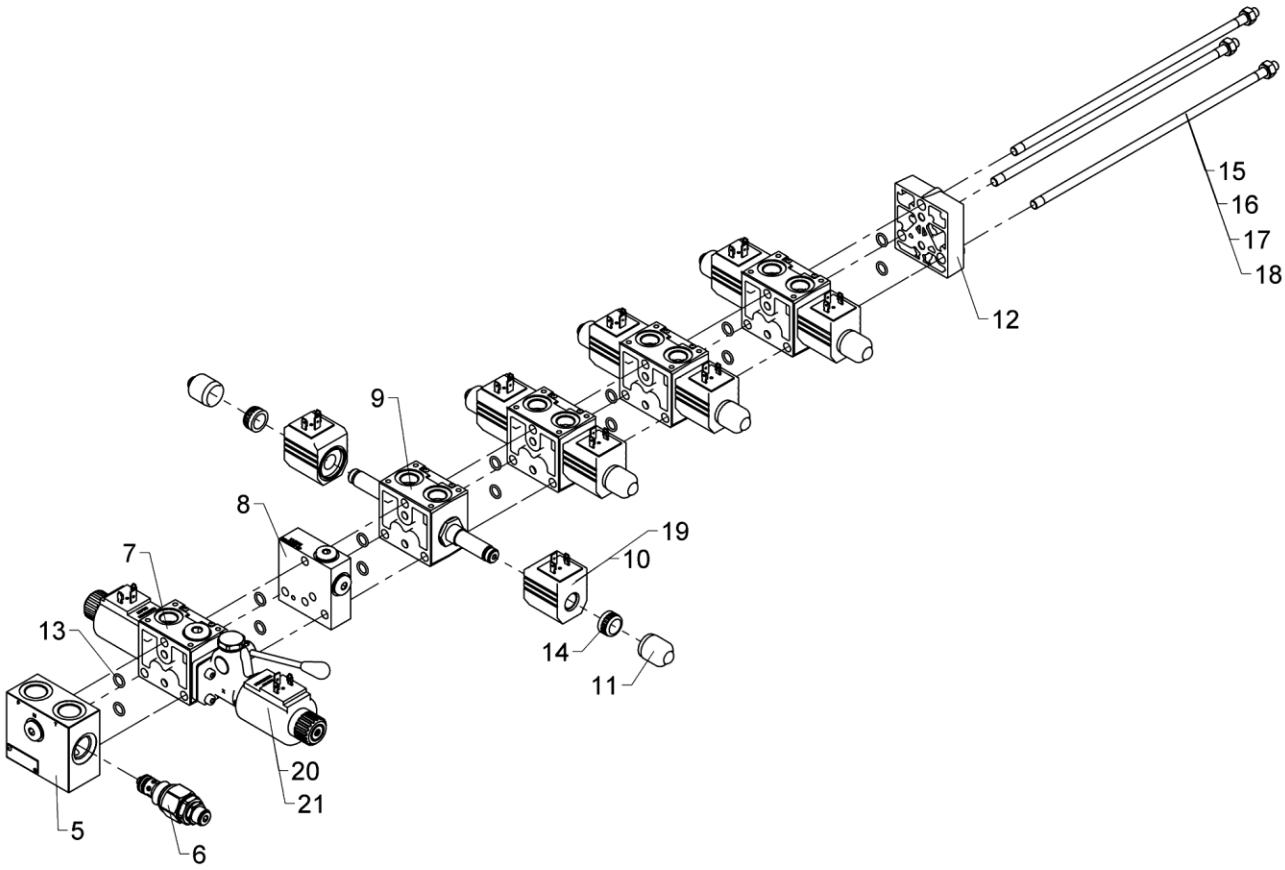

Valve block (stabilizer control valve)

Pos	Qty.	Part no.	Description	Remarks
1	1	50510	Stabilizer valve	8 funkt.
2	1	50513	Stabilizer valve block	6 funkt.
3	1	50512	Stabilizer control valve	4 funkt.
4	1	50514	Stabilizer valve block	2 funkt.
5	1	50534	Inlet section	
6	1	50530	Main relief valve	
7	1	50531	Valve	
8	1	50532	Module	
9	4	50533	Valve	
10	8	50535	Solenoid 24 V	
11	8	50516	Cover for push button	
12	1	50537	Outlet section	
13	14	20114	O-ring	Ø8,73 x 1,78
14	8	50538	Washer	
15	1	50522	Kit of stay bolts	M8x300 / 50510
16	1	50546		M8X255 / 50513
17	1	50525	Kit of stay bolts M8X220	M8x220 / 50512
18	1	50526	Kit of staybolts M8X165	M8x165 / 50514
19	1	50515	Solenoid 12V	
20	1	59082	Solenoid 24 V	
21	1	59073	Solenoid 12V	

1500K, 1510K, 1720K, 1730K, 1820K, 1830K

66 52 800
Internal ref. 66 51 510

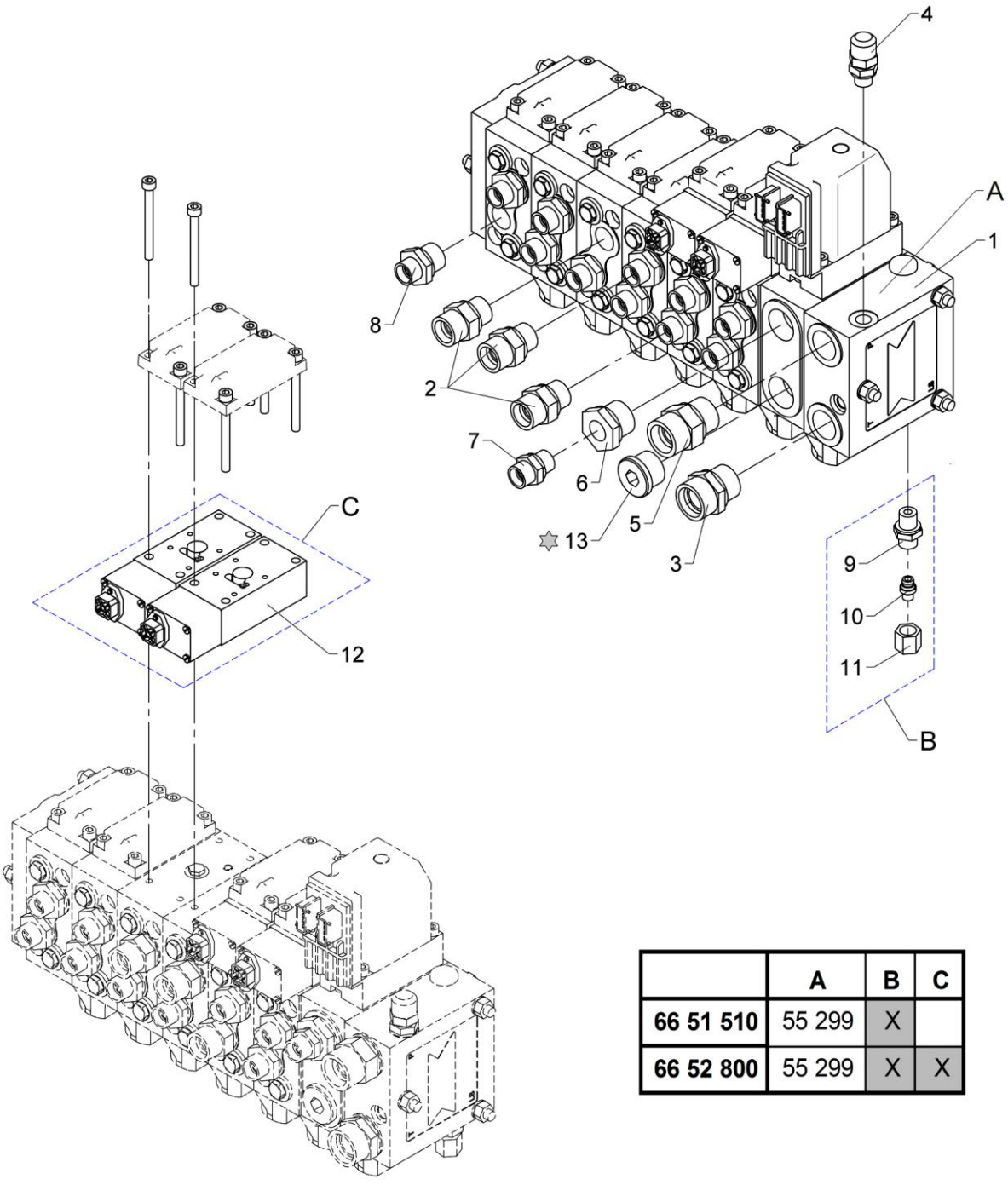

	A	B	C
66 51 510	55 299	X	
66 52 800	55 299	X	X

✡ Loctite 542

Control valves, Danfoss, 6 sections, variable, Manual

Pos	Qty.	Part no.	Description	Remarks
		6651510		
		6652800		
1	1	55299	Valve block	
2	3	26334	Connection	P-GEV 16 SR-WD
3	1	25169	Connection	P-GEV 22 LR-WD
4	1	26103	Pressure-gauge connect.	
5	1	26197	Connection	P-GEV 20 SR-WD
6	1	26319	Reducing connection	RED-R 3/4-WD/R 3/8
7	1	25127	Connection	P-GEV 12 LR-WD
8	9	25108	Connection	GES 12 LR 1/2-WD
9	1	25109	Connection	GES 8 LR-WD
10	1	26166	Blanking plug	VSD 8 L
11	1	25181	Coupling nut	M 8 L
12	2	59676	Sensor	
13	1	26355	Plug	VS-R-3/4 WD

1500K, 1510K, 1720K, 1730K, 1820K, 1830K

Internal ref. 66 51 610

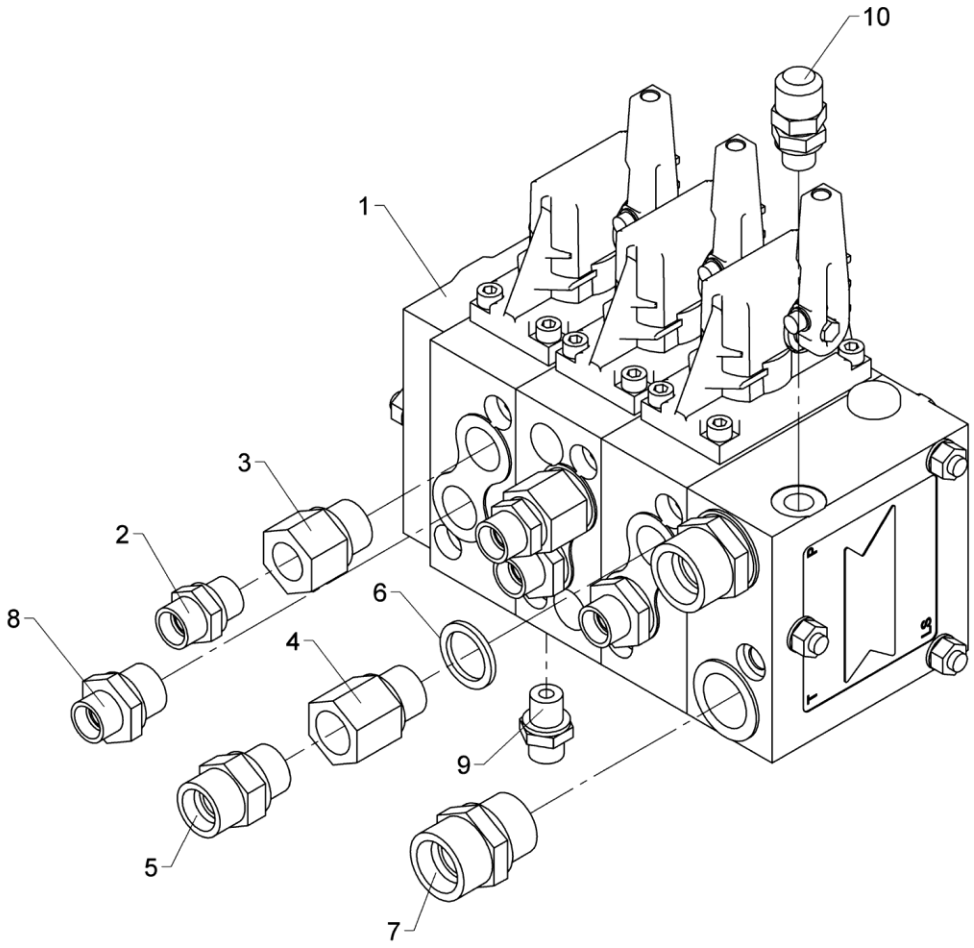

Control valve, Danfoss, 3 sections, 1 circuit, fixed flow, left

Pos	Qty.	Part no.	Description	Remarks
1	1	63391	Valve block	Manuel + V
2	2	25127	Connection	P-GEV 12 LR-WD
3	2	25243	Reducing connection	RED-R 1/2-WD/R 3/8
4	1	26922	Reducing nipple	
5	1	26334	Connection	P-GEV 16 SR-WD
6	1	21106	Seal washer	ø21,5 x 28,7 x 2,5
7	2	26197	Connection	P-GEV 20 SR-WD
8	3	25108	Connection	GES 12 LR 1/2-WD
9	1	25109	Connection	GES 8 LR-WD
10	1	26103	Pressure-gauge connect.	

1500K, 1510K, 1720K, 1730K, 1820K, 1830K

Internal ref. 66 51 620

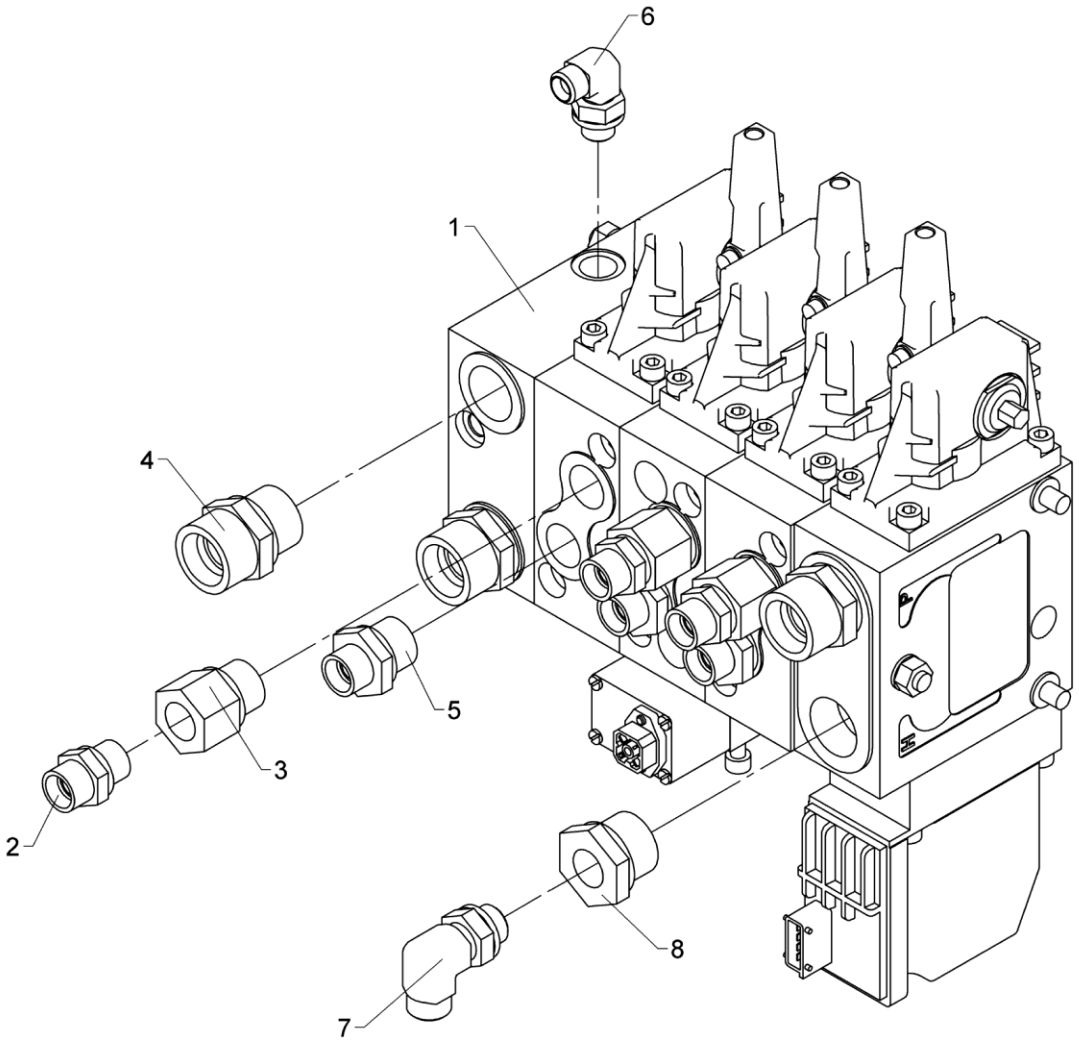

Control valve, Danfoss, 3 sections, 1 circuit, fixed flow, right

Pos	Qty.	Part no.	Description	Remarks
1	1	63392	Valve block	Manuel F
2	3	25127	Connection	P-GEV 12 LR-WD
3	3	25243	Reducing connection	RED-R 1/2-WD/R 3/8
4	3	26197	Connection	P-GEV 20 SR-WD
5	3	25108	Connection	GES 12 LR 1/2-WD
6	1	26898	Elbow connection	8 mm - 1/4"
7	1	26897	Elbow connection	12 mm - 3/8"
8	1	26319	Reducing connection	RED-R 3/4-WD/R 3/8

1500K, 1510K, 1720K, 1730K, 1820K, 1830K

Internal ref. 66 51 590

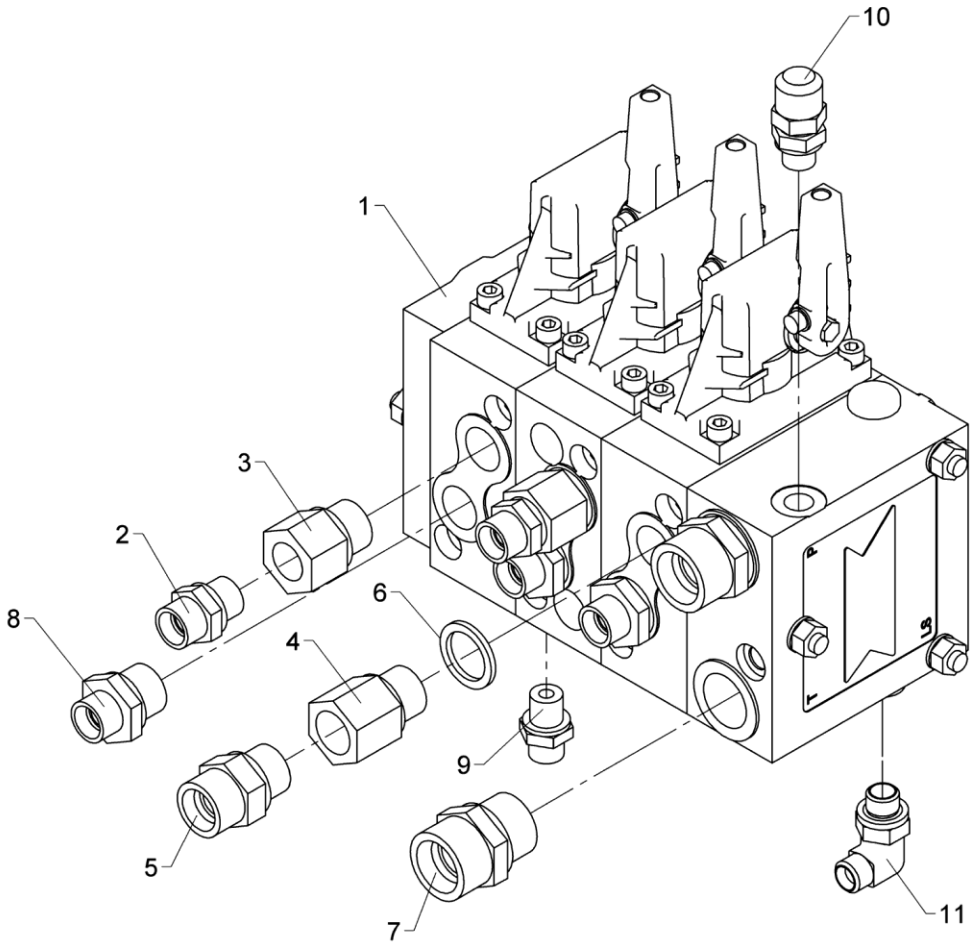

534 06 470

From loader 1060001
To loader

Control valve, Danfoss, 3 sections, 1 circuit, variable flow, left

Created 08-01-2010
Modified

Pos	Qty.	Part no.	Description	Remarks
1	1	63393	Valve block	Manuel + V
2	2	25127	Connection	P-GEV 12 LR-WD
3	2	25243	Reducing connection	RED-R 1/2-WD/R 3/8
4	1	26922	Reducing nipple	
5	1	26334	Connection	P-GEV 16 SR-WD
6	1	21106	Seal washer	ø21,5 x 28,7 x 2,5
7	2	26197	Connection	P-GEV 20 SR-WD
8	3	25108	Connection	GES 12 LR 1/2-WD
9	1	25109	Connection	GES 8 LR-WD
10	1	26103	Pressure-gauge connect.	
11	1	26898	Elbow connection	8 mm - 1/4"

1500K, 1510K, 1720K, 1730K, 1820K, 1830K

Internal ref. 66 51 600

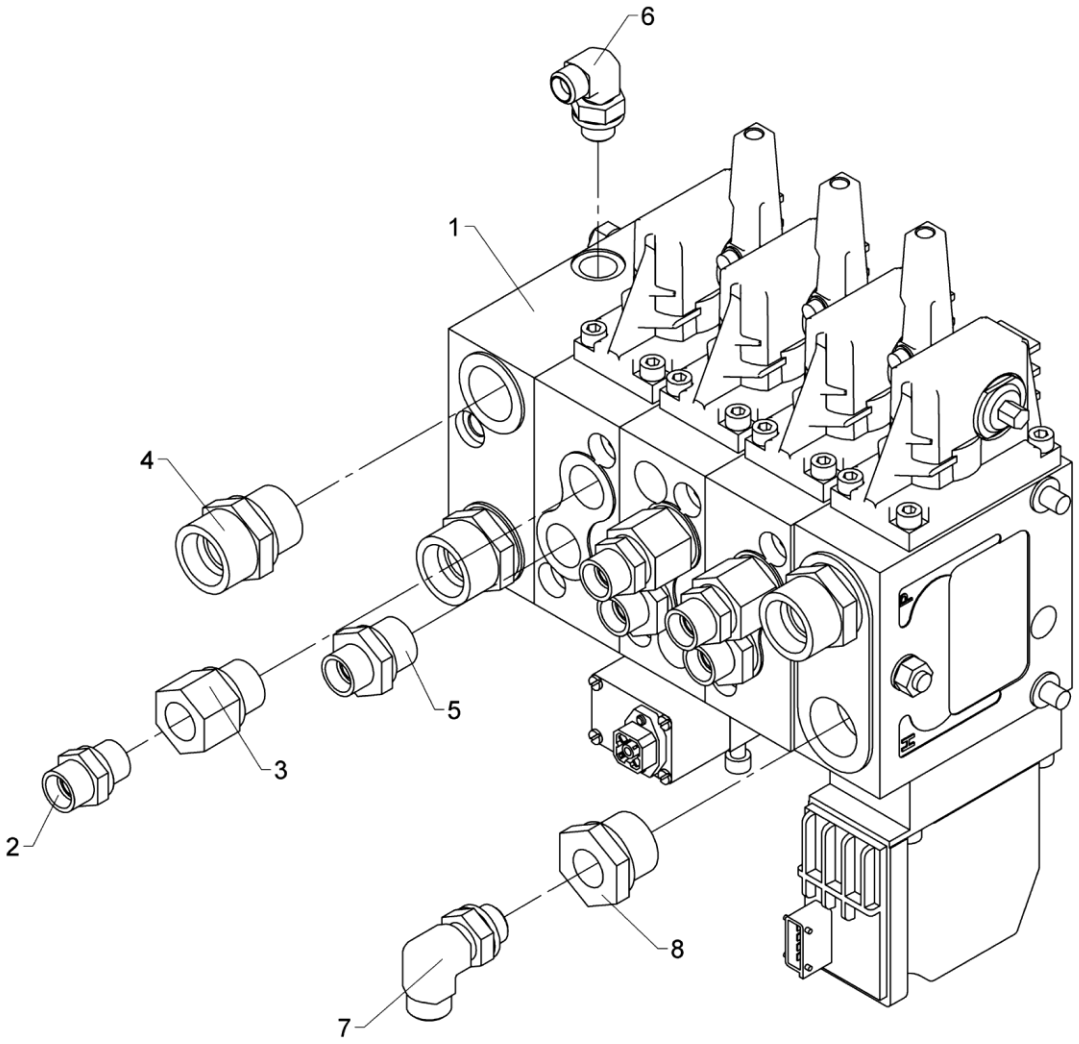

Control valve, Danfoss, 3 sections, 1 circuit, variable flow, right

Pos	Qty.	Part no.	Description	Remarks
1	1	63394	Valve block	Manuel F
2	3	25127	Connection	P-GEV 12 LR-WD
3	3	25243	Reducing connection	RED-R 1/2-WD/R 3/8
4	3	26197	Connection	P-GEV 20 SR-WD
5	3	25108	Connection	GES 12 LR 1/2-WD
6	1	26898	Elbow connection	8 mm - 1/4"
7	1	26897	Elbow connection	12 mm - 3/8"
8	1	26319	Reducing connection	RED-R 3/4-WD/R 3/8

1500K, 1510K, 1720K, 1730K, 1820K, 1830K

Internal ref. 99 99 540

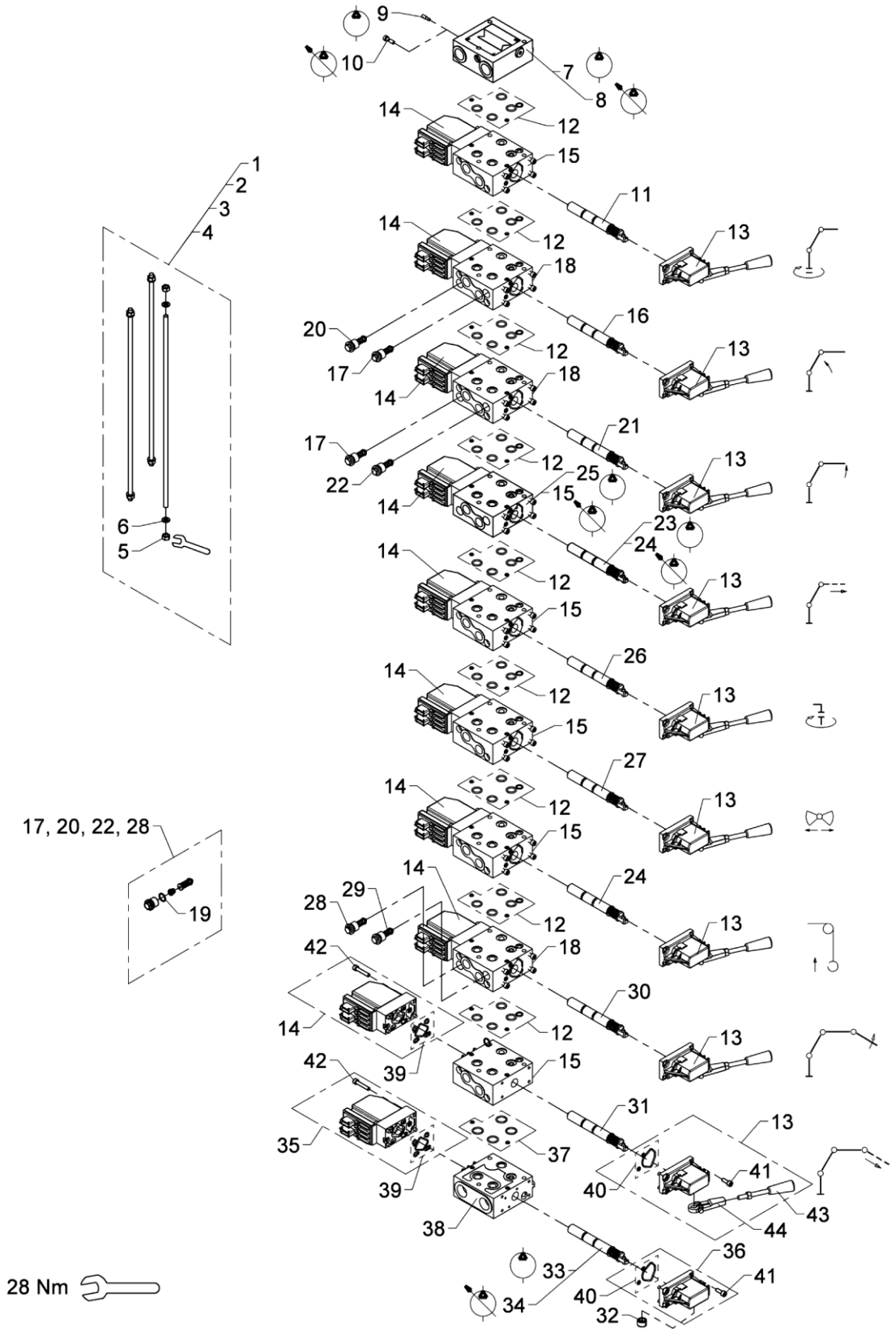

Danfoss control valve PVG32, 4-7 sections

Pos	Qty.	Part no.	Description	Remarks
1		58965	Connecting kit, 4 sections	
2		58966	Connecting kit, 5 sections	
3		58967	Connecting kit, 6 sections	
4		58968	Connecting kit, 7 sections	
5		30856	Nut, stainless	M8
6		62044	Washer	
7		58955	Inlet section, OC	Fast pumpe
8		58956	Inlet section, CC	Variabel pumpe
9		58941	Open centre kit	
10		62065	Closed center kit	
11		62207	Spool	
12		62237	Seal kit	
13		58907	Lever module inkl. lever	
14		62295	Electric activation	
15		62225	Basic module	
16		62033	Spool	
17		58931	Port-relief valve	350 bar
18		62227	Basic module	
19		62052	O-ring	
20		62274	Port-relief valve	125 bar
21		62209	Spool	
22		62286	Port-relief valve	250 bar
23		61963	Spool	Fast pumpe
24		62055	Spool	Variabel pumpe
25		62224	Basic module	
26		58902	Spool	
27		62070	Spool	
28		62283	Port-relief valve	320 bar
29		62278	Port-relief valve	190 bar
30		61964	Spool	
31		58903	Spool	
32		64416	Cover for sealing	
33		58959	Spool, OC	Fast pumpe
34		58960	Spool, CC	Variabel pumpe
35		58962	Electric activation	
36		58919	Lever module	
37		58925	Seal kit	
38		58958	PVSK valve section	
39		62240	Seal kit	
40		62239	Seal kit	
41		30424	Screw	MC6 x 16

1500K, 1510K, 1720K, 1730K, 1820K, 1830K

Internal ref. 99 99 540

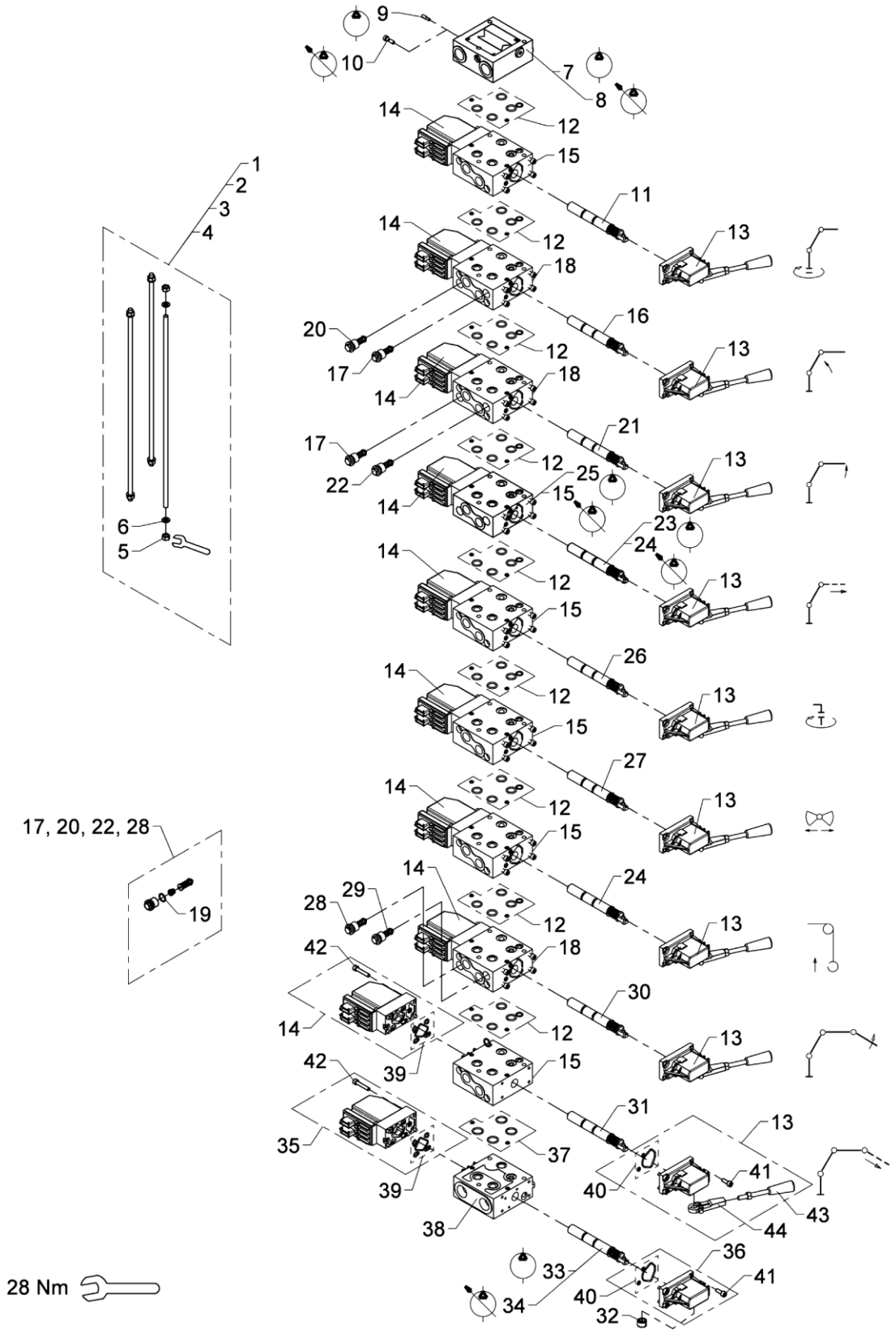

Danfoss control valve PVG32, 4-7 sections

Pos	Qty.	Part no.	Description	Remarks
42		62241	Screw	
43		62062	Lever	
44		59682	Foot for lever	

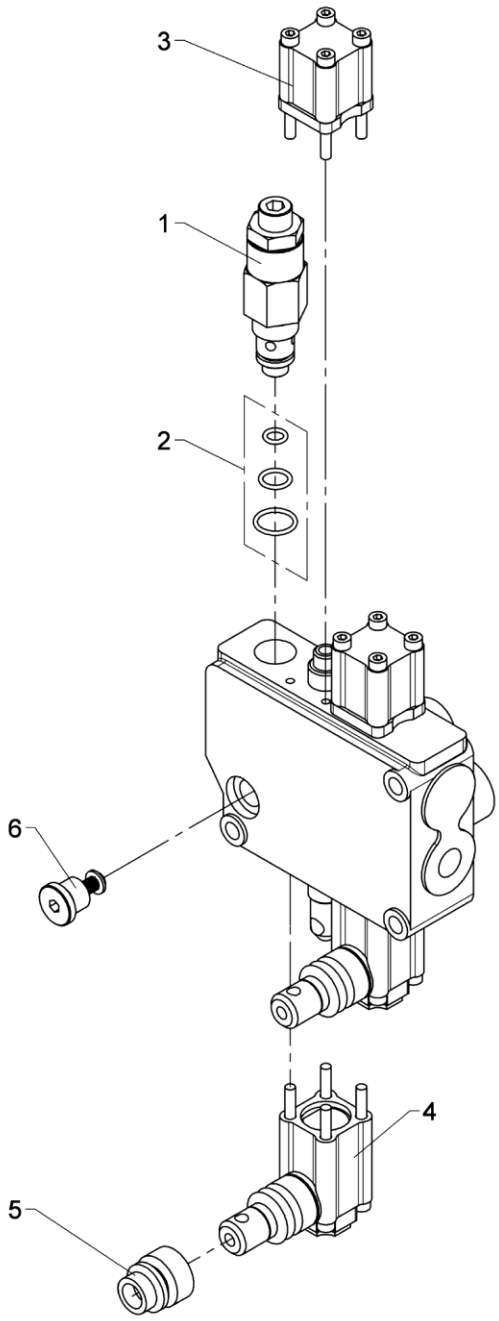
3
1
2
6
4
5

HC - M50 stabilizer valve section

Pos	Qty.	Part no.	Description	Remarks
1		55343	Main relief valve 190 bar	
2		55314	Seal kit cpl.	
3		55332	Return spring kit	
4		55334	Hand lever kit	
5		55389	Rubber bellows (M50)	
6		55339	Check valve kit	

1500K, 1510K, 1720K, 1730K, 1820K, 1830K

Internal ref. 99 99 570

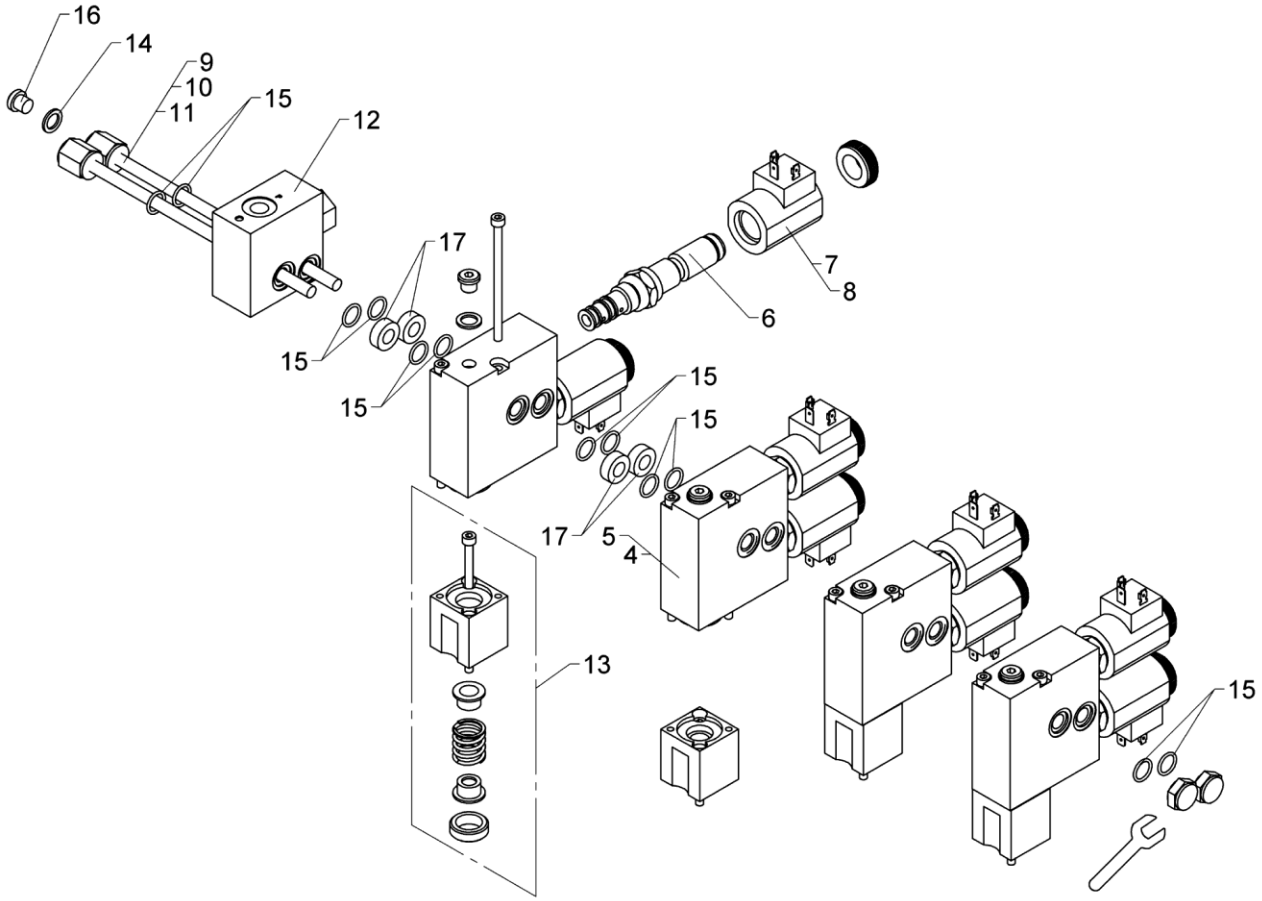

HC-D4 electro-hydraulic NEM-kit, NEM radio remote control

Pos	Qty.	Part no.	Description	Remarks
1		55360	El-hydr. NEM-kit, 4x24V, right	HC-D4, 4 sekt.
2		55361	El-hydr. NEM-kit, 5x24V, right	HC-D4, 5 sekt.
3		55362	El-hydr. NEM-kit, 6x24V, right	HC-D4, 6 sekt.
4		55324	Electro-hydr.module 12V	
5		55322	Electro-hydr. module 24V	
6		55320	Cartridge	
7		55323	Solenoid 12V	
8		55321	Solenoid, 24V	
9		55307	Kit of stay bolts NEM 4	
10		55312	Kit of stay bolts NEM 5	
11		55313	Kit of stay bolts NEM 6	
12		55325	Pressure reducing valve	
13		55306	Spring kit	
14		21115	Seal washer	ø10,7 x 16 x 1,5
15		20115	O-ring	OR 12,42 x 1,78
16		25187	Plug	VS-R-1/8 WD
17		55363	Centering washer	

1500K, 1510K, 1720K, 1730K, 1820K, 1830K

Internal ref. 99 99 575

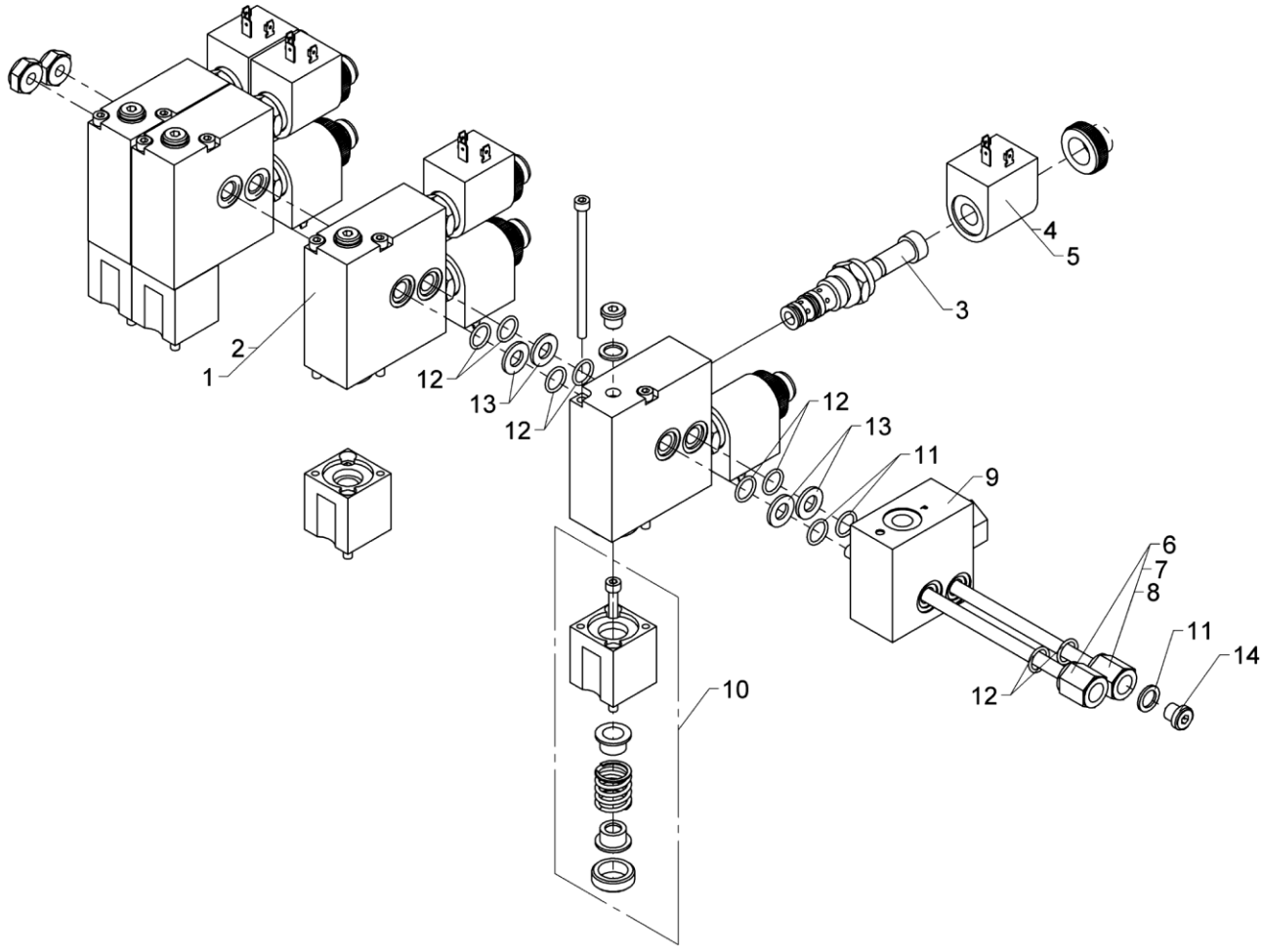

HC - M50 electro-hydraulic NEM-kit NEM radio remote control

Pos	Qty.	Part no.	Description	Remarks
1	3	55373	Electro-hydr.module 12V	
2	1	55372	Electro-hydr.module 24V	
3	1	55504	Cartridge for NEM ON/OFF	
4	1	55344	Solenoid, 12V	
5	1	55345	Solenoid, 26V	
6	1	55501	Stay bolt kit	3 sekt.
7	1	55328	Kit of stay bolts	4 sekt.
8	1	55327	Kit of stay bolts	5 sekt.
9	1	55325	Pressure reducing valve	
10	1	55319	Spring kit, electric activatio	
11	1	21115	Seal washer	ø10,7 x 16 x 1,5
12	6	20115	O-ring	OR 12,42 x 1,78
13	4	55317	Centering shim	
14	1	25187	Plug	VS-R-1/8 WD

1500K, 1510K, 1720K, 1730K, 1820K, 1830K

Internal ref. 99 99 550

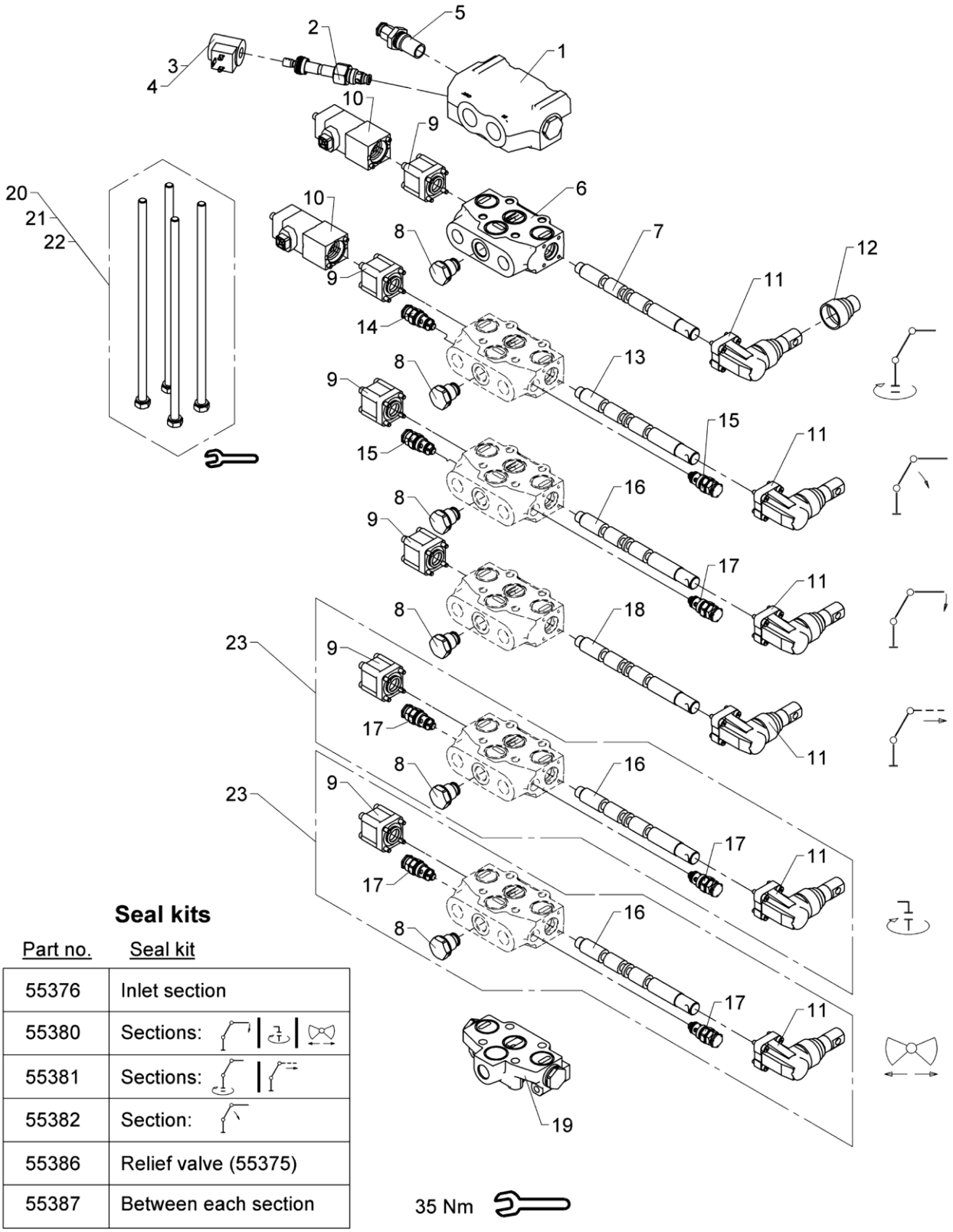

Seal kits

Part no.	Seal kit
55376	Inlet section
55380	Sections:
55381	Sections:
55382	Section:
55386	Relief valve (55375)
55387	Between each section

HC-D4 valve block, 4-6 sections

Created 08-02-2012
Modified 02-03-2016

Pos	Qty.	Part no.	Description	Remarks
1	1	55535	Inlet section	
2	1	55346	Cartridge	
3	1	55344	Solenoid, 12V	
4	1	55345	Solenoid, 26V	
5	1	55375	Main relief valve 300 bar	
6	1	55534	Section D4	
7	1	55367	Spool	
8	6	55379	Check valve	
9	6	55378	Spring center device	
10	2	55371	Spool sensor	
11	6	55377	Hand lever kit	
12	1	55340	Rubber bellows (HC-D4)	
13	1	55364	Spool	
14	1	55383	Relief valve	100 bar
15	2	55385	Relief valve	325 bar
16	3	55395	Spool, extension	
17	5	55384	Relief valve	200 bar
18	1	55388	Spool	
19	1	55533	Outlet section	
20	1	55397	Kit of stay bolts	4 sektioner
21	1	55398	Kit of stay bolts	5 sektioner
22	1	55399	Kit of stay bolts	6 sektioner
23	1	55510	Valve section, compl. HC-D4	

1500K, 1510K, 1720K, 1730K, 1820K, 1830K

Internal ref. 63 40 990

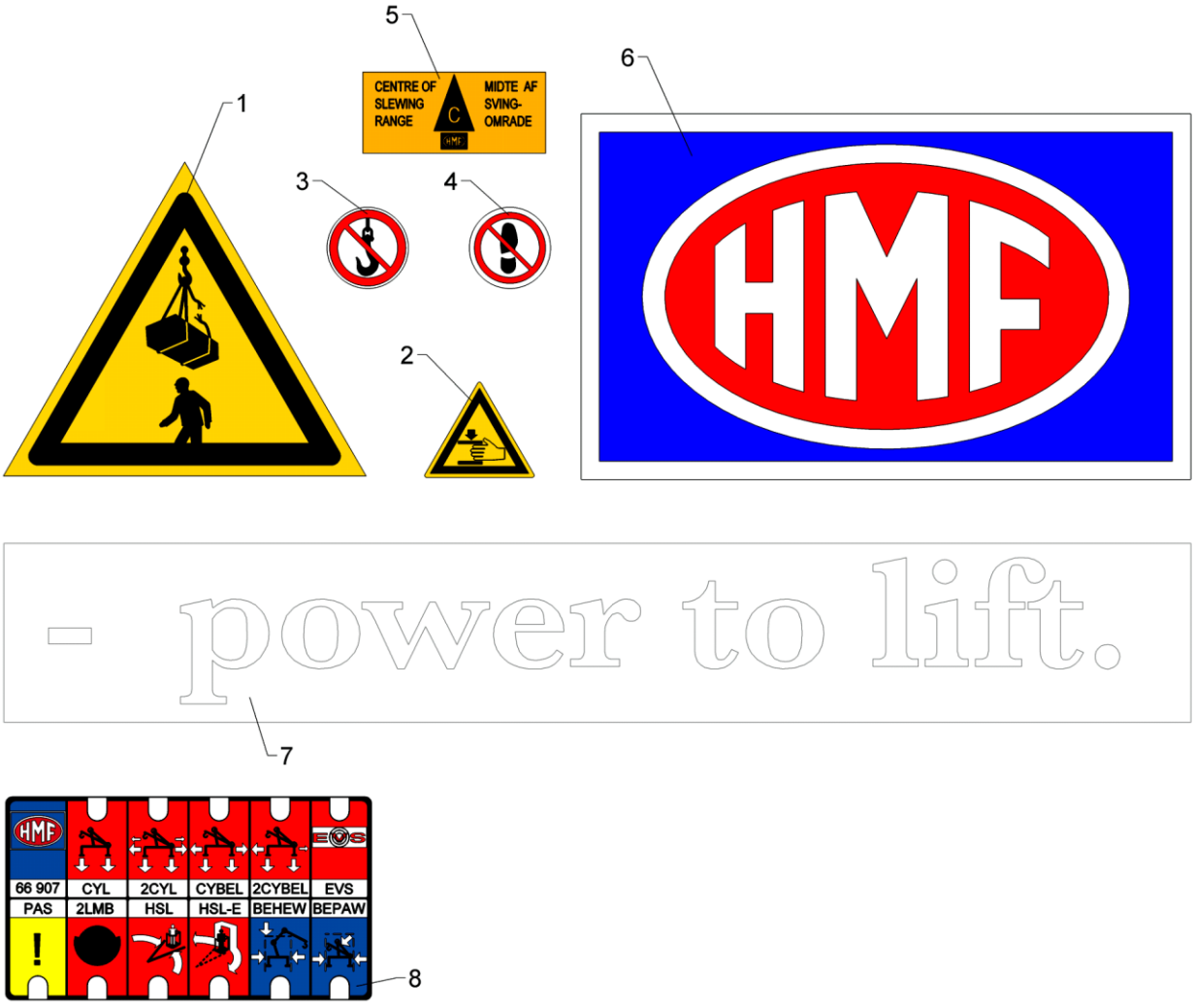

Standard labels

Created 13-11-2008
Modified 12-10-2017

Pos	Qty.	Part no.	Description	Remarks
1	2	66462	"NEVER WALK UNDER LOAD"	
2	2	66469	Label - "Danger - squeezing"	
3	1	66466	Label, "HOOK FORBIDDEN"	
4	1	66464	Label "NO STEP"	
5	1	64702	Label for slewing	
6	2	64604	HMF label 180X300	
7	2	64664	Label, 'Power to lift.', white	
8	1	66907	Pictogram for column	

1500K, 1510K, 1720K, 1730K, 1820K, 1830K

Internal ref. 99 99 000

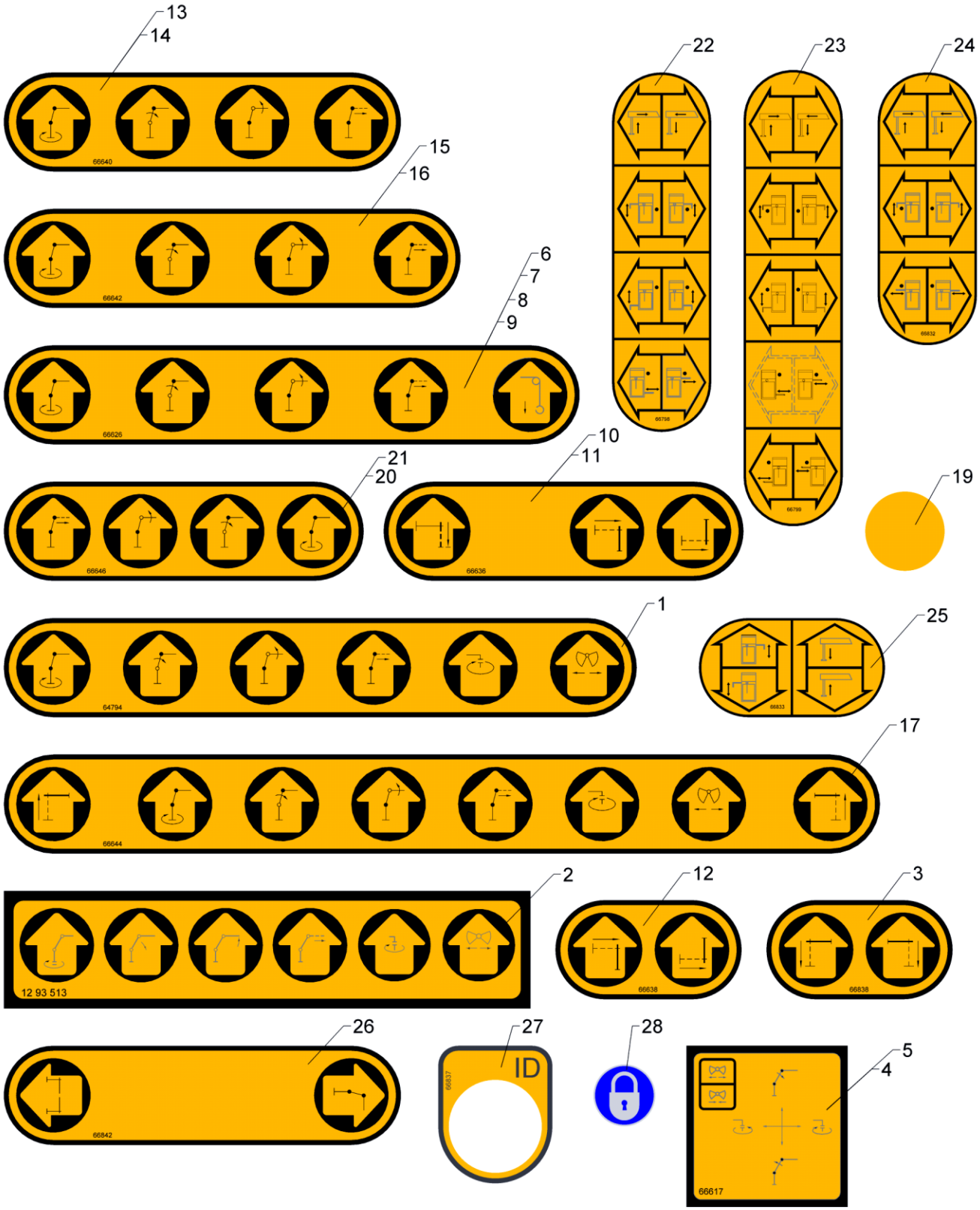

Operating labels

Pos	Qty.	Part no.	Description	Remarks
1	1	64794	Operating label	
2	1	65763	Label, 680 Series	12 93 513
3	1	66838	Operating label	
4	1	66617	Operating label right	
5	1	66618	Operating label left	
6	1	66626	Operating label	WINCH
7	1	66627	Operating label	FLY-JIB
8	1	66628	Operating label	2 EXV/WINCH
9	1	66629	Operating label	FLY-JIB/WINCH
10	1	66636	Stab. operation, valve bl.side	
11	1	66637	Stab. operation,dual ctrl side	
12	1	66638	Stab. operation, (HC-M50-2fcts	
13	1	66640	Stab. operation, (HC-4-4 fcts.	
14	1	66641	Operating label, (HC-4-6fcts.)	
15	1	66642	Operating label, (PVG 32-4fcts	
16	1	66643	Operating label, (PVG 32-6fcts	
17	1	66644	Operat. label, (HS,6fcts.+stab	
18	1	66840	Operating label	
19	1	66645	Label	
20	1	66646	Label,dual control (HC-4-4fcts	
21	1	66647	Label,dual control (HC-4-6fcts	
22	1	66798	Operating label,dual ctrl side	
23	1	66799	Operating label,valve bl. side	
24	1	66832	Label, emergency operation	
25	1	66833	Operating label	
26	1	66842	Operating label	
27	1	66837	Operating label	
28	1	66459	Label "LOCKING DEVICE CLOSED"	

1500K, 1510K, 1720K, 1730K, 1820K, 1830K

Internal ref. 99 99 061

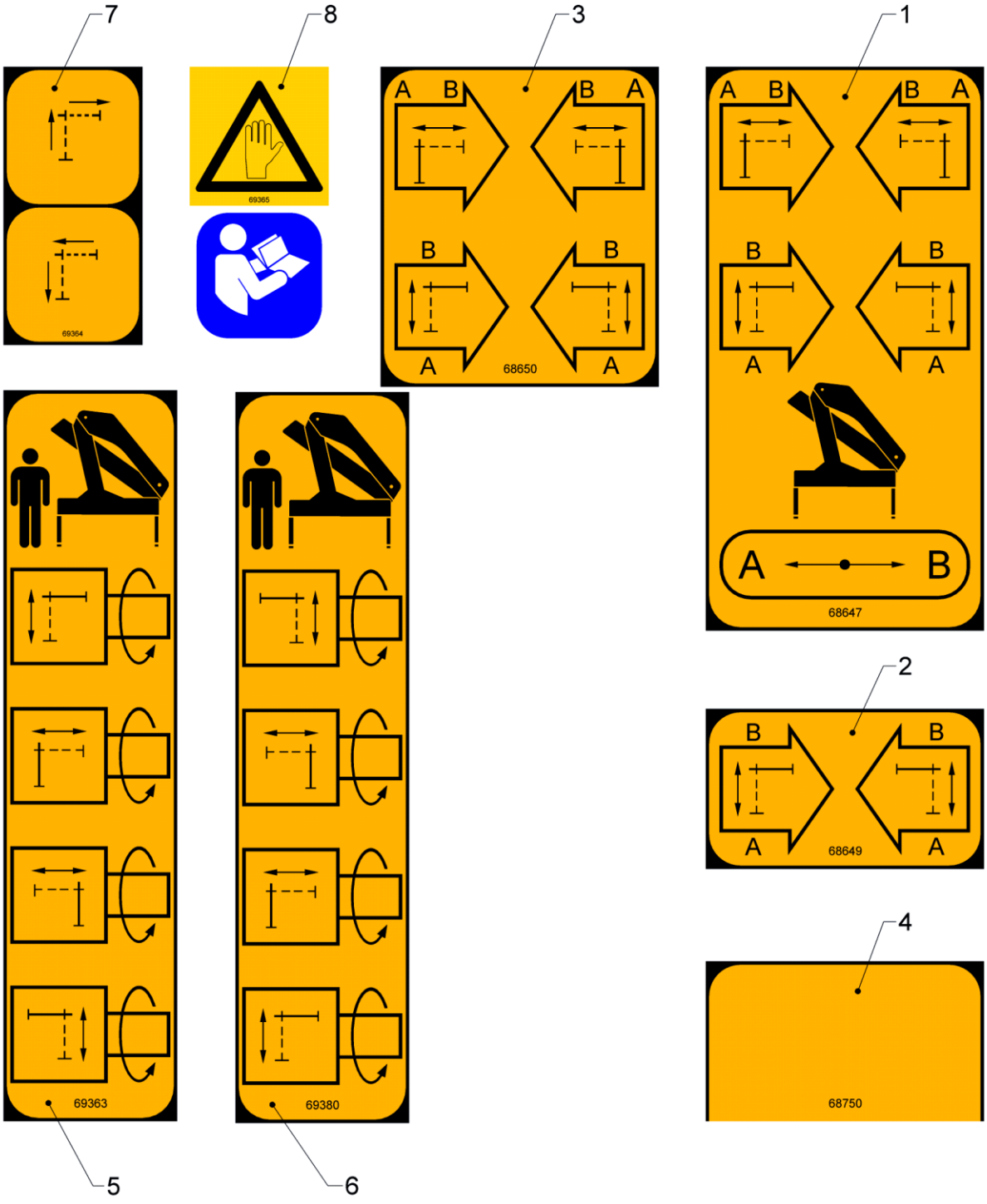

Labels for emergency operation

Pos	Qty.	Part no.	Description	Remarks
1	1	68647	Label, emergency operation	
2	1	68649	Label, emergency operation	
3	1	68650	Label, emergency operation	
4	1	68750	Label, emergency operation	
5	1	69363	Label, emerg. op. 4 func.	
6	1	69380		1610K-RCS/2820K-RCS
7	1	69364	Label for emergency operation	
8	1	69365	Label for emergency operation	

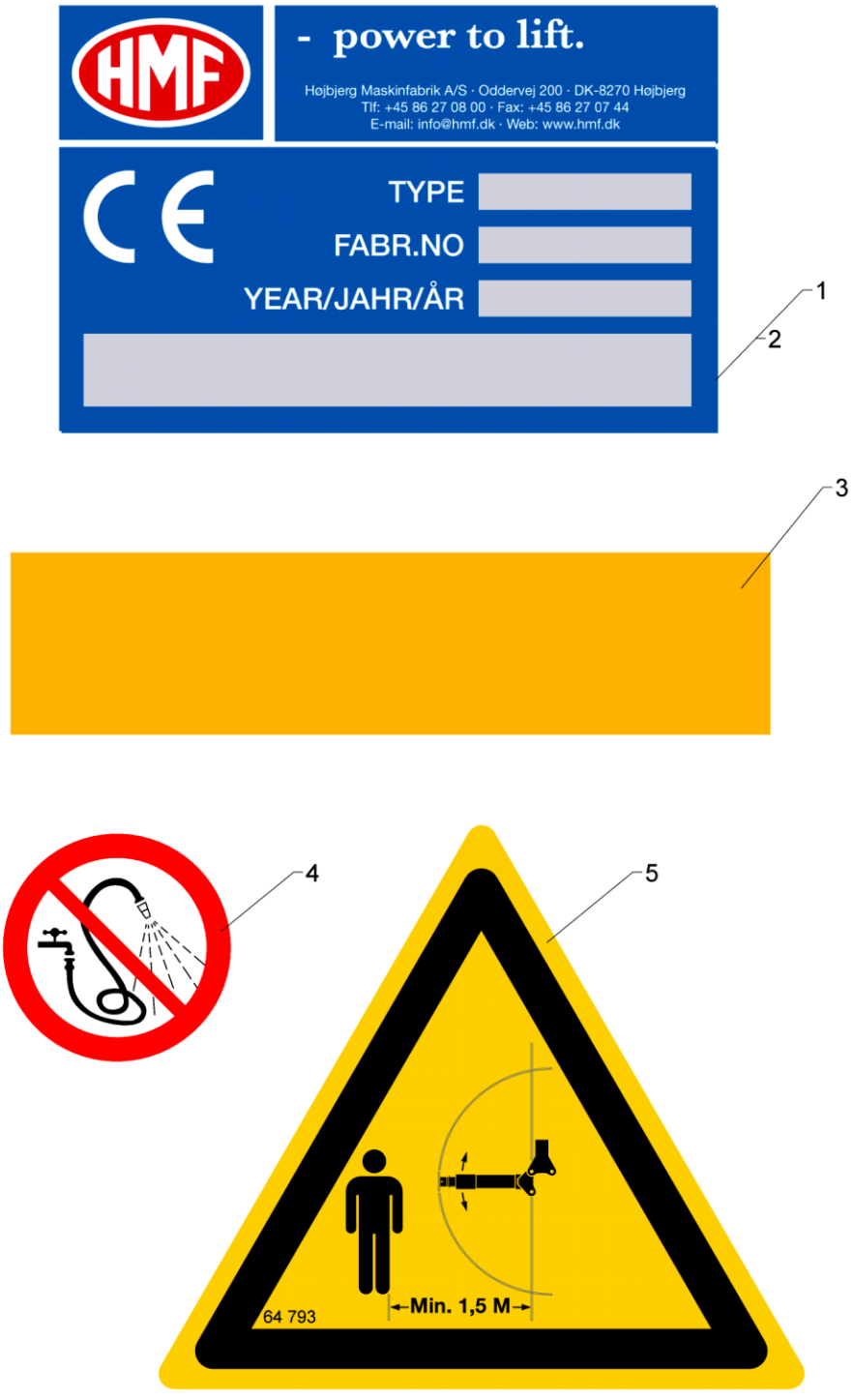
HMF
- power to lift.
Højbjerg Maskinfabrik A/S · Oddervej 200 · DK-8270 Højbjerg
Tlf: +45 86 27 08 00 · Fax: +45 86 27 07 44
E-mail: info@hmf.dk · Web: www.hmf.dk
CE
TYPE
FABR.NO
YEAR/JAHR/ÅR
1
2
3
4
5
64 793
Min. 1,5 M

Type plates, marking tape, warning signs

Created 08-02-2012
Modified 07-03-2017

Pos	Qty.	Part no.	Description	Remarks
1	1	64796	Type plate, excl. CE	
2	1	64797	Type plate, incl. CE	CE
3	1	66598	Marking tape - dark-yellow	
4	1	65770	Label-NO high pressure rinsing	
5	1	64793	Label, swing-up stabilizer leg	

1500K, 1510K, 1720K, 1730K, 1820K, 1830K

Internal ref. 99 99 020

1-6

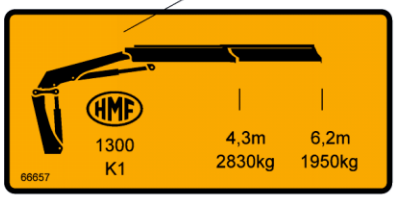

7-12

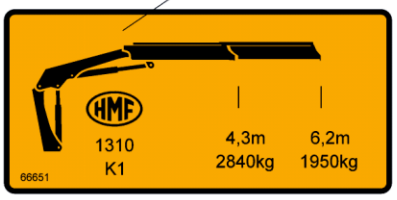

13-18

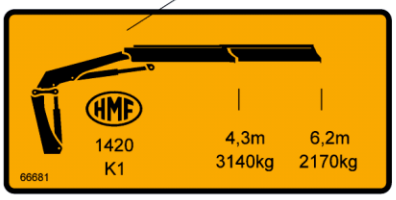

19-24

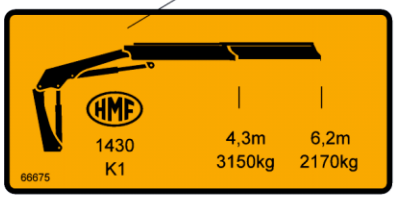

25-30

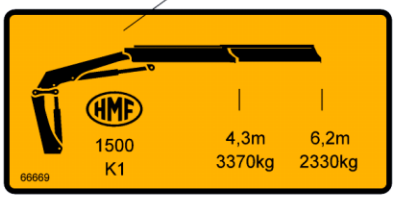

31-36

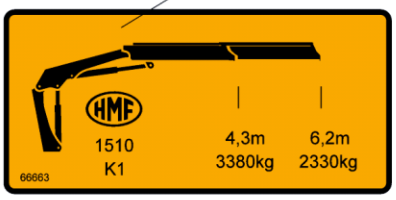

37-42

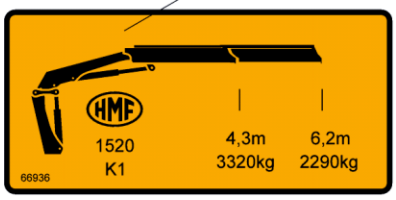

43-48

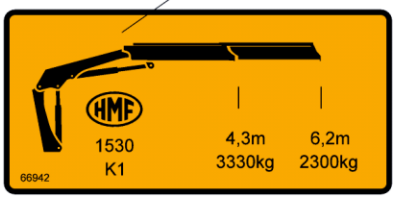

49-54

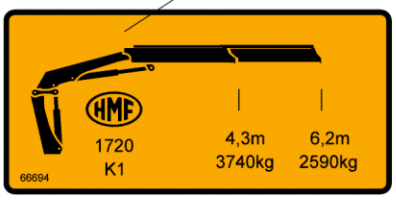

55-60

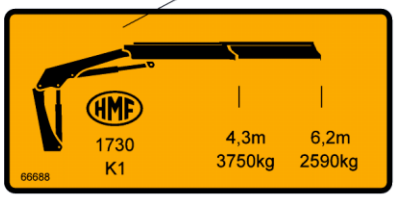

61-66

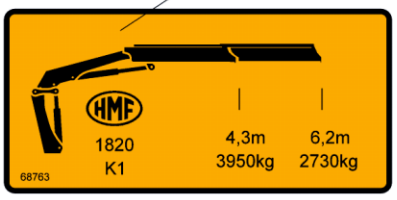

67-72

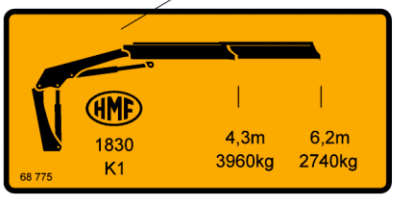

Lifting capacity diagrams

Created 08-01-2010
Modified 18-06-2014

Pos	Qty.	Part no.	Description	Remarks
1	1	66657	Lifting capacity diagram1300K1	
2	1	66658	Lifting capacity diagram1300K2	
3	1	66659	Lifting capacity diagram1300K3	
4	1	66660	Lifting capacity diagram1300K4	
5	1	66661	Lifting capacity diagram1300K5	
6	1	66662	Lifting capacity diagram1300K6	
7	1	66651	Lifting capacity diagram1310K1	
8	1	66652	Lifting capacity diagram1310K2	
9	1	66653	Lifting capacity diagram1310K3	
10	1	66654	Lifting capacity diagram1310K4	
11	1	66655	Lifting capacity diagram1310K5	
12	1	66656	Lifting capacity diagram1310K6	
13	1	66681	Lifting capacity diagram1420K1	
14	1	66682	Lifting capacity diagram1420K2	
15	1	66683	Lifting capacity diagram1420K3	
16	1	66684	Lifting capacity diagram1420K4	
17	1	66685	Lifting capacity diagram1420K5	
18	1	66686	Lifting capacity diagram1420K6	
19	1	66675	Lifting capacity diagram1430K1	
20	1	66676	Lifting capacity diagram1430K2	
21	1	66677	Lifting capacity diagram1430K3	
22	1	66678	Lifting capacity diagram1430K4	
23	1	66679	Lifting capacity diagram1430K5	
24	1	66680	Lifting capacity diagram1430K6	
25	1	66669	Lifting capacity diagram1500K1	
26	1	66670	Lifting capacity diagram1500K2	
27	1	66671	Lifting capacity diagram1500K3	
28	1	66672	Lifting capacity diagram1500K4	
29	1	66673	Lifting capacity diagram1500K5	
30	1	66674	Lifting capacity diagram1500K6	
31	1	66663	Lifting capacity diagram1510K1	
32	1	66664	Lifting capacity diagram1510K2	
33	1	66665	Lifting capacity diagram1510K3	
34	1	66666	Lifting capacity diagram1510K4	
35	1	66667	Lifting capacity diagram1510K5	
36	1	66668	Lifting capacity diagram1510K6	
37	1	66936	Lifting capacity diagram1520K1	
38	1	66937	Lifting capacity diagram1520K2	
39	1	66938	Lifting capacity diagram1520K3	
40	1	66939	Lifting capacity diagram1520K4	
41	1	66940	Lifting capacity diagram1520K5	

1500K, 1510K, 1720K, 1730K, 1820K, 1830K

Internal ref. 99 99 020

1-6

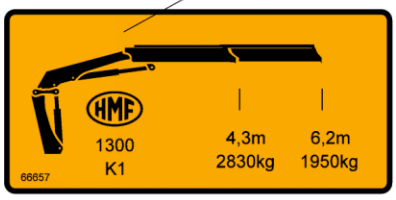

7-12

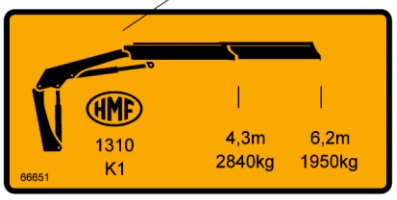

13-18

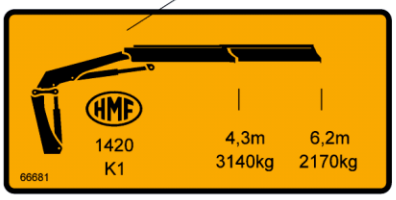

19-24

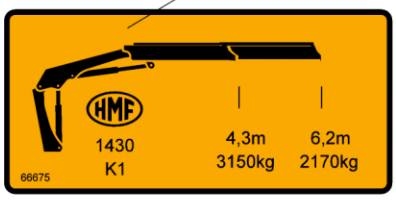

25-30

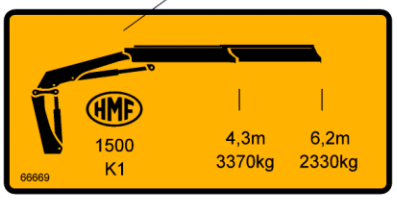

31-36

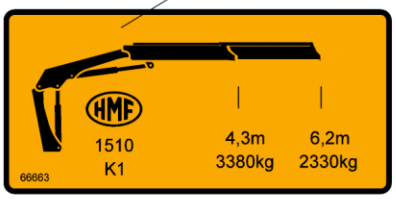

37-42

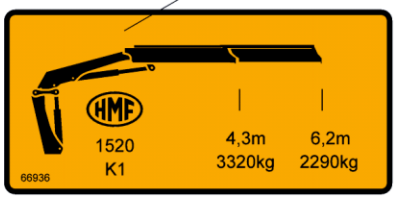

43-48

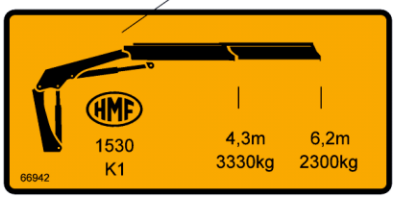

49-54

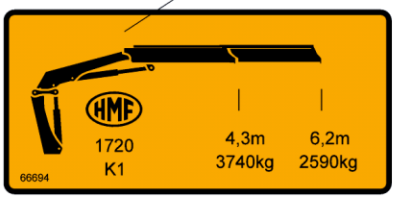

55-60

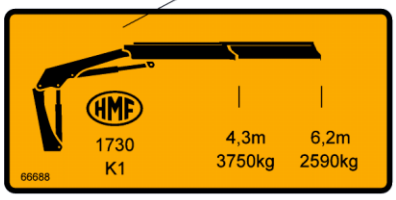

61-66

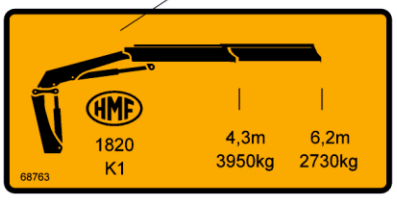

67-72

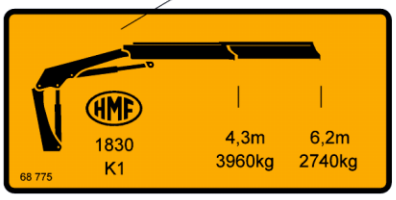

Lifting capacity diagrams

Pos	Qty.	Part no.	Description	Remarks
42	1	66941	Lifting capacity diagram1520K6	
43	1	66942	Lifting capacity diagram1530K1	
44	1	66943	Lifting capacity diagram1530K2	
45	1	66944	Lifting capacity diagram1530K3	
46	1	66945	Lifting capacity diagram1530K4	
47	1	66946	Lifting capacity diagram1530K5	
48	1	66947	Lifting capacity diagram1530K6	
49	1	66694	Lifting capacity diagram1720K1	
50	1	66695	Lifting capacity diagram1720K2	
51	1	66696	Lifting capacity diagram1720K3	
52	1	66697	Lifting capacity diagram1720K4	
53	1	66698	Lifting capacity diagram1720K5	
54	1	66699	Lifting capacity diagram1720K6	
55	1	66688	Lifting capacity diagram1730K1	
56	1	66689	Lifting capacity diagram1730K2	
57	1	66690	Lifting capacity diagram1730K3	
58	1	66691	Lifting capacity diagram1730K4	
59	1	66692	Lifting capacity diagram1730K5	
60	1	66693	Lifting capacity diagram1730K6	
61	1	68763	Lifting capacity diagram1820K1	
62	1	68764	Lifting capacity diagram1820K2	
63	1	68765	Lifting capacity diagram1820K3	
64	1	68766	Lifting capacity diagram1820K4	
65	1	68767	Lifting capacity diagram1820K5	
66	1	68768	Lifting capacity diagram1820K6	
67	1	68775	Lifting capacity diagram1830K1	
68	1	68776	Lifting capacity diagram1830K2	
69	1	68777	Lifting capacity diagram1830K3	
70	1	68778	Lifting capacity diagram1830K4	
71	1	68779	Lifting capacity diagram1830K5	
72	1	68780	Lifting capacity diagram1830K6	

1500K, 1510K, 1720K, 1730K, 1820K, 1830K

Internal ref. 66 68 580

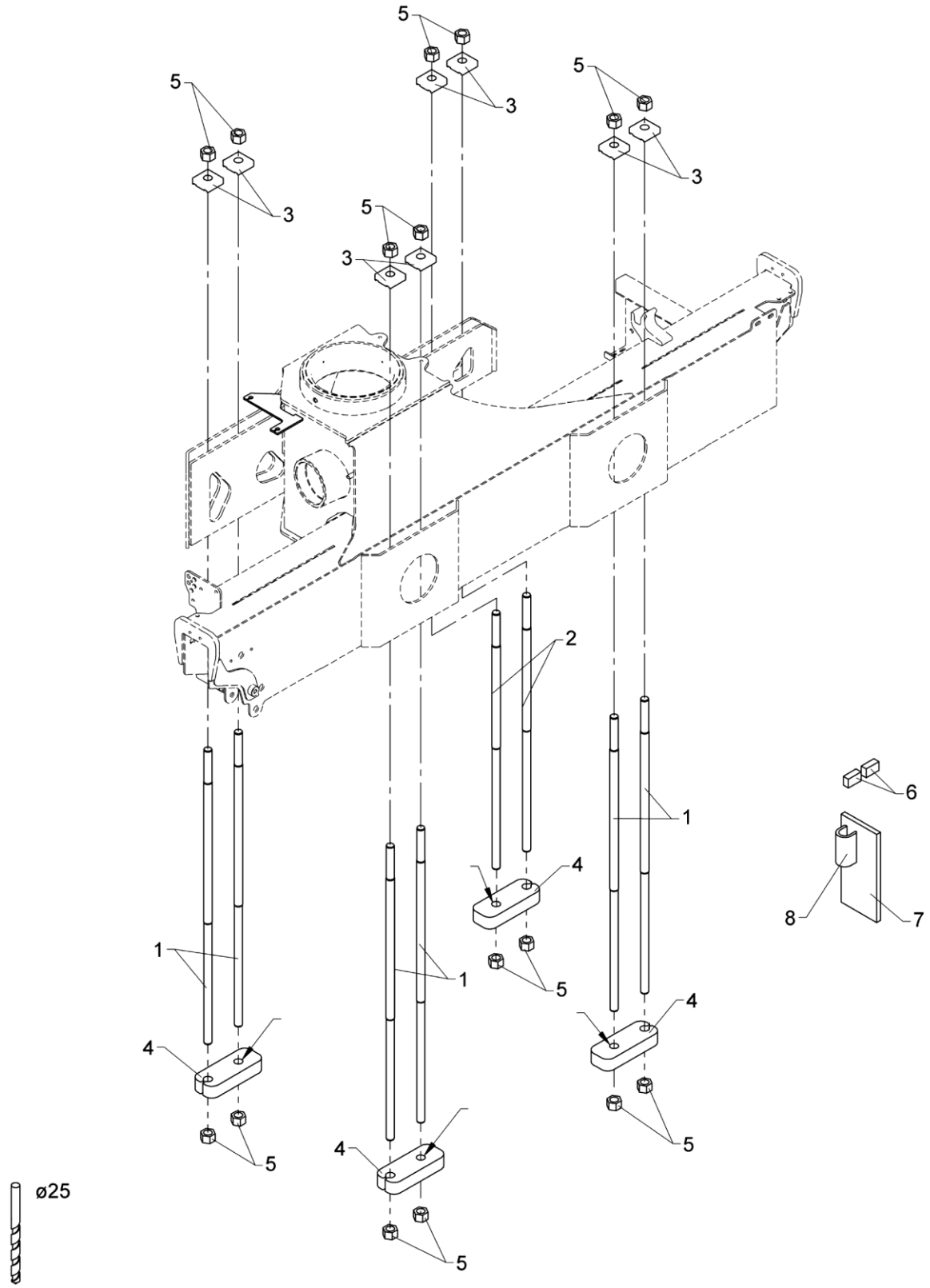

534 07 100

From loader 1060001
To loader

Created 24-11-2008
Modified 08-02-2012

Mounting kit (8 M24 x 2 pins)

Pos	Qty.	Part no.	Description	Remarks
1	6	32916	Mounting bolt	
2	2	32917	Mounting bolt	
3	8	6340496	Mounting plate	
4	4	6887384	Clamp	
5	16	31051	Lock nut	M24 x 2
6	6	6644084	Stop block	
7	4	6659924	Spacer	
8	4	6659914	U-section	

1500K, 1510K, 1720K, 1730K, 1820K, 1830K

Internal ref. 66 68 590

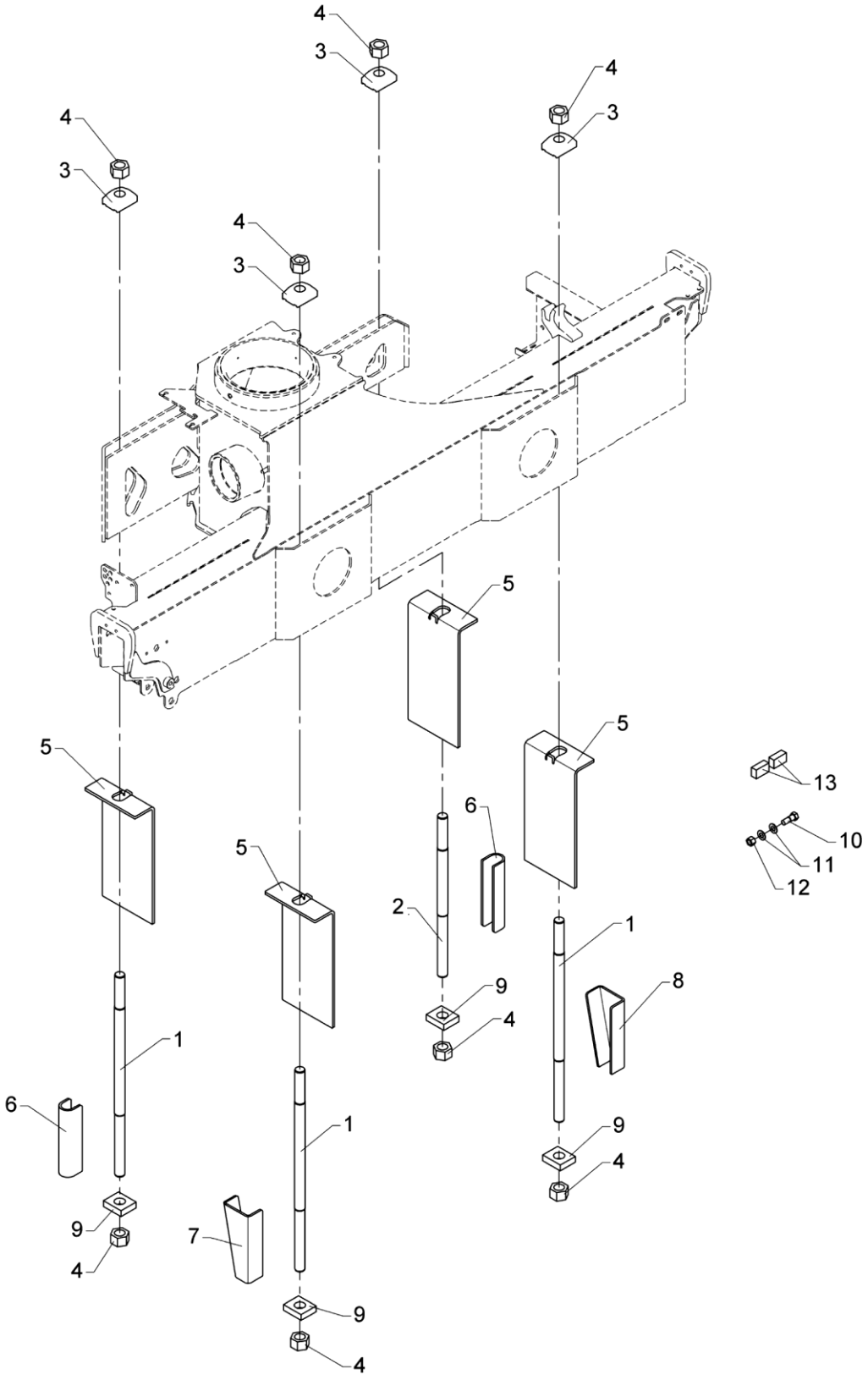

Mounting kit (4 M30 x 2 pins)

534 07 110

From loader 1060001
To loader

Created 13-11-2008
Modified 08-02-2012

Pos	Qty.	Part no.	Description	Remarks
1	3	32918	Mounting bolt	
2	1	32919	Mounting bolt	
3	4	6340497	Mounting plate	
4	8	31086	Lock nut	M30 x 2
5	4	6881704	Mounting plate	
6	2	6887354	U-profile	
7	1	6881684	Plate, left	
8	1	6881694	Plate, right	
9	4	6658094	Washer	
10	24	31497	Steel bolt	M14 x 40
11	48	31111	Washer	14 mm
12	24	30891	Lock nut	M14
13	6	6644084	Stop block	

1500K, 1510K, 1720K, 1730K, 1820K, 1830K

68 88 120
68 88 170
Internal ref. 68 88 040

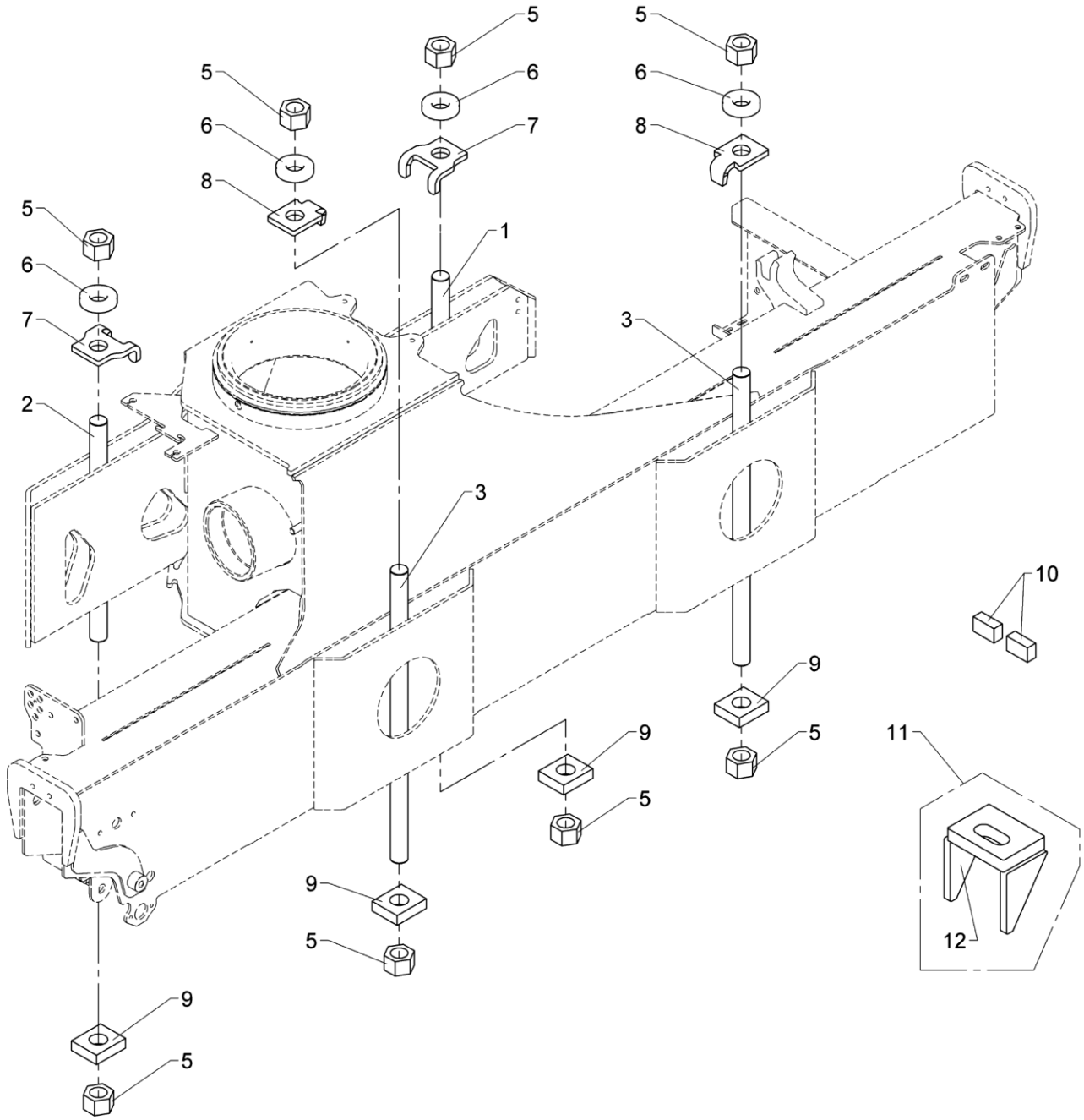

534 07 115

From loader 1060001
To loader

Created 05-02-2014
Modified

Mounting kit (4 M30 x 2 pins) - 50 mm.

Pos	Qty.	Part no.	Description	Remarks
1	1	6888021	Mounting bolt, M30 x 2 x 350	
2	1	6888022	Monting bolt, M30 x 2 x 450	
3	2	6888023	Mounting bolt, M30 x 2 x 600	
4	1	6888120	Nut/washer/stop - kit	Pos. 5, 6, 7, 8, 9, 10
5	8	31086	Lock nut	M30 x 2
6	4	6394701	Mounting plate 30 mm	
7	2	6394706	Mouting plate 30 mm	
8	2	6394708	Mounting plate 30 mm	
9	4	6658094	Washer	
10	6	6644084	Stop block	
11	1	6888170	Fittings	Pos. 12
12	4	6668244	Bracket	

1500K, 1510K, 1720K, 1730K, 1820K, 1830K

68 88 120
68 88 180
Internal ref. 68 88 010

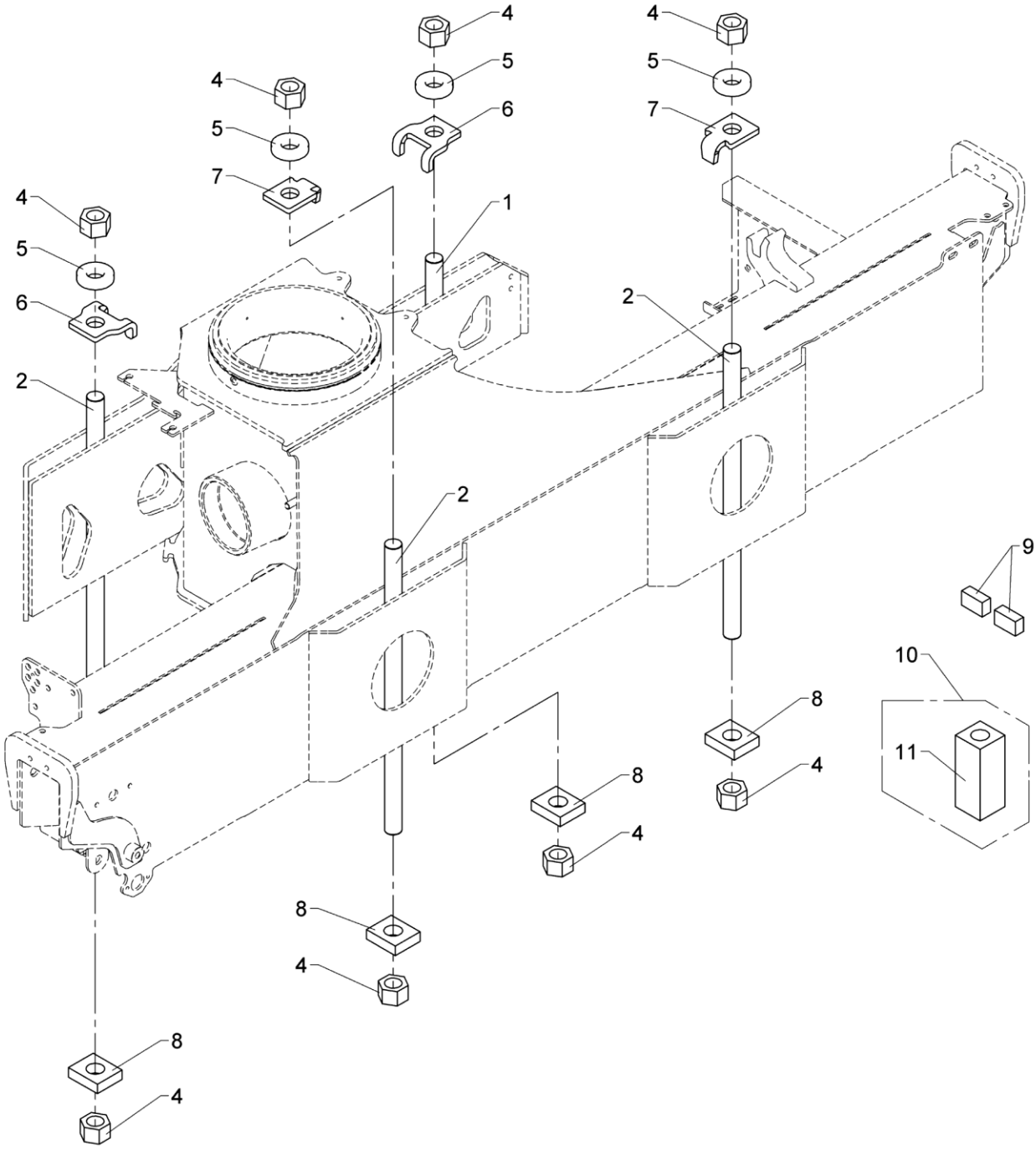

Mounting kit (4 M30 x 2 pins) - 150 mm.

534 07 120

From loader 1060001
To loader

Created 05-02-2014
Modified

Pos	Qty.	Part no.	Description	Remarks
1	1	6888022	Monting bolt, M30 x 2 x 450	
2	3	6888023	Mounting bolt, M30 x 2 x 600	
3	1	6888120	Nut/washer/stop - kit	Pos. 4, 5, 6, 7, 8, 9,
4	8	31086	Lock nut	M30 x 2
5	4	6394701	Mounting plate 30 mm	
6	2	6394706	Mouting plate 30 mm	
7	2	6394708	Mounting plate 30 mm	
8	4	6658094	Washer	
9	6	6644084	Stop block	
10	1	6888180	Fittings	Pos. 11
11	4	6887599	Mounting block	

1500K, 1510K, 1720K, 1730K, 1820K, 1830K

66 68 980
68 88 120
Internal ref. 68 88 050

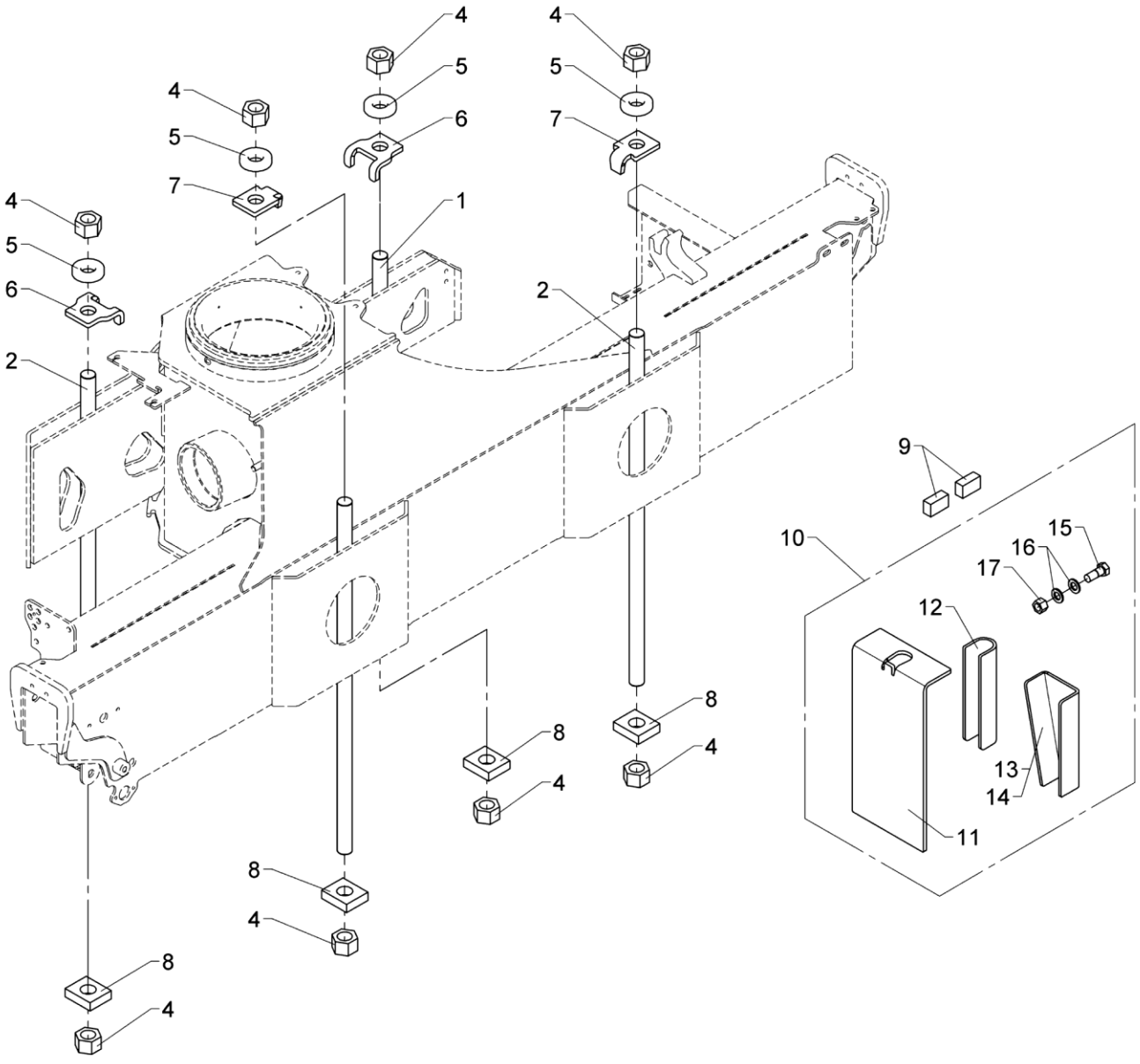

Mounting kit (4 M30 x 2 pins) - 250 mm.

534 07 130

From loader 1060001
To loader

Created 07-02-2014
Modified

Pos	Qty.	Part no.	Description	Remarks
1	1	6888023	Mounting bolt, M30 x 2 x 600	
2	3	6888024	Mounting bolt, M30 x 2 x 850	
3	1	6888120	Nut/washer/stop - kit	Pos. 4, 5, 6, 7, 8, 9
4	8	31086	Lock nut	M30 x 2
5	4	6394701	Mounting plate 30 mm	
6	2	6394706	Mouting plate 30 mm	
7	2	6394708	Mounting plate 30 mm	
8	4	6658094	Washer	
9	6	6644084	Stop block	
10	1	6668980	Mouting brackets	Pos. 11, 12, 13, 14, 15, 16, 17
11	4	6881704	Mounting plate	
12	2	6887354	U-profile	
13	1	6881684	Plate, left	
14	1	6881694	Plate, right	
15	24	31496	Tight-fitting bolt	M16 x 40
16	48	31103	Washer, 16 mm	16 mm
17	24	30892	Lock nut	M16

1500K, 1510K, 1720K, 1730K, 1820K, 1830K

68 88 130
66 68 960
Internal ref. 68 88 030

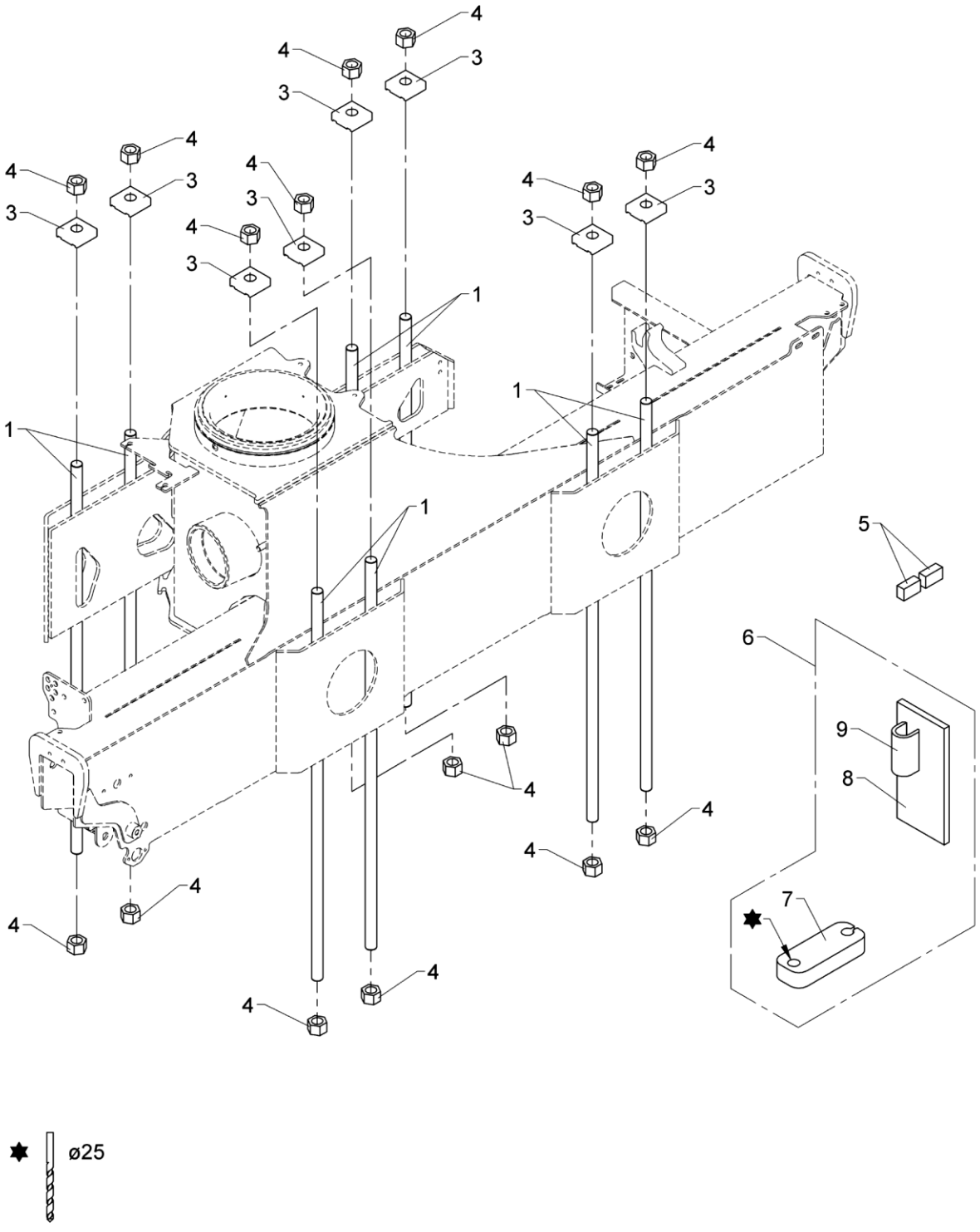

Mounting kit (8 M24 x 2 pins)

534 07 140

From loader 1060001
To loader

Created 03-02-2014
Modified

Pos	Qty.	Part no.	Description	Remarks
1	8	6888011	Mouting bolt, M24 x 2 x 1000	
2	1	6888130	Nut/washer/stop - kit	Pos. 3, 4, 5
3	8	6340496	Mounting plate	
4	16	31051	Lock nut	M24 x 2
5	6	6644084	Stop block	
6	1	6668960	Mounting bracket	Pos. 7, 8, 9
7	4	6887384	Clamp	
8	4	6659924	Spacer	
9	4	6659914	U-section	

1500K, 1510K, 1720K, 1730K, 1820K, 1830K

63 63 720
63 65 720
Internal ref. 63 42 720

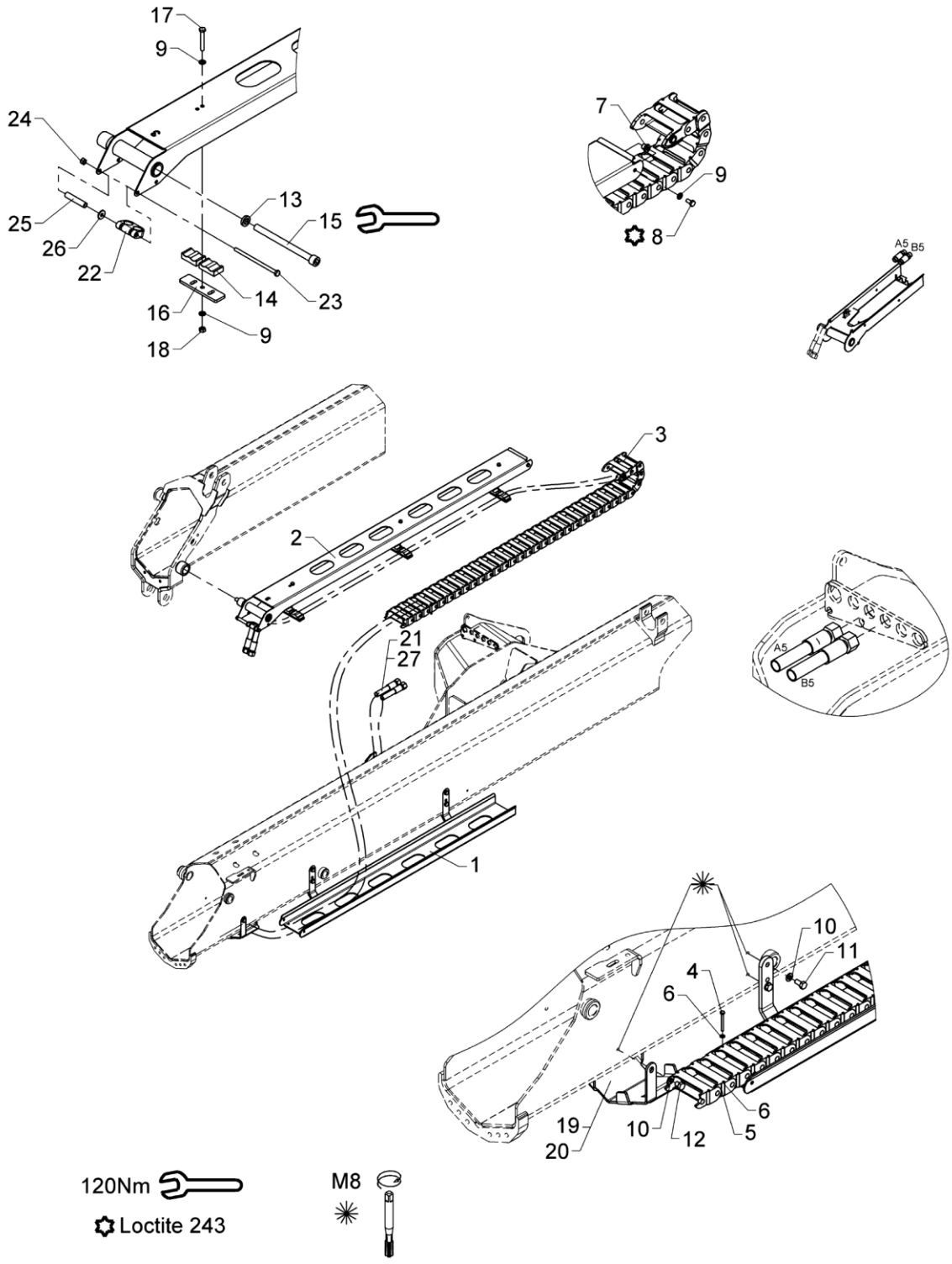

Hose guides, K1-1EXV.

Pos	Qty.	Part no.	Description	Remarks
		6342720	Hose guide, K1-1 EXV	1300K-1830K
		6365720	Hose guide, K1-1 EXV.	1100K-1330K
		6363720	Hose guide, K1-1 EXV.	900K-1130K
1	1	6340721	Guide (jib)	
2	1	6340748	Guide (extension K3)	
3	1	28713	Nylon drag chain, 33 links	
4	2	30128	Set screw	M4 x 40
5	2	30857	Lock nut	M4
6	4	31188	Washer, stainless	4 mm
7	2	6340719	Nut	
8	2	30111	Set screw, stainless	
9	8	32302	Face washer, stainless	6 mm
10	6	31147	Face washer, 8 mm	
11	4	30131	Set screw, stainless	M8 x 16
12	2	30105	Set screw, stainless	M8 x 10
13	1	6340717	Washer	
14	6	63561	Clamp	
15	1	32488	Screw	MC12 x 150
16	3	6340769	Adaptor	
17	3	30118	Steel pin, stainless	M6 x 45
18	3	30854	Nut, stainless	M6
19	1	6340299	Protective guard	Serie 1300/1500
20	1	6365299	Hose shield	Serie 1100/1110, 900/910
21	2	56566	Hose	Serie 1300/1500, 1100/1110
22	1	68028	Clamp	
23	1	30167	Steel bolt	M6 x 60
24	1	30884	Lock nut, stainless	M6
25	1	6340724	Distance pipe	
26	1	31134	Washer, stainless	
27	2	56910	Hose 3/8" x 4370 mm	Serie 900/910/1100KS/1221KS

1500K, 1510K, 1720K, 1730K, 1820K, 1830K

63 63 730
63 65 730
63 46 730
Internal ref. 63 42 730

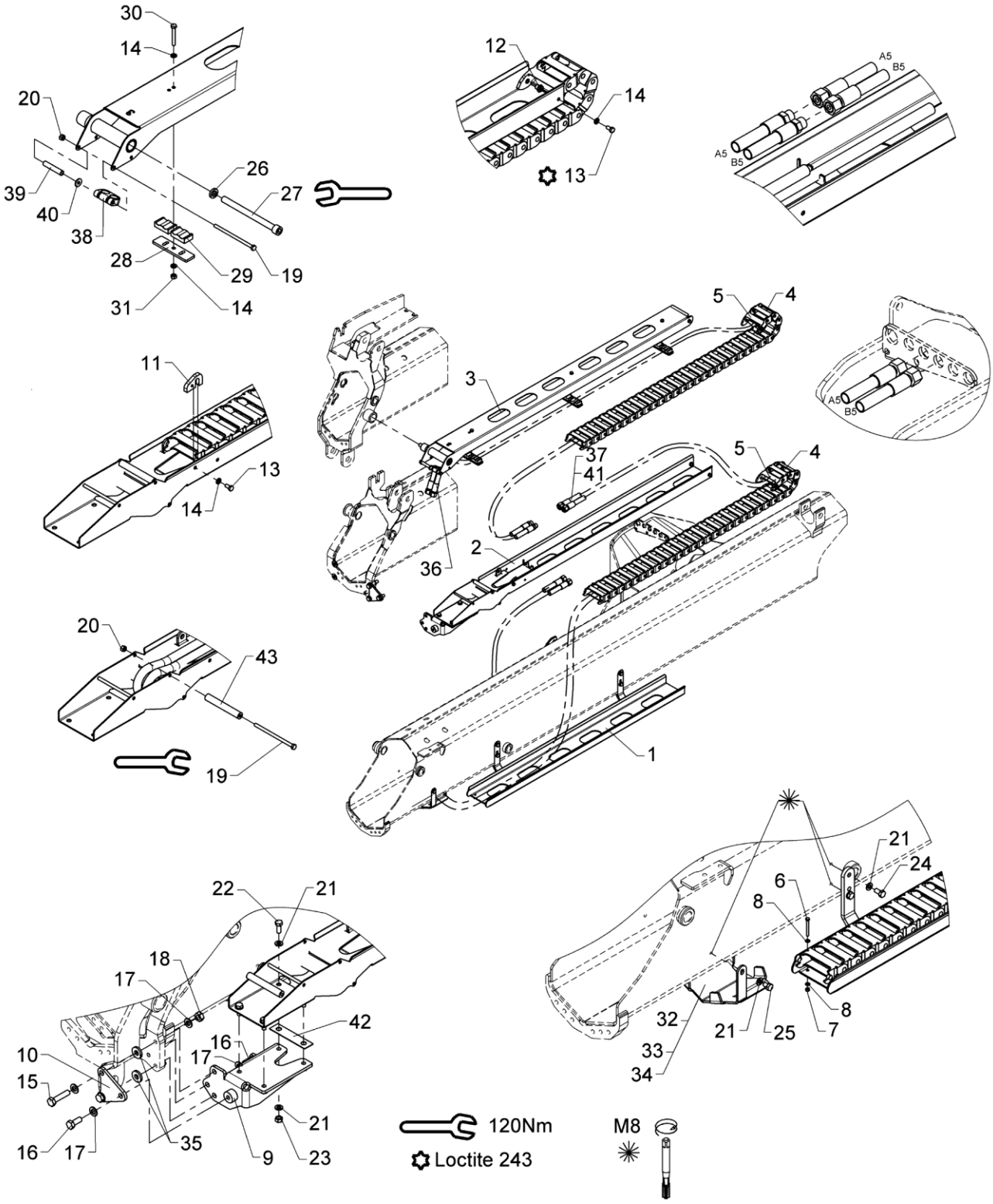

Obsolete

Hose guides, K2-1EXV.

534 09 110

From loader 1060001
To loader 1060924

Created 16-03-2009
Modified 14-01-2013

Pos	Qty.	Part no.	Description	Remarks
		6342730	Hose guide, K2-1 EXV	
		6346730	Hose guide, K2-1 EXV	
		6365730	Hose guide, K2-1 EXV.	
		6363730	Hose guide, K2-1 EXV.	
1	1	6340721	Guide (jib)	
2	1	6340731	Guide (Extension I)	
3	1	6340748	Guide (extension K3)	
4	2	28712	Nylon drag chain, 30 links	
5	2	63400	End link for nylon drag chain	
6	2	30128	Set screw	M4 x 40
7	2	30857	Lock nut	M4
8	4	31188	Washer, stainless	4 mm
9	1	6340725	Mounting bracket	
10	1	6340729	Plate	
11	1	6340718	Bracket	
12	4	6340719	Nut	
13	5	30111	Set screw, stainless	
14	11	32302	Face washer, stainless	6 mm
15	2	30377	Set screw	M10 x 45
16	2	31513	Set screw, stainless	M10 x 25
17	6	31565	Washer, stainless	10 mm
18	2	30858	Nut	M10
19	2	30167	Steel bolt	M6 x 60
20	2	30884	Lock nut, stainless	M6
21	14	31147	Face washer, 8 mm	
22	4	30132	Set screw, stainless	
23	4	30856	Nut, stainless	M8
24	4	30131	Set screw, stainless	M8 x 16
25	2	30130	Set screw, stainless	M8 x 12
26	1	6340717	Washer	
27	1	32488	Screw	MC12 x 150
28	3	6340769	Adaptor	
29	6	63561	Clamp	
30	3	30118	Steel pin, stainless	M6 x 45
31	3	30854	Nut, stainless	M6
32	1	6340299	Protective guard	Serie 1300/1500
33	1	6344299	Protective guard	Serie 1800/2200
34	1	6365299	Hose shield	Serie 1100/1110
35	2	31756	Washer	Serie 900/910/1100/1110
36	2	56568	Hose	
37	2	56569	Hose	

1500K, 1510K, 1720K, 1730K, 1820K, 1830K

63 63 730
63 65 730
63 46 730
Internal ref. 63 42 730

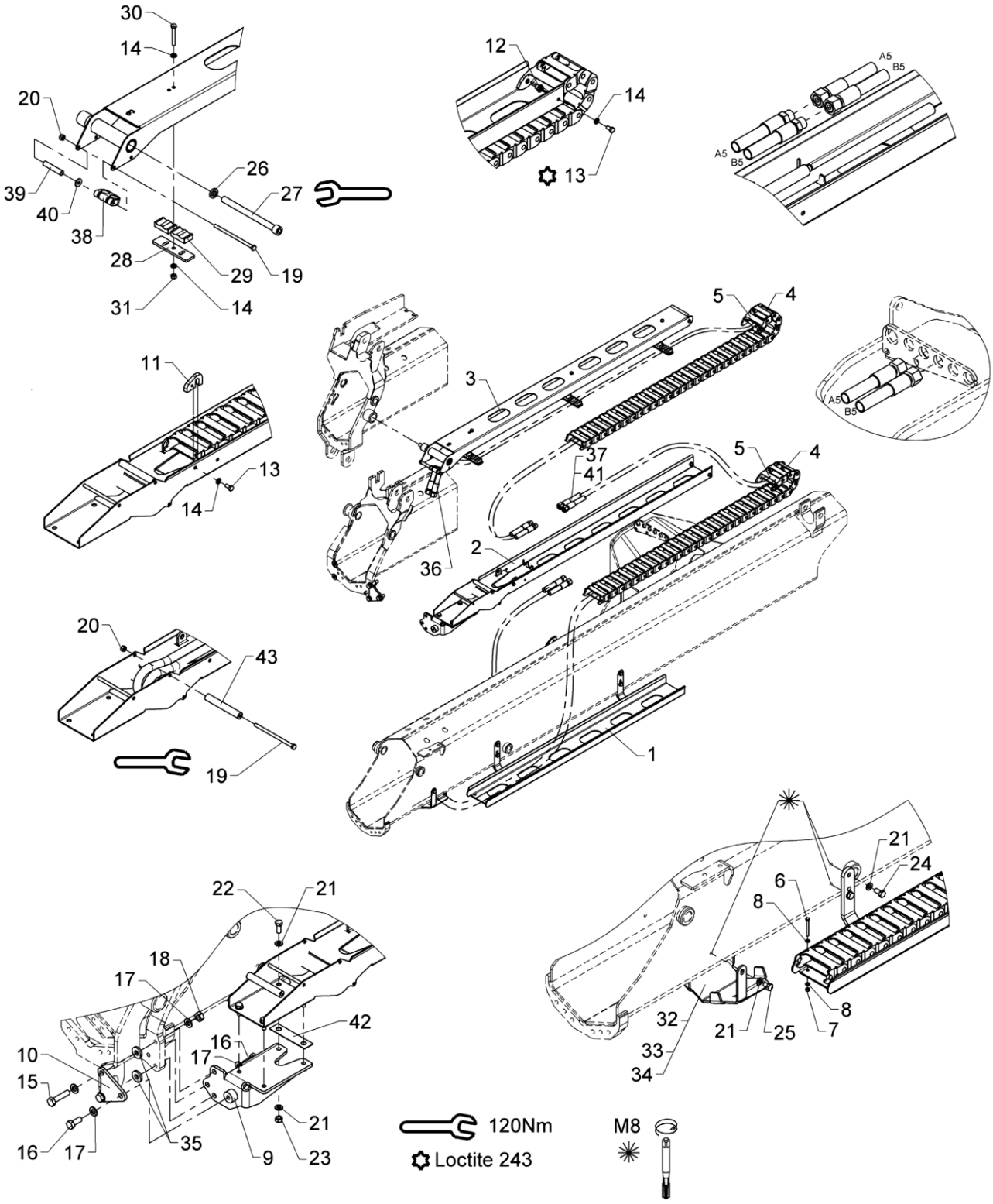

Obsolete

Hose guides, K2-1EXV.

534 09 110

From loader 1060001
To loader 1060924

Created 16-03-2009
Modified 14-01-2013

Pos	Qty.	Part no.	Description	Remarks
38	1	68028	Clamp	
39	1	6340724	Distance pipe	
40	1	31134	Washer, stainless	
41	2	56458	Hose 3/8 x 3750 mm L/L	Serie 900/910
42	1	6340764	Shim	
43	1	56513	Hose	

1500K, 1510K, 1720K, 1730K, 1820K, 1830K

63 63 730
63 65 730
63 46 730
Internal ref. 63 42 730

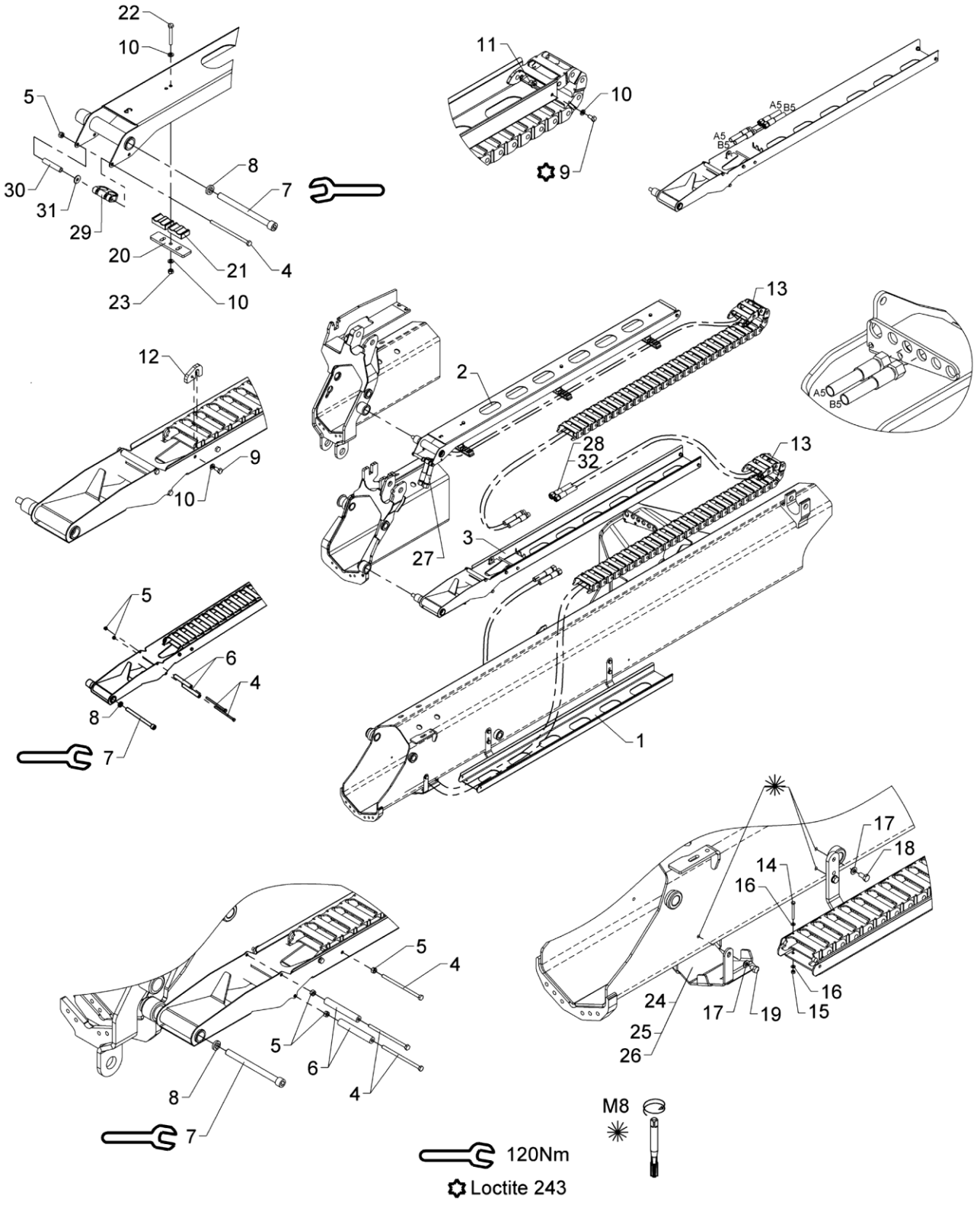

Hose guides, K2-1EXV.

Pos	Qty.	Part no.	Description	Remarks
		6342730	Hose guide, K2-1 EXV	
		6346730	Hose guide, K2-1 EXV	
		6365730	Hose guide, K2-1 EXV.	
		6363730	Hose guide, K2-1 EXV.	
1	1	6340721	Guide (jib)	
2	1	6340748	Guide (extension K3)	
3	1	6341731	Hose guide (Extension I)	
4	4	30167	Steel bolt	M6 x 60
5	4	30884	Lock nut, stainless	M6
6	2	56513	Hose	
7	2	32488	Screw	MC12 x 150
8	2	6340717	Washer	
9	5	30111	Set screw, stainless	
10	11	32302	Face washer, stainless	6 mm
11	4	6340719	Nut	
12	1	6340718	Bracket	
13	2	28712	Nylon drag chain, 30 links	
14	2	30128	Set screw	M4 x 40
15	2	30857	Lock nut	M4
16	4	31188	Washer, stainless	4 mm
17	6	31147	Face washer, 8 mm	
18	4	30131	Set screw, stainless	M8 x 16
19	2	30105	Set screw, stainless	M8 x 10
20	3	6340769	Adaptor	
21	6	63561	Clamp	
22	3	30118	Steel pin, stainless	M6 x 45
23	3	30854	Nut, stainless	M6
24	1	6340299	Protective guard	Serie 1300/1620
25	1	6344299	Protective guard	Serie 1800/2820
26	1	6365299	Hose shield	Serie 1100/1110
27	2	56568	Hose	
28	2	56569	Hose	1100K - 2820K
29	1	68028	Clamp	
30	1	6340724	Distance pipe	
31	1	31134	Washer, stainless	
32	2	56458	Hose 3/8 x 3750 mm L/L	Serie 900/910/1100KS/1221KS

1500K, 1510K, 1720K, 1730K, 1820K, 1830K

63 63 740
63 65 740
63 46 740
Internal ref. 63 42 740

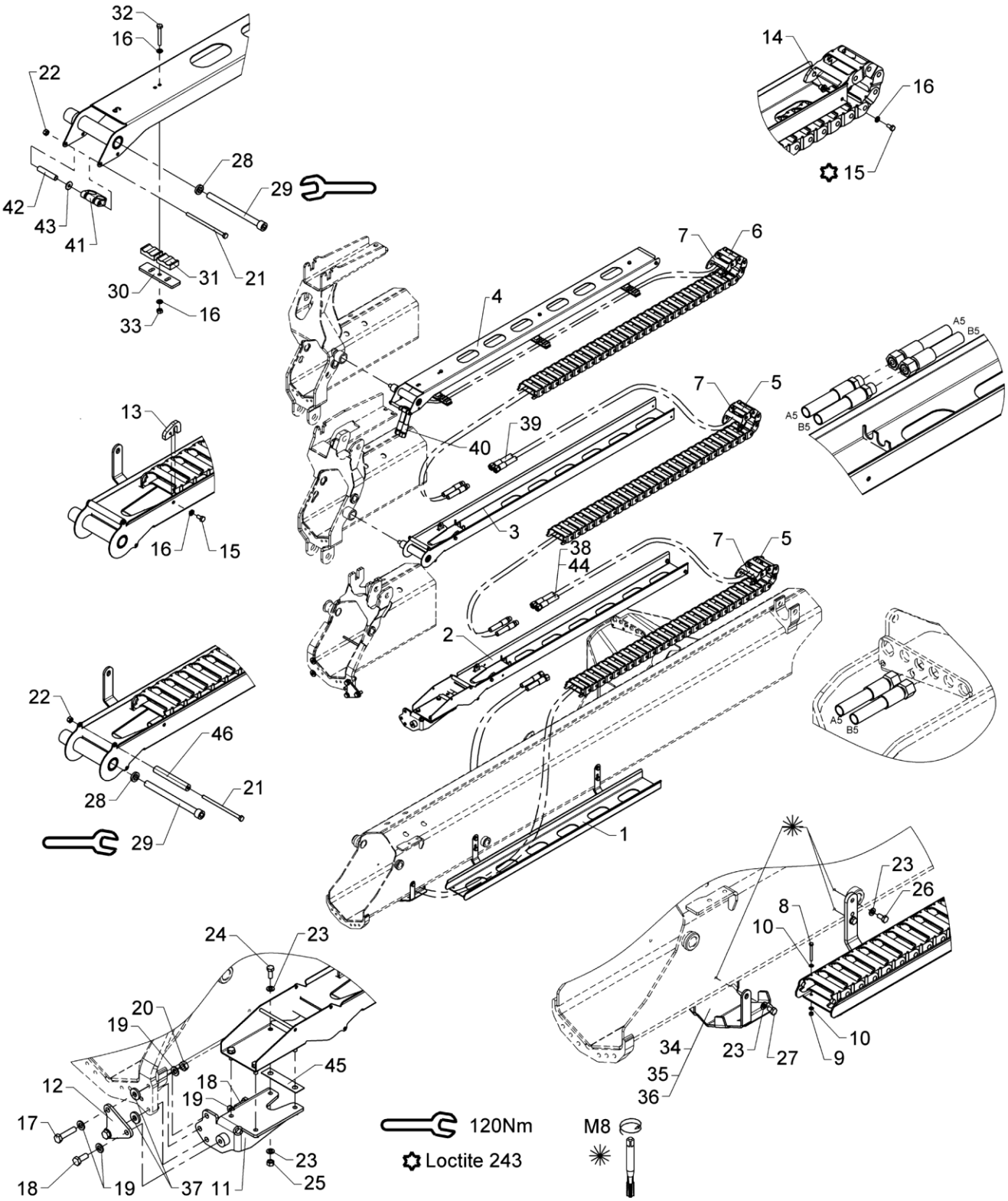

Obsolete

Hose guides, K3-1 EXV.

534 09 120

From loader 1060001
To loader 1060924

Created 16-03-2009
Modified 14-01-2013

Pos	Qty.	Part no.	Description	Remarks
		6342740	Hose guide, K3-1 EXV	
		6346740	Hose guide, K3-1 EXV	
		6365740	Hose guide, K3-1 EXV.	
		6363740	Hose guide, K3-1 EXV.	
1	1	6340721	Guide (jib)	
2	1	6340731	Guide (Extension I)	
3	1	6340741	Guide (Extension II)	
4	1	6340748	Guide (extension K3)	
5	2	28712	Nylon drag chain, 30 links	
6	1	28713	Nylon drag chain, 33 links	
7	3	63400	End link for nylon drag chain	
8	2	30128	Set screw	M4 x 40
9	2	30857	Lock nut	M4
10	4	31188	Washer, stainless	4 mm
11	1	6340725	Mounting bracket	
12	1	6340729	Plate	
13	2	6340718	Bracket	
14	6	6340719	Nut	
15	8	30111	Set screw, stainless	
16	14	32302	Face washer, stainless	6 mm
17	2	30377	Set screw	M10 x 45
18	2	31513	Set screw, stainless	M10 x 25
19	6	31565	Washer, stainless	10 mm
20	2	30858	Nut	M10
21	3	30167	Steel bolt	M6 x 60
22	3	30884	Lock nut, stainless	M6
23	14	31147	Face washer, 8 mm	
24	4	30132	Set screw, stainless	
25	4	30856	Nut, stainless	M8
26	4	30131	Set screw, stainless	M8 x 16
27	2	30130	Set screw, stainless	M8 x 12
28	2	6340717	Washer	
29	2	32488	Screw	MC12 x 150
30	3	6340769	Adaptor	
31	6	63561	Clamp	
32	3	30118	Steel pin, stainless	M6 x 45
33	3	30854	Nut, stainless	M6
34	1	6340299	Protective guard	Serie 1300/1500
35	1	6344299	Protective guard	Serie 1800/2200
36	1	6365299	Hose shield	Serie 1100/1110
37	2	31756	Washer	Serie 1100/1110

1500K, 1510K, 1720K, 1730K, 1820K, 1830K

63 63 740
63 65 740
63 46 740
Internal ref. 63 42 740

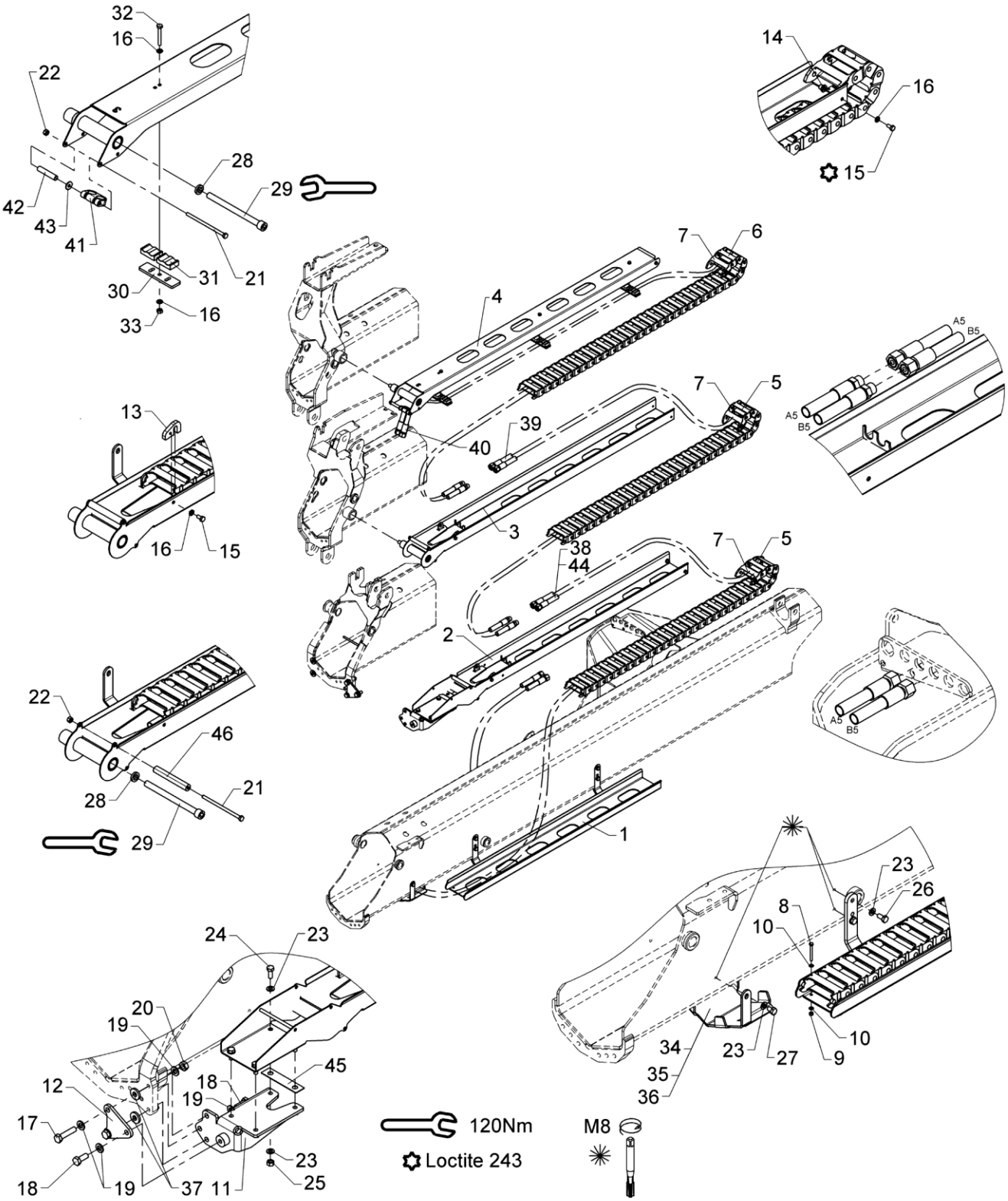

Obsolete

Hose guides, K3-1 EXV.

534 09 120

From loader 1060001
To loader 1060924

Created 16-03-2009
Modified 14-01-2013

Pos	Qty.	Part no.	Description	Remarks
38	2	56569	Hose	
39	2	56564	Hose	
40	2	56565	Hose	
41	1	68028	Clamp	
42	1	6340724	Distance pipe	
43	1	31134	Washer, stainless	
44	2	56458	Hose 3/8 x 3750 mm L/L	Serie 900/910
45	1	6340764	Shim	
46	2	56513	Hose	

1500K, 1510K, 1720K, 1730K, 1820K, 1830K

63 63 740
63 65 740
63 46 740
Internal ref. 63 42 740

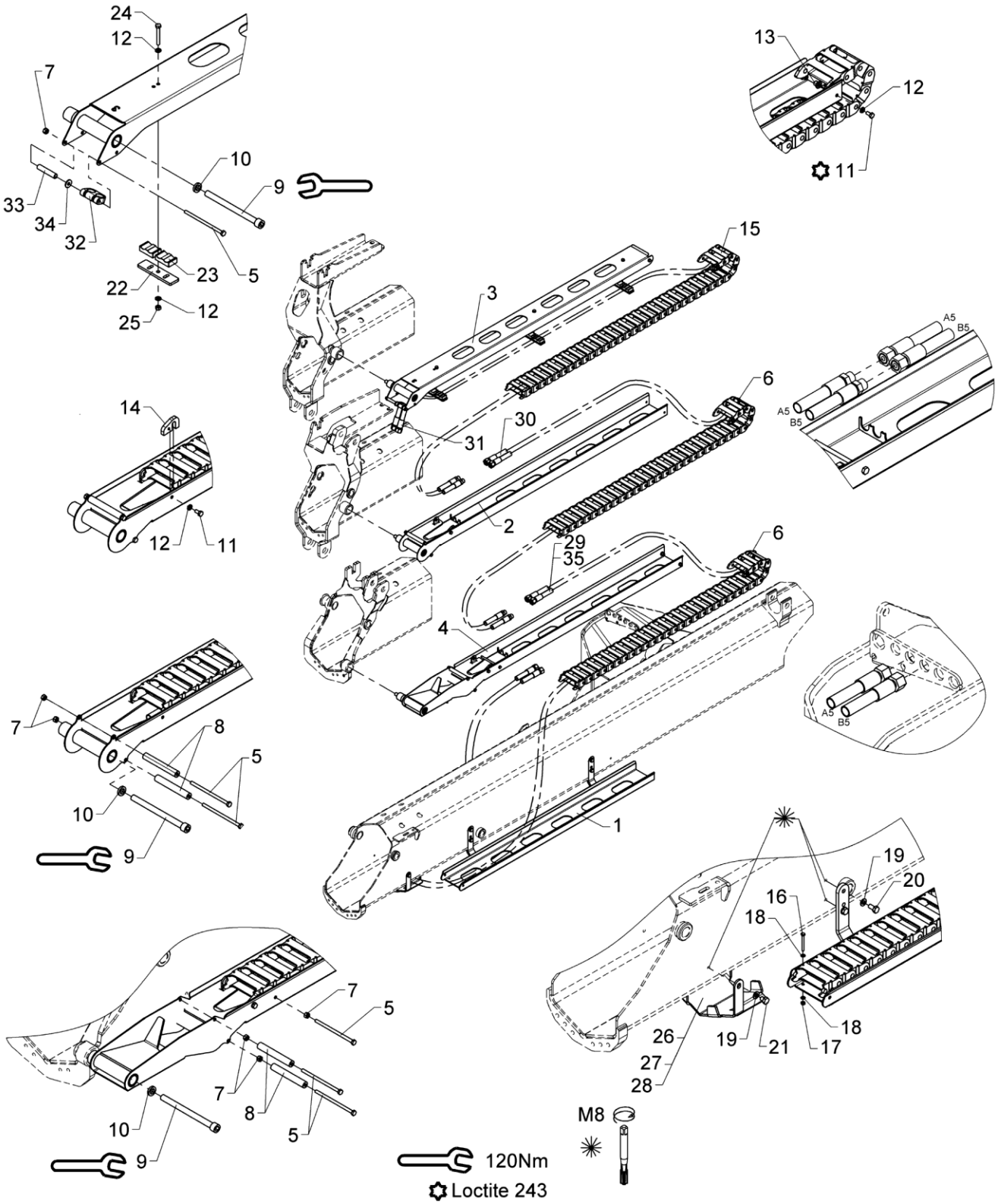

Hose guides, K3-1 EXV.

Pos	Qty.	Part no.	Description	Remarks
		6342740	Hose guide, K3-1 EXV	
		6346740	Hose guide, K3-1 EXV	
		6365740	Hose guide, K3-1 EXV.	
		6363740	Hose guide, K3-1 EXV.	
1	1	6340721	Guide (jib)	
2	1	6340741	Guide (Extension II)	
3	1	6340748	Guide (extension K3)	
4	1	6341731	Hose guide (Extension I)	
5	6	30167	Steel bolt	M6 x 60
6	2	28712	Nylon drag chain, 30 links	
7	6	30884	Lock nut, stainless	M6
8	4	56513	Hose	
9	3	32488	Screw	MC12 x 150
10	3	6340717	Washer	
11	8	30111	Set screw, stainless	
12	14	32302	Face washer, stainless	6 mm
13	6	6340719	Nut	
14	2	6340718	Bracket	
15	1	28713	Nylon drag chain, 33 links	
16	2	30128	Set screw	M4 x 40
17	2	30857	Lock nut	M4
18	4	31188	Washer, stainless	4 mm
19	6	31147	Face washer, 8 mm	
20	4	30131	Set screw, stainless	M8 x 16
21	2	30105	Set screw, stainless	M8 x 10
22	3	6340769	Adaptor	
23	6	63561	Clamp	
24	3	30118	Steel pin, stainless	M6 x 45
25	3	30854	Nut, stainless	M6
26	1	6340299	Protective guard	Serie 1300/1500
27	1	6344299	Protective guard	Serie 1800/2200
28	1	6365299	Hose shield	Serie 1100/1110
29	2	56569	Hose	
30	2	56564	Hose	
31	2	56565	Hose	
32	1	68028	Clamp	
33	1	6340724	Distance pipe	
34	1	31134	Washer, stainless	
35	2	56458	Hose 3/8 x 3750 mm L/L	Serie 900/910

1500K, 1510K, 1720K, 1730K, 1820K, 1830K

63 63 750
63 65 750
63 46 750
Internal ref. 63 42 750

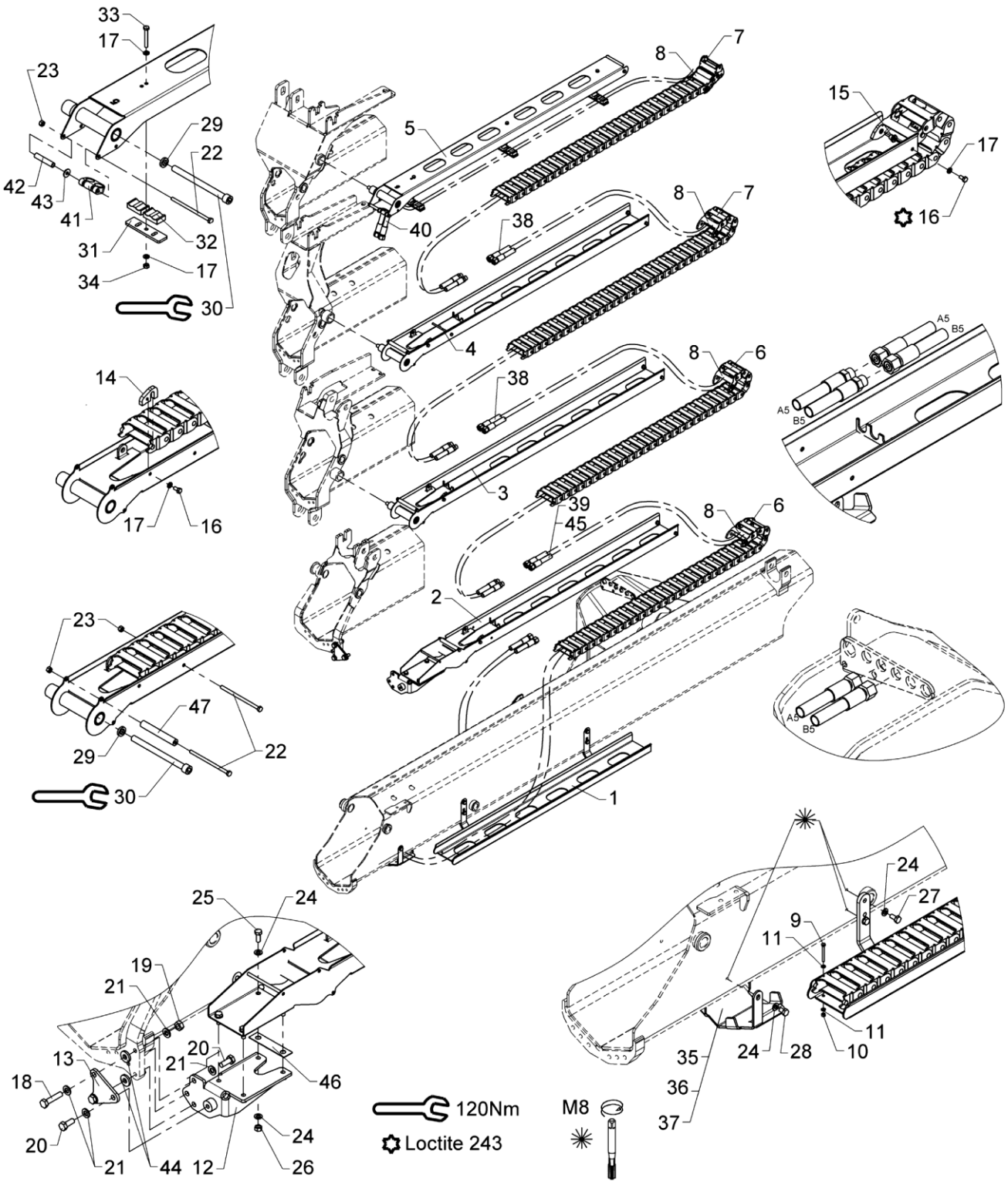

Obsolete

Hose guides, K4-1 EXV.

534 09 130

From loader 1060001
To loader 1060924

Created 16-03-2009
Modified 14-01-2013

Pos	Qty.	Part no.	Description	Remarks
		6342750	Hose guides, K4-1 EXV	
		6346750	Hose guides, K4-1 EXV	
		6365750	Hose guide, K4-1 EXV.	
		6363750	Hose guide, K4-1 EXV.	
1	1	6340721	Guide (jib)	
2	1	6340731	Guide (Extension I)	
3	1	6340741	Guide (Extension II)	
4	1	6340751	Guide (Extension III)	
5	1	6340758	Guide (extension K5)	
6	2	28712	Nylon drag chain, 30 links	
7	2	28713	Nylon drag chain, 33 links	
8	4	63400	End link for nylon drag chain	
9	2	30128	Set screw	M4 x 40
10	2	30857	Lock nut	M4
11	4	31188	Washer, stainless	4 mm
12	1	6340725	Mounting bracket	
13	1	6340729	Plate	
14	3	6340718	Bracket	
15	8	6340719	Nut	
16	11	30111	Set screw, stainless	
17	17	32302	Face washer, stainless	6 mm
18	2	30377	Set screw	M10 x 45
19	2	30858	Nut	M10
20	2	31513	Set screw, stainless	M10 x 25
21	6	31565	Washer, stainless	10 mm
22	5	30167	Steel bolt	M6 x 60
23	5	30884	Lock nut, stainless	M6
24	14	31147	Face washer, 8 mm	
25	4	30132	Set screw, stainless	
26	4	30856	Nut, stainless	M8
27	4	30131	Set screw, stainless	M8 x 16
28	2	30130	Set screw, stainless	M8 x 12
29	3	6340717	Washer	
30	3	32488	Screw	MC12 x 150
31	3	6340769	Adaptor	
32	6	63561	Clamp	
33	3	30118	Steel pin, stainless	M6 x 45
34	3	30854	Nut, stainless	M6
35	1	6340299	Protective guard	Serie 1300/1500
36	1	6344299	Protective guard	Serie 1800/2200
37	1	6365299	Hose shield	Serie 1100/1110

1500K, 1510K, 1720K, 1730K, 1820K, 1830K

63 63 750
63 65 750
63 46 750
Internal ref. 63 42 750

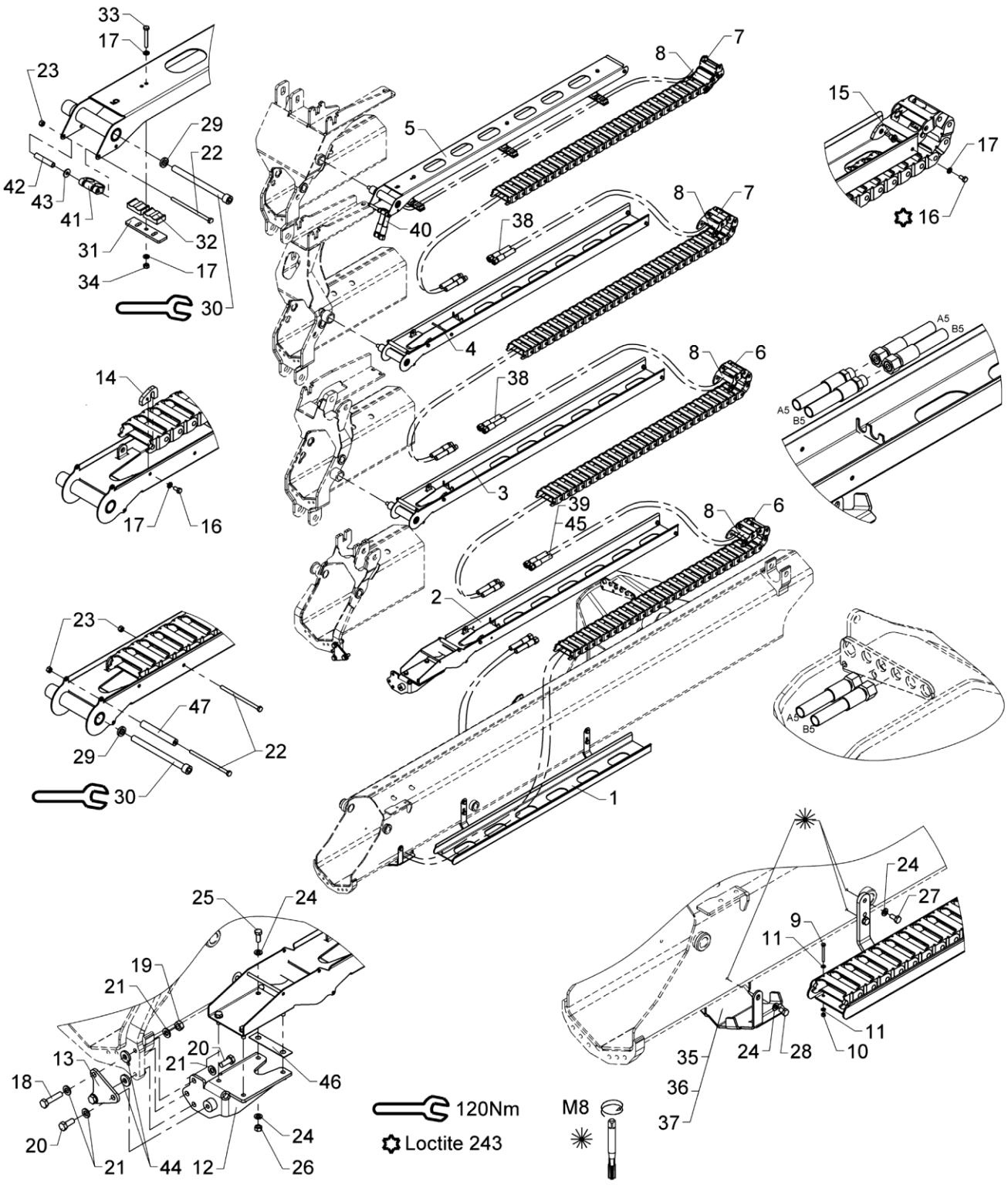

Obsolete

Hose guides, K4-1 EXV.

534 09 130

From loader 1060001
To loader 1060924

Created 16-03-2009
Modified 14-01-2013

Pos	Qty.	Part no.	Description	Remarks
38	4	56564	Hose	
39	2	56569	Hose	
40	2	56565	Hose	
41	1	68028	Clamp	
42	1	6340724	Distance pipe	
43	1	31134	Washer, stainless	
44	2	31756	Washer	Serie 1100/1110
45	2	56458	Hose 3/8 x 3750 mm L/L	Serie 900/910
46	1	6340764	Shim	
47	3	56513	Hose	

1500K, 1510K, 1720K, 1730K, 1820K, 1830K

63 63 750
63 65 750
63 46 750
Internal ref. 63 42 750

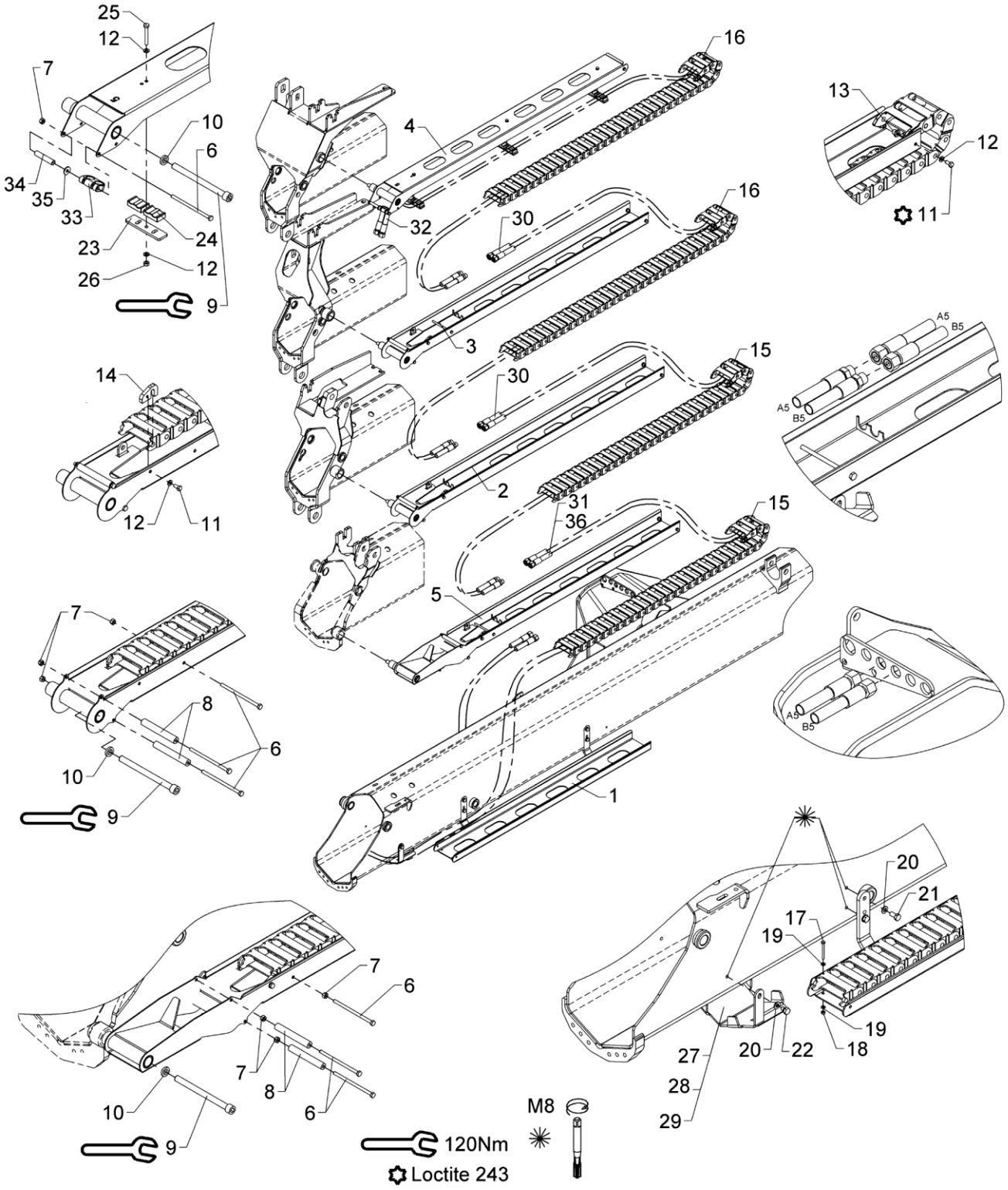

Hose guides, K4-1 EXV.

Pos	Qty.	Part no.	Description	Remarks
		6342750	Hose guides, K4-1 EXV	
		6346750	Hose guides, K4-1 EXV	
		6365750	Hose guide, K4-1 EXV.	
		6363750	Hose guide, K4-1 EXV.	
1	1	6340721	Guide (jib)	
2	1	6340741	Guide (Extension II)	
3	1	6340751	Guide (Extension III)	
4	1	6340758	Guide (extension K5)	
5	1	6341731	Hose guide (Extension I)	
6	9	30167	Steel bolt	M6 x 60
7	9	30884	Lock nut, stainless	M6
8	6	56513	Hose	
9	4	32488	Screw	MC12 x 150
10	4	6340717	Washer	
11	11	30111	Set screw, stainless	
12	17	32302	Face washer, stainless	6 mm
13	8	6340719	Nut	
14	3	6340718	Bracket	
15	2	28712	Nylon drag chain, 30 links	
16	2	28713	Nylon drag chain, 33 links	
17	2	30128	Set screw	M4 x 40
18	2	30857	Lock nut	M4
19	4	31188	Washer, stainless	4 mm
20	6	31147	Face washer, 8 mm	
21	4	30131	Set screw, stainless	M8 x 16
22	2	30105	Set screw, stainless	M8 x 10
23	3	6340769	Adaptor	
24	6	63561	Clamp	
25	3	30118	Steel pin, stainless	M6 x 45
26	3	30854	Nut, stainless	M6
27	1	6340299	Protective guard	Serie 1300/1500
28	1	6344299	Protective guard	Serie 1800/2200
29	1	6365299	Hose shield	Serie 1100/1110
30	4	56564	Hose	
31	2	56569	Hose	
32	2	56565	Hose	
33	1	68028	Clamp	
34	1	6340724	Distance pipe	
35	1	31134	Washer, stainless	
36	2	56458	Hose 3/8 x 3750 mm L/L	Serie 900/910

1500K, 1510K, 1720K, 1730K, 1820K, 1830K

63 63 760
63 65 760
63 46 760
Internal ref. 63 42 760

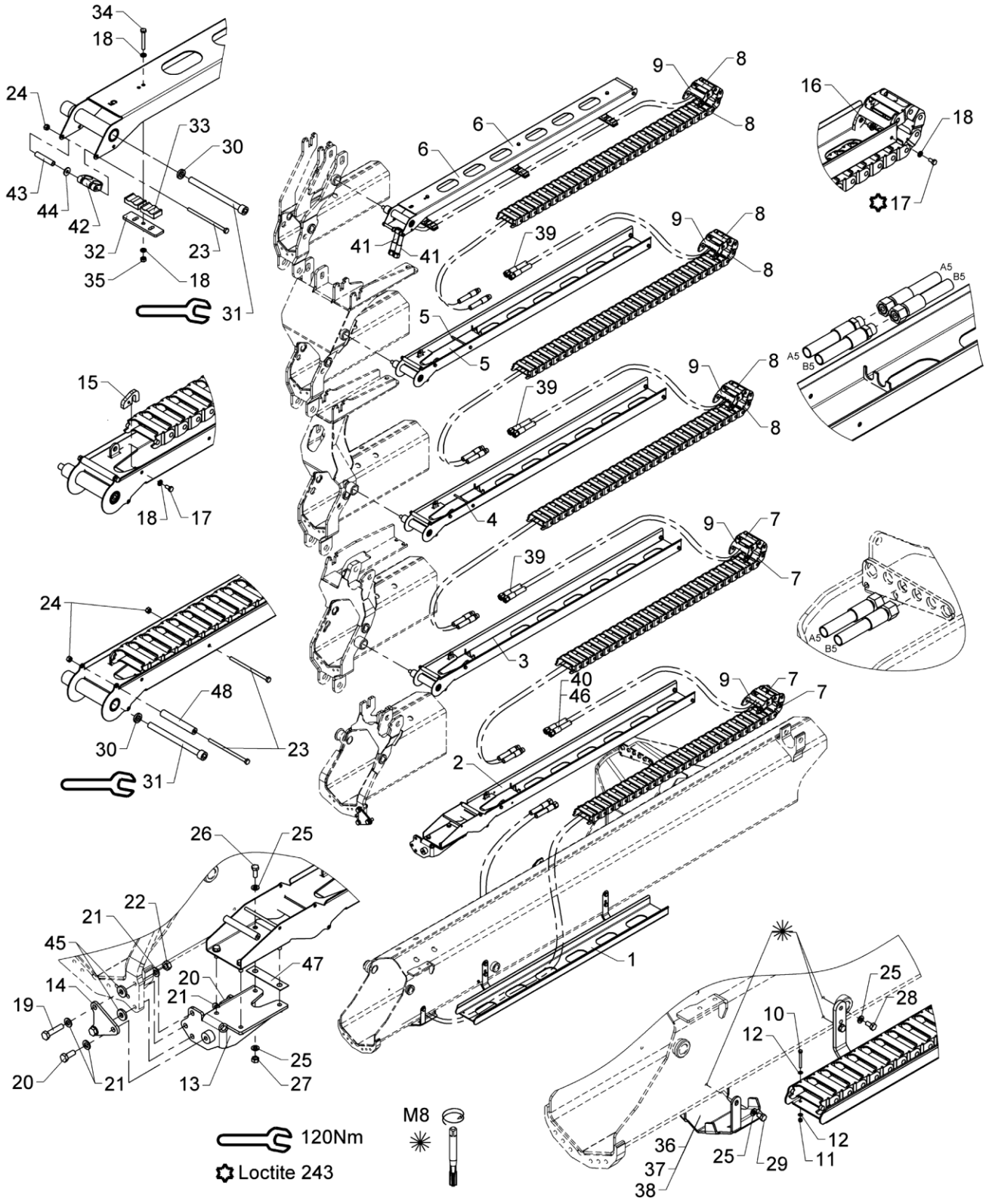

Obsolete

Hose guides, K5-1 EXV.

534 09 140

From loader 1060001
To loader 1060924

Created 17-03-2009
Modified 14-01-2013

Pos	Qty.	Part no.	Description	Remarks
		6342760	Hose guides, K5-1 EXV	
		6346760	Hose guides, K5-1 EXV	
		6365760	Hose guide, K5-1 EXV.	
		6363760	Hose guide, K5-1 EXV.	
1	1	6340721	Guide (jib)	
2	1	6340731	Guide (Extension I)	
3	1	6340741	Guide (Extension II)	
4	1	6340751	Guide (Extension III)	
5	1	6340755	Guide (Extension IV)	
6	1	6340758	Guide (extension K5)	
7	2	28712	Nylon drag chain, 30 links	
8	3	28713	Nylon drag chain, 33 links	
9	5	63400	End link for nylon drag chain	
10	2	30128	Set screw	M4 x 40
11	2	30857	Lock nut	M4
12	4	31188	Washer, stainless	4 mm
13	1	6340725	Mounting bracket	
14	1	6340729	Plate	
15	4	6340718	Bracket	
16	10	6340719	Nut	
17	14	30111	Set screw, stainless	
18	20	32302	Face washer, stainless	6 mm
19	2	30377	Set screw	M10 x 45
20	2	31513	Set screw, stainless	M10 x 25
21	6	31565	Washer, stainless	10 mm
22	2	30858	Nut	M10
23	7	30167	Steel bolt	M6 x 60
24	7	30884	Lock nut, stainless	M6
25	14	31147	Face washer, 8 mm	
26	4	30132	Set screw, stainless	
27	4	30856	Nut, stainless	M8
28	4	30131	Set screw, stainless	M8 x 16
29	2	30130	Set screw, stainless	M8 x 12
30	4	6340717	Washer	
31	4	32488	Screw	MC12 x 150
32	3	6340769	Adaptor	
33	6	63561	Clamp	
34	3	30118	Steel pin, stainless	M6 x 45
35	3	30854	Nut, stainless	M6
36	1	6340299	Protective guard	Serie 1300/1500
37	1	6344299	Protective guard	Serie 1800/2200

1500K, 1510K, 1720K, 1730K, 1820K, 1830K

63 63 760
63 65 760
63 46 760
Internal ref. 63 42 760

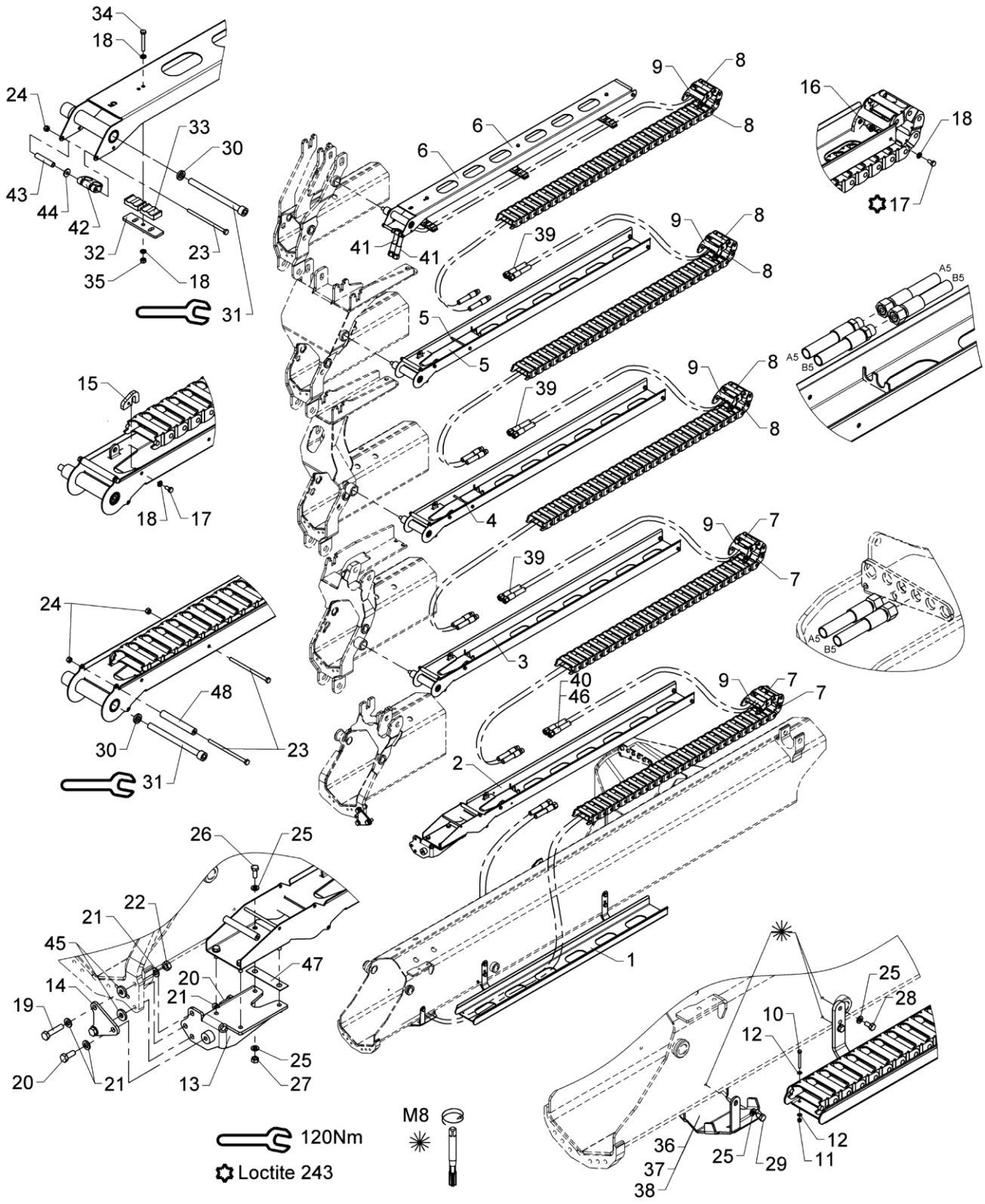

Obsolete

Hose guides, K5-1 EXV.

534 09 140

From loader 1060001
To loader 1060924

Created 17-03-2009
Modified 14-01-2013

Pos	Qty.	Part no.	Description	Remarks
38	1	6365299	Hose shield	Serie 1100/1110
39	6	56564	Hose	
40	2	56569	Hose	
41	2	56565	Hose	
42	1	68028	Clamp	
43	1	6340724	Distance pipe	
44	1	31134	Washer, stainless	
45	2	31756	Washer	Serie 1100/1110
46	2	56458	Hose 3/8 x 3750 mm L/L	Serie 900/910
47	1	6340764	Shim	
48	4	56513	Hose	

1500K, 1510K, 1720K, 1730K, 1820K, 1830K

63 63 760
63 65 760
63 46 760
Internal ref. 63 42 760

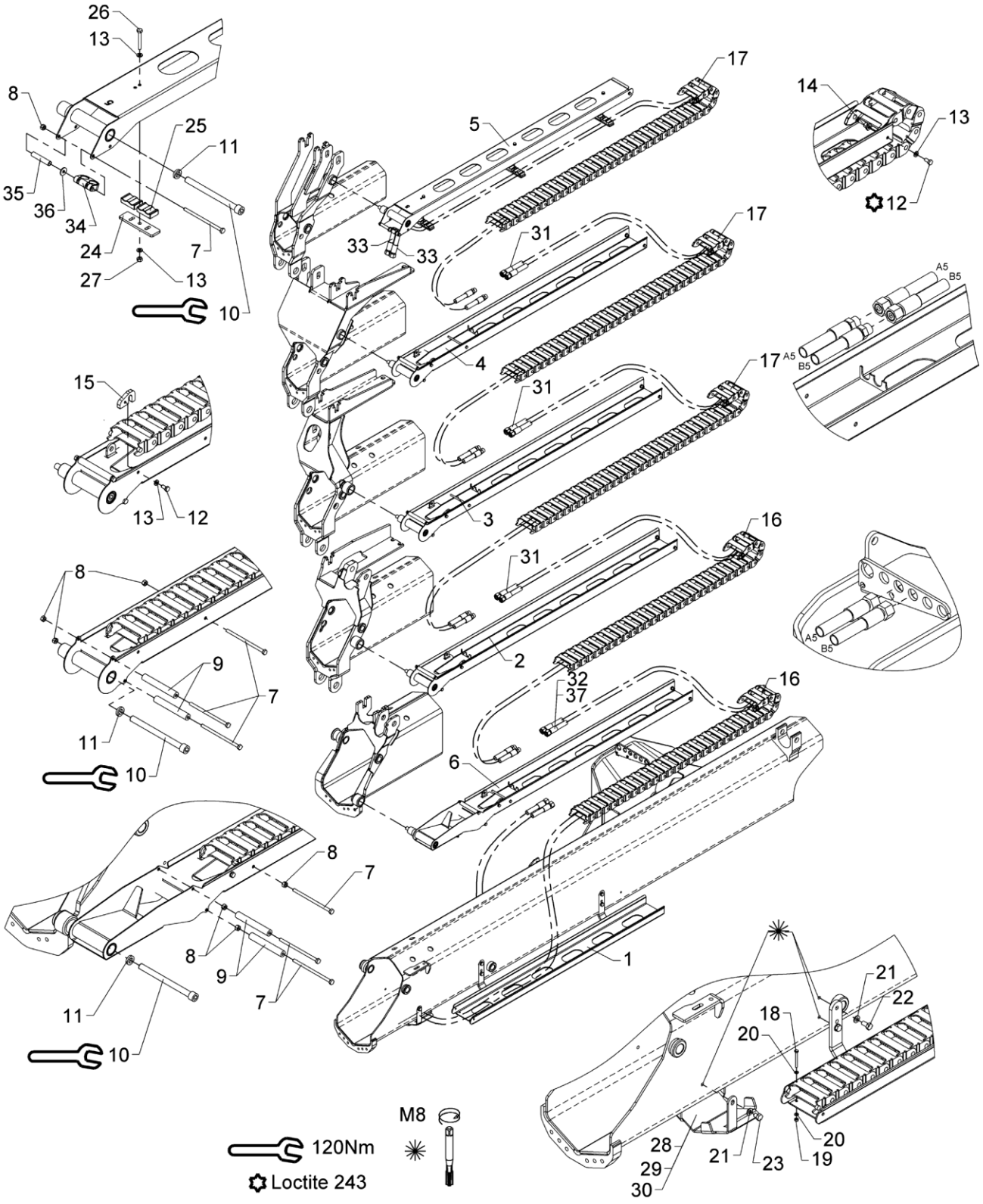

Hose guides, K5-1 EXV.

Pos	Qty.	Part no.	Description	Remarks
		6342760	Hose guides, K5-1 EXV	
		6346760	Hose guides, K5-1 EXV	
		6365760	Hose guide, K5-1 EXV.	
		6363760	Hose guide, K5-1 EXV.	
1	1	6340721	Guide (jib)	
2	1	6340741	Guide (Extension II)	
3	1	6340751	Guide (Extension III)	
4	1	6340755	Guide (Extension IV)	
5	1	6340758	Guide (extension K5)	
6	1	6341731	Hose guide (Extension I)	
7	12	30167	Steel bolt	M6 x 60
8	12	30884	Lock nut, stainless	M6
9	8	56513	Hose	
10	5	32488	Screw	MC12 x 150
11	5	6340717	Washer	
12	14	30111	Set screw, stainless	
13	20	32302	Face washer, stainless	6 mm
14	10	6340719	Nut	
15	4	6340718	Bracket	
16	2	28712	Nylon drag chain, 30 links	
17	3	28713	Nylon drag chain, 33 links	
18	2	30128	Set screw	M4 x 40
19	2	30857	Lock nut	M4
20	4	31188	Washer, stainless	4 mm
21	6	31147	Face washer, 8 mm	
22	4	30131	Set screw, stainless	M8 x 16
23	2	30105	Set screw, stainless	M8 x 10
24	3	6340769	Adaptor	
25	6	63561	Clamp	
26	3	30118	Steel pin, stainless	M6 x 45
27	3	30854	Nut, stainless	M6
28	1	6340299	Protective guard	Serie 1300/1620
29	1	6344299	Protective guard	Serie 1800/2820
30	1	6365299	Hose shield	Serie 1100/1110
31	6	56564	Hose	
32	2	56569	Hose	
33	2	56565	Hose	
34	1	68028	Clamp	
35	1	6340724	Distance pipe	
36	1	31134	Washer, stainless	
37	2	56458	Hose 3/8 x 3750 mm L/L	Serie 900/910

1500K, 1510K, 1720K, 1730K, 1820K, 1830K

63 46 770
Internal ref. 63 42 770

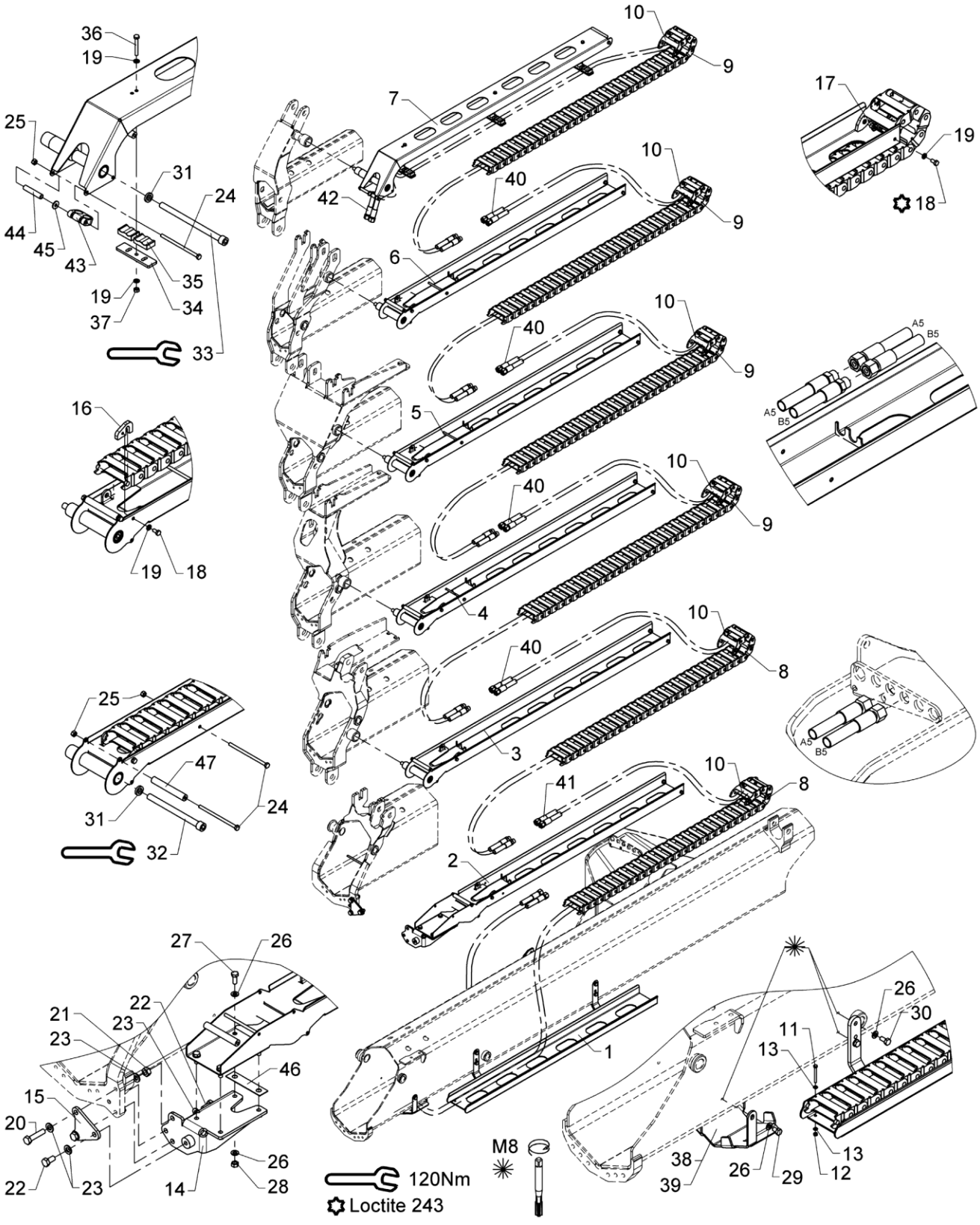

Obsolete

Hose guides, K6-1 EXV.

534 09 150

From loader 1060001
To loader 1060924

Created 17-03-2009
Modified 14-01-2013

Pos	Qty.	Part no.	Description	Remarks
		6342770	Hose guides, K6-1 EXV	
		6346770	Hose guides, K6-1 EXV	
1	1	6340721	Guide (jib)	
2	1	6340731	Guide (Extension I)	
3	1	6340741	Guide (Extension II)	
4	1	6340751	Guide (Extension III)	
5	1	6340755	Guide (Extension IV)	
6	1	6340761	Guide (Extension V)	
7	1	6340765	Guide (Extension VI)	
8	2	28712	Nylon drag chain, 30 links	
9	4	28713	Nylon drag chain, 33 links	
10	6	63400	End link for nylon drag chain	
11	2	30128	Set screw	M4 x 40
12	2	30857	Lock nut	M4
13	4	31188	Washer, stainless	4 mm
14	1	6340725	Mounting bracket	
15	1	6340729	Plate	
16	5	6340718	Bracket	
17	12	6340719	Nut	
18	17	30111	Set screw, stainless	
19	23	32302	Face washer, stainless	6 mm
20	2	30377	Set screw	M10 x 45
21	2	30858	Nut	M10
22	2	31517	Set screw, stainless	M10 x 20
23	6	31565	Washer, stainless	10 mm
24	9	30167	Steel bolt	M6 x 60
25	9	30884	Lock nut, stainless	M6
26	14	31147	Face washer, 8 mm	
27	4	30132	Set screw, stainless	
28	4	30856	Nut, stainless	M8
29	2	30130	Set screw, stainless	M8 x 12
30	4	30131	Set screw, stainless	M8 x 16
31	5	6340717	Washer	
32	4	32488	Screw	MC12 x 150
33	1	32489	Screw	MC12 x 180
34	3	6340769	Adaptor	
35	6	63561	Clamp	
36	3	30118	Steel pin, stainless	M6 x 45
37	3	30854	Nut, stainless	M6
38	1	6340299	Protective guard	Serie 1300/1500
39	1	6344299	Protective guard	Serie 1800/2200

1500K, 1510K, 1720K, 1730K, 1820K, 1830K

63 46 770
Internal ref. 63 42 770

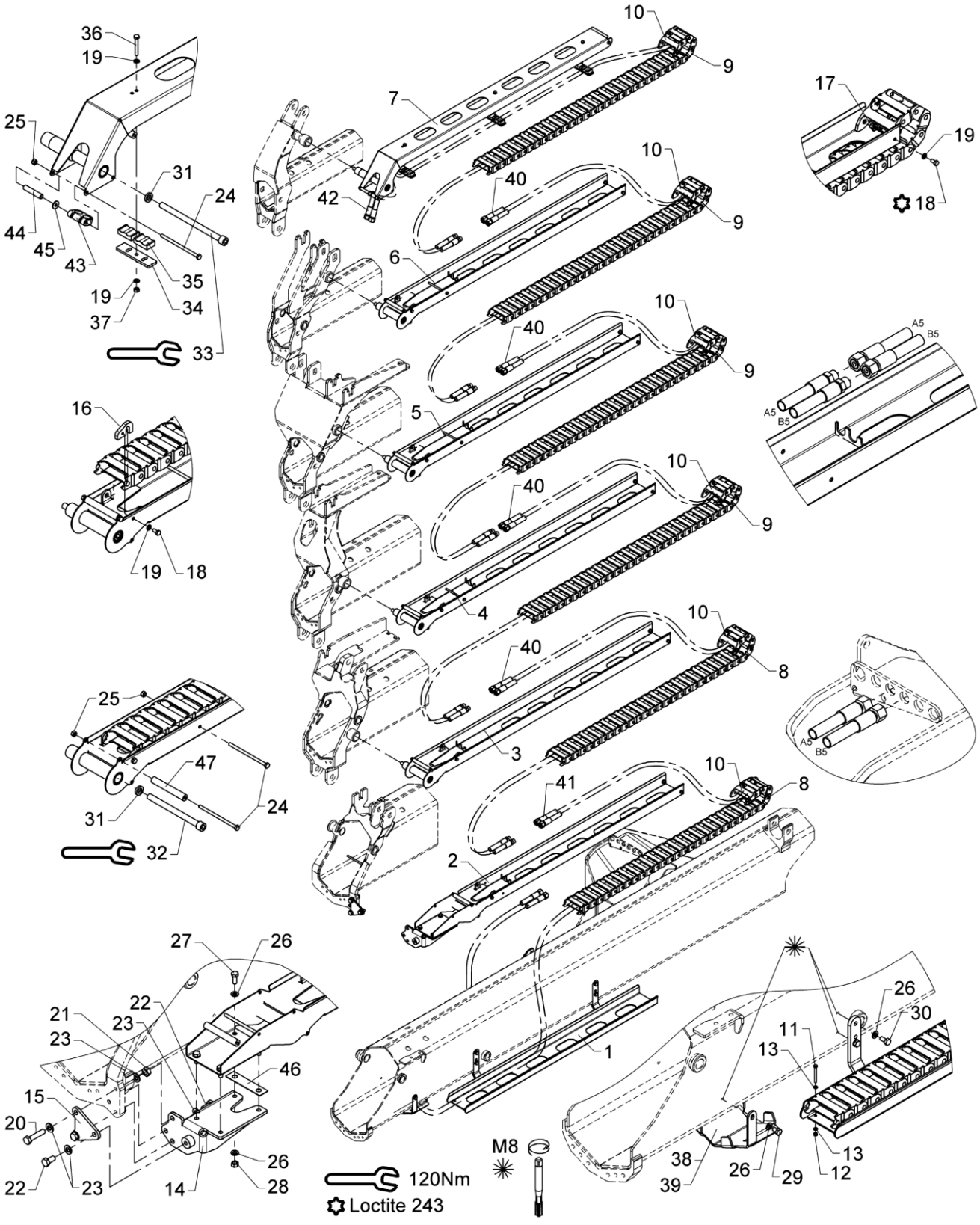

Obsolete

Hose guides, K6-1 EXV.

534 09 150

From loader 1060001
To loader 1060924

Created 17-03-2009
Modified 14-01-2013

Pos	Qty.	Part no.	Description	Remarks
40	8	56564	Hose	
41	2	56569	Hose	
42	2	56565	Hose	
43	1	68028	Clamp	
44	1	6340724	Distance pipe	
45	1	31134	Washer, stainless	
46	1	6340764	Shim	
47	5	56513	Hose	

1500K, 1510K, 1720K, 1730K, 1820K, 1830K

63 46 770
Internal ref. 63 42 770

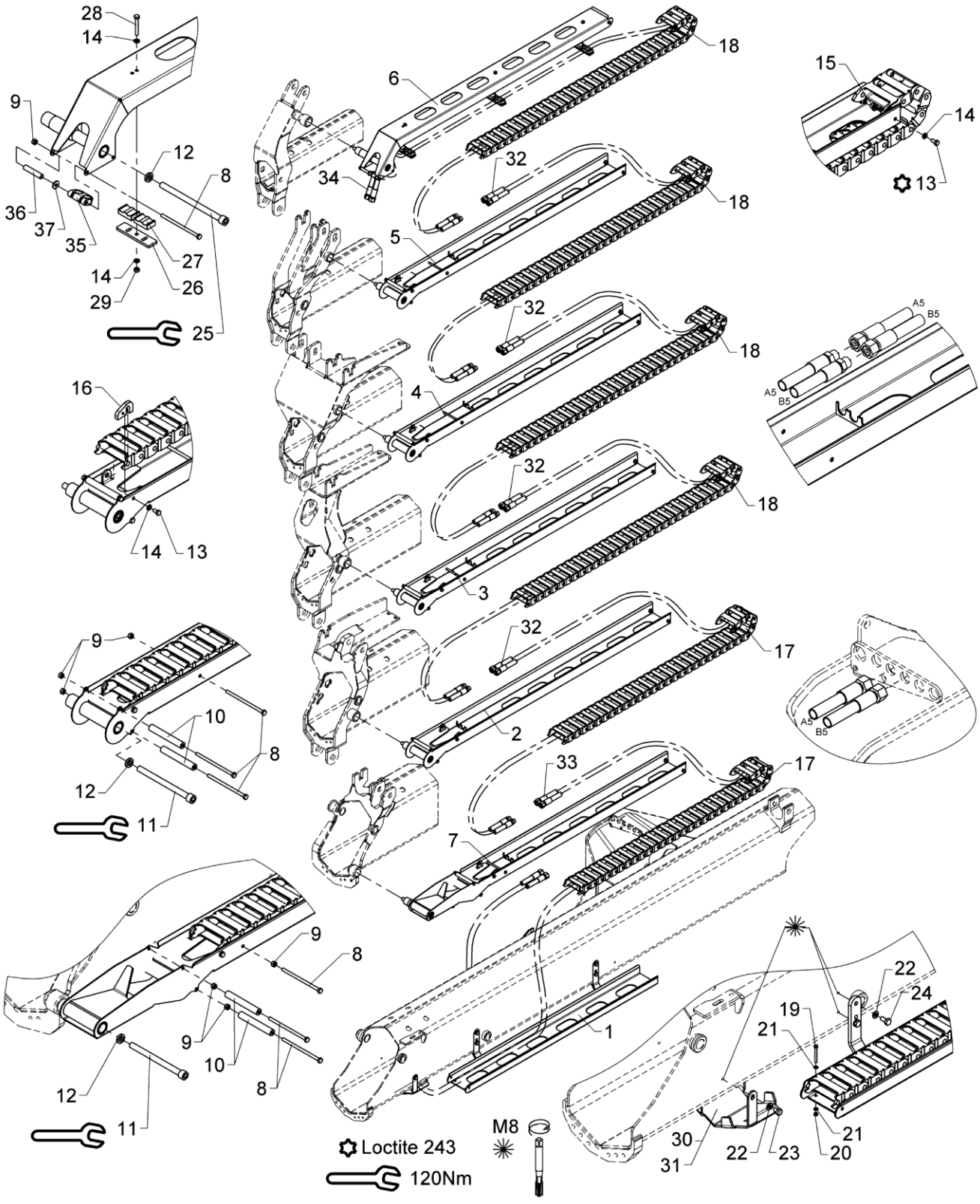

Hose guides, K6-1 EXV.

Pos	Qty.	Part no.	Description	Remarks
		6342770	Hose guides, K6-1 EXV	
		6346770	Hose guides, K6-1 EXV	
1	1	6340721	Guide (jib)	
2	1	6340741	Guide (Extension II)	
3	1	6340751	Guide (Extension III)	
4	1	6340755	Guide (Extension IV)	
5	1	6340761	Guide (Extension V)	
6	1	6340765	Guide (Extension VI)	
7	1	6341731	Hose guide (Extension I)	
8	15	30167	Steel bolt	M6 x 60
9	15	30884	Lock nut, stainless	M6
10	10	56513	Hose	
11	5	32488	Screw	MC12 x 150
12	6	6340717	Washer	
13	17	30111	Set screw, stainless	
14	23	32302	Face washer, stainless	6 mm
15	12	6340719	Nut	
16	5	6340718	Bracket	
17	2	28712	Nylon drag chain, 30 links	
18	4	28713	Nylon drag chain, 33 links	
19	2	30128	Set screw	M4 x 40
20	2	30857	Lock nut	M4
21	4	31188	Washer, stainless	4 mm
22	6	31147	Face washer, 8 mm	
23	2	30105	Set screw, stainless	M8 x 10
24	4	30131	Set screw, stainless	M8 x 16
25	1	32489	Screw	MC12 x 180
26	3	6340769	Adaptor	
27	6	63561	Clamp	
28	3	30118	Steel pin, stainless	M6 x 45
29	3	30854	Nut, stainless	M6
30	1	6340299	Protective guard	Serie 1300/1500
31	1	6344299	Protective guard	Serie 1800/2200
32	8	56564	Hose	
33	2	56569	Hose	
34	2	56565	Hose	
35	1	68028	Clamp	
36	1	6340724	Distance pipe	
37	1	31134	Washer, stainless	

1500K, 1510K, 1720K, 1730K, 1820K, 1830K

63 55 770
63 63 820
63 65 820
Internal ref. 63 40 720

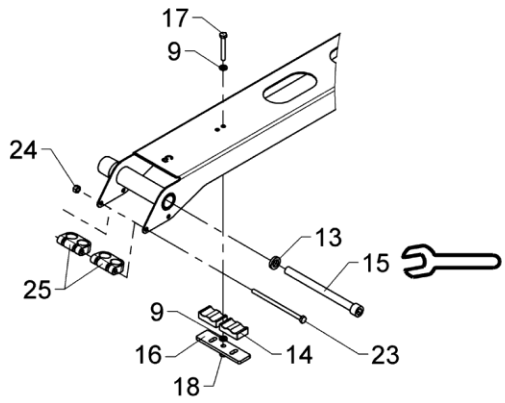

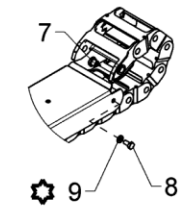

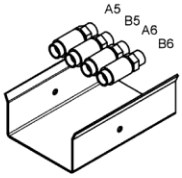

Serie 1300/1500 +
Serie 1210L/1510L

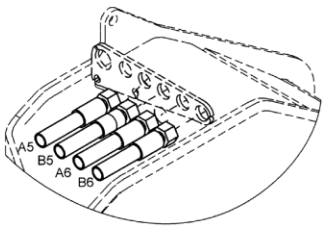

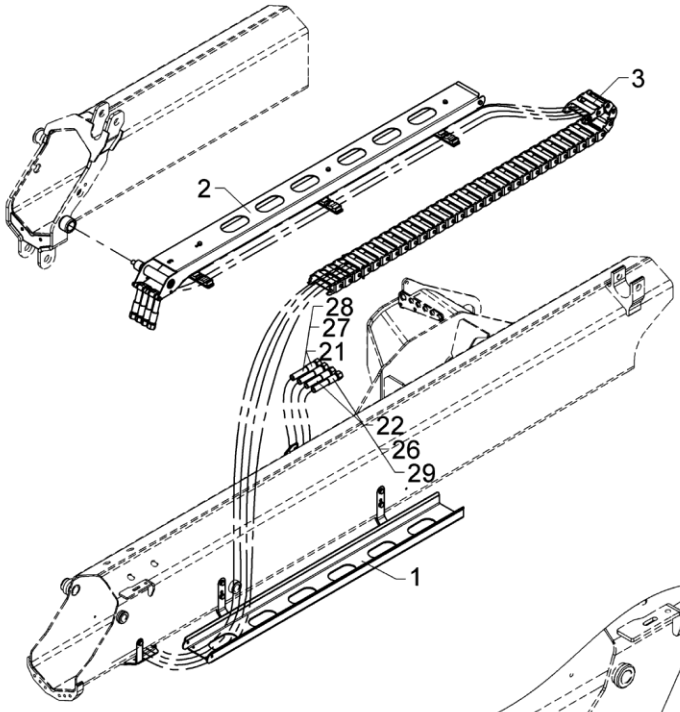

Serie 900/910 +
Serie 1100/1110

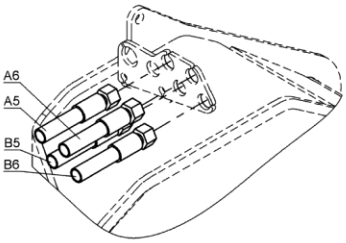

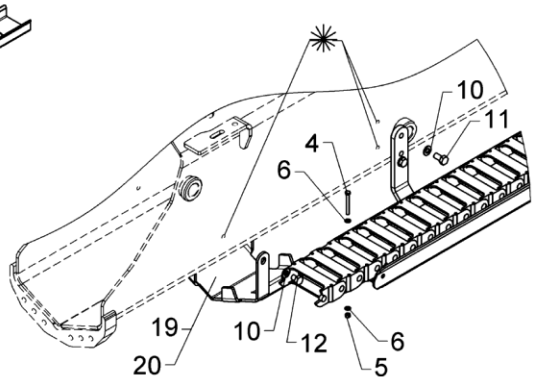

120Nm
Loctite 243
M8

Hose guides, K1-2 EXV.

Pos	Qty.	Part no.	Description	Remarks
		6340720	Hose guide, K1-2 EXV	1300/1500
		6365820	Hose guide, K1-2 EXV.	1100/1110
		6363820	Hose guide, K1-2 EXV.	900/910
		6355770	Hose guides, L1-2 EXV	1210L/1510L
1	1	6340721	Guide (jib)	
2	1	6340748	Guide (extension K3)	
3	1	28713	Nylon drag chain, 33 links	
4	2	30128	Set screw	M4 x 40
5	2	30857	Lock nut	M4
6	4	31188	Washer, stainless	4 mm
7	2	6340719	Nut	
8	2	30111	Set screw, stainless	
9	8	32302	Face washer, stainless	6 mm
10	6	31147	Face washer, 8 mm	
11	4	30131	Set screw, stainless	M8 x 16
12	2	30105	Set screw, stainless	M8 x 10
13	1	6340717	Washer	
14	6	63561	Clamp	
15	1	32488	Screw	MC12 x 150
16	3	6340769	Adaptor	
17	3	30118	Steel pin, stainless	M6 x 45
18	3	30854	Nut, stainless	M6
19	1	6340299	Protective guard	Serie 1300/1500/1210L/1510L
20	1	6365299	Hose shield	Serie 1100/1110, 900/910
21	2	56566	Hose	Serie 1300/1500, 1100/1110
22	2	56567	Hose	Serie 1300/1500, 1100/1110
23	1	30167	Steel bolt	M6 x 60
24	1	30884	Lock nut, stainless	M6
25	2	68028	Clamp	
26	2	56911	Hose 3/8" x 4470 mm	Serie 900/910/1100KS/1221KS
27	2	56910	Hose 3/8" x 4370 mm	Serie 900/910/1100KS/1221KS
28	2	56957	Hose 3/8 X 4910 mm L/L	Serie 1210L/1510L
29	2	56958	Hose 3/8 X 5010 mm L/L	Serie 1210L/1510L

1500K, 1510K, 1720K, 1730K, 1820K, 1830K

63 63 830
63 65 830
63 45 730
Internal ref. 63 40 730

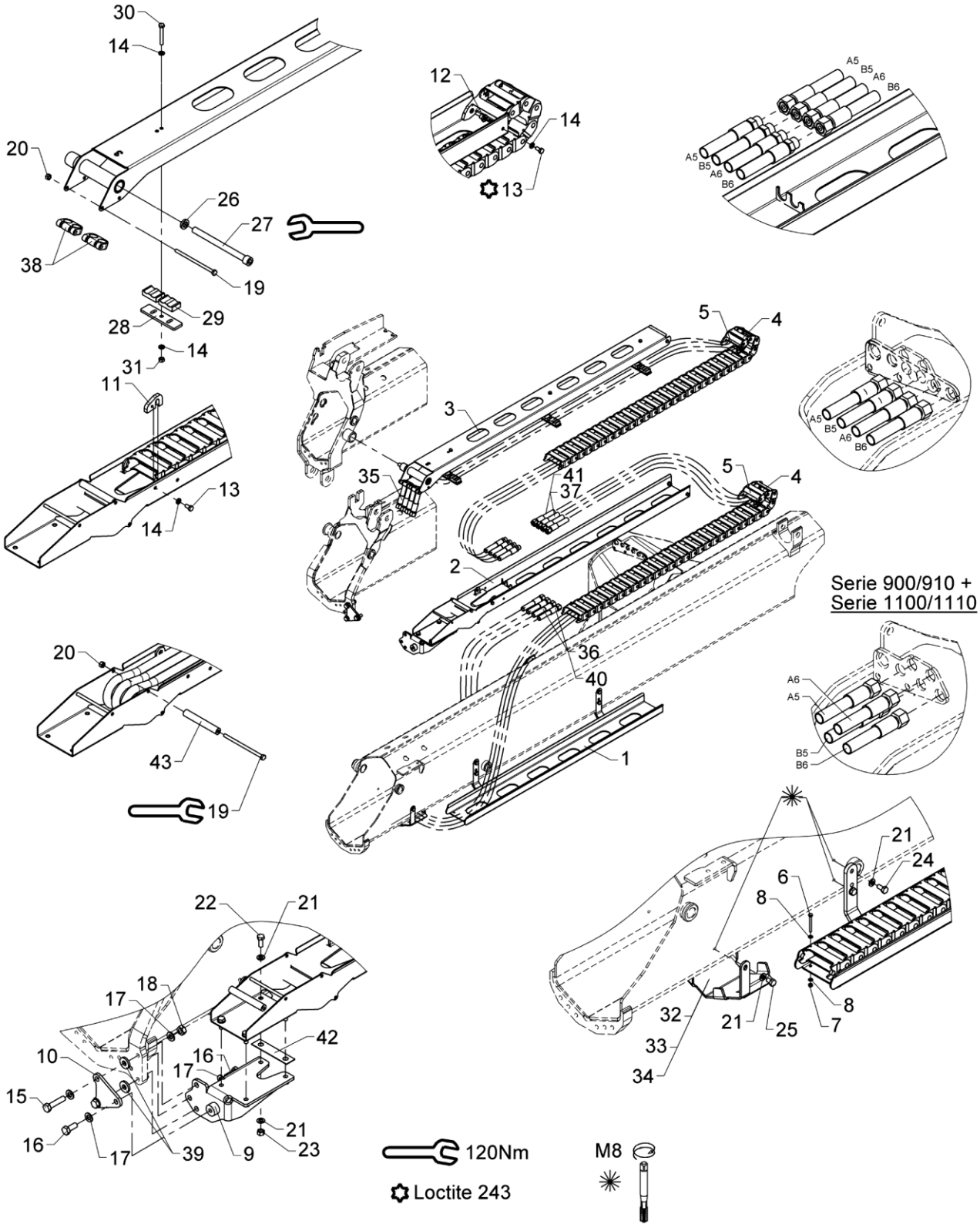

Obsolete

Hose guides, K2-2 EXV.

534 09 210

From loader 1060001
To loader 1060924

Created 17-03-2009
Modified 07-01-2013

Pos	Qty.	Part no.	Description	Remarks
		6340730	Hose guide, K2-1 EXV	
		6345730	Hose guide, K2-2 EXV	
		6365830	Hose guide, K2-2 EXV.	
		6363830	Hose guide, K2-2 EXV.	
1	1	6340721	Guide (jib)	
2	1	6340731	Guide (Extension I)	
3	1	6340748	Guide (extension K3)	
4	2	28712	Nylon drag chain, 30 links	
5	2	63400	End link for nylon drag chain	
6	2	30128	Set screw	M4 x 40
7	2	30857	Lock nut	M4
8	4	31188	Washer, stainless	4 mm
9	1	6340725	Mounting bracket	
10	1	6340729	Plate	
11	1	6340718	Bracket	
12	4	6340719	Nut	
13	5	30111	Set screw, stainless	
14	11	32302	Face washer, stainless	6 mm
15	2	30377	Set screw	M10 x 45
16	2	31513	Set screw, stainless	M10 x 25
17	6	31565	Washer, stainless	10 mm
18	2	30858	Nut	M10
19	2	30167	Steel bolt	M6 x 60
20	2	30884	Lock nut, stainless	M6
21	14	31147	Face washer, 8 mm	
22	4	30132	Set screw, stainless	
23	4	30856	Nut, stainless	M8
24	4	30131	Set screw, stainless	M8 x 16
25	2	30130	Set screw, stainless	M8 x 12
26	1	6340717	Washer	
27	1	32488	Screw	MC12 x 150
28	3	6340769	Adaptor	
29	6	63561	Clamp	
30	3	30118	Steel pin, stainless	M6 x 45
31	3	30854	Nut, stainless	M6
32	1	6340299	Protective guard	Serie 1300/1500
33	1	6344299	Protective guard	Serie 1800/2200
34	1	6365299	Hose shield	Serie 1100/1110
35	4	56568	Hose	
36	2	56563	Hose	
37	2	56569	Hose	

1500K, 1510K, 1720K, 1730K, 1820K, 1830K

63 63 830
63 65 830
63 45 730
Internal ref. 63 40 730

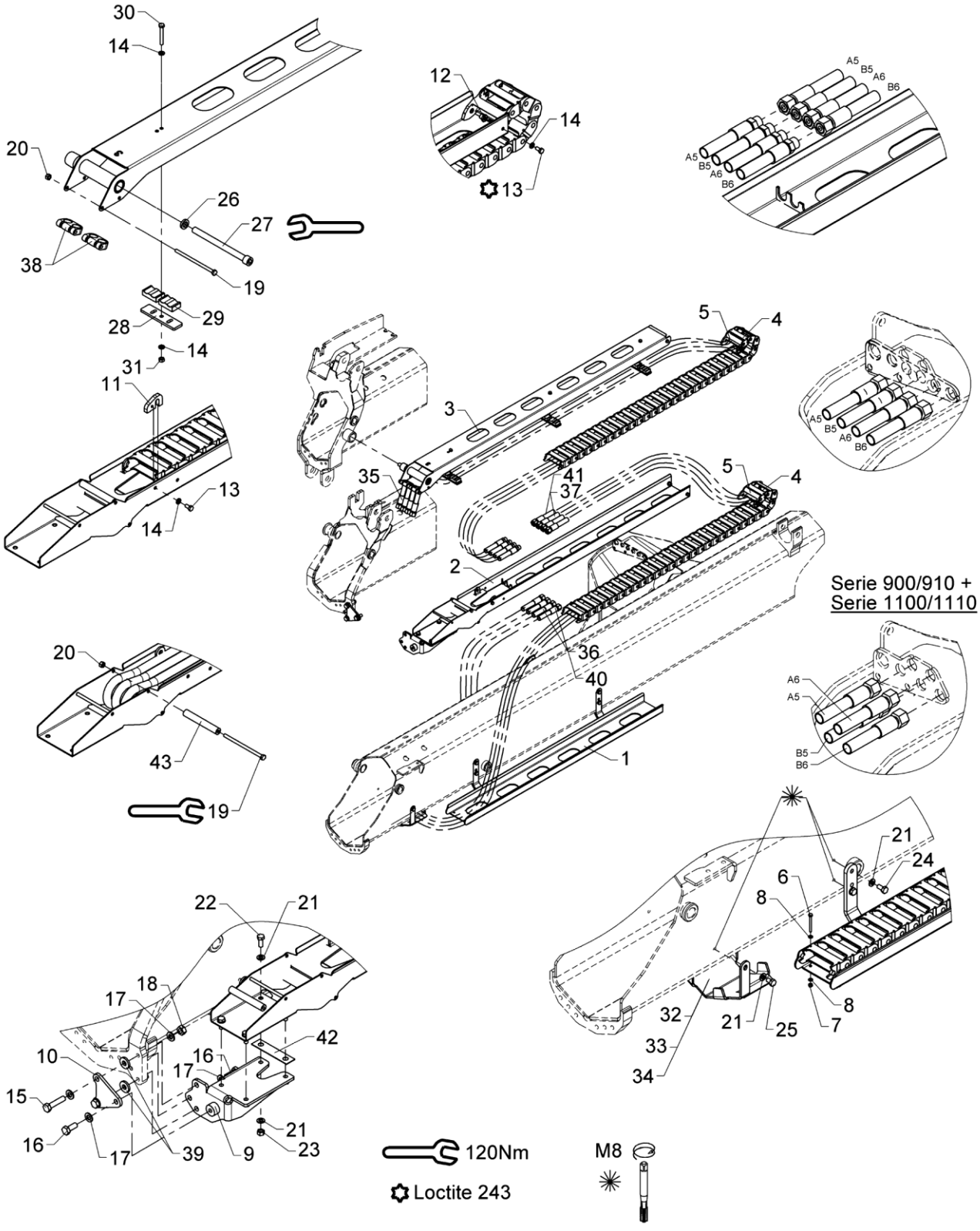

Obsolete

Hose guides, K2-2 EXV.

534 09 210

From loader 1060001
To loader 1060924

Created 17-03-2009
Modified 07-01-2013

Pos	Qty.	Part no.	Description	Remarks
38	2	68028	Clamp	
39	2	31756	Washer	Serie 1100/1110
40	2	56462	Hose 3/8 x 3850 mm	Serie 900/910
41	2	56458	Hose 3/8 x 3750 mm L/L	Serie 900/910
42	1	6340764	Shim	
43	1	56513	Hose	

1500K, 1510K, 1720K, 1730K, 1820K, 1830K

63 55 780
63 63 830
63 65 830
63 45 730
Internal ref. 63 40 730

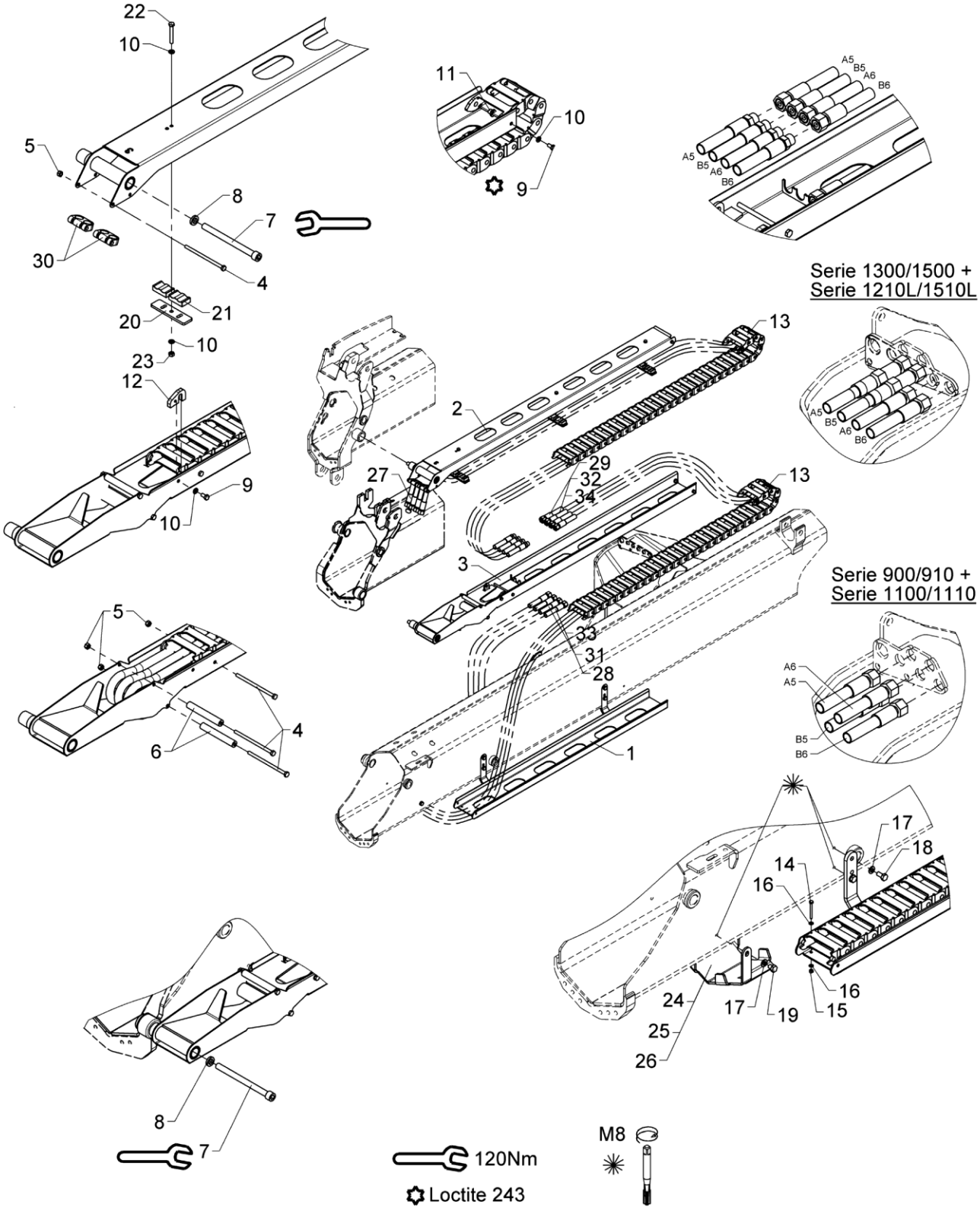

Hose guides, K2-2 EXV.

Pos	Qty.	Part no.	Description	Remarks
		6340730	Hose guide, K2-1 EXV	S.1300K/1500K
		6345730	Hose guide, K2-2 EXV	S.1800K/2200K
		6365830	Hose guide, K2-2 EXV.	S.1100K/1110K
		6363830	Hose guide, K2-2 EXV.	S.900K/910K
		6355780		S.1210L/1510L
1	1	6340721	Guide (jib)	
2	1	6340748	Guide (extension K3)	
3	1	6341731	Hose guide (Extension I)	
4	4	30167	Steel bolt	M6 x 60
5	4	30884	Lock nut, stainless	M6
6	2	56513	Hose	
7	2	32488	Screw	MC12 x 150
8	2	6340717	Washer	
9	5	30111	Set screw, stainless	
10	11	32302	Face washer, stainless	6 mm
11	4	6340719	Nut	
12	1	6340718	Bracket	
13	2	28712	Nylon drag chain, 30 links	
14	2	30128	Set screw	M4 x 40
15	2	30857	Lock nut	M4
16	4	31188	Washer, stainless	4 mm
17	6	31147	Face washer, 8 mm	
18	4	30131	Set screw, stainless	M8 x 16
19	2	30105	Set screw, stainless	M8 x 10
20	3	6340769	Adaptor	
21	6	63561	Clamp	
22	3	30118	Steel pin, stainless	M6 x 45
23	3	30854	Nut, stainless	M6
24	1	6340299	Protective guard	S. 1300/1500/1210L/1510L
25	1	6344299	Protective guard	S. 1800/2200
26	1	6365299	Hose shield	S. 1100/1110
27	4	56568	Hose	
28	2	56563	Hose	S. 1300-2200/1100/1110
29	2	56569	Hose	S. 1300-2200/1100/1110
30	2	68028	Clamp	
31	2	56462	Hose 3/8 x 3850 mm	S. 900/910/1100KS/1221KS
32	2	56458	Hose 3/8 x 3750 mm L/L	S. 900/910/1100KS/1221KS
33	2	56916	Hose	S. 1210L/1510L
34	2	56993	Hydraulic hose	S. 1210L/1510L

1500K, 1510K, 1720K, 1730K, 1820K, 1830K

63 63 840
63 65 840
63 45 740
Internal ref. 63 40 740

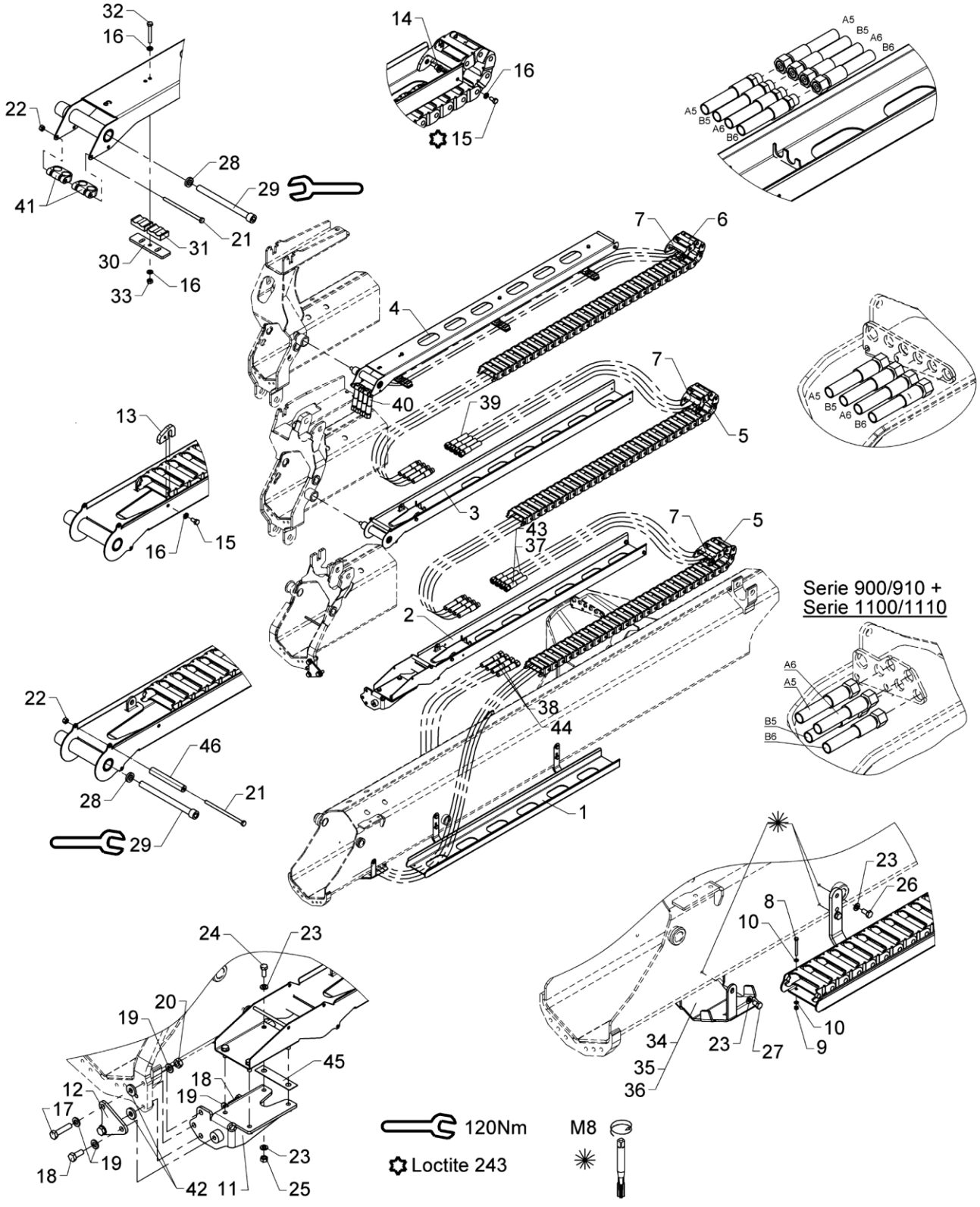

Obsolete

Hose guides, K3-2 EXV.

534 09 220

From loader 1060001
To loader 1060924

Created 17-03-2009
Modified 07-01-2013

Pos	Qty.	Part no.	Description	Remarks
		6340740	Hose guide, K3-2 EXV	
		6345740	Hose guides, K3-2 EXV	
		6365840	Hose guide, K3-2 EXV.	
		6363840	Hose guide, K3-2 EXV.	
1	1	6340721	Guide (jib)	
2	1	6340731	Guide (Extension I)	
3	1	6340741	Guide (Extension II)	
4	1	6340748	Guide (extension K3)	
5	2	28712	Nylon drag chain, 30 links	
6	1	28713	Nylon drag chain, 33 links	
7	3	63400	End link for nylon drag chain	
8	2	30128	Set screw	M4 x 40
9	2	30857	Lock nut	M4
10	4	31188	Washer, stainless	4 mm
11	1	6340725	Mounting bracket	
12	1	6340729	Plate	
13	2	6340718	Bracket	
14	6	6340719	Nut	
15	8	30111	Set screw, stainless	
16	14	32302	Face washer, stainless	6 mm
17	2	30377	Set screw	M10 x 45
18	2	31513	Set screw, stainless	M10 x 25
19	6	31565	Washer, stainless	10 mm
20	2	30858	Nut	M10
21	3	30167	Steel bolt	M6 x 60
22	3	30884	Lock nut, stainless	M6
23	14	31147	Face washer, 8 mm	
24	4	30132	Set screw, stainless	
25	4	30856	Nut, stainless	M8
26	4	30131	Set screw, stainless	M8 x 16
27	2	30130	Set screw, stainless	M8 x 12
28	2	6340717	Washer	
29	2	32488	Screw	MC12 x 150
30	3	6340769	Adaptor	
31	6	63561	Clamp	
32	3	30118	Steel pin, stainless	M6 x 45
33	3	30854	Nut, stainless	M6
34	1	6340299	Protective guard	Serie 1300/1500
35	1	6344299	Protective guard	Serie 1800/2200
36	1	6365299	Hose shield	Serie 1100/1110
37	2	56569	Hose	

1500K, 1510K, 1720K, 1730K, 1820K, 1830K

63 63 840
63 65 840
63 45 740
Internal ref. 63 40 740

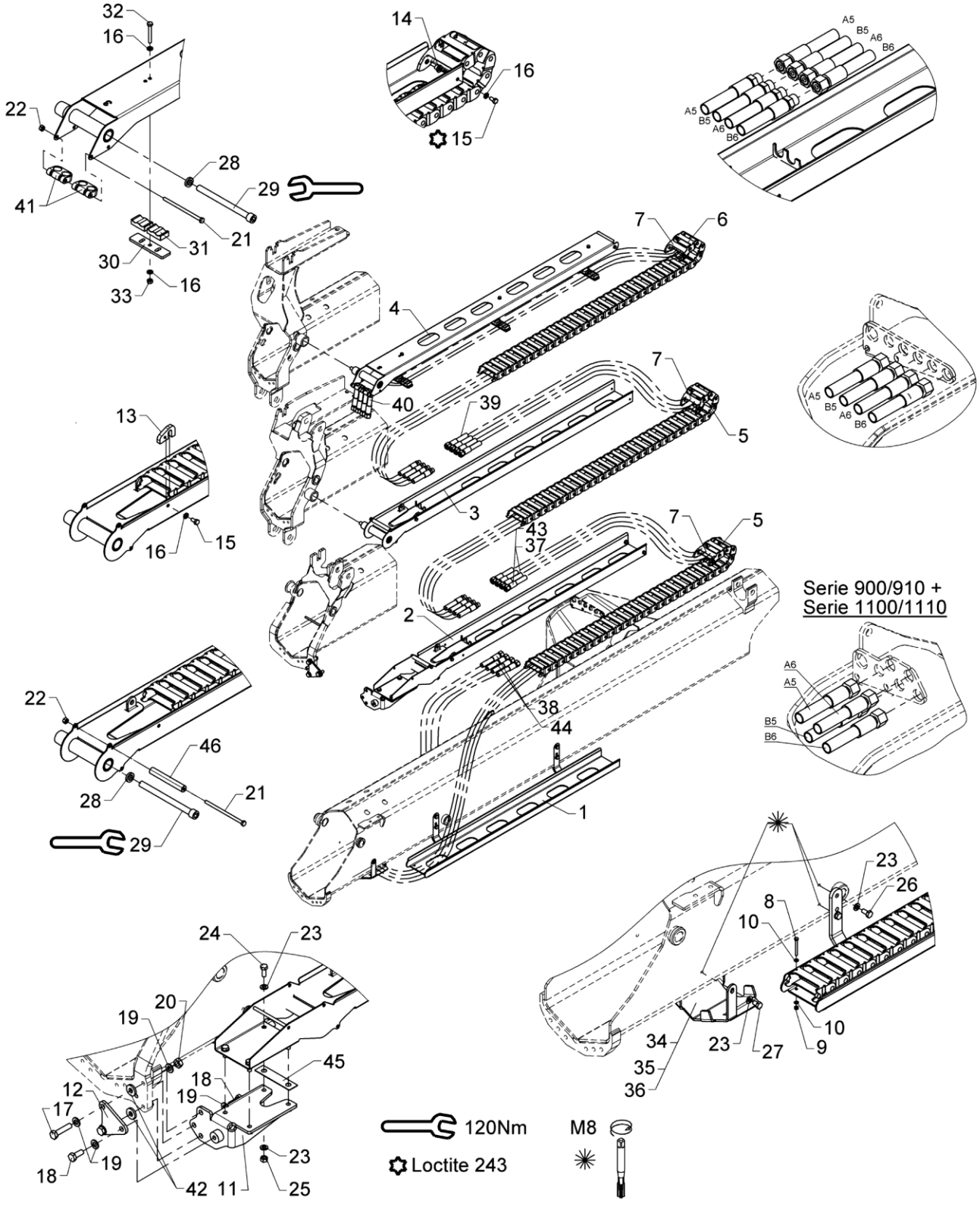

Obsolete

Hose guides, K3-2 EXV.

534 09 220

From loader 1060001
To loader 1060924

Created 17-03-2009
Modified 07-01-2013

Pos	Qty.	Part no.	Description	Remarks
38	2	56563	Hose	
39	4	56564	Hose	
40	4	56565	Hose	
41	2	68028	Clamp	
42	2	31756	Washer	Serie 1100/1110
43	2	56458	Hose 3/8 x 3750 mm L/L	Serie 900/910
44	2	56462	Hose 3/8 x 3850 mm	Serie 900/910
45	1	6340764	Shim	
46	2	56513	Hose	

1500K, 1510K, 1720K, 1730K, 1820K, 1830K

63 63 840
63 65 840
63 45 530
63 55 860 63 45 740
Internal ref. 63 40 740

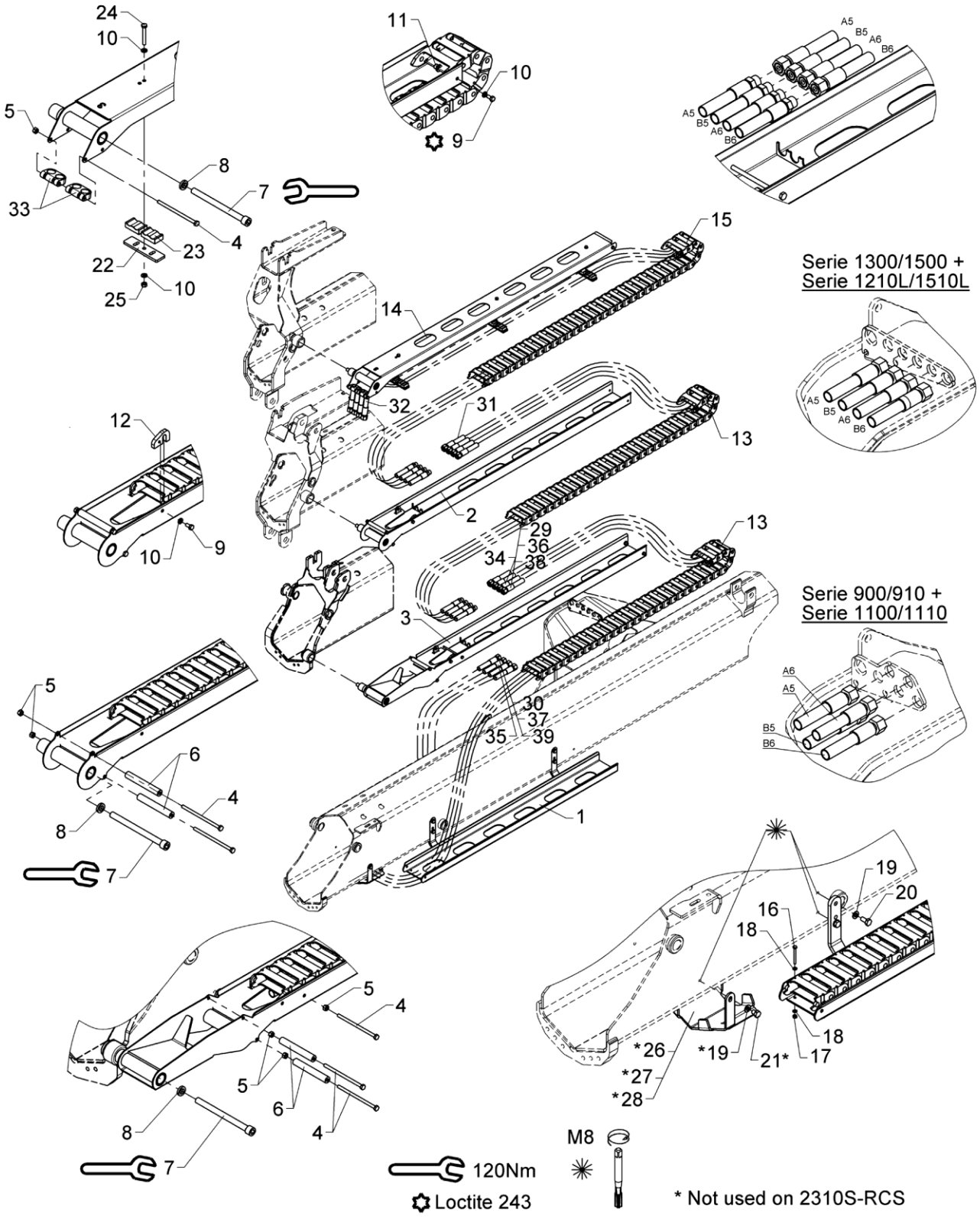

Hose guides, K3-2 EXV.

Pos	Qty.	Part no.	Description	Remarks
		6340740	Hose guide, K3-2 EXV	S.1200/1400
		6345740	Hose guides, K3-2 EXV	S.1700/2100
		6345530		S.2310S-RCS
		6365840	Hose guide, K3-2 EXV.	S.1100/1110
		6363840	Hose guide, K3-2 EXV.	S.900/910
		6355860		S.1210L/1510L
1	1	6340721	Guide (jib)	
2	1	6340741	Guide (Extension II)	
3	1	6341731	Hose guide (Extension I)	
4	6	30167	Steel bolt	M6 x 60
5	6	30884	Lock nut, stainless	M6
6	4	56513	Hose	
7	3	32488	Screw	MC12 x 150
8	3	6340717	Washer	
9	8	30111	Set screw, stainless	
10	14	32302	Face washer, stainless	6 mm
11	6	6340719	Nut	
12	2	6340718	Bracket	
13	2	28712	Nylon drag chain, 30 links	
14	1	6340748	Guide (extension K3)	
15	1	28713	Nylon drag chain, 33 links	
16	2	30128	Set screw	M4 x 40
17	2	30857	Lock nut	M4
18	4	31188	Washer, stainless	4 mm
19	6	31147	Face washer, 8 mm	
20	4	30131	Set screw, stainless	M8 x 16
21	2	30105	Set screw, stainless	M8 x 10
22	3	6340769	Adaptor	
23	6	63561	Clamp	
24	3	30118	Steel pin, stainless	M6 x 45
25	3	30854	Nut, stainless	M6
26	1	6340299	Protective guard	S. 1300/1500/1210L/1510L
27	1	6344299	Protective guard	S. 1800/2200
28	1	6365299	Hose shield	S. 1100/1110
29	2	56569	Hose	S. 1300-2200/1100/1110
30	2	56563	Hose	S. 1300-2200/1100/1110
31	4	56564	Hose	
32	4	56565	Hose	
33	2	68028	Clamp	
34	2	56458	Hose 3/8 x 3750 mm L/L	S. 900/910
35	2	56462	Hose 3/8 x 3850 mm	S.900/910

1500K, 1510K, 1720K, 1730K, 1820K, 1830K

63 63 840
63 65 840
63 45 530
63 55 860 63 45 740
Internal ref. 63 40 740

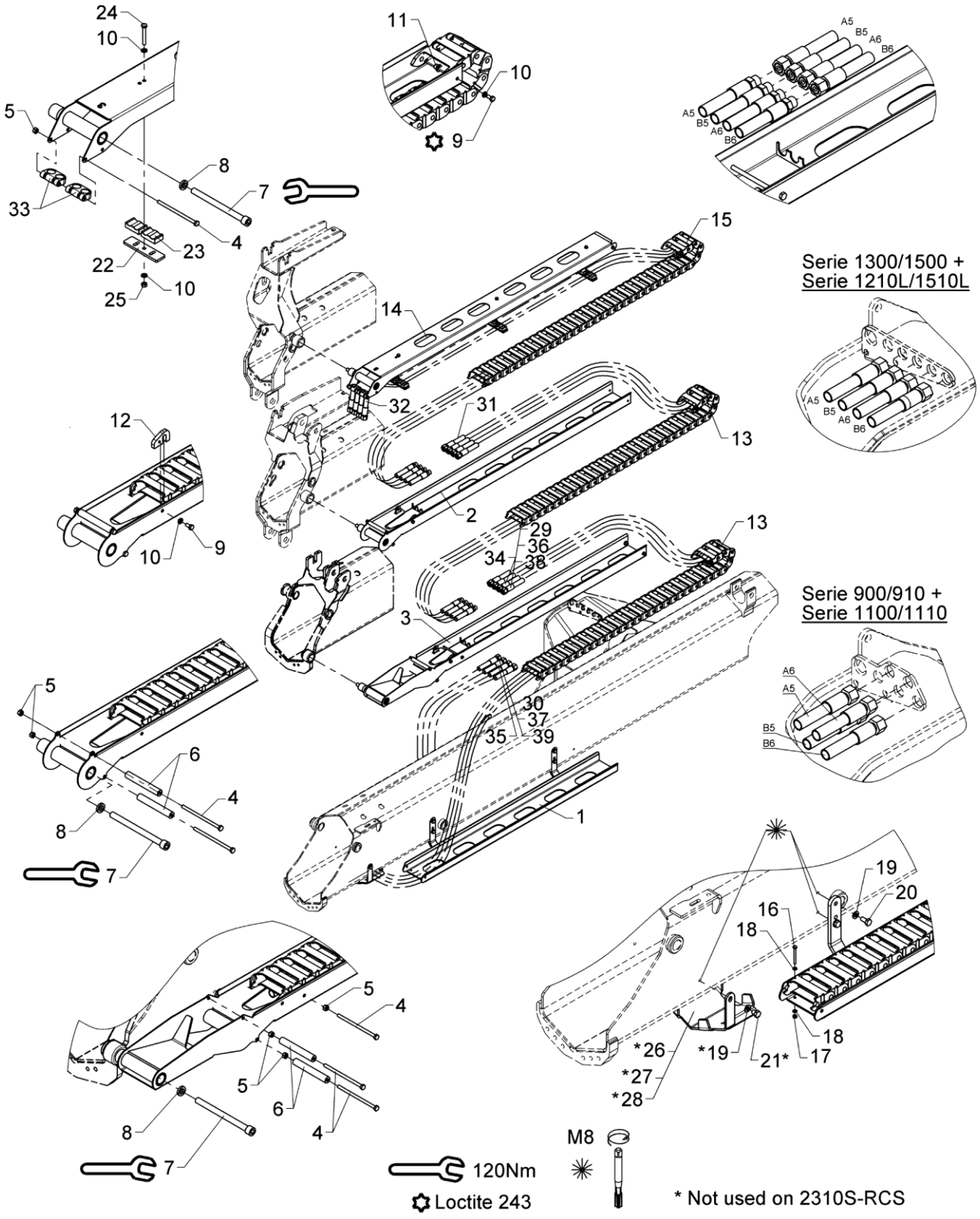

Hose guides, K3-2 EXV.

Pos	Qty.	Part no.	Description	Remarks
36	2	56986	Hose 3/8" x 3200 mm L/L	Serie 2310S-RCS
37	2	56987	Hose 3/8" x 3300 mm L/L	Serie 2310S-RCS
38	2	56993	Hydraulic hose	S. 1210L/1510L
39	2	56916	Hose	S. 1210L/1510L

1500K, 1510K, 1720K, 1730K, 1820K, 1830K

63 63 850
63 65 850
63 45 750
Internal ref. 63 40 750

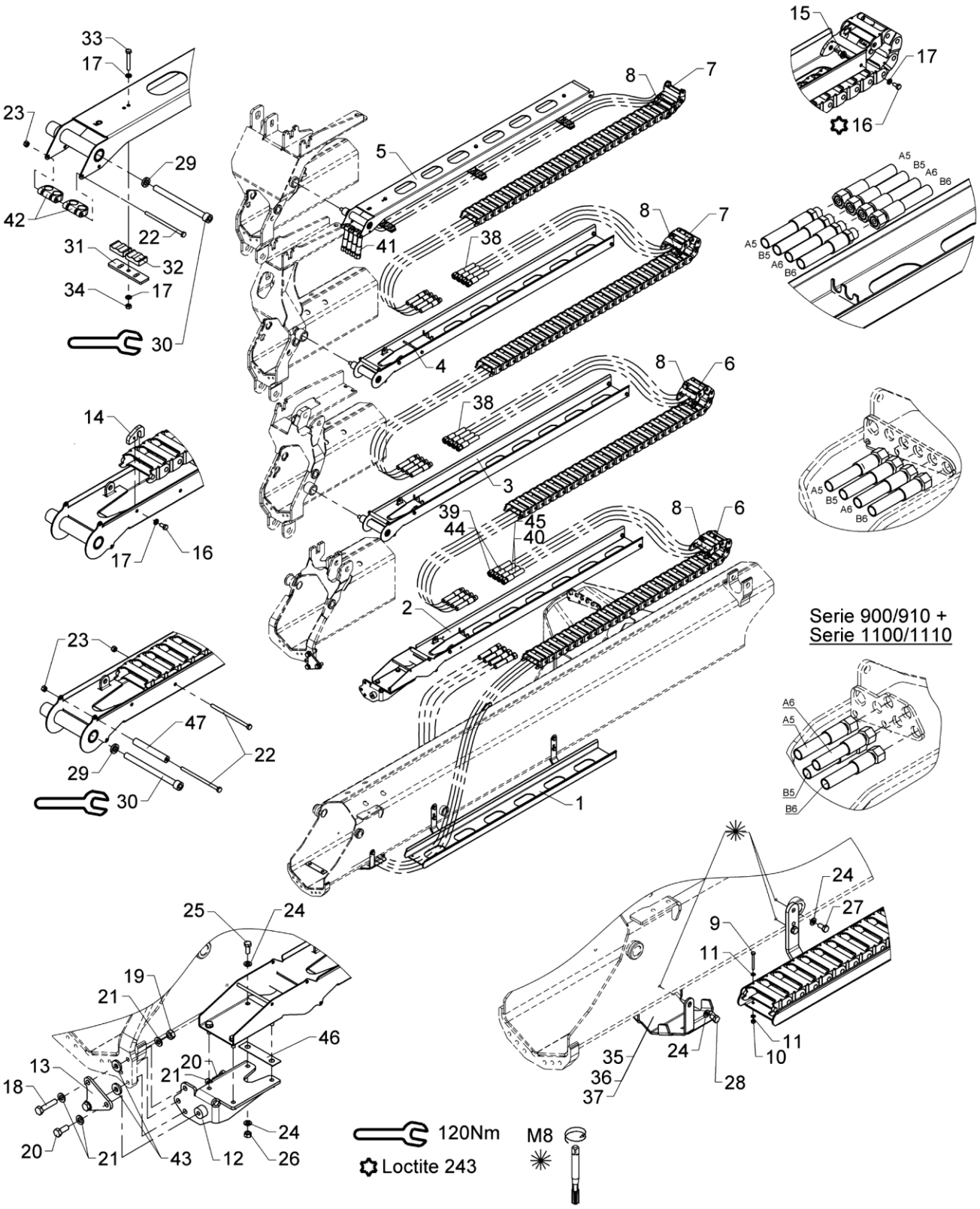

Obsolete

Hose guides, K4-2 EXV.

534 09 230

From loader 1060001
To loader 1060924

Created 17-03-2009
Modified 11-01-2013

Pos	Qty.	Part no.	Description	Remarks
		6340750	Hose guides, K4-2 EXV	
		6345750	Hose guides, K4-2 EXV	
		6365850	Hose guide, K4-2 EXV.	
		6363850	Hose guide, K4-2 EXV.	
1	1	6340721	Guide (jib)	
2	1	6340731	Guide (Extension I)	
3	1	6340741	Guide (Extension II)	
4	1	6340751	Guide (Extension III)	
5	1	6340758	Guide (extension K5)	
6	2	28712	Nylon drag chain, 30 links	
7	2	28713	Nylon drag chain, 33 links	
8	4	63400	End link for nylon drag chain	
9	2	30128	Set screw	M4 x 40
10	2	30857	Lock nut	M4
11	4	31188	Washer, stainless	4 mm
12	1	6340725	Mounting bracket	
13	1	6340729	Plate	
14	3	6340718	Bracket	
15	8	6340719	Nut	
16	11	30111	Set screw, stainless	
17	17	32302	Face washer, stainless	6 mm
18	2	30377	Set screw	M10 x 45
19	2	30858	Nut	M10
20	2	31513	Set screw, stainless	M10 x 25
21	6	31565	Washer, stainless	10 mm
22	5	30167	Steel bolt	M6 x 60
23	5	30884	Lock nut, stainless	M6
24	14	31147	Face washer, 8 mm	
25	4	30132	Set screw, stainless	
26	4	30856	Nut, stainless	M8
27	4	30131	Set screw, stainless	M8 x 16
28	2	30130	Set screw, stainless	M8 x 12
29	3	6340717	Washer	
30	3	32488	Screw	MC12 x 150
31	3	6340769	Adaptor	
32	6	63561	Clamp	
33	3	30118	Steel pin, stainless	M6 x 45
34	3	30854	Nut, stainless	M6
35	1	6340299	Protective guard	Serie 1300/1500
36	1	6344299	Protective guard	Serie 1800/2200
37	1	6365299	Hose shield	Serie 1100/1110

1500K, 1510K, 1720K, 1730K, 1820K, 1830K

63 63 850
63 65 850
63 45 750
Internal ref. 63 40 750

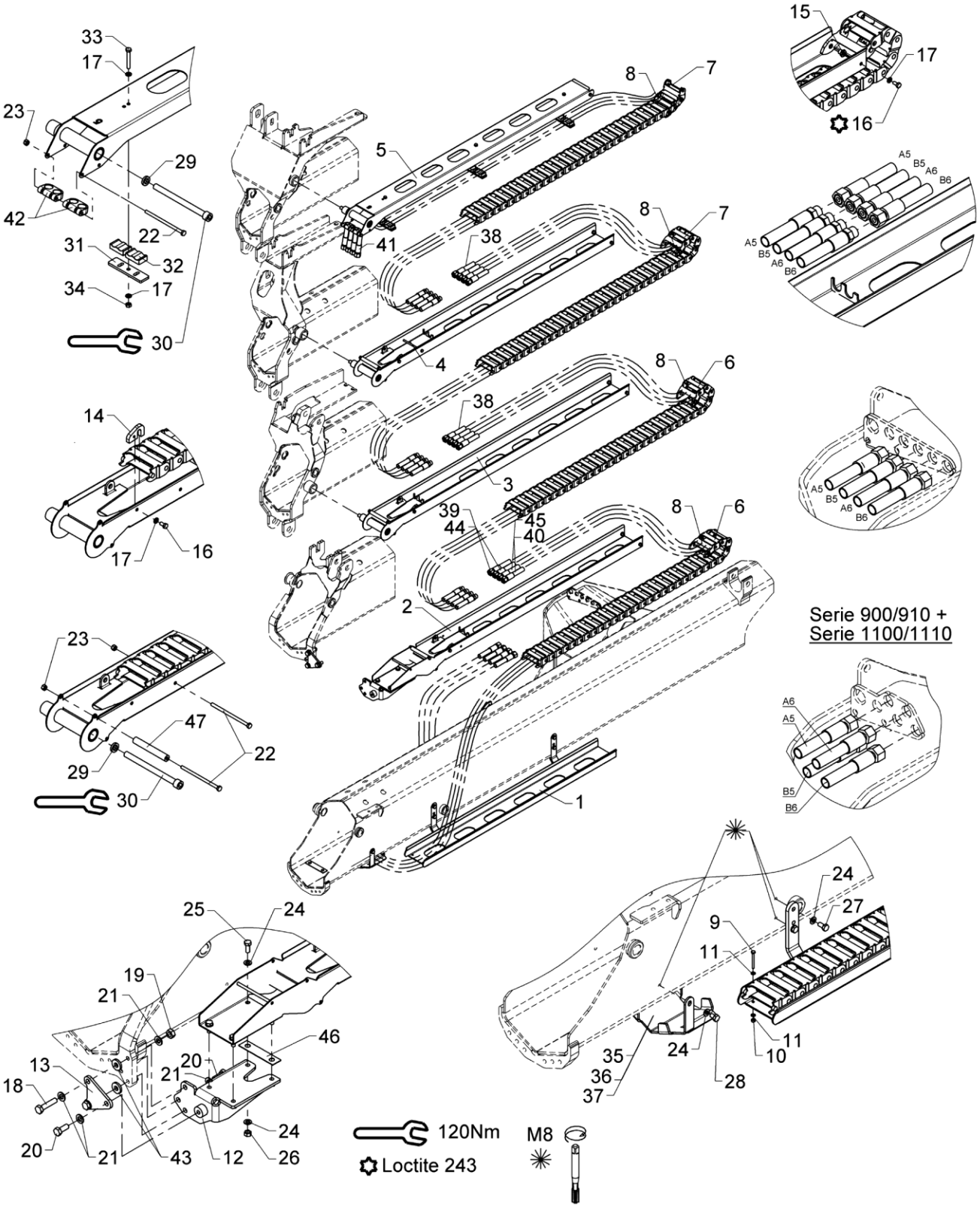

Obsolete

Hose guides, K4-2 EXV.

534 09 230

From loader 1060001
To loader 1060924

Created 17-03-2009
Modified 11-01-2013

Pos	Qty.	Part no.	Description	Remarks
38	8	56564	Hose	
39	2	56563	Hose	
40	2	56569	Hose	
41	4	56565	Hose	
42	2	68028	Clamp	
43	2	31756	Washer	Serie 1100/1110
44	2	56462	Hose 3/8 x 3850 mm	Serie 900/910
45	2	56458	Hose 3/8 x 3750 mm L/L	Serie 900/910
46	1	6340764	Shim	
47	3	56513	Hose	

1500K, 1510K, 1720K, 1730K, 1820K, 1830K

63 63 850
63 65 850
63 45 550
63 55 870 63 45 750
Internal ref. 63 40 750

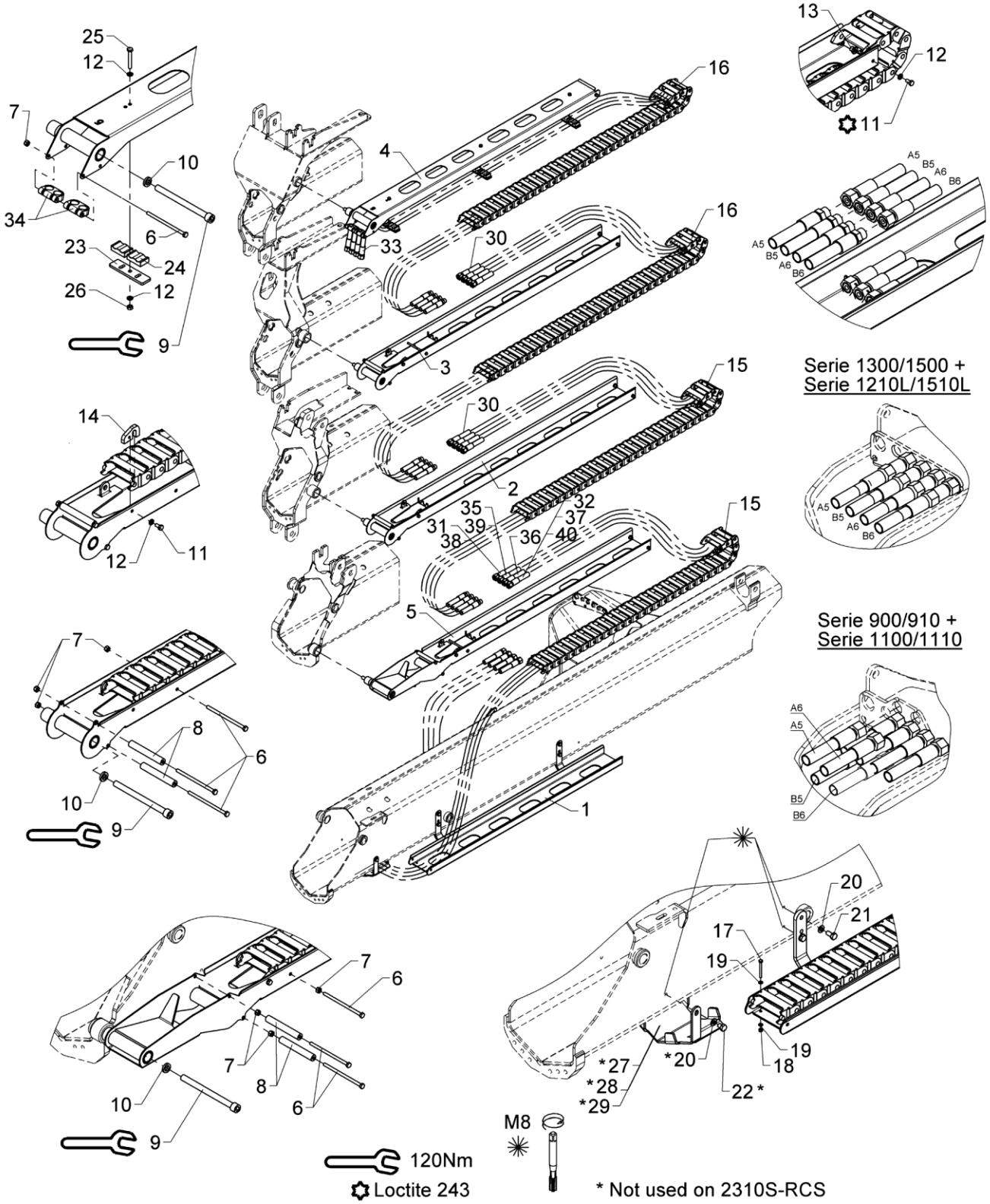

Hose guides, K4-2 EXV.

Pos	Qty.	Part no.	Description	Remarks
		6340750	Hose guides, K4-2 EXV	S. 1300/1500
		6345750	Hose guides, K4-2 EXV	S. 1800/2200
		6345550		S. 2310S-RCS
		6365850	Hose guide, K4-2 EXV.	S. 1100/1110
		6363850	Hose guide, K4-2 EXV.	S. 900/910
		6355870		S. 1210L/1510L
1	1	6340721	Guide (jib)	
2	1	6340741	Guide (Extension II)	
3	1	6340751	Guide (Extension III)	
4	1	6340758	Guide (extension K5)	
5	1	6341731	Hose guide (Extension I)	
6	9	30167	Steel bolt	M6 x 60
7	9	30884	Lock nut, stainless	M6
8	6	56513	Hose	
9	4	32488	Screw	MC12 x 150
10	4	6340717	Washer	
11	11	30111	Set screw, stainless	
12	17	32302	Face washer, stainless	6 mm
13	8	6340719	Nut	
14	3	6340718	Bracket	
15	2	28712	Nylon drag chain, 30 links	
16	2	28713	Nylon drag chain, 33 links	
17	2	30128	Set screw	M4 x 40
18	2	30857	Lock nut	M4
19	4	31188	Washer, stainless	4 mm
20	6	31147	Face washer, 8 mm	
21	4	30131	Set screw, stainless	M8 x 16
22	2	30105	Set screw, stainless	M8 x 10
23	3	6340769	Adaptor	
24	6	63561	Clamp	
25	3	30118	Steel pin, stainless	M6 x 45
26	3	30854	Nut, stainless	M6
27	1	6340299	Protective guard	S. 1300/1500/1210L/1510L
28	1	6344299	Protective guard	S. 1800/2200
29	1	6365299	Hose shield	S. 1100/1110
30	8	56564	Hose	
31	2	56563	Hose	S. 1300-2200/1100/1110
32	2	56569	Hose	S. 1300-2200/1100/1110
33	4	56565	Hose	
34	2	68028	Clamp	
35	2	56462	Hose 3/8 x 3850 mm	S. 900/910

1500K, 1510K, 1720K, 1730K, 1820K, 1830K

63 63 850
63 65 850
63 45 550
63 55 870 63 45 750
Internal ref. 63 40 750

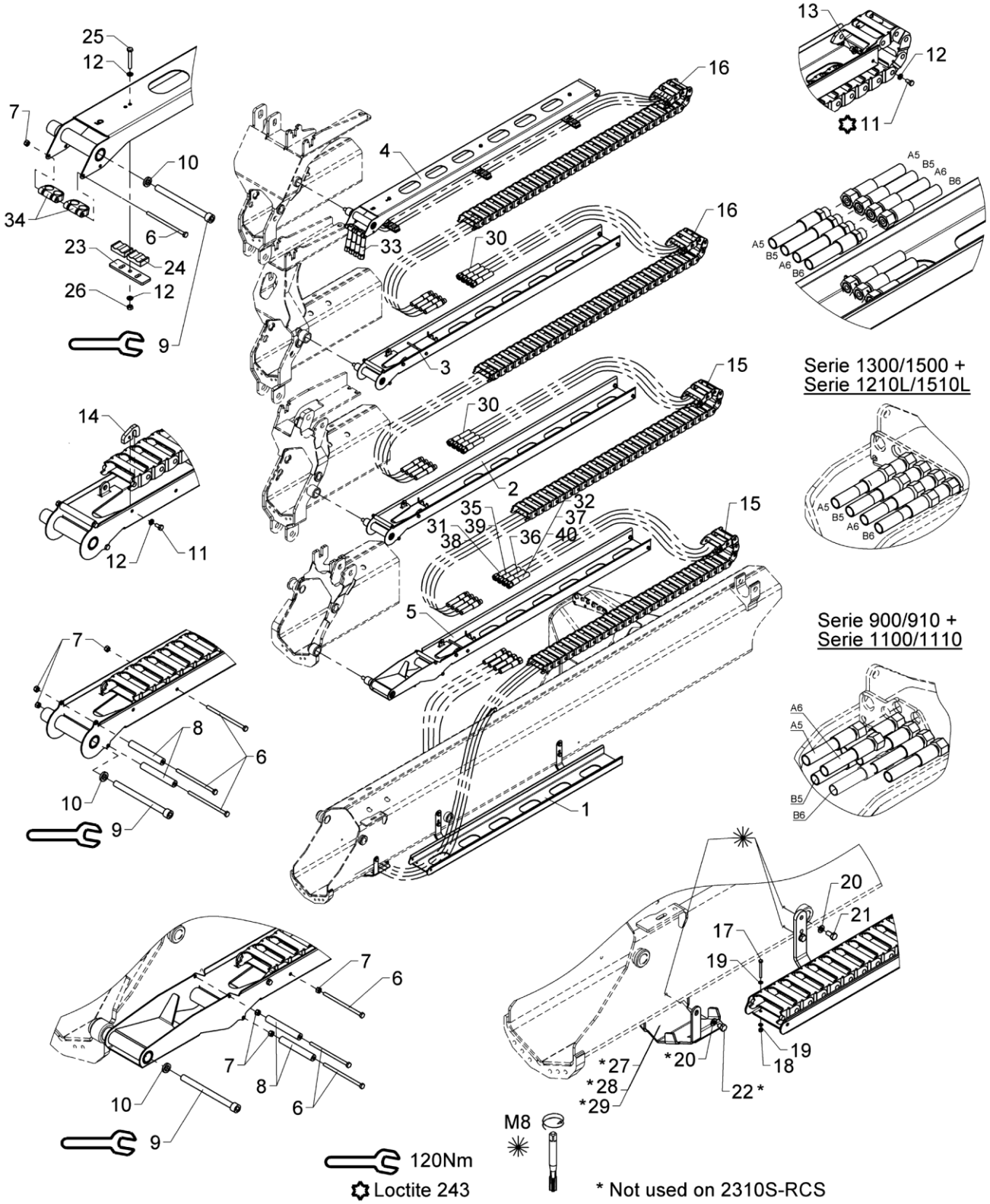

Hose guides, K4-2 EXV.

Pos	Qty.	Part no.	Description	Remarks
36	2	56458	Hose 3/8 x 3750 mm L/L	S. 900/910
37	2	56986	Hose 3/8" x 3200 mm L/L	S. 2310S-RCS
38	2	56987	Hose 3/8" x 3300 mm L/L	S. 2310S-RCS
39	2	56916	Hose	S. 1210L/1510L
40	2	56993	Hydraulic hose	S. 1210L/1510L

1500K, 1510K, 1720K, 1730K, 1820K, 1830K

63 63 860
63 65 860
63 45 760
Internal ref. 63 40 760

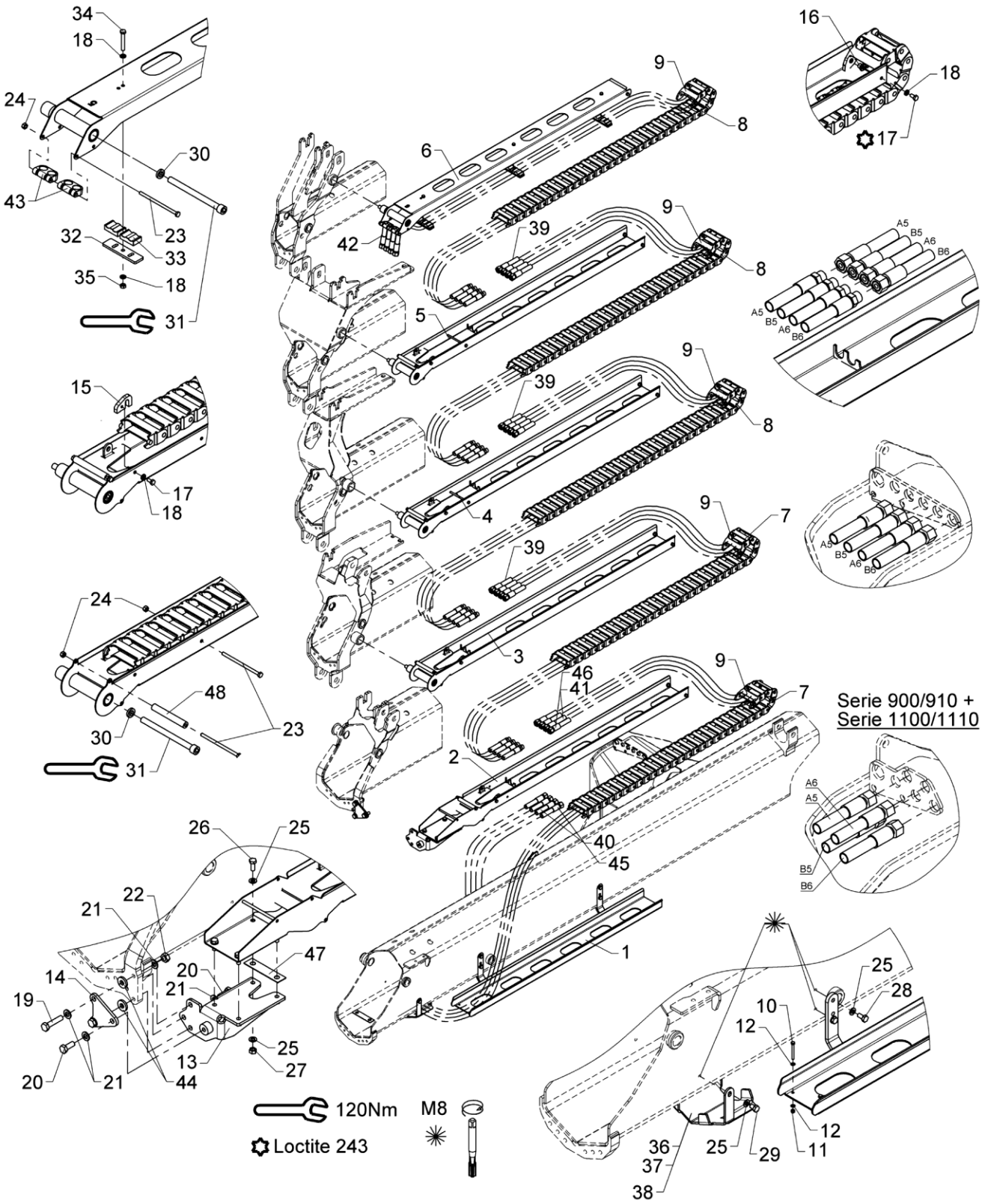

Obsolete

Hose guides, K5-2 EXV.

534 09 240

From loader 1060001
To loader 1060924

Created 19-03-2009
Modified 14-01-2013

Pos	Qty.	Part no.	Description	Remarks
		6340760	Hose guides, K5-2 EXV	
		6345760	Hose guides, K5-2 EXV	
		6365860	Hose guide, K5-2 EXV.	
		6363860	Hose guide, K5-2 EXV.	
1	1	6340721	Guide (jib)	
2	1	6340731	Guide (Extension I)	
3	1	6340741	Guide (Extension II)	
4	1	6340751	Guide (Extension III)	
5	1	6340755	Guide (Extension IV)	
6	1	6340758	Guide (extension K5)	
7	2	28712	Nylon drag chain, 30 links	
8	3	28713	Nylon drag chain, 33 links	
9	5	63400	End link for nylon drag chain	
10	2	30128	Set screw	M4 x 40
11	2	30857	Lock nut	M4
12	4	31188	Washer, stainless	4 mm
13	1	6340725	Mounting bracket	
14	1	6340729	Plate	
15	4	6340718	Bracket	
16	10	6340719	Nut	
17	14	30111	Set screw, stainless	
18	20	32302	Face washer, stainless	6 mm
19	2	30377	Set screw	M10 x 45
20	2	31513	Set screw, stainless	M10 x 25
21	6	31565	Washer, stainless	10 mm
22	2	30858	Nut	M10
23	7	30167	Steel bolt	M6 x 60
24	7	30884	Lock nut, stainless	M6
25	14	31147	Face washer, 8 mm	
26	4	30132	Set screw, stainless	
27	4	30856	Nut, stainless	M8
28	4	30131	Set screw, stainless	M8 x 16
29	2	30130	Set screw, stainless	M8 x 12
30	4	6340717	Washer	
31	4	32488	Screw	MC12 x 150
32	3	6340769	Adaptor	
33	6	63561	Clamp	
34	3	30118	Steel pin, stainless	M6 x 45
35	3	30854	Nut, stainless	M6
36	1	6340299	Protective guard	Serie 1300/1500
37	1	6344299	Protective guard	Serie 1800/2200

1500K, 1510K, 1720K, 1730K, 1820K, 1830K

63 63 860
63 65 860
63 45 760
Internal ref. 63 40 760

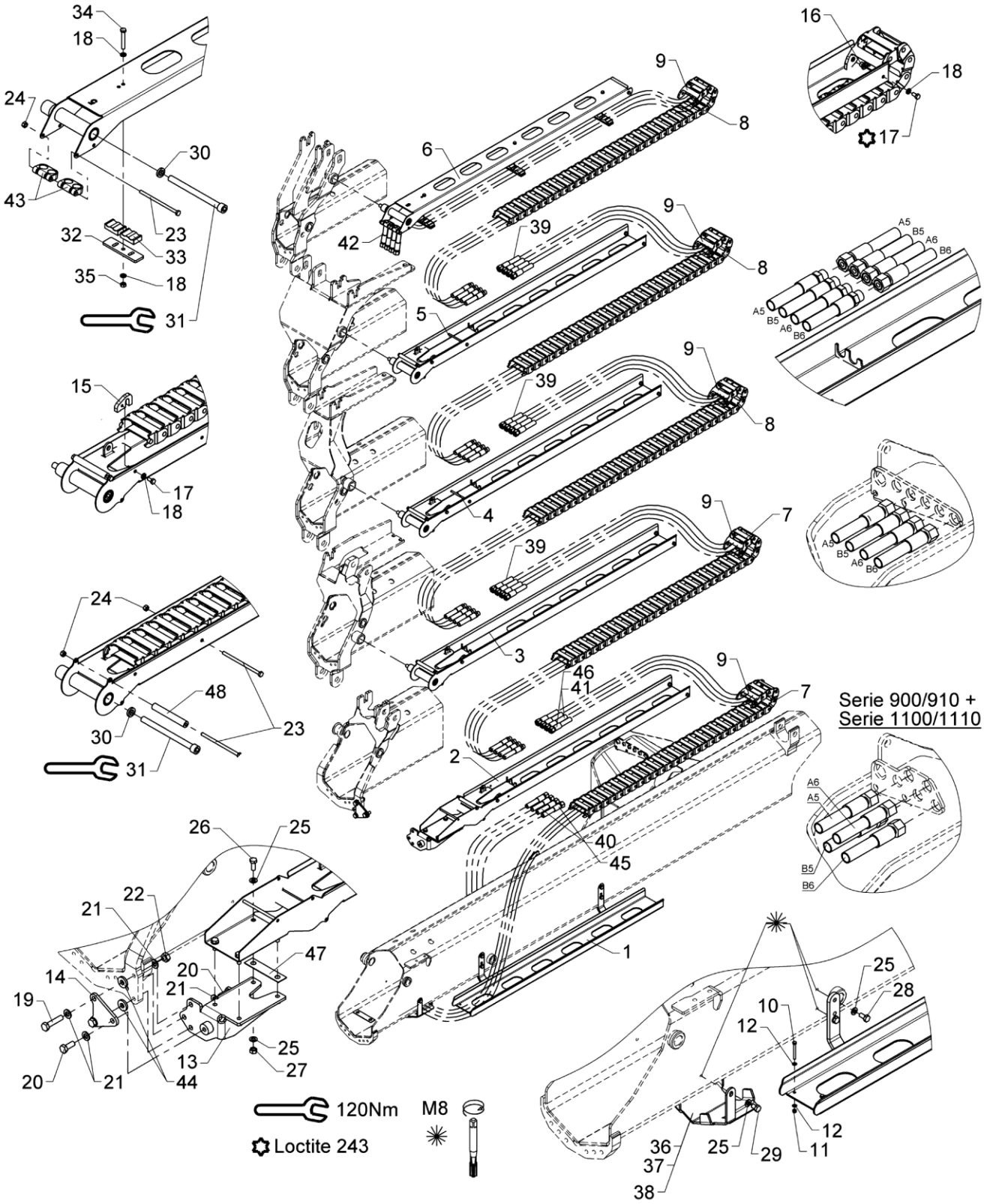

Obsolete

Hose guides, K5-2 EXV.

534 09 240

From loader 1060001
To loader 1060924

Created 19-03-2009
Modified 14-01-2013

Pos	Qty.	Part no.	Description	Remarks
38	1	6365299	Hose shield	Serie 1100/1110
39	12	56564	Hose	
40	2	56563	Hose	
41	2	56569	Hose	
42	4	56565	Hose	
43	2	68028	Clamp	
44	2	31756	Washer	Serie 1100/1110
45	2	56462	Hose 3/8 x 3850 mm	Serie 900/910
46	2	56458	Hose 3/8 x 3750 mm L/L	Serie 900/910
47	1	6340764	Shim	
48	4	56513	Hose	

1500K, 1510K, 1720K, 1730K, 1820K, 1830K

63 63 860
63 65 860
63 45 760
Internal ref. 63 40 760

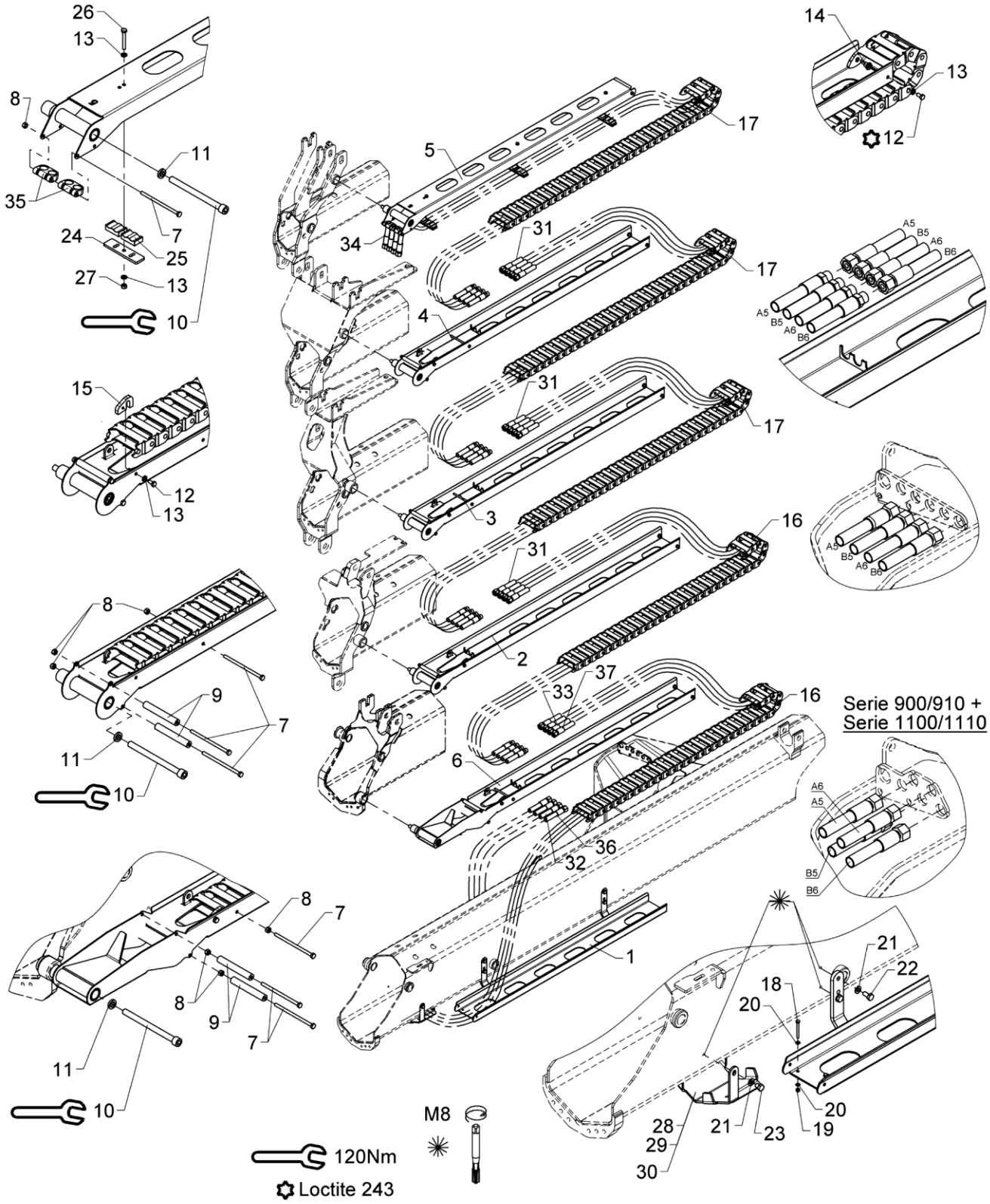

Hose guides, K5-2 EXV.

Pos	Qty.	Part no.	Description	Remarks
		6340760	Hose guides, K5-2 EXV	
		6345760	Hose guides, K5-2 EXV	
		6365860	Hose guide, K5-2 EXV.	
		6363860	Hose guide, K5-2 EXV.	
1	1	6340721	Guide (jib)	
2	1	6340741	Guide (Extension II)	
3	1	6340751	Guide (Extension III)	
4	1	6340755	Guide (Extension IV)	
5	1	6340758	Guide (extension K5)	
6	1	6341731	Hose guide (Extension I)	
7	12	30167	Steel bolt	M6 x 60
8	12	30884	Lock nut, stainless	M6
9	8	56513	Hose	
10	5	32488	Screw	MC12 x 150
11	5	6340717	Washer	
12	14	30111	Set screw, stainless	
13	20	32302	Face washer, stainless	6 mm
14	10	6340719	Nut	
15	4	6340718	Bracket	
16	2	28712	Nylon drag chain, 30 links	
17	3	28713	Nylon drag chain, 33 links	
18	2	30128	Set screw	M4 x 40
19	2	30857	Lock nut	M4
20	4	31188	Washer, stainless	4 mm
21	6	31147	Face washer, 8 mm	
22	4	30131	Set screw, stainless	M8 x 16
23	2	30105	Set screw, stainless	M8 x 10
24	3	6340769	Adaptor	
25	6	63561	Clamp	
26	3	30118	Steel pin, stainless	M6 x 45
27	3	30854	Nut, stainless	M6
28	1	6340299	Protective guard	Serie 1300/1620
29	1	6344299	Protective guard	Serie 1800/2820
30	1	6365299	Hose shield	Serie 1100/1110
31	12	56564	Hose	
32	2	56563	Hose	
33	2	56569	Hose	
34	4	56565	Hose	
35	2	68028	Clamp	
36	2	56462	Hose 3/8 x 3850 mm	Serie 900/910
37	2	56458	Hose 3/8 x 3750 mm L/L	Serie 900/910

1500K, 1510K, 1720K, 1730K, 1820K, 1830K

63 45 770
Internal ref. 63 40 770

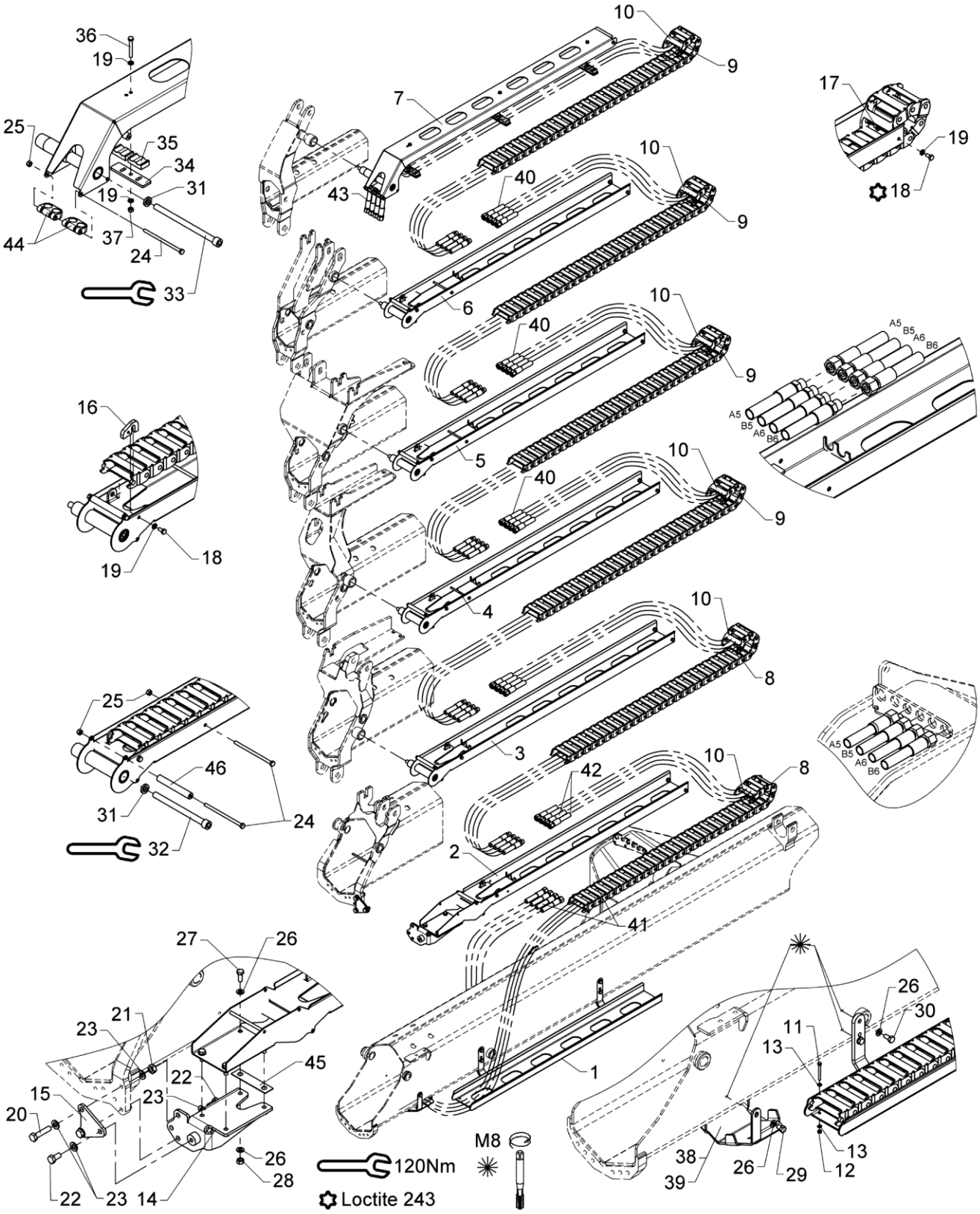

Obsolete

Hose guides, K6-2 EXV.

534 09 250

From loader 1060001
To loader 1060924

Created 19-03-2009
Modified 14-01-2013

Pos	Qty.	Part no.	Description	Remarks
		6340770	Hose guides, K6-2 EXV	
		6345770	Hose guides, K6-2 EXV	
1	1	6340721	Guide (jib)	
2	1	6340731	Guide (Extension I)	
3	1	6340741	Guide (Extension II)	
4	1	6340751	Guide (Extension III)	
5	1	6340755	Guide (Extension IV)	
6	1	6340761	Guide (Extension V)	
7	1	6340765	Guide (Extension VI)	
8	2	28712	Nylon drag chain, 30 links	
9	4	28713	Nylon drag chain, 33 links	
10	6	63400	End link for nylon drag chain	
11	2	30128	Set screw	M4 x 40
12	2	30857	Lock nut	M4
13	4	31188	Washer, stainless	4 mm
14	1	6340725	Mounting bracket	
15	1	6340729	Plate	
16	5	6340718	Bracket	
17	12	6340719	Nut	
18	17	30111	Set screw, stainless	
19	23	32302	Face washer, stainless	6 mm
20	2	30377	Set screw	M10 x 45
21	2	30858	Nut	M10
22	2	31517	Set screw, stainless	M10 x 20
23	6	31565	Washer, stainless	10 mm
24	9	30167	Steel bolt	M6 x 60
25	9	30884	Lock nut, stainless	M6
26	14	31147	Face washer, 8 mm	
27	4	30132	Set screw, stainless	
28	4	30856	Nut, stainless	M8
29	2	30130	Set screw, stainless	M8 x 12
30	4	30131	Set screw, stainless	M8 x 16
31	5	6340717	Washer	
32	4	32488	Screw	MC12 x 150
33	1	32489	Screw	MC12 x 180
34	3	6340769	Adaptor	
35	6	63561	Clamp	
36	3	30118	Steel pin, stainless	M6 x 45
37	3	30854	Nut, stainless	M6
38	1	6340299	Protective guard	Serie 1300/1500
39	1	6344299	Protective guard	Serie 1800/2200

1500K, 1510K, 1720K, 1730K, 1820K, 1830K

63 45 770
Internal ref. 63 40 770

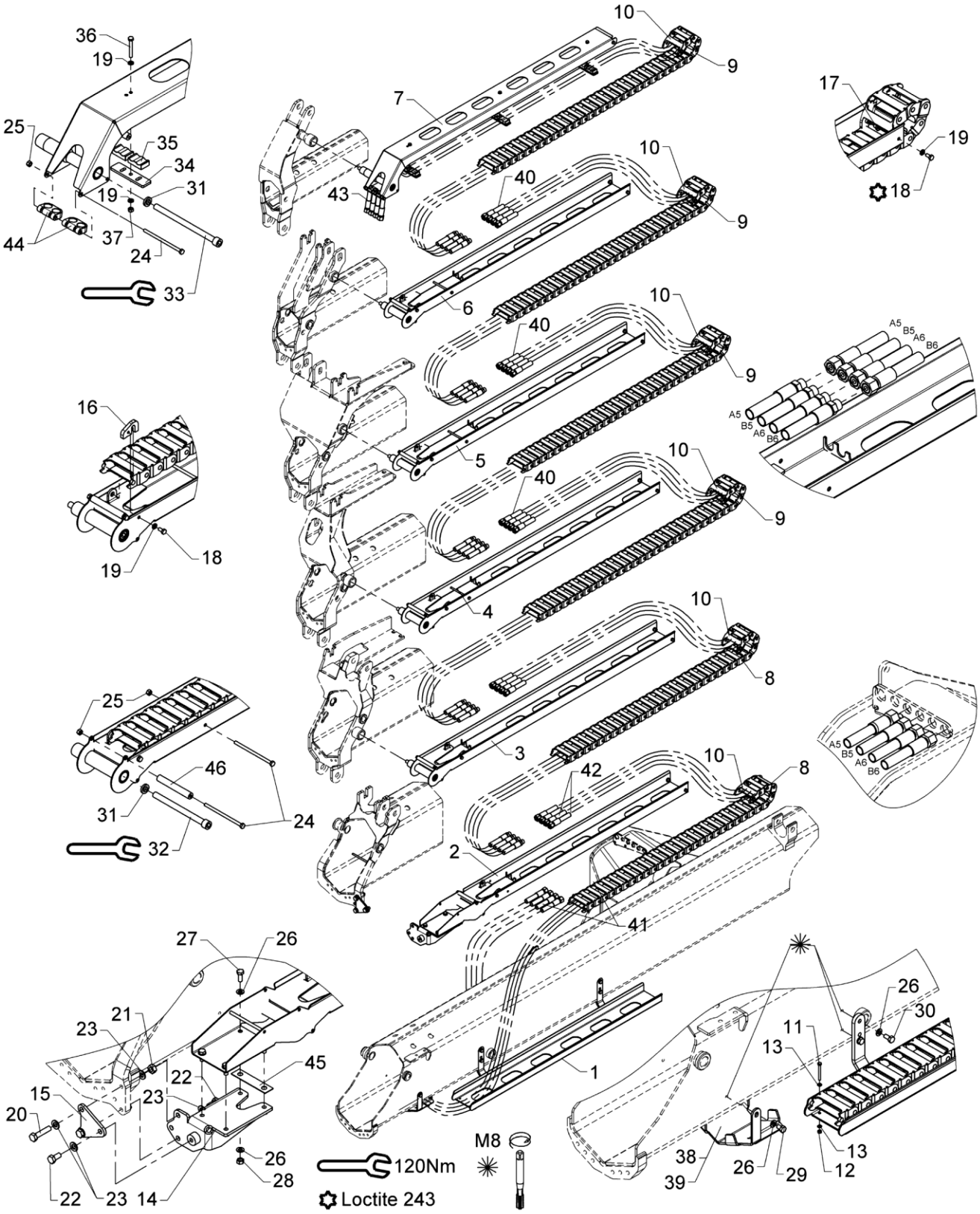

Obsolete

Hose guides, K6-2 EXV.

534 09 250

From loader 1060001
To loader 1060924

Created 19-03-2009
Modified 14-01-2013

Pos	Qty.	Part no.	Description	Remarks
40	16	56564	Hose	3/8 X 2900 mm L/S
41	2	56563	Hose	3/8 X 4170 mm L/L
42	2	56569	Hose	
43	4	56565	Hose	3/8 x 3420 mm L/S 12L
44	2	68028	Clamp	
45	1	6340764	Shim	
46	5	56513	Hose	

1500K, 1510K, 1720K, 1730K, 1820K, 1830K

63 45 770
Internal ref. 63 40 770

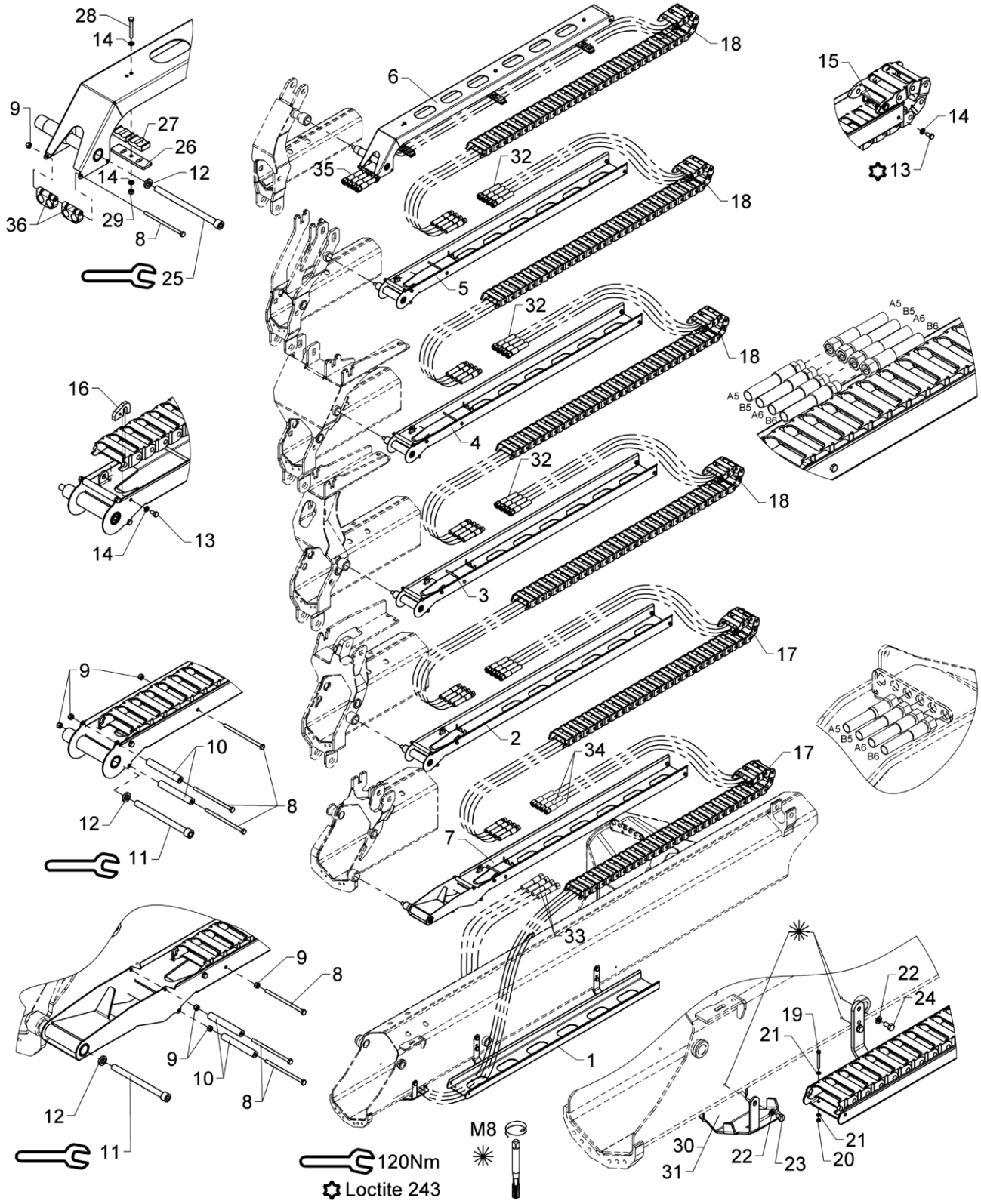

Hose guides, K6-2 EXV.

Pos	Qty.	Part no.	Description	Remarks
		6340770	Hose guides, K6-2 EXV	
		6345770	Hose guides, K6-2 EXV	
1	1	6340721	Guide (jib)	
2	1	6340741	Guide (Extension II)	
3	1	6340751	Guide (Extension III)	
4	1	6340755	Guide (Extension IV)	
5	1	6340761	Guide (Extension V)	
6	1	6340765	Guide (Extension VI)	
7	1	6341731	Hose guide (Extension I)	
8	15	30167	Steel bolt	M6 x 60
9	15	30884	Lock nut, stainless	M6
10	10	56513	Hose	
11	5	32488	Screw	MC12 x 150
12	6	6340717	Washer	
13	17	30111	Set screw, stainless	
14	23	32302	Face washer, stainless	6 mm
15	12	6340719	Nut	
16	5	6340718	Bracket	
17	2	28712	Nylon drag chain, 30 links	
18	4	28713	Nylon drag chain, 33 links	
19	2	30128	Set screw	M4 x 40
20	2	30857	Lock nut	M4
21	4	31188	Washer, stainless	4 mm
22	6	31147	Face washer, 8 mm	
23	2	30105	Set screw, stainless	M8 x 10
24	4	30131	Set screw, stainless	M8 x 16
25	1	32489	Screw	MC12 x 180
26	3	6340769	Adaptor	
27	6	63561	Clamp	
28	3	30118	Steel pin, stainless	M6 x 45
29	3	30854	Nut, stainless	M6
30	1	6340299	Protective guard	Serie 1300/1500
31	1	6344299	Protective guard	Serie 1800/2200
32	16	56564	Hose	3/8 X 2900 mm L/S
33	2	56563	Hose	3/8 X 4170 mm L/L
34	2	56569	Hose	
35	4	56565	Hose	3/8 x 3420 mm L/S 12L
36	2	68028	Clamp	

1500K, 1510K, 1720K, 1730K, 1820K, 1830K

63 47 730
Internal ref. 63 43 730

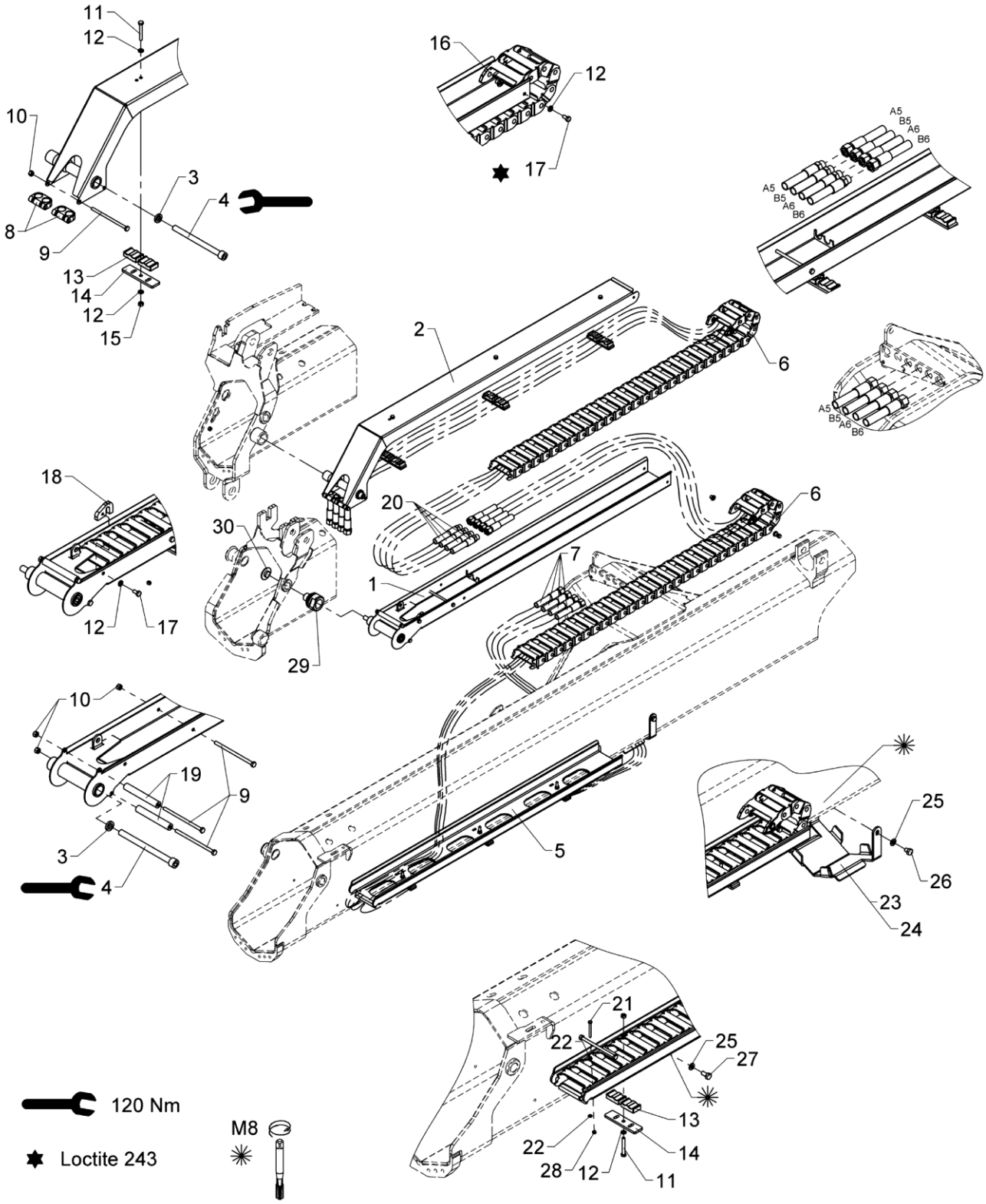

Hose guides, K2-2 EXV-raised

Pos	Qty.	Part no.	Description	Remarks
		6343730	Hose guides, K2-2 EXV-raised	
		6347730	Hose guides, K2-2 EXV-raised	
1	1	6340746	Hose guide (Extension II)	
2	1	6340768	Hose guide (Extension II)	
3	2	6340717	Washer	
4	2	32488	Screw	MC12 x 150
5	1	6340705	Hose guide (Jib)	
6	2	28712	Nylon drag chain, 30 links	
7	4	56569	Hose	
8	2	68028	Clamp	
9	4	30167	Steel bolt	M6 x 60
10	4	30884	Lock nut, stainless	M6
11	6	30118	Steel pin, stainless	M6 x 45
12	17	32302	Face washer, stainless	6 mm
13	12	63561	Clamp	
14	6	6340769	Adaptor	
15	6	30854	Nut, stainless	M6
16	4	6340719	Nut	
17	5	30111	Set screw, stainless	
18	1	6340718	Bracket	
19	2	56513	Hose	
20	4	56568	Hose	
21	2	30128	Set screw	M4 x 40
22	4	31188	Washer, stainless	4 mm
23	1	6340299	Protective guard	Serie 1300/1500
24	1	6344299	Protective guard	Serie 1800/2200
25	6	31147	Face washer, 8 mm	
26	2	30105	Set screw, stainless	M8 x 10
27	4	30131	Set screw, stainless	M8 x 16
28	2	30857	Lock nut	M4
29	1	6340417	Pin for hose guide	
30	1	6381484	Guide	

1500K, 1510K, 1720K, 1730K, 1820K, 1830K

Internal ref. 63 40 900

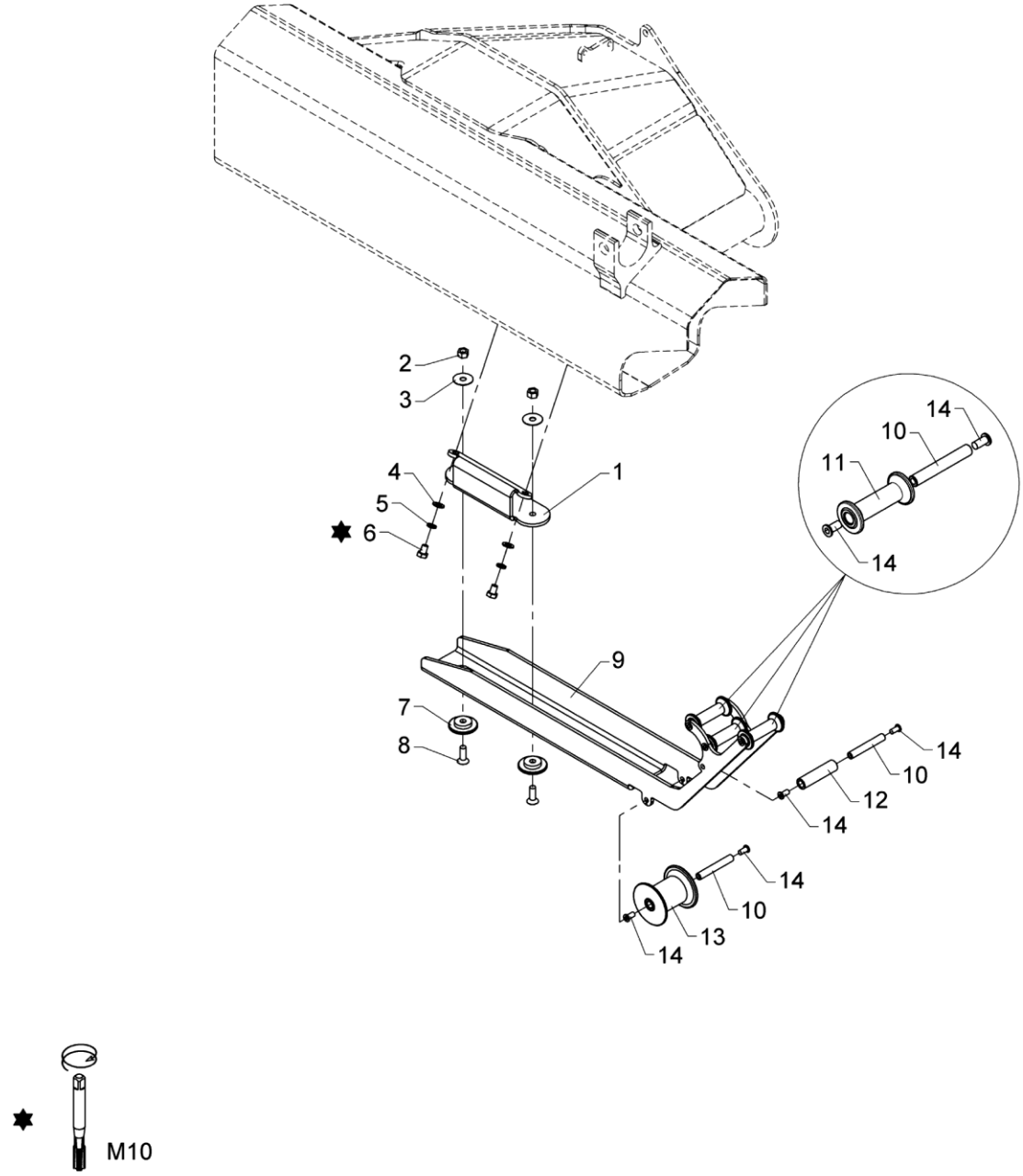

Obsolete

Bracket for hose reel, cpl. (jib)

534 09 280

From loader 1060001
To loader 1061535

Created 24-04-2007
Modified 02-05-2014

Pos	Qty.	Part no.	Description	Remarks
1	1	6340623	Bracket	
2	2	30888	Lock nut	M10
3	2	31141	Washer	10 mm
4	2	31565	Washer, stainless	10 mm
5	2	31156	Spring washer	10 mm
6	2	30152	Set screw	M10 x 14
7	2	6340624	Guide shoe	
8	2	30581	Counter-sunk screw	MK10 x 30
9	1	6340625	Bracket for guide roller	
10	5	6301042	Pin	
11	3	63579	Guide roller	
12	1	63578	Guide roller	
13	1	63547	Guide roller	
14	10	32481	Screw	MCL8 x 16

1500K, 1510K, 1720K, 1730K, 1820K, 1830K

Internal ref. 63 40 900

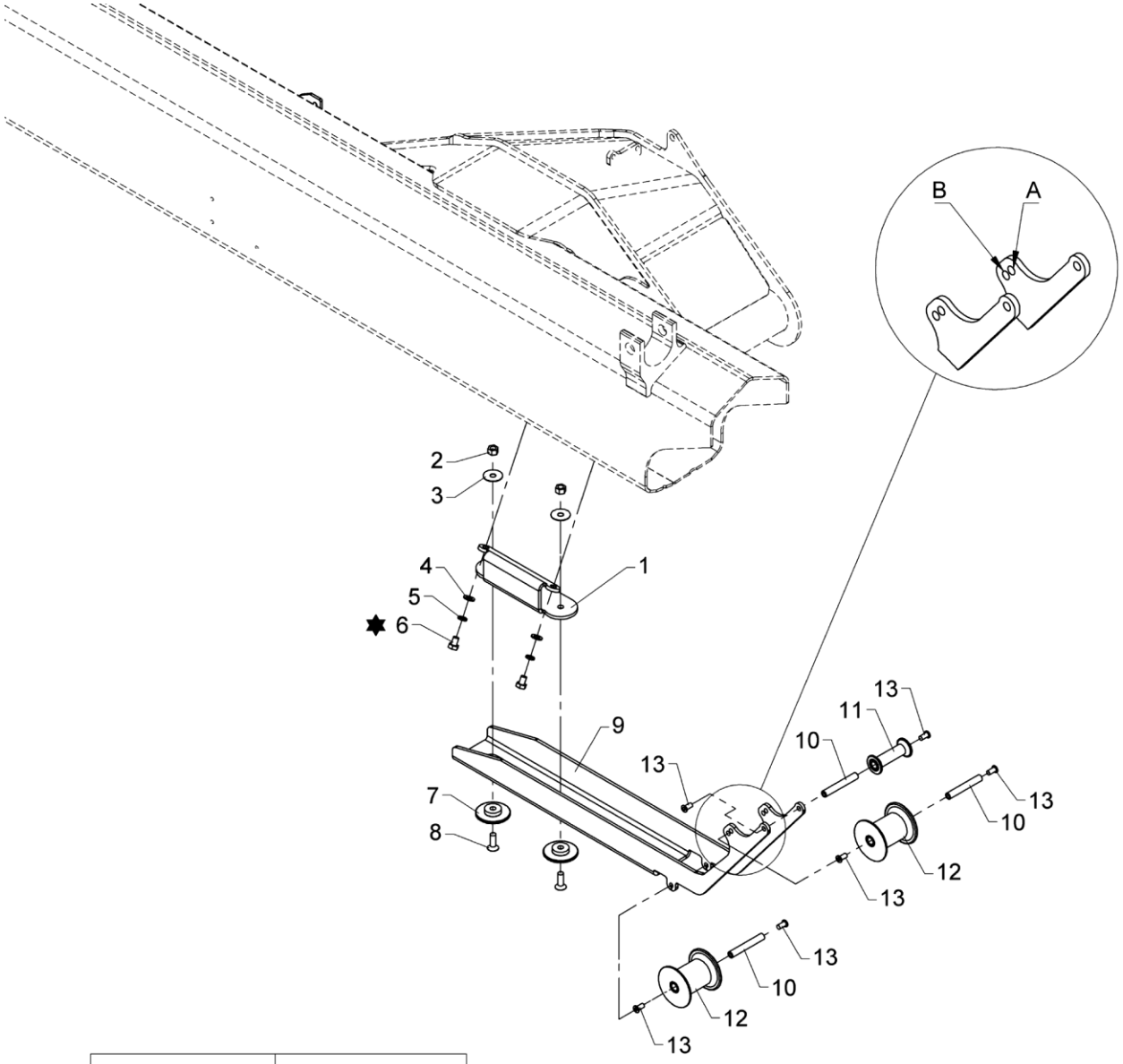

A	B
1800K - 1810K 2020K - 2030K 2120K - 2130K 2200K - 2210K 2310K - 2320K 2420K - 2430K 2620K - 2630K 2810K - 2820K 1910L 2030L 2110L 2530L	1300K - 1310K 1410K - 1420K 1500K - 1510K 1520K - 1530K 1610K - 1620K 1720K - 1730K 1820K - 1830K 1910K - 1920K 1210L 1430L 1510L 1730L



Loctite 243

Bracket for hose reel, cpl. (jib)

534 09 280 A

From loader 1061536
To loader

Created 26-01-2016
Modified 06-12-2018

Pos	Qty.	Part no.	Description	Remarks
1	1	6340623	Bracket	
2	2	30888	Lock nut	M10
3	2	31141	Washer	10 mm
4	2	31565	Washer, stainless	10 mm
5	2	31156	Spring washer	10 mm
6	2	30152	Set screw	M10 x 14
7	2	6340624	Guide shoe	
8	2	30581	Counter-sunk screw	MK10 x 30
9	1	6340847	Bracket for guide roller	
10	3	6301042	Pin	
11	1	63579	Guide roller	
12	2	63547	Guide roller	
13	6	32481	Screw	MC8 x 16

1500K, 1510K, 1720K, 1730K, 1820K, 1830K

Internal ref. 63 42 910

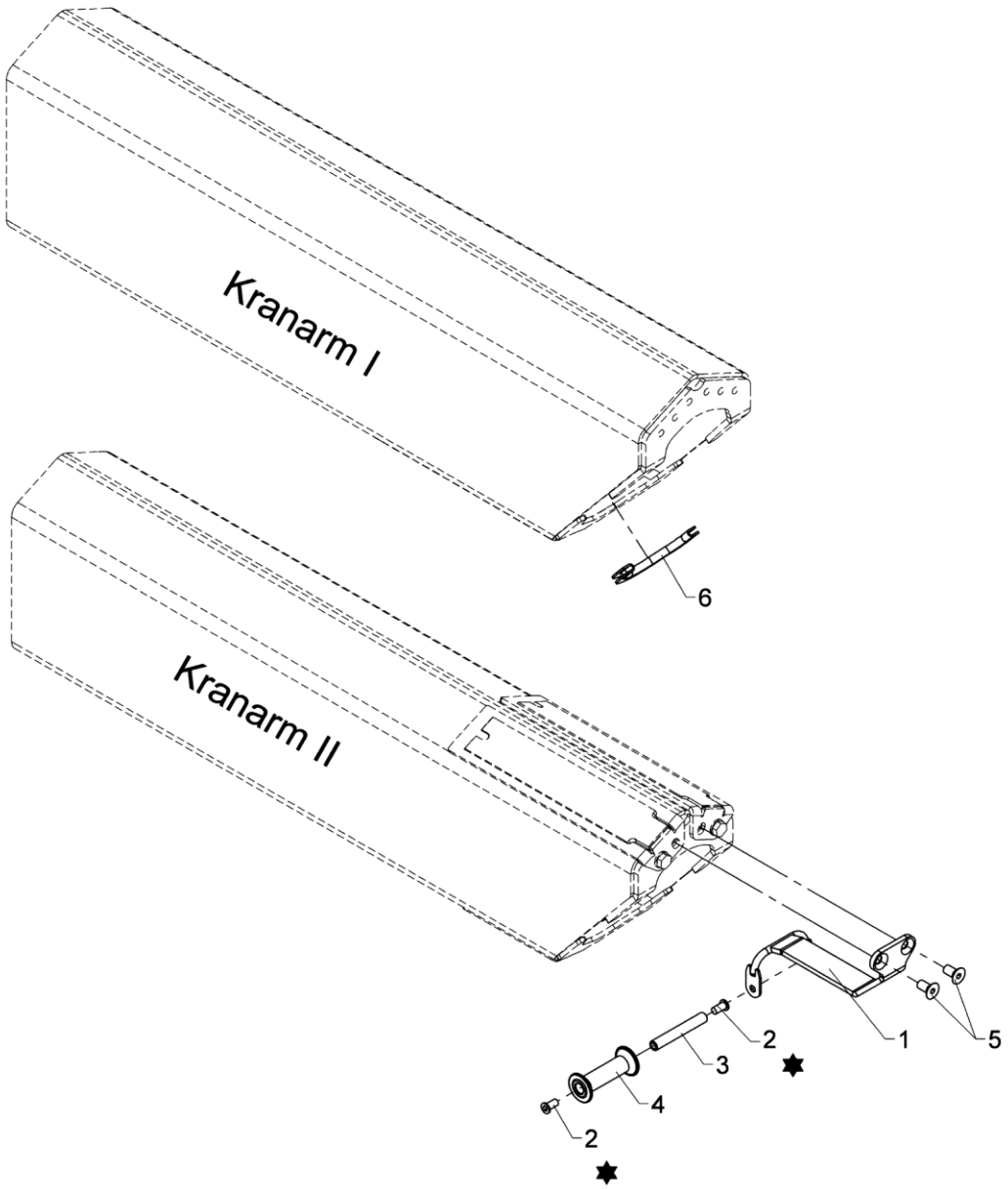

✸ Loctite 243

Obsolete

Attachment for hose reel, cpl. (extension 2)

534 09 290

From loader 1060001
To loader 1061535

Created 24-04-2007
Modified

Pos	Qty.	Part no.	Description	Remarks
1	1	6340635	Roller bracket (ext. 2)	
2	2	32481	Screw	MCL8 x 16
3	1	6301042	Pin	
4	1	63579	Guide roller	
5	2	30545	Countersunk screw	MK10 x 20
6	1	46596	Rubber protection	190 mm

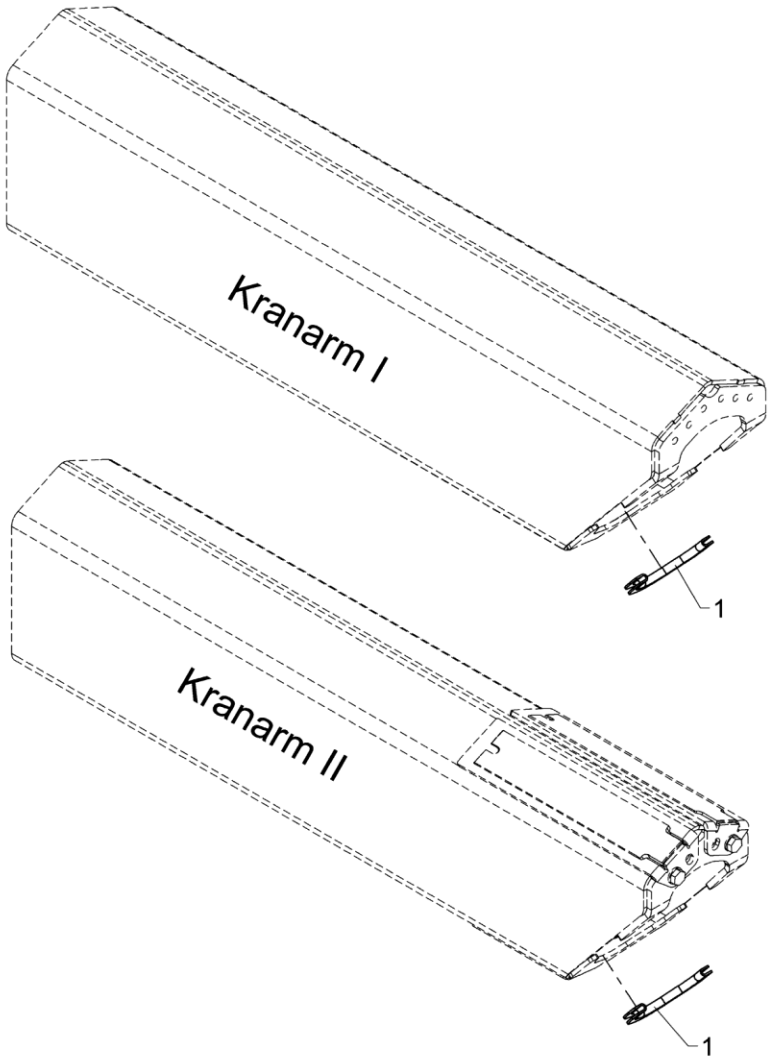
Kranarm I
1
Kranarm II
1

534 09 290 A

Attachment for hose reel, cpl. (extension 2)

From loader 1060001
To loader 1061536
Created 26-01-2016
Modified

Pos	Qty.	Part no.	Description	Remarks
1	2	46596	Rubber protection	190 mm

1500K, 1510K, 1720K, 1730K, 1820K, 1830K

Internal ref. 63 42 920

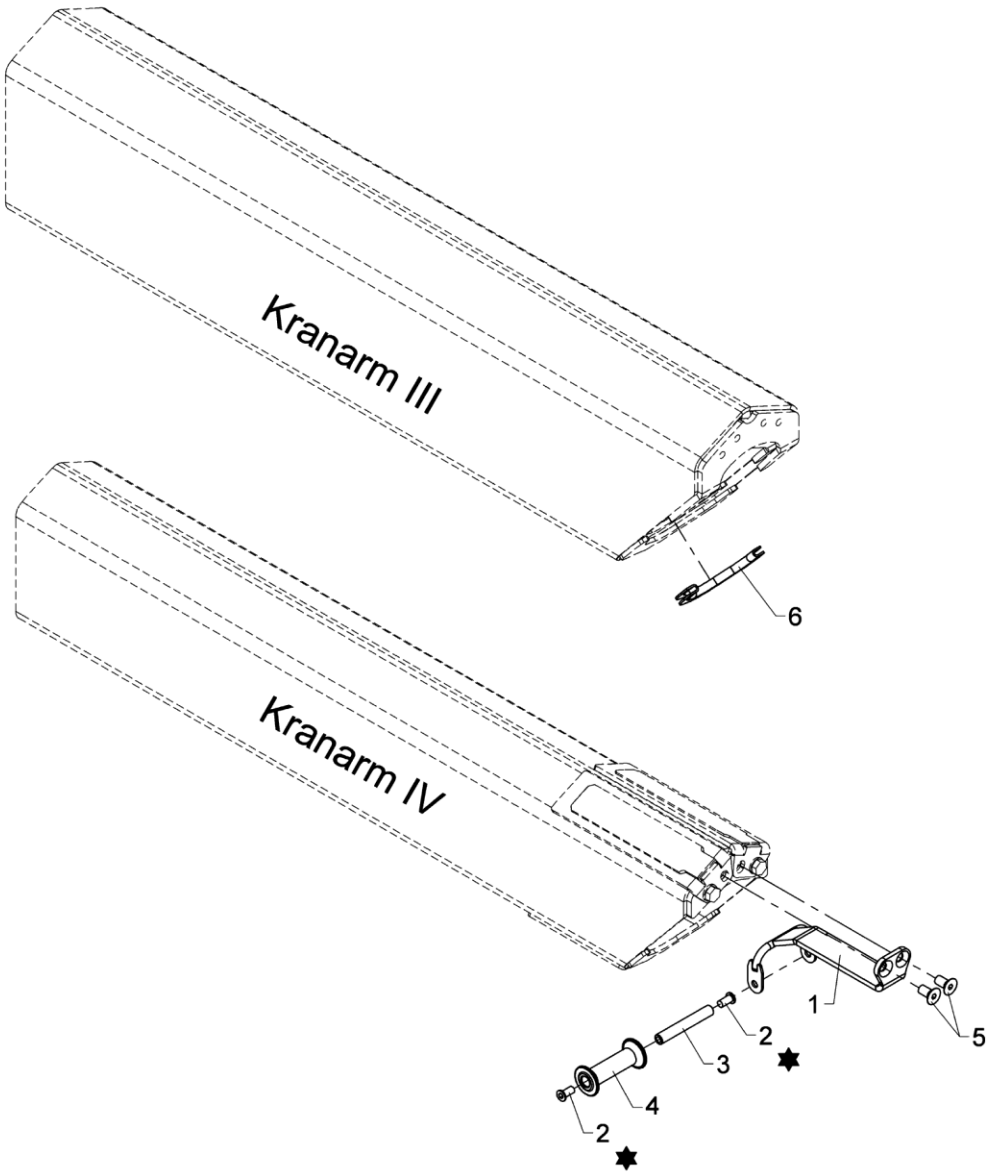

✸ Loctite 243

Attachment for hose reel, cpl. (extension 4)

Pos	Qty.	Part no.	Description	Remarks
1	1	6340627	Roller bracket (Extension 4)	
2	2	32481	Screw	MCL8 x 16
3	1	6301042	Pin	
4	1	63579	Guide roller	
5	2	30545	Countersunk screw	MK10 x 20
6	1	46596	Rubber protection	190 mm

1500K, 1510K, 1720K, 1730K, 1820K, 1830K

63 42 930
Internal ref. 63 40 920

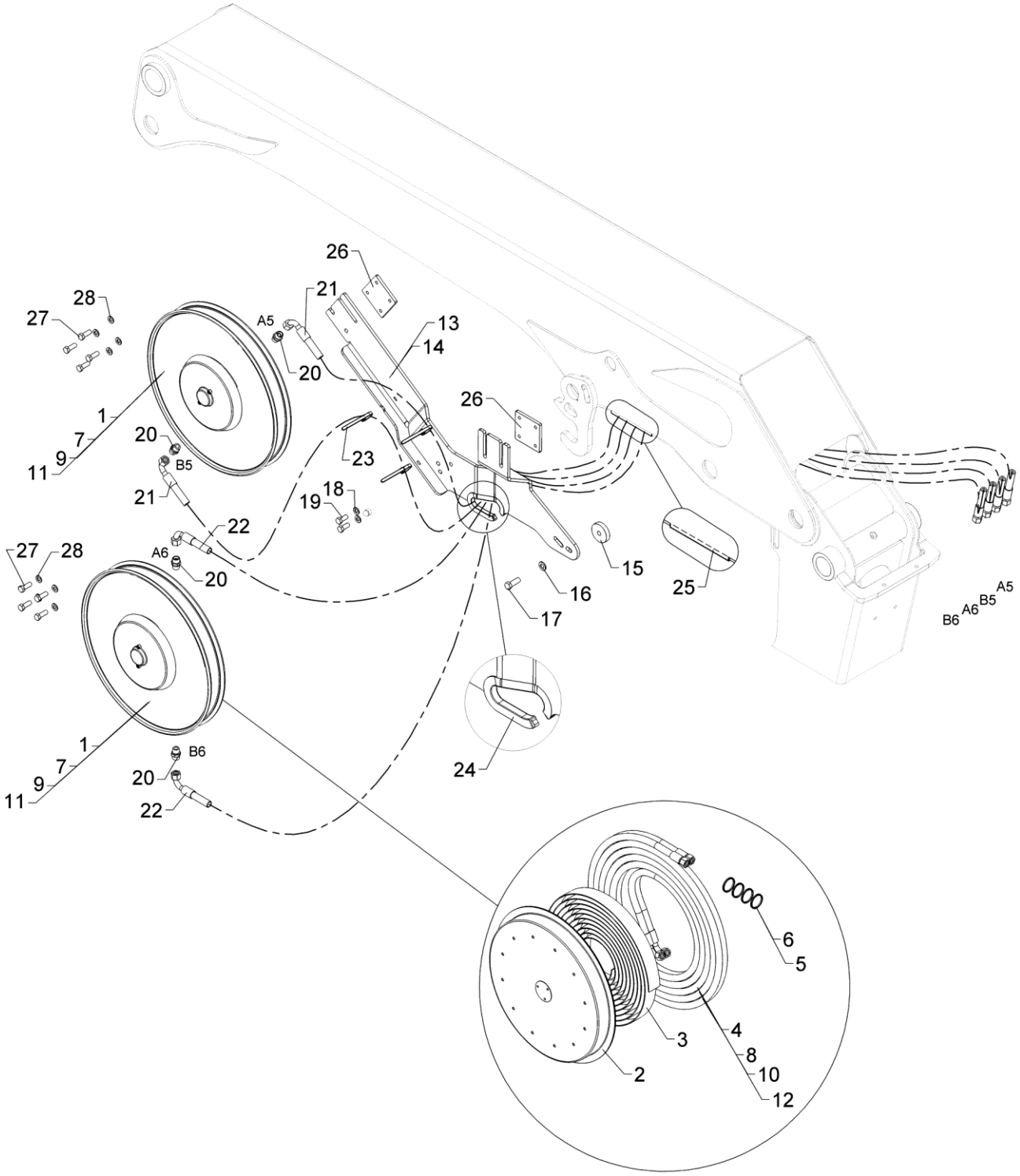

Hydr. system, hose reels, 2 EXV.

Pos	Qty.	Part no.	Description	Remarks
		6340920	Hydr.system, hose reels 2EXV	S.1300/1500
		6342930	Hydr.system, hose reels 2EXV	S.1210/1410/1710/2110
1	2	56371	Hose reel	K1, K2, K3
2	1	56486	Spring housing	56371-56372-56373-56374
3	1	56345	Spring	56371-56372-56373-56374
4	1	56375	Double hose	3/8"B2 x 11300 mm
5	1	56336	Seal kit	Slangerl. med serienr. fra 51514
6	1	56340	Seal kit	Slangerl. med serienr. før 51514
7	2	56372	Hose reel	K4
8	1	56376	Double hose	3/8"T2 x 13400 mm
9	2	56373	Hose reel	K5
10	1	56377	Double hose	3/8"T2 x 15600 mm
11	2	56374	Hose reel	K6
12	1	56378	Double hose	3/8"T2 x 17900 mm
13	1	6340621	Bracket for hose reel	S.1300/1500
14	1	6340622	Bracket for hose reel	S.1210/1410/1710/2110
15	1	6340617	Shim	
16	1	31131	Washer	12 mm
17	1	31524	Set screw	M12 x 35
18	2	31177	Washer	10 mm
19	2	31513	Set screw, stainless	M10 x 25
20	4	25127	Connection	P-GEV 12 LR-WD
21	2	0017540	Hose	
22	2	0015020	Hose	
23	3	27275	Cable tie, black, 7.6x385mm	7,6 x 390mm
24	1	46587	Rubber protection	210 mm
25	1	46587	Rubber protection	150 mm
26	2	6352024	Threaded plate	
27	8	30156	Set screw, stainless	M10 x 30
28	8	31565	Washer, stainless	10 mm

1500K, 1510K, 1720K, 1730K, 1820K, 1830K

Internal ref. 63 40 910

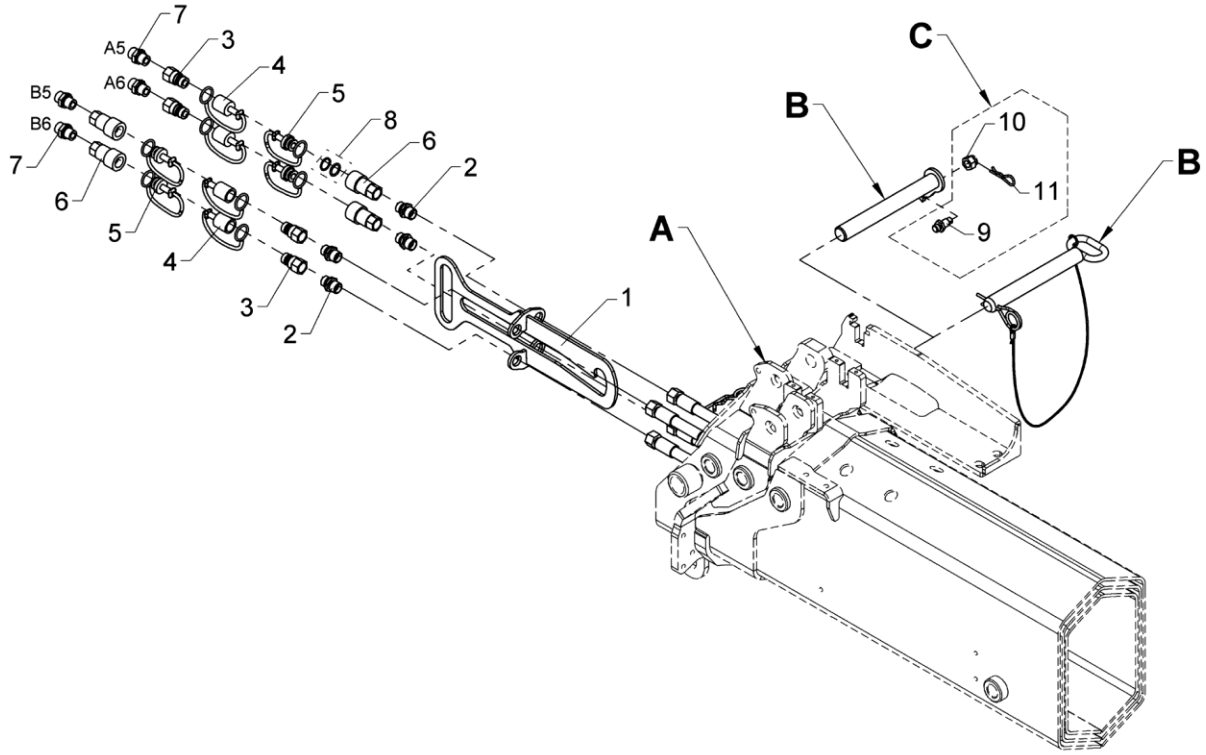

1300K/1310K/1420K/1430K/ 1500K/1510K/1720K/1730K

A	B	C
K1	63 40 657	X
K2	63 40 677	X
K3	60 92 454	
K4	63 40 397	
K5	63 40 397	
K6	63 01 166	

1800K/1810K/2020K/2030K/ 2200K/2210K/2420K/2430K

A	B	C
K2	63 40 657	X
K3	63 40 657	X
K4	60 92 454	
K5	63 40 397	
K6	63 40 397	

Kit, quick-release coupling for internal hose routing, 2 EXV.

Pos	Qty.	Part no.	Description	Remarks
		6340910	Quick-release coupl. int, 2EXV	
1	1	6340631	Bracket	
2	4	6661444	Socket	
3	4	60620	Quick-release coupling,M	3/8"
4	4	60622	Dust cap, F	3/8"
5	4	60621	Dust cap, M	3/8"
6	4	60619	Quick-release coupling,F	3/8"
7	4	25127	Connection	P-GEV 12 LR-WD
8	1	60635	Seal kit	
9	1	6340359	Lock pin	
10	1	32127	Nut	M12
11	1	33379	Spring	
12	1	6340657	Pin	
13	1	6340677	Pin	
14	1	6092454	Lock pin with chain	
15	1	6301166	Lock pin with split pin	
16	1	6340397	Lock pin with lock spring	

1500K, 1510K, 1720K, 1730K, 1820K, 1830K

63 40 630
Internal ref. 63 40 620

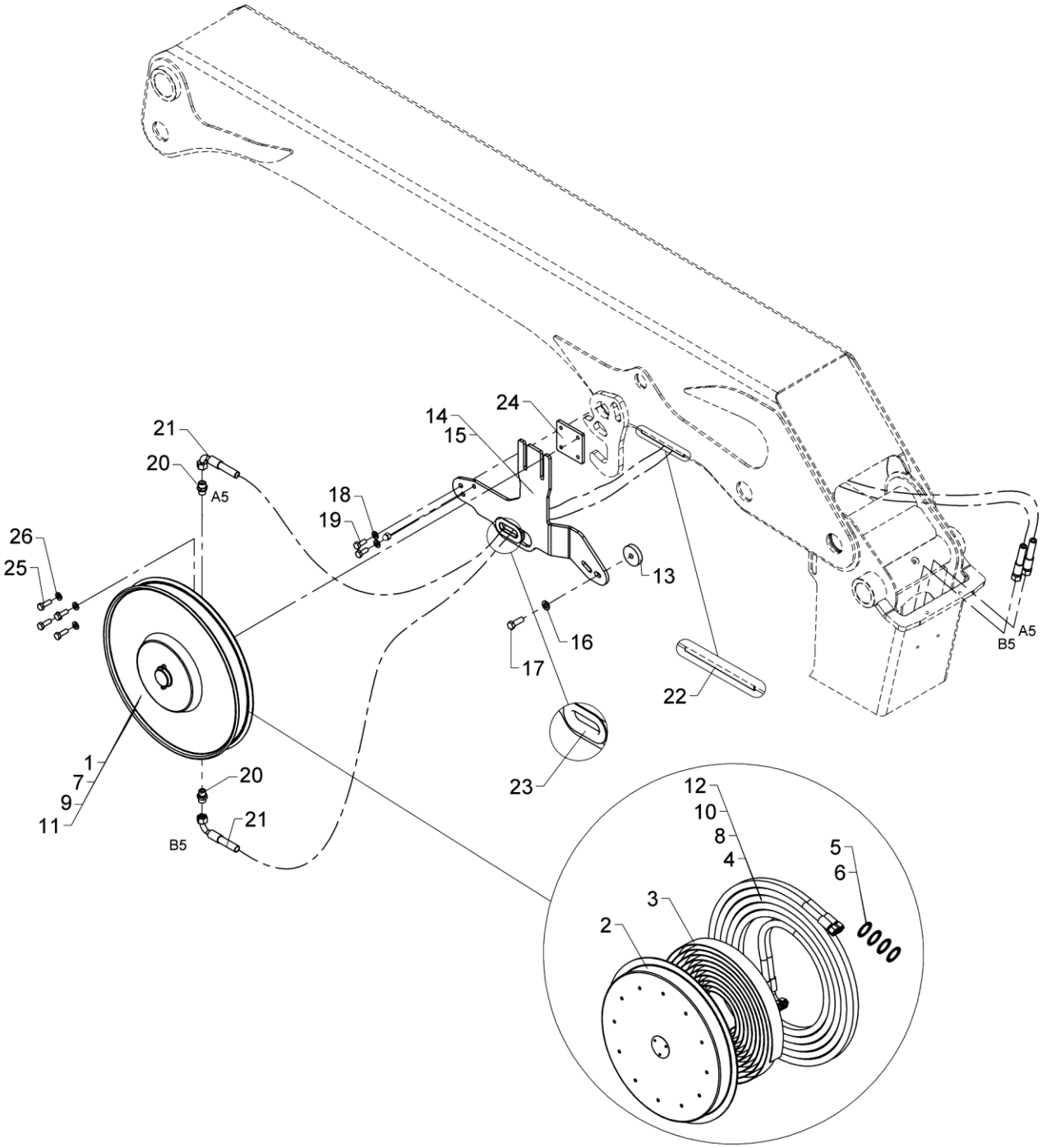

Hydr. system, hose reels, 1 EXV.

Created 12-01-2010
Modified 29-03-2019

Pos	Qty.	Part no.	Description	Remarks
		6340620	Hydr. syst. hose reels, 1 EXV	S.1300/1500
		6340630	Hydr. syst. hose reels, 1 EXV	S.1310/1510
1	1	56371	Hose reel	K1, K2, K3
2	1	56486	Spring housing	56371 - 53372 - 56373 - 56374
3	1	56345	Spring	56371 - 53372 - 56373 - 56374
4	1	56375	Double hose	3/8"B2 x 11300 mm
5	1	56336	Seal kit	Slangeruller fra serienr. 51514
6	1	56340	Seal kit	Slangeruller før serienr. 51514
7	1	56372	Hose reel	K4
8	1	56376	Double hose	3/8"T2 x 13400 mm
9	1	56373	Hose reel	K5
10	1	56377	Double hose	3/8"T2 x 15600 mm
11	1	56374	Hose reel	K6
12	1	56378	Double hose	3/8"T2 x 17900 mm
13	1	6340617	Shim	
14	1	6340618	Bracket for hose reel (1EXV)	S.1300/1500
15	1	6340619	Bracket for hose reel (1EXV)	S.1310/1510
16	1	31131	Washer	12 mm
17	1	31524	Set screw	M12 x 35
18	2	31177	Washer	10 mm
19	2	31513	Set screw, stainless	M10 x 25
20	2	25127	Connection	P-GEV 12 LR-WD
21	2	0015020	Hose	
22	1	46587	Rubber protection	150 mm
23	1	46587	Rubber protection	175 mm
24	1	6352024	Threaded plate	
25	4	30156	Set screw, stainless	M10 x 30
26	4	31565	Washer, stainless	10 mm

1500K, 1510K, 1720K, 1730K, 1820K, 1830K

Internal ref. 63 40 610

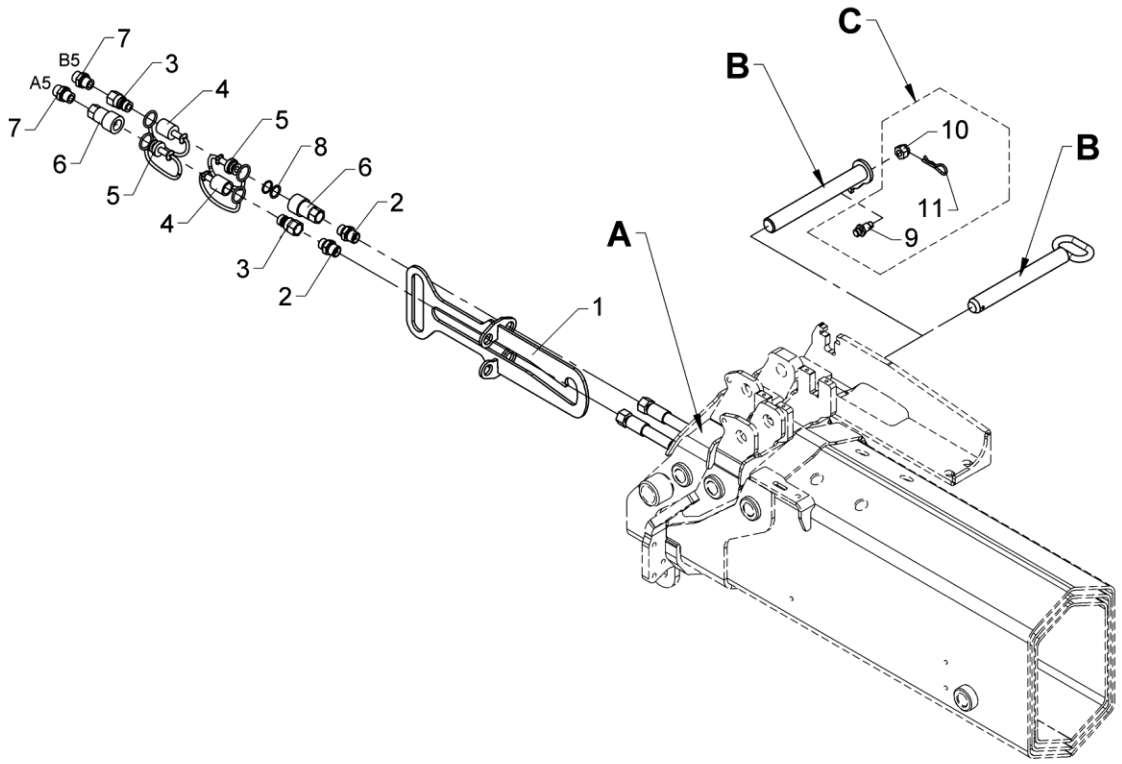

1300K/1310K/1420K/1430K/ 1500K/1510K/1720K/1730K

A	B	C
K1	63 40 657	X
K2	63 40 677	X
K3	60 92 454	
K4	63 40 397	
K5	63 40 397	
K6	63 01 166	

1800K/1810K/2020K/2030K/ 2200K/2210K/2420K/2430K

A	B	C
K2	63 40 657	X
K3	63 40 657	X
K4	60 92 454	
K5	63 40 397	
K6	63 40 397	

Kit, quick-release coupling for internal hose routing, 1 EXV.

Pos	Qty.	Part no.	Description	Remarks
		6340610	Kit, quick-release coupl.,1EXV	
1	1	6340631	Bracket	
2	2	6661444	Socket	
3	2	60620	Quick-release coupling,M	3/8"
4	2	60622	Dust cap, F	3/8"
5	2	60621	Dust cap, M	3/8"
6	2	60619	Quick-release coupling,F	3/8"
7	2	25127	Connection	P-GEV 12 LR-WD
8	1	60635	Seal kit	
9	1	6340359	Lock pin	
10	1	32127	Nut	M12
11	1	33379	Spring	
12	1	6340657	Pin	
13	1	6340677	Pin	
14	1	6092454	Lock pin with chain	
15	1	6301166	Lock pin with split pin	
16	1	6340397	Lock pin with lock spring	

1500K, 1510K, 1720K, 1730K, 1820K, 1830K

Internal ref. 63 43 860

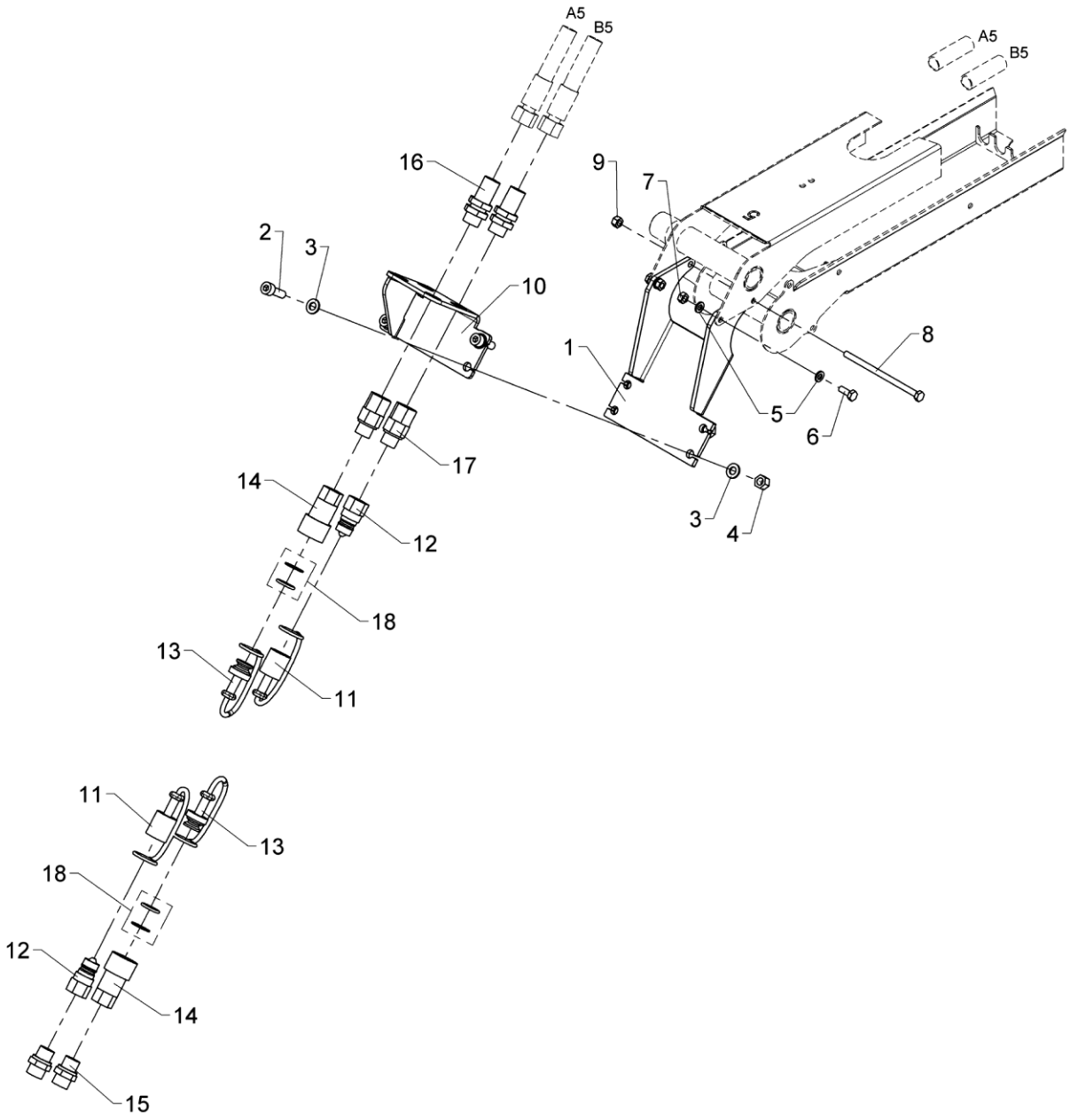

Quick-release coupling for 1 extra valve + bracket, K1-K5/T3-T4

Pos	Qty.	Part no.	Description	Remarks
1	1	6340771	Adapter	
2	4	30440	Screw	MC8 x 25
3	8	31147	Face washer, 8 mm	
4	4	30886	Lock nut, stainless	M8
5	4	32302	Face washer, stainless	6 mm
6	2	30112	Set screw, stainless	M6 x 16
7	2	30854	Nut, stainless	M6
8	1	30167	Steel bolt	M6 x 60
9	1	30884	Lock nut, stainless	M6
10	1	6394164	Bracket,quick-release coupling	
11	2	60622	Dust cap, F	3/8"
12	2	60620	Quick-release coupling,M	3/8"
13	2	60621	Dust cap, M	3/8"
14	2	60619	Quick-release coupling,F	3/8"
15	2	25127	Connection	P-GEV 12 LR-WD
16	2	25201	Bulkhead connection	
17	2	25240	Connection	EGESD 12 LR-WD
18	2	60635	Seal kit	

1500K, 1510K, 1720K, 1730K, 1820K, 1830K

Internal ref. 63 43 870

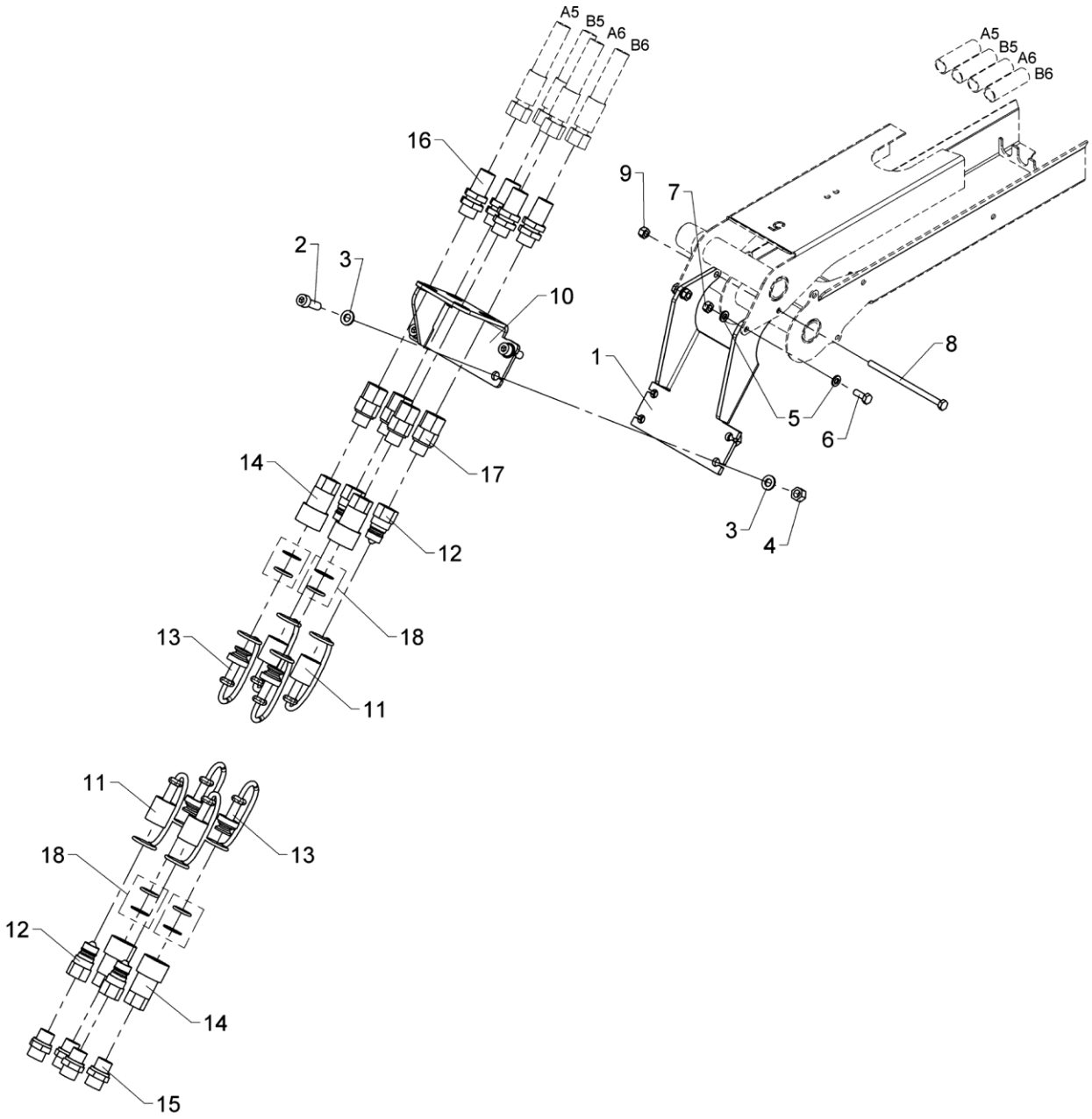

Quick-release coupling for 2 extra valves + bracket, K1-K5/T3-T4

Pos	Qty.	Part no.	Description	Remarks
1	1	6340771	Adapter	
2	4	30440	Screw	MC8 x 25
3	8	31147	Face washer, 8 mm	
4	4	30886	Lock nut, stainless	M8
5	4	32302	Face washer, stainless	6 mm
6	2	30112	Set screw, stainless	M6 x 16
7	2	30854	Nut, stainless	M6
8	1	30167	Steel bolt	M6 x 60
9	1	30884	Lock nut, stainless	M6
10	1	6394164	Bracket,quick-release coupling	
11	4	60622	Dust cap, F	3/8"
12	4	60620	Quick-release coupling,M	3/8"
13	4	60621	Dust cap, M	3/8"
14	4	60619	Quick-release coupling,F	3/8"
15	4	25127	Connection	P-GEV 12 LR-WD
16	4	25201	Bulkhead connection	
17	4	25240	Connection	EGESD 12 LR-WD
18	4	60635	Seal kit	

1500K, 1510K, 1720K, 1730K, 1820K, 1830K

Internal ref. 63 42 950

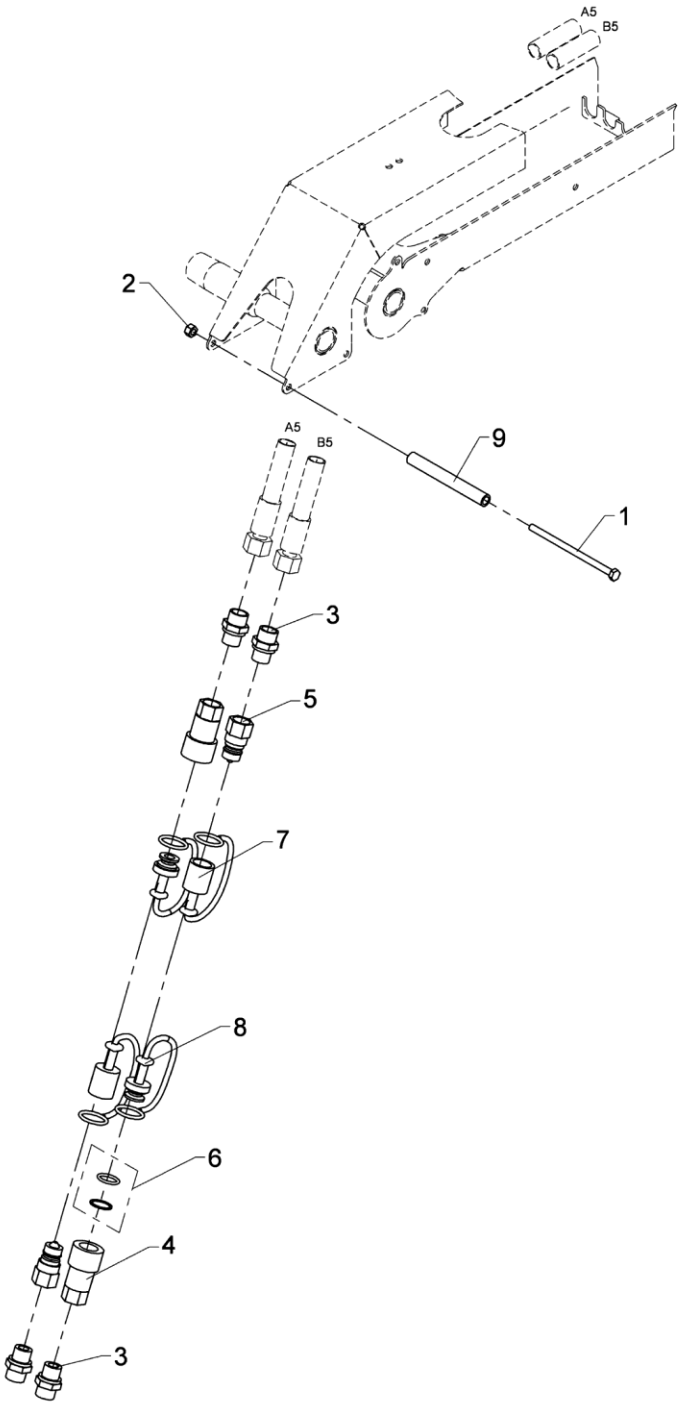

534 09 390

From loader 1060001
To loader

Created 23-09-2009
Modified 14-03-2011

Quick-release coupling for 1 extra valve

Pos	Qty.	Part no.	Description	Remarks
1	1	30167	Steel bolt	M6 x 60
2	1	30884	Lock nut, stainless	M6
3	4	25127	Connection	P-GEV 12 LR-WD
4	2	60619	Quick-release coupling,F	3/8"
5	2	60620	Quick-release coupling,M	3/8"
6	1	60635	Seal kit	
7	2	60622	Dust cap, F	3/8"
8	2	60621	Dust cap, M	3/8"
9	1	62511	Plastic hose	100 mm

1500K, 1510K, 1720K, 1730K, 1820K, 1830K

Internal ref. 63 42 960

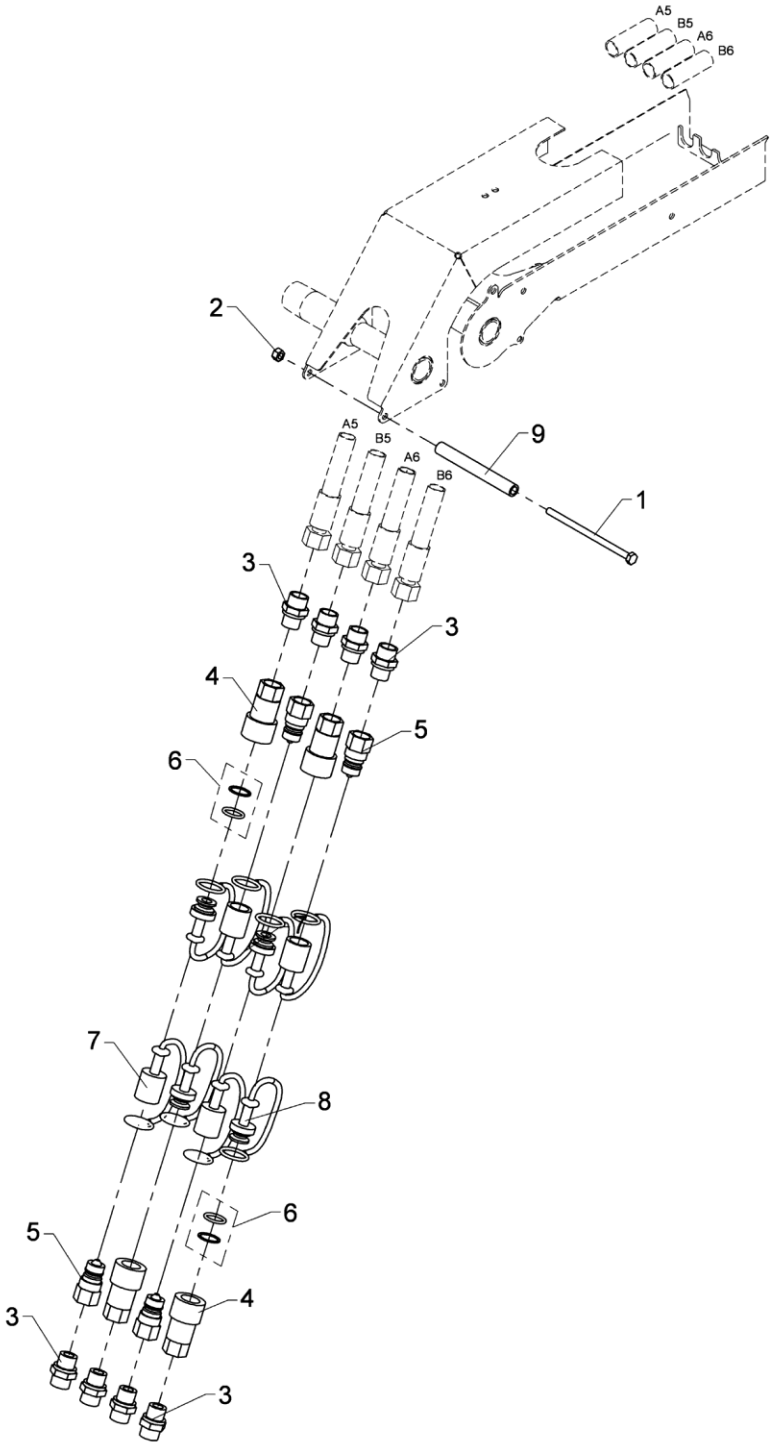

534 09 400

From loader 1060001
To loader

Created 23-09-2009
Modified 02-05-2014

Quick-release coupling for 2 extra valves

Pos	Qty.	Part no.	Description	Remarks
1	1	30167	Steel bolt	M6 x 60
2	1	30884	Lock nut, stainless	M6
3	8	25127	Connection	P-GEV 12 LR-WD
4	4	60619	Quick-release coupling,F	3/8"
5	4	60620	Quick-release coupling,M	3/8"
6	2	60635	Seal kit	
7	4	60622	Dust cap, F	3/8"
8	4	60621	Dust cap, M	3/8"
9	1	62511	Plastic hose	100 mm

1500K, 1510K, 1720K, 1730K, 1820K, 1830K

Internal ref. 63 42 970

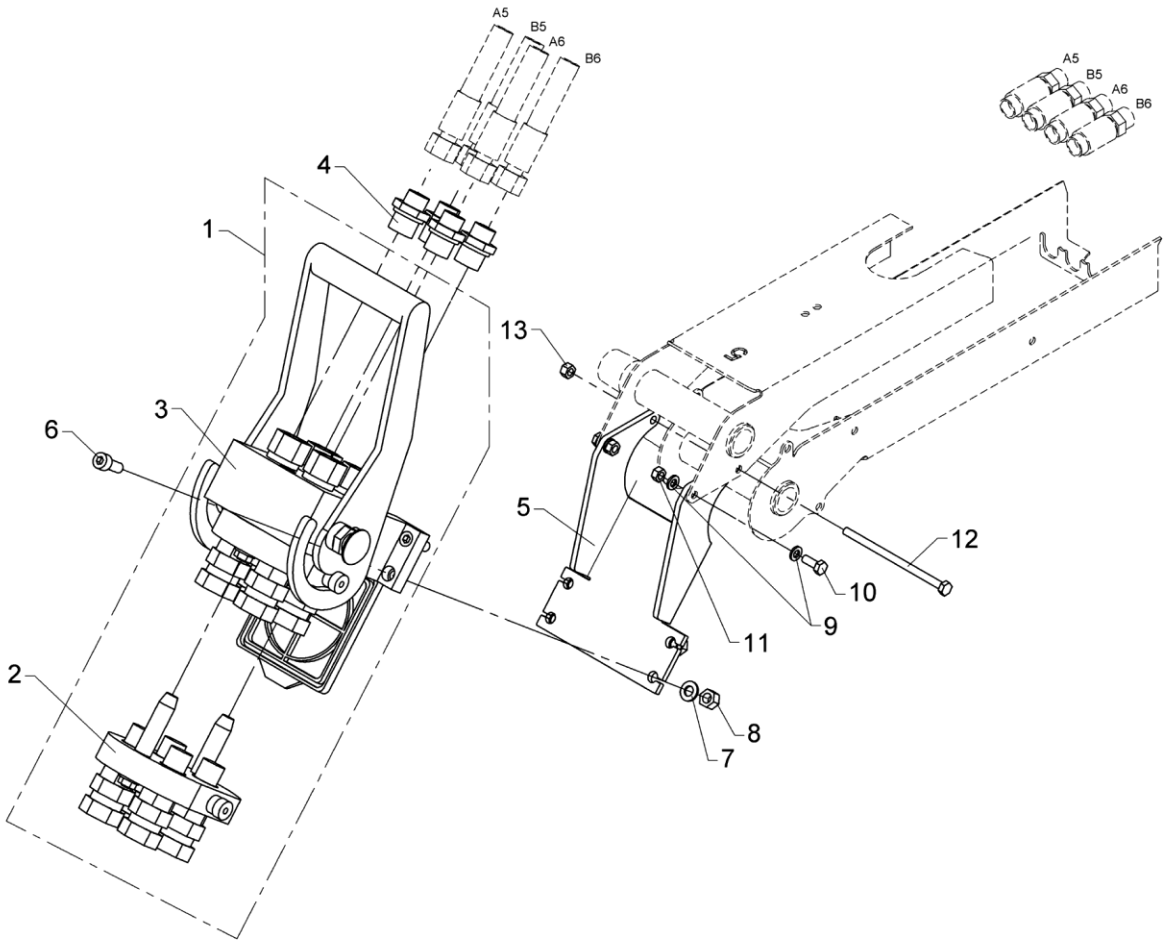

534 09 410

From loader 1060001
To loader

Multi-coupling for 2 extra valves K1-K5/T3-T4

Created 12-01-2010
Modified 01-11-2018

Pos	Qty.	Part no.	Description	Remarks
1	1	58430	Multifaster coupling	1/2"
2	1	58431	Multifaster coupling	
3	1	58432	Multifaster coupling	
4	4	25108	Connection	GES 12 LR 1/2-WD
5	1	6340771	Adapter	
6	4	30438	Screw	MC8 x 20
7	4	31147	Face washer, 8 mm	8 mm
8	4	30886	Lock nut, stainless	M8
9	4	32302	Face washer, stainless	6 mm
10	2	30112	Set screw, stainless	M6 x 16
11	2	30854	Nut, stainless	M6
12	1	30167	Steel bolt	M6 x 60
13	1	30884	Lock nut, stainless	M6

1500K, 1510K, 1720K, 1730K, 1820K, 1830K

Internal ref. 63 42 980

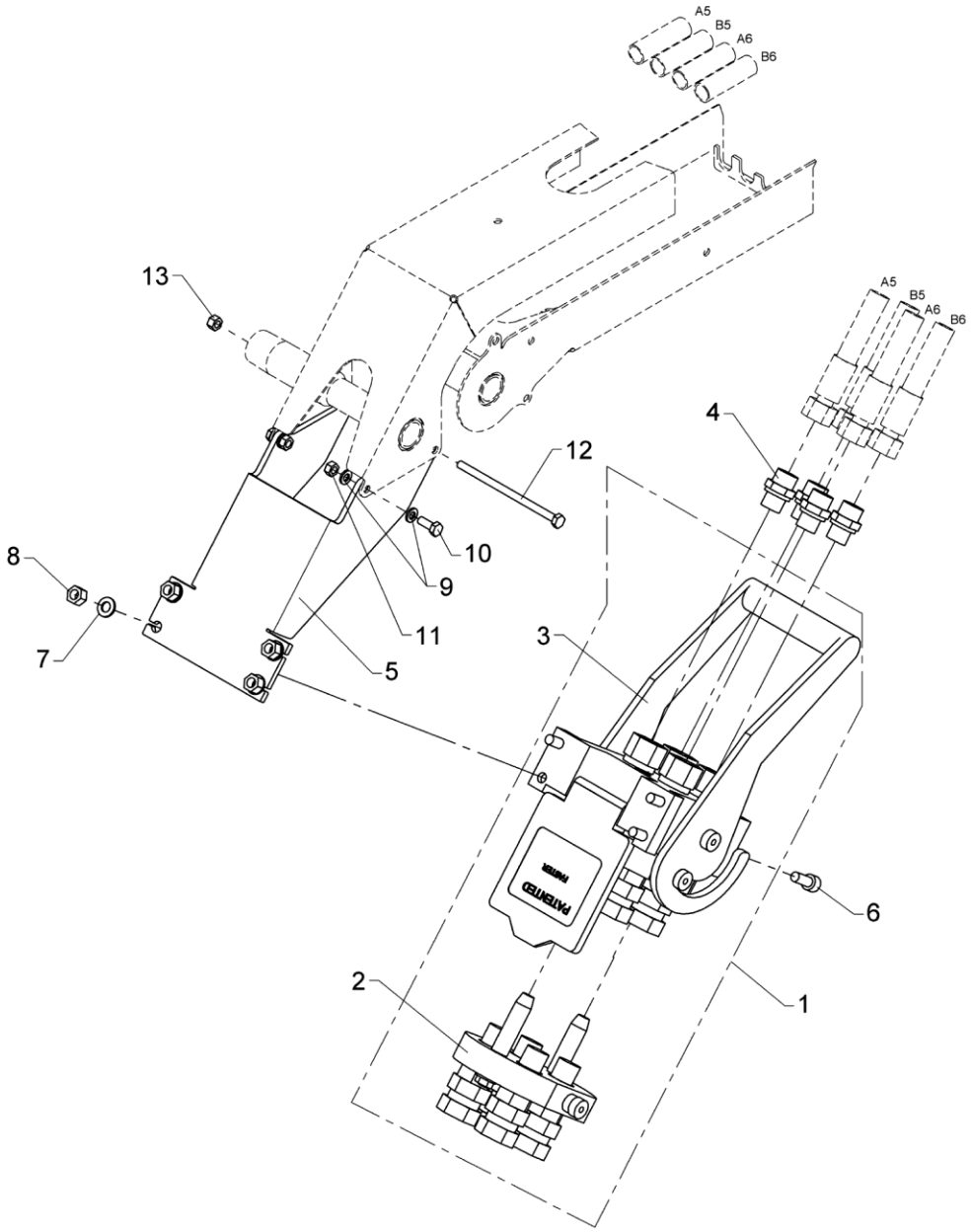

534 09 420

From loader 1060001
To loader

Multi-coupling for 2 extra valves K6/T5

Created 12-01-2010
Modified 05-04-2011

Pos	Qty.	Part no.	Description	Remarks
1	1	58430	Multifaster coupling	1/2"
2	1	58431	Multifaster coupling	
3	1	58432	Multifaster coupling	
4	4	25127	Connection	P-GEV 12 LR-WD
5	1	6340772	Adapter	
6	4	30438	Screw	MC8 x 20
7	4	31147	Face washer, 8 mm	8 mm
8	4	30886	Lock nut, stainless	M8
9	4	32302	Face washer, stainless	6 mm
10	2	30112	Set screw, stainless	M6 x 16
11	2	30854	Nut, stainless	M6
12	1	30167	Steel bolt	M6 x 60
13	1	30884	Lock nut, stainless	M6

1500K, 1510K, 1720K, 1730K, 1820K, 1830K

Internal ref. 63 43 930

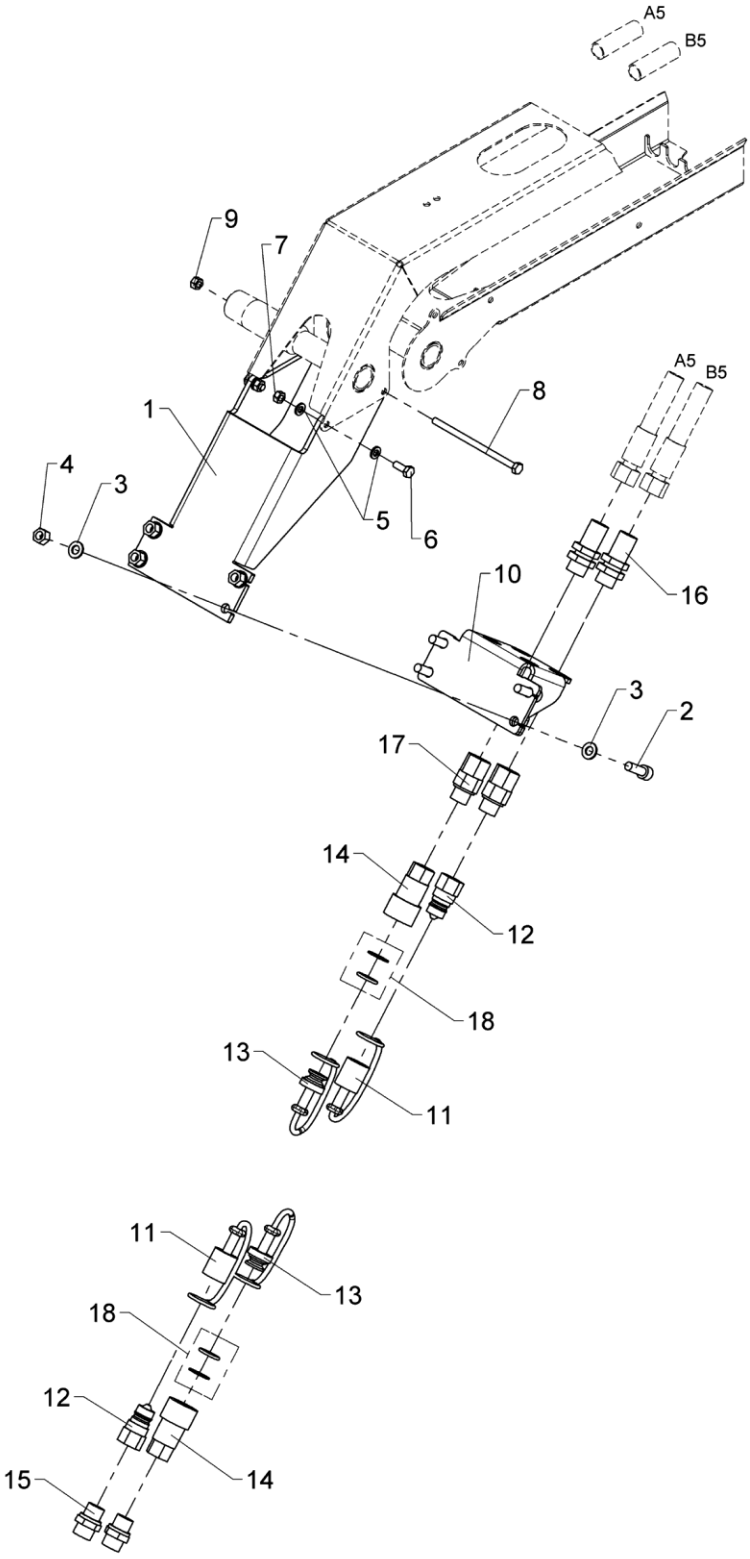

Quick-release coupling for 1 extra valve + bracket, K6/T5

Pos	Qty.	Part no.	Description	Remarks
1	1	6340772	Adapter	
2	4	30440	Screw	MC8 x 25
3	8	31147	Face washer, 8 mm	
4	4	30886	Lock nut, stainless	M8
5	4	32302	Face washer, stainless	6 mm
6	2	30112	Set screw, stainless	M6 x 16
7	2	30854	Nut, stainless	M6
8	1	30167	Steel bolt	M6 x 60
9	1	30884	Lock nut, stainless	M6
10	1	6394164	Bracket,quick-release coupling	
11	2	60622	Dust cap, F	3/8"
12	2	60620	Quick-release coupling,M	3/8"
13	2	60621	Dust cap, M	3/8"
14	2	60619	Quick-release coupling,F	3/8"
15	2	25127	Connection	P-GEV 12 LR-WD
16	2	25201	Bulkhead connection	
17	2	25240	Connection	EGESD 12 LR-WD
18	2	60635	Seal kit	

1500K, 1510K, 1720K, 1730K, 1820K, 1830K

Internal ref. 63 43 940

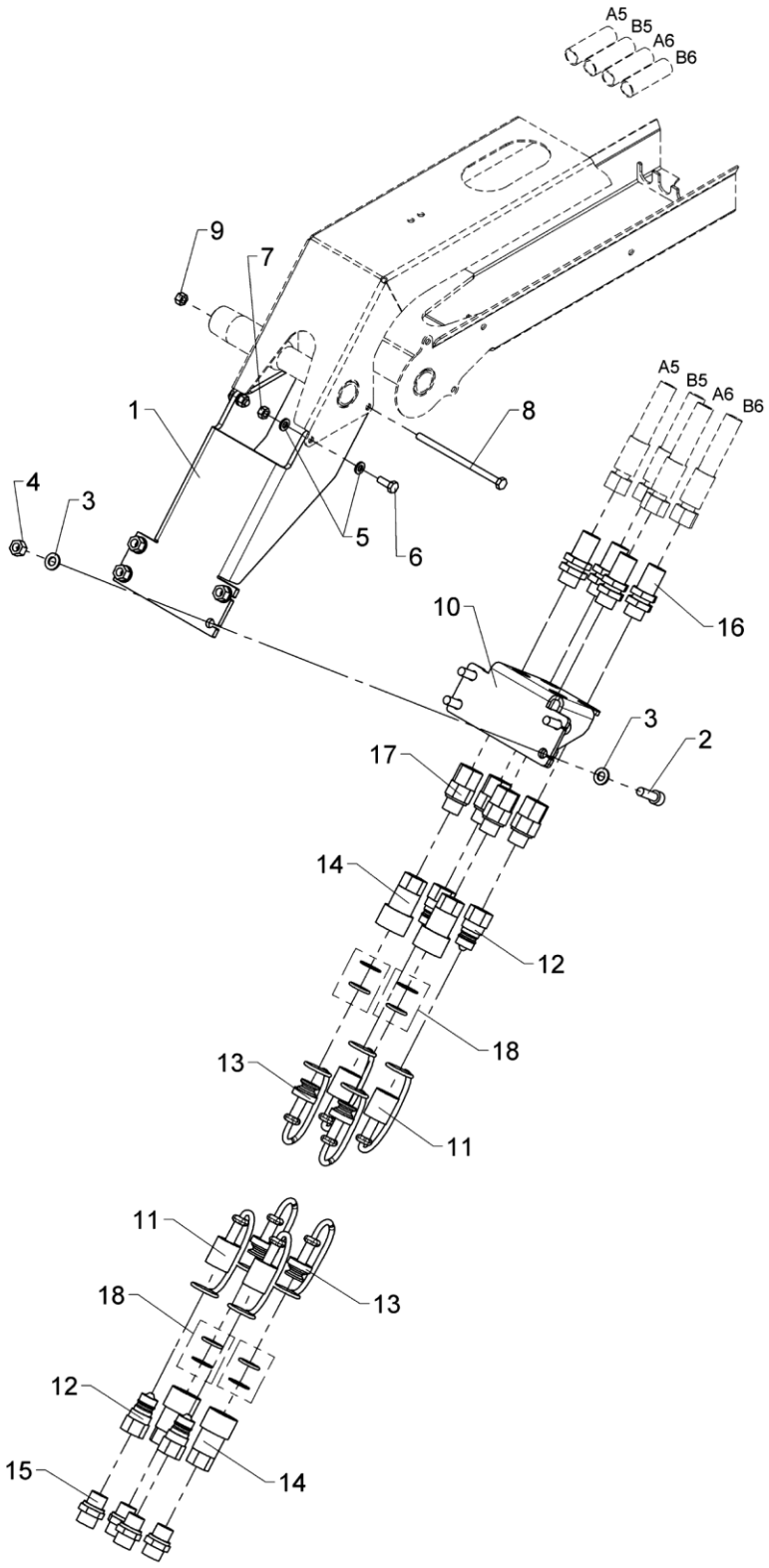

Quick-release coupling for 2 extra valves + bracket, K6/T5

Pos	Qty.	Part no.	Description	Remarks
1	1	6340772	Adapter	
2	4	30440	Screw	MC8 x 25
3	8	31147	Face washer, 8 mm	
4	4	30886	Lock nut, stainless	M8
5	4	32302	Face washer, stainless	6 mm
6	2	30112	Set screw, stainless	M6 x 16
7	2	30854	Nut, stainless	M6
8	1	30167	Steel bolt	M6 x 60
9	1	30884	Lock nut, stainless	M6
10	1	6394164	Bracket,quick-release coupling	
11	4	60622	Dust cap, F	3/8"
12	4	60620	Quick-release coupling,M	3/8"
13	4	60621	Dust cap, M	3/8"
14	4	60619	Quick-release coupling,F	3/8"
15	4	25127	Connection	P-GEV 12 LR-WD
16	4	25201	Bulkhead connection	
17	4	25240	Connection	EGESD 12 LR-WD
18	4	60635	Seal kit	

1500K, 1510K, 1720K, 1730K, 1820K, 1830K

Internal ref. 63 42 870

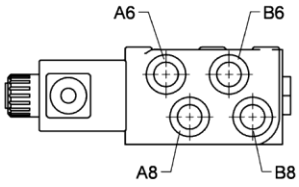

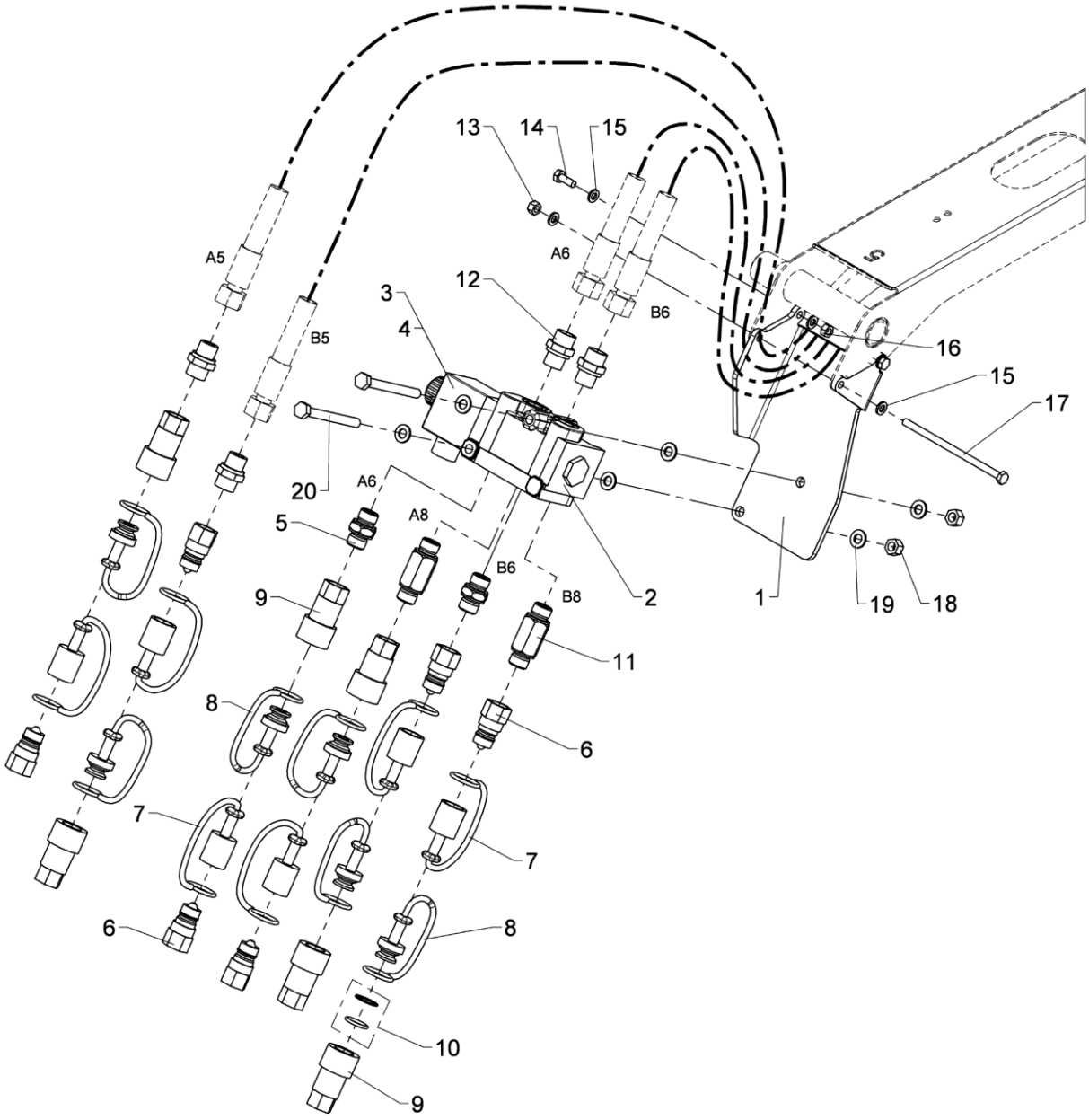

Kit for 3 extra valves (K1-K5)

534 09 460

From loader 1060001
To loader

Created 15-12-2008
Modified 31-08-2009

Pos	Qty.	Part no.	Description	Remarks
1	1	6340773	Adaptor	
2	1	59062	Change-over valve	
3	1	59063	Solenoid 24 V	
4	1	59078	Solenoid 12V	
5	2	6340775	Connection	
6	6	60620	Quick-release coupling,M	3/8"
7	6	60622	Dust cap, F	3/8"
8	6	60621	Dust cap, M	3/8"
9	6	60619	Quick-release coupling,F	3/8"
10	1	60635	Seal kit	
11	2	6340776	Connection	
12	4	25127	Connection	P-GEV 12 LR-WD
13	1	30884	Lock nut, stainless	M6
14	2	30112	Set screw, stainless	M6 x 16
15	6	32302	Face washer, stainless	6 mm
16	2	30854	Nut, stainless	M6
17	1	32107	Steel bolt, stainless	M6 x 120
18	2	30886	Lock nut, stainless	M8
19	6	31147	Face washer, 8 mm	8 mm
20	2	30143	Steel bolt, stainless	M8 x 80

1500K, 1510K, 1720K, 1730K, 1820K, 1830K

Internal ref. 63 42 880

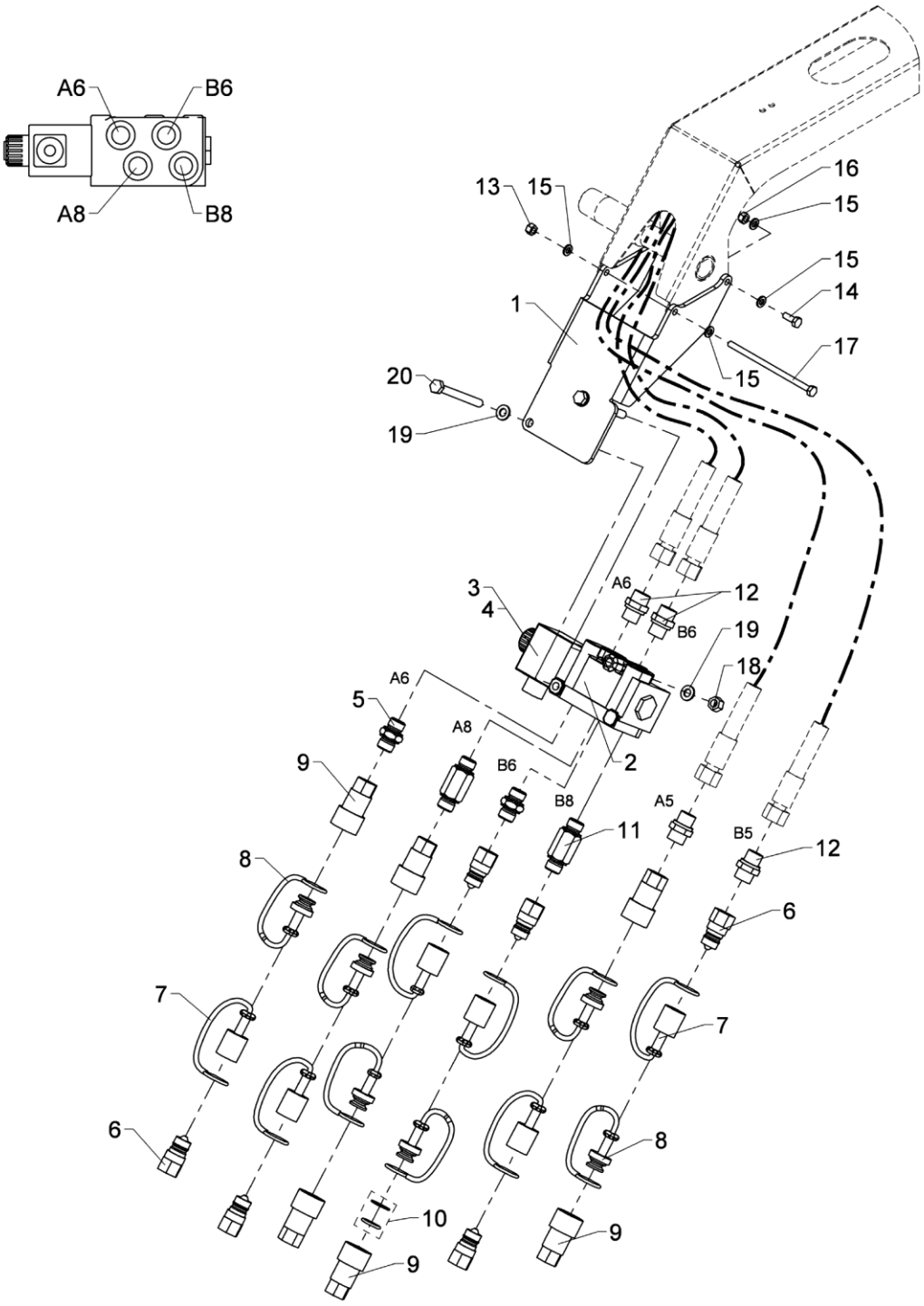

Kit for 3 extra valves (K6)

534 09 470

From loader 1060001
To loader

Created 11-03-2009
Modified 31-08-2009

Pos	Qty.	Part no.	Description	Remarks
1	1	6340774	Adapter (change-over valve K6)	
2	1	59062	Change-over valve	
3	1	59063	Solenoid 24 V	
4	1	59078	Solenoid 12V	
5	2	6340775	Connection	
6	6	60620	Quick-release coupling,M	3/8"
7	6	60622	Dust cap, F	3/8"
8	6	60621	Dust cap, M	3/8"
9	6	60619	Quick-release coupling,F	3/8"
10	1	60635	Seal kit	
11	2	6340776	Connection	
12	4	25127	Connection	P-GEV 12 LR-WD
13	1	30884	Lock nut, stainless	M6
14	2	30112	Set screw, stainless	M6 x 16
15	6	32302	Face washer, stainless	6 mm
16	2	30854	Nut, stainless	M6
17	1	32107	Steel bolt, stainless	M6 x 120
18	2	30886	Lock nut, stainless	M8
19	4	31147	Face washer, 8 mm	8 mm
20	2	30143	Steel bolt, stainless	M8 x 80

1500K, 1510K, 1720K, 1730K, 1820K, 1830K

63 44 750
Internal ref. 63 40 470

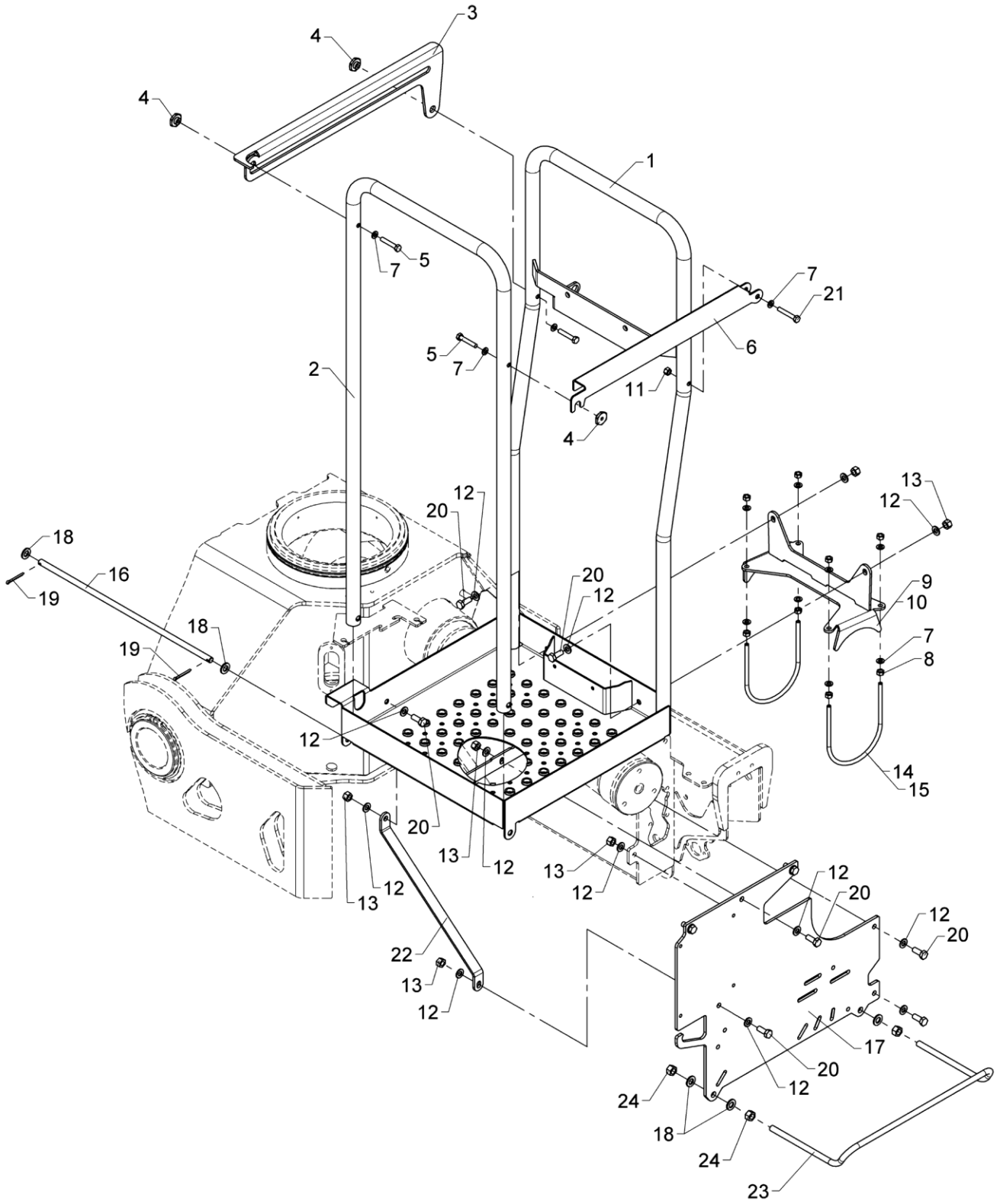

Obsolete

Stand-up controls, standard

534 10 010

From loader 1060001
To loader 1061942

Created 02-12-2008
Modified 25-05-2011

Pos	Qty.	Part no.	Description	Remarks
		6340470	Stand-up controls (standard)	1300K-1830K
		6344750	Stand-up controls (standard)	1800K-2630K + 1943Z/2243Z
1	1	6340461	Platform	
2	1	6340471	Safety guard	
3	1	6340474	Railing	
4	3	6340475	Nut	
5	3	31511	Set screw, stainless	M8 x 45
6	1	6340473	Railing	
7	12	31147	Face washer, 8 mm	8 mm
8	8	30856	Nut, stainless	M8
9	1	6340455	Mounting bracket	1300K-1830K
10	1	6344455	Mounting bracket	1800K-2630K + 1943Z/2243Z
11	1	30886	Lock nut, stainless	M8
12	18	31565	Washer, stainless	10 mm
13	9	31564	Lock nut, stainless	M10
14	2	6340458	Clamp	1300K-1830K
15	2	6344458	Clamp	1800K-2630K + 1943Z/2243Z
16	1	6340472	Pin	
17	1	6340459	Valve bracket	
18	6	32338	Washer	12 mm
19	2	31638	Split pin	ø4 x 40
20	9	31513	Set screw, stainless	M10 x 25
21	1	30139	Steel bolt, stainless	M8 x 50
22	1	6340469	Reinforcement plate	
23	1	6239973	Clamp	
24	4	30860	Nut, stainless	M12

1500K, 1510K, 1720K, 1730K, 1820K, 1830K

63 44 750
Internal ref. 63 40 470

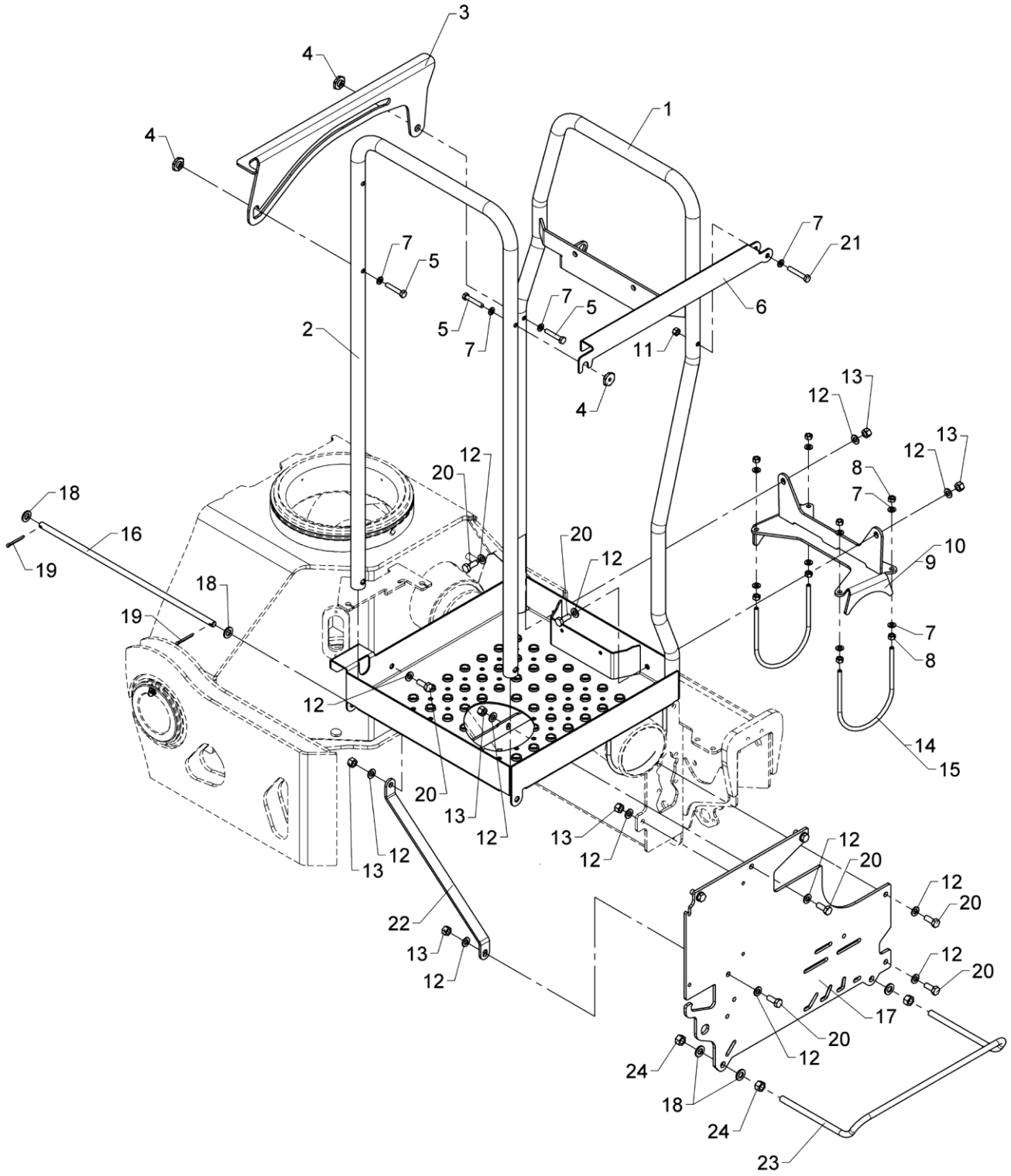

Stand-up controls, standard

Pos	Qty.	Part no.	Description	Remarks
		6340470	Stand-up controls (standard)	1300K-1830K
		6344750	Stand-up controls (standard)	1800K-2630K + 2243Z
1	1	6342461	Platform	
2	1	6340471	Safety guard	
3	1	6342474	Railing	
4	3	6340475	Nut	
5	3	31511	Set screw, stainless	M8 x 45
6	1	6340473	Railing	
7	12	31147	Face washer, 8 mm	8 mm
8	8	30856	Nut, stainless	M8
9	1	6340455	Mounting bracket	1300K-1830K
10	1	6344455	Mounting bracket	1800K-2630K + 2243Z
11	1	30886	Lock nut, stainless	M8
12	18	31565	Washer, stainless	10 mm
13	9	31564	Lock nut, stainless	M10
14	2	6340458	Clamp	1300K-1830K
15	2	6344458	Clamp	1800K-2630K + 2243Z
16	1	6340472	Pin	
17	1	6340459	Valve bracket	
18	6	32338	Washer	12 mm
19	2	31638	Split pin	ø4 x 40
20	9	31513	Set screw, stainless	M10 x 25
21	1	30139	Steel bolt, stainless	M8 x 50
22	1	6340469	Reinforcement plate	
23	1	6239973	Clamp	
24	4	30860	Nut, stainless	M12

1500K, 1510K, 1720K, 1730K, 1820K, 1830K

Internal ref. 63 41 450

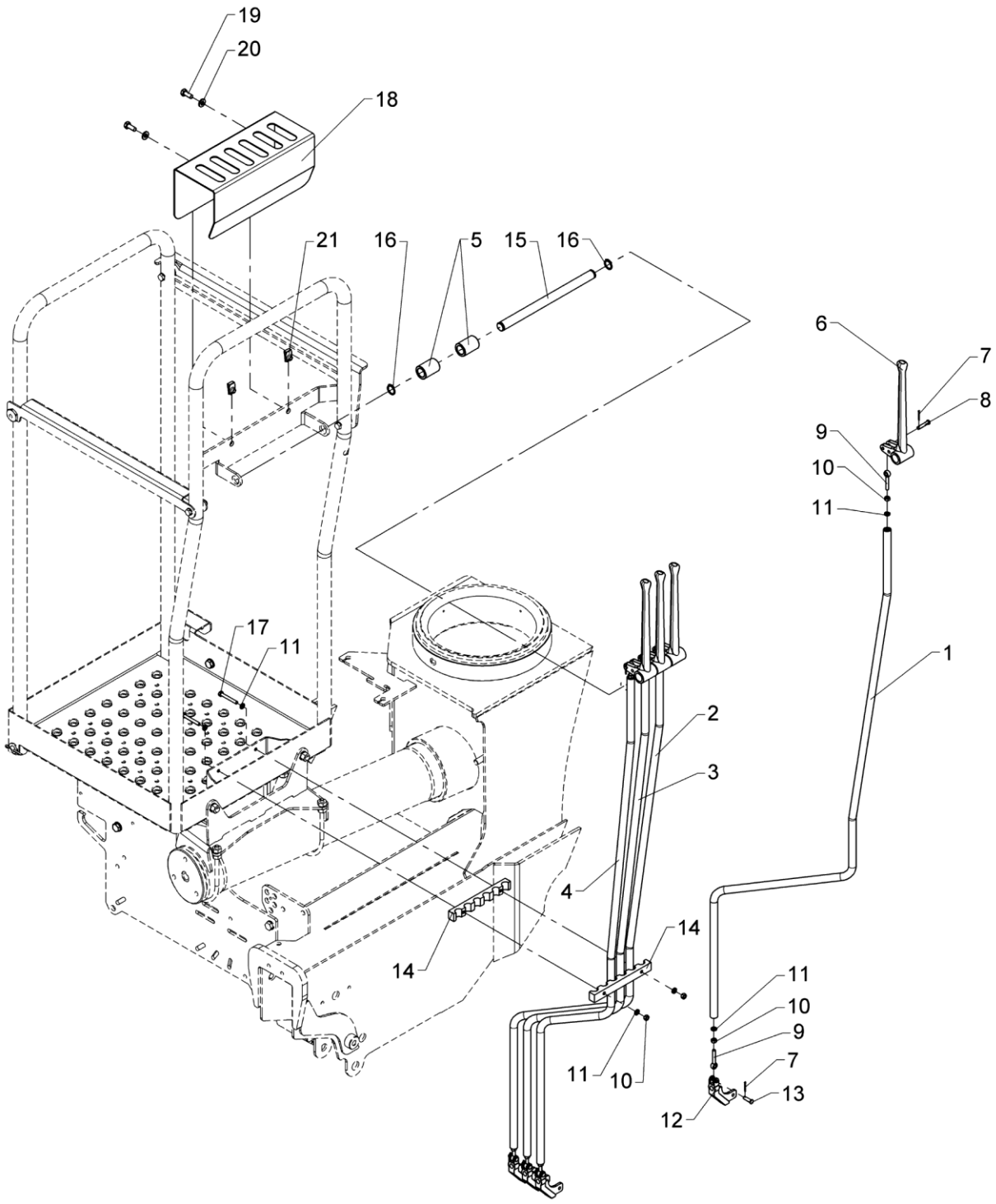

Obsolete

534 10 020

From loader 1060001
To loader 1061834

Created 11-02-2008
Modified

Rod control, HS std. - 4 functions

Pos	Qty.	Part no.	Description	Remarks
		6341450	Rod control, 4 functions	
1	1	6340481	Connecting rod (slew)	
2	1	6340482	Connecting rod (boom)	
3	1	6340483	Connecting rod (jib)	
4	1	6340484	Connecting rod (extension)	
5	2	64040	Nylon bushing	
6	4	63423	Lever for dual controls	
7	8	31601	Split pin, stainless	ø1,6 x 20
8	4	31274	Cotter bolt	ø6 x 30
9	8	32114	Pin	M6 x 40
10	10	30854	Nut, stainless	M6
11	12	32302	Face washer, stainless	6 mm
12	4	63499	Adapter	
13	4	31271	Cotter bolt	ø6 x 21
14	2	63599	Guide	
15	1	6660954	Pin for 5 levers	
16	2	33107	Circlip	19U
17	2	30118	Steel pin, stainless	M6 x 45
18	1	6340477	Protection	
19	2	30132	Set screw, stainless	M8 x 20
20	2	31754	Washer	8,4 x 18 x 2
21	2	31069	Clip	M8 1,5 - 5,5 mm.

1500K, 1510K, 1720K, 1730K, 1820K, 1830K

Internal ref. 63 43 750

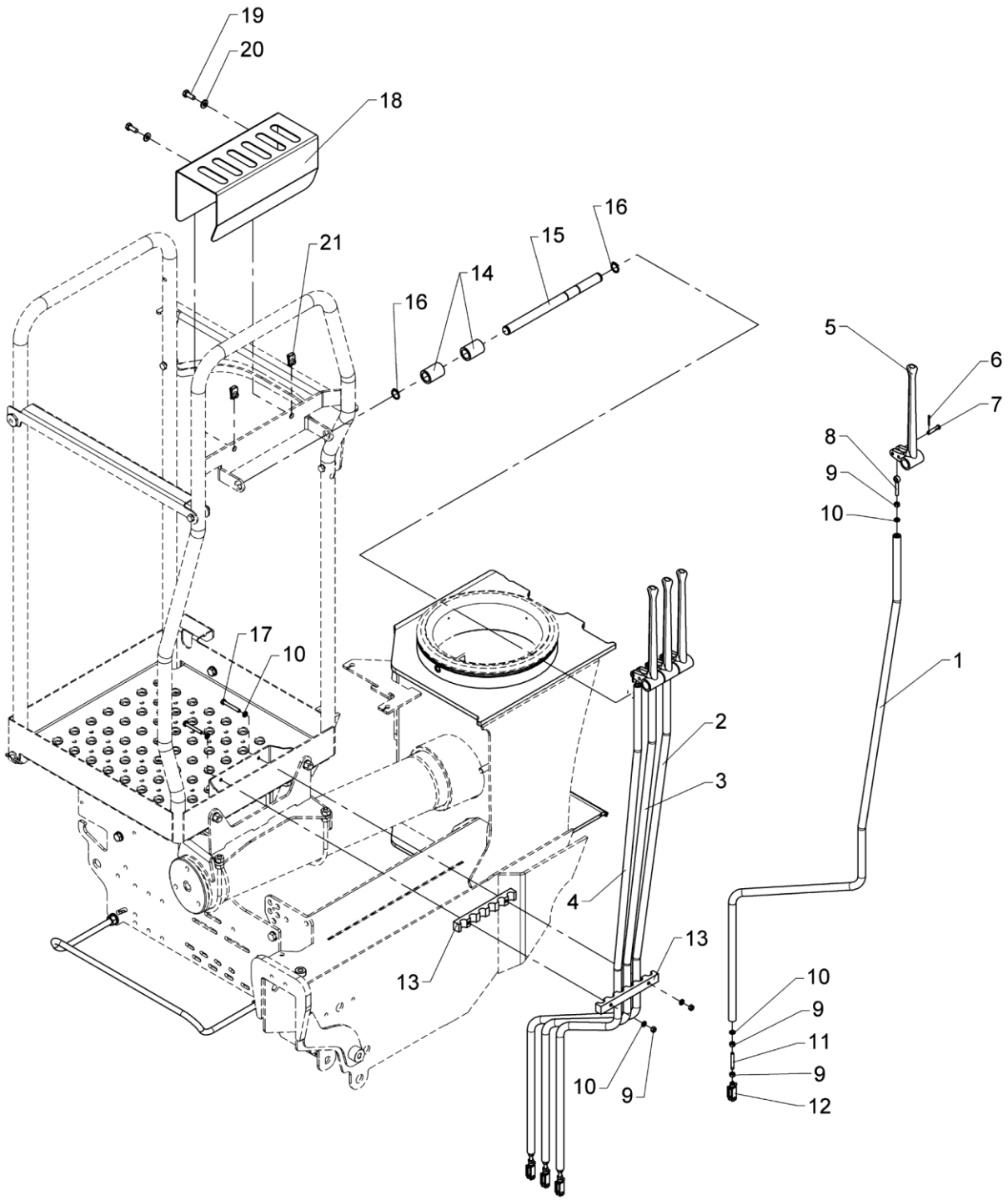

Rod control, HS std. - 4 functions

534 10 020 A

From loader 1061835
To loader

Created 23-11-2015
Modified

Pos	Qty.	Part no.	Description	Remarks
		6343750		
1	1	6341481	Connecting rod (Slew)	
2	1	6341482	Connecting rod (Boom)	
3	1	6341483	Connecting rod (Jib)	
4	1	6341484	Connecting rod (Extension)	
5	4	63423	Lever for dual controls	
6	4	31601	Split pin, stainless	
7	4	31274	Cotter bolt	ø6 x 30
8	4	32114	Pin	M6 x 40
9	14	30854	Nut, stainless	M6
10	12	32302	Face washer, stainless	6 mm
11	4	31007	Pointed screw	MSP6 x 40
12	4	48414	Clevis	
13	2	63599	Guide	
14	2	64040	Nylon bushing	
15	1	6660954	Pin for 5 levers	
16	2	33107	Circlip	
17	2	30118	Steel pin, stainless	M6 x 45
18	1	6340477	Protection	
19	2	30132	Set screw, stainless	
20	2	31754	Washer	8 mm
21	2	31069	Clip	M8 1,5 - 5,5 mm.

1500K, 1510K, 1720K, 1730K, 1820K, 1830K

Internal ref. 63 41 460

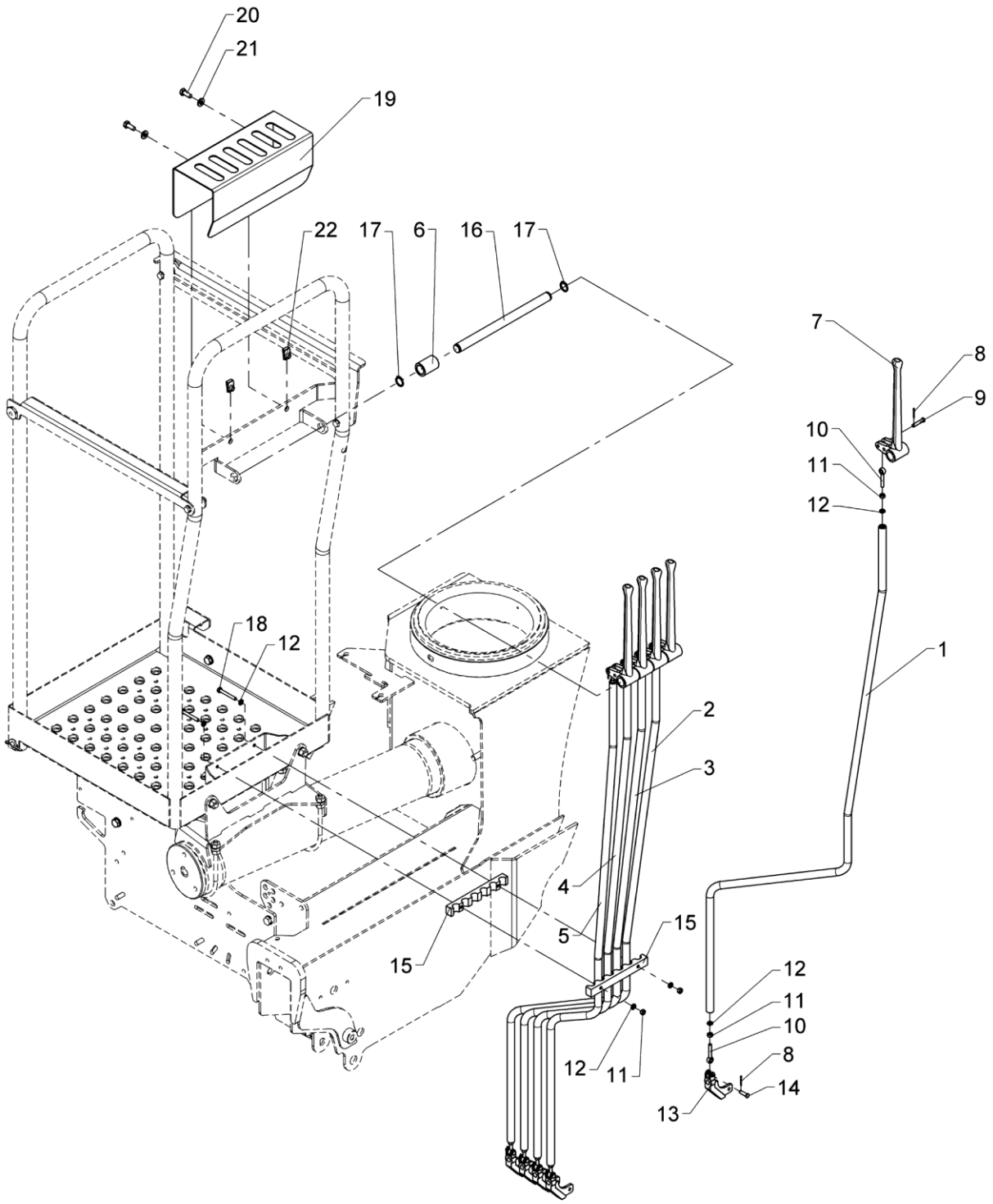

Obsolete

534 10 030

From loader 1060001
To loader 1061834

Created 11-02-2008
Modified

Rod control, HS std. - 5 functions

Pos	Qty.	Part no.	Description	Remarks
		6341460	Rod control	
1	1	6340481	Connecting rod (slew)	
2	1	6340482	Connecting rod (boom)	
3	1	6340483	Connecting rod (jib)	
4	1	6340484	Connecting rod (extension)	
5	1	6340485	Connecting rod (1 EXV)	
6	1	64040	Nylon bushing	
7	5	63423	Lever for dual controls	
8	10	31601	Split pin, stainless	ø1,6 x 20
9	5	31274	Cotter bolt	ø6 x 30
10	10	32114	Pin	M6 x 40
11	12	30854	Nut, stainless	M6
12	14	32302	Face washer, stainless	6 mm
13	5	63499	Adapter	
14	5	31271	Cotter bolt	ø6 x 21
15	2	63599	Guide	
16	1	6660954	Pin for 5 levers	
17	2	33107	Circlip	19U
18	2	30118	Steel pin, stainless	M6 x 45
19	1	6340477	Protection	
20	2	30132	Set screw, stainless	M8 x 20
21	2	31754	Washer	8,4 x 18 x 2
22	2	31069	Clip	M8 1,5 - 5,5 mm.

1500K, 1510K, 1720K, 1730K, 1820K, 1830K

Internal ref. 63 43 760

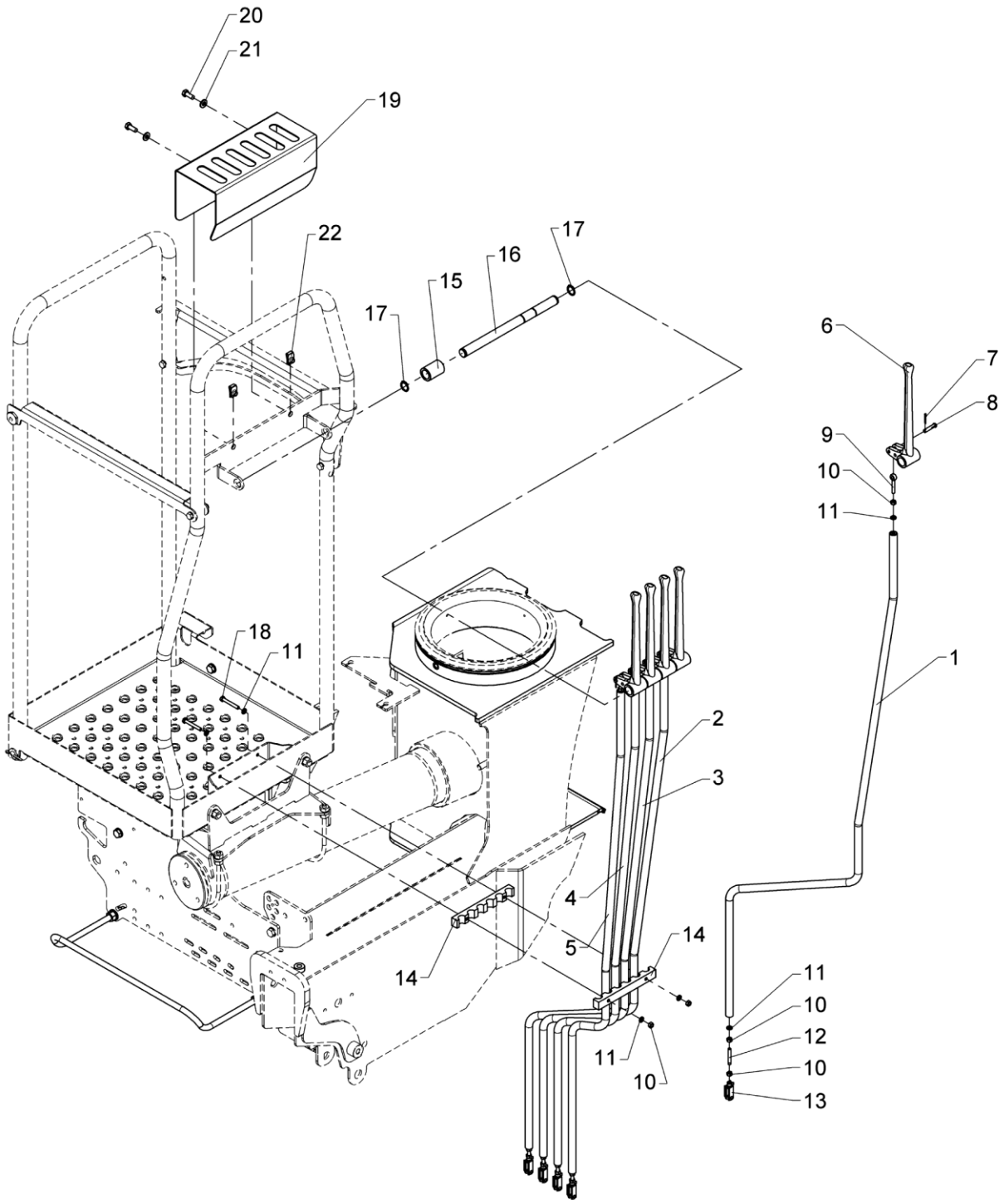

Rod control, HS std. - 5 functions

534 10 030 A

From loader 1061835
To loader

Created 23-11-2015
Modified

Pos	Qty.	Part no.	Description	Remarks
		6343760		
1	1	6341481	Connecting rod (Slew)	
2	1	6341482	Connecting rod (Boom)	
3	1	6341483	Connecting rod (Jib)	
4	1	6341484	Connecting rod (Extension)	
5	1	6341485	Connecting rod (1 EXV)	
6	5	63423	Lever for dual controls	
7	5	31601	Split pin, stainless	
8	5	31274	Cotter bolt	ø6 x 30
9	5	32114	Pin	M6 x 40
10	17	30854	Nut, stainless	M6
11	14	32302	Face washer, stainless	6 mm
12	5	31007	Pointed screw	MSP6 x 40
13	5	48414	Clevis	
14	2	63599	Guide	
15	1	64040	Nylon bushing	
16	1	6660954	Pin for 5 levers	
17	2	33107	Circlip	
18	2	30118	Steel pin, stainless	M6 x 45
19	1	6340477	Protection	
20	2	30132	Set screw, stainless	
21	2	31754	Washer	8 mm
22	2	31069	Clip	M8 1,5 - 5,5 mm.

1500K, 1510K, 1720K, 1730K, 1820K, 1830K

Internal ref. 63 40 480

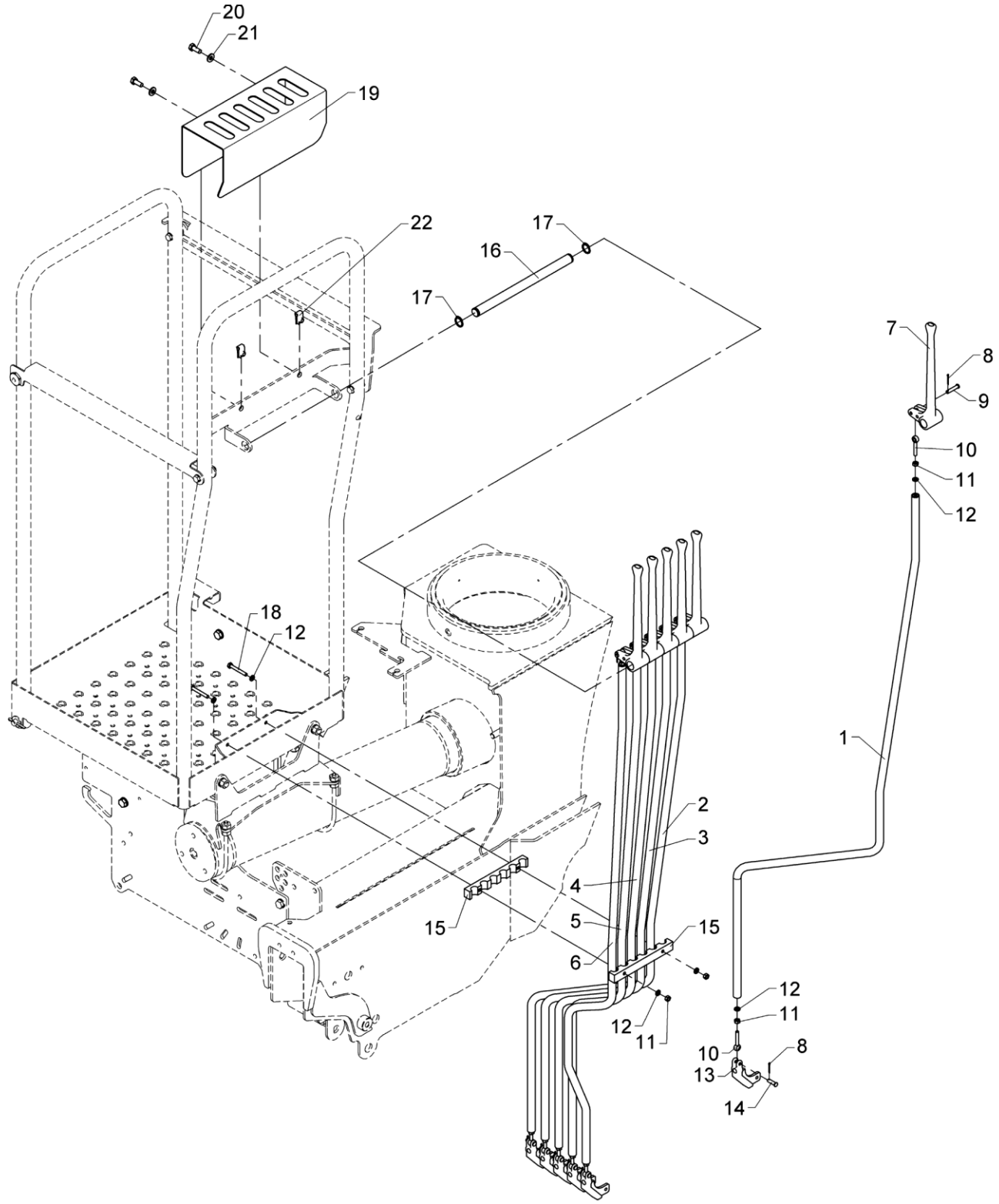

Obsolete

534 10 040

From loader 1060001
To loader 1061834

Created 16-04-2007
Modified

Rod control, HS std. - 6 functions

Pos	Qty.	Part no.	Description	Remarks
		6340480	Rod control 6 functions	
1	1	6340481	Connecting rod (slew)	
2	1	6340482	Connecting rod (boom)	
3	1	6340483	Connecting rod (jib)	
4	1	6340484	Connecting rod (extension)	
5	1	6340485	Connecting rod (1 EXV)	
6	1	6340486	Connecting rod (2 EXV)	
7	6	63423	Lever for dual controls	
8	12	31601	Split pin, stainless	ø1,6 x 20
9	6	31274	Cotter bolt	ø6 x 30
10	12	32114	Pin	M6 x 40
11	14	30854	Nut, stainless	M6
12	16	32302	Face washer, stainless	6 mm
13	6	63499	Adapter	
14	6	31271	Cotter bolt	ø6 x 21
15	2	63599	Guide	
16	1	6660954	Pin for 5 levers	
17	2	33107	Circlip	19U
18	2	30118	Steel pin, stainless	M6 x 45
19	1	6340477	Protection	
20	2	30132	Set screw, stainless	M8 x 20
21	2	31754	Washer	8,4 x 18 x 2
22	2	31069	Clip	M8 1,5 - 5,5 mm.

1500K, 1510K, 1720K, 1730K, 1820K, 1830K

Internal ref. 63 43 770

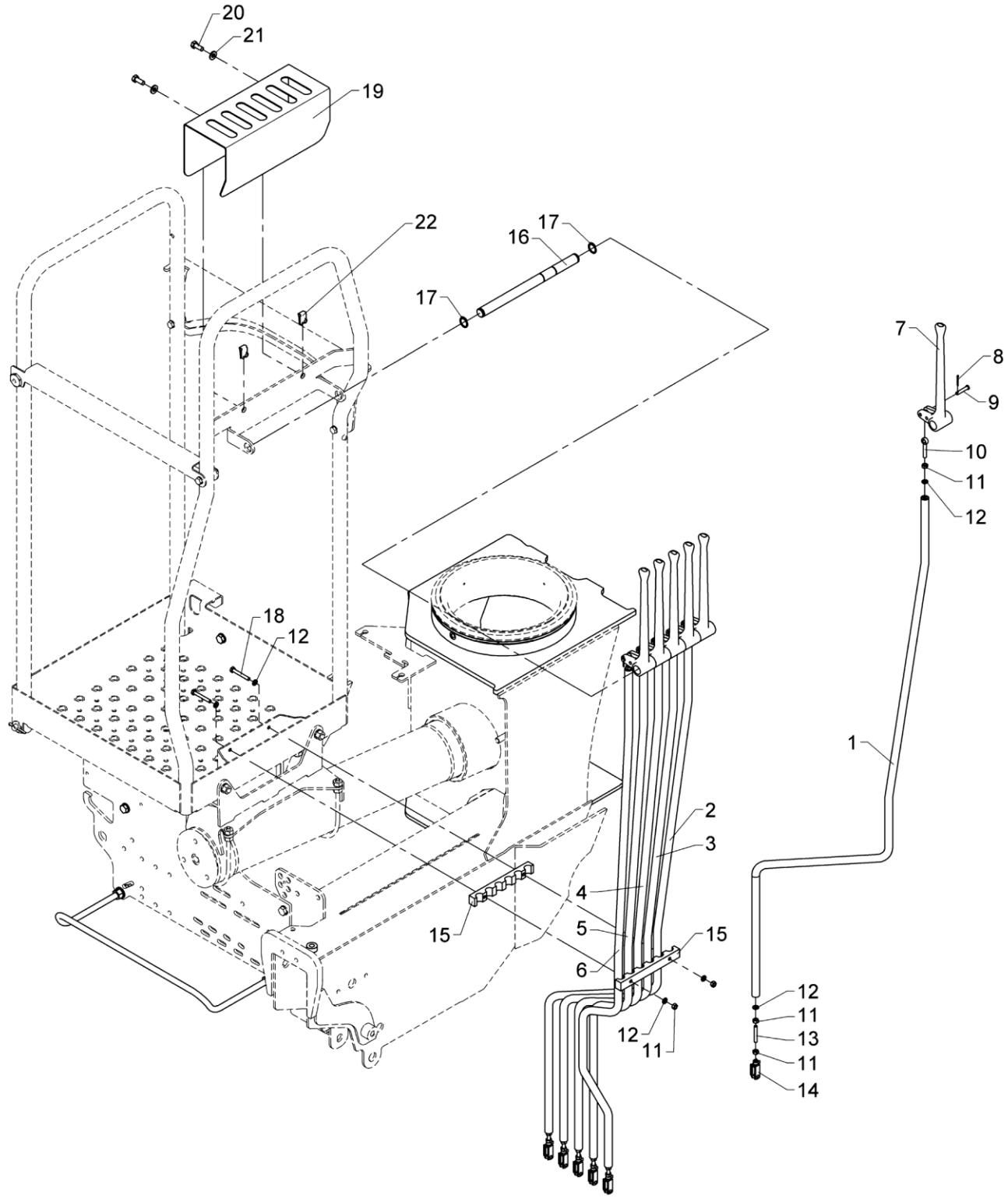

Rod control, HS std. - 6 functions

Pos	Qty.	Part no.	Description	Remarks
		6343770		
1	1	6341481	Connecting rod (Slew)	
2	1	6341482	Connecting rod (Boom)	
3	1	6341483	Connecting rod (Jib)	
4	1	6341484	Connecting rod (Extension)	
5	1	6341485	Connecting rod (1 EXV)	
6	1	6341486	Connecting rod (2 EXV)	
7	6	63423	Lever for dual controls	
8	6	31601	Split pin, stainless	
9	6	31274	Cotter bolt	ø6 x 30
10	6	32114	Pin	M6 x 40
11	20	30854	Nut, stainless	M6
12	16	32302	Face washer, stainless	6 mm
13	6	31007	Pointed screw	MSP6 x 40
14	6	48414	Clevis	
15	2	63599	Guide	
16	1	6660954	Pin for 5 levers	
17	2	33107	Circlip	
18	2	30118	Steel pin, stainless	M6 x 45
19	1	6340477	Protection	
20	2	30132	Set screw, stainless	
21	2	31754	Washer	8 mm
22	2	31069	Clip	M8 1,5 - 5,5 mm.

1500K, 1510K, 1720K, 1730K, 1820K, 1830K

Internal ref. 63 40 490

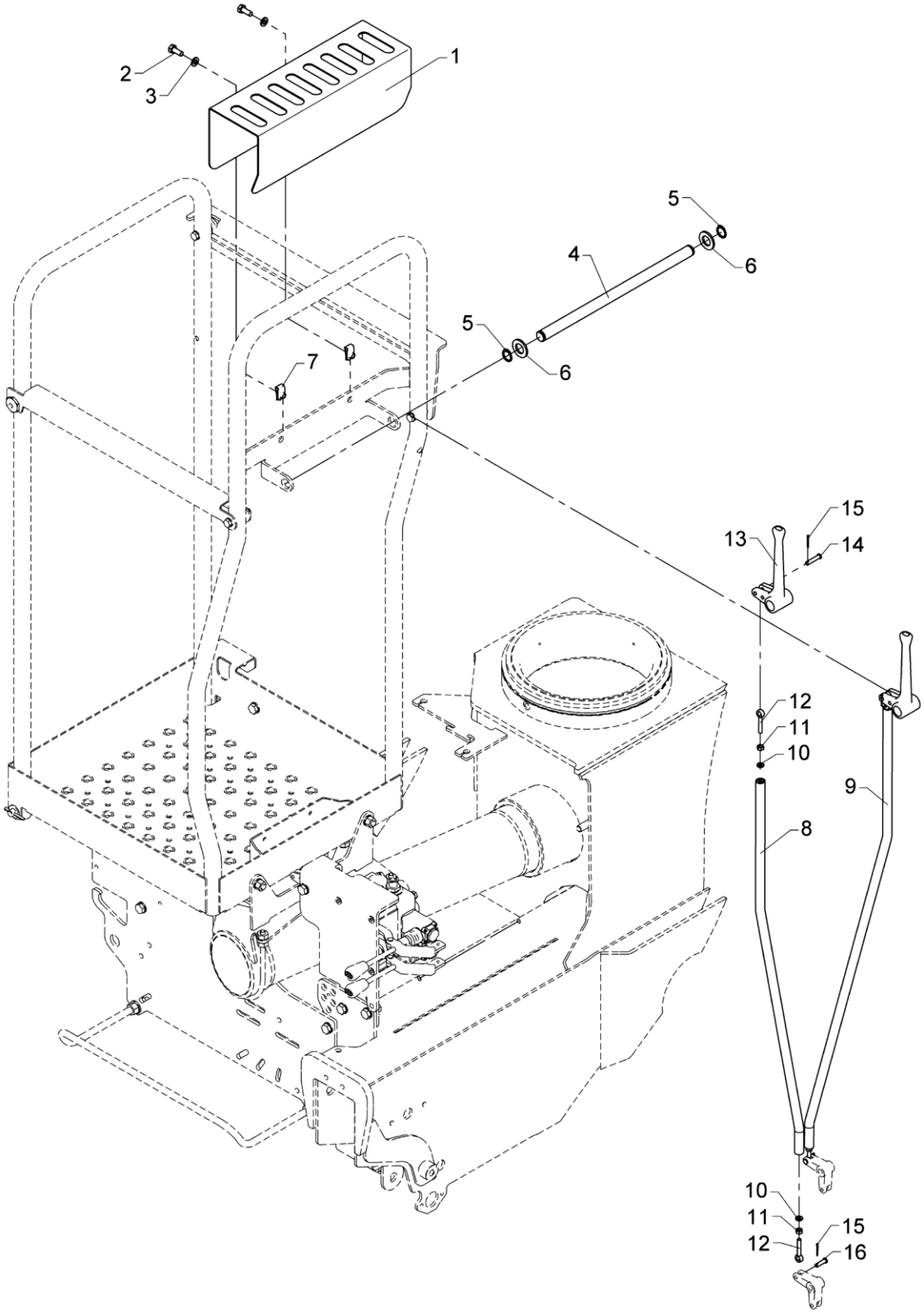

Stabilizer operation, HS std. - 2/4 fcts.

Created 12-01-2010
Modified 12-02-2014

Pos	Qty.	Part no.	Description	Remarks
1	1	6340478	Protection	
2	2	30132	Set screw, stainless	M8 x 20
3	2	31147	Face washer, 8 mm	8 mm
4	1	6340476	Pin	
5	2	33107	Circlip	19U
6	2	31132	Washer	18 mm
7	2	31069	Clip	M8 1,5 - 5,5 mm.
8	1	6340487	Connecting rod, (stab.right)	
9	1	6340488	Connecting rod, (stab.left)	
10	4	32302	Face washer, stainless	6 mm
11	4	30854	Nut, stainless	M6
12	4	32114	Pin	M6 x 40
13	2	63422	Lever for dual controls	
14	2	31274	Cotter bolt	ø6 x 30
15	4	31601	Split pin, stainless	ø1,6 x 20
16	2	31271	Cotter bolt	ø6 x 21

1500K, 1510K, 1720K, 1730K, 1820K, 1830K

63 41 660
Internal ref. 63 41 650

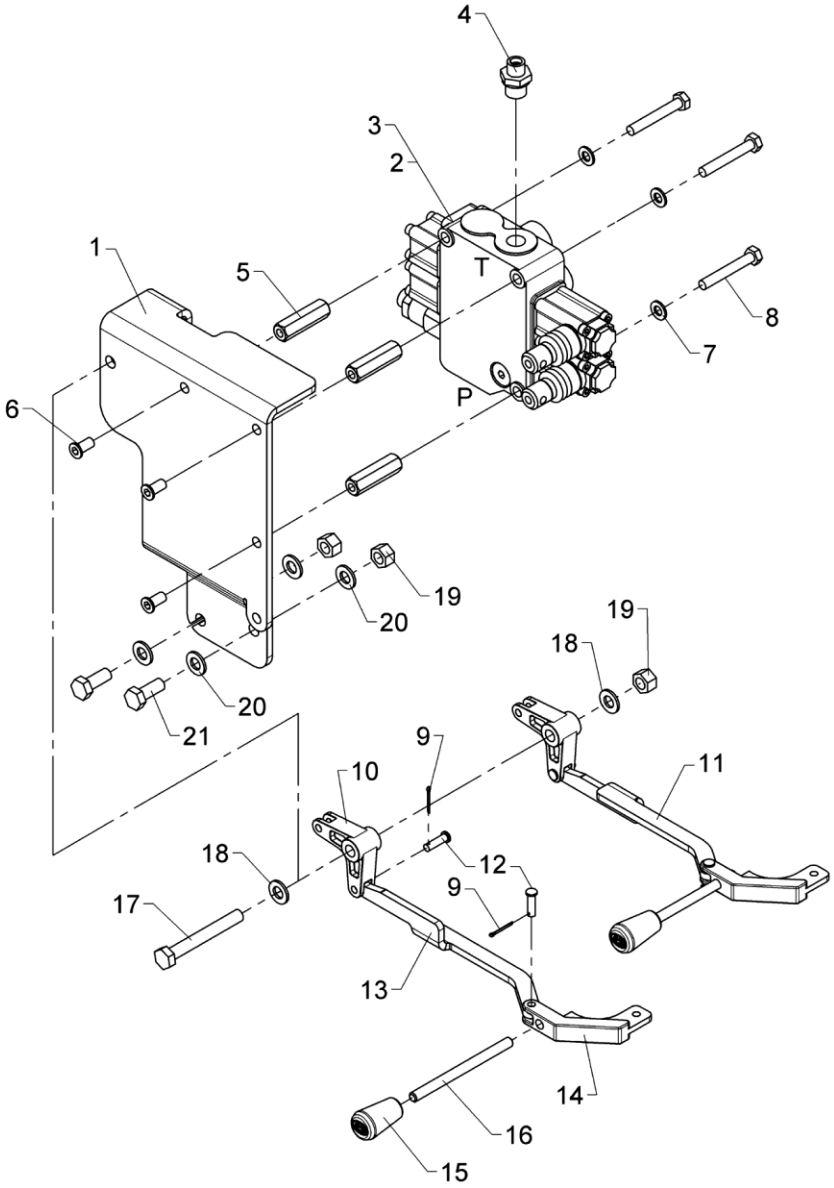

Obsolete

Valve bracket - HS 2 fcts./4 fcts. (oper. from HS)

534 10 070

From loader 1060001
To loader 1061386

Created 12-01-2010
Modified 08-05-2014

Pos	Qty.	Part no.	Description	Remarks
		6341650	Valve bracket, HS 2 functions	
		6341660	Valve bracket, HS 4 functions	
1	1	6340492	Valve bracket (HS)	
2	1	55225	Stabilizer valve	HC-M50/2 PB 48926
3	1	55226	Stabilizer valve	HC-M50/4 PB-4 sekt 48925
4	1	25244	Connection	GES 8 LR 3/8-WD
5	3	6340222	Spacer	
6	3	32481	Screw	MCL8 x 16
7	3	31147	Face washer, 8 mm	8 mm
8	3	30140	Steel bolt, stainless	M8 x 55
9	4	31601	Split pin, stainless	ø1,6 x 20
10	2	63479	Bracket	
11	1	6340491	Link	
12	4	31271	Cotter bolt	
13	1	6340489	Link	
14	2	63478	Adapter	
15	2	59224	Knob for lever	
16	2	1330187	Control lever, long, straight	
17	1	30163	Steel bolt	M10 x 80
18	2	31565	Washer, stainless	10 mm
19	3	31564	Lock nut, stainless	M10
20	4	31177	Washer	10 mm
21	2	31513	Set screw, stainless	M10 x 25

1500K, 1510K, 1720K, 1730K, 1820K, 1830K

63 41 660
Internal ref. 63 41 650

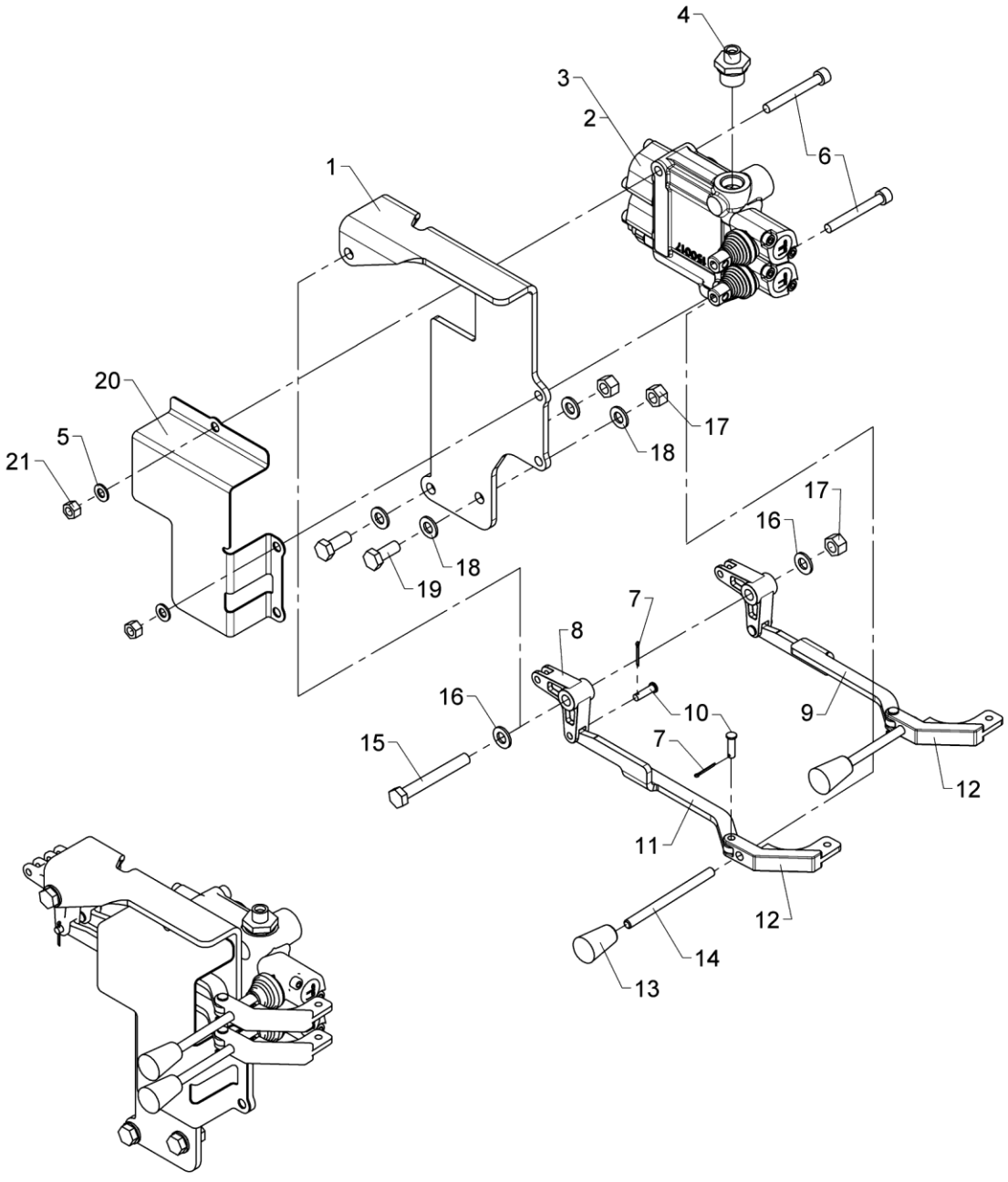

Valve bracket - HS 2 fcts./4 fcts. (oper. from HS)

Pos	Qty.	Part no.	Description	Remarks
		6341650	Valve bracket, HS 2 functions	
		6341660	Valve bracket, HS 4 functions	
1	1	6344874	Valve bracket (HS)	
2	1	55738	Stabilizer control valve	63 41 650
3	1	55737	Stabilizer control valve	63 41 660
4	1	25687	Straight connection 8l 182"	24-SDS-L8-G1/2E
5	2	31147	Face washer, 8 mm	8 mm
6	2	32367	Screw	MC8 x 65
7	4	31601	Split pin, stainless	ø1,6 x 20
8	2	63479	Bracket	
9	1	6340491	Link	
10	4	31271	Cotter bolt	
11	1	6340489	Link	
12	2	63478	Adapter	
13	2	59224	Knob for lever	
14	2	1330187	Control lever, long, straight	
15	1	30163	Steel bolt	M10 x 80
16	2	31565	Washer, stainless	10 mm
17	3	31564	Lock nut, stainless	M10
18	4	31177	Washer	10 mm
19	2	31513	Set screw, stainless	M10 x 25
20	1	6344877	Valve bracket (HS)	
21	2	30886	Lock nut, stainless	M8

1500K, 1510K, 1720K, 1730K, 1820K, 1830K

Internal ref. 63 42 490

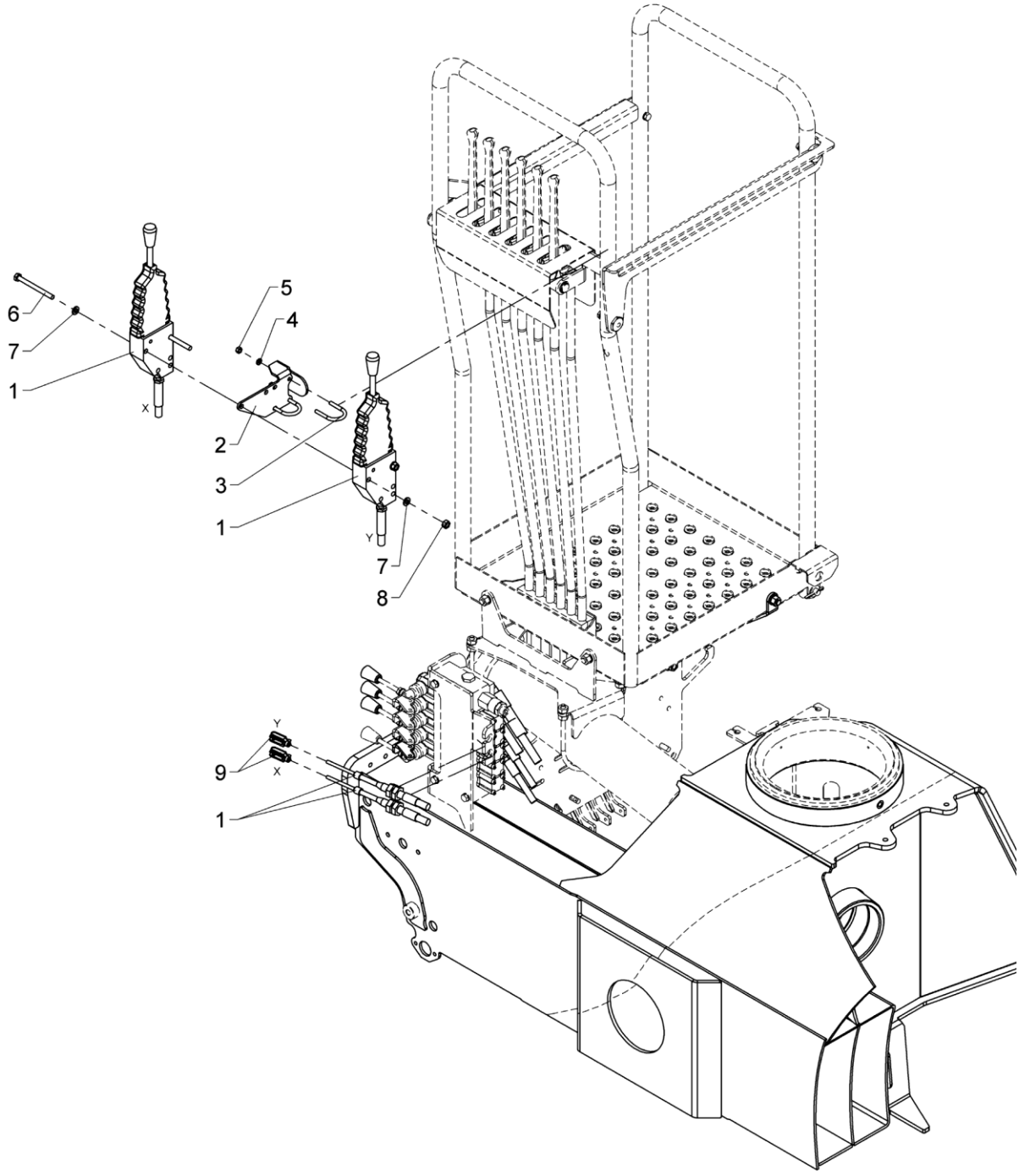

Stabilizer operation, HS std. - 4 fcts. + 4 available fcts.

Pos	Qty.	Part no.	Description	Remarks
1	2	48465	Push-pull cable incl. lever	1500 mm
2	1	6340499	Fittings	
3	2	6340903	Clamp	
4	4	32302	Face washer, stainless	6 mm
5	4	30854	Nut, stainless	M6
6	2	30144	Steel bolt, stainless	M8 x 90
7	4	31147	Face washer, 8 mm	8 mm
8	2	30856	Nut, stainless	M8
9	2	48414	Clevis	

1500K, 1510K, 1720K, 1730K, 1820K, 1830K

63 45 470
Internal ref. 63 41 470

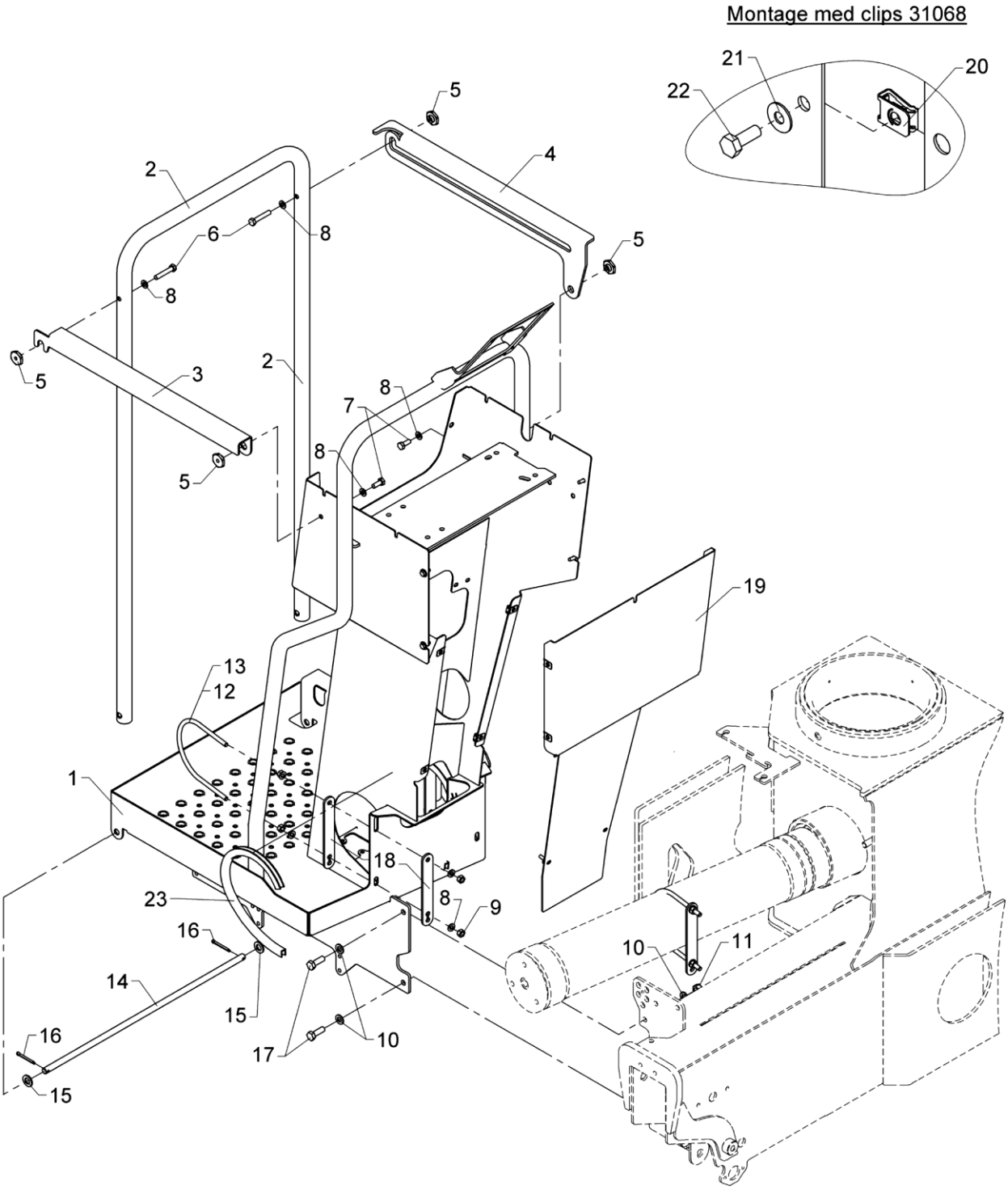

Stand-up controls, direct valve control

Pos	Qty.	Part no.	Description	Remarks
		6341470	Stand-up control - direct ctrl	
		6345470	Stand-up control - direct ctrl	
1	1	6340851	Platform	
2	1	6340865	Safety guard	
3	1	6340867	Railing	
4	1	6340868	Railing	
5	4	6340475	Nut	
6	2	31511	Set screw, stainless	M8 x 45
7	2	30132	Set screw, stainless	M8 x 20
8	12	31147	Face washer, 8 mm	8 mm
9	8	30856	Nut, stainless	M8
10	4	31565	Washer, stainless	10 mm
11	2	31564	Lock nut, stainless	M10
12	2	6340878	Clamp	Serie 1300/1500
13	2	6344878	Clamp	Serie 1800/2200
14	1	6340866	Pin	
15	2	32338	Washer	12 mm
16	2	31638	Split pin	ø4 x 40
17	2	30156	Set screw, stainless	M10 x 30
18	4	6340864	Division plate	
19	1	6340869	End plate	
20	8	31068	Clip	M6 0,5 - 4,0 mm.
21	8	32306	Washer	6 mm
22	8	30112	Set screw, stainless	M6 x 16
23	2	22122	PVC protection	410 mm

1500K, 1510K, 1720K, 1730K, 1820K, 1830K

63 46 640
Internal ref. 63 43 640

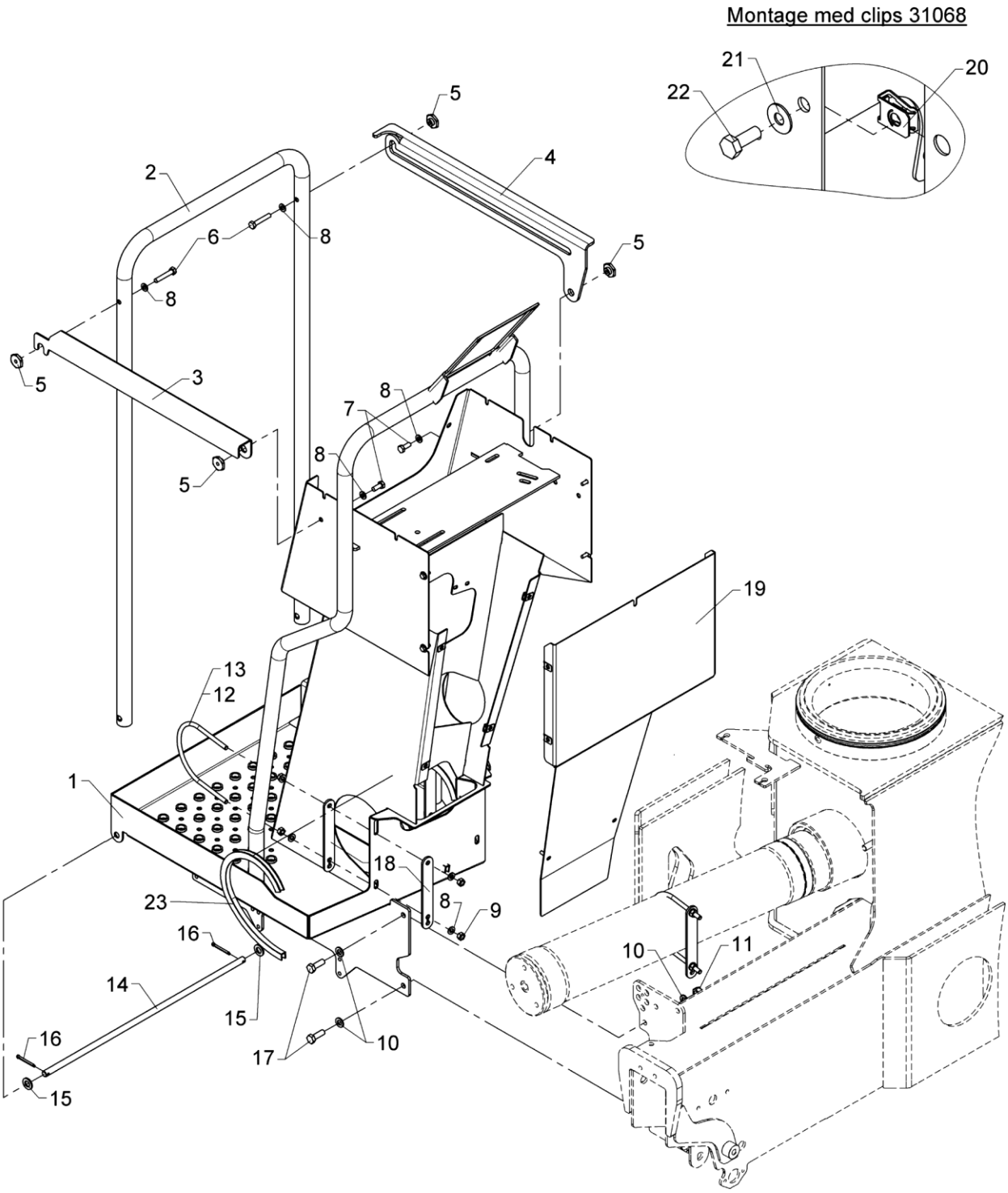

Obsolete

534 10 200 A

From loader

To loader

Stand-up controls, direct valve control

Created 31-10-2013

Modified 08-01-2014

Pos	Qty.	Part no.	Description	Remarks
		6343640	Stand-up control - direct ctrl	Serie 1300/1500
		6346640	Stand-up control - direct ctrl	Serie 1800/2200/1943Z
1	1	6341851	Platform	
2	1	6340865	Safety guard	
3	1	6340867	Railing	
4	1	6340868	Railing	
5	4	6340475	Nut	
6	2	31511	Set screw, stainless	M8 x 45
7	2	30132	Set screw, stainless	
8	12	31147	Face washer, 8 mm	
9	8	30856	Nut, stainless	M8
10	4	31565	Washer, stainless	10 mm
11	2	31564	Lock nut, stainless	M10
12	2	6340878	Clamp	Serie 1300/1500
13	2	6344878	Clamp	Serie 1800/2200
14	1	6340866	Pin	
15	2	32338	Washer	12 mm
16	2	31638	Split pin	ø4 x 40
17	2	30156	Set screw, stainless	M10 x 30
18	4	6340864	Division plate	
19	1	6341869	End plate	
20	8	31068	Clip	M6 0,5 - 4,0 mm.
21	8	32306	Washer	6 mm
22	8	30112	Set screw, stainless	M6 x 16
23	2	22122	PVC protection	410 mm

1500K, 1510K, 1720K, 1730K, 1820K, 1830K

63 46 640
Internal ref. 63 43 640

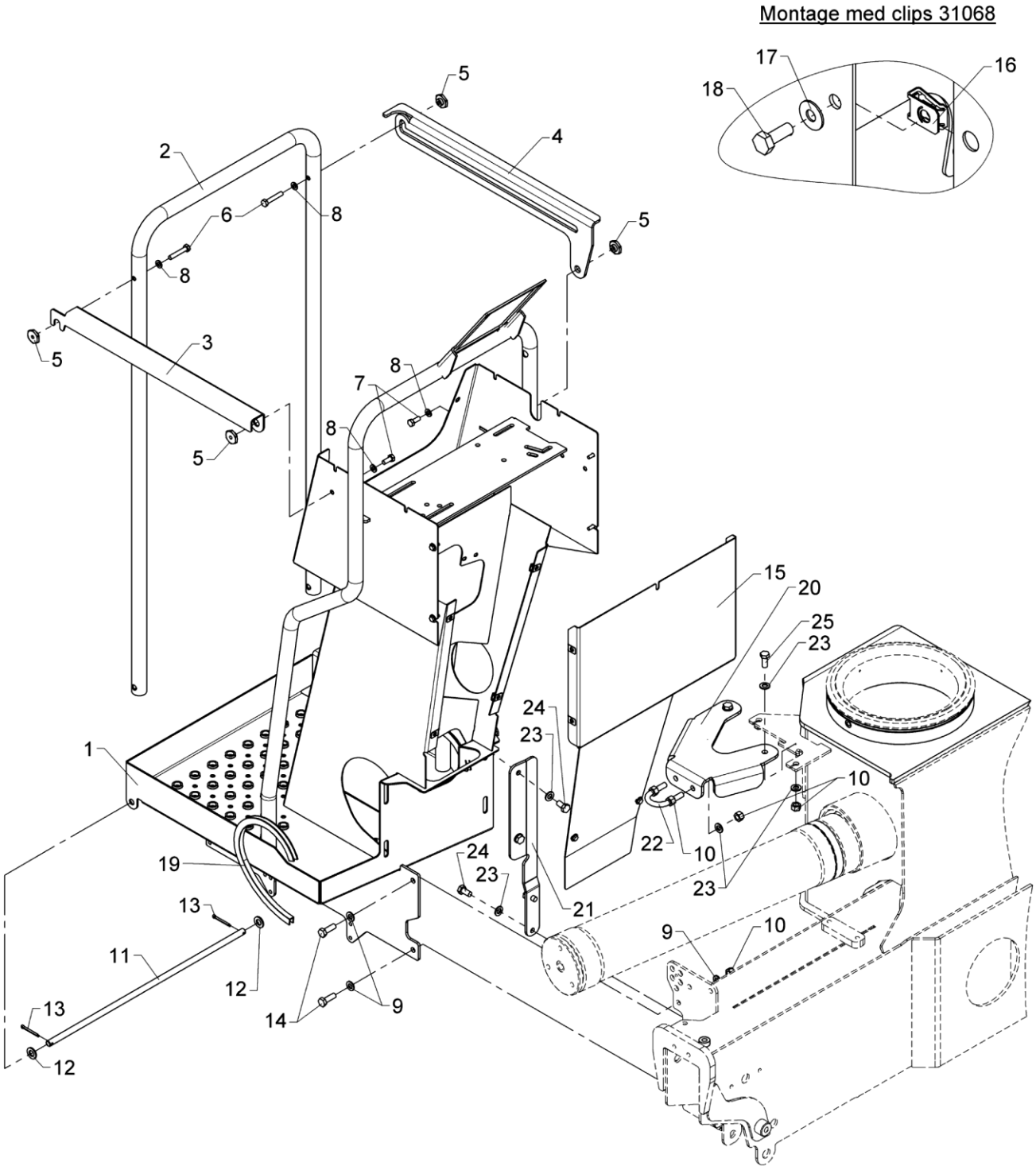

Stand-up controls, direct valve control

Pos	Qty.	Part no.	Description	Remarks
		6343640	Stand-up control - direct ctrl	Serie 1300/1500
		6346640	Stand-up control - direct ctrl	Serie 1800/2200/1943Z
1	1	6341851	Platform	
2	1	6340865	Safety guard	
3	1	6340867	Railing	
4	1	6340868	Railing	
5	4	6340475	Nut	
6	2	31511	Set screw, stainless	M8 x 45
7	2	30132	Set screw, stainless	
8	4	31147	Face washer, 8 mm	
9	4	31565	Washer, stainless	10 mm
10	10	31564	Lock nut, stainless	M10
11	1	6340866	Pin	
12	2	32338	Washer	12 mm
13	2	31638	Split pin	ø4 x 40
14	2	30156	Set screw, stainless	M10 x 30
15	1	6341869	End plate	
16	8	31068	Clip	M6 0,5 - 4,0 mm.
17	8	32306	Washer	6 mm
18	8	30112	Set screw, stainless	M6 x 16
19	2	22122	PVC protection	410 mm
20	1	6344452	Stand-up ctrls, direct,bracket	
21	1	6344459	Mounting fittings	
22	1	44291	U-clamp without nut and washer	
23	12	31177	Washer	10 mm
24	4	31517	Set screw, stainless	M10 x 20
25	2	30155	Set screw	M10 x 25

1500K, 1510K, 1720K, 1730K, 1820K, 1830K

Internal ref. 63 41 480

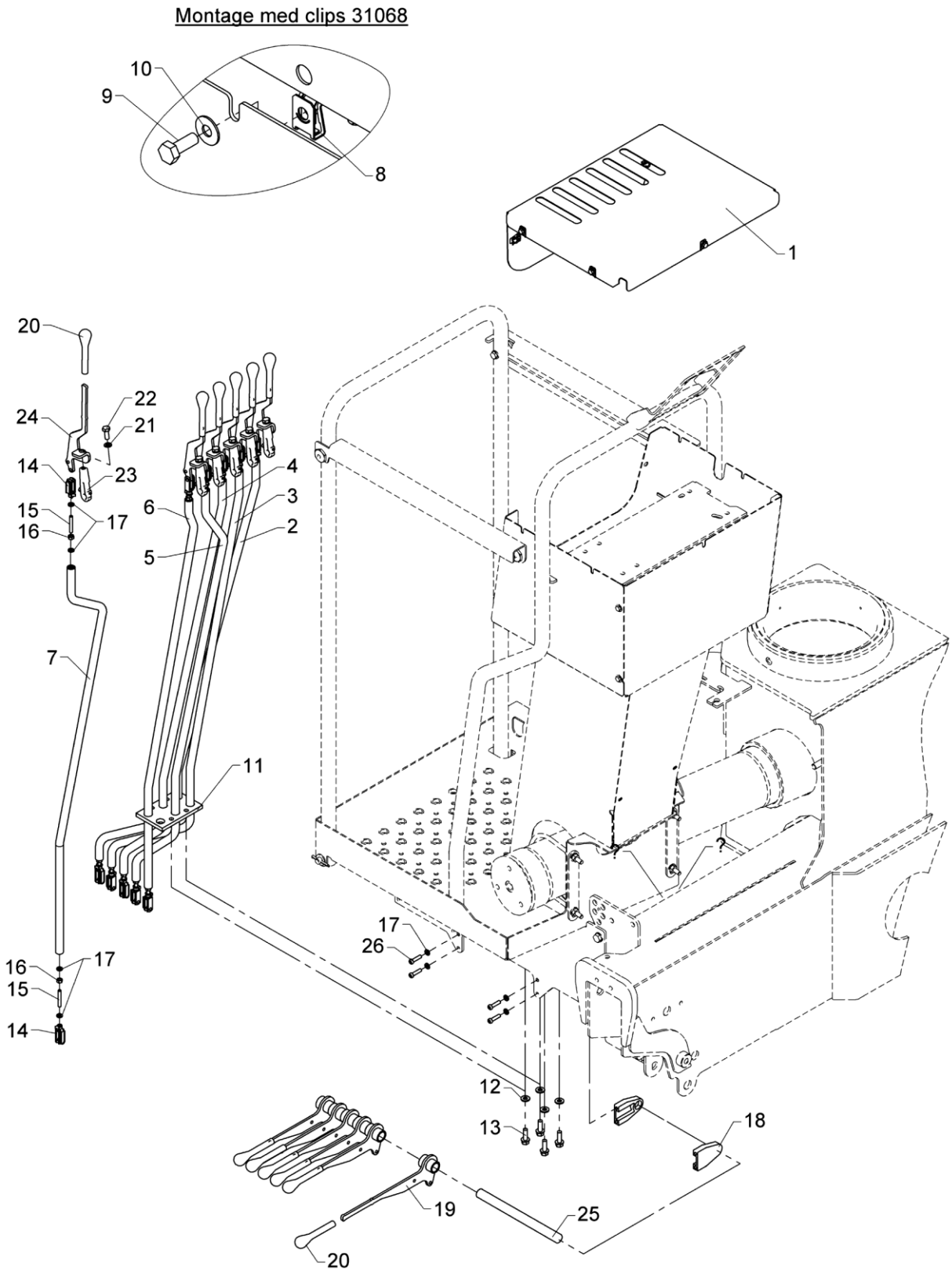

Obsolete

Rod control, HS, direct valve control (Danfoss)

534 10 210

From loader 1060001
To loader 1060978

Created 12-01-2010
Modified 31-10-2013

Pos	Qty.	Part no.	Description	Remarks
1	1	6340871	Protection plate (Danfoss)	
2	1	6340891	Connecting rod (slew)	
3	1	6340892	Connecting rod (boom)	
4	1	6340893	Connecting rod (jib)	
5	1	6340894	Connecting rod (extension)	
6	1	6340895	Connecting rod (EXV1)	
7	1	6340896	Connecting rod (EXV2)	
8	7	31068	Clip	M6 0,5 - 4,0 mm.
9	7	30112	Set screw, stainless	M6 x 16
10	7	32306	Washer	6 mm
11	1	64412	Guide	
12	4	31754	Washer	8,4 x 18 x 2
13	4	30996	Screw	M8 x 25
14	12	48414	Clevis	
15	12	31007	Pointed screw	MSP6 x 40
16	12	30854	Nut, stainless	M6
17	28	32302	Face washer, stainless	6 mm
18	2	63564	Bracket for pin	
19	6	6340875	Lever	
20	12	48406	Knob	
21	6	31155	Spring washer	8 mm
22	6	30132	Set screw, stainless	M8 x 20
23	6	59682	Foot for lever	
24	6	6306159	Control lever	
25	1	6340249	Pin	
26	4	30340	Screw, stainless	6,0 x 25

1500K, 1510K, 1720K, 1730K, 1820K, 1830K

Internal ref. 63 43 650

Montage med clips 31068

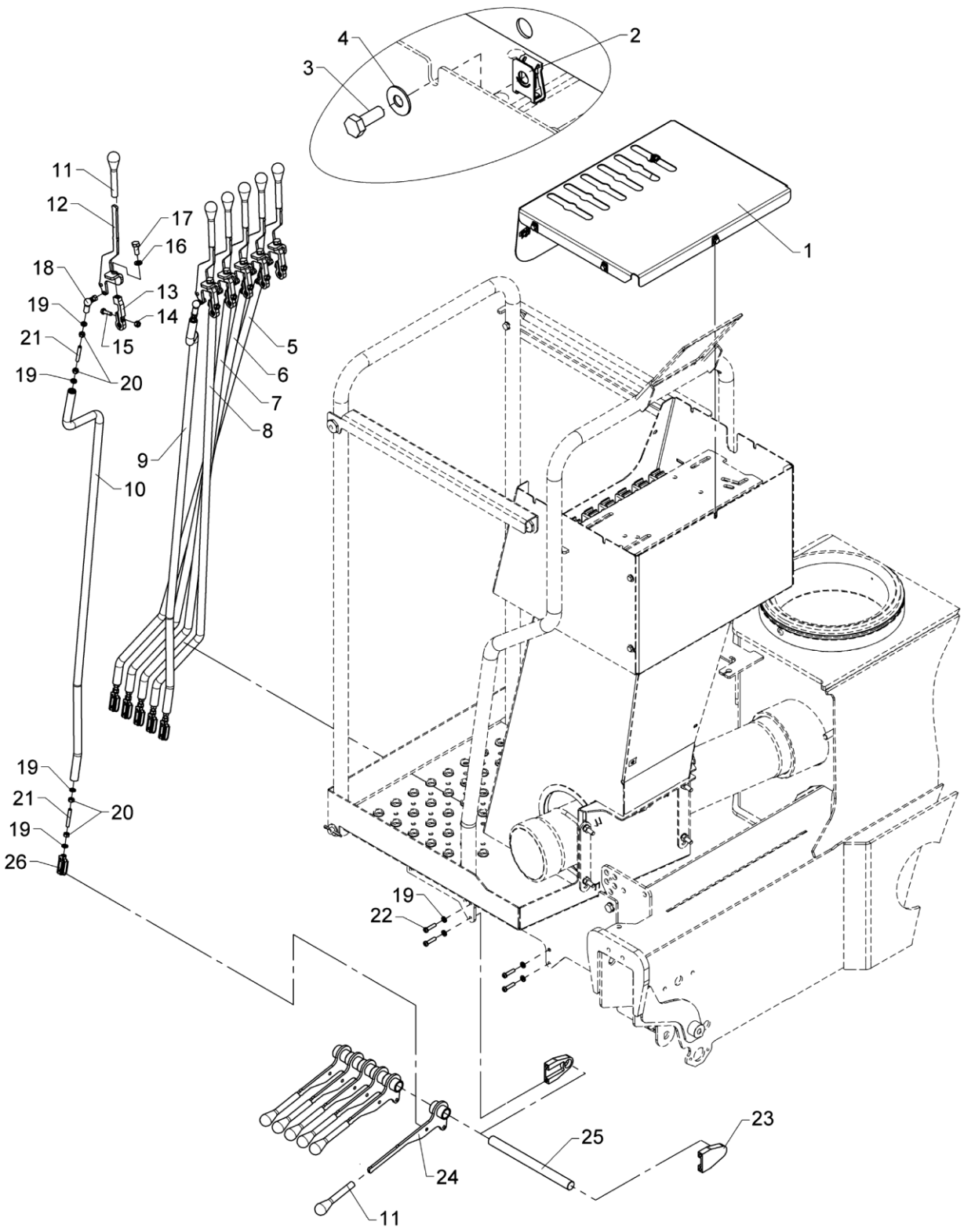

Obsolete

Rod control, HS, direct valve control (Danfoss)

534 10 210 A

From loader 1061484
To loader 1061548

Created 31-10-2013
Modified 28-02-2014

Pos	Qty.	Part no.	Description	Remarks
1	1	6341861	Protection plate (Danfoss)	
2	7	31068	Clip	M6 0,5 - 4,0 mm.
3	7	30112	Set screw, stainless	M6 x 16
4	7	32306	Washer	6 mm
5	1	6341891	Connecting rod (slew - Danfoss	
6	1	6341892	Connecting rod (boom)	
7	1	6341893	Connecting rod (jib)	
8	1	6341894	Connecting rod (ext.Danfoss)	
9	1	6341895	Connecting rod (1EXV-Danfoss	
10	1	6341896	Connecting rod (2EXV-Danfoss	
11	12	48406	Knob	
12	6	6306159	Control lever	
13	6	6344475	Foot for lever	
14	6	30884	Lock nut, stainless	M6
15	6	30113	Set screw, stainless	M6 x 20
16	6	31155	Spring washer	8 mm
17	6	30132	Set screw, stainless	
18	6	24105	Toggle joint	
19	28	32302	Face washer, stainless	6 mm
20	24	30854	Nut, stainless	M6
21	12	31007	Pointed screw	MSP6 x 40
22	4	30340	Screw, stainless	6,0 x 25
23	2	63564	Bracket for pin	
24	6	6340875	Lever	
25	1	6340249	Pin	
26	6	48414	Clevis	

1500K, 1510K, 1720K, 1730K, 1820K, 1830K

Internal ref. 63 54 710

Montage med clips 31068

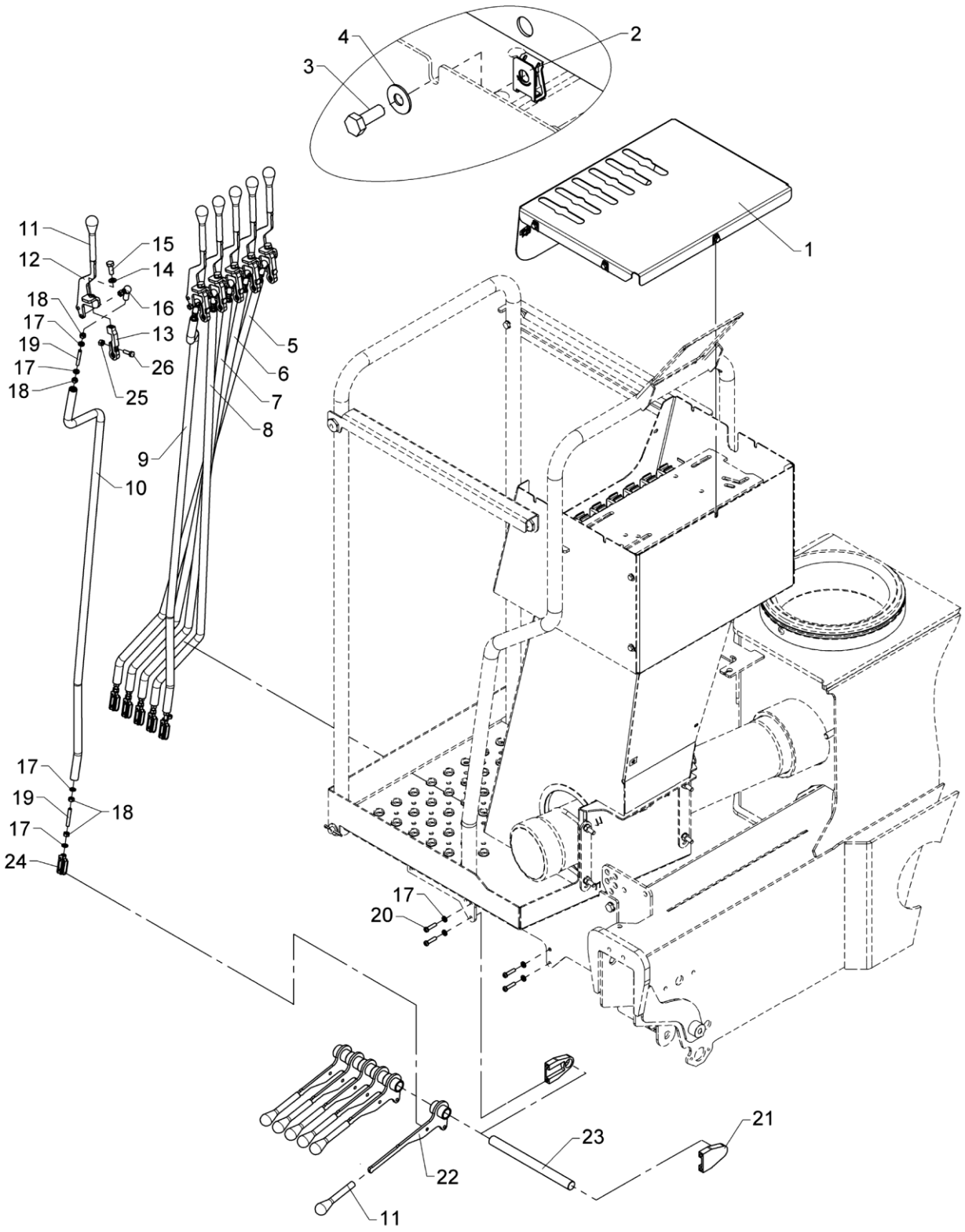

Rod control, HS, direct valve control (Danfoss)

Pos	Qty.	Part no.	Description	Remarks
1	1	6341871	Protection plate (Danfoss)	
2	7	31068	Clip	M6 0,5 - 4,0 mm.
3	7	30112	Set screw, stainless	M6 x 16
4	7	32306	Washer	6 mm
5	1	6341891	Connecting rod (slew - Danfoss	
6	1	6341892	Connecting rod (boom)	
7	1	6341893	Connecting rod (jib)	
8	1	6341894	Connecting rod (ext.Danfoss)	
9	1	6341895	Connecting rod (1EXV-Danfoss	
10	1	6341896	Connecting rod (2EXV-Danfoss	
11	12	48406	Knob	
12	6	6306159	Control lever	
13	6	6344475	Foot for lever	
14	6	31155	Spring washer	8 mm
15	6	30132	Set screw, stainless	
16	6	24105	Toggle joint	
17	28	32302	Face washer, stainless	6 mm
18	24	30854	Nut, stainless	M6
19	12	31007	Pointed screw	MSP6 x 40
20	4	30340	Screw, stainless	6,0 x 25
21	2	63564	Bracket for pin	
22	6	6340875	Lever	
23	1	6340249	Pin	
24	6	48414	Clevis	
25	6	30884	Lock nut, stainless	M6
26	6	30113	Set screw, stainless	M6 x 20

1500K, 1510K, 1720K, 1730K, 1820K, 1830K

Internal ref. 63 41 550

Montage med clips 31068

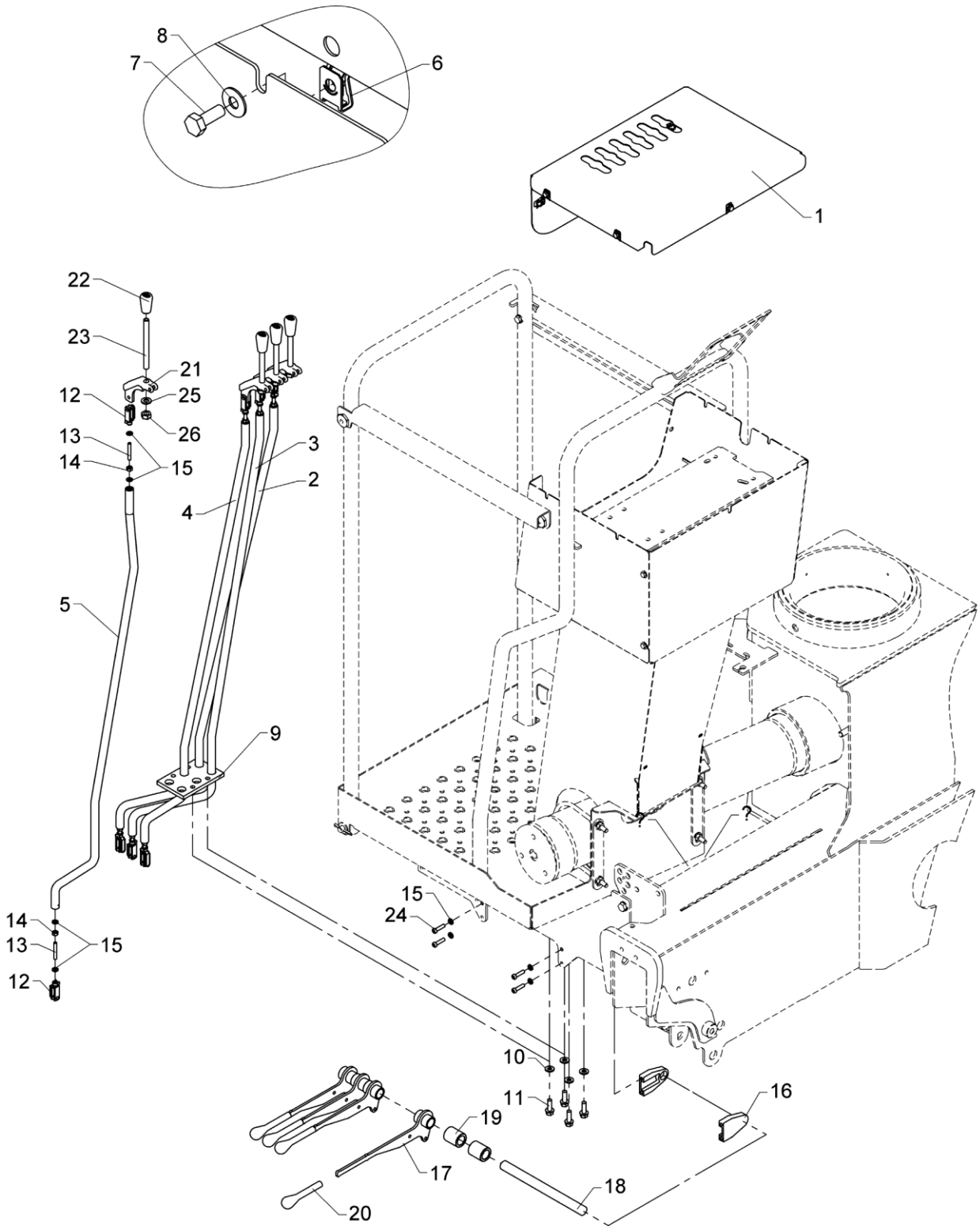

Obsolete

534 10 220

From loader 1060001
To loader

Created 12-01-2010
Modified

Rod control, HS, direct valve control (Hydrocontrol) - 4 fcts.

Pos	Qty.	Part no.	Description	Remarks
1	1	6340872	Protection plate (HC - 1 circ.	
2	1	6340881	Connecting rod (slew-HC)	
3	1	6340882	Connecting rod (boom-HC)	
4	1	6340883	Connecting rod (jib-HC)	
5	1	6340884	Connecting rod (extension-HC)	
6	7	31068	Clip	M6 0,5 - 4,0 mm.
7	7	30112	Set screw, stainless	M6 x 16
8	7	32306	Washer	6 mm
9	1	64412	Guide	
10	4	31754	Washer	8,4 x 18 x 2
11	4	30996	Screw	M8 x 25
12	8	48414	Clevis	
13	8	31007	Pointed screw	MSP6 x 40
14	8	30854	Nut, stainless	M6
15	20	32302	Face washer, stainless	6 mm
16	2	63564	Bracket for pin	
17	4	6340875	Lever	
18	1	6340249	Pin	
19	2	63598	Bushing	ø30/20x35
20	4	48406	Knob	
21	4	63499	Adapter	
22	4	64411	Knob for lever	
23	4	6340245	Control valve lever	
24	4	30340	Screw, stainless	6,0 x 25
25	4	31177	Washer	10 mm
26	4	30858	Nut	M10

1500K, 1510K, 1720K, 1730K, 1820K, 1830K

Internal ref. 63 43 660

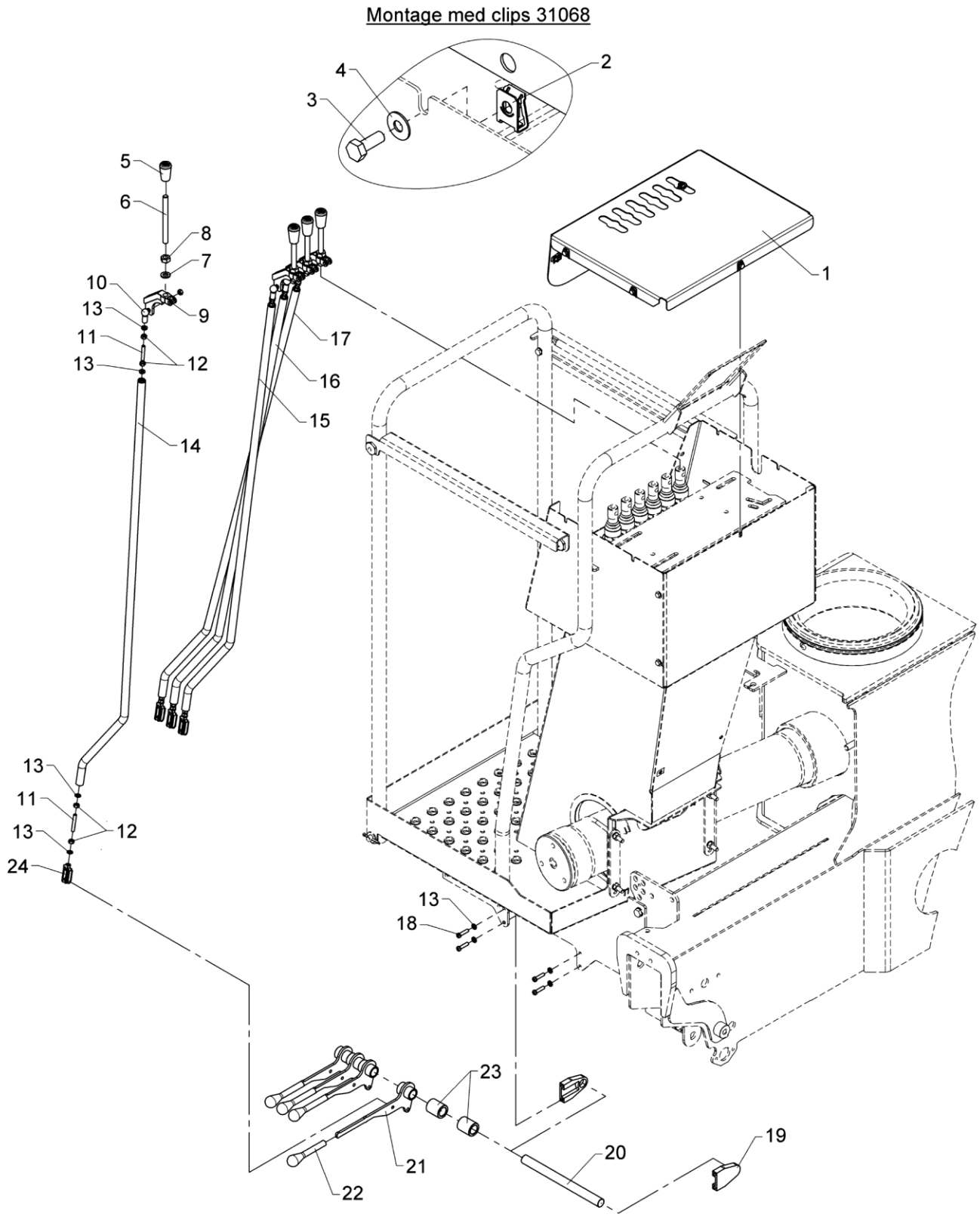

Rod control, HS, direct valve control (Hydrocontrol) - 4 fcts.

Pos	Qty.	Part no.	Description	Remarks
1	1	6341862	Protection plate (HC-1 circ.)	
2	7	31068	Clip	M6 0,5 - 4,0 mm.
3	7	30112	Set screw, stainless	M6 x 16
4	7	32306	Washer	6 mm
5	4	64411	Knob for lever	
6	4	6340245	Control valve lever	
7	4	31177	Washer	10 mm
8	4	30858	Nut	M10
9	4	63499	Adapter	
10	4	24105	Toggle joint	
11	8	31007	Pointed screw	MSP6 x 40
12	16	30854	Nut, stainless	M6
13	20	32302	Face washer, stainless	6 mm
14	1	6341884	Connecting rod (extensionHC)	
15	1	6341883	Connecting rod (jib HC)	
16	1	6341882	Connecting rod (boom HC)	
17	1	6341881	Connecting rod (slew HC)	
18	4	30340	Screw, stainless	6,0 x 25
19	2	63564	Bracket for pin	
20	1	6340249	Pin	
21	4	6340875	Lever	
22	4	48406	Knob	
23	2	63598	Bushing	ø30/ø20 x 35
24	4	48414	Clevis	

1500K, 1510K, 1720K, 1730K, 1820K, 1830K

Internal ref. 63 41 560

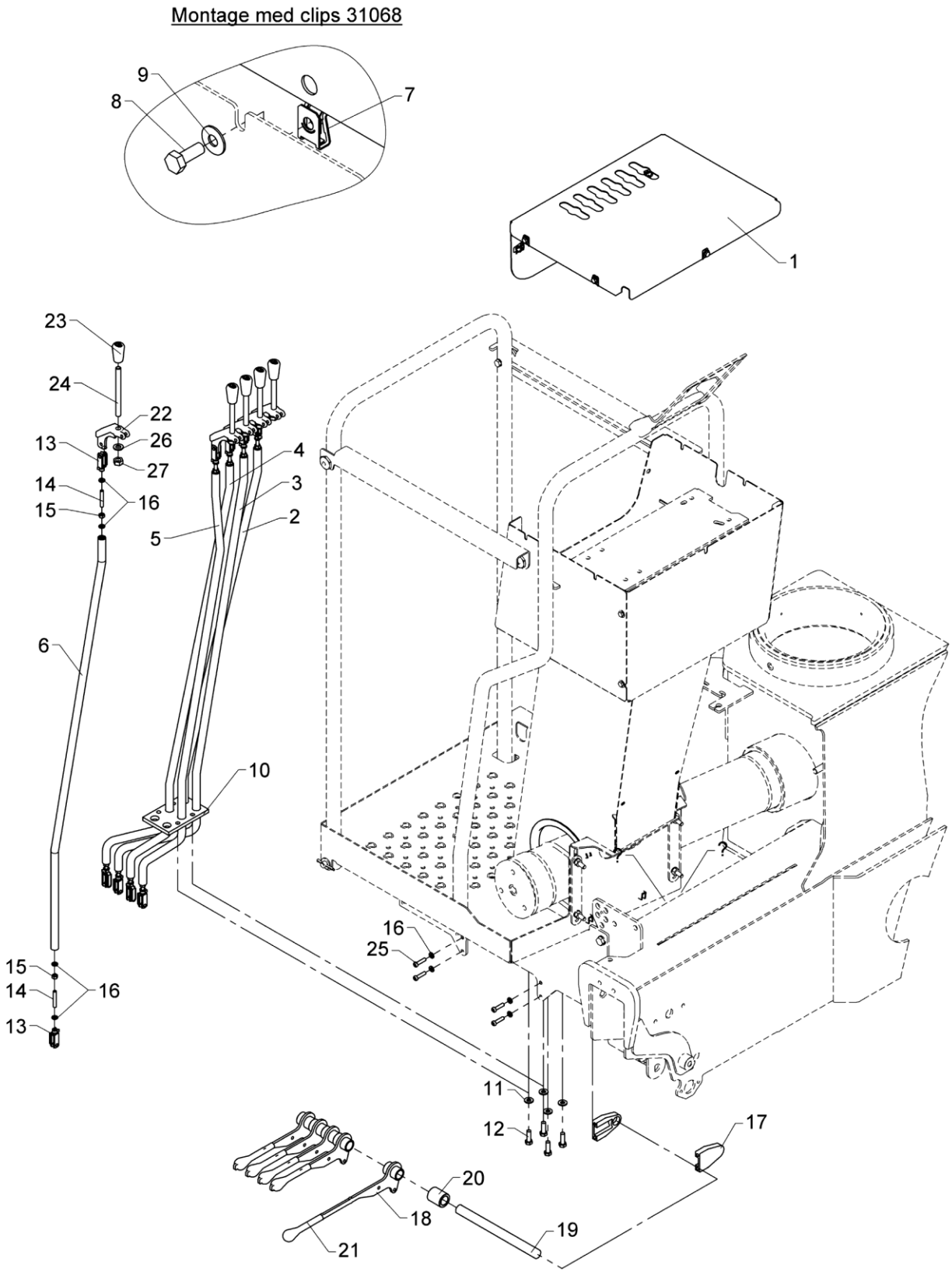

Obsolete

534 10 230

From loader 1060001
To loader

Created 12-01-2010
Modified

Rod control, HS, direct valve control (Hydrocontrol) - 5 fcts.

Pos	Qty.	Part no.	Description	Remarks
1	1	6340872	Protection plate (HC - 1 circ.	
2	1	6340881	Connecting rod (slew-HC)	
3	1	6340882	Connecting rod (boom-HC)	
4	1	6340883	Connecting rod (jib-HC)	
5	1	6340884	Connecting rod (extension-HC)	
6	1	6340885	Connecting rod (EXV1-HC)	
7	7	31068	Clip	M6 0,5 - 4,0 mm.
8	7	30112	Set screw, stainless	M6 x 16
9	7	32306	Washer	6 mm
10	1	64412	Guide	
11	4	31754	Washer	8,4 x 18 x 2
12	4	30996	Screw	M8 x 25
13	10	48414	Clevis	
14	10	31007	Pointed screw	MSP6 x 40
15	10	30854	Nut, stainless	M6
16	24	32302	Face washer, stainless	6 mm
17	2	63564	Bracket for pin	
18	5	6340875	Lever	
19	1	6340249	Pin	
20	1	63598	Bushing	ø30/20x35
21	5	48406	Knob	
22	5	63499	Adapter	
23	5	64411	Knob for lever	
24	5	6340245	Control valve lever	
25	4	30340	Screw, stainless	6,0 x 25
26	5	31177	Washer	10 mm
27	5	30858	Nut	M10

1500K, 1510K, 1720K, 1730K, 1820K, 1830K

Internal ref. 63 43 670

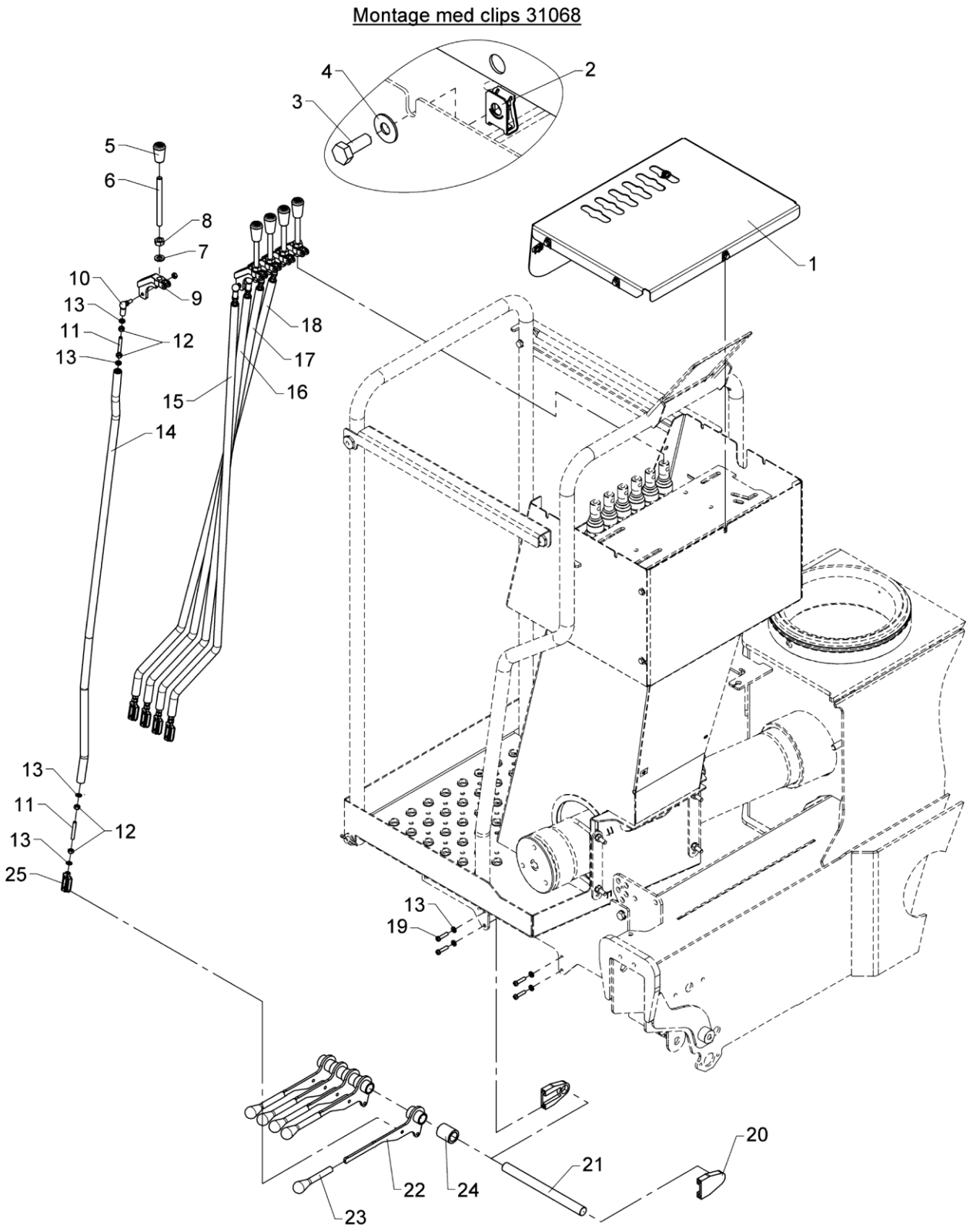

Rod control, HS, direct valve control (Hydrocontrol) - 5 fcts.

Created 31-10-2013
Modified 13-12-2012

Pos	Qty.	Part no.	Description	Remarks
1	1	6341862	Protection plate (HC-1 circ.)	
2	7	31068	Clip	M6 0,5 - 4,0 mm.
3	7	30112	Set screw, stainless	M6 x 16
4	7	32306	Washer	6 mm
5	5	64411	Knob for lever	
6	5	6340245	Control valve lever	
7	5	31177	Washer	10 mm
8	5	30858	Nut	M10
9	5	63499	Adapter	
10	5	24105	Toggle joint	
11	10	31007	Pointed screw	MSP6 x 40
12	20	30854	Nut, stainless	M6
13	24	32302	Face washer, stainless	6 mm
14	1	6341885	Connecting rod (1EXV-HC	
15	1	6341884	Connecting rod (extensionHC)	
16	1	6341883	Connecting rod (jib HC)	
17	1	6341882	Connecting rod (boom HC)	
18	1	6341881	Connecting rod (slew HC)	
19	4	30340	Screw, stainless	6,0 x 25
20	2	63564	Bracket for pin	
21	1	6340249	Pin	
22	5	6340875	Lever	
23	5	48406	Knob	
24	1	63598	Bushing	ø30/ø20 x 35
25	5	48414	Clevis	

1500K, 1510K, 1720K, 1730K, 1820K, 1830K

63 41 590
Internal ref. 63 41 490

Montage med clips 31068

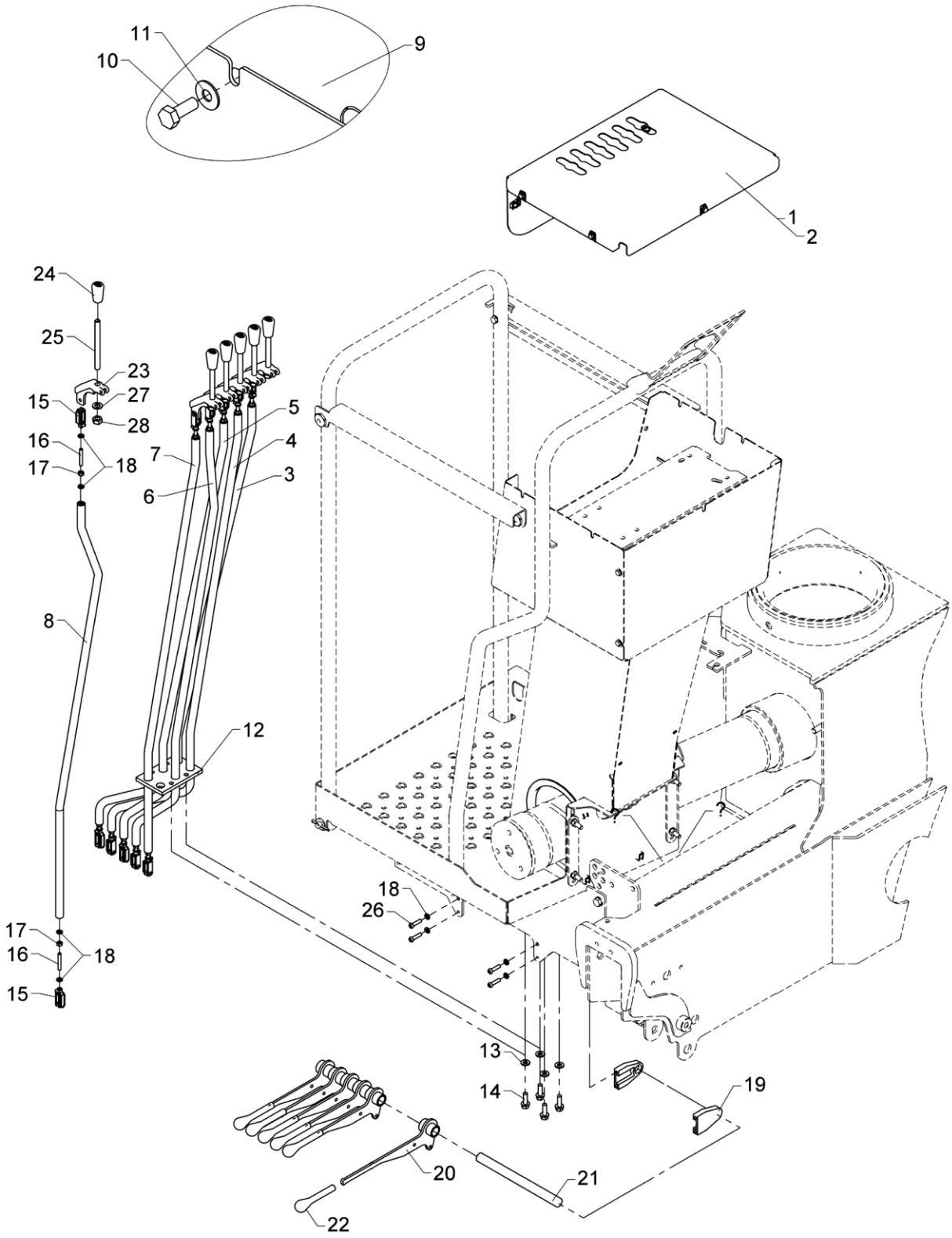

Obsolete

534 10 240

From loader 1060001
To loader

Created 12-01-2010
Modified

Rod control, HS, direct valve control (Hydrocontrol) - 6 fcts.

Pos	Qty.	Part no.	Description	Remarks
		6341490	Rod control, HS 6 functions	
		6341590	Rod control, 6 functions	
1	1	6340872	Protection plate (HC - 1 circ.	
2	1	6340873	Protection plate (HC-2circuits	
3	1	6340881	Connecting rod (slew-HC)	
4	1	6340882	Connecting rod (boom-HC)	
5	1	6340883	Connecting rod (jib-HC)	
6	1	6340884	Connecting rod (extension-HC)	
7	1	6340885	Connecting rod (EXV1-HC)	
8	1	6340886	Connecting rod (EXV2-HC)	
9	7	31068	Clip	M6 0,5 - 4,0 mm.
10	7	30112	Set screw, stainless	M6 x 16
11	7	32306	Washer	6 mm
12	1	64412	Guide	
13	4	31754	Washer	8,4 x 18 x 2
14	4	30996	Screw	M8 x 25
15	12	48414	Clevis	
16	12	31007	Pointed screw	MSP6 x 40
17	12	30854	Nut, stainless	M6
18	28	32302	Face washer, stainless	6 mm
19	2	63564	Bracket for pin	
20	6	6340875	Lever	
21	1	6340249	Pin	
22	6	48406	Knob	
23	6	63499	Adapter	
24	6	64411	Knob for lever	
25	6	6340245	Control valve lever	
26	4	30340	Screw, stainless	6,0 x 25
27	6	31177	Washer	10 mm
28	6	30858	Nut	M10

1500K, 1510K, 1720K, 1730K, 1820K, 1830K

63 43 780
Internal ref. 63 43 680

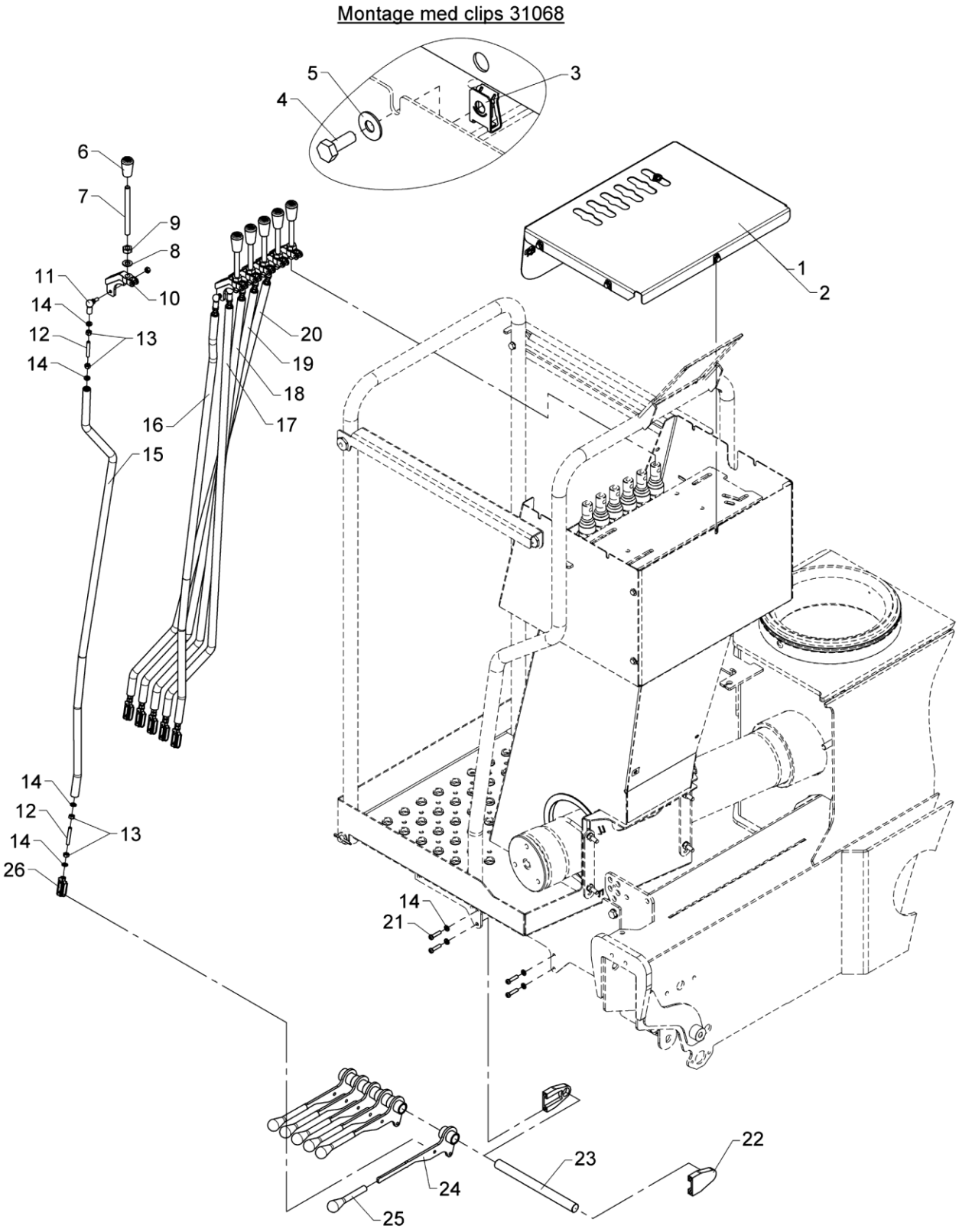

Rod control, HS, direct valve control (Hydrocontrol) - 6 fcts.

Pos	Qty.	Part no.	Description	Remarks
		6343680	Rod control, HS 6 fcts.	
		6343780	Rod control, HS 6 fcts, 2 circ	
1	1	6341862	Protection plate (HC-1 circ.)	
2	1	6341863	Protection plate (HC-2 circ.)	
3	7	31068	Clip	M6 0,5 - 4,0 mm.
4	7	30112	Set screw, stainless	M6 x 16
5	7	32306	Washer	6 mm
6	6	64411	Knob for lever	
7	6	6340245	Control valve lever	
8	6	31177	Washer	10 mm
9	6	30858	Nut	M10
10	6	63499	Adapter	
11	6	24105	Toggle joint	
12	12	31007	Pointed screw	MSP6 x 40
13	24	30854	Nut, stainless	M6
14	28	32302	Face washer, stainless	6 mm
15	1	6341886	Connecting rod (2EXV-HC)	
16	1	6341885	Connecting rod (1EXV-HC	
17	1	6341884	Connecting rod (extensionHC)	
18	1	6341883	Connecting rod (jib HC)	
19	1	6341882	Connecting rod (boom HC)	
20	1	6341881	Connecting rod (slew HC)	
21	4	30340	Screw, stainless	6,0 x 25
22	2	63564	Bracket for pin	
23	1	6340249	Pin	
24	6	6340875	Lever	
25	6	48406	Knob	
26	6	48414	Clevis	

1500K, 1510K, 1720K, 1730K, 1820K, 1830K

Internal ref. 63 43 690

Montage med clips 31068

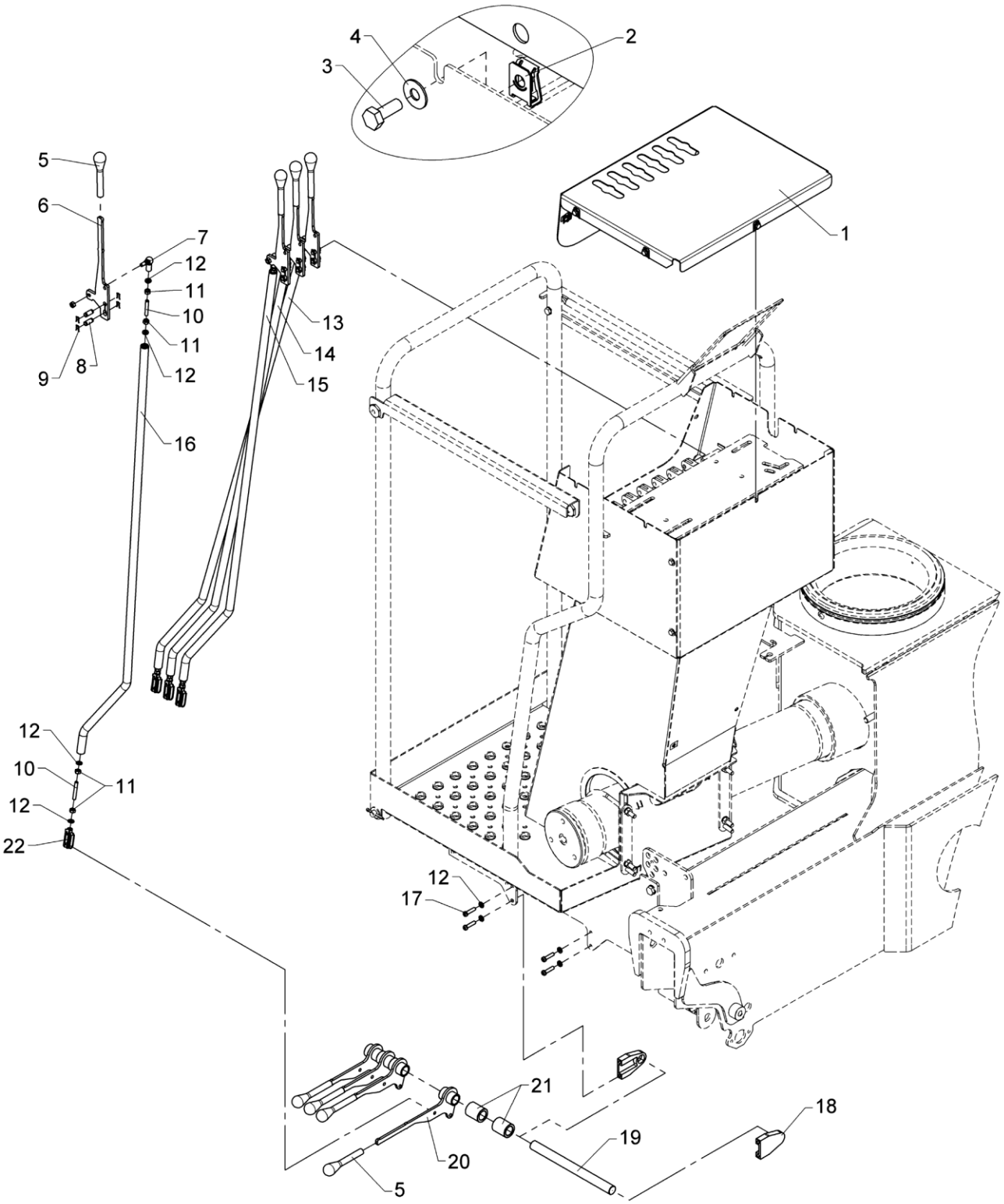

Rod control, HS, direct valve control (Nordhydraulik) - 4 fcts.

Created 04-06-2012
Modified 14-12-2012

Pos	Qty.	Part no.	Description	Remarks
1	1	6341864	Protection plate (NH-1circuit)	
2	7	31068	Clip	M6 0,5 - 4,0 mm.
3	7	30112	Set screw, stainless	M6 x 16
4	7	32306	Washer	6 mm
5	8	48406	Knob	
6	4	6882053	Control lever, long	
7	4	24105	Toggle joint	
8	8	61364	Pin	
9	16	61320	Lock for pin	
10	8	31007	Pointed screw	MSP6 x 40
11	16	30854	Nut, stainless	M6
12	20	32302	Face washer, stainless	6 mm
13	1	6341911	Connecting rod (slew NH)	
14	1	6341912	Connecting rod (boom NH2)	
15	1	6341913	Connecting rod (jib NH2)	
16	1	6341914	Connecting rod (extension NH	
17	4	30340	Screw, stainless	6,0 x 25
18	2	63564	Bracket for pin	
19	1	6340249	Pin	
20	4	6340875	Lever	
21	2	63598	Bushing	ø30/ø20 x 35
22	4	48414	Clevis	

1500K, 1510K, 1720K, 1730K, 1820K, 1830K

Internal ref. 63 43 700

Montage med clips 31068

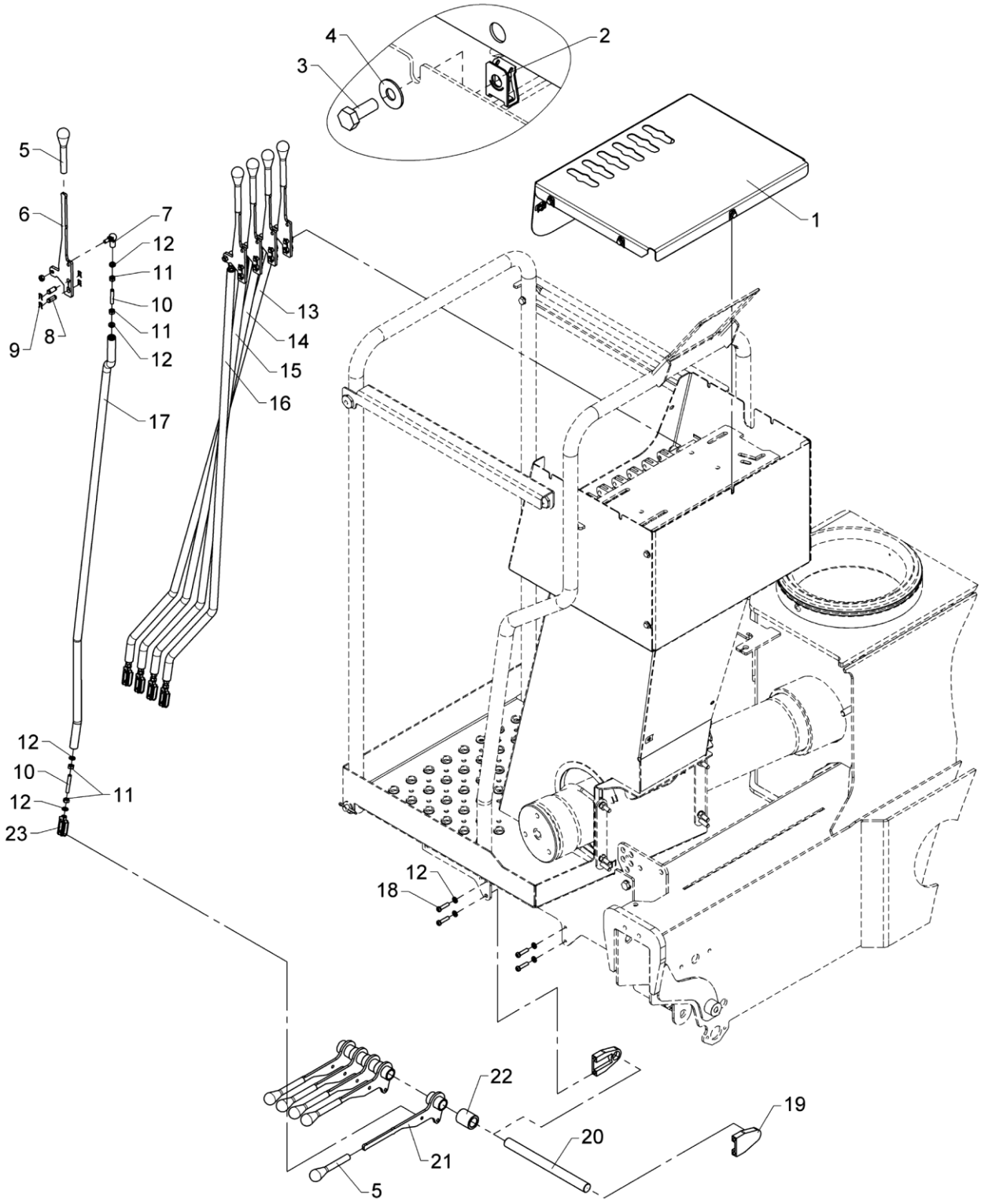

Rod control, HS, direct valve control (Nordhydraulik) - 5 fcts.

Created 06-06-2012
Modified 13-12-2012

Pos	Qty.	Part no.	Description	Remarks
1	1	6341864	Protection plate (NH-1circuit)	
2	7	31068	Clip	M6 0,5 - 4,0 mm.
3	7	30112	Set screw, stainless	M6 x 16
4	7	32306	Washer	6 mm
5	10	48406	Knob	
6	5	6882053	Control lever, long	
7	5	24105	Toggle joint	
8	10	61364	Pin	
9	20	61320	Lock for pin	
10	10	31007	Pointed screw	MSP6 x 40
11	20	30854	Nut, stainless	M6
12	24	32302	Face washer, stainless	6 mm
13	1	6341911	Connecting rod (slew NH)	
14	1	6341912	Connecting rod (boom NH2)	
15	1	6341913	Connecting rod (jib NH2)	
16	1	6341914	Connecting rod (extension NH	
17	1	6341915	Connecting rod (1EXV-NH-2)	
18	4	30340	Screw, stainless	6,0 x 25
19	2	63564	Bracket for pin	
20	1	6340249	Pin	
21	5	6340875	Lever	
22	1	63598	Bushing	ø30/ø20 x 35
23	5	48414	Clevis	

1500K, 1510K, 1720K, 1730K, 1820K, 1830K

Internal ref. 63 43 710

Montage med clips 31068

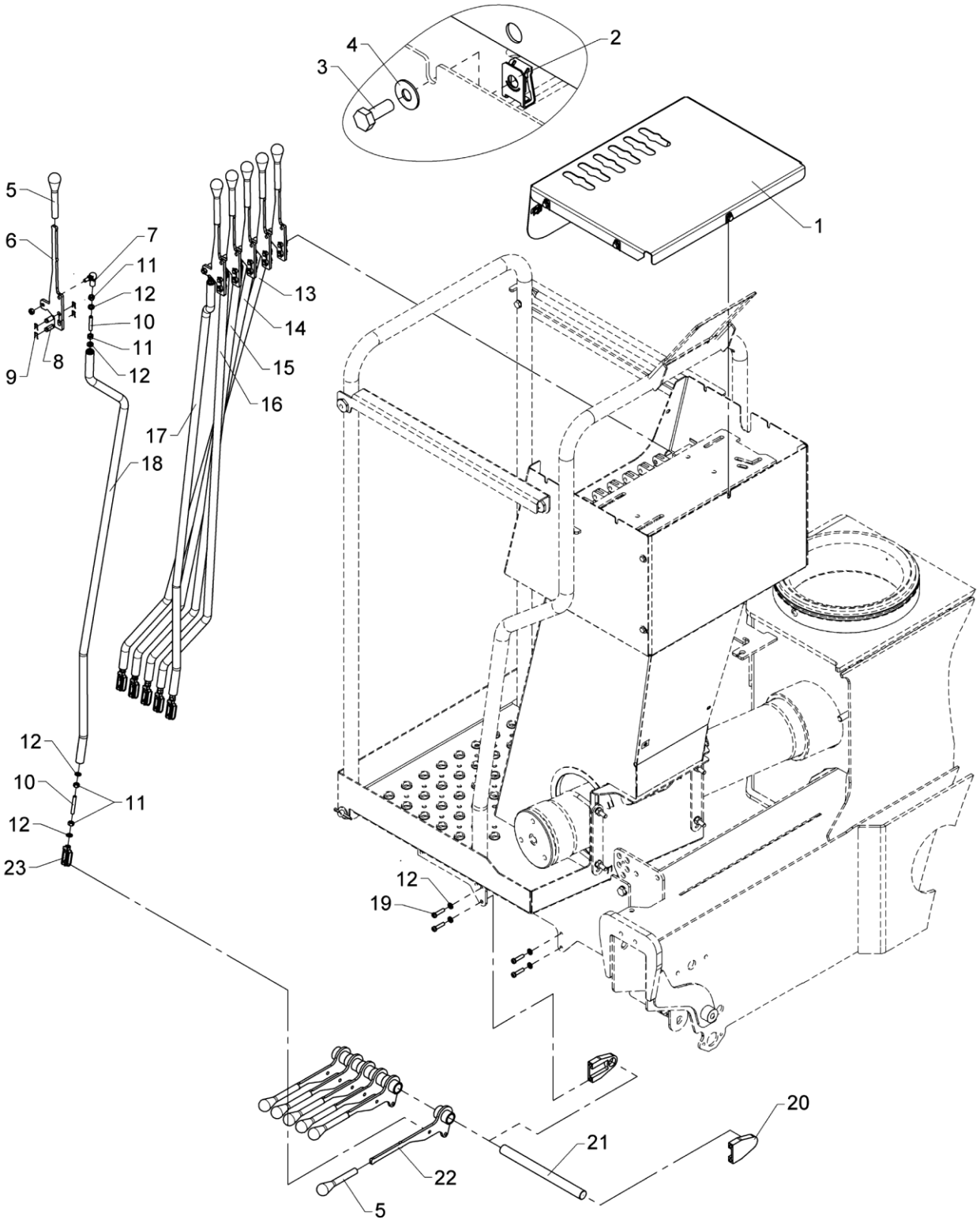

Rod control, HS, direct valve control (Nordhydraulik) - 6 fcts.

Created 07-06-2012
Modified 13-12-2012

Pos	Qty.	Part no.	Description	Remarks
1	1	6341864	Protection plate (NH-1circuit)	
2	7	31068	Clip	M6 0,5 - 4,0 mm.
3	7	30112	Set screw, stainless	M6 x 16
4	7	32306	Washer	6 mm
5	12	48406	Knob	
6	6	6882053	Control lever, long	
7	6	24105	Toggle joint	
8	12	61364	Pin	
9	24	61320	Lock for pin	
10	12	31007	Pointed screw	MSP6 x 40
11	24	30854	Nut, stainless	M6
12	28	32302	Face washer, stainless	6 mm
13	1	6341911	Connecting rod (slew NH)	
14	1	6341912	Connecting rod (boom NH2)	
15	1	6341913	Connecting rod (jib NH2)	
16	1	6341914	Connecting rod (extension NH	
17	1	6341915	Connecting rod (1EXV-NH-2)	
18	1	6341916	Connecting rod (2EXV-NH-2)	
19	4	30340	Screw, stainless	6,0 x 25
20	2	63564	Bracket for pin	
21	1	6340249	Pin	
22	6	6340875	Lever	
23	6	48414	Clevis	

1500K, 1510K, 1720K, 1730K, 1820K, 1830K

Internal ref. 63 43 720

Montage med clips 31068

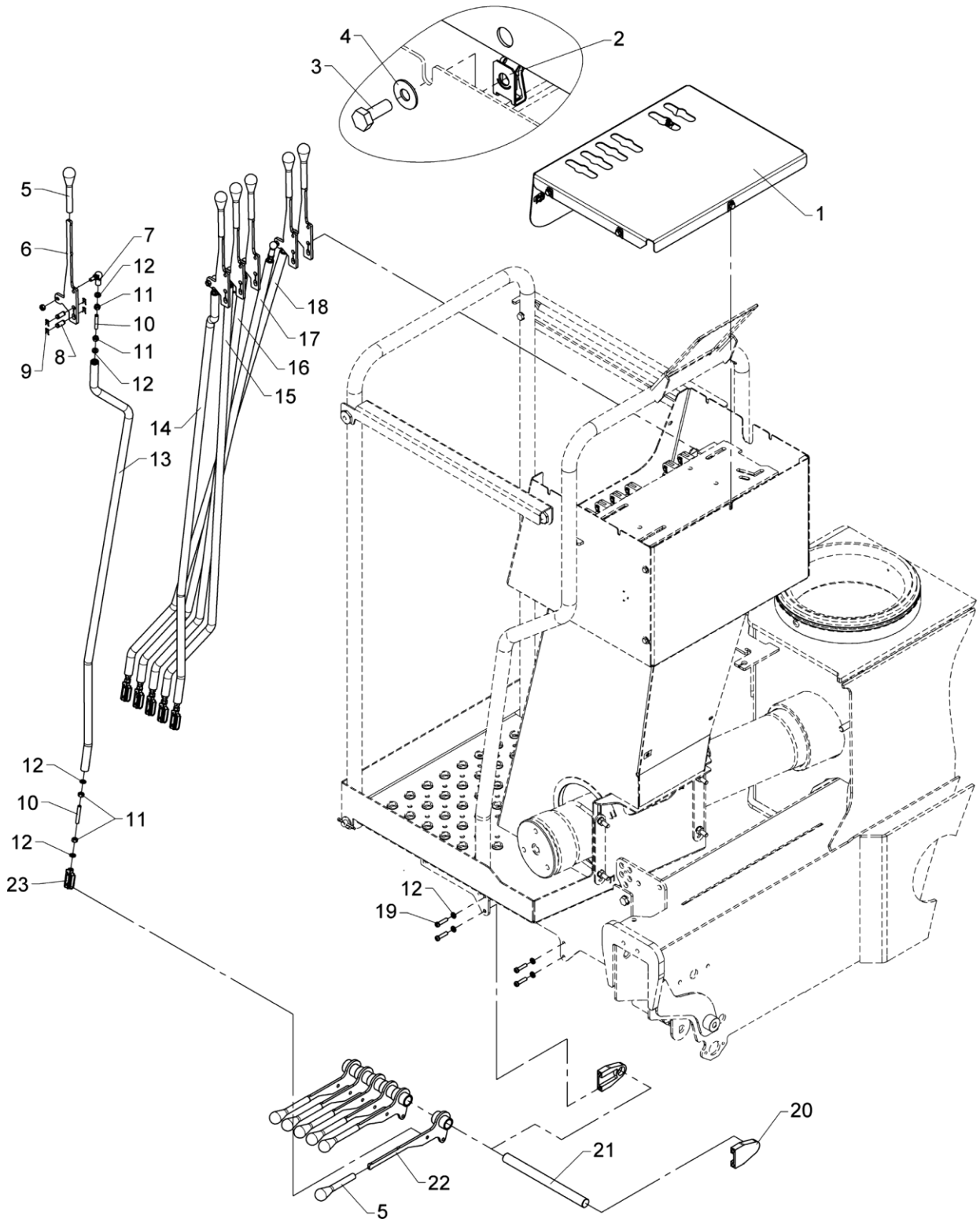

Rod control, HS, direct valve control (Nordhydraulik) - 6 fcts. - 2 circuits

Created 07-06-2012
Modified 12-12-2012

Pos	Qty.	Part no.	Description	Remarks
1	1	6341865	Protection plate (NH-2circuit)	
2	7	31068	Clip	M6 0,5 - 4,0 mm.
3	7	30112	Set screw, stainless	M6 x 16
4	7	32306	Washer	6 mm
5	12	48406	Knob	
6	6	6882053	Control lever, long	
7	6	24105	Toggle joint	
8	12	61364	Pin	
9	24	61320	Lock for pin	
10	12	31007	Pointed screw	MSP6 x 40
11	24	30854	Nut, stainless	M6
12	28	32302	Face washer, stainless	6 mm
13	1	6341916	Connecting rod (2EXV-NH-2)	
14	1	6341915	Connecting rod (1EXV-NH-2)	
15	1	6341914	Connecting rod (extension NH	
16	1	6341913	Connecting rod (jib NH2)	
17	1	6341912	Connecting rod (boom NH2)	
18	1	6341911	Connecting rod (slew NH)	
19	4	30340	Screw, stainless	6,0 x 25
20	2	63564	Bracket for pin	
21	1	6340249	Pin	
22	6	6340875	Lever	
23	6	48414	Clevis	

1500K, 1510K, 1720K, 1730K, 1820K, 1830K

Internal ref. 63 42 480

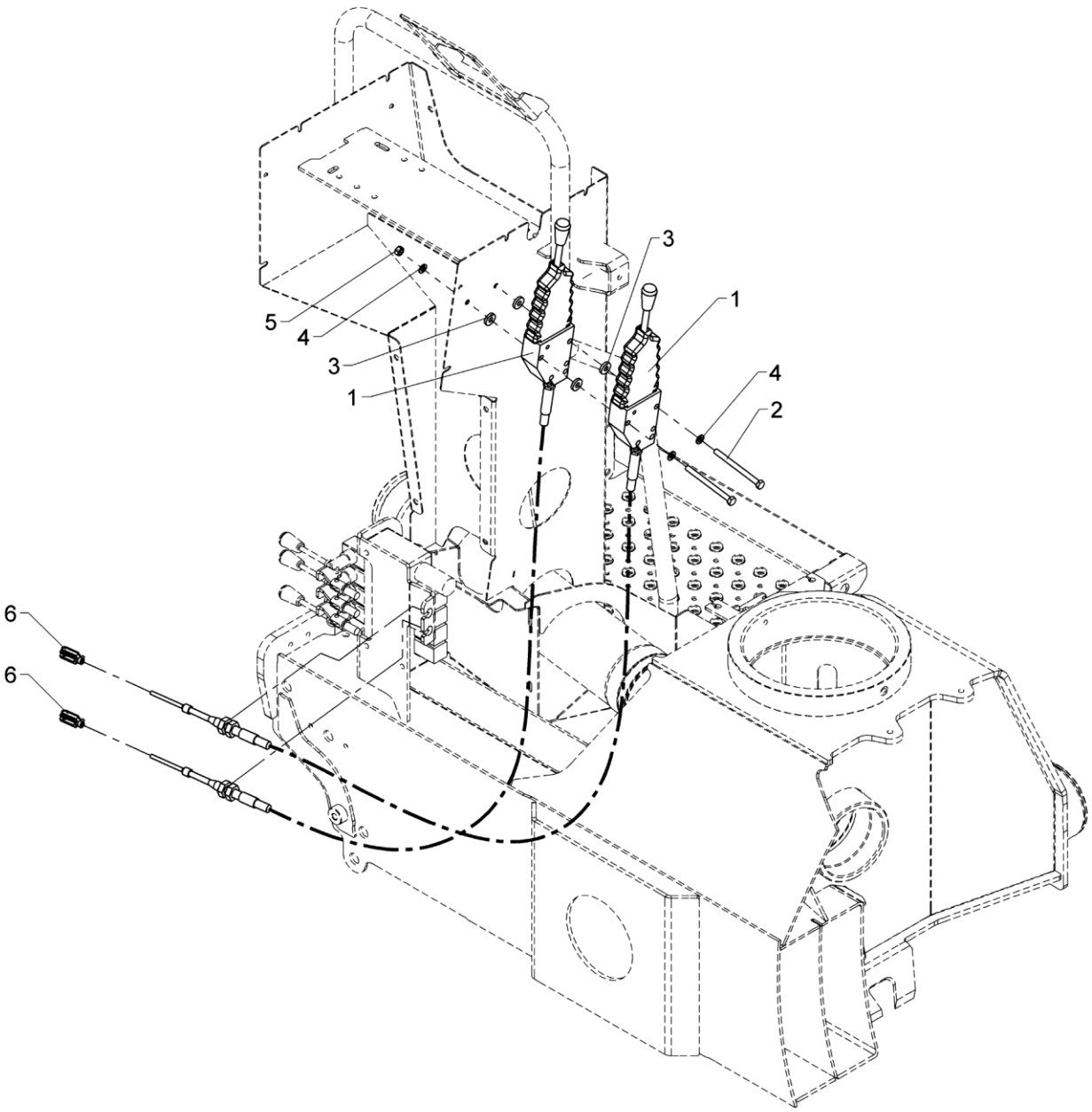

Stabilizer operation, HS, direct valve control

Created 15-04-2009
Modified 09-01-2014

Pos	Qty.	Part no.	Description	Remarks
1	2	48465	Push-pull cable incl. lever	1500 mm
2	2	30145	Steel bolt, stainless	M8 x 100
3	4	31755	Washer	8 mm
4	4	31147	Face washer, 8 mm	8 mm
5	2	30856	Nut, stainless	M8
6	2	48414	Clevis	

1500K, 1510K, 1720K, 1730K, 1820K, 1830K

Internal ref. 63 43 890

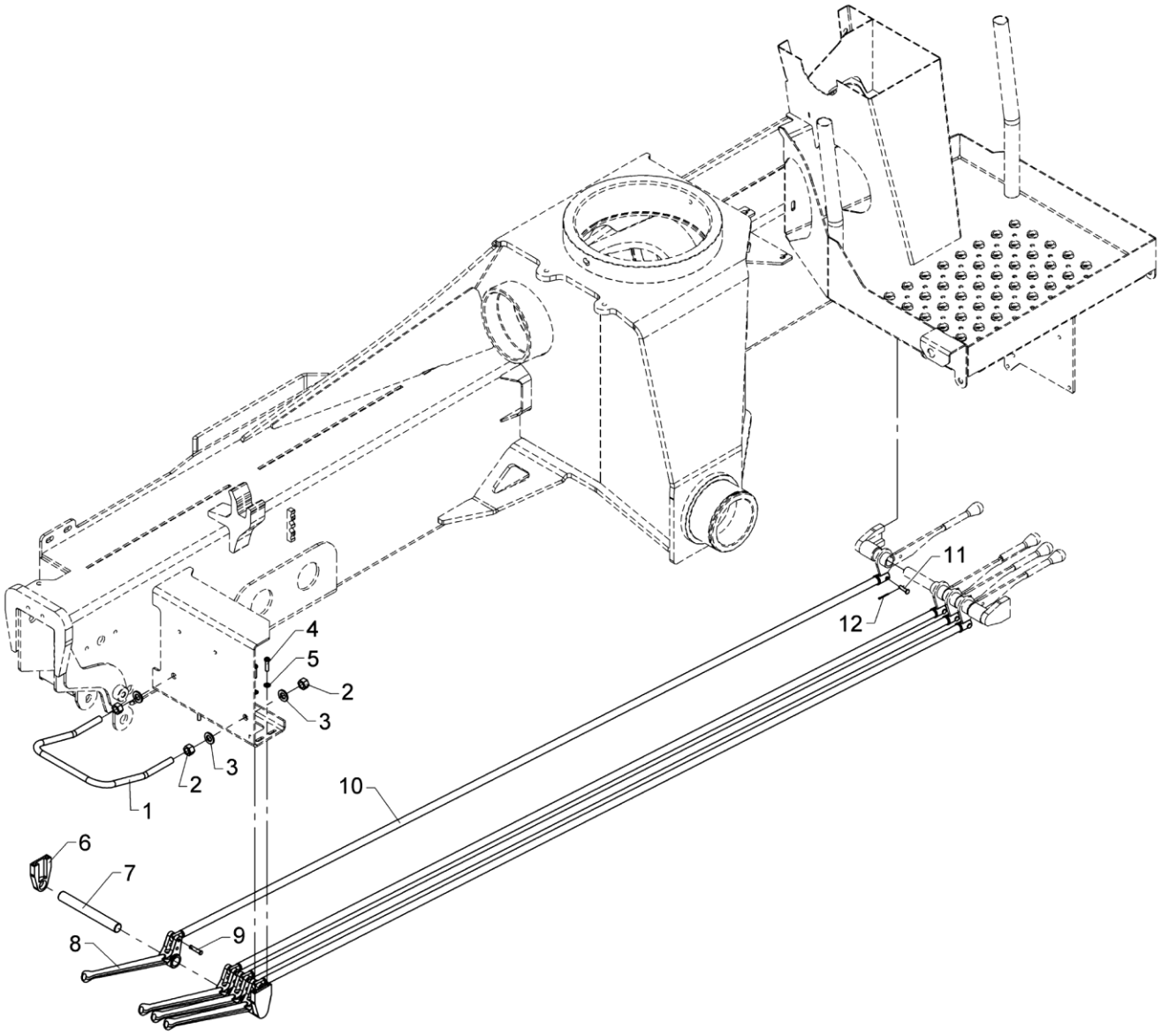

534 10 300

From loader 1060001
To loader

Created 12-01-2010
Modified

Dual control, HS, direct valve control - 4 fcts.

Pos	Qty.	Part no.	Description	Remarks
1	1	6340247	Safety guard	
2	4	30860	Nut, stainless	M12
3	4	32338	Washer	12 mm
4	4	30340	Screw, stainless	6,0 x 25
5	4	32302	Face washer, stainless	6 mm
6	2	63564	Bracket for pin	
7	1	6340248	Pin	
8	4	63443	Lever for dual controls	
9	4	63468	Split pin with spring lock	
10	4	6340889	Connecting rod	
11	4	31271	Cotter bolt	ø6 x 21
12	4	31601	Split pin, stainless	ø1,6 x 20

1500K, 1510K, 1720K, 1730K, 1820K, 1830K

Internal ref. 63 43 900

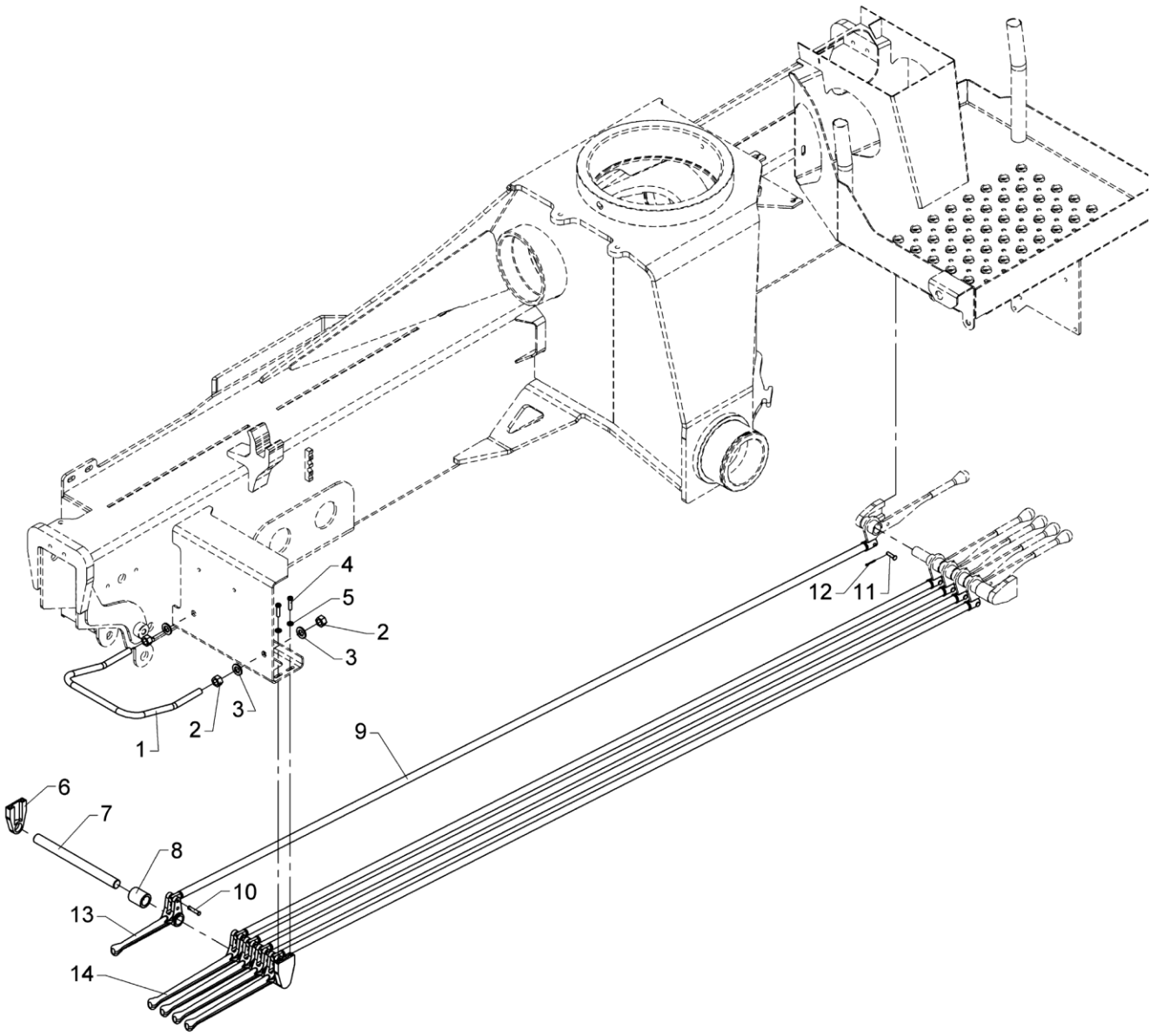

Dual control, HS, direct valve control - 5 fcts.

Pos	Qty.	Part no.	Description	Remarks
1	1	6340247	Safety guard	
2	4	30860	Nut, stainless	M12
3	4	32338	Washer	12 mm
4	4	30340	Screw, stainless	6,0 x 25
5	4	32302	Face washer, stainless	6 mm
6	2	63564	Bracket for pin	
7	1	6340249	Pin	
8	1	63598	Bushing	
9	5	6340889	Connecting rod	
10	5	63468	Split pin with spring lock	
11	5	31271	Cotter bolt	ø6 x 21
12	5	31601	Split pin, stainless	ø1,6 x 20
13	1	63444	Lever for dual controls	
14	4	63443	Lever for dual controls	

1500K, 1510K, 1720K, 1730K, 1820K, 1830K

Internal ref. 63 43 910

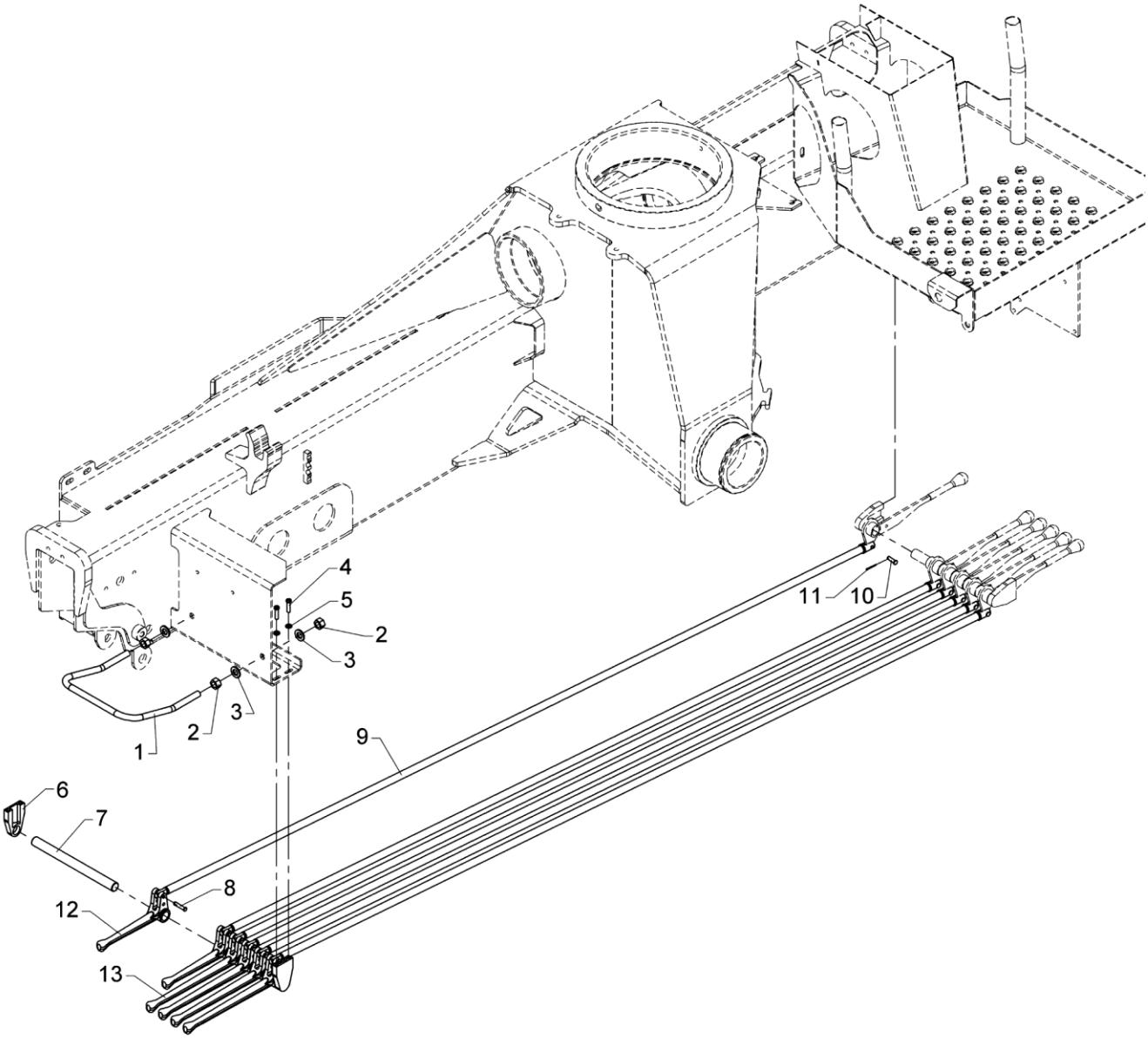

Dual control, HS, direct valve control - 6 fcts.

Pos	Qty.	Part no.	Description	Remarks
1	1	6340247	Safety guard	
2	4	30860	Nut, stainless	M12
3	4	32338	Washer	12 mm
4	4	30340	Screw, stainless	6,0 x 25
5	4	32302	Face washer, stainless	6 mm
6	2	63564	Bracket for pin	
7	1	6340249	Pin	
8	6	63468	Split pin with spring lock	
9	6	6340889	Connecting rod	
10	6	31271	Cotter bolt	ø6 x 21
11	6	31601	Split pin, stainless	ø1,6 x 20
12	2	63444	Lever for dual controls	
13	4	63443	Lever for dual controls	

1500K, 1510K, 1720K, 1730K, 1820K, 1830K

63 41 640
Internal ref. 63 41 280

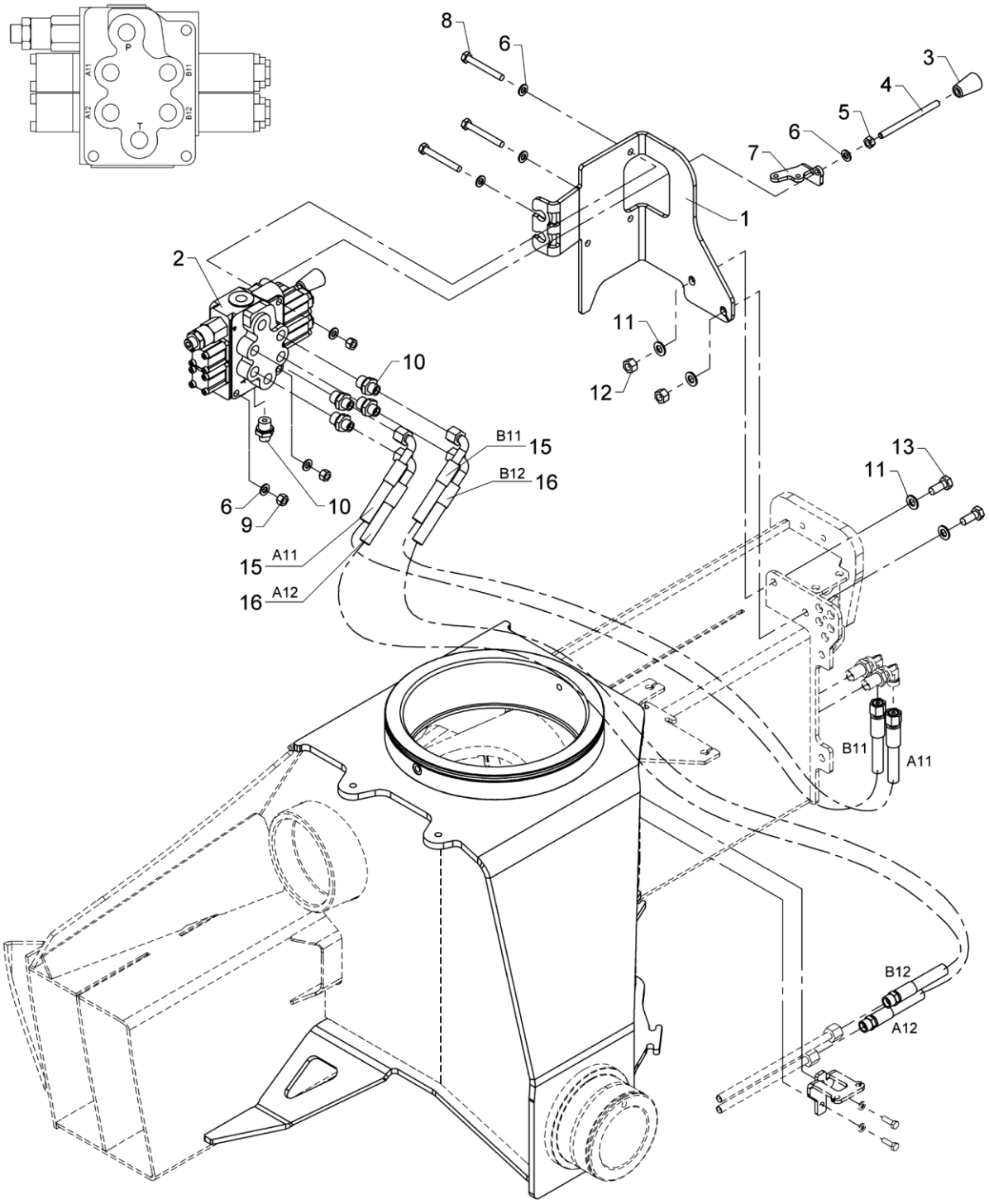

Obsolete

Valve bracket, cpl., direct valve control - 2 fcts.

534 10 350

From loader 1060001
To loader

Created 08-01-2009
Modified 05-05-2014

Pos	Qty.	Part no.	Description	Remarks
		6341280	Valve bracket, cpl. 2 fcts.HS	
		6341640	Hose kit, 2 functions, HS	
1	1	6340227	Valve bracket (TS - 2 fcts.)	
2	1	55225	Stabilizer valve	
3	2	59224	Knob for lever	
4	2	1330187	Control lever, long, straight	
5	2	30856	Nut, stainless	M8
6	8	31147	Face washer, 8 mm	8 mm
7	2	6340229	Adapter	
8	3	30259	Steel bolt, stainless	M8 x 65
9	3	30886	Lock nut, stainless	M8
10	5	25244	Connection	GES 8 LR 3/8-WD
11	4	31565	Washer, stainless	10 mm
12	2	31564	Lock nut, stainless	M10
13	2	31513	Set screw, stainless	M10 x 25
14	1	6341640	Hose kit, 2 functions, HS	
15	2	56515	Hose	5/16 X 1250 mm 90/L 10Let
16	2	56516	Hose	5/16 X 600 mm 90/S

1500K, 1510K, 1720K, 1730K, 1820K, 1830K

63 41 640
Internal ref. 63 41 280

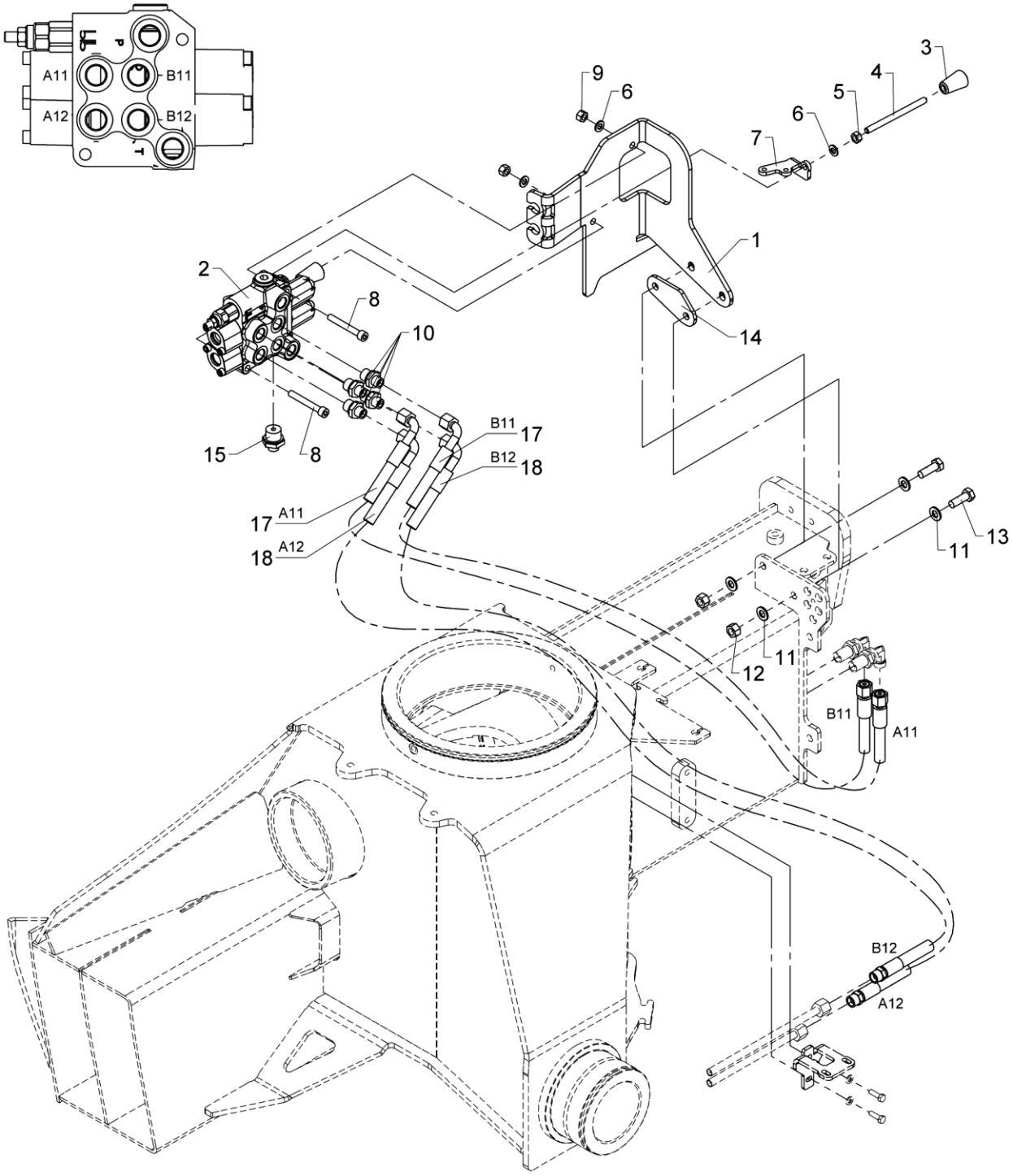

Valve bracket, cpl., direct valve control - 2 fcts.

Pos	Qty.	Part no.	Description	Remarks
		6341280	Valve bracket, cpl. 2 fcts.HS	
		6341640	Hose kit, 2 functions, HS	
1	1	6344873	Valve bracket (HS)	
2	1	55738	Stabilizer control valve	
3	2	59224	Knob for lever	
4	2	1330187	Control lever, long, straight	
5	2	30856	Nut, stainless	M8
6	4	31147	Face washer, 8 mm	8 mm
7	2	6340229	Adapter	
8	2	30469	Screw	MC8 x 60
9	2	30886	Lock nut, stainless	M8
10	4	25244	Connection	GES 8 LR 3/8-WD
11	4	31565	Washer, stainless	10 mm
12	2	31564	Lock nut, stainless	M10
13	2	30156	Set screw, stainless	M10 x 30
14	1	6344879	Interm. flange / valve bracket	
15	1	25687	Straight connection 8l 182"	24-SDS-L8-G1/2E
16	1	6341640	Hose kit, 2 functions, HS	
17	2	56515	Hose	5/16 X 1250 mm 90/L 10Let
18	2	56516	Hose	5/16 X 600 mm 90/S

1500K, 1510K, 1720K, 1730K, 1820K, 1830K

63 41 640
Internal ref. 63 41 290

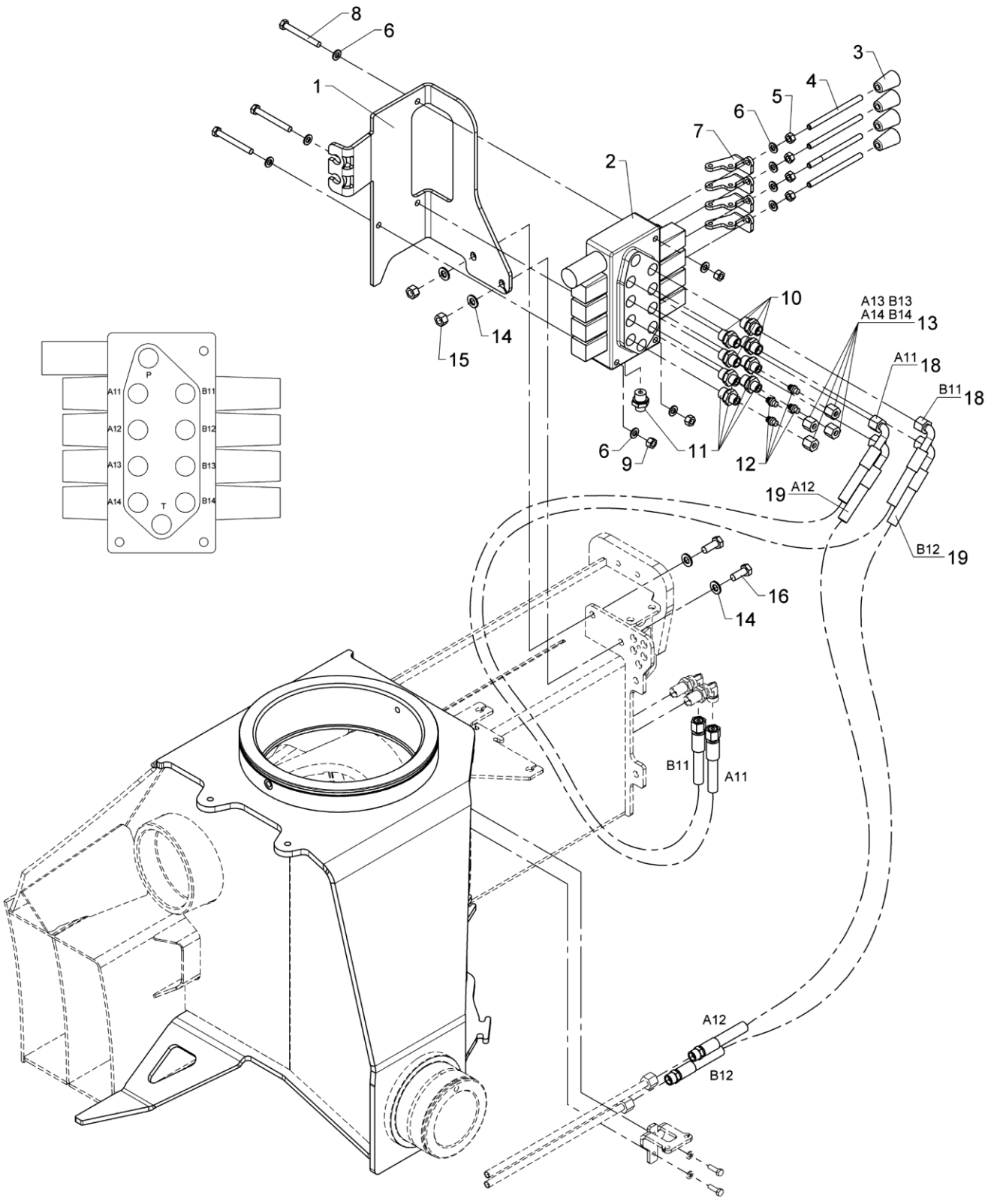

Obsolete

534 10 355

From loader 1060001
To loader

Created 06-01-2011
Modified 09-01-2014

Valve bracket, cpl., direct valve control - 2 fcts. + 2 available fcts.

Pos	Qty.	Part no.	Description	Remarks
		6341290	Valve br., cpl.2fcts.+2 avail.	
		6341640	Hose kit, 2 functions, HS	
1	1	6340228	Valve bracket (TS - 4 fcts.)	
2	1	55281	Stabilizer valve	
3	4	59224	Knob for lever	
4	4	1330187	Control lever, long, straight	
5	4	30856	Nut, stainless	M8
6	10	31147	Face washer, 8 mm	
7	4	6340229	Adapter	
8	3	30142	Steel bolt, stainless	M8 x 70
9	3	30886	Lock nut, stainless	M8
10	4	25253	Connection	P-GEV 10 LR 3/8-WD
11	5	25244	Connection	GES 8 LR 3/8-WD
12	4	26166	Blanking plug	VSD 8 L
13	4	25181	Coupling nut	M 8 L
14	4	31565	Washer, stainless	10 mm
15	2	31564	Lock nut, stainless	M10
16	2	31513	Set screw, stainless	M10 x 25
17	1	6341640	Hose kit, 2 functions, HS	
18	2	56515	Hose	5/16"x1250mm V/O
19	2	56516	Hose	5/16"x1250mm V/O

1500K, 1510K, 1720K, 1730K, 1820K, 1830K

63 41 640
Internal ref. 63 41 290

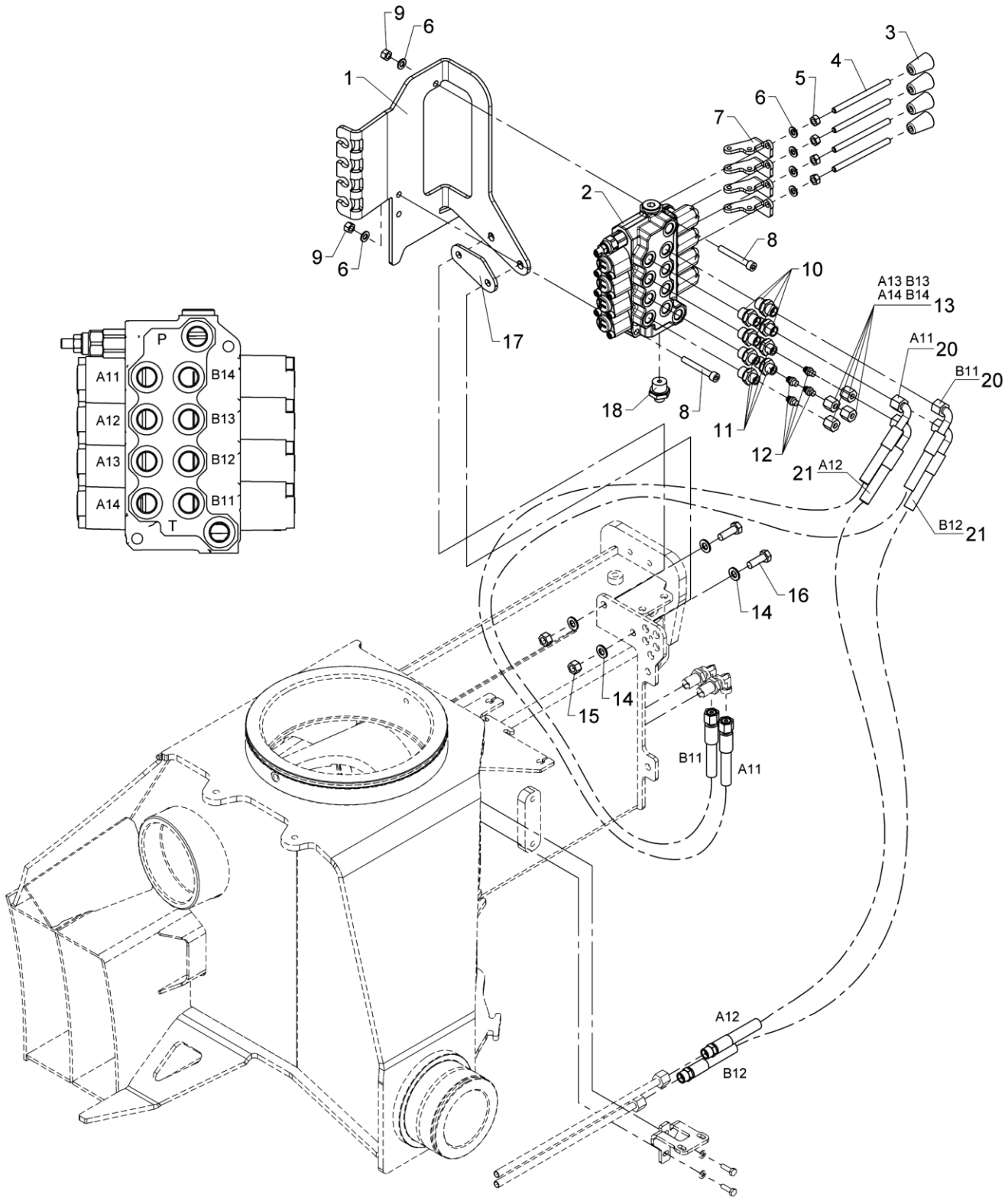

Valve bracket, cpl., direct valve control - 2 fcts. + 2 available fcts.

Pos	Qty.	Part no.	Description	Remarks
		6341290	Valve br., cpl.2fcts.+2 avail.	
		6341640	Hose kit, 2 functions, HS	
1	1	6344876	Valve bracket (HS)	
2	1	55737	Stabilizer control valve	
3	4	59224	Knob for lever	
4	4	1330187	Control lever, long, straight	
5	4	30856	Nut, stainless	M8
6	6	31147	Face washer, 8 mm	
7	4	6340229	Adapter	
8	2	30469	Screw	MC8 x 60
9	2	30886	Lock nut, stainless	M8
10	4	25253	Connection	P-GEV 10 LR 3/8-WD
11	4	25244	Connection	GES 8 LR 3/8-WD
12	4	26166	Blanking plug	VSD 8 L
13	4	25181	Coupling nut	M 8 L
14	4	31565	Washer, stainless	10 mm
15	2	31564	Lock nut, stainless	M10
16	2	30156	Set screw, stainless	M10 x 30
17	1	6344879	Interm. flange / valve bracket	
18	1	25687	Straight connection 8l 182"	24-SDS-L8-G1/2E
19	1	6341640	Hose kit, 2 functions, HS	
20	2	56515	Hose	5/16"x1250mm V/O
21	2	56516	Hose	5/16"x1250mm V/O

1500K, 1510K, 1720K, 1730K, 1820K, 1830K

63 41 630
Internal ref. 63 41 300

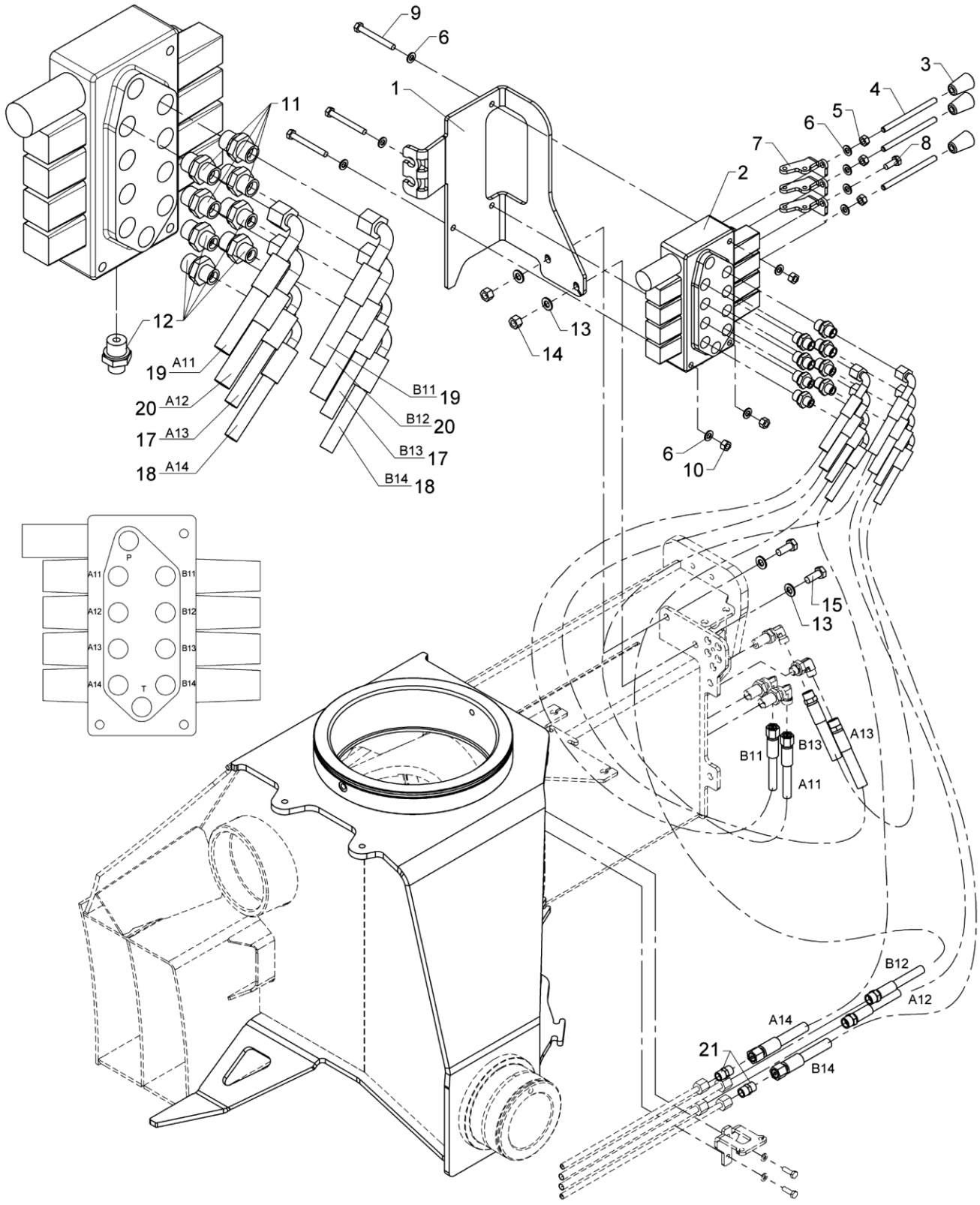

Obsolete

Valve bracket, cpl., direct valve control - 4 fcts.

534 10 360

From loader 1060001
To loader

Created 08-01-2009
Modified 09-01-2014

Pos	Qty.	Part no.	Description	Remarks
		6341300	Valve bracket, cpl. 4 fcts.HS	
		6341630	Hose kit, 4 functions, HS	
1	1	6340228	Valve bracket (TS - 4 fcts.)	
2	1	55281	Stabilizer valve	
3	3	59224	Knob for lever	
4	3	1330187	Control lever, long, straight	
5	3	30856	Nut, stainless	M8
6	10	31147	Face washer, 8 mm	8 mm
7	3	6340229	Adapter	
8	1	30132	Set screw, stainless	M8 x 20
9	3	30142	Steel bolt, stainless	M8 x 70
10	3	30886	Lock nut, stainless	M8
11	4	25253	Connection	P-GEV 10 LR 3/8-WD
12	5	25244	Connection	GES 8 LR 3/8-WD
13	4	31565	Washer, stainless	10 mm
14	2	31564	Lock nut, stainless	M10
15	2	31513	Set screw, stainless	M10 x 25
16	1	6341630	Hose kit, 4 functions, HS	
17	2	62620	Hose	1/4 X 1100 M14X1.5 L/90
18	2	62525	Hose	1/4 X 400 M14 X 1.5 L/90
19	2	56515	Hose	5/16 X 1250 mm 90/L 10Let
20	2	56516	Hose	5/16 X 600 mm 90/S
21	2	25246	Double connection	P-GV 8 L

1500K, 1510K, 1720K, 1730K, 1820K, 1830K

63 41 630
Internal ref. 63 41 300

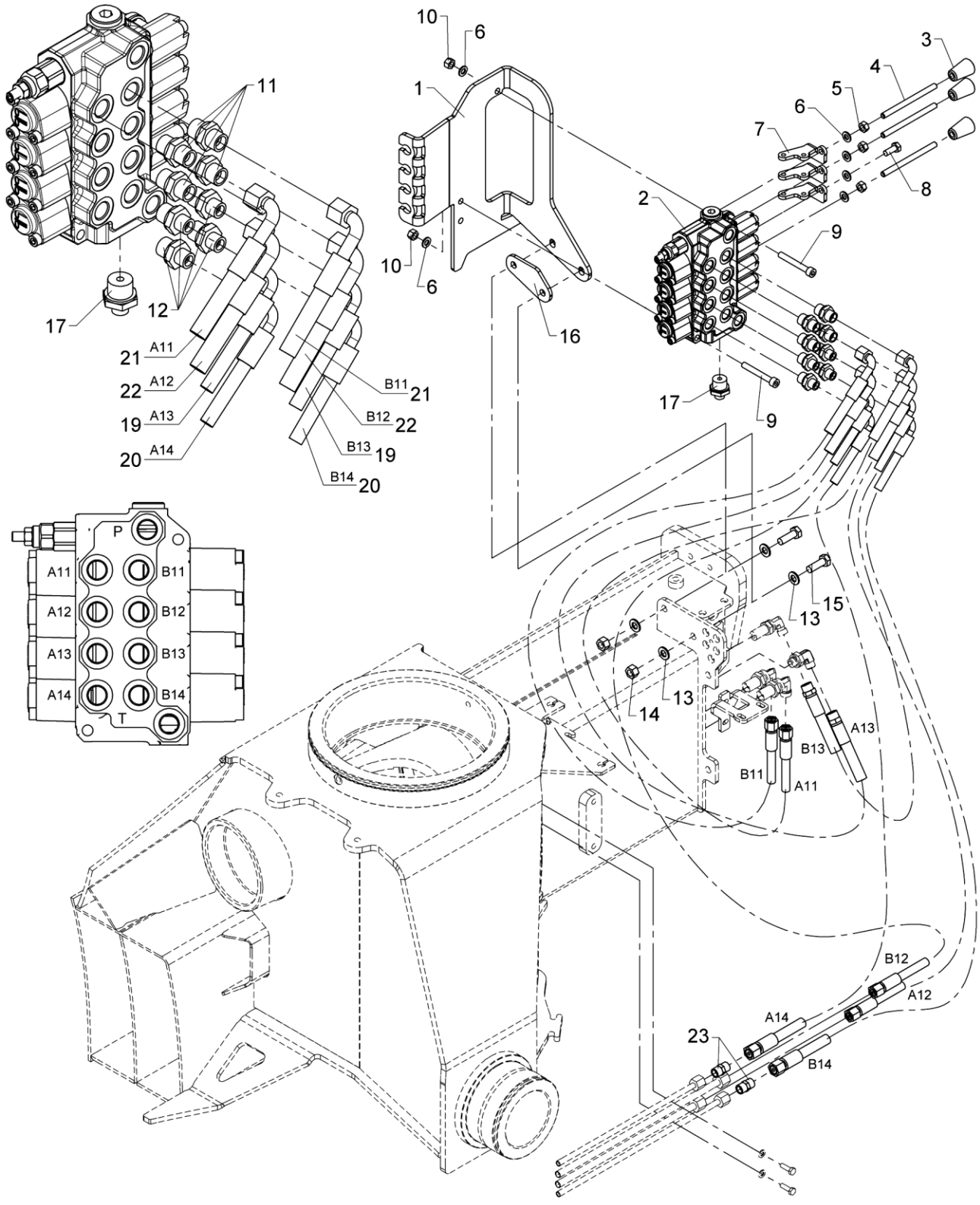

Valve bracket, cpl., direct valve control - 4 fcts.

Pos	Qty.	Part no.	Description	Remarks
		6341300	Valve bracket, cpl. 4 fcts.HS	
		6341630	Hose kit, 4 functions, HS	
1	1	6344876	Valve bracket (HS)	
2	1	55737	Stabilizer control valve	
3	3	59224	Knob for lever	
4	3	1330187	Control lever, long, straight	
5	3	30856	Nut, stainless	M8
6	6	31147	Face washer, 8 mm	8 mm
7	3	6340229	Adapter	
8	1	30132	Set screw, stainless	M8 x 20
9	2	30469	Screw	MC8 x 60
10	2	30886	Lock nut, stainless	M8
11	4	25253	Connection	P-GEV 10 LR 3/8-WD
12	4	25244	Connection	GES 8 LR 3/8-WD
13	4	31565	Washer, stainless	10 mm
14	2	31564	Lock nut, stainless	M10
15	2	30156	Set screw, stainless	M10 x 30
16	1	6344879	Interm. flange / valve bracket	
17	1	25687	Straight connection 8l 182"	24-SDS-L8-G1/2E
18	1	6341630	Hose kit, 4 functions, HS	
19	2	62620	Hose	1/4 X 1100 M14X1.5 L/90
20	2	62525	Hose	1/4 X 400 M14 X 1.5 L/90
21	2	56515	Hose	5/16 X 1250 mm 90/L 10Let
22	2	56516	Hose	5/16 X 600 mm 90/S
23	2	25246	Double connection	P-GV 8 L

1500K, 1510K, 1720K, 1730K, 1820K, 1830K

63 41 670
Internal ref. 63 41 320

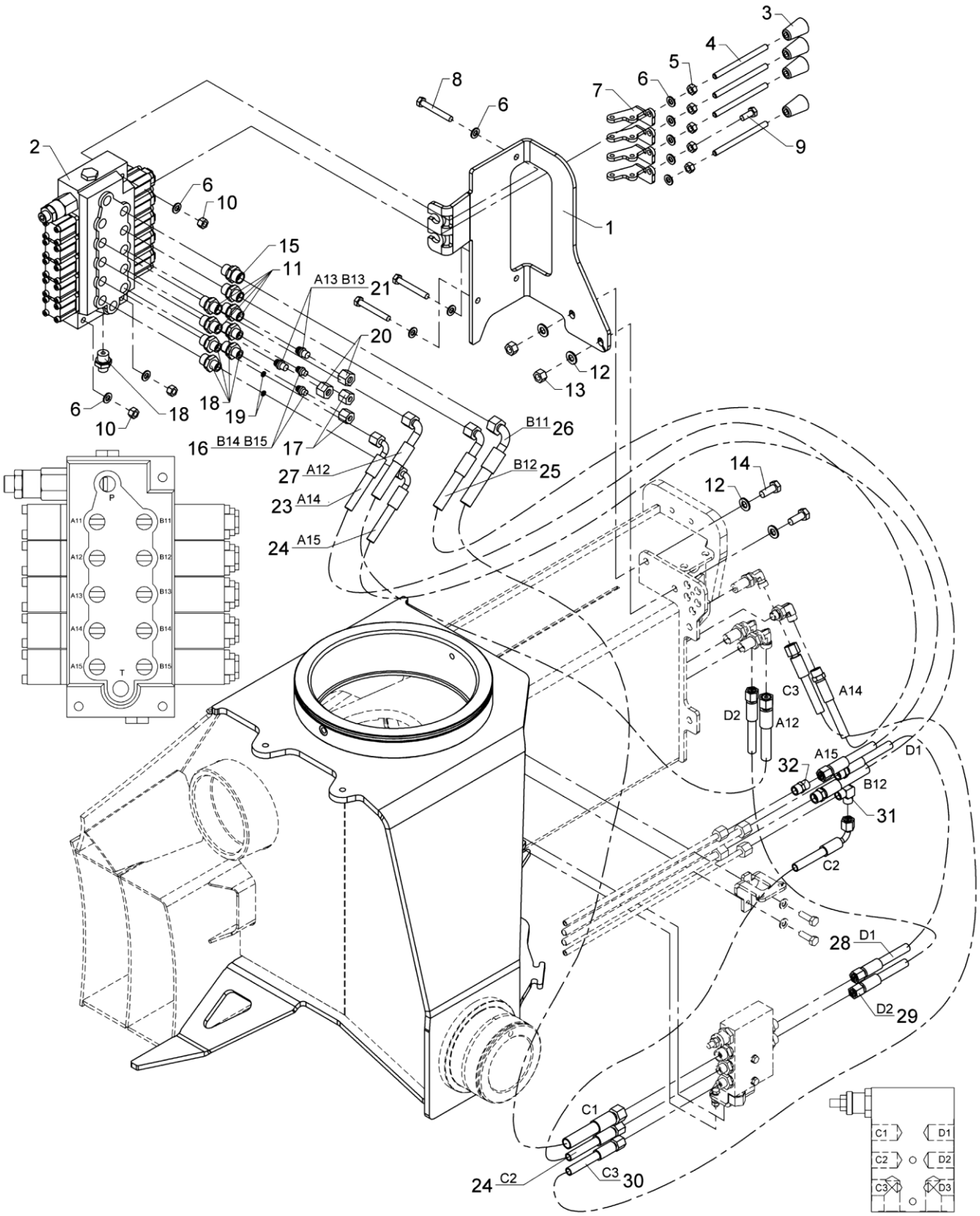

Obsolete

534 10 370

From loader 1060001
To loader
Created
Modified 05-05-2014

Valve bracket, cpl., direct valve control - 4 fcts. + 4 available fcts.

Pos	Qty.	Part no.	Description	Remarks
		6341320	Valve br., cpl.4fcts.+4 avail.	
		6341670	Hose kit, 4 fcts + 4 avail.,HS	
1	1	6340226	Valve bracket (TS - 4 fcts.)	
2	1	55277	Valve block, complete	
3	4	59224	Knob for lever	
4	4	1330187	Control lever, long, straight	
5	5	30856	Nut, stainless	M8
6	11	31147	Face washer, 8 mm	8 mm
7	4	6340229	Adapter	
8	3	30141	Set screw, stainless	M8 x 60
9	1	30132	Set screw, stainless	M8 x 20
10	3	30886	Lock nut, stainless	M8
11	4	25253	Connection	P-GEV 10 LR 3/8-WD
12	4	31565	Washer, stainless	10 mm
13	2	31564	Lock nut, stainless	M10
14	2	31513	Set screw, stainless	M10 x 25
15	1	25127	Connection	P-GEV 12 LR-WD
16	2	26166	Blanking plug	VSD 8 L
17	2	25181	Coupling nut	M 8 L
18	5	25244	Connection	GES 8 LR 3/8-WD
19	2	60963	Washer	
20	2	25182	Coupling nut	M 10 L
21	2	25202	Blanking plug	VSD 10 L
22	1	6341670	Hose kit, 4 fcts + 4 avail.,HS	
23	1	62620	Hose	1/4 X 1100 M14X1.5 L/90
24	2	62525	Hose	1/4 X 400 M14 X 1.5 L/90
25	1	56516	Hose	5/16 X 600 mm 90/S
26	1	0017300	Hose	
27	1	56515	Hose	5/16 X 1250 mm 90/L 10Let
28	1	56460	Hose	1/4" x 550mm L/S-10mm
29	1	56510	Hose	1/4 X 600 mm L/L 10Let
30	1	62569	Hose	1/4 X 800 M14 X 1.5 L/L
31	1	25247	Elbow connection	WV 8 L
32	1	25246	Double connection	P-GV 8 L

1500K, 1510K, 1720K, 1730K, 1820K, 1830K

63 41 670
Internal ref. 63 41 320

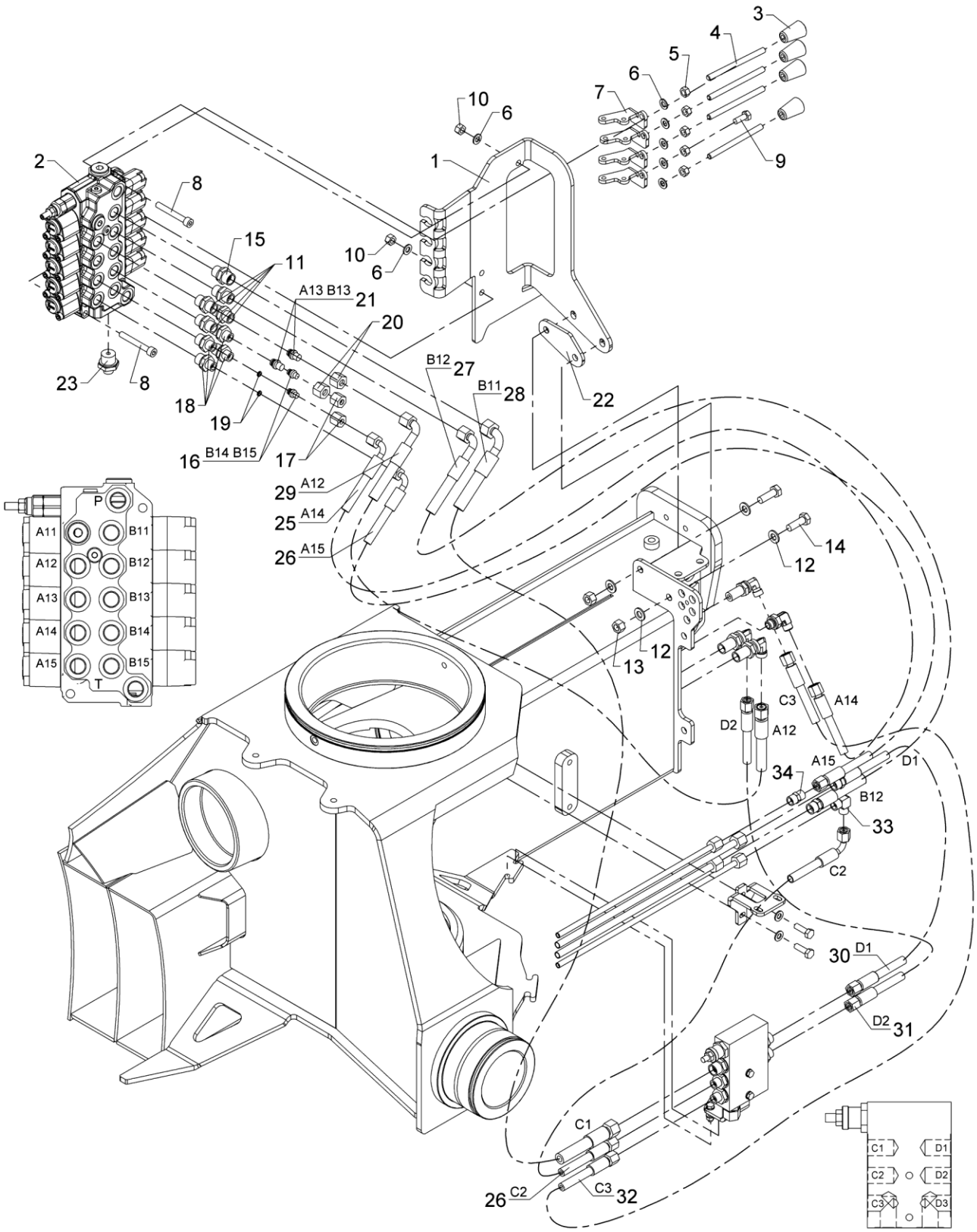

Valve bracket, cpl., direct valve control - 4 fcts. + 4 available fcts.

Pos	Qty.	Part no.	Description	Remarks
		6341320	Valve br., cpl.4fcts.+4 avail.	
		6341670	Hose kit, 4 fcts + 4 avail.,HS	
1	1	6344876	Valve bracket (HS)	
2	1	55739	Stabilizer Valve	
3	4	59224	Knob for lever	
4	4	1330187	Control lever, long, straight	
5	5	30856	Nut, stainless	M8
6	7	31147	Face washer, 8 mm	8 mm
7	4	6340229	Adapter	
8	2	30469	Screw	MC8 x 60
9	1	30132	Set screw, stainless	M8 x 20
10	2	30886	Lock nut, stainless	M8
11	4	25253	Connection	P-GEV 10 LR 3/8-WD
12	4	31565	Washer, stainless	10 mm
13	2	31564	Lock nut, stainless	M10
14	2	30156	Set screw, stainless	M10 x 30
15	1	25127	Connection	P-GEV 12 LR-WD
16	2	26166	Blanking plug	VSD 8 L
17	2	25181	Coupling nut	M 8 L
18	4	25244	Connection	GES 8 LR 3/8-WD
19	2	60963	Washer	
20	2	25182	Coupling nut	M 10 L
21	2	25202	Blanking plug	VSD 10 L
22	1	6344879	Interm. flange / valve bracket	
23	1	25687	Straight connection 8l 182"	24-SDS-L8-G1/2E
24	1	6341670	Hose kit, 4 fcts + 4 avail.,HS	
25	1	62620	Hose	1/4 X 1100 M14X1.5 L/90
26	2	62525	Hose	1/4 X 400 M14 X 1.5 L/90
27	1	56516	Hose	5/16 X 600 mm 90/S
28	1	0017300	Hose	
29	1	56515	Hose	5/16 X 1250 mm 90/L 10Let
30	1	56460	Hose	1/4" x 550mm L/S-10mm
31	1	56510	Hose	1/4 X 600 mm L/L 10Let
32	1	62569	Hose	1/4 X 800 M14 X 1.5 L/L
33	1	25247	Elbow connection	WV 8 L
34	1	25246	Double connection	P-GV 8 L

1500K, 1510K, 1720K, 1730K, 1820K, 1830K

Internal ref. 63 41 390

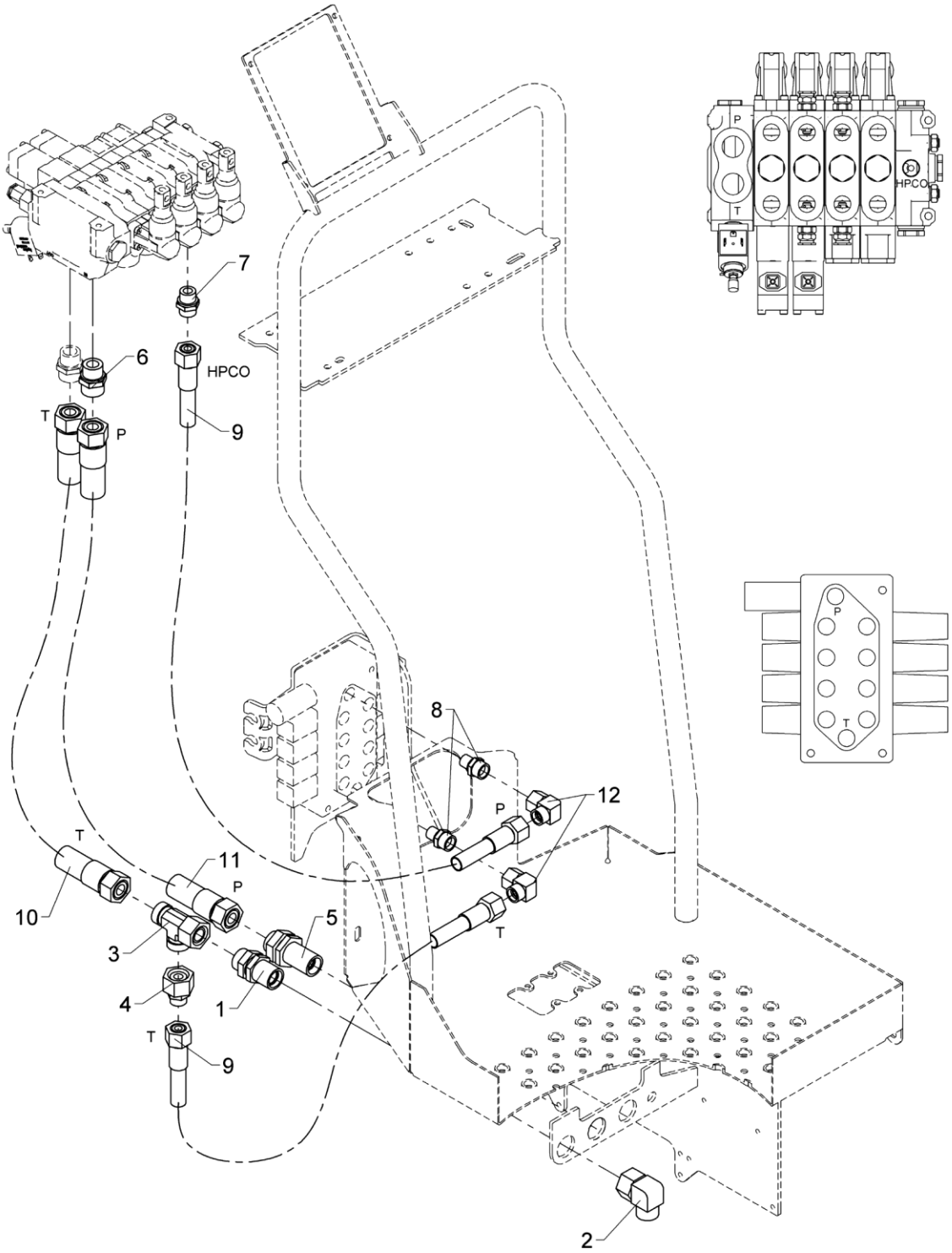

Pump and return hoses - HC - 1-circuit - HS direct valve control

Pos	Qty.	Part no.	Description	Remarks
1	1	25266	Bulkhead connection	P-GSV 22 L
2	1	25209	Elbow connection	EWSD 22 L
3	1	26149	Connection	ELSD 22 L
4	1	25298	Connection	REDSDN 22/15 L
5	1	26369	Bulkhead connection	GSS 12 L
6	1	26197	Connection	P-GEV 20 SR-WD
7	1	25143	Connection	P-GEV 15 LR-WD
8	2	25273	Connection	GES 15 LR 3-8 A3L
9	2	56509	Hose	1/2 X 1100 mm L/L M22
10	1	62574	Hose	3/4 X 1300 M30 X 2 L/L
11	1	56456	Hose	5/8 x 1400 mm 20S O/O
12	2	25284	Elbow connection	EWSD 15 L

1500K, 1510K, 1720K, 1730K, 1820K, 1830K

Internal ref. 63 41 400

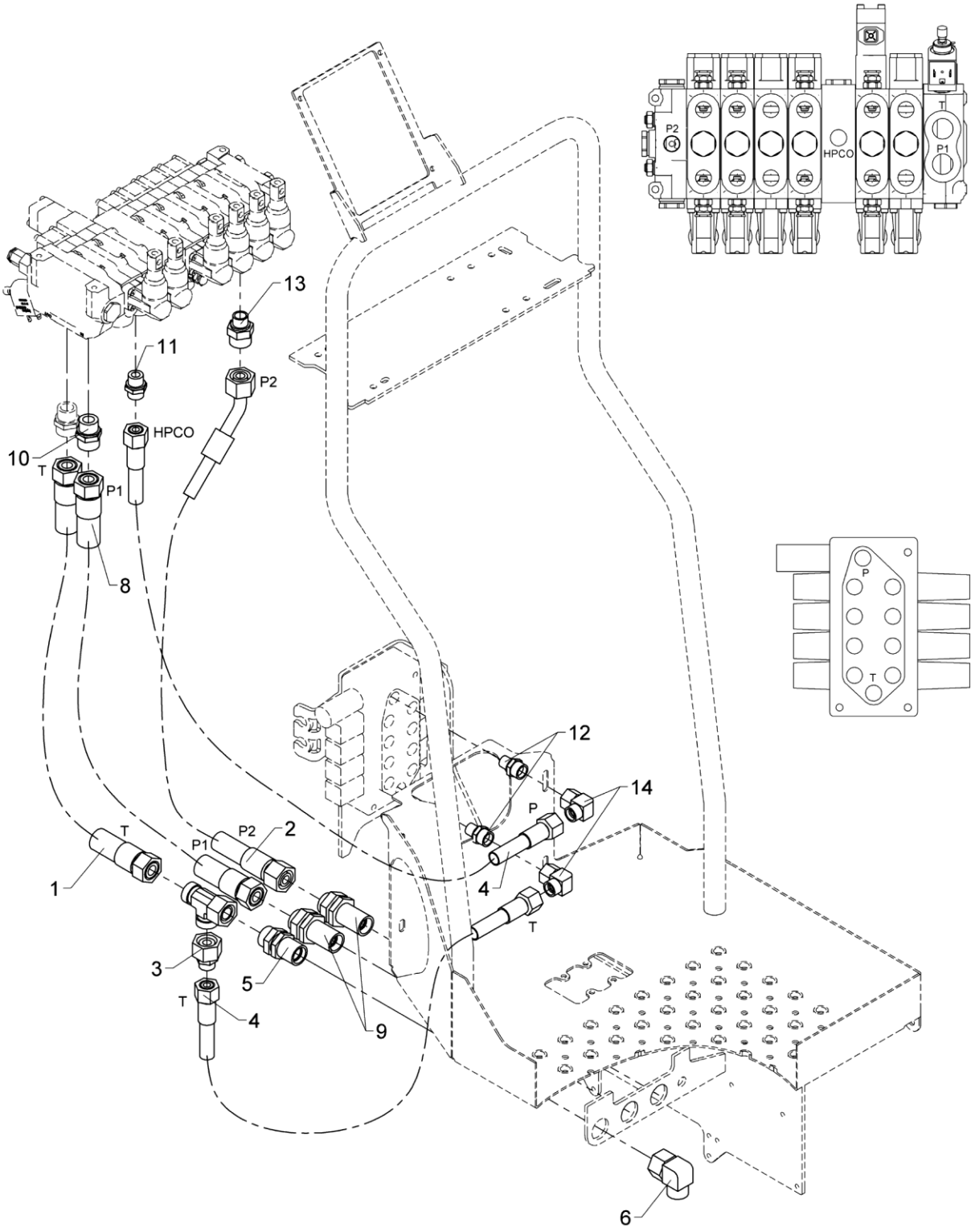

Pump and return hoses - HC - 2-circuit - HS direct valve control

Pos	Qty.	Part no.	Description	Remarks
1	1	62574	Hose	3/4 X 1300 M30 X 2 L/L
2	1	56523	Hose	5/8 X 1400 mm L/45 20Svær
3	1	25298	Connection	REDSDN 22/15 L
4	2	56509	Hose	1/2 X 1100 mm L/L M22
5	1	25266	Bulkhead connection	P-GSV 22 L
6	1	25209	Elbow connection	EWSD 22 L
7	1	26149	Connection	ELSD 22 L
8	1	56456	Hose	5/8 x 1400 mm 20S O/O
9	2	26369	Bulkhead connection	GSS 12 L
10	1	26197	Connection	P-GEV 20 SR-WD
11	1	25143	Connection	P-GEV 15 LR-WD
12	2	25273	Connection	GES 15 LR 3-8 A3L
13	1	26221	Connection	P-GEV 20 SR 1/2-WD
14	2	25284	Elbow connection	EWSD 15 L

1500K, 1510K, 1720K, 1730K, 1820K, 1830K

63 43 420
Internal ref. 63 41 420

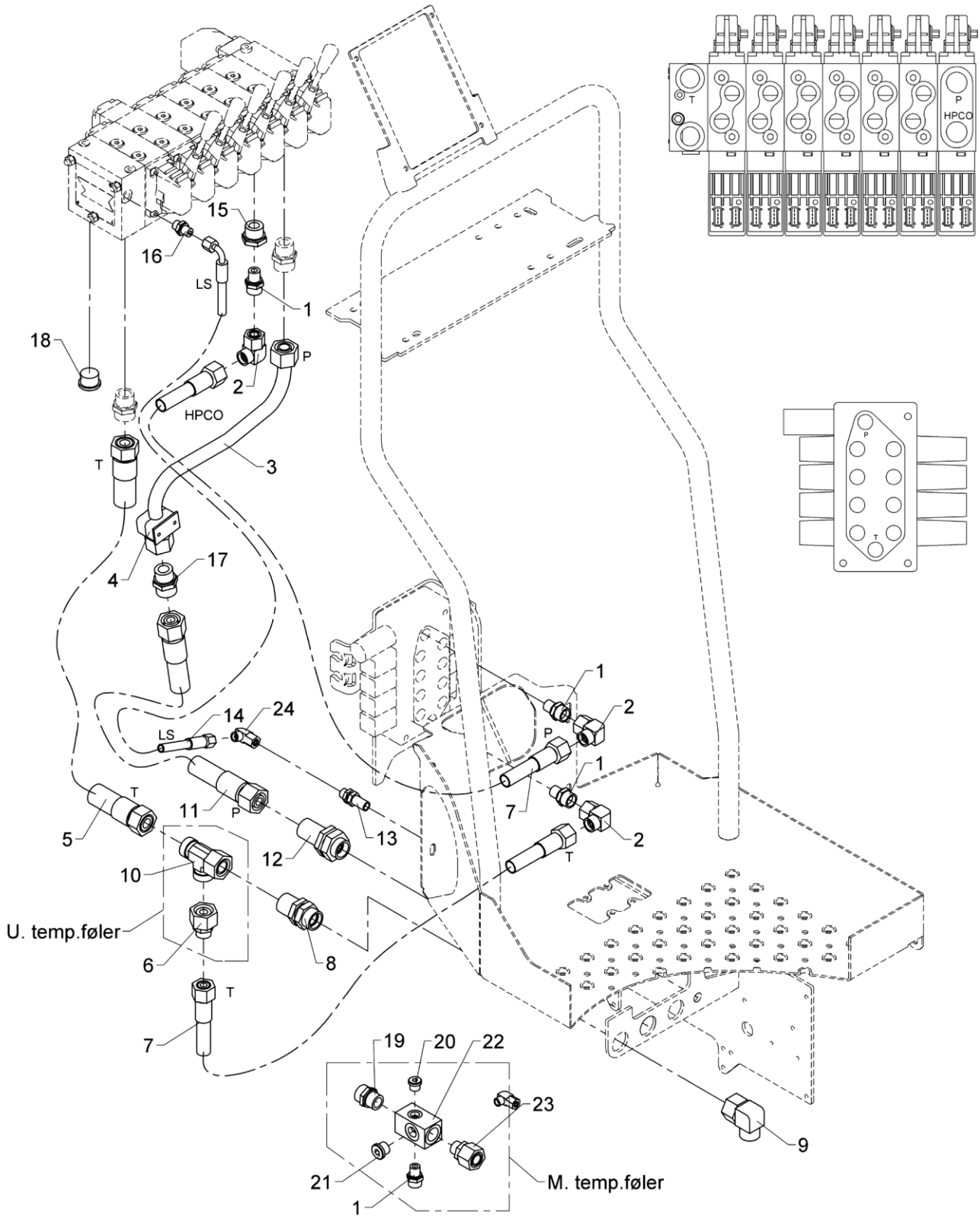

Pump and return hoses - Danfoss - HS - direct valve control

Pos	Qty.	Part no.	Description	Remarks
		6341420	Pump + return hoses, DanfossHS	
		6343420		
1	4	25273	Connection	GES 15 LR 3-8 A3L
2	3	25284	Elbow connection	EWSD 15 L
3	1	6340879	Connection pipe	
4	1	31830	Clamp	
5	1	62574	Hose	3/4 X 1300 M30 X 2 L/L
6	1	25298	Connection	REDSDN 22/15 L
7	2	56509	Hose	1/2 X 1100 mm L/L M22
8	1	25266	Bulkhead connection	P-GSV 22 L
9	1	25209	Elbow connection	EWSD 22 L
10	1	26149	Connection	ELSD 22 L
11	1	56457	Hose	5/8 x 1200 mm 20S O/O
12	1	26369	Bulkhead connection	GSS 20 S
13	1	25261	Bulkhead connection	P-GSV 8 L
14	1	56506	Hose	1/4 X 1530 mm M14x1,5 L/90
15	1	26319	Reducing connection	RED-R 3/4-WD/R 3/8
16	1	25109	Connection	GES 8 LR-WD
17	1	26197	Connection	P-GEV 20 SR-WD
18	1	26355	Plug	VS-R-3/4 WD
19	1	25169	Connection	P-GEV 22 LR-WD
20	1	25277	Plug	VS-R-3/8 WD
21	1	25103	Plug	VS-R-1/2 WD
22	1	59355	Return block	
23	1	25279	Connection	EGESD 22 LR-WD
24	1	26170	Elbow connection	EWSD 8 L

1500K, 1510K, 1720K, 1730K, 1820K, 1830K

Internal ref. 63 42 640

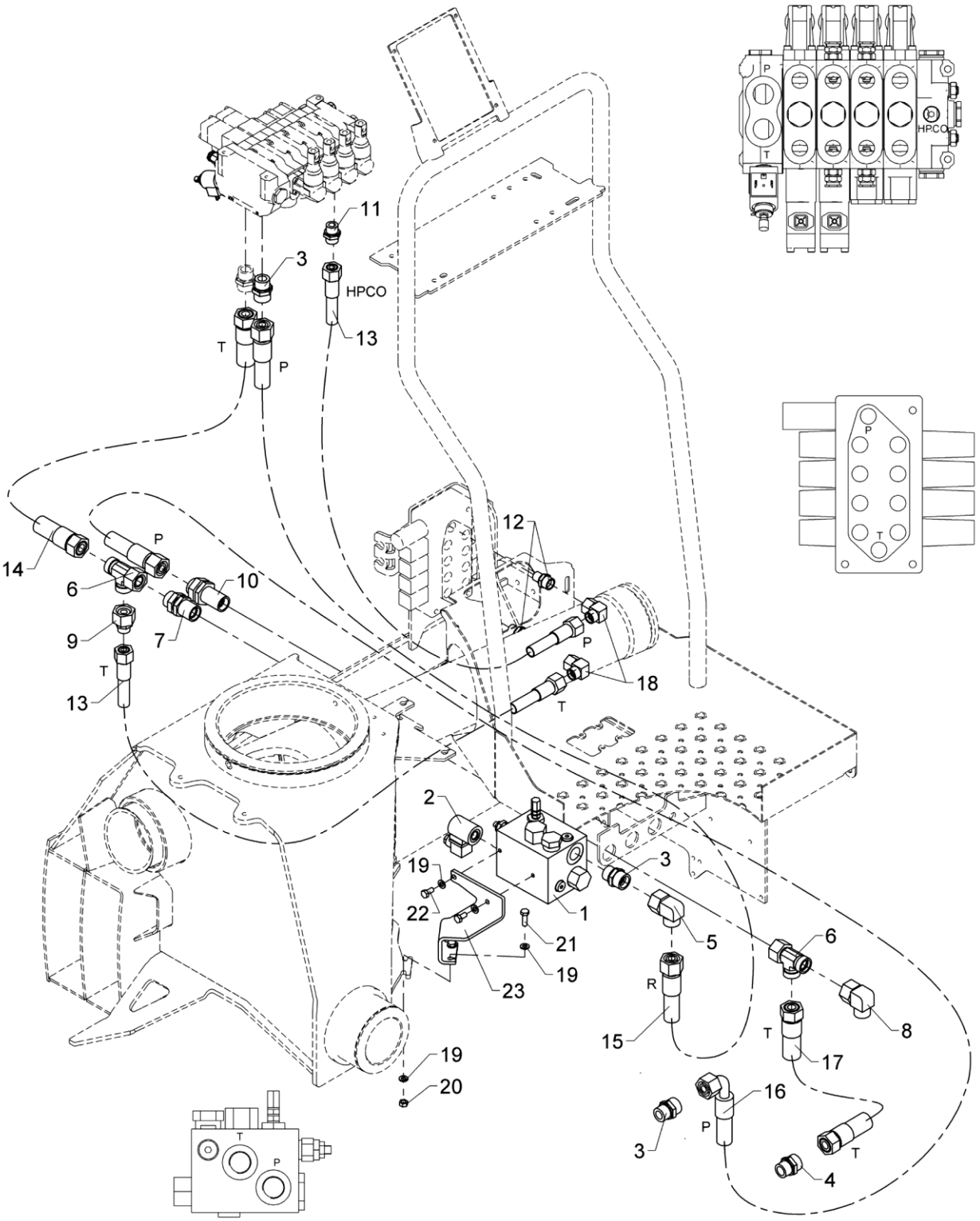

534 10 485

From loader 1060001
To loader

Created 12-01-2010
Modified

Kit for HDL - HS direct valve control

Pos	Qty.	Part no.	Description	Remarks
		6342640	Kit for HDL - HS10	
1	1	59018	HDL-2 valve	
2	1	59904	Solenoid	
3	3	26197	Connection	P-GEV 20 SR-WD
4	1	25169	Connection	P-GEV 22 LR-WD
5	1	26198	Elbow connection	EWVD 20 S-SV
6	2	26149	Connection	ELSD 22 L
7	1	25266	Bulkhead connection	P-GSV 22 L
8	1	25209	Elbow connection	EWSD 22 L
9	1	25298	Connection	REDSDN 22/15 L
10	1	26369	Bulkhead connection	GSS 20 S
11	1	25143	Connection	P-GEV 15 LR-WD
12	2	25273	Connection	GES 15 LR 3-8 A3L
13	2	56509	Hose	1/2 X 1100 mm L/L M22
14	1	62574	Hose	3/4 X 1300 M30 X 2 L/L
15	1	62626	Hose	5/8 X 1600 M30X2L/L SS
16	1	62668	Hose	5/8 X 650 M30X2 L/90 SS
17	1	62559	Hose	3/4 X 550 M30 X 2 L/L
18	2	25284	Elbow connection	EWSD 15 L
19	6	31147	Face washer, 8 mm	8 mm
20	2	30856	Nut, stainless	M8
21	2	30134	Set screw, stainless	M8 x 25
22	2	30131	Set screw, stainless	M8 x 16
23	1	6340848	Bracket (HDL-2)	

1500K, 1510K, 1720K, 1730K, 1820K, 1830K

63 46 410
63 45 410
Internal ref. 63 41 410

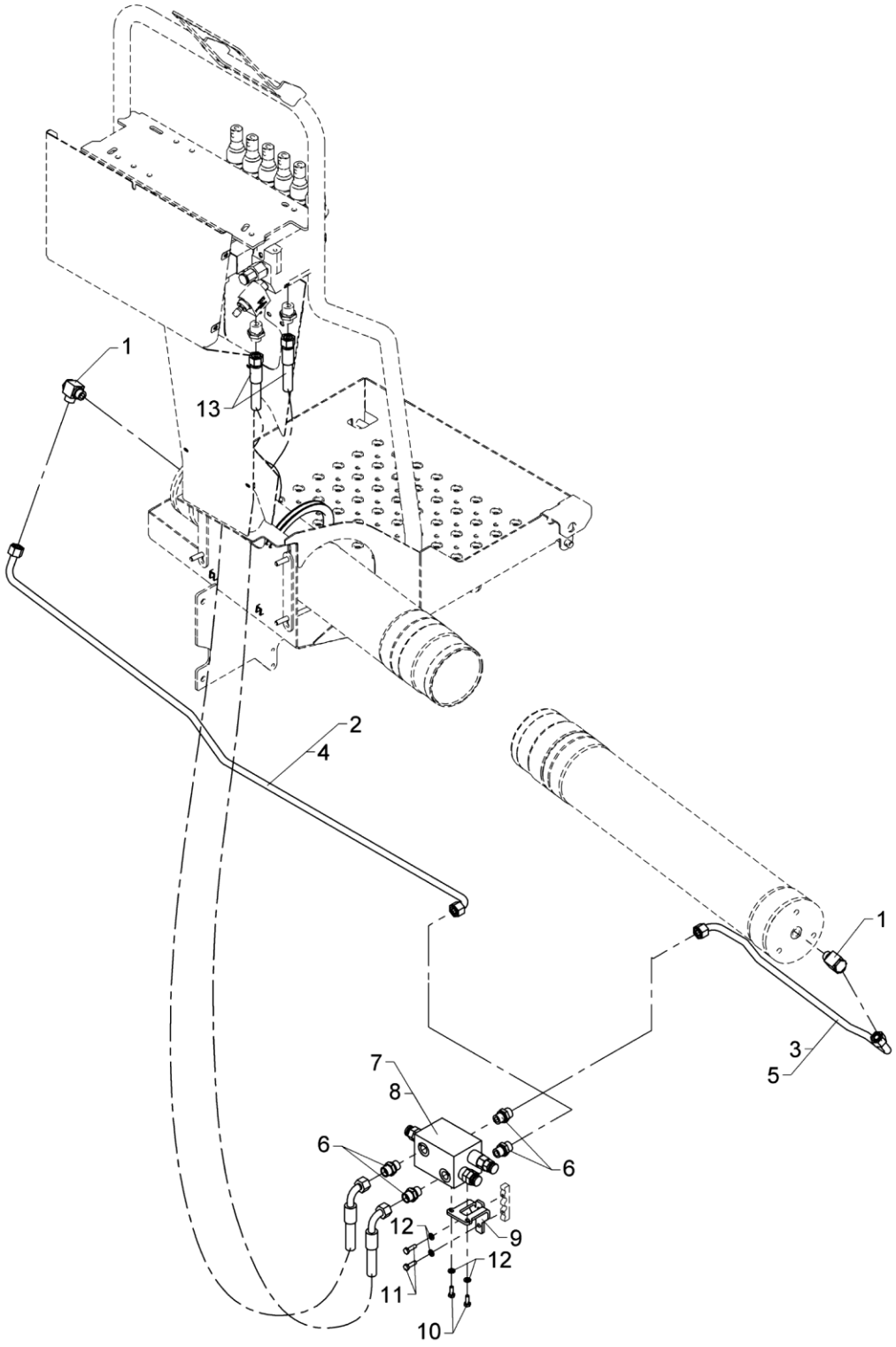

Obsolete

Hydraulic system, slewing, HS, direct valve control

534 10 490

From loader 1060001
To loader 1061030

Created 12-01-2010
Modified 25-10-2013

Pos	Qty.	Part no.	Description	Remarks
		6341410	Hydraulic system, slewing HS10	
		6345410	Hydraulic system, slewing HS10	
		6346410	Hydraulic system, slewing HS10	
1	2	25130	Banjo connection	RSWV 12 LR
2	1	6340279	Pipe	1300/1730
3	1	6340278	Pipe	1300/1730
4	1	6344279	Pipe	1800/2430
5	1	6344278	Pipe	1800/2430
6	4	25127	Connection	P-GEV 12 LR-WD
7	1	55262	Load-holding valve	1300/2030
8	1	55261	Load-holding valve	2200/2430
9	1	6340237	Bracket for load-holding valve	
10	2	30112	Set screw, stainless	M6 x 16
11	2	30113	Set screw, stainless	M6 x 20
12	4	32302	Face washer, stainless	6 mm
13	2	0017310	Hose	

1500K, 1510K, 1720K, 1730K, 1820K, 1830K

63 46 410
63 45 410
Internal ref. 63 41 410

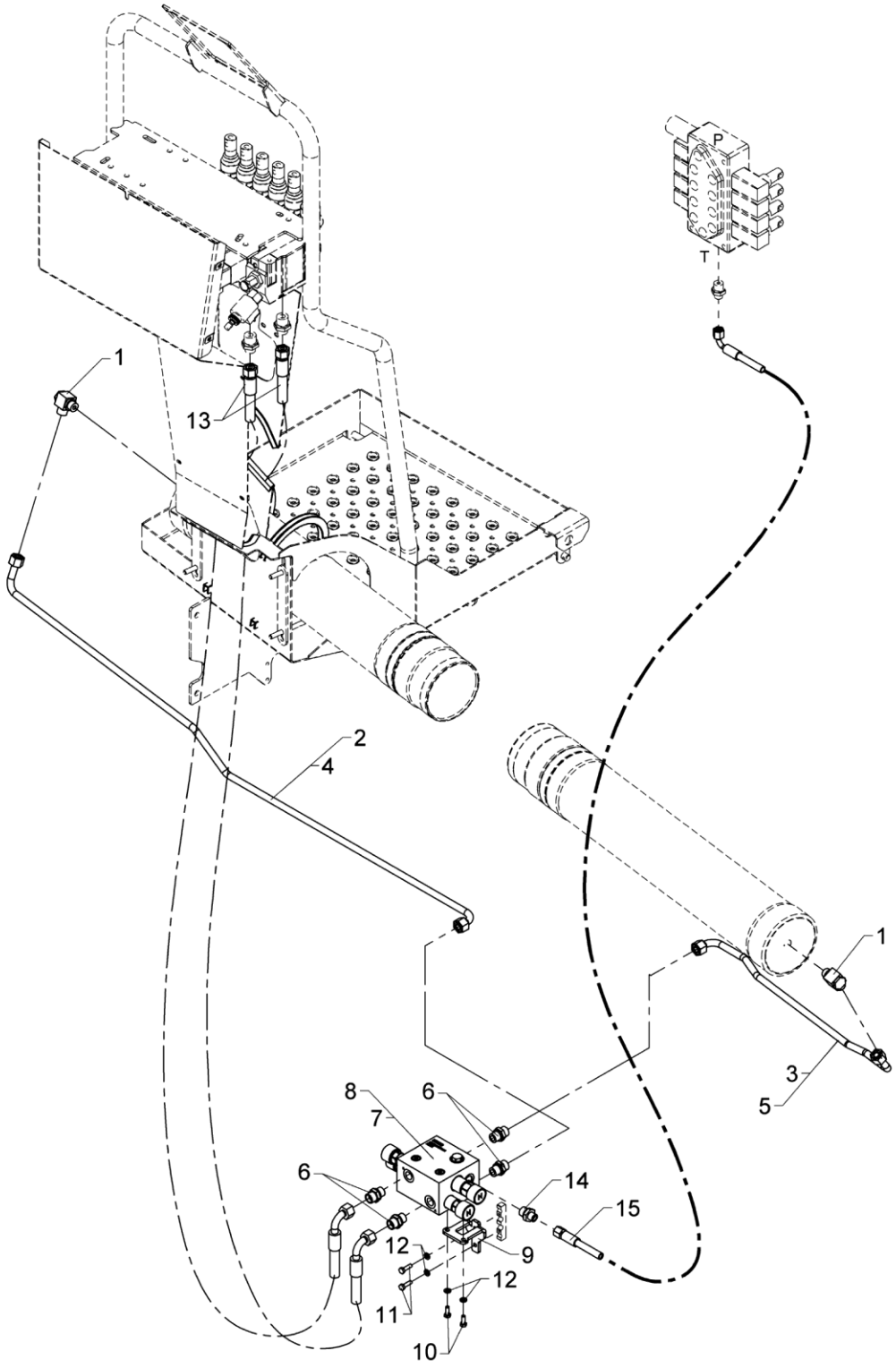

Hydraulic system, slewing, HS, direct valve control

Pos	Qty.	Part no.	Description	Remarks
		6341410	Hydraulic system, slewing HS10	
		6345410	Hydraulic system, slewing HS10	
		6346410	Hydraulic system, slewing HS10	
1	2	25130	Banjo connection	RSWV 12 LR
2	1	6340279	Pipe	1300/1730
3	1	6340278	Pipe	1300/1730
4	1	6344279	Pipe	1800/2430
5	1	6344278	Pipe	1800/2430
6	4	25127	Connection	P-GEV 12 LR-WD
7	1	55711	Load-holding valve	1300/2030
8	1	55710	Load-holding valve	2200/2430
9	1	6340237	Bracket for load-holding valve	
10	2	30112	Set screw, stainless	M6 x 16
11	2	30113	Set screw, stainless	M6 x 20
12	4	32302	Face washer, stainless	6 mm
13	2	0017310	Hose	
14	1	25244	Connection	GES 8 LR 3/8-WD
15	1	62526	Hose	1/4 X 550 M14 X 1.5 L/90

1500K, 1510K, 1720K, 1730K, 1820K, 1830K

Internal ref. 63 41 360

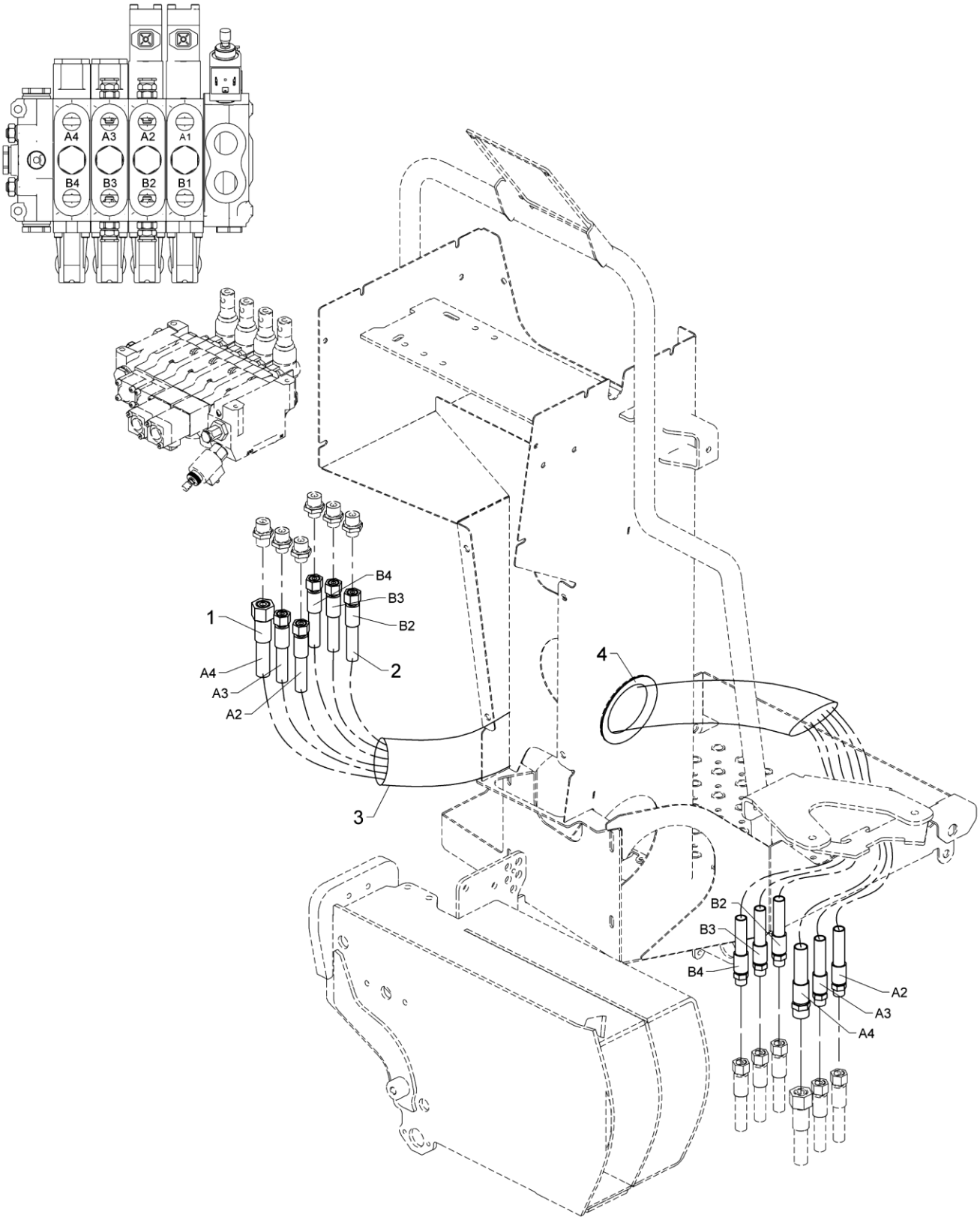

Hose kit, 4 fcts. Hydrocontrol

534 10 500

From loader 1060001
To loader

Created 12-01-2010
Modified

Pos	Qty.	Part no.	Description	Remarks
1	1	56505	Hose	1/2 X 1000 mm L/S
2	5	0015180	Hose	
3	1	62634	Protective cover	
4	1	22122	PVC protection	320 mm

1500K, 1510K, 1720K, 1730K, 1820K, 1830K

Internal ref. 63 41 370

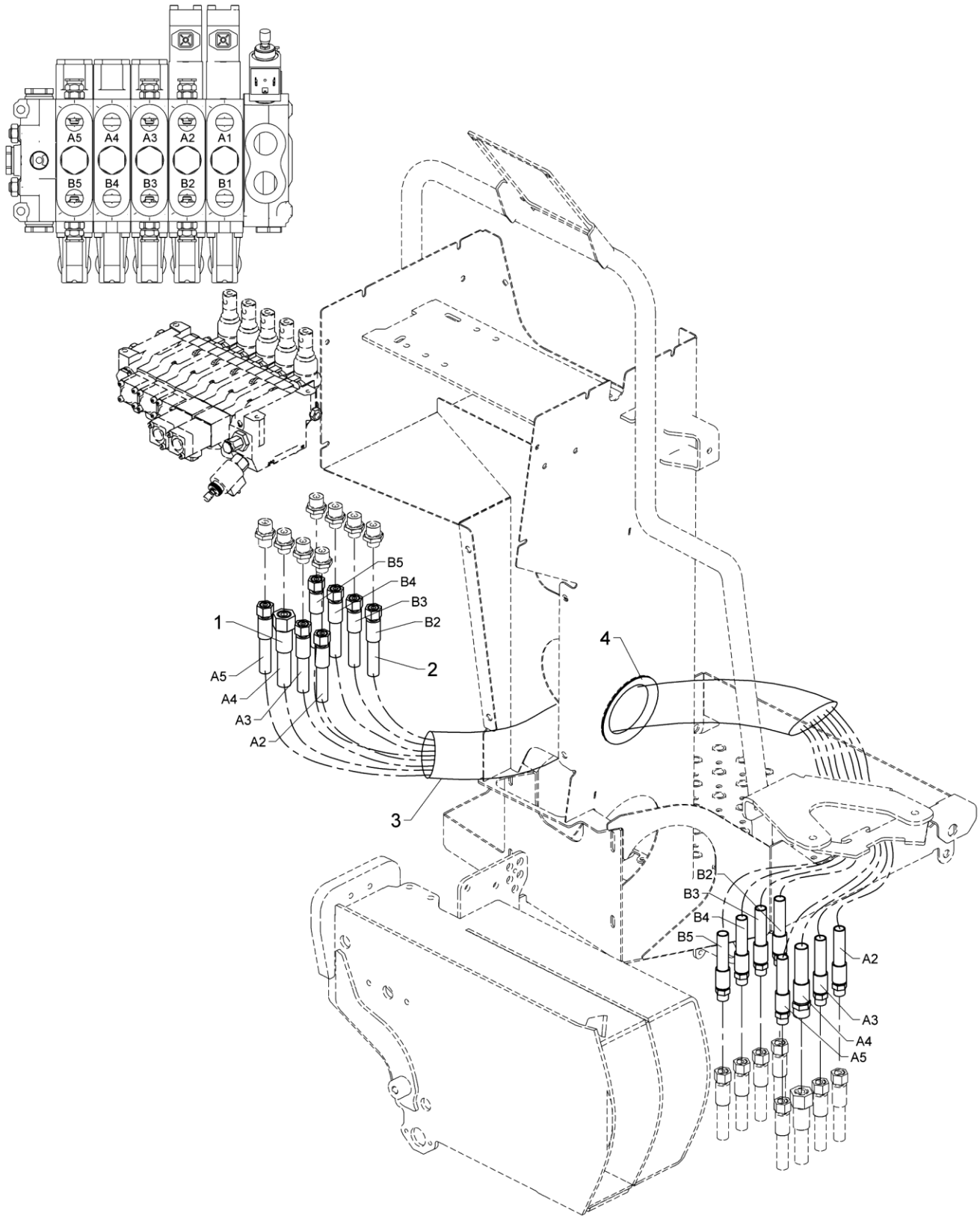

Hose kit, 5 fcts. Hydrocontrol

534 10 510

From loader 1060001
To loader

Created 12-01-2010
Modified

Pos	Qty.	Part no.	Description	Remarks
1	1	56505	Hose	1/2 X 1000 mm L/S
2	7	0015180	Hose	
3	1	62634	Protective cover	
4	1	22122	PVC protection	320 mm

1500K, 1510K, 1720K, 1730K, 1820K, 1830K

Internal ref. 63 41 380

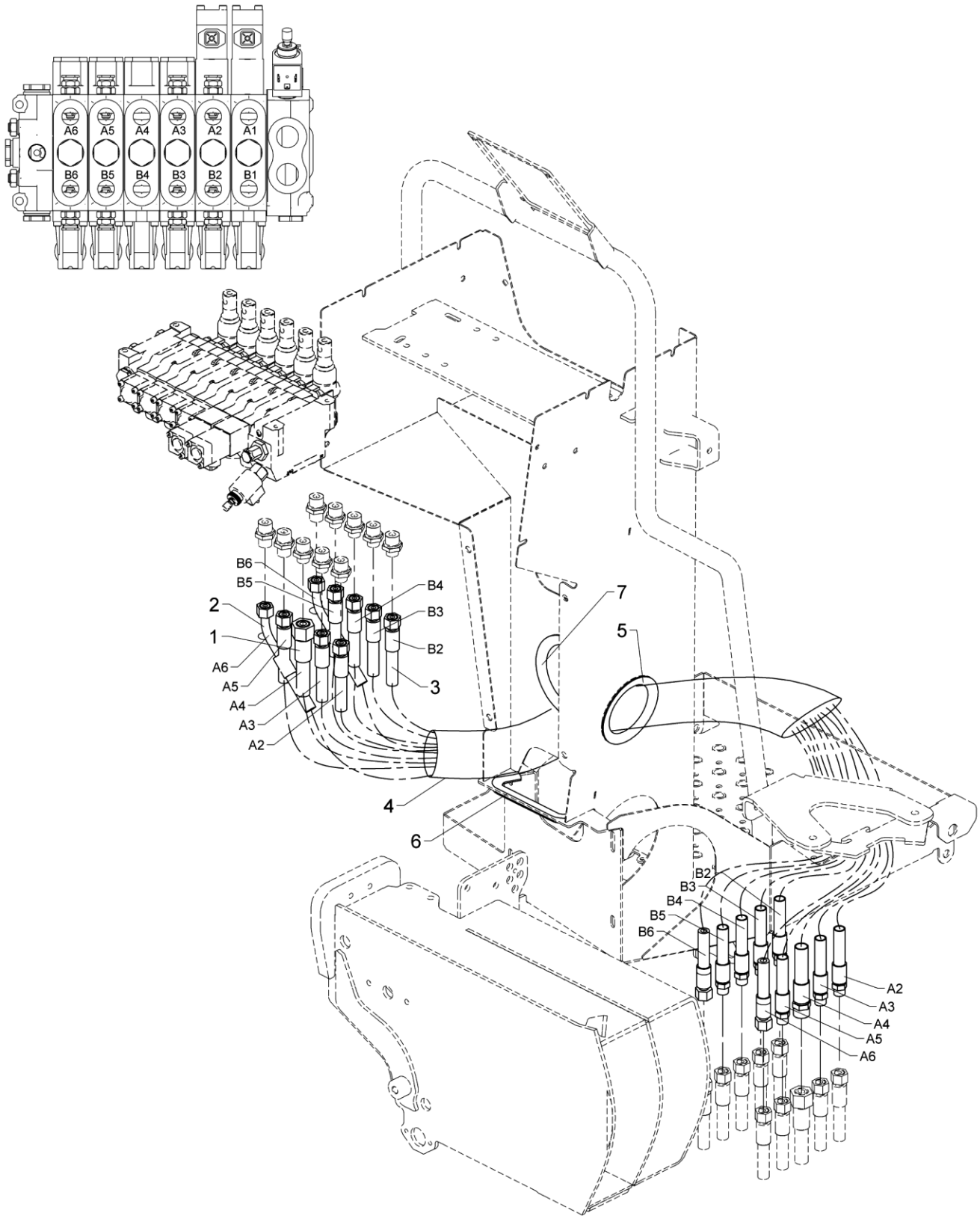

534 10 520

From loader 1060001
To loader

Hose kit, HS dir. valve ctrl. (HC 6 fcts.)

Created 12-01-2010
Modified 22-11-2018

Pos	Qty.	Part no.	Description	Remarks
1	1	56505	Hose	1/2 X 1000 mm L/S
2	2	57851	Hose	MS-800 3/8" x 1000 L/45°
3	7	0015180	Hose	
4	1	62634	Protective cover	
5	1	22122	PVC protection	320 mm
6	1	22122	PVC protection	260 mm
7	1	22122	PVC protection	410 mm

1500K, 1510K, 1720K, 1730K, 1820K, 1830K

63 41 440
Internal ref. 63 41 430

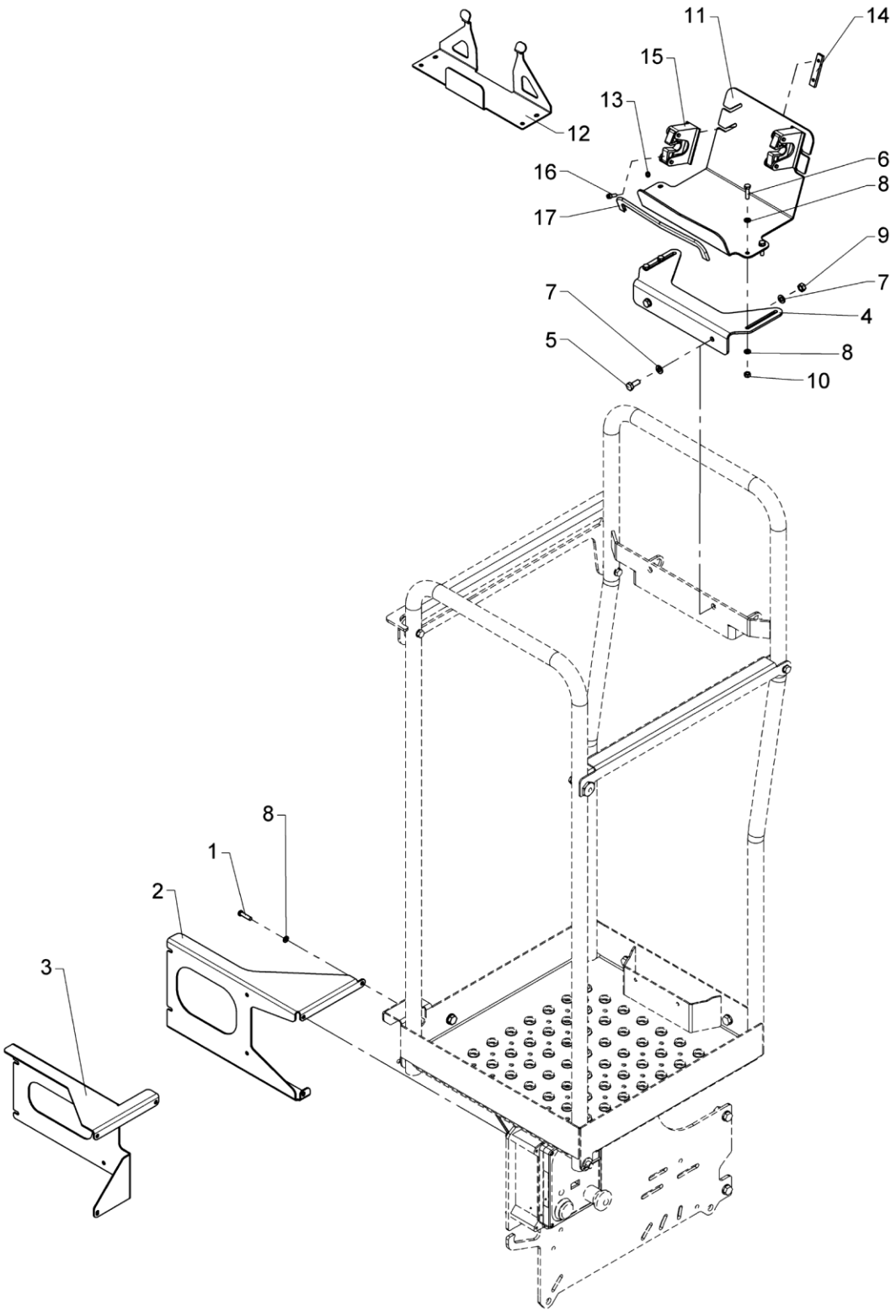

Obsolete

Mounting fittings, HSRC

534 10 800

From loader 1060001
To loader

Created 24-02-2009
Modified

Pos	Qty.	Part no.	Description	Remarks
		6341430	Fittings, HSRC (Scanreco)	
		6341440	Fittings, HSRC (Hetronic)	
1	4	30340	Screw, stainless	6,0 x 25
2	1	6340494	Mounting bracket (RC 400 - HS)	
3	1	6340495	Mounting bracket,Scanreco/Hetr	
4	1	6340498	Fitting	
5	2	30132	Set screw, stainless	M8 x 20
6	4	30114	Set screw, stainless	M6 x 25
7	4	31147	Face washer, 8 mm	8 mm
8	12	32302	Face washer, stainless	6 mm
9	2	30856	Nut, stainless	M8
10	4	30854	Nut, stainless	M6
11	1	6340901	Bracket, Scanreco RC box	
12	1	6340902	Bracket(HETR.remote ctrl. box)	
13	4	31189	Washer	5 mm
14	2	8507104	Threaded plate	
15	2	46453	Bracket	
16	4	30433	Screw	MC5 x 16
17	1	46596	Rubber protection	0,3 m.

1500K, 1510K, 1720K, 1730K, 1820K, 1830K

63 45 010
Internal ref. 63 43 140

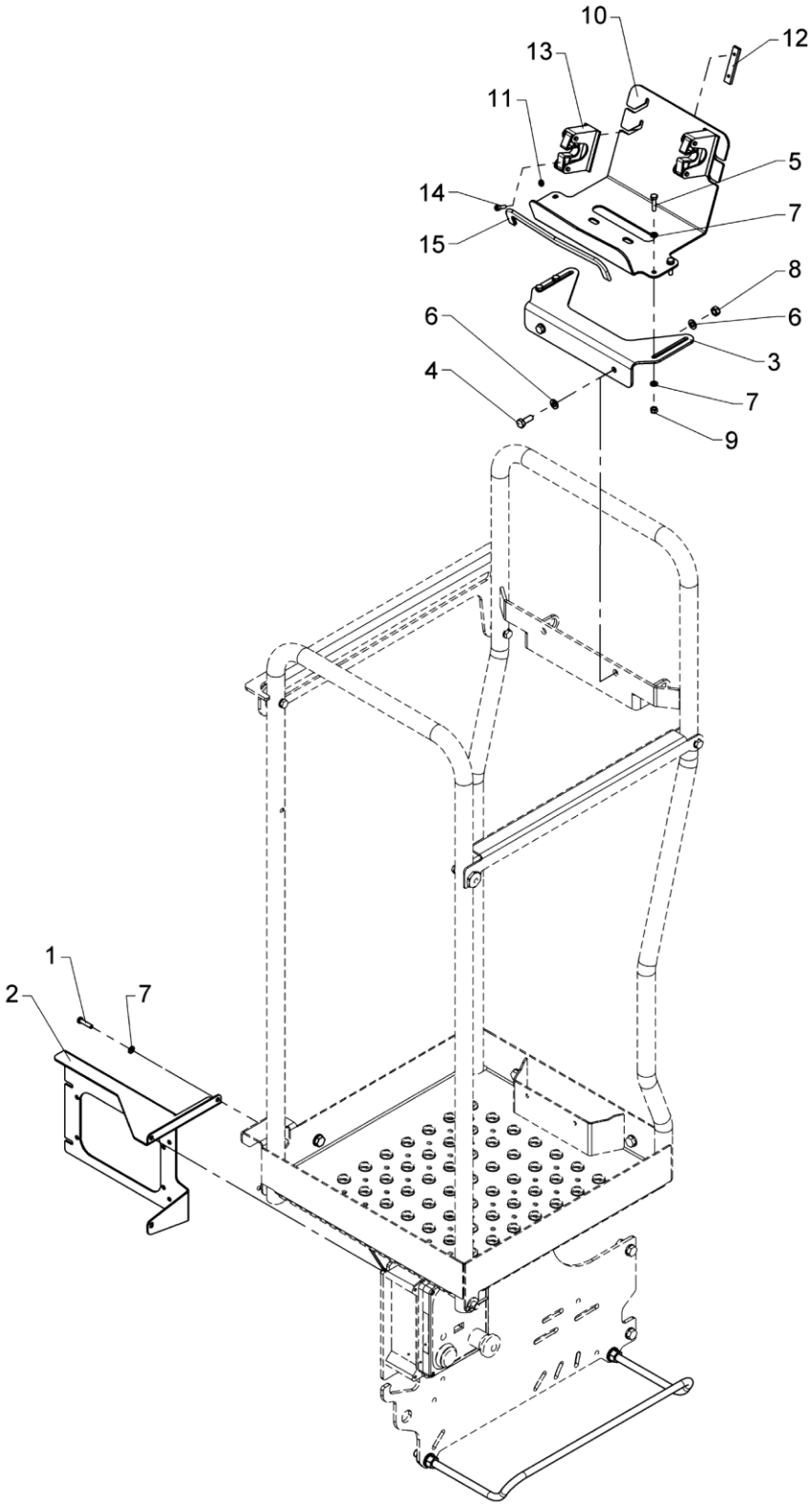

Mounting fittings, HSRC

Pos	Qty.	Part no.	Description	Remarks
		6343140	Mouting fittings, HSRC (SR-G2)	Pos. 1 - 15
		6345010		Pos. 3 - 15 (1610K-RCS - 2820K-R
1	4	30340	Screw, stainless	6,0 x 25
2	1	6340495	Mounting bracket,Scanreco/Hetr	
3	1	6340498	Fitting	
4	2	30133	Set screw, stainless	
5	4	30114	Set screw, stainless	M6 x 25
6	4	31147	Face washer, 8 mm	
7	12	32302	Face washer, stainless	6 mm
8	2	30856	Nut, stainless	M8
9	4	30854	Nut, stainless	M6
10	1	6340901	Bracket, Scanreco RC box	
11	4	31189	Washer	5 mm
12	2	8507104	Threaded plate	
13	2	46453	Bracket	
14	4	30433	Screw	MC5 x 16
15	1	46596	Rubber protection	0,3 m.

1500K, 1510K, 1720K, 1730K, 1820K, 1830K

63 44 990
63 44 760
63 41 990
Internal ref. 63 41 980

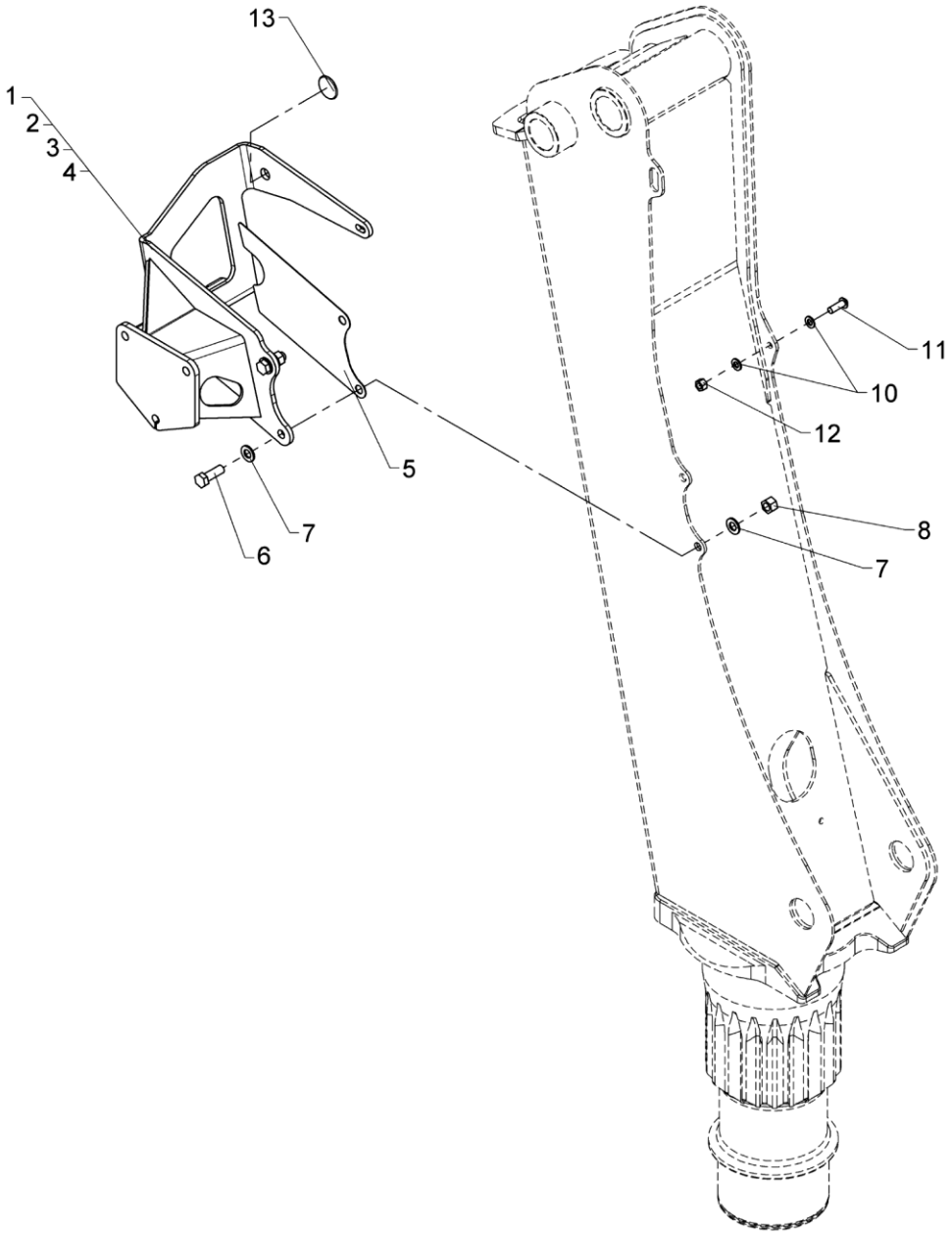

Obsolete

Mounting fittings, TS

534 11 010

From loader 1060001
To loader

Created 24-02-2009
Modified 17-06-2010

Pos	Qty.	Part no.	Description	Remarks
		6341980	Fittings, TS 1300/1500	
		6341990	Fittings, TS 1310/1510	
		6344760	Fittings, TS, 1800/2200	
		6344990	Fittings, TS, 1810/2210	
1	1	6340081	Bracket	1300/1500
2	1	6340085	Bracket	1310/1510
3	1	6344081	Bracket	1800/2200
4	1	6344085	Bracket	1810/2210/1710L/2030L/2110L/253
5	1	6340087	Division plate	
6	2	30207	Set screw	M14 x 40
7	4	31178	Washer	14 mm
8	2	30891	Lock nut	M14
10	2	31177	Washer	10 mm
11	1	30649	Screw	M10 x 30
12	1	30888	Lock nut	M10
13	1	6381484	Guide	

1500K, 1510K, 1720K, 1730K, 1820K, 1830K

63 44 990
63 44 760
63 41 990
Internal ref. 63 41 980

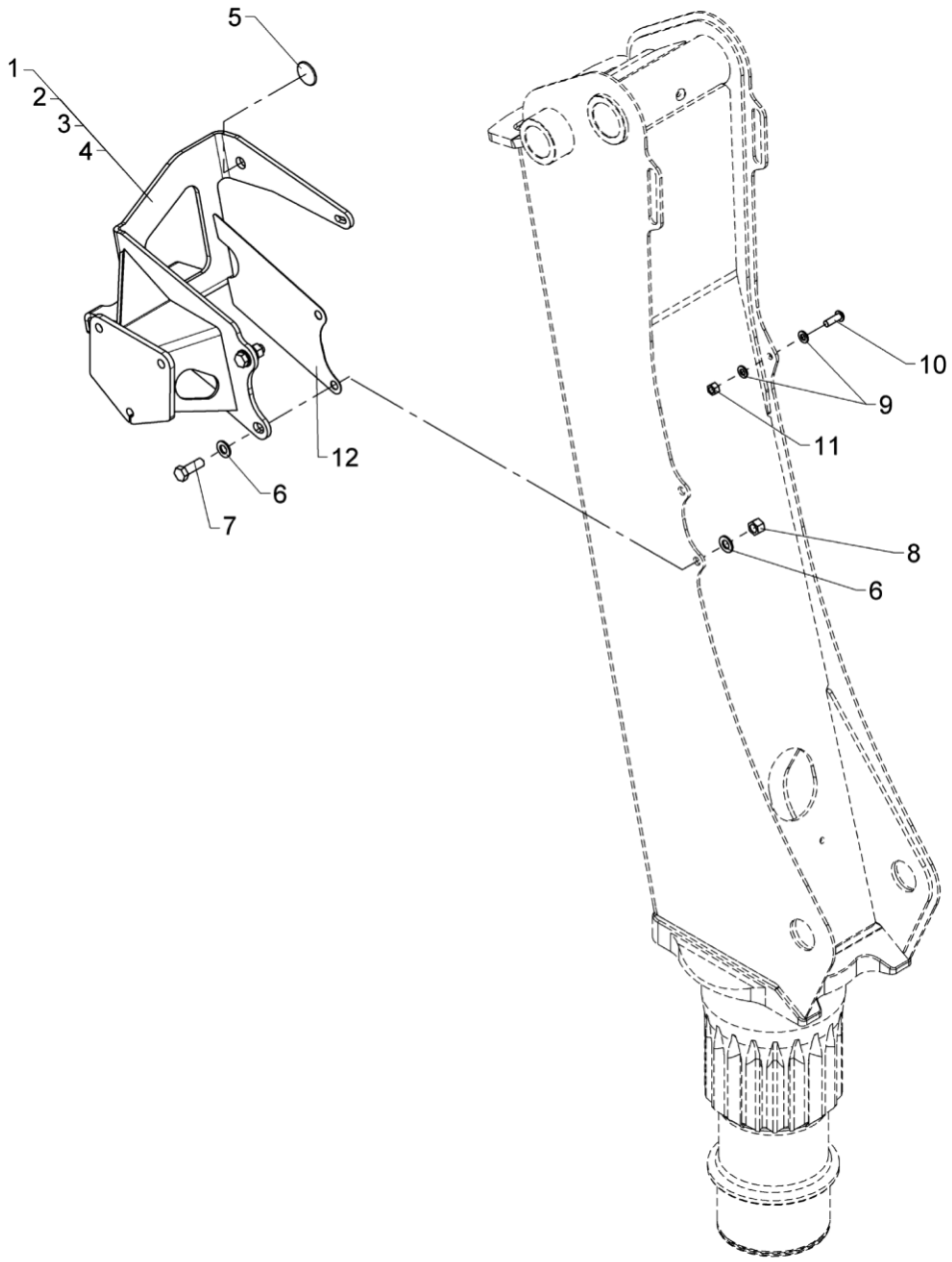

Mounting fittings, TS

Pos	Qty.	Part no.	Description	Remarks
		6341980	Fittings, TS 1300/1500	
		6341990	Fittings, TS 1310/1510	
		6344760	Fittings, TS, 1800/2200	
		6344990	Fittings, TS, 1810/2210	
1	1	6340685	Top seat bracket (TS)	1300/1500
2	1	6340687	TS bracket	1310/1510
3	1	6344685	TS bracket	1800/2200
4	1	6344687	TS bracket	1810/2210/1710L/2030L/2110L/253
5	1	6381484	Guide	
6	4	31178	Washer	14 mm
7	2	30207	Set screw	M14 x 40
8	2	30891	Lock nut	M14
9	2	31177	Washer	10 mm
10	1	30649	Screw	M10 x 30
11	1	30888	Lock nut	M10
12	1	6340087	Division plate	

1500K, 1510K, 1720K, 1730K, 1820K, 1830K

Internal ref. 63 41 950

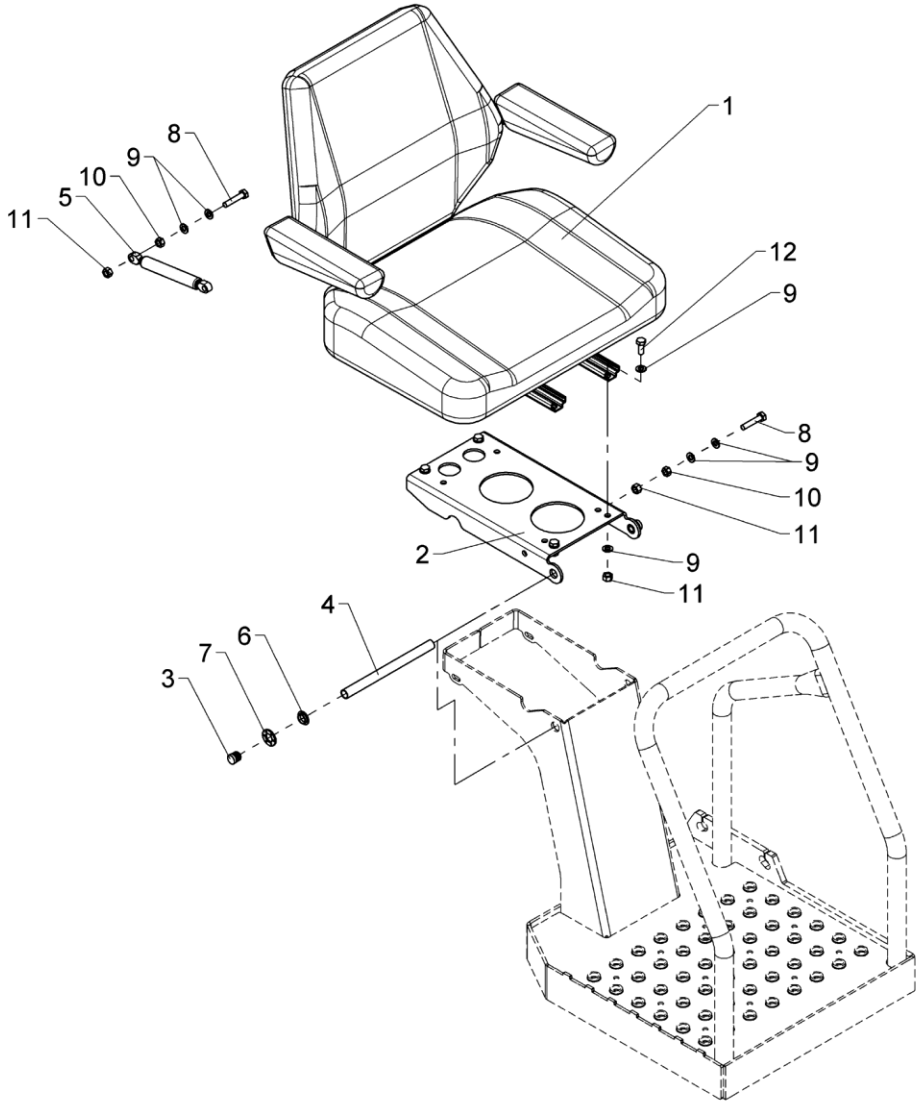

Seat, cpl.

Pos	Qty.	Part no.	Description	Remarks
1	1	24134	Seat	
2	1	6306638	Plate, seat	
3	2	64520	Stopper	
4	1	6306649	Pin	
5	1	48460	Gas spring	
6	2	23416	Composite bearing	BB 1504,5
7	2	32279	Clamping ring sleeve	15 mm
8	2	30137	Set screw, stainless	M8 x 40
9	12	31147	Face washer, 8 mm	8 mm
10	2	30856	Nut, stainless	M8
11	6	30886	Lock nut, stainless	M8
12	4	30132	Set screw, stainless	M8 x 20

1500K, 1510K, 1720K, 1730K, 1820K, 1830K

Internal ref. 63 41 940

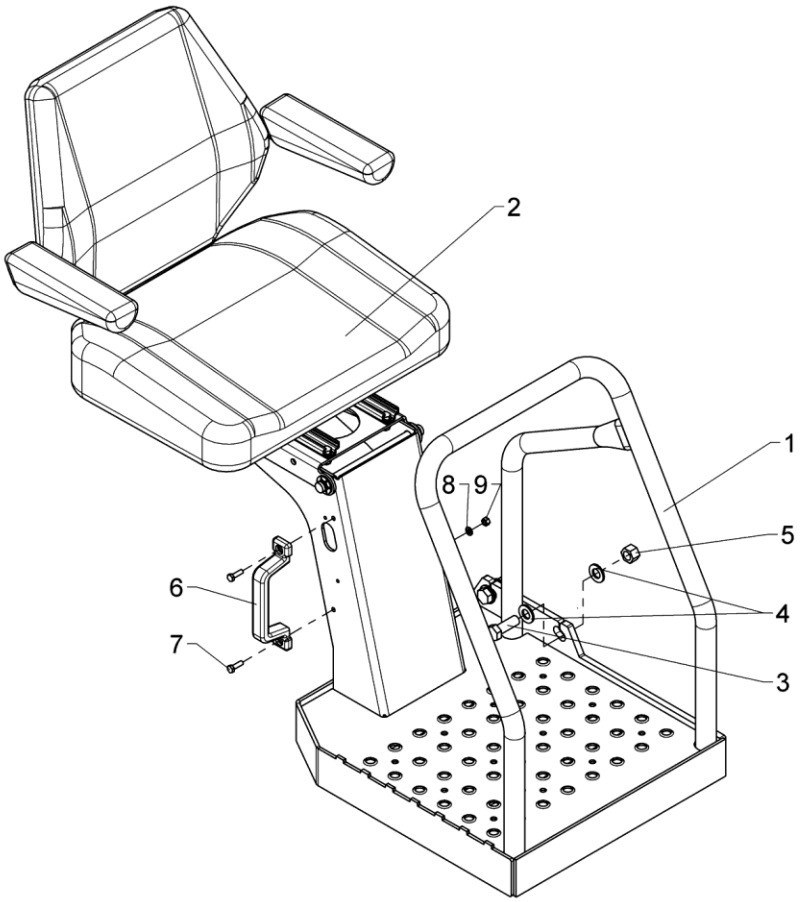

Top seat (RC), cpl.

534 11 030

From loader 1060001
To loader

Created 24-02-2009
Modified 28-02-2019

Pos	Qty.	Part no.	Description	Remarks
1	1	6340911	Platform, (TSRC)	
2	1	6341950	Seat, complete	
3	3	32248	Set screw	M14 x 40
4	6	31178	Washer	14 mm
5	3	32317	Lock nut	M14
6	1	42999	Lever (knob)	
7	2	30113	Set screw, stainless	M6 x 20
8	2	32302	Face washer, stainless	6 mm
9	2	30884	Lock nut, stainless	M6

1500K, 1510K, 1720K, 1730K, 1820K, 1830K

63 41 970
Internal ref. 63 41 960

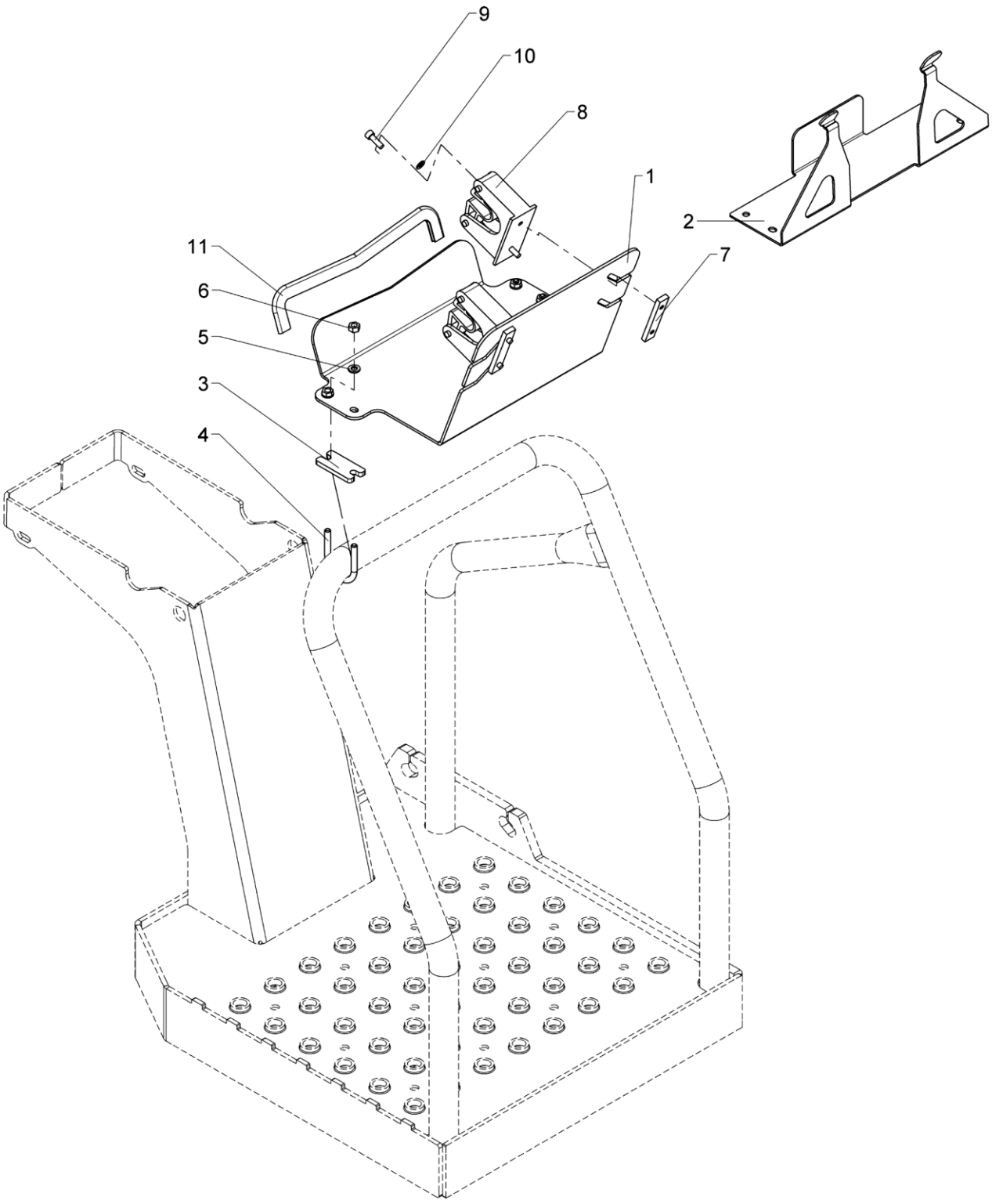

Mounting fittings, TS RC

Pos	Qty.	Part no.	Description	Remarks
		6341960	Fittings, TS RC (SR)	
		6341970	Fittings, TS RC (HETR)	
1	1	6340901	Bracket, Scanreco RC box	
2	1	6340902	Bracket(HETR.remote ctrl. box)	
3	2	6340904	Division plate	
4	2	6340903	Clamp	
5	4	32302	Face washer, stainless	6 mm
6	4	30854	Nut, stainless	M6
7	2	8507104	Threaded plate	
8	2	46453	Bracket	
9	4	30433	Screw	MC5 x 16
10	4	31189	Washer	5 mm
11	1	46596	Rubber protection	0,3 m.

1500K, 1510K, 1720K, 1730K, 1820K, 1830K

63 43 400
Internal ref. 63 41 900

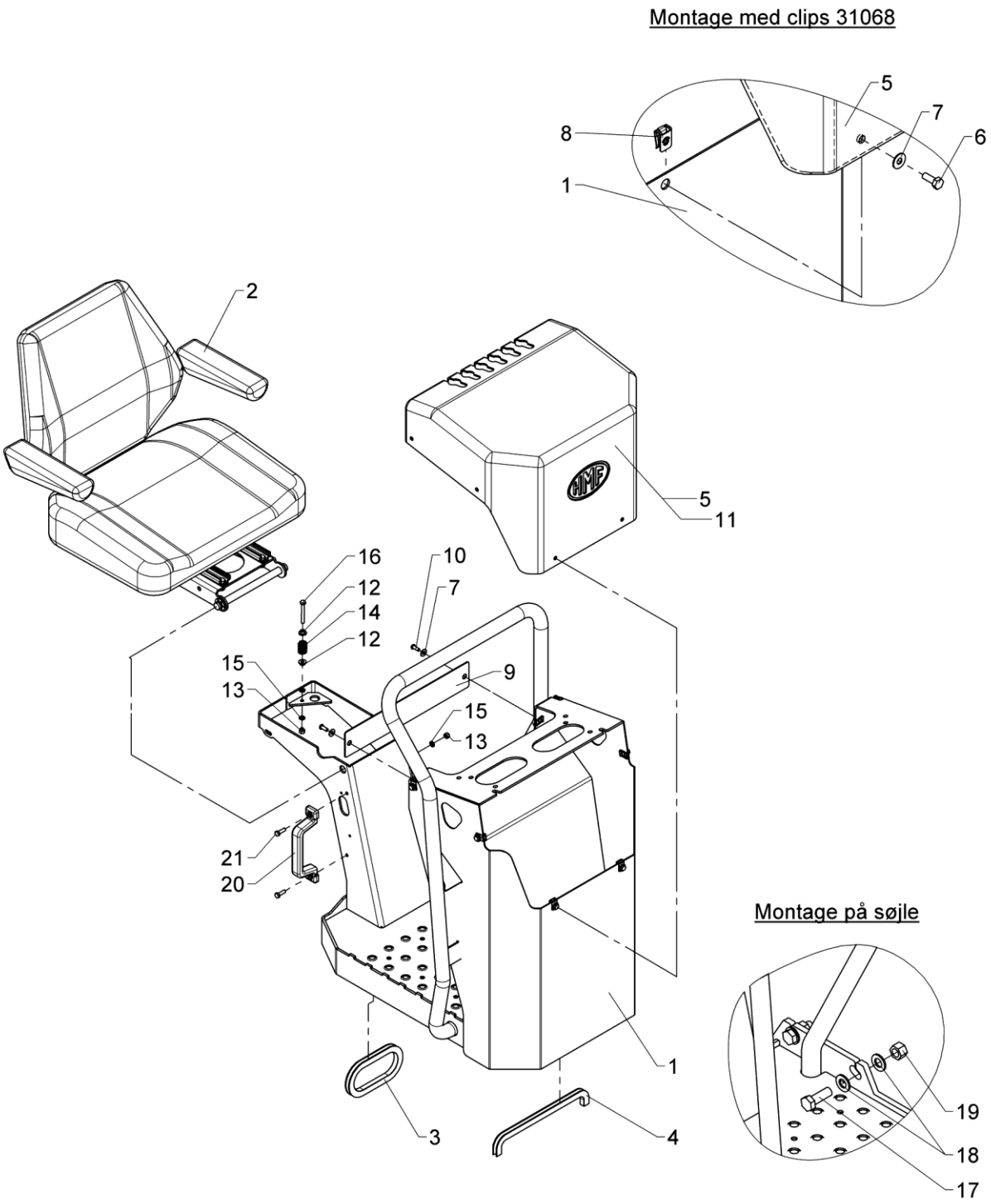

534 11 050

From loader 1060001
To loader

Top seat (HC or RS 210 linear controls), cpl.

Created 24-02-2009
Modified 28-02-2019

Pos	Qty.	Part no.	Description	Remarks
		6341900	Top seat, complete	Bruges afskærmning 42163
		6343400		Bruges afskærmning 42800
1	1	6340921	Platform (TS)	
2	1	6341950	Seat, complete	
3	1	46587	Rubber protection	370 mm
4	1	46587	Rubber protection	300 mm
5	1	42163	Protection	
6	6	30112	Set screw, stainless	M6 x 16
7	8	32306	Washer	6 mm
8	8	31068	Clip	M6 0,5 - 4,0 mm.
9	1	6340937	Cover	
10	2	32222	Button head screw	M6 x 16
11	1	42800	Shielding	
12	2	64382	Nylon bushing	
13	3	30884	Lock nut, stainless	M6
14	1	33367	Spring	6884924
15	4	32302	Face washer, stainless	6 mm
16	1	30119	Steel pin, stainless	M6 x 50
17	3	32248	Set screw	M14 x 40
18	6	31178	Washer	14 mm
19	3	32317	Lock nut	M14
20	1	42999	Lever (knob)	
21	2	30113	Set screw, stainless	M6 x 20

1500K, 1510K, 1720K, 1730K, 1820K, 1830K

Internal ref. 63 41 880

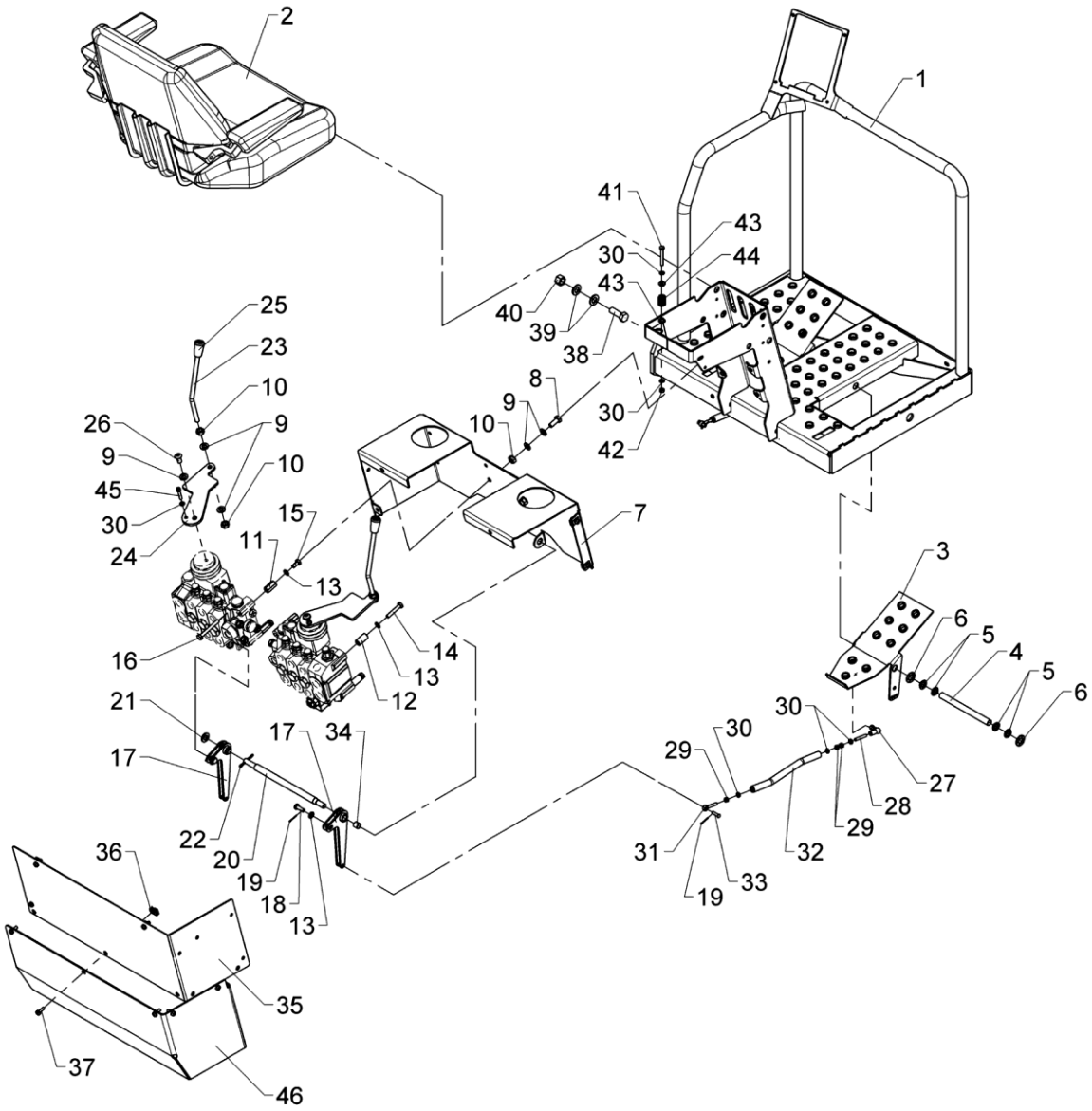

534 11 060

From loader 1060001
To loader

Created 12-01-2010
Modified 05-12-2014

Top seat (HC X), cpl.

Pos	Qty.	Part no.	Description	Remarks
1	1	6306621	Platform (TS)	
2	1	6341950	Seat, complete	
3	2	6306632	Foot lever	
4	2	6306633	Pin	
5	8	23416	Composite bearing	BB 1504,5
6	4	32279	Clamping ring sleeve	15 mm
7	1	6341031	Valve bracket	
8	4	31513	Set screw, stainless	M10 x 25
9	14	31565	Washer, stainless	10 mm
10	8	31551	Nut, stainless	M10
11	4	6341034	Spacer	
12	4	6341035	Spacer	
13	8	31147	Face washer, 8 mm	8 mm
14	4	31511	Set screw, stainless	M8 x 45
15	2	30131	Set screw, stainless	M8 x 16
16	2	32250	Set screw	M8 x 65
17	2	6341036	Bracket	
18	2	31276	Cotter bolt	ø8 x 23
19	4	31601	Split pin, stainless	ø1,6 x 20
20	1	6341033	Pin	
21	1	32338	Washer	12 mm
22	1	31638	Split pin	ø4 x 40
23	2	6341039	Control lever	
24	2	6341041	Guide plate	
25	2	64411	Knob for lever	
26	2	30926	Steel bolt	M10 x 20
27	2	24105	Toggle joint	
28	2	31007	Pointed screw	MSP6 x 40
29	6	30854	Nut, stainless	M6
30	10	32302	Face washer, stainless	6 mm
31	2	32114	Pin	M6 x 40
32	2	6341042	Connecting rod	
33	2	31271	Cotter bolt	ø6 x 21
34	4	23456	Composite bearing	ø12/14 x 12
35	1	6341032	Protection	
36	10	31068	Clip	M6 0,5 - 4,0 mm.
37	10	32480	Screw	M6 x 18
38	3	32248	Set screw	M14 x 40
39	6	31178	Washer	14 mm
40	3	32317	Lock nut	M14
41	1	30119	Steel pin, stainless	M6 x 50

1500K, 1510K, 1720K, 1730K, 1820K, 1830K

Internal ref. 63 41 880

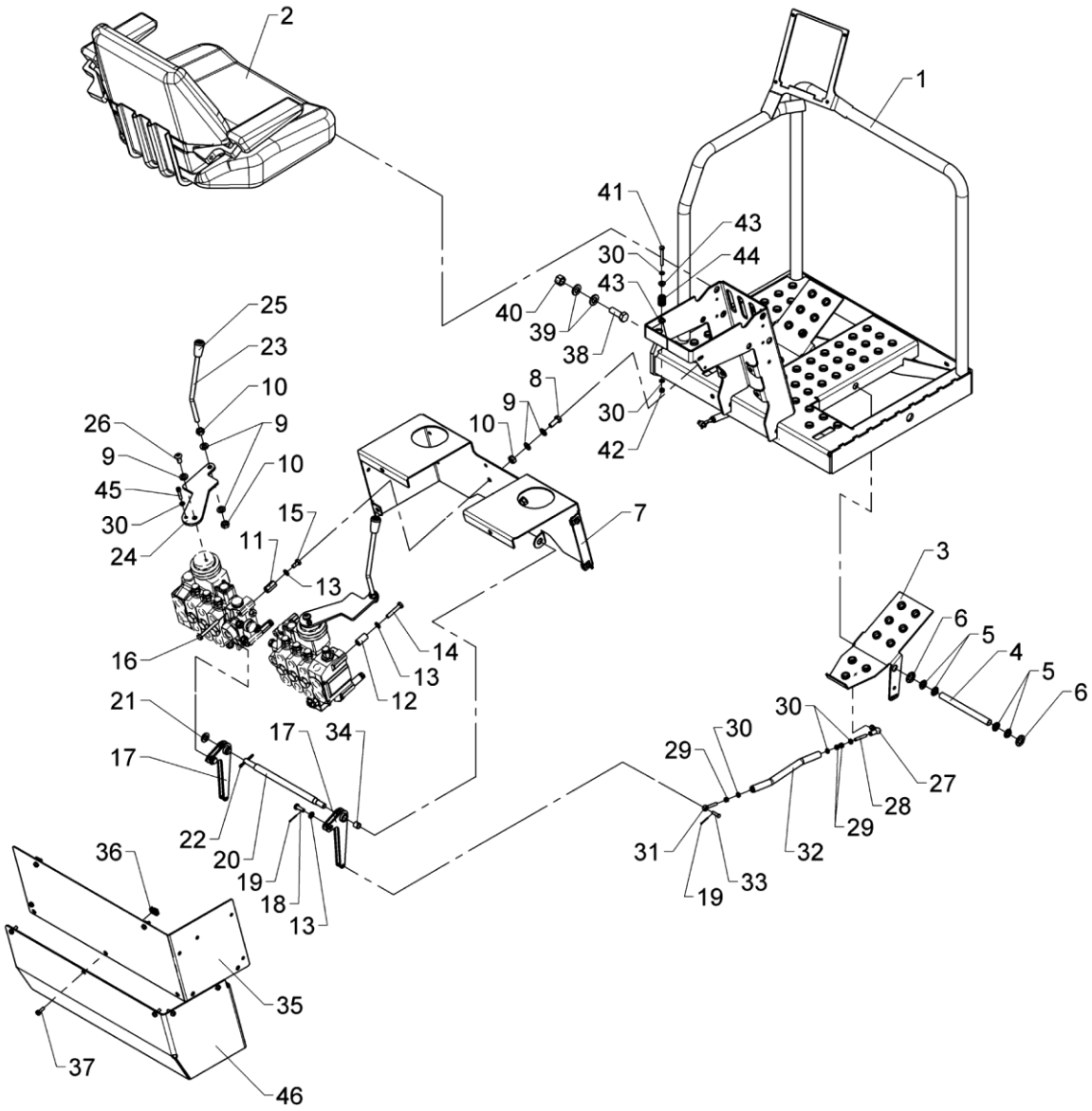

Top seat (HC X), cpl.

534 11 060

From loader 1060001
To loader

Created 12-01-2010
Modified 05-12-2014

Pos	Qty.	Part no.	Description	Remarks
42	1	30884	Lock nut, stainless	M6
43	2	64382	Nylon bushing	
44	1	33367	Spring	6884924
45	2	30961	Screw	MC6 x 30
46	1	6341049	Shielding. HC joysticks	

1500K, 1510K, 1720K, 1730K, 1820K, 1830K

Internal ref. 63 41 890

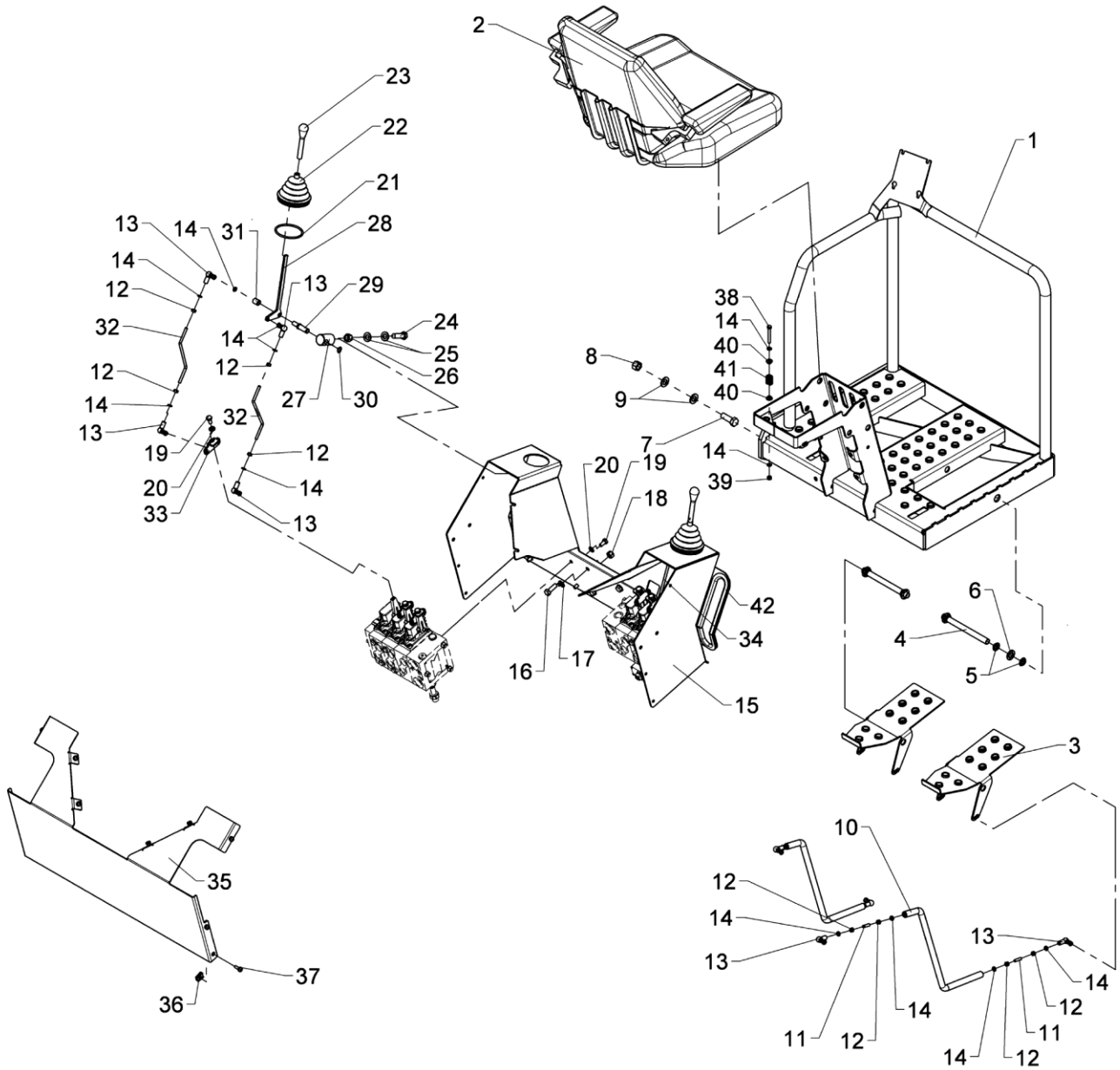

Obsolete

Top seat (Danfoss X), cpl.

534 11 070

From loader 1060001
To loader 1060001

Created 12-01-2010
Modified

Pos	Qty.	Part no.	Description	Remarks
1	1	6306621	Platform (TS)	
2	1	6341950	Seat, complete	
3	2	6306632	Foot lever	
4	2	6306633	Pin	
5	8	23416	Composite bearing	BB 1504,5
6	4	32279	Clamping ring sleeve	15 mm
7	3	32248	Set screw	M14 x 40
8	3	32317	Lock nut	M14
9	6	31178	Washer	14 mm
10	2	6306645	Connecting rod	
11	4	30560	Pointed screw	MSP6 x 25
12	16	30854	Nut, stainless	M6
13	12	24105	Toggle joint	
14	23	32302	Face washer, stainless	6 mm
15	1	6341051	Valve bracket	
16	4	30156	Set screw, stainless	M10 x 30
17	8	31565	Washer, stainless	10 mm
18	4	31564	Lock nut, stainless	M10
19	14	30131	Set screw, stainless	M8 x 16
20	14	31147	Face washer, 8 mm	8 mm
21	2	20268	O-ring	OR 70 x 4
22	2	64390	Bellows	
23	2	48406	Knob	
24	2	31533	Set screw, stainless	M12 x 40
25	4	32338	Washer	12 mm
26	2	30890	Lock nut	M12
27	2	64064	Universal joint	
28	2	6306648	Control lever	
29	2	6306647	Pin	
30	2	33102	Circlip	12U
31	2	6302048	Spacer	
32	2	6306652	Threaded pin	
33	6	6306646	Adapter, Danfoss	
34	2	6306653	Threaded pin	
35	1	6341054	Protection	
36	10	31068	Clip	M6 0,5 - 4,0 mm.
37	10	32480	Screw	M6 x 18
38	1	30119	Steel pin, stainless	M6 x 50
39	1	30884	Lock nut, stainless	M6
40	2	64382	Nylon bushing	
41	1	33367	Spring	6884924

1500K, 1510K, 1720K, 1730K, 1820K, 1830K

Internal ref. 63 41 890

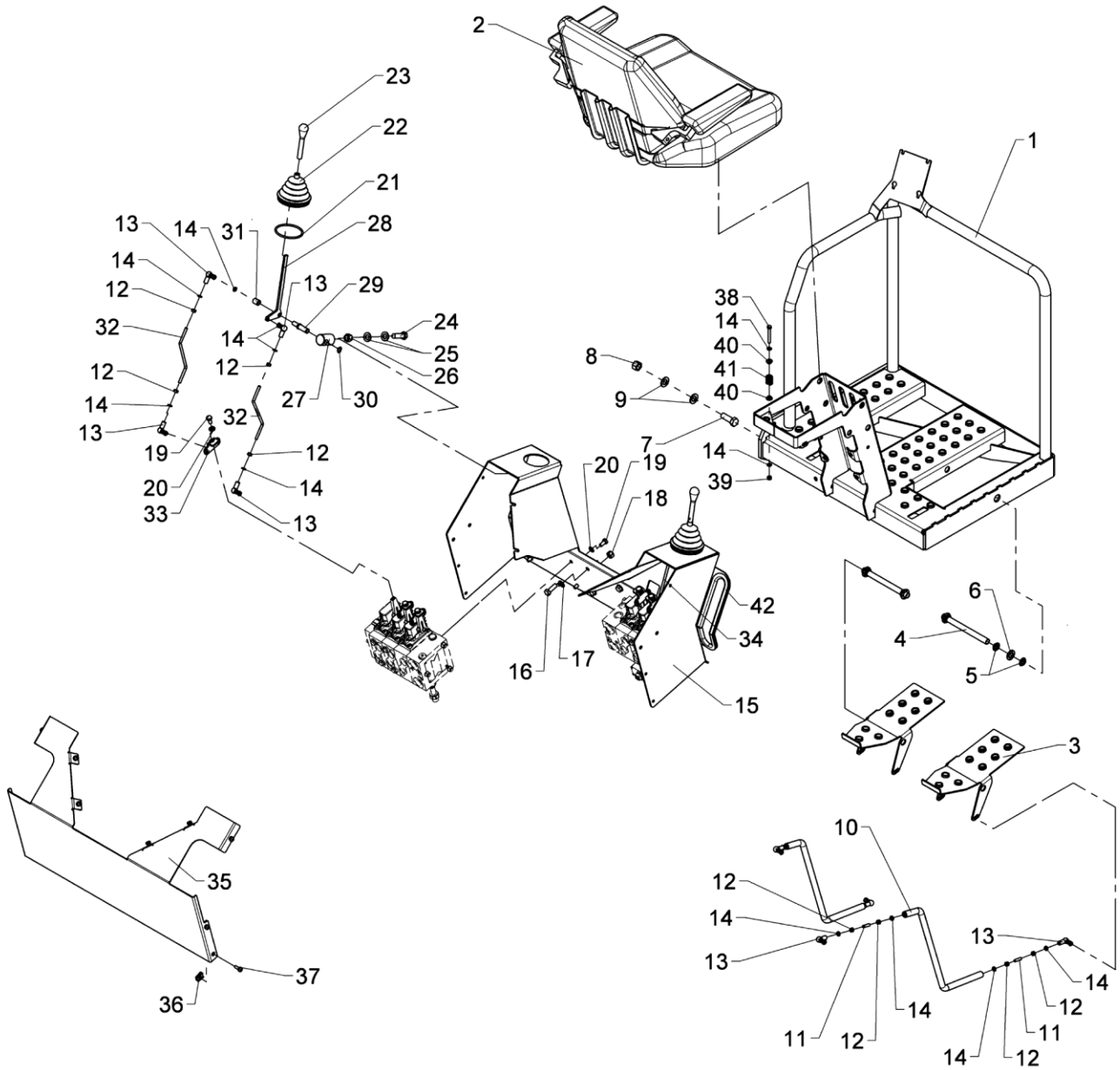

Obsolete

Top seat (Danfoss X), cpl.

534 11 070

From loader 1060001
To loader 1060001

Created 12-01-2010
Modified

Pos	Qty.	Part no.	Description	Remarks
42	2	46596	Rubber protection	L = 510

1500K, 1510K, 1720K, 1730K, 1820K, 1830K

Internal ref. 63 41 890

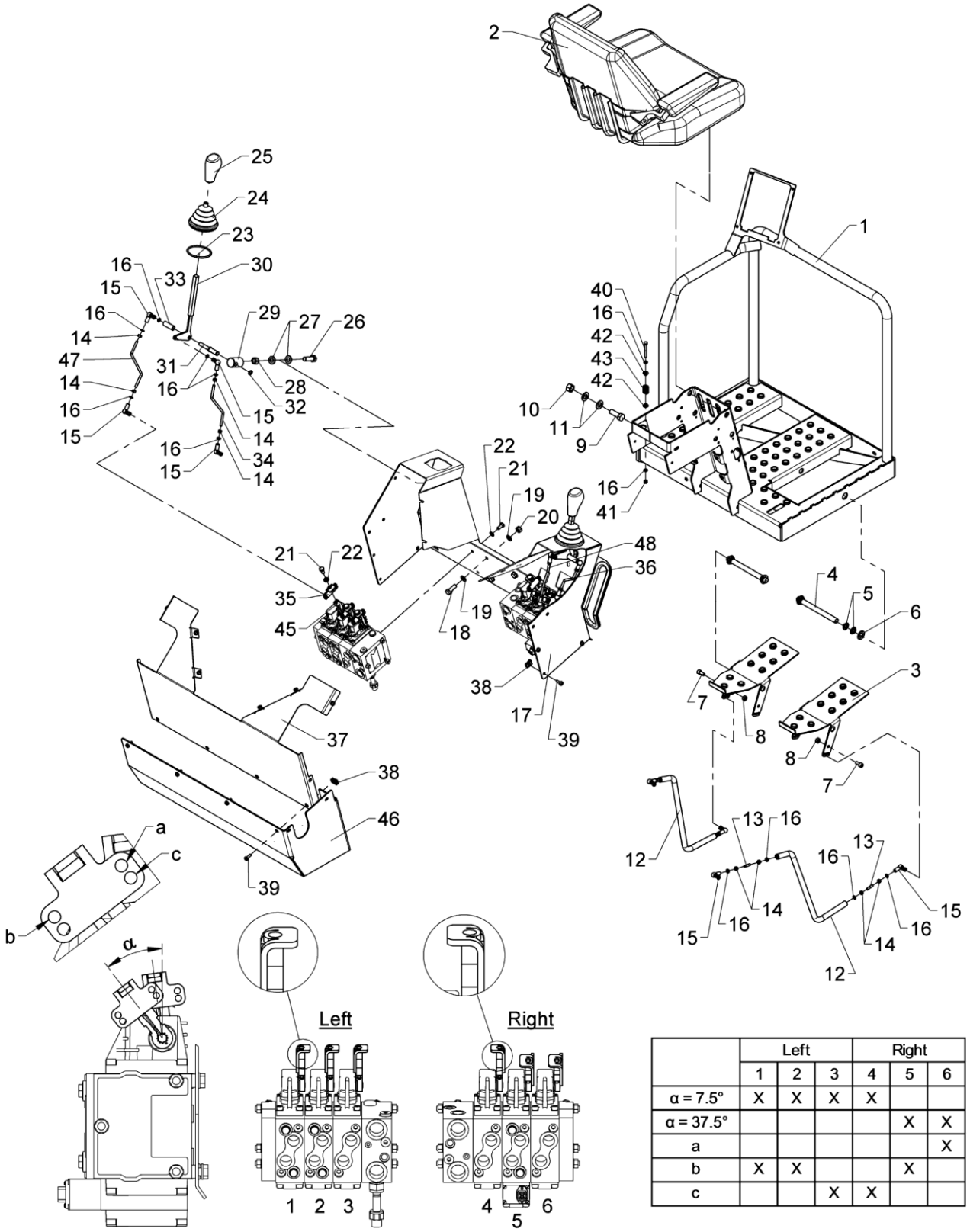

	Left			Right		
	1	2	3	4	5	6
α = 7.5°	X	X	X	X		
α = 37.5°					X	X
a						X
b	X	X			X	
c			X	X		

534 11 070 A

From loader 1060001
To loader

Top seat (Danfoss X), cpl.

Created 07-02-2014
Modified 23-01-2019

Pos	Qty.	Part no.	Description	Remarks
1	1	6306621	Platform (TS)	
2	1	6341950	Seat, complete	
3	2	6306632	Foot lever	
4	2	6306633	Pin	
5	8	23416	Composite bearing	BB 1504,5
6	4	32279	Clamping ring sleeve	15 mm
7	2	32228	Cylinder screw	MC8 x 16
8	2	30856	Nut, stainless	M8
9	3	32248	Set screw	M14 x 40
10	3	32317	Lock nut	M14
11	6	31178	Washer	14 mm
12	2	6306645	Connecting rod	
13	4	30560	Pointed screw	MSP6 x 25
14	16	30854	Nut, stainless	M6
15	12	24105	Toggle joint	
16	22	32302	Face washer, stainless	6 mm
17	1	6341051	Valve bracket	
18	4	30156	Set screw, stainless	M10 x 30
19	8	31565	Washer, stainless	10 mm
20	4	31564	Lock nut, stainless	M10
21	14	30131	Set screw, stainless	M8 x 16
22	14	31147	Face washer, 8 mm	
23	2	20268	O-ring	OR 70 x 4
24	2	64390	Bellows	
25	2	50236	Lever	
26	2	31533	Set screw, stainless	M12 x 40
27	4	32338	Washer	12 mm
28	2	30890	Lock nut	M12
29	2	64064	Universal joint	
30	2	6306849	Welded lever for joystick	
31	2	6306845	Pin	
32	2	33102	Circlip	12U
33	2	6306846	Distance pipe	
34	1	6306861	Threaded pin	
35	6	6306646	Adapter, Danfoss	
36	1	6306843	Threaded pin	
37	1	6341054	Protection	
38	15	31068	Clip	M6 0,5 - 4,0 mm.
39	15	32480	Screw	M6 x 18
40	1	30119	Steel pin, stainless	M6 x 50
41	1	30884	Lock nut, stainless	M6

1500K, 1510K, 1720K, 1730K, 1820K, 1830K

Internal ref. 63 41 890

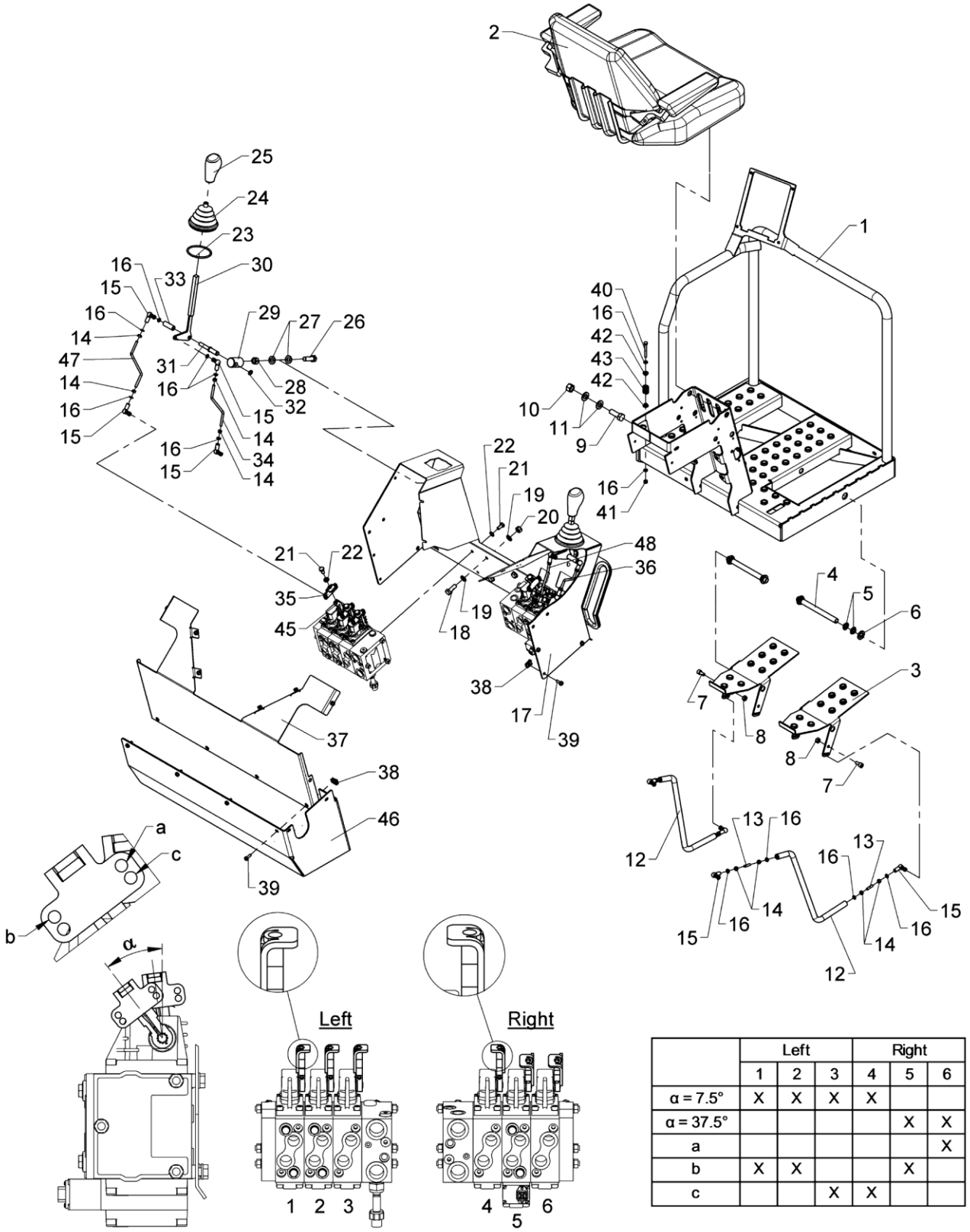

	Left			Right		
	1	2	3	4	5	6
α = 7.5°	X	X	X	X		
α = 37.5°					X	X
a						X
b	X	X			X	
c			X	X		

534 11 070 A

From loader 1060001
To loader

Top seat (Danfoss X), cpl.

Created 07-02-2014
Modified 23-01-2019

Pos	Qty.	Part no.	Description	Remarks
42	2	64382	Nylon bushing	
43	1	33367	Spring	6884924
44	2	46596	Rubber protection	L = 510
45	6	6344475	Foot for lever	
46	1	6341044	Shielding	
47	1	6306844	Threaded pin	
48	1	6306841	Threaded pin	

1500K, 1510K, 1720K, 1730K, 1820K, 1830K

Internal ref. 63 41 870

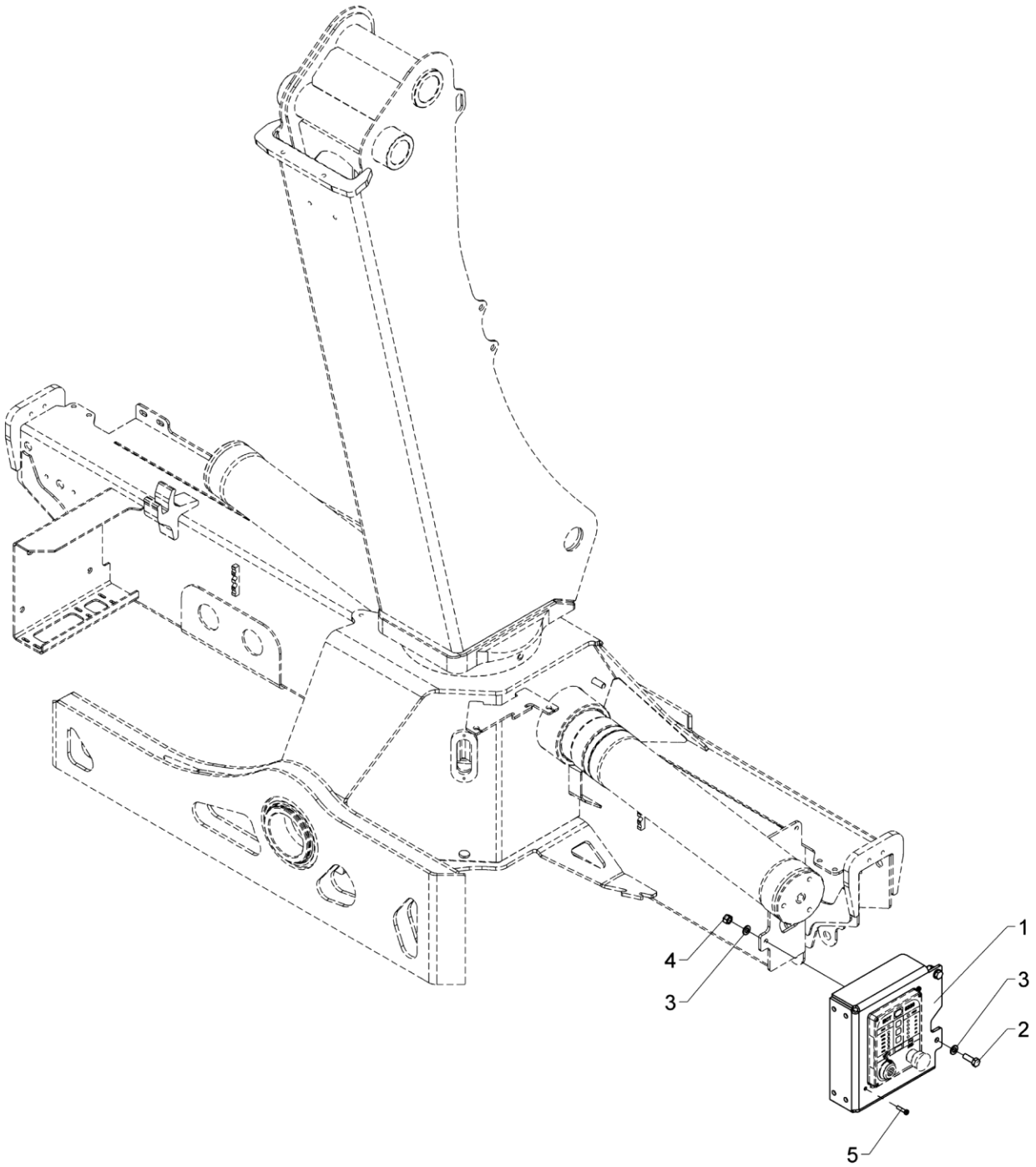

Bracket, complete (ECT 5320 - TS)

Pos	Qty.	Part no.	Description	Remarks
1	1	6340909	Bracket, (ECT5320 - TS)	
2	2	30156	Set screw, stainless	M10 x 30
3	4	31177	Washer	10 mm
4	2	31564	Lock nut, stainless	M10
5	3	30340	Screw, stainless	6,0 x 25

1500K, 1510K, 1720K, 1730K, 1820K, 1830K

Internal ref. 63 41 860

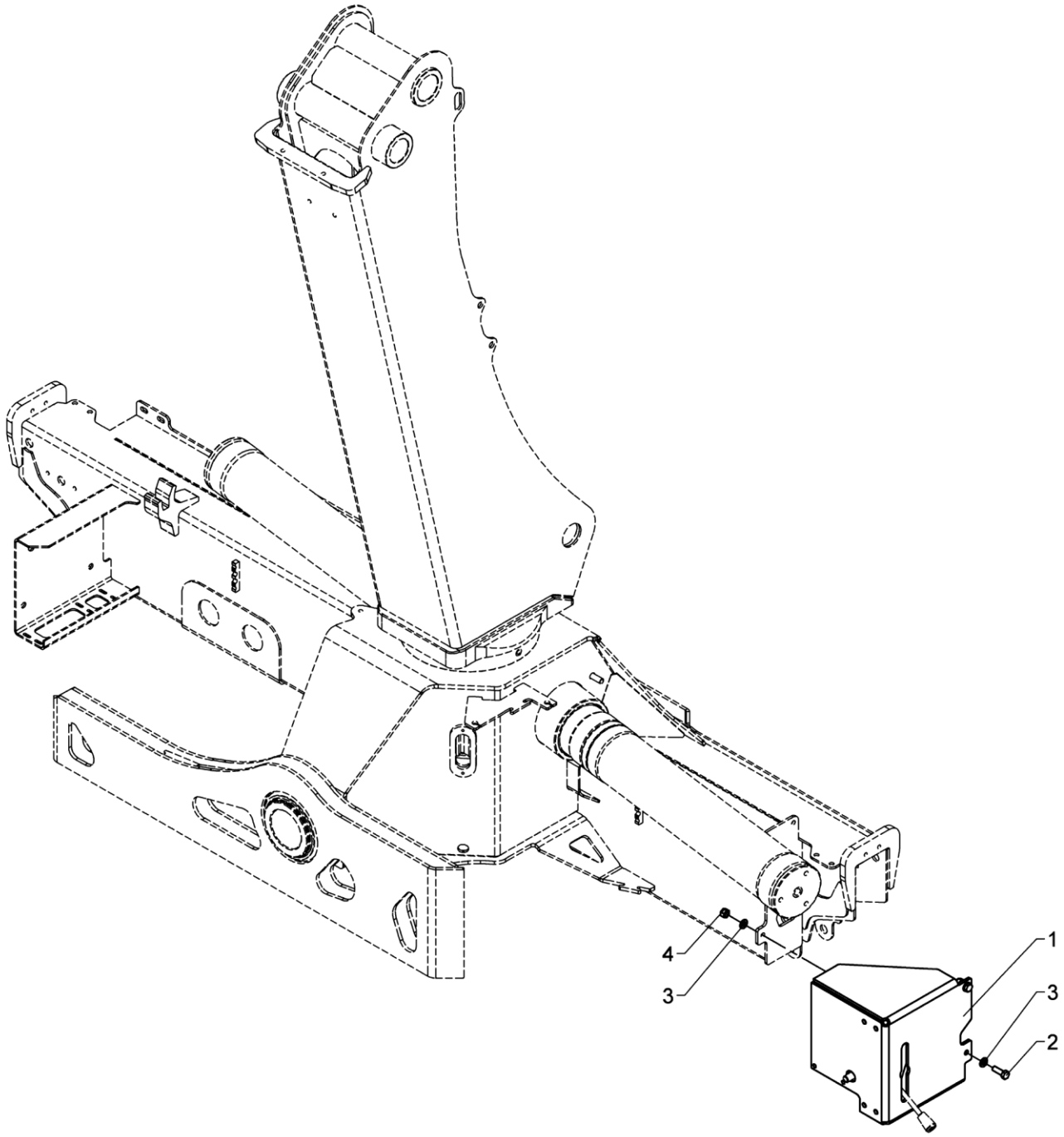

Bracket, complete (change-over valve, TS, excl. CE)

From loader 1060001
To loader
Created 16-06-2009
Modified

Pos	Qty.	Part no.	Description	Remarks
1	1	6340908	Bracket	
2	2	30156	Set screw, stainless	M10 x 30
3	4	31177	Washer	10 mm
4	2	31564	Lock nut, stainless	M10

1500K, 1510K, 1720K, 1730K, 1820K, 1830K

63 45 540
Internal ref. 63 41 540

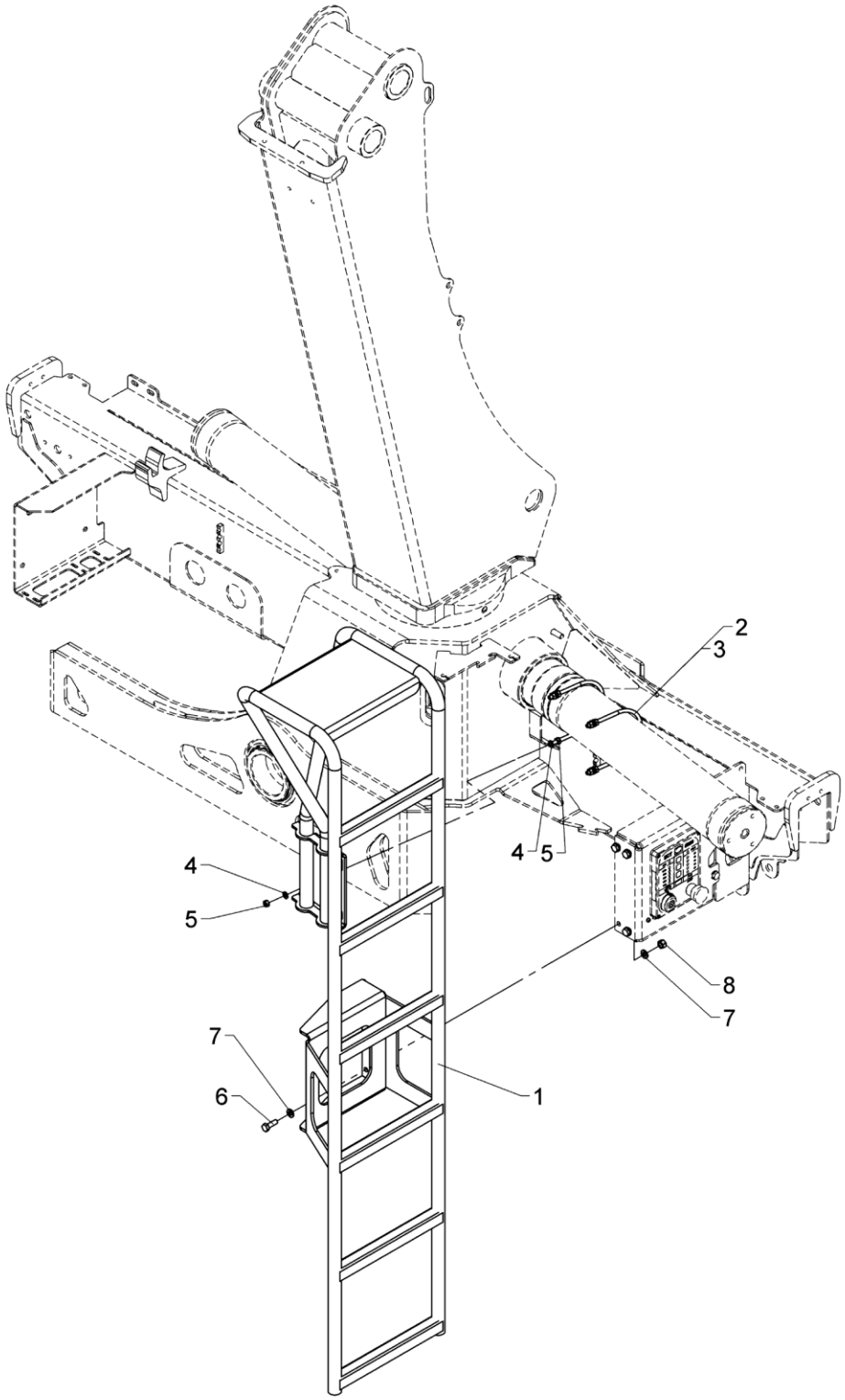

Obsolete

Ladder for TS, cpl.

534 11 090

From loader 1060001
To loader 1061909

Created 25-02-2009
Modified 06-05-2014

Pos	Qty.	Part no.	Description	Remarks
		6341540	Ladder, TS, cpl. (1300-1730)	
		6345540	Ladder, TS, cpl. (1800-2430)	
1	1	6340931	Ladder (TS)	
2	2	6340878	Clamp	1300/1730
3	2	6344878	Clamp	1800/2430
4	8	31147	Face washer, 8 mm	8 mm
5	8	30856	Nut, stainless	M8
6	4	30156	Set screw, stainless	M10 x 30
7	8	31565	Washer, stainless	10 mm
8	4	31564	Lock nut, stainless	M10

1500K, 1510K, 1720K, 1730K, 1820K, 1830K

Internal ref. 63 41 540

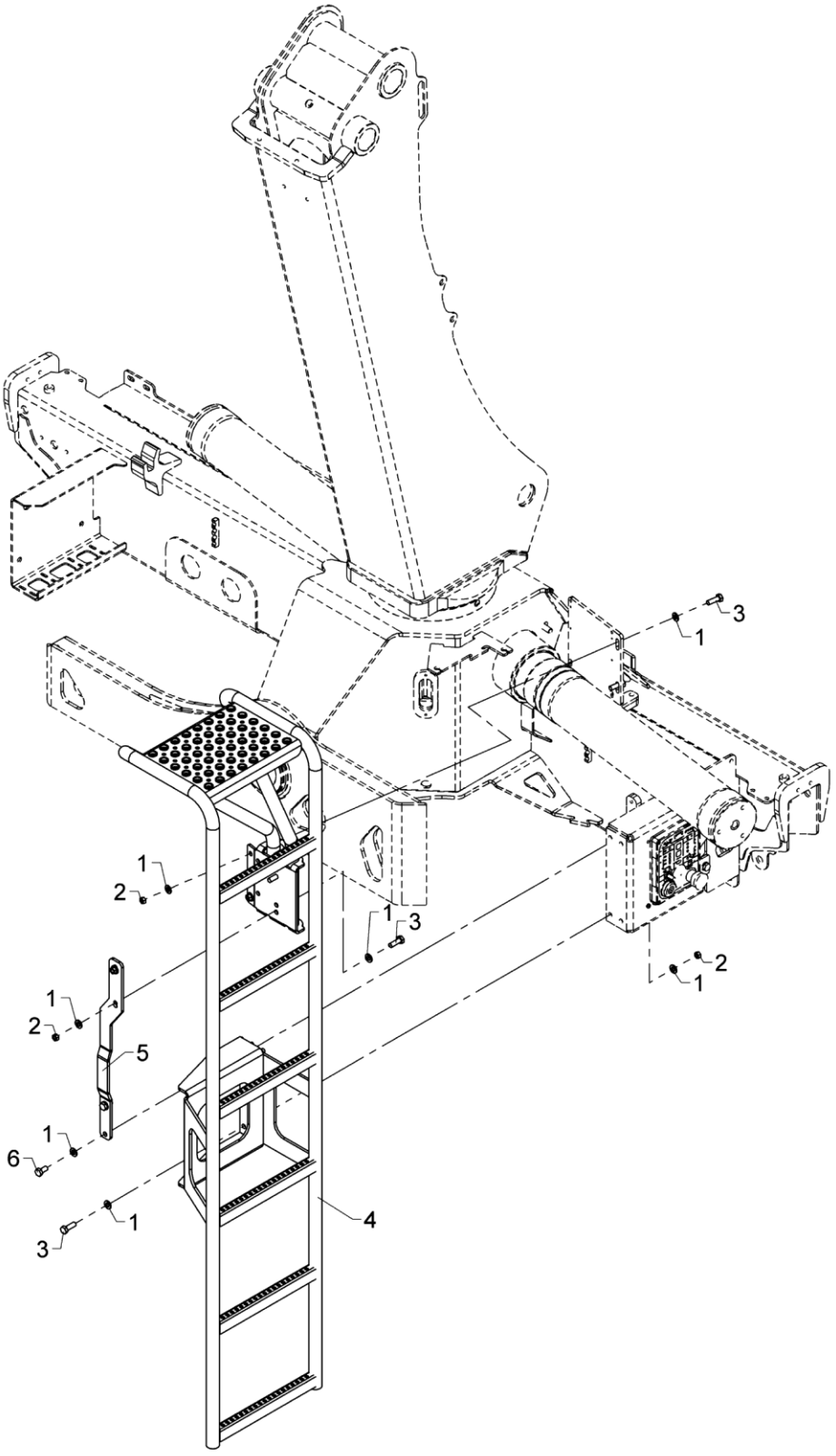

534 11 090 A

From loader 1061910
To loader

Created 01-04-2018
Modified

Ladder for TS, cpl.

Pos	Qty.	Part no.	Description	Remarks
1	18	31565	Washer, stainless	10 mm
2	8	30856	Nut, stainless	M8
3	8	30156	Set screw, stainless	M10 x 30
4	1	6342931	Ladder, (TS)	
5	1	6342935	Reinforcement	
6	2	31517	Set screw, stainless	M10 x 20

1500K, 1510K, 1720K, 1730K, 1820K, 1830K

Internal ref. 63 42 590

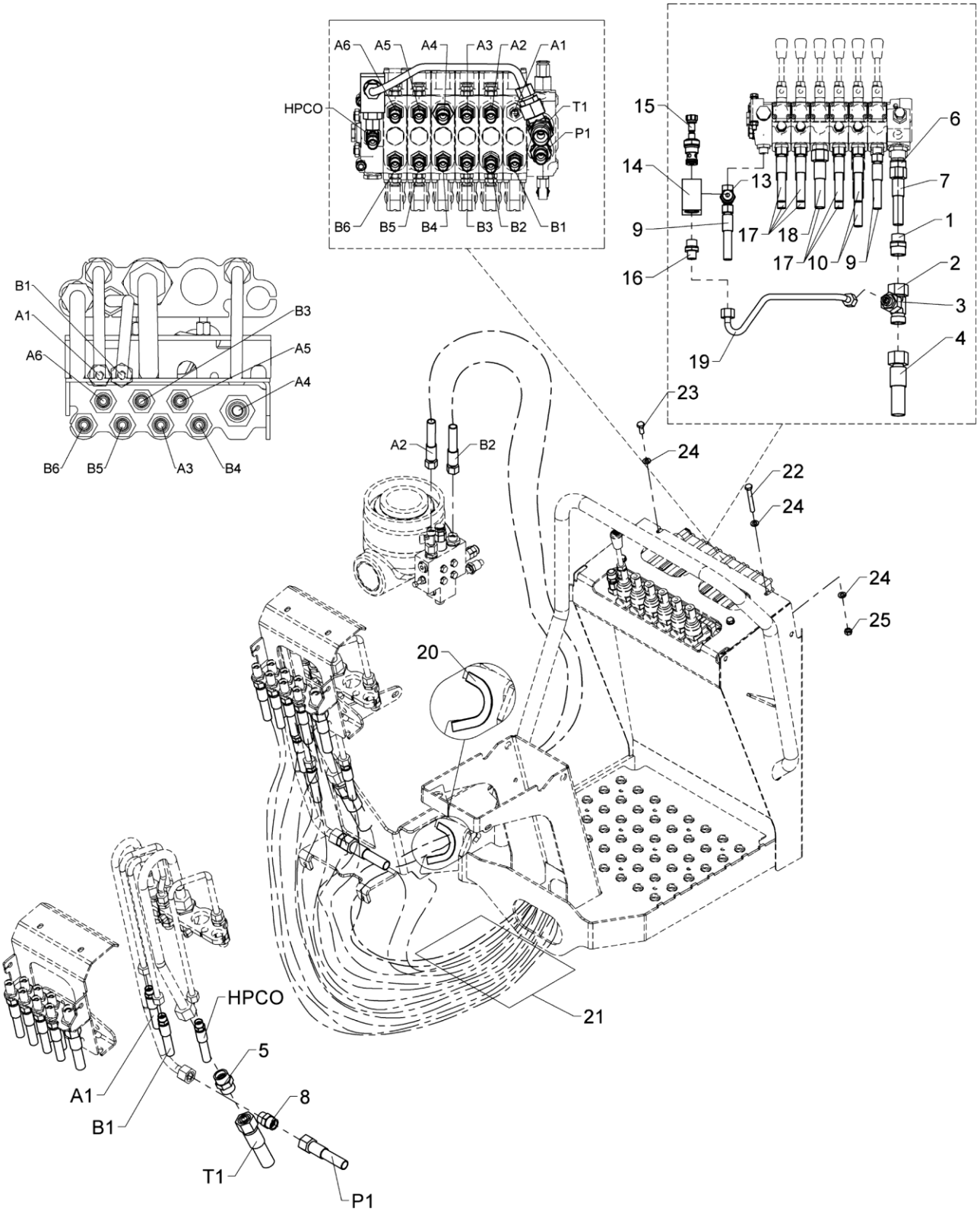

Hose kit, 6 fcts., (TSHC linear)

534 11 100

From loader 1060001
To loader

Created 12-01-2010
Modified

Pos	Qty.	Part no.	Description	Remarks
1	1	26197	Connection	P-GEV 20 SR-WD
2	1	26362	Connection	ELSD 20 S
3	1	26873	Reducing connection	REDSDN 20/12 S
4	1	62626	Hose	
5	1	26140	Double connection	GS 20 S
6	1	26390	Connection	P-GEV 16 SR 3/4-WD
7	1	62696	Hose	
8	1	26145	Double connection	GS 16 S
9	3	0017200	Hose	
10	1	26106	Connection	P-MAV 8 LR
11	2	0017520	Hose	
12	1	25270	Connection	ELSD 12 L
13	1	26388	Connection	EGESD 12 LR 1/2-WD
14	1	59939	Valve housing	
15	1	59617	Cartridge	
16	1	25194	Straight connection	GES 12 SR 1-2-WD
17	7	0015370	Hose	
18	1	62676	Hose	
19	1	6340838	Pipe	
20	2	46587	Rubber protection	130 mm
21	1	59500	Protective cover	
22	2	30259	Steel bolt, stainless	M8 x 65
23	2	30132	Set screw, stainless	M8 x 20
24	6	31147	Face washer, 8 mm	8 mm
25	2	30856	Nut, stainless	M8

1500K, 1510K, 1720K, 1730K, 1820K, 1830K

Internal ref. 63 42 580

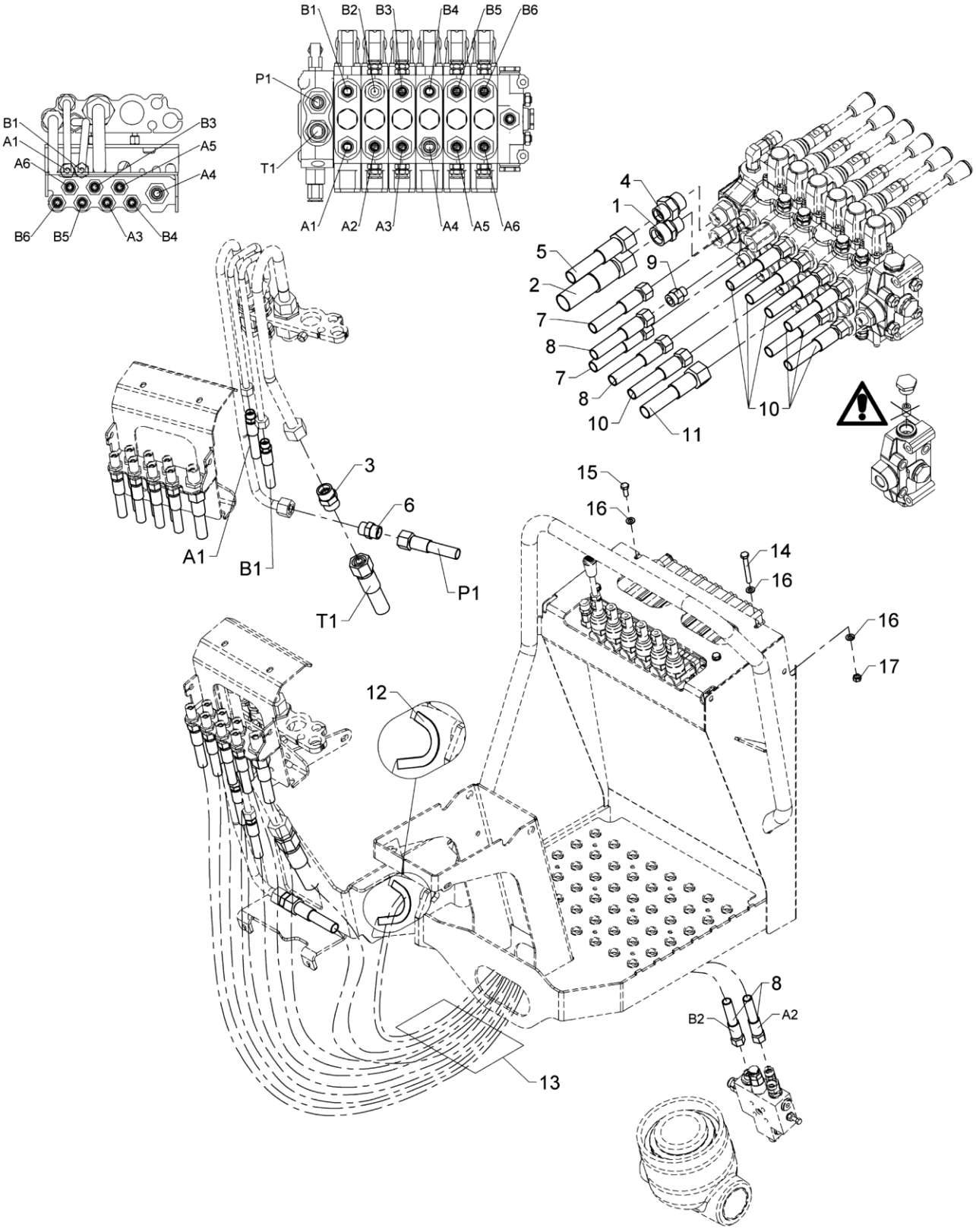

Hose kit, 6 functions (TSHC, linear, excl. CE)

Pos	Qty.	Part no.	Description	Remarks
1	1	26197	Connection	P-GEV 20 SR-WD
2	1	62626	Hose	
3	1	26140	Double connection	GS 20 S
4	1	26390	Connection	P-GEV 16 SR 3/4-WD
5	1	62696	Hose	
6	1	26145	Double connection	GS 16 S
7	2	0017200	Hose	
8	2	0017520	Hose	
9	1	26106	Connection	P-MAV 8 LR
10	7	0015370	Hose	
11	1	62676	Hose	
12	2	46587	Rubber protection	130 mm
13	1	59500	Protective cover	
14	2	30259	Steel bolt, stainless	M8 x 65
15	2	30132	Set screw, stainless	M8 x 20
16	6	31147	Face washer, 8 mm	8 mm
17	2	30856	Nut, stainless	M8

1500K, 1510K, 1720K, 1730K, 1820K, 1830K

Internal ref. 63 42 600

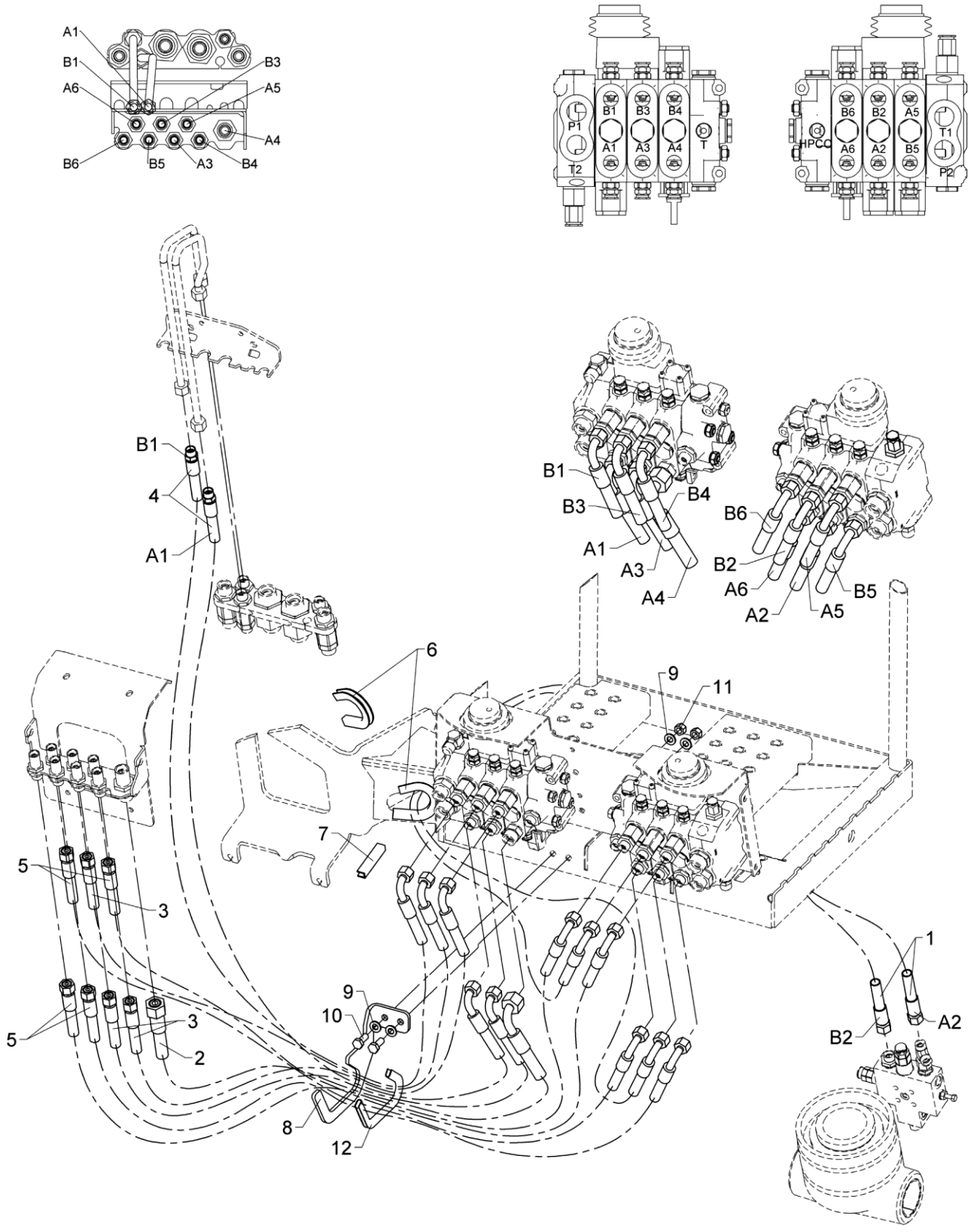

534 11 110

From loader 1060001
To loader

Created 12-01-2010
Modified 03-01-2011

Hose kit, loader functions (TS HC joystick)

Pos	Qty.	Part no.	Description	Remarks
1	2	0017540	Hose	
2	1	62686	Hose	1/2 X 1100 M24X1.5 L/90
3	3	0017120	Hose	
4	2	0017010	Hose	
5	4	0015030	Hose	
6	2	46587	Rubber protection	75 mm
7	1	46587	Rubber protection	130 mm
8	1	6341043	Hose clamp	
9	4	31565	Washer, stainless	10 mm
10	2	30155	Set screw	M10 x 25
11	2	31564	Lock nut, stainless	M10
12	1	46596	Rubber protection	250 mm

1500K, 1510K, 1720K, 1730K, 1820K, 1830K

Internal ref. 63 42 430

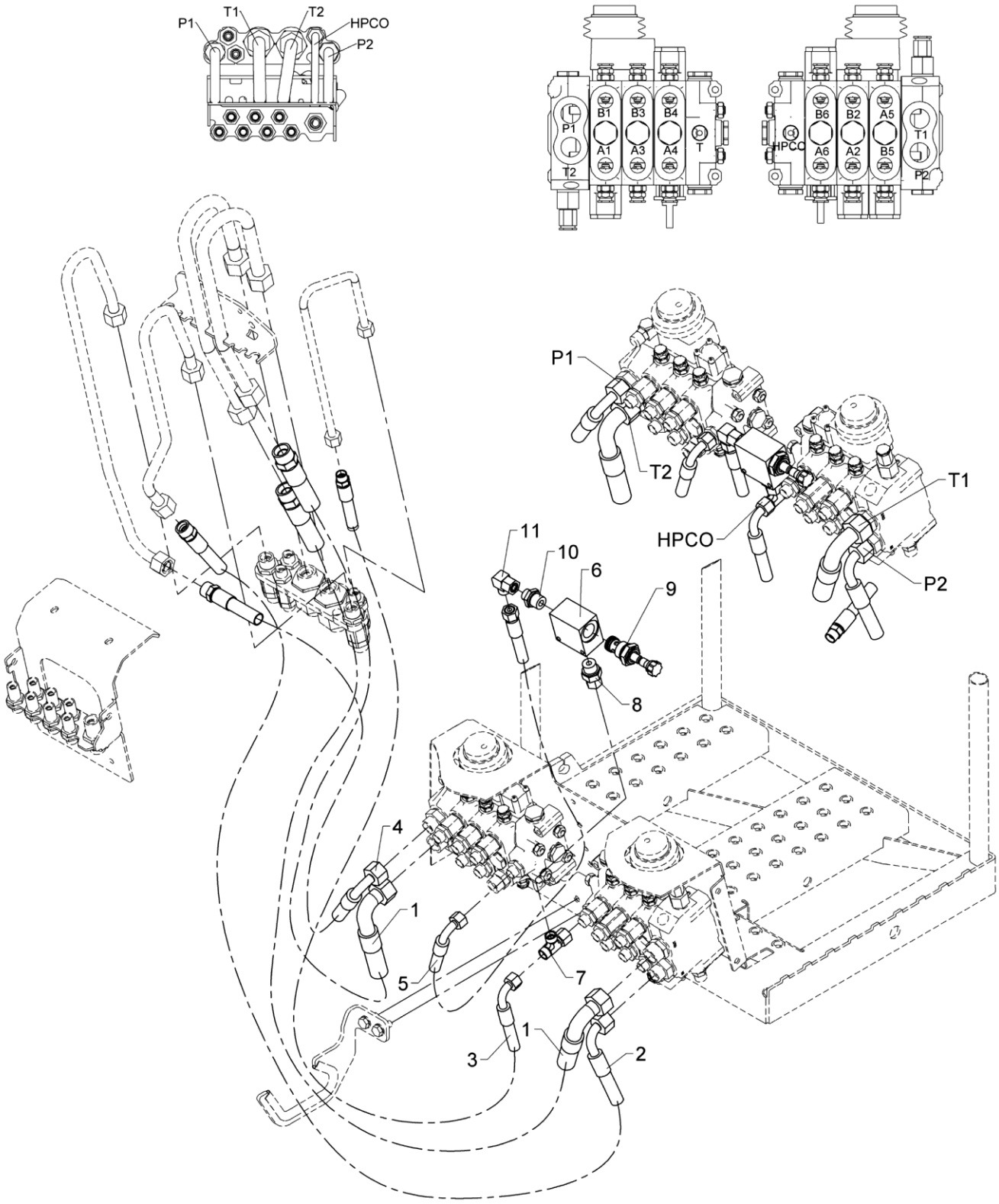

534 11 120

From loader 1060001
To loader

Created 12-01-2010
Modified

Hose kit for pump and tank, (TS HC joystick)

Pos	Qty.	Part no.	Description	Remarks
1	2	56527	Hose	3/4 X 1200 mm M30x2 S/90 20S
2	1	56526	Hose	1/2 X 1100 mm S/90 16S
3	1	0017010	Hose	
4	1	56525	Hose	1/2 X 750 mm M24x1,5 S/90 16S
5	1	0017710	Hose	
6	1	59939	Valve housing	
7	1	25270	Connection	ELSD 12 L
8	1	26388	Connection	EGESD 12 LR 1/2-WD
9	1	59617	Cartridge	
10	1	25108	Connection	GES 12 LR 1/2-WD
11	1	25242	Elbow connection	EWSD 12 L

1500K, 1510K, 1720K, 1730K, 1820K, 1830K

Internal ref. 63 42 620

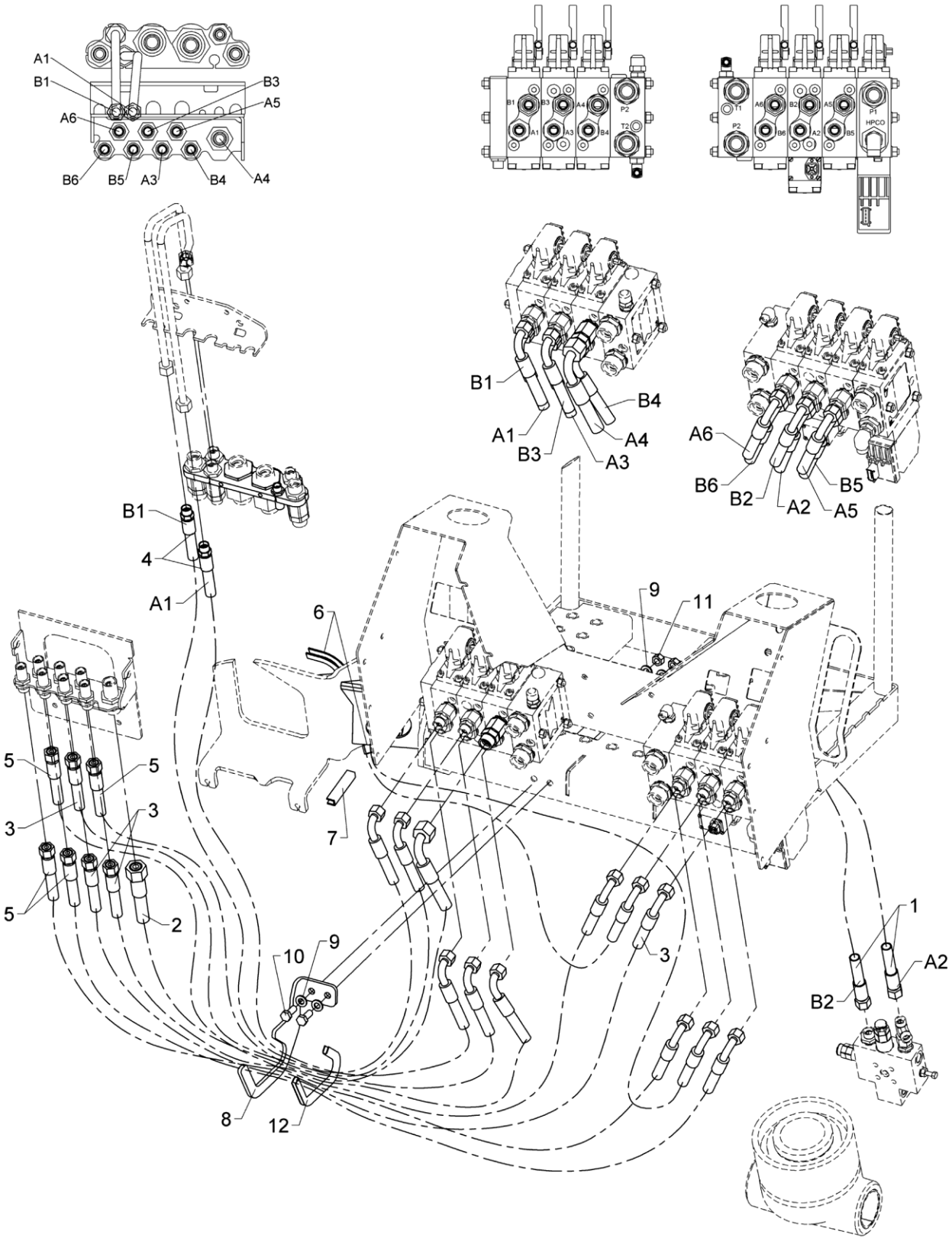

Obsolete

534 11 130

From loader 1060001
To loader

Created 12-01-2010
Modified 05-05-2014

Hose kit, loader functions (TS Danfoss 1 circuit, fixed and variable flow)

Pos	Qty.	Part no.	Description	Remarks
1	2	0017540	Hose	
2	1	62686	Hose	1/2 X 1100 M24X1.5 L/90
3	3	0017120	Hose	
4	2	0017010	Hose	
5	4	0015030	Hose	
6	2	46587	Rubber protection	130 mm
7	1	46587	Rubber protection	75 mm
8	1	6341043	Hose clamp	
9	4	31565	Washer, stainless	10 mm
10	2	30155	Set screw	M10 x 25
11	2	31564	Lock nut, stainless	M10
12	1	46596	Rubber protection	250 mm

1500K, 1510K, 1720K, 1730K, 1820K, 1830K

Internal ref. 63 55 610

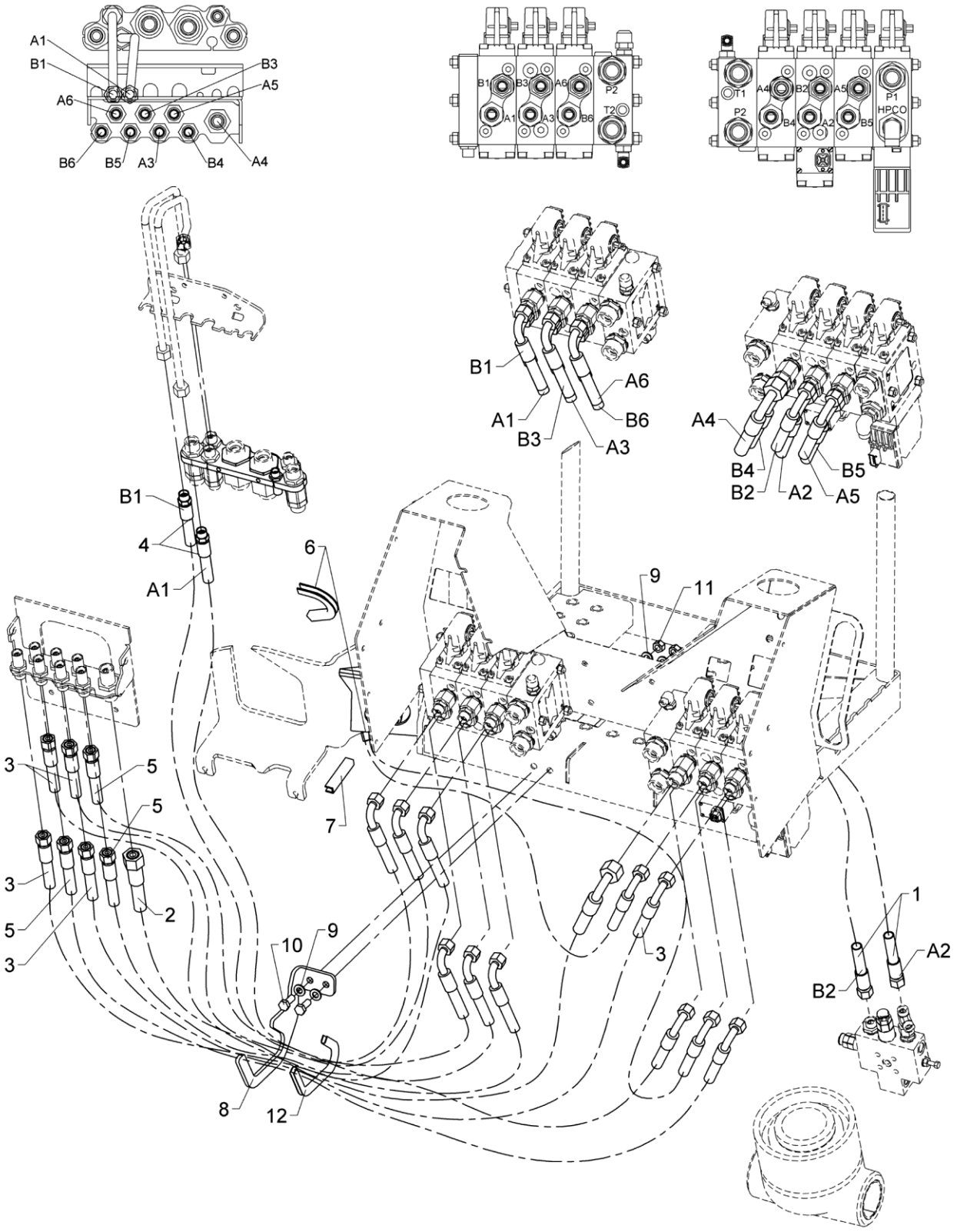

Hose kit, loader functions (TS Danfoss 1 circuit, fixed and variable flow)

Pos	Qty.	Part no.	Description	Remarks
1	2	0017540	Hose	
2	1	62683	Hose	1/2 X 1450 M24X1.5 L/90
3	4	0017120	Hose	
4	2	0017010	Hose	
5	3	0015030	Hose	
6	2	46587	Rubber protection	75 mm
7	1	46587	Rubber protection	130 mm
8	1	6341043	Hose clamp	
9	4	31565	Washer, stainless	10 mm
10	2	30155	Set screw	M10 x 25
11	2	31564	Lock nut, stainless	M10
12	1	46596	Rubber protection	250 mm

1500K, 1510K, 1720K, 1730K, 1820K, 1830K

Internal ref. 63 42 670

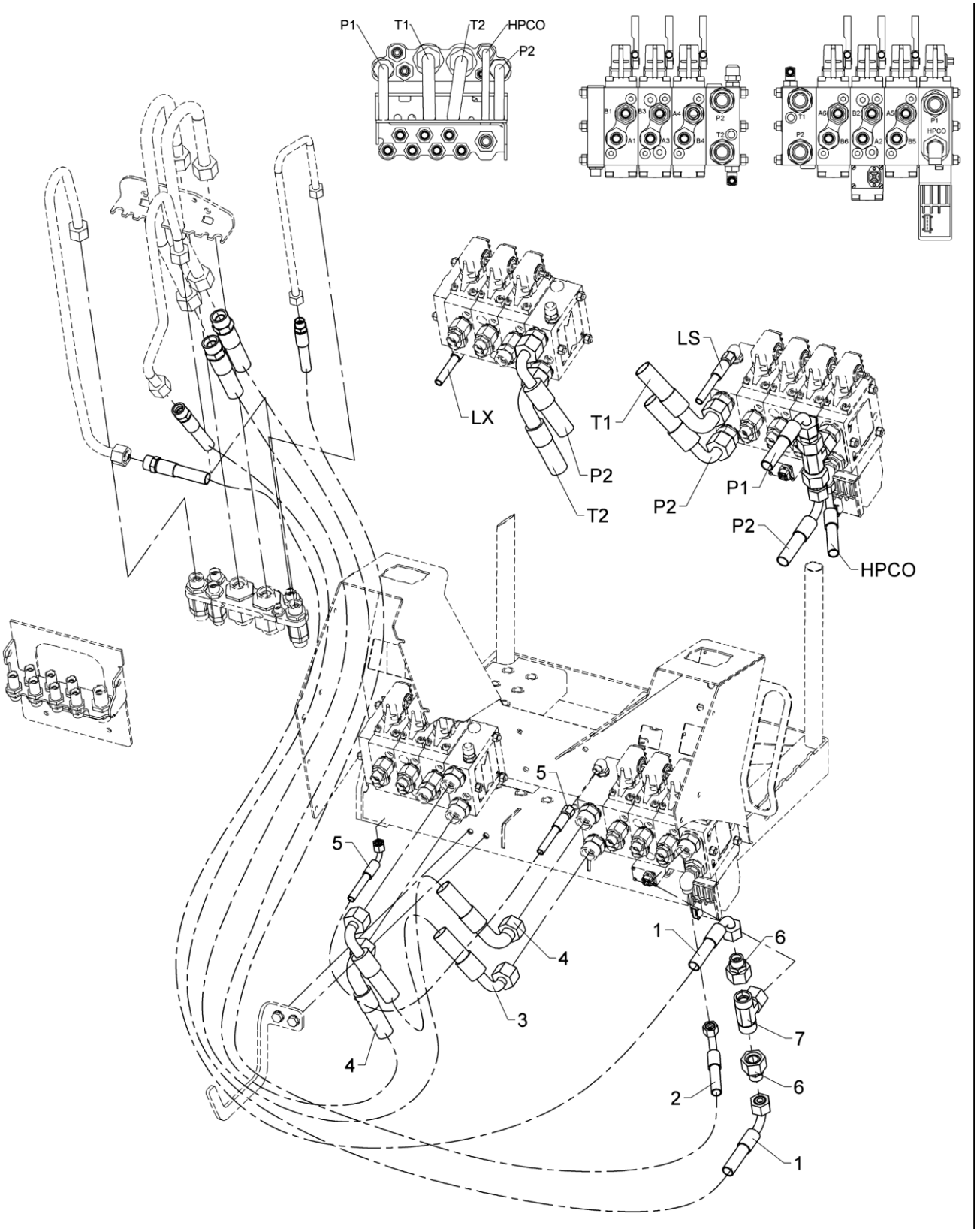

Hose kit for pump and tank (TS, Danfoss 1 circuit, fixed flow)

Pos	Qty.	Part no.	Description	Remarks
1	2	56526	Hose	1/2 X 1100 mm S/90 16S
2	1	0017370	Hose	
3	1	56953	Hose	5/8 X 300 M30X2 90/90 SS
4	2	56527	Hose	3/4 X 1200 mm M30x2 S/90 20S
5	1	56520	Hose	1/4 x 900mm L/90
6	2	26306	Reducing connection	REDSDN 20/16 S
7	1	26360	Connection	ETVD 20 S

1500K, 1510K, 1720K, 1730K, 1820K, 1830K

Internal ref. 63 42 660

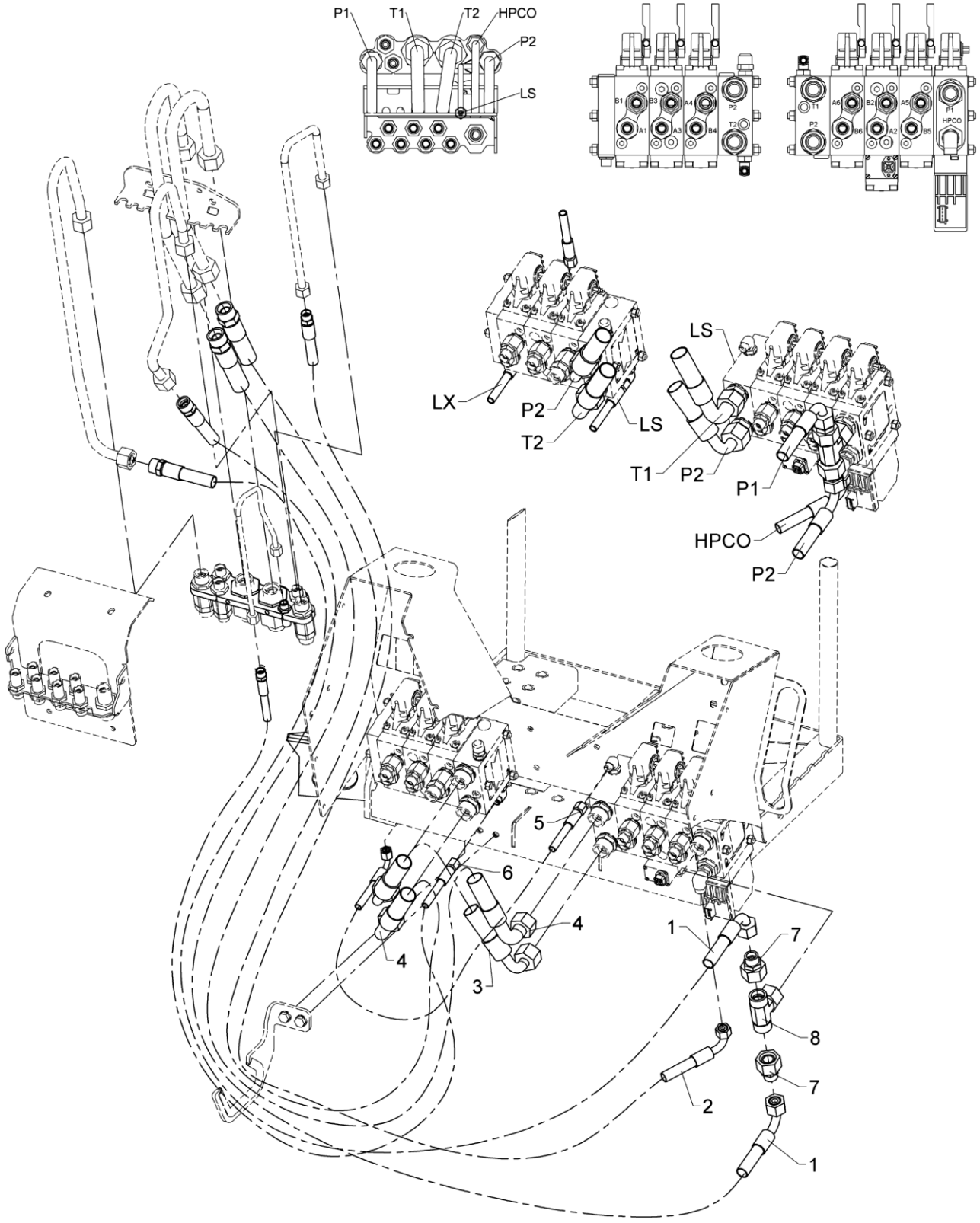

From loader 1060001
To loader

Hose kit for pump and tank (TS, Danfoss 1 circuit, variable flow)

Created 01-06-2009
Modified 05-05-2014

Pos	Qty.	Part no.	Description	Remarks
1	2	56526	Hose	1/2 X 1100 mm S/90 16S
2	1	0017370	Hose	
3	1	56953	Hose	5/8 X 300 M30X2 90/90 SS
4	2	56527	Hose	3/4 X 1200 mm M30x2 S/90 20S
5	1	56954	Hose	1/4 X 500 M14X1.5 L/90 (350 bar)
6	1	56528	Hose	1/4 X 1000 mm S/L 8Let
7	2	26306	Reducing connection	REDSDN 20/16 S
8	1	26360	Connection	ETVD 20 S

1500K, 1510K, 1720K, 1730K, 1820K, 1830K

Internal ref. 63 42 500

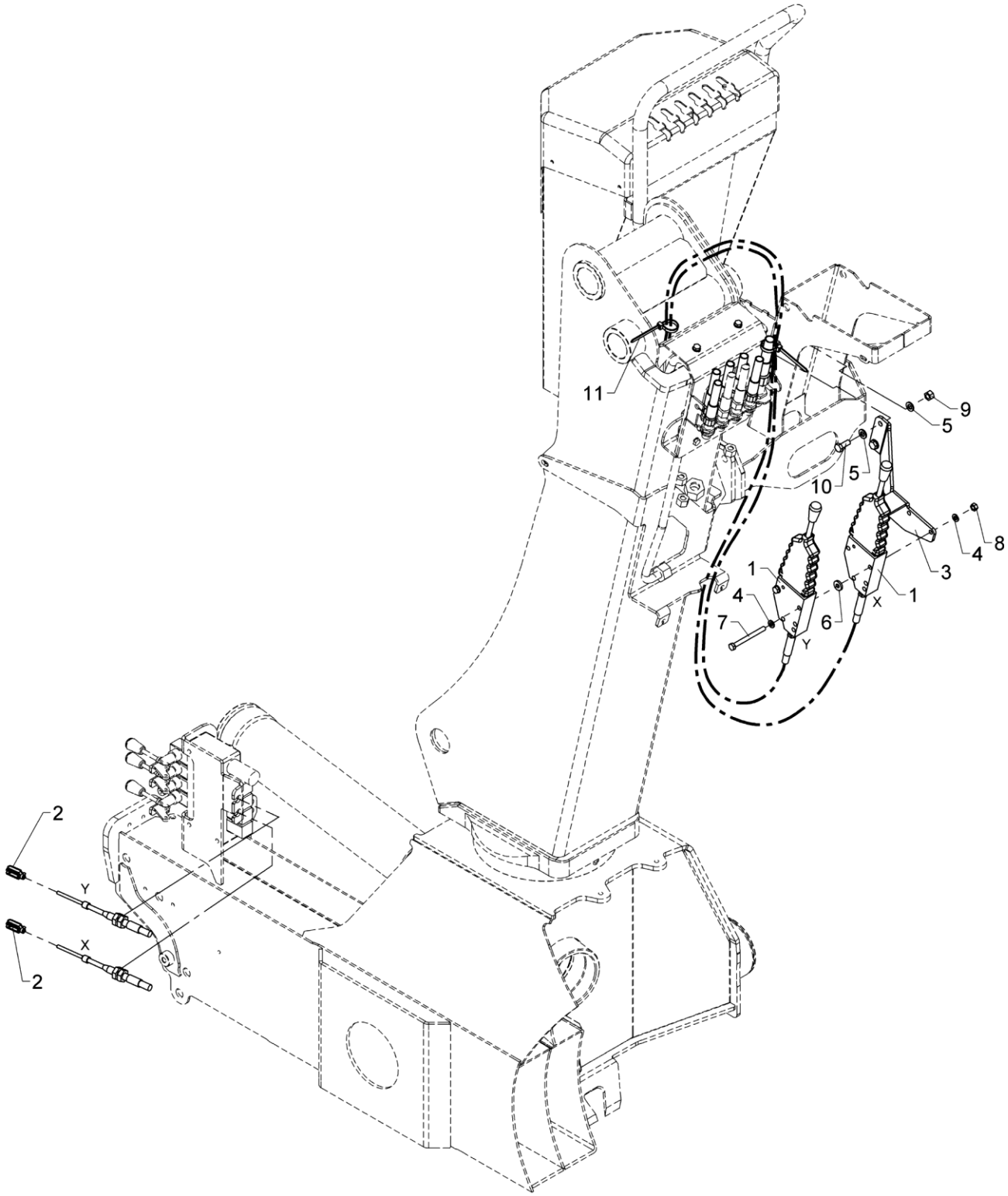

Stabilizer operation (TS HC linear)

Pos	Qty.	Part no.	Description	Remarks
1	2	48482	Push-pull cable 5.0 m lever	
2	2	48414	Clevis	
3	1	6340905	Fittings (TS stabilizer oper.)	
4	4	31147	Face washer, 8 mm	8 mm
5	4	31565	Washer, stainless	10 mm
6	2	31755	Washer	
7	2	30144	Steel bolt, stainless	M8 x 90
8	2	30856	Nut, stainless	M8
9	2	31564	Lock nut, stainless	M10
10	2	31513	Set screw, stainless	M10 x 25
11	2	27275	Cable tie, black, 7.6x385mm	

1500K, 1510K, 1720K, 1730K, 1820K, 1830K

Internal ref. 63 42 510

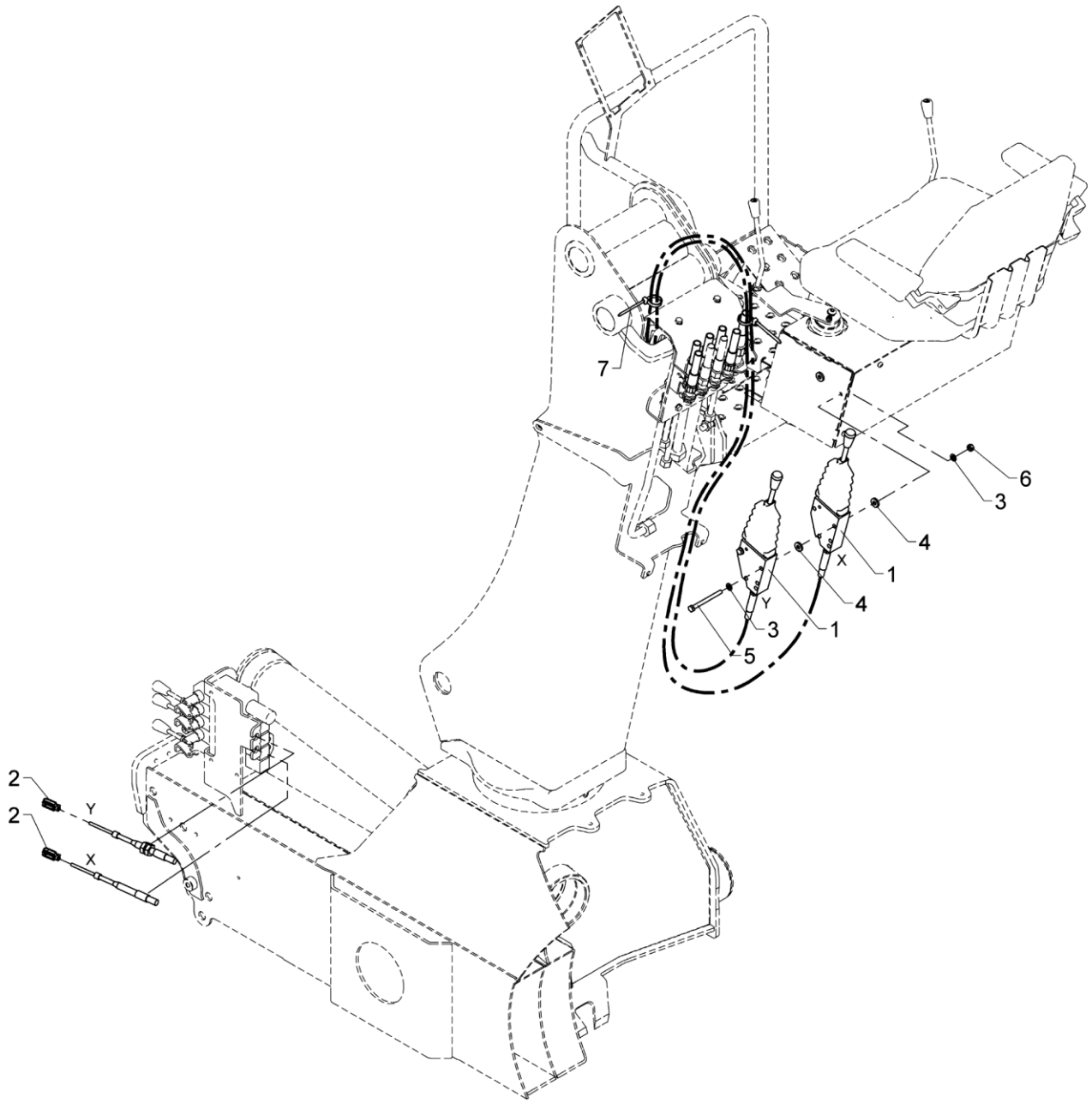

Stabilizer operation (TS joystick)

Pos	Qty.	Part no.	Description	Remarks
1	2	48482	Push-pull cable 5.0 m lever	
2	2	48414	Clevis	
3	4	31147	Face washer, 8 mm	8 mm
4	4	31755	Washer	
5	2	30144	Steel bolt, stainless	M8 x 90
6	2	30856	Nut, stainless	M8
7	2	27275	Cable tie, black, 7.6x385mm	

1500K, 1510K, 1720K, 1730K, 1820K, 1830K

63 45 080
63 41 080
Internal ref. 63 41 070

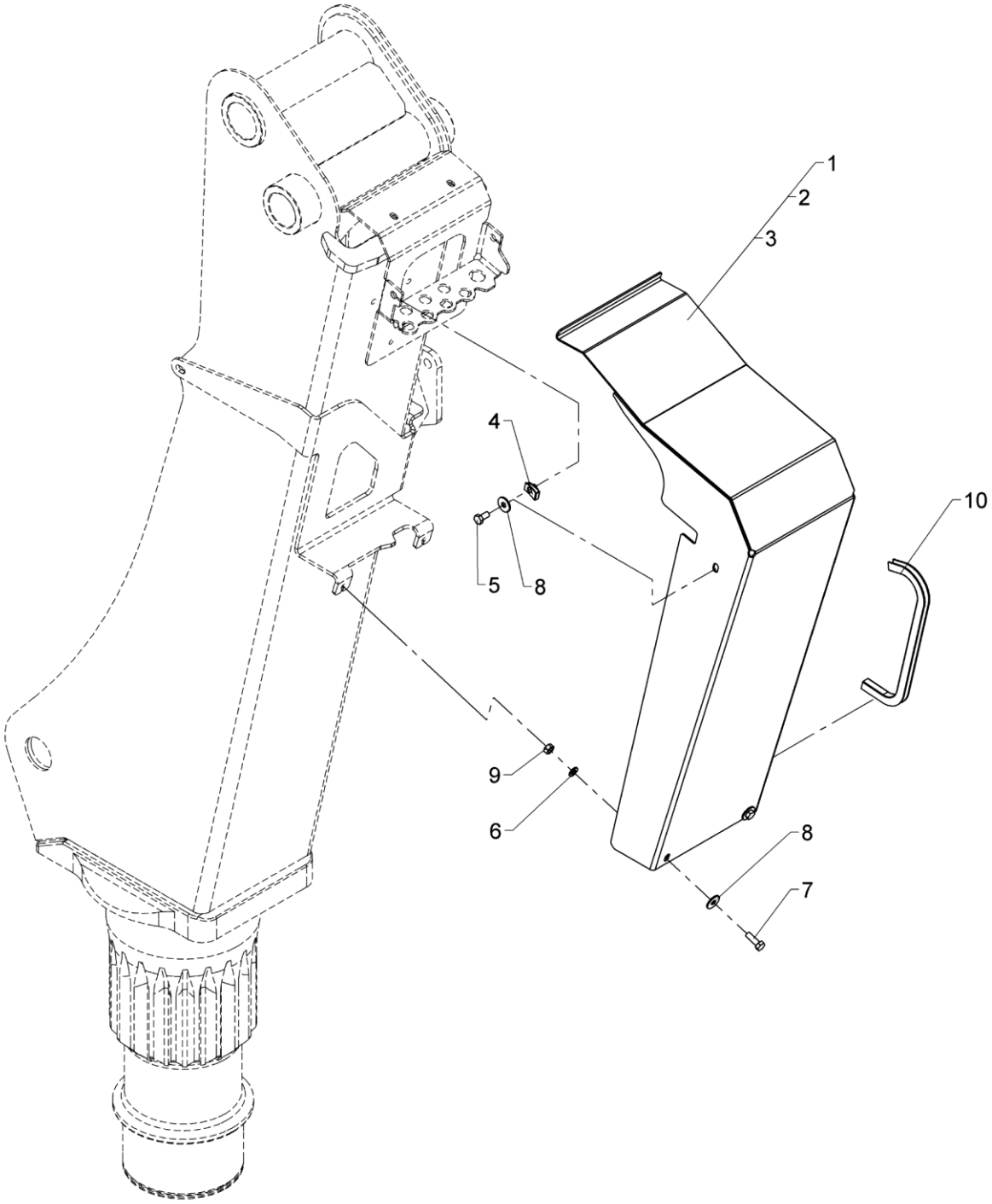

Obsolete

534 11 200

From loader 1060001
To loader

Created 24-02-2009
Modified

Hose shield (TS), cpl.

Pos	Qty.	Part no.	Description	Remarks
		6341070	Hose shield (TS), cpl.	
		6341080	Hose shield (TS), cpl.	
		6345080	Hose shield (TS), cpl.	
1	1	6340078	Hose shield (TS)	1310/1510/1810/2210
2	1	6340088	Hose shield (TS)	1300/1500
3	1	6344088	Hose shield (TS)	1800/2200
4	2	31069	Clip	M8 1,5 - 5,5 mm.
5	2	30131	Set screw, stainless	M8 x 16
6	2	31147	Face washer, 8 mm	8 mm
7	2	30134	Set screw, stainless	M8 x 25
8	4	31136	Washer, stainless	
9	2	30856	Nut, stainless	M8
10	1	22122	PVC protection	360 mm

1500K, 1510K, 1720K, 1730K, 1820K, 1830K

63 45 080
63 41 080
Internal ref. 63 41 070

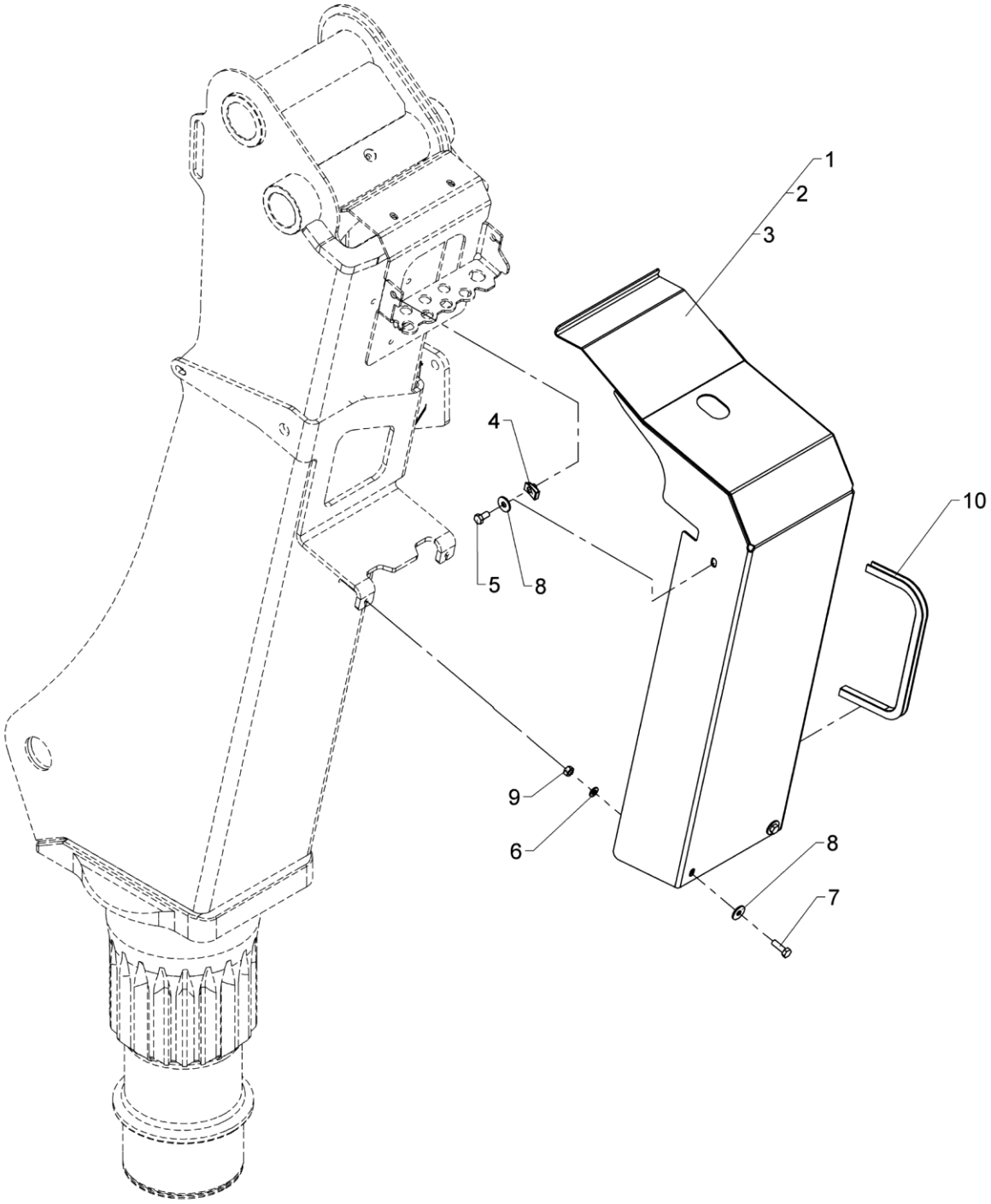

Hose shield (TS), cpl.

Pos	Qty.	Part no.	Description	Remarks
		6341070	Hose shield (TS), cpl.	
		6341080	Hose shield (TS), cpl.	
		6345080	Hose shield (TS), cpl.	
1	1	6340696	Hose shield (TS)	1310/1510/1810/2210
2	1	6340697	Hose shield (TS)	1300/1500
3	1	6344696	Hose shield (TS)	1800/2200
4	2	31069	Clip	M8 1,5 - 5,5 mm.
5	2	30131	Set screw, stainless	M8 x 16
6	2	31147	Face washer, 8 mm	8 mm
7	2	30134	Set screw, stainless	M8 x 25
8	4	31136	Washer, stainless	
9	2	30856	Nut, stainless	M8
10	1	22122	PVC protection	449 mm

1500K, 1510K, 1720K, 1730K, 1820K, 1830K

Internal ref. 63 42 360

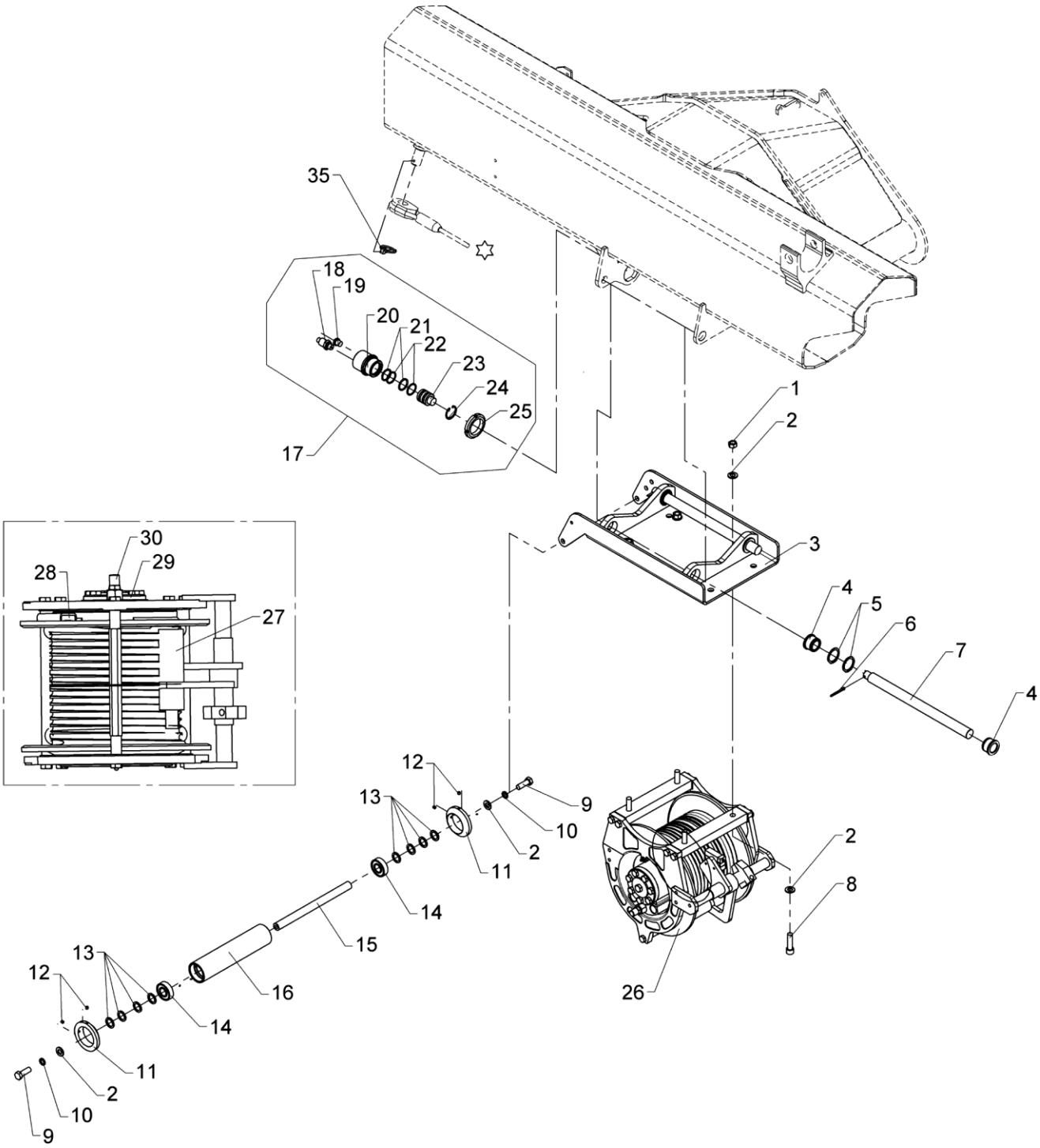

☆ 63 193

Obsolete

Winch 1.5 T + mounting fittings and weighing cell

534 13 020

From loader 1060001
To loader 1061095

Created 21-08-2007
Modified

Pos	Qty.	Part no.	Description	Remarks
		6342360	Hoist 1.5t, fittings/load cyl.	
1	4	32372	Nut	M12
2	10	31131	Washer	12 mm
3	1	6340977	Winch bracket	
4	4	63485	Slide bearing	
5	4	33117	Circlip	35U
6	2	31638	Split pin	ø4 x 40
7	2	6340987	Pin	
8	4	30428	Sockethead screw	MC12 x 45
9	2	30178	Set screw	M12 x 35
10	2	31158	Spring washer	12 mm
11	2	6886764	Guide roller	
12	4	31548	Pointed screw, stainless	MSP6 x 6
13	8	33227	Back ring	SS 20 x 28 x 2
14	2	23178	Ball bearing	
15	1	6371254	Pin	
16	1	6290984	Guide roller	
17	1	6342350	Weighing cell, complete	
18	1	28850	Pressure transducer	
19	1	25197	Plug	VS-R-1/4 WD
20	1	6340988	Housing	
21	2	20175	O-ring	OR 26,2 x 3
22	2	20898	Back ring	STR 27 x 32 x 1,3
23	1	6340989	Piston	
24	1	33103	Circlip	34 I
25	1	23163	Nut	M45 x 1,5
26	1	58284	Winch	
27	1	58588	Wire guide	905201800
28	1	58589	Thimble	241000100
29	1	59398	Motor	MGLR 200/9000143
30	1	59399	Load-holding valve	438002300
31	1	58591	Seal kit for brake	600008400
32	1	58413	Seal kit for P9 motor	6000094
33	1	58238	Washers	10x02941060 + 9x02941061 + 2x4
34	1	58592	Kit for motor	600453100
35	1	33386	Ring split	ø6 x 45

1500K, 1510K, 1720K, 1730K, 1820K, 1830K

Internal ref. 63 42 360

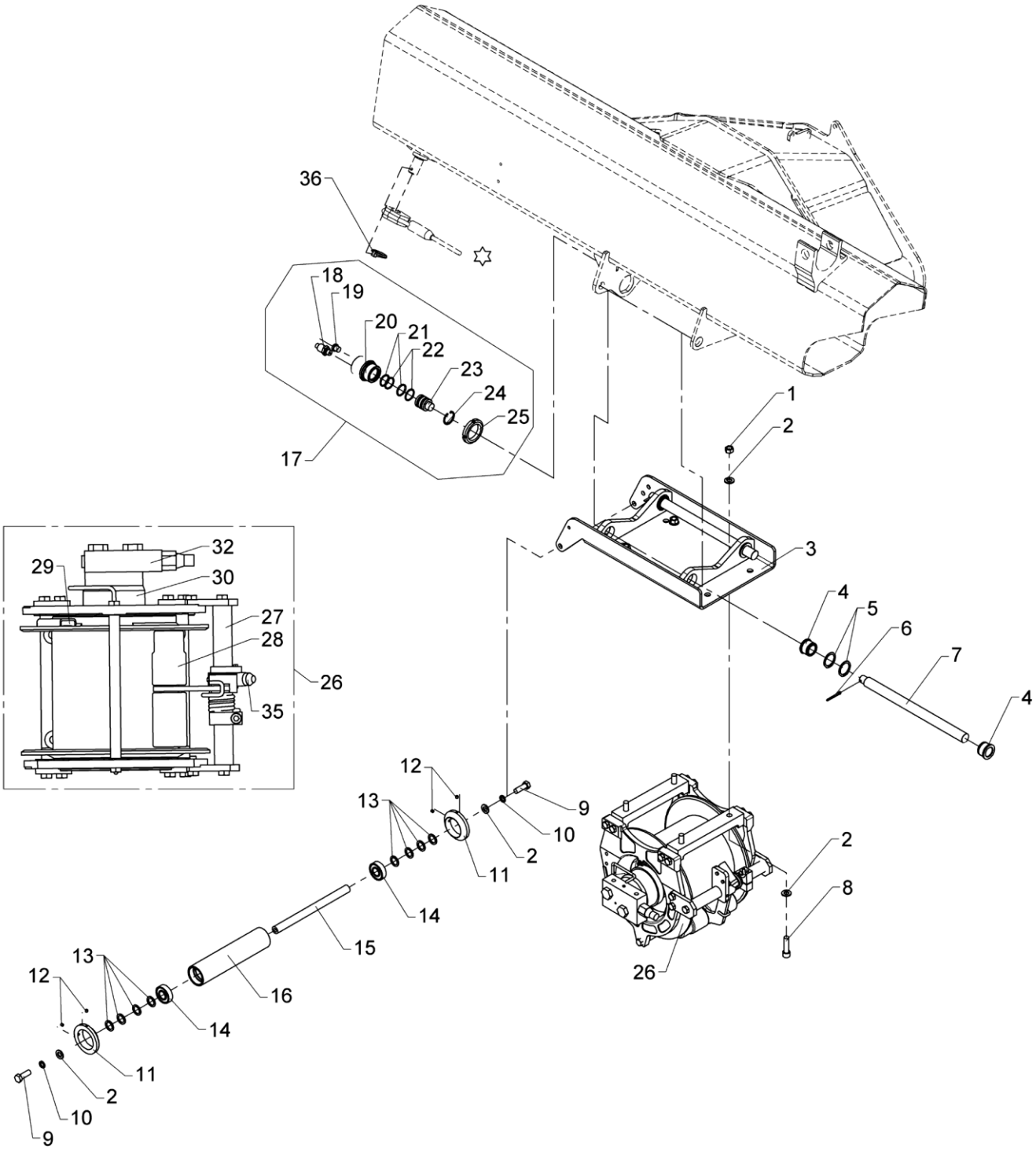

☆ 63 193

Winch 1.5 T + mounting fittings and weighing cell

Pos	Qty.	Part no.	Description	Remarks
		6342360	Hoist 1.5t, fittings/load cyl.	
1	4	32372	Nut	M12
2	10	31131	Washer	12 mm
3	1	6340977	Winch bracket	
4	4	63485	Slide bearing	
5	4	33117	Circlip	35U
6	2	31638	Split pin	ø4 x 40
7	2	6340987	Pin	
8	4	30428	Sockethead screw	MC12 x 45
9	2	30178	Set screw	M12 x 35
10	2	31158	Spring washer	12 mm
11	2	6886764	Guide roller	
12	4	31548	Pointed screw, stainless	MSP6 x 6
13	8	33227	Back ring	SS 20 x 28 x 2
14	2	23178	Ball bearing	
15	1	6371254	Pin	
16	1	6290984	Guide roller	
17	1	6342350	Weighing cell, complete	
18	1	28850	Pressure transducer	
19	1	25197	Plug	VS-R-1/4 WD
20	1	6340988	Housing	
21	2	20175	O-ring	OR 26,2 x 3
22	2	20898	Back ring	STR 27 x 32 x 1,3
23	1	6340989	Piston	
24	1	33103	Circlip	34 I
25	1	23163	Nut	M45 x 1,5
26	1	56607	Winch	
27	1	58593	Wire guide	
28	1	58594	Complete arm for P9 winch	
29	1	58589	Thimble	
30	1	58596	Motor	
	1	58598	Seal kit for motor	
32	1	58597	Valve	
	1	58238	Washers	
	1	61288	Seal kit P9E	
35	1	49298	Micro switch 6000	
36	1	33386	Ring split	ø6 x 45

1500K, 1510K, 1720K, 1730K, 1820K, 1830K

Internal ref. 63 42 340

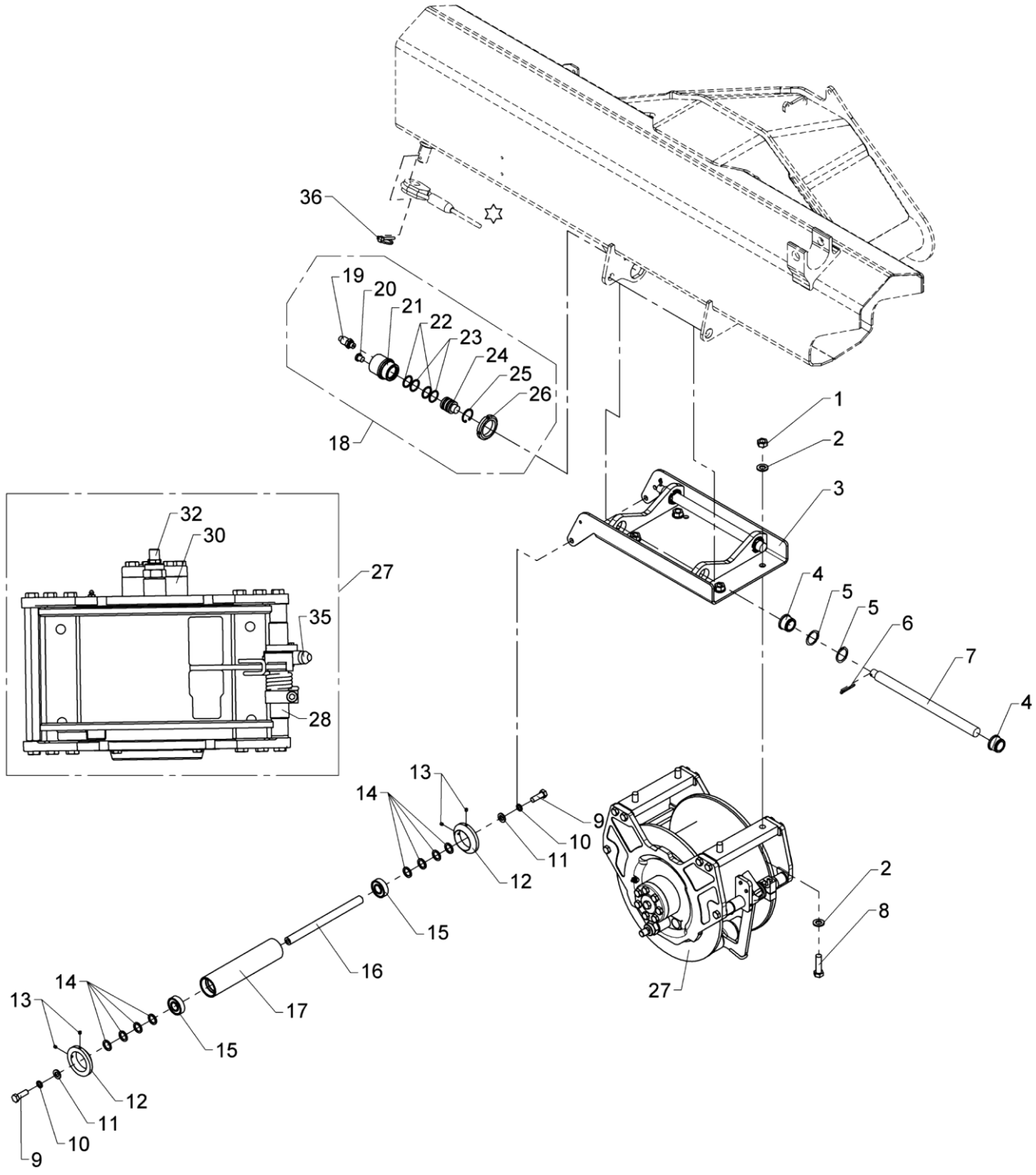

☆ 63 193

Winch 2.5 T + mounting fittings and weighing cell

Pos	Qty.	Part no.	Description	Remarks
		6342340	Hoist2.5t, fittings/load cyl.	
1	4	30862	Nut	M14
2	8	31178	Washer	14 mm
3	1	6340977	Winch bracket	
4	4	63485	Slide bearing	
5	4	33117	Circlip	35U
6	2	31638	Split pin	ø4 x 40
7	2	6340987	Pin	
8	4	30210	Steel bolt	M14 x 50
9	2	30178	Set screw	M12 x 35
10	2	31158	Spring washer	12 mm
11	2	31131	Washer	12 mm
12	2	6886764	Guide roller	
13	4	31548	Pointed screw, stainless	MSP6 x 6
14	8	33227	Back ring	SS 20 x 28 x 2
15	2	23178	Ball bearing	
16	1	6371254	Pin	
17	1	6290984	Guide roller	
18	1	6342350	Weighing cell, complete	
19	1	28850	Pressure transducer	
20	1	25197	Plug	VS-R-1/4 WD
21	1	6340988	Housing	
22	2	20175	O-ring	OR 26,2 x 3
23	2	20898	Back ring	STR 27 x 32 x 1,3
24	1	6340989	Piston	
25	1	33103	Circlip	34 I
26	1	23163	Nut	M45 x 1,5
27	1	58285	Winch	P15E
28	1	56606	Complete arm for P15/P15Ewinch	
29	1	69251	Thimble	
30	1	69252	Motor	
31	1	69253	Seal kit for motor	
32	1	59397	Load-holding valve	
33	1	58237	Strips	
34	1	58262	Seal kit P15	
35	1	49298	Micro switch 6000	
36	1	33386	Ring split	ø6 x 45

1500K, 1510K, 1720K, 1730K, 1820K, 1830K

Internal ref. 63 42 300

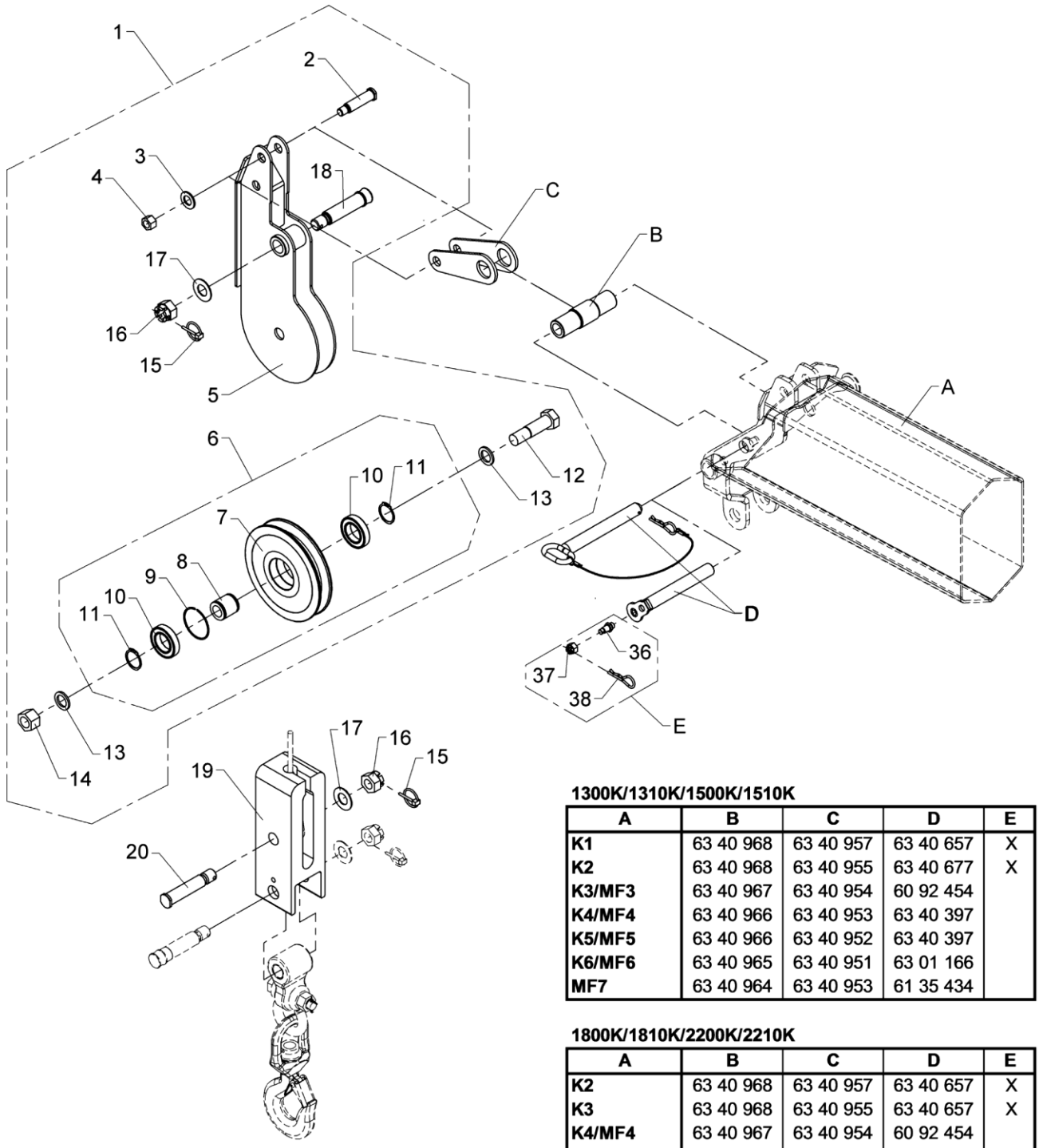

1300K/1310K/1500K/1510K

A	B	C	D	E
K1	63 40 968	63 40 957	63 40 657	X
K2	63 40 968	63 40 955	63 40 677	X
K3/MF3	63 40 967	63 40 954	60 92 454	
K4/MF4	63 40 966	63 40 953	63 40 397	
K5/MF5	63 40 966	63 40 952	63 40 397	
K6/MF6	63 40 965	63 40 951	63 01 166	
MF7	63 40 964	63 40 953	61 35 434	

1800K/1810K/2200K/2210K

A	B	C	D	E
K2	63 40 968	63 40 957	63 40 657	X
K3	63 40 968	63 40 955	63 40 657	X
K4/MF4	63 40 967	63 40 954	60 92 454	
K5/MF5	63 40 966	63 40 952	63 40 397	
K6/MF6	63 40 966	63 40 951	63 40 397	
K7	63 40 965	63 40 951	63 44 727	X
MF7	63 40 965	63 40 951	63 01 166	
K8/MF8	63 40 964	63 40 953	61 35 434	
MF9	---	63 40 956	61 35 434	

Wire pulley, single snatch block

Created 26-06-2007
Modified 22-02-2017

Pos	Qty.	Part no.	Description	Remarks
1	1	6342310	Wire sheave	
2	1	6340982	Pin	
3	1	31179	Washer	20 mm
4	1	30892	Lock nut	M16
5	1	6340991	Wire pulley	
6	1	6342290	Wire sheave with bearing	
7	1	63484	Wire sheave	
8	1	6887304	Hub	
9	1	23904	Spring ring	BR 68
10	2	23150	Ball bearing	
11	2	33121	Circlip	40U
12	1	32476	Steel bolt	M24 x 95
13	2	30929	Nordlock washer	24 mm
14	1	30897	Lock nut	M24
15	2	31967	Ring split	ø4,5 x 40
16	2	30837	Nut	M24
17	2	31128	Washer	24 mm
18	1	6304458	Pin for suspension	
19	1	6340958	Counterweight	
20	1	6340959	Pin	
21	2	6340957	Link	
22	2	6340955	Link	
23	2	6340954	Link	
24	2	6340953	Link	
25	2	6340952	Link	
26	2	6340951	Link	
27	2	6340956	Link	
28	1	6340968	Hub	
29	1	6340967	Hub	
30	1	6340966	Hub	
31	1	6340965	Hub	
32	1	6340964	Hub	
33	1	6340657	Pin	
34	1	6340677	Pin	
35	1	6344727	Pin	
36	1	6340359	Lock pin	
37	1	32127	Nut	M12
38	1	33399	Lock spring	
39	1	6092454	Lock pin with chain	
40	1	6340397	Lock pin with lock spring	
41	1	6301166	Lock pin with split pin	

1500K, 1510K, 1720K, 1730K, 1820K, 1830K

Internal ref. 63 42 300

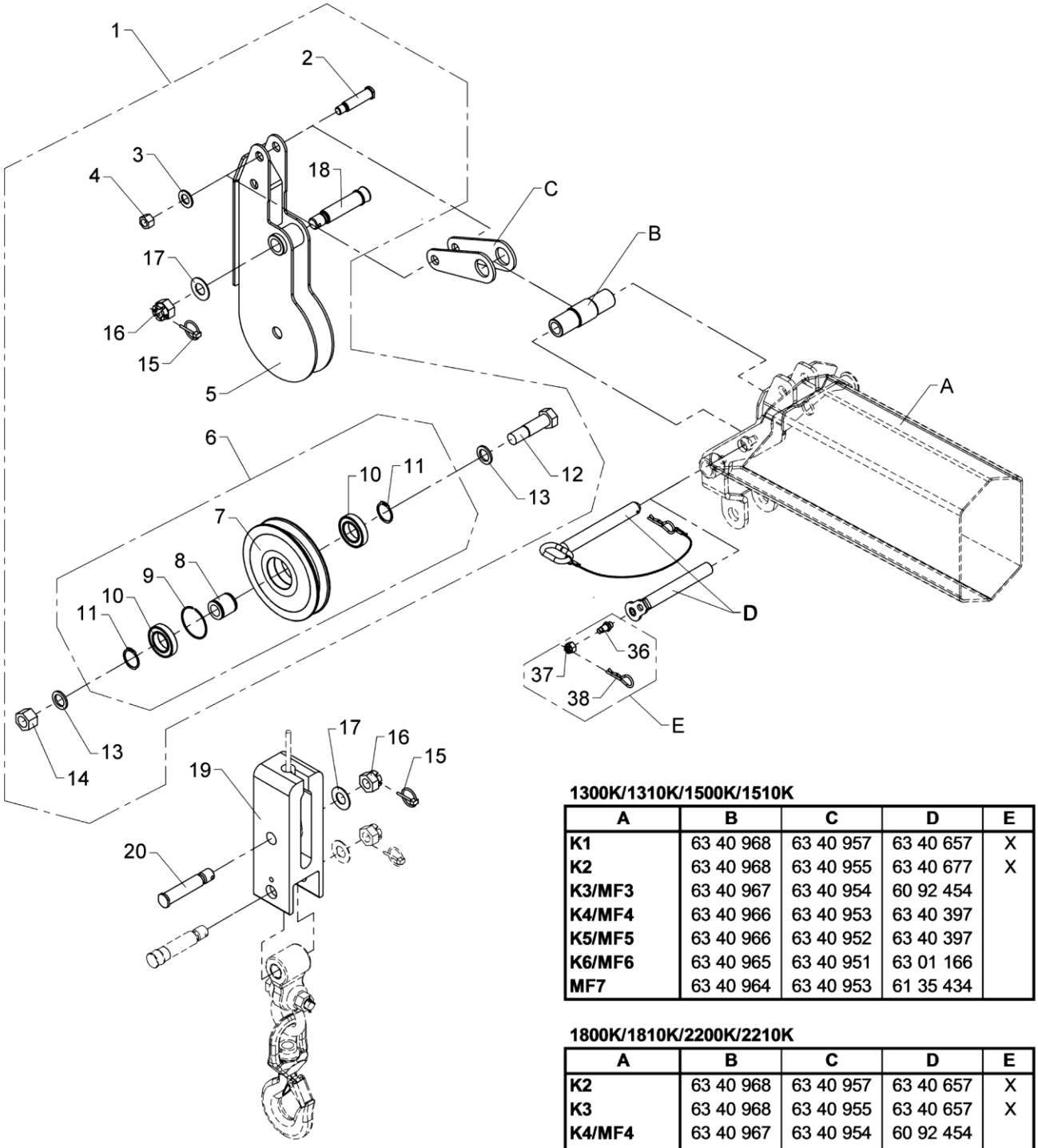

1300K/1310K/1500K/1510K

A	B	C	D	E
K1	63 40 968	63 40 957	63 40 657	X
K2	63 40 968	63 40 955	63 40 677	X
K3/MF3	63 40 967	63 40 954	60 92 454	
K4/MF4	63 40 966	63 40 953	63 40 397	
K5/MF5	63 40 966	63 40 952	63 40 397	
K6/MF6	63 40 965	63 40 951	63 01 166	
MF7	63 40 964	63 40 953	61 35 434	

1800K/1810K/2200K/2210K

A	B	C	D	E
K2	63 40 968	63 40 957	63 40 657	X
K3	63 40 968	63 40 955	63 40 657	X
K4/MF4	63 40 967	63 40 954	60 92 454	
K5/MF5	63 40 966	63 40 952	63 40 397	
K6/MF6	63 40 966	63 40 951	63 40 397	
K7	63 40 965	63 40 951	63 44 727	X
MF7	63 40 965	63 40 951	63 01 166	
K8/MF8	63 40 964	63 40 953	61 35 434	
MF9	---	63 40 956	61 35 434	

Wire pulley, single snatch block

Pos	Qty.	Part no.	Description	Remarks
42	1	6135434	Lock pin	

1500K, 1510K, 1720K, 1730K, 1820K, 1830K

63 42 320
Internal ref. 63 42 280

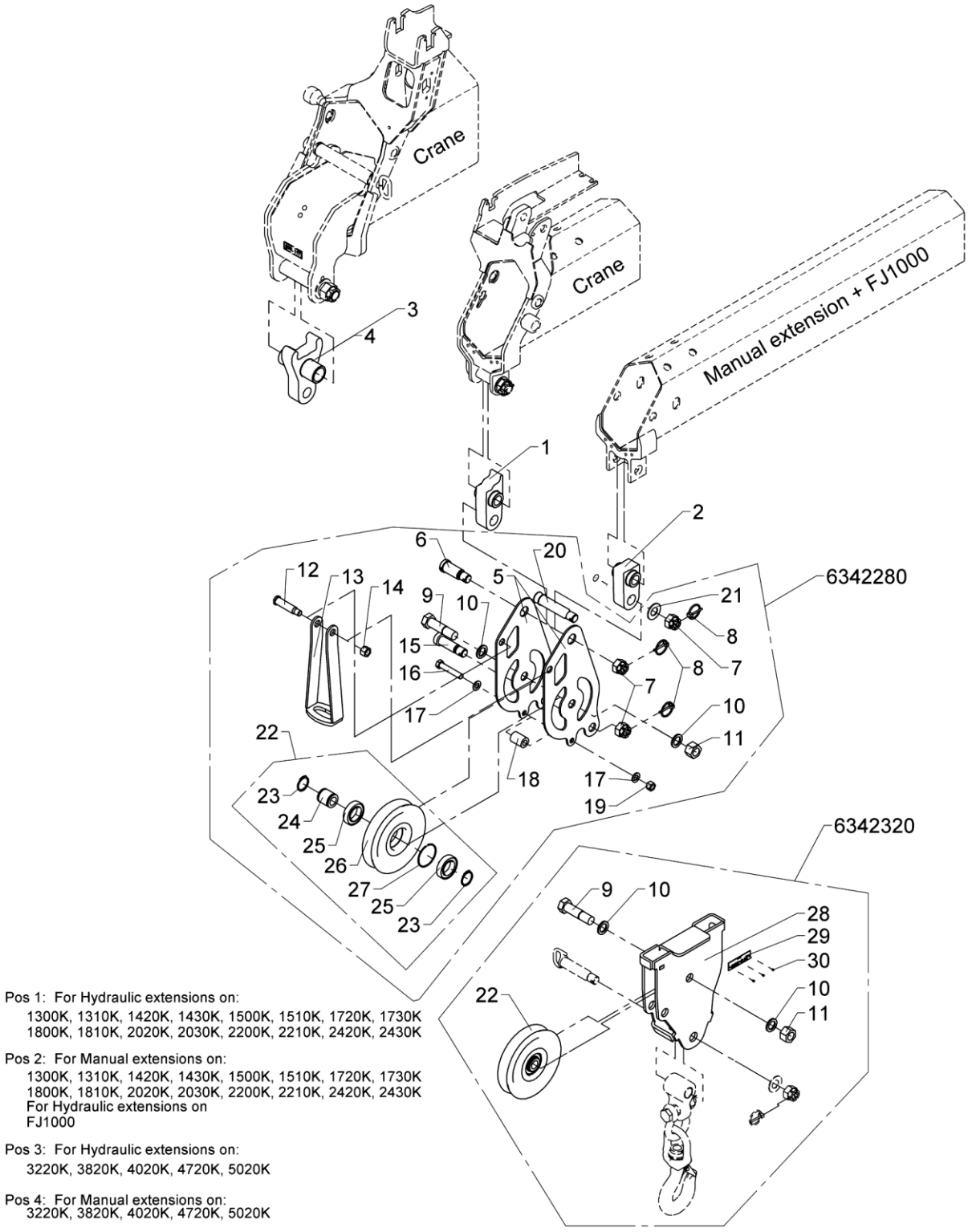

Pos 1: For Hydraulic extensions on:
1300K, 1310K, 1420K, 1430K, 1500K, 1510K, 1720K, 1730K
1800K, 1810K, 2020K, 2030K, 2200K, 2210K, 2420K, 2430K

Pos 2: For Manual extensions on:
1300K, 1310K, 1420K, 1430K, 1500K, 1510K, 1720K, 1730K
1800K, 1810K, 2020K, 2030K, 2200K, 2210K, 2420K, 2430K
For Hydraulic extensions on
FJ1000

Pos 3: For Hydraulic extensions on:
3220K, 3820K, 4020K, 4720K, 5020K

Pos 4: For Manual extensions on:
3220K, 3820K, 4020K, 4720K, 5020K

Wire pulley, double snatch block

Created 13-01-2010
Modified 05-02-2019

Pos	Qty.	Part no.	Description	Remarks
		6342280	Wire sheave	
		6342320	Snatch block	
1	1	6304414	Wire pulley	Til kranarme
2	1	6340995	Wire pulley	Til man. forlængerarme
3	1	6302615	Wire pulley	
4	1	6394891	Wire pulley, manual extension	
5	2	6340981	Side plate	
6	1	6256324	Pin	
7	3	30837	Nut	M24
8	3	31967	Ring split	ø4,5 x 40
9	2	32476	Steel bolt	M24 x 95
10	4	30929	Nordlock washer	24 mm
11	2	30897	Lock nut	M24
12	1	6340982	Pin	
13	1	6340983	Wire safety device	
14	1	30892	Lock nut	M16
15	1	6300558	Pin	
16	1	30214	Steel bolt	M14 x 80
17	2	31178	Washer	14 mm
18	1	6885504	Distance pipe	
19	1	30891	Lock nut	M14
20	1	6304458	Pin for suspension	
21	1	31128	Washer	24 mm
22	2	6342290	Wire sheave with bearing	
23	2	33121	Circlip	40U
24	1	6887304	Hub	
25	2	23150	Ball bearing	
26	1	63484	Wire sheave	
27	1	23904	Spring ring	BR 68
28	1	6340997	Snatch block	
29	1	64836	Brass label, SWL 5.0 t	
30	3	31340	Rivet	

1500K, 1510K, 1720K, 1730K, 1820K, 1830K

Internal ref. 63 04 410

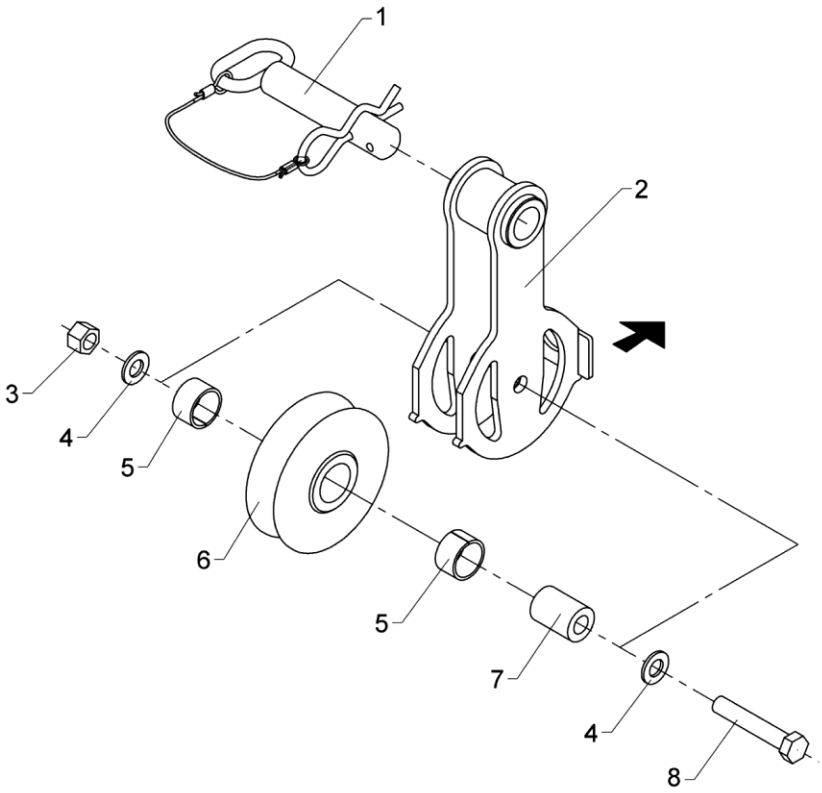

Orientering i forhold til last.
Orientation in relation to the load.
Orientierung im Verhältnis zur Last.
L`orientation par rapport á la charge.
Orientación en relación con la carga.

Wire roller guide

Created 24-02-2009
Modified 06-12-2012

Pos	Qty.	Part no.	Description	Remarks
1	1	6304266	Lock pin with split pin	
2	1	6304411	Suspension for roller guide	
3	1	30891	Lock nut	M14
4	2	31178	Washer	14 mm
5	2	23302	Bushing	MB 3020 DU
6	1	63513	Wire roller guide	
7	1	6885504	Distance pipe	
8	1	30214	Steel bolt	M14 x 80

1500K, 1510K, 1720K, 1730K, 1820K, 1830K

Internal ref. 63 42 370

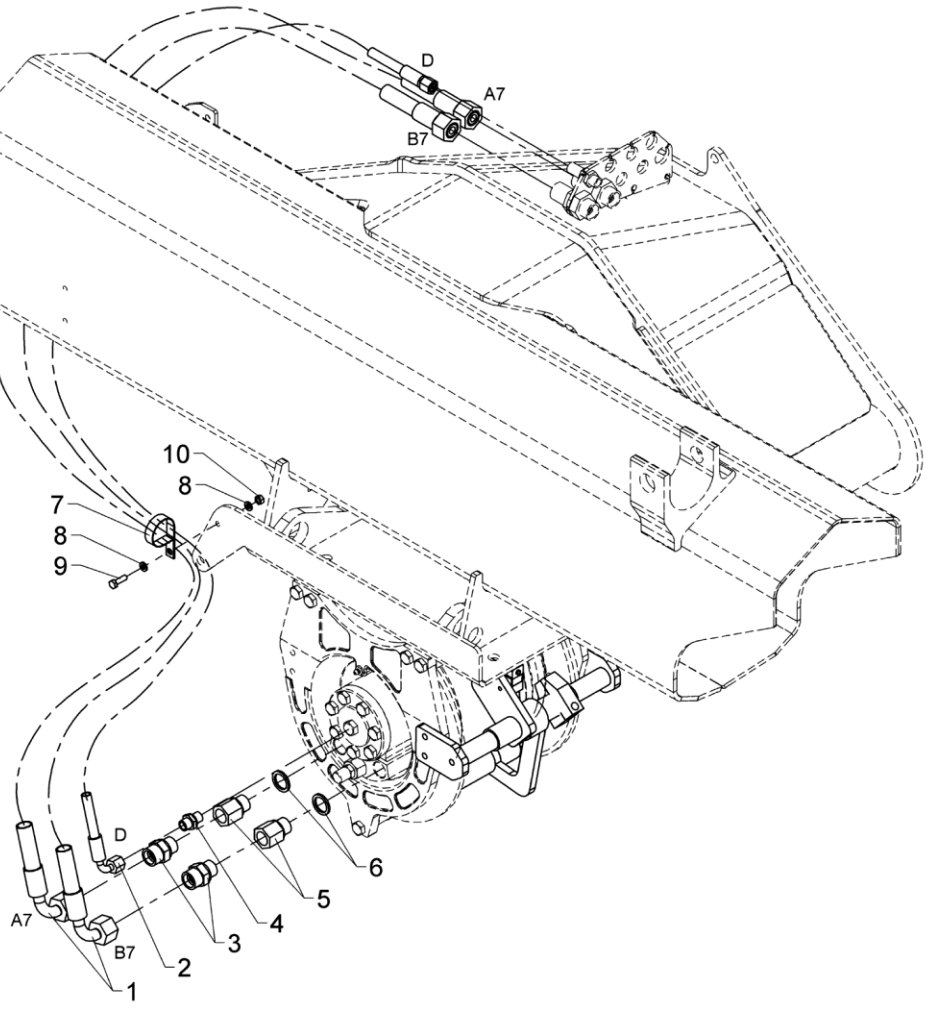

Obsolete

534 13 100

Hydraulic system, winch

From loader 1060001
To loader 1061095

Created 24-02-2009
Modified 16-02-2011

Pos	Qty.	Part no.	Description	Remarks
1	2	62687	Hose	1/2 X 1600 M24X1.5 L/90
2	1	62501	Hose	1/4X1600M14X1.5L/90RUSTF
3	2	26334	Connection	P-GEV 16 SR-WD
4	1	25109	Connection	GES 8 LR-WD
5	2	26922	Reducing nipple	
6	2	21106	Seal washer	ø21,5 x 28,7 x 2,5
7	1	31869	Rubber clip Ø 38 mm	
8	2	32302	Face washer, stainless	6 mm
9	1	30113	Set screw, stainless	M6 x 20
10	1	30854	Nut, stainless	M6

1500K, 1510K, 1720K, 1730K, 1820K, 1830K

Internal ref. 63 42 370

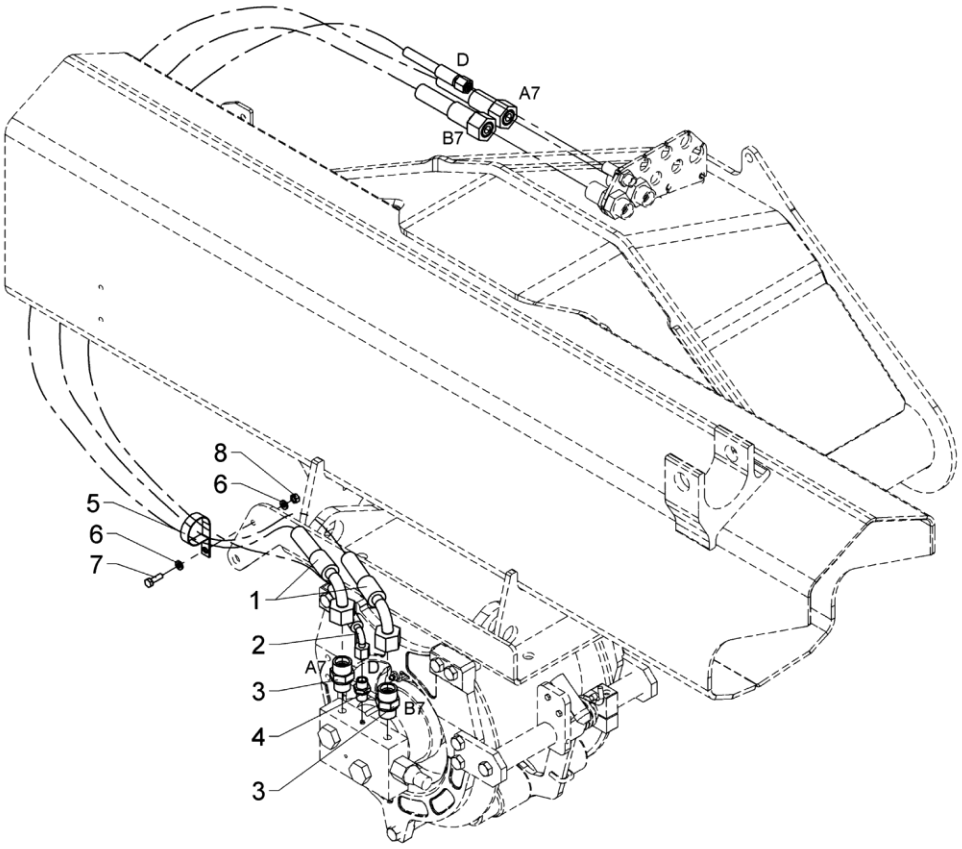

Hydraulic system, winch

Pos	Qty.	Part no.	Description	Remarks
1	2	62687	Hose	1/2 X 1600 M24X1.5 L/90
2	1	62501	Hose	1/4X1600M14X1.5L/90RUSTF
3	2	26334	Connection	P-GEV 16 SR-WD
4	1	25109	Connection	GES 8 LR-WD
5	1	31869	Rubber clip Ø 38 mm	
6	2	32302	Face washer, stainless	6 mm
7	1	30113	Set screw, stainless	M6 x 20
8	1	30854	Nut, stainless	M6

1500K, 1510K, 1720K, 1730K, 1820K, 1830K

63 45 380
Internal ref. 63 42 380

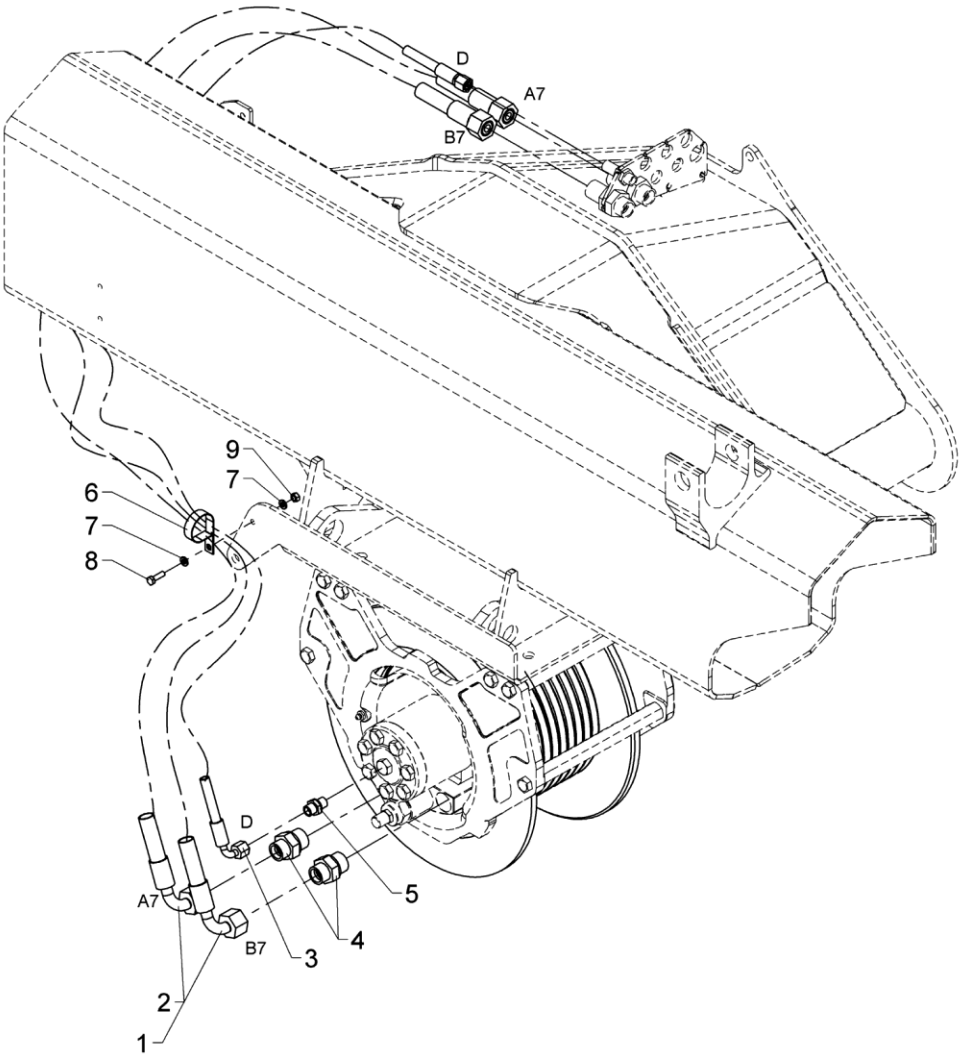

Hydraulic system, P15E

Pos	Qty.	Part no.	Description	Remarks
		6342380	Hydraulic system, P15E	1300K - 1730K
		6345380	Hydraulic system, P15E	1800K - 2430K
1	2	62687	Hose	1/2" x 1600 1300K - 1730K
2	2	62682	Hose	1/2" x 1700 1800K - 2430K
3	1	62501	Hose	1/4X1600M14X1.5L/90RUSTF
4	2	26390	Connection	P-GEV 16 SR 3/4-WD
5	1	25109	Connection	GES 8 LR-WD
6	1	31869	Rubber clip Ø 38 mm	
7	2	32302	Face washer, stainless	6 mm
8	1	30113	Set screw, stainless	M6 x 20
9	1	30854	Nut, stainless	M6

1500K, 1510K, 1720K, 1730K, 1820K, 1830K

Internal ref. 66 68 680

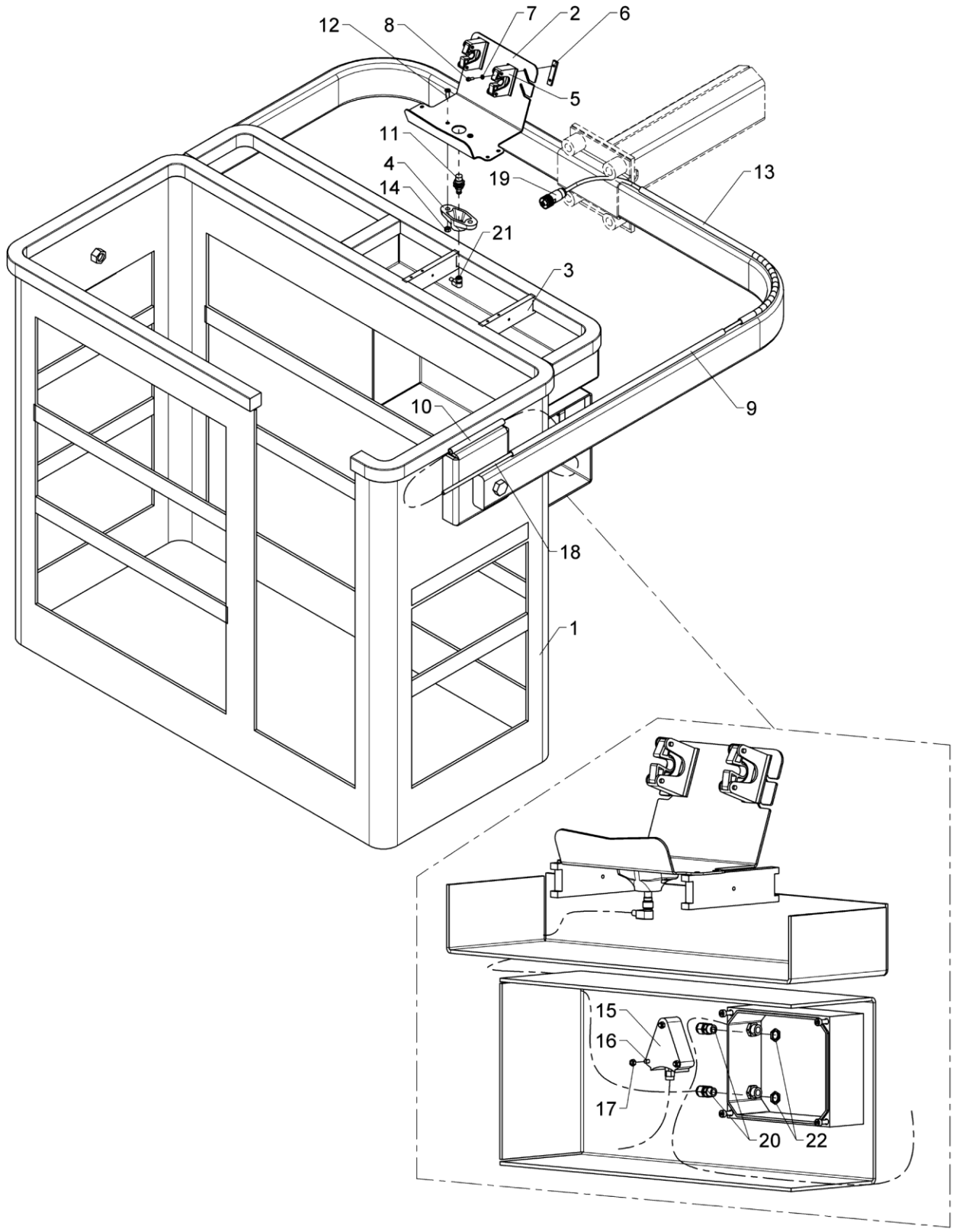

Obsolete

Basket, PB 800 Hy

534 15 000

From loader 1060001
To loader 1060447

Created 26-11-2009
Modified

Pos	Qty.	Part no.	Description	Remarks
1	1	47674	Personnel basket	PB 800 Hy
2	1	6340901	Bracket, Scanreco RC box	
3	2	68017	Bracket	
4	1	6342211	Bracket for beam, stab. sensor	
5	2	46453	Bracket	
6	2	8507104	Threaded plate	
7	4	31189	Washer	5 mm
8	4	30433	Screw	MC5 x 16
9	1	6342112	Pipe for wiring, basket	
10	1	12808	Pipe, Ø 15x5 mm R	
11	1	28905	Proximity switch	
12	2	32486	Screw	MCL8 x 20
13	1	6342111	Pipe for wiring	
14	2	30856	Nut, stainless	M8
15	1	28739	Tilt sensor	
16	3	30103	Steel bolt, stainless	M5 x 40
17	3	30853	Nut, stainless	M5
18	1	28278	Cable 4 x 2.5	
19	1	29251	Cable socket, 4-polar, 16 A	
20	2	28244	Bushing	PG 7
21	1	28117	Cable with plug	
22	2	28415	Nut	

1500K, 1510K, 1720K, 1730K, 1820K, 1830K

Internal ref. 66 68 680

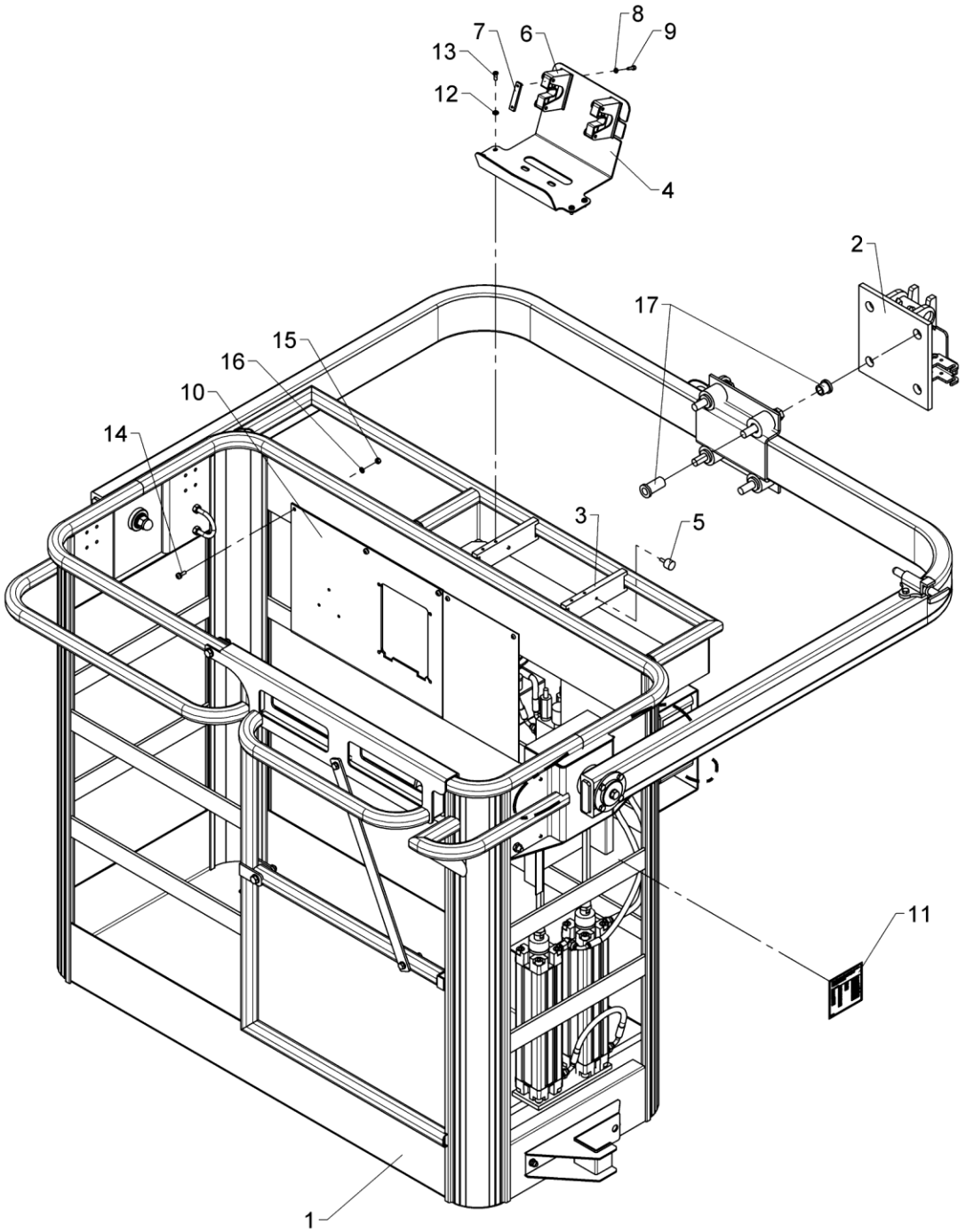

Basket, PB 800 Hy

534 15 000 A

From loader 1060448
To loader

Created 19-02-2015
Modified 22-01-2019

Pos	Qty.	Part no.	Description	Remarks
1	1	47674	Personnel basket	PB 800 Hy
2	1	8518500	Coupling for MEWP	
3	2	68017	Bracket	
4	1	6340919	Bracket(ScanrecoG2 control box	
5	2	61916	Torsion balancer Type 4	
6	2	46454	Bracket	
7	2	8507105	Threaded plate (Scanreco G2)	
8	4	31189	Washer	5 mm
9	4	30433	Screw	MC5 x 16
10	1	7004033	Bracket for connection box	
11	1	68917	Label for basket	
12	4	32302	Face washer, stainless	6 mm
13	4	32490	Screw	MC6 x 16
14	3	32480	Screw	M6 x 18
15	2	30884	Lock nut, stainless	M6
16	2	31154	Spring washer, stainless	6 mm
17	4	47815	Bushing	

1500K, 1510K, 1720K, 1730K, 1820K, 1830K

Internal ref. 66 68 690

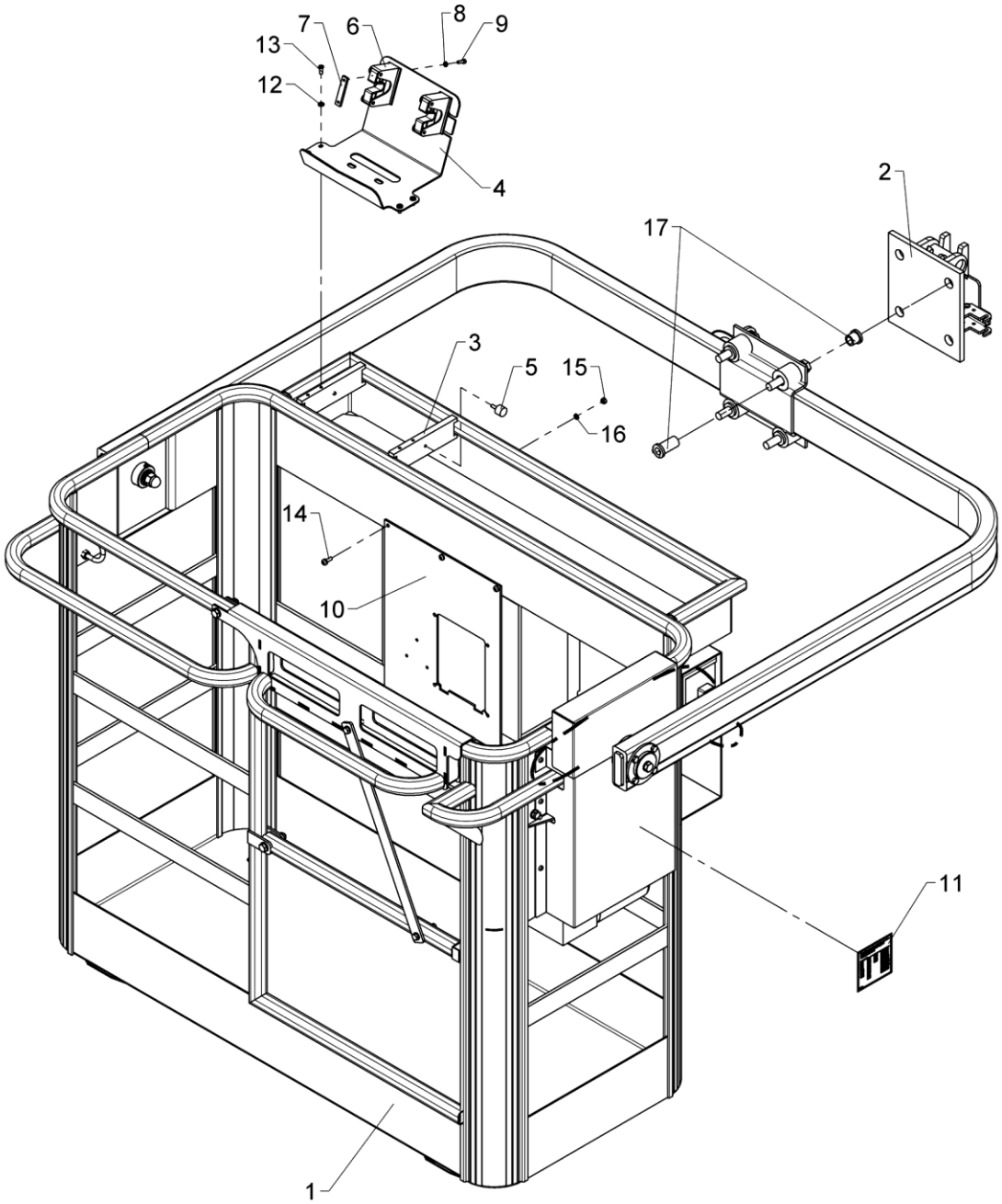

Basket, PB 800 E

Created 02-12-2015
Modified 22-01-2019

Pos	Qty.	Part no.	Description	Remarks
1	1	47820	Personnel basket	PB 800 E
2	1	8518500	Coupling for MEWP	
3	2	68017	Bracket	
4	1	6340919	Bracket(ScanrecoG2 control box	
5	2	61916	Torsion balancer Type 4	
6	2	46454	Bracket	
7	2	8507105	Threaded plate (Scanreco G2)	
8	4	31189	Washer	5 mm
9	4	30433	Screw	MC5 x 16
10	1	7004034	Conn. box bracket (RCL box)	
11	1	68917	Label for basket	
12	4	32302	Face washer, stainless	6 mm
13	4	32490	Screw	MC6 x 16
14	3	32480	Screw	M6 x 18
15	3	30884	Lock nut, stainless	M6
16	3	31154	Spring washer, stainless	6 mm
17	4	47815	Bushing	

1500K, 1510K, 1720K, 1730K, 1820K, 1830K

Internal ref. 66 68 670

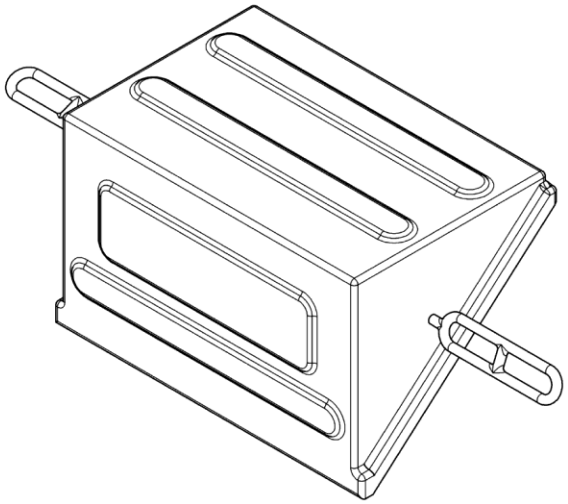

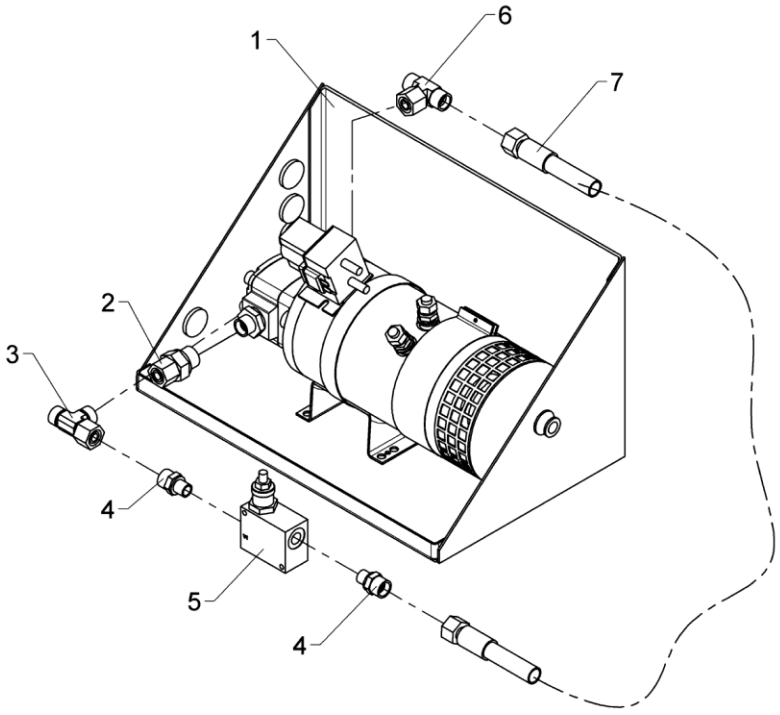

Obsolete

Emergency pump, basket loader

534 15 010

From loader 1060001
To loader 1060522

Created 03-02-2010
Modified

Pos	Qty.	Part no.	Description	Remarks
1	1	50080	Emergency pump, basket loader	
2	1	26388	Connection	EGESD 12 LR 1/2-WD
3	1	25270	Connection	ELSD 12 L
4	2	25195	Connection	P-GEV 12 LR 1/4-WD
5	1	50511	Counter-balance valve	
6	1	25212	T-connection	ETVD 12 L
7	1	0017970	Hose	

1500K, 1510K, 1720K, 1730K, 1820K, 1830K

Internal ref. 66 68 670

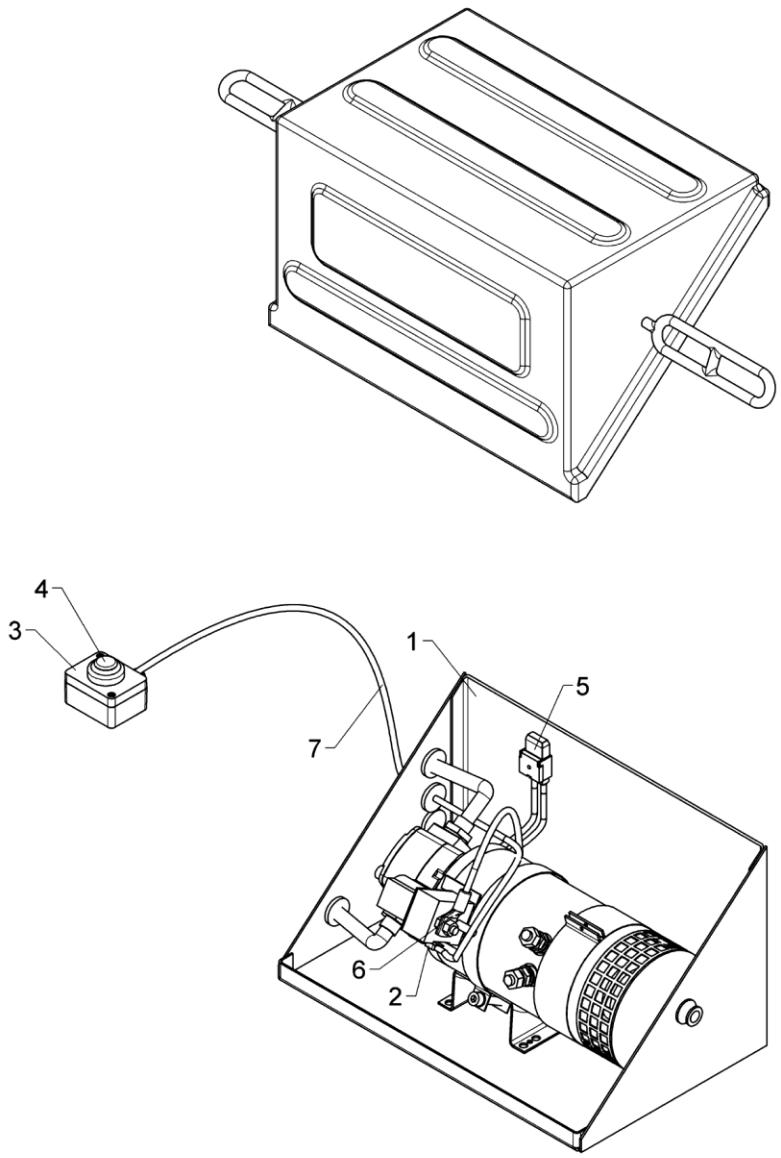

534 15 010 A

From loader 1060523
To loader

Created 15-02-2011
Modified

Emergency pump, basket loader

Pos	Qty.	Part no.	Description	Remarks
1	1	50080	Emergency pump, basket loader	
2	3	27429	Clamp	
3	1	28384	Connection box	
4	1	27333	Push button	
5	1	27250	Fuse holder	
6	1	28347	Clip	
7	3	28249	Cable 2 x 0.75	10 mtr.

1500K, 1510K, 1720K, 1730K, 1820K, 1830K

63 45 340
Internal ref. 63 41 340

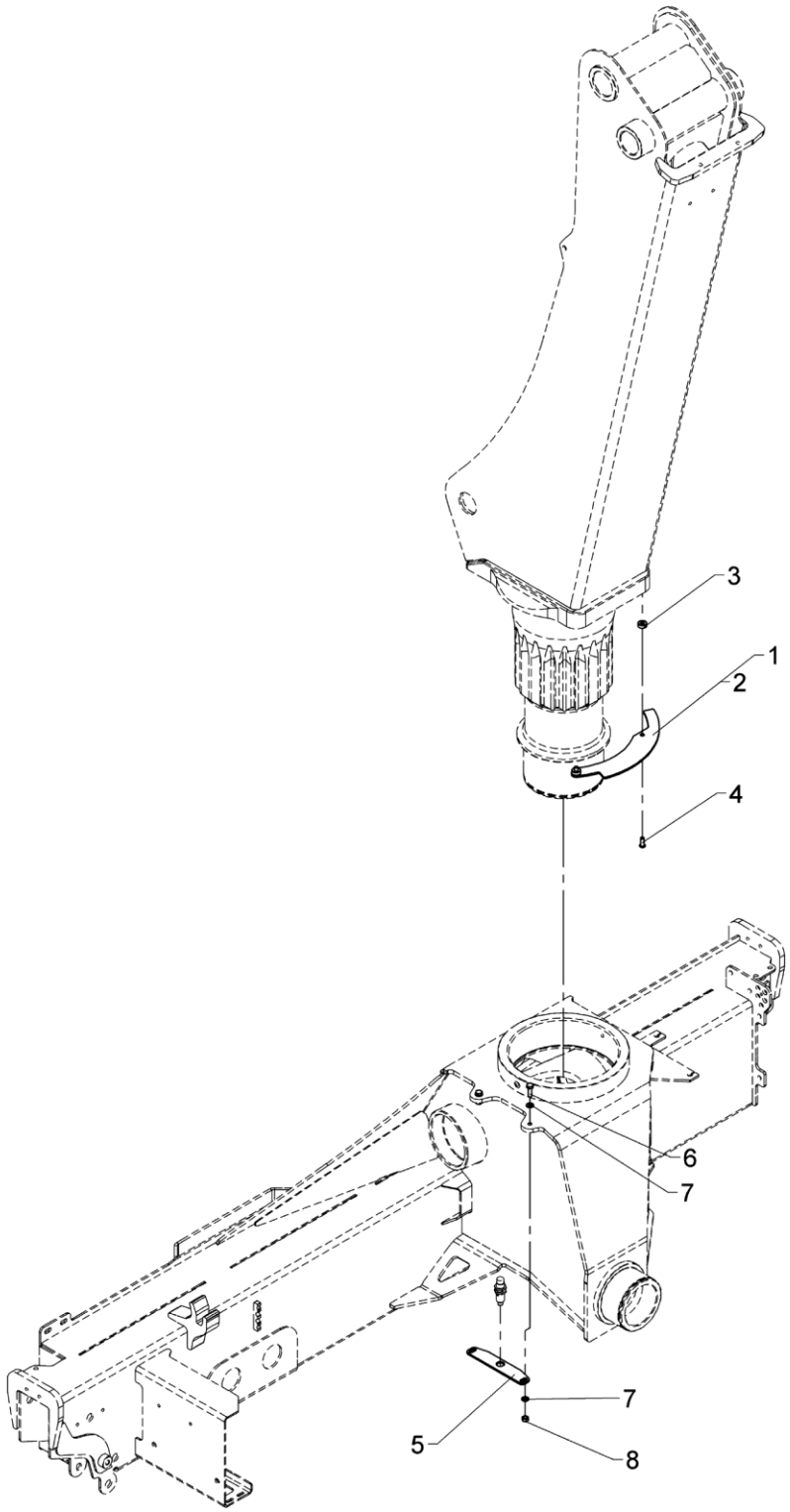

Obsolete

Cam disc kit (Stand-up controls)

534 16 010

From loader 1060001
To loader 1060823

Created 13-01-2010
Modified

Pos	Qty.	Part no.	Description	Remarks
		6341340	Cam disc kit (stand-up ctrls)	
		6345340	Cam disc kit (stand-up ctrls)	
1	1	6341998	Cam disc (stand-up controls)	1300K/1500K
2	1	6345998	Cam disc (stand-up controls)	1800K/2200K
3	2	6871754	Spacer	
4	2	32486	Screw	MCL8 x 20
5	1	6341997	Sensor fittings (cam disc)	
6	2	30134	Set screw, stainless	M8 x 25
7	4	31147	Face washer, 8 mm	8 mm
8	2	30856	Nut, stainless	M8

1500K, 1510K, 1720K, 1730K, 1820K, 1830K

63 45 330
Internal ref. 63 41 330

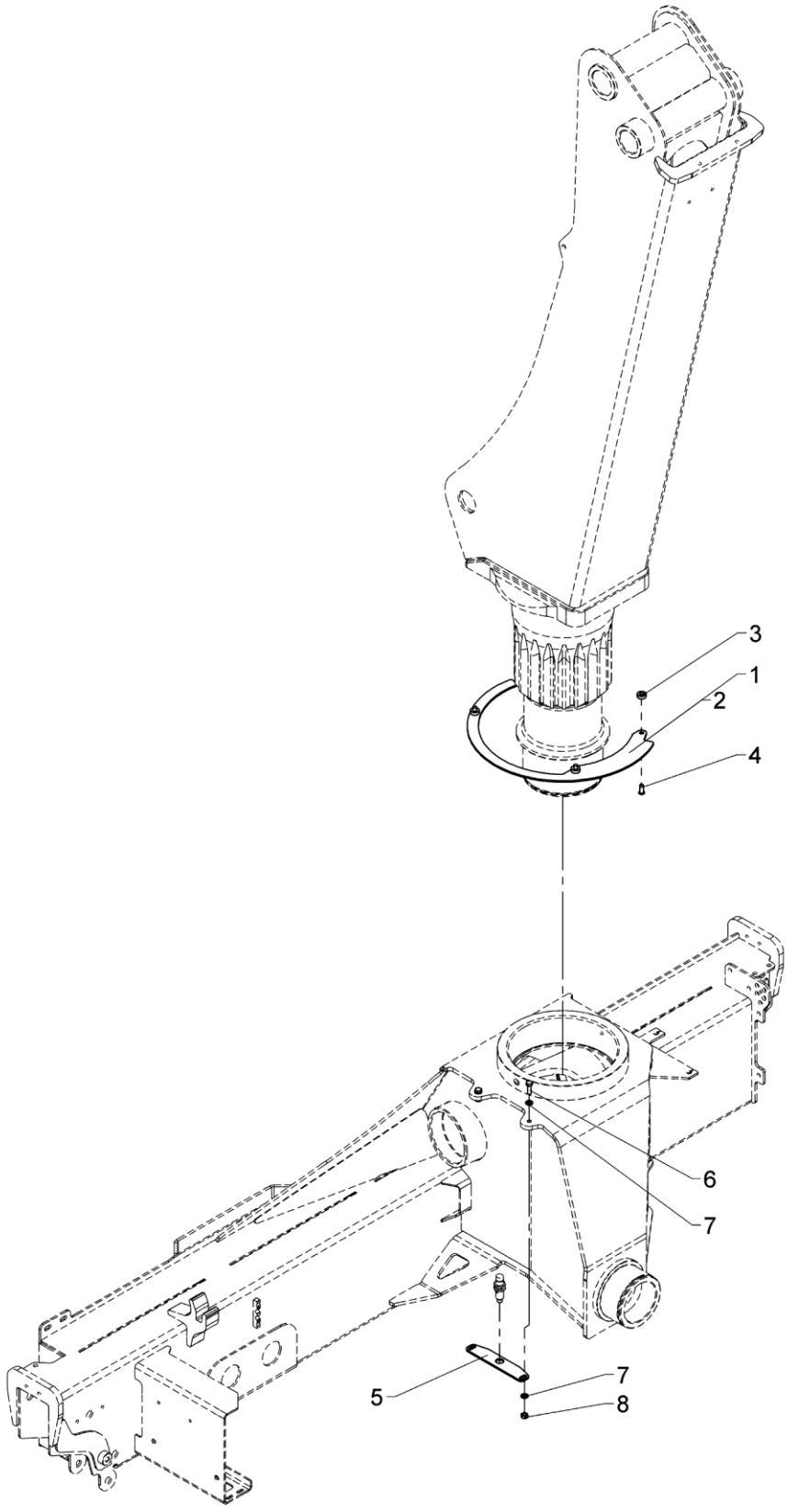

Obsolete

Cam disc kit (2-stage LMB)

534 16 020

From loader 1060001
To loader 1060712

Created 13-01-2010
Modified

Pos	Qty.	Part no.	Description	Remarks
		6341330	Cam disc kit (2-stage LMB)	
		6345330	Cam disc kit (2-stage LMB)	
1	1	6341999	Cam disc (2 stage LMB)	1300K/1500K
2	1	6345999	Cam disc (2 stage LMB)	1800K/2200K
3	3	6871754	Spacer	
4	3	32486	Screw	MCL8 x 20
5	1	6341997	Sensor fittings (cam disc)	
6	2	30134	Set screw, stainless	M8 x 25
7	4	31147	Face washer, 8 mm	8 mm
8	2	30856	Nut, stainless	M8

1500K, 1510K, 1720K, 1730K, 1820K, 1830K

63 45 840
Internal ref. 63 41 840

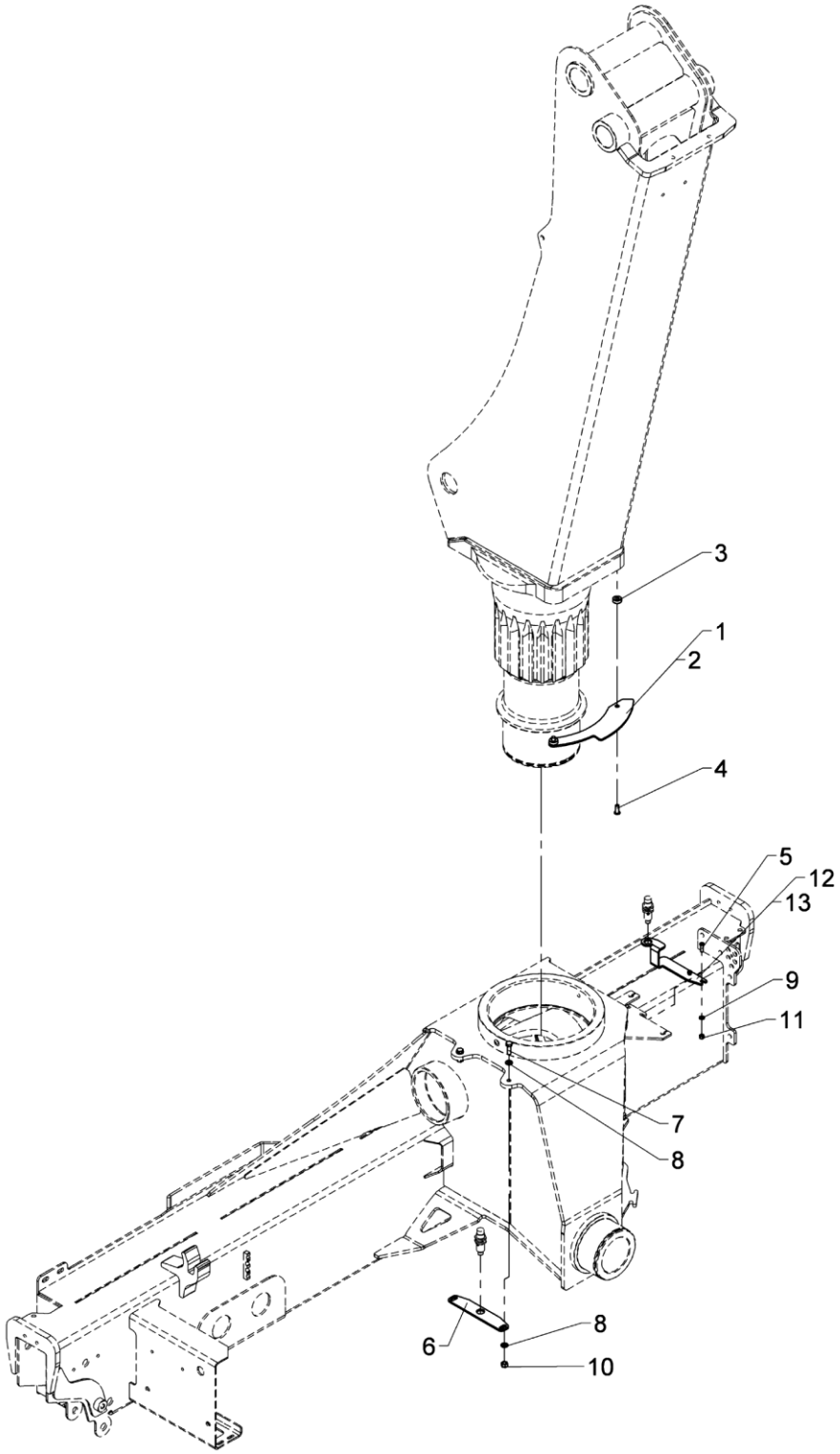

Obsolete

Cam disc kit (QOPS, std.), cpl.

534 16 030

From loader 1060001
To loader 1060674

Created 13-01-2010
Modified

Pos	Qty.	Part no.	Description	Remarks
		6341840	Cam disc kit (QOPS, std.)	
		6345840	Cam disc kit (QOPS, std.)	
1	1	6341996	Cam disc (QOPS, std.)	1300K/1500K
2	1	6345996	Cam dis (QOPS, std.)	1800K/2200K
3	2	6871754	Spacer	
4	2	32486	Screw	MCL8 x 20
5	2	32483	Screw	MCL6 x 20
6	1	6341997	Sensor fittings (cam disc)	
7	2	30134	Set screw, stainless	M8 x 25
8	4	31147	Face washer, 8 mm	8 mm
9	2	32302	Face washer, stainless	6 mm
10	2	30886	Lock nut, stainless	M8
11	2	30884	Lock nut, stainless	M6
12	1	6341995	Sensor fittings (QOPS)	1300K/1500K
13	1	6345995	Sensor fittings (QOPS)	1800K/2200K

1500K, 1510K, 1720K, 1730K, 1820K, 1830K

63 45 850
Internal ref. 63 41 850

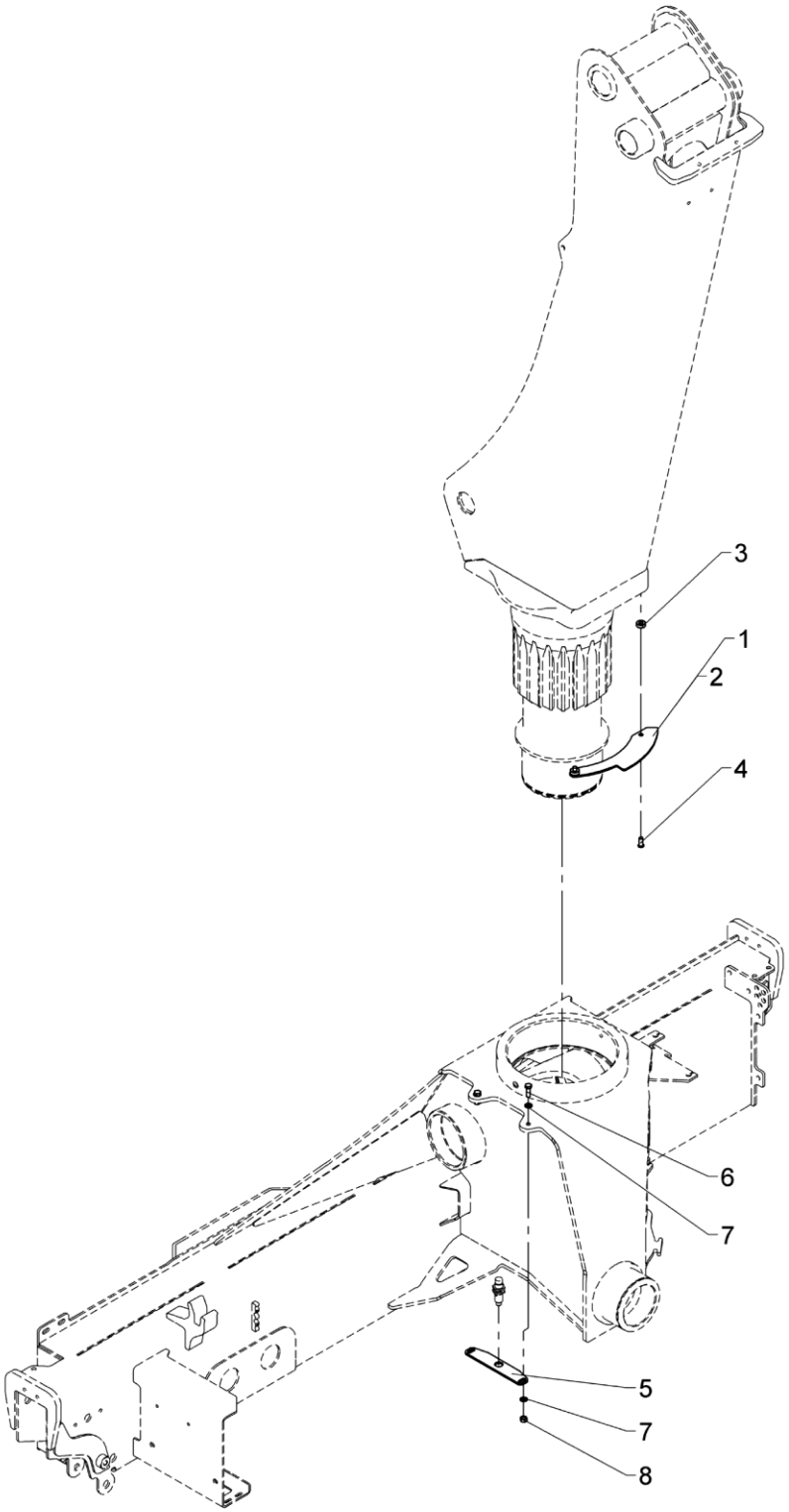

Obsolete

Cam disc kit (QOPS, RC), cpl.

534 16 040

From loader 1060001
To loader 1060424

Created 13-01-2010
Modified

Pos	Qty.	Part no.	Description	Remarks
		6341850	Cam disc kit (QOPS, RC)	
		6345850	Cam disc kit (QOPS, RC)	
1	1	6341996	Cam disc (QOPS, std.)	1300K/1500K
2	1	6345996	Cam dis (QOPS, std.)	1800K/2200K
3	2	6871754	Spacer	
4	2	32486	Screw	MCL8 x 20
5	1	6341997	Sensor fittings (cam disc)	
6	2	30134	Set screw, stainless	M8 x 25
7	4	31147	Face washer, 8 mm	8 mm
8	2	30856	Nut, stainless	M8

1500K, 1510K, 1720K, 1730K, 1820K, 1830K

63 45 790
Internal ref. 63 41 790

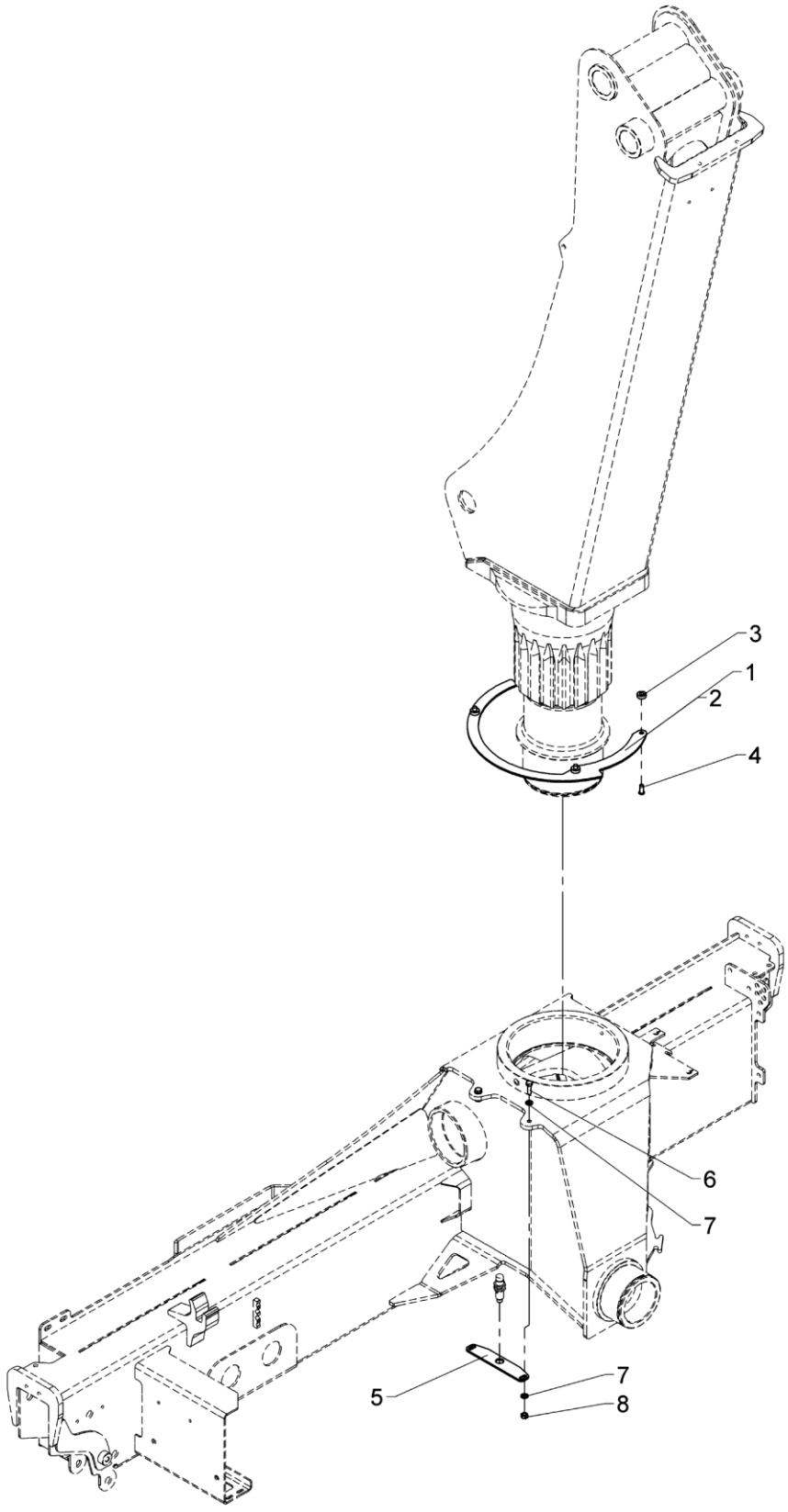

Obsolete

Cam disc kit (HS + 2-stage LMB)

534 16 050

From loader 1060001
To loader 1060468

Created 13-01-2010
Modified

Pos	Qty.	Part no.	Description	Remarks
		6341790	Cam disc kit (HS+2-stage LMB)	
		6345790	Cam disc kit (HS+2-stage LMB)	
1	1	6341994	Cam disc (HS+2-stage LMB)	1300/1310/1500/1510
2	1	6345994	Cam disc (HS+2-stage LMB)	1800/1810/2200/2210
3	3	6871754	Spacer	
4	3	32486	Screw	MCL8 x 20
5	1	6341997	Sensor fittings (cam disc)	
6	2	30134	Set screw, stainless	M8 x 25
7	4	31147	Face washer, 8 mm	8 mm
8	2	30856	Nut, stainless	M8

1500K, 1510K, 1720K, 1730K, 1820K, 1830K

Internal ref. 63 40 780

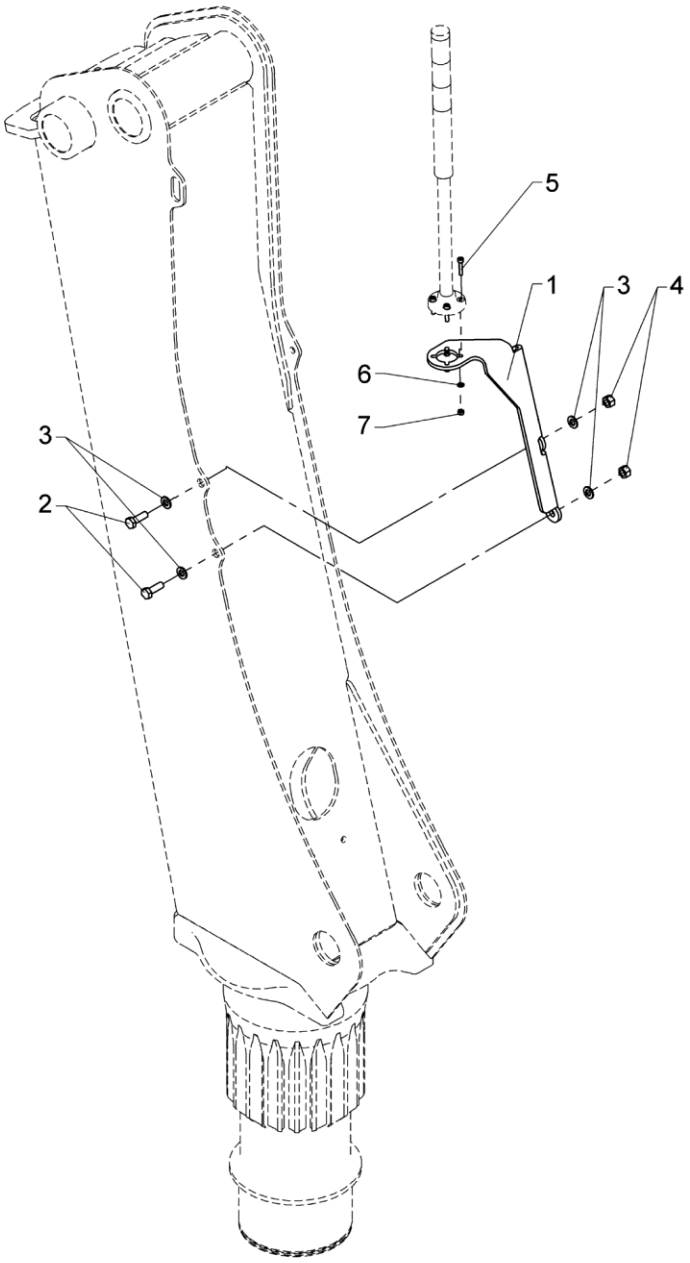

Obsolete

Mounting fittings, light tower

534 16 060

From loader 1060001
To loader 1060001

Created 04-01-2010
Modified 13-01-2014

Pos	Qty.	Part no.	Description	Remarks
1	1	6340069	Bracket (light tower)	
2	2	30156	Set screw, stainless	M10 x 30
3	4	31565	Washer, stainless	10 mm
4	2	31564	Lock nut, stainless	M10
5	4	30481	Screw	
6	4	32308	Washer	5 mm
7	4	30859	Lock nut, stainless	M5

1500K, 1510K, 1720K, 1730K, 1820K, 1830K

63 42 940
63 42 900
63 42 860
63 42 850
Internal ref. 63 42 840

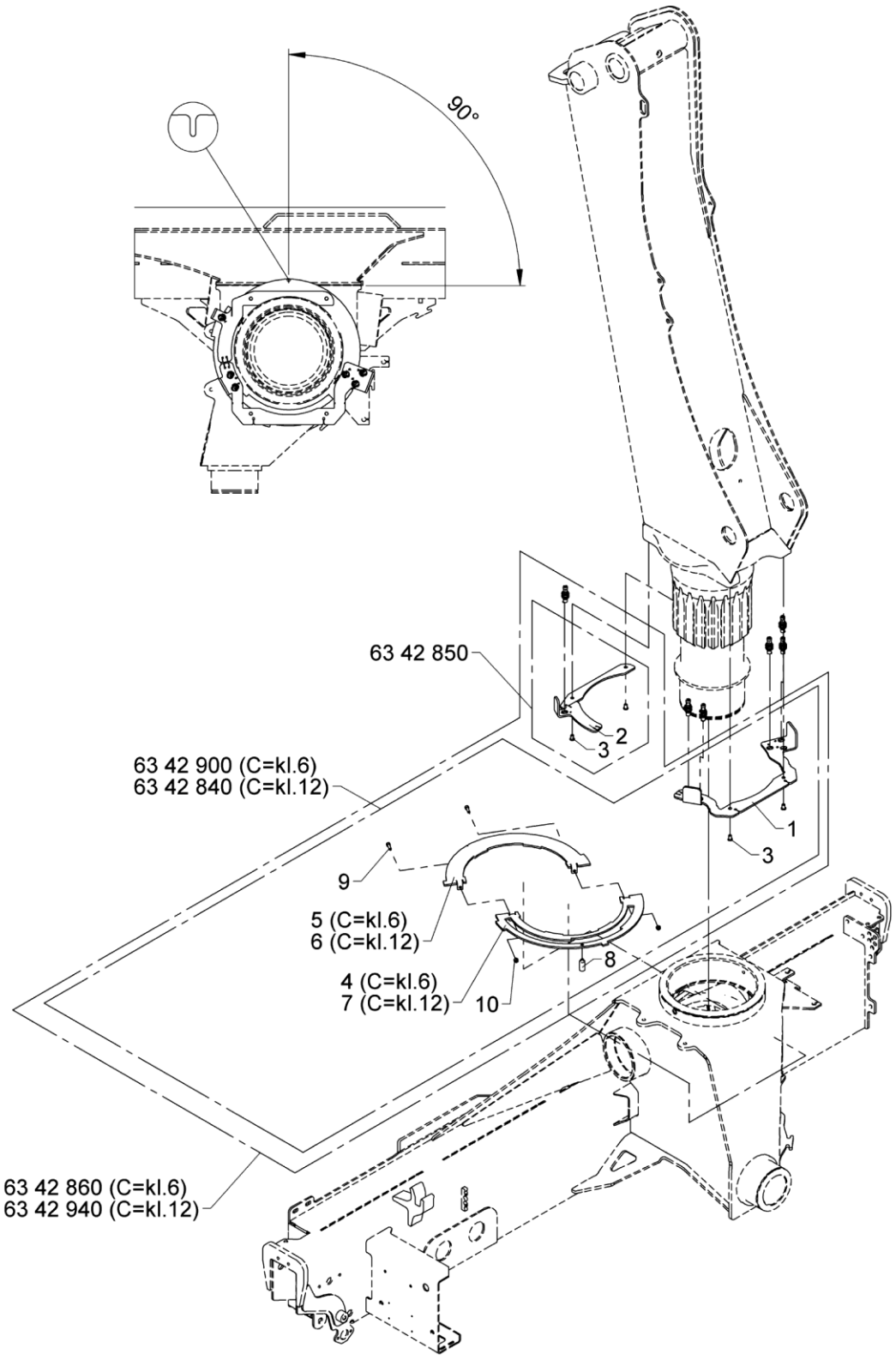

Cam disc kit

534 16 070

From loader 1060001
To loader

Created 17-10-2011
Modified 23-01-2013

Pos	Qty.	Part no.	Description	Remarks
		6342840	Cam disc kit	(2LMB,HS,QOPS,CBS, C=12)
		6342850	Cam disc kit	(+2CYBEL)
		6342860	Cam disc kit	(2CYBEL)
		6342900	Cam disc kit	(2LMB,HS,QOPS,CBS)
		6342940	Cam disc kit	(2CYBEL, C=12)
1	1	6341081	Sensor bracket	
2	1	6341082	Sensor bracket	
3	4	32507	Cylinder screw 8 x 12	MC8 x 12
4	1	6341076	Cam disc, part 1/2	
5	1	6341077	Cam disc, part 2/2	
6	1	6341078	Cam disc, part 1/2 C=12o'clock	
7	1	6341079	Cam disc, part 2/2,C=12o'clock	
8	1	68058	Spacer	
9	2	31538	Screw, stainless	MC6 x 20
10	2	30884	Lock nut, stainless	M6

1500K, 1510K, 1720K, 1730K, 1820K, 1830K

63 42 890
Internal ref. 63 40 890

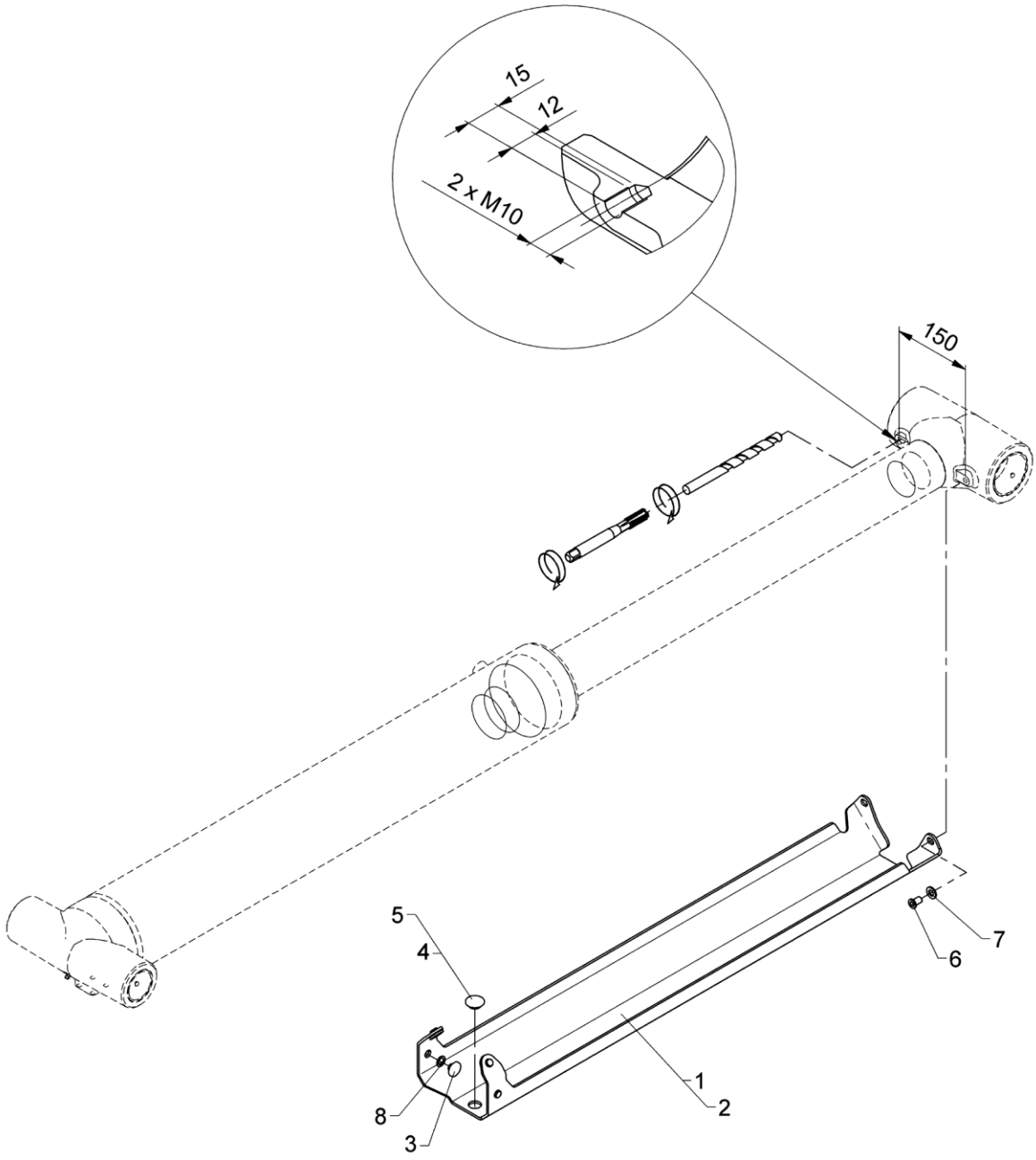

Protective guard, jib cylinder, cpl.

Created 13-01-2010
Modified 15-04-2015

Pos	Qty.	Part no.	Description	Remarks
		6340890	Protective guard, jib cylinder	
		6342890	Protective guard, jib cylinder	
1	1	6340159	Protective guard	Serie 1300
2	1	6342159	Protective guard	Serie 1500
3	4	63569	Guide shoe	3 mm
4	1	63429	Guide	ø30 x 3 mm
5	1	63460	Spacer	5 mm
6	2	32423	Sockethead screw	MC10 x 16
7	2	31565	Washer, stainless	10 mm
8	4	33219	Back ring	PS 12 x 18 x 1,0

1500K, 1510K, 1720K, 1730K, 1820K, 1830K

Internal ref. 63 41 050

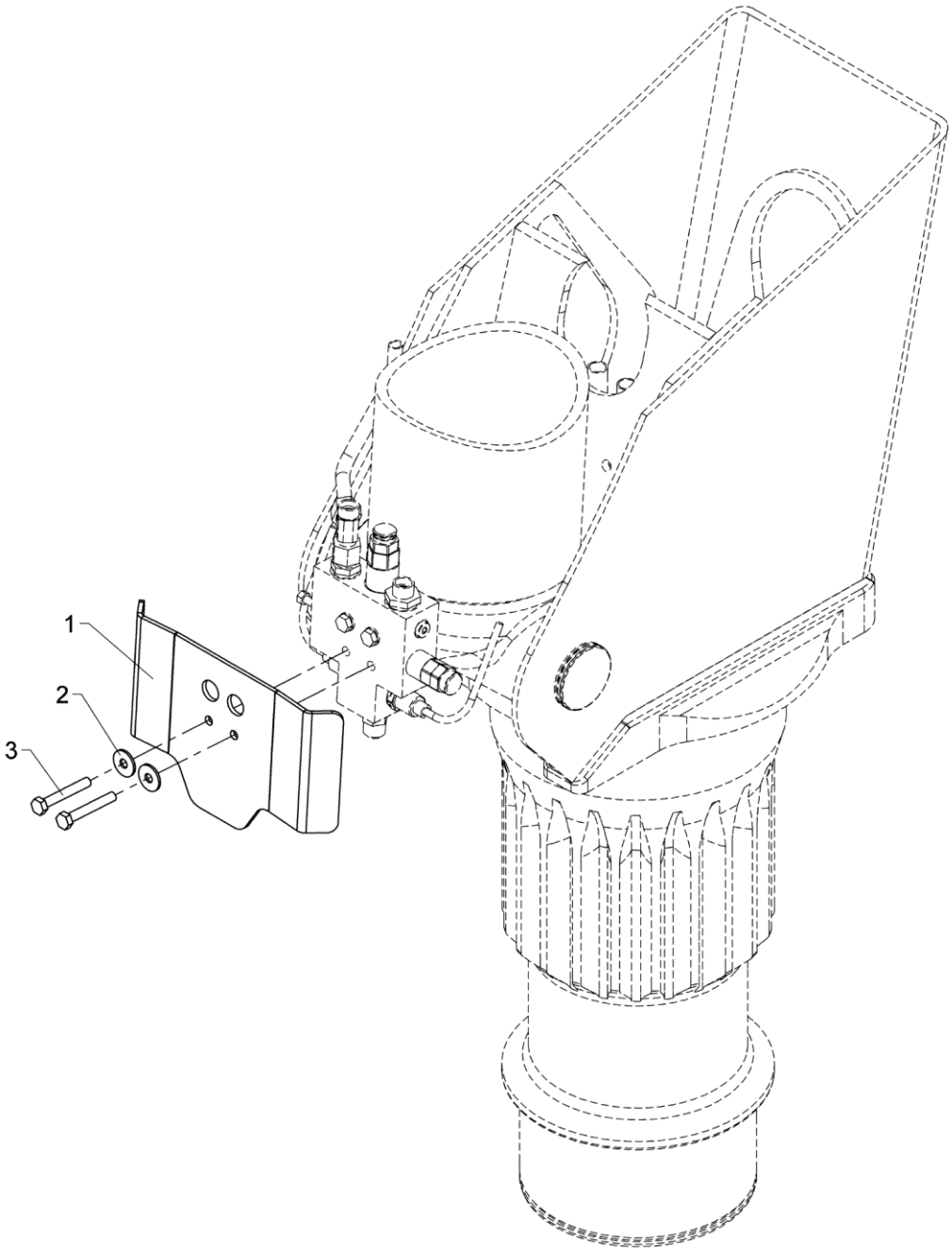

Protective guard (LHV boom), cpl.

Created 13-01-2010
Modified 14-08-2018

Pos	Qty.	Part no.	Description	Remarks
1	1	6340949	Protective guard (LHV boom)	
2	2	31136	Washer, stainless	8 mm
3	2	30140	Steel bolt, stainless	M8 x 55

1500K, 1510K, 1720K, 1730K, 1820K, 1830K

85 02 970
85 02 960
Internal ref. 85 02 910

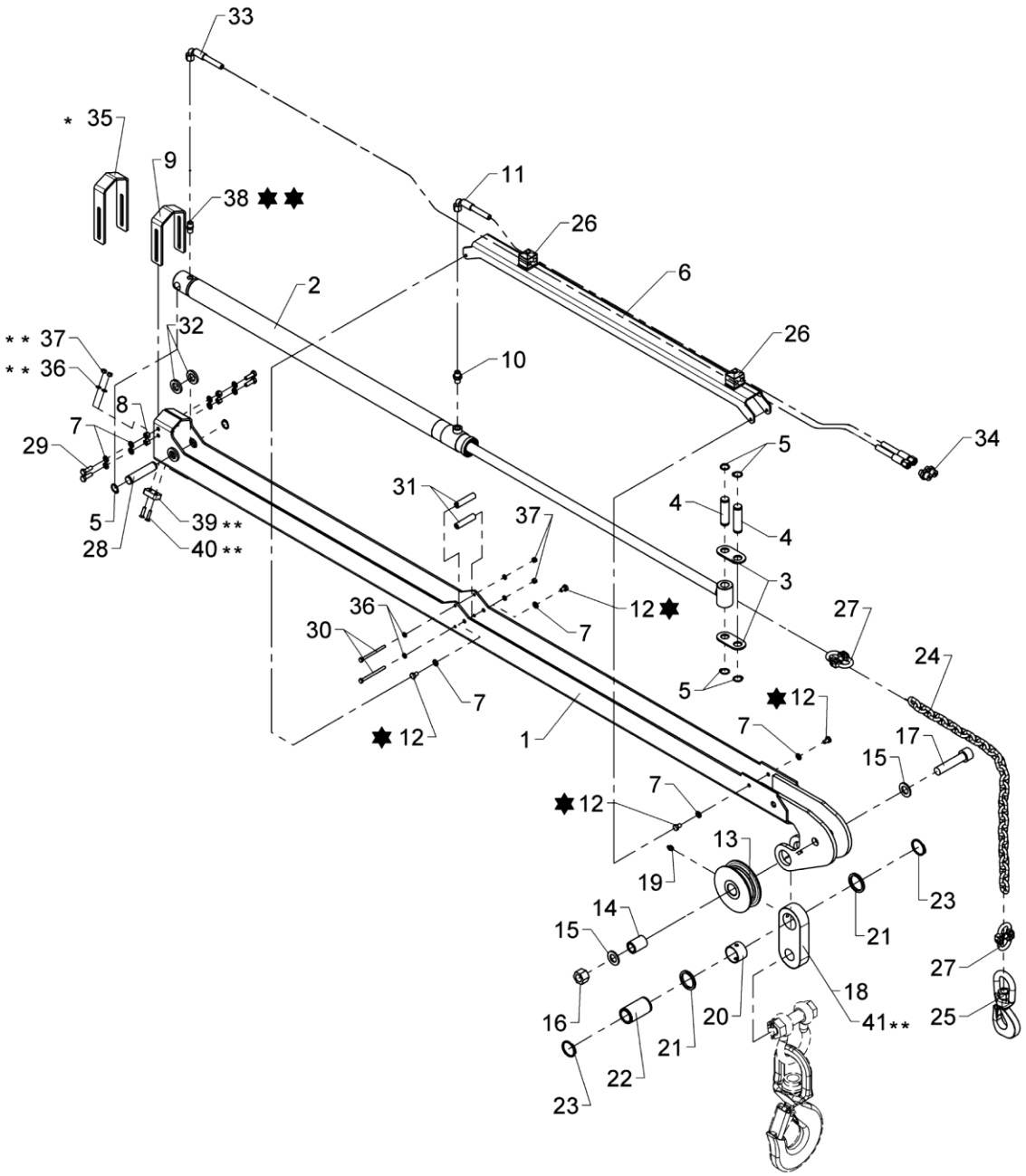

✸ Loctite 243

✸✸ Loctite 577

*K3 - 1800K/2630K

** 610K/810K

Equipment for glass container

Pos	Qty.	Part no.	Description	Remarks
		8502910	Equipment for bottle container	
		8502960	Container handling equipment	1800K/2630K K3
		8502970	Container handling equipment	610K/810K K1,K2
1	1	8502842	Boom,bottle contain.handl.syst	
2	1	1243204	Telescopic cylinder	
3	2	8502874	Fitting	
4	2	8502804	Bolt	Ø20 x 75
5	6	33108	Circlip	20U
6	1	8502934	End plate	
7	12	31147	Face washer, 8 mm	
8	4	30886	Lock nut, stainless	M8
9	1	8502894	Bracket	
10	1	25109	Connection	GES 8 LR-WD
11	1	62579	Hose	1/4X1800
12	4	30130	Set screw, stainless	M8 x 12
13	1	64074	Wire sheave	
14	1	8502794	Hub	Ø30/20,5 x 41,5
15	2	31179	Washer	20 mm
16	1	30894	Lock nut	M20
17	1	30485	Screw	MC20 x 100
18	1	8502784	Hook suspension	
19	1	31318	Lubricator	1/8" RG
20	1	23333	Bushing	PM 4030 DX
21	2	64557	Distance ring ø50x5	Ø50/40,03 x 4,5
22	1	8502774	Hub	Ø40/30,5 x 70
23	2	33121	Circlip	40U
24	1	62177	Steel chain	KL 7-8 (mtr.) 1 1/2 meter pr.enhed.
25	1	62128	Hook	
26	2	31418	Clamp, double	2 x 12 mm
27	2	62178	Connection for steel chain	
28	1	8502864	Bolt	Ø20 x 91
29	4	31009	Set screw	M8 x 25
30	2	30196	Steel bolt, stainless	M6 x 80
31	2	56513	Hose	
32	2	8502954	Spacer	Ø35/20,5 x 5
33	1	62552	Hose	1/4" x 2650 V/O
34	2	25244	Connection	GES 8 LR 3/8-WD
35	1	8502884	Profile	K3 - 1800K/2630K
36	8	32302	Face washer, stainless	6 mm
37	6	30884	Lock nut, stainless	M6
38	1	25112	Connection	GES 8 LRK - 25112

1500K, 1510K, 1720K, 1730K, 1820K, 1830K

85 02 970
85 02 960
Internal ref. 85 02 910

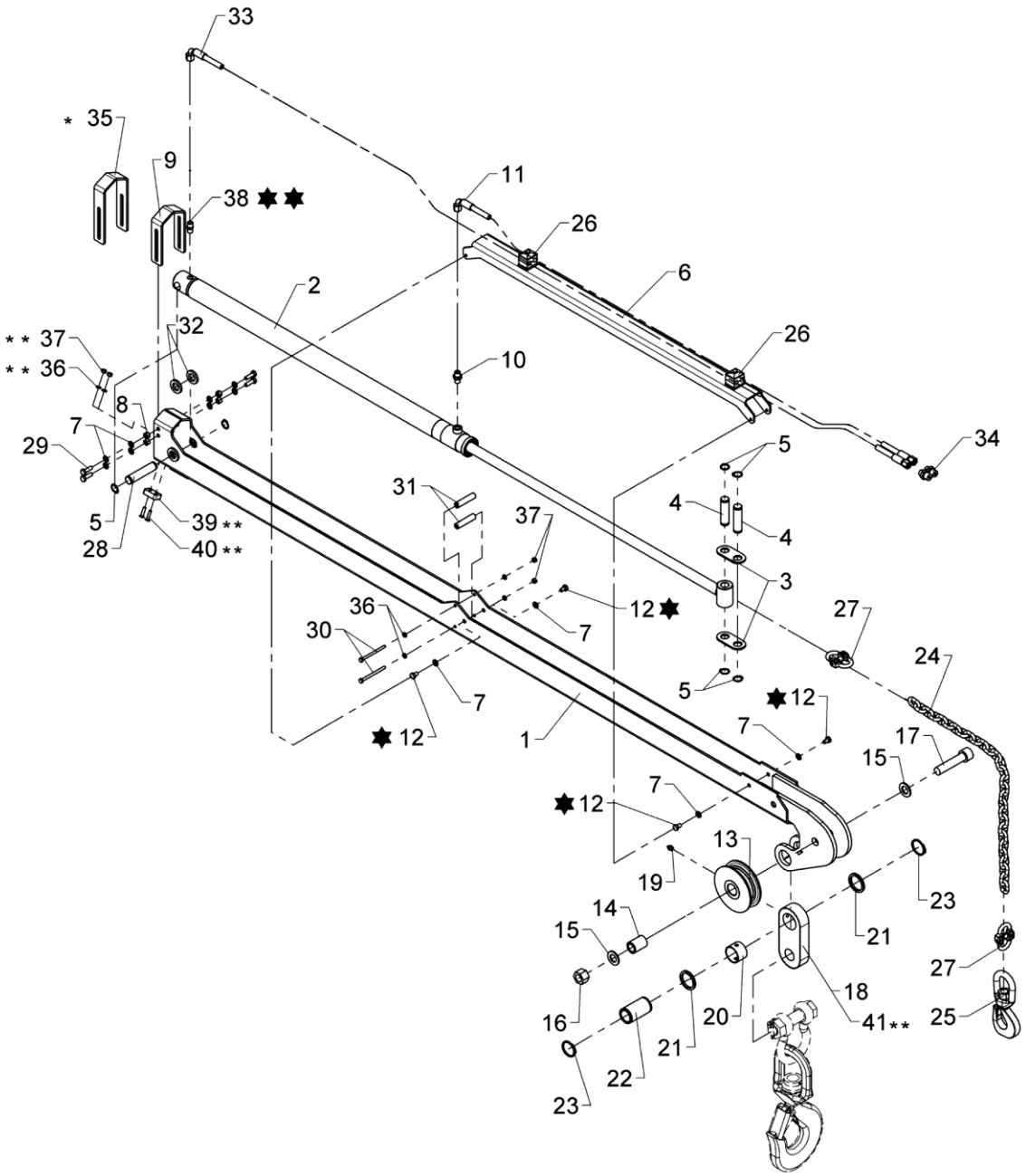

✸ Loctite 243

✸✸ Loctite 577

*K3 - 1800K/2630K

** 610K/810K

Equipment for glass container

Pos	Qty.	Part no.	Description	Remarks
39	2	8502994	Spacer 40 x 25 x 12	610K/810K
40	4	32261	Countersunk screw	MK6 x 25
41	1	8502984	Arm f. bottle container,susp.	610K/810K

1500K, 1510K, 1720K, 1730K, 1820K, 1830K

Internal ref. 70 04 120

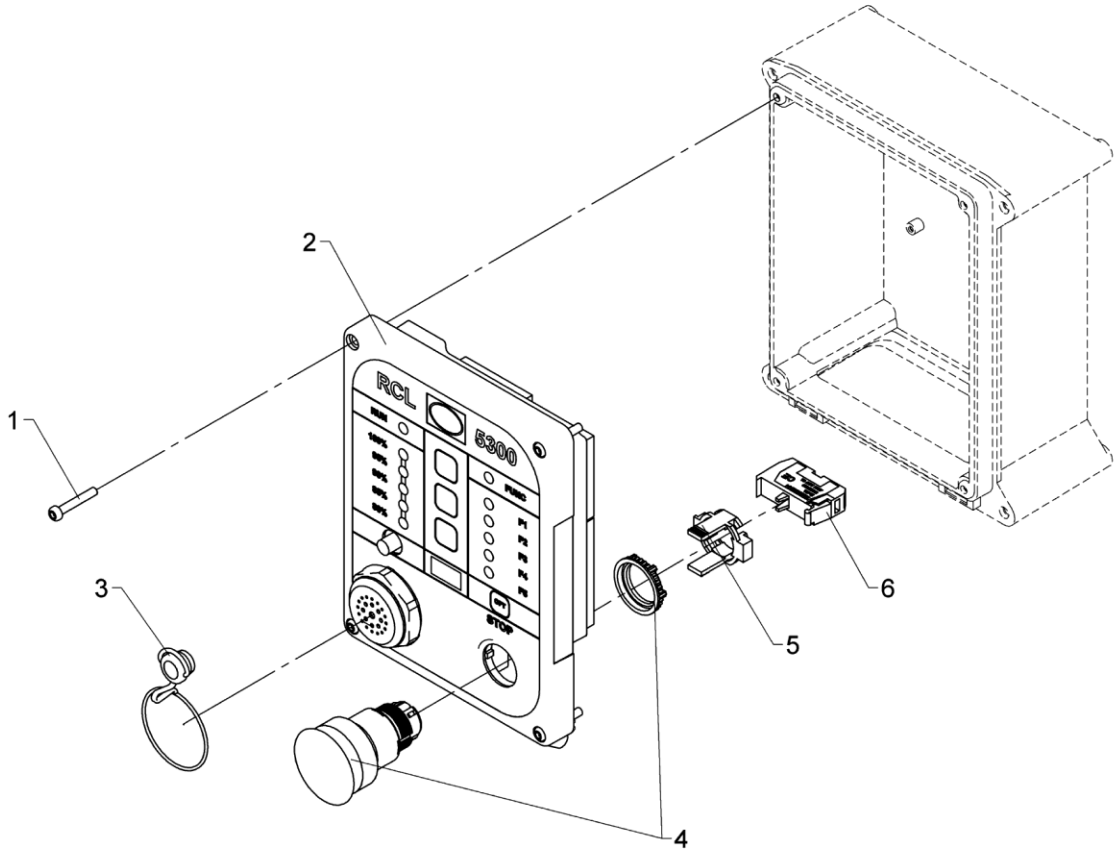

RCL 5300

Pos	Qty.	Part no.	Description	Remarks
1	4	30347	Screw, stainless	4,0 x 25
2	1	29301	Front complete, RCL 5300	
3	1	29306	Plug	
4	1	29196	Stop button	
5	1	29198	Attachment, stop button	
6	1	29197	Switch element, stop button	

1500K, 1510K, 1720K, 1730K, 1820K, 1830K

Internal ref. 70 03 690

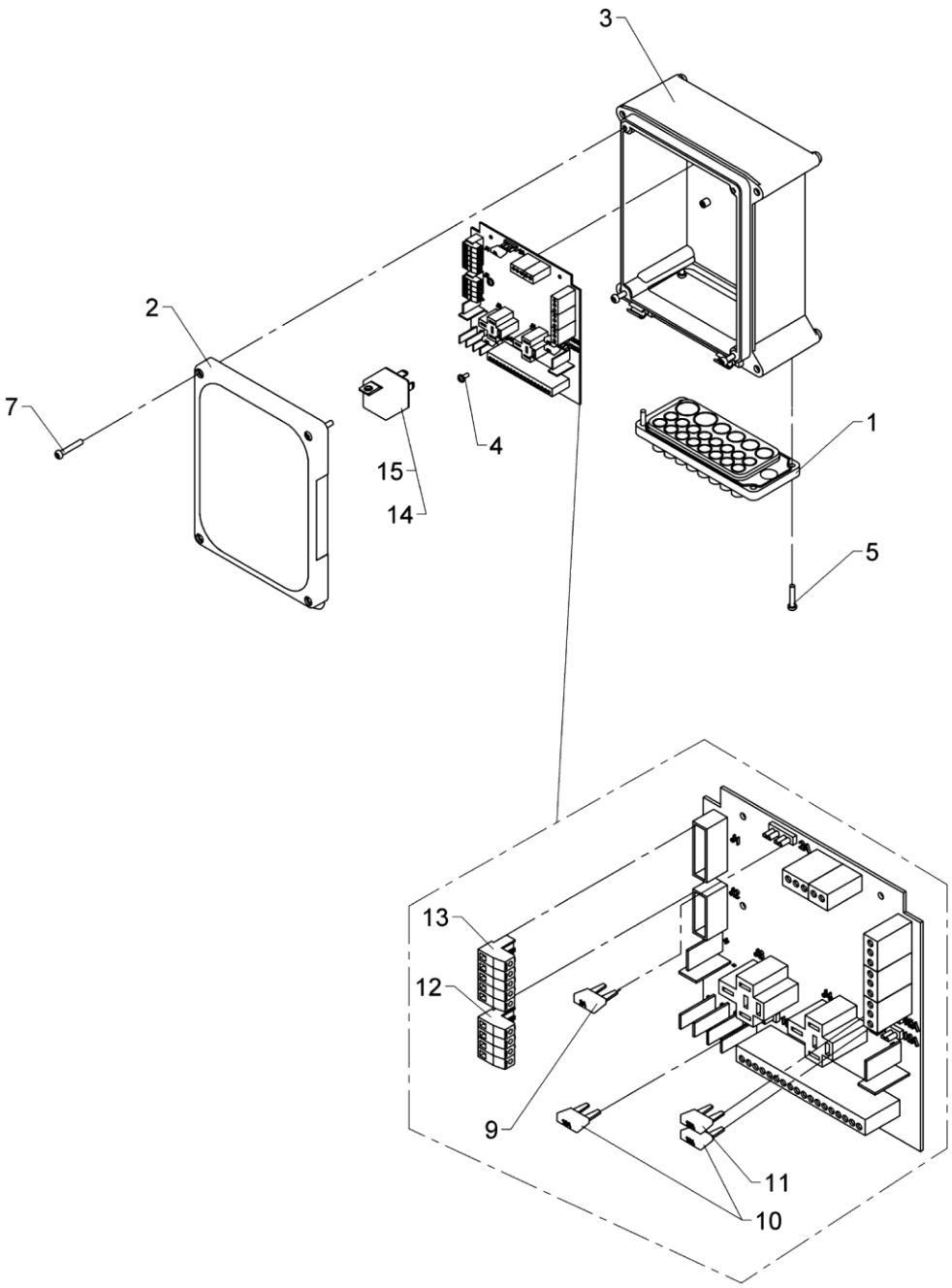

Obsolete

534 20 015

From loader 1060001
To loader

Created 05-01-2018
Modified

EJB5380

Pos	Qty.	Part no.	Description	Remarks
1	1	29307	Cable lead-in	
2	1	29347	RCL 5300 indicator panel	
3	1	29304	Bottom f. RCL-box incl. hinge	
4	6	30361	Screw, stainless	3,0 x 8
5	4	30346	Screw, stainless	4,0 x 20
6	4	30340	Screw, stainless	6,0 x 25
7	4	30347	Screw, stainless	4,0 x 25
8	1	29473	EJB5380	
9	1	29369	Fuse 2A MINI	
10	2	27822	Fuse 10A MINI	
11	1	29370	Fuse 15A MINI	
12	1	29331	Plug, 4-polar	
13	1	29887	Plug, 5-polar	
14	1	27342	Relay, 24V	
15	1	27340	Relay, 12 V	

1500K, 1510K, 1720K, 1730K, 1820K, 1830K

Internal ref. 70 03 690

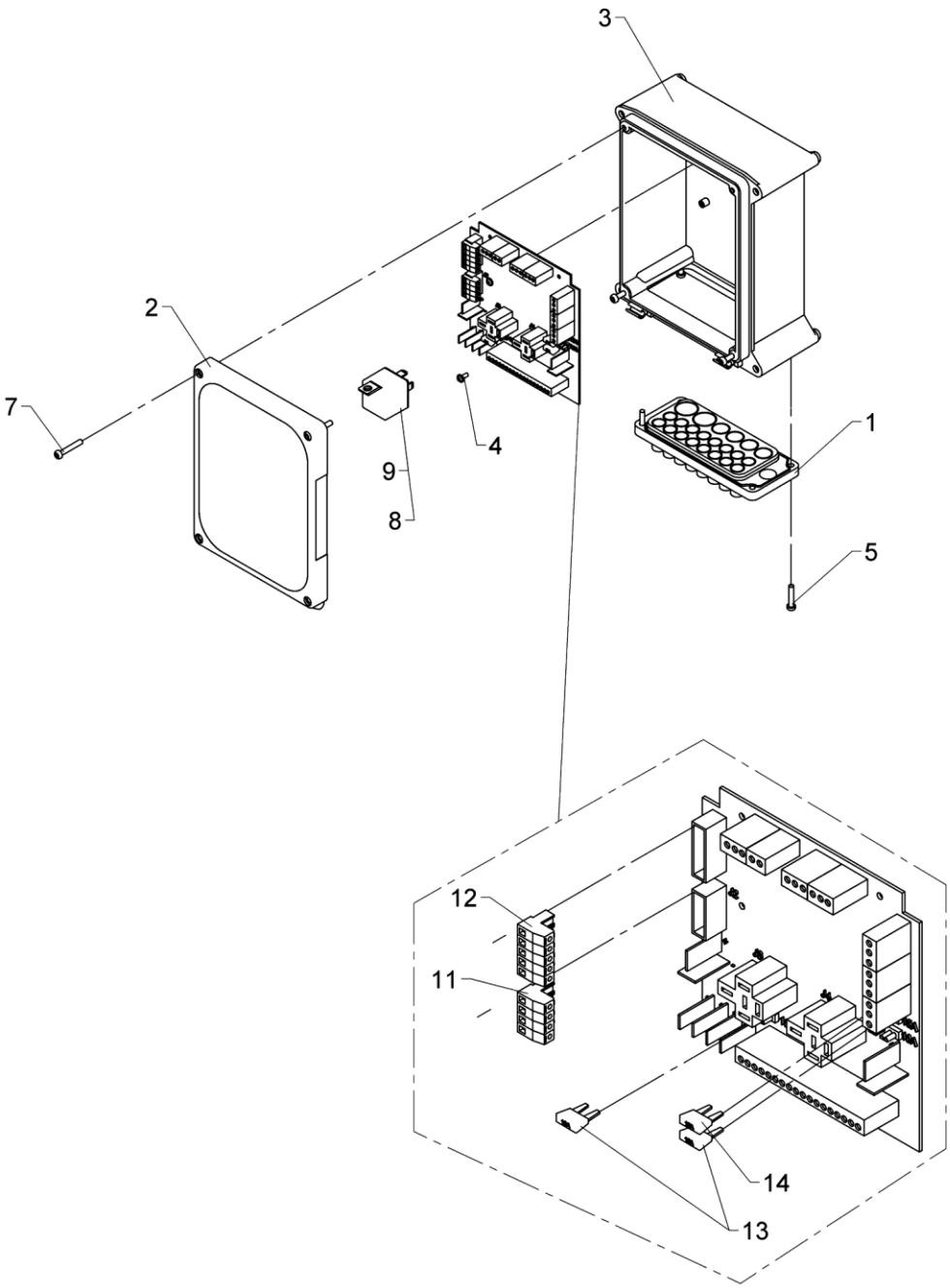

EJB5380

Pos	Qty.	Part no.	Description	Remarks
1	1	29307	Cable lead-in	
2	1	29347	RCL 5300 indicator panel	
3	1	29304	Bottom f. RCL-box incl. hinge	
4	6	30361	Screw, stainless	3,0 x 8
5	4	30346	Screw, stainless	4,0 x 20
6	4	30340	Screw, stainless	6,0 x 25
7	4	30347	Screw, stainless	4,0 x 25
8	1	27342	Relay, 24V	
9	1	27340	Relay, 12 V	
10	1	29473	EJB5380	
11	1	29331	Plug, 4-polar	
12	1	29887	Plug, 5-polar	
13	2	27822	Fuse 10A MINI	
14	1	29370	Fuse 15A MINI	

1500K, 1510K, 1720K, 1730K, 1820K, 1830K

Internal ref. 70 03 920

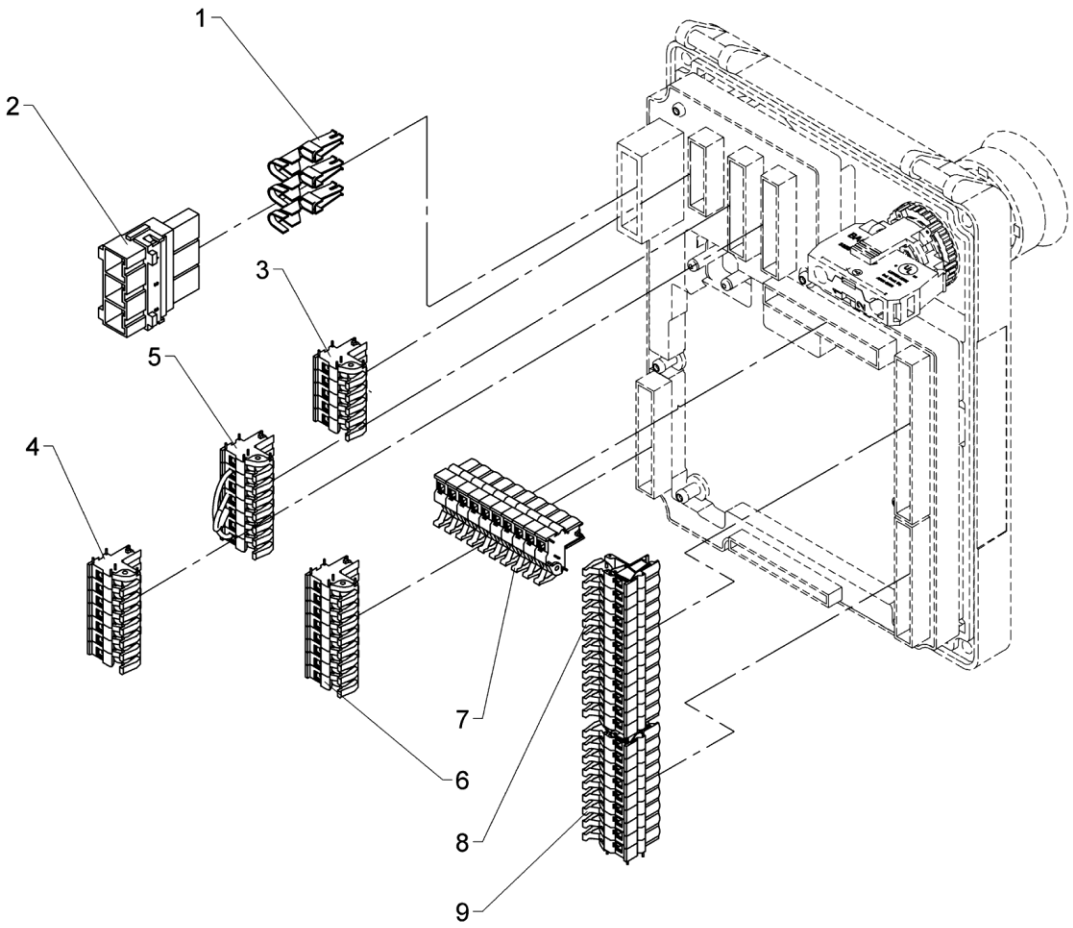

Plugs in RCL

Created 16-04-2008
Modified 13-03-2009

Pos	Qty.	Part no.	Description	Remarks
1	3	29316	Pin	
2	1	29315	Plug, 3-polar for RCL 53XX	
3	1	29317	Plug, 5-polar for RCL 53XX	
4	1	29318	Plug, 7-polar for RCL 53XX	
5	1	29340	CAN termination/RCL53xx	
6	1	29319	Plug, 8-polar for RCL 53XX	
7	1	29321	Plug, 10-polar for RCL 53XX	
8	1	29322	Plug, 12-polar for RCL 53XX	
9	1	29320	Plug, 9-polar for RCL 53XX	

1500K, 1510K, 1720K, 1730K, 1820K, 1830K

Internal ref. 63 41 740

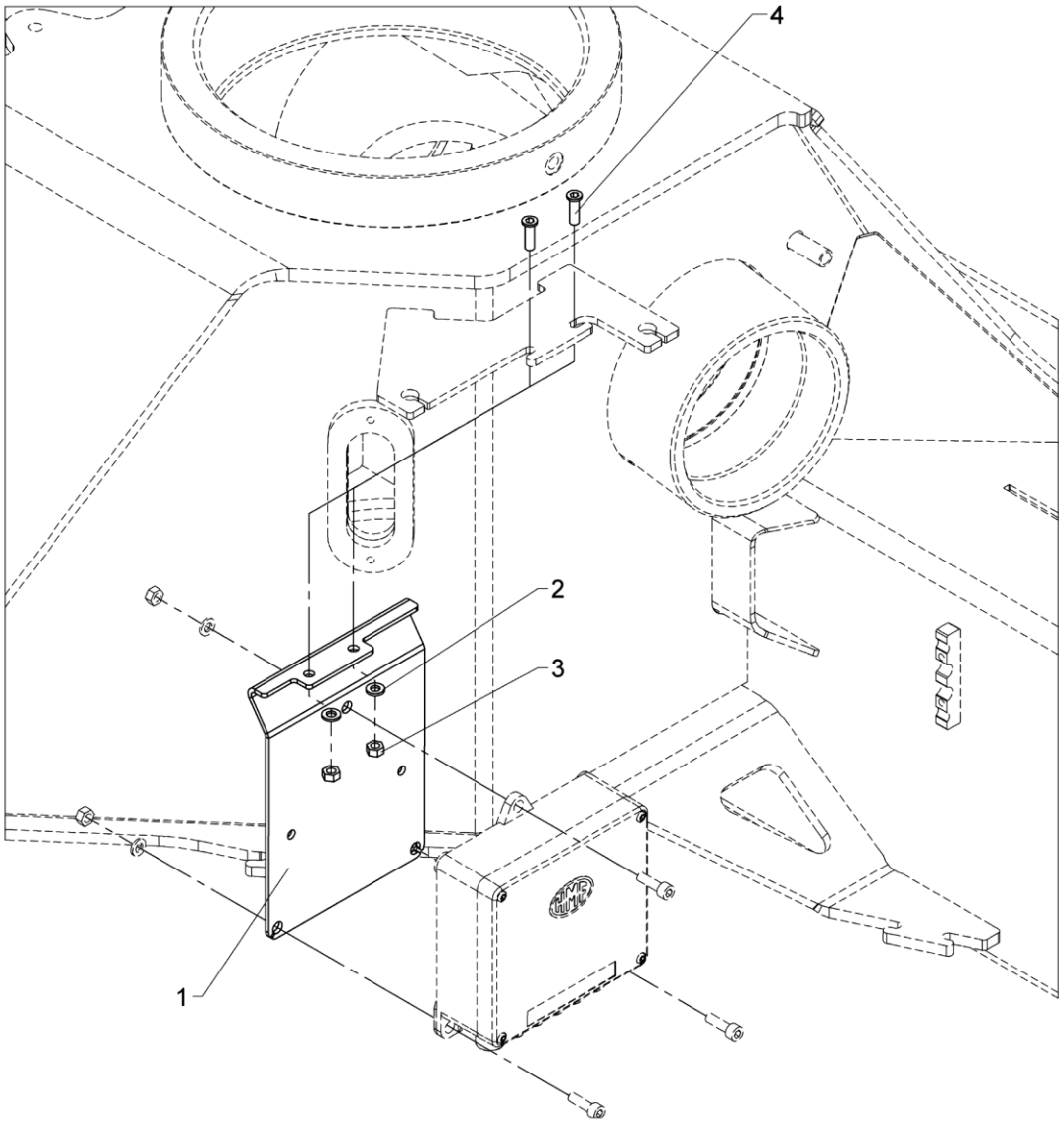

Mounting fittings for junction box (FJC 5330)

Created 04-03-2009
Modified 22-07-2010

Pos	Qty.	Part no.	Description	Remarks
1	1	6340899	Mounting fittings (FJC 5330)	
2	2	32302	Face washer, stainless	6 mm
3	2	30854	Nut, stainless	M6
4	2	32483	Screw	MCL6 x 20

1500K, 1510K, 1720K, 1730K, 1820K, 1830K

Internal ref. 70 05 490

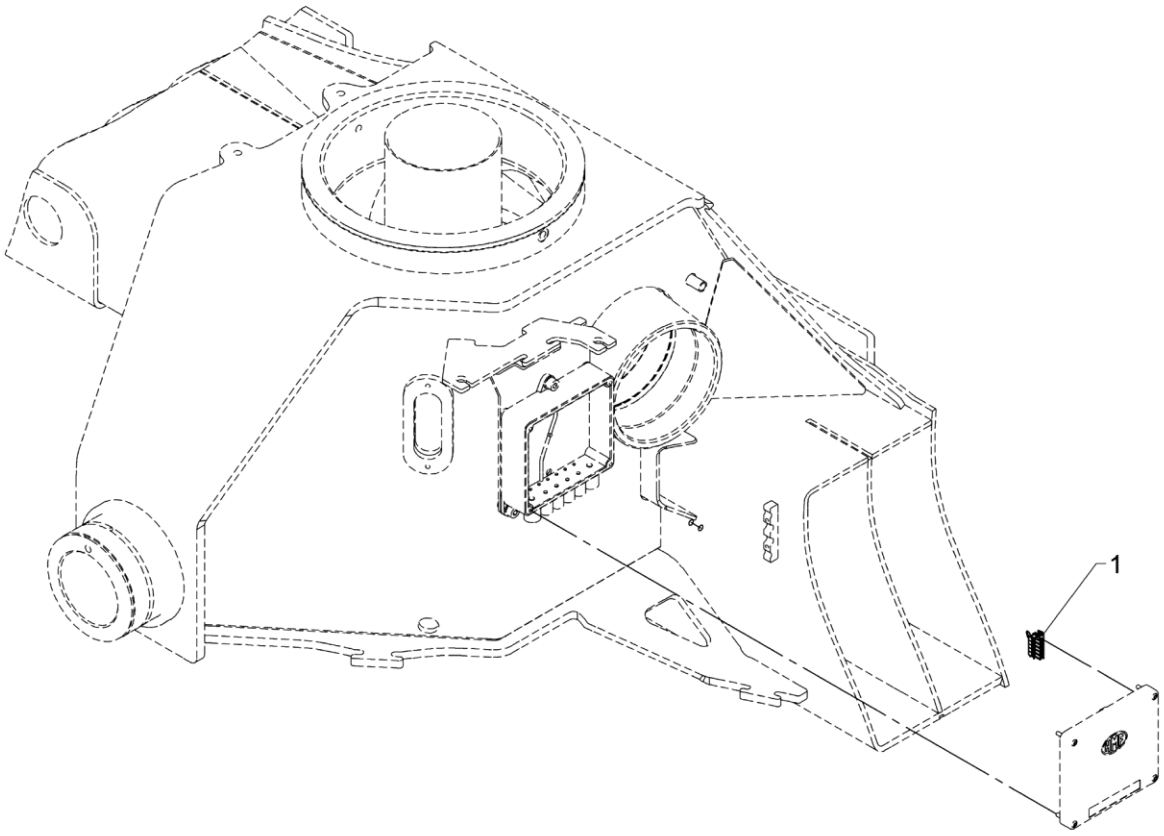

CAN termination, CIO5376

534 20 040

From loader 1060001
To loader

Created 13-02-2013
Modified

Pos	Qty.	Part no.	Description	Remarks
1	1	29341	CAN termination FJC	

1500K, 1510K, 1720K, 1730K, 1820K, 1830K

Internal ref. 70 06 302

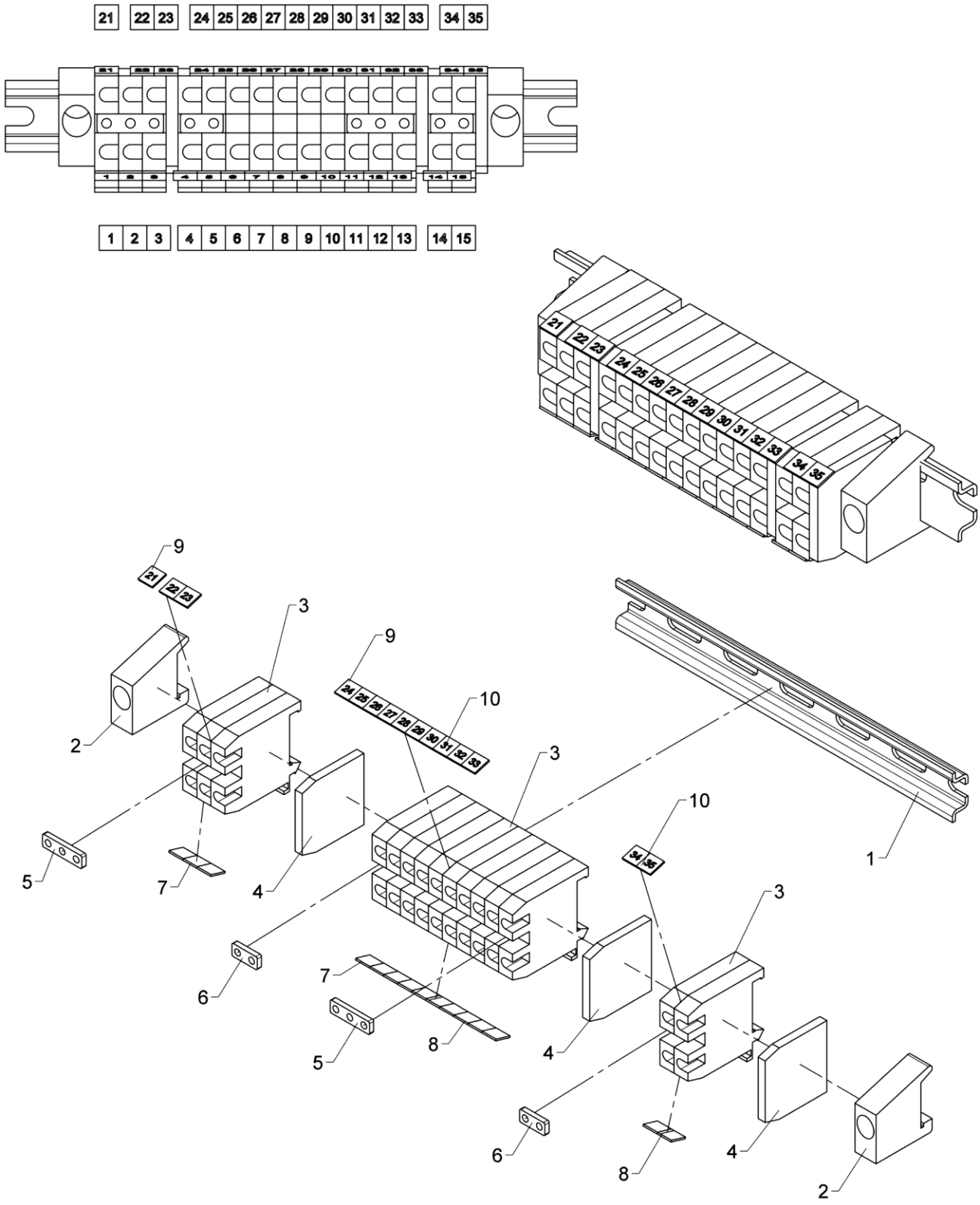

Obsolete

534 20 049

From loader 1060001
To loader

Created 09-07-2012
Modified

Terminal block, Box 1

Pos	Qty.	Part no.	Description	Remarks
1	1	28013	Guide rail	120 mm.
2	2	28012	End angle	
3	15	28010	Terminal	
4	3	28011	End plate	
5	2	28014	Fish plate	
6	2	28208	Fish plate	
7	1	28019	Labels nos. 1-10	
8	1	28020	Labels nos. 11-20	
9	1	28965	Dekafix labels 21-30	
10	1	29427	Dekafix marker 31-40	

1500K, 1510K, 1720K, 1730K, 1820K, 1830K

Internal ref. 70 06 306

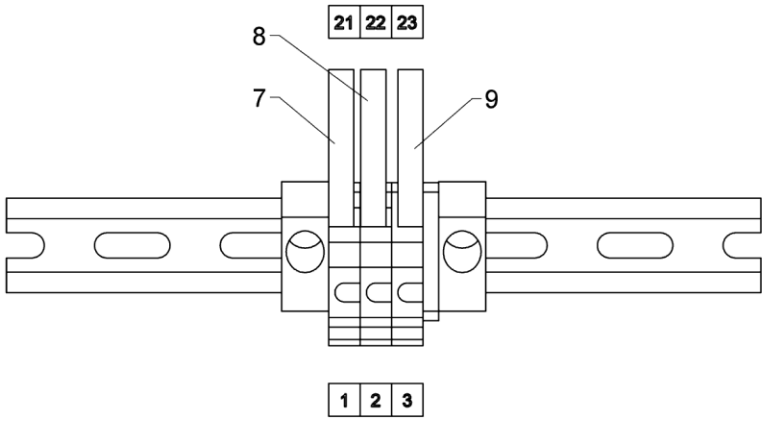

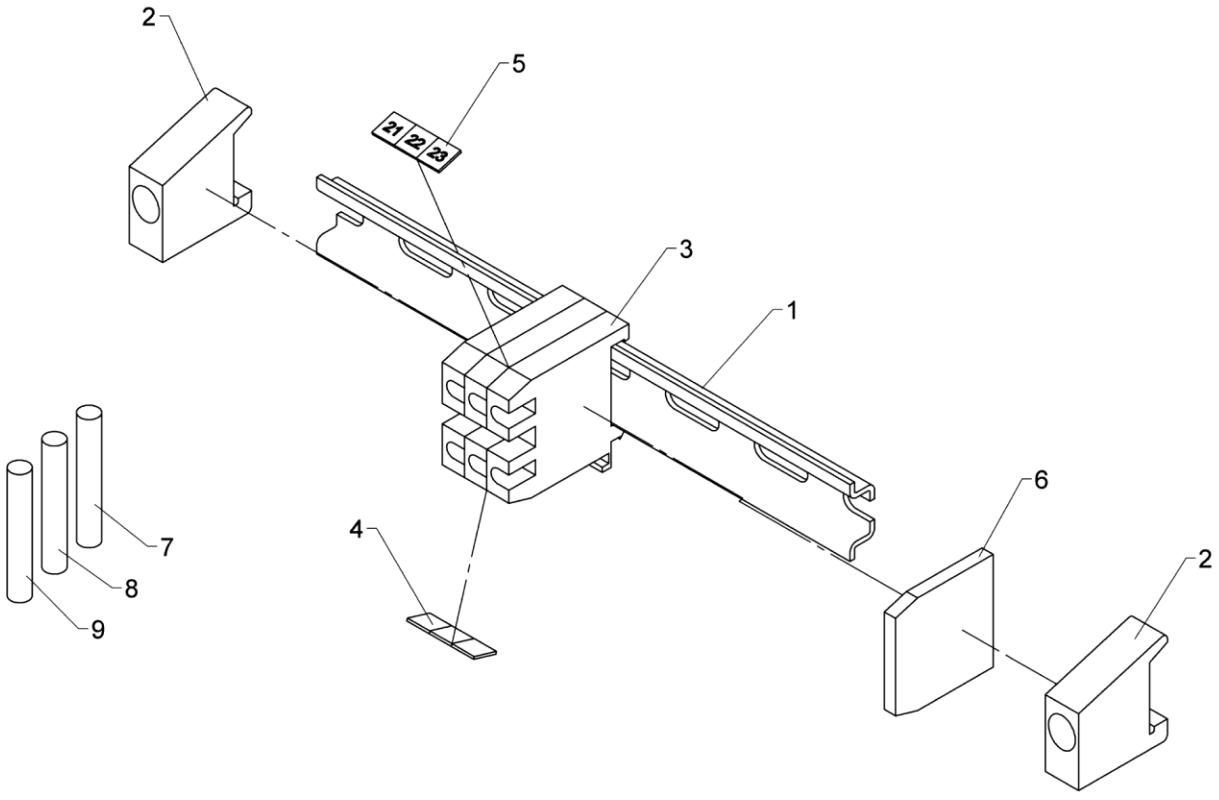

534 20 050

From loader 1060001
To loader

Terminal block for RCL box with RC

Created 17-04-2013
Modified 08-07-2014

Pos	Qty.	Part no.	Description	Remarks
1	1	28013	Guide rail	120 mm.
2	2	28012	End angle	
3	3	28010	Terminal	
4	1	28019	Labels nos. 1-10	
5	1	28965	Dekafix labels 21-30	
6	1	28011	End plate	
7	1	27202	Cable	0,3 m
8	1	27204	Wire, 1 x1.5mm2	0,3 m
9	1	27120	Cable	0,3 m

1500K, 1510K, 1720K, 1730K, 1820K, 1830K

Internal ref. 70 08 250

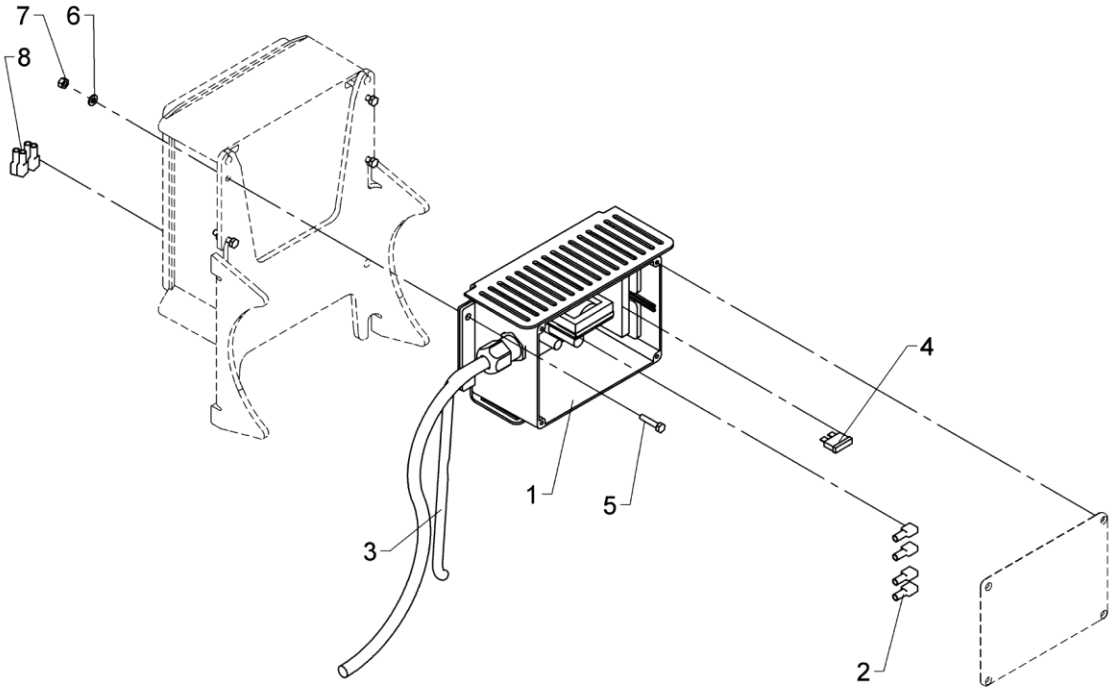

12 V Converter

Pos	Qty.	Part no.	Description	Remarks
1	1	29478	Converter, 12-24 V, complete	
2	4	27428	Clip	
3	1	28278	Cable 4 x 2.5	
4	1	27378	Fuse 25 Amp	
5	4	30126	Set screw	M4 x 20
6	4	31188	Washer, stainless	4 mm
7	4	30857	Lock nut	M4
8	4	27428	Clip	

1500K, 1510K, 1720K, 1730K, 1820K, 1830K

Internal ref. 70 06 310

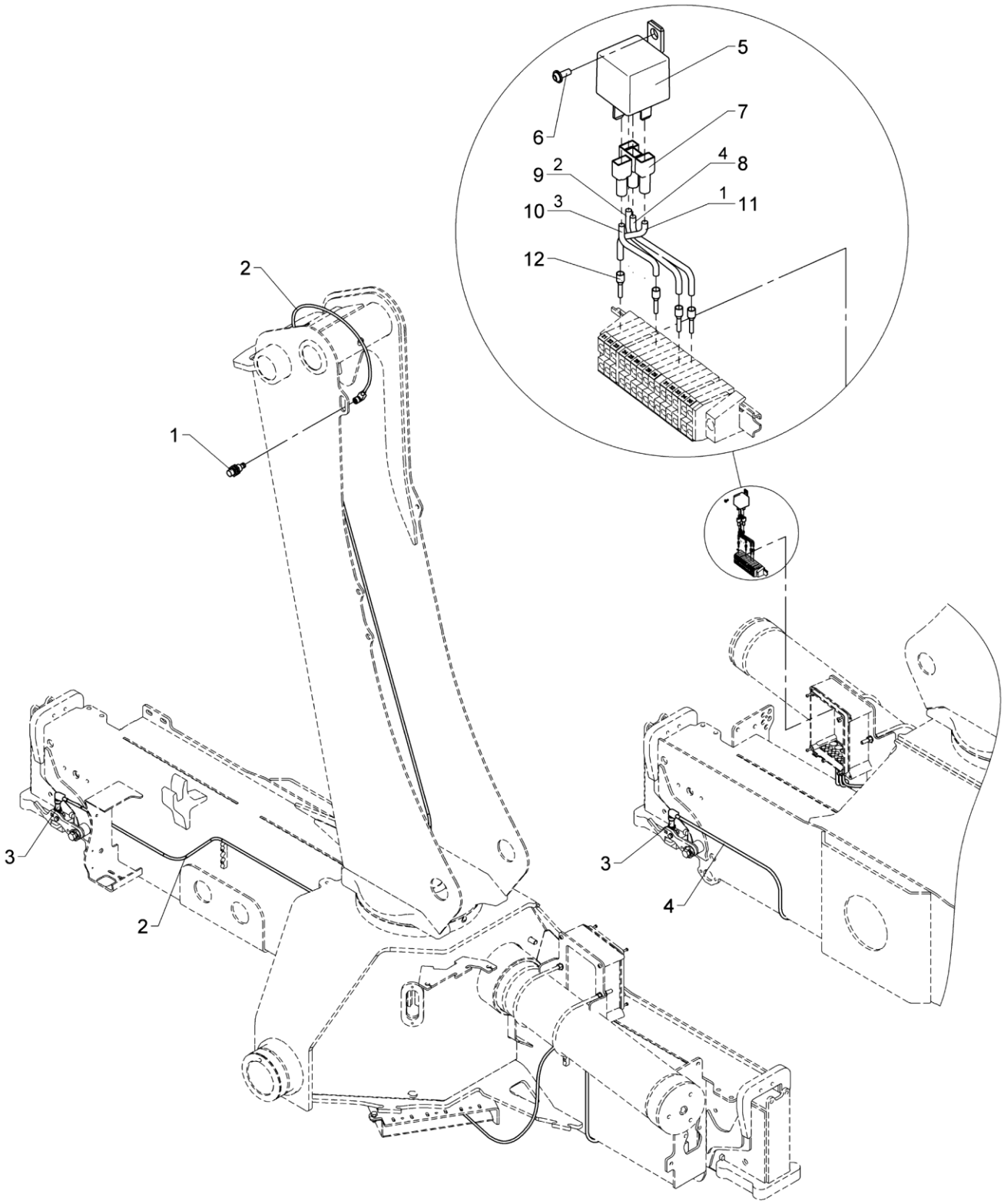

Obsolete

534 20 060

From loader 1060001
To loader 1061004

Created 08-12-2011
Modified 14-11-2012

BEHEW

Pos	Qty.	Part no.	Description	Remarks
1	1	28980	Proximity switch	
2	2	28077	Cable with plug	
3	2	29257	Proximity switch M12x44, 4mm	
4	1	28117	Cable with plug	
5	1	27342	Relay, 24V	
6	1	30361	Screw, stainless	3,0 x 8
7	4	27429	Clamp	
8	1	27209	Wire 1 x 1,5 mm2	300 mm
9	1	27206	Wire, 1 x 1.5mm2	300 mm
10	1	27204	Wire, 1 x1.5mm2	300 mm
11	1	27202	Cable	300 mm
12	4	27715	Cable end	

1500K, 1510K, 1720K, 1730K, 1820K, 1830K

Internal ref. 70 06 310

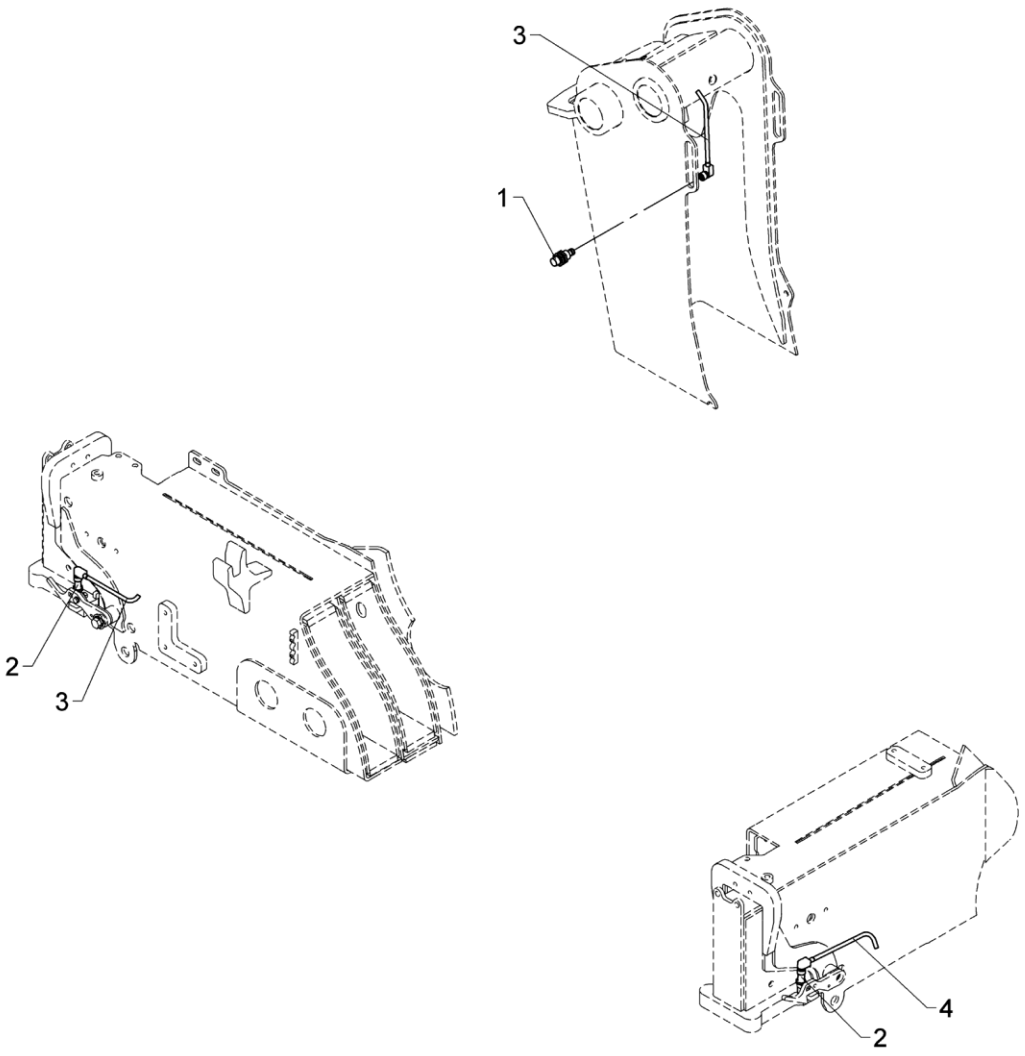

BEHEW

Pos	Qty.	Part no.	Description	Remarks
1	1	28980	Proximity switch	
2	2	29257	Proximity switch M12x44, 4mm	
3	2	28077	Cable with plug	
4	1	28117	Cable with plug	

1500K, 1510K, 1720K, 1730K, 1820K, 1830K

Internal ref. 70 09 870

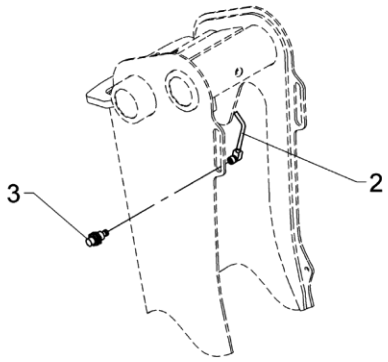

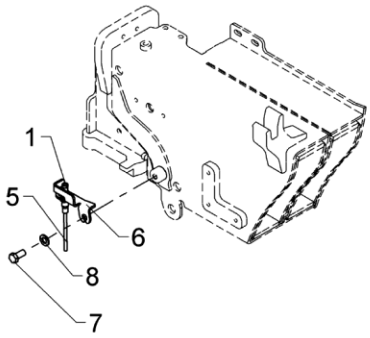

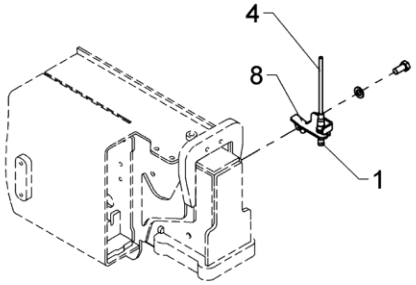

BEHEW

Pos	Qty.	Part no.	Description	Remarks
1	2	29447	Proximity switchM12 8mm PNP-NO	
2	1	28077	Cable with plug	
3	1	28980	Proximity switch	
4	1	29223	Cable with socket, 2 m	
5	1	29224	Cable with socket, 5 m	
6	2	6354755	Fitting for sensor, BEHEW	
7	2	30176	Set screw	M12 x 25
8	2	32338	Washer	12 mm

1500K, 1510K, 1720K, 1730K, 1820K, 1830K

Internal ref. 70 06 610

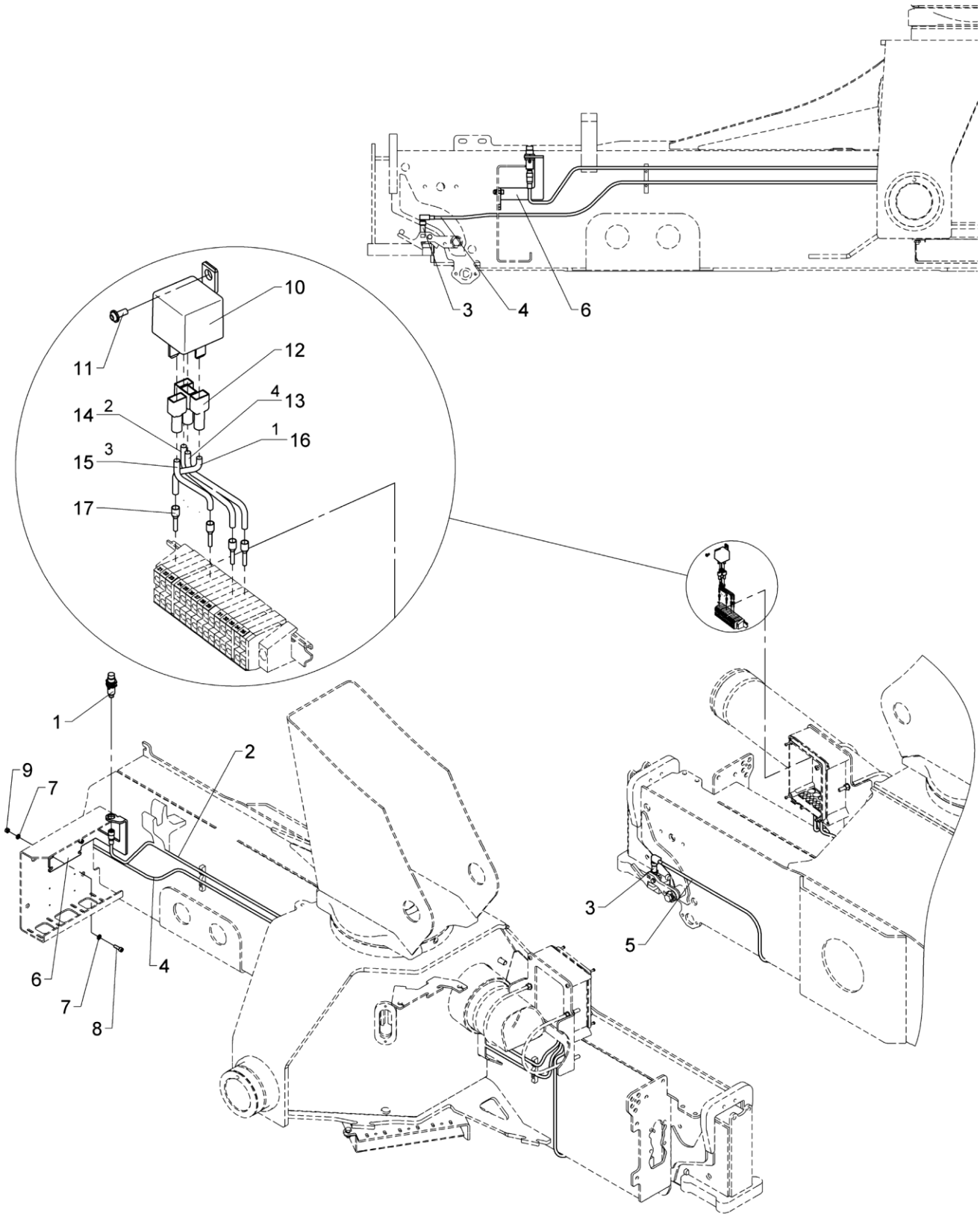

Obsolete

BEPAW, 12_23

534 20 070

From loader 1060001
To loader 1061004

Created 03-10-2012
Modified

Pos	Qty.	Part no.	Description	Remarks
1	1	28210	Proximity switch	
2	1	29224	Cable with socket, 5 m	
3	2	29257	Proximity switch M12x44, 4mm	
4	1	28077	Cable with plug	
5	1	28117	Cable with plug	
6	1	6340947	Mounting fittings, trans.alarm	
7	4	32302	Face washer, stainless	6 mm
8	2	30427	Screw	MC6 x 20
9	2	30854	Nut, stainless	M6
10	1	27342	Relay, 24V	
11	1	30361	Screw, stainless	3,0 x 8
12	4	27429	Clamp	
13	1	27209	Wire 1 x 1,5 mm2	300 mm
14	1	27206	Wire, 1 x 1.5mm2	300 mm
15	1	27204	Wire, 1 x1.5mm2	300 mm
16	1	27202	Cable	300 mm
17	4	27715	Cable end	

1500K, 1510K, 1720K, 1730K, 1820K, 1830K

Internal ref. 70 06 610

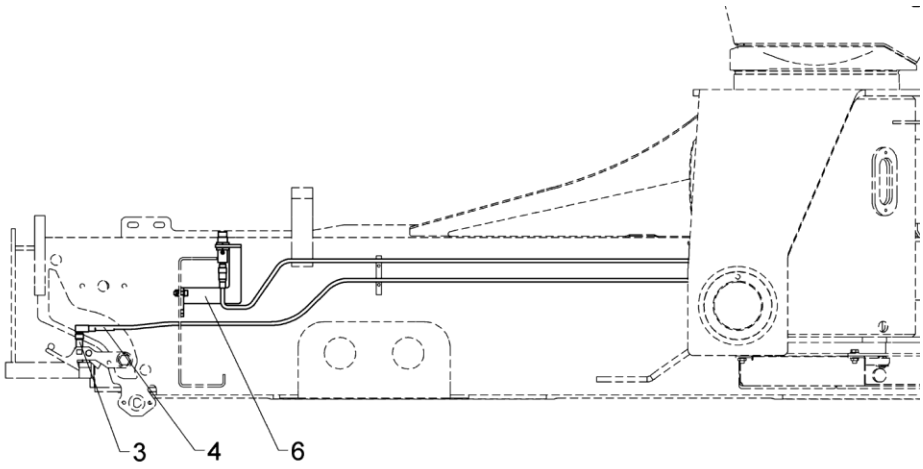

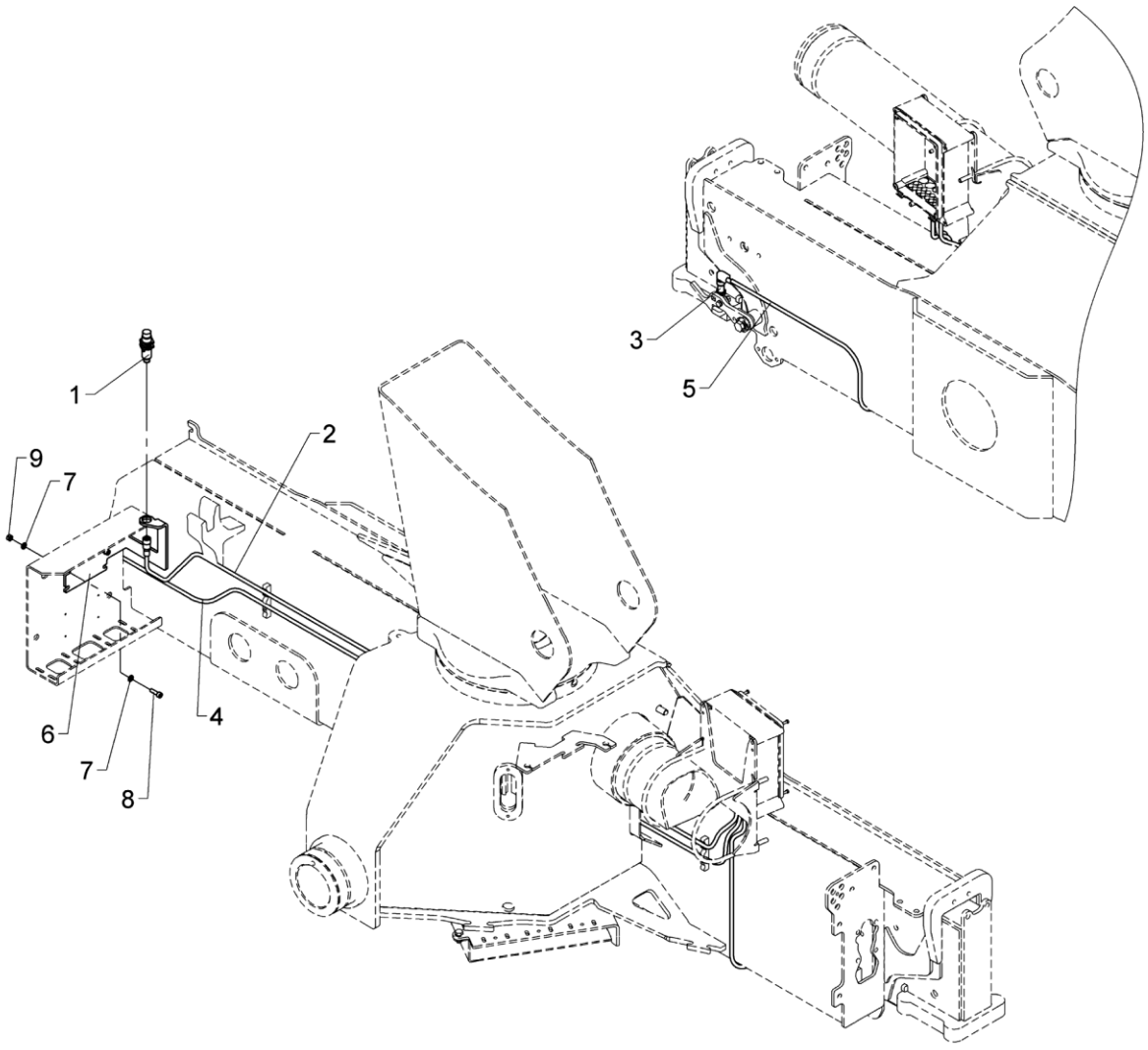

BEPAW, 12_23

Pos	Qty.	Part no.	Description	Remarks
1	1	28210	Proximity switch	
2	1	29224	Cable with socket, 5 m	
3	2	29257	Proximity switch M12x44, 4mm	
4	1	28077	Cable with plug	
5	1	28117	Cable with plug	
6	1	6340947	Mounting fittings, trans.alarm	
7	4	32302	Face washer, stainless	6 mm
8	2	30427	Screw	MC6 x 20
9	2	30854	Nut, stainless	M6

1500K, 1510K, 1720K, 1730K, 1820K, 1830K

Internal ref. 70 09 470

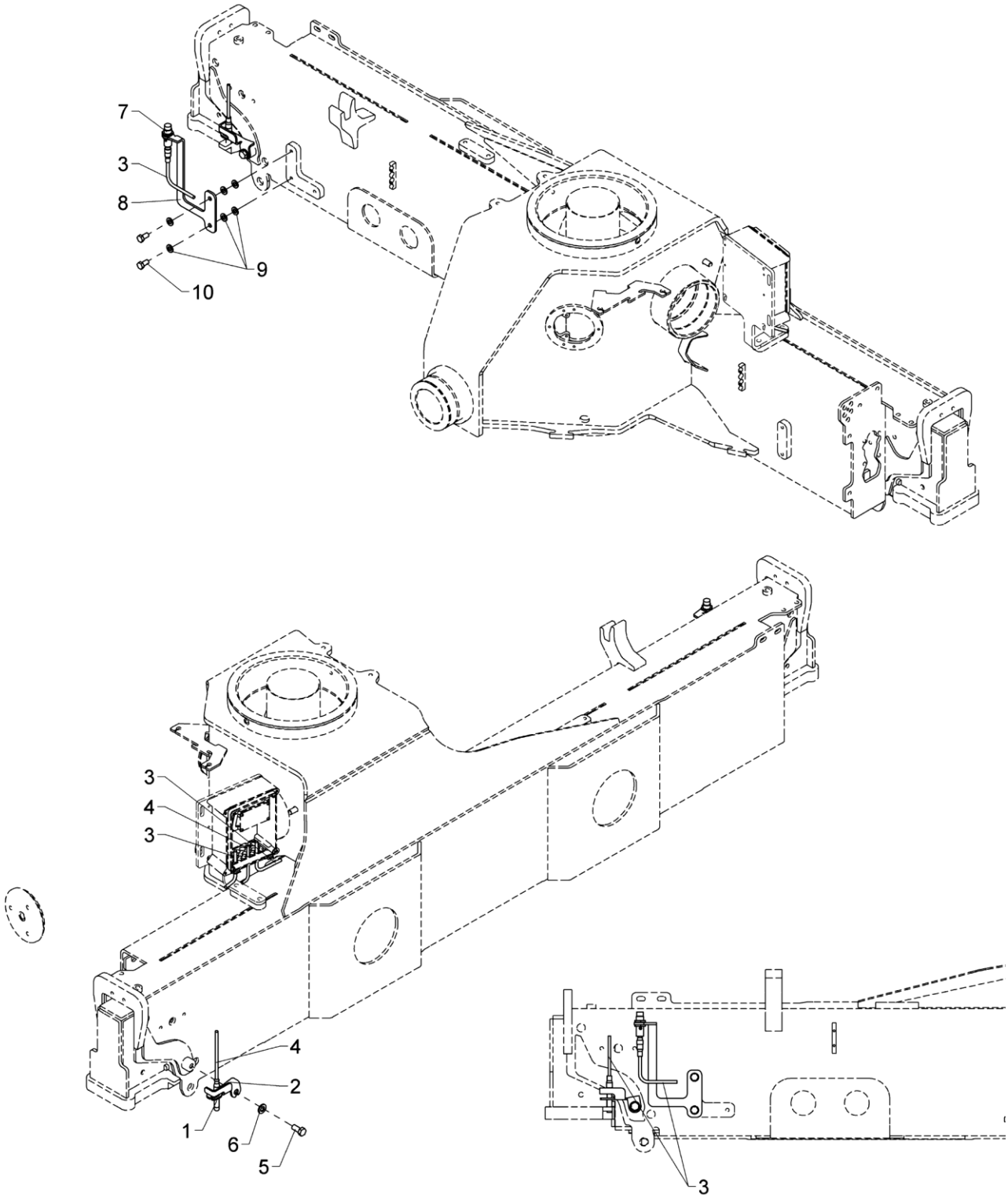

BEPAW

Pos	Qty.	Part no.	Description	Remarks
1	2	29447	Proximity switchM12 8mm PNP-NO	
2	2	6354755	Fitting for sensor, BEHEW	
3	2	29224	Cable with socket, 5 m	
4	1	29223	Cable with socket, 2 m	
5	2	30176	Set screw	M12 x 25
6	2	32338	Washer	12 mm
7	1	28210	Proximity switch	
8	1	6340589	Mounting fittings (BEPAW)	
9	6	31177	Washer	10 mm
10	2	31517	Set screw, stainless	M10 x 20

1500K, 1510K, 1720K, 1730K, 1820K, 1830K

Internal ref. 70 06 330

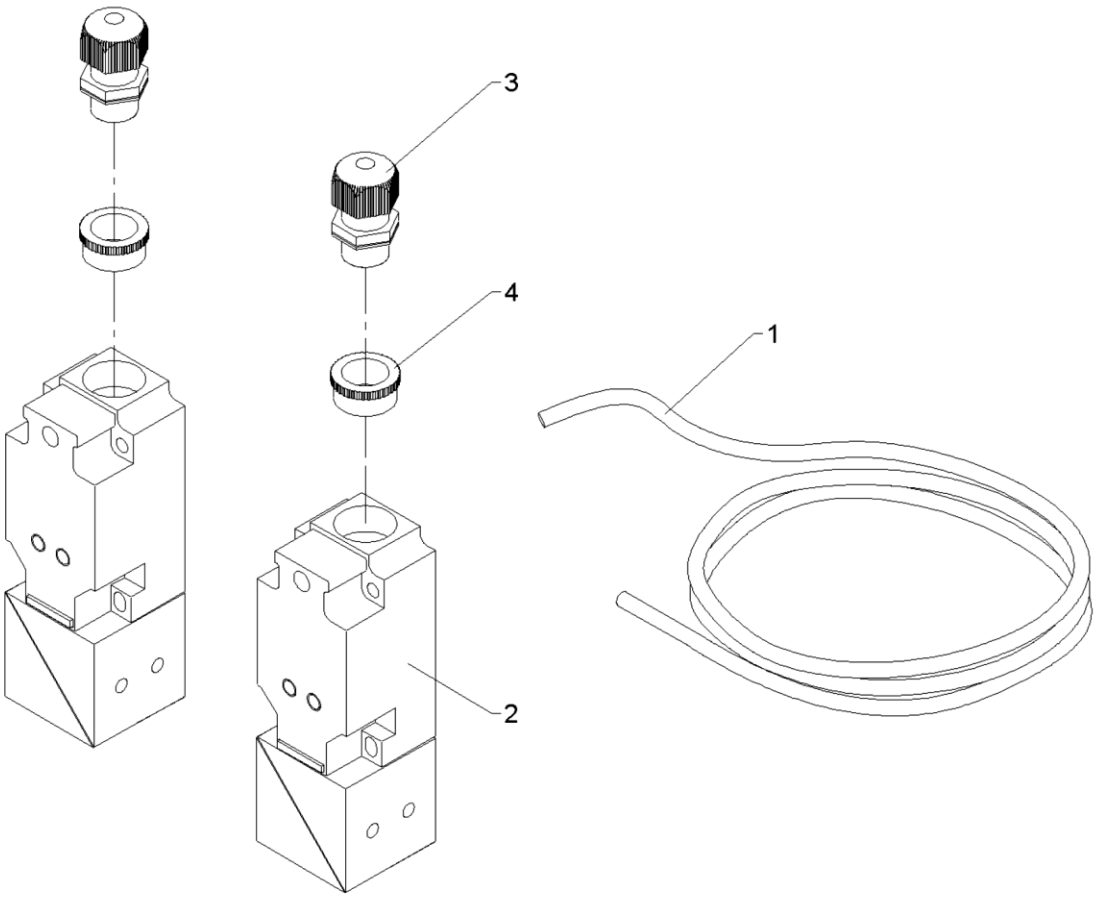

Obsolete

534 20 080

From loader 1060001
To loader

Created 16-07-2012
Modified

CYW

Pos	Qty.	Part no.	Description	Remarks
1	1	28262	Cable 4 x 0.75	8 m
2	2	27598	Proximity switch	
3	2	28246	Bushing	
4	2	27866	Socket	

1500K, 1510K, 1720K, 1730K, 1820K, 1830K

Internal ref. 70 06 330

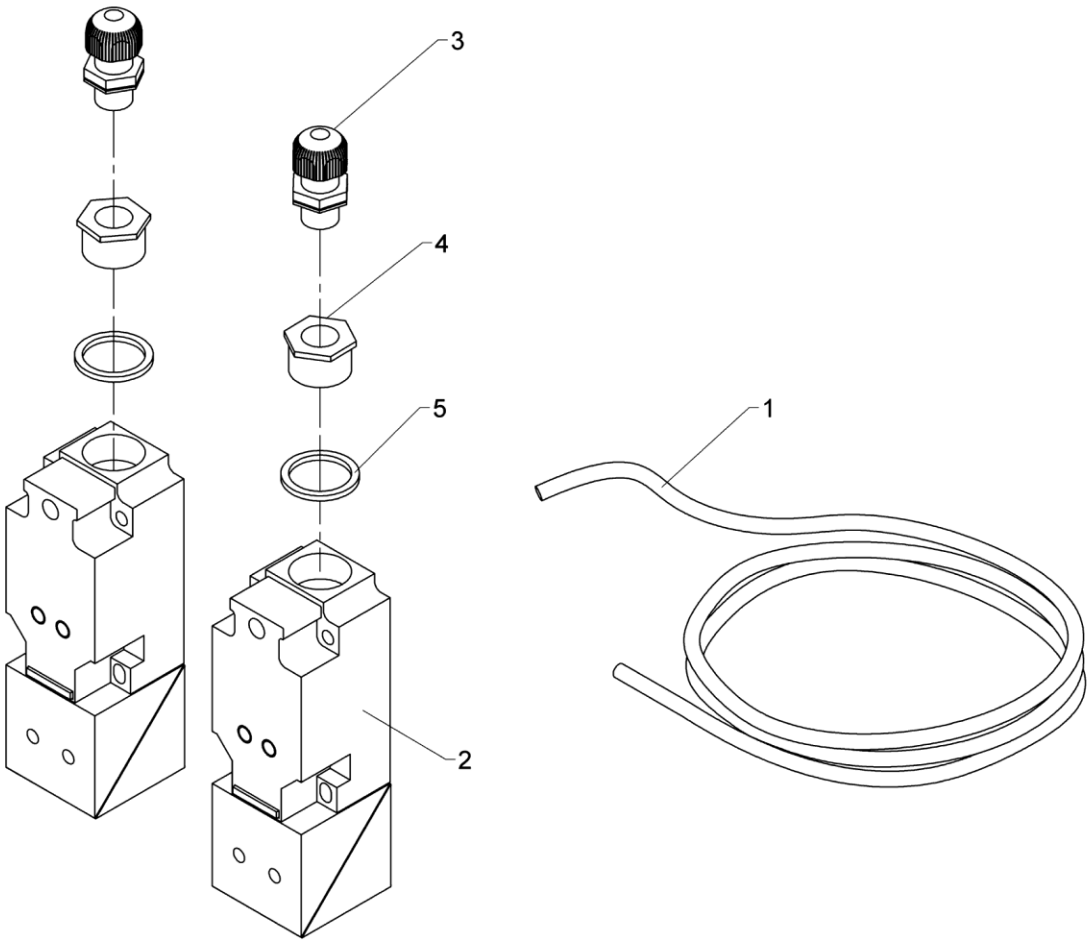

Pos	Qty.	Part no.	Description	Remarks
1	1	28262	Cable 4 x 0.75	8 m
2	2	27598	Proximity switch	
3	2	28459	Connection	
4	2	29200	Socket M12/M20	
5	2	28402	Sealing ring	

1500K, 1510K, 1720K, 1730K, 1820K, 1830K

Internal ref. 70 06 190

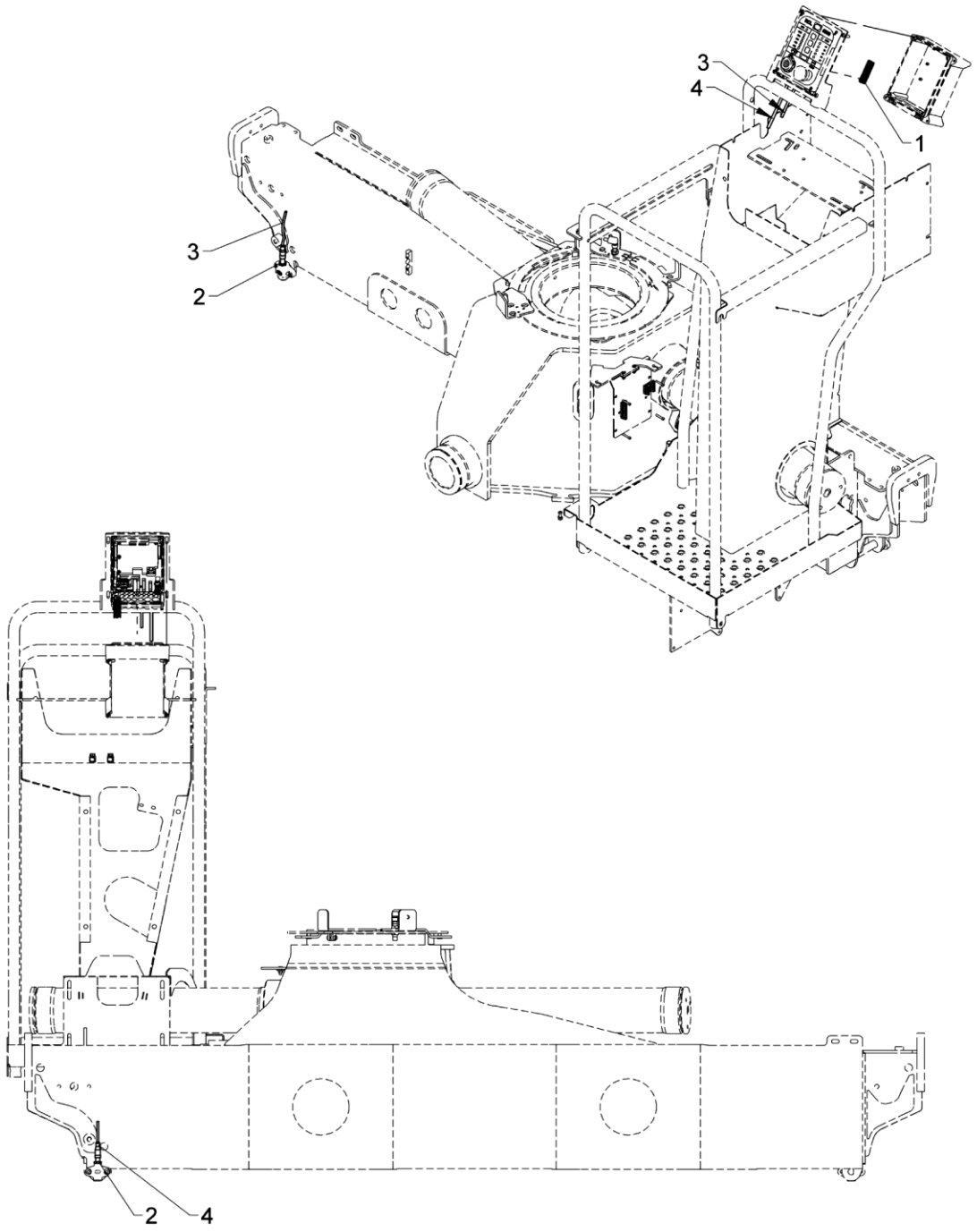

Obsolete

534 20 085

From loader 1060001
To loader

Created 09-01-2014
Modified

CYL

Pos	Qty.	Part no.	Description	Remarks
1	1	29322	Plug, 12-polar for RCL 53XX	
2	2	29257	Proximity switch M12x44, 4mm	
3	1	29224	Cable with socket, 5 m	
4	1	29223	Cable with socket, 2 m	

1500K, 1510K, 1720K, 1730K, 1820K, 1830K

Internal ref. 70 06 190

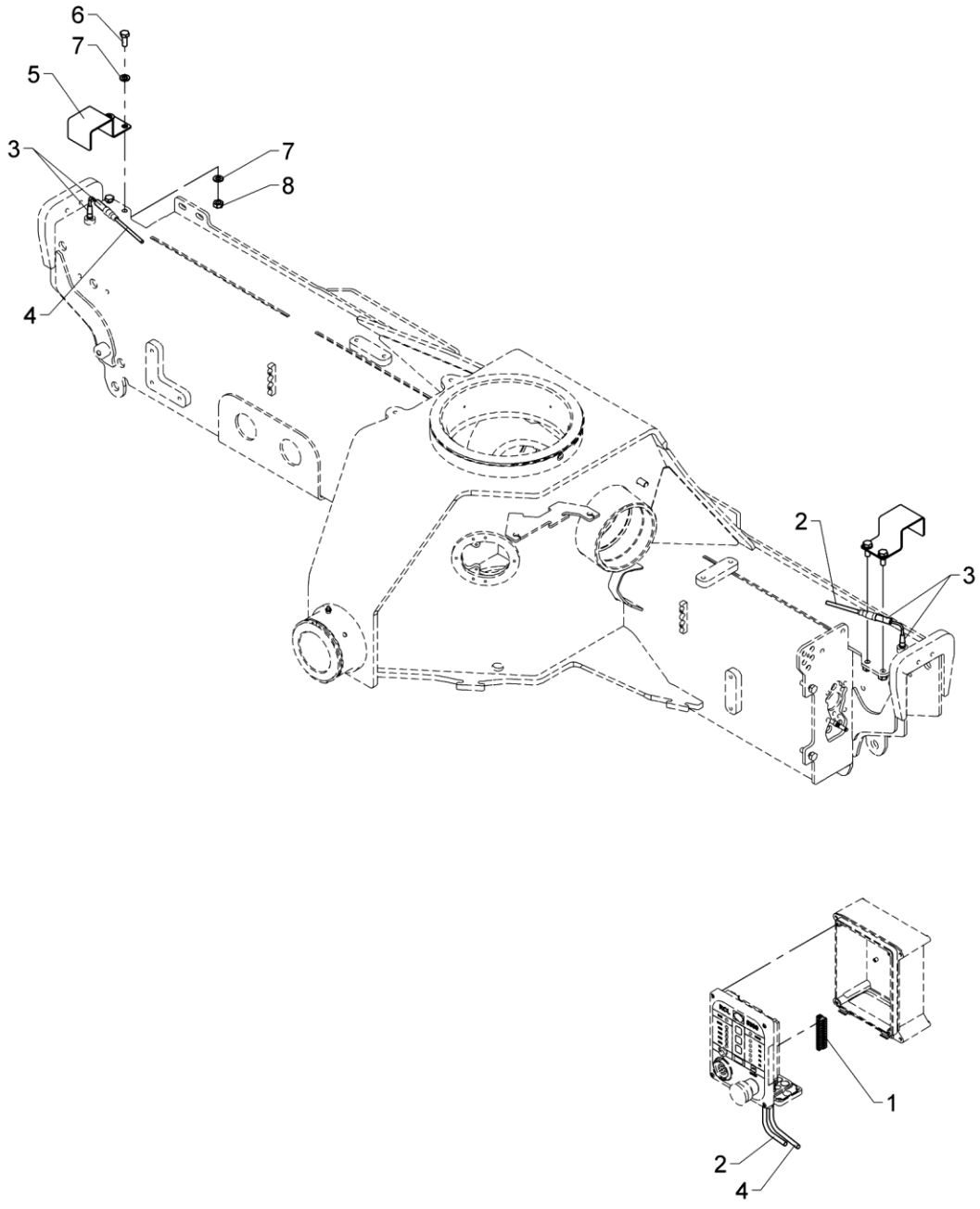

CYL

Pos	Qty.	Part no.	Description	Remarks
1	1	29322	Plug, 12-polar for RCL 53XX	
2	1	29223	Cable with socket, 2 m	
3	2	29282	Proximity switch M12-4mm NO	
4	1	29224	Cable with socket, 5 m	
5	2	6340654	Protective guard	
6	4	30155	Set screw	M10 x 25
7	8	31565	Washer, stainless	10 mm
8	4	30858	Nut	M10

1500K, 1510K, 1720K, 1730K, 1820K, 1830K

Internal ref. 70 06 370

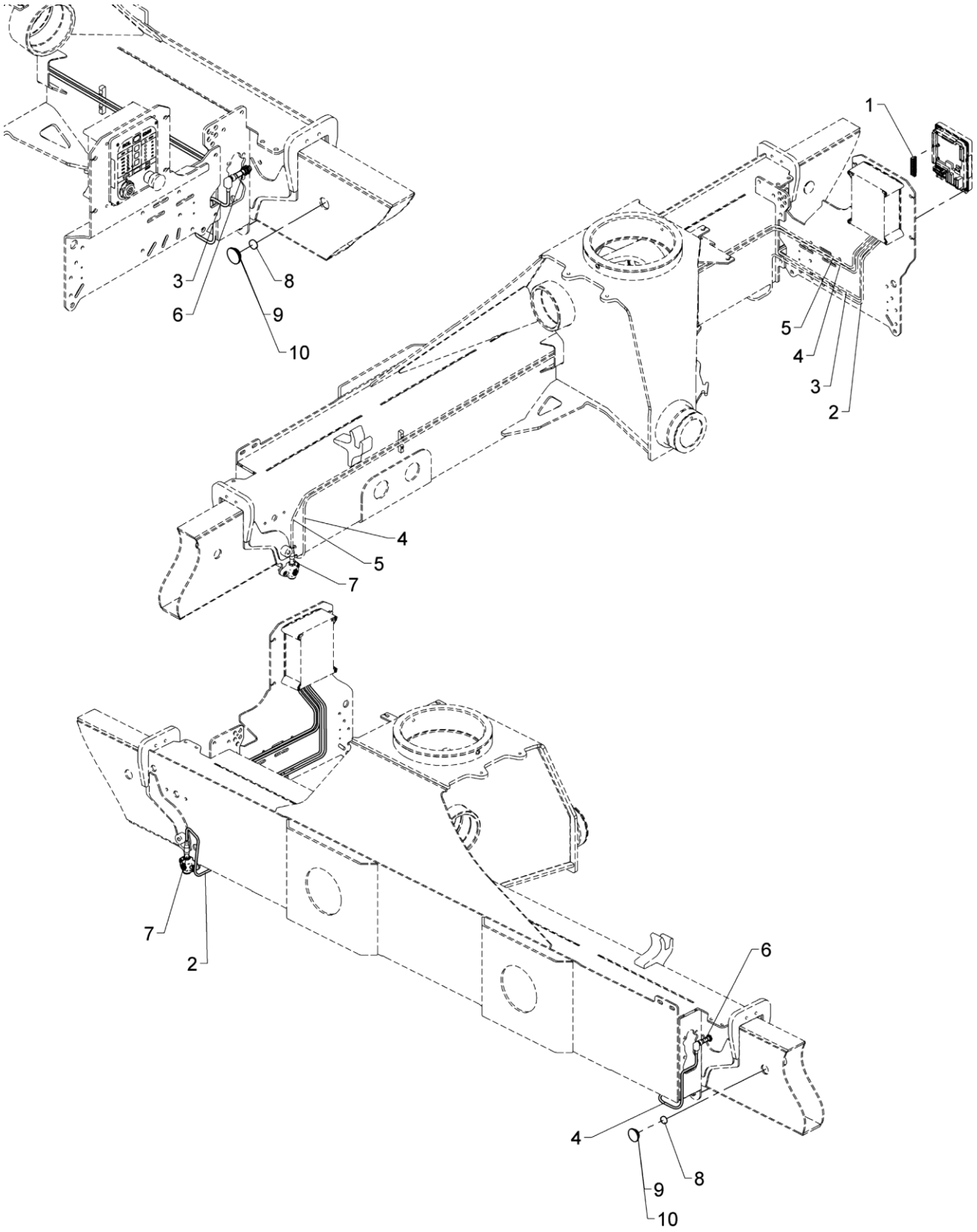

Obsolete

CYBEL, single extension

534 20 090

From loader 1060001
To loader

Created 21-02-2013
Modified

Pos	Qty.	Part no.	Description	Remarks
1	1	29322	Plug, 12-polar for RCL 53XX	
2	1	29223	Cable with socket, 2 m	1,4
3	1	28117	Cable with plug	
4	1	28077	Cable with plug	3,3
5	1	29224	Cable with socket, 5 m	2,7
6	2	29259	Magnet proximity switch M12	
7	2	29257	Proximity switch M12x44, 4mm	
8	2	29262	Solenoid Ø22x5	
9	2	64424	Slide block	2 mm
10	2	63681	Slide block	3 mm

1500K, 1510K, 1720K, 1730K, 1820K, 1830K

Internal ref. 70 06 370

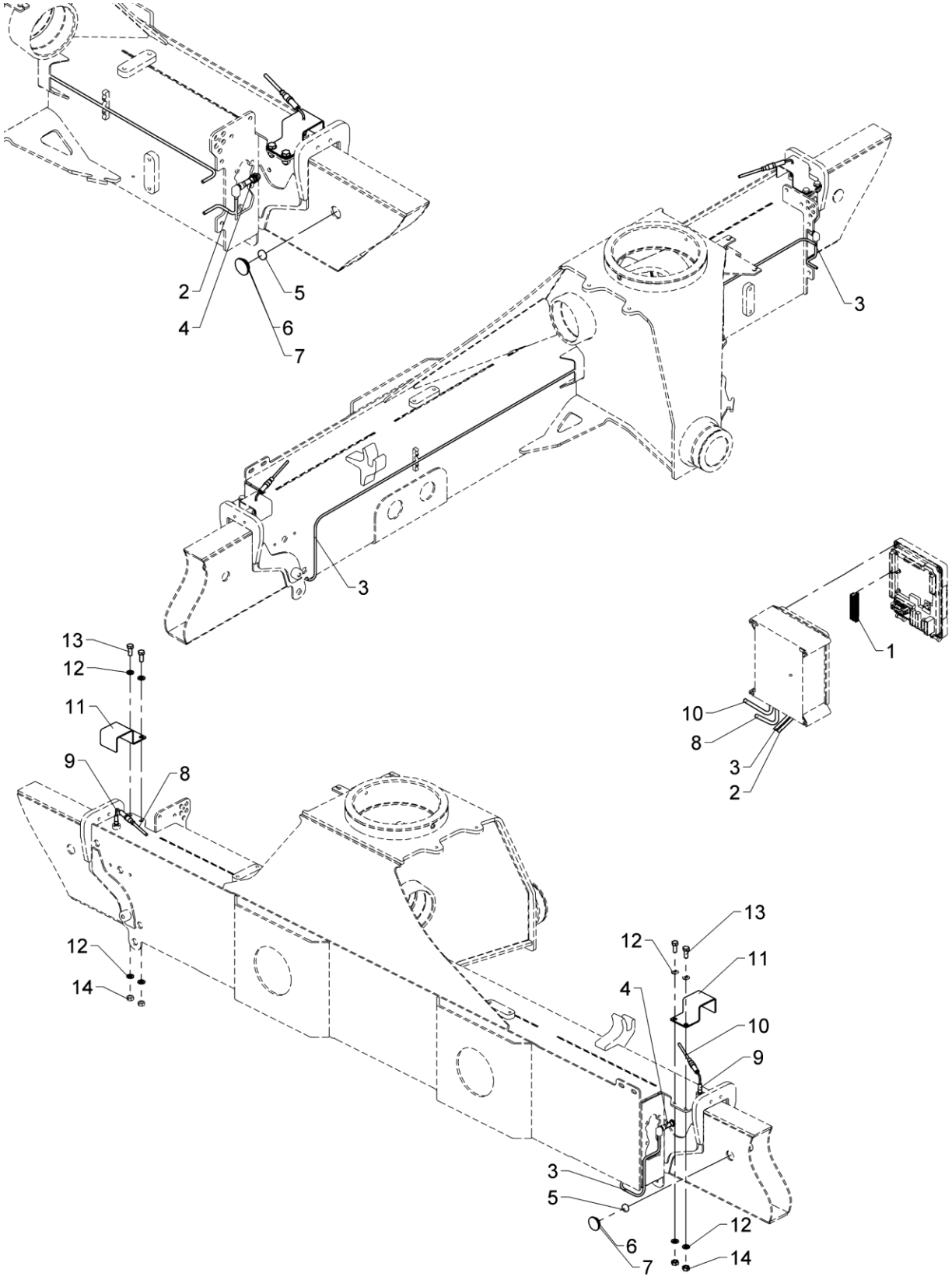

CYBEL, single extension

Pos	Qty.	Part no.	Description	Remarks
1	1	29322	Plug, 12-polar for RCL 53XX	
2	1	28117	Cable with plug	
3	1	28077	Cable with plug	3,3
4	2	29259	Magnet proximity switch M12	
5	2	29262	Solenoid Ø22x5	
6	2	64424	Slide block	2 mm
7	2	63681	Slide block	3 mm
8	1	29223	Cable with socket, 2 m	
9	2	29282	Proximity switch M12-4mm NO	
10	1	29224	Cable with socket, 5 m	
11	2	6340654	Protective guard	
12	8	31565	Washer, stainless	10 mm
13	4	30155	Set screw	M10 x 25
14	4	30858	Nut	M10

1500K, 1510K, 1720K, 1730K, 1820K, 1830K

Internal ref. 70 06 450

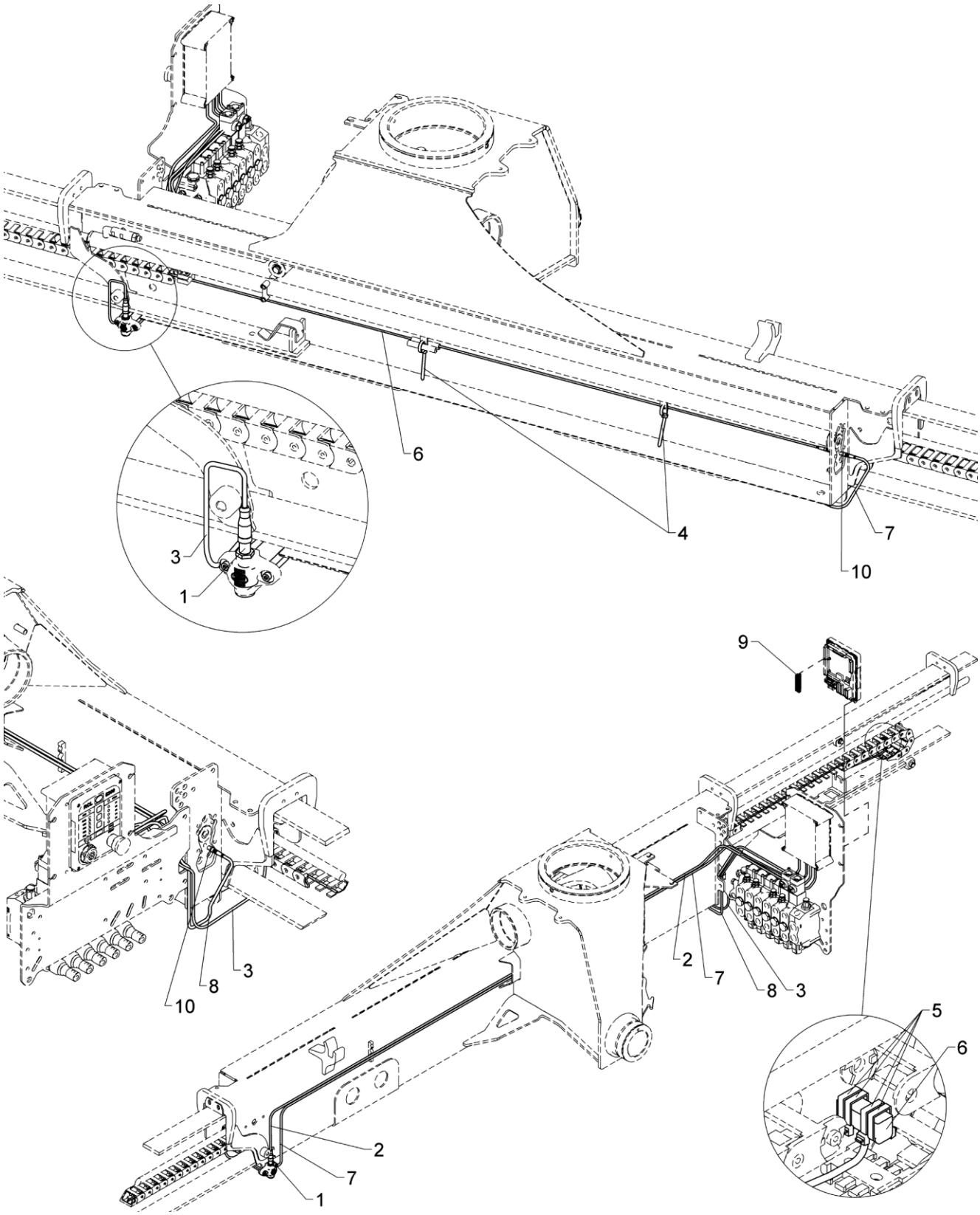

Obsolete

534 20 100

From loader 1060001
To loader

Created 12-06-2012
Modified 21-02-2013

CYBEL double extension

Pos	Qty.	Part no.	Description	Remarks
1	2	29257	Proximity switch M12x44, 4mm	
2	1	29224	Cable with socket, 5 m	
3	1	29223	Cable with socket, 2 m	
4	4	27275	Cable tie, black, 7.6x385mm	
5	8	27274	Clip	
6	2	29253	Tilt switch, nylon drag chain	
7	1	29264	Cable 5 m, M8 socket	
8	1	29265	Cable 2 m, M8 socket	
9	1	29322	Plug, 12-polar for RCL 53XX	
10	2	29443	Panel lead-in M8 - 3-polar	

1500K, 1510K, 1720K, 1730K, 1820K, 1830K

Internal ref. 70 06 450

Position of 29253		
	CYBEL	CYBEL-I
A=4600	- - - - -	15
A=5570	- - - - -	22
A=6450	7	29

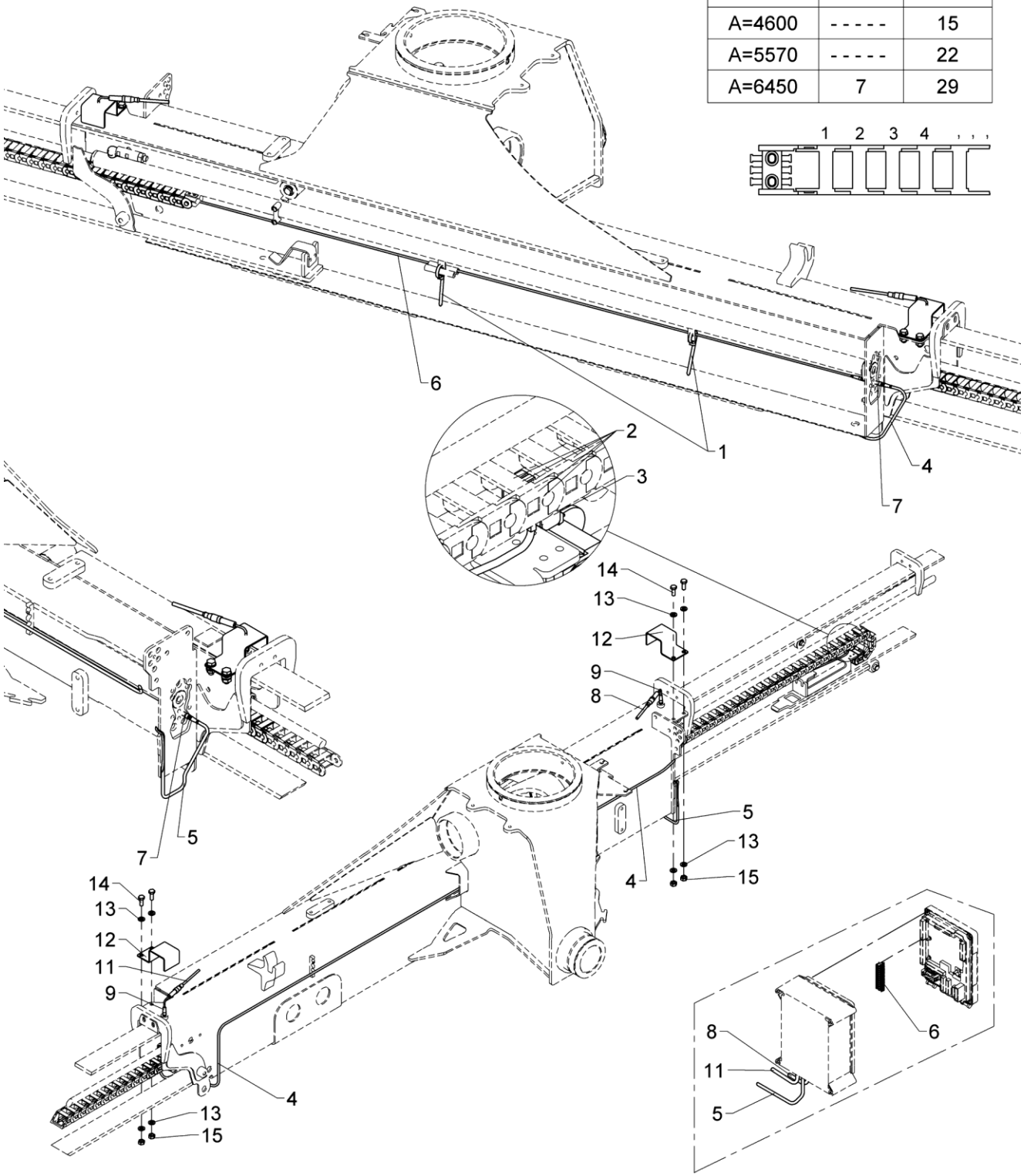

CYBEL double extension

Created 26-02-2016
Modified 25-01-2019

Pos	Qty.	Part no.	Description	Remarks
1	4	27275	Cable tie, black, 7.6x385mm	
2	8	27274	Clip	
3	2	29253	Tilt switch, nylon drag chain	
4	1	29264	Cable 5 m, M8 socket	
5	1	29265	Cable 2 m, M8 socket	
6	1	29322	Plug, 12-polar for RCL 53XX	
7	2	29443	Panel lead-in M8 - 3-polar	
8	1	29223	Cable with socket, 2 m	
9	2	29282	Proximity switch M12-4mm NO	
10	1	29223	Cable with socket, 2 m	
11	1	29224	Cable with socket, 5 m	
12	2	6340654	Protective guard	
13	8	31565	Washer, stainless	10 mm
14	4	30155	Set screw	M10 x 25
15	4	30858	Nut	M10

1500K, 1510K, 1720K, 1730K, 1820K, 1830K

Internal ref. 70 06 210

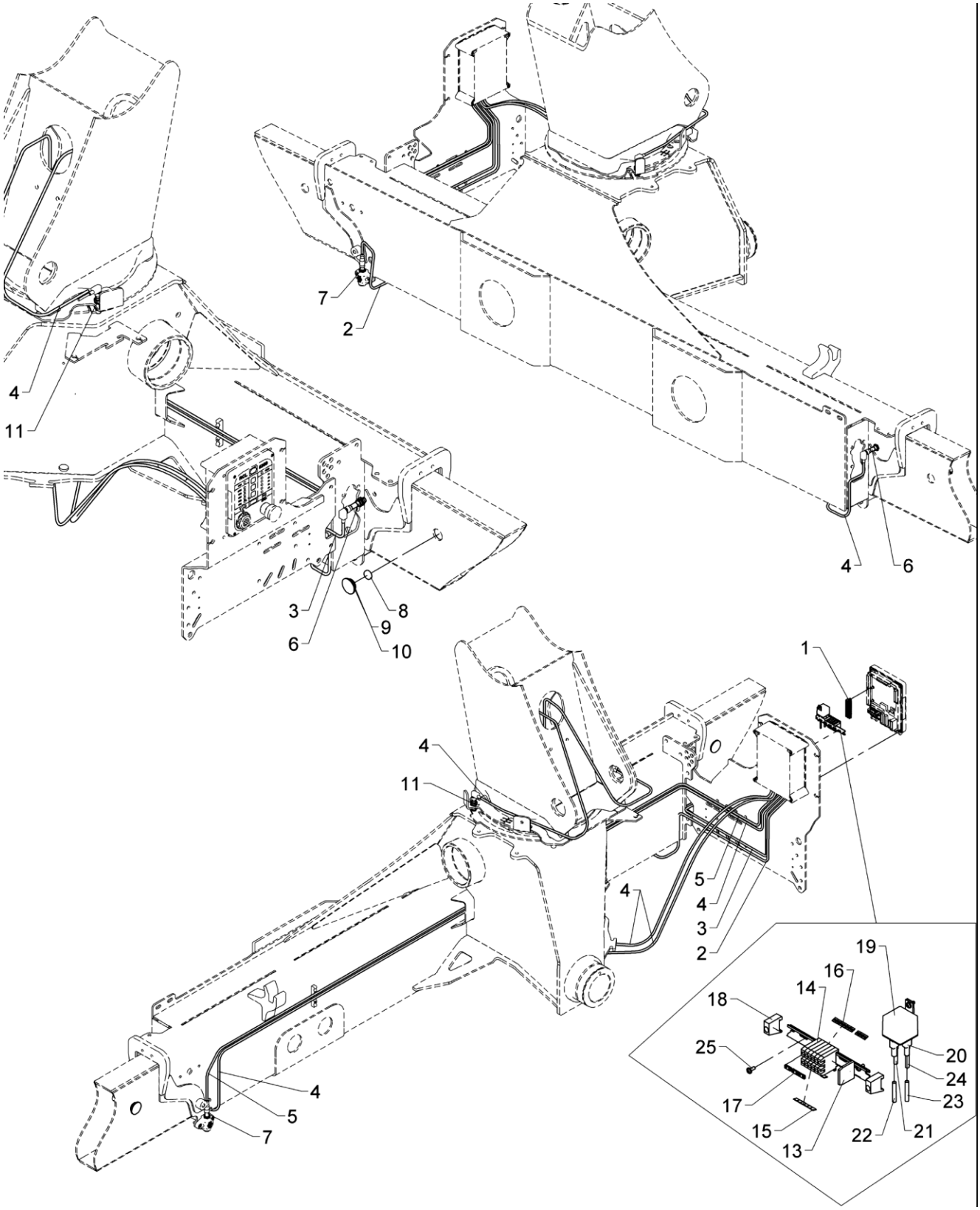

Obsolete

534 20 110

From loader 1060001
To loader

Created 18-02-2013
Modified

2CYBEL, single extension (2LMB)

Pos	Qty.	Part no.	Description	Remarks
1	1	29322	Plug, 12-polar for RCL 53XX	
2	1	29223	Cable with socket, 2 m	1,4
3	1	28117	Cable with plug	
4	3	28077	Cable with plug	2,7 m
5	1	29224	Cable with socket, 5 m	2,7
6	2	29259	Magnet proximity switch M12	
7	2	29257	Proximity switch M12x44, 4mm	
8	2	29262	Solenoid Ø22x5	
9	2	64424	Slide block	2 mm
10	2	63681	Slide block	3 mm
11	2	29447	Proximity switchM12 8mm PNP-NO	
12	1	28013	Guide rail	120 mm.
13	1	28011	End plate	
14	6	28010	Terminal	
15	1	28020	Labels nos. 11-20	
16	1	29427	Dekafix marker 31-40	
17	3	28208	Fish plate	
18	2	28012	End angle	
19	1	27342	Relay, 24V	
20	4	27429	Clamp	
21	1	27202	Cable	0,3 m
22	1	27203	Cable	0,3 m
23	1	27206	Wire, 1 x 1.5mm2	0,3 m
24	1	27209	Wire 1 x 1,5 mm2	0,3 m
25	3	30361	Screw, stainless	3,0 x 8

1500K, 1510K, 1720K, 1730K, 1820K, 1830K

Internal ref. 70 06 210

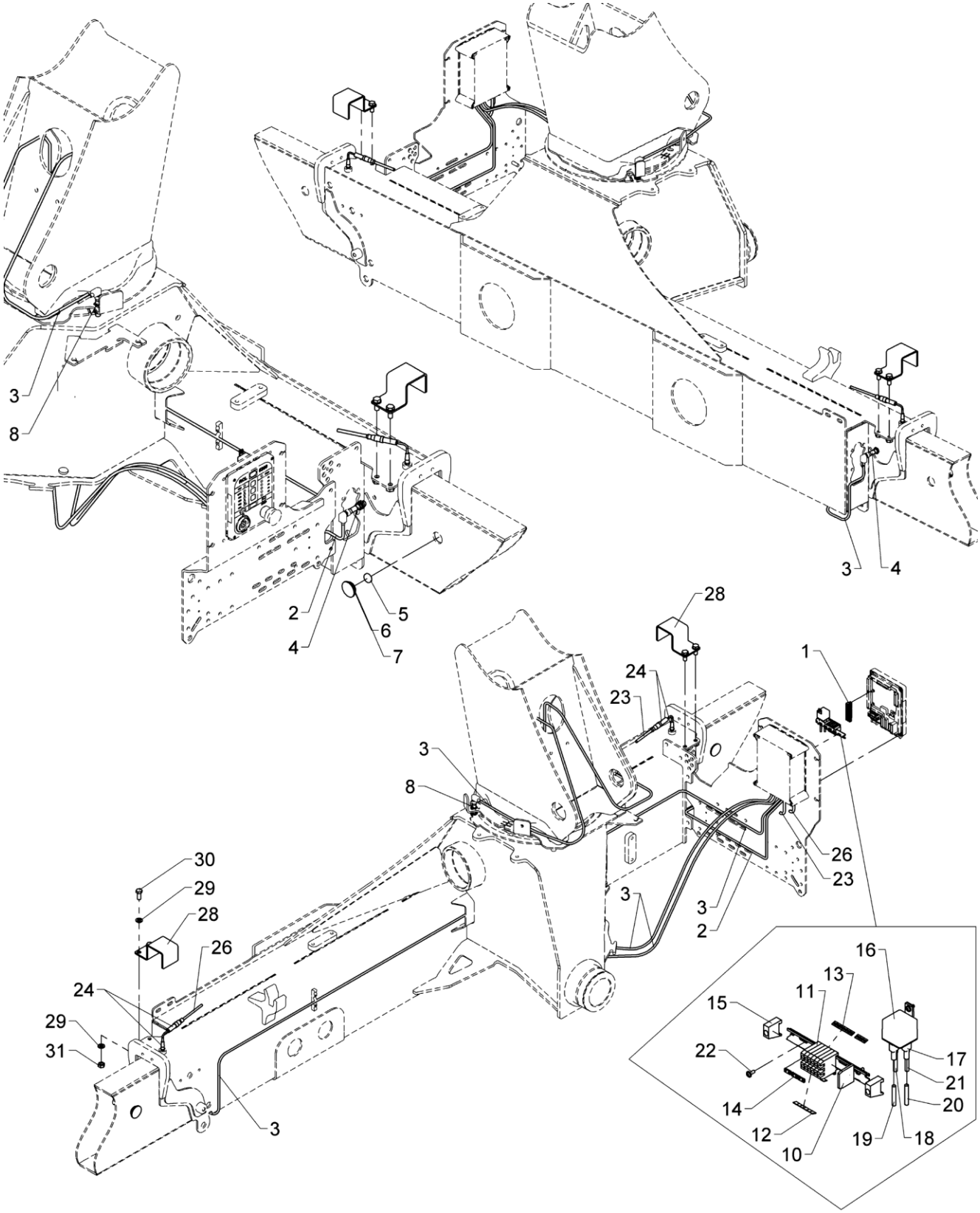

2CYBEL, single extension (2LMB)

Pos	Qty.	Part no.	Description	Remarks
1	1	29322	Plug, 12-polar for RCL 53XX	
2	1	28117	Cable with plug	
3	3	28077	Cable with plug	2,7 m
4	2	29259	Magnet proximity switch M12	
5	2	29262	Solenoid Ø22x5	
6	2	64424	Slide block	2 mm
7	2	63681	Slide block	3 mm
8	2	29447	Proximity switchM12 8mm PNP-NO	
9	1	28013	Guide rail	120 mm.
10	1	28011	End plate	
11	6	28010	Terminal	
12	1	28020	Labels nos. 11-20	
13	1	29427	Dekafix marker 31-40	
14	3	28208	Fish plate	
15	2	28012	End angle	
16	1	27342	Relay, 24V	
17	4	27429	Clamp	
18	1	27202	Cable	0,3 m
19	1	27203	Cable	0,3 m
20	1	27206	Wire, 1 x 1.5mm2	0,3 m
21	1	27209	Wire 1 x 1,5 mm2	0,3 m
22	3	30361	Screw, stainless	3,0 x 8
23	1	29223	Cable with socket, 2 m	
24	2	29282	Proximity switch M12-4mm NO	
25	1	29223	Cable with socket, 2 m	
26	1	29224	Cable with socket, 5 m	
27	1	29224	Cable with socket, 5 m	
28	2	6340654	Protective guard	
29	8	31565	Washer, stainless	10 mm
30	4	30155	Set screw	M10 x 25
31	4	30858	Nut	M10

1500K, 1510K, 1720K, 1730K, 1820K, 1830K

Internal ref. 70 06 230

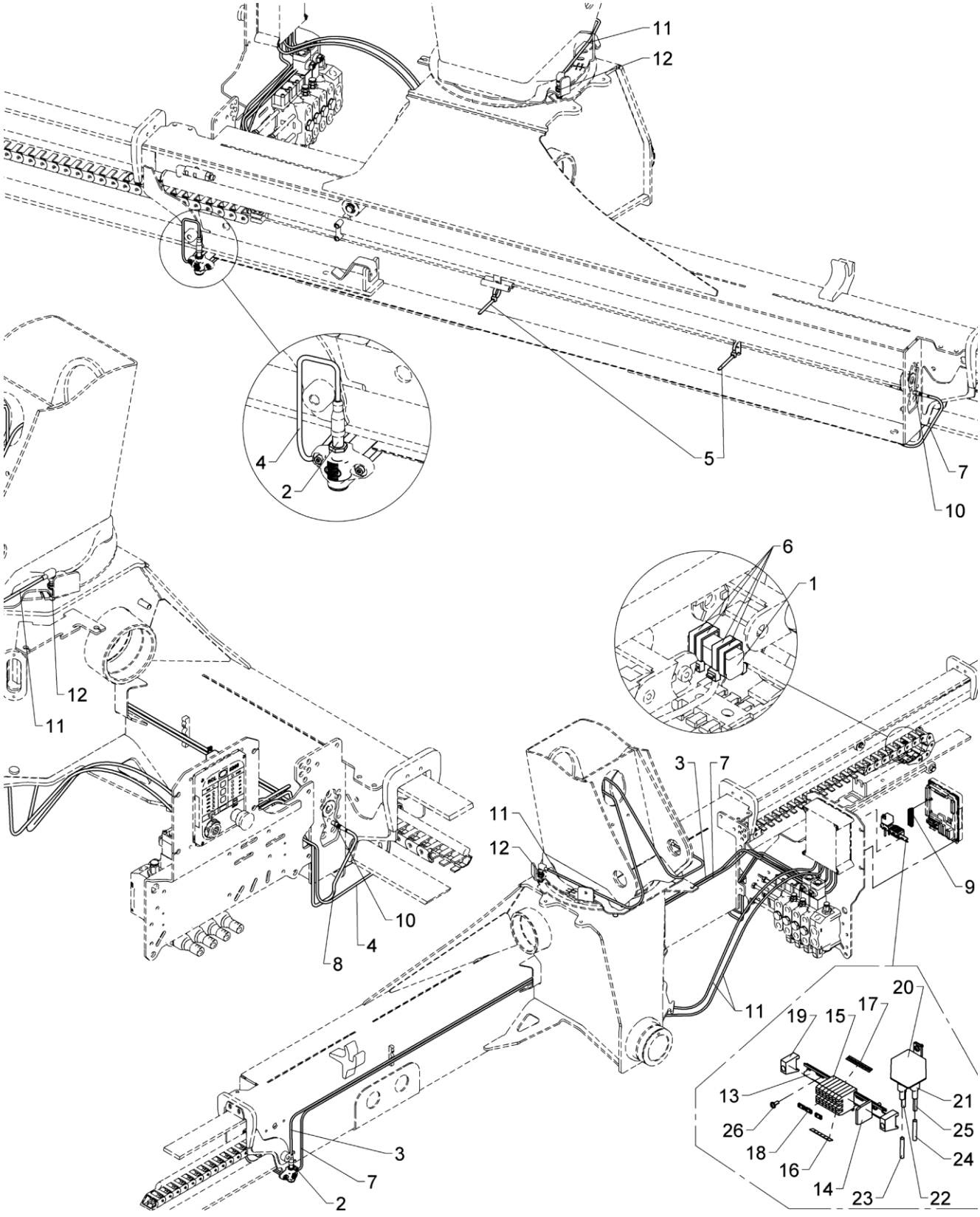

Obsolete

534 20 120

From loader 1060001
To loader

Created 19-02-2013
Modified

2CYBEL, double extension (2LMB)

Pos	Qty.	Part no.	Description	Remarks
1	2	29253	Tilt switch, nylon drag chain	
2	2	29257	Proximity switch M12x44, 4mm	
3	1	29224	Cable with socket, 5 m	
4	1	29223	Cable with socket, 2 m	
5	4	27275	Cable tie, black, 7.6x385mm	
6	8	27274	Clip	
7	1	29264	Cable 5 m, M8 socket	
8	1	29265	Cable 2 m, M8 socket	
9	1	29322	Plug, 12-polar for RCL 53XX	
10	2	29443	Panel lead-in M8 - 3-polar	
11	2	28077	Cable with plug	
12	2	29447	Proximity switchM12 8mm PNP-NO	
13	1	28013	Guide rail	120 mm.
14	1	28011	End plate	
15	7	28010	Terminal	
16	1	28020	Labels nos. 11-20	
17	1	29427	Dekafix marker 31-40	
18	3	28208	Fish plate	
19	2	28012	End angle	
20	1	27342	Relay, 24V	
21	4	27429	Clamp	
22	1	27202	Cable	0,3 m
23	1	27203	Cable	0,3 m
24	1	27206	Wire, 1 x 1.5mm2	0,3 m
25	1	27209	Wire 1 x 1,5 mm2	0,3 m
26	3	30361	Screw, stainless	3,0 x 8

1500K, 1510K, 1720K, 1730K, 1820K, 1830K

Internal ref. 70 06 230

Position of 29253		
	CYBEL	CYBEL-I
A=4600	- - - - -	15
A=5570	- - - - -	22
A=6450	7	29

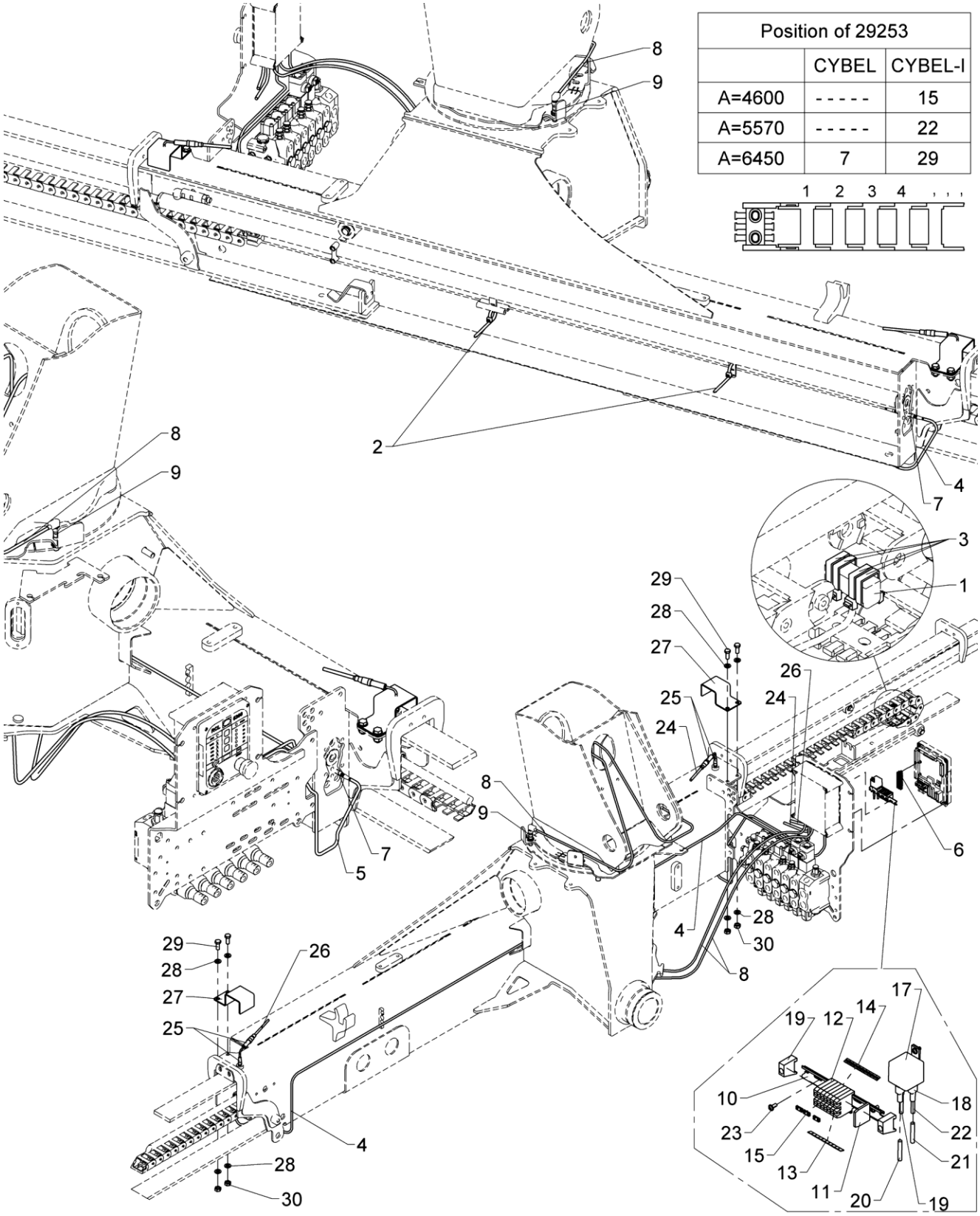

2CYBEL, double extension (2LMB)

Pos	Qty.	Part no.	Description	Remarks
1	2	29253	Tilt switch, nylon drag chain	
2	4	27275	Cable tie, black, 7.6x385mm	
3	8	27274	Clip	
4	1	29264	Cable 5 m, M8 socket	
5	1	29265	Cable 2 m, M8 socket	
6	1	29322	Plug, 12-polar for RCL 53XX	
7	2	29443	Panel lead-in M8 - 3-polar	
8	2	28077	Cable with plug	
9	2	29447	Proximity switchM12 8mm PNP-NO	
10	1	28013	Guide rail	120 mm.
11	1	28011	End plate	
12	7	28010	Terminal	
13	1	28020	Labels nos. 11-20	
14	1	29427	Dekafix marker 31-40	
15	3	28208	Fish plate	
19	2	28012	End angle	
17	1	27342	Relay, 24V	
18	4	27429	Clamp	
19	1	27202	Cable	0,3 m
20	1	27203	Cable	0,3 m
21	1	27206	Wire, 1 x 1.5mm2	0,3 m
22	1	27209	Wire 1 x 1,5 mm2	0,3 m
23	3	30361	Screw, stainless	3,0 x 8
24	1	29223	Cable with socket, 2 m	
25	2	29282	Proximity switch M12-4mm NO	
26	1	29224	Cable with socket, 5 m	
27	2	6340654	Protective guard	
28	8	31565	Washer, stainless	10 mm
29	4	30155	Set screw	M10 x 25
30	4	30858	Nut	M10

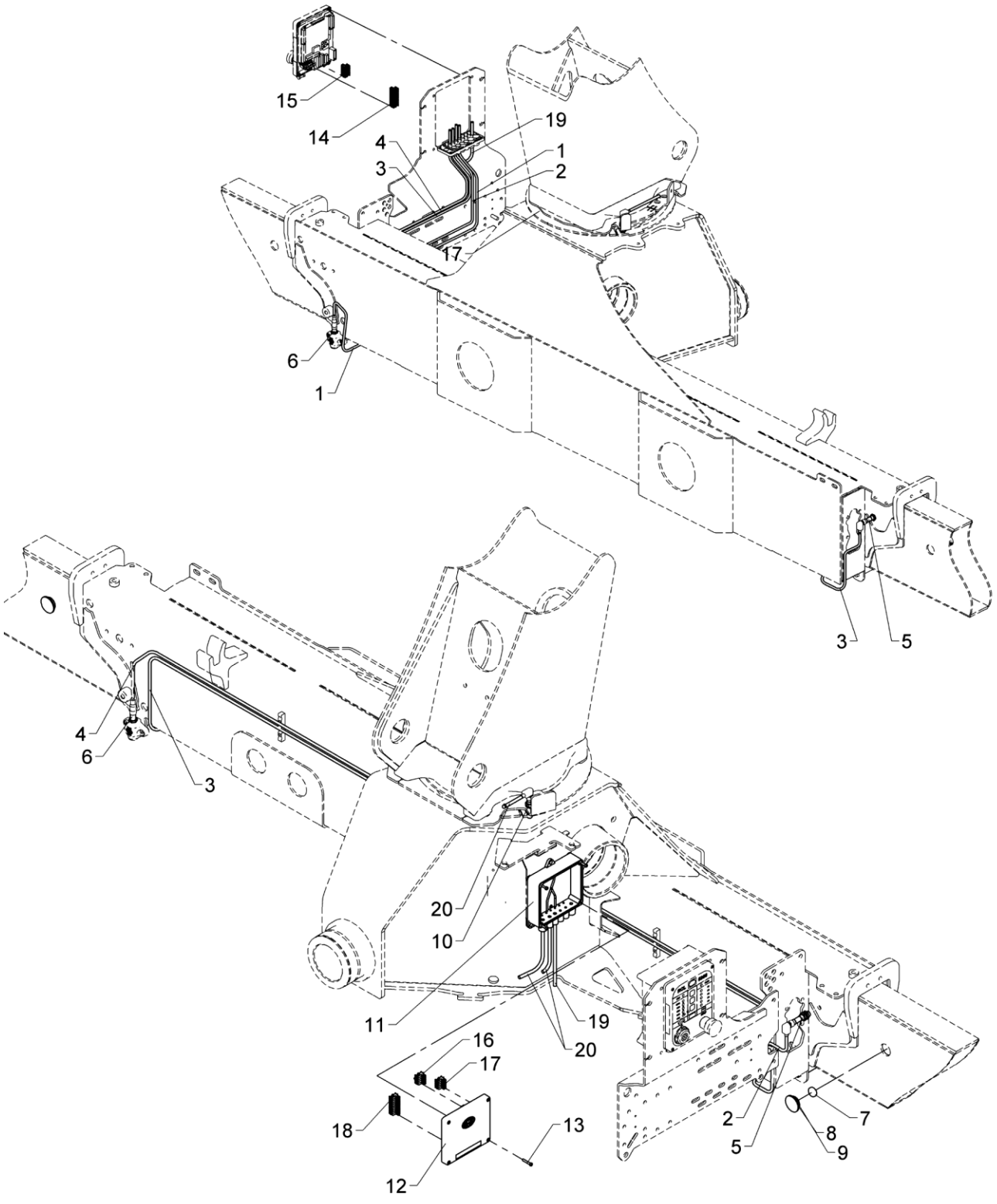
15
14
4
3
19
1
2
17
6
1
3
5
4
6
3
20
10
11
19
20
16
17
18
13
12
2
5
7
8
9

Obsolete

534 20 137

From loader

To loader

2-CYBEL, single extension with CIO (RC, RCS)

Created 01-01-2016

Modified

Pos	Qty.	Part no.	Description	Remarks
		7009280		
		7009300		
1	1	29223	Cable with socket, 2 m	
2	1	28117	Cable with plug	
3	1	28077	Cable with plug	
4	1	29224	Cable with socket, 5 m	
5	2	29259	Magnet proximity switch M12	
6	2	29257	Proximity switch M12x44, 4mm	
7	2	29262	Solenoid Ø22x5	
8	2	64424	Slide block	2 mm
9	2	63681	Slide block	3 mm
10	2	29447	Proximity switchM12 8mm PNP-NO	
11	1	29313	Bottom f. Fly-Jib box	
12	1	29346	CIO5376 controller cover cpl.	
13	4	30347	Screw, stainless	4,0 x 25
14	1	29322	Plug, 12-polar for RCL 53XX	
15	1	29318	Plug, 7-polar for RCL 53XX	
16	1	29341	CAN termination FJC	
17	1	29317	Plug, 5-polar for RCL 53XX	
18	1	29321	Plug, 10-polar for RCL 53XX	
19	1	28263	CAN BUS cable	2 m
20	2	28077	Cable with plug	

1500K, 1510K, 1720K, 1730K, 1820K, 1830K

70 09 300
Internal ref. 70 09 280

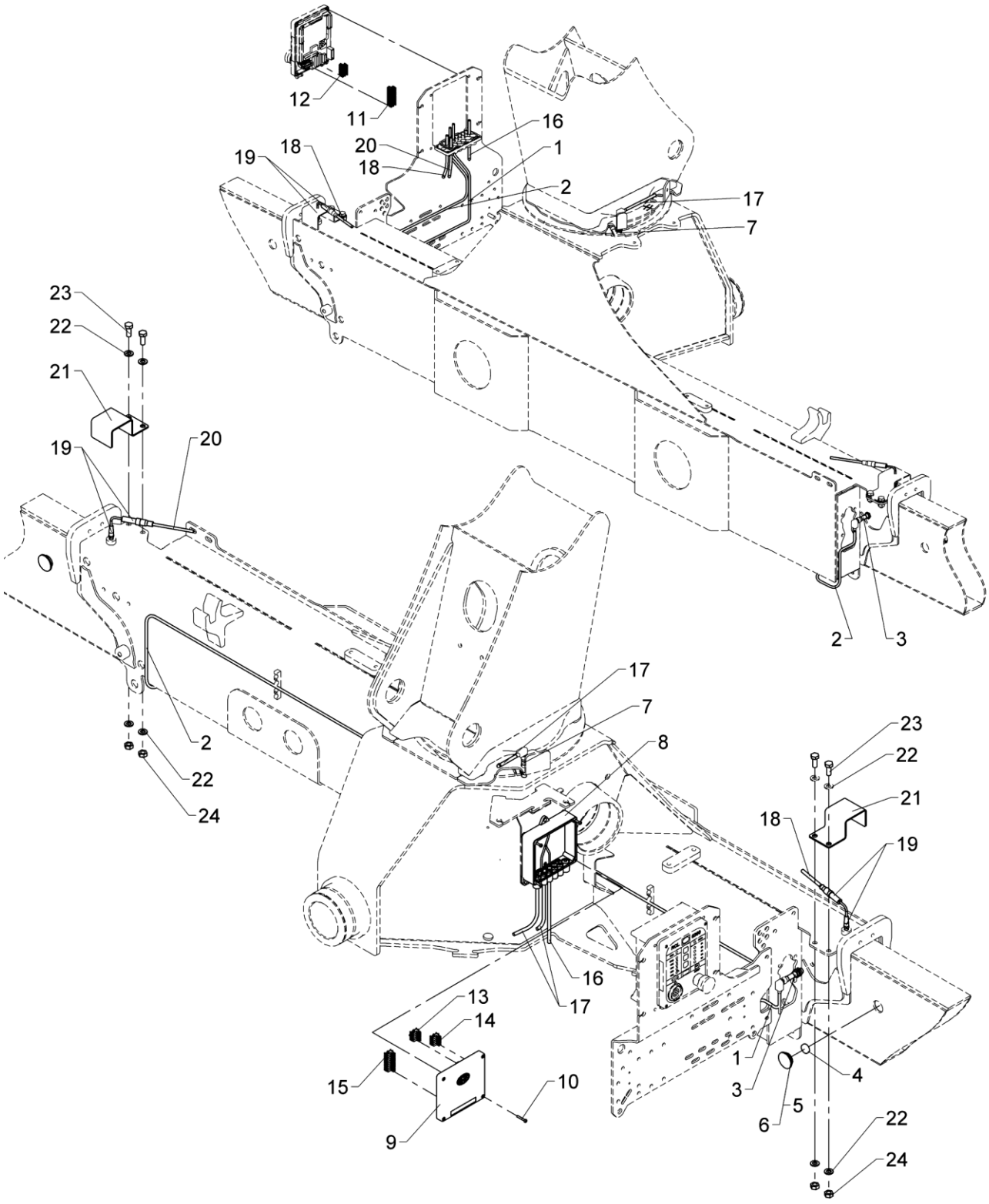

2-CYBEL, single extension with CIO (RC, RCS)

Pos	Qty.	Part no.	Description	Remarks
		7009280		
		7009300		
1	1	28117	Cable with plug	
2	1	28077	Cable with plug	
3	2	29259	Magnet proximity switch M12	
4	2	29262	Solenoid Ø22x5	
5	2	64424	Slide block	2 mm
6	2	63681	Slide block	3 mm
7	2	29447	Proximity switchM12 8mm PNP-NO	
8	1	29313	Bottom f. Fly-Jib box	
9	1	29346	CIO5376 controller cover cpl.	
10	4	30347	Screw, stainless	4,0 x 25
11	1	29322	Plug, 12-polar for RCL 53XX	
12	1	29318	Plug, 7-polar for RCL 53XX	
13	1	29341	CAN termination FJC	
14	1	29317	Plug, 5-polar for RCL 53XX	
15	1	29321	Plug, 10-polar for RCL 53XX	
16	1	28263	CAN BUS cable	2 m
17	2	28077	Cable with plug	
18	1	29223	Cable with socket, 2 m	
19	2	29282	Proximity switch M12-4mm NO	
20	1	29224	Cable with socket, 5 m	
21	2	6340654	Protective guard	
22	8	31565	Washer, stainless	10 mm
23	4	30155	Set screw	M10 x 25
24	4	30858	Nut	M10

1500K, 1510K, 1720K, 1730K, 1820K, 1830K

70 09 310
Internal ref. 70 09 290

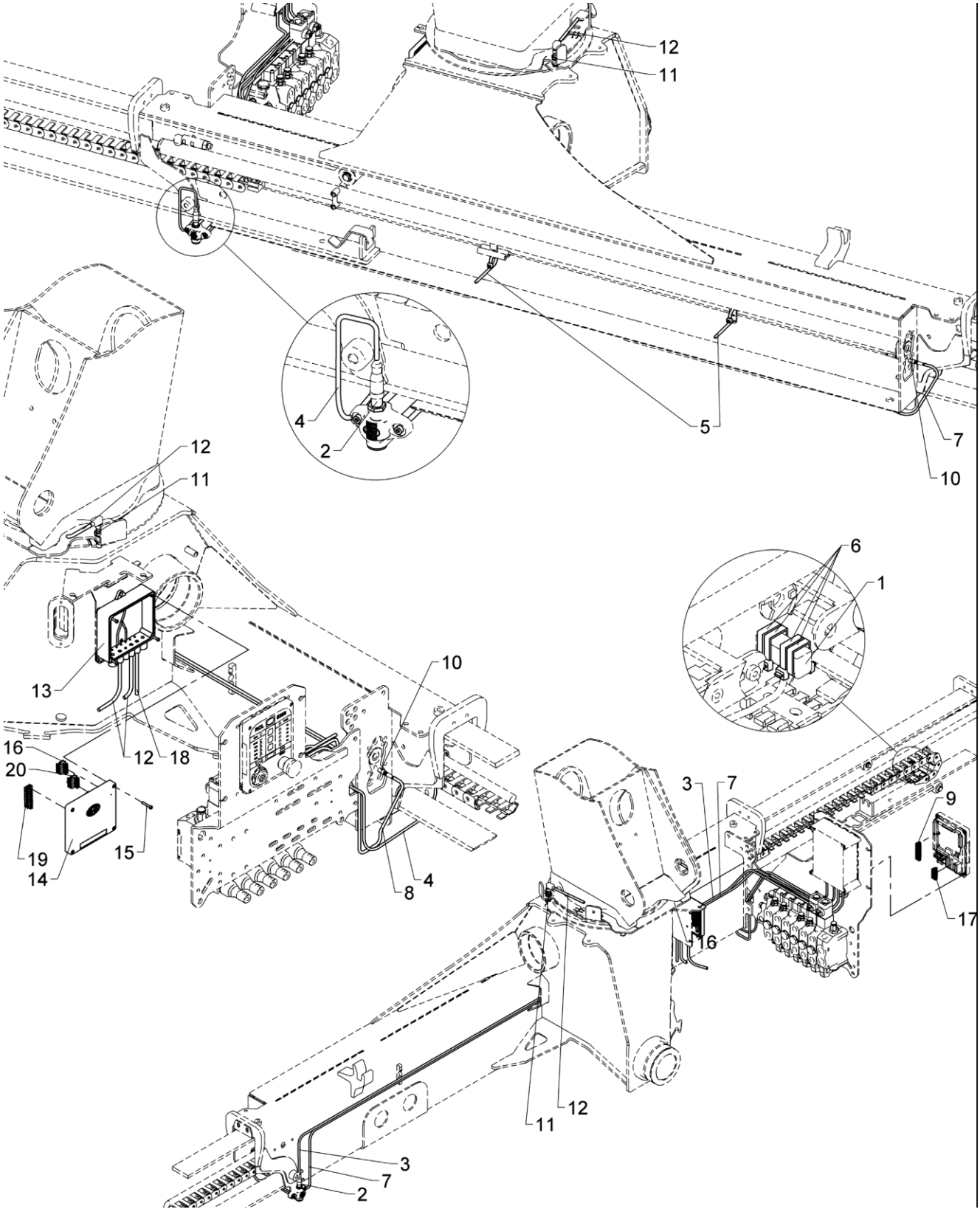

Obsolete

534 20 138

From loader

To loader

Created 01-01-2016

Modified

2CYBEL, double extension with CIO (RC, RCS)

Pos	Qty.	Part no.	Description	Remarks
		7009290		
		7009310		
1	2	29253	Tilt switch, nylon drag chain	
2	2	29257	Proximity switch M12x44, 4mm	
3	1	29224	Cable with socket, 5 m	
4	1	29223	Cable with socket, 2 m	
5	4	27275	Cable tie, black, 7.6x385mm	
6	8	27274	Clip	
7	1	29264	Cable 5 m, M8 socket	
8	1	29265	Cable 2 m, M8 socket	
9	1	29322	Plug, 12-polar for RCL 53XX	
10	2	29443	Panel lead-in M8 - 3-polar	
11	2	29447	Proximity switchM12 8mm PNP-NO	
12	2	28077	Cable with plug	
13	1	29313	Bottom f. Fly-Jib box	
14	1	29346	CIO5376 controller cover cpl.	
15	4	30347	Screw, stainless	4,0 x 25
16	1	29317	Plug, 5-polar for RCL 53XX	
17	1	29318	Plug, 7-polar for RCL 53XX	
18	1	28263	CAN BUS cable	2 m
19	1	29321	Plug, 10-polar for RCL 53XX	
20	1	29341	CAN termination FJC	

1500K, 1510K, 1720K, 1730K, 1820K, 1830K

70 09 310
Internal ref. 70 09 290

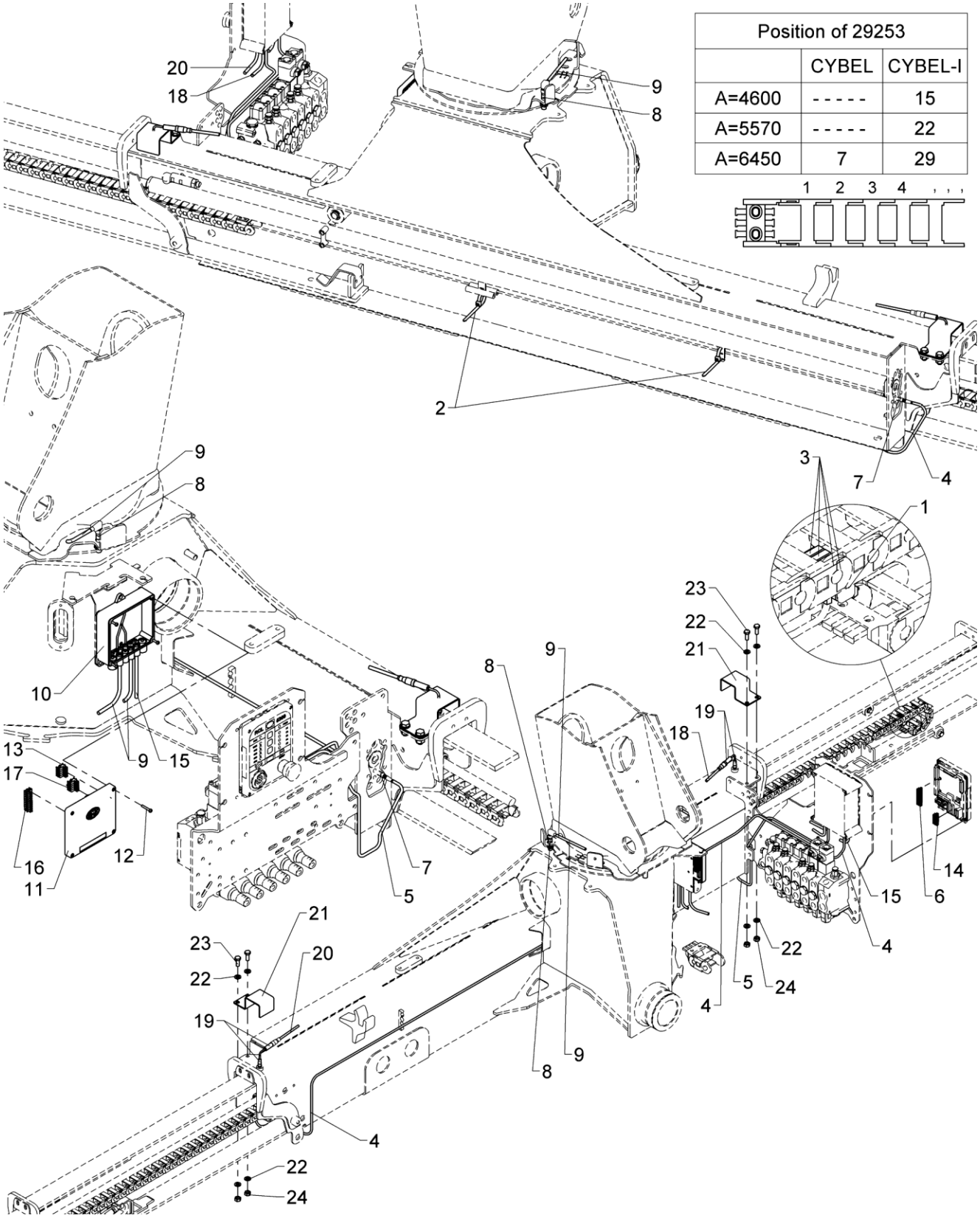

2CYBEL, double extension with CIO (RC, RCS)

Pos	Qty.	Part no.	Description	Remarks
		7009290		
		7009310		
1	2	29253	Tilt switch, nylon drag chain	
2	4	27275	Cable tie, black, 7.6x385mm	
3	8	27274	Clip	
4	1	29264	Cable 5 m, M8 socket	
5	1	29265	Cable 2 m, M8 socket	
6	1	29322	Plug, 12-polar for RCL 53XX	
7	2	29443	Panel lead-in M8 - 3-polar	
8	2	29447	Proximity switchM12 8mm PNP-NO	
9	2	28077	Cable with plug	
10	1	29313	Bottom f. Fly-Jib box	
11	1	29346	CIO5376 controller cover cpl.	
12	4	30347	Screw, stainless	4,0 x 25
13	1	29317	Plug, 5-polar for RCL 53XX	
14	1	29318	Plug, 7-polar for RCL 53XX	
15	1	28263	CAN BUS cable	2 m
16	1	29321	Plug, 10-polar for RCL 53XX	
17	1	29341	CAN termination FJC	
18	1	29223	Cable with socket, 2 m	
19	2	29282	Proximity switch M12-4mm NO	
20	1	29224	Cable with socket, 5 m	
21	2	6340654	Protective guard	
22	8	31565	Washer, stainless	10 mm
23	4	30155	Set screw	M10 x 25
24	4	30858	Nut	M10

1500K, 1510K, 1720K, 1730K, 1820K, 1830K

Internal ref. 70 06 260

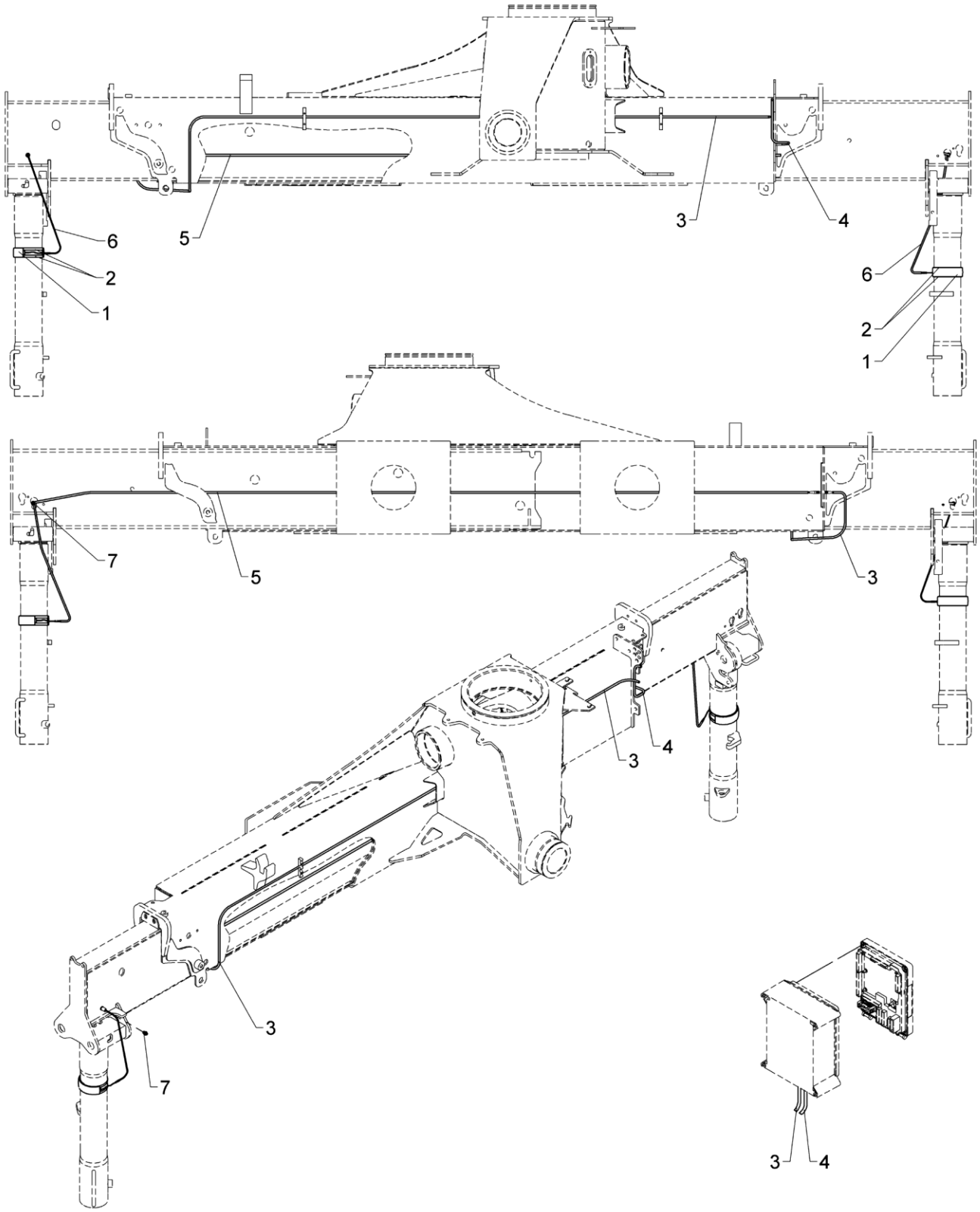

534 20 140

From loader 1060001
To loader

Created 18-02-2013
Modified

Alarm flash on stabilizer legs

Pos	Qty.	Part no.	Description	Remarks
1	2	29432	Alarm flash, yellow 24V, 24 cm	
2	4	27275	Cable tie, black, 7.6x385mm	
3	1	29483	Cable M8, 5 m, female, 3 polar	
4	1	29482	Cable M8, 2 m, female, 3 polar	
5	2	29436	Cable M8, socket and plug 6.3m	
6	2	29444	Cable M8 - 3-polar	
7	2	29437	Safety plug M8x1, socket	

1500K, 1510K, 1720K, 1730K, 1820K, 1830K

Internal ref. 70 06 590

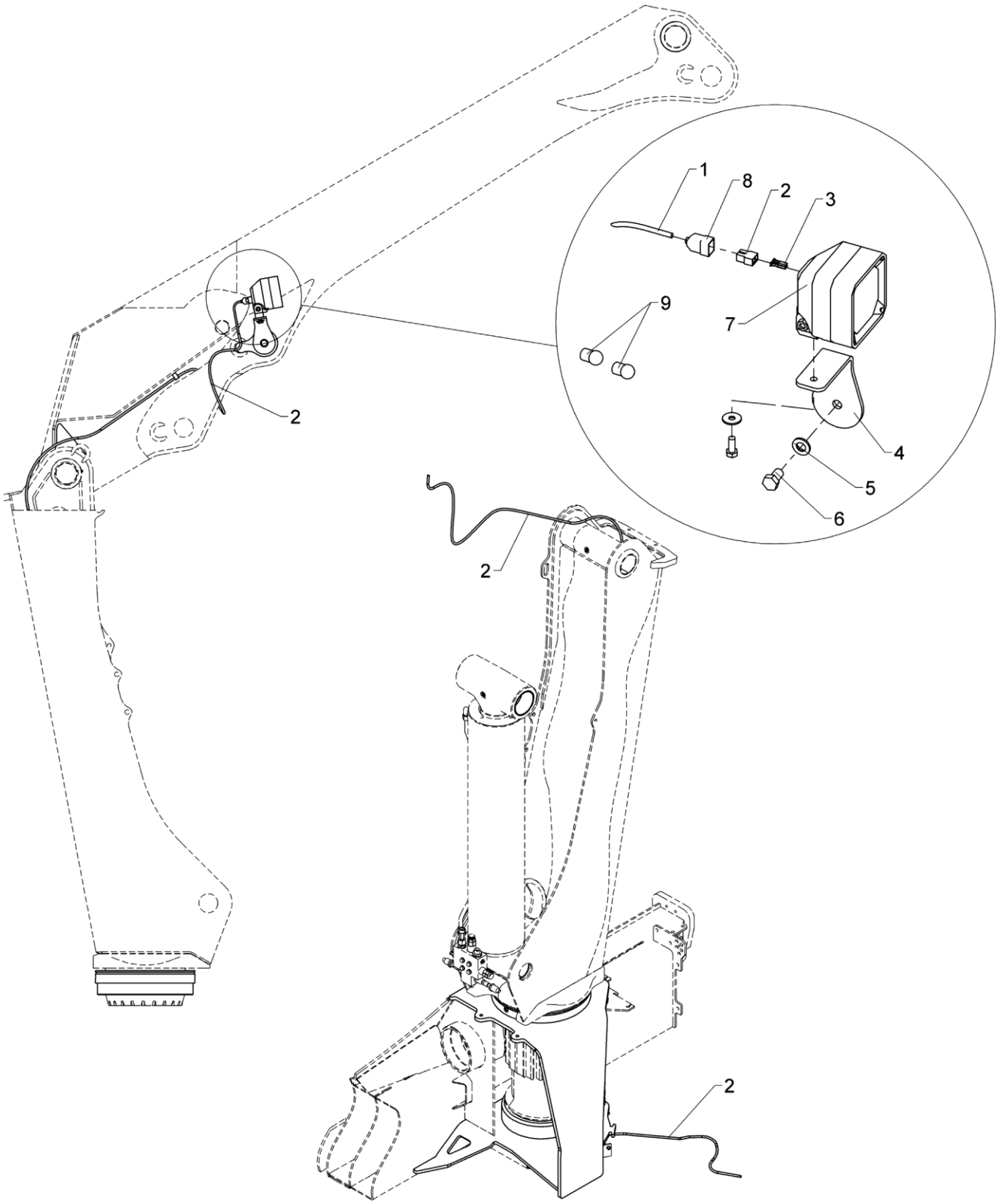

Obsolete

534 20 150

From loader 1060001
To loader

Created 20-06-2012
Modified

Spotlight, boom

Pos	Qty.	Part no.	Description	Remarks
1	1	27447	Multisocket - male	
2	1	27215	Wire 2 x 1.5	7,0 m
3	2	27422	Plug	
4	1	6340219	Fittings	
5	1	32338	Washer	12 mm
6	1	30175	Set screw	M12 x 20
7	1	27138	Spotlight	
8	1	29182	Cable lead-in	
9	2	27828	Bulb 24V, 70W	

1500K, 1510K, 1720K, 1730K, 1820K, 1830K

Internal ref. 70 06 590

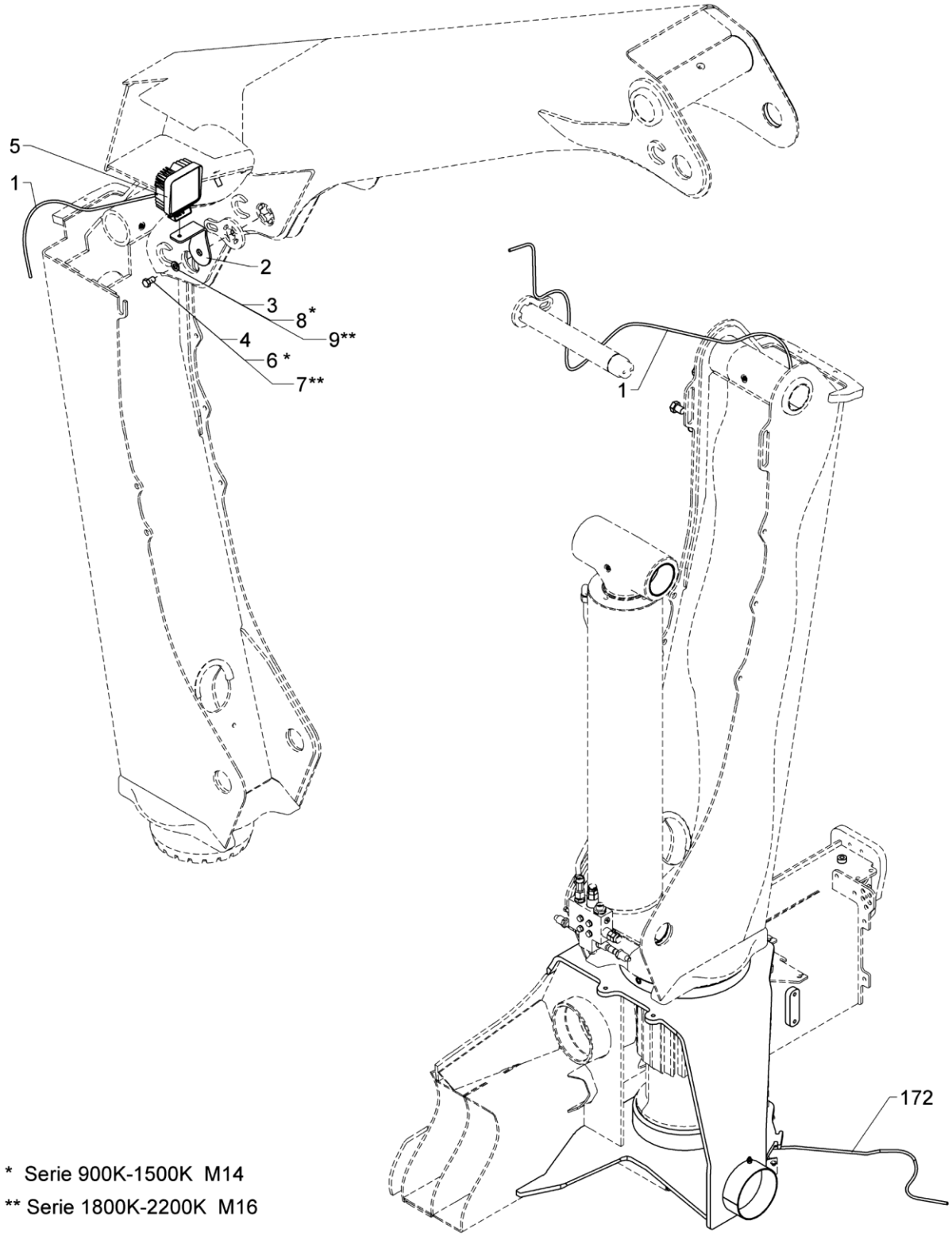

* Serie 900K-1500K M14

** Serie 1800K-2200K M16

534 20 150 A

From loader 1060001
To loader

Created 26-11-2012
Modified 26-06-2018

Spotlight, boom

Pos	Qty.	Part no.	Description	Remarks
1	1	29462	Cable, LED spotlight, 9.0m	
2	1	6340219	Fittings	
3	1	32338	Washer	12 mm
4	1	30175	Set screw	M12 x 20
5	1	29400	Spotlight LED 27 W	
6	1	30204	Set screw	M14 x 20
7	1	32120	Set screw	M16 x 20
8	1	31195	Washer	14 mm
9	1	31196	Washer	16 mm

1500K, 1510K, 1720K, 1730K, 1820K, 1830K

Internal ref. 70 06 580

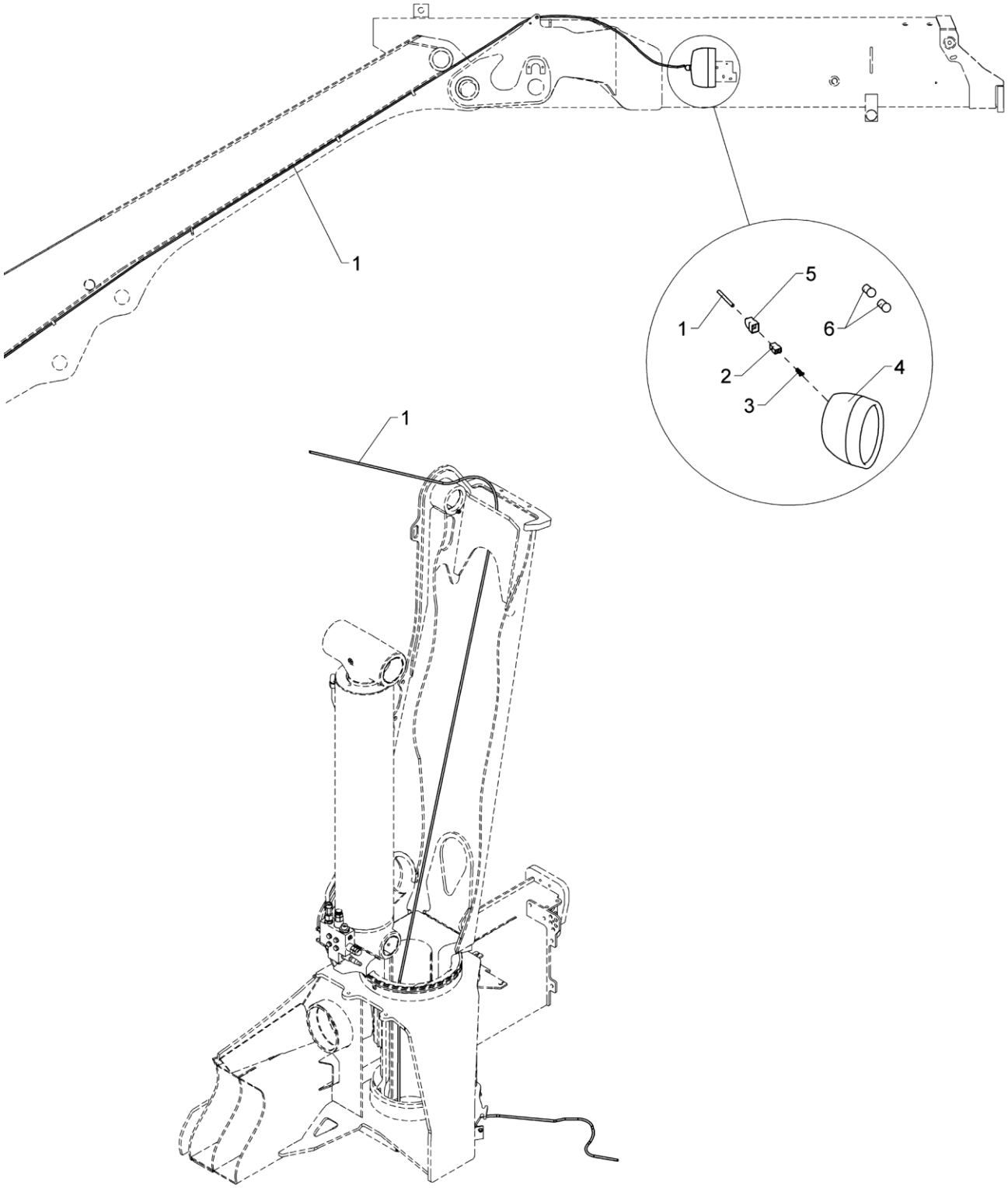

Obsolete

Spotlight, jib

534 20 160

From loader 1060001
To loader

Created 20-06-2012
Modified

Pos	Qty.	Part no.	Description	Remarks
1	1	27215	Wire 2 x 1.5	9,0 m
2	1	27447	Multisocket - male	
3	2	27422	Plug	
4	1	28308	Working lamp, Twinpower 2x70W	
5	1	29182	Cable lead-in	
6	2	27835	Bulb 24V, 5W	

1500K, 1510K, 1720K, 1730K, 1820K, 1830K

Internal ref. 70 06 580

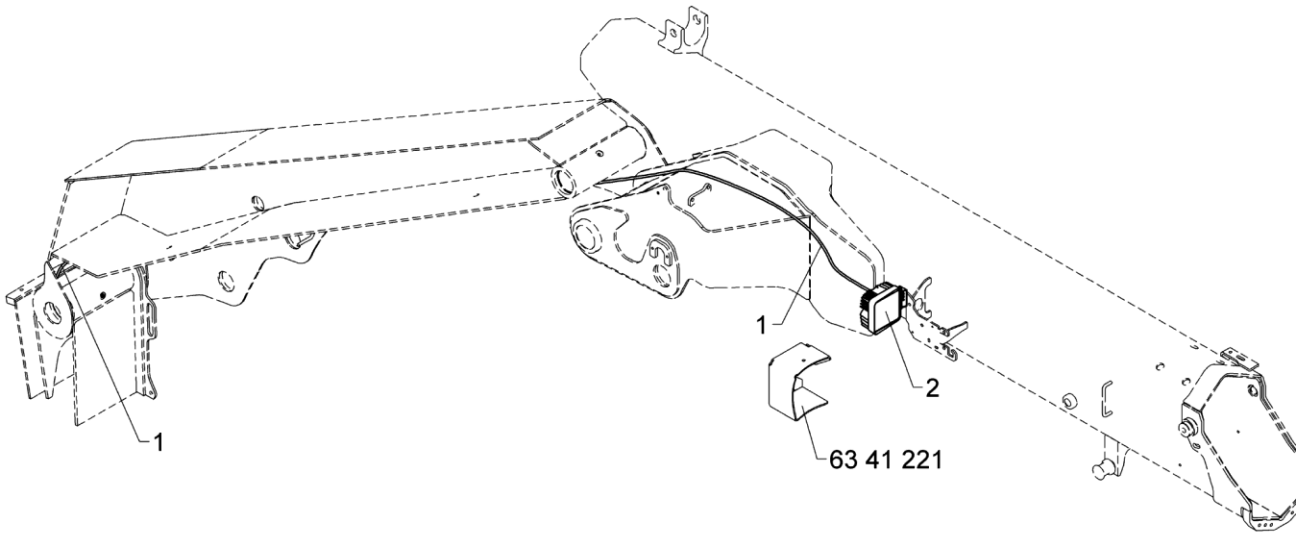

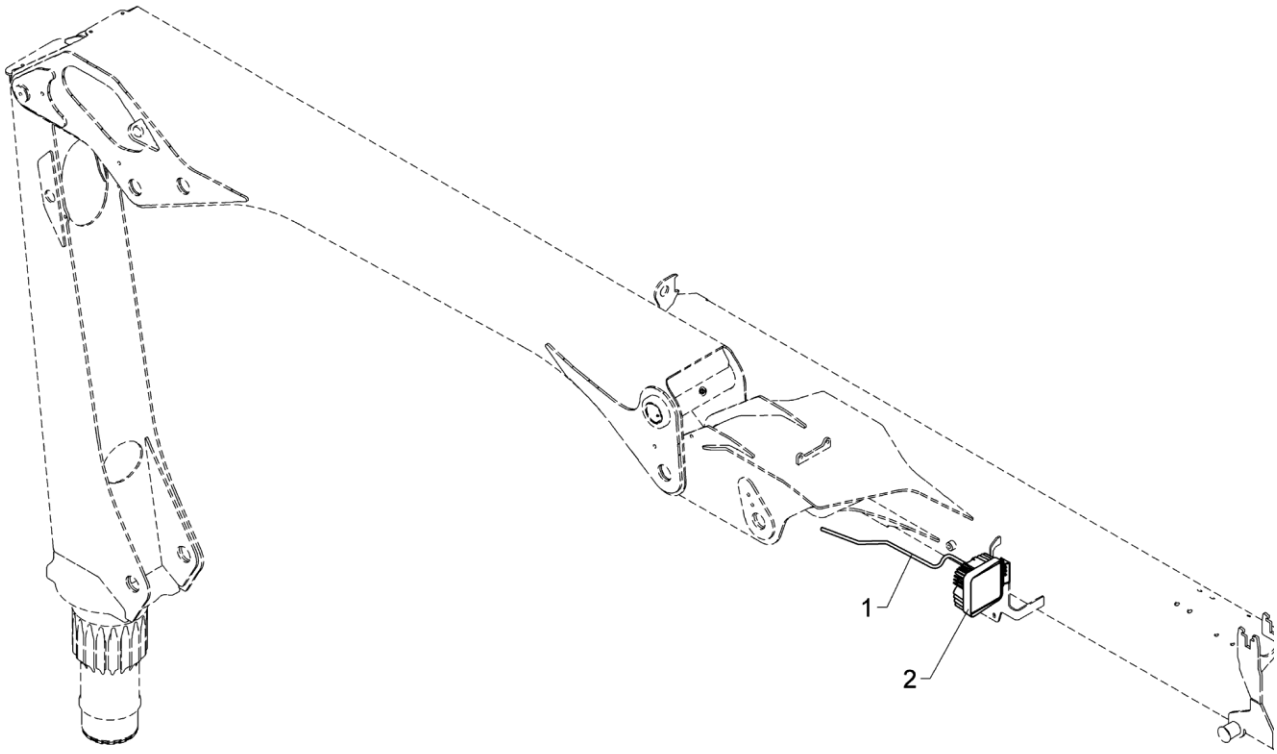

610K, 810K

Obsolete

Spotlight, jib

534 20 160 A

From loader 1060001
To loader

Created 26-11-2012
Modified 25-11-2016

Pos	Qty.	Part no.	Description	Remarks
1	1	29462	Cable, LED spotlight, 9.0m	
2	1	29400	Spotlight LED 27 W	

1500K, 1510K, 1720K, 1730K, 1820K, 1830K

70 07 090
Internal ref. 70 06 580

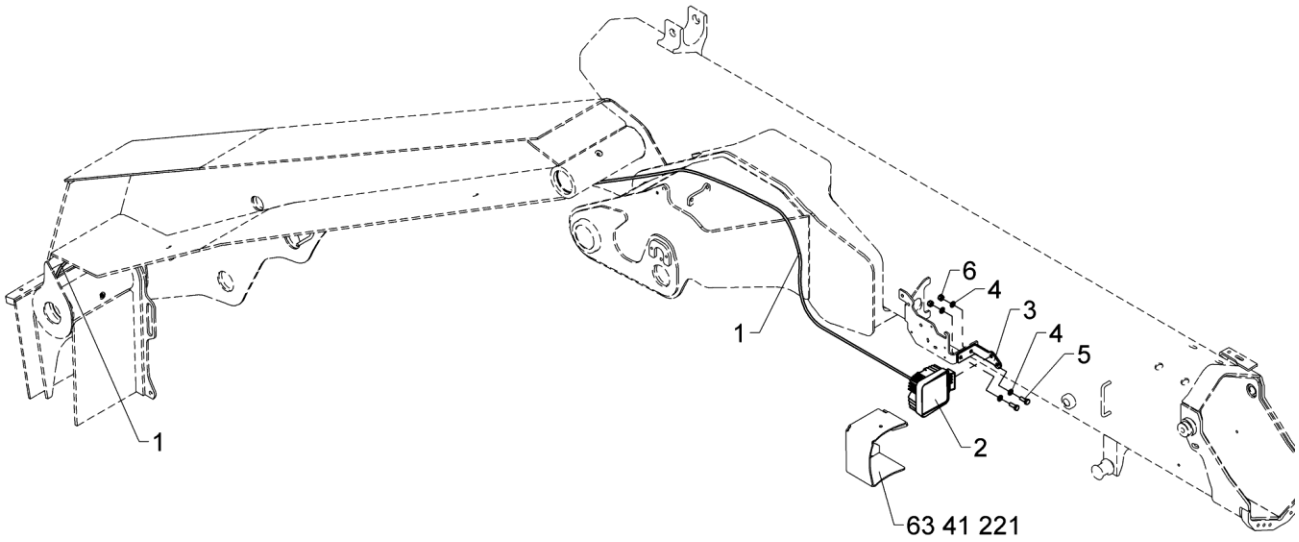

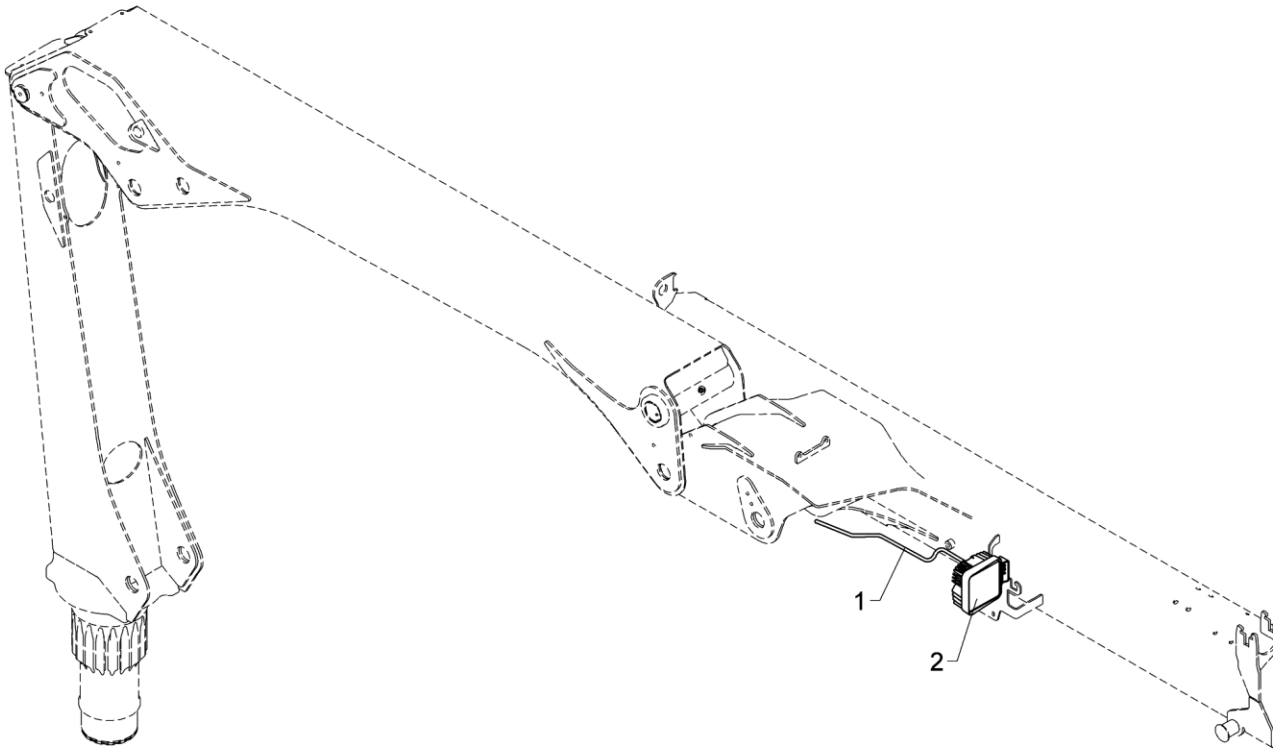

610K, 810K

Spotlight, jib

Pos	Qty.	Part no.	Description	Remarks
		7006580	Spotlight, jib	Pos. 1, 2, 3, 4, 5, 6
		7007090		Pos. 1, 2 (610K, 810K)
1	1	29462	Cable, LED spotlight, 9.0m	
2	1	29400	Spotlight LED 27 W	
3	1	6341552		
4	4	31147	Face washer, 8 mm	
5	2	30133	Set screw, stainless	
6	2	30886	Lock nut, stainless	M8

1500K, 1510K, 1720K, 1730K, 1820K, 1830K

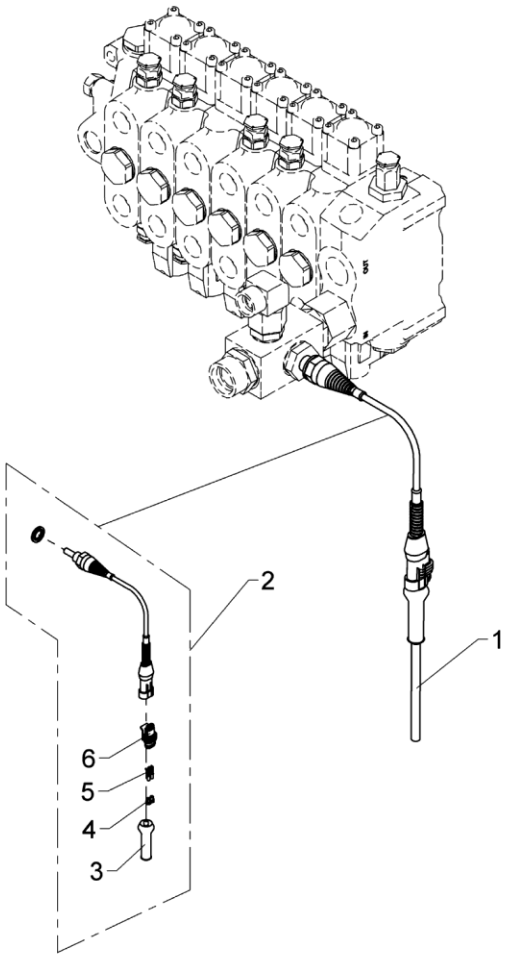

Temperature monitoring without oil cooler

Created 20-02-2013
Modified 01-10-2015

Pos	Qty.	Part no.	Description	Remarks
1	1	28249	Cable 2 x 0.75	2 m
2	1	49652	Thermostat for RCL5300	
3	1	29888	Cover plate, 2-polar plug	
4	2	29159	Cable lead-in, AMP	
5	2	28844	Socket, AMP	
6	1	28843	Bipolar socket, AMP	

1500K, 1510K, 1720K, 1730K, 1820K, 1830K

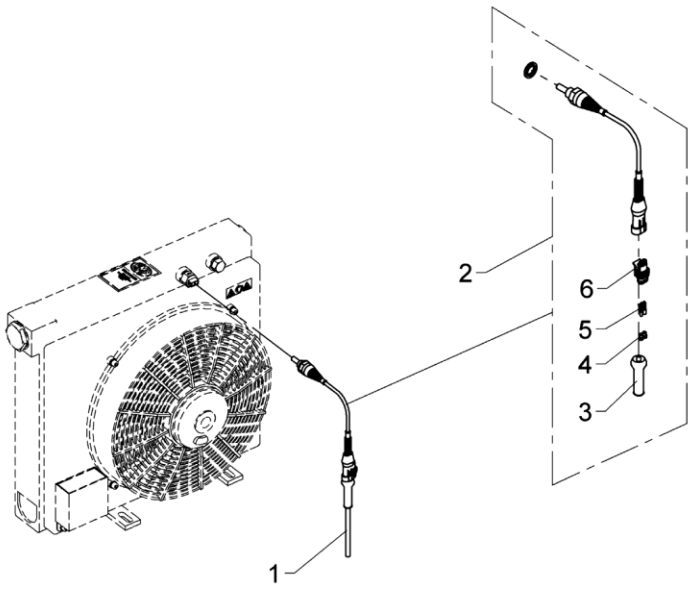

Temperature monitoring for oil cooler

Created 16-03-2010
Modified 01-10-2015

Pos	Qty.	Part no.	Description	Remarks
1	1	28249	Cable 2 x 0.75	3 m
2	1	49652	Thermostat for RCL5300	
3	1	29888	Cover plate, 2-polar plug	
4	2	29159	Cable lead-in, AMP	
5	2	28844	Socket, AMP	
6	1	28843	Bipolar socket, AMP	

1500K, 1510K, 1720K, 1730K, 1820K, 1830K

70 09 000
Internal ref. 70 08 990

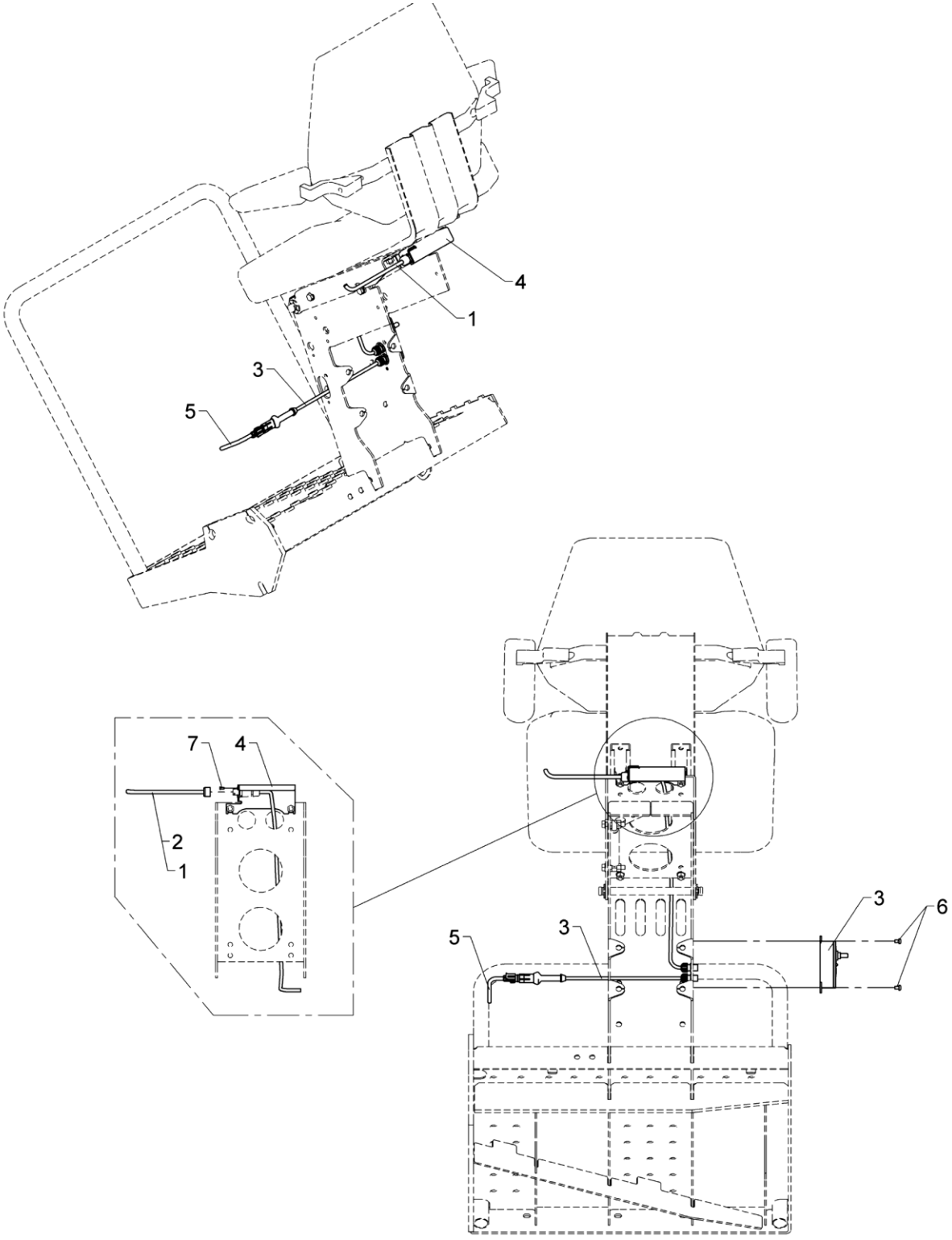

Heated seating 12V/24V

Pos	Qty.	Part no.	Description	Remarks
		7008990		
		7009000		
1	1	24135	Heating cover 24 v.	
2	1	24137	Seat cover 12 V	
3	1	29588	Control box, heated seat	
4	1	7004026	Fittings, plug for heated seat	
5	1	29462	Cable, LED spotlight, 9.0m	
6	2	31032	Screw, stainless M 5 x 8	
7	3	31048	Taptite screw M3 x 6	M3 x 6

1500K, 1510K, 1720K, 1730K, 1820K, 1830K

70 02 480
Internal ref. 70 06 600

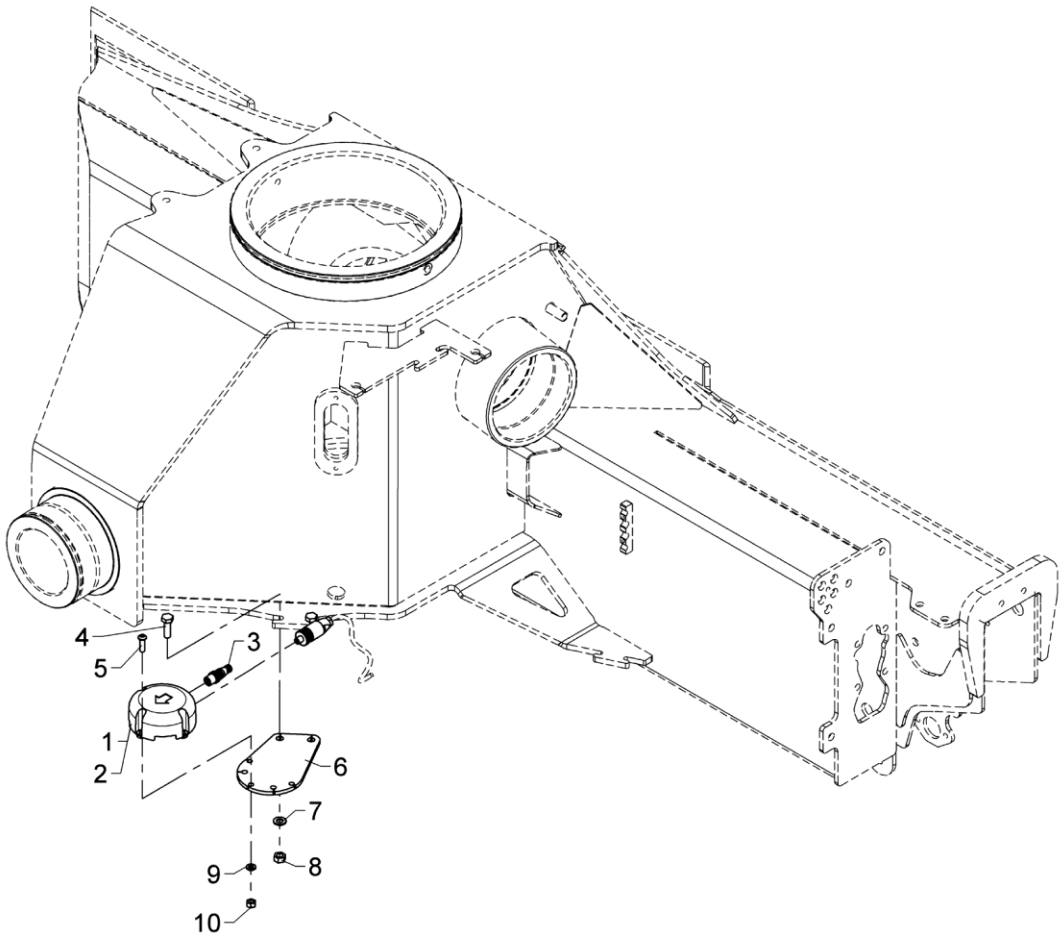

EVS, G2

Pos	Qty.	Part no.	Description	Remarks
1	1	29426	Electronic inclinometer,single	
2	1	29425	Inclinometer, redundant	MEWP
3	1	29486	Plug M12, termination	
4	2	30134	Set screw, stainless	M8 x 25
5	3	32491	Round-head screw	M6 x 20
6	1	6340274	Mounting fittings (AIC 5062)	
7	2	31147	Face washer, 8 mm	
8	2	30856	Nut, stainless	M8
9	3	32302	Face washer, stainless	6 mm
10	3	30884	Lock nut, stainless	M6

1500K, 1510K, 1720K, 1730K, 1820K, 1830K

Internal ref. 70 07 990

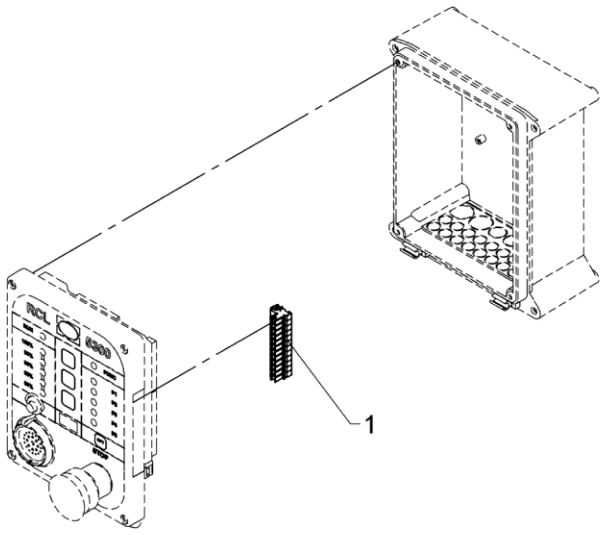

PAS

Pos	Qty.	Part no.	Description	Remarks
1	1	29322	Plug, 12-polar for RCL 53XX	

1500K, 1510K, 1720K, 1730K, 1820K, 1830K

Internal ref. 70 07 330

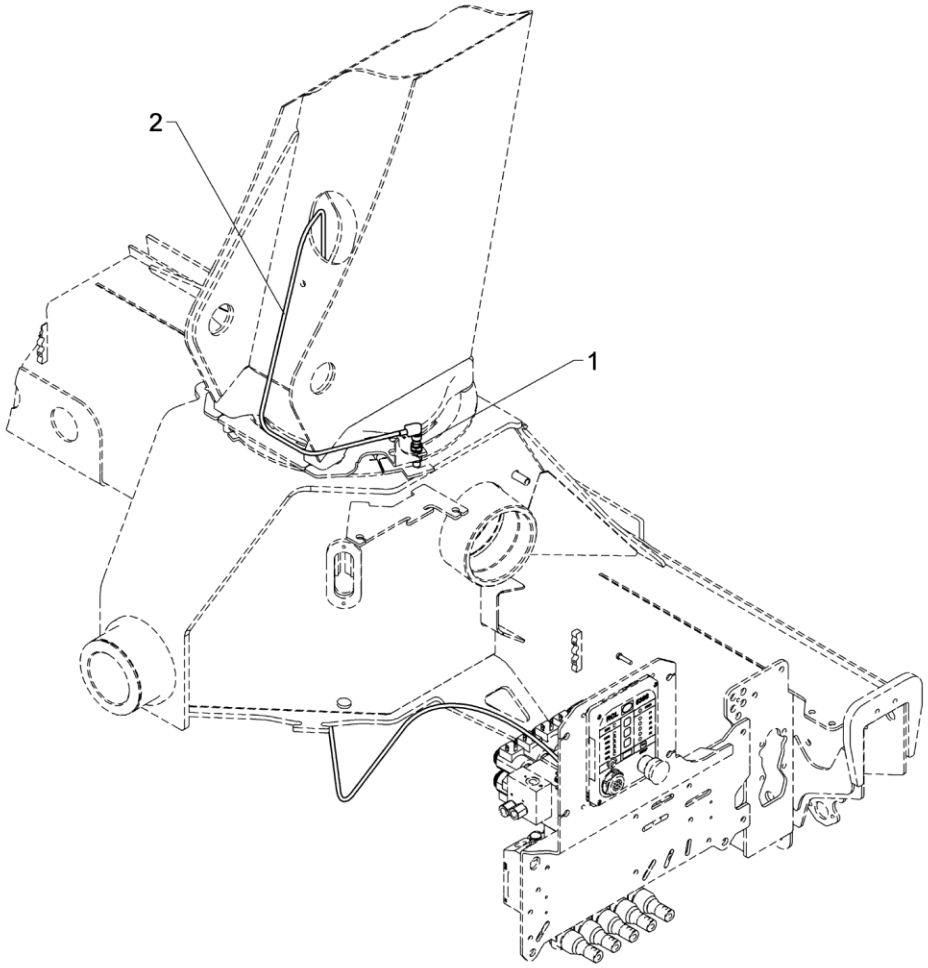

CBS - Calibrate Bypass Sensor

534 20 230

From loader 1060001
To loader

Created 04-10-2012
Modified

Pos	Qty.	Part no.	Description	Remarks
1	1	29447	Proximity switchM12 8mm PNP-NO	
2	1	28077	Cable with plug	2,7 m

1500K, 1510K, 1720K, 1730K, 1820K, 1830K

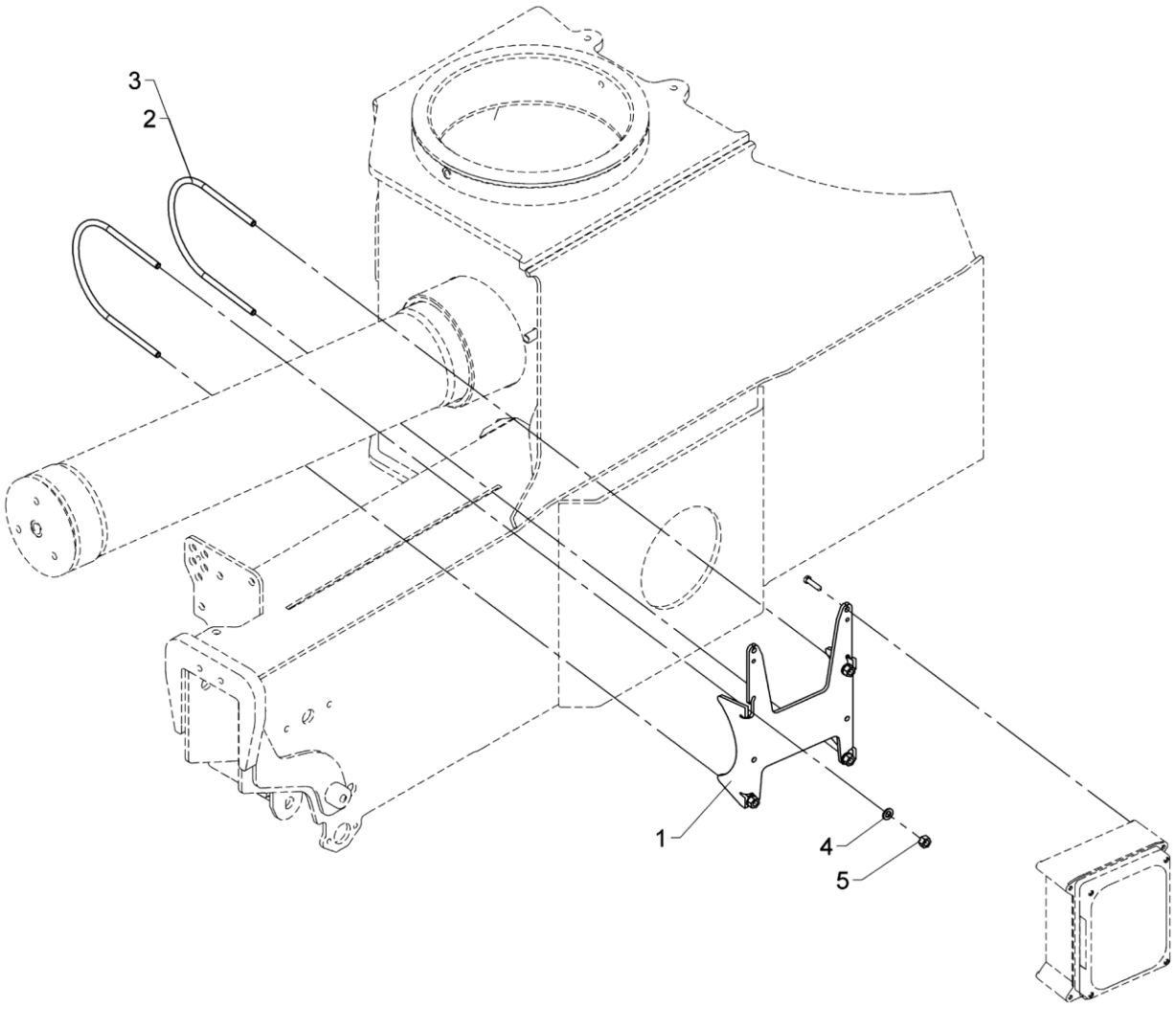

Obsolete

Mounting fittings for junction box

534 20 250

From loader 1060001
To loader 1061929

Created 29-09-2011
Modified 22-09-2017

Pos	Qty.	Part no.	Description	Remarks
1	1	6353267	Bracket for connection box	
2	2	6344458	Clamp	1800K,2200K,1710L,2110L,1910T,
3	2	6340458	Clamp	1300K,2200K,1210L,1510L,1410T
4	8	31147	Face washer, 8 mm	
5	8	30886	Lock nut, stainless	M8

1500K, 1510K, 1720K, 1730K, 1820K, 1830K

63 47 230
Internal ref. 63 47 210

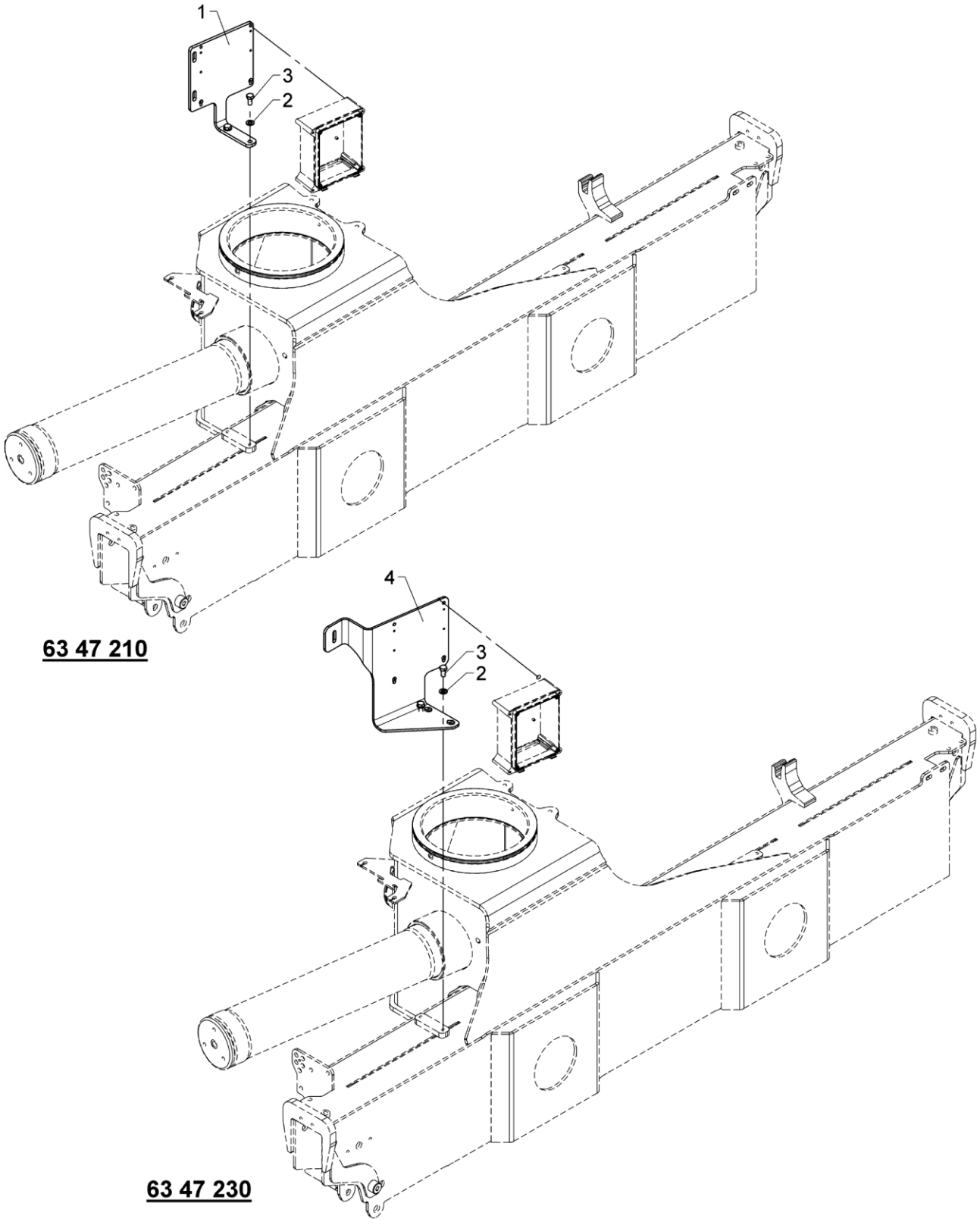

63 47 210

63 47 230

Mounting fittings for junction box, RCS

Pos	Qty.	Part no.	Description	Remarks
		6347210		
		6347230		
1	1	6340939	Fittings, connection box	
2	2	31177	Washer	10 mm
3	2	31517	Set screw, stainless	M10 x 20
4	1	6344454	Mount. bracket,stand-up ctrls	

1500K, 1510K, 1720K, 1730K, 1820K, 1830K

Internal ref. 70 06 400

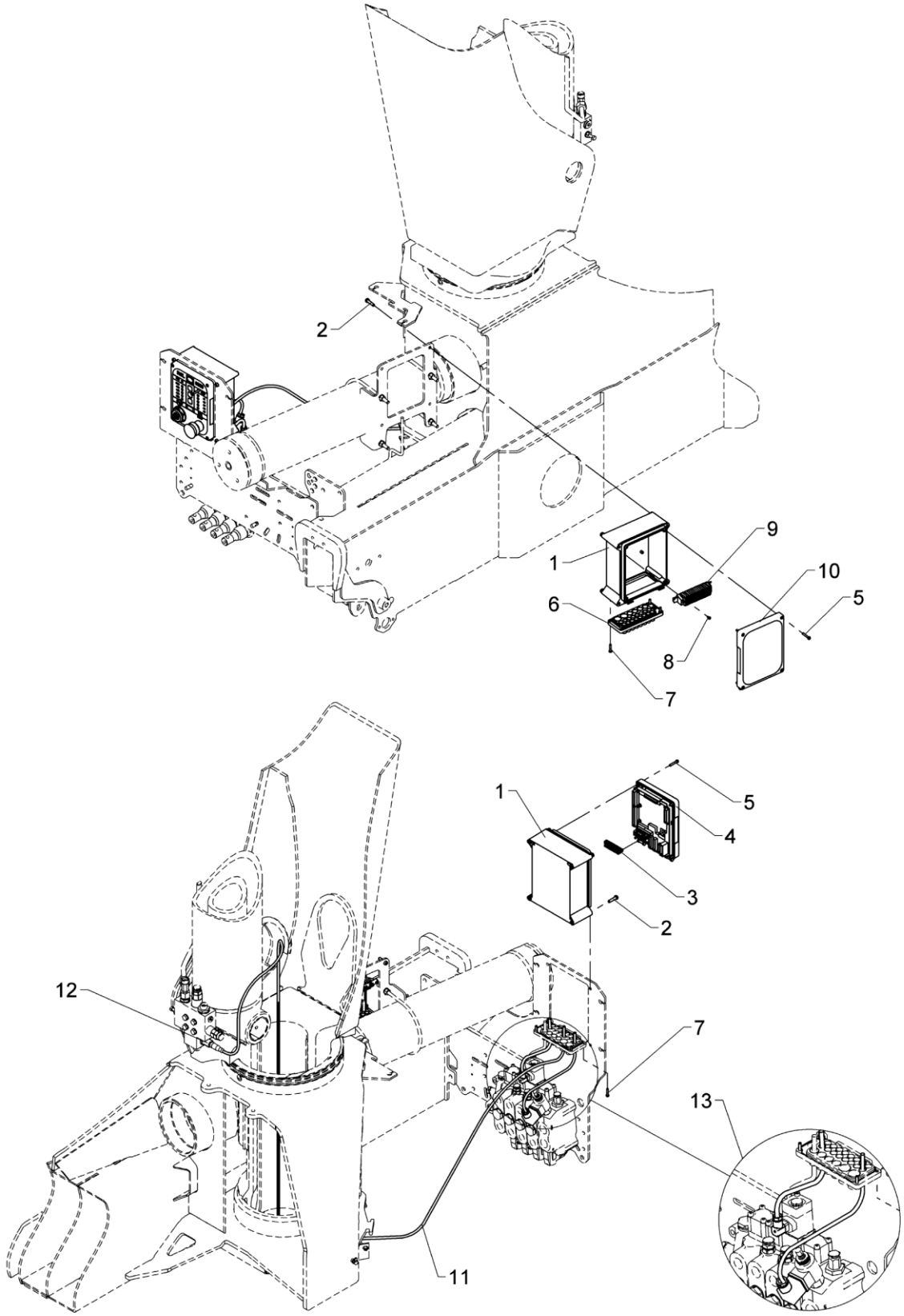

Obsolete

Basic electronic parts, crane without RC

534 20 510

From loader 1060001
To loader

Created 25-02-2013
Modified 17-05-2013

Pos	Qty.	Part no.	Description	Remarks
1	2	29304	Bottom f. RCL-box incl. hinge	
2	8	30340	Screw, stainless	6,0 x 25
3	1	29321	Plug, 10-polar for RCL 53XX	
4	1	29301	Front complete, RCL 5300	
5	8	30347	Screw, stainless	4,0 x 25
6	1	29307	Cable lead-in	
7	8	30346	Screw, stainless	4,0 x 20
8	2	30361	Screw, stainless	3,0 x 8
9	1	7006302	Terminal block, Box1	
10	1	29347	RCL 5300 indicator panel	
11	1	29224	Cable with socket, 5 m	
12	1	28850	Pressure transducer	
13	1	28719	Wiring, standard	

1500K, 1510K, 1720K, 1730K, 1820K, 1830K

70 07 940
70 07 930
Internal ref. 70 06 400

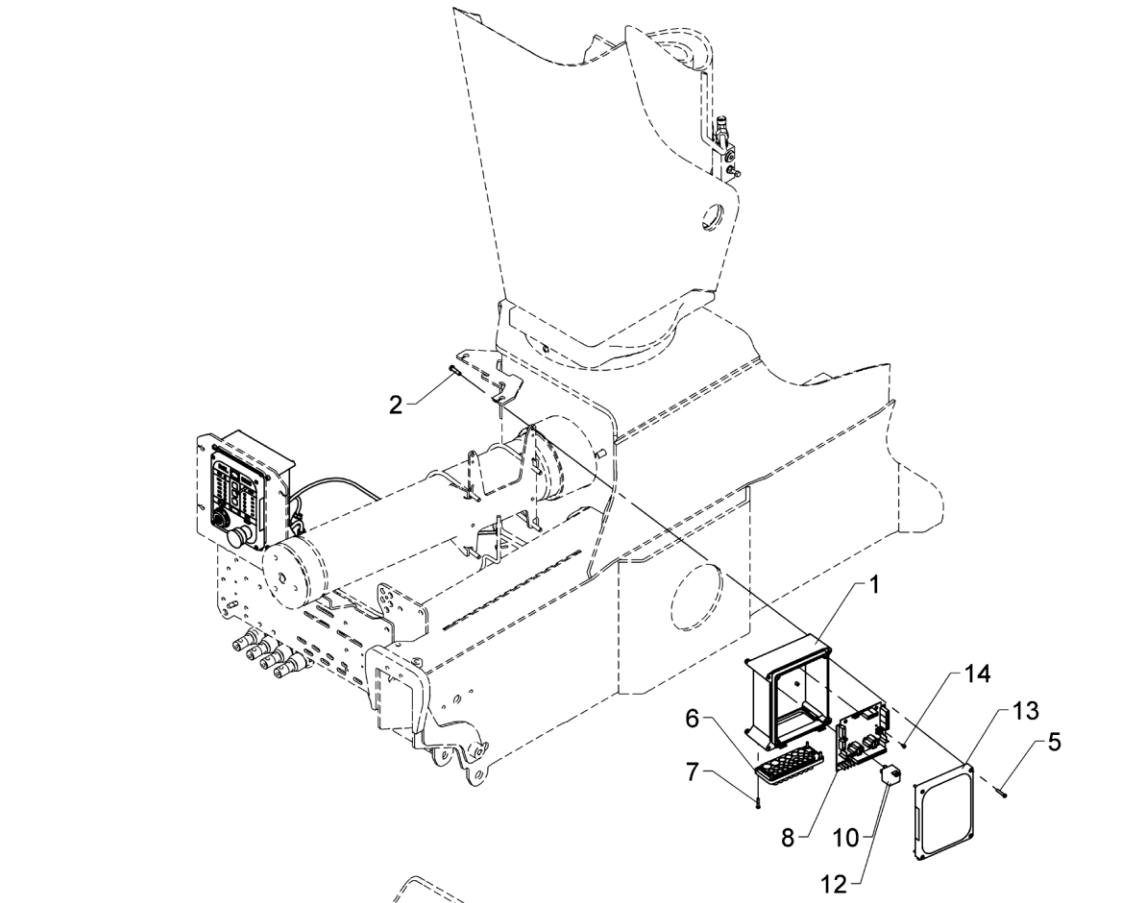

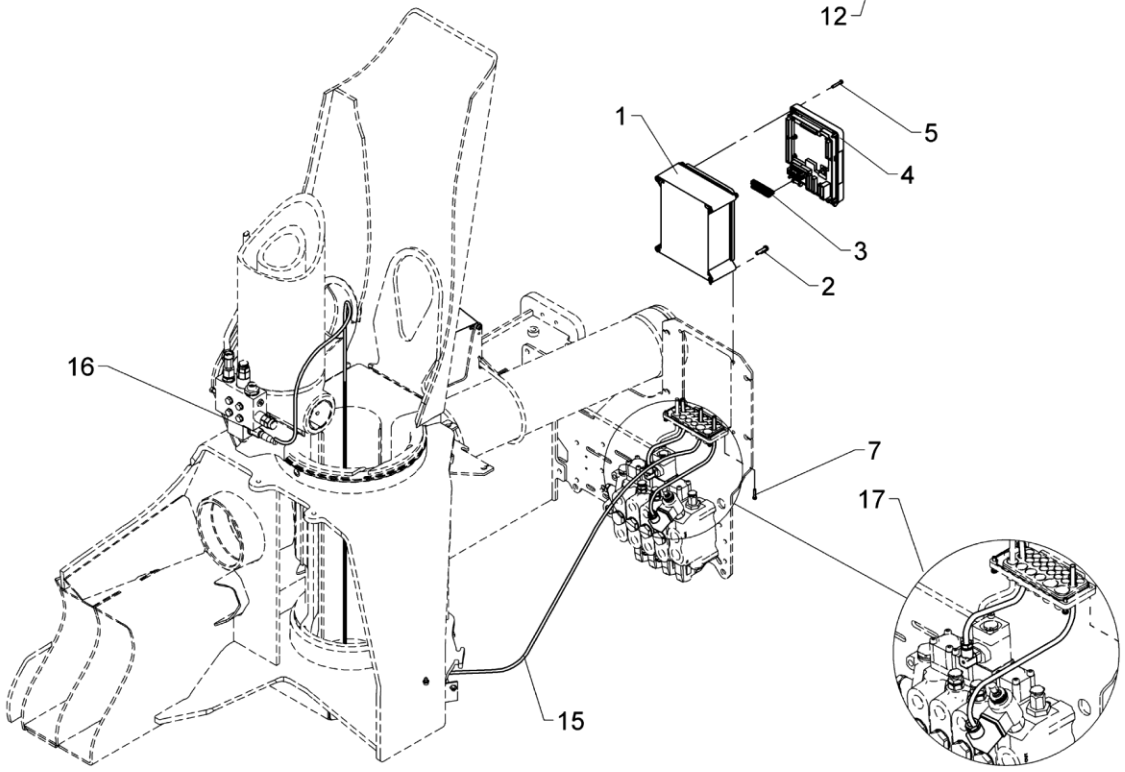

Basic electronic parts, crane without RC

Pos	Qty.	Part no.	Description	Remarks
		7006400	Basic parts,crane withoutRC+CE	
		7007930	Relay, 12 V	
		7007940	Relay, 24 V	
1	2	29304	Bottom f. RCL-box incl. hinge	
2	8	30340	Screw, stainless	6,0 x 25
3	1	29321	Plug, 10-polar for RCL 53XX	
4	1	29301	Front complete, RCL 5300	
5	8	30347	Screw, stainless	4,0 x 25
6	1	29307	Cable lead-in	
7	8	30346	Screw, stainless	4,0 x 20
8	1	29473	EJB5380	
9	1	7007930	Relay, 12 V	
10	1	27340	Relay, 12 V	
11	1	7007940	Relay, 24 V	
12	1	27342	Relay, 24V	
13	1	29347	RCL 5300 indicator panel	
14	6	30361	Screw, stainless	3,0 x 8
15	1	29224	Cable with socket, 5 m	
16	1	28850	Pressure transducer	
17	1	28719	Wiring, standard	

1500K, 1510K, 1720K, 1730K, 1820K, 1830K

Internal ref. 70 03 060

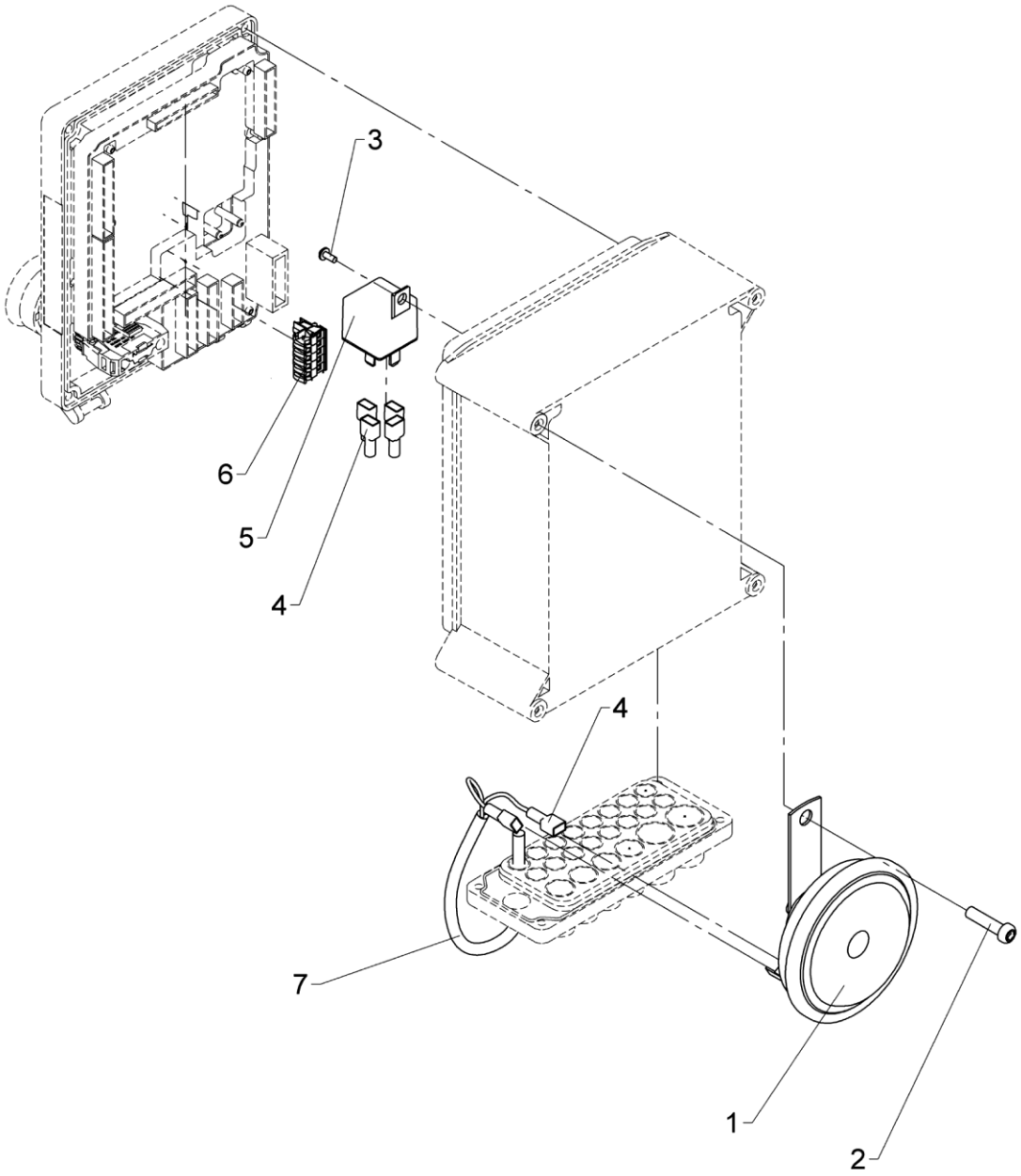

Horn, no RC

534 20 520

From loader 1060001
To loader

Created 01-05-2009
Modified

Pos	Qty.	Part no.	Description	Remarks
1	1	28971	Horn, 24 V, 2.5 Amp.	
2	1	30340	Screw, stainless	6,0 x 25
3	1	30361	Screw, stainless	3,0 x 8
4	6	27429	Clamp	
5	1	27342	Relay, 24V	
6	1	29317	Plug, 5-polar for RCL 53XX	
7	1	28249	Cable 2 x 0.75	0,8 m

1500K, 1510K, 1720K, 1730K, 1820K, 1830K

70 03 210
70 04 340
70 04 220
Internal ref. 70 05 310

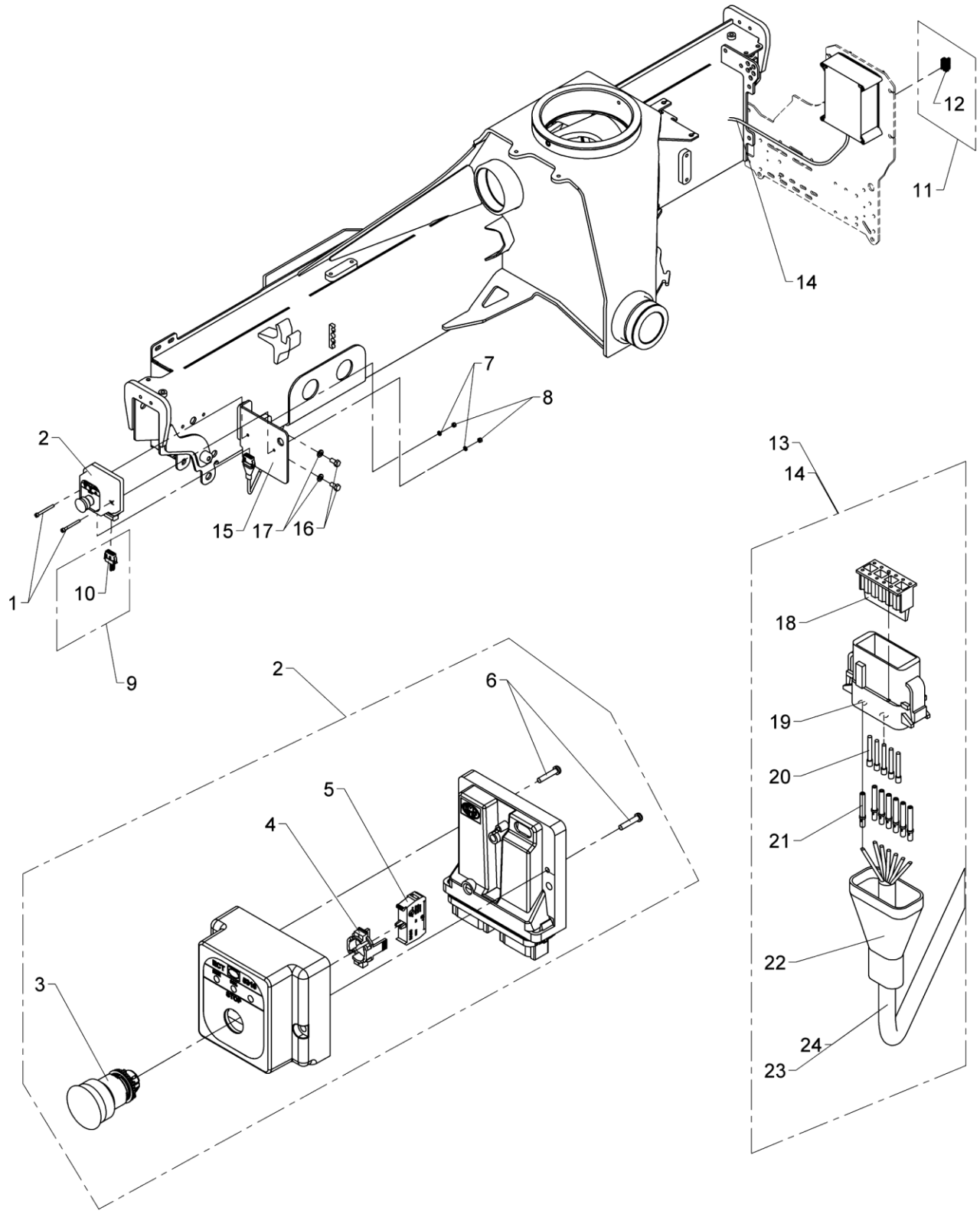

ECT 5310 on the side of the dual controls.

Pos	Qty.	Part no.	Description	Remarks
		7005310	ECT 5310, opposite valve block	
		7004220	CAN termination ECT5310	
		7004340	Plug, 7-polar for RCL	
		7003210		900K,.1130,,..1100K,..1330K
1	2	30441	Screw	MC6 x 60
2	1	29335	ECT5310 external stop button	
3	1	29196	Stop button	
4	1	29198	Attachment, stop button	
5	1	29197	Switch element, stop button	
6	2	30346	Screw, stainless	4,0 x 20
7	2	32302	Face washer, stainless	6 mm
8	2	30884	Lock nut, stainless	M6
9	1	7004220	CAN termination ECT5310	
10	1	29342	CAN termination ECT	
11	1	7004340	Plug, 7-polar for RCL	
12	1	29318	Plug, 7-polar for RCL 53XX	
13	1	7003040	4.5 m CAN+STOP cable ECT5310	900K,.1130,,..1100K,..1330K
14	1	7003030	3.5 m CAN+STOP cable ECT5310	
15	1	6340634	Fittings (stop button)	
16	2	31517	Set screw, stainless	M10 x 20
17	2	31177	Washer	10 mm
18	1	29328	Lock for plug for ECT5310	
19	1	29326	Plug, type A for ECT5310	
20	5	29339	Sealing for plug for ECT5310	
21	7	29329	Pin for plug for ECT5310	
22	1	28566	Insulation, black	10 cm
23	1	28263	CAN BUS cable	3,5 m / 900K,.1130,,..1100K,..1330
24	1	28263	CAN BUS cable	4,5 m / 900K,.1130,,..1100K,..1330

1500K, 1510K, 1720K, 1730K, 1820K, 1830K

63 42 120
Internal ref. 63 40 130

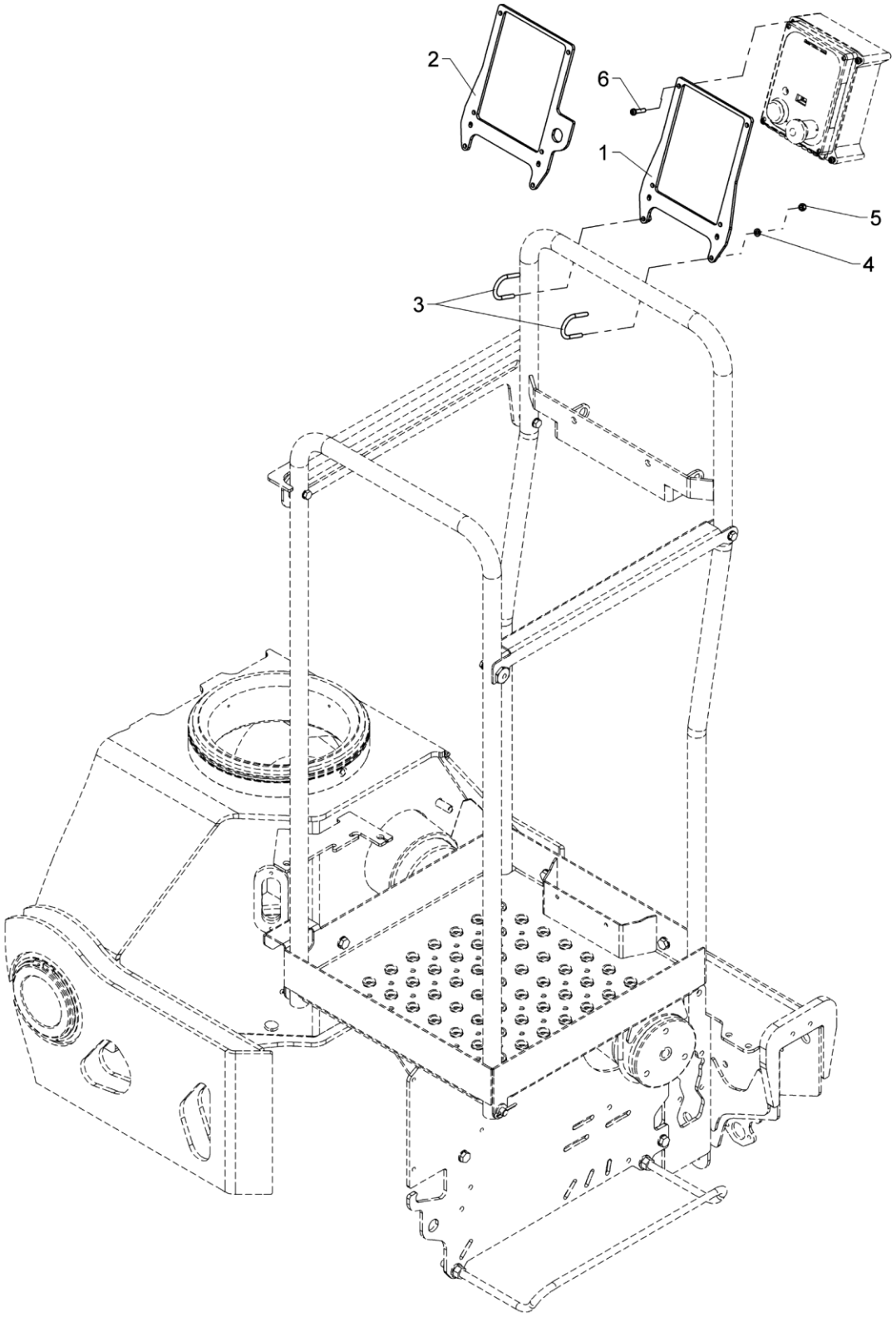

Mounting fittings for ECT 5320 (HS std.)

Created 25-02-2009
Modified 28-10-2011

Pos	Qty.	Part no.	Description	Remarks
		6340130	Fittings for ECT 5320	
		6342120	Fittings ECT5320(HSL-Q,dual c)	
1	1	6340479	Bracket for ECT 5320	(HS, std.)
2	1	6340579	Mounting fittings (ECT 5320)	(HSL-Q, dobb.styring)
3	2	6340903	Clamp	
4	4	32302	Face washer, stainless	6 mm
5	4	30884	Lock nut, stainless	M6
6	4	30340	Screw, stainless	6,0 x 25

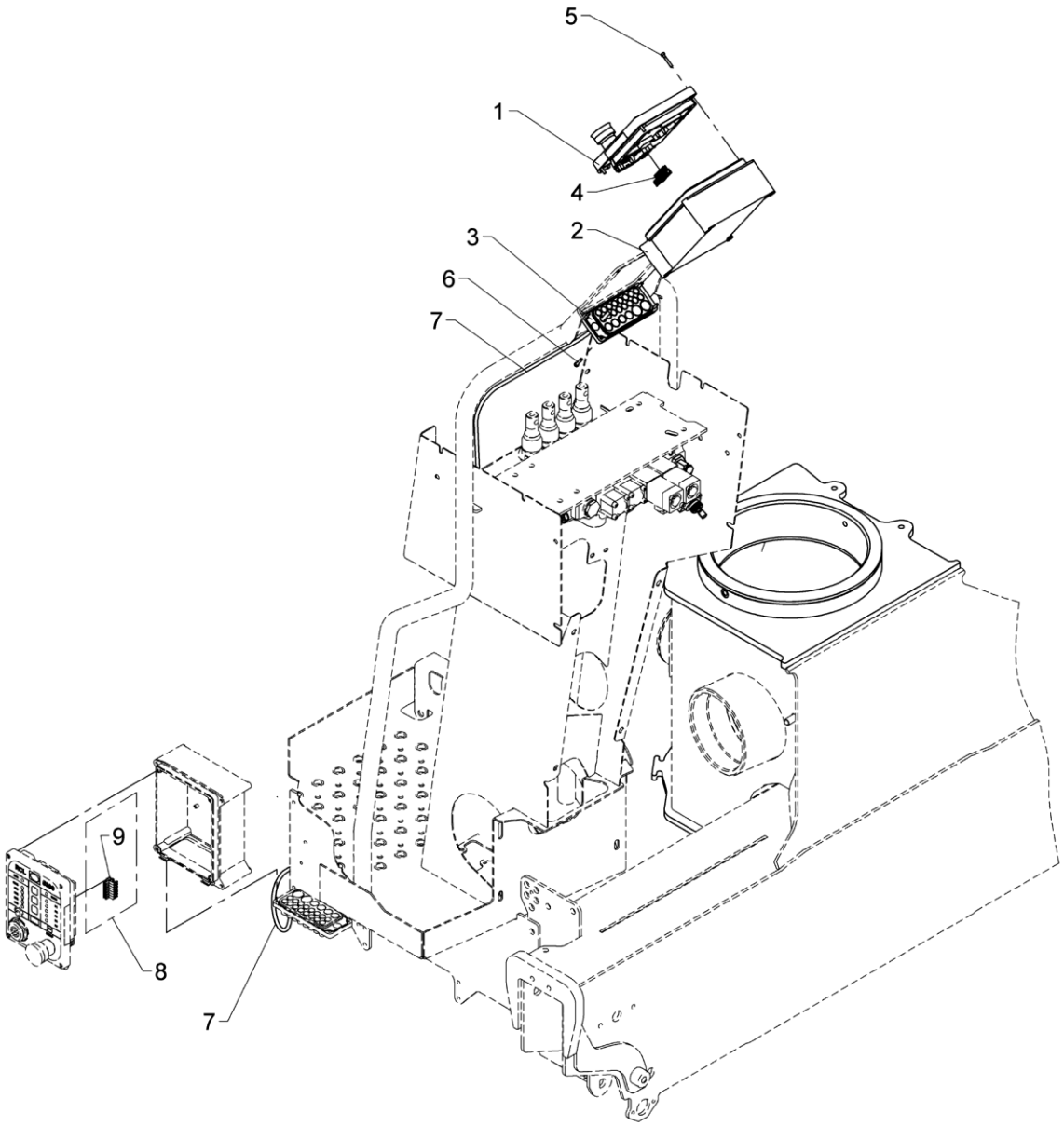
5
1
4
2
3
6
7
9
8
7

Obsolete

ECT 5320 on stand-up platform (HS)

534 20 540

From loader 1060001
To loader

Created 01-05-2009
Modified 30-11-2010

Pos	Qty.	Part no.	Description	Remarks
1	1	29303	Front complete, ECT5320	
2	1	29304	Bottom f. RCL-box incl. hinge	
3	1	29307	Cable lead-in	
4	1	29318	Plug, 7-polar for RCL 53XX	
5	4	30347	Screw, stainless	4,0 x 25
6	4	30346	Screw, stainless	4,0 x 20
7	1	28263	CAN BUS cable	4,5 m
8	1	7004340	Plug, 7-polar for RCL	
9	1	29318	Plug, 7-polar for RCL 53XX	

1500K, 1510K, 1720K, 1730K, 1820K, 1830K

Internal ref. 70 05 330

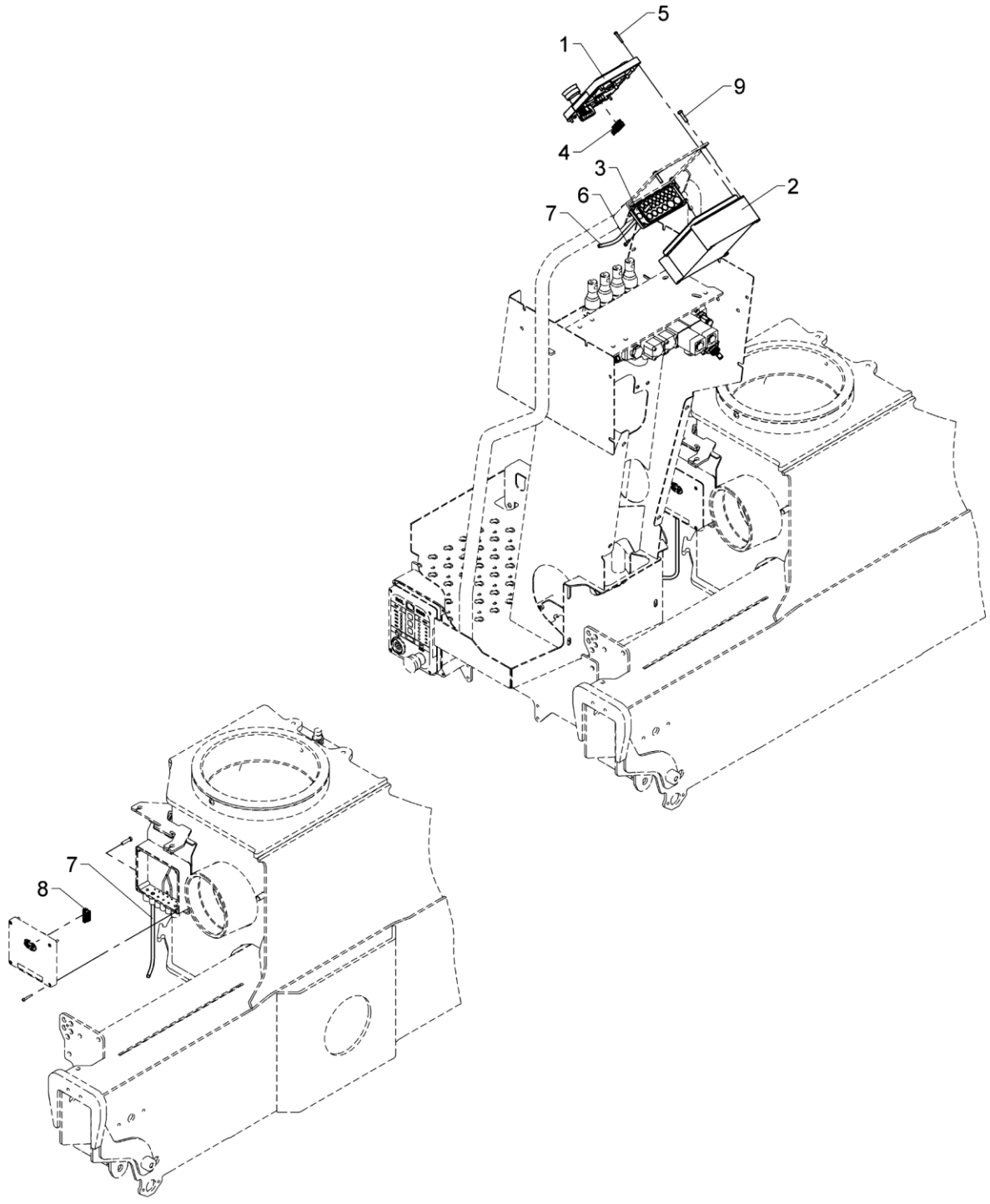

ECT 5320 on stand-up platform (HS)

Pos	Qty.	Part no.	Description	Remarks
1	1	29303	Front complete, ECT5320	
2	1	29304	Bottom f. RCL-box incl. hinge	
3	1	29307	Cable lead-in	
4	1	29318	Plug, 7-polar for RCL 53XX	
5	4	30347	Screw, stainless	4,0 x 25
6	4	30346	Screw, stainless	4,0 x 20
7	1	28263	CAN BUS cable	3,5 m
8	1	29317	Plug, 5-polar for RCL 53XX	
9	4	30340	Screw, stainless	6,0 x 25

1500K, 1510K, 1720K, 1730K, 1820K, 1830K

Internal ref. 70 06 430

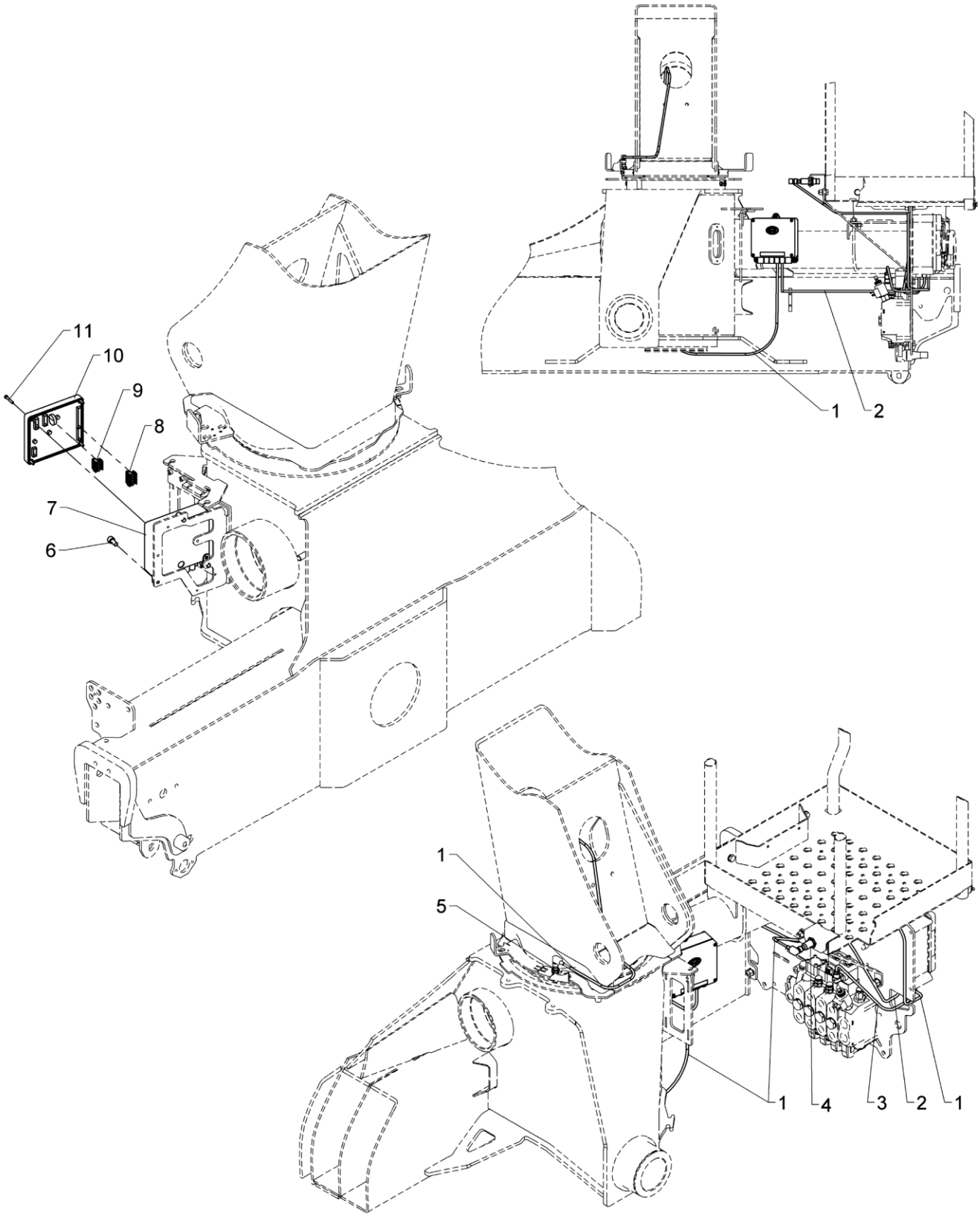

HSL

Pos	Qty.	Part no.	Description	Remarks
1	2	28117	Cable with plug	
2	1	28263	CAN BUS cable	2 m
3	1	28294	Cable, spool sensor	
4	1	28210	Proximity switch	
5	1	29447	Proximity switchM12 8mm PNP-NO	
6	3	30449	Screw	MC8 x 16
7	1	29313	Bottom f. Fly-Jib box	
8	1	29324	Plug, 6-polar for RCL 53XX	
9	1	29317	Plug, 5-polar for RCL 53XX	
10	1	29346	CIO5376 controller cover cpl.	
11	4	30347	Screw, stainless	4,0 x 25

1500K, 1510K, 1720K, 1730K, 1820K, 1830K

Internal ref. 70 06 430

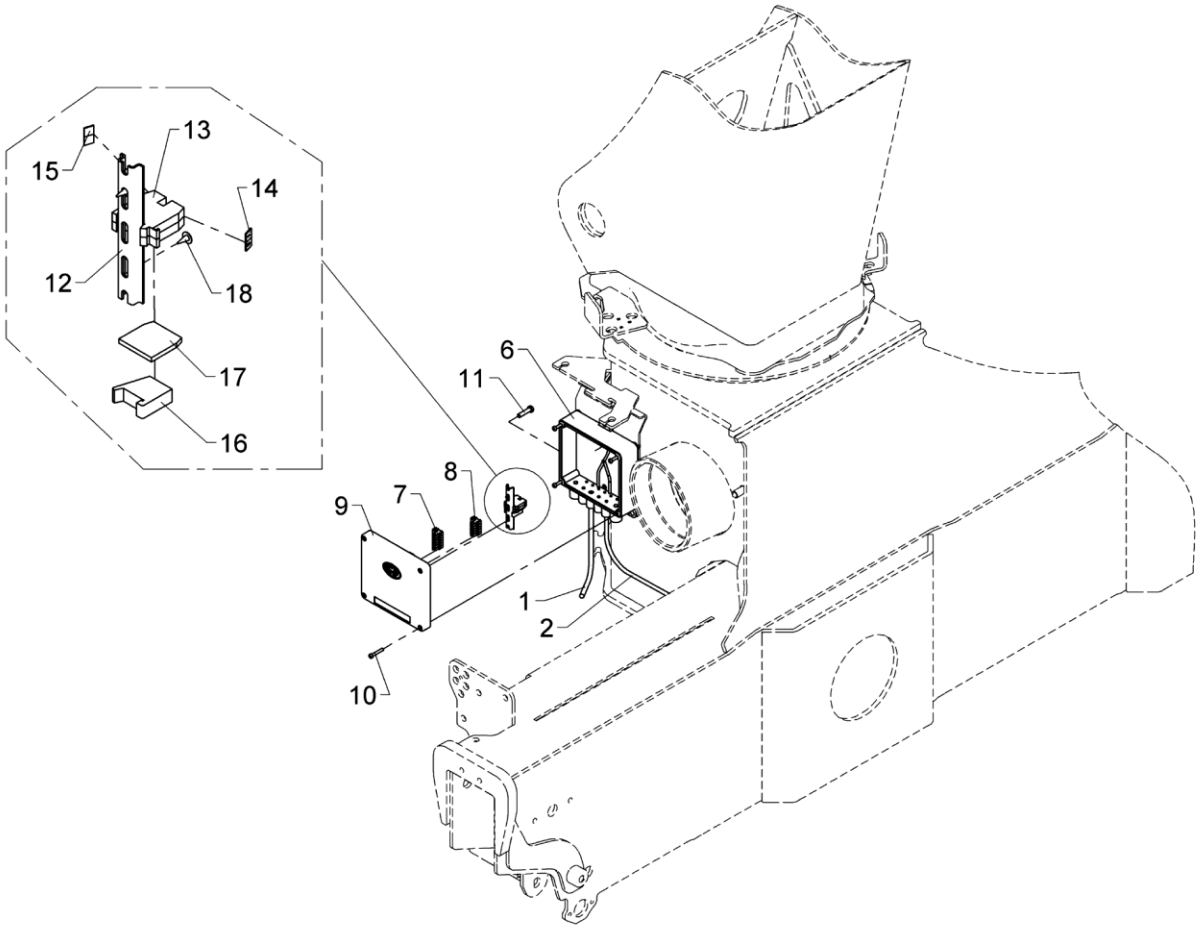

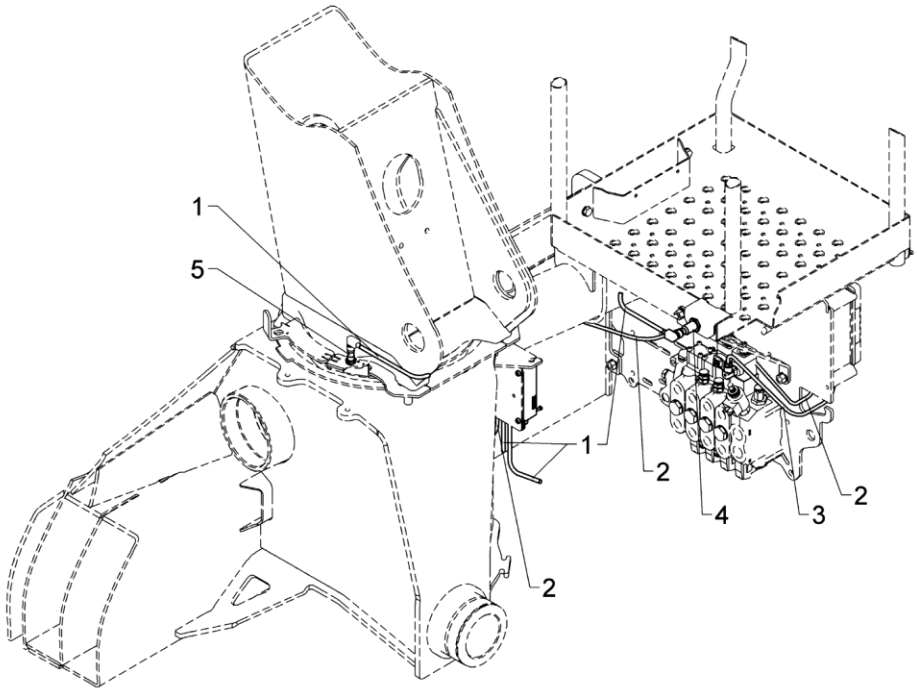

HSL

Pos	Qty.	Part no.	Description	Remarks
1	2	28117	Cable with plug	
2	1	28263	CAN BUS cable	2 m
3	1	28294	Cable, spool sensor	
4	1	28210	Proximity switch	
5	1	29447	Proximity switchM12 8mm PNP-NO	
6	1	29313	Bottom f. Fly-Jib box	
7	1	29324	Plug, 6-polar for RCL 53XX	
8	1	29317	Plug, 5-polar for RCL 53XX	
9	1	29346	CIO5376 controller cover cpl.	
10	4	30347	Screw, stainless	4,0 x 25
11	4	30340	Screw, stainless	6,0 x 25
12	1	28013	Guide rail	80 mm
13	2	28010	Terminal	
14	1	28019	Labels nos. 1-10	
15	1	28965	Dekafix labels 21-30	
16	1	28012	End angle	
17	1	28011	End plate	
18	2	28693	Screw	Ø2.9 x 6.5

1500K, 1510K, 1720K, 1730K, 1820K, 1830K

Internal ref. 70 06 700

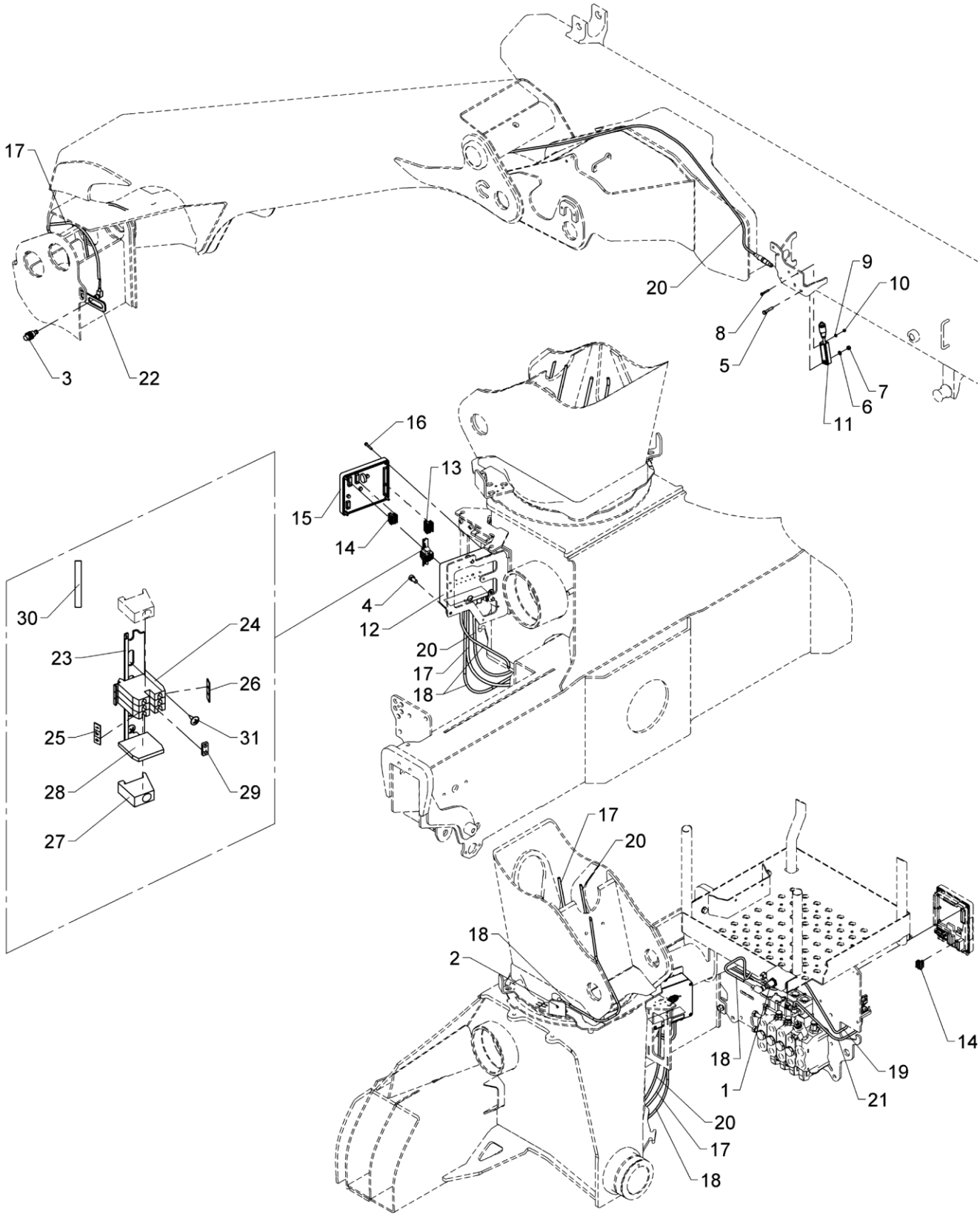

Obsolete

534 20 560

From loader 1060001
To loader

Created 22-10-2012
Modified

HSL-E

Pos	Qty.	Part no.	Description	Remarks
1	1	28210	Proximity switch	
2	1	29447	Proximity switchM12 8mm PNP-NO	
3	1	28980	Proximity switch	
4	3	30449	Screw	MC8 x 16
5	1	30116	Steel pin, stainless	M6 x 35
6	1	32302	Face washer, stainless	6 mm
7	1	30884	Lock nut, stainless	M6
8	1	31790	Set screw M4 x 30	M4 x 30
9	1	31188	Washer, stainless	4 mm
10	1	30857	Lock nut	M4
11	1	29295	Tilt sensor + 0.25 m cable	
12	1	29313	Bottom f. Fly-Jib box	
13	1	29324	Plug, 6-polar for RCL 53XX	
14	2	29317	Plug, 5-polar for RCL 53XX	
15	1	29346	CIO5376 controller cover cpl.	
16	4	30347	Screw, stainless	4,0 x 25
17	1	28077	Cable with plug	
18	2	28117	Cable with plug	
19	1	28263	CAN BUS cable	2 m
20	1	28730	Cable + socket, 10 m	9,0 m
21	1	28294	Cable, spool sensor	
22	1	6306803	Bracket for proximity switch	
23	1	28013	Guide rail	80 mm
24	3	28010	Terminal	
25	1	28019	Labels nos. 1-10	
26	1	28965	Dekafix labels 21-30	
27	1	28012	End angle	
28	1	28011	End plate	
29	1	28208	Fish plate	
30	1	27202	Cable	0,3 m
31	2	28693	Screw	Ø2.9 x 6.5

1500K, 1510K, 1720K, 1730K, 1820K, 1830K

Internal ref. 70 06 700

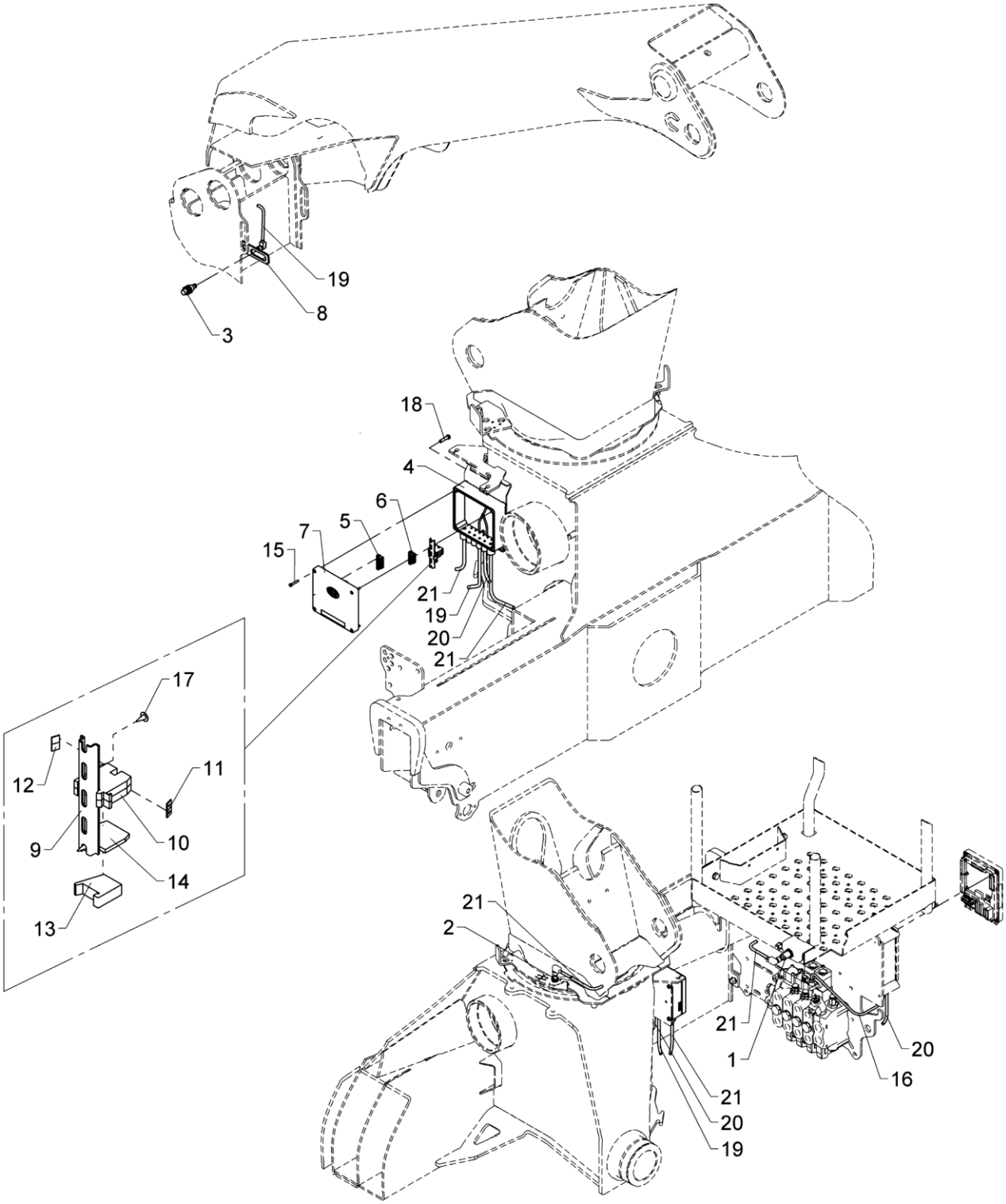

HSL-E

Pos	Qty.	Part no.	Description	Remarks
1	1	28210	Proximity switch	
2	1	29447	Proximity switchM12 8mm PNP-NO	
3	1	28980	Proximity switch	
4	1	29313	Bottom f. Fly-Jib box	
5	1	29324	Plug, 6-polar for RCL 53XX	
6	1	29317	Plug, 5-polar for RCL 53XX	
7	1	29346	CIO5376 controller cover cpl.	
8	1	6306803	Bracket for proximity switch	
9	1	28013	Guide rail	80 mm
10	2	28010	Terminal	
11	1	28019	Labels nos. 1-10	
12	1	28965	Dekafix labels 21-30	
13	1	28012	End angle	
14	1	28011	End plate	
15	4	30347	Screw, stainless	4,0 x 25
16	1	28294	Cable, spool sensor	
17	2	28693	Screw	Ø2.9 x 6.5
18	4	30340	Screw, stainless	6,0 x 25
19	1	28077	Cable with plug	
20	1	28263	CAN BUS cable	2 m
21	2	28117	Cable with plug	

1500K, 1510K, 1720K, 1730K, 1820K, 1830K

Internal ref. 70 06 710

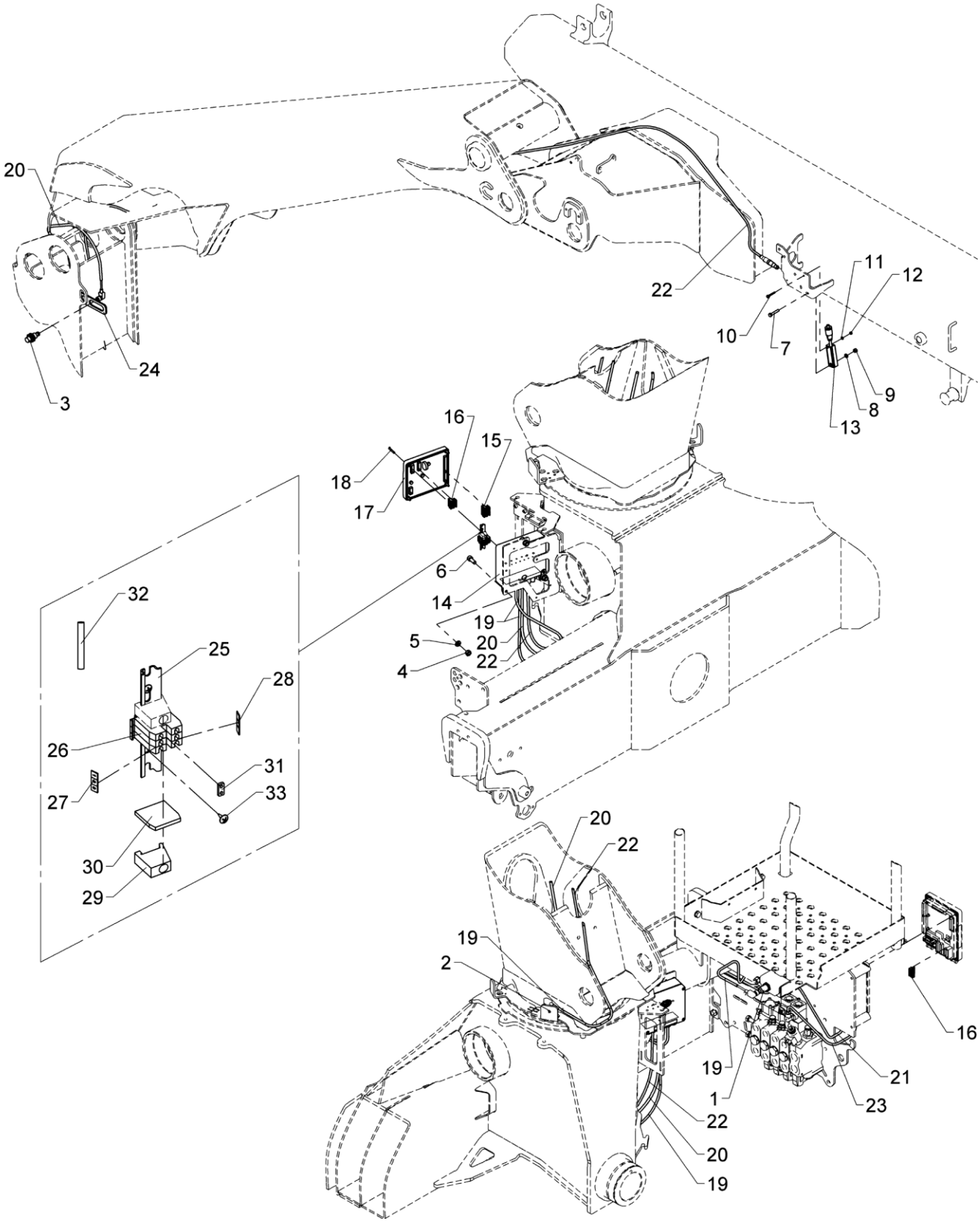

Obsolete

534 20 570

From loader 1060001
To loader

Created 22-10-2012
Modified

HSL-Q, single

Pos	Qty.	Part no.	Description	Remarks
1	1	28210	Proximity switch	
2	1	29447	Proximity switchM12 8mm PNP-NO	
3	1	28980	Proximity switch	
4	3	30856	Nut, stainless	M8
5	3	31147	Face washer, 8 mm	
6	3	30438	Screw	MC8 x 20
7	1	30116	Steel pin, stainless	M6 x 35
8	1	32302	Face washer, stainless	6 mm
9	1	30884	Lock nut, stainless	M6
10	1	31790	Set screw M4 x 30	M4 x 30
11	1	31188	Washer, stainless	4 mm
12	1	30857	Lock nut	M4
13	1	29295	Tilt sensor + 0.25 m cable	
14	1	29313	Bottom f. Fly-Jib box	
15	1	29324	Plug, 6-polar for RCL 53XX	
16	2	29317	Plug, 5-polar for RCL 53XX	
17	1	29346	CIO5376 controller cover cpl.	
18	4	30347	Screw, stainless	4,0 x 25
19	2	28117	Cable with plug	
20	1	28077	Cable with plug	
21	1	28263	CAN BUS cable	2 m
22	1	28730	Cable + socket, 10 m	9,0 m
23	1	28294	Cable, spool sensor	
24	1	6306803	Bracket for proximity switch	
25	1	28013	Guide rail	80 mm
26	3	28010	Terminal	
27	1	28019	Labels nos. 1-10	
28	1	28965	Dekafix labels 21-30	
29	1	28012	End angle	
30	1	28011	End plate	
31	1	28208	Fish plate	
32	1	27202	Cable	0,3 m
33	2	28693	Screw	Ø2.9 x 6.5

1500K, 1510K, 1720K, 1730K, 1820K, 1830K

Internal ref. 70 06 710

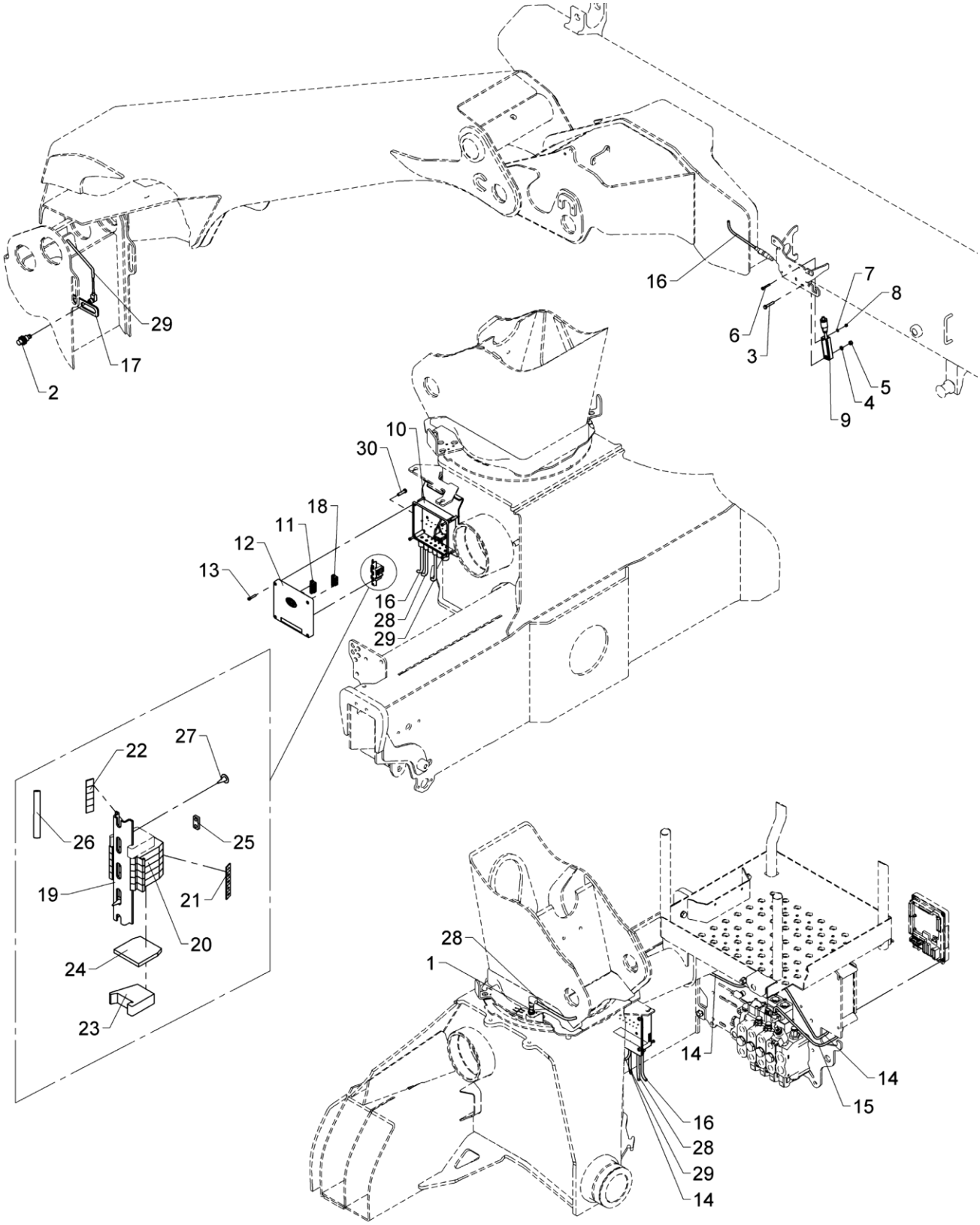

HSL-Q, single

Pos	Qty.	Part no.	Description	Remarks
1	1	29447	Proximity switchM12 8mm PNP-NO	
2	1	28980	Proximity switch	
3	1	30116	Steel pin, stainless	M6 x 35
4	1	32302	Face washer, stainless	6 mm
5	1	30884	Lock nut, stainless	M6
6	1	31790	Set screw M4 x 30	M4 x 30
7	1	31188	Washer, stainless	4 mm
8	1	30857	Lock nut	M4
9	1	29295	Tilt sensor + 0.25 m cable	
10	1	29313	Bottom f. Fly-Jib box	
11	1	29324	Plug, 6-polar for RCL 53XX	
12	1	29346	CIO5376 controller cover cpl.	
13	4	30347	Screw, stainless	4,0 x 25
14	1	28263	CAN BUS cable	2 m
15	1	28294	Cable, spool sensor	
16	1	28730	Cable + socket, 10 m	
17	1	6306803	Bracket for proximity switch	
18	1	29317	Plug, 5-polar for RCL 53XX	
19	1	28013	Guide rail	80 mm
20	5	28010	Terminal	
21	1	28019	Labels nos. 1-10	
22	1	28965	Dekafix labels 21-30	
23	1	28012	End angle	
24	1	28011	End plate	
25	1	28208	Fish plate	
26	1	27202	Cable	0,3 m
27	2	28693	Screw	Ø2.9 x 6.5
28	1	28117	Cable with plug	
29	1	28077	Cable with plug	
30	4	30340	Screw, stainless	6,0 x 25

1500K, 1510K, 1720K, 1730K, 1820K, 1830K

Internal ref. 70 06 720

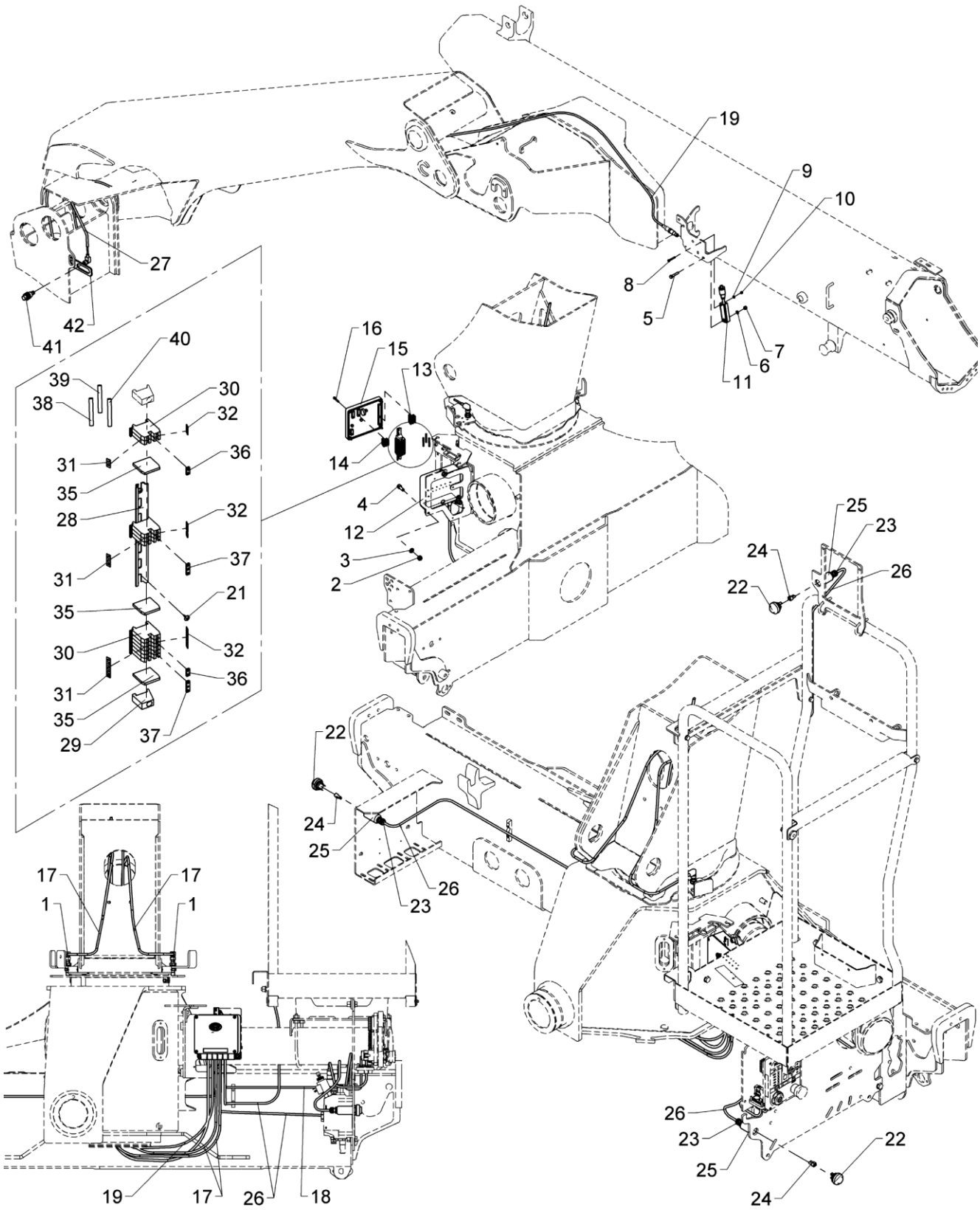

Obsolete

534 20 580

From loader 1060001
To loader

Created 22-10-2012
Modified 01-01-2014

HSL-Q, double

Pos	Qty.	Part no.	Description	Remarks
1	2	29447	Proximity switchM12 8mm PNP-NO	
2	3	30856	Nut, stainless	M8
3	3	31147	Face washer, 8 mm	
4	3	30438	Screw	MC8 x 20
5	1	30116	Steel pin, stainless	M6 x 35
6	1	32302	Face washer, stainless	6 mm
7	1	30884	Lock nut, stainless	M6
8	1	31790	Set screw M4 x 30	M4 x 30
9	1	31188	Washer, stainless	4 mm
10	1	30857	Lock nut	M4
11	1	29295	Tilt sensor + 0.25 m cable	
12	1	29313	Bottom f. Fly-Jib box	
13	1	29324	Plug, 6-polar for RCL 53XX	
14	2	29317	Plug, 5-polar for RCL 53XX	
15	1	29346	CIO5376 controller cover cpl.	
16	4	30347	Screw, stainless	4,0 x 25
17	2	28117	Cable with plug	
18	1	28263	CAN BUS cable	2 m
19	1	28730	Cable + socket, 10 m	9,0 m
20	1	28294	Cable, spool sensor	
21	2	28693	Screw	Ø2.9 x 6.5
22	3	27333	Push button	
23	3	28459	Connection	
24	6	27429	Clamp	
25	3	64574	Housing	
26	1	28148	Cable	6 m
27	1	28077	Cable with plug	
28	1	28013	Guide rail	110 mm.
29	1	28012	End angle	
30	11	28010	Terminal	
31	1	28019	Labels nos. 1-10	
32	1	28965	Dekafix labels 21-30	
33	1	29427	Dekafix marker 31-40	
34	1	28020	Labels nos. 11-20	
35	3	28011	End plate	
36	2	28208	Fish plate	
37	2	28014	Fish plate	
38	1	27202	Cable	0,3 m
39	1	27209	Wire 1 x 1,5 mm2	0,3 m
40	1	27204	Wire, 1 x1.5mm2	0,3 m
41	1	28980	Proximity switch	

1500K, 1510K, 1720K, 1730K, 1820K, 1830K

Internal ref. 70 06 720

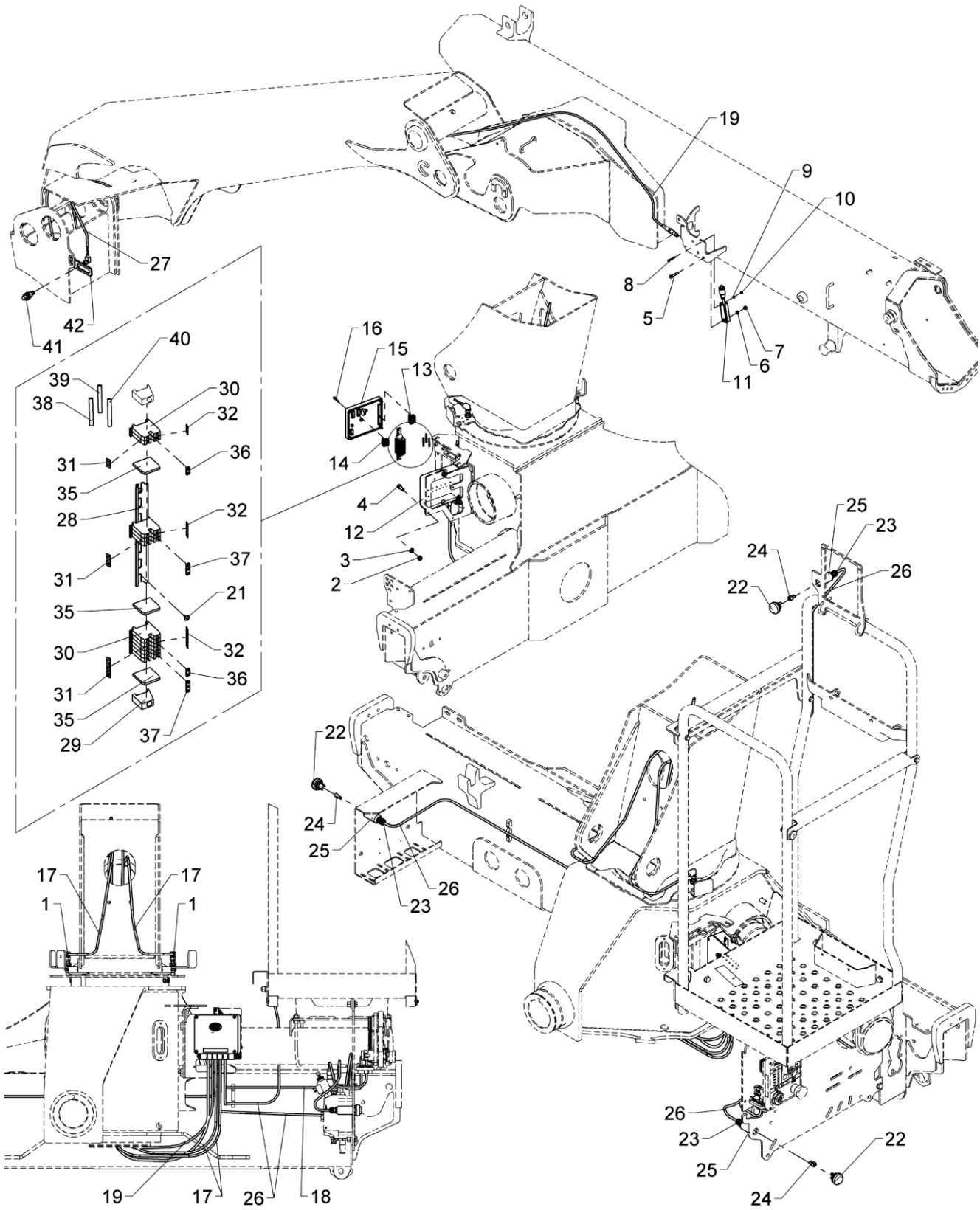

Obsolete

534 20 580

From loader 1060001
To loader

Created 22-10-2012
Modified 01-01-2014

HSL-Q, double

Pos	Qty.	Part no.	Description	Remarks
42	1	6306803	Bracket for proximity switch	

1500K, 1510K, 1720K, 1730K, 1820K, 1830K

Internal ref. 70 06 720

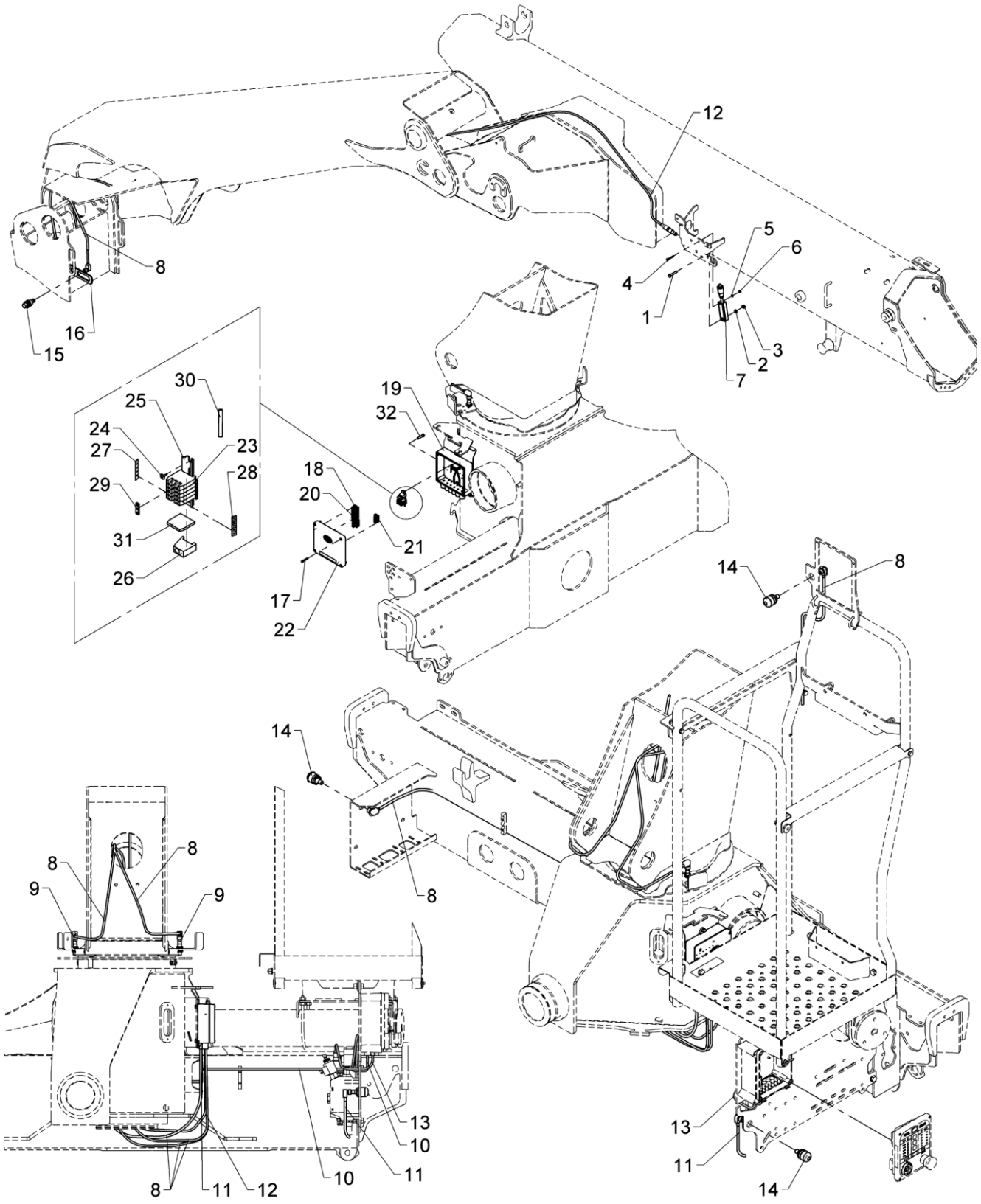

HSL-Q, double

Pos	Qty.	Part no.	Description	Remarks
1	1	30116	Steel pin, stainless	M6 x 35
2	1	32302	Face washer, stainless	6 mm
3	1	30884	Lock nut, stainless	M6
4	1	31790	Set screw M4 x 30	M4 x 30
5	1	31188	Washer, stainless	4 mm
6	1	30857	Lock nut	M4
7	1	29295	Tilt sensor + 0.25 m cable	
8	5	28077	Cable with plug	
9	2	29447	Proximity switchM12 8mm PNP-NO	
10	1	28263	CAN BUS cable	2 m
11	1	28117	Cable with plug	0,45 m
12	1	28730	Cable + socket, 10 m	
13	1	28294	Cable, spool sensor	
14	3	29498	Touch button with light	
15	1	28980	Proximity switch	
16	1	6306803	Bracket for proximity switch	
17	4	30347	Screw, stainless	4,0 x 25
18	1	29321	Plug, 10-polar for RCL 53XX	
19	1	29313	Bottom f. Fly-Jib box	
20	1	29324	Plug, 6-polar for RCL 53XX	
21	1	29317	Plug, 5-polar for RCL 53XX	
22	1	29346	CIO5376 controller cover cpl.	
23	5	28010	Terminal	
24	2	28693	Screw	Ø2.9 x 6.5
25	1	28013	Guide rail	60 mm.
26	1	28012	End angle	
27	1	28965	Dekafix labels 21-30	
28	1	28019	Labels nos. 1-10	
29	1	28014	Fish plate	
30	1	27209	Wire 1 x 1,5 mm2	0,3 m
31	1	28011	End plate	
32	4	30340	Screw, stainless	6,0 x 25

1500K, 1510K, 1720K, 1730K, 1820K, 1830K

Internal ref. 70 06 750

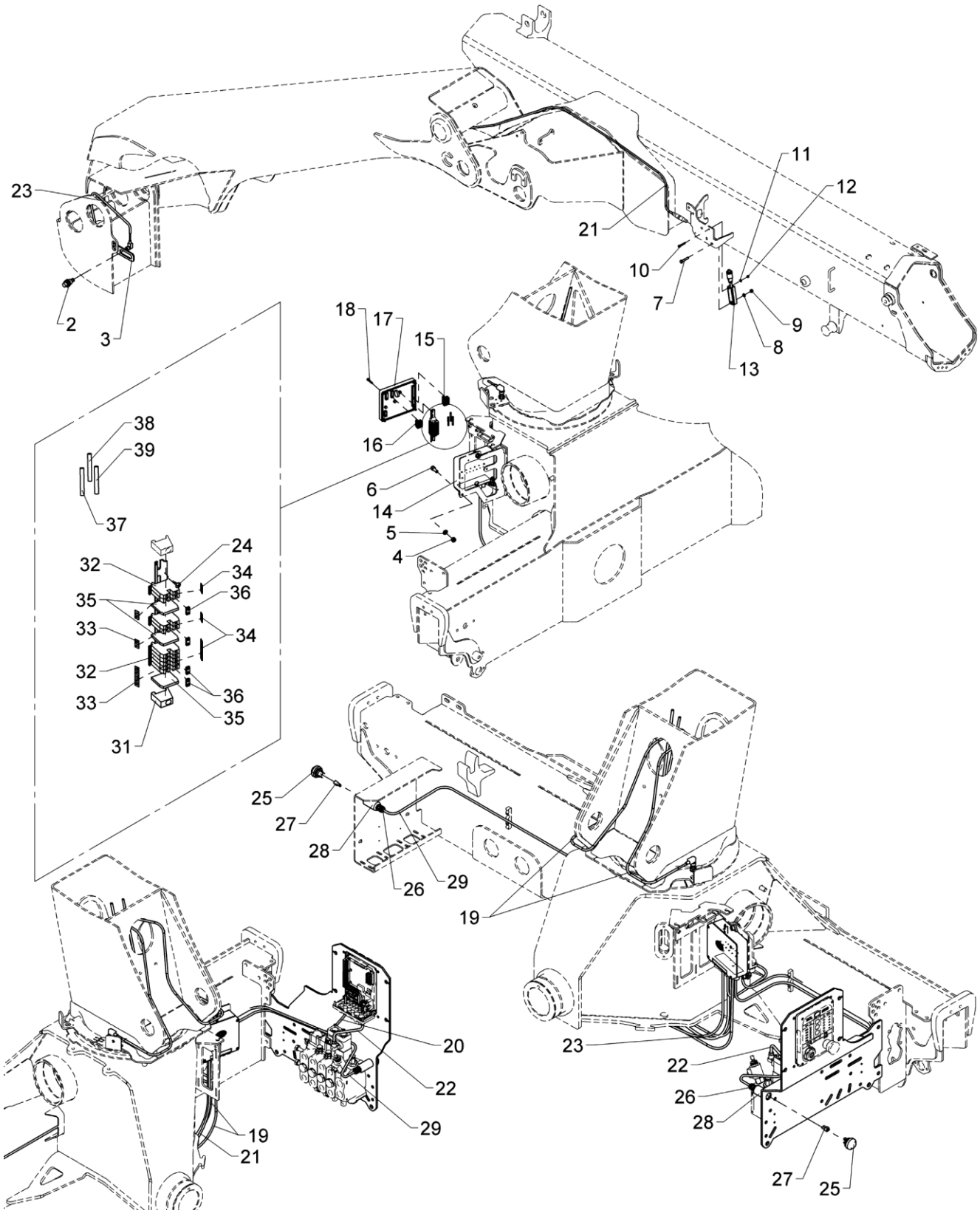

Obsolete

534 20 590

From loader 1060001
To loader

Created 22-10-2012
Modified 01-01-2014

QOPS, STD.

Pos	Qty.	Part no.	Description	Remarks
1	2	29447	Proximity switchM12 8mm PNP-NO	
2	1	28980	Proximity switch	
3	1	6306803	Bracket for proximity switch	
4	3	30856	Nut, stainless	M8
5	3	31147	Face washer, 8 mm	
6	3	30438	Screw	MC8 x 20
7	1	30116	Steel pin, stainless	M6 x 35
8	1	32302	Face washer, stainless	6 mm
9	1	30884	Lock nut, stainless	M6
10	1	31790	Set screw M4 x 30	M4 x 30
11	1	31188	Washer, stainless	4 mm
12	1	30857	Lock nut	M4
13	1	29295	Tilt sensor + 0.25 m cable	
14	1	29313	Bottom f. Fly-Jib box	
15	1	29324	Plug, 6-polar for RCL 53XX	
16	2	29317	Plug, 5-polar for RCL 53XX	
17	1	29346	CIO5376 controller cover cpl.	
18	4	30347	Screw, stainless	4,0 x 25
19	2	28117	Cable with plug	
20	1	28263	CAN BUS cable	2 m
21	1	28730	Cable + socket, 10 m	9,0 m
22	1	28294	Cable, spool sensor	
23	1	28077	Cable with plug	
24	2	28693	Screw	Ø2.9 x 6.5
25	2	27333	Push button	
26	2	28459	Connection	
27	4	27429	Clamp	
28	2	64574	Housing	
29	2	28148	Cable	4 m
30	1	28013	Guide rail	110 mm.
31	1	28012	End angle	
32	9	28010	Terminal	
33	1	28019	Labels nos. 1-10	
34	1	28965	Dekafix labels 21-30	
35	3	28011	End plate	
36	4	28208	Fish plate	
37	1	27202	Cable	0,3 m
38	1	27209	Wire 1 x 1,5 mm2	0,3 m
39	1	27204	Wire, 1 x1.5mm2	0,3 m

1500K, 1510K, 1720K, 1730K, 1820K, 1830K

Internal ref. 70 06 750

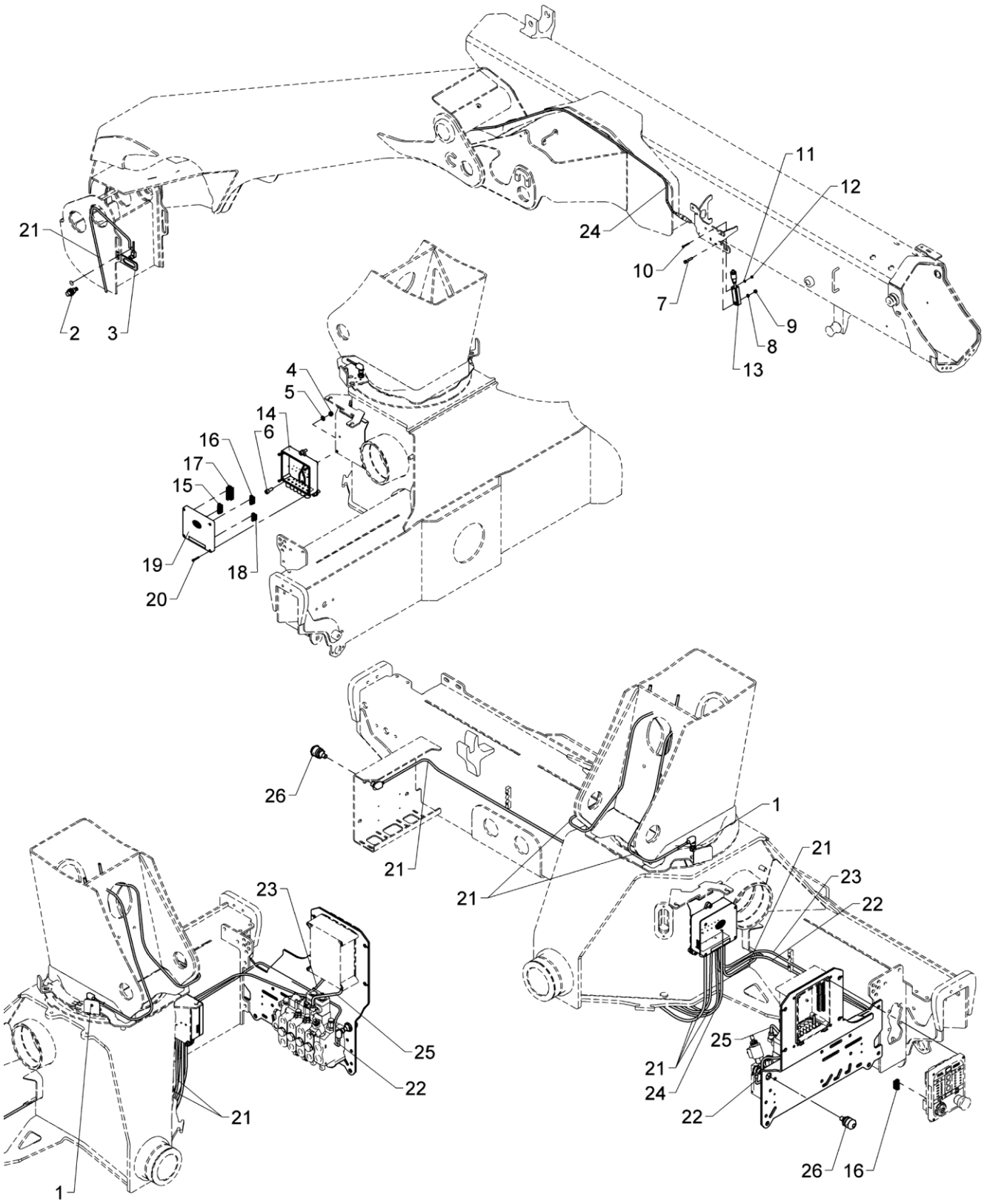

QOPS, STD.

Pos	Qty.	Part no.	Description	Remarks
1	2	29447	Proximity switchM12 8mm PNP-NO	
2	1	28980	Proximity switch	
3	1	6306803	Bracket for proximity switch	
4	3	30856	Nut, stainless	M8
5	3	31147	Face washer, 8 mm	
6	3	30438	Screw	MC8 x 20
7	1	30116	Steel pin, stainless	M6 x 35
8	1	32302	Face washer, stainless	6 mm
9	1	30884	Lock nut, stainless	M6
10	1	31790	Set screw M4 x 30	M4 x 30
11	1	31188	Washer, stainless	4 mm
12	1	30857	Lock nut	M4
13	1	29295	Tilt sensor + 0.25 m cable	
14	1	29313	Bottom f. Fly-Jib box	
15	1	29324	Plug, 6-polar for RCL 53XX	
16	2	29317	Plug, 5-polar for RCL 53XX	
17	1	29321	Plug, 10-polar for RCL 53XX	
18	1	29323	Plug, 4-polar for RCL 53XX	
19	1	29346	CIO5376 controller cover cpl.	
20	4	30347	Screw, stainless	4,0 x 25
21	4	28077	Cable with plug	
22	1	28117	Cable with plug	
23	1	28263	CAN BUS cable	2 m
24	1	28730	Cable + socket, 10 m	
25	1	28294	Cable, spool sensor	
26	2	29498	Touch button with light	

1500K, 1510K, 1720K, 1730K, 1820K, 1830K

Internal ref. 70 07 360

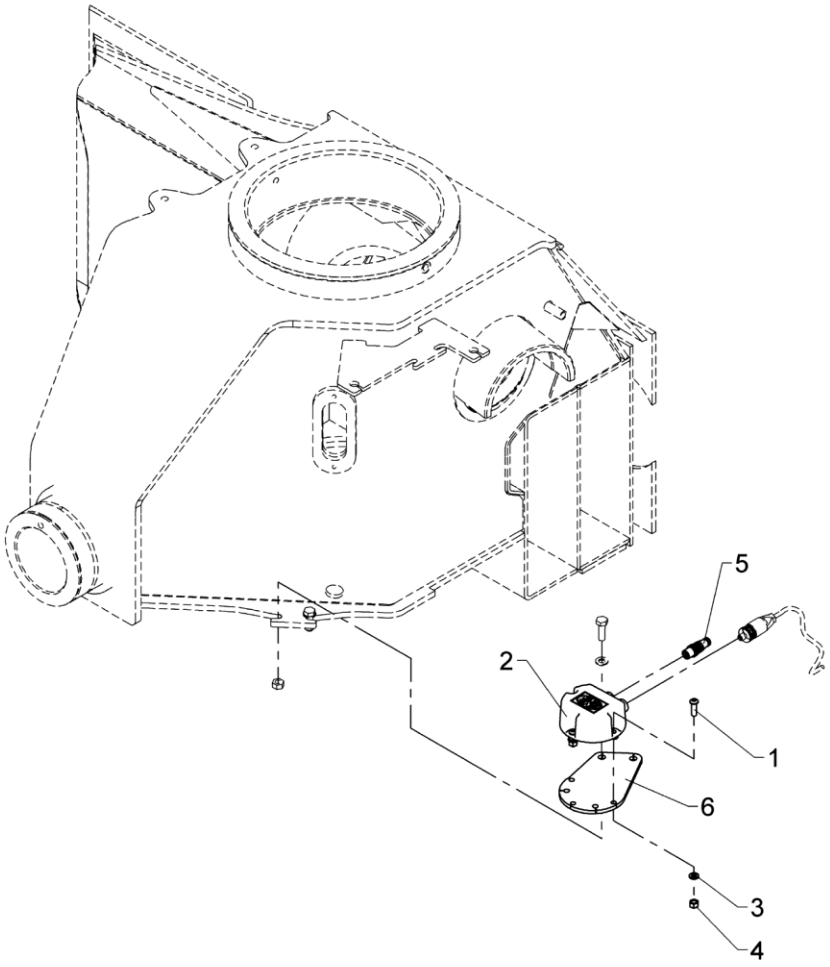

EVS, G2 + HDL

Pos	Qty.	Part no.	Description	Remarks
1	3	32491	Round-head screw	M6 x 20
2	1	29426	Electronic inclinometer,single	
3	3	32302	Face washer, stainless	6 mm
4	3	30884	Lock nut, stainless	M6
5	1	29486	Plug M12, termination	
6	1	6340274	Mounting fittings (AIC 5062)	

1500K, 1510K, 1720K, 1730K, 1820K, 1830K

Internal ref. 70 07 370

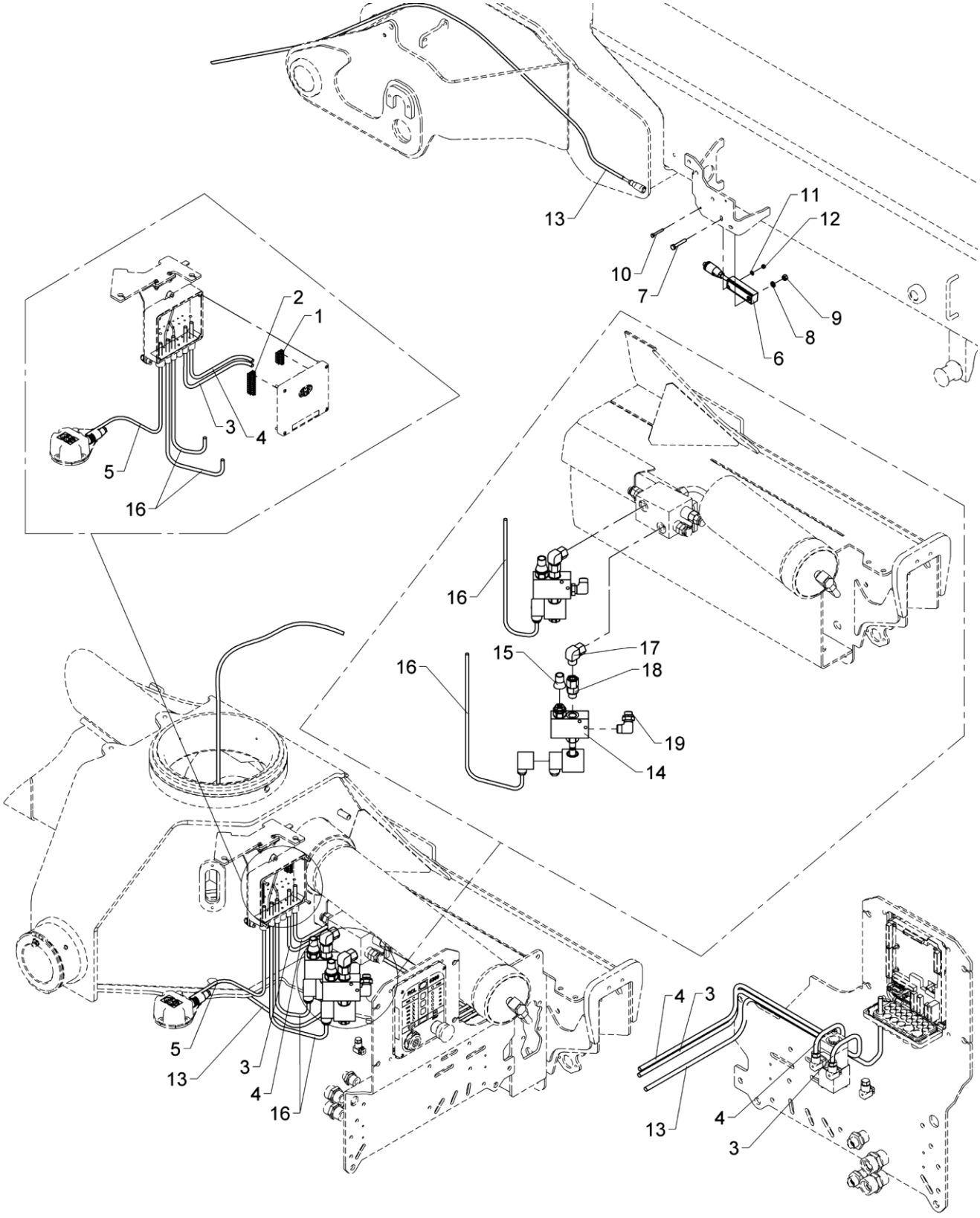

Obsolete

534 20 610

From loader 1060001
To loader

Created 21-08-2012
Modified 23-10-2012

EVS, knuckle boom crane without RC with HS or QOPS

Pos	Qty.	Part no.	Description	Remarks
1	1	29317	Plug, 5-polar for RCL 53XX	
2	1	29321	Plug, 10-polar for RCL 53XX	
3	1	28268	Cable, spool sensor, jib	
4	1	28269	Cable, spool sensor, extension	
5	1	29456	CAN cable, M12, 2 m, female	
6	1	29295	Tilt sensor + 0.25 m cable	
7	1	30116	Steel pin, stainless	M6 x 35
8	1	32302	Face washer, stainless	6 mm
9	1	30884	Lock nut, stainless	M6
10	1	31790	Set screw M4 x 30	M4 x 30
11	1	31188	Washer, stainless	4 mm
12	1	30857	Lock nut	M4
13	1	28730	Cable + socket, 10 m	
14	2	50517	Valve	
15	2	50518	Cover for sealing	
16	2	28265	Cable, dump valve, 1.35 m	
17	2	25242	Elbow connection	EWSD 12 L
18	2	25240	Connection	EGESD 12 LR-WD
19	2	26897	Elbow connection	12 mm - 3/8"

1500K, 1510K, 1720K, 1730K, 1820K, 1830K

Internal ref. 70 07 370

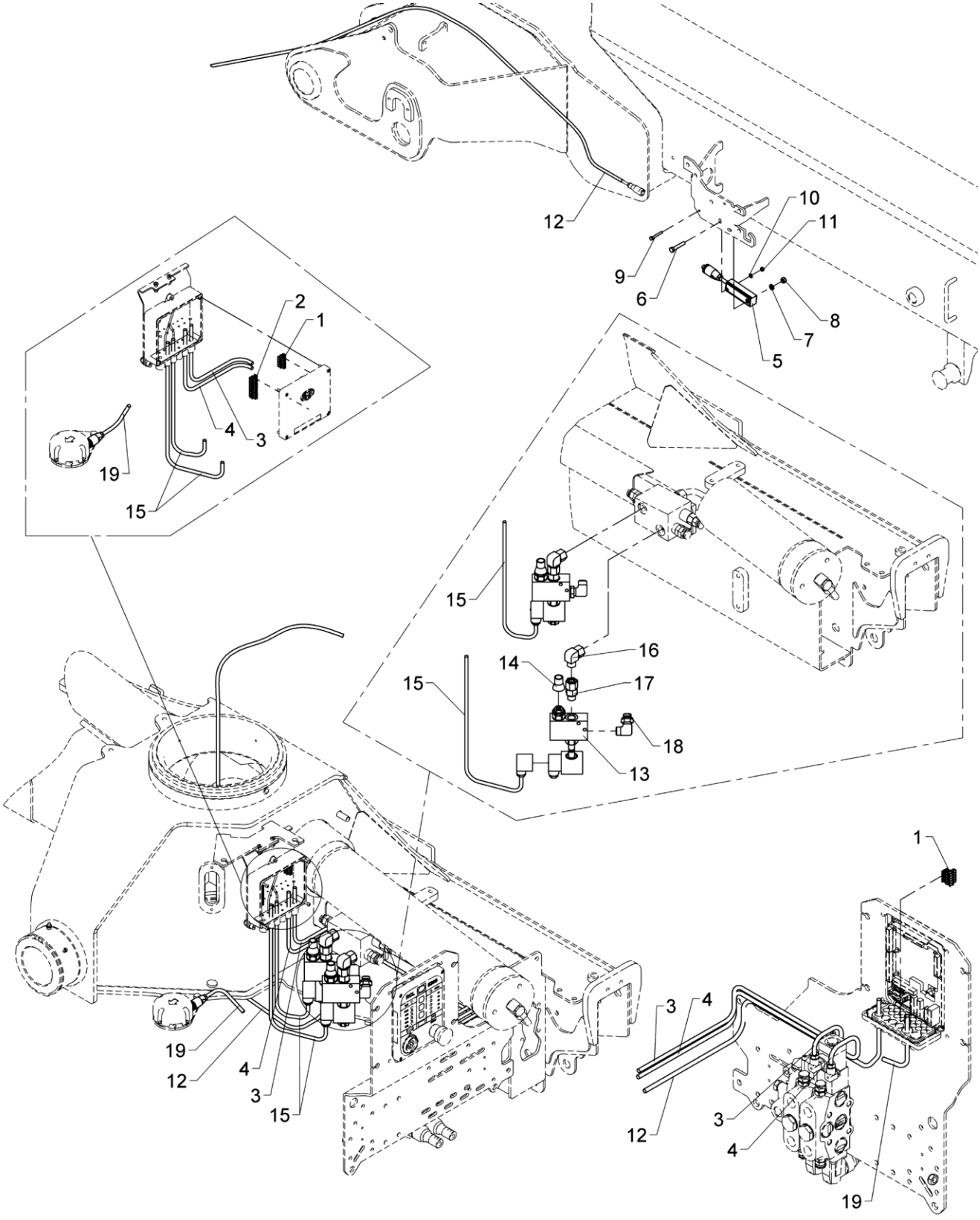

EVS, knuckle boom crane without RC with HS or QOPS

Pos	Qty.	Part no.	Description	Remarks
1	2	29317	Plug, 5-polar for RCL 53XX	
2	1	29321	Plug, 10-polar for RCL 53XX	
3	1	28269	Cable, spool sensor, extension	
4	1	28268	Cable, spool sensor, jib	
5	1	29295	Tilt sensor + 0.25 m cable	
6	1	30116	Steel pin, stainless	M6 x 35
7	1	32302	Face washer, stainless	6 mm
8	1	30884	Lock nut, stainless	M6
9	1	31790	Set screw M4 x 30	M4 x 30
10	1	31188	Washer, stainless	4 mm
11	1	30857	Lock nut	M4
12	1	28730	Cable + socket, 10 m	
13	2	50517	Valve	
14	2	50518	Cover for sealing	
15	2	28265	Cable, dump valve, 1.35 m	
16	2	25242	Elbow connection	EWSD 12 L
17	2	25240	Connection	EGESD 12 LR-WD
18	2	26897	Elbow connection	12 mm - 3/8"
19	1	29456	CAN cable, M12, 2 m, female	

1500K, 1510K, 1720K, 1730K, 1820K, 1830K

Internal ref. 70 04 500

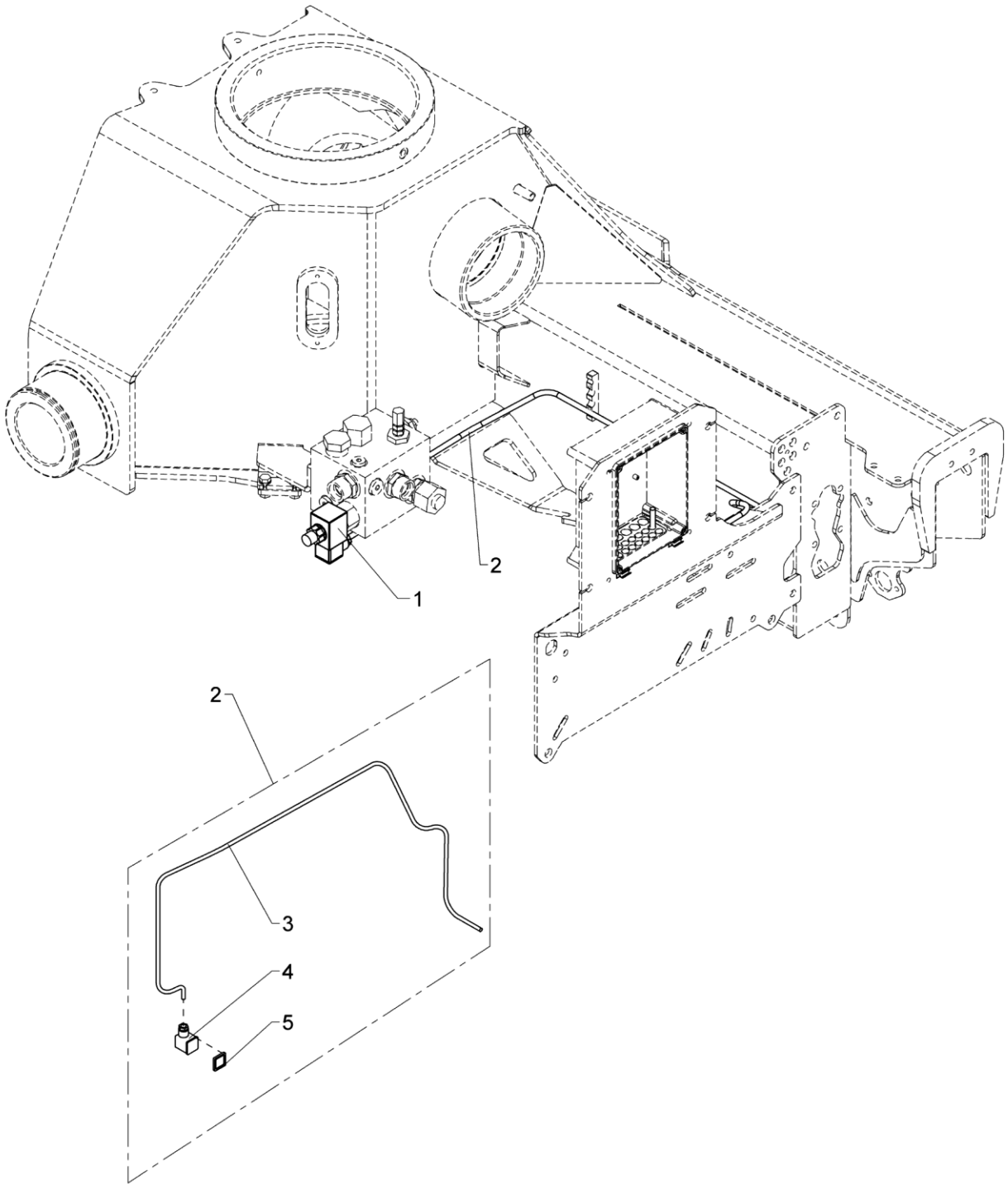

HDL without RC

Pos	Qty.	Part no.	Description	Remarks
1	1	61778	Solenoid	
2	1	28265	Cable, dump valve, 1.35 m	
3	1	28249	Cable 2 x 0.75	
4	1	28258	Plug, solenoid valve	
5	1	28840	Seal	

1500K, 1510K, 1720K, 1730K, 1820K, 1830K

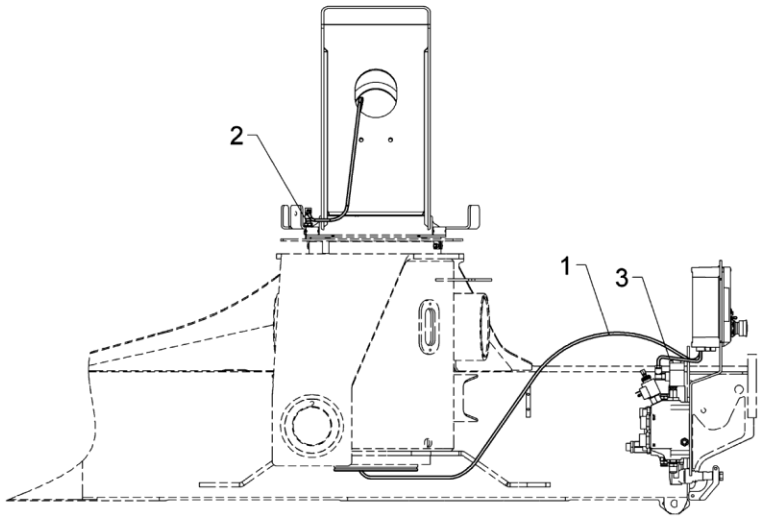

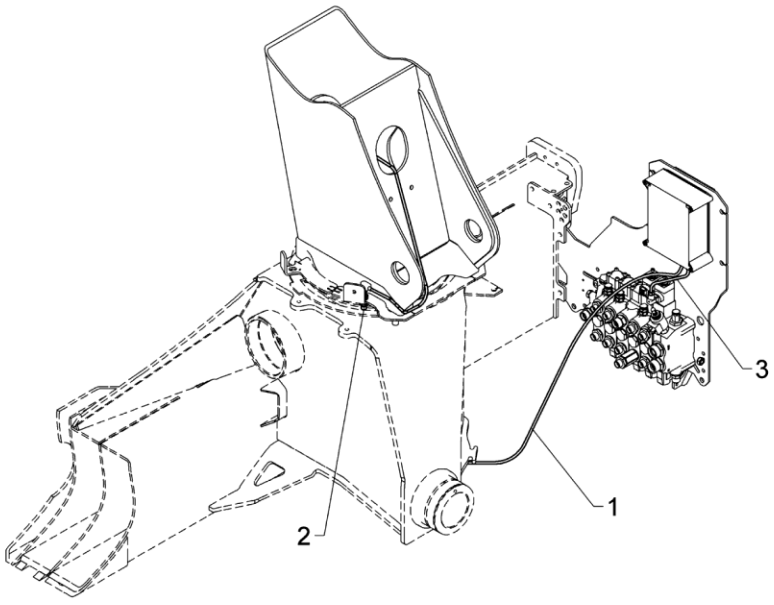

2-stage LMB, without RC

534 20 630

From loader 1060001
To loader

Created 18-07-2014
Modified

Pos	Qty.	Part no.	Description	Remarks
1	1	28077	Cable with plug	2,7 m
2	1	29447	Proximity switchM12 8mm PNP-NO	
3	1	28294	Cable, spool sensor	

1500K, 1510K, 1720K, 1730K, 1820K, 1830K

Internal ref. 70 06 200

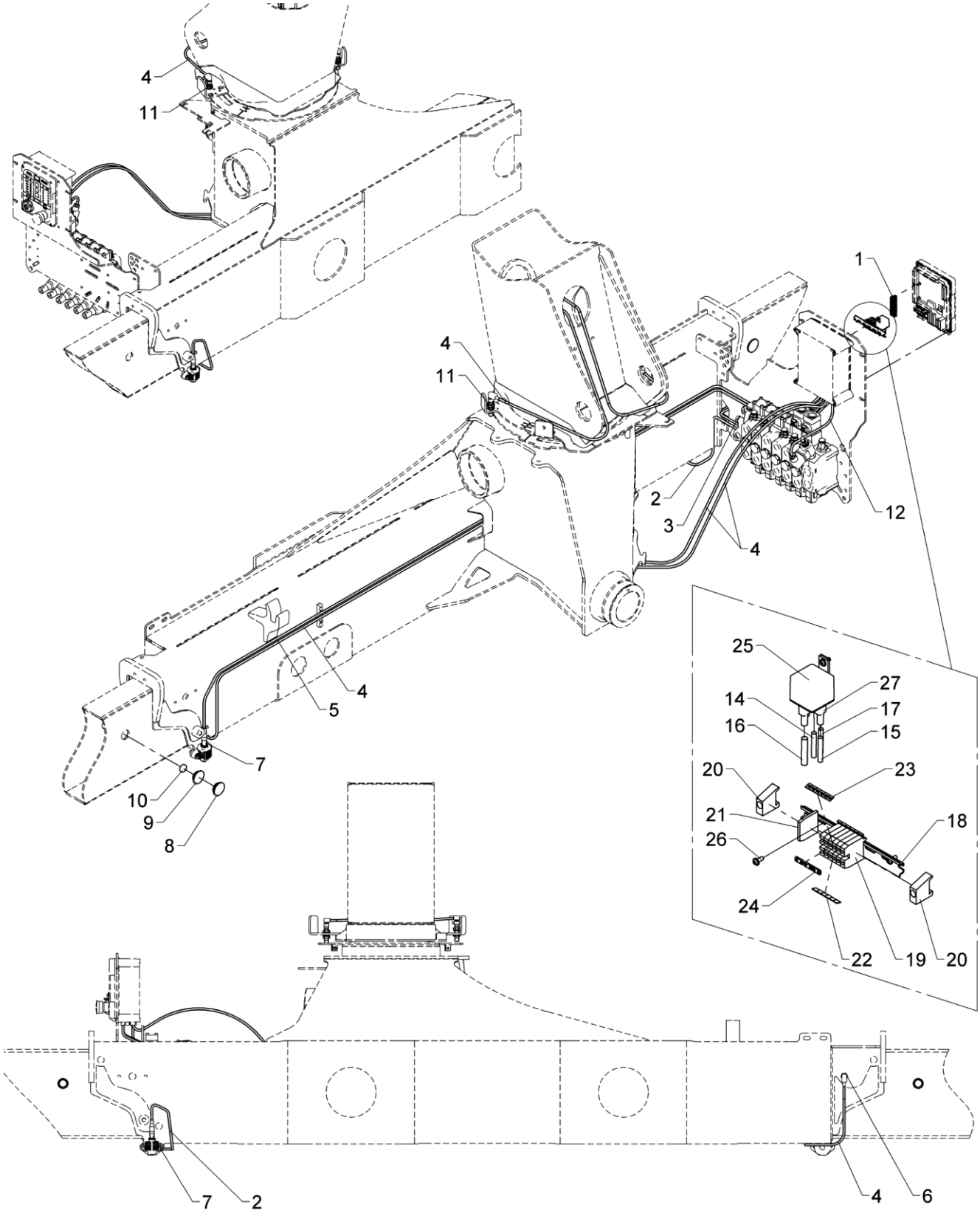

Obsolete

534 20 650

From loader 1060001
To loader

Created 25-02-2013
Modified

2CYBEL, single extension (manual)

Pos	Qty.	Part no.	Description	Remarks
1	1	29322	Plug, 12-polar for RCL 53XX	
2	1	29223	Cable with socket, 2 m	1,4
3	1	28117	Cable with plug	
4	3	28077	Cable with plug	
5	1	29224	Cable with socket, 5 m	2,7
6	2	29259	Magnet proximity switch M12	
7	2	29257	Proximity switch M12x44, 4mm	
8	2	63681	Slide block	3 mm
9	2	64424	Slide block	2 mm
10	2	29262	Solenoid Ø22x5	
11	2	29447	Proximity switchM12 8mm PNP-NO	
12	1	28294	Cable, spool sensor	
13	1	27202	Cable	0,3 m
14	1	27203	Cable	0,3 m
15	1	27209	Wire 1 x 1,5 mm2	0,3 m
16	1	27205	Wire, 1 x 1.5mm2	0,3 m
17	1	27206	Wire, 1 x 1.5mm2	0,3 m
18	1	28013	Guide rail	120 mm.
19	6	28010	Terminal	
20	2	28012	End angle	
21	1	28011	End plate	
22	1	29427	Dekafix marker 31-40	
23	1	28020	Labels nos. 11-20	
24	3	28208	Fish plate	
25	1	27342	Relay, 24V	
26	3	30361	Screw, stainless	3,0 x 8
27	4	27429	Clamp	

1500K, 1510K, 1720K, 1730K, 1820K, 1830K

Internal ref. 70 06 200

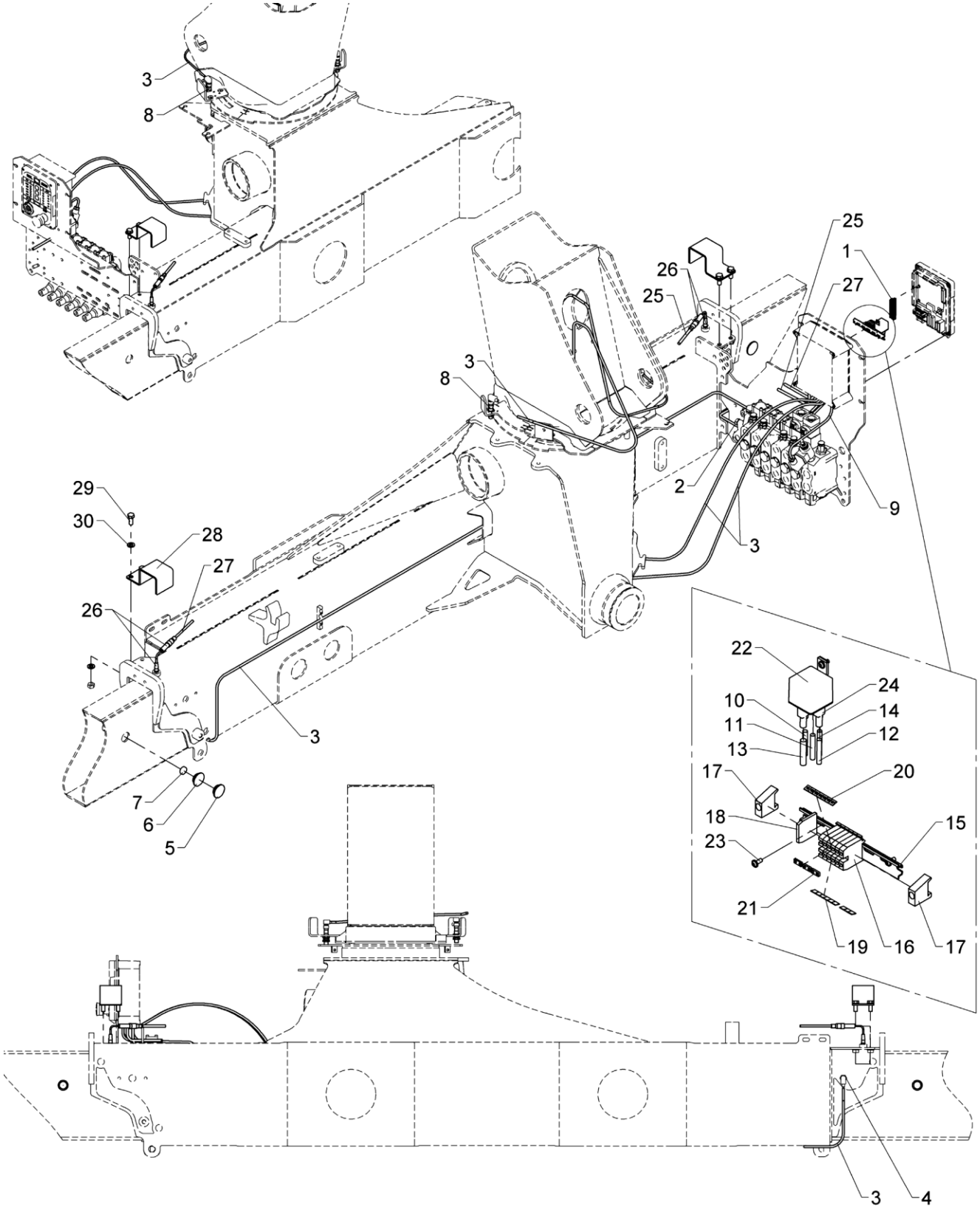

2CYBEL, single extension (manual)

Pos	Qty.	Part no.	Description	Remarks
1	1	29322	Plug, 12-polar for RCL 53XX	
2	1	28117	Cable with plug	
3	3	28077	Cable with plug	
4	2	29259	Magnet proximity switch M12	
5	2	63681	Slide block	3 mm
6	2	64424	Slide block	2 mm
7	2	29262	Solenoid Ø22x5	
8	2	29447	Proximity switchM12 8mm PNP-NO	
9	1	28294	Cable, spool sensor	
10	1	27202	Cable	0,3 m
11	1	27203	Cable	0,3 m
12	1	27209	Wire 1 x 1,5 mm2	0,3 m
13	1	27205	Wire, 1 x 1.5mm2	0,3 m
14	1	27206	Wire, 1 x 1.5mm2	0,3 m
15	1	28013	Guide rail	120 mm.
16	6	28010	Terminal	
17	2	28012	End angle	
18	1	28011	End plate	
19	1	29427	Dekafix marker 31-40	
20	1	28020	Labels nos. 11-20	
21	3	28208	Fish plate	
22	1	27342	Relay, 24V	
23	3	30361	Screw, stainless	3,0 x 8
24	4	27429	Clamp	
25	1	29223	Cable with socket, 2 m	
26	2	29282	Proximity switch M12-4mm NO	
27	1	29224	Cable with socket, 5 m	
28	2	6340654	Protective guard	
29	4	30155	Set screw	M10 x 25
30	8	31565	Washer, stainless	10 mm
31	4	30858	Nut	M10

1500K, 1510K, 1720K, 1730K, 1820K, 1830K

Internal ref. 70 06 220

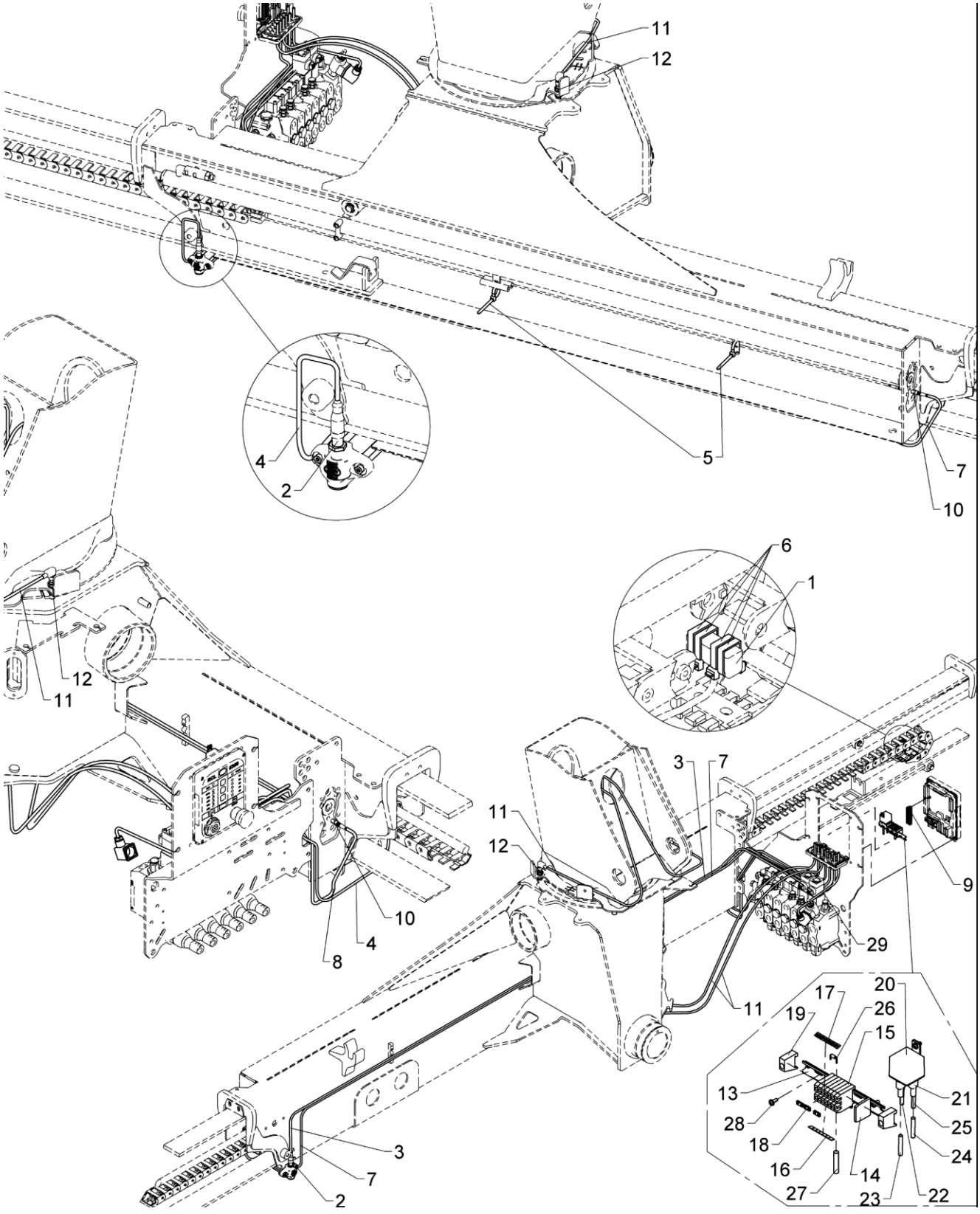

Obsolete

534 20 660

From loader 1060001
To loader

Created 12-09-2013
Modified

2CYBEL, double extension (man.)

Pos	Qty.	Part no.	Description	Remarks
1	2	29253	Tilt switch, nylon drag chain	
2	2	29257	Proximity switch M12x44, 4mm	
3	1	29224	Cable with socket, 5 m	
4	1	29223	Cable with socket, 2 m	
5	4	27275	Cable tie, black, 7.6x385mm	
6	8	27274	Clip	
7	1	29264	Cable 5 m, M8 socket	
8	1	29265	Cable 2 m, M8 socket	
9	1	29322	Plug, 12-polar for RCL 53XX	
10	2	29443	Panel lead-in M8 - 3-polar	
11	2	28077	Cable with plug	
12	2	29447	Proximity switchM12 8mm PNP-NO	
13	1	28013	Guide rail	120 mm.
14	1	28011	End plate	
15	7	28010	Terminal	
16	1	28020	Labels nos. 11-20	
17	1	29427	Dekafix marker 31-40	
18	3	28208	Fish plate	
19	2	28012	End angle	
20	1	27342	Relay, 24V	
21	4	27429	Clamp	
22	1	27202	Cable	0,3 m
23	1	27203	Cable	0,3 m
24	1	27206	Wire, 1 x 1.5mm2	0,3 m
25	1	27209	Wire 1 x 1,5 mm2	0,3 m
26	1	27944	Diode	
27	1	27205	Wire, 1 x 1.5mm2	0,3 m
28	3	30361	Screw, stainless	3,0 x 8
29	1	28294	Cable, spool sensor	

1500K, 1510K, 1720K, 1730K, 1820K, 1830K

Internal ref. 70 06 220

Position of 29253		
	CYBEL	CYBEL-I
A=4600	- - - - -	15
A=5570	- - - - -	22
A=6450	7	29

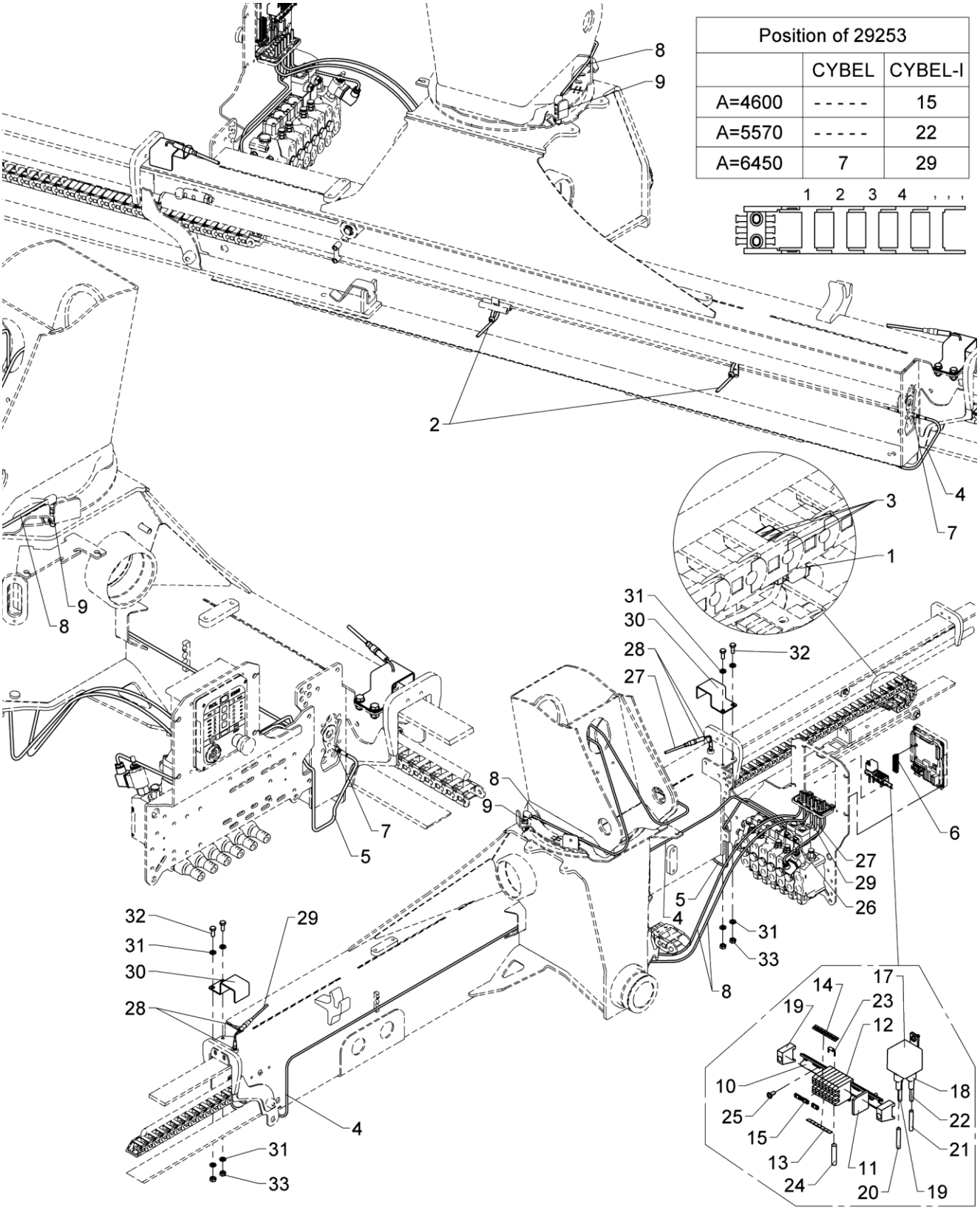

2CYBEL, double extension (man.)

Created 12-09-2013
Modified 25-01-2019

Pos	Qty.	Part no.	Description	Remarks
1	2	29253	Tilt switch, nylon drag chain	
2	4	27275	Cable tie, black, 7.6x385mm	
3	8	27274	Clip	
4	1	29264	Cable 5 m, M8 socket	
5	1	29265	Cable 2 m, M8 socket	
6	1	29322	Plug, 12-polar for RCL 53XX	
7	2	29443	Panel lead-in M8 - 3-polar	
8	2	28077	Cable with plug	
9	2	29447	Proximity switchM12 8mm PNP-NO	
10	1	28013	Guide rail	120 mm.
11	1	28011	End plate	
12	7	28010	Terminal	
13	1	28020	Labels nos. 11-20	
14	1	29427	Dekafix marker 31-40	
15	3	28208	Fish plate	
19	2	28012	End angle	
17	1	27342	Relay, 24V	
18	4	27429	Clamp	
19	1	27202	Cable	0,3 m
20	1	27203	Cable	0,3 m
21	1	27206	Wire, 1 x 1.5mm2	0,3 m
22	1	27209	Wire 1 x 1,5 mm2	0,3 m
23	1	27944	Diode	
24	1	27205	Wire, 1 x 1.5mm2	0,3 m
25	3	30361	Screw, stainless	3,0 x 8
26	1	28294	Cable, spool sensor	
27	1	29223	Cable with socket, 2 m	
28	2	29282	Proximity switch M12-4mm NO	
29	1	29224	Cable with socket, 5 m	
30	2	6340654	Protective guard	
31	8	31565	Washer, stainless	10 mm
32	4	30155	Set screw	M10 x 25
33	4	30858	Nut	M10

1500K, 1510K, 1720K, 1730K, 1820K, 1830K

Internal ref. 70 04 380

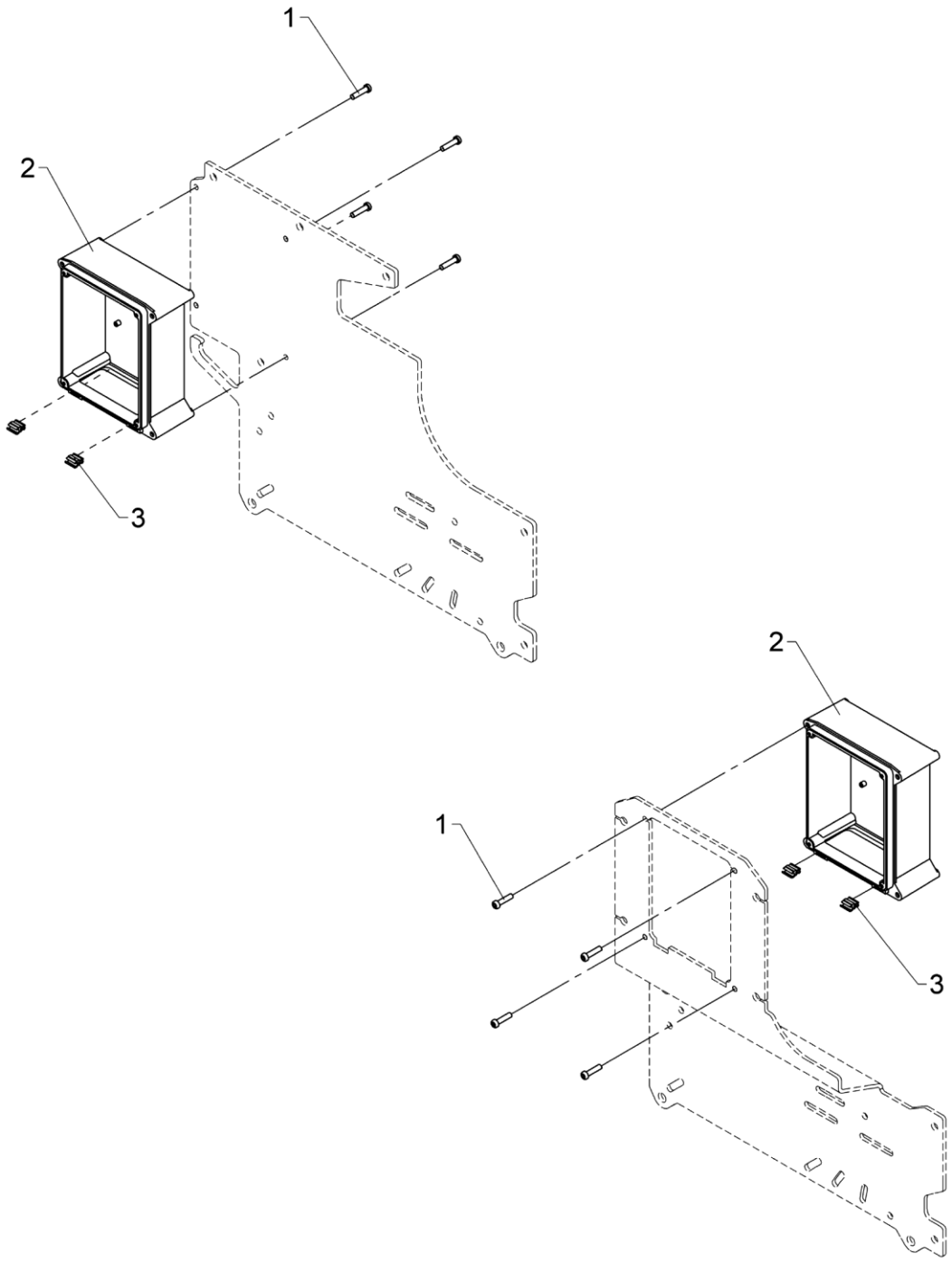

534 21 040

From loader 1060001
To loader

Bottom for RCL box, no RC

Created 12-03-2009
Modified 13-03-2009

Pos	Qty.	Part no.	Description	Remarks
1	4	30340	Screw, stainless	6,0 x 25
2	1	29304	Bottom f. RCL-box incl. hinge	
3	2	29305	Hinge	

1500K, 1510K, 1720K, 1730K, 1820K, 1830K

Internal ref. 70 04 390

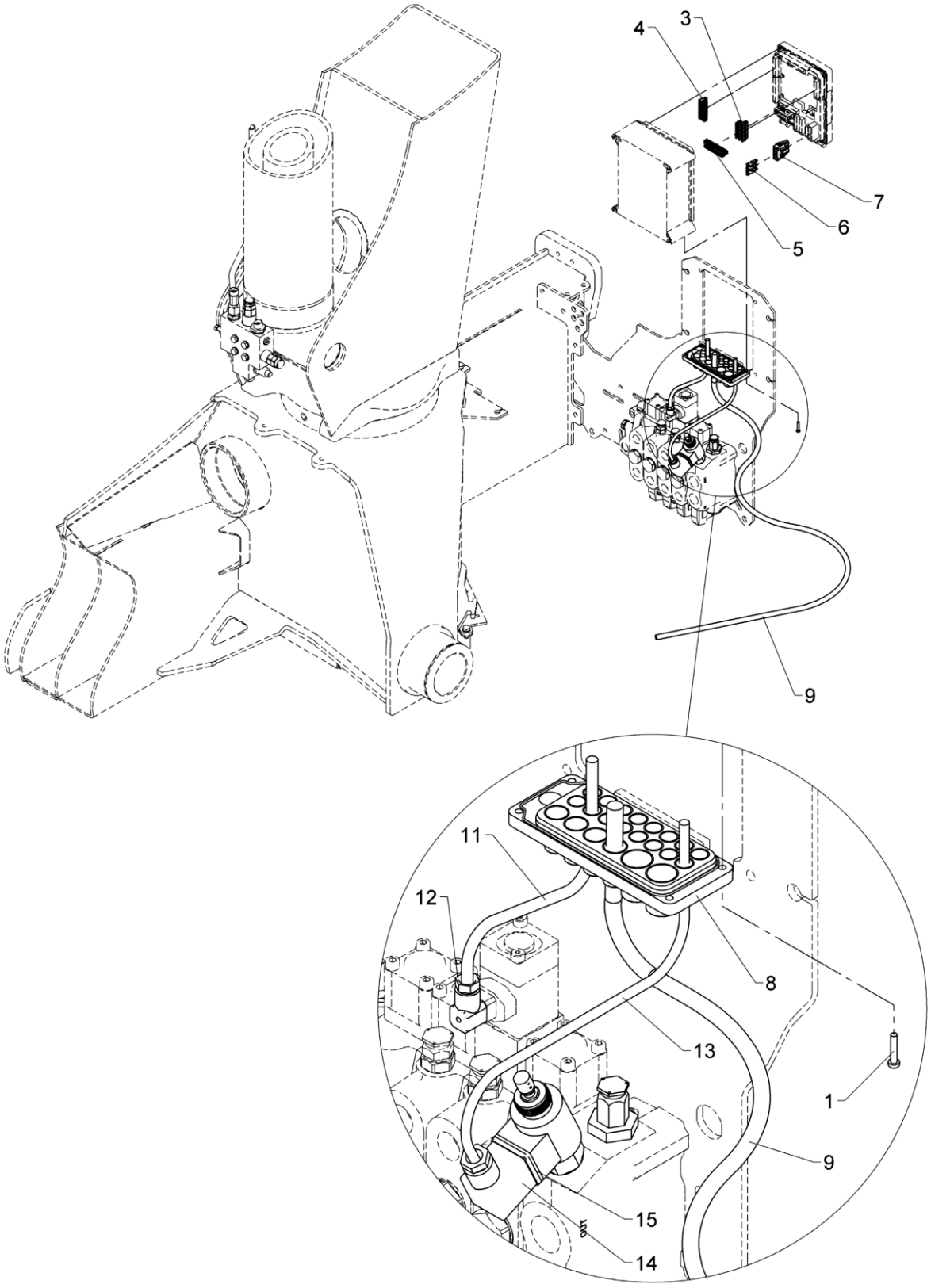

534 21 050

From loader 1060001
To loader

Wiring, base, standard

Created 01-05-2009
Modified 17-03-2010

Pos	Qty.	Part no.	Description	Remarks
1	4	30346	Screw, stainless	4,0 x 20
2	1	28719	Wiring, standard	
3	1	29319	Plug, 8-polar for RCL 53XX	
4	1	29320	Plug, 9-polar for RCL 53XX	
5	1	29321	Plug, 10-polar for RCL 53XX	
6	3	29316	Pin	
7	1	29315	Plug, 3-polar for RCL 53XX	
8	1	29307	Cable lead-in	
9	1	28278	Cable 4 x 2.5	3,5 m
11	1	28252	Cable	1,3 m
12	1	28257	Plug, spool sensor	
13	1	28249	Cable 2 x 0.75	1,3 m
14	1	28258	Plug, solenoid valve	
15	1	28840	Seal	

1500K, 1510K, 1720K, 1730K, 1820K, 1830K

Internal ref. 70 04 700

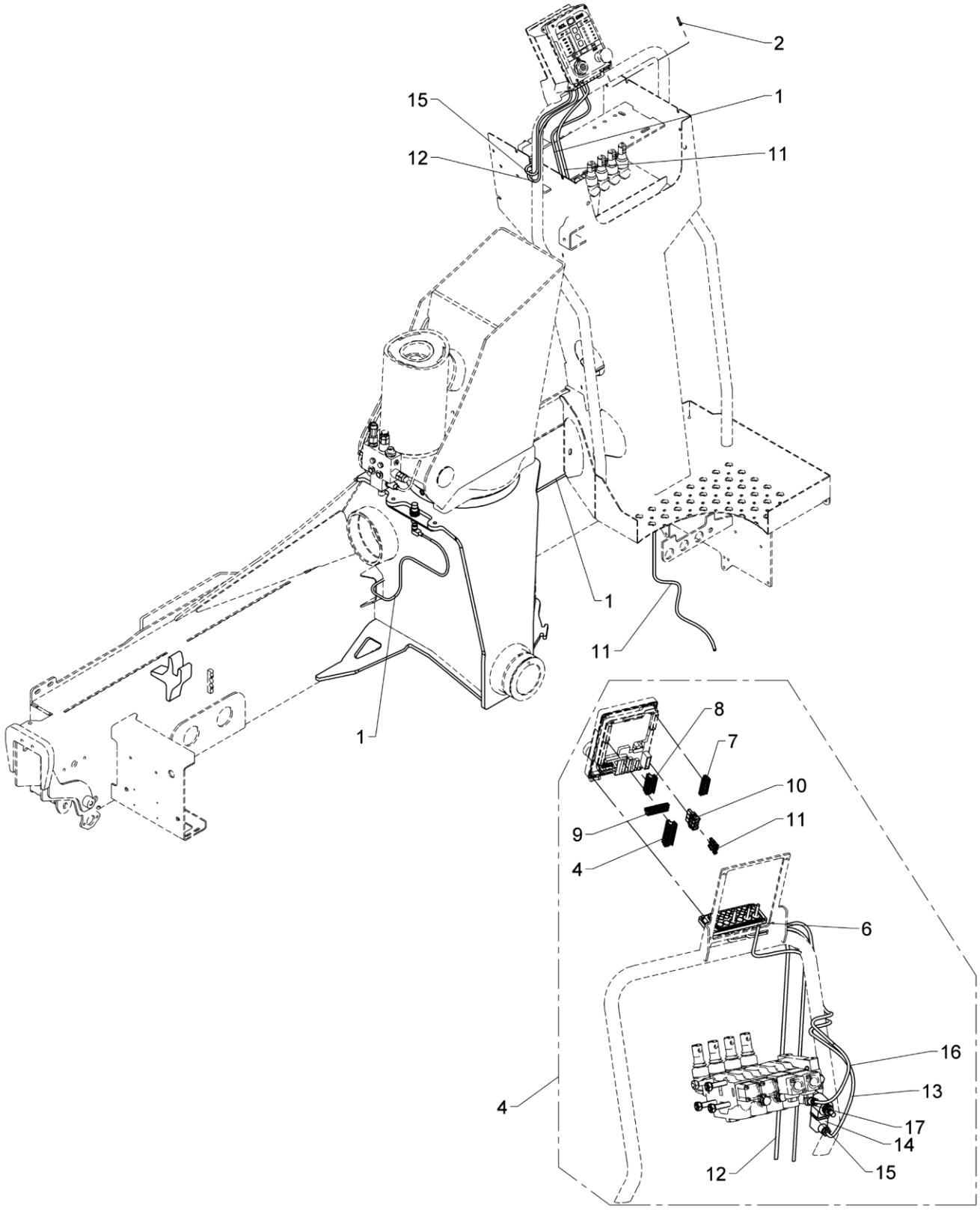

Base, warning over stand-up controls (HS10)

Created 22-03-2010
Modified 03-05-2010

Pos	Qty.	Part no.	Description	Remarks
1	1	28077	Cable with plug	
2	4	30346	Screw, stainless	4,0 x 20
3	1	29322	Plug, 12-polar for RCL 53XX	
4	1	28719	Wiring, standard	
5	1	29307	Cable lead-in	
6	1	29319	Plug, 8-polar for RCL 53XX	
7	1	29320	Plug, 9-polar for RCL 53XX	
8	1	29321	Plug, 10-polar for RCL 53XX	
9	1	29315	Plug, 3-polar for RCL 53XX	
10	3	29316	Pin	
11	1	28278	Cable 4 x 2.5	3,5 m
12	1	28249	Cable 2 x 0.75	1,3 m
13	1	28258	Plug, solenoid valve	
14	1	28840	Seal	
15	1	28252	Cable	1,3 m
16	1	28257	Plug, spool sensor	

1500K, 1510K, 1720K, 1730K, 1820K, 1830K

Internal ref. 70 04 720

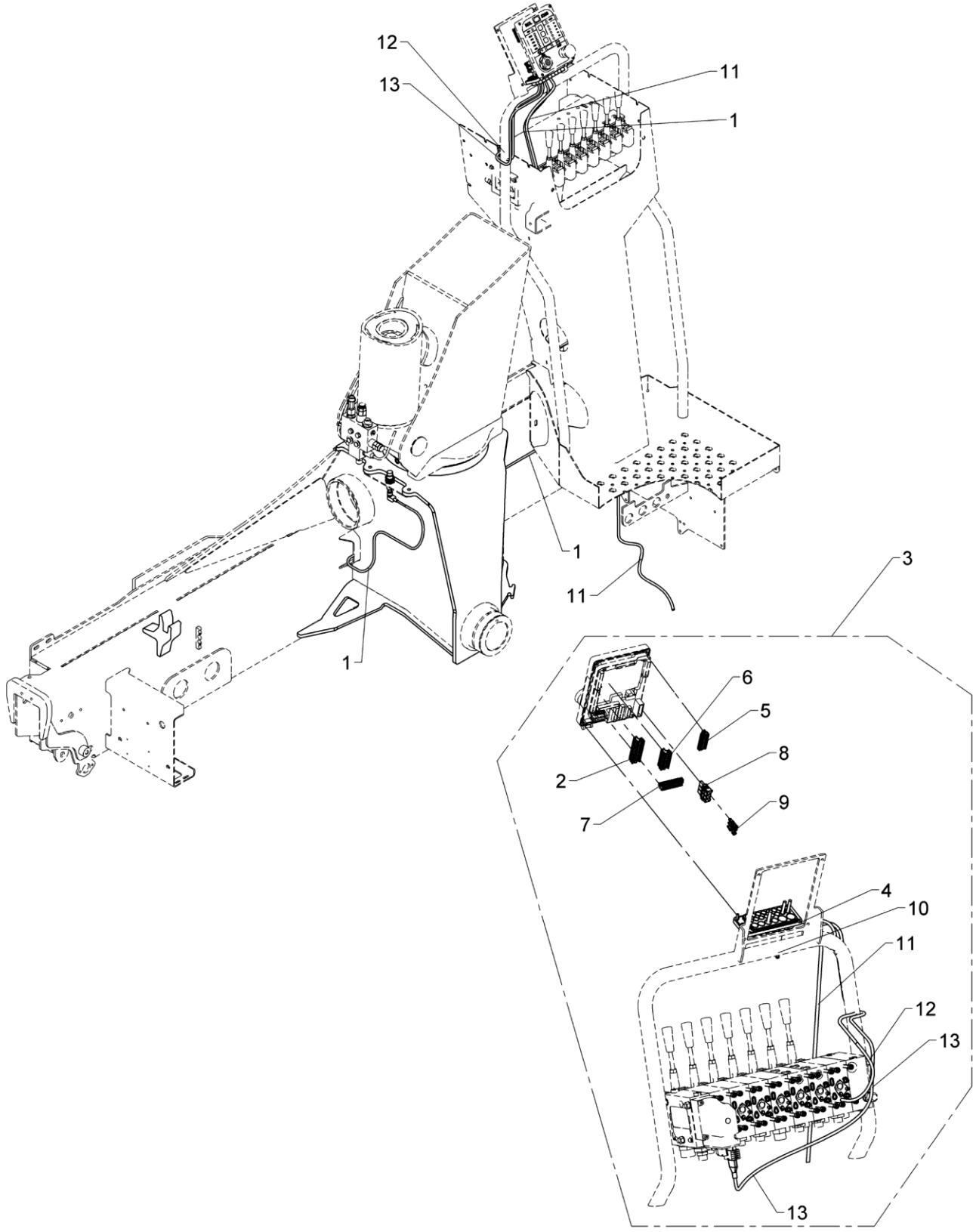

Base, warning over stand-up controls (HS10), variable flow pump

Pos	Qty.	Part no.	Description	Remarks
1	1	28077	Cable with plug	
2	1	29322	Plug, 12-polar for RCL 53XX	
3	1	7004730	Wiring, base HS, variable pump	
4	1	29307	Cable lead-in	
5	1	29319	Plug, 8-polar for RCL 53XX	
6	1	29320	Plug, 9-polar for RCL 53XX	
7	1	29321	Plug, 10-polar for RCL 53XX	
8	1	29315	Plug, 3-polar for RCL 53XX	
9	3	29316	Pin	
10	4	30346	Screw, stainless	4,0 x 20
11	1	28278	Cable 4 x 2.5	3,5 m
12	1	28267	Cable, spool sensor, boom	1,3 m
13	1	58951	Cable, AMP grey	

1500K, 1510K, 1720K, 1730K, 1820K, 1830K

Internal ref. 70 04 690

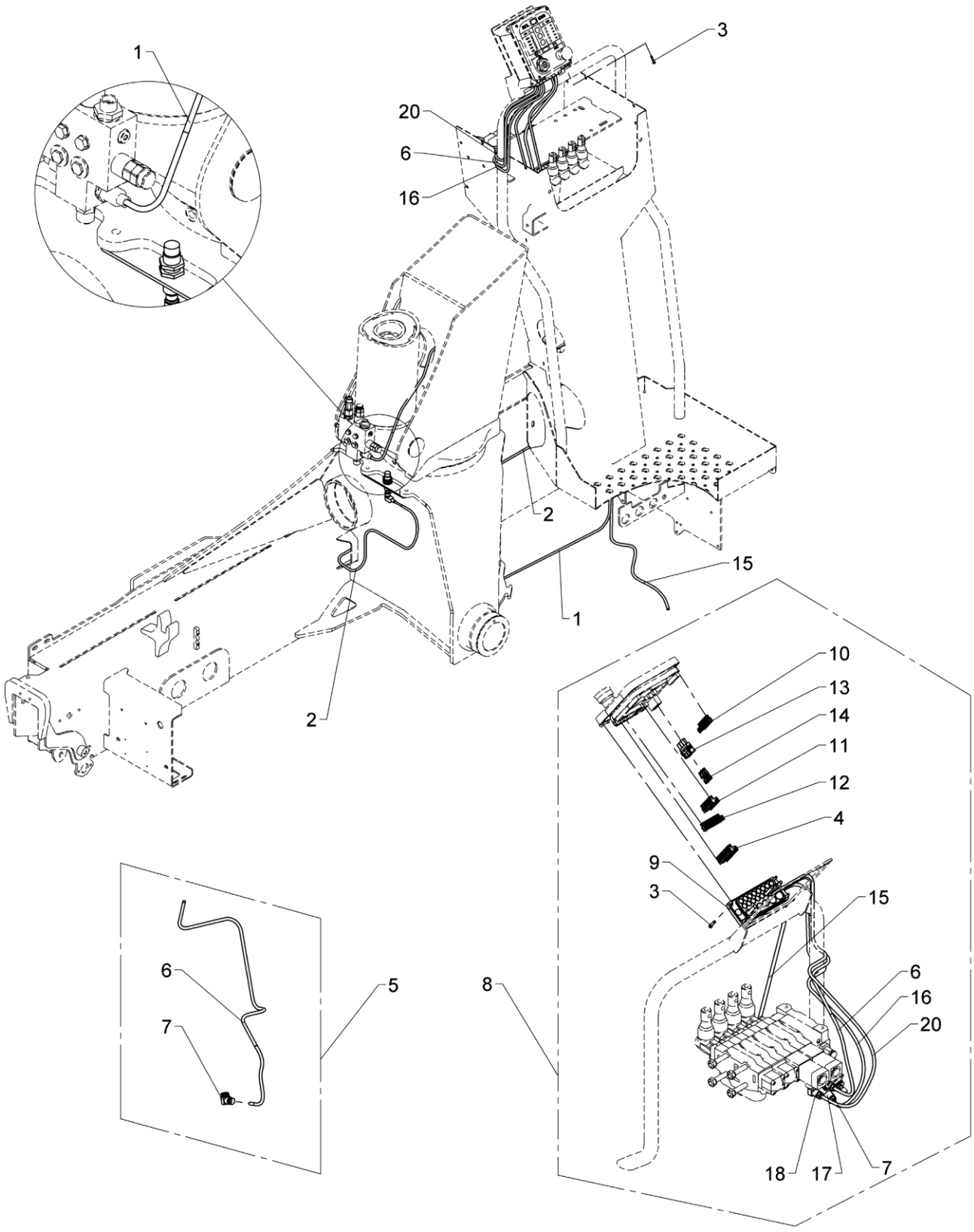

Base, electronic slewing limitation (HS10)

Pos	Qty.	Part no.	Description	Remarks
1	1	29224	Cable with socket, 5 m	
2	1	28077	Cable with plug	
3	4	30346	Screw, stainless	4,0 x 20
4	1	29322	Plug, 12-polar for RCL 53XX	
5	1	28294	Cable, spool sensor	
6	1	28252	Cable	1,3 m
7	1	28257	Plug, spool sensor	
8	1	28719	Wiring, standard	
9	1	29307	Cable lead-in	
10	1	29319	Plug, 8-polar for RCL 53XX	
11	1	29320	Plug, 9-polar for RCL 53XX	
12	1	29321	Plug, 10-polar for RCL 53XX	
13	1	29315	Plug, 3-polar for RCL 53XX	
14	3	29316	Pin	
15	1	28278	Cable 4 x 2.5	3,5 m
16	1	28249	Cable 2 x 0.75	1,3 m
17	1	28258	Plug, solenoid valve	
18	1	28257	Plug, spool sensor	
19	1	28840	Seal	
20	1	28252	Cable	1,3 m

1500K, 1510K, 1720K, 1730K, 1820K, 1830K

Internal ref. 70 04 710

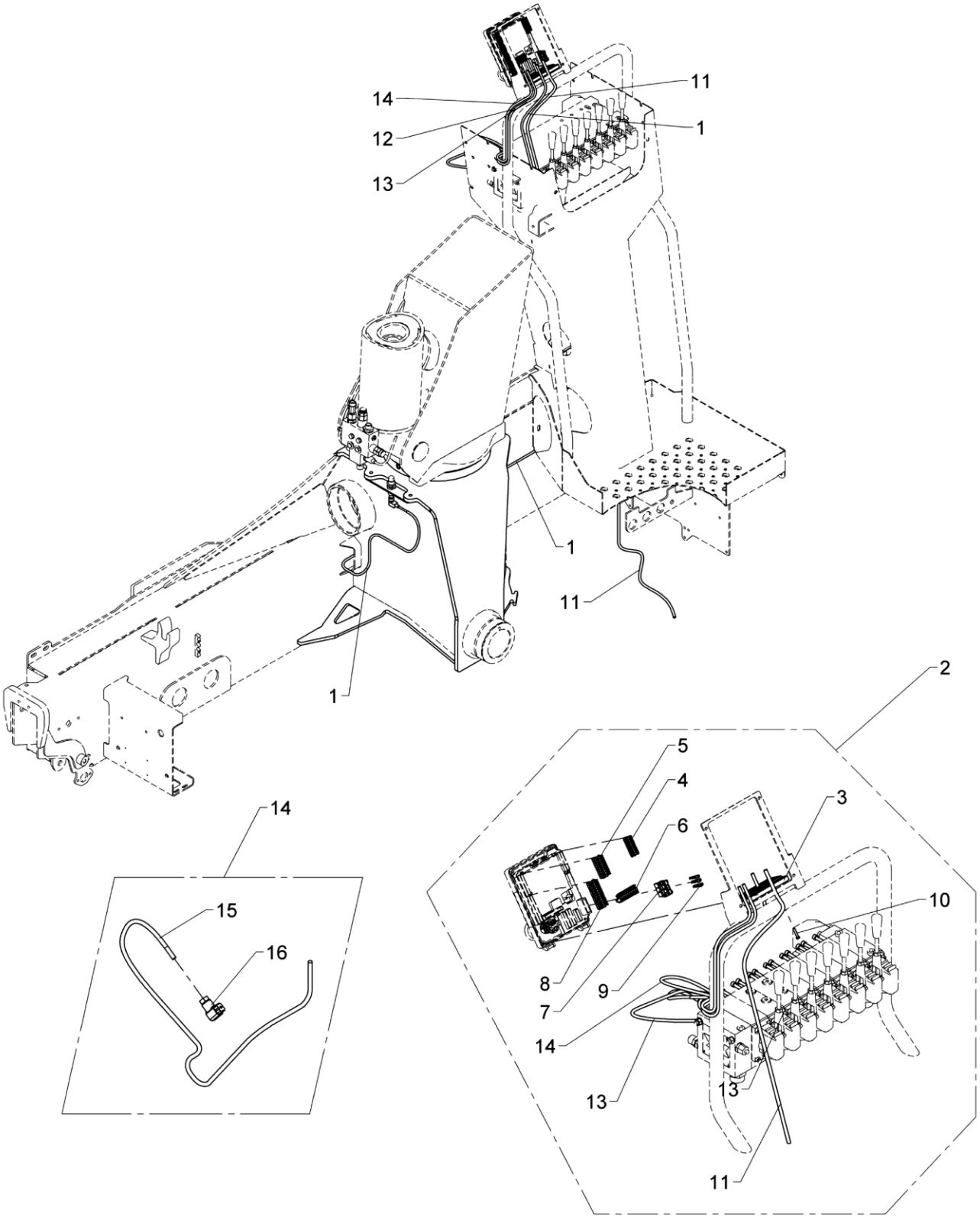

Base, electronic slewing limitation (HS10), variable flow pump

Pos	Qty.	Part no.	Description	Remarks
1	1	28077	Cable with plug	
2	1	7004730	Wiring, base HS, variable pump	
3	1	29307	Cable lead-in	
4	1	29319	Plug, 8-polar for RCL 53XX	
5	1	29320	Plug, 9-polar for RCL 53XX	
6	1	29321	Plug, 10-polar for RCL 53XX	
7	1	29315	Plug, 3-polar for RCL 53XX	
8	1	29322	Plug, 12-polar for RCL 53XX	
9	3	29316	Pin	
10	4	30346	Screw, stainless	4,0 x 20
11	1	28278	Cable 4 x 2.5	3,5 m
12	1	28267	Cable, spool sensor, boom	1,3 m
13	1	58951	Cable, AMP grey	
14	1	28294	Cable, spool sensor	1,3 m
15	1	28252	Cable	1,3 m
16	1	28257	Plug, spool sensor	

1500K, 1510K, 1720K, 1730K, 1820K, 1830K

Internal ref. 70 04 660

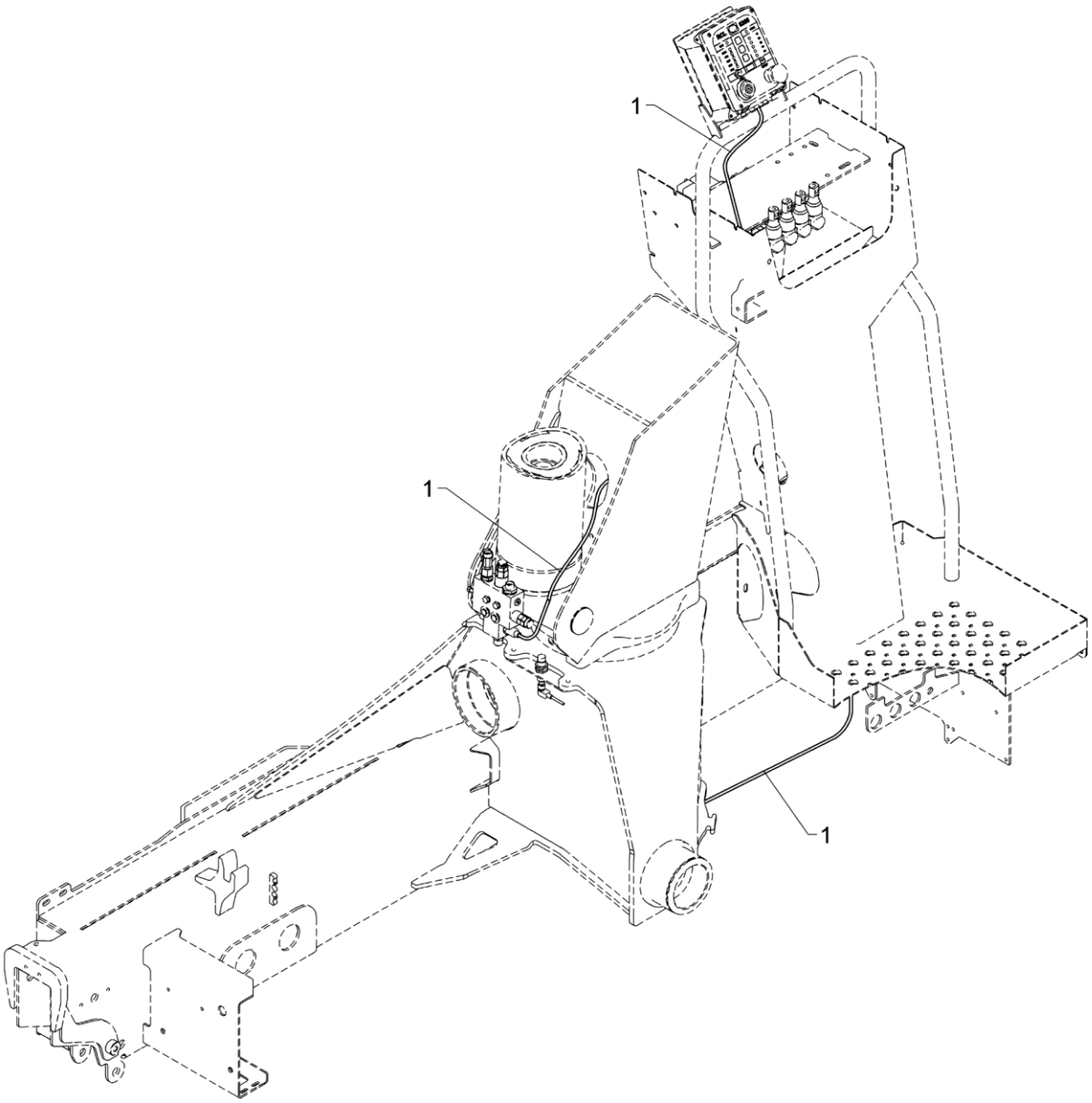

534 21 100

From loader 1060001
To loader

Created 01-05-2009
Modified

Column, HS10

Pos	Qty.	Part no.	Description	Remarks
1	1	29224	Cable with socket, 5 m	

1500K, 1510K, 1720K, 1730K, 1820K, 1830K

Internal ref. 70 04 350

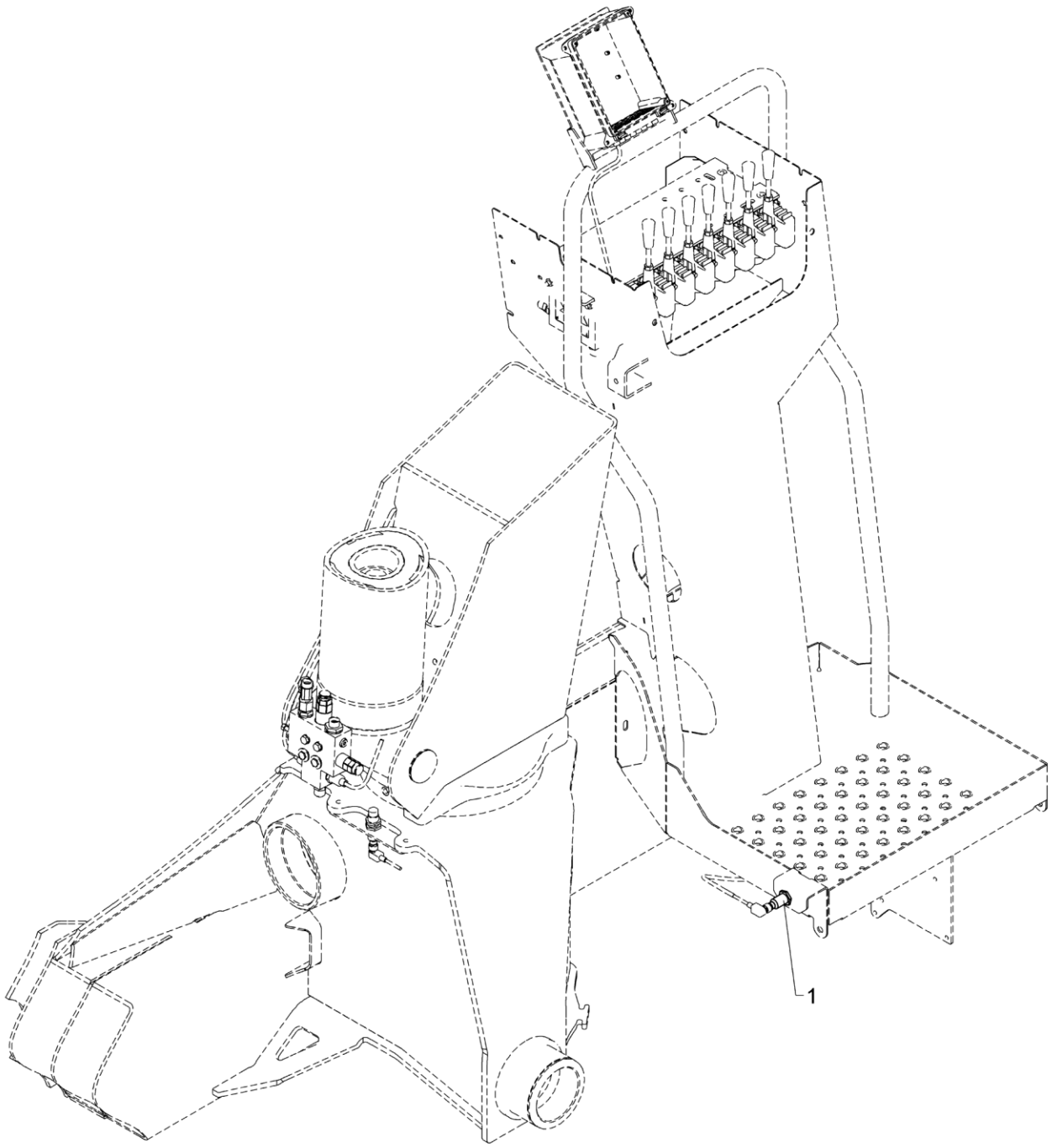

HS10 sensor on platform

534 21 110

From loader 1060001
To loader

Created 01-05-2009
Modified

Pos	Qty.	Part no.	Description	Remarks
1	1	28210	Proximity switch	

1500K, 1510K, 1720K, 1730K, 1820K, 1830K

Internal ref. 70 03 250

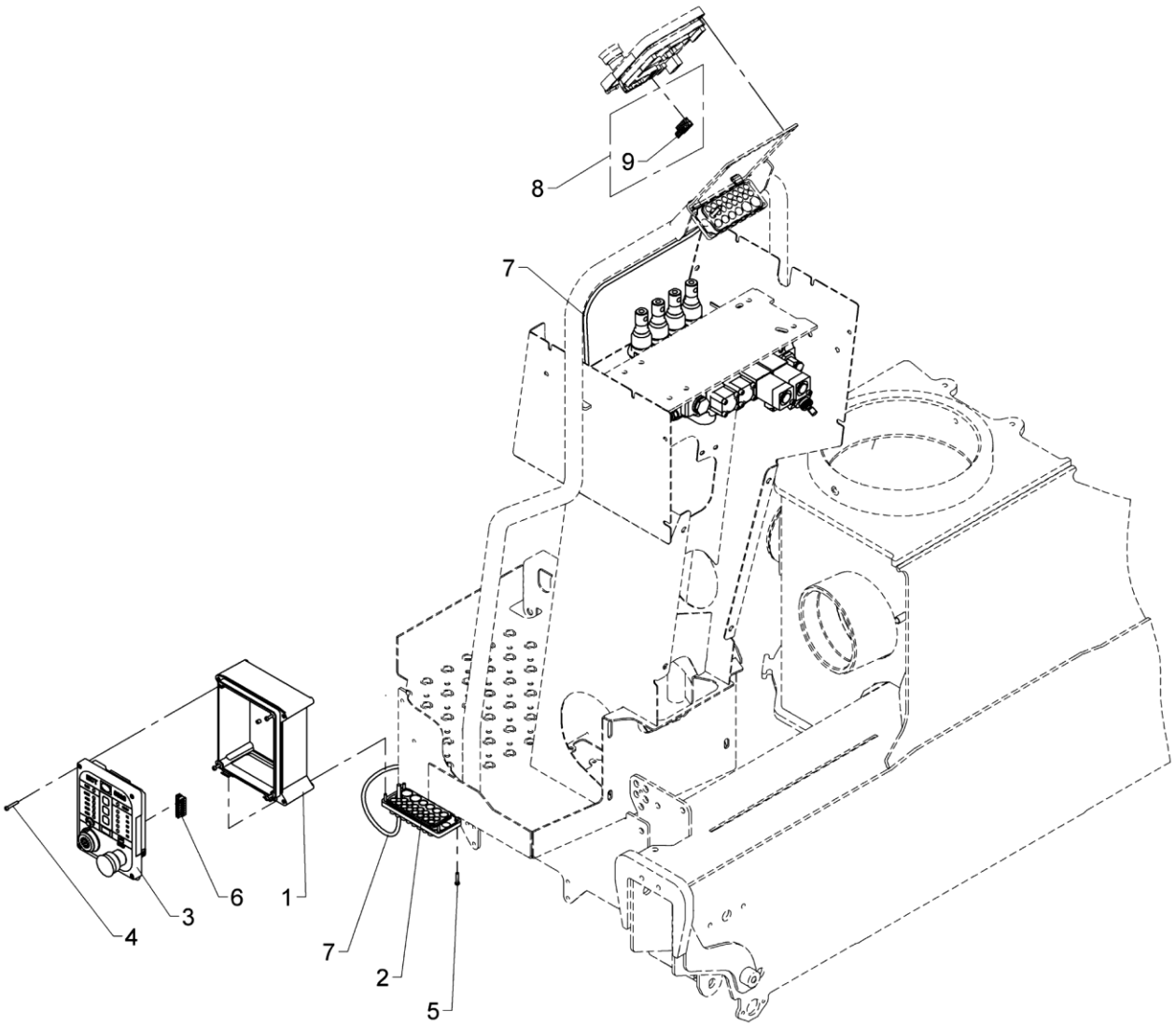

534 21 120

From loader 1060001
To loader

ECT 5320 compl. + 3.5m cable

Created 29-06-2010
Modified 13-01-2014

Pos	Qty.	Part no.	Description	Remarks
1	1	29304	Bottom f. RCL-box incl. hinge	
2	1	29307	Cable lead-in	
3	1	29303	Front complete, ECT5320	
4	4	30347	Screw, stainless	4,0 x 25
5	4	30346	Screw, stainless	4,0 x 20
6	1	29318	Plug, 7-polar for RCL 53XX	
7	1	28263	CAN BUS cable	3,5 m
8	1	7004340	Plug, 7-polar for RCL	
9	1	29318	Plug, 7-polar for RCL 53XX	

1500K, 1510K, 1720K, 1730K, 1820K, 1830K

Internal ref. 70 05 230

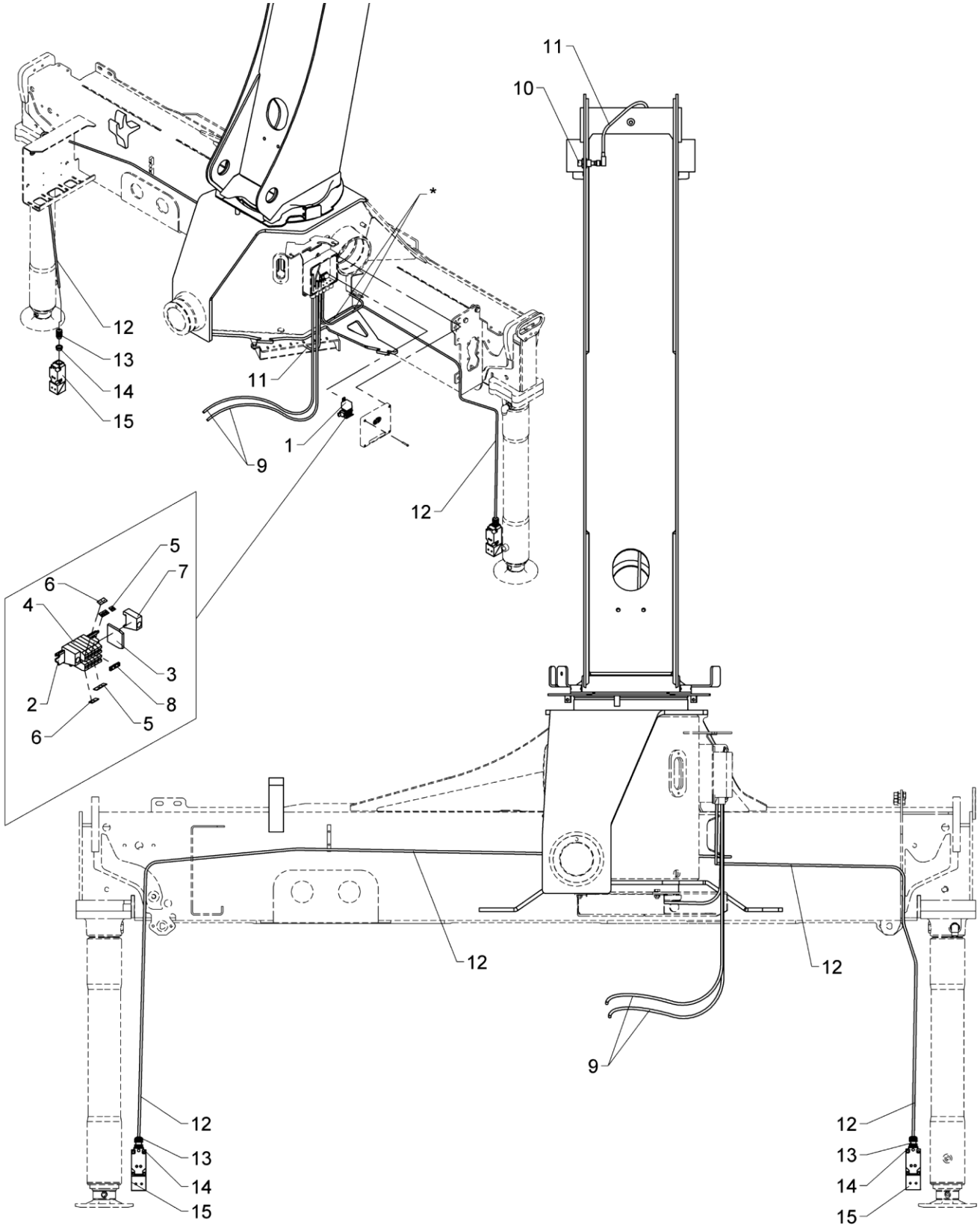

CYBEW Transport alarm stabilizer leg and beam

From loader 1060001
To loader

Created 22-03-2010
Modified 06-03-2013

Pos	Qty.	Part no.	Description	Remarks
1	1	27342	Relay, 24V	
2	1	28013	Guide rail	60 mm.
3	1	28011	End plate	
4	5	28010	Terminal	
5	2	28020	Labels nos. 11-20	
6	2	28211	Labels, "-"	
7	2	28012	End angle	
8	1	28014	Fish plate	
9	1	28249	Cable 2 x 0.75	8 m
10	1	28980	Proximity switch	
11	1	28077	Cable with plug	
12	1	28262	Cable 4 x 0.75	8 m
13	2	28246	Bushing	
14	2	27866	Socket	
15	2	27598	Proximity switch	

1500K, 1510K, 1720K, 1730K, 1820K, 1830K

Internal ref. 70 05 260

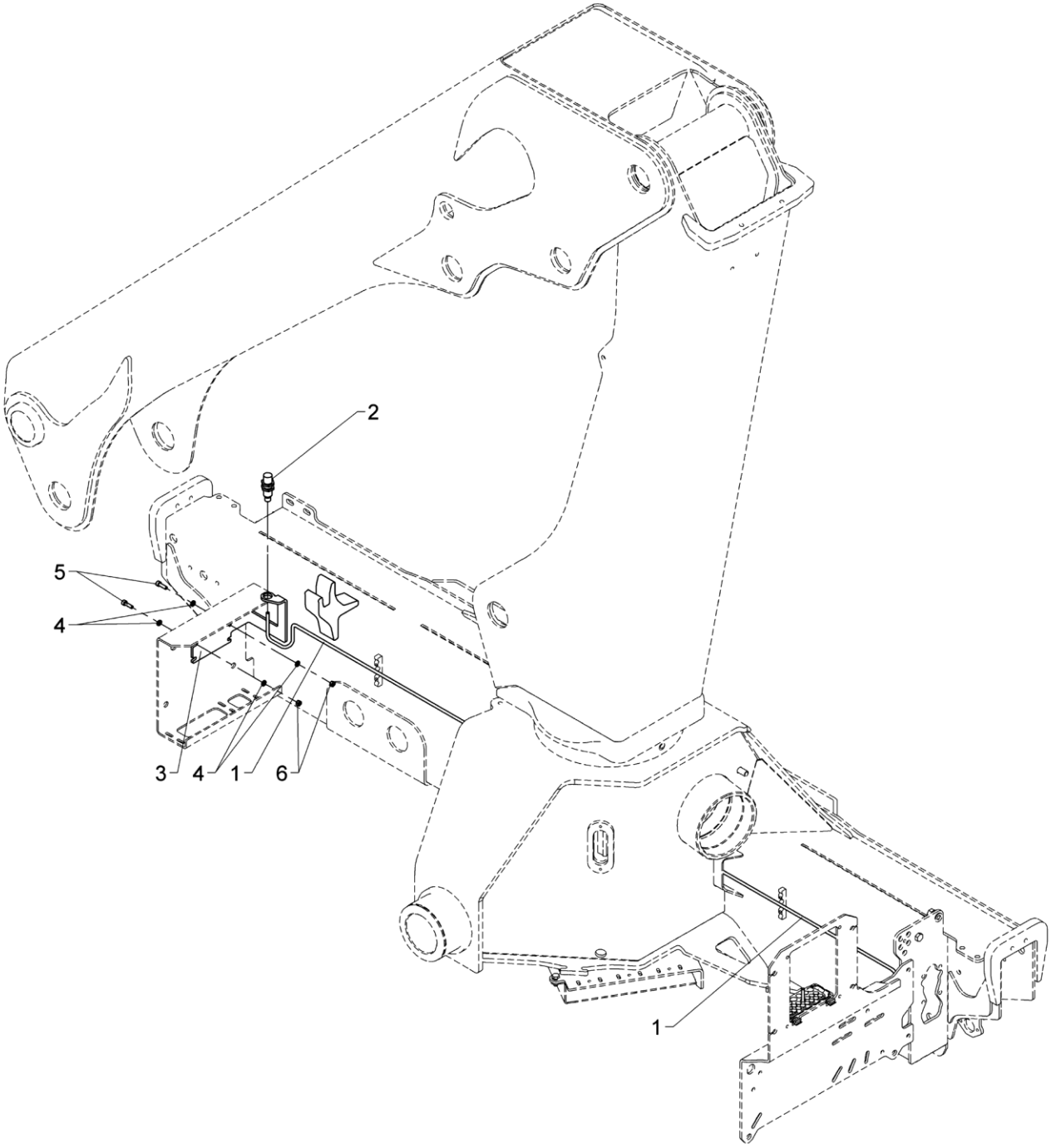

534 21 330

From loader 1060001
To loader

Created 01-05-2009
Modified 20-08-2010

PAW, transport alarm - stowing of loader

Pos	Qty.	Part no.	Description	Remarks
1	1	28902	Cable with plug, 10 m.	
2	1	29124	Proximity switch	
3	1	6340947	Mounting fittings, trans.alarm	
4	4	32302	Face washer, stainless	6 mm
5	2	30427	Screw	MC6 x 20
6	2	30854	Nut, stainless	M6

1500K, 1510K, 1720K, 1730K, 1820K, 1830K

Internal ref. 70 05 250

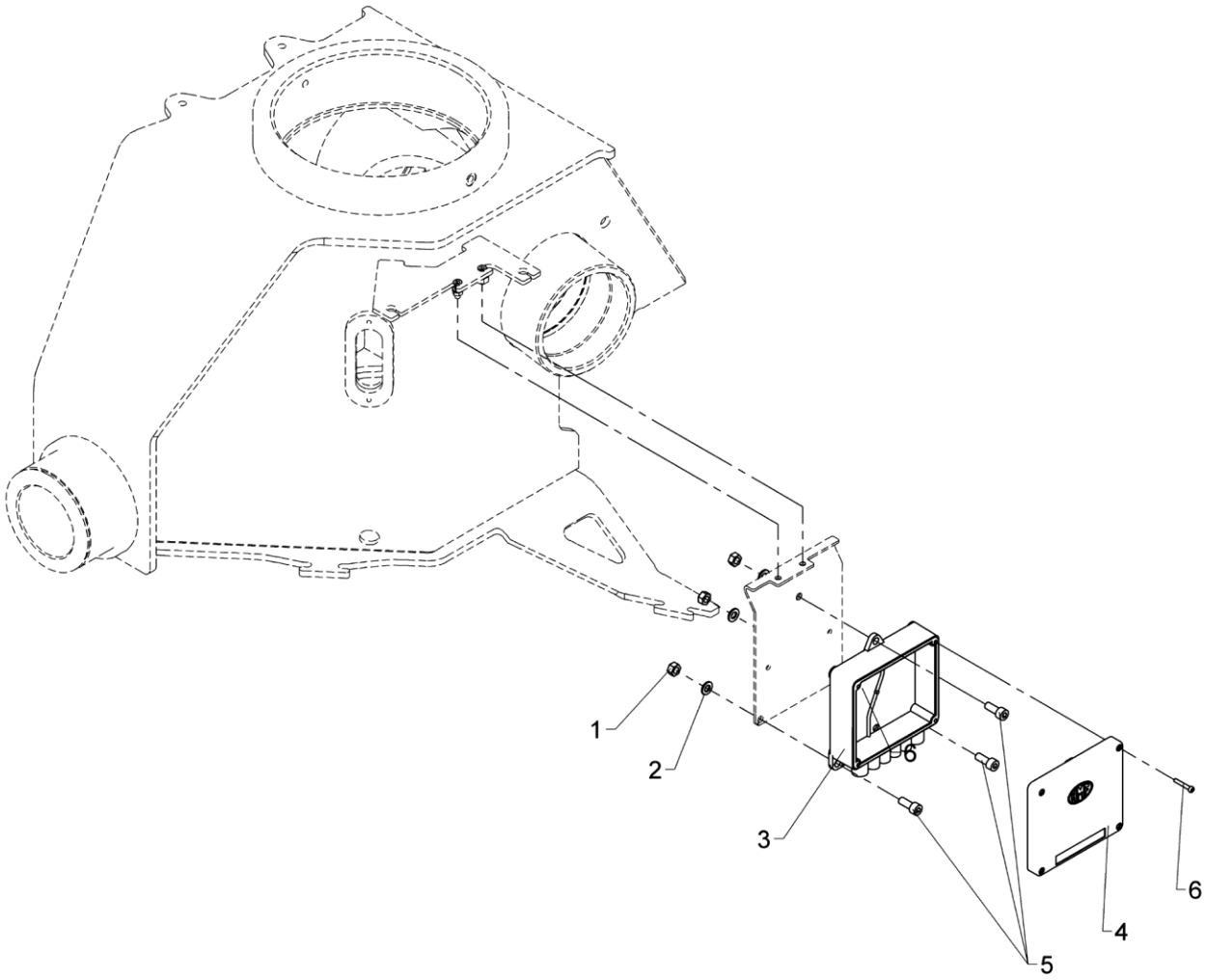

534 21 350

From loader 1060001
To loader

Created 01-05-2009
Modified

Junction box, various electric parts

Pos	Qty.	Part no.	Description	Remarks
1	3	30856	Nut, stainless	M8
2	3	31147	Face washer, 8 mm	
3	1	29313	Bottom f. Fly-Jib box	
4	1	29314	Cover for Fly-Jib box	
5	3	30438	Screw	MC8 x 20
6	4	30347	Screw, stainless	4,0 x 25

1500K, 1510K, 1720K, 1730K, 1820K, 1830K

Internal ref. 70 04 630

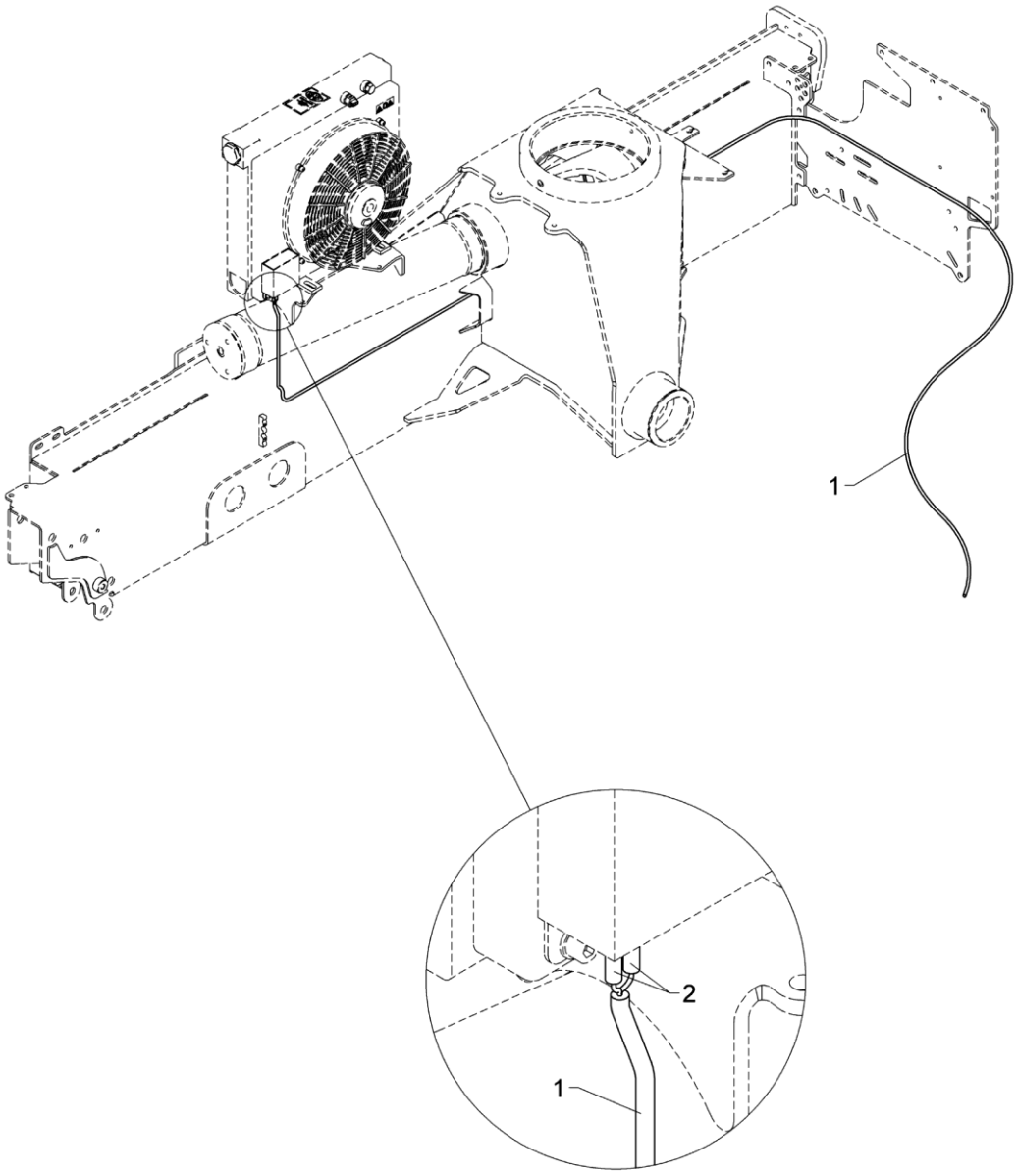

Oil cooler supply

534 21 360

From loader 1060001
To loader

Created 01-03-2013
Modified

Pos	Qty.	Part no.	Description	Remarks
1	1	27215	Wire 2 x 1.5	5,0 m
2	2	27429	Clamp	

1500K, 1510K, 1720K, 1730K, 1820K, 1830K

Internal ref. 70 05 460

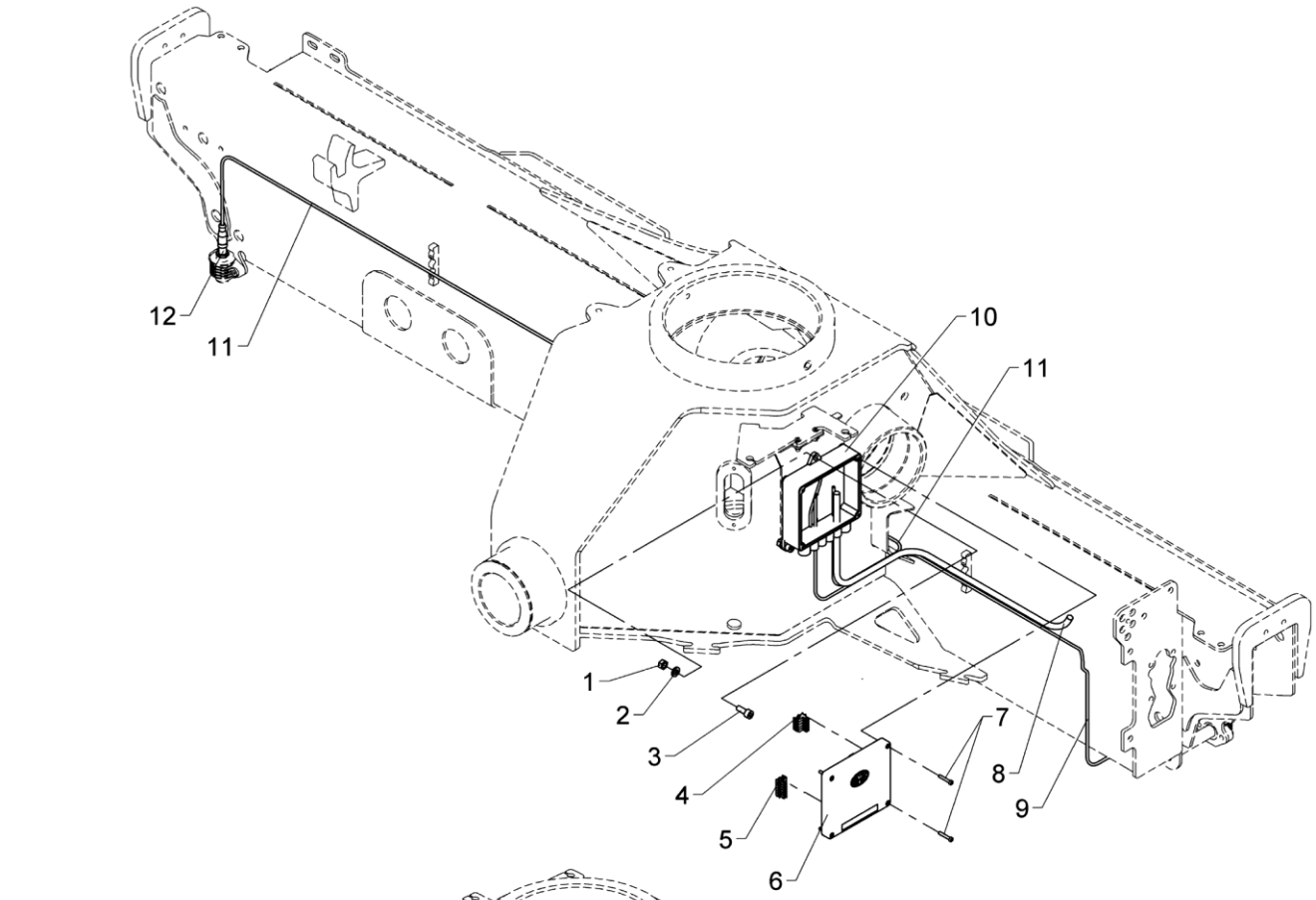

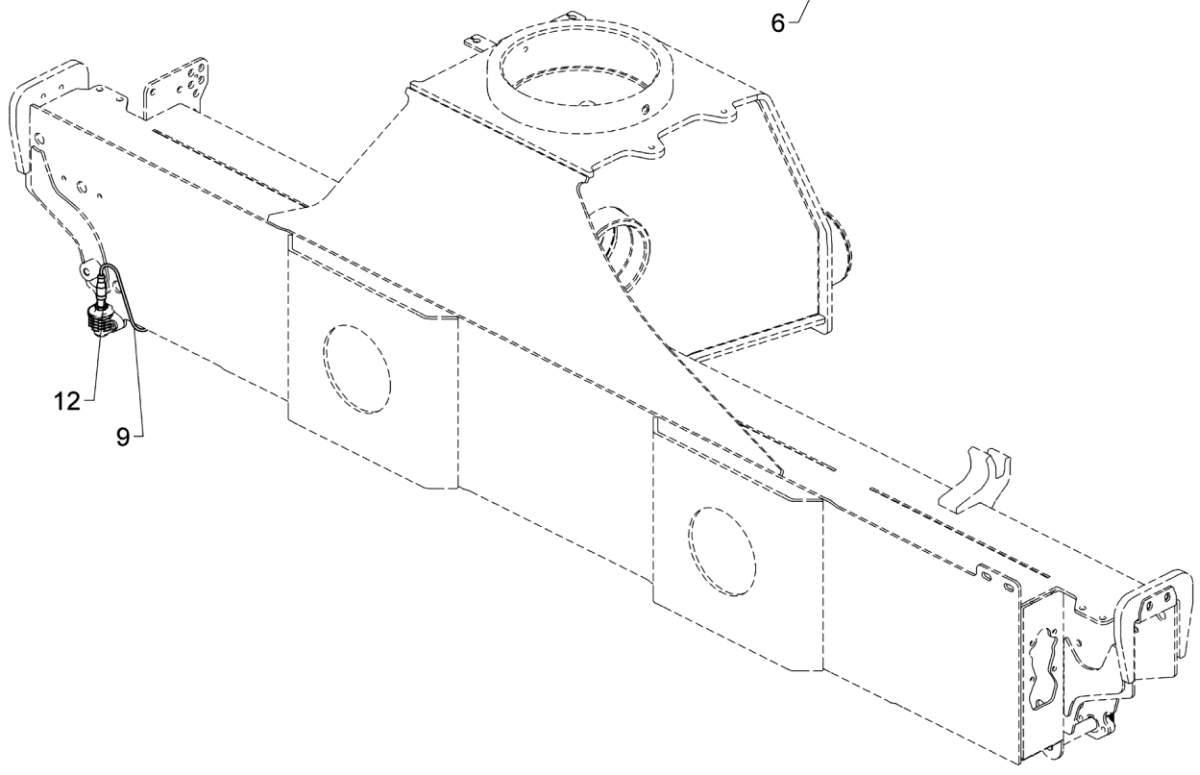

CYL, 12-23

Pos	Qty.	Part no.	Description	Remarks
1	3	30856	Nut, stainless	M8
2	3	31147	Face washer, 8 mm	
3	3	30438	Screw	MC8 x 20
4	1	29317	Plug, 5-polar for RCL 53XX	
5	1	29324	Plug, 6-polar for RCL 53XX	
6	1	29346	CIO5376 controller cover cpl.	
7	4	30347	Screw, stainless	4,0 x 25
8	1	28263	CAN BUS cable	1.5 m
9	1	29223	Cable with socket, 2 m	
10	1	29313	Bottom f. Fly-Jib box	
11	1	29224	Cable with socket, 5 m	
12	2	29257	Proximity switch M12x44, 4mm	

1500K, 1510K, 1720K, 1730K, 1820K, 1830K

Internal ref. 70 05 470

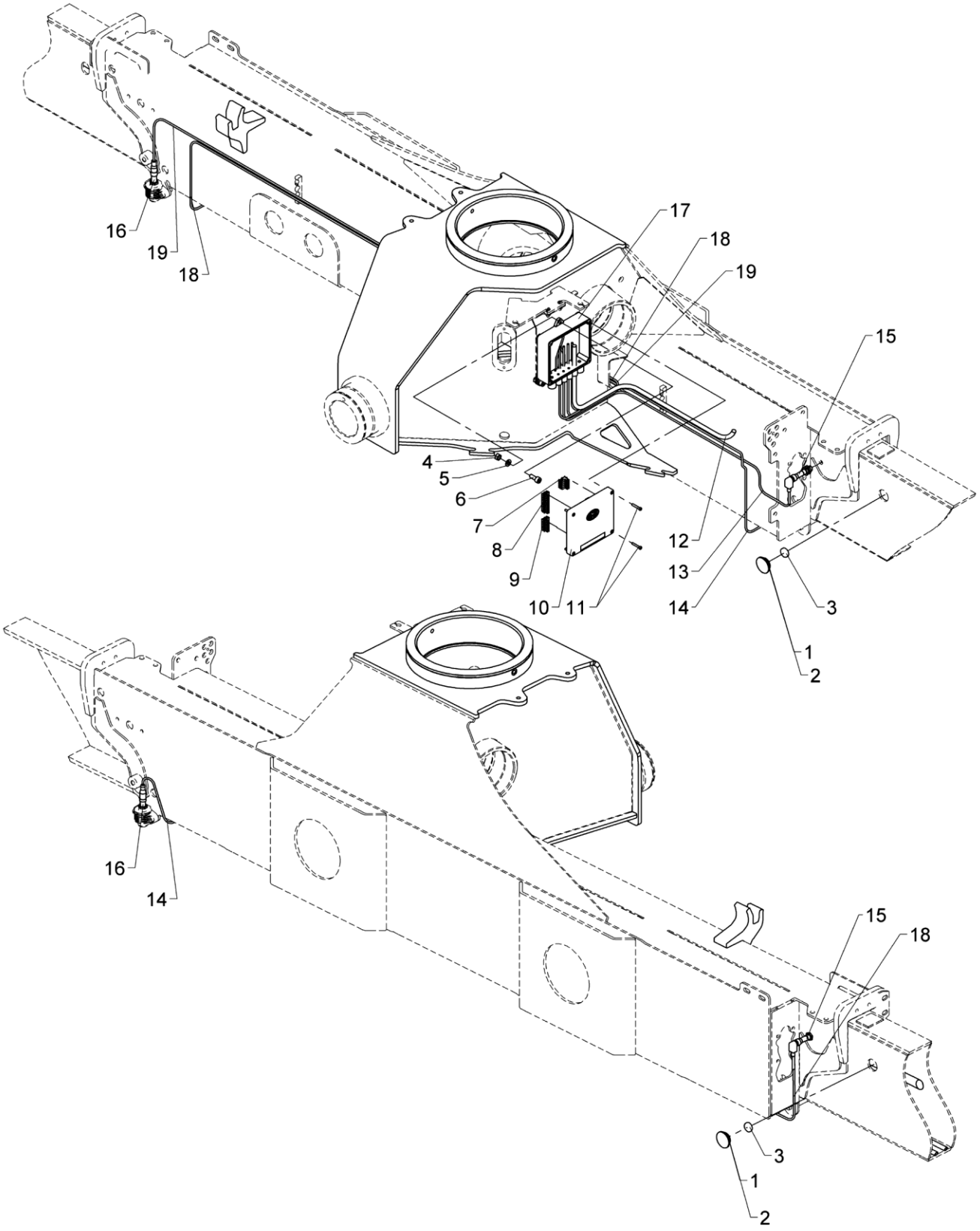

CYBEL, single extension, 12-23

534 21 390

From loader 1060001
To loader

Created 05-02-2010
Modified 22-07-2010

Pos	Qty.	Part no.	Description	Remarks
1	2	64424	Slide block	2 mm
2	2	63681	Slide block	3 mm
3	2	29262	Solenoid Ø22x5	
4	3	30856	Nut, stainless	M8
5	3	31147	Face washer, 8 mm	
6	3	30438	Screw	MC8 x 20
7	1	29317	Plug, 5-polar for RCL 53XX	
8	1	29321	Plug, 10-polar for RCL 53XX	
9	1	29324	Plug, 6-polar for RCL 53XX	
10	1	29346	CIO5376 controller cover cpl.	
11	4	30347	Screw, stainless	4,0 x 25
12	1	28263	CAN BUS cable	2 m
13	1	28117	Cable with plug	
14	1	29223	Cable with socket, 2 m	
15	2	29259	Magnet proximity switch M12	
16	2	29257	Proximity switch M12x44, 4mm	
17	1	29313	Bottom f. Fly-Jib box	
18	1	28077	Cable with plug	
19	1	29224	Cable with socket, 5 m	

1500K, 1510K, 1720K, 1730K, 1820K, 1830K

Internal ref. 70 05 480

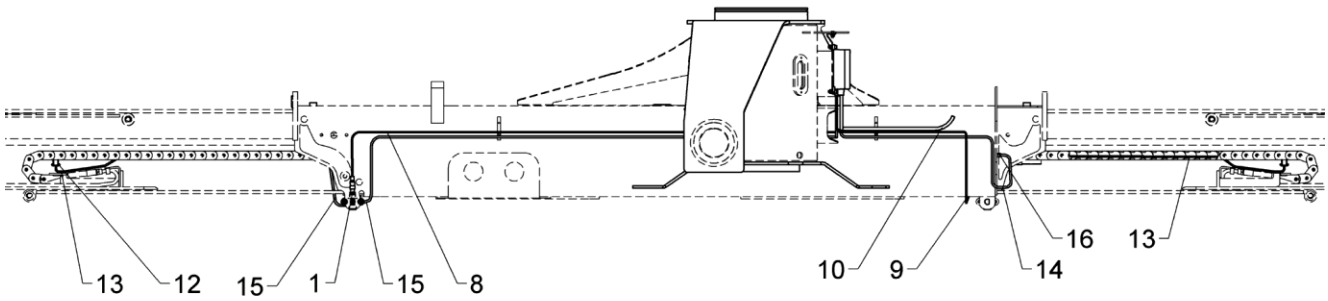

Position of 29253		
	CYBEL	CYBEL-I
A=4600	- - - - -	15
A=5570	- - - - -	22
A=6450	7	29

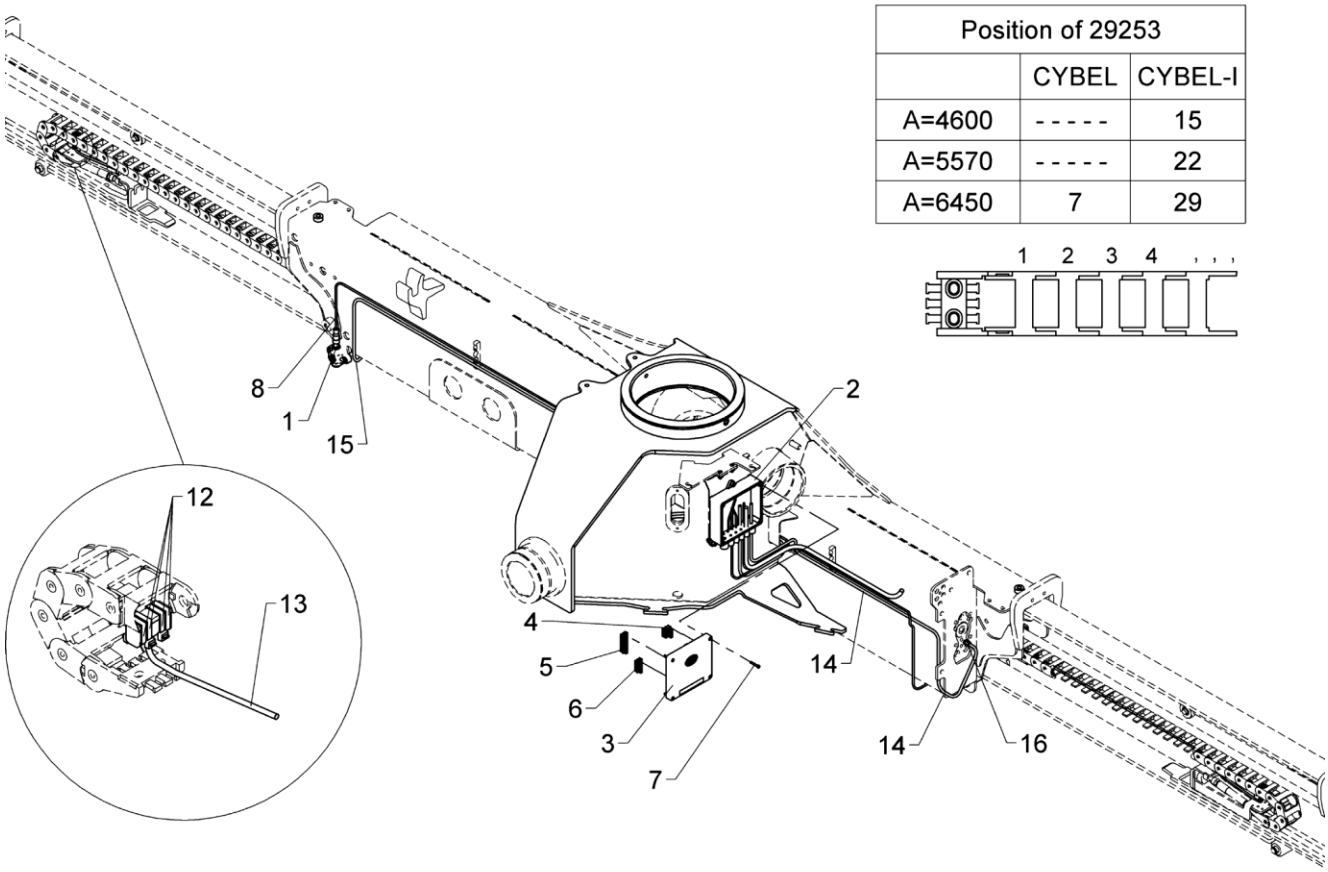

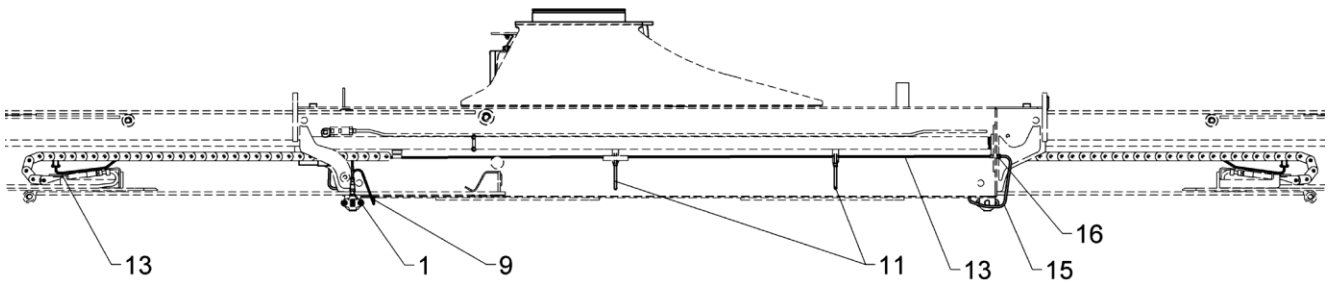

CYBEL double extension 12-23

Pos	Qty.	Part no.	Description	Remarks
1	2	29257	Proximity switch M12x44, 4mm	
2	1	29313	Bottom f. Fly-Jib box	
3	1	29346	CIO5376 controller cover cpl.	
4	1	29317	Plug, 5-polar for RCL 53XX	
5	1	29321	Plug, 10-polar for RCL 53XX	
6	1	29324	Plug, 6-polar for RCL 53XX	
7	4	30347	Screw, stainless	4,0 x 25
8	1	29224	Cable with socket, 5 m	
9	1	29223	Cable with socket, 2 m	
10	1	28263	CAN BUS cable	
11	2	27275	Cable tie, black, 7.6x385mm	
12	8	27274	Clip	
13	2	29253	Tilt switch, nylon drag chain	
14	1	29265	Cable 2 m, M8 socket	
15	1	29264	Cable 5 m, M8 socket	
16	2	29443	Panel lead-in M8 - 3-polar	

1500K, 1510K, 1720K, 1730K, 1820K, 1830K

Internal ref. 63 41 820

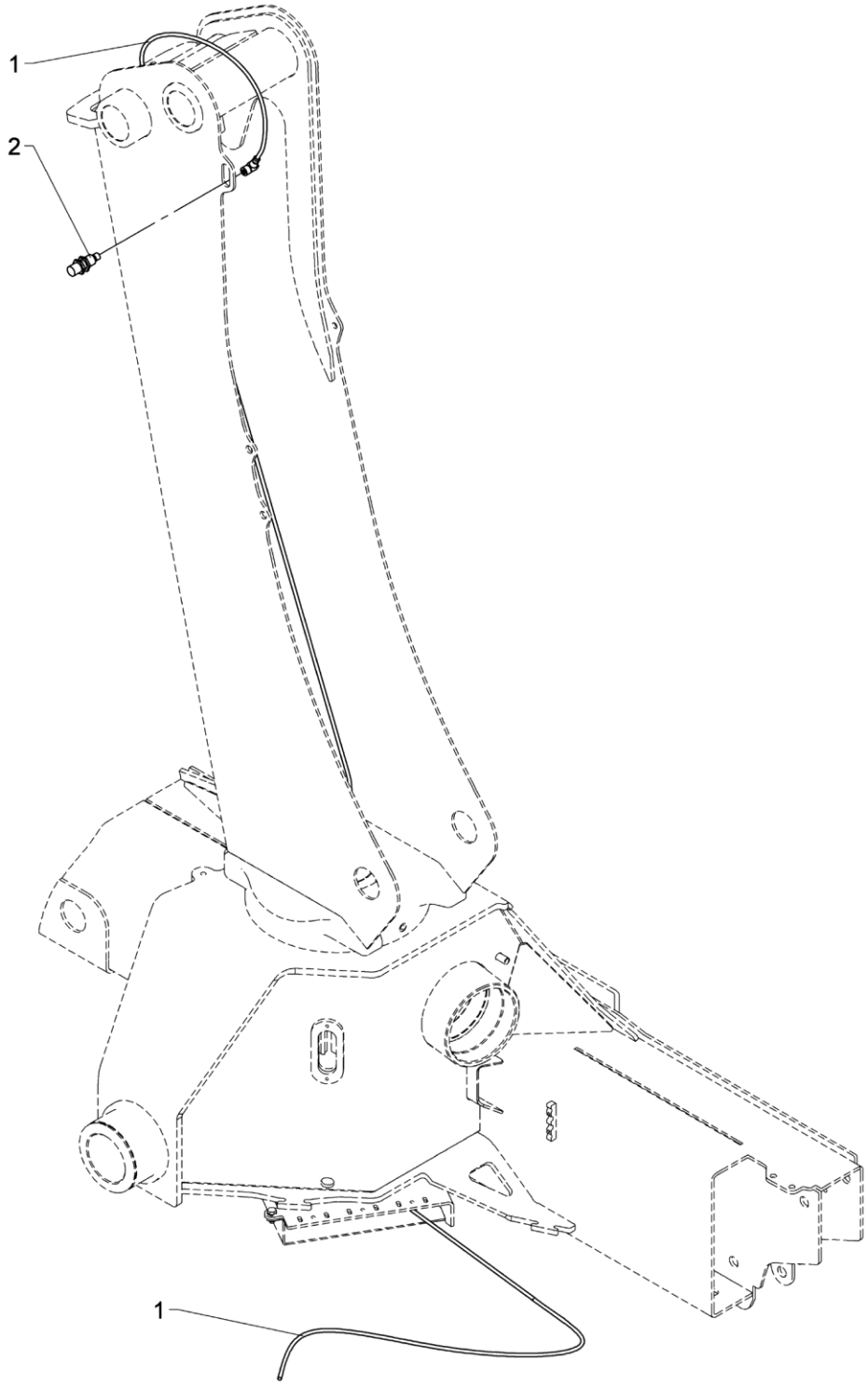

534 21 420

From loader 1060001
To loader

Created 01-05-2009
Modified 14-05-2009

Height indicateur

Pos	Qty.	Part no.	Description	Remarks
1	1	28902	Cable with plug, 10 m.	
2	1	29124	Proximity switch	

1500K, 1510K, 1720K, 1730K, 1820K, 1830K

Internal ref. 70 04 800

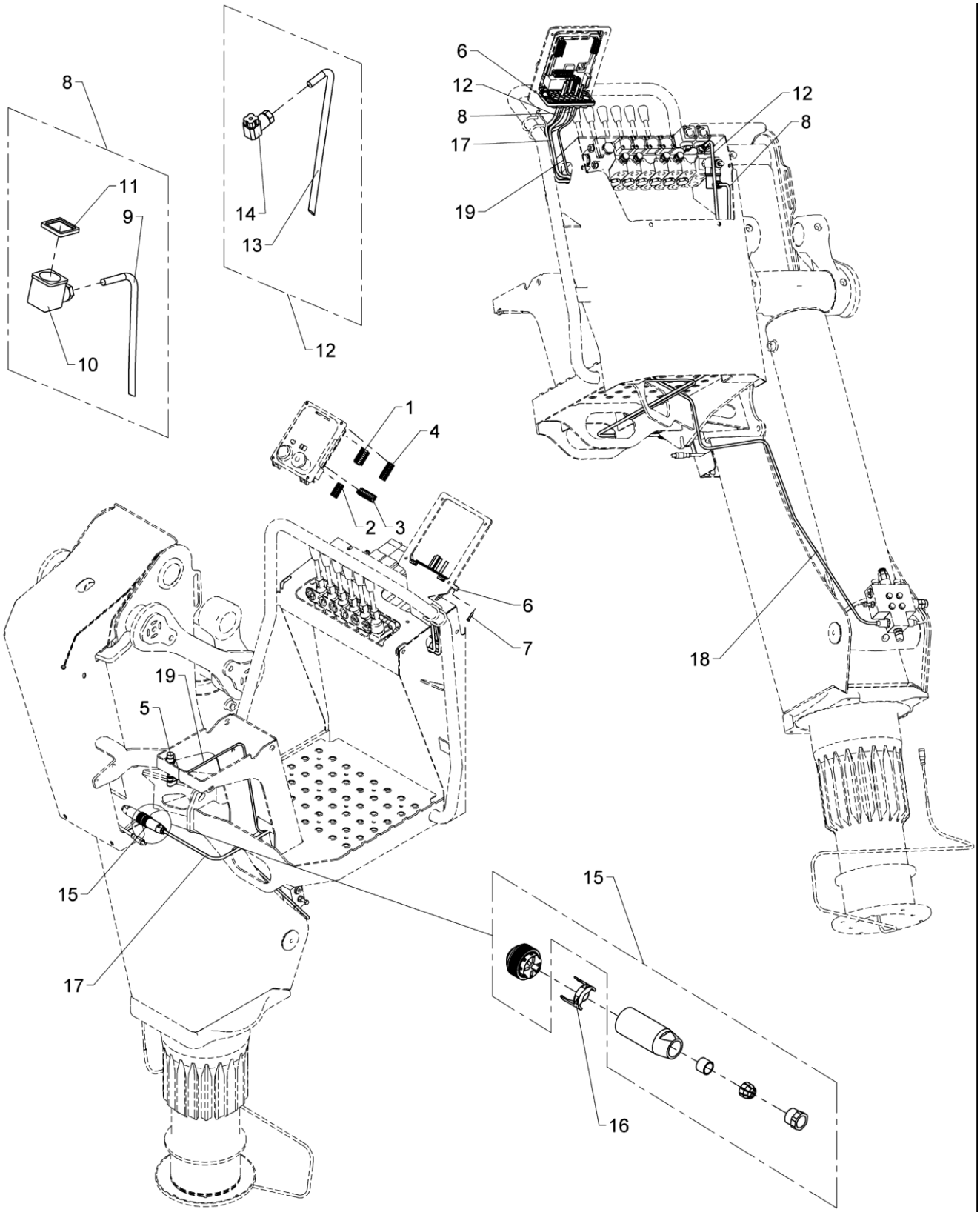

TS platform, 1-circuit fixed flow pump

Created 31-03-2010
Modified 16-06-2010

Pos	Qty.	Part no.	Description	Remarks
1	1	29319	Plug, 8-polar for RCL 53XX	
2	1	29318	Plug, 7-polar for RCL 53XX	
3	1	29321	Plug, 10-polar for RCL 53XX	
4	1	29320	Plug, 9-polar for RCL 53XX	
5	1	28210	Proximity switch	
6	1	29307	Cable lead-in	
7	4	30346	Screw, stainless	4,0 x 20
8	1	28265	Cable, dump valve, 1.35 m	
9	1	28249	Cable 2 x 0.75	1,4 m
10	1	28258	Plug, solenoid valve	
11	1	28840	Seal	
12	1	28294	Cable, spool sensor	1,3 m
13	1	28252	Cable	1,3 m
14	1	28257	Plug, spool sensor	
15	1	29230	Plug	
16	1	29236	Cable clamp	
17	1	28263	CAN BUS cable	2,5 m
18	1	29224	Cable with socket, 5 m	
19	1	28117	Cable with plug	

1500K, 1510K, 1720K, 1730K, 1820K, 1830K

Internal ref. 70 04 820

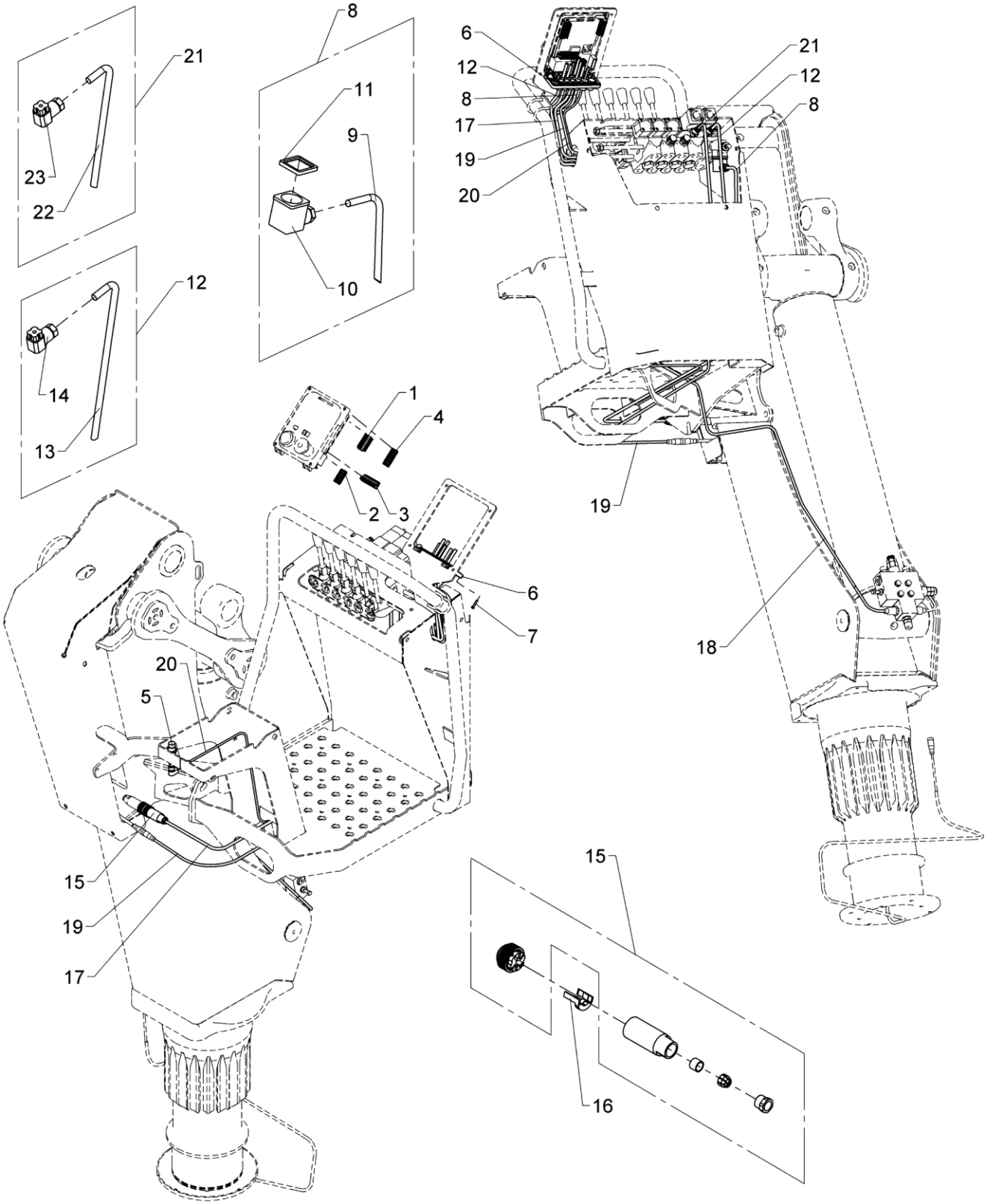

TS platform, 1-circuit fixed flow pump, 2-stage LMB

Pos	Qty.	Part no.	Description	Remarks
1	1	29319	Plug, 8-polar for RCL 53XX	
2	1	29318	Plug, 7-polar for RCL 53XX	
3	1	29321	Plug, 10-polar for RCL 53XX	
4	1	29320	Plug, 9-polar for RCL 53XX	
5	1	28210	Proximity switch	
6	1	29307	Cable lead-in	
7	4	30346	Screw, stainless	4,0 x 20
8	1	28265	Cable, dump valve, 1.35 m	
9	1	28249	Cable 2 x 0.75	1,4 m
10	1	28258	Plug, solenoid valve	
11	1	28840	Seal	
12	1	28294	Cable, spool sensor	1,3 m
13	1	28252	Cable	1,3 m
14	1	28257	Plug, spool sensor	
15	1	29230	Plug	
16	1	29236	Cable clamp	
17	1	28263	CAN BUS cable	2,5 m
18	1	29224	Cable with socket, 5 m	
19	1	29223	Cable with socket, 2 m	
20	1	28117	Cable with plug	
21	1	28267	Cable, spool sensor, boom	1,3 m
22	1	28252	Cable	1,3 m
23	1	28257	Plug, spool sensor	

1500K, 1510K, 1720K, 1730K, 1820K, 1830K

Internal ref. 70 04 830

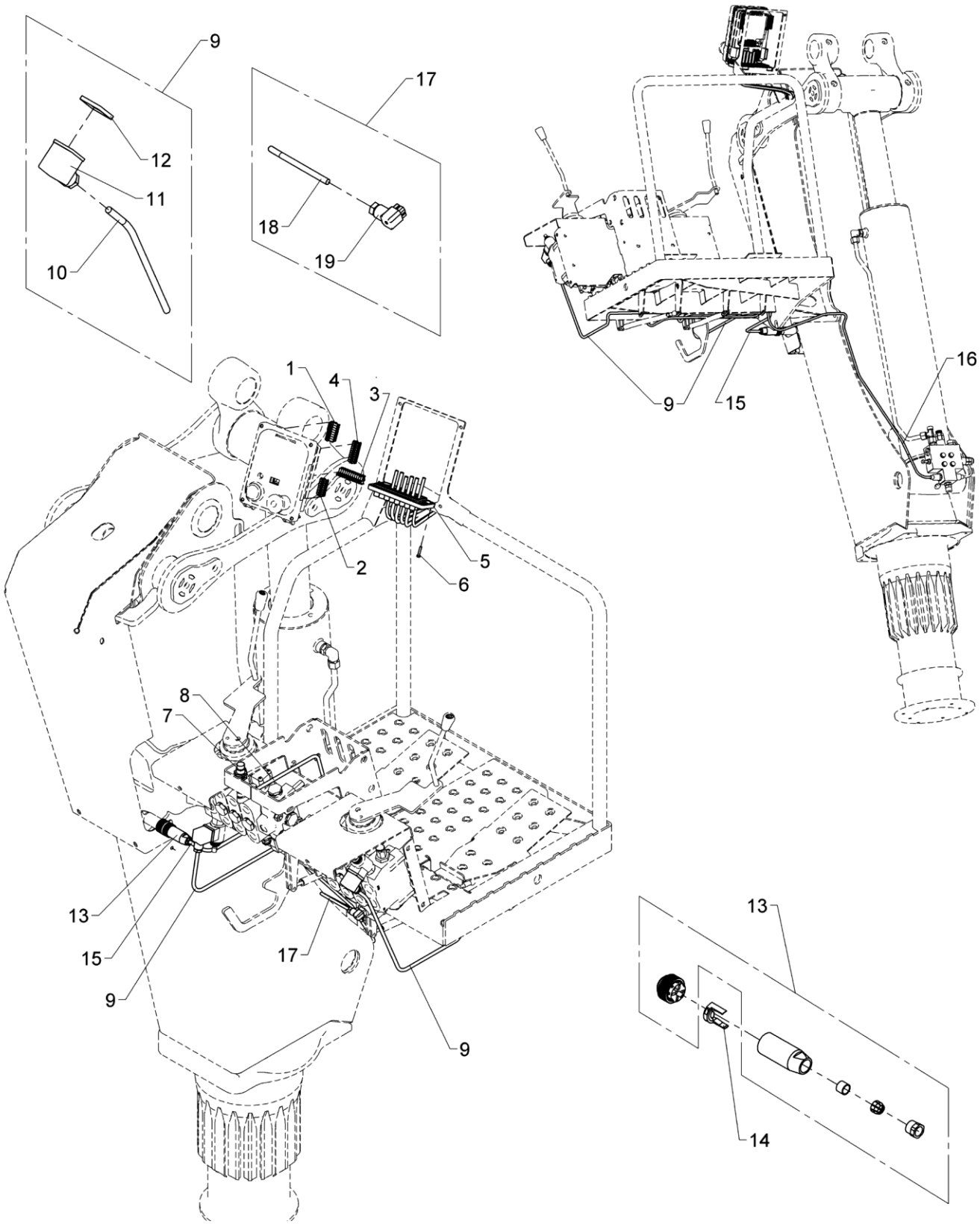

TS platform, 2-circuit fixed flow pump, CE basic system

Pos	Qty.	Part no.	Description	Remarks
1	1	29319	Plug, 8-polar for RCL 53XX	
2	1	29318	Plug, 7-polar for RCL 53XX	
3	1	29322	Plug, 12-polar for RCL 53XX	
4	1	29320	Plug, 9-polar for RCL 53XX	
5	1	29307	Cable lead-in	
6	4	30346	Screw, stainless	4,0 x 20
7	1	28210	Proximity switch	
8	1	28117	Cable with plug	
9	2	28286	Cable, dump valve	
10	2	28249	Cable 2 x 0.75	3 m
11	2	28258	Plug, solenoid valve	
12	2	28840	Seal	
13	1	29230	Plug	
14	1	29236	Cable clamp	
15	1	28263	CAN BUS cable	2 m
16	1	29224	Cable with socket, 5 m	
17	1	28819	Cable, spool sensor	
18	1	28252	Cable	3 m
19	1	28257	Plug, spool sensor	

1500K, 1510K, 1720K, 1730K, 1820K, 1830K

Internal ref. 63 42 130

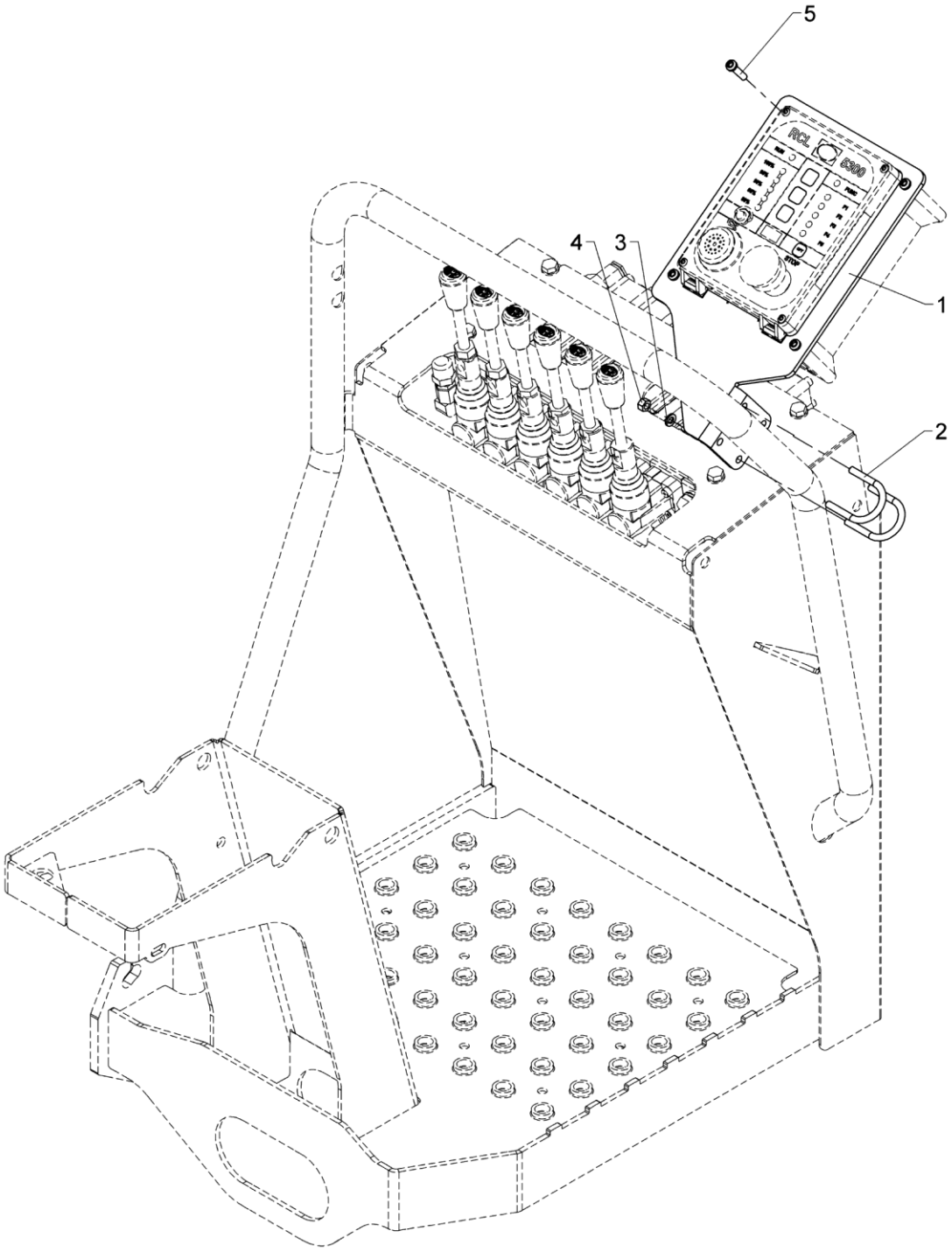

Mounting fittings RCL 5300 (TSRC linear)

Pos	Qty.	Part no.	Description	Remarks
1	1	6340906	Fittings for RCL 5300 (TS)	
2	2	6340903	Clamp	
3	4	32302	Face washer, stainless	6 mm
4	4	30884	Lock nut, stainless	M6
5	4	30340	Screw, stainless	6,0 x 25

1500K, 1510K, 1720K, 1730K, 1820K, 1830K

Internal ref. 70 04 780

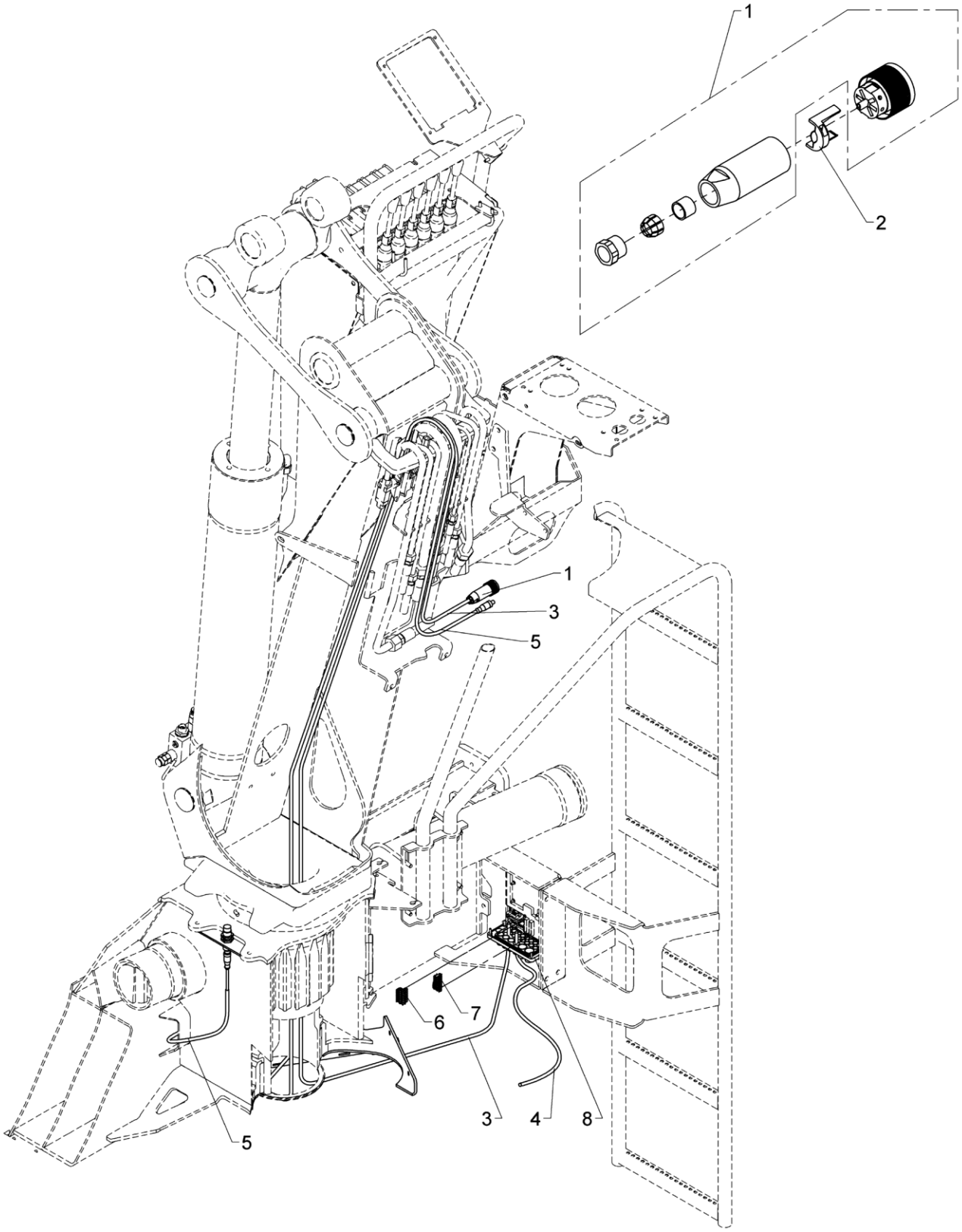

Column, TS incl. CE

534 21 740

From loader 1060001
To loader

Created 24-06-2010
Modified

Pos	Qty.	Part no.	Description	Remarks
1	1	29231	Socket for cable	
2	1	29236	Cable clamp	
3	1	28263	CAN BUS cable	6 m
4	1	28278	Cable 4 x 2.5	3,5 m
5	1	29235	Extension cable, 5 m	
6	1	29318	Plug, 7-polar for RCL 53XX	
7	1	29340	CAN termination/RCL53xx	
8	1	29307	Cable lead-in	

1500K, 1510K, 1720K, 1730K, 1820K, 1830K

Internal ref. 70 04 770

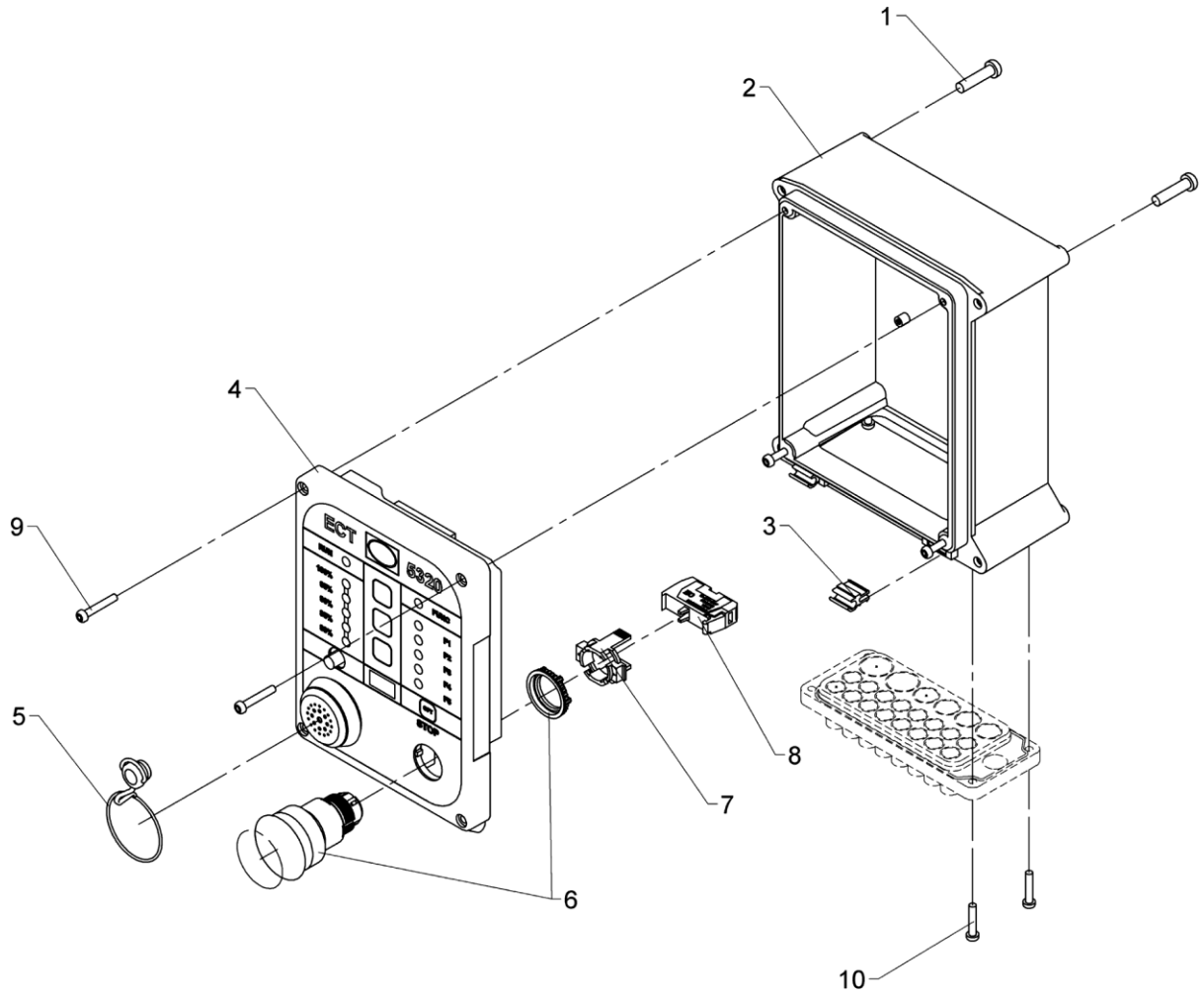

ECT 5320 in the valve block side, TS

Pos	Qty.	Part no.	Description	Remarks
1	4	30340	Screw, stainless	6,0 x 25
2	1	29304	Bottom f. RCL-box incl. hinge	
3	1	29305	Hinge	
4	1	29303	Front complete, ECT5320	
5	1	29306	Plug	
6	1	29196	Stop button	
7	1	29198	Attachment, stop button	
8	1	29197	Switch element, stop button	
9	4	30347	Screw, stainless	4,0 x 25
10	4	30346	Screw, stainless	4,0 x 20

1500K, 1510K, 1720K, 1730K, 1820K, 1830K

70 07 930
70 07 940
Internal ref. 70 08 420

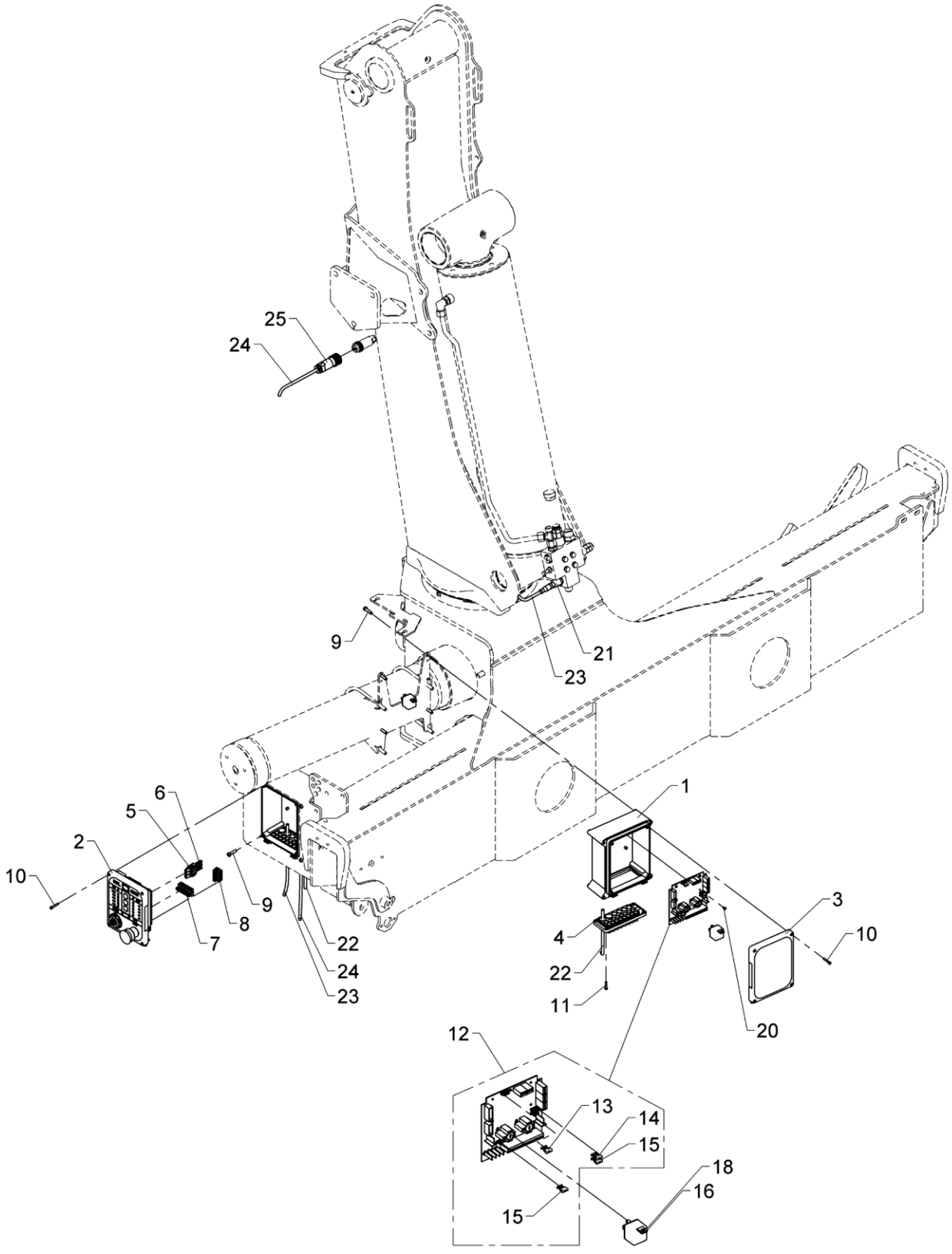

Electronic parts, TS, base

Pos	Qty.	Part no.	Description	Remarks
		7008420	Basic electronic parts,TS base	
		7007940	Relay, 24 V	
		7007930	Relay, 12 V	
1	2	29304	Bottom f. RCL-box incl. hinge	
2	1	29301	Front complete, RCL 5300	
3	1	29347	RCL 5300 indicator panel	
4	2	29307	Cable lead-in	
5	1	29315	Plug, 3-polar for RCL 53XX	
6	3	29316	Pin	
7	1	29321	Plug, 10-polar for RCL 53XX	
8	1	29318	Plug, 7-polar for RCL 53XX	
9	8	30340	Screw, stainless	6,0 x 25
10	8	30347	Screw, stainless	4,0 x 25
11	8	30346	Screw, stainless	4,0 x 20
12	1	29473	EJB5380	
13	1	29369	Fuse 2A MINI	
14	1	29370	Fuse 15A MINI	
15	2	27822	Fuse 10A MINI	
16	1	7007940	Relay, 24 V	
17	1	27342	Relay, 24V	
18	1	7007930	Relay, 12 V	
19	1	27340	Relay, 12 V	
20	6	30361	Screw, stainless	3,0 x 8
21	1	28850	Pressure transducer	
22	1	28278	Cable 4 x 2.5	2 m
23	1	29224	Cable with socket, 5 m	
24	1	28263	CAN BUS cable	5 m
25	1	29275	Cable socket 7-polar 10 A	

1500K, 1510K, 1720K, 1730K, 1820K, 1830K

Internal ref. 70 08 430

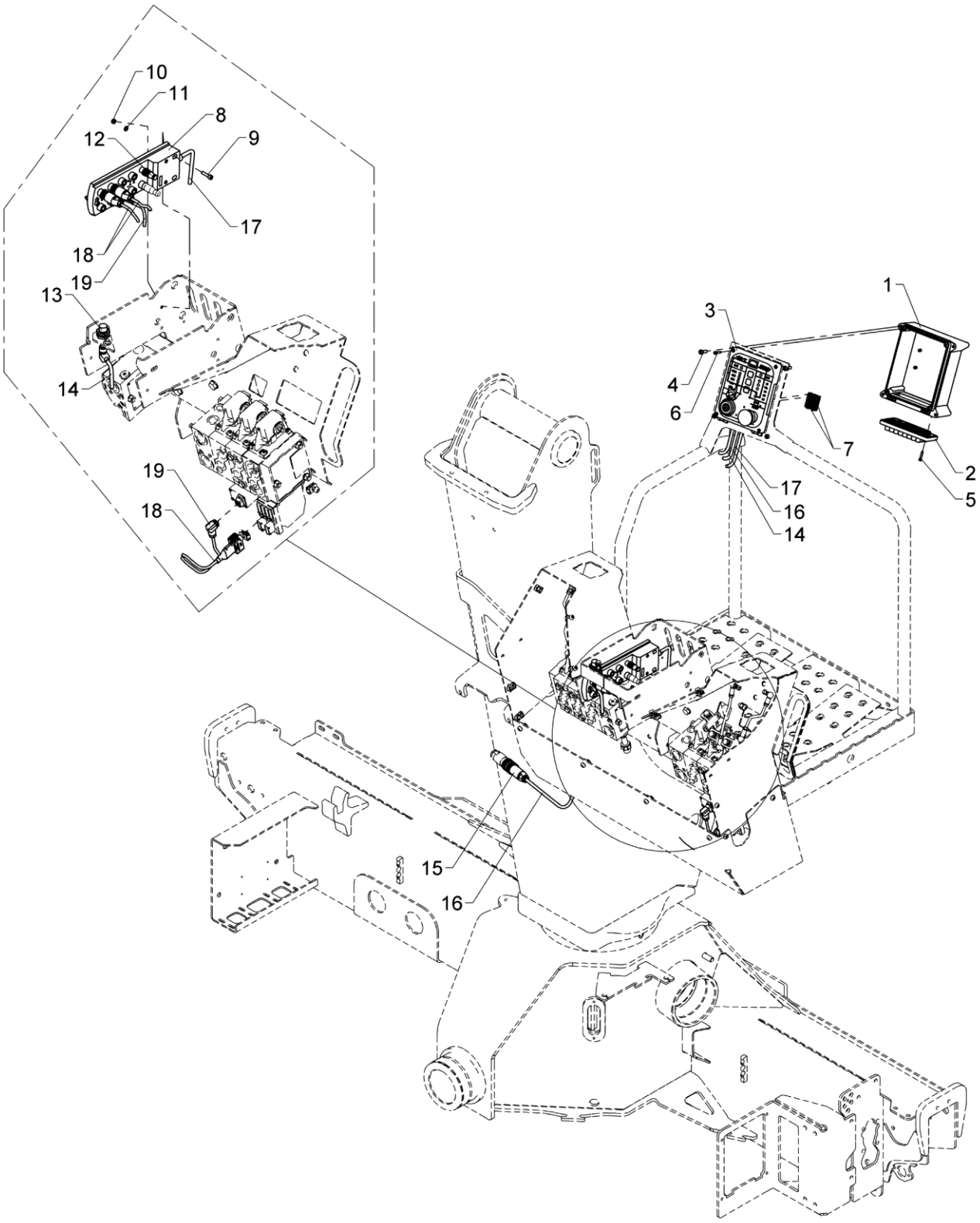

Electronic parts, TS, Danfoss

Pos	Qty.	Part no.	Description	Remarks
1	1	29304	Bottom f. RCL-box incl. hinge	
2	1	29307	Cable lead-in	
3	1	29303	Front complete, ECT5320	
4	4	30340	Screw, stainless	6,0 x 25
5	4	30346	Screw, stainless	4,0 x 20
6	4	30347	Screw, stainless	4,0 x 25
7	2	29318	Plug, 7-polar for RCL 53XX	
8	1	29470	IO module CR2033	
9	3	30425	Screw	MC5 x 30
10	3	30853	Nut, stainless	M5
11	3	32308	Washer	5 mm
12	1	29486	Plug M12, termination	
13	1	28980	Proximity switch	
14	1	28077	Cable with plug	
15	1	29285	Cable plug, 7-polar, 10 A	
16	1	28263	CAN BUS cable	3 m
17	1	28263	CAN BUS cable	2,5 m
18	1	29388	Cable PVED - 2 x M12	
19	1	29386	Cable M12 spool sensor 0,7m	

1500K, 1510K, 1720K, 1730K, 1820K, 1830K

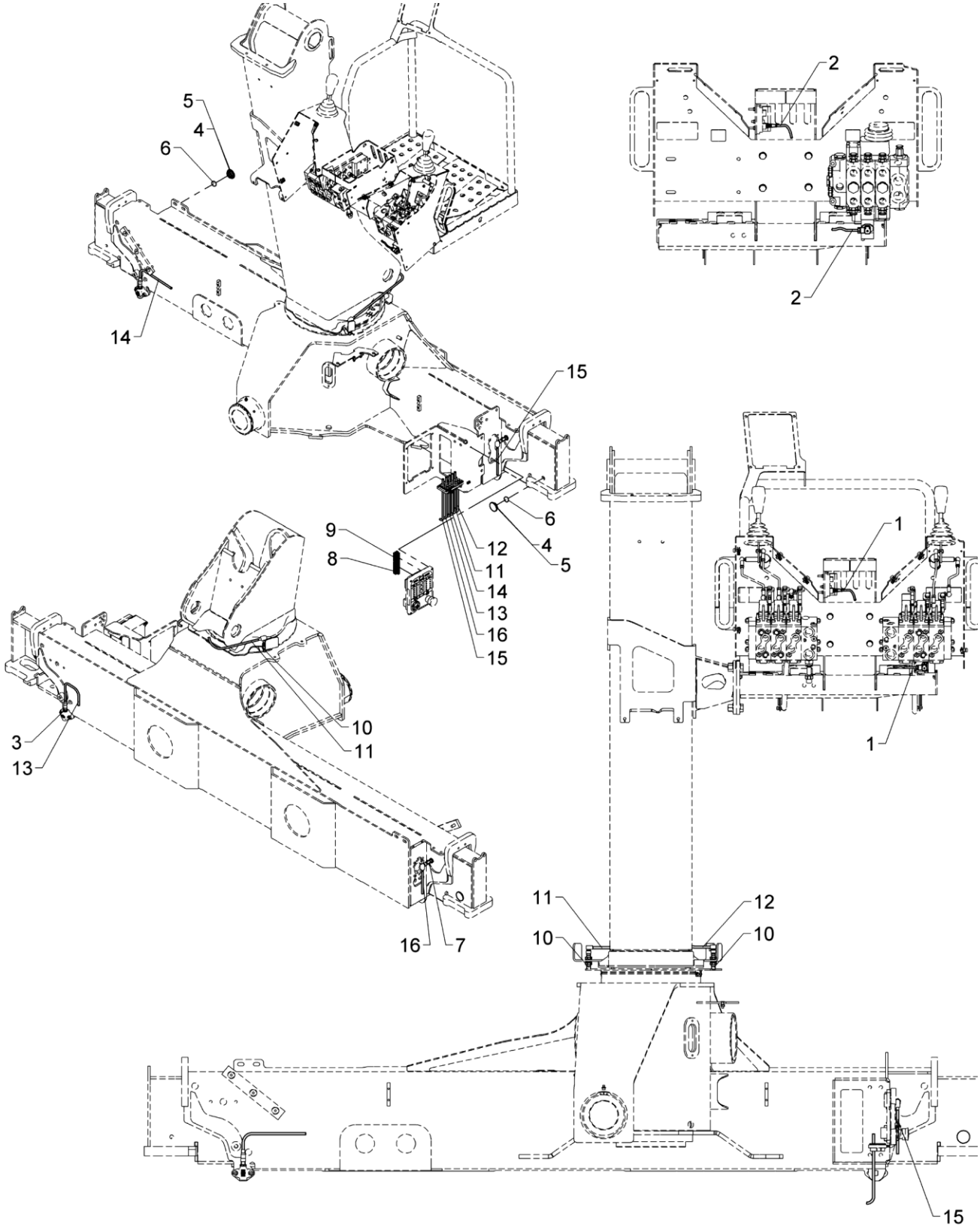

Obsolete

2CYBEL, single extension, TS

534 21 800

From loader 1060001
To loader

Created 19-02-2014
Modified 26-01-2016

Pos	Qty.	Part no.	Description	Remarks
		7008510	2CYBEL, beam, single ext., TS	
		7008490	2CYBEL, beam, single ext., TS	
1	1	29386	Cable M12 spool sensor 0,7m	70 08 490 (Danfoss)
2	1	29568	Cable M12, spool sensor 0.7 m	70 08 500 (hydroconntrol)
3	2	29257	Proximity switch M12x44, 4mm	
4	2	64424	Slide block	2 mm
5	2	63681	Slide block	3 mm
6	2	29262	Solenoid Ø22x5	
7	2	29259	Magnet proximity switch M12	
8	1	29322	Plug, 12-polar for RCL 53XX	
9	1	29320	Plug, 9-polar for RCL 53XX	
10	2	29447	Proximity switchM12 8mm PNP-NO	
11	1	28077	Cable with plug	
12	1	28077	Cable with plug	
13	1	29223	Cable with socket, 2 m	
14	1	29224	Cable with socket, 5 m	
15	1	28117	Cable with plug	
16	1	28077	Cable with plug	

1500K, 1510K, 1720K, 1730K, 1820K, 1830K

70 08 490
70 08 500
Internal ref. 70 08 510

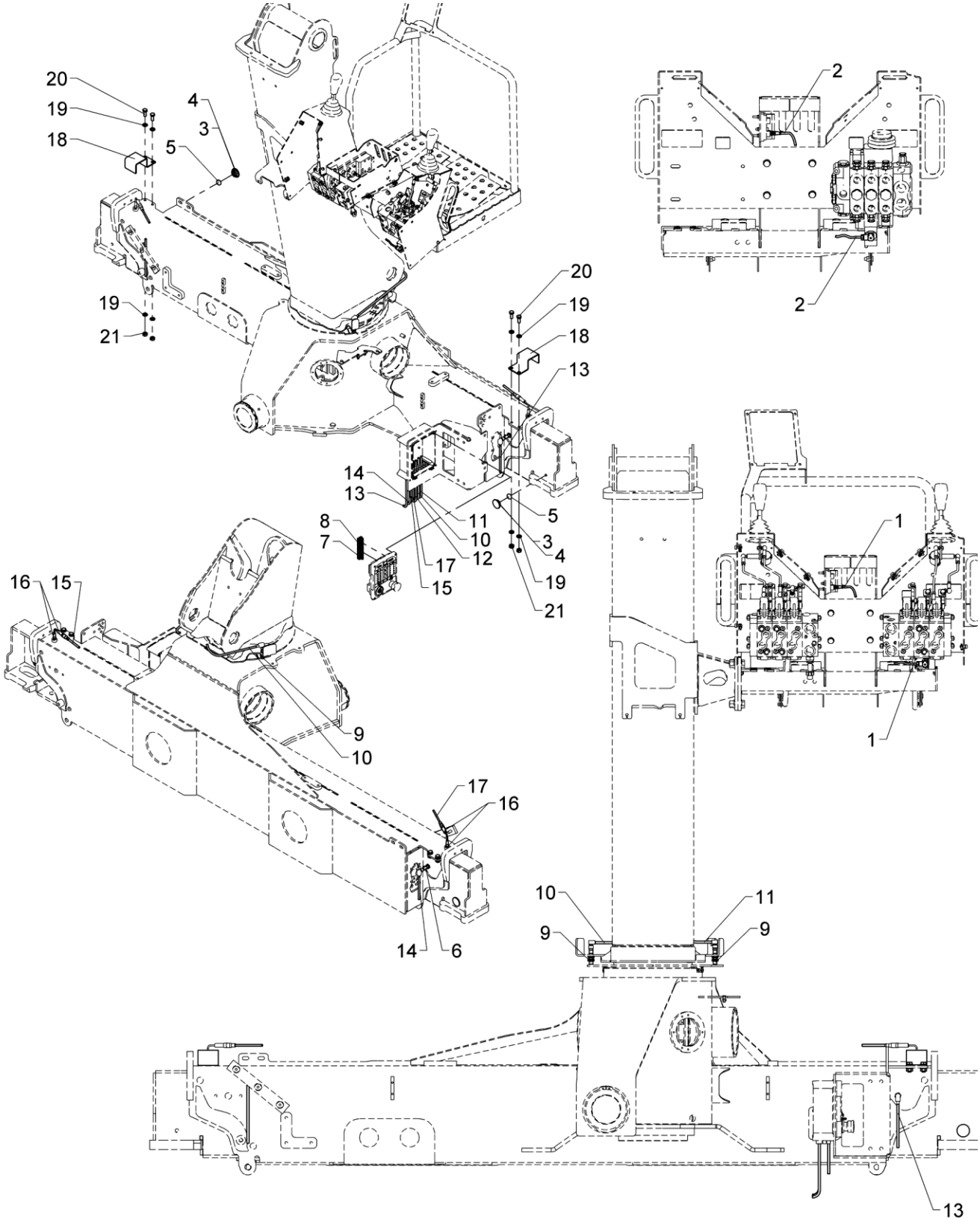

2CYBEL, single extension, TS

Pos	Qty.	Part no.	Description	Remarks
		7008510	2CYBEL, beam, single ext., TS	
		7008500		
		7008490	2CYBEL, beam, single ext., TS	
1	1	29386	Cable M12 spool sensor 0,7m	70 08 490 (Danfoss)
2	1	29568	Cable M12, spool sensor 0.7 m	70 08 500 (hydroconntrol)
3	2	64424	Slide block	2 mm
4	2	63681	Slide block	3 mm
5	2	29262	Solenoid Ø22x5	
6	2	29259	Magnet proximity switch M12	
7	1	29322	Plug, 12-polar for RCL 53XX	
8	1	29320	Plug, 9-polar for RCL 53XX	
9	2	29447	Proximity switchM12 8mm PNP-NO	
10	1	28077	Cable with plug	
11	1	28077	Cable with plug	
12	1	29224	Cable with socket, 5 m	
13	1	28117	Cable with plug	
14	1	28077	Cable with plug	
15	1	29223	Cable with socket, 2 m	
16	2	29282	Proximity switch M12-4mm NO	
17	1	29224	Cable with socket, 5 m	
18	2	6340654	Protective guard	
19	8	31565	Washer, stainless	10 mm
20	4	30155	Set screw	M10 x 25
21	4	30858	Nut	M10

1500K, 1510K, 1720K, 1730K, 1820K, 1830K

70 08 520
Internal ref. 70 08 540

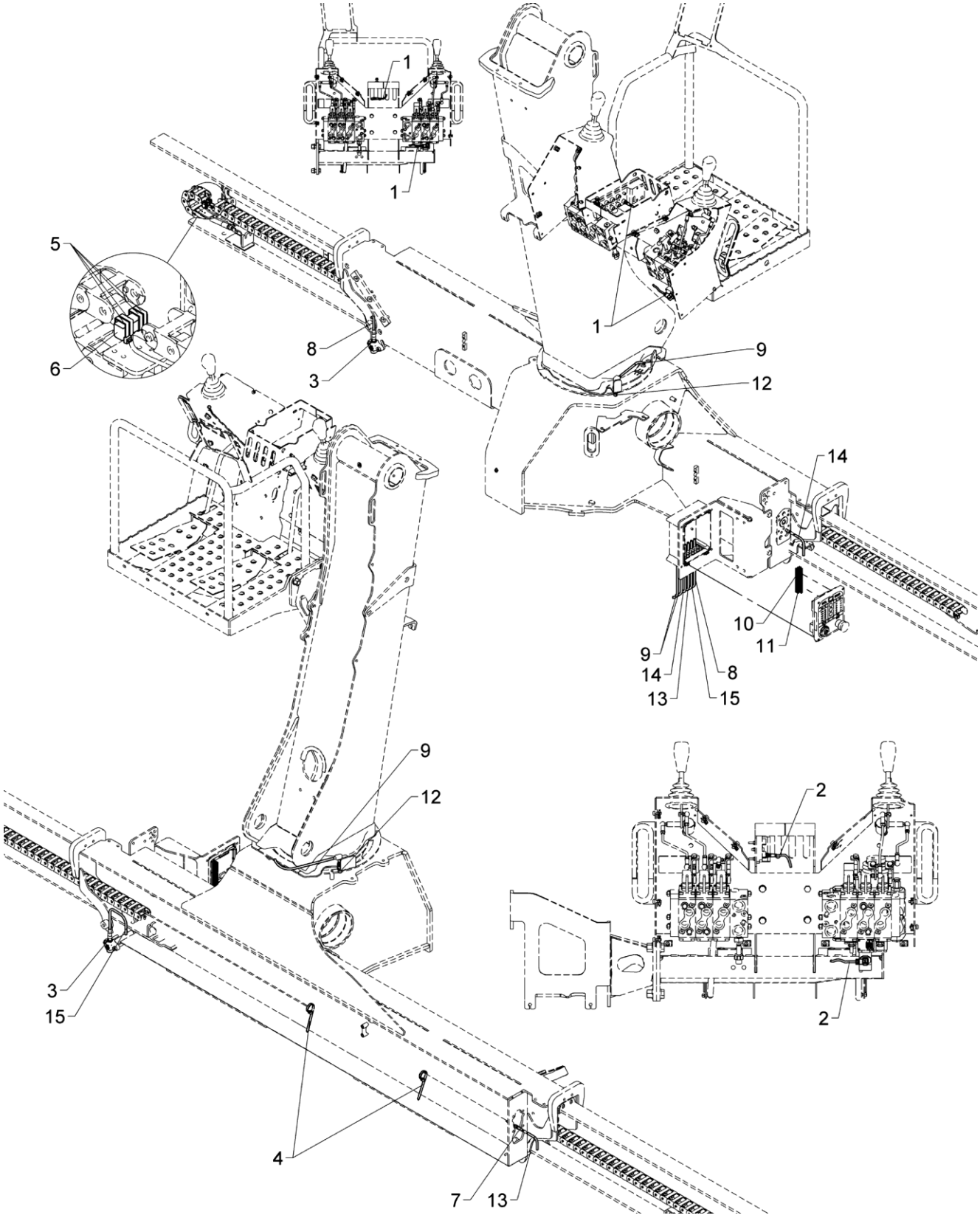

Obsolete

2CYBEL, double extension, TS

534 21 810

From loader 1060001
To loader

Created 19-02-2014
Modified 26-01-2016

Pos	Qty.	Part no.	Description	Remarks
		7008540	2CYBEL, beam, double ext., TS	
		7008520	2CYBEL, beam, double ext., TS	
1	1	29386	Cable M12 spool sensor 0,7m	70 08 520 (Danfoss)
2	1	29568	Cable M12, spool sensor 0.7 m	70 08 530 (hydroconntrol)
3	2	29257	Proximity switch M12x44, 4mm	
4	4	27275	Cable tie, black, 7.6x385mm	
5	8	27274	Clip	
6	2	29253	Tilt switch, nylon drag chain	
7	2	29443	Panel lead-in M8 - 3-polar	
8	1	29224	Cable with socket, 5 m	
9	2	28077	Cable with plug	
10	1	29320	Plug, 9-polar for RCL 53XX	
11	1	29322	Plug, 12-polar for RCL 53XX	
12	2	29447	Proximity switchM12 8mm PNP-NO	
13	1	29264	Cable 5 m, M8 socket	
14	1	29265	Cable 2 m, M8 socket	
15	1	29223	Cable with socket, 2 m	

1500K, 1510K, 1720K, 1730K, 1820K, 1830K

70 08 530
70 08 520
Internal ref. 70 08 540

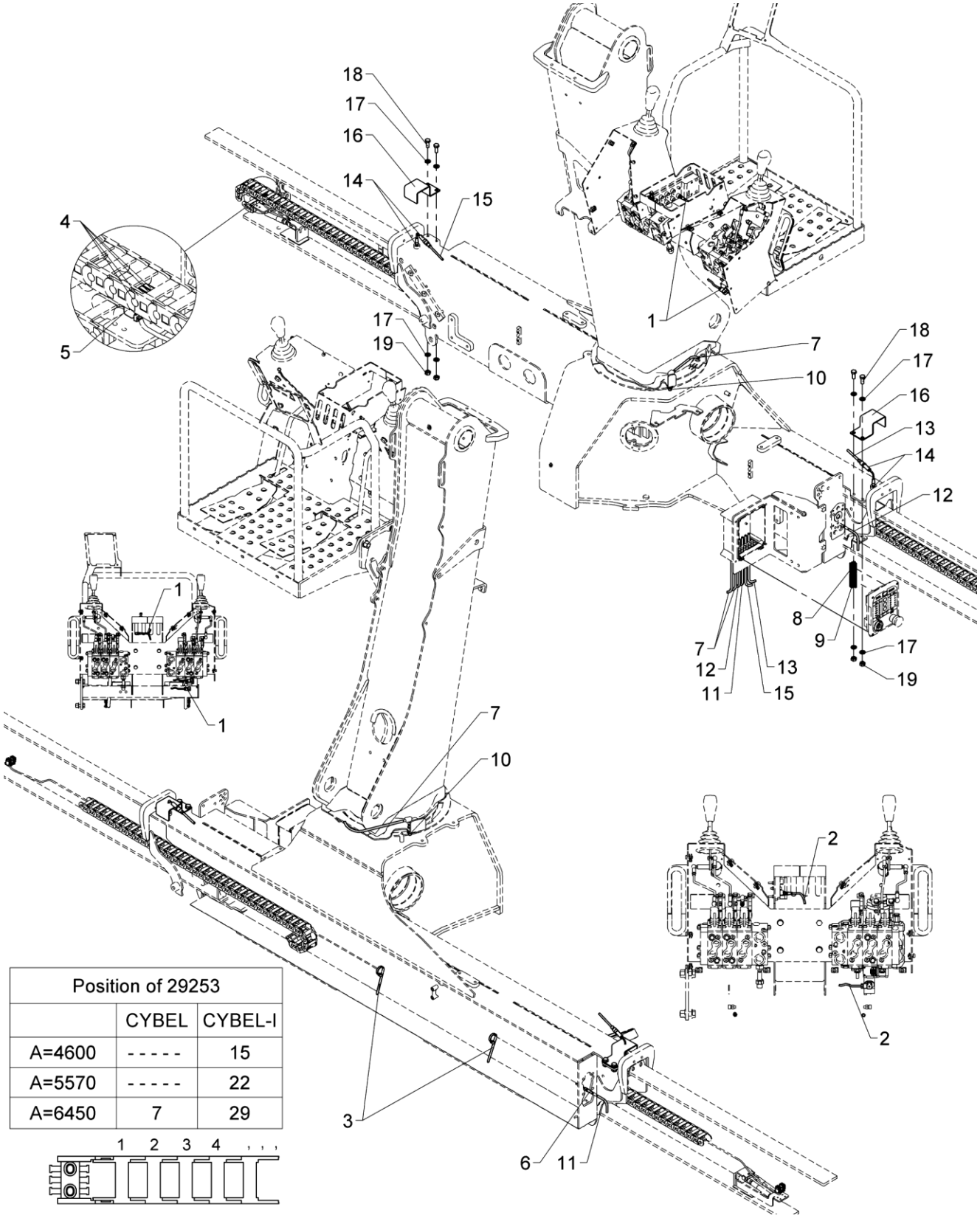

Position of 29253		
	CYBEL	CYBEL-I
A=4600	- - - - -	15
A=5570	- - - - -	22
A=6450	7	29

2CYBEL, double extension, TS

Pos	Qty.	Part no.	Description	Remarks
		7008540	2CYBEL, beam, double ext., TS	
		7008520	2CYBEL, beam, double ext., TS	
		7008530		
1	1	29386	Cable M12 spool sensor 0,7m	70 08 520 (Danfoss)
2	1	29568	Cable M12, spool sensor 0.7 m	70 08 530 (hydrocontrol)
3	4	27275	Cable tie, black, 7.6x385mm	
4	8	27274	Clip	
5	2	29253	Tilt switch, nylon drag chain	
6	2	29443	Panel lead-in M8 - 3-polar	
7	2	28077	Cable with plug	
8	1	29320	Plug, 9-polar for RCL 53XX	
9	1	29322	Plug, 12-polar for RCL 53XX	
10	2	29447	Proximity switchM12 8mm PNP-NO	
11	1	29264	Cable 5 m, M8 socket	
12	1	29265	Cable 2 m, M8 socket	
13	1	29223	Cable with socket, 2 m	
14	2	29282	Proximity switch M12-4mm NO	
15	1	29224	Cable with socket, 5 m	
16	2	6340654	Protective guard	
17	8	31565	Washer, stainless	10 mm
18	4	30155	Set screw	M10 x 25
19	4	30858	Nut	M10

1500K, 1510K, 1720K, 1730K, 1820K, 1830K

Internal ref. 70 08 450

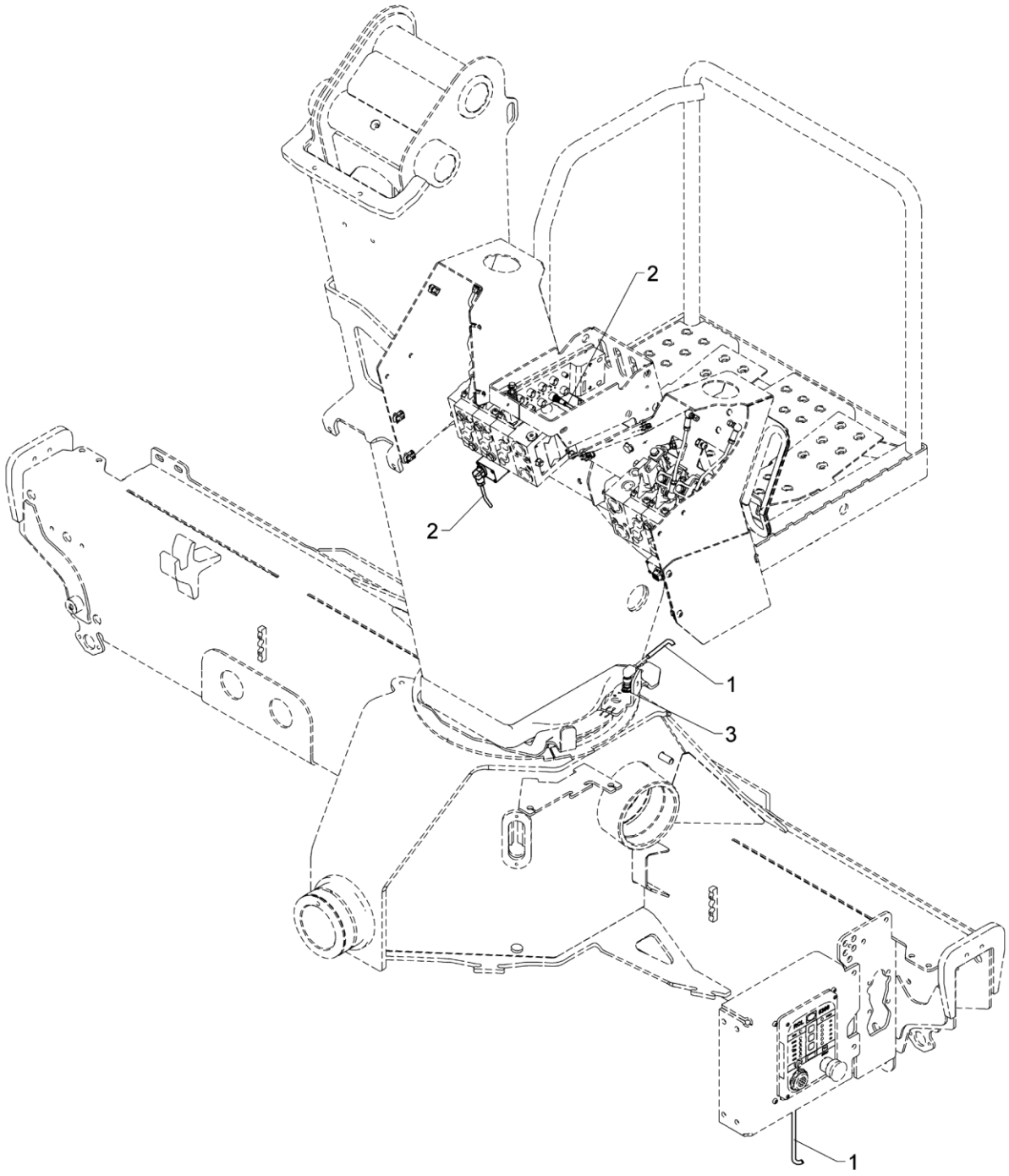

534 21 840

From loader 1060001
To loader

Created 18-02-2014
Modified 06-05-2014

2-stage LMB, TS, Danfoss

Pos	Qty.	Part no.	Description	Remarks
1	1	28077	Cable with plug	
2	1	29386	Cable M12 spool sensor 0,7m	
3	1	29447	Proximity switchM12 8mm PNP-NO	

1500K, 1510K, 1720K, 1730K, 1820K, 1830K

Internal ref. 70 08 470

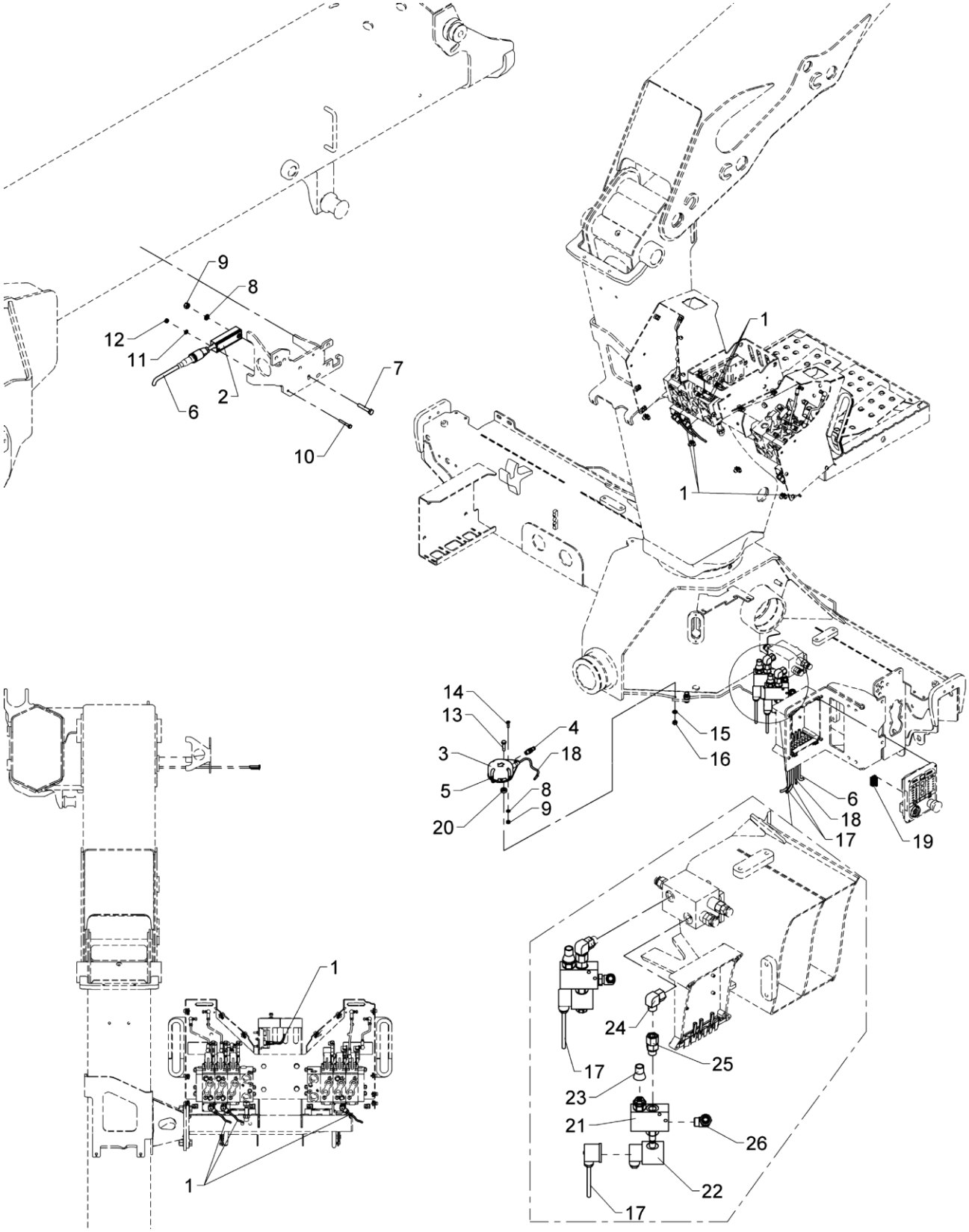

EVS-H, TS, Danfoss

Pos	Qty.	Part no.	Description	Remarks
1	3	29386	Cable M12 spool sensor 0,7m	
2	1	29295	Tilt sensor + 0.25 m cable	
3	1	29426	Electronic inclinometer,single	
4	1	29486	Plug M12, termination	
5	1	6340274	Mounting fittings (AIC 5062)	
6	1	28730	Cable + socket, 10 m	
7	1	30116	Steel pin, stainless	M6 x 35
8	4	32302	Face washer, stainless	6 mm
9	4	30884	Lock nut, stainless	M6
10	1	31790	Set screw M4 x 30	M4 x 30
11	1	31188	Washer, stainless	4 mm
12	1	30857	Lock nut	M4
13	2	30135	Set screw, stainless	M8 x 30
14	3	32491	Round-head screw	M6 x 20
15	2	31147	Face washer, 8 mm	
16	2	30856	Nut, stainless	M8
17	2	28265	Cable, dump valve, 1.35 m	
18	1	29456	CAN cable, M12, 2 m, female	
19	1	29318	Plug, 7-polar for RCL 53XX	
20	2	6871754	Spacer	
21	2	50517	Valve	
22	2	61778	Solenoid	
23	2	50518	Cover for sealing	
24	2	25242	Elbow connection	EWSD 12 L
25	2	25240	Connection	EGESD 12 LR-WD
26	2	26897	Elbow connection	12 mm - 3/8"

1500K, 1510K, 1720K, 1730K, 1820K, 1830K

Internal ref. 70 06 300

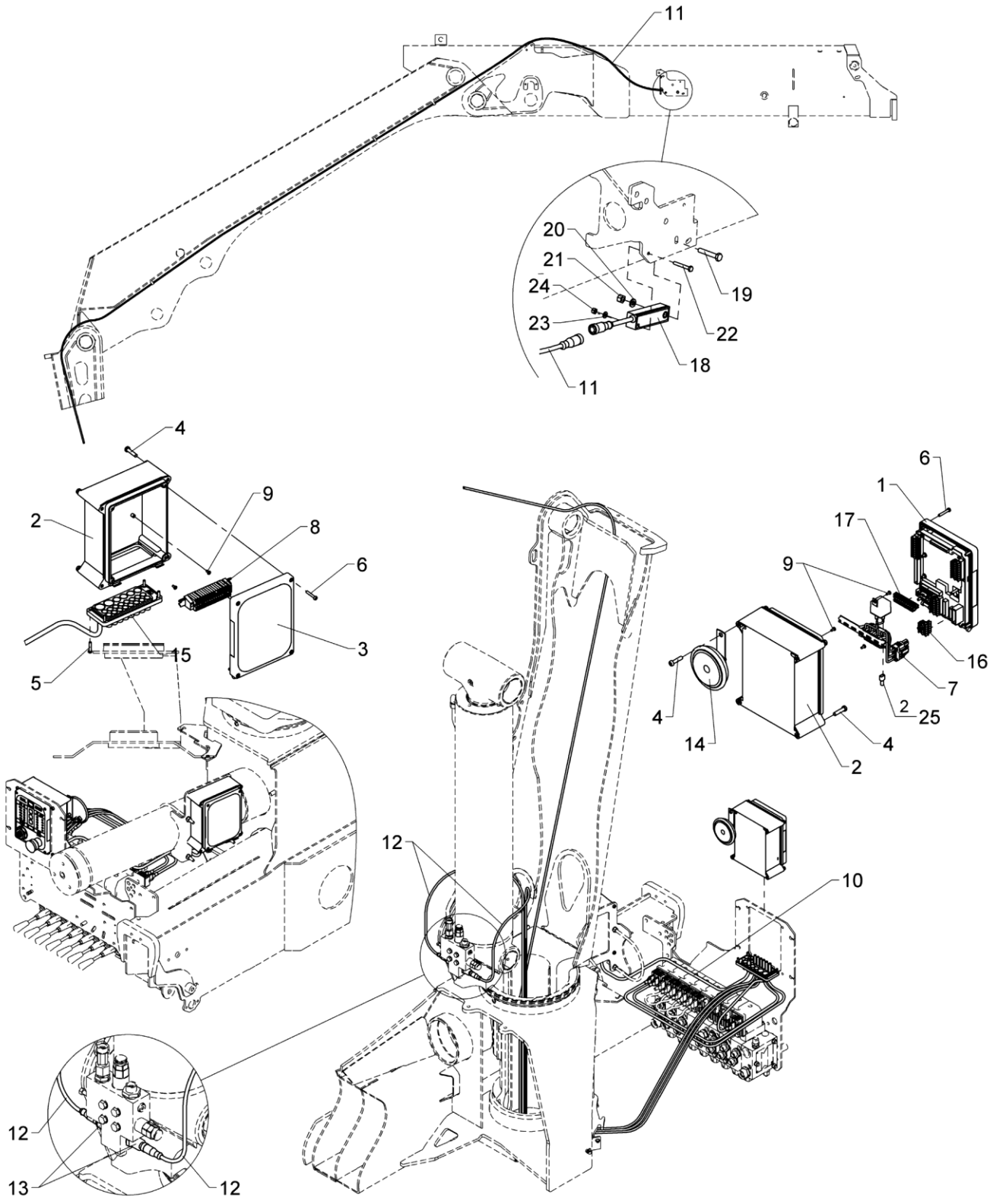

Obsolete

534 22 010

From loader 1060001
To loader

Created 16-07-2012
Modified

Basic electronic parts, crane with RC

Pos	Qty.	Part no.	Description	Remarks
1	1	29301	Front complete, RCL 5300	
2	2	29304	Bottom f. RCL-box incl. hinge	
3	1	29347	RCL 5300 indicator panel	
4	9	30340	Screw, stainless	6,0 x 25
5	8	30346	Screw, stainless	4,0 x 20
6	8	30347	Screw, stainless	4,0 x 25
7	1	7006301	Terminal block for RC 24 V	
8	1	7006302	Terminal block, Box1	
9	5	30361	Screw, stainless	3,0 x 8
10	1	28722	Wiring, RC base	
11	1	28730	Cable + socket, 10 m	10 m
12	2	29224	Cable with socket, 5 m	5 m
13	2	28850	Pressure transducer	
14	1	28971	Horn, 24 V, 2.5 Amp.	
15	1	29307	Cable lead-in	
16	1	29341	CAN termination FJC	
17	1	29321	Plug, 10-polar for RCL 53XX	
18	1	29295	Tilt sensor + 0.25 m cable	
19	1	30116	Steel pin, stainless	M6 x 35
20	1	32302	Face washer, stainless	6 mm
21	1	30884	Lock nut, stainless	M6
22	1	31790	Set screw M4 x 30	M4 x 30
23	1	31188	Washer, stainless	4 mm
24	1	30857	Lock nut	M4
25	1	27428	Clip	

1500K, 1510K, 1720K, 1730K, 1820K, 1830K

70 07 940
70 07 930
Internal ref. 70 06 300

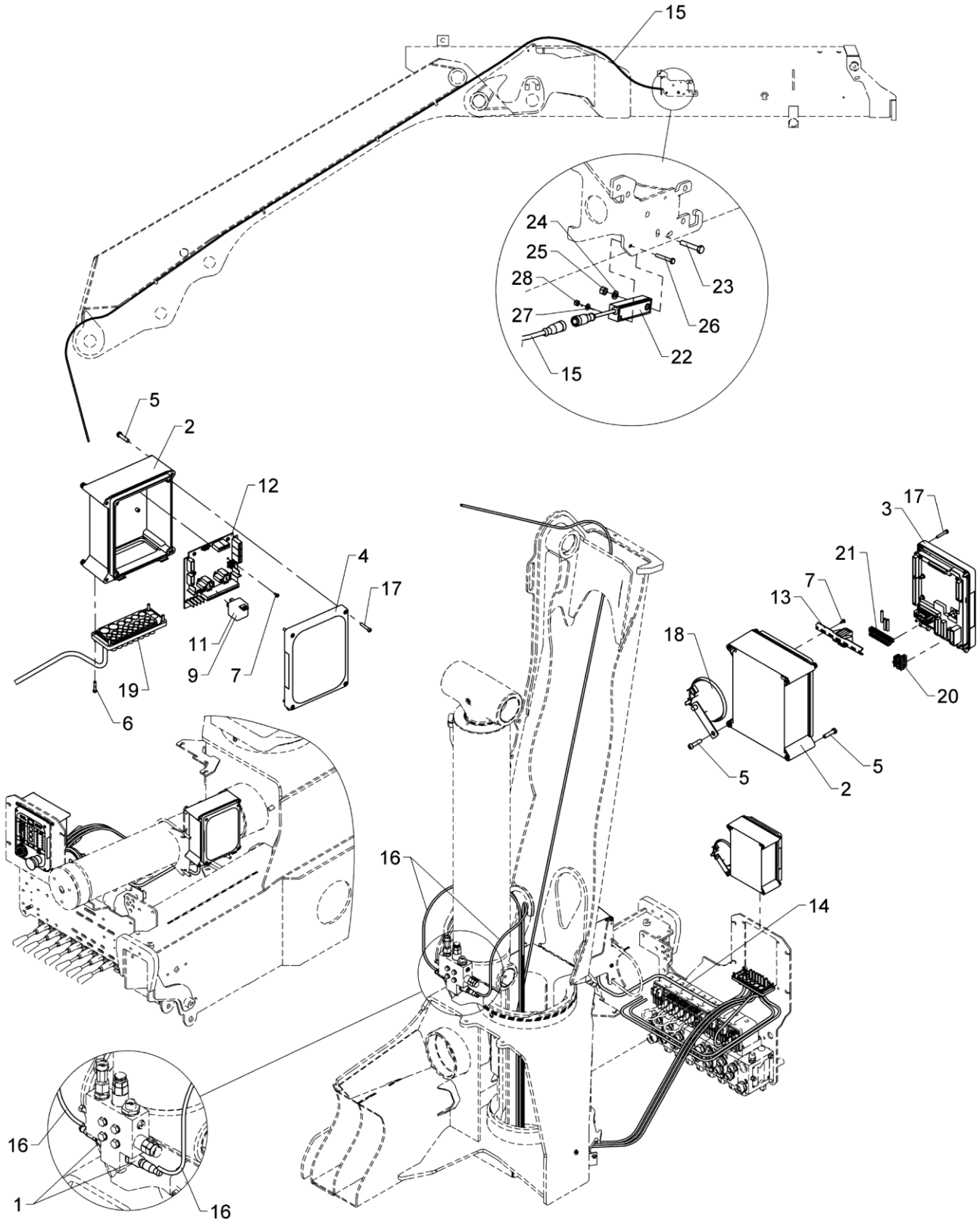

Obsolete

534 22 010 A

From loader

To loader

Basic electronic parts, crane with RC

Created 25-05-2013

Modified 06-05-2014

Pos	Qty.	Part no.	Description	Remarks
		7006300	Basic parts, crane + RC	
		7007930	Relay, 12 V	
		7007940	Relay, 24 V	
1	2	28850	Pressure transducer	
2	2	29304	Bottom f. RCL-box incl. hinge	
3	1	29301	Front complete, RCL 5300	
4	1	29347	RCL 5300 indicator panel	
5	9	30340	Screw, stainless	6,0 x 25
6	8	30346	Screw, stainless	4,0 x 20
7	8	30361	Screw, stainless	3,0 x 8
8	1	7007940	Relay, 24 V	
9	1	27342	Relay, 24V	
10	1	7007930	Relay, 12 V	
11	1	27340	Relay, 12 V	
12	1	29473	EJB5380	
13	1	7006306	Terminal block for RCL + RC	
14	1	28722	Wiring, RC base	
15	1	28730	Cable + socket, 10 m	9,0 m
16	2	29224	Cable with socket, 5 m	6,0 m
17	8	30347	Screw, stainless	4,0 x 25
18	1	28971	Horn, 24 V, 2.5 Amp.	
19	1	29307	Cable lead-in	
20	1	29341	CAN termination FJC	
21	1	29321	Plug, 10-polar for RCL 53XX	
22	1	29295	Tilt sensor + 0.25 m cable	
23	1	30116	Steel pin, stainless	M6 x 35
24	1	32302	Face washer, stainless	6 mm
25	1	30884	Lock nut, stainless	M6
26	1	31790	Set screw M4 x 30	M4 x 30
27	1	31188	Washer, stainless	4 mm
28	1	30857	Lock nut	M4

1500K, 1510K, 1720K, 1730K, 1820K, 1830K

70 07 940
70 07 930
Internal ref. 70 06 300

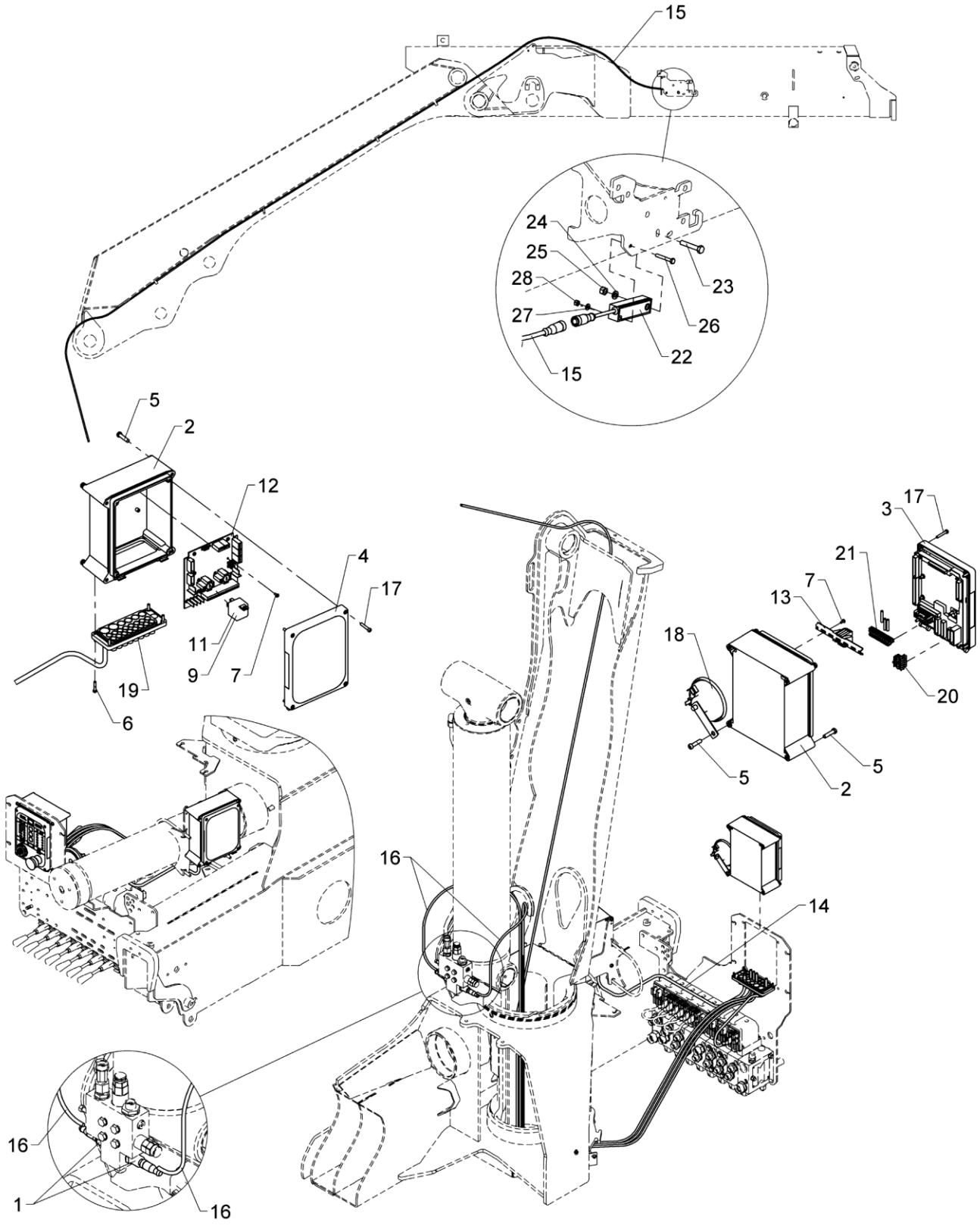

Basic electronic parts, crane with RC

Pos	Qty.	Part no.	Description	Remarks
		7006300	Basic parts, crane + RC	
		7007930	Relay, 12 V	
		7007940	Relay, 24 V	
1	2	28850	Pressure transducer	
2	2	29304	Bottom f. RCL-box incl. hinge	
3	1	29301	Front complete, RCL 5300	
4	1	29347	RCL 5300 indicator panel	
5	9	30340	Screw, stainless	6,0 x 25
6	8	30346	Screw, stainless	4,0 x 20
7	8	30361	Screw, stainless	3,0 x 8
8	1	7007940	Relay, 24 V	
9	1	27342	Relay, 24V	
10	1	7007930	Relay, 12 V	
11	1	27340	Relay, 12 V	
12	1	29473	EJB5380	
13	1	7006306	Terminal block for RCL + RC	
14	1	28751	Wiring, PVSK-M	
15	1	28730	Cable + socket, 10 m	9,0 m
16	2	29224	Cable with socket, 5 m	6,0 m
17	8	30347	Screw, stainless	4,0 x 25
18	1	28971	Horn, 24 V, 2.5 Amp.	
19	1	29307	Cable lead-in	
20	1	29341	CAN termination FJC	
21	1	29321	Plug, 10-polar for RCL 53XX	
22	1	29295	Tilt sensor + 0.25 m cable	
23	1	30116	Steel pin, stainless	M6 x 35
24	1	32302	Face washer, stainless	6 mm
25	1	30884	Lock nut, stainless	M6
26	1	31790	Set screw M4 x 30	M4 x 30
27	1	31188	Washer, stainless	4 mm
28	1	30857	Lock nut	M4

1500K, 1510K, 1720K, 1730K, 1820K, 1830K

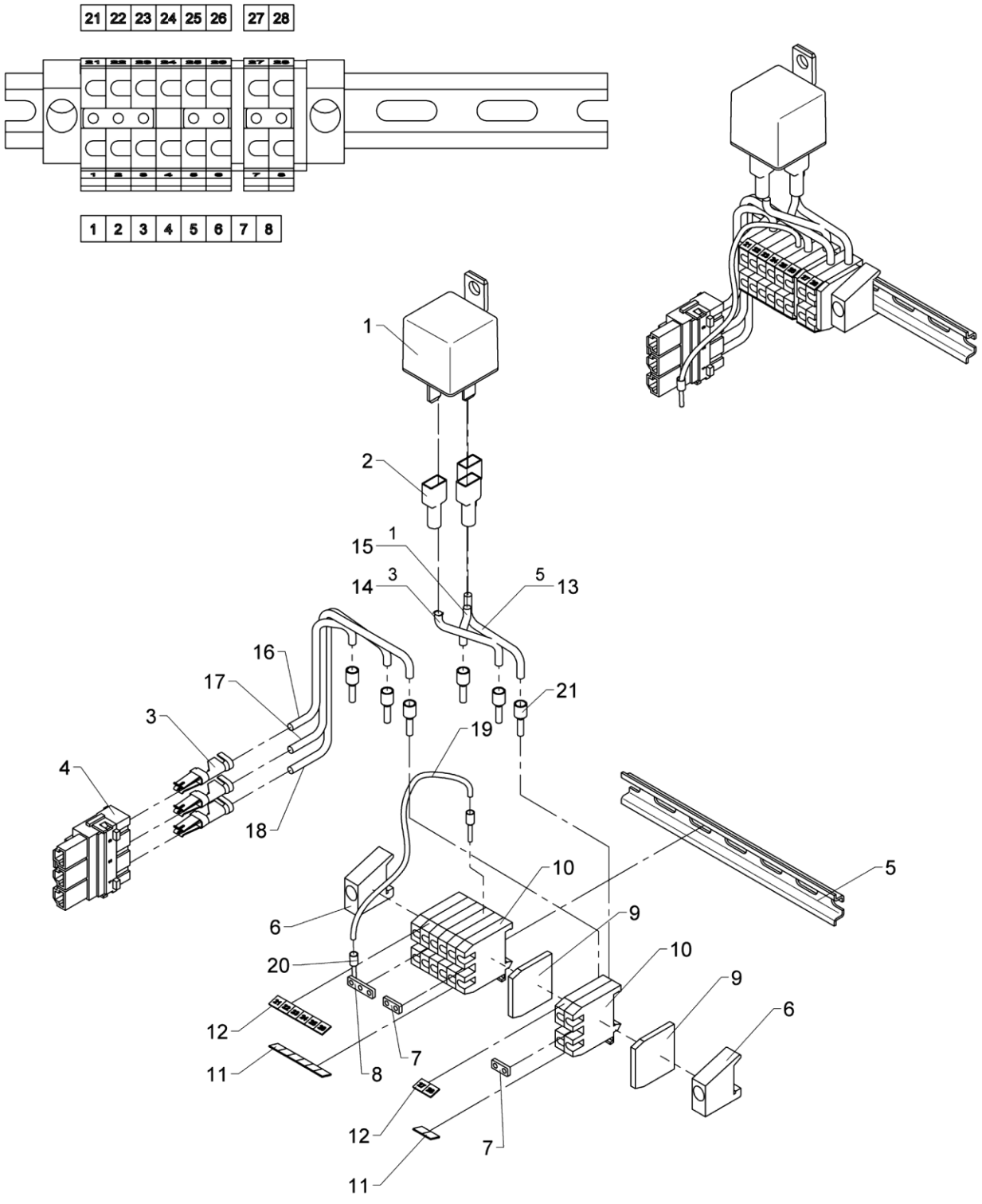

Obsolete

Terminal block for RC, 24 V

534 22 015

From loader 1060001
To loader

Created 24-11-2011
Modified

Pos	Qty.	Part no.	Description	Remarks
1	1	27342	Relay, 24V	
2	3	27428	Clip	
3	3	29316	Pin	
4	1	29315	Plug, 3-polar for RCL 53XX	
5	1	28013	Guide rail	120 mm.
6	2	28012	End angle	
7	2	28208	Fish plate	
8	1	28014	Fish plate	
9	2	28011	End plate	
10	8	28010	Terminal	
11	1	28019	Labels nos. 1-10	
12	1	28965	Dekafix labels 21-30	
13	1	29460	Wire 1 x 2.5 mm2	150 mm
14	1	28594	Wire - green	150 mm
15	1	28445	Cable	150 mm
16	1	28445	Cable	250 mm
17	1	29460	Wire 1 x 2.5 mm2	250 mm
18	1	28594	Wire - green	250 mm
19	1	27120	Cable	300 mm
20	2	27762	Cable end	
21	6	27776	Cable lead-in	

1500K, 1510K, 1720K, 1730K, 1820K, 1830K

Internal ref. 70 06 470

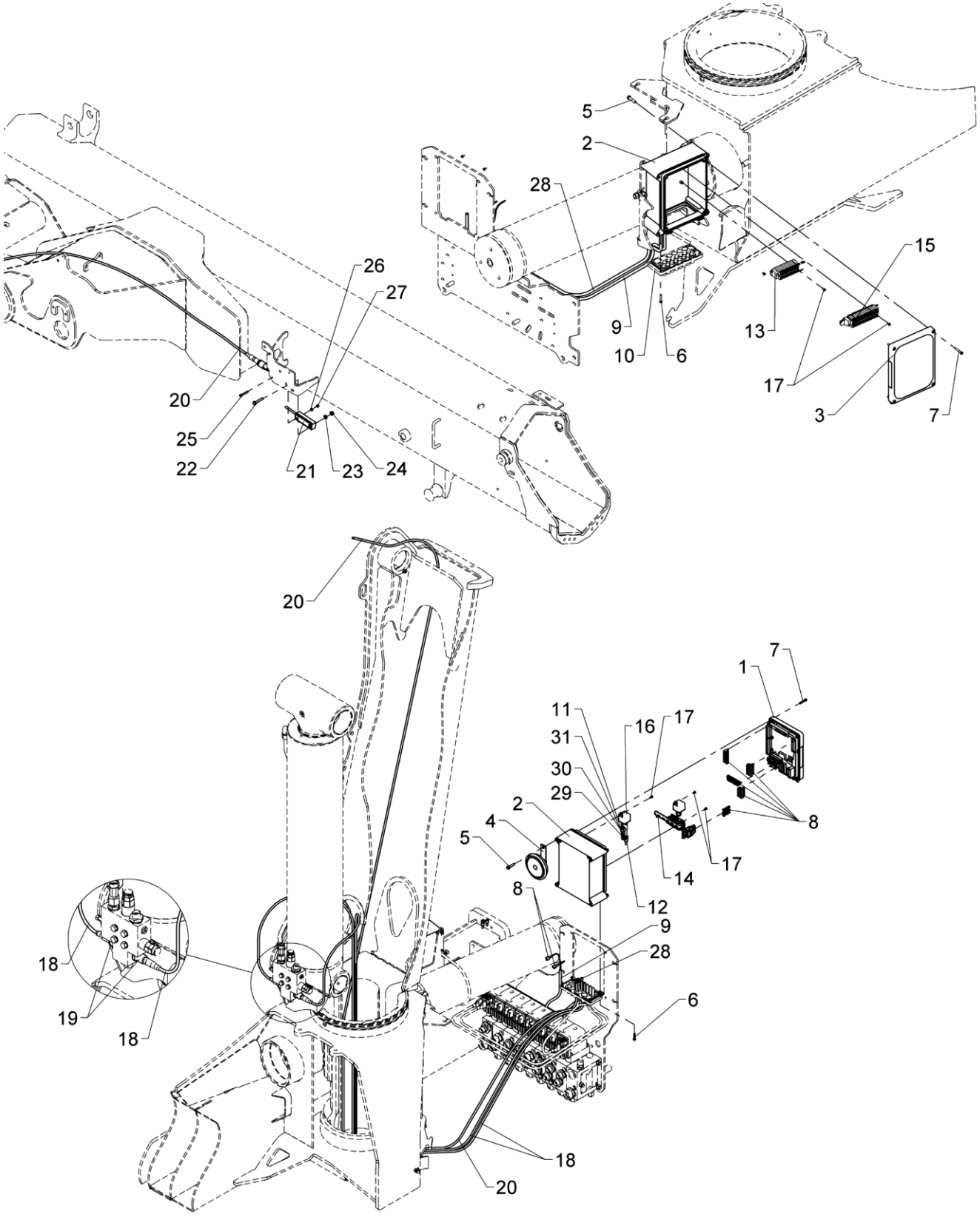

Obsolete

Basic electronic parts, RC, BMS-1

534 22 020

From loader 1060001
To loader

Created 25-02-2013
Modified

Pos	Qty.	Part no.	Description	Remarks
1	1	29301	Front complete, RCL 5300	
2	2	29304	Bottom f. RCL-box incl. hinge	
3	1	29347	RCL 5300 indicator panel	
4	1	28971	Horn, 24 V, 2.5 Amp.	
5	9	30340	Screw, stainless	6,0 x 25
6	8	30346	Screw, stainless	4,0 x 20
7	8	30347	Screw, stainless	4,0 x 25
8	1	28722	Wiring, RC base	
9	1	28249	Cable 2 x 0.75	2 m
10	1	29307	Cable lead-in	
11	5	27429	Clamp	
12	2	27428	Clip	
13	1	7006304	Terminal block, Box 1, BMS-1	
14	1	7006301	Terminal block for RC 24 V	
15	1	7006302	Terminal block, Box1	
16	1	27342	Relay, 24V	
17	8	30361	Screw, stainless	3,0 x 8
18	2	29224	Cable with socket, 5 m	
19	2	28850	Pressure transducer	
20	1	28730	Cable + socket, 10 m	9,0 m
21	1	29295	Tilt sensor + 0.25 m cable	
22	1	30116	Steel pin, stainless	M6 x 35
23	1	32302	Face washer, stainless	6 mm
24	1	30884	Lock nut, stainless	M6
25	1	31790	Set screw M4 x 30	M4 x 30
26	1	31188	Washer, stainless	4 mm
27	1	30857	Lock nut	M4
28	1	28148	Cable	2 m
29	1	27202	Cable	0,3 m
30	1	27203	Cable	0,3 m
31	1	27204	Wire, 1 x1.5mm2	0,3 m

1500K, 1510K, 1720K, 1730K, 1820K, 1830K

Internal ref. 70 09 460

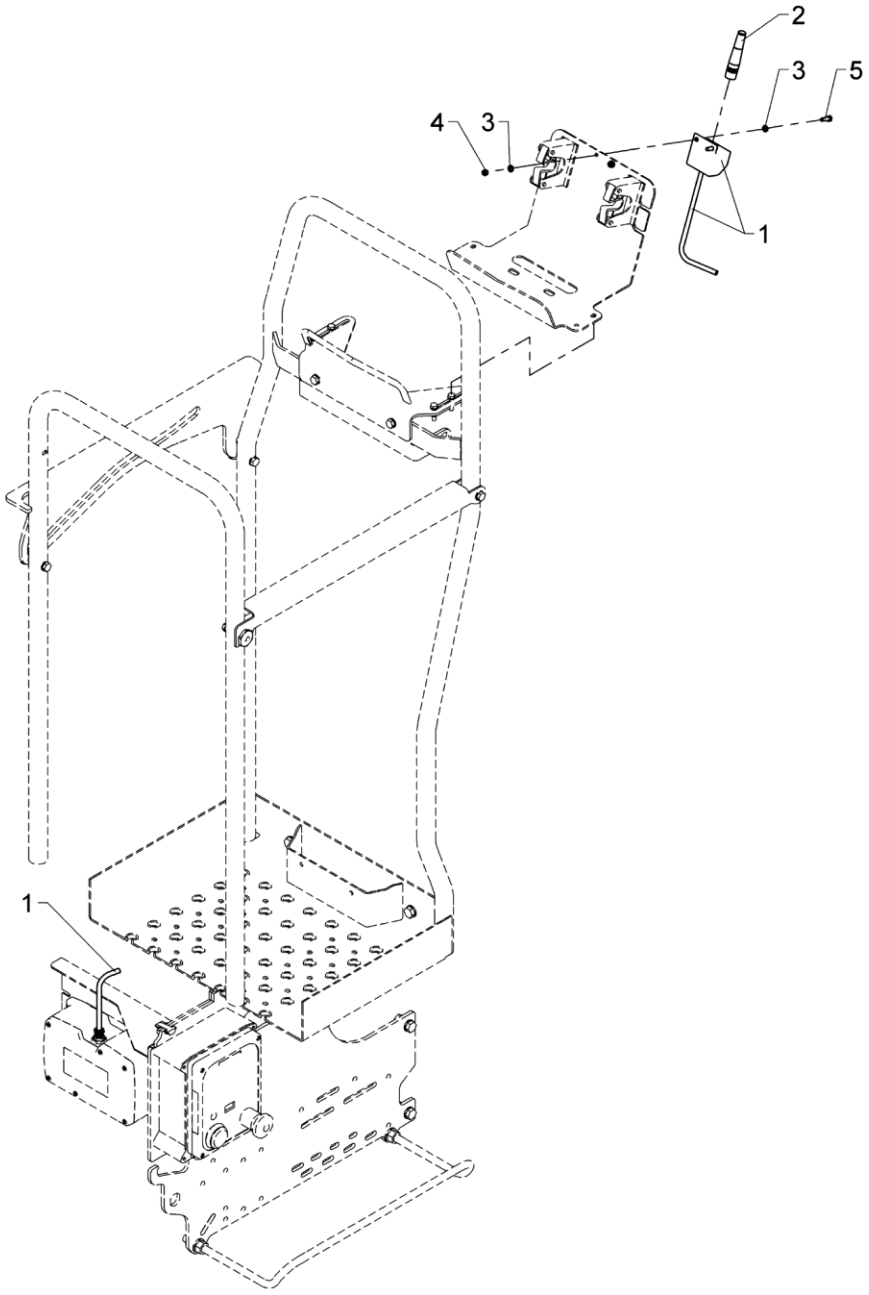

Antenna, HSRC

534 22 025

From loader 1060001
To loader

Created 11-05-2017
Modified

Pos	Qty.	Part no.	Description	Remarks
1	1	56724	Antenna cable 2.5 m	
2	1	58136	Antenna	
3	4	32308	Washer	5 mm
4	2	30853	Nut, stainless	M5
5	2	30121	Set screw	M5 x 16

1500K, 1510K, 1720K, 1730K, 1820K, 1830K

Internal ref. 70 05 280

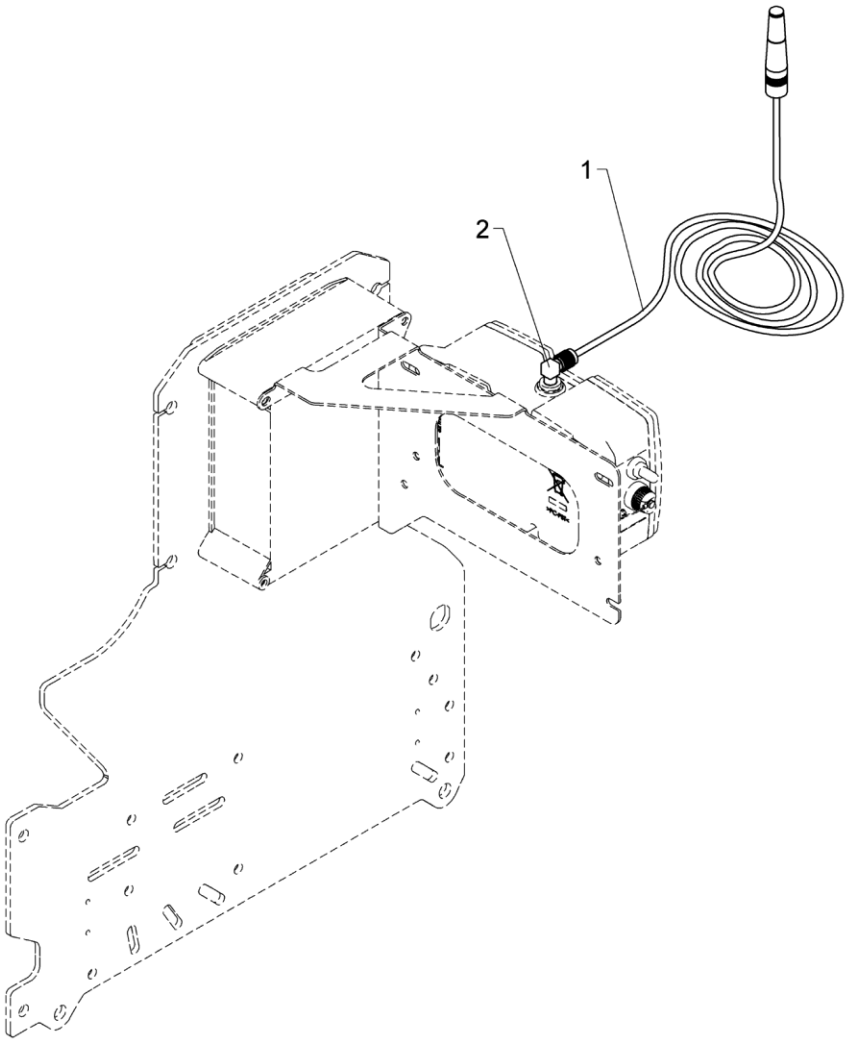

534 22 030

From loader 1060001
To loader

Created 13-02-2013
Modified

Antenna extension, Hetronic HSRC

Pos	Qty.	Part no.	Description	Remarks
1	1	57335	Cable - 3 m for antenna BMS-2	8 m
2	1	57348	Coax angle adapter	

1500K, 1510K, 1720K, 1730K, 1820K, 1830K

Internal ref. 70 09 120

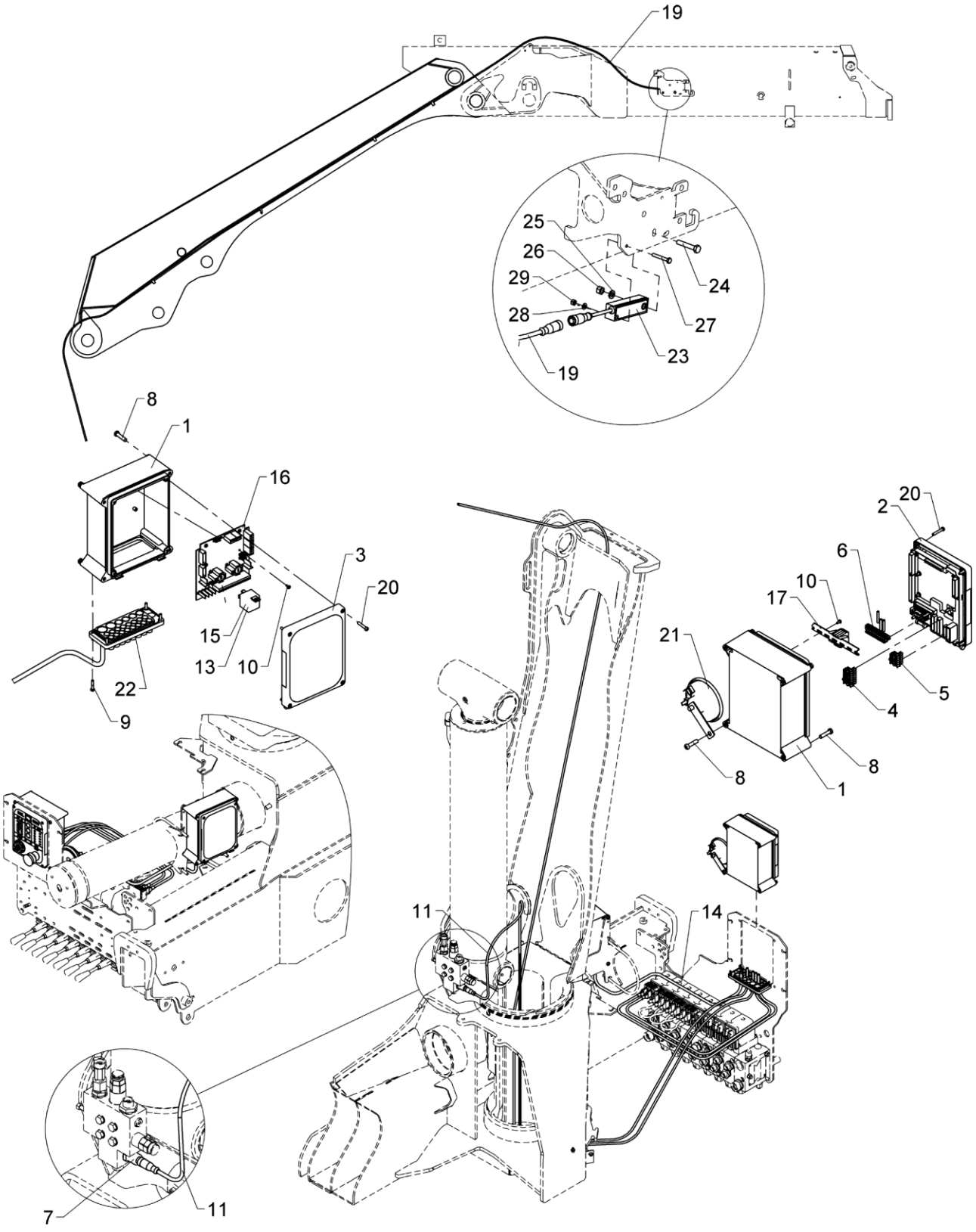

Basic electronic parts, RC, PVG16

Pos	Qty.	Part no.	Description	Remarks
1	2	29304	Bottom f. RCL-box incl. hinge	
2	1	29301	Front complete, RCL 5300	
3	1	29347	RCL 5300 indicator panel	
4	1	29340	CAN termination/RCL53xx	
5	1	29341	CAN termination FJC	
6	1	29321	Plug, 10-polar for RCL 53XX	
7	1	28850	Pressure transducer	
8	9	30340	Screw, stainless	6,0 x 25
9	8	30346	Screw, stainless	4,0 x 20
10	8	30361	Screw, stainless	3,0 x 8
11	1	29224	Cable with socket, 5 m	
12	1	7007940	Relay, 24 V	
13	1	27342	Relay, 24V	
14	1	7007930	Relay, 12 V	
15	1	27340	Relay, 12 V	
16	1	29473	EJB5380	
17	1	7006306	Terminal block for RCL + RC	
18	1	28755	Wiring, PVG 16	
19	1	28730	Cable + socket, 10 m	9,0 m
20	8	30347	Screw, stainless	4,0 x 25
21	1	28971	Horn, 24 V, 2.5 Amp.	
22	1	29307	Cable lead-in	
23	1	29295	Tilt sensor + 0.25 m cable	
24	1	30116	Steel pin, stainless	M6 x 35
25	1	32302	Face washer, stainless	6 mm
26	1	30884	Lock nut, stainless	M6
27	1	31790	Set screw M4 x 30	M4 x 30
28	1	31188	Washer, stainless	4 mm
29	1	30857	Lock nut	M4

1500K, 1510K, 1720K, 1730K, 1820K, 1830K

Internal ref. 70 06 420

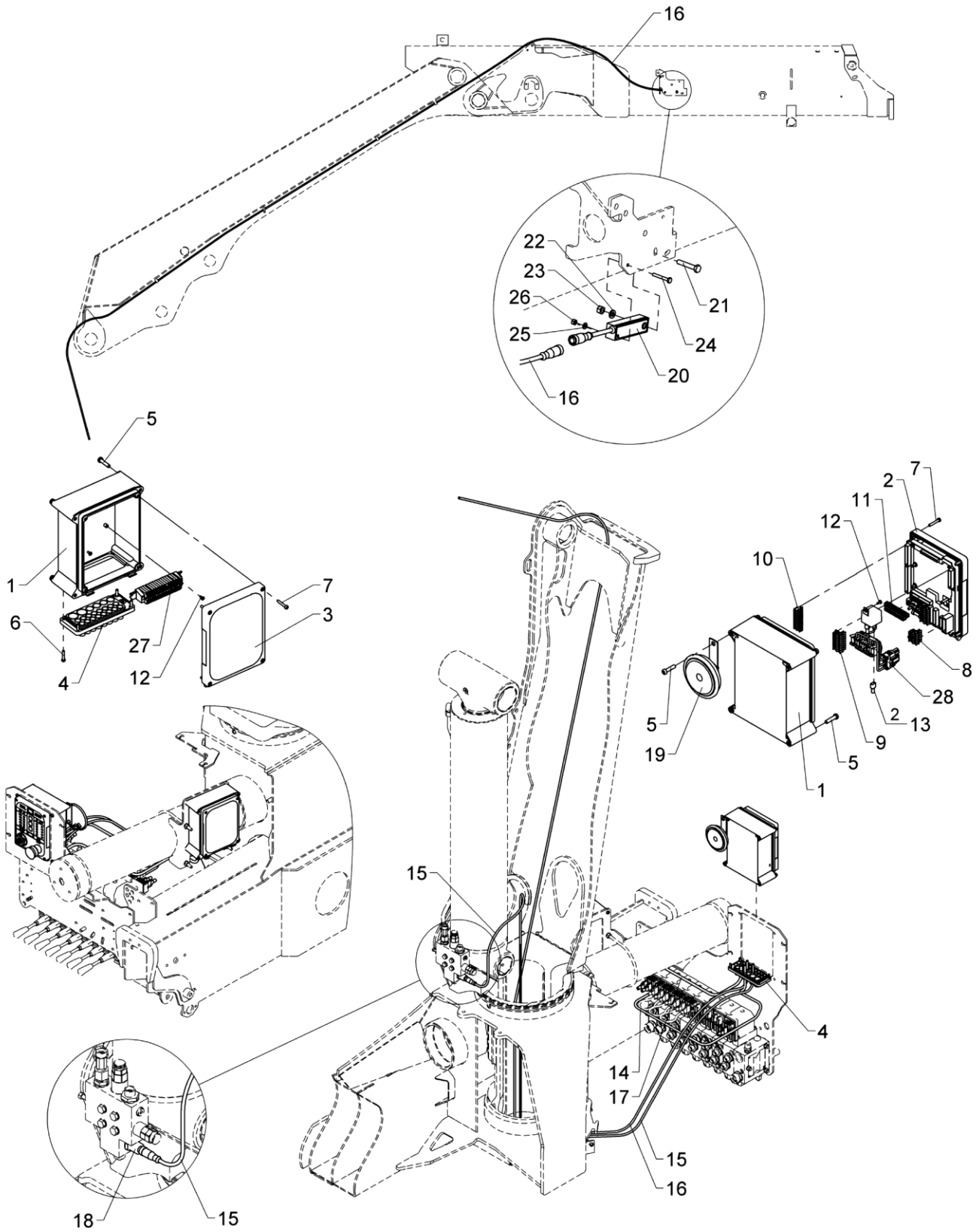

Obsolete

Basic electronic parts, NEMRC with CE

534 22 045

From loader 1060001
To loader

Created 21-03-2013
Modified

Pos	Qty.	Part no.	Description	Remarks
1	2	29304	Bottom f. RCL-box incl. hinge	
2	1	29301	Front complete, RCL 5300	
3	1	29347	RCL 5300 indicator panel	
4	2	29307	Cable lead-in	
5	9	30340	Screw, stainless	6,0 x 25
6	8	30346	Screw, stainless	4,0 x 20
7	8	30347	Screw, stainless	4,0 x 25
8	1	29341	CAN termination FJC	
9	1	29319	Plug, 8-polar for RCL 53XX	
10	1	29320	Plug, 9-polar for RCL 53XX	
11	1	29321	Plug, 10-polar for RCL 53XX	
12	5	30361	Screw, stainless	3,0 x 8
13	1	27428	Clip	
14	1	28265	Cable, dump valve, 1.35 m	
15	1	29224	Cable with socket, 5 m	
16	1	28730	Cable + socket, 10 m	9,0 m
17	1	28278	Cable 4 x 2.5	2 m
18	1	28850	Pressure transducer	
19	1	28971	Horn, 24 V, 2.5 Amp.	
20	1	29295	Tilt sensor + 0.25 m cable	
21	1	30116	Steel pin, stainless	M6 x 35
22	1	32302	Face washer, stainless	6 mm
23	1	30884	Lock nut, stainless	M6
24	1	31790	Set screw M4 x 30	M4 x 30
25	1	31188	Washer, stainless	4 mm
26	1	30857	Lock nut	M4
27	1	7006302	Terminal block, Box1	
28	1	7006301	Terminal block for RC 24 V	

1500K, 1510K, 1720K, 1730K, 1820K, 1830K

70 07 940
70 07 930
Internal ref. 70 06 420

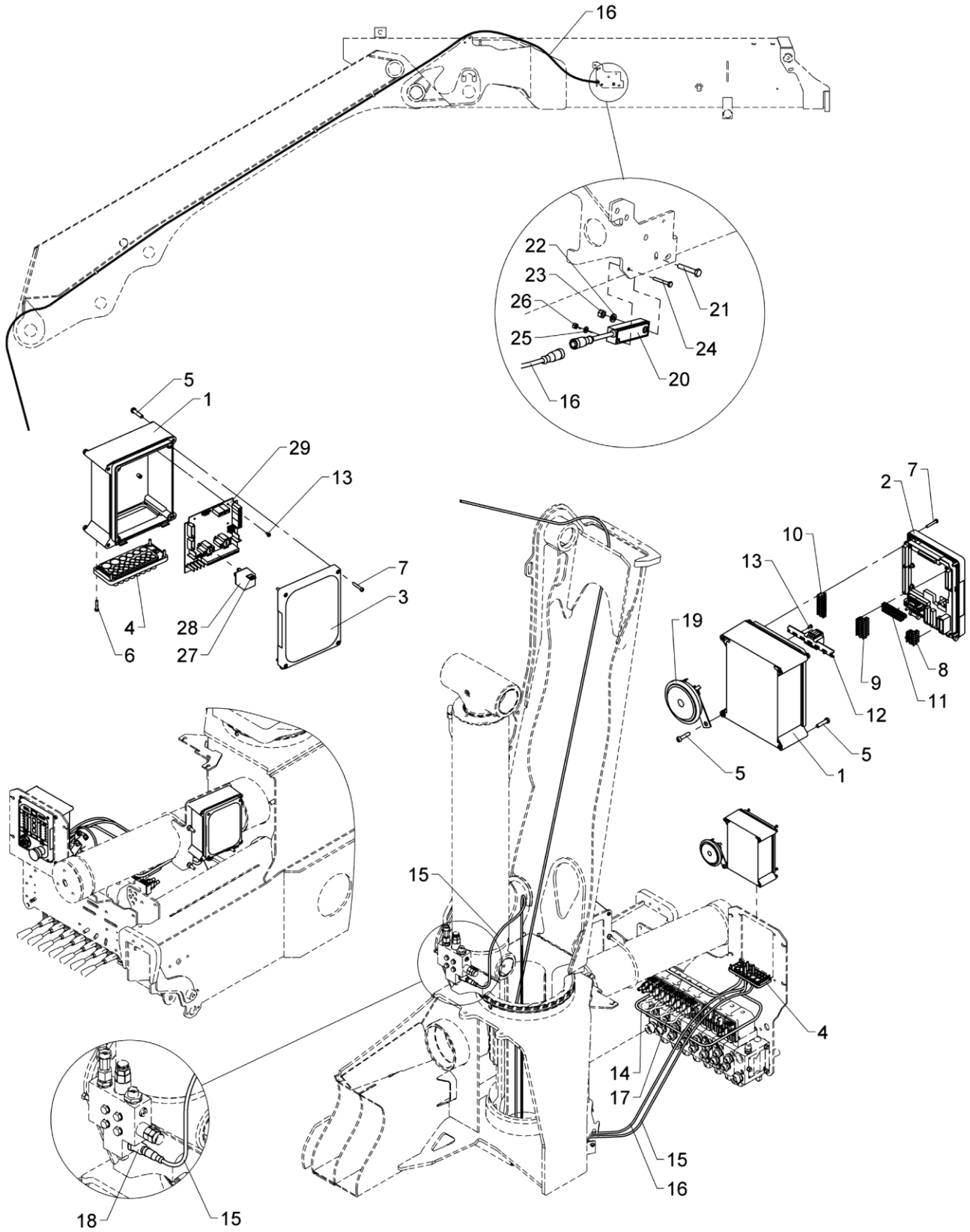

Obsolete

Basic electronic parts, NEMRC with CE

534 22 045 A

From loader 1060001
To loader

Created 20-05-2013
Modified

Pos	Qty.	Part no.	Description	Remarks
		7006420	Basic parts, NEMRC with CE	
		7007930	Relay, 12 V	
		7007940	Relay, 24 V	
1	2	29304	Bottom f. RCL-box incl. hinge	
2	1	29301	Front complete, RCL 5300	
3	1	29347	RCL 5300 indicator panel	
4	2	29307	Cable lead-in	
5	9	30340	Screw, stainless	6,0 x 25
6	8	30346	Screw, stainless	4,0 x 20
7	8	30347	Screw, stainless	4,0 x 25
8	1	29341	CAN termination FJC	
9	1	29319	Plug, 8-polar for RCL 53XX	
10	1	29320	Plug, 9-polar for RCL 53XX	
11	1	29321	Plug, 10-polar for RCL 53XX	
12	1	7006306	Terminal block for RCL + RC	
13	8	30361	Screw, stainless	3,0 x 8
14	1	28265	Cable, dump valve, 1.35 m	
15	1	29224	Cable with socket, 5 m	
16	1	28730	Cable + socket, 10 m	9,0 m
17	1	28278	Cable 4 x 2.5	2 m
18	1	28850	Pressure transducer	
19	1	28971	Horn, 24 V, 2.5 Amp.	
20	1	29295	Tilt sensor + 0.25 m cable	
21	1	30116	Steel pin, stainless	M6 x 35
22	1	32302	Face washer, stainless	6 mm
23	1	30884	Lock nut, stainless	M6
24	1	31790	Set screw M4 x 30	M4 x 30
25	1	31188	Washer, stainless	4 mm
26	1	30857	Lock nut	M4
27	1	27340	Relay, 12 V	
28	1	27342	Relay, 24V	
29	1	29473	EJB5380	

1500K, 1510K, 1720K, 1730K, 1820K, 1830K

Internal ref. 70 06 410

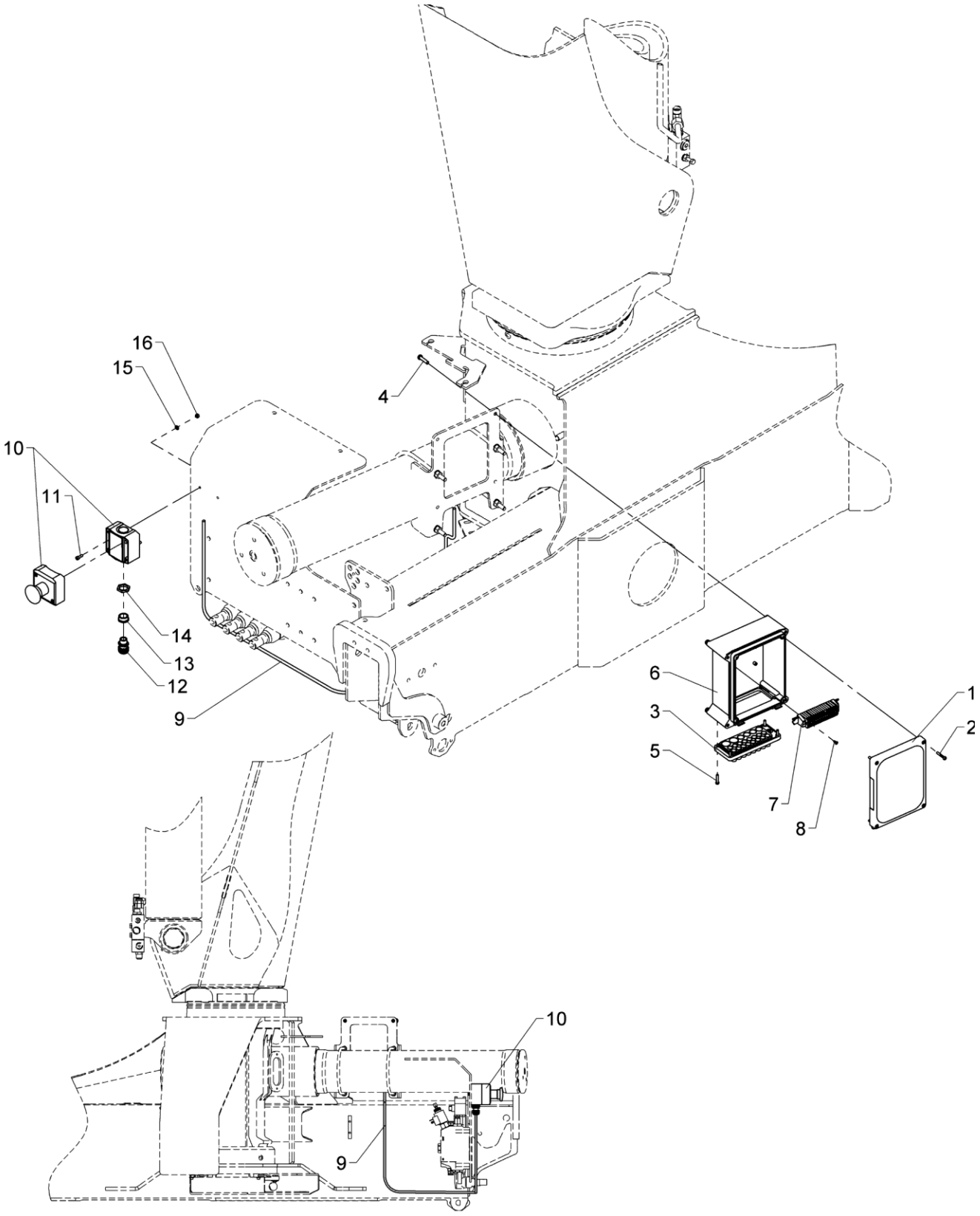

Obsolete

Basic electronic parts, NEMRC without CE

534 22 050

From loader 1060001
To loader

Created 31-05-2012
Modified 17-05-2013

Pos	Qty.	Part no.	Description	Remarks
1	1	29347	RCL 5300 indicator panel	
2	4	30347	Screw, stainless	4,0 x 25
3	1	29307	Cable lead-in	
4	4	30340	Screw, stainless	6,0 x 25
5	4	30346	Screw, stainless	4,0 x 20
6	1	29304	Bottom f. RCL-box incl. hinge	
7	1	7006302	Terminal block, Box1	
8	2	30361	Screw, stainless	3,0 x 8
9	1	27215	Wire 2 x 1.5	2 m
10	1	28992	Emergency stop box	
11	2	32406	Sockethead screw	MC4 x 12
12	1	28246	Bushing	
13	1	27866	Socket	
14	1	28081	Plastic nut	PG13,5
15	2	31188	Washer, stainless	4 mm
16	2	30857	Lock nut	M4

1500K, 1510K, 1720K, 1730K, 1820K, 1830K

70 07 940
70 07 930
Internal ref. 70 06 410

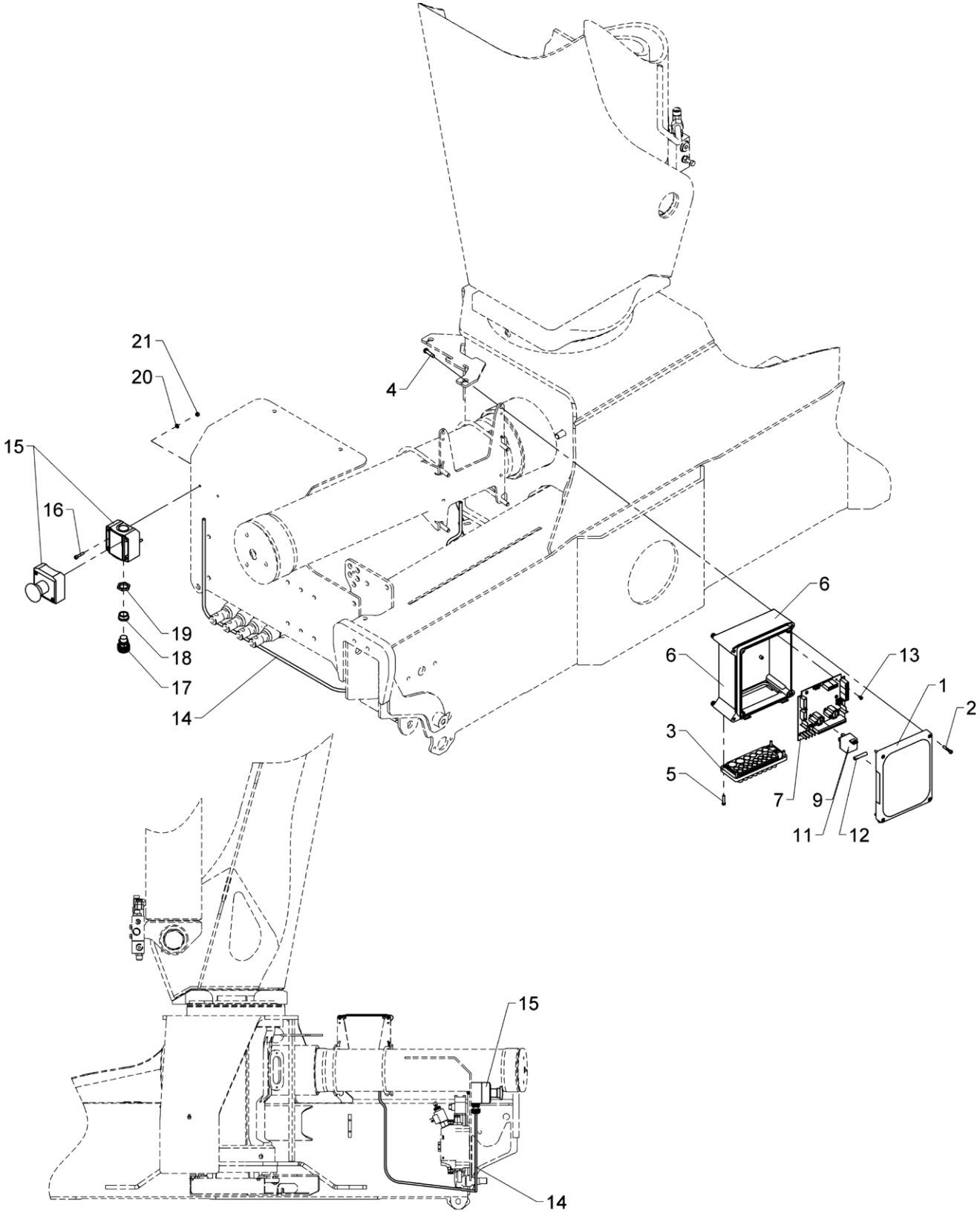

Obsolete

Basic electronic parts, NEMRC without CE

534 22 050 A

From loader 1060001
To loader

Created 20-05-2013
Modified 05-01-2015

Pos	Qty.	Part no.	Description	Remarks
		7006410	Basic parts, NEMRC without CE	
		7007930	Relay, 12 V	
		7007940	Relay, 24 V	
1	1	29347	RCL 5300 indicator panel	
2	4	30347	Screw, stainless	4,0 x 25
3	1	29307	Cable lead-in	
4	4	30340	Screw, stainless	6,0 x 25
5	4	30346	Screw, stainless	4,0 x 20
6	1	29304	Bottom f. RCL-box incl. hinge	
7	1	29473	EJB5380	
8	1	7007930	Relay, 12 V	
9	1	27340	Relay, 12 V	
10	1	7007940	Relay, 24 V	
11	1	27342	Relay, 24V	
12	1	27497	Insulation joint, blue	
13	6	30361	Screw, stainless	3,0 x 8
14	1	27215	Wire 2 x 1.5	2 m
15	1	28992	Emergency stop box	
16	2	30700	Screw, stainless	MC4 x 20
17	1	28246	Bushing	
18	1	27866	Socket	
19	1	28081	Plastic nut	PG13,5
20	2	31188	Washer, stainless	4 mm
21	2	30857	Lock nut	M4

1500K, 1510K, 1720K, 1730K, 1820K, 1830K

Internal ref. 70 06 360

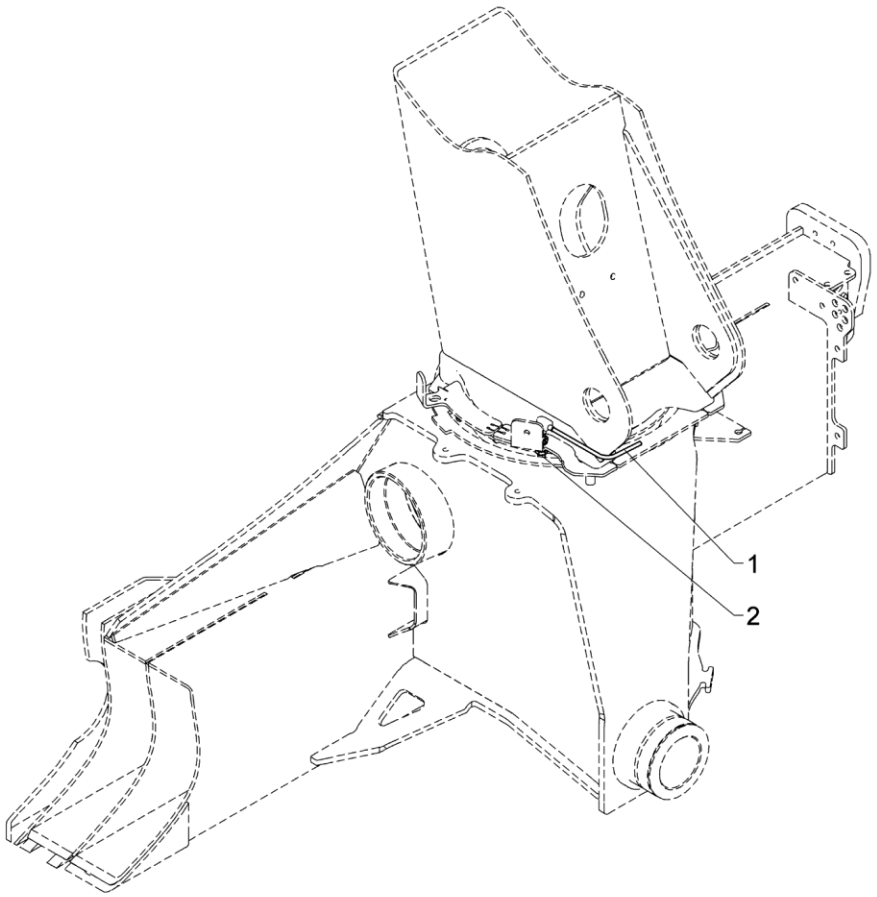

2-stage LMB, RC

Pos	Qty.	Part no.	Description	Remarks
1	1	28077	Cable with plug	2,7 m
2	1	29447	Proximity switchM12 8mm PNP-NO	

1500K, 1510K, 1720K, 1730K, 1820K, 1830K

Internal ref. 70 06 440

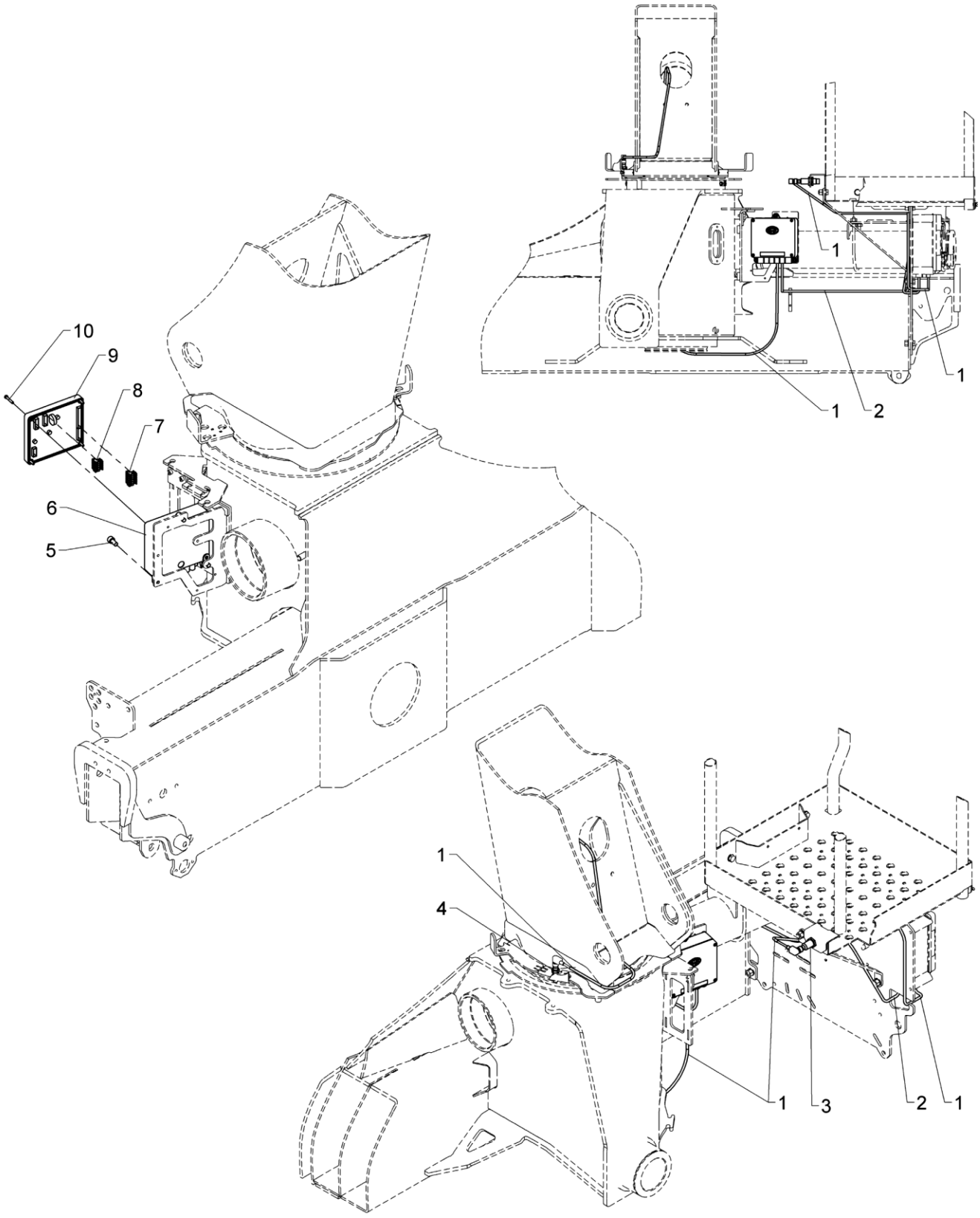

Obsolete

HSL, HSRC

534 22 070

From loader 1060001
To loader

Created 13-07-2012
Modified

Pos	Qty.	Part no.	Description	Remarks
1	2	28117	Cable with plug	
2	1	28263	CAN BUS cable	2 m
3	1	28210	Proximity switch	
4	1	29447	Proximity switchM12 8mm PNP-NO	
5	3	30449	Screw	MC8 x 16
6	1	29313	Bottom f. Fly-Jib box	
7	1	29324	Plug, 6-polar for RCL 53XX	
8	1	29317	Plug, 5-polar for RCL 53XX	
9	1	29346	CIO5376 controller cover cpl.	
10	4	30347	Screw, stainless	4,0 x 25

1500K, 1510K, 1720K, 1730K, 1820K, 1830K

Internal ref. 70 06 440

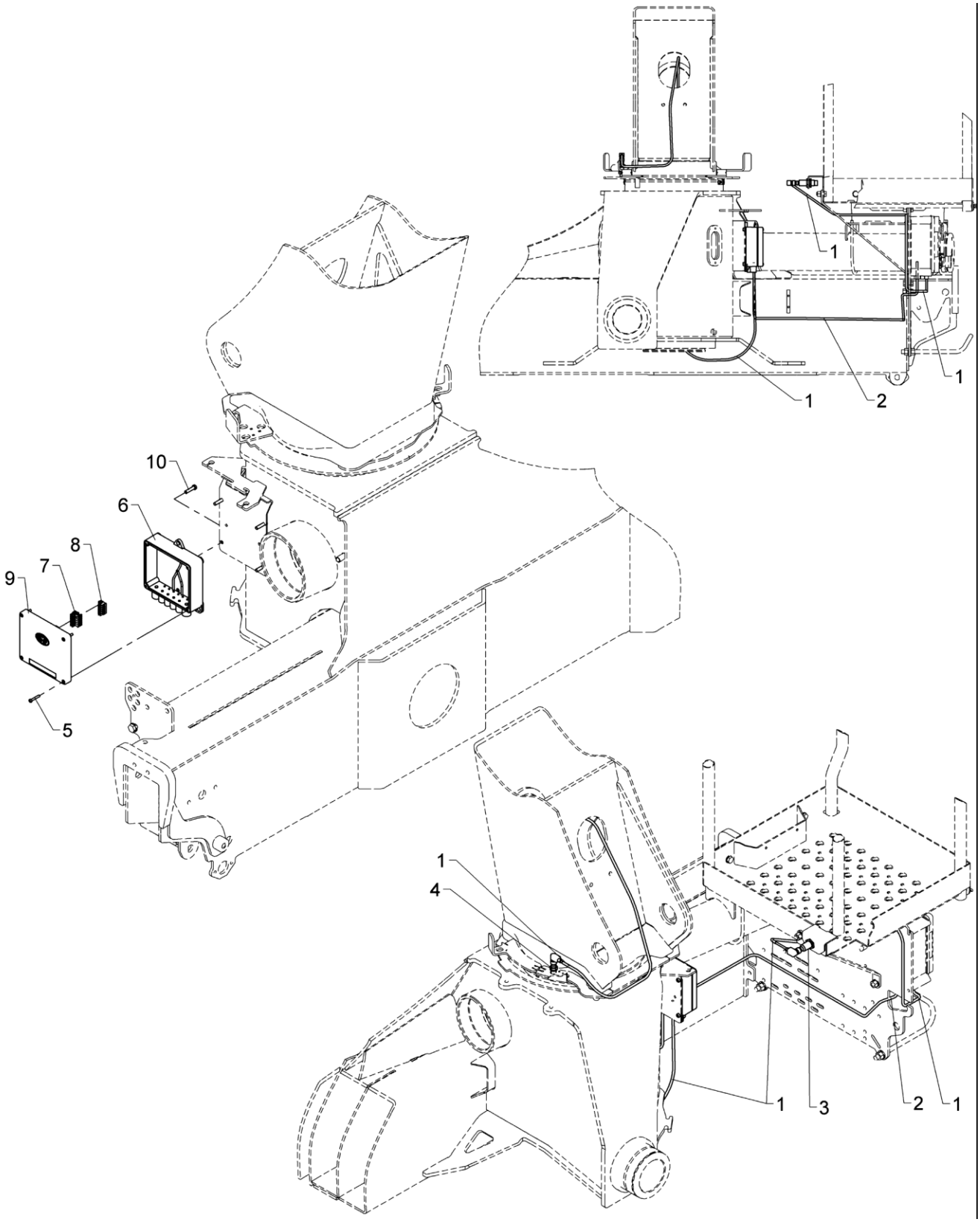

HSL, HSRC

Pos	Qty.	Part no.	Description	Remarks
1	2	28117	Cable with plug	
2	1	28263	CAN BUS cable	2 m
3	1	28210	Proximity switch	
4	1	29447	Proximity switchM12 8mm PNP-NO	
5	4	30347	Screw, stainless	4,0 x 25
6	1	29313	Bottom f. Fly-Jib box	
7	1	29324	Plug, 6-polar for RCL 53XX	
8	1	29317	Plug, 5-polar for RCL 53XX	
9	1	29346	CIO5376 controller cover cpl.	
10	4	30340	Screw, stainless	6,0 x 25

1500K, 1510K, 1720K, 1730K, 1820K, 1830K

Internal ref. 70 06 730

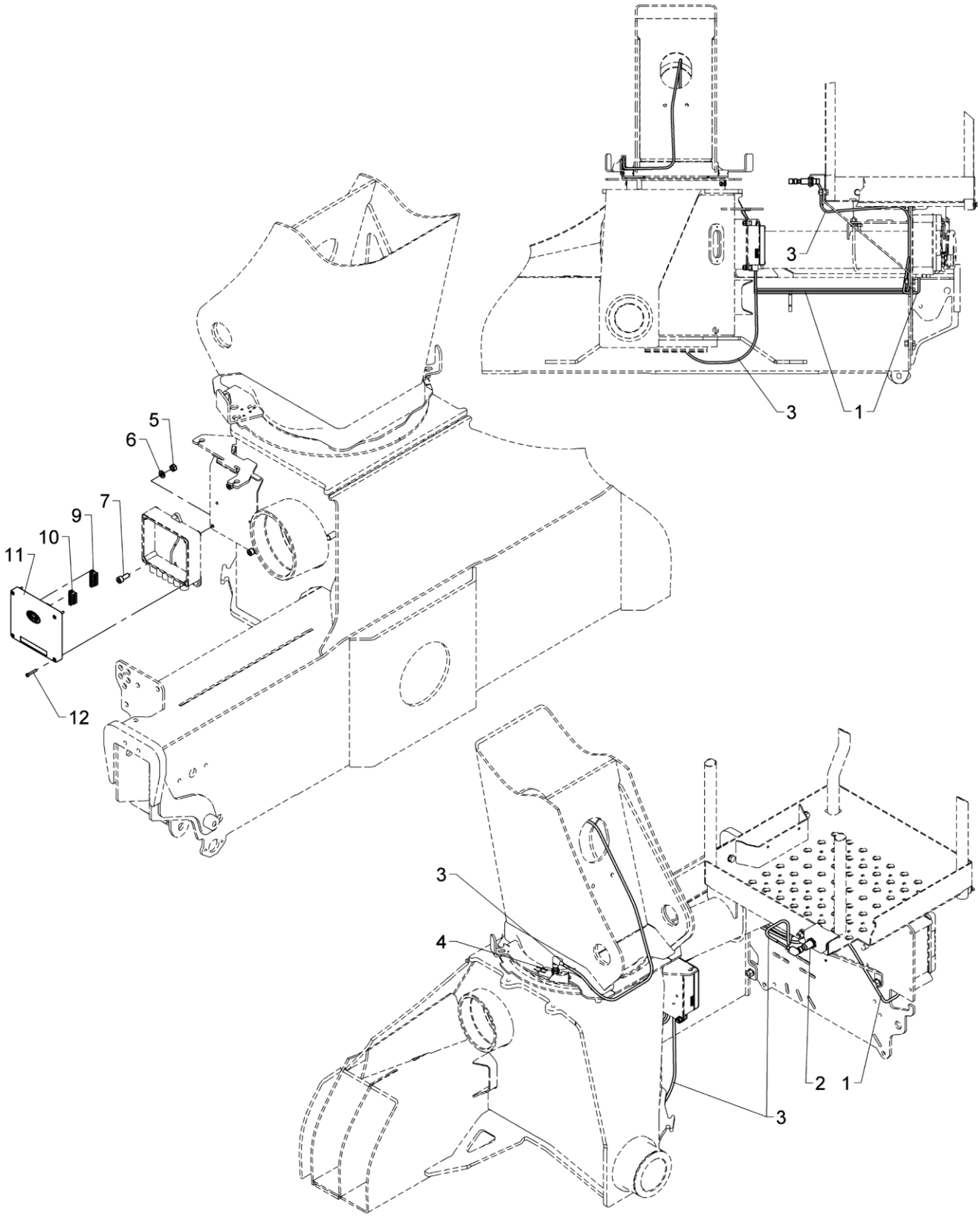

HSL, HS NEMRC

Pos	Qty.	Part no.	Description	Remarks
1	1	28263	CAN BUS cable	2 m
2	1	28210	Proximity switch	
3	2	28117	Cable with plug	
4	1	29447	Proximity switchM12 8mm PNP-NO	
5	3	30856	Nut, stainless	M8
6	3	31147	Face washer, 8 mm	
7	3	30438	Screw	MC8 x 20
8	1	29313	Bottom f. Fly-Jib box	
9	1	29324	Plug, 6-polar for RCL 53XX	
10	1	29317	Plug, 5-polar for RCL 53XX	
11	1	29346	CIO5376 controller cover cpl.	
12	4	30347	Screw, stainless	4,0 x 25

1500K, 1510K, 1720K, 1730K, 1820K, 1830K

Internal ref. 70 06 740

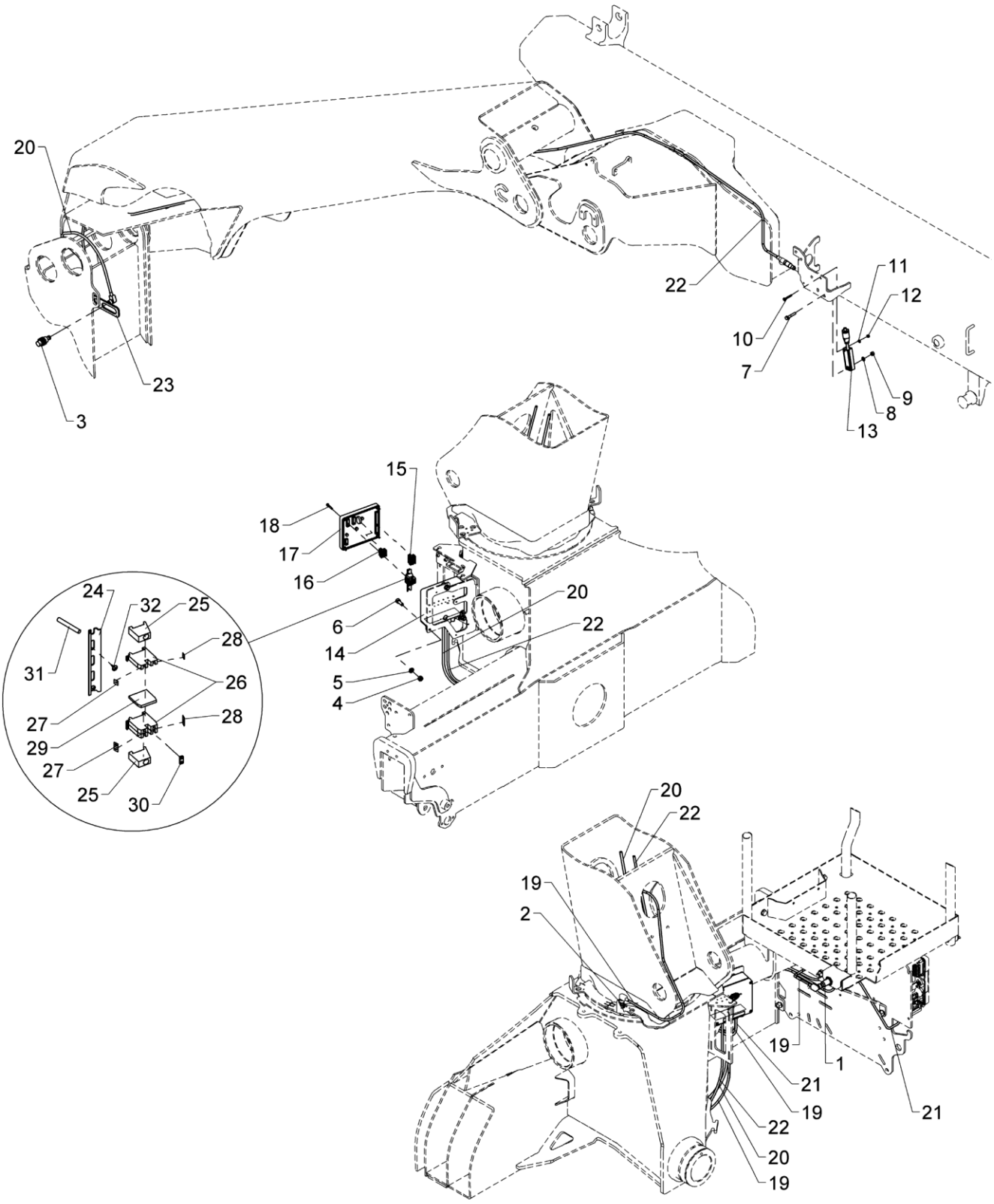

HSL-E, HS NEMRC

Pos	Qty.	Part no.	Description	Remarks
1	1	28210	Proximity switch	
2	1	29447	Proximity switchM12 8mm PNP-NO	
3	1	28980	Proximity switch	
4	3	30856	Nut, stainless	M8
5	3	31147	Face washer, 8 mm	
6	3	30438	Screw	MC8 x 20
7	1	30116	Steel pin, stainless	M6 x 35
8	1	32302	Face washer, stainless	6 mm
9	1	30884	Lock nut, stainless	M6
10	1	31790	Set screw M4 x 30	M4 x 30
11	1	31188	Washer, stainless	4 mm
12	1	30857	Lock nut	M4
13	1	29295	Tilt sensor + 0.25 m cable	
14	1	29313	Bottom f. Fly-Jib box	
15	1	29324	Plug, 6-polar for RCL 53XX	
16	1	29317	Plug, 5-polar for RCL 53XX	
17	1	29346	CIO5376 controller cover cpl.	
18	4	30347	Screw, stainless	4,0 x 25
19	2	28117	Cable with plug	
20	1	28077	Cable with plug	
21	1	28263	CAN BUS cable	2 m
22	1	28730	Cable + socket, 10 m	9,0 m
23	1	6306803	Bracket for proximity switch	
24	1	28013	Guide rail	80 mm
25	2	28012	End angle	
26	3	28010	Terminal	
27	1	28019	Labels nos. 1-10	
28	1	28965	Dekafix labels 21-30	
29	1	28011	End plate	
30	1	28208	Fish plate	
31	1	27202	Cable	0,3 m
32	2	28693	Screw	Ø2.9 x 6.5

1500K, 1510K, 1720K, 1730K, 1820K, 1830K

Internal ref. 70 06 530

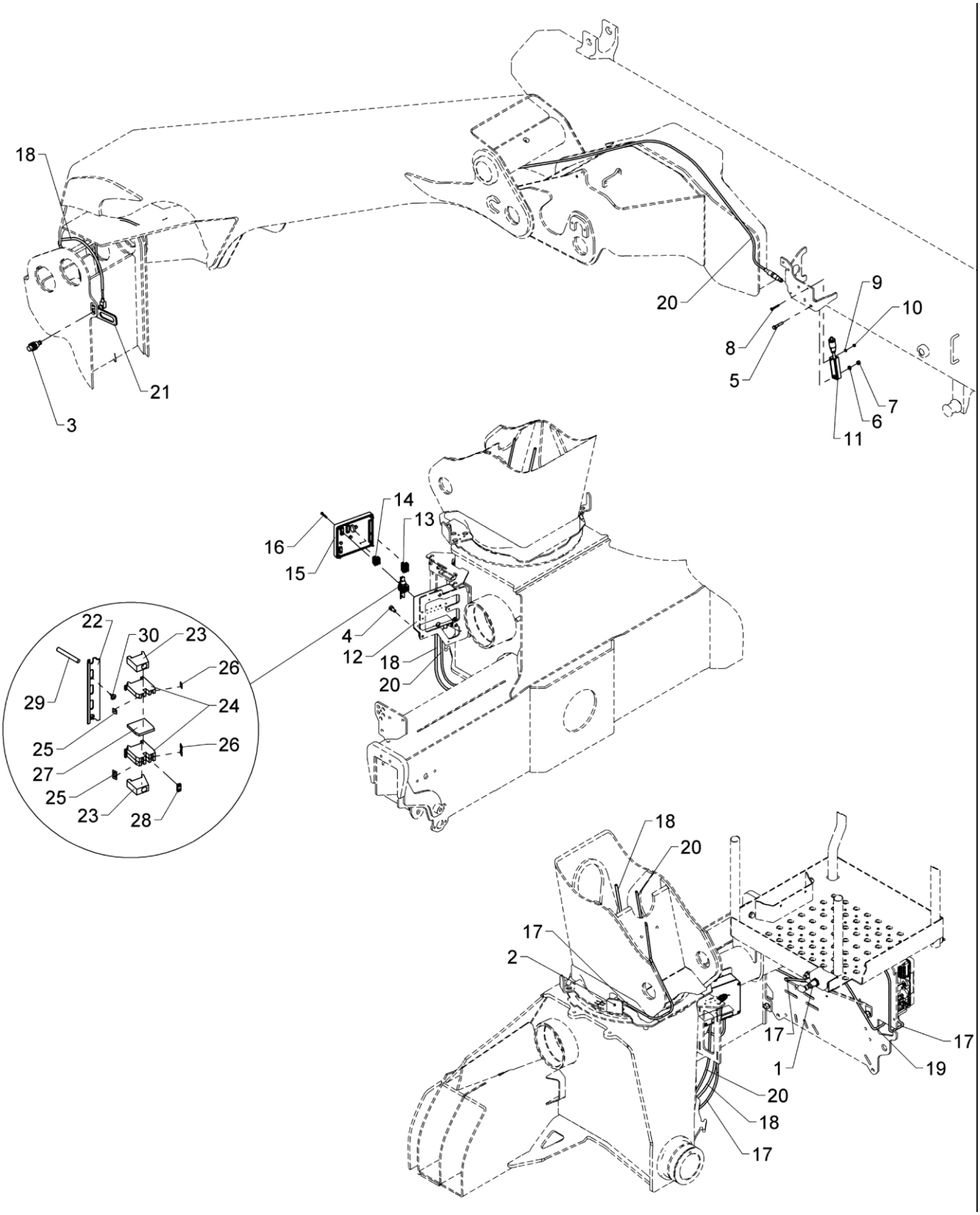

Obsolete

534 22 095

From loader 1060001
To loader

Created 13-09-2013
Modified

HSL-E, HSRC

Pos	Qty.	Part no.	Description	Remarks
1	1	28210	Proximity switch	
2	1	29447	Proximity switchM12 8mm PNP-NO	
3	1	28980	Proximity switch	
4	3	30449	Screw	MC8 x 16
5	1	30116	Steel pin, stainless	M6 x 35
6	1	32302	Face washer, stainless	6 mm
7	1	30884	Lock nut, stainless	M6
8	1	31790	Set screw M4 x 30	M4 x 30
9	1	31188	Washer, stainless	4 mm
10	1	30857	Lock nut	M4
11	1	29295	Tilt sensor + 0.25 m cable	
12	1	29313	Bottom f. Fly-Jib box	
13	1	29324	Plug, 6-polar for RCL 53XX	
14	1	29317	Plug, 5-polar for RCL 53XX	
15	1	29346	CIO5376 controller cover cpl.	
16	4	30347	Screw, stainless	4,0 x 25
17	2	28117	Cable with plug	
18	1	28077	Cable with plug	
19	1	28263	CAN BUS cable	2 m
20	1	28730	Cable + socket, 10 m	9,0 m
21	1	6306803	Bracket for proximity switch	
22	1	28013	Guide rail	80 mm
23	2	28012	End angle	
24	3	28010	Terminal	
25	1	28019	Labels nos. 1-10	
26	1	28965	Dekafix labels 21-30	
27	1	28011	End plate	
28	1	28208	Fish plate	
29	1	27202	Cable	0,3 m
30	2	28693	Screw	Ø2.9 x 6.5

1500K, 1510K, 1720K, 1730K, 1820K, 1830K

Internal ref. 70 06 530

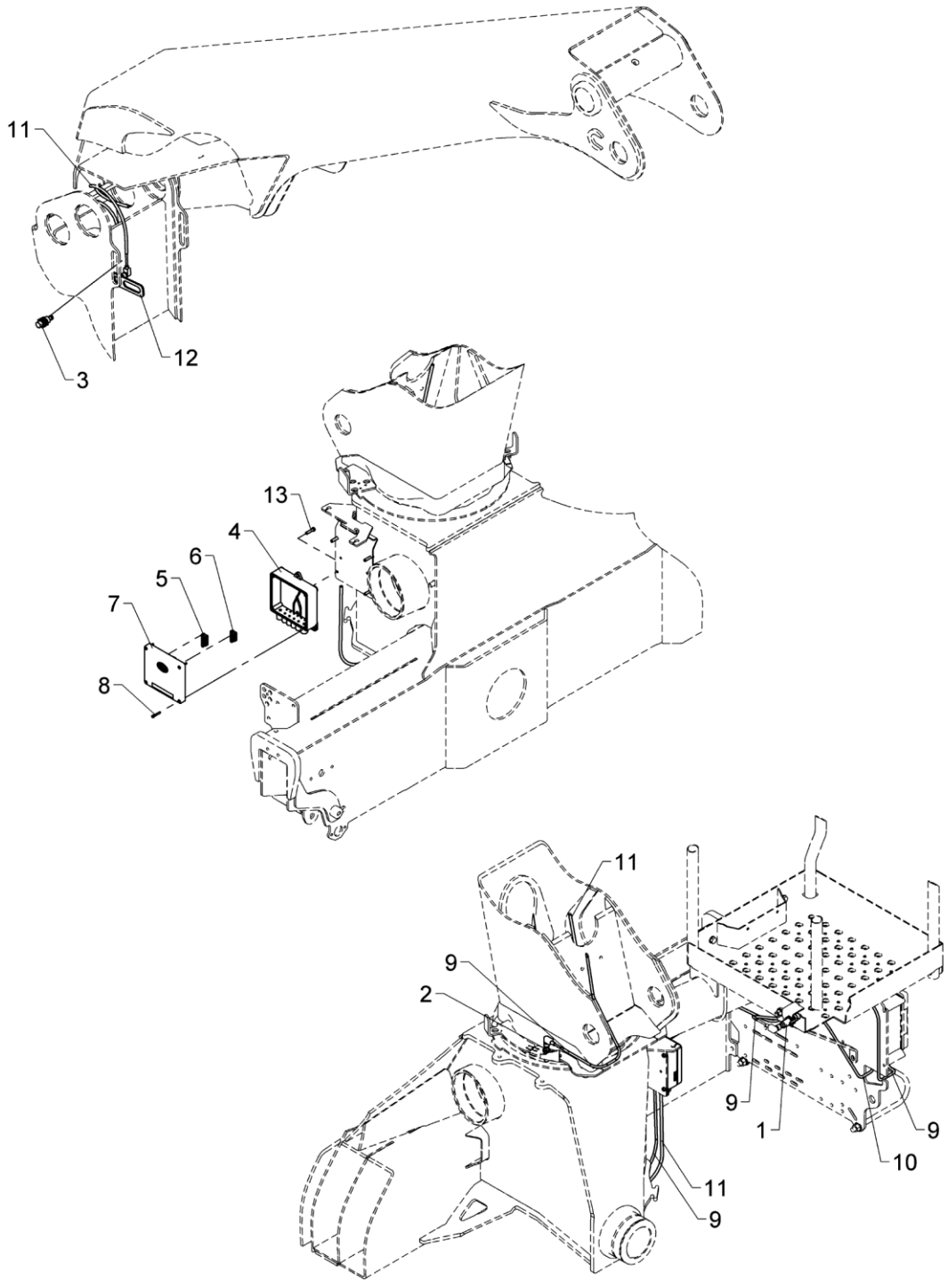

HSL-E, HSRC

Pos	Qty.	Part no.	Description	Remarks
1	1	28210	Proximity switch	
2	1	29447	Proximity switchM12 8mm PNP-NO	
3	1	28980	Proximity switch	
4	1	29313	Bottom f. Fly-Jib box	
5	1	29324	Plug, 6-polar for RCL 53XX	
6	1	29317	Plug, 5-polar for RCL 53XX	
7	1	29346	CIO5376 controller cover cpl.	
8	4	30347	Screw, stainless	4,0 x 25
9	2	28117	Cable with plug	
10	1	28263	CAN BUS cable	2 m
11	1	28077	Cable with plug	
12	1	6306803	Bracket for proximity switch	
13	4	30340	Screw, stainless	6,0 x 25

1500K, 1510K, 1720K, 1730K, 1820K, 1830K

Internal ref. 70 06 540

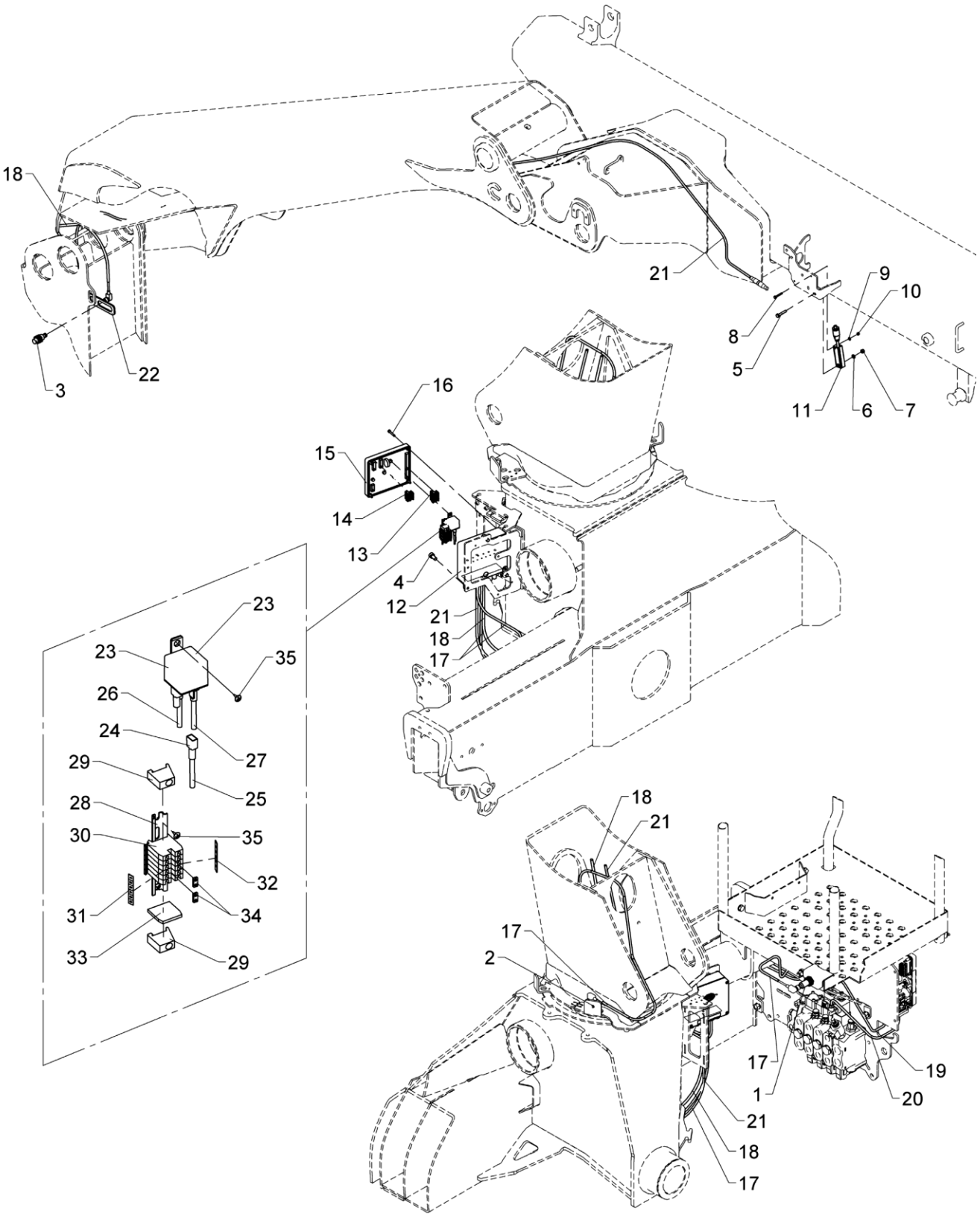

HSL-Q, HSRC

Pos	Qty.	Part no.	Description	Remarks
1	1	28210	Proximity switch	
2	1	29447	Proximity switchM12 8mm PNP-NO	
3	1	28980	Proximity switch	
4	3	30449	Screw	MC8 x 16
5	1	30116	Steel pin, stainless	M6 x 35
6	1	32302	Face washer, stainless	6 mm
7	1	30884	Lock nut, stainless	M6
8	1	31790	Set screw M4 x 30	M4 x 30
9	1	31188	Washer, stainless	4 mm
10	1	30857	Lock nut	M4
11	1	29295	Tilt sensor + 0.25 m cable	
12	1	29313	Bottom f. Fly-Jib box	
13	1	29324	Plug, 6-polar for RCL 53XX	
14	1	29317	Plug, 5-polar for RCL 53XX	
15	1	29346	CIO5376 controller cover cpl.	
16	4	30347	Screw, stainless	4,0 x 25
17	2	28117	Cable with plug	
18	1	28077	Cable with plug	
19	1	28263	CAN BUS cable	2 m
20	1	28294	Cable, spool sensor	
21	1	28730	Cable + socket, 10 m	9,0 m
22	1	6306803	Bracket for proximity switch	
23	1	27342	Relay, 24V	
24	4	27429	Clamp	
25	1	27202	Cable	0,2 m
26	1	27204	Wire, 1 x1.5mm2	0,3 m
27	1	27203	Cable	0,2 m
28	1	28013	Guide rail	80 mm
29	2	28012	End angle	
30	6	28010	Terminal	
31	2	28019	Labels nos. 1-10	
32	2	28965	Dekafix labels 21-30	
33	1	28011	End plate	
34	2	28208	Fish plate	
35	3	28693	Screw	Ø2.9 x 6.5

1500K, 1510K, 1720K, 1730K, 1820K, 1830K

Internal ref. 70 06 540

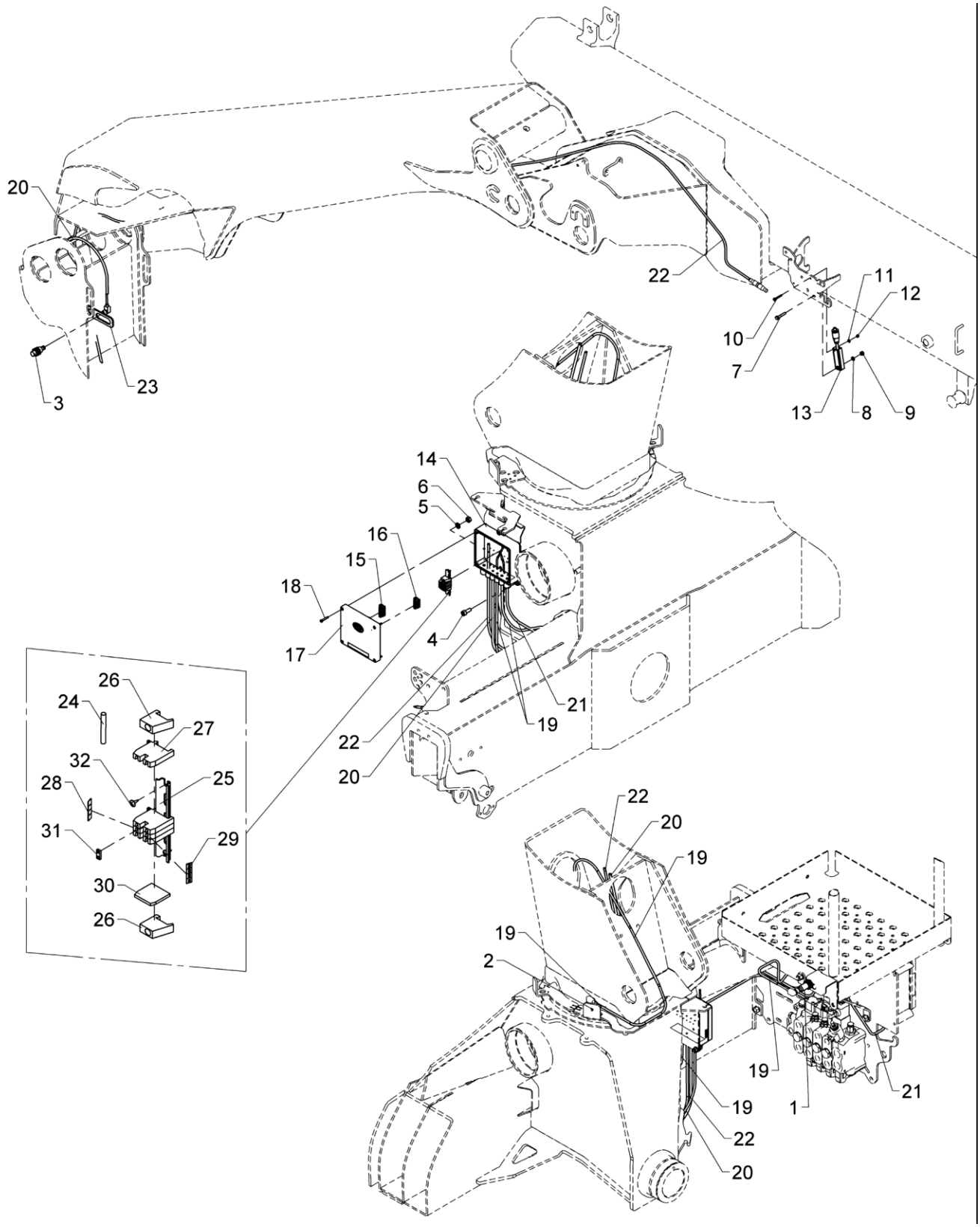

HSL-Q, HSRC

Pos	Qty.	Part no.	Description	Remarks
1	1	28210	Proximity switch	
2	1	29447	Proximity switchM12 8mm PNP-NO	
3	1	28980	Proximity switch	
4	3	30438	Screw	MC8 x 20
5	3	31147	Face washer, 8 mm	
6	3	30856	Nut, stainless	M8
7	1	30116	Steel pin, stainless	M6 x 35
8	1	32302	Face washer, stainless	6 mm
9	1	30884	Lock nut, stainless	M6
10	1	31790	Set screw M4 x 30	M4 x 30
11	1	31188	Washer, stainless	4 mm
12	1	30857	Lock nut	M4
13	1	29295	Tilt sensor + 0.25 m cable	
14	1	29313	Bottom f. Fly-Jib box	
15	1	29324	Plug, 6-polar for RCL 53XX	
16	1	29317	Plug, 5-polar for RCL 53XX	
17	1	29346	CIO5376 controller cover cpl.	
18	4	30347	Screw, stainless	4,0 x 25
19	2	28117	Cable with plug	
20	1	28077	Cable with plug	
21	1	28263	CAN BUS cable	2 m
22	1	28730	Cable + socket, 10 m	9,0 m
23	1	6306803	Bracket for proximity switch	
24	1	27202	Cable	0,3 m
25	1	28013	Guide rail	80 mm
26	2	28012	End angle	
27	4	28010	Terminal	
28	1	28019	Labels nos. 1-10	
29	1	28965	Dekafix labels 21-30	
30	1	28011	End plate	
31	1	28208	Fish plate	
32	2	28693	Screw	Ø2.9 x 6.5

1500K, 1510K, 1720K, 1730K, 1820K, 1830K

Internal ref. 70 06 390

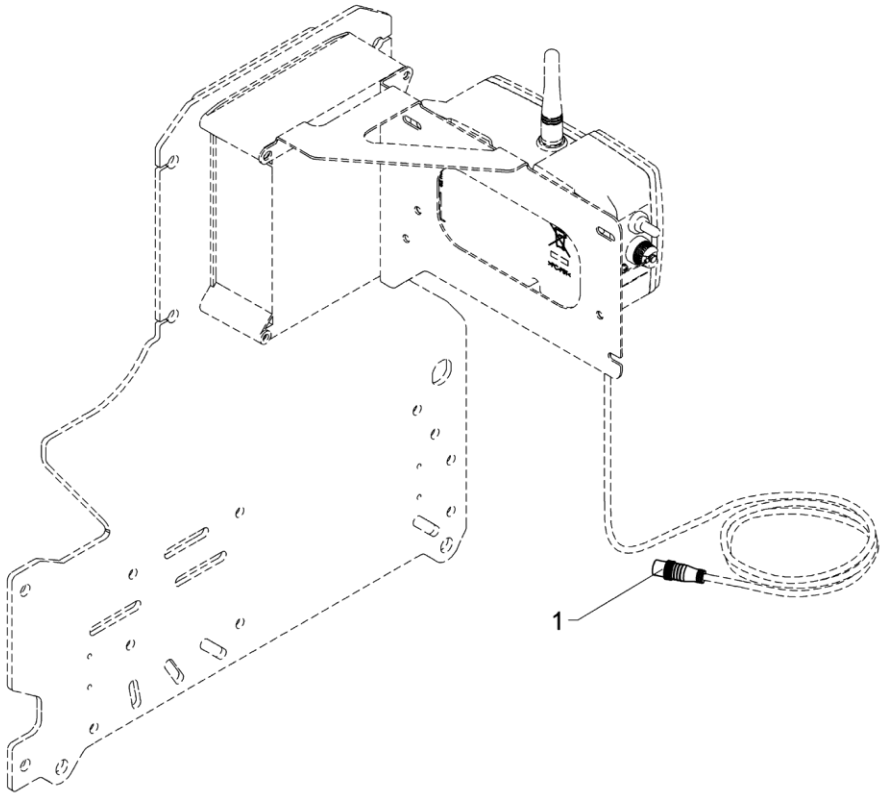

Termination, G2

534 22 120

From loader 1060001
To loader

Created 03-09-2012
Modified

Pos	Qty.	Part no.	Description	Remarks
1	1	29486	Plug M12, termination	

1500K, 1510K, 1720K, 1730K, 1820K, 1830K

70 06 490
Internal ref. 70 06 480

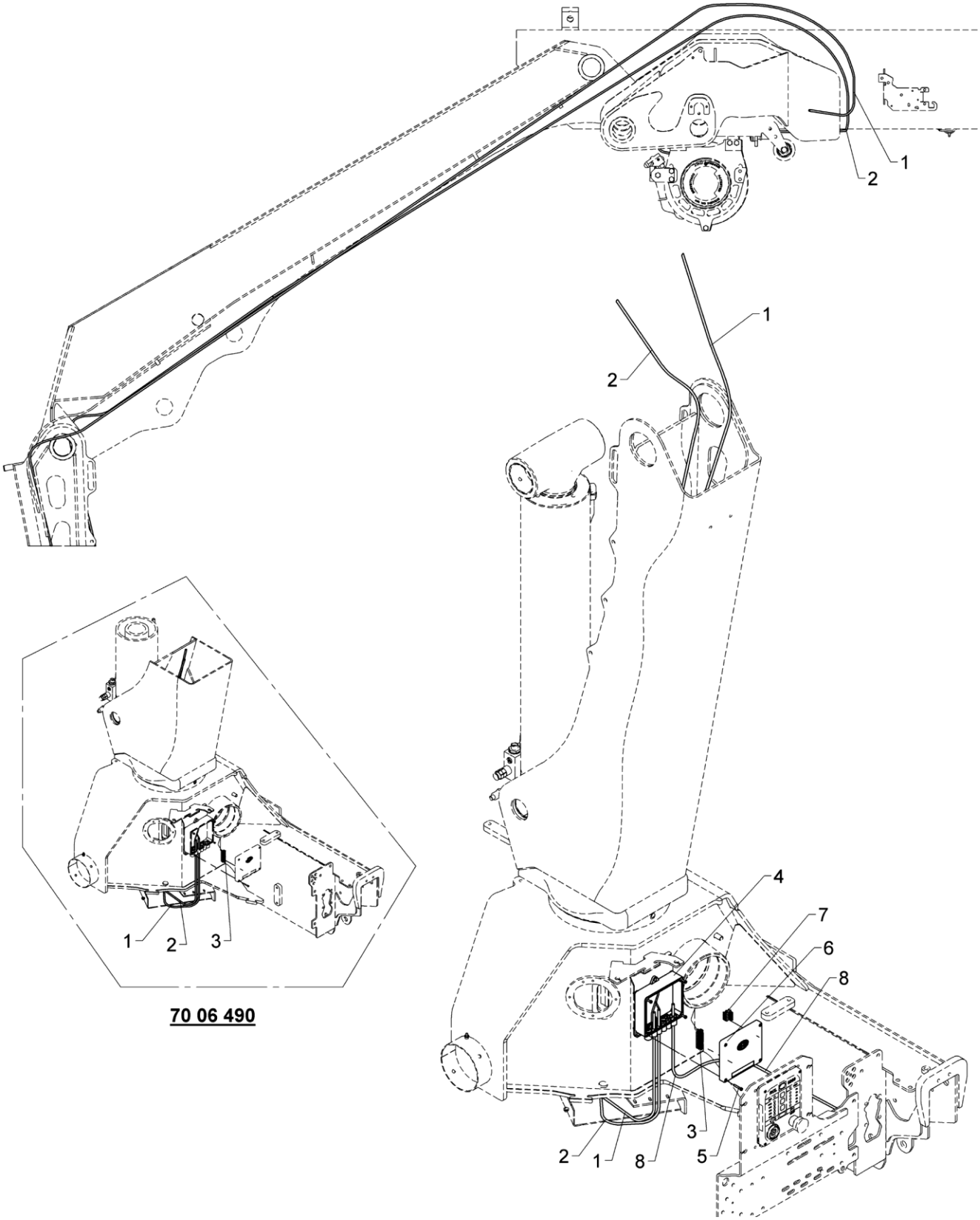

70 06 490

Winch, electric parts

Pos	Qty.	Part no.	Description	Remarks
1	1	28249	Cable 2 x 0.75	10 m
2	1	28730	Cable + socket, 10 m	
3	1	29321	Plug, 10-polar for RCL 53XX	
4	1	29313	Bottom f. Fly-Jib box	
5	4	30347	Screw, stainless	4,0 x 25
6	1	29346	CIO5376 controller cover cpl.	
7	1	29317	Plug, 5-polar for RCL 53XX	
8	1	28263	CAN BUS cable	2,0 m
9	4	30340	Screw, stainless	6,0 x 25

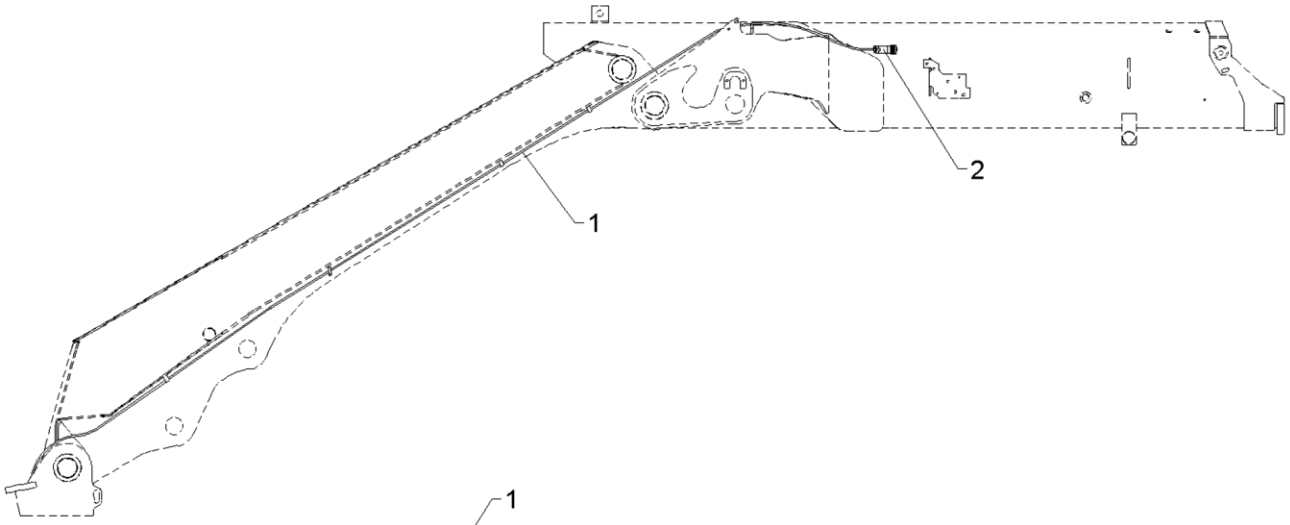
1
2

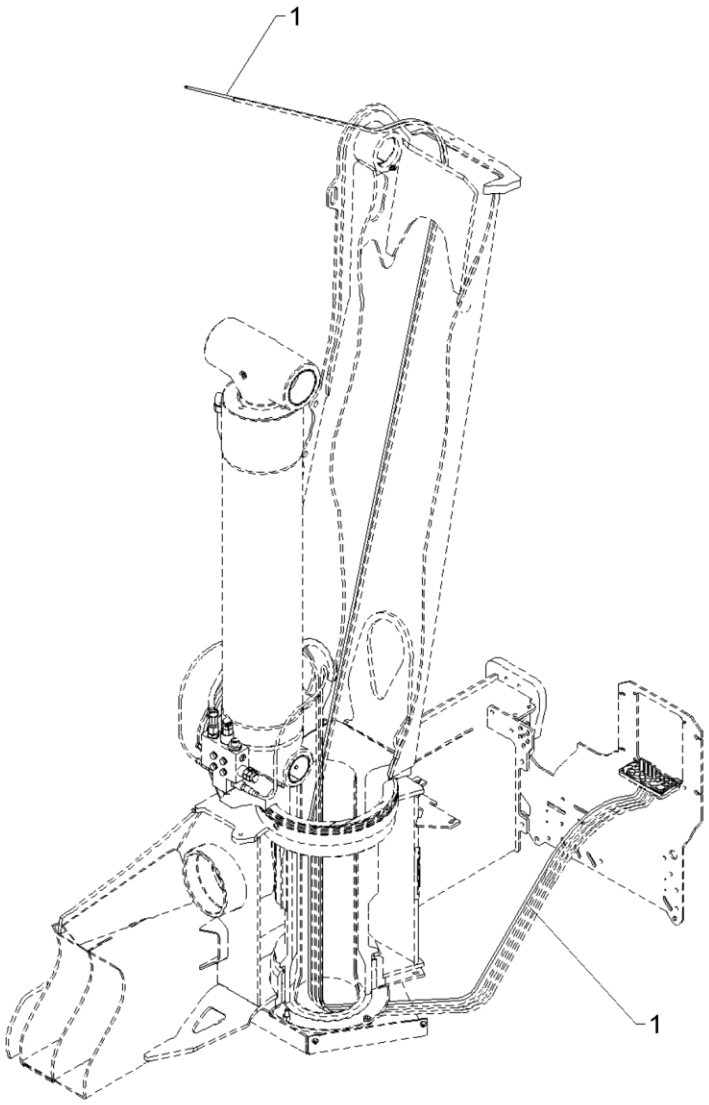
1
1

Obsolete

534 22 140

From loader 1060001
To loader

Created 31-03-2010
Modified 02-12-2011

Column, Fly-Jib

Pos	Qty.	Part no.	Description	Remarks
1	1	28263	CAN BUS cable	9 m
2	1	29275	Cable socket 7-polar 10 A	

1500K, 1510K, 1720K, 1730K, 1820K, 1830K

Internal ref. 70 03 630

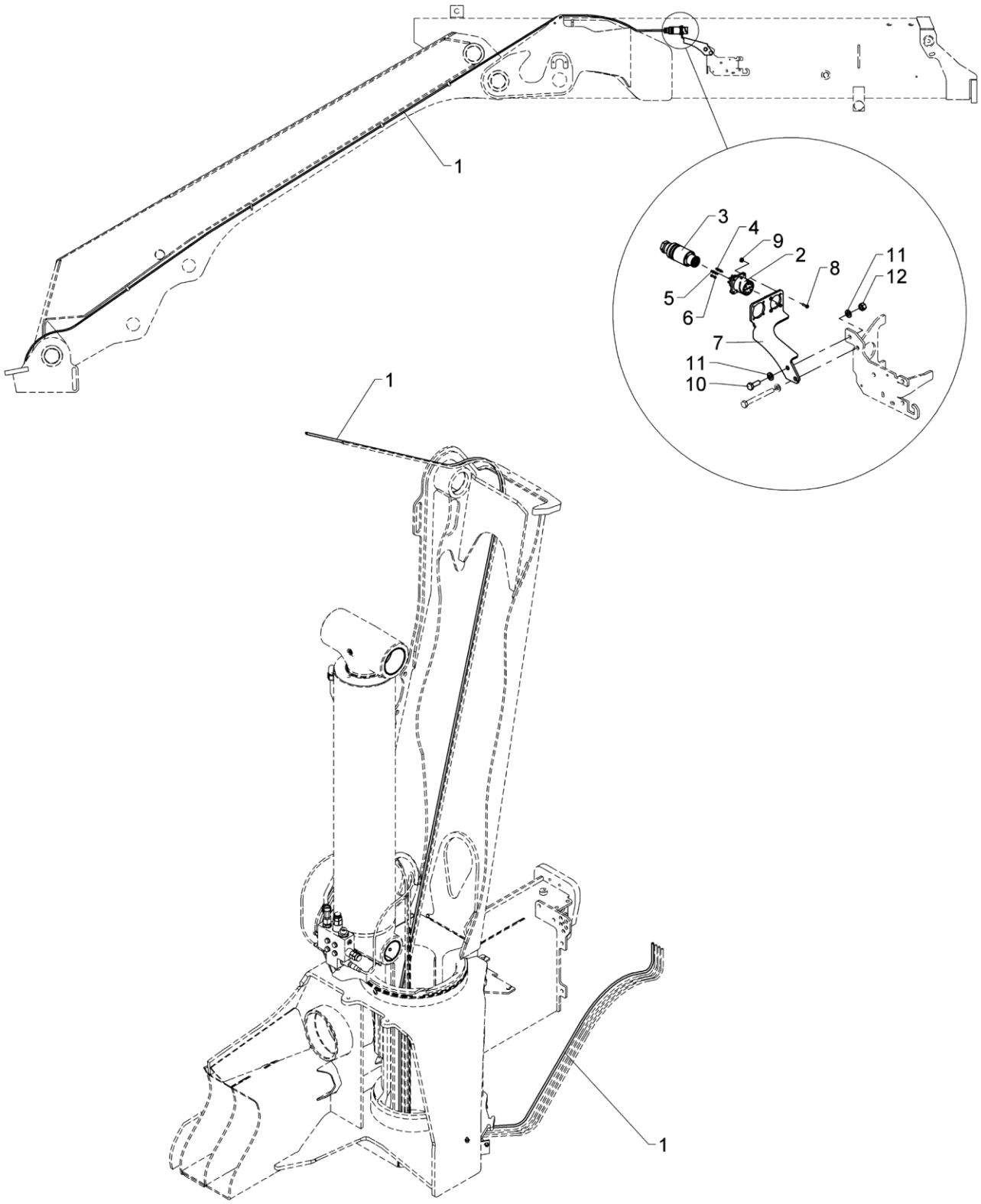

Obsolete

Column, Fly-Jib

534 22 140 A

From loader 1060001
To loader

Created 12-01-2016
Modified

Pos	Qty.	Part no.	Description	Remarks
1	1	28263	CAN BUS cable	9 m
2	1	29628	Socket 10-polar	
3	1	29635	Housing, Socket, short	
4	5	29633	Pin, female, 0,75mm² - 1,5mm²	
5	2	29631	Pin, female, 0,32-0,52 mm²	
6	3	29638	Sealing	
7	1	7004032	Bracket, FJ + MEWP plug	
8	4	32386	Screw M3 x 12 stainless	M3 x 12
9	4	32387	Lock nut M3 stainless	M3
10	1	30133	Set screw, stainless	
11	2	31147	Face washer, 8 mm	
12	1	30886	Lock nut, stainless	M8

1500K, 1510K, 1720K, 1730K, 1820K, 1830K

Internal ref. 70 03 630

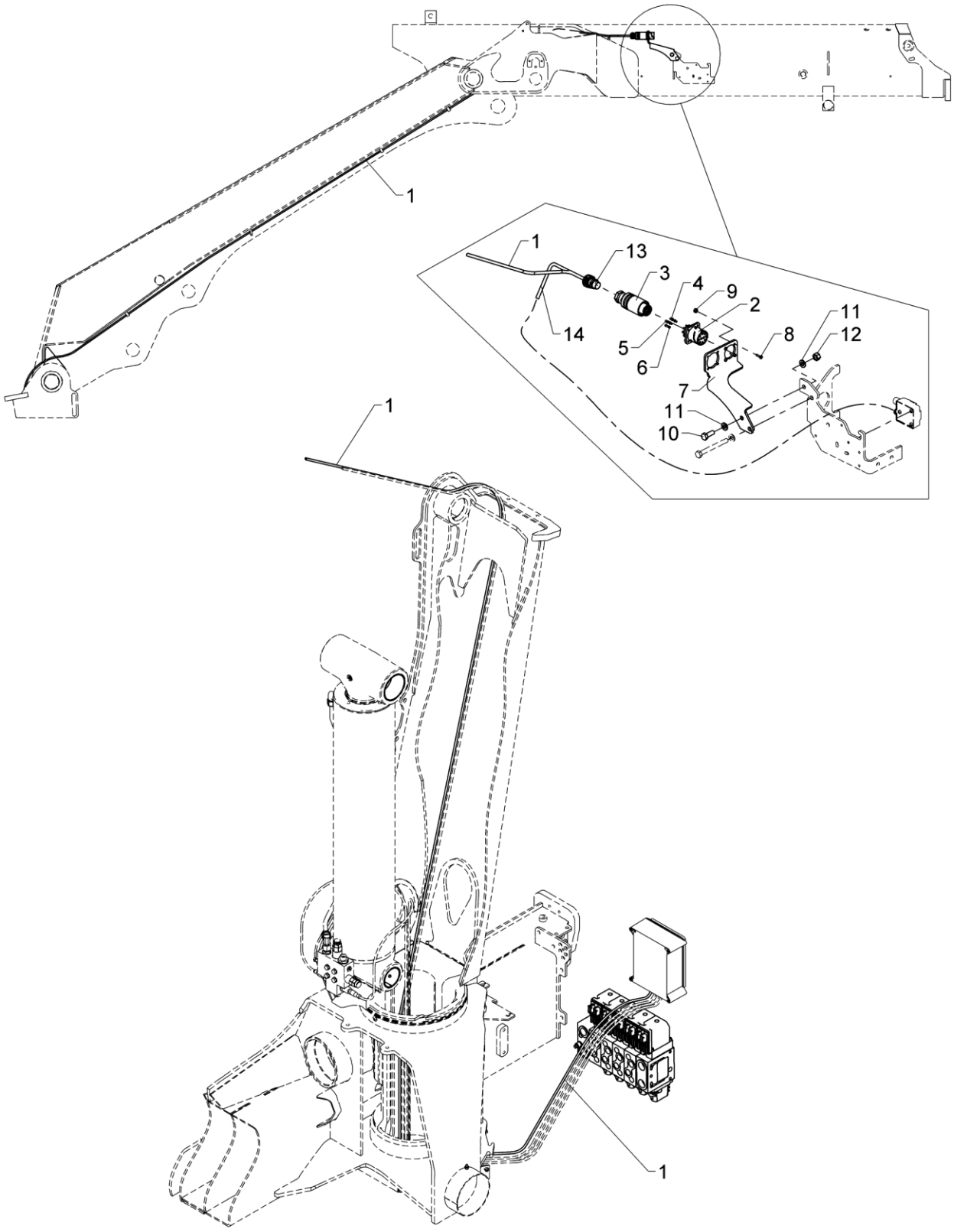

Column, Fly-Jib

Pos	Qty.	Part no.	Description	Remarks
1	1	28262	Cable 4 x 0.75	9 m
2	1	29628	Socket 10-polar	
3	1	29635	Housing, Socket, short	
4	4	29633	Pin, female, 0,75mm² - 1,5mm²	
5	3	29631	Pin, female, 0,32-0,52 mm²	
6	3	29638	Sealing	
7	1	7004032	Bracket, FJ + MEWP plug	
8	4	32386	Screw M3 x 12 stainless	M3 x 12
9	4	32387	Lock nut M3 stainless	M3
10	1	30133	Set screw, stainless	
11	2	31147	Face washer, 8 mm	
12	1	30886	Lock nut, stainless	M8
13	1	29700	Connection PG 13,5 2x 5,5-7,5	
14	1	29881	CAN cable 1.5m, M12 male plug	

1500K, 1510K, 1720K, 1730K, 1820K, 1830K

Internal ref. 70 06 500

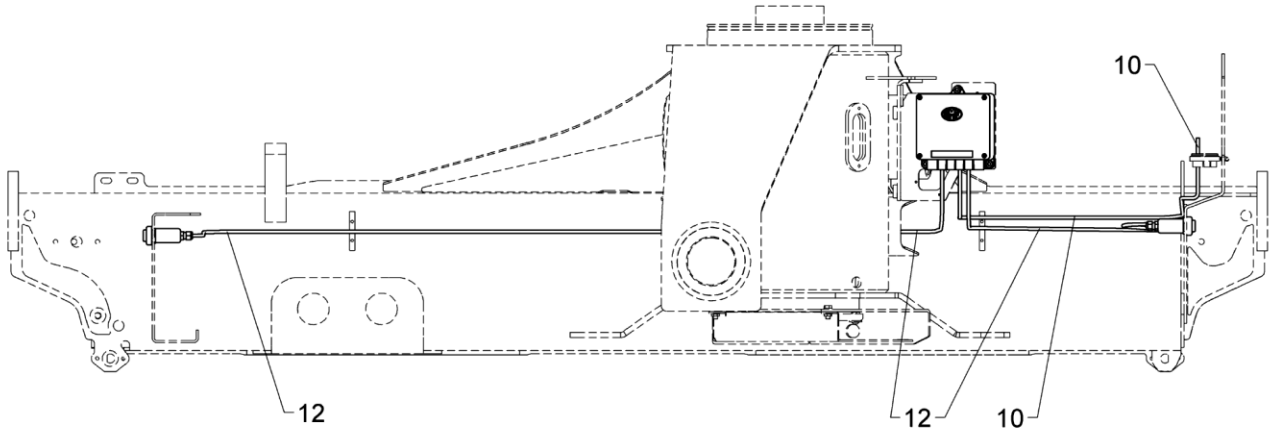

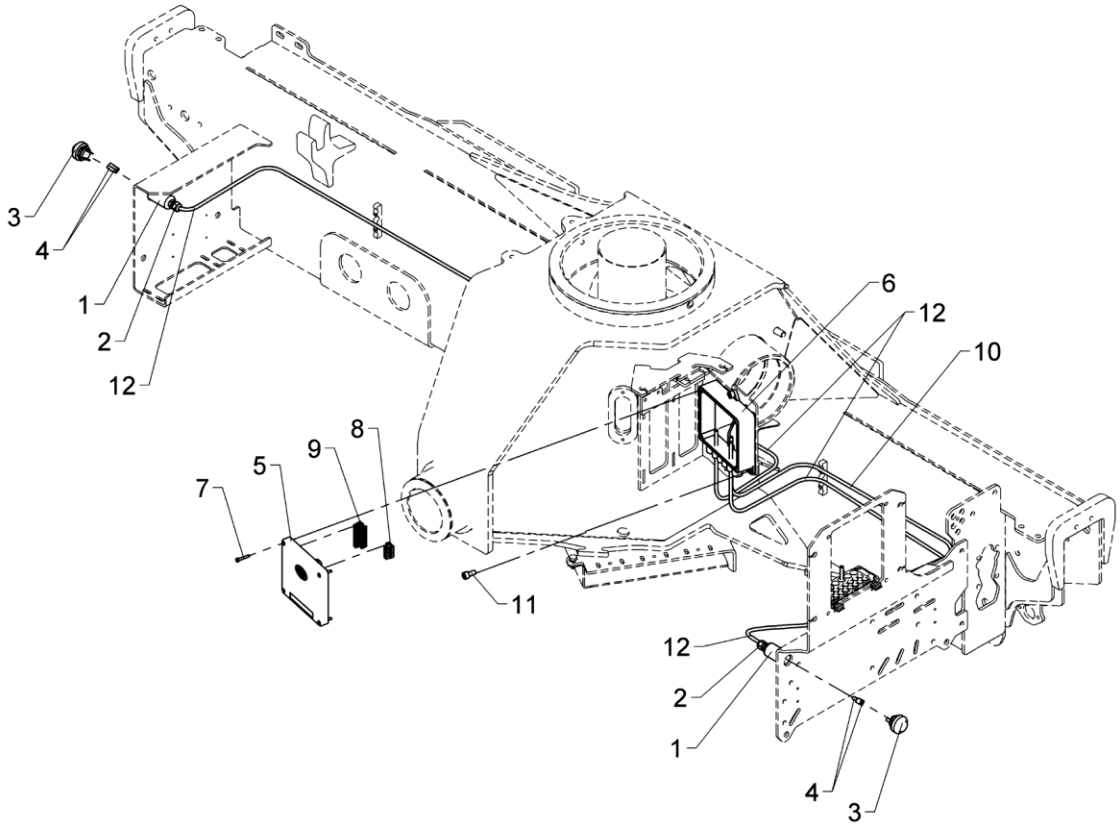

Obsolete

534 22 150

From loader 1060001
To loader

Created 14-06-2012
Modified 01-01-2014

Stabilizer operation via RC

Pos	Qty.	Part no.	Description	Remarks
1	2	64574	Housing	
2	2	28459	Connection	M12 x 1,5
3	2	27333	Push button	
4	4	27429	Clamp	
5	1	29346	CIO5376 controller cover cpl.	
6	1	29313	Bottom f. Fly-Jib box	
7	4	30347	Screw, stainless	4,0 x 25
8	1	29317	Plug, 5-polar for RCL 53XX	
9	1	29321	Plug, 10-polar for RCL 53XX	
10	1	28263	CAN BUS cable	1,5 m
11	3	30449	Screw	MC8 x 16
12	2	28249	Cable 2 x 0.75	3,5 m

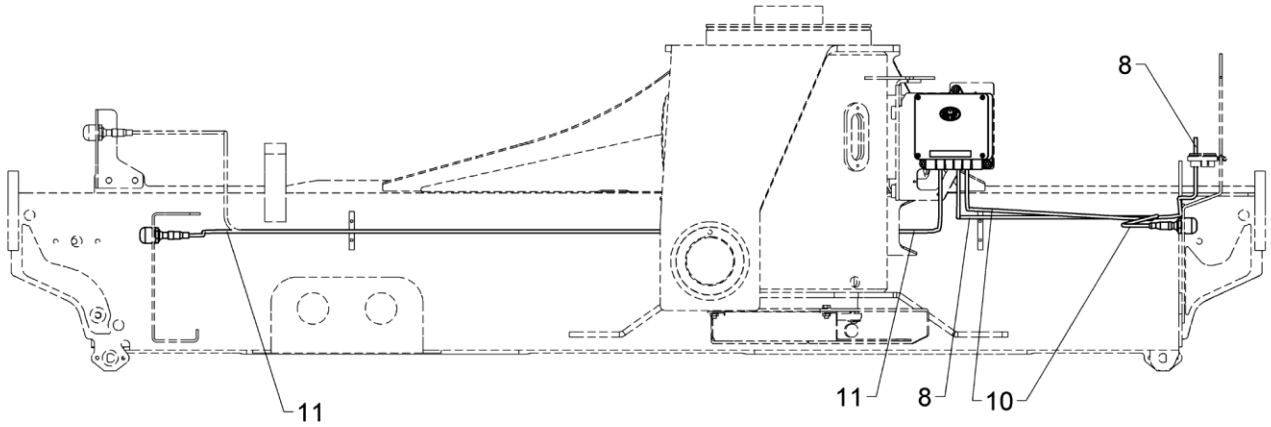
8
11
11
8
10

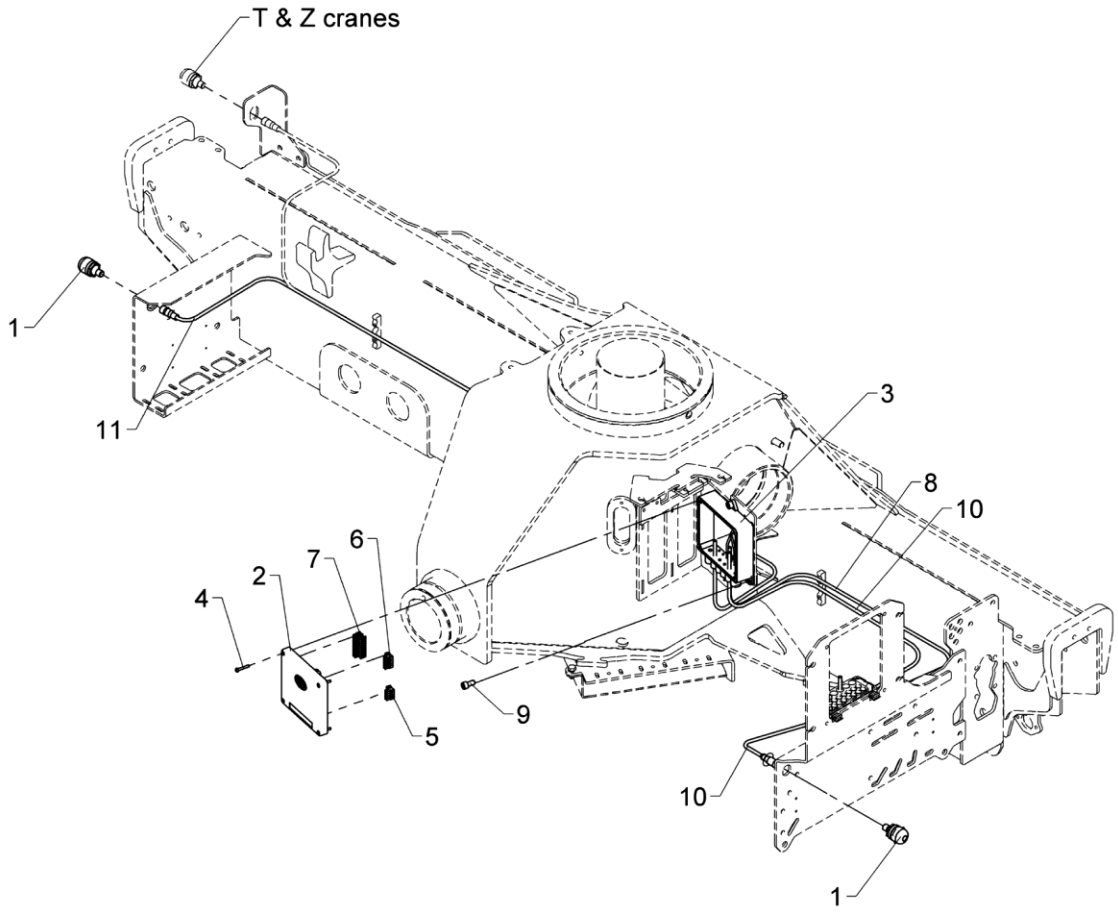
T & Z cranes
1
11
3
8
10
6
7
2
4
9
5
10
1

Obsolete

534 22 150 A

From loader 1060001
To loader

Created 01-01-2014
Modified 24-02-2014

Stabilizer operation via RC

Pos	Qty.	Part no.	Description	Remarks
1	2	29498	Touch button with light	
2	1	29346	CIO5376 controller cover cpl.	
3	1	29313	Bottom f. Fly-Jib box	
4	4	30347	Screw, stainless	4,0 x 25
5	1	29323	Plug, 4-polar for RCL 53XX	
6	1	29317	Plug, 5-polar for RCL 53XX	
7	1	29321	Plug, 10-polar for RCL 53XX	
8	1	28263	CAN BUS cable	1,5 m
9	3	30449	Screw	MC8 x 16
10	1	29223	Cable with socket, 2 m	
11	1	29224	Cable with socket, 5 m	

1500K, 1510K, 1720K, 1730K, 1820K, 1830K

Internal ref. 70 06 500

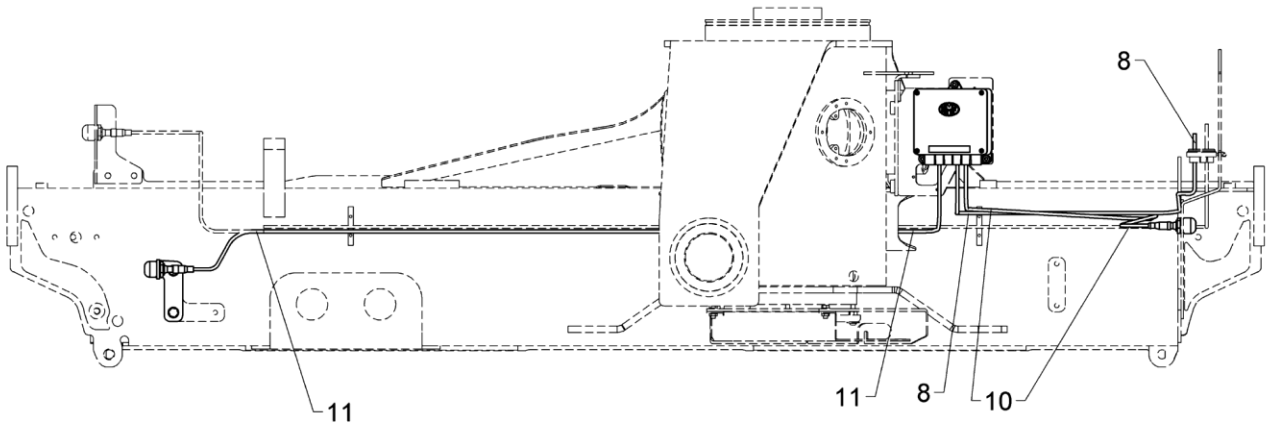

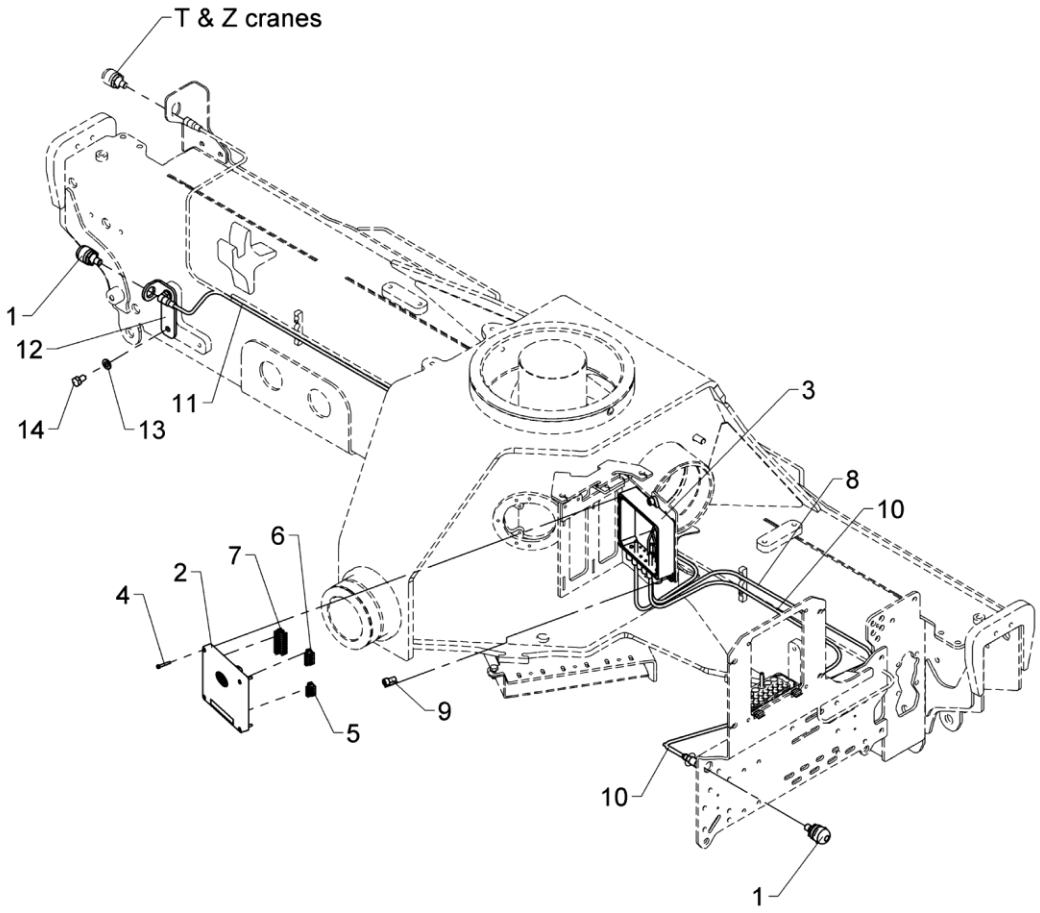

Stabilizer operation via RC

Pos	Qty.	Part no.	Description	Remarks
1	2	29498	Touch button with light	
2	1	29346	CIO5376 controller cover cpl.	
3	1	29313	Bottom f. Fly-Jib box	
4	4	30347	Screw, stainless	4,0 x 25
5	1	29323	Plug, 4-polar for RCL 53XX	
6	1	29317	Plug, 5-polar for RCL 53XX	
7	1	29321	Plug, 10-polar for RCL 53XX	
8	1	28263	CAN BUS cable	1,5 m
9	3	30449	Screw	MC8 x 16
10	1	29223	Cable with socket, 2 m	
11	1	29224	Cable with socket, 5 m	
12	1	6340639	Mounting fittings (light)	
13	2	31565	Washer, stainless	10 mm
14	2	31510	Set screw, stainless	M10 x 16

1500K, 1510K, 1720K, 1730K, 1820K, 1830K

Internal ref. 70 06 560

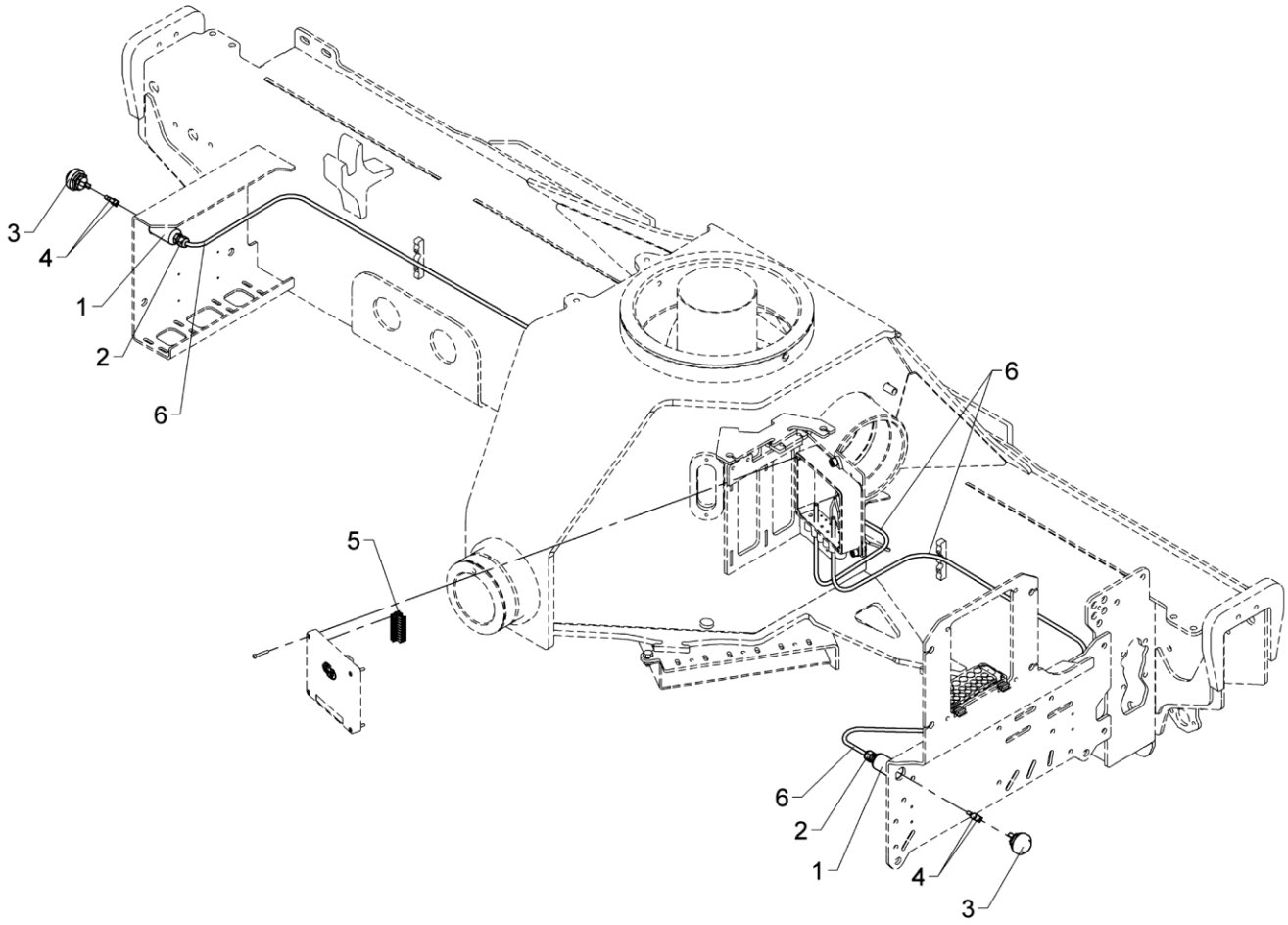

Obsolete

Stabilizer operation via RC (without CIO)

534 22 154

From loader 1060001
To loader 1061169

Created 01-02-2013
Modified

Pos	Qty.	Part no.	Description	Remarks
1	2	64574	Housing	
2	2	28459	Connection	M12 x 1,5
3	2	27333	Push button	
4	4	27429	Clamp	
5	1	29321	Plug, 10-polar for RCL 53XX	
6	2	28249	Cable 2 x 0.75	3,5 m

1500K, 1510K, 1720K, 1730K, 1820K, 1830K

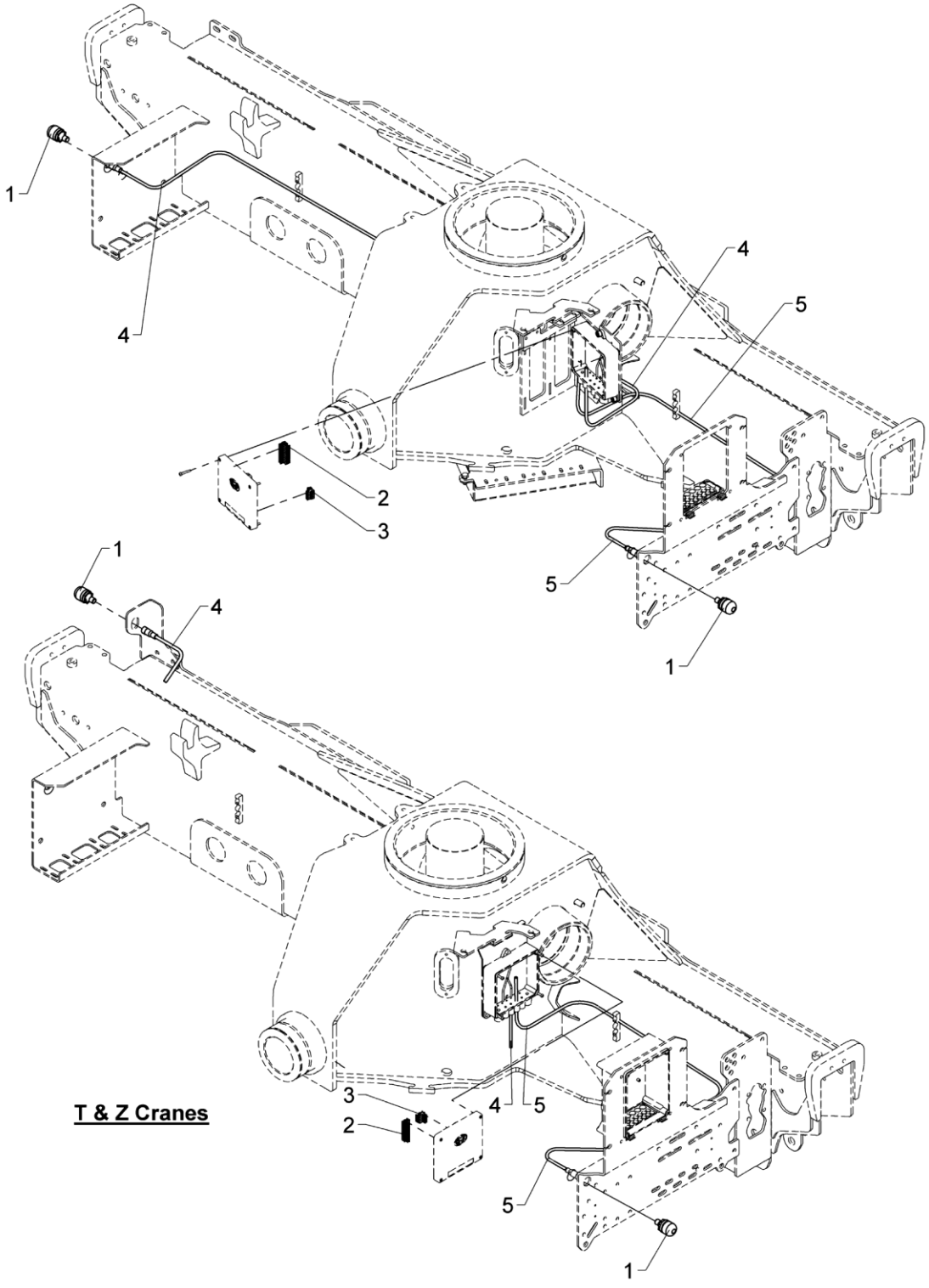

Obsolete

Stabilizer operation via RC (without CIO)

534 22 154 A

From loader 1061170
To loader 1061996

Created 17-01-2014
Modified

Pos	Qty.	Part no.	Description	Remarks
1	2	29498	Touch button with light	
2	1	29321	Plug, 10-polar for RCL 53XX	
3	1	29323	Plug, 4-polar for RCL 53XX	
4	1	29224	Cable with socket, 5 m	
5	1	29223	Cable with socket, 2 m	

1500K, 1510K, 1720K, 1730K, 1820K, 1830K

Internal ref. 70 06 560

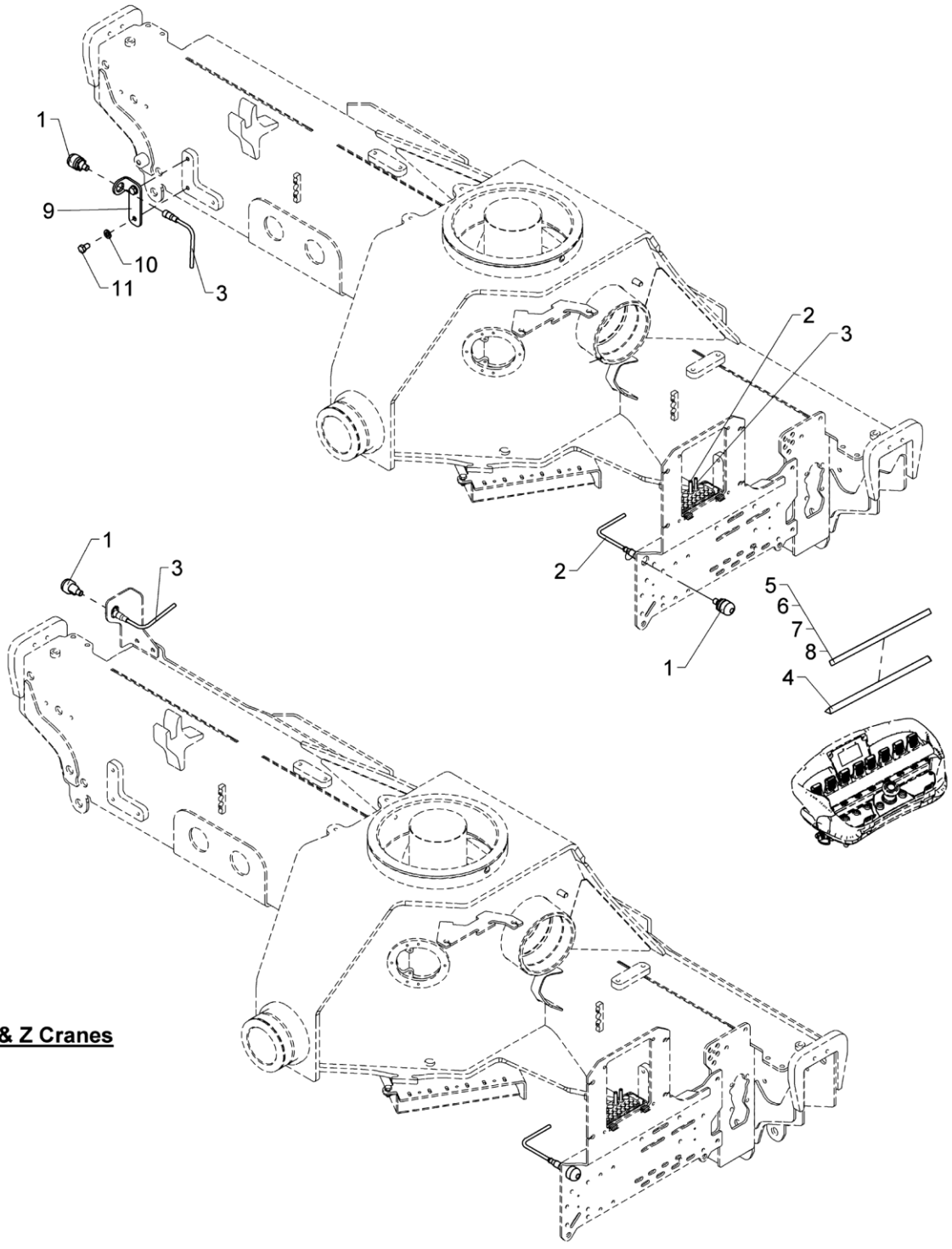

T & Z Cranes

Stabilizer operation via RC (without CIO)

Pos	Qty.	Part no.	Description	Remarks
1	2	29498	Touch button with light	
2	1	29223	Cable with socket, 2 m	
3	1	29224	Cable with socket, 5 m	
4	1	63512	Rail for label	
5	1	66454	Operating label	8 funk.
6	1	68901	Operating label	2 funk.
7	1	68902	Operating label	6 funk.
8	1	68903	Operating label	4 funk.
9	1	6340639	Mounting fittings (light)	
10	2	31565	Washer, stainless	10 mm
11	2	31510	Set screw, stainless	M10 x 16

1500K, 1510K, 1720K, 1730K, 1820K, 1830K

Internal ref. 70 06 570

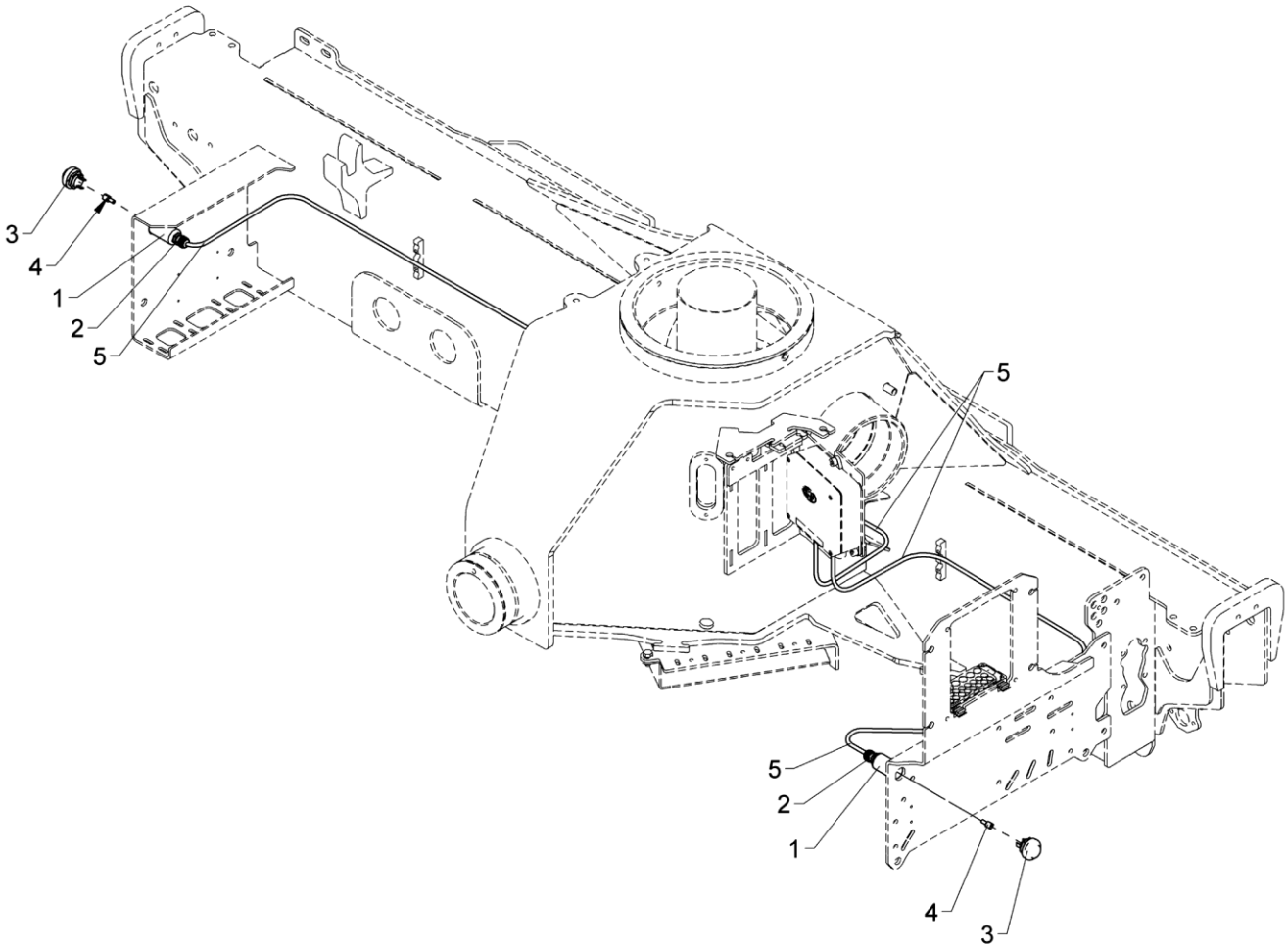

Obsolete

Stabilizer operation via RC (with winch)

534 22 156

From loader 1060001
To loader 1061169

Created 01-02-2013
Modified

Pos	Qty.	Part no.	Description	Remarks
1	2	64574	Housing	
2	2	28459	Connection	
3	2	27333	Push button	
4	4	27429	Clamp	
5	2	28249	Cable 2 x 0.75	3 m

1500K, 1510K, 1720K, 1730K, 1820K, 1830K

Internal ref. 70 06 570

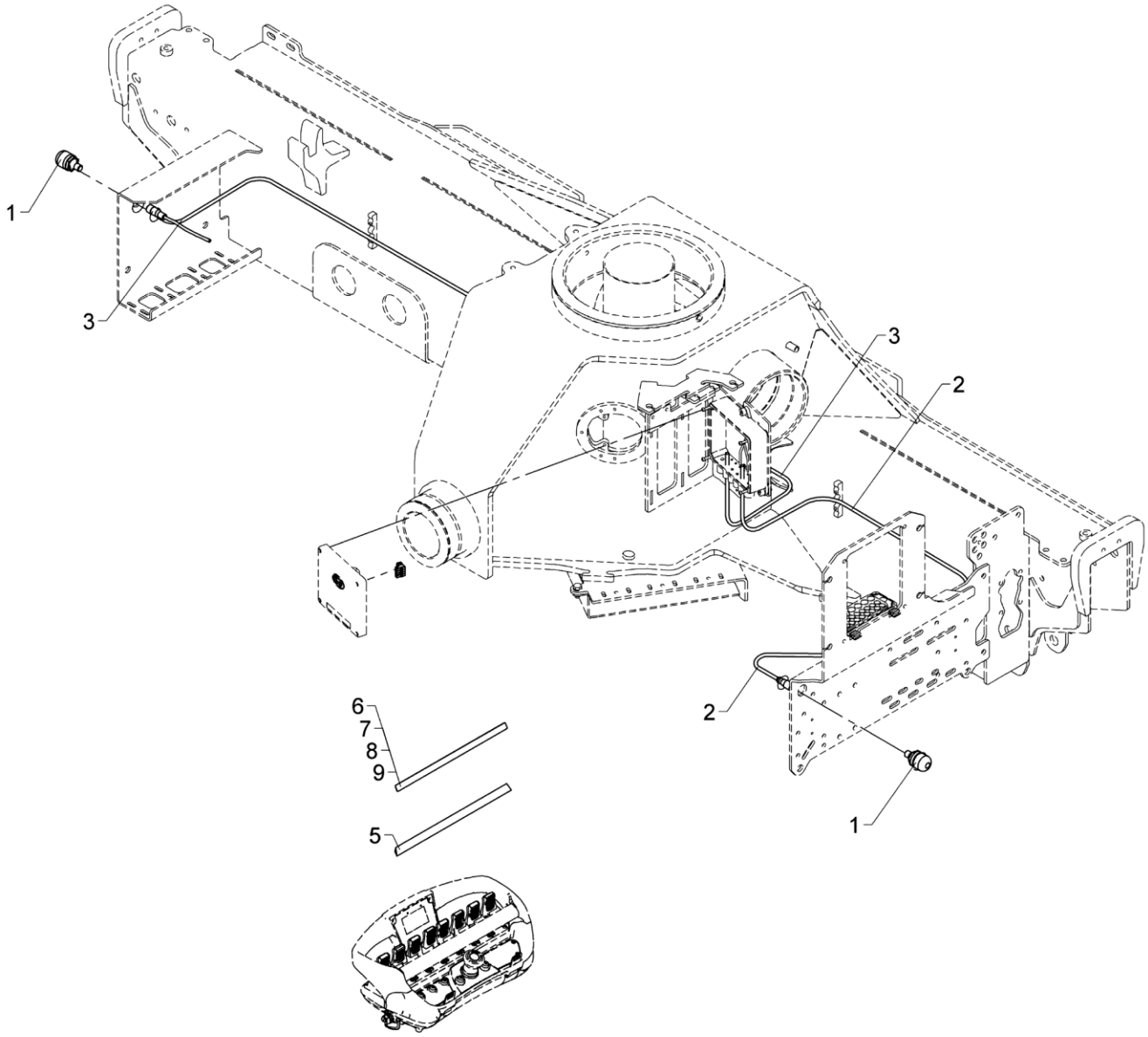

Obsolete

Stabilizer operation via RC (with winch)

534 22 156 A

From loader 1061170
To loader 1061996

Created 17-01-2014
Modified

Pos	Qty.	Part no.	Description	Remarks
1	2	29498	Touch button with light	
2	1	29223	Cable with socket, 2 m	
3	1	29224	Cable with socket, 5 m	
4	1	29323	Plug, 4-polar for RCL 53XX	
5	1	63512	Rail for label	
6	1	66454	Operating label	8 funk.
7	1	68901	Operating label	2 funk.
8	1	68902	Operating label	6 funk.
9	1	68903	Operating label	4 funk.

1500K, 1510K, 1720K, 1730K, 1820K, 1830K

Internal ref. 70 06 570

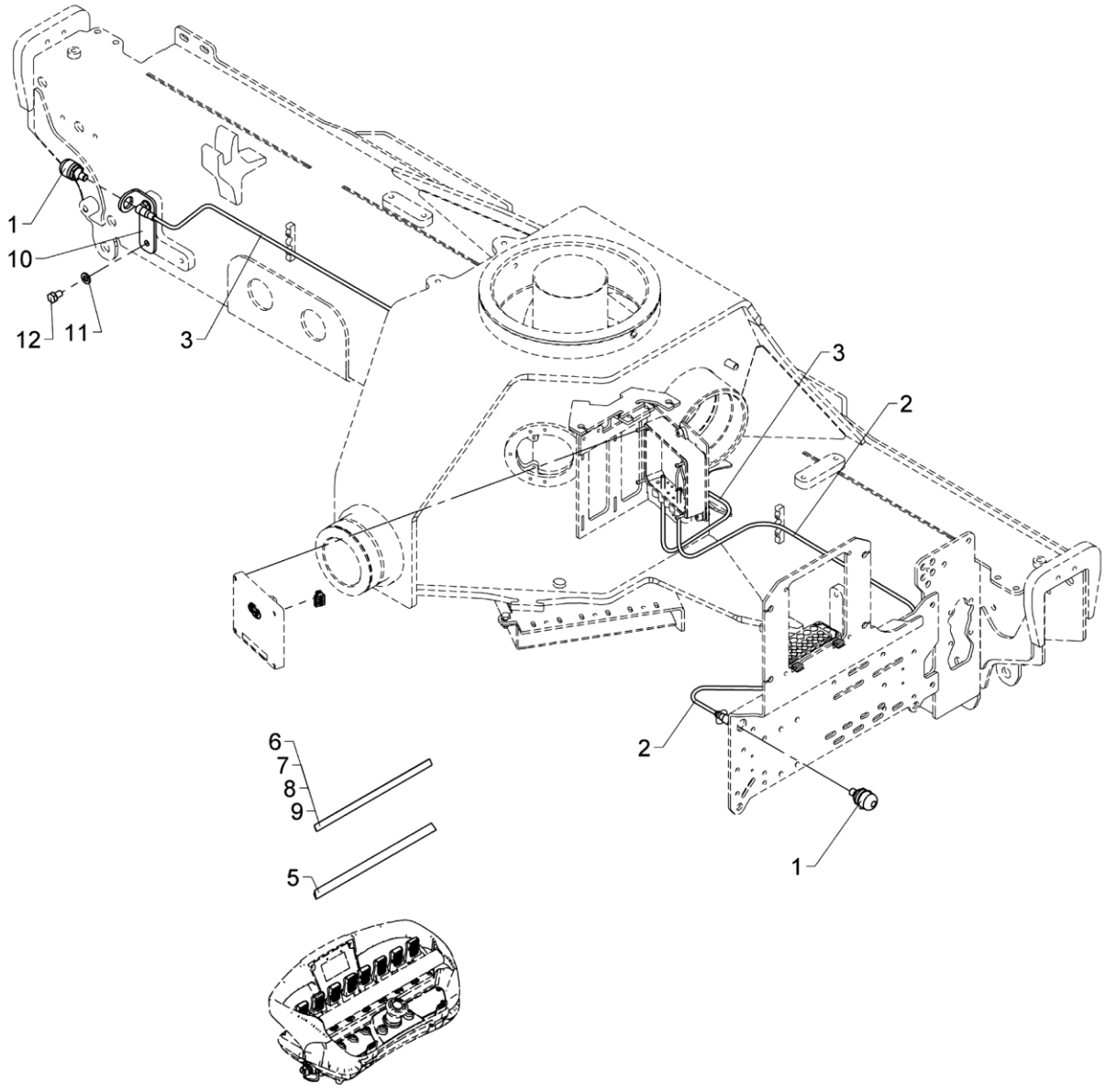

Stabilizer operation via RC (with winch)

Pos	Qty.	Part no.	Description	Remarks
1	2	29498	Touch button with light	
2	1	29223	Cable with socket, 2 m	
3	1	29224	Cable with socket, 5 m	
4	1	29323	Plug, 4-polar for RCL 53XX	
5	1	63512	Rail for label	
6	1	66454	Operating label	8 funk.
7	1	68901	Operating label	2 funk.
8	1	68902	Operating label	6 funk.
9	1	68903	Operating label	4 funk.
10	1	6340639	Mounting fittings (light)	
11	2	31565	Washer, stainless	10 mm
12	2	31510	Set screw, stainless	M10 x 16

1500K, 1510K, 1720K, 1730K, 1820K, 1830K

70 04 330
70 04 320
70 04 310
70 04 300
Internal ref. 70 04 290

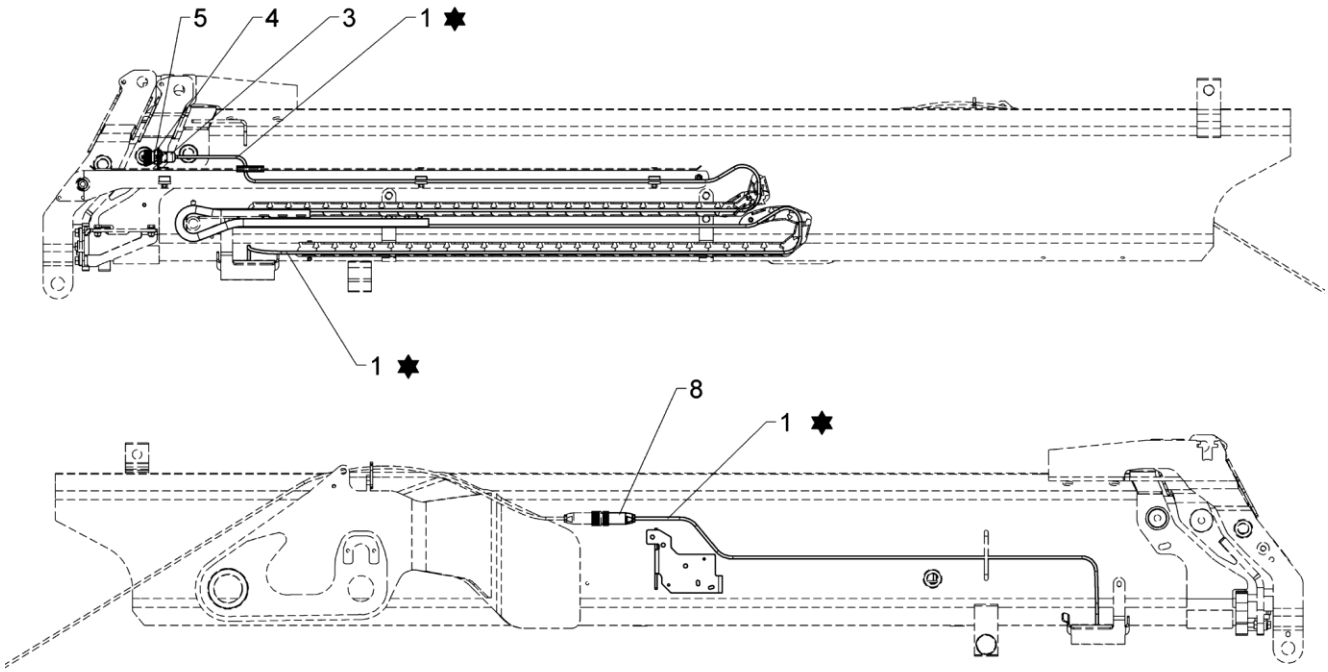

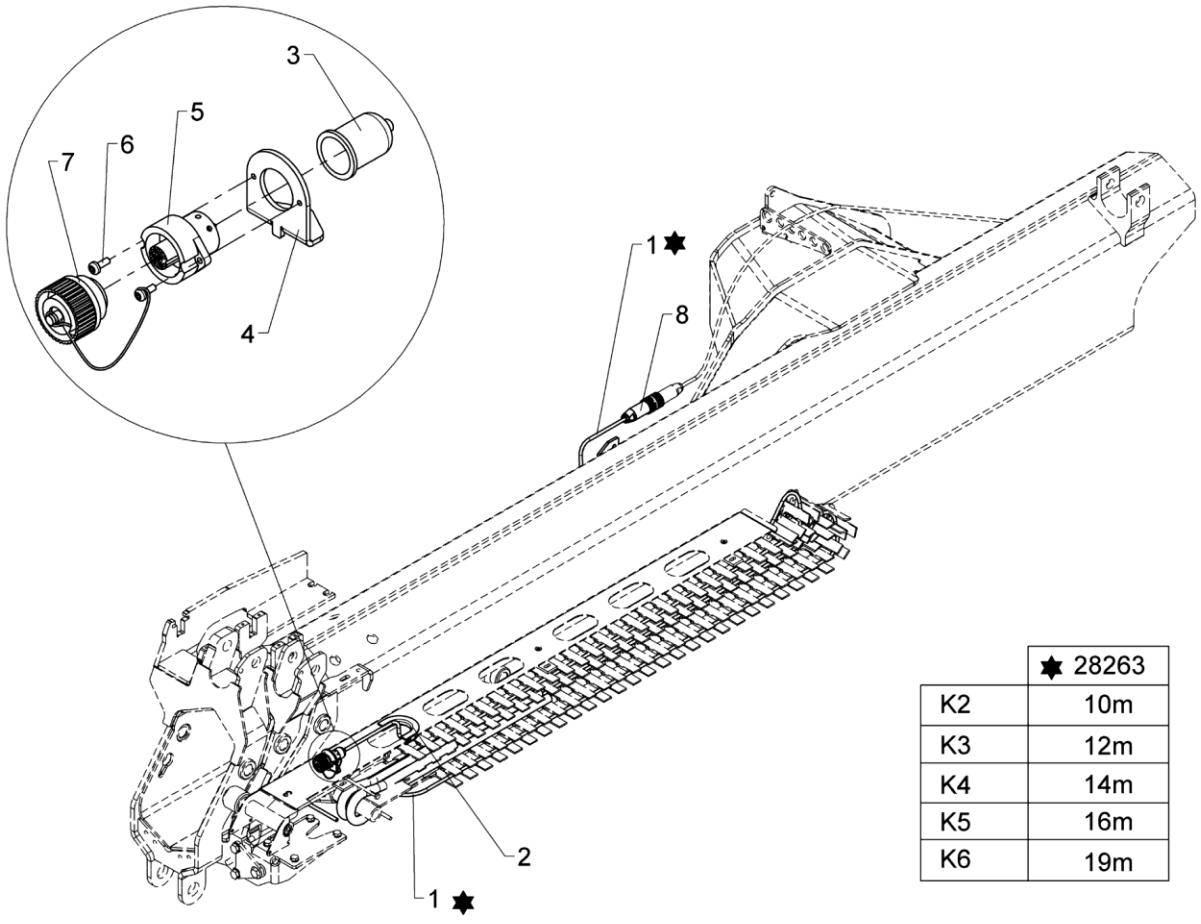

	✸ 28263
K2	10m
K3	12m
K4	14m
K5	16m
K6	19m

Obsolete

Fly-Jib supply, K2

534 22 160

From loader 1060001
To loader

Created 06-04-2010
Modified 06-07-2010

Pos	Qty.	Part no.	Description	Remarks
		7004290	Electric cable, FJ K2	
		7004300	Electric cable, FJ K3	
		7004310	Electric cable, FJ K4	
		7004320	Electric cable, FJ K5	
		7004330	Electric cable, FJ K6	
1	1	28263	CAN BUS cable	
2	1	22122	PVC protection	
3	1	29233	Protection	
4	1	6340779	Adapter	
5	1	29232	Socket, 7-polar, 10 A	
6	2	31030	Screw	M3 x 8
7	1	58103	Cover	
8	1	29285	Cable plug, 7-polar, 10 A	

1500K, 1510K, 1720K, 1730K, 1820K, 1830K

70 04 330
70 04 320
70 04 310
Internal ref. 70 04 300

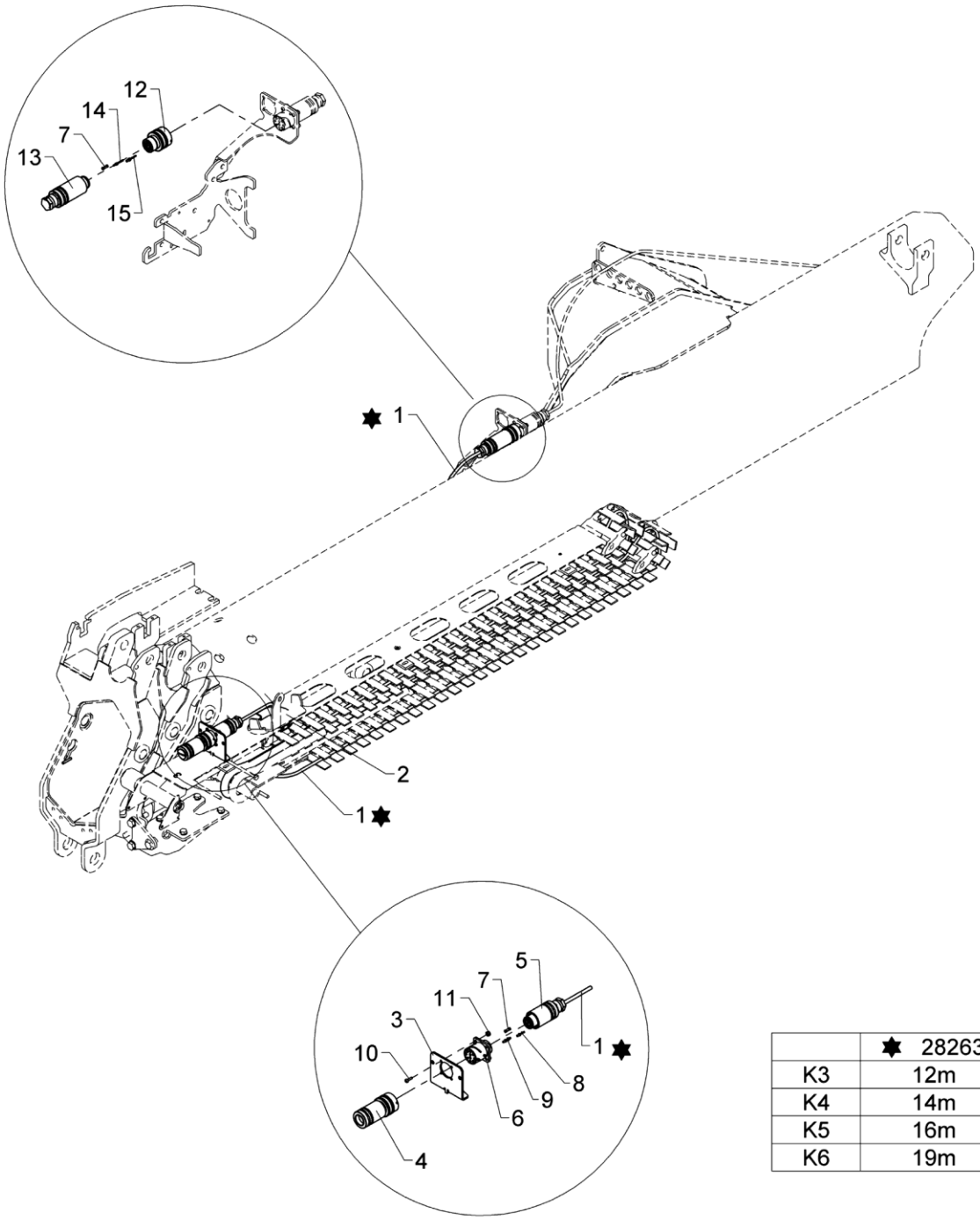

	✸ 28263
K3	12m
K4	14m
K5	16m
K6	19m

Fly-Jib supply

Pos	Qty.	Part no.	Description	Remarks
		7004300	Electric cable, FJ K3	
		7004310	Electric cable, FJ K4	
		7004320	Electric cable, FJ K5	
		7004330	Electric cable, FJ K6	
1	1	28263	CAN BUS cable	
2	1	22122	PVC protection	
3	1	7004028	Bracket, FJ plug	
4	1	7009999	Dummy plug for Fly-Jib	
5	1	29635	Housing, Socket, short	
6	1	29628	Socket 10-polar	
7	6	29638	Sealing	
8	2	29631	Pin, female, 0,32-0,52 mm²	
9	5	29633	Pin, female, 0,75mm² - 1,5mm²	
10	4	32386	Screw M3 x 12 stainless	M3 x 12
11	4	32387	Lock nut M3 stainless	M3
12	1	29629	Plug, 10-polar	
13	1	29634	Housing, plug, long	
14	5	29632	Pin, 0,75-1,5 mm²	
15	2	29630	Pin, male, 0,32mm² - 0,52mm²	

1500K, 1510K, 1720K, 1730K, 1820K, 1830K

Internal ref. 70 06 340

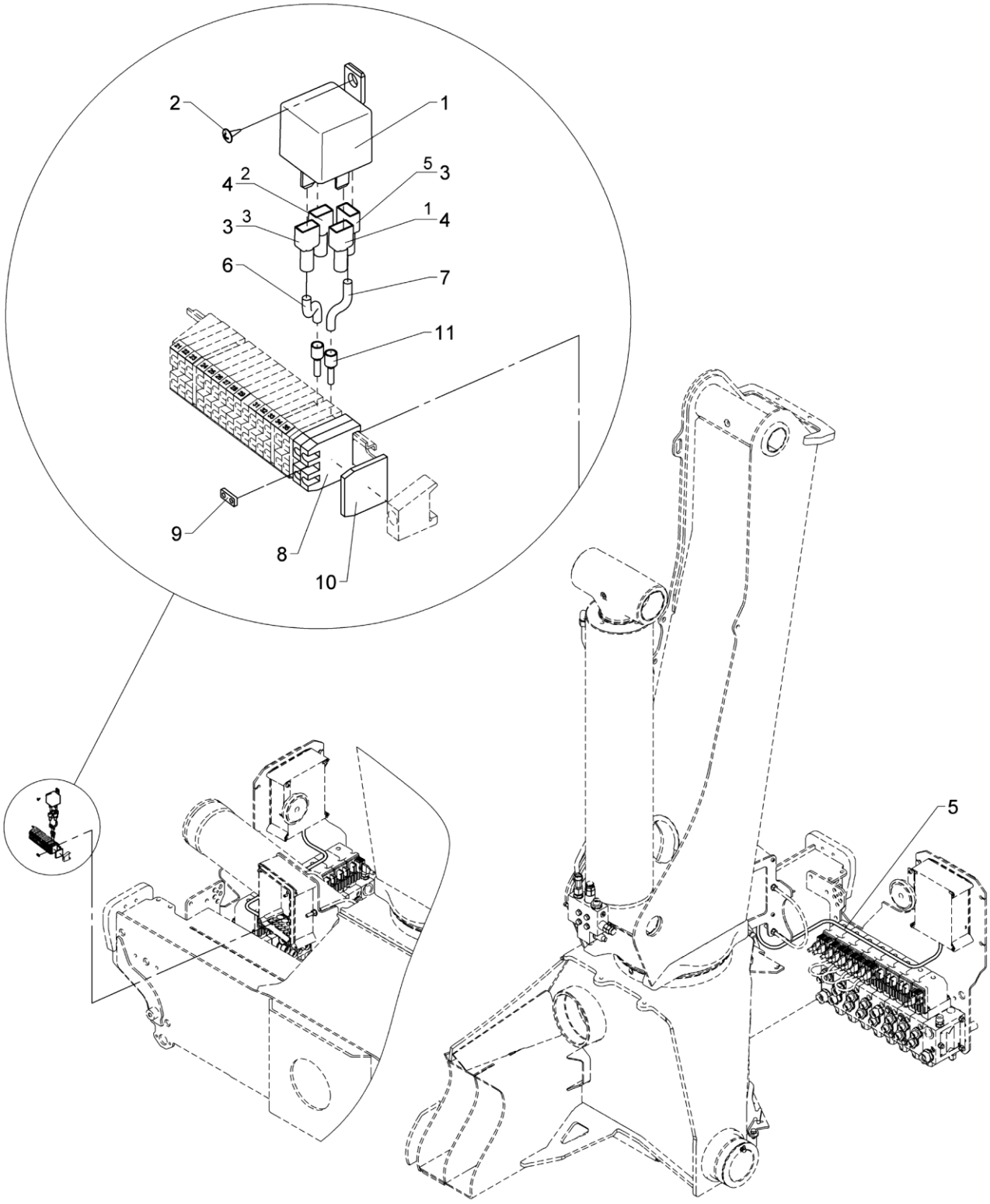

Obsolete

534 22 170

From loader 1060001
To loader

Created 14-12-2011
Modified

Spotlight, radio remote controlled.

Pos	Qty.	Part no.	Description	Remarks
1	1	27342	Relay, 24V	
2	1	28693	Screw	Ø2.9 x 6.5
3	2	27428	Clip	
4	2	27429	Clamp	
5	1	28262	Cable 4 x 0.75	2 m
6	1	27212	Wire 1 x 2.5 mm2	150 mm
7	1	29460	Wire 1 x 2.5 mm2	150 mm
8	2	28010	Terminal	
9	1	28208	Fish plate	
10	1	28011	End plate	
11	2	27776	Cable lead-in	

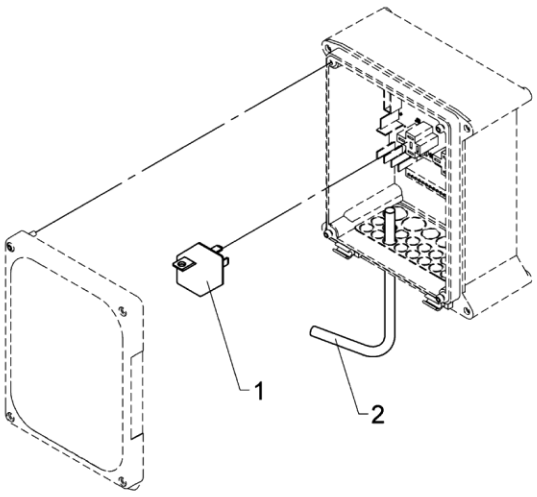
1
2

534 22 170 A

From loader 1060001
To loader

Created 20-05-2013
Modified 21-10-2016

Spotlight, radio remote controlled.

Pos	Qty.	Part no.	Description	Remarks
1	1	27342	Relay, 24V	
2	1	28262	Cable 4 x 0.75	2 m

1500K, 1510K, 1720K, 1730K, 1820K, 1830K

Internal ref. 70 06 510

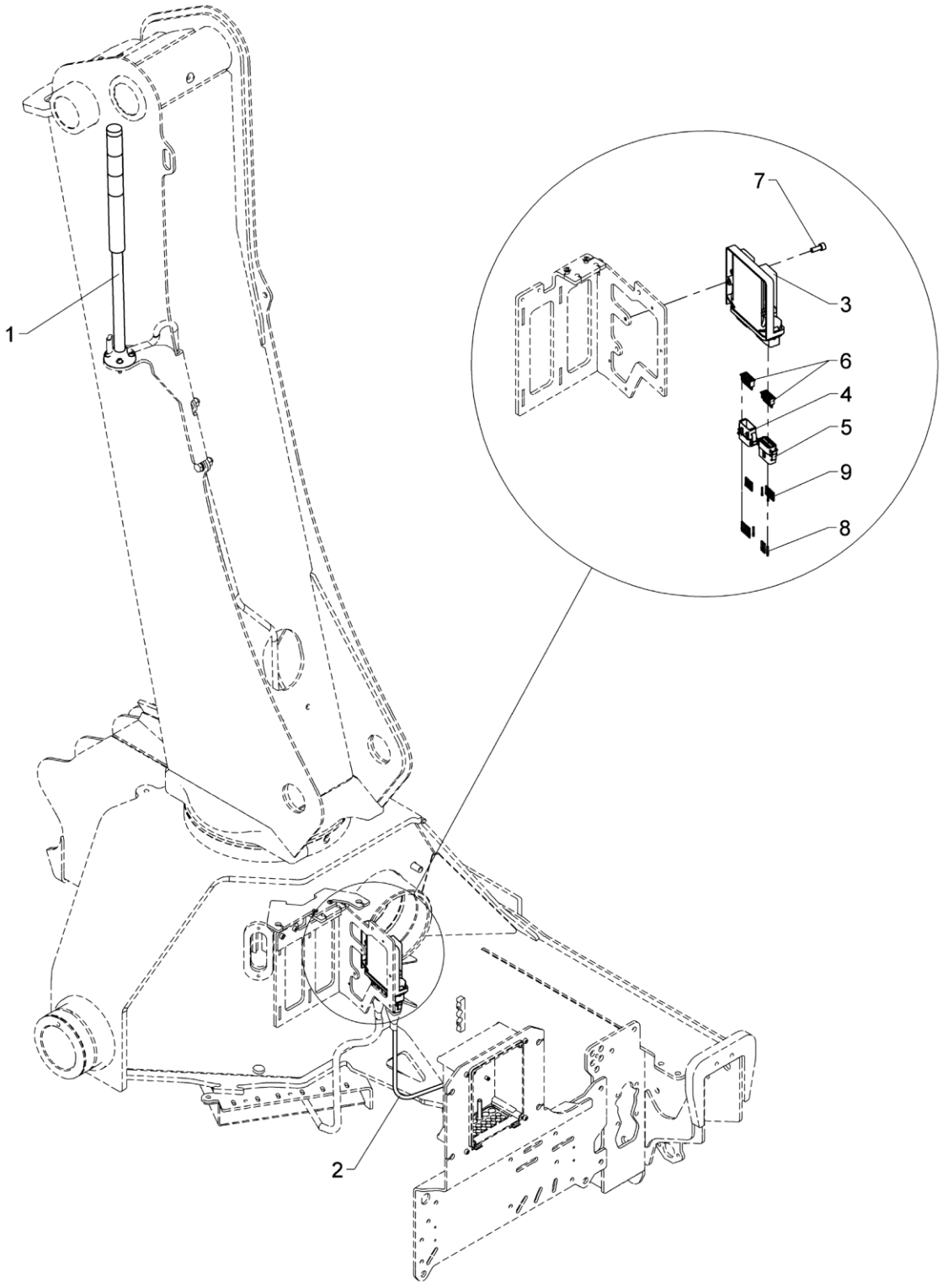

534 22 180

From loader 1060001
To loader

Created 25-02-2013
Modified

Light tower for BMS-1

Pos	Qty.	Part no.	Description	Remarks
1	1	29195	Light tower incl. foot + cable	
2	1	28263	CAN BUS cable	2 m
3	1	29345	CIO5374 controller excl. cable	
4	1	29326	Plug, type A for ECT5310	
5	1	29327	Plug, type B for ECT5310	
6	2	29328	Lock for plug for ECT5310	
7	2	30424	Screw	MC6 x 16
8	11	29329	Pin for plug for ECT5310	
9	13	29339	Sealing for plug for ECT5310	

1500K, 1510K, 1720K, 1730K, 1820K, 1830K

Internal ref. 70 05 240

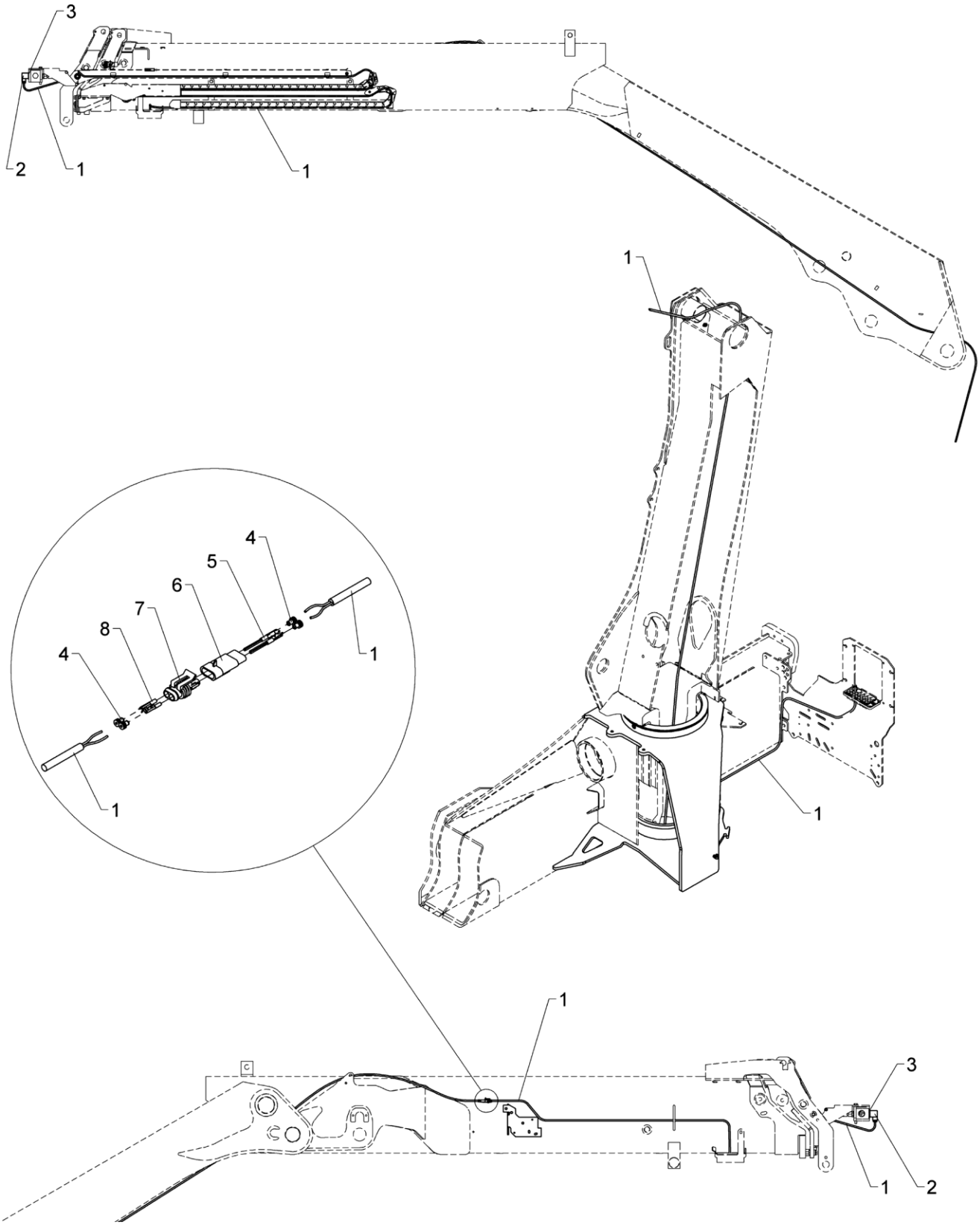

Obsolete

534 22 190

From loader 1060001
To loader

Created 19-03-2010
Modified 08-05-2013

3rd extra valve

Pos	Qty.	Part no.	Description	Remarks
1	1	28249	Cable 2 x 0.75	25 m
2	1	28258	Plug, solenoid valve	
3	1	28840	Seal	
4	4	29159	Cable lead-in, AMP	
5	2	29161	Plug, AMP	
6	1	29160	Socket, 2-polar, AMP	
7	1	28843	Bipolar socket, AMP	
8	2	28844	Socket, AMP	

1500K, 1510K, 1720K, 1730K, 1820K, 1830K

Internal ref. 70 05 240

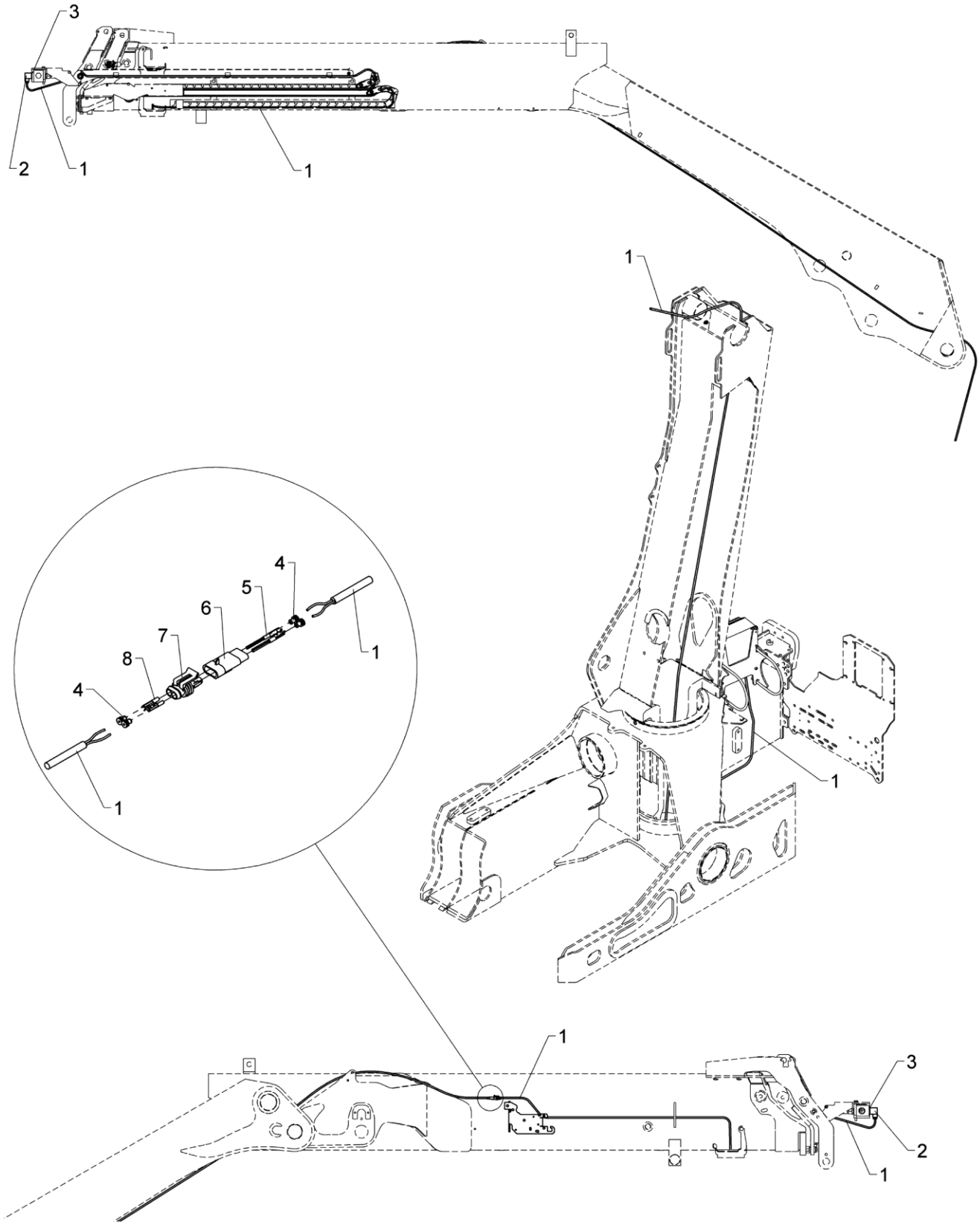

3rd extra valve

534 22 190 A

From loader 1060001
To loader

Created 24-09-2018
Modified

Pos	Qty.	Part no.	Description	Remarks
1	1	28249	Cable 2 x 0.75	30 m
2	1	28258	Plug, solenoid valve	
3	1	28840	Seal	
4	4	29159	Cable lead-in, AMP	
5	2	29161	Plug, AMP	
6	1	29160	Socket, 2-polar, AMP	
7	1	28843	Bipolar socket, AMP	
8	2	28844	Socket, AMP	

1500K, 1510K, 1720K, 1730K, 1820K, 1830K

Internal ref. 70 06 350

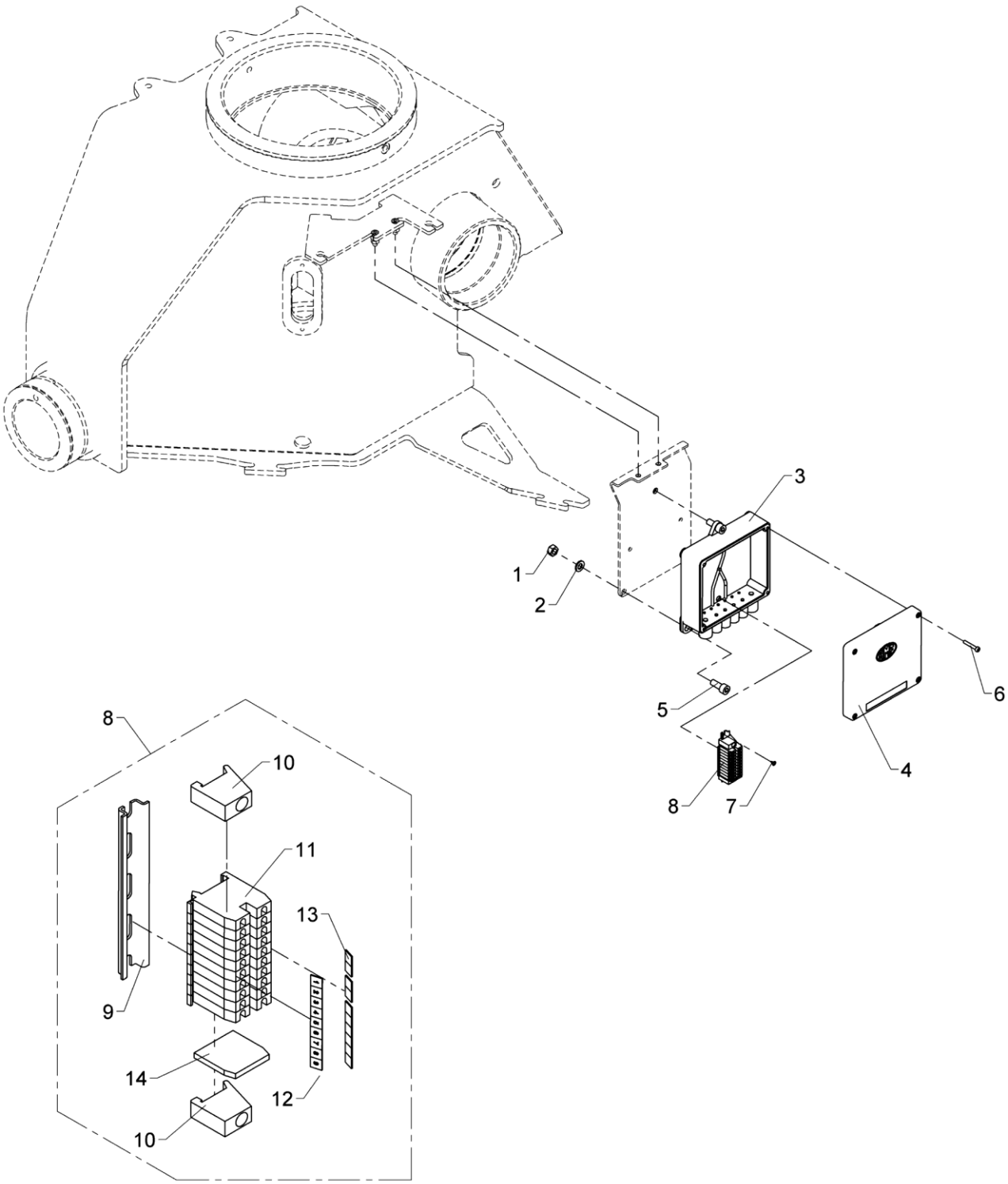

Junction box 2, G2

534 22 200

From loader 1060001
To loader

Created 05-12-2011
Modified

Pos	Qty.	Part no.	Description	Remarks
1	3	30856	Nut, stainless	M8
2	3	31147	Face washer, 8 mm	
3	1	29313	Bottom f. Fly-Jib box	
4	1	29314	Cover for Fly-Jib box	
5	3	30438	Screw	MC8 x 20
6	4	30347	Screw, stainless	4,0 x 25
7	2	28693	Screw	Ø2.9 x 6.5
8	1	7006303	Terminal block,junction box II	
9	1	28013	Guide rail	120 mm.
10	2	28012	End angle	
11	10	28010	Terminal	
12	1	28019	Labels nos. 1-10	
13	1	28965	Dekafix labels 21-30	
14	1	28011	End plate	

1500K, 1510K, 1720K, 1730K, 1820K, 1830K

Internal ref. 70 06 550

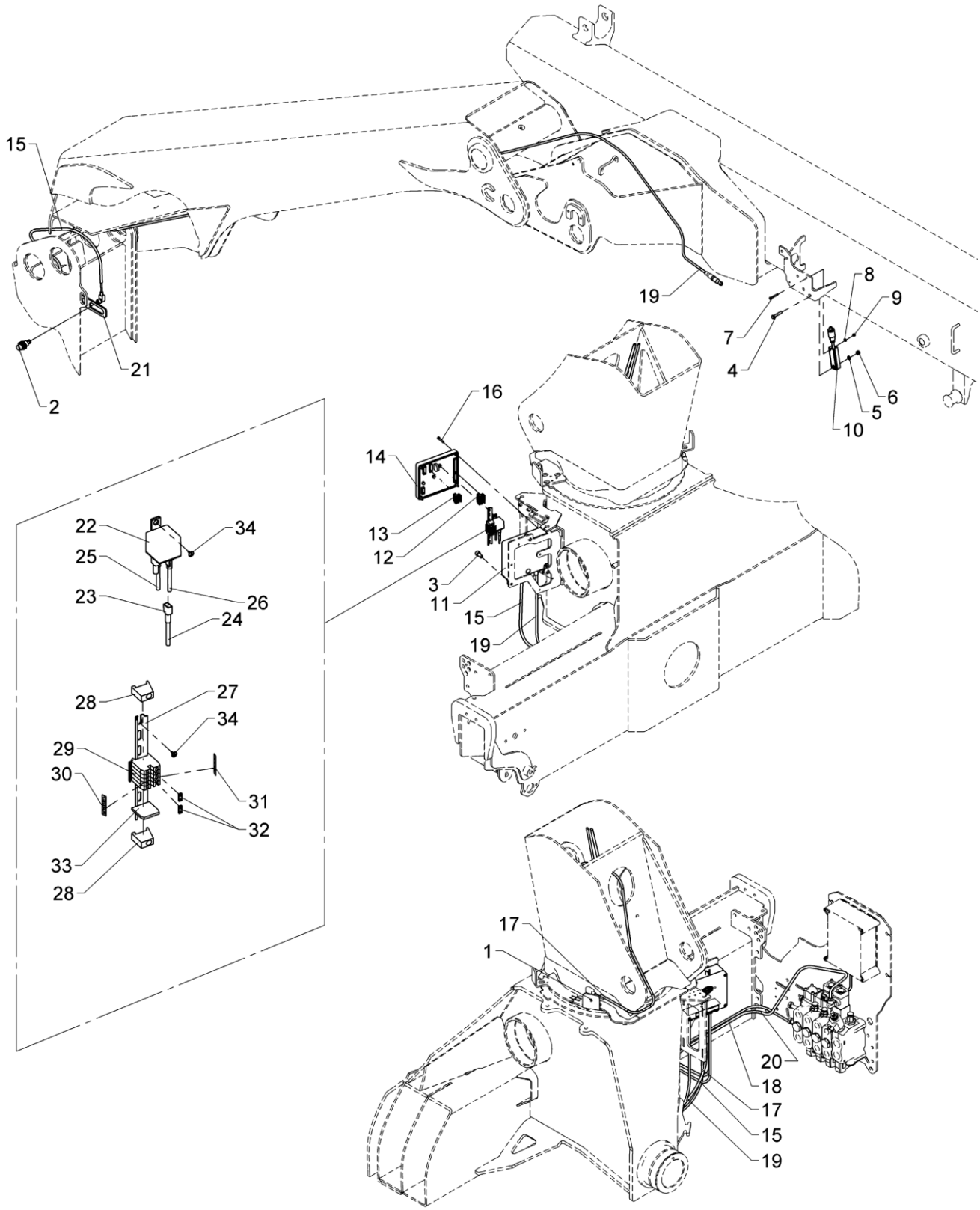

Obsolete

534 22 220

From loader 1060001
To loader

Created 22-10-2012
Modified 23-06-2014

QOPS, STDRC

Pos	Qty.	Part no.	Description	Remarks
1	1	29447	Proximity switchM12 8mm PNP-NO	
2	1	28980	Proximity switch	
3	3	30449	Screw	MC8 x 16
4	1	30116	Steel pin, stainless	M6 x 35
5	1	32302	Face washer, stainless	6 mm
6	1	30884	Lock nut, stainless	M6
7	1	31790	Set screw M4 x 30	M4 x 30
8	1	31188	Washer, stainless	4 mm
9	1	30857	Lock nut	M4
10	1	29295	Tilt sensor + 0.25 m cable	
11	1	29313	Bottom f. Fly-Jib box	
12	1	29324	Plug, 6-polar for RCL 53XX	
13	1	29317	Plug, 5-polar for RCL 53XX	
14	1	29346	CIO5376 controller cover cpl.	
15	1	28077	Cable with plug	
16	4	30347	Screw, stainless	4,0 x 25
17	1	28117	Cable with plug	
18	1	28263	CAN BUS cable	2 m
19	1	28730	Cable + socket, 10 m	
20	1	28294	Cable, spool sensor	
21	1	6306803	Bracket for proximity switch	
22	1	27342	Relay, 24V	
23	4	27429	Clamp	
24	1	27202	Cable	0,2 m
25	1	27204	Wire, 1 x1.5mm2	0,3 m
26	1	27203	Cable	0,2 m
27	1	28013	Guide rail	110 mm.
28	2	28012	End angle	
29	5	28010	Terminal	
30	2	28019	Labels nos. 1-10	
31	2	28965	Dekafix labels 21-30	
32	2	28208	Fish plate	
33	1	28011	End plate	
34	3	28693	Screw	Ø2.9 x 6.5

1500K, 1510K, 1720K, 1730K, 1820K, 1830K

Internal ref. 70 06 550

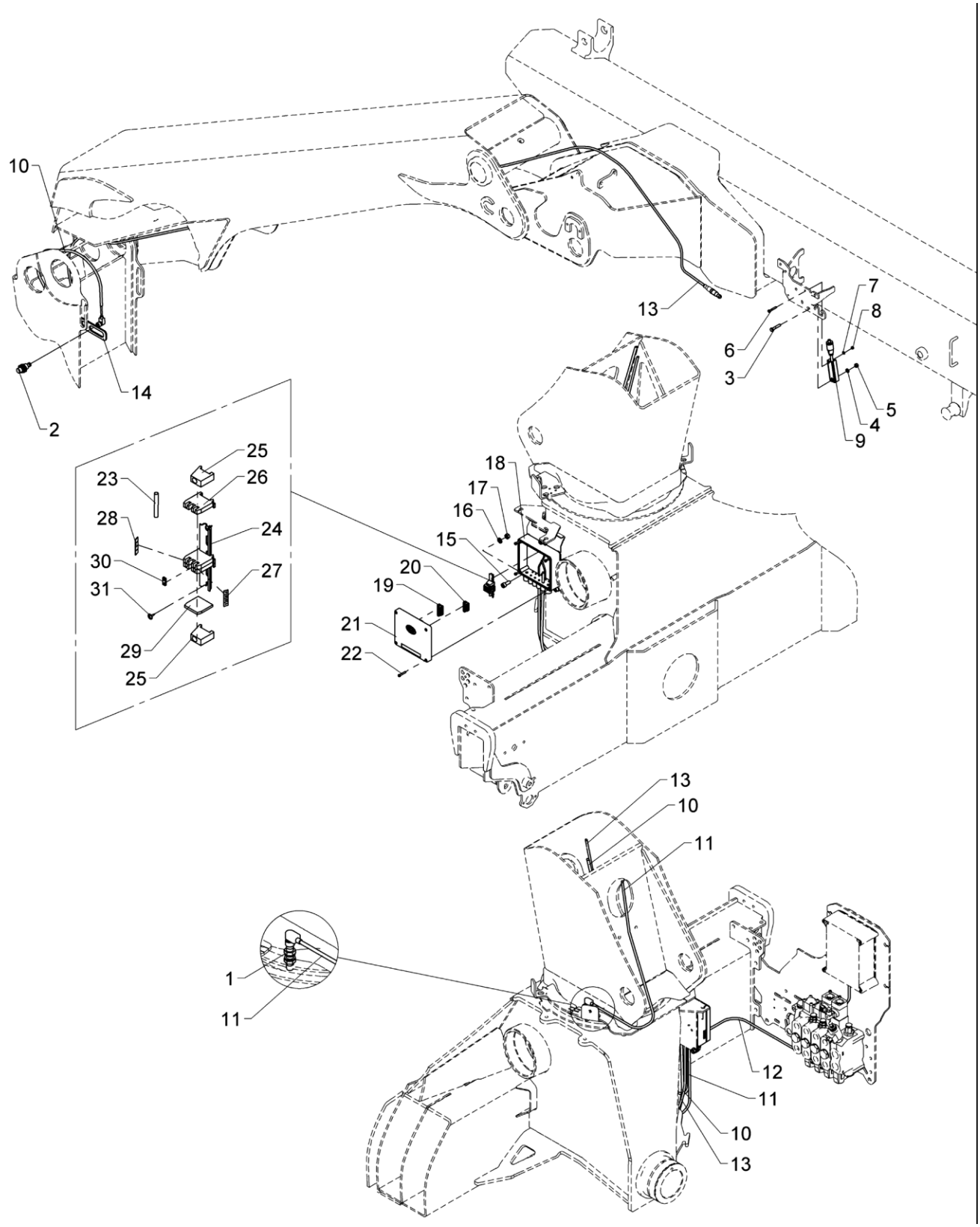

QOPS, STDRC

Pos	Qty.	Part no.	Description	Remarks
1	1	29447	Proximity switchM12 8mm PNP-NO	
2	1	28980	Proximity switch	
3	1	30116	Steel pin, stainless	M6 x 35
4	1	32302	Face washer, stainless	6 mm
5	1	30884	Lock nut, stainless	M6
6	1	31790	Set screw M4 x 30	M4 x 30
7	1	31188	Washer, stainless	4 mm
8	1	30857	Lock nut	M4
9	1	29295	Tilt sensor + 0.25 m cable	
10	1	28077	Cable with plug	
11	1	28117	Cable with plug	
12	1	28263	CAN BUS cable	2 m
13	1	28730	Cable + socket, 10 m	
14	1	6306803	Bracket for proximity switch	
15	3	30438	Screw	MC8 x 20
16	3	31147	Face washer, 8 mm	
17	3	30856	Nut, stainless	M8
18	1	29313	Bottom f. Fly-Jib box	
19	1	29324	Plug, 6-polar for RCL 53XX	
20	1	29317	Plug, 5-polar for RCL 53XX	
21	1	29346	CIO5376 controller cover cpl.	
22	4	30347	Screw, stainless	4,0 x 25
23	1	27202	Cable	0,3 m
24	1	28013	Guide rail	80 mm
25	2	28012	End angle	
26	3	28010	Terminal	
27	1	28019	Labels nos. 1-10	
28	1	28965	Dekafix labels 21-30	
29	1	28011	End plate	
30	1	28208	Fish plate	
31	2	28693	Screw	Ø2.9 x 6.5

1500K, 1510K, 1720K, 1730K, 1820K, 1830K

Internal ref. 70 08 840

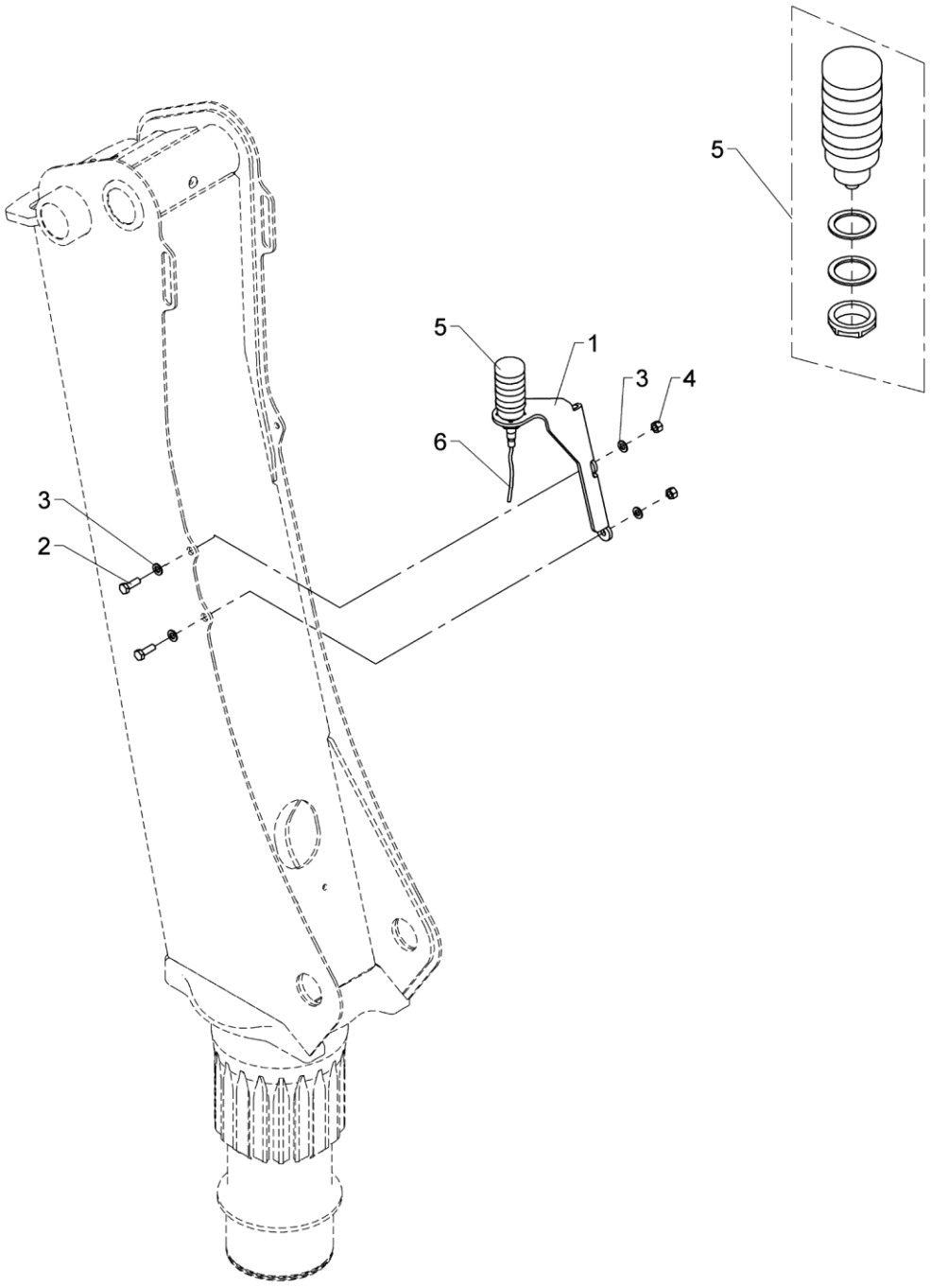

Light tower

Pos	Qty.	Part no.	Description	Remarks
1	1	6340069	Bracket (light tower)	
2	2	30156	Set screw, stainless	M10 x 30
3	4	31565	Washer, stainless	10 mm
4	2	31564	Lock nut, stainless	M10
5	1	29542	Light tower	
6	1	29224	Cable with socket, 5 m	

1500K, 1510K, 1720K, 1730K, 1820K, 1830K

Internal ref. 82 00 010

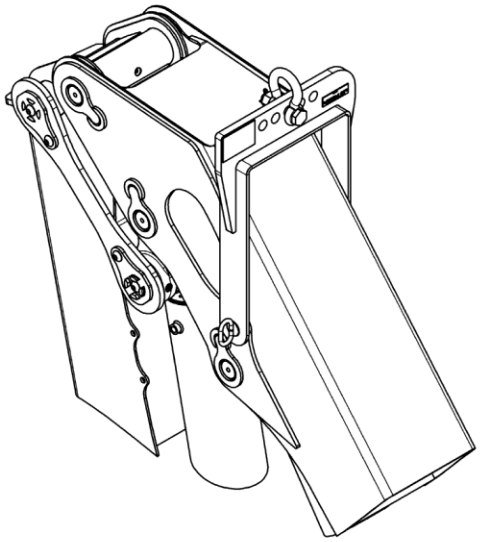

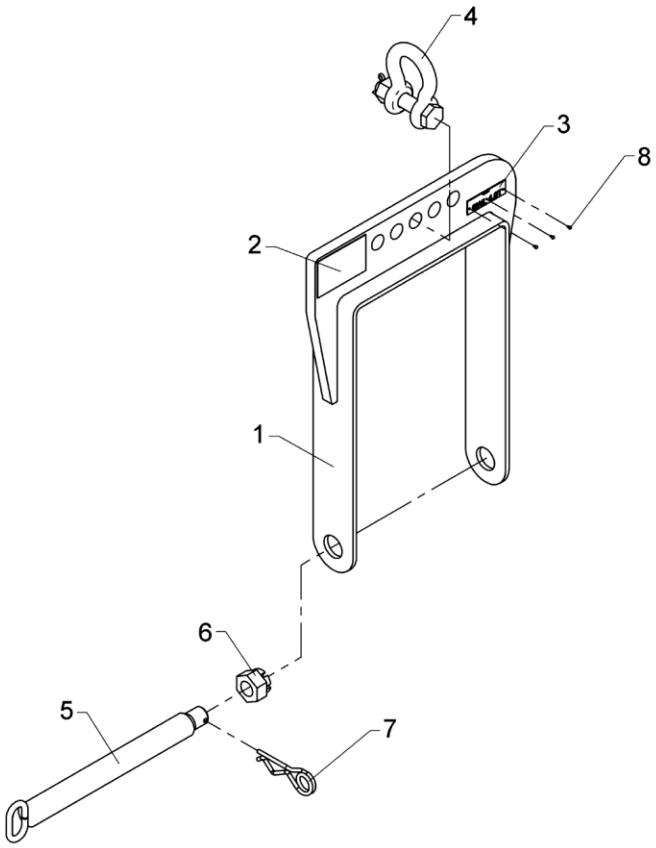

534 25 010

From loader 1060001
To loader

Created 25-02-2009
Modified 16-02-2017

Lifting yoke, cpl.

Pos	Qty.	Part no.	Description	Remarks
1	1	8200011	Lifting yoke	
2	1	64797	Type plate, incl. CE	
3	1	64835	Brass label SWL 4.0 t	
4	1	62117	Shackle	
5	1	8200015	Pin	
6	1	30839	Nut	M30
7	1	33383	Lock spring	
8	3	31340	Rivet	

1500K, 1510K, 1720K, 1730K, 1820K, 1830K

Internal ref. 82 00 000

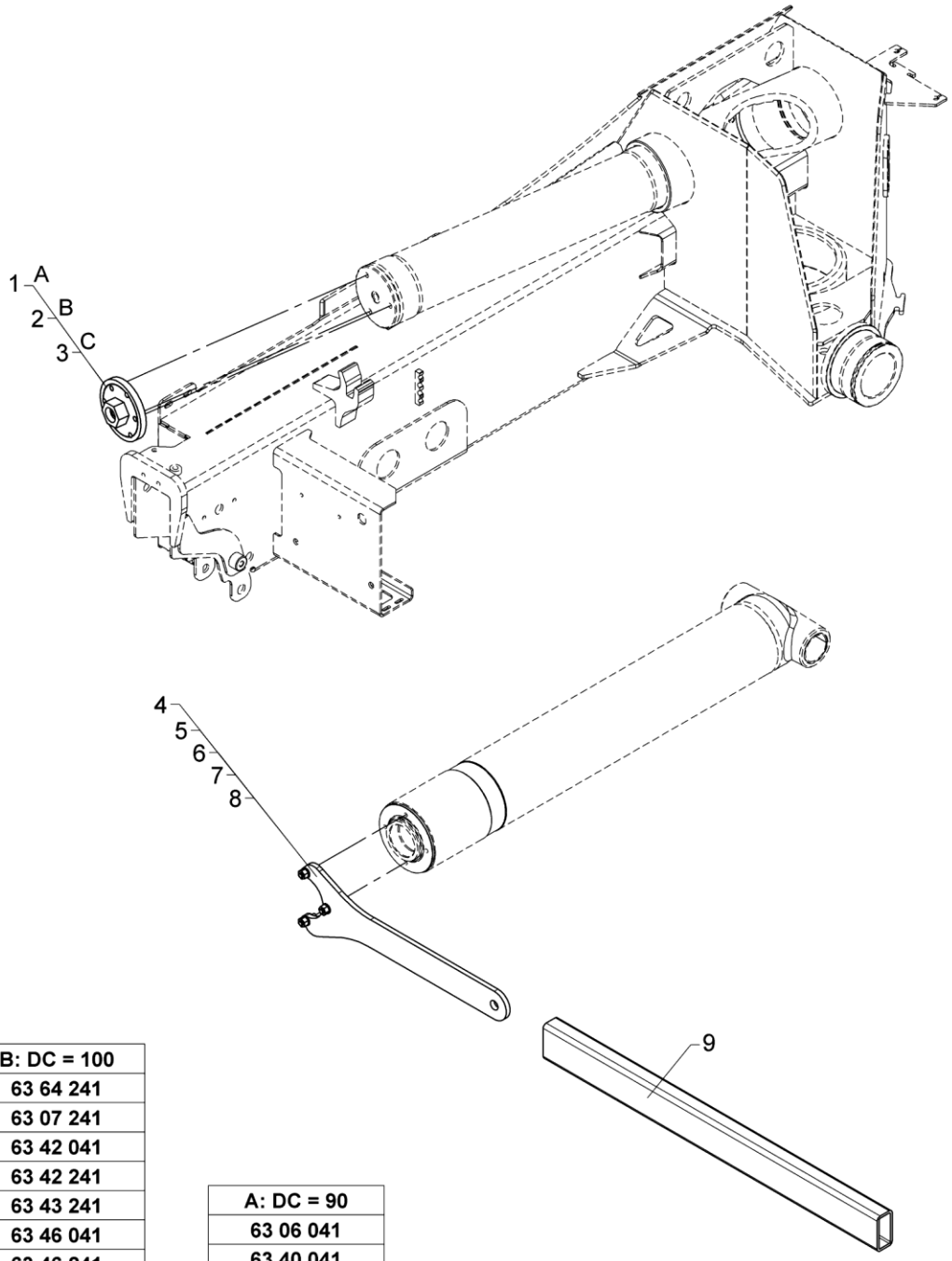

B: DC = 100
63 64 241
63 07 241
63 42 041
63 42 241
63 43 241
63 46 041
63 46 241
63 54 241
63 55 031
63 55 071
63 55 141
63 55 091
63 59 041
63 64 241

A: DC = 90
63 06 041
63 40 041
63 44 041
63 65 041

C: DC = 75
63 68 041
63 67 041

Hydraulic accessories

Pos	Qty.	Part no.	Description	Remarks
1	1	8200001	Mounting tool,slewing cylinder	DC = 90
2	1	8200004	Mounting tool,slewing cylinder	DC = 100
3	1	8200009	Mounting tools, slew.cyl.	DC = 75
4	1	8200045	Spanner wrench (DC 110 - Ø8)	Cylinder ø125 + ø120
5	1	8200046	Spanner wrench (DC 120 - Ø10	Cylinder ø140
6	1	8200047	Spanner wrench (DC 130 - Ø10	Cylinder ø150 + ø160
7	1	8200048	Spanner wrench (DC 150 - Ø10	Cylinder ø180
8	1	8200082	Spanner wrench	Cylinder ø110
9	1	8200037	Square tube	

1500K, 1510K, 1720K, 1730K, 1820K, 1830K

Internal ref. 82 00 050

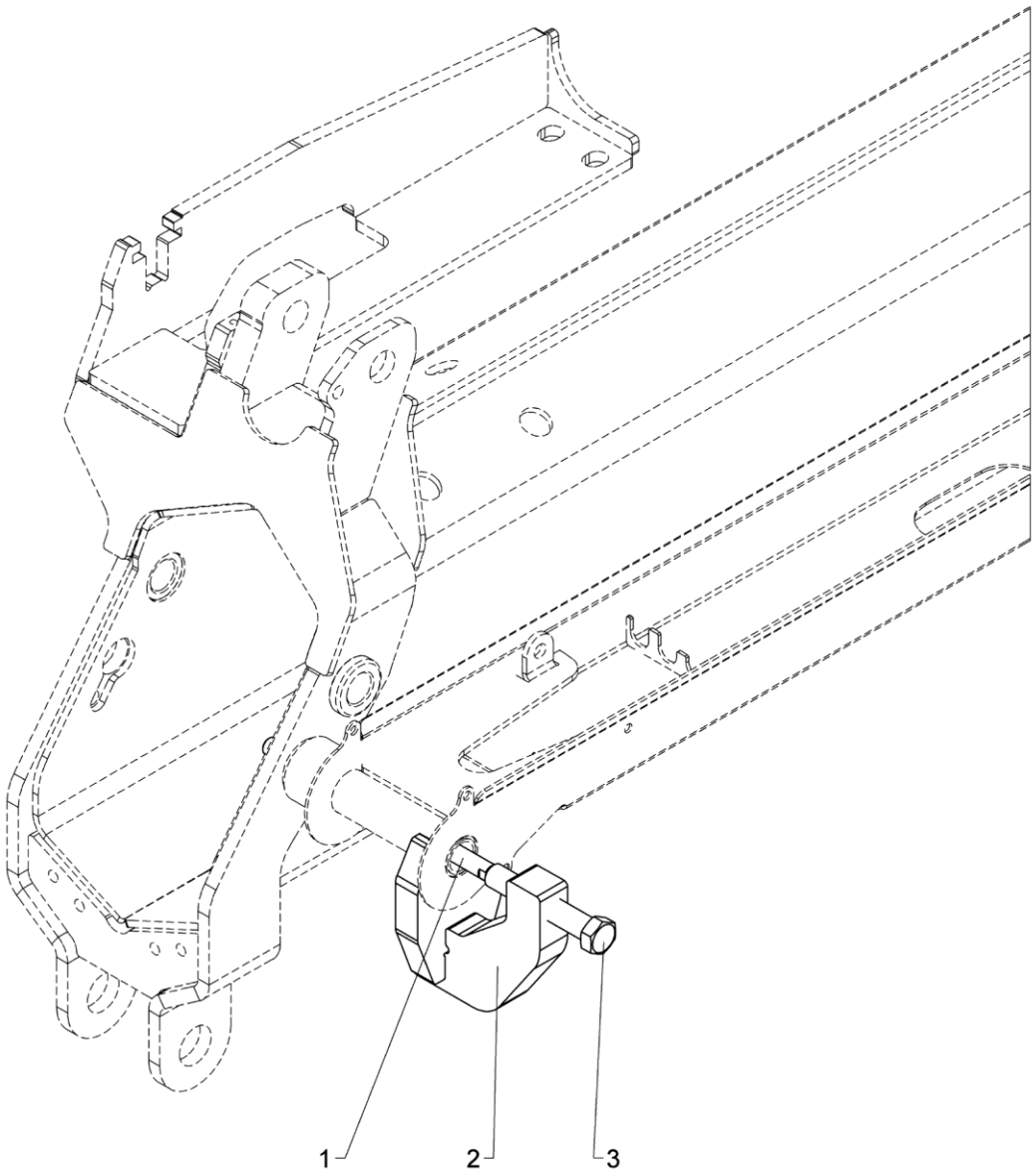

Dismounting tools, cpl.(EXV)

Pos	Qty.	Part no.	Description	Remarks
1	1	8200054	Rod	
2	1	8200051	Dismounting tool	
3	1	8200055	Pin	

1500K, 1510K, 1720K, 1730K, 1820K, 1830K

Internal ref. 82 00 030

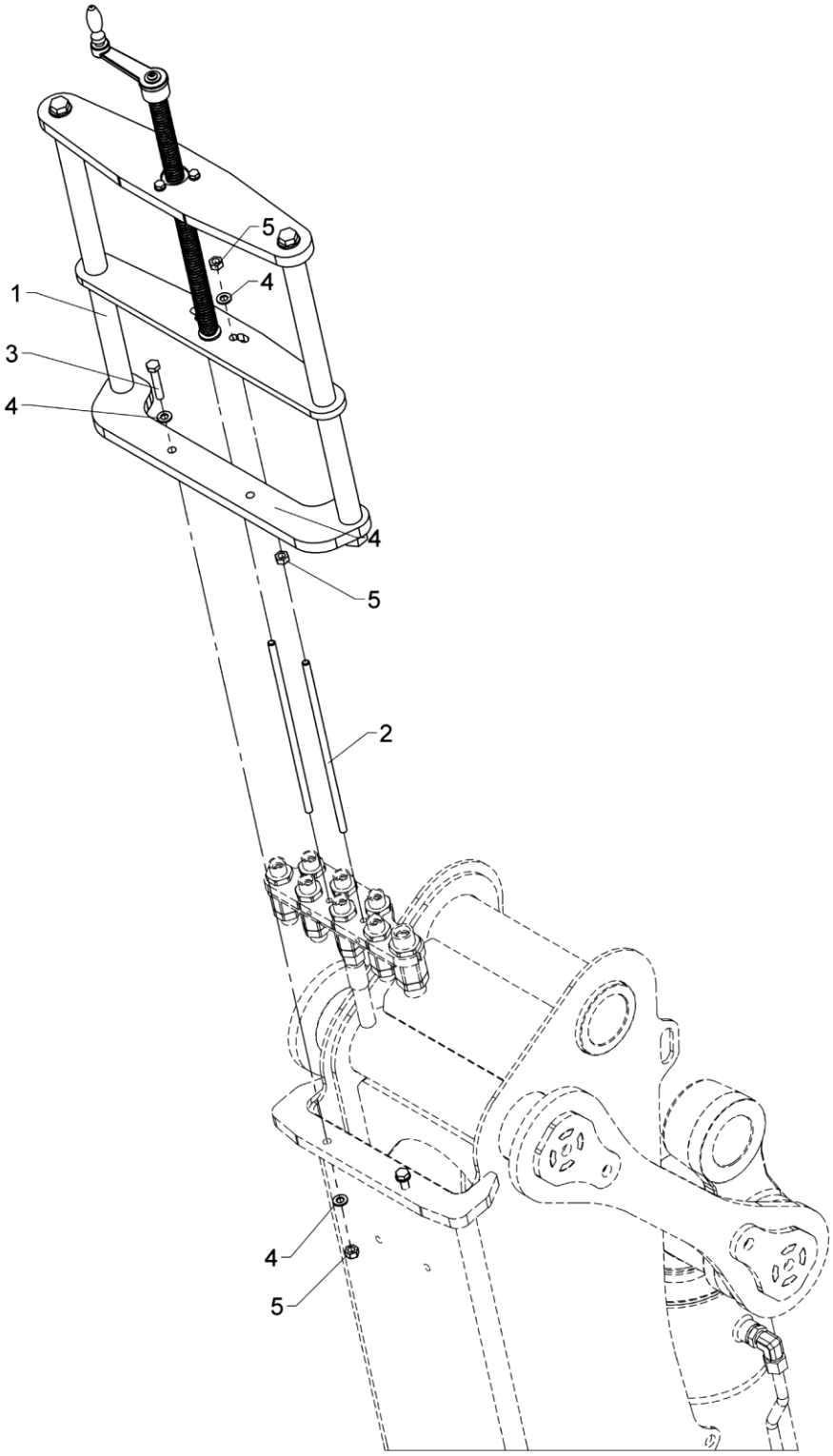

Lifting tools cpl. (Change of hoses inside the column)

Pos	Qty.	Part no.	Description	Remarks
1	1	8200020	Lifting tool (change of hoses	
2	2	8200035	Threaded pin	
3	2	30138	Steel bolt, stainless	M8 x 45
4	8	31147	Face washer, 8 mm	8 mm
5	6	30856	Nut, stainless	M8

1500K, 1510K, 1720K, 1730K, 1820K, 1830K

Internal ref. 82 00 090

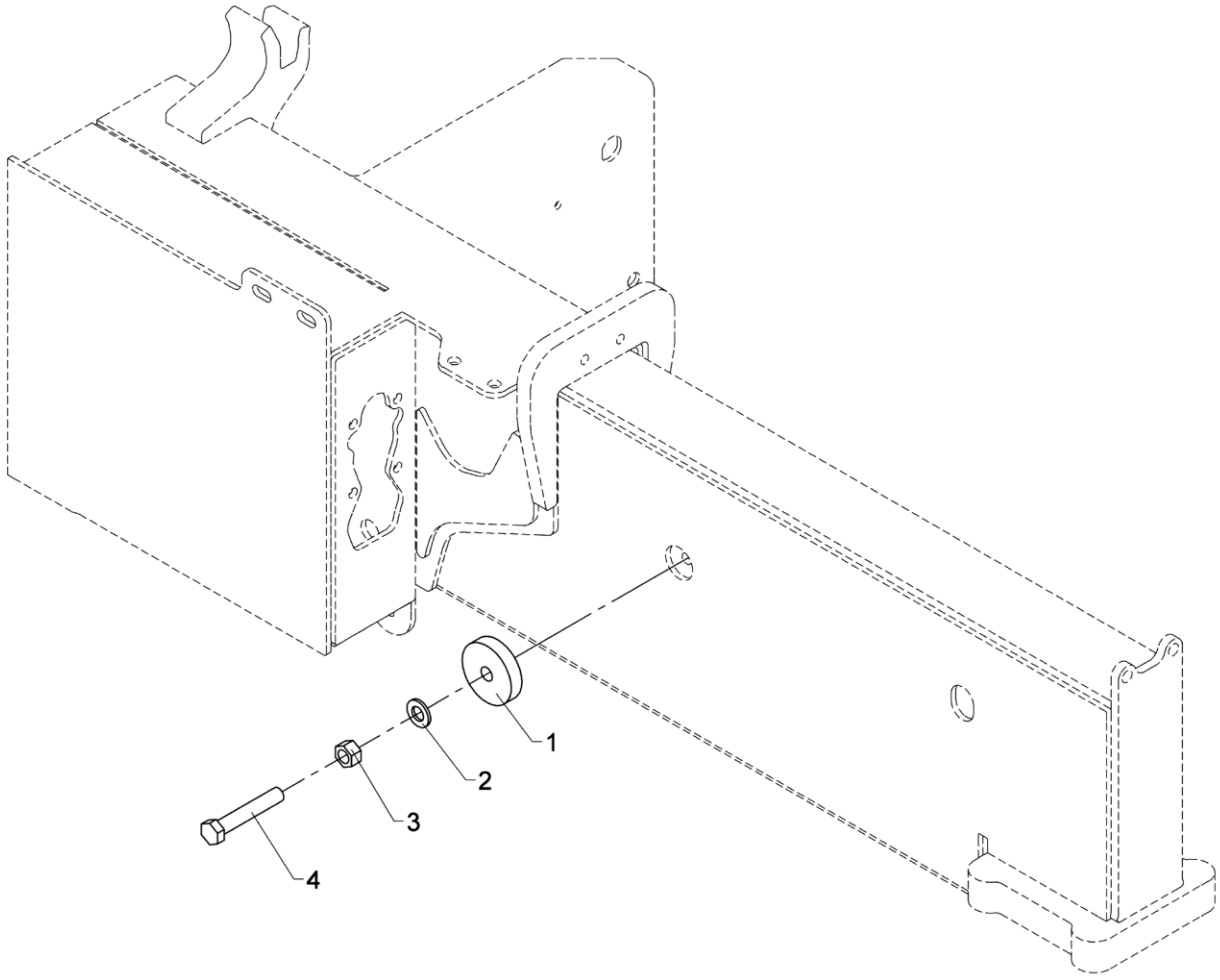

Holding kit (pin in hydr. extension)

534 25 050

From loader 1060001
To loader

Created 13-01-2010
Modified

Pos	Qty.	Part no.	Description	Remarks
1	1	6340617	Shim	
2	1	31131	Washer	12 mm
3	1	30860	Nut, stainless	M12
4	1	30190	Set screw	M12 x 70

1500K, 1510K, 1720K, 1730K, 1820K, 1830K

Internal ref. 82 00 100

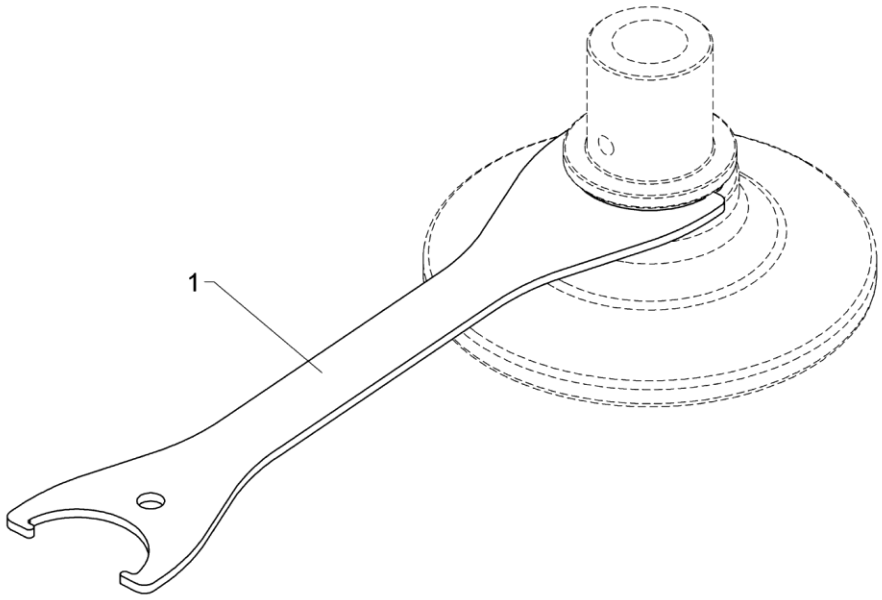

534 25 060

From loader 1060001
To loader

Created 09-05-2014
Modified

Spanner wrench, footplate + ball joint

Pos	Qty.	Part no.	Description	Remarks
1	1	8200058	Spanner wrench (DC 50 - Ø4)	

1500K, 1510K, 1720K, 1730K, 1820K, 1830K

Internal ref. 82 00 130

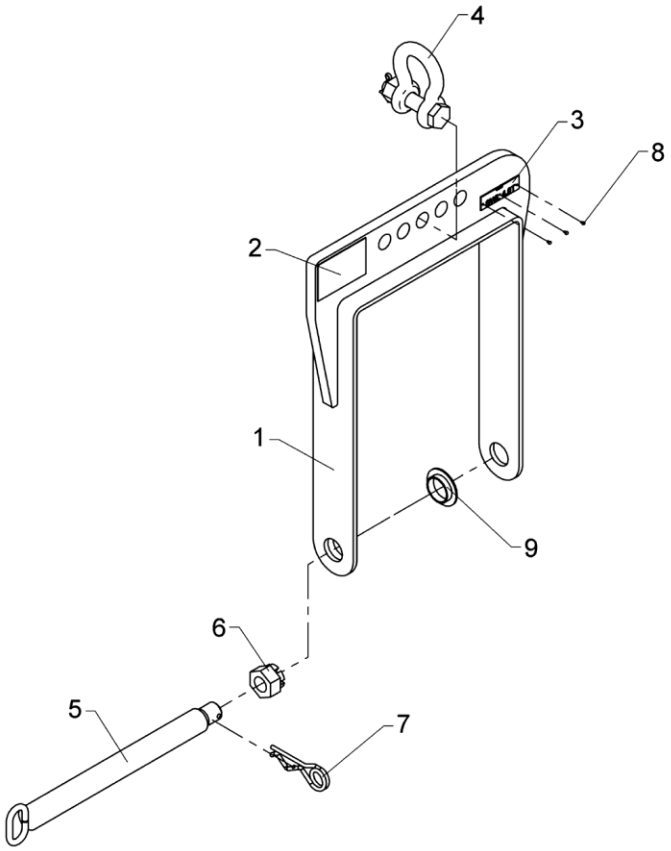

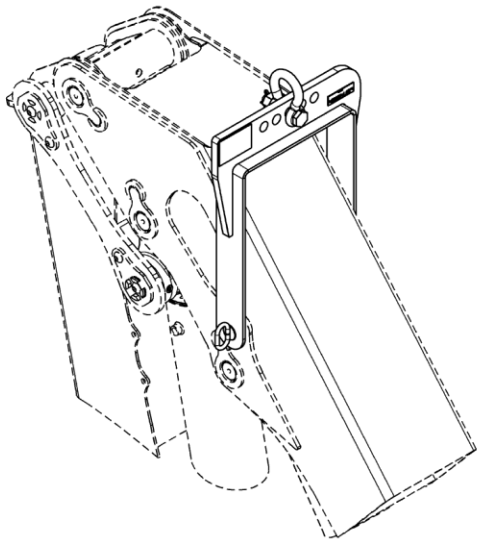

Lifting yoke, cpl.

534 25 070

From loader 1060001
To loader

Created 20-03-2018
Modified

Pos	Qty.	Part no.	Description	Remarks
1	1	8200111	Lifting beam	
2	1	64797	Type plate, incl. CE	
3	1	64835	Brass label SWL 4.0 t	
4	1	62117	Shackle	
5	1	8200115	Bolt	Ø40
6	1	30839	Nut	M30
7	1	33383	Lock spring	
8	3	31340	Rivet	
9	2	64597	Bushing, black	

1500K, 1510K, 1720K, 1730K, 1820K, 1830K

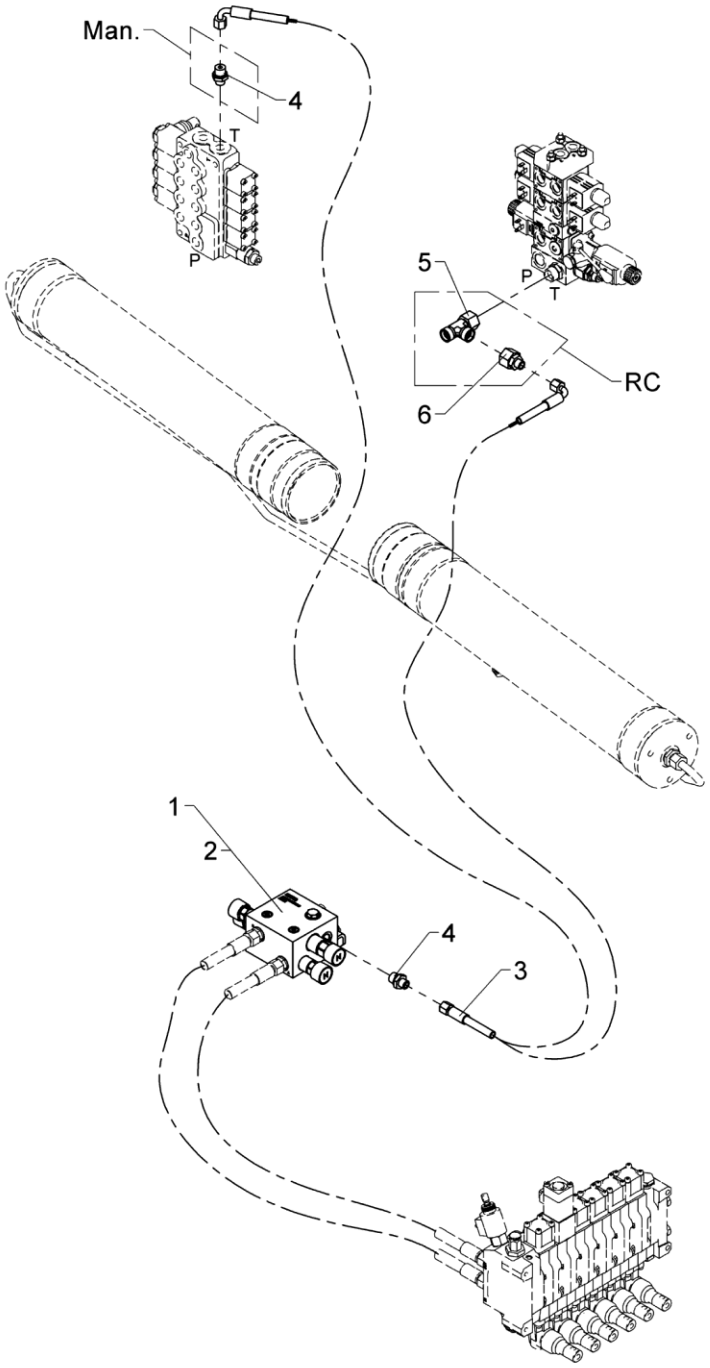

534 25 080

From loader 1060001
To loader

Created 26-09-2014
Modified

Kit for replacement of load-holding valve

Pos	Qty.	Part no.	Description	Remarks
		8200110		fra 55261 til 55710
		8200120		fra 55262 til 55711
1	1	55710	Load-holding valve	
2	1	55711	Load-holding valve	
3	1	62526	Hose	1/4 X 550 M14 X 1.5 L/90
4	2	25244	Connection	GES 8 LR 3/8-WD
5	1	26142	Connection	ELSD 15 L
6	1	25285	Connection	REDSDN 15/8 L