IOWA MOLD TOOLING CO., INC.

P.O. Box 189
Garner, IA 50438
Tel: 641.923.3711
Fax: 641.923.2424
www.imt.com

Manual 99906526

1230 MCS SPARE PARTS MANUAL

Revised: November 25, 2019

Copyright © 2019 Iowa Mold Tooling Co., Inc.
All rights reserved

No part of this publication may be reproduced, stored in a retrieval system, or transmitted in any form or by any means, electronic, mechanical, photocopying, recording or otherwise without the prior written permission of Iowa Mold Tooling Co., Inc.

Iowa Mold Tooling Co., Inc. is an Oshkosh Corporation Company

1100K, 1110K, 1220K, 1230K, 1320K, 1330K

Description	Page no.	From loader	To loader
Basic loader			
Base, complete	458 01 010	1170001	1170029
Base, complete	458 01 010 A	1170030	
Protection plate, cpl. (std.)	458 01 050	1170001	
Central lubrication and lubricating brush	458 01 080	1170001	
Slewing system, 420°	458 01 100 A	1170001	1170024
Slewing system, 420°	458 01 100 B	1170025	
Slewing system, 420°	458 01 100 C	1170025	1170082
Slewing system, 420°	458 01 100 D	1170083	
Slewing system, 420°	458 01 100 E		
Column, cpl. for link arm system, boom	458 01 300	1170001	
Column, cpl. excl. link arm system, boom	458 01 350	1170001	
Main boom, cpl. for link arm system, boom	458 01 400	1170001	
Main boom, cpl., no link arm system, boom	458 01 420	1170001	
Stowing hook, complete	458 01 450	1170001	
Stowing hook, complete	458 01 450 A		
Boom cylinder, C125 x 750	458 01 480	1170001	
Boom cylinder, C125 x 750 with LHV	458 01 490	1170001	
Boom cylinder, C120 x 733	458 01 500	1170001	
Boom cylinder, C120 x 733 with LHV	458 01 510	1170001	
Jib cylinder C120 x 848	458 01 600	1170001	
Jib cylinder with LHV	458 01 610	1170001	
Link arm system, boom	458 01 700	1170001	
Mounting fittings, basic loader incl. link arm system	458 01 720	1170001	
Mounting fittings, basic loader excl. link arm system	458 01 750	1170001	
Hose shield, cpl.	458 01 760	1170001	
Link arm system, jib	458 01 800	1170001	
Stabilizers			

1100K, 1110K, 1220K, 1230K, 1320K, 1330K

Description	Page no.	From loader	To loader
Stabilizer beam, type SV - 5570	458 02 010	1170001	
Stabilizer beam, type SR-60°, 5570	458 02 020	1170001	
Stabilizer beam, type SR-180°, 5570	458 02 030	1170001	
Stabilizer beam, type SV - 4600	458 02 070	1170001	
Stabilizer beam, type SR-60°, 4600	458 02 080	1170001	
Stabilizer beam, type SR-180°, 4600	458 02 090	1170001	
Detection, stabilizer down (CYL/CYBEL)	458 02 130	1170001	
Stabilizer lock and lever	458 02 140	1170001	
Stabilizer safety lock	458 02 150	1170001	
Safety lock (CE, manual extension)	458 02 160	1170001	
Stabilizer cylinder, C80-520, type V	458 02 200	1170001	1170134
Stabilizer cylinder, C80-520, type V	458 02 200 A	1170135	
Stabilizer cylinder, C80-720, type V	458 02 201	1170001	
Stabilizer cylinder with check valve, C80-520, type V	458 02 210	1170001	
Stabilizer cylinder with check valve, C80-720, type V	458 02 211	1170001	
Stabilizer cylinder, C80-520, type R-180°	458 02 220	1170001	1170134
Stabilizer cylinder, C80-520, type R-180°	458 02 220 A	1170135	
Stabilizer cylinder, C80-520, type R-60°	458 02 221	1170001	1170134
Stabilizer cylinder, C80-520, type R-60°	458 02 221 A	1170135	
Stabilizer cylinder with check valve, type R-60°	458 02 230	1170001	
Foot plate with ball joint, cpl. (ø160)	458 02 235 A	1170135	
Extension piece, cpl.	458 02 236	1170135	
Stabilizer cylinder with check valve, C80-520, Type R-180°	458 02 250	1170001	
Stabilizer cylinder with check valve, C80-440, type V	458 02 270	1170001	
Beam cylinder C32 - 1625	458 02 300	1170001	
Beam cylinder C32 - 1137	458 02 320	1170001	

Boom System

1100K, 1110K, 1220K, 1230K, 1320K, 1330K

Description	Page no.	From loader	To loader
Jib, complete	458 03 010	1170001	
Jib, complete (KS)	458 03 015	1170001	
Jib, complete (winch)	458 03 020	1170001	
Fitting of jib and jib cylinder	458 03 030	1170001	
Jib extension I incl. fittings	458 03 100	1170001	1170076
Jib extension I incl. fittings	458 03 100 A	1170077	
Jib extension I incl. fittings (KS)	458 03 103	1170001	
Jib extension K1 incl. fittings	458 03 105	1170001	
Jib extension K1 incl. fittings (KS)	458 03 108	1170001	
Jib extension K2 incl. fittings	458 03 110	1170001	
Jib extension K3 incl. fittings	458 03 120	1170001	
Jib extension K4 incl. fittings	458 03 130	1170001	
Jib extension K5 incl. fittings	458 03 140	1170001	
Hook suspension	458 03 290	1170001	
Hook suspension	458 03 290 A	1170001	
Extension cylinder II (C60/45 x 1848)	458 03 300	1170001	
Extension cylinder II (C55/40 x 2080)	458 03 310	1170001	
Extension cylinder III (C55/40 x 2080)	458 03 320	1170001	
Extension cylinder IV (C55/35)	458 03 330	1170001	
Extension cylinder V (C55/35)	458 03 340 A	1170001	
Extension cylinder K2 (C55/40 x 2080)	458 03 350	1170001	
Extension cylinder K2 (C55/40 x 2080)	458 03 360	1170001	
Extension cylinder I (C60/45 x 1482)	458 03 400	1170001	
Extension cylinder II (C55/40 x 2080)	458 03 410	1170001	
Extension cylinder I incl. fittings	458 03 500	1170001	
Extension cylinder I C incl. fittings	458 03 505	1170001	
Extension cylinder II incl. fittings	458 03 510	1170001	

1100K, 1110K, 1220K, 1230K, 1320K, 1330K

Description	Page no.	From loader	To loader
Extension cylinder II incl. fittings (KS)	458 03 515	1170001	
Extension cylinder III incl. fittings	458 03 520	1170001	
Extension cylinder IV incl. fittings	458 03 530	1170001	
Extension cylinder V incl. Fittings for K5	458 03 540	1170001	
Extension cylinder V incl. Fittings for K4	458 03 560	1170001	
Extension cylinder V incl. Fittings for K3	458 03 570	1170001	
Manual extension, F3	458 03 720	1170001	
Manual extension, F4	458 03 730	1170001	
Manual extension, F5	458 03 740	1170001	
Manual extension, F6	458 03 750	1170001	
Hydraulic systems, valve brackets and dual controls			
Valve brackets	458 05 010	1170001	
Valve brackets (excl. CE)	458 05 015	1170001	
NEM-RC kit	458 05 110	1170001	
NEM-RC kit (for external tank)	458 05 115	1170001	
Dual control, 4 functions	458 05 120	1170001	
Dual control, 5 functions	458 05 130	1170001	
Dual control, 6 functions	458 05 140	1170001	
Counter-balance valve	458 05 190	1170001	
Valve bracket, cpl. 2 fcts.	458 05 200	1170001	
Valve bracket, cpl., 2 fcts. + 2 available fcts.	458 05 205	1170001	
Valve bracket, cpl. 4 fcts.	458 05 210	1170001	
Valve bracket, cpl. 4 fcts. + 4 available	458 05 220	1170001	
Valve bracket, cpl. 2 functions + 2 available functions - RC	458 05 225	1170001	
Valve bracket, cpl. 4 functions + 2 available functions - RC	458 05 230	1170001	
Valve bracket, cpl. 4 functions + 4 available functions - RC	458 05 240	1170001	
Valve bracket, cpl. 2 functions - RC	458 05 250	1170001	

1100K, 1110K, 1220K, 1230K, 1320K, 1330K

Description	Page no.	From loader	To loader
Valve bracket, cpl. 4 functions - RC	458 05 260	1170001	
Dual control, 2 fcts. std.	458 05 270	1170001	
Dual control, 4 fcts. std.	458 05 280	1170001	
Dual control, 4 fcts., hydr. swing-up stabilizer legs	458 05 290	1170001	
Dual control.4 fcts. + 4 available functions	458 05 300	1170001	
Dual control, 4 fcts. + 4 available fcts. (hydr. swing-up stabilizer legs)	458 05 310	1170001	
Kit for HDL-2 (std.)	458 05 350	1170001	
Cross-over controls, 4 functions	458 05 370	1170001	
Cross-over controls, 5 functions	458 05 380	1170001	
Cross-over controls, 6 functions	458 05 390	1170001	
Hydraulic systems, loader functions			
Hose kit, 900-K and 1110-K Series	458 05 400	1170001	
Hose kit, 900-K and 1110-K Series	458 05 400 A	1170001	
Hose kit, 1100-K Series	458 05 420	1170001	
Hose kit, winch	458 05 430	1170001	
Hydraulic system, slewing	458 05 500	1170001	
Hydraulic system, slewing	458 05 500 A	1170001	1170121
Hydraulic system, slewing	458 05 500 B	1170122	
Hydraulic systems, stabilizer beams			
Hydr. syst., stabilizers, manual extension	458 05 700	1170001	
Hydr. syst., stabilizers, hydr. extension	458 05 710	1170001	
Hydr. syst., SV, 4600, manual extension	458 05 750	1170001	
Hydr. syst., SR 60°/180°, 4600, manual extension	458 05 755	1170001	
Hydr. syst., SV, 4600, hydr. extension	458 05 760	1170001	
Hydr. syst., SR 60°/180°, 4600, hydr. extension	458 05 770	1170001	
Hydr. syst., SV, 5570, manual extension	458 05 780	1170001	
Hydr. syst., SR 60°/180, 5570, manual extension	458 05 785	1170001	
Hydr. syst., SV, 5570, hydr. extension	458 05 790	1170001	

1100K, 1110K, 1220K, 1230K, 1320K, 1330K

Description	Page no.	From loader	To loader
Hydraulic system, SR 60°, 5570, hydr. extension	458 05 800	1170001	
Hydraulic systems, pump and tank			
Hydr. syst. pump + return hoses	458 06 020	1170001	
Tank, cpl.	458 06 070	1170001	
Tank incl. fittings	458 06 080	1170001	
Oil cooler	458 06 100	1170001	
High-pressure filter	458 06 120	1170001	
Hydraulic systems, valve blocks			
Valve block, 4 sects. HC-D4	458 06 200	1170001	
Valve block, 5 sects. HC-D4	458 06 210	1170001	
Valve block, 6 sects. HC-D4	458 06 220	1170001	
Valve block, 4 sects. HC-D4 NEM	458 06 230	1170001	
Valve block, 5 sects. HC-D4 NEM	458 06 240	1170001	
Valve block, 6 sects. HC-D4 NEM	458 06 250	1170001	
Valve block, 4 sects. HC-D4_CE-EVS	458 06 260	1170001	
Valve block, 5 sects. HC-D4_CE-EVS	458 06 270	1170001	
Valve block, 6 sects. HC-D4_CE-EVS	458 06 280	1170001	
Control valves, Danfoss, 4 sections, fixed/variable flow (std./QOPS)	458 06 310	1170001	
Control valves, Danfoss, 5 sections, fixed/variable flow with rotator (std./QOPS)	458 06 320	1170001	
Control valves, Danfoss, 5 sections, fixed/variable flow with winch (std./QOPS)	458 06 330	1170001	
Control valves, Danfoss, 6 sections, fixed/variable flow with rotator and grab (std./QOPS)	458 06 340	1170001	
Control valves, Danfoss, 7 sections, fixed/variable flow with rotator, grab and winch (std./QOPS)	458 06 370	1170001	
Danfoss control valve PVG32, 4-7 sections	458 06 490	1170001	
HC - M50 stabilizer valve section	458 06 493	1170001	
HC - M45 stabilizer valve section	458 06 494	1170001	
HC-D4 electro-hydraulic NEM-kit, NEM radio remote control	458 06 495	1170001	
HC-D4 valve block, 4-6 sections	458 06 499	1170001	
Labels and mounting kits			

1100K, 1110K, 1220K, 1230K, 1320K, 1330K

Description	Page no.	From loader	To loader
Standard labels	458 07 010	1170001	
Operating labels	458 07 020	1170001	
Labels for emergency operation	458 07 025	1170001	
Type plates, marking tape, warning signs	458 07 030	1170001	
Lifting capacity diagrams	458 07 040	1170001	
Mounting kit (8 M24 x 2 pins)	458 07 100	1170001	
Mounting kit (4 M30 x 2 pins)	458 07 110	1170001	
Mounting kit (4 M30 x 2 pins) - 50 mm.	458 07 115	1170001	
Mounting kit (4 M30 x 2 pins) - 150 mm.	458 07 120	1170001	
Mounting kit (4 M30 x 2 pins) - 250 mm.	458 07 130	1170001	
Mounting kit (8 M24 x 2 pins)	458 07 140	1170001	
Accessories, extra valves			
Hose guides, K1-1EXV.	458 09 100	1170001	
Hose guides, K2-1EXV.	458 09 110	1170001	1170110
Hose guides, K2-1EXV.	458 09 110 A	1170077	
Hose guides, K3-1 EXV.	458 09 120	1170001	1170076
Hose guides, K3-1 EXV.	458 09 120 A	1170077	
Hose guides, K4-1 EXV.	458 09 130	1170001	1170076
Hose guides, K4-1 EXV.	458 09 130 A	1170077	
Hose guides, K5-1 EXV.	458 09 140	1170001	1170076
Hose guides, K5-1 EXV.	458 09 140 A	1170077	
Hose guides, K1-2 EXV.	458 09 200	1170001	
Hose guides, K2-2 EXV.	458 09 210	1170001	1170076
Hose guides, K2-2 EXV.	458 09 210 A	1170077	
Hose guides, K3-2 EXV.	458 09 220	1170001	1170076
Hose guides, K3-2 EXV.	458 09 220 A	1170077	
Hose guides, K4-2 EXV.	458 09 230	1170001	1170076

1100K, 1110K, 1220K, 1230K, 1320K, 1330K

Description	Page no.	From loader	To loader
Hose guides, K4-2 EXV.	458 09 230 A	1170077	
Hose guides, K5-2 EXV.	458 09 240	1170001	1170076
Hose guides, K5-2 EXV.	458 09 240 A	1170077	
Bracket for hose reel, cpl. (jib)	458 09 280	1170001	
Hydr. system, hose reels, 2 EXV.	458 09 310	1170001	
Kit, quick-release coupling for internal hose routing, 2 EXV.	458 09 320	1170001	
Hydr. system, hose reels, 1 EXV.	458 09 330	1170001	
Kit, quick-release coupling for internal hose routing, 1 EXV.	458 09 340	1170001	
Quick-release coupling for 1 extra valve + bracket, K1-K5/T3-T4	458 09 370		
Quick-release coupling for 2 extra valves + bracket, K1-K5/T3-T4	458 09 380		
Quick-release coupling for 1 extra valve	458 09 390	1170001	
Quick-release coupling for 2 extra valves	458 09 400	1170001	
Multi-coupling for 2 extra valves K1-K5/T3-T4	458 09 410	1170001	
Accessories, stand-up controls, HS			
Stand-up controls, standard	458 10 010	1170001	
Stand-up controls, standard	458 10 010 A		
Rod control, HS std. - 4 functions	458 10 020	1170001	
Rod control, HS std. - 5 functions	458 10 030	1170001	
Rod control, HS std. - 6 functions	458 10 040	1170001	
Stabilizer operation, HS std. - 2/4 fcts.	458 10 060	1170001	
Valve bracket - HS 2 fcts./4 fcts. (oper. from HS)	458 10 070	1170001	
Rod control, dual control, HS 2 fcts.	458 10 080	1170001	
Accessories, top seat, TS			
Mounting fittings, TS	458 11 010	1170001	
Seat, cpl.	458 11 020	1170001	
Top seat (RC), cpl.	458 11 030	1170001	
Mounting fittings, TS RC	458 11 040	1170001	
Accessories, winch			

1100K, 1110K, 1220K, 1230K, 1320K, 1330K

Description	Page no.	From loader	To loader
Winch 1.5 T + mounting fittings and weighing cell	458 13 020	1170001	1170196
Winch 1.5 T + mounting fittings and weighing cell	458 13 020 A	1170197	
Wire sheaves, winches	458 13 050	1170001	
Wire roller guide	458 13 060	1170001	
Hydraulic system, winch	458 13 100	1170001	
Hydraulic system, winch	458 13 100 A		
Accessories, miscellaneous			
Mounting fittings, light tower	458 16 060	1170001	
Cam disc kit	458 16 070	1170001	
	458 16 110	1170001	
Electronic parts, in general			
CAN termination, CIO5376	458 20 040	1170001	
Terminal block, Box 1	458 20 049	1170001	
Terminal block for RCL box with RC	458 20 050		
12 V converter	458 20 055	1170001	
BEHEW	458 20 060		
BEHEW	458 20 060 A		
CYW	458 20 080	1170001	
CYW	458 20 080 A	1170001	
CYBEL, single extension	458 20 090	1170001	
2CYBEL, single extension (2LMB)	458 20 110	1170001	
2CYBEL, single extension (manual)	458 20 130	1170001	
2CYBEL, double extension (man.)	458 20 135	1170001	
Alarm flash on stabilizer legs	458 20 140	1170001	
Spotlight, boom	458 20 150	1170001	
Spotlight, boom	458 20 150 A	1170001	
Spotlight, jib	458 20 160 A	1170001	
Temperature monitoring without oil cooler	458 20 170	1170001	

1100K, 1110K, 1220K, 1230K, 1320K, 1330K

Description	Page no.	From loader	To loader
Temperature monitoring for oil cooler	458 20 180	1170001	
CBS - Calibrate Bypass Sensor	458 20 190	1170001	
BEPAW	458 20 400	1170001	
BEPAW	458 20 400 A	1170001	
Mounting fittings for junction box	458 20 490	1170001	
Electronic parts, manual crane			
Basic electronic parts, crane without RC	458 20 510	1170001	
Basic electronic parts, crane without RC	458 20 510 A	1170001	
Horn, no RC	458 20 520	1170001	
Mounting fittings for ECT 5320 (HS std.)	458 20 530	1170001	
ECT 5320 on stand-up platform (HS)	458 20 540	1170001	
HSL	458 20 550	1170001	
HSL-Q, single	458 20 570	1170001	
HSL-Q, double	458 20 580	1170001	
HSL-Q, double	458 20 580 A	1170001	
QOPS, STD.	458 20 590	1170001	
QOPS, STD.	458 20 590 A	1170001	
EVS, knuckle boom crane without RC	458 20 600	1170001	
EVS, knuckle boom crane without RC with HS or QOPS	458 20 610	1170001	
2-stage LMB, without RC	458 20 620	1170001	
Electronic parts, RC crane			
Basic electronic parts, crane with RC	458 22 010	1170001	
Basic electronic parts, crane with RC	458 22 010 A	1170001	
Terminal block for RC, 24 V	458 22 015	1170001	
Basic electronic parts, NEMRC without CE	458 22 040	1170001	
Basic electronic parts, NEMRC without CE	458 22 040 A	1170001	
Basic electronic parts, NEMRC with CE	458 22 045	1170001	
Basic electronic parts, NEMRC with CE	458 22 045 A	1170001	

1100K, 1110K, 1220K, 1230K, 1320K, 1330K

Description	Page no.	From loader	To loader
HSL, HSRC	458 22 070	1170001	
HSL-E, HS NEMRC	458 22 090	1170001	
HSL-E, HSRC	458 22 095	1170001	
HSL-Q, HSRC	458 22 100	1170001	
HSL-Q, HSRC	458 22 100 A	1170001	
EVS, G2	458 22 110 A	1170001	
Winch, electric parts	458 22 130	1170001	
Stabilizer operation via RC (with winch)	458 22 156	1170001	
Stabilizer operation via RC (with winch)	458 22 156 A	1170001	
Spotlight, radio remote controlled.	458 22 170	1170001	
Spotlight, radio remote controlled.	458 22 170 A	1170001	
Junction box 2, G2	458 22 200	1170001	
QOPS, STDRC	458 22 220	1170001	
QOPS, STDRC	458 22 220 A	1170001	
Light tower	458 22 230	1170001	
Bracket for mounting of electric parts	458 22 510	1170001	
Hydraulic accessories			
Kit for replacement of load-holding valve	458 25 080	1170001	

Obsolete

458 01 010

1100K, 1110K, 1220K, 1230K, 1320K, 1330K

Internal ref. 63 65 000

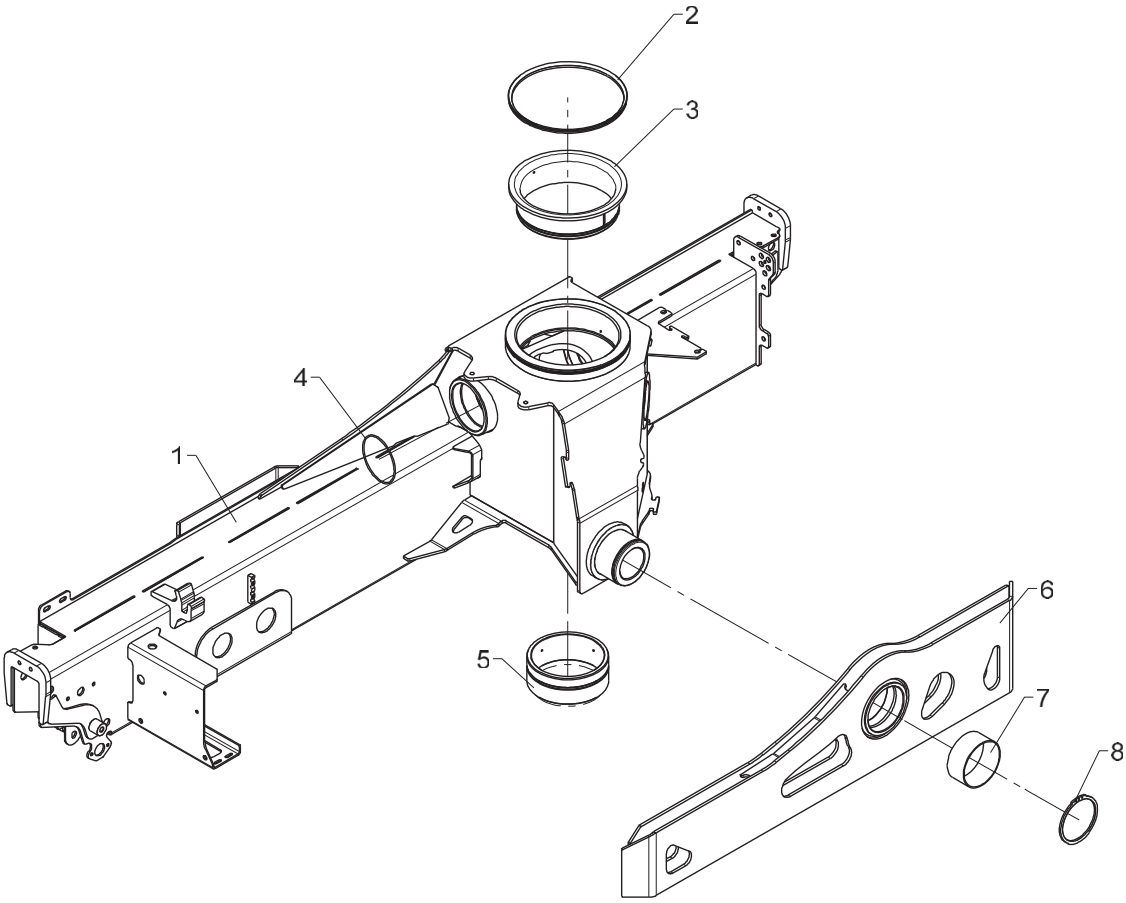

Obsolete

458 01 010

Base, complete

From loader 1170001
To loader 1170029

Created 10-02-2012
Modified 01-10-2012

Pos	Qty.	Part no.	Description	Remarks
1	1	6365010	Base, painted	
2	1	21937	V-ring	VL-0275
3	1	68007	Top bearing ø 210	
4	2	20196	O-ring	OR 109,5 x 3
5	1	68006	Bottom bearing ø160	
6	1	6366135	Suspension traverse	
7	1	23442	Composite bearing	ø110/115 x 50
8	1	33158	Circlip	110U

1100K, 1110K, 1220K, 1230K, 1320K, 1330K

Internal ref. 63 65 000

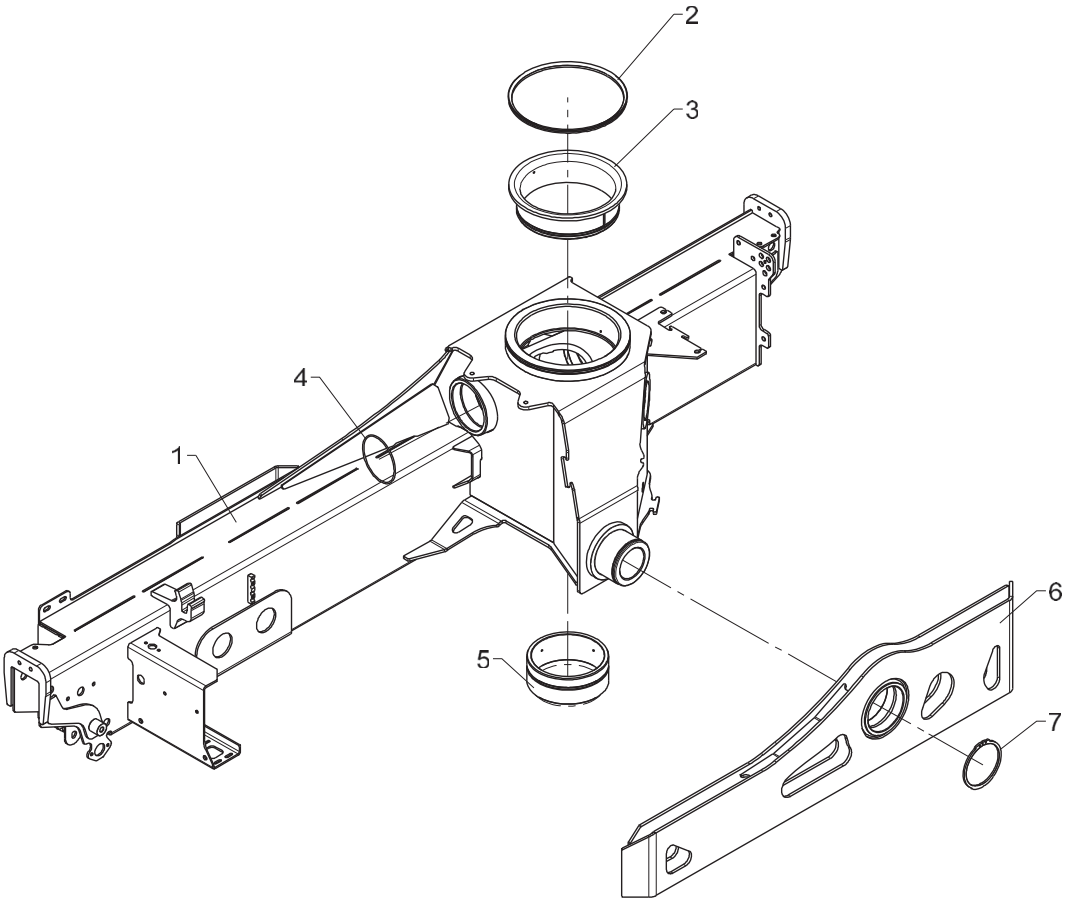

Base, complete

From loader 1170030
To loader
Created 01-10-2012
Modified

Pos	Qty.	Part no.	Description	Remarks
1	1	6365010	Base, painted	
2	1	21937	V-ring	VL-0275
3	1	68007	Top bearing ø 210	
4	2	20196	O-ring	OR 109,5 x 3
5	1	68006	Bottom bearing ø160	
6	1	6366135	Suspension traverse	
7	1	33158	Circlip	110U

1100K, 1110K, 1220K, 1230K, 1320K, 1330K

Internal ref. 63 65 260

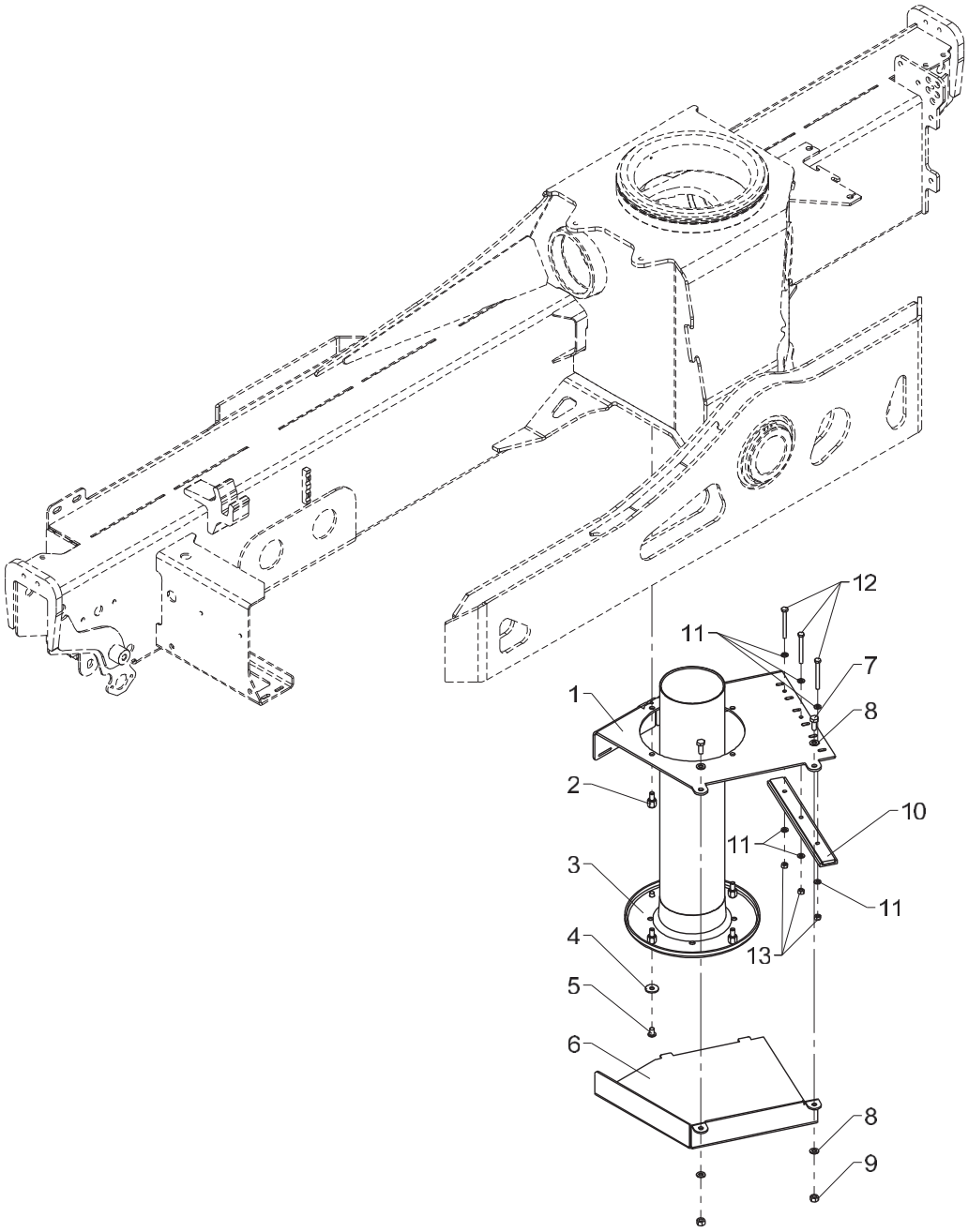

458 01 050

From loader 1170001
To loader

Created 10-02-2012
Modified

Protection plate, cpl. (std.)

Pos	Qty.	Part no.	Description	Remarks
1	1	6365231	Cover	
2	4	6340223	Spacer	
3	1	68005	Hose connection	
4	4	31136	Washer, stainless	8 mm
5	4	30924	Screw	M8 x 12
6	1	6365233	Hose shield	
7	2	30132	Set screw, stainless	
8	4	31147	Face washer, 8 mm	
9	2	30886	Lock nut, stainless	M8
10	1	6340238	Clamp, complete	
11	6	32302	Face washer, stainless	6 mm
12	3	30120	Steel pin, stainless	M6 x 60
13	3	30884	Lock nut, stainless	M6

1100K, 1110K, 1220K, 1230K, 1320K, 1330K

Internal ref. 63 65 020

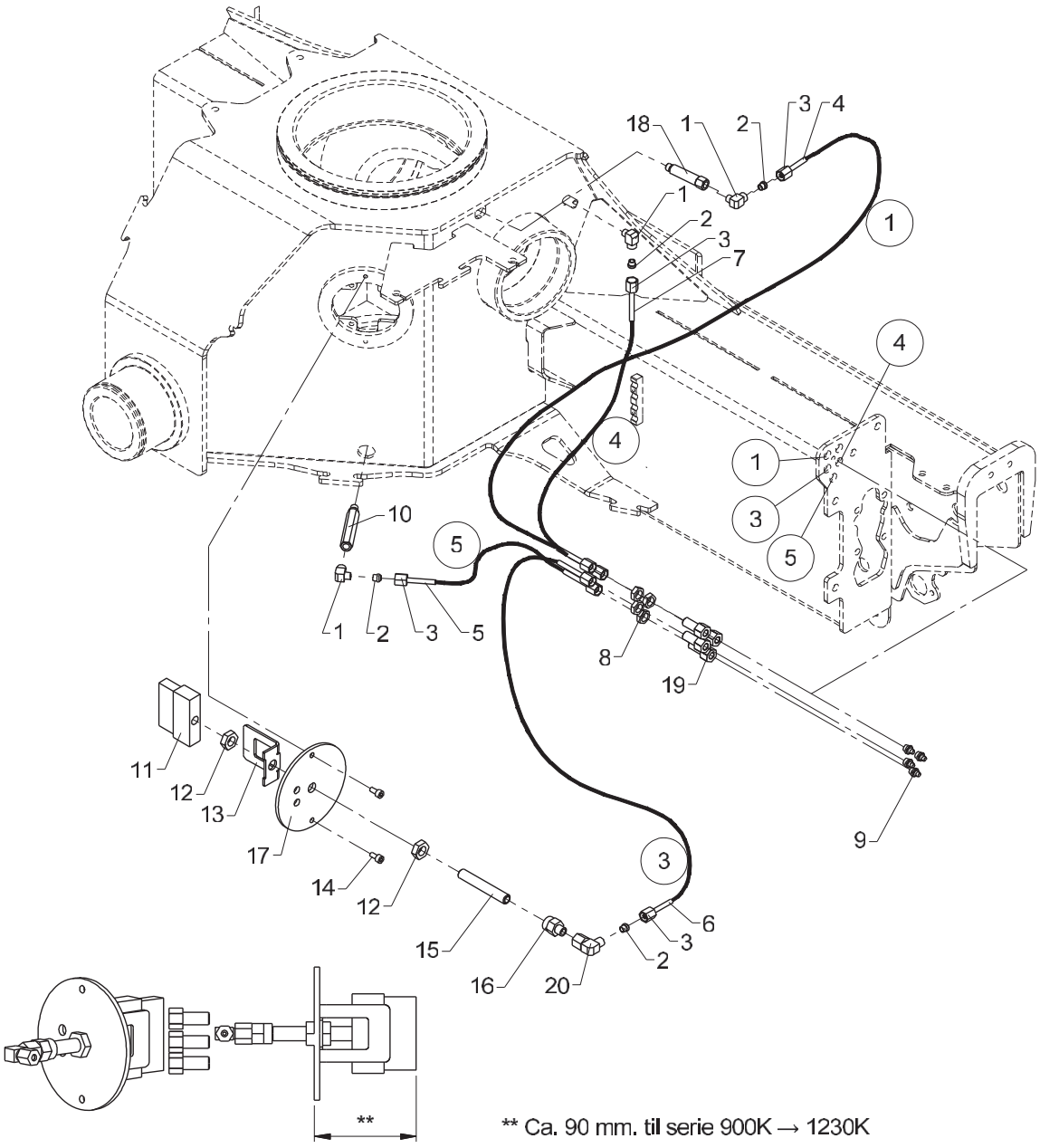

** Ca. 90 mm. til serie 900K → 1230K

Central lubrication and lubricating brush

Pos	Qty.	Part no.	Description	Remarks
1	3	26186	Elbow connection	WEV 6 LRK
2	8	26114	Profile ring	P-R 6 L/S
3	8	26164	Coupling nut	M 6 L
4	1	62821	Nylon pipe	970 mm
5	1	62821	Nylon pipe	880 mm
6	1	62821	Nylon pipe	1200 mm
7	1	62821	Nylon pipe	640 mm
8	4	26890	Counter nut	M12 x 1,5
9	4	31318	Lubricator	1/8" RG
10	1	6340046	Nipple (1/8" RG - 90 mm)	
11	1	31395	Brush	
12	2	25354	Counter nut	1/4"
13	1	6306047	Safety device, lubrica. brush	
14	2	30423	Sockethead screw	MC8 x 12
15	1	6306048	Threaded pipe	
16	1	26372	Pressure gauge connection	P-MAV 6 LR
17	1	6340963	Cover for lubricating brush	63 65 020
18	1	6365083	Nipple (1/8" RG - 65 mm)	
19	4	26891	Bulkhead connection	
20	1	26174	Elbow connection	EWSD 6 L

1100K, 1110K, 1220K, 1230K, 1320K, 1330K

Internal ref. 63 65 030

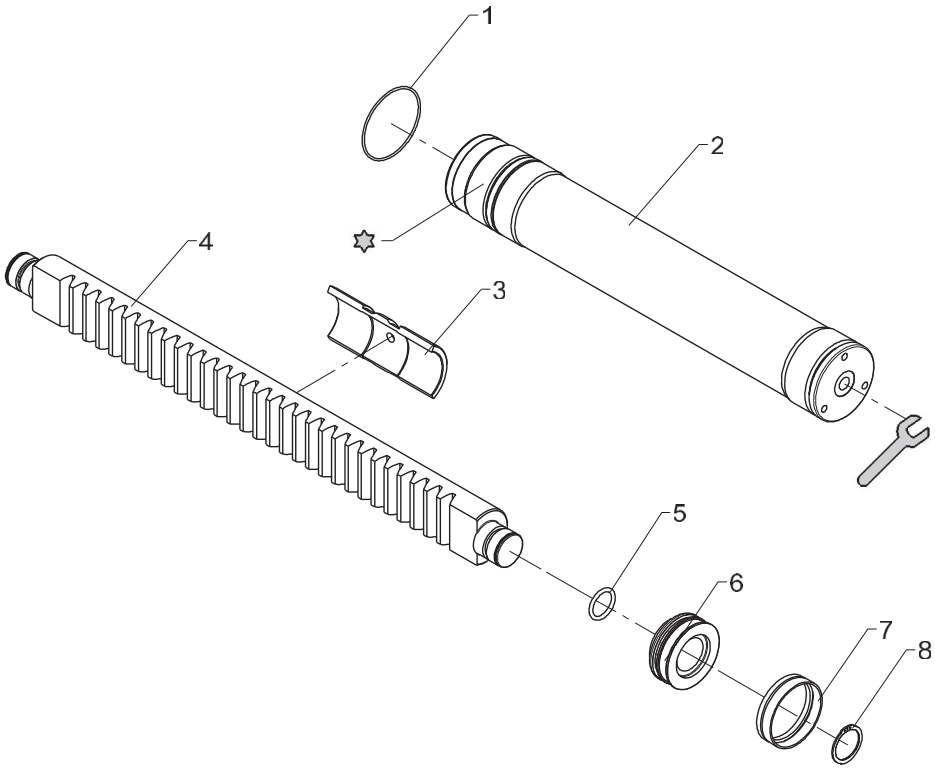

Loctite 8156

500 Nm

Obsolete

458 01 100 A

From loader 1170001
To loader 1170024

Slewing system, 420°

Created 01-11-2011
Modified 05-01-2012

Pos	Qty.	Part no.	Description	Remarks
1	1	20195	O-ring	OR 104,5 x 3
2	1	6365041	Slewing cylinder	
3	1	68008	Guide block Ø85	
4	1	6365044	Rack	
5	2	20305	O-ring	OR 37,47 x 5,33
6	2	6306445	Piston	
7	2	22115	Seal incl. bearing	
8	2	33129	Circlip	50U

1100K, 1110K, 1220K, 1230K, 1320K, 1330K

Internal ref. 63 65 030

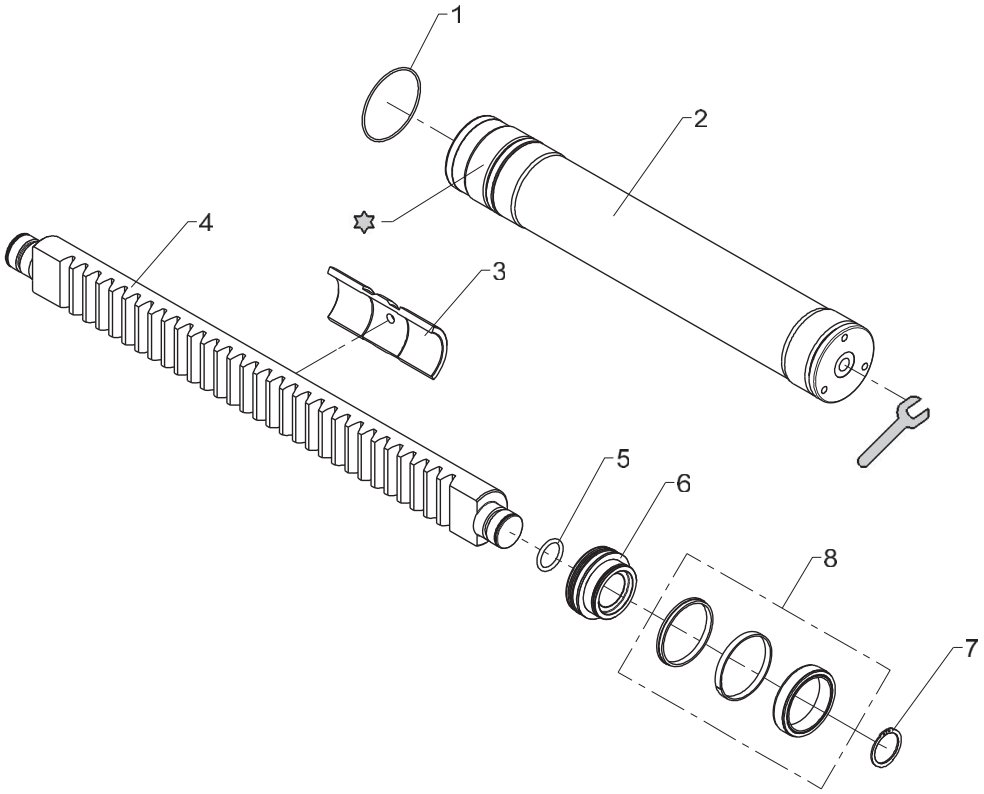

Loctite 8156

500 Nm

Obsolete

458 01 100 B

From loader 1170025
To loader

Slewing system, 420°

Created 05-01-2012
Modified 05-01-2012

Pos	Qty.	Part no.	Description	Remarks
1	1	20195	O-ring	OR 104,5 x 3
2	1	6365041	Slewing cylinder	
3	1	68008	Guide block Ø85	
4	1	6365044	Rack	
5	2	20305	O-ring	OR 37,47 x 5,33
6	2	6365085	Piston	
7	2	33129	Circlip	50U
8	2	6894560	Seal kit, slewing cylinder	

1100K, 1110K, 1220K, 1230K, 1320K, 1330K

Internal ref. 63 65 030

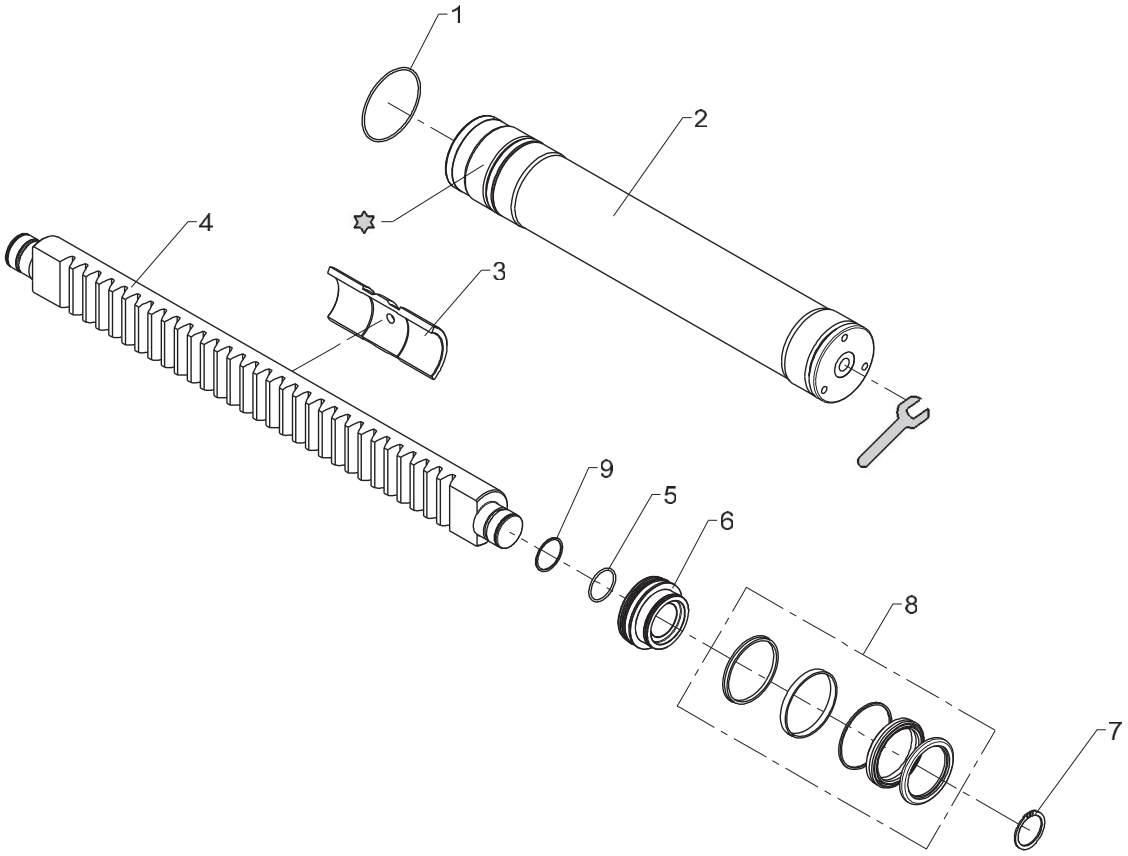

Loctite 8156

500 Nm

Obsolete

458 01 100 C

From loader 1170025
To loader 1170082

Created 22-02-2012
Modified 06-06-2012

Slewing system, 420°

Pos	Qty.	Part no.	Description	Remarks
1	2	20195	O-ring	OR 104,5 x 3
2	2	6365041	Slewing cylinder	
3	1	68008	Guide block Ø85	
4	1	6365044	Rack	
5	2	20181	O-ring	OR 44,2 x 3
6	2	6365085	Piston	
7	2	33129	Circlip	50U
8	2	6894560	Seal kit, slewing cylinder	
9	2	20868	Back ring	STR 45 x 50 x 1,3-Y95A

1100K, 1110K, 1220K, 1230K, 1320K, 1330K

Internal ref. 63 65 030

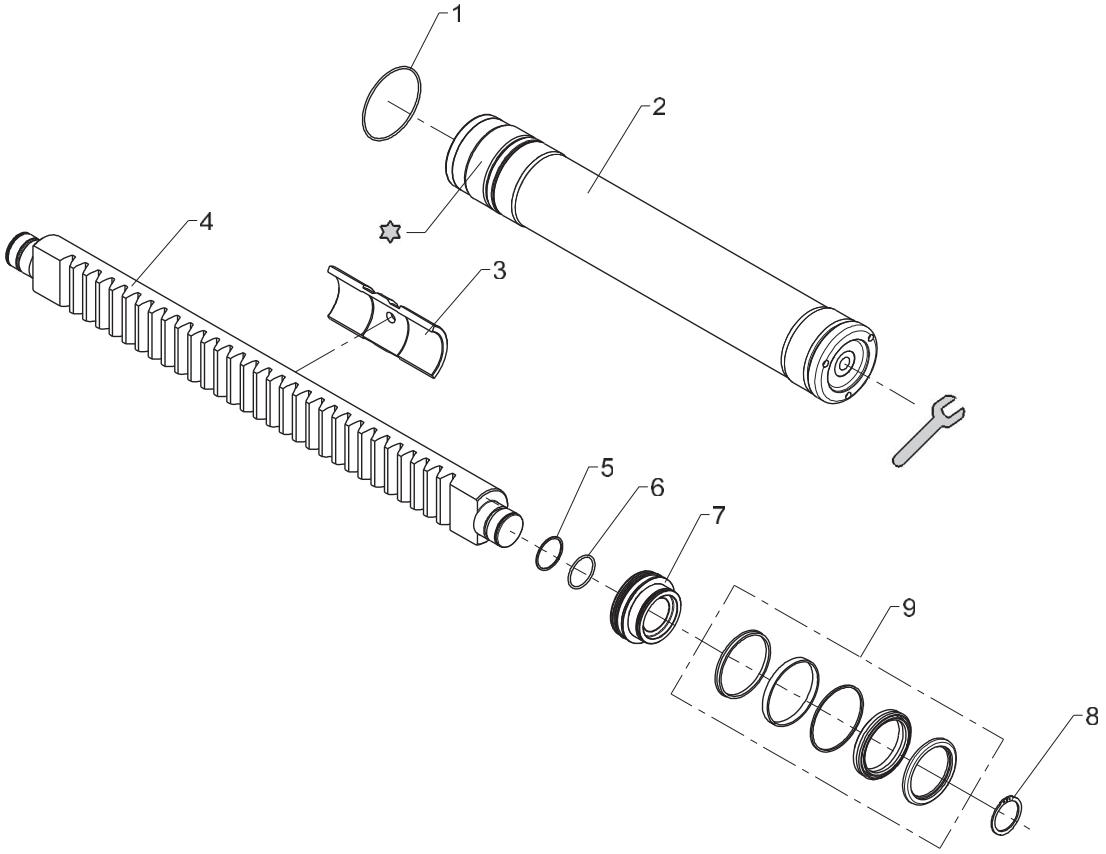

Loctite 8156

500 Nm

Obsolete

458 01 100 D

From loader 1170083
To loader

Created 22-10-2012
Modified

Slewing system, 420°

Pos	Qty.	Part no.	Description	Remarks
1	2	20195	O-ring	OR 104,5 x 3
2	2	6364041	Slewing cylinder	
3	1	68008	Guide block Ø85	
4	1	6365044	Rack	
5	2	20868	Back ring	STR 45 x 50 x 1,3-Y95A
6	2	20181	O-ring	OR 44,2 x 3
7	2	6365085	Piston	
8	2	33129	Circlip	50U
9	2	6894560	Seal kit, slewing cylinder	

1100K, 1110K, 1220K, 1230K, 1320K, 1330K

Internal ref. 63 65 030

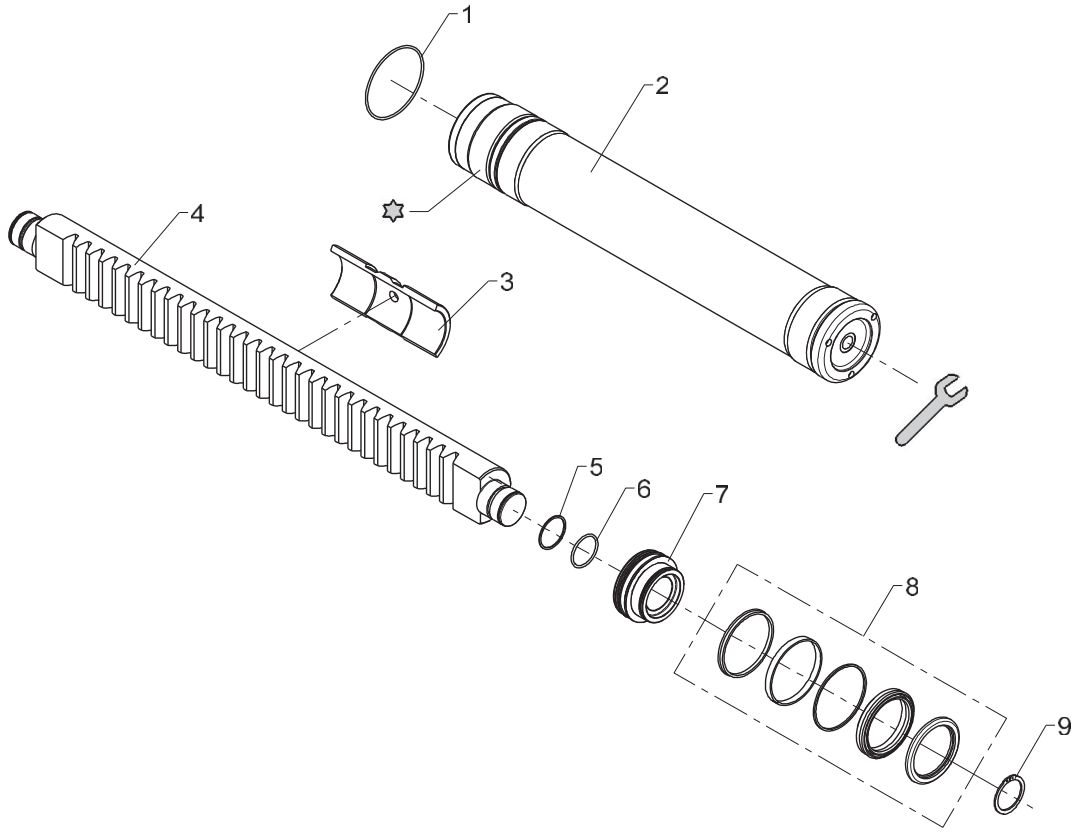

Loctite 8156

500 Nm

Slewing system, 420°

Pos	Qty.	Part no.	Description	Remarks
1	2	20195	O-ring	OR 104,5 x 3
2	2	6364241	Slewing cylider	
3	1	68008	Guide block Ø85	
4	1	6365044	Rack	
5	2	20868	Back ring	STR 45 x 50 x 1,3-Y95A
6	2	20181	O-ring	OR 44,2 x 3
7	2	6365085	Piston	
8	2	6894560	Seal kit, slewing cylinder	
9	2	33129	Circlip	

1100K, 1110K, 1220K, 1230K, 1320K, 1330K

Internal ref. 63 65 050

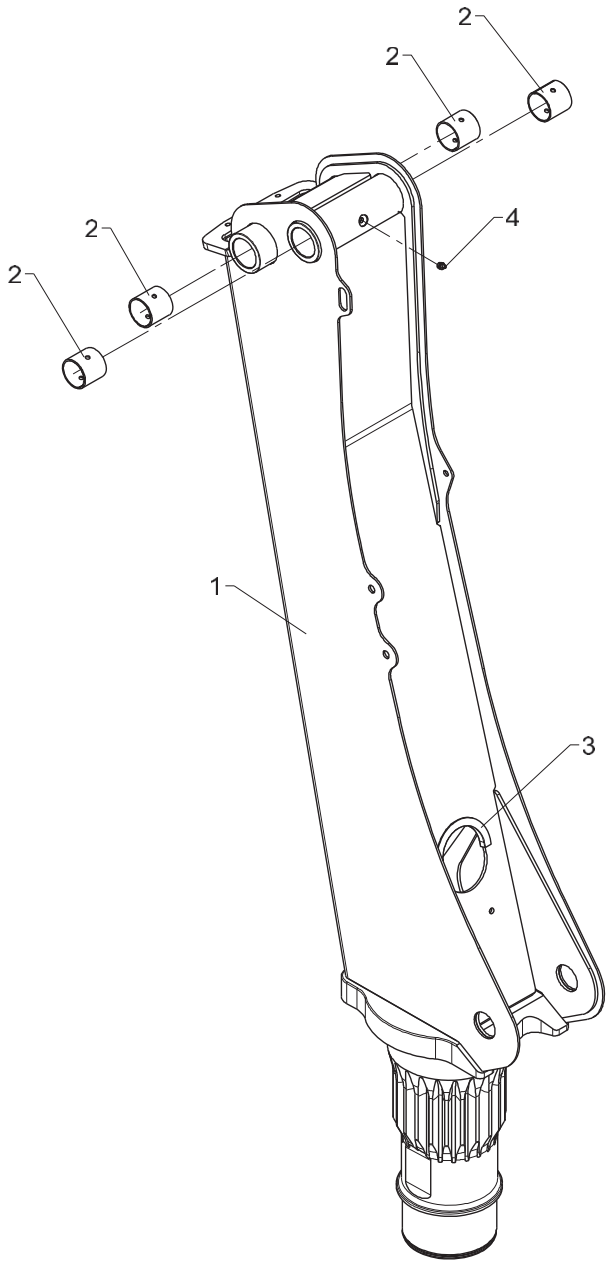

458 01 300

From loader 1170001
To loader

Column, cpl. for link arm system, boom

Created 29-03-2012
Modified 29-03-2012

Pos	Qty.	Part no.	Description	Remarks
1	1	6365040	Column, painted	
2	4	23440	Bushing, glacier	PM 5050 DX
3	1	46587	Rubber protection	180 mm
4	1	31318	Lubricator	1/8" RG

1100K, 1110K, 1220K, 1230K, 1320K, 1330K

Internal ref. 63 65 070

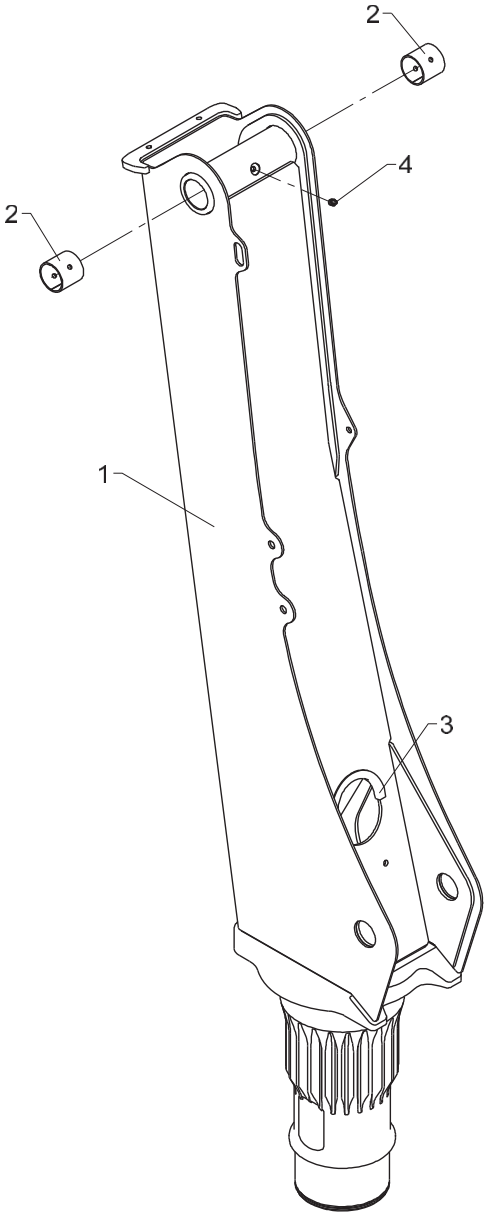

458 01 350

From loader 1170001
To loader

Created 29-03-2012
Modified

Column, cpl. excl. link arm system, boom

Pos	Qty.	Part no.	Description	Remarks
1	1	6365080	Column, painted	
2	2	23440	Bushing, glacier	PM 5050 DX
3	1	46587	Rubber protection	180 mm
4	1	31318	Lubricator	1/8" RG

1100K, 1110K, 1220K, 1230K, 1320K, 1330K

Internal ref. 63 65 180

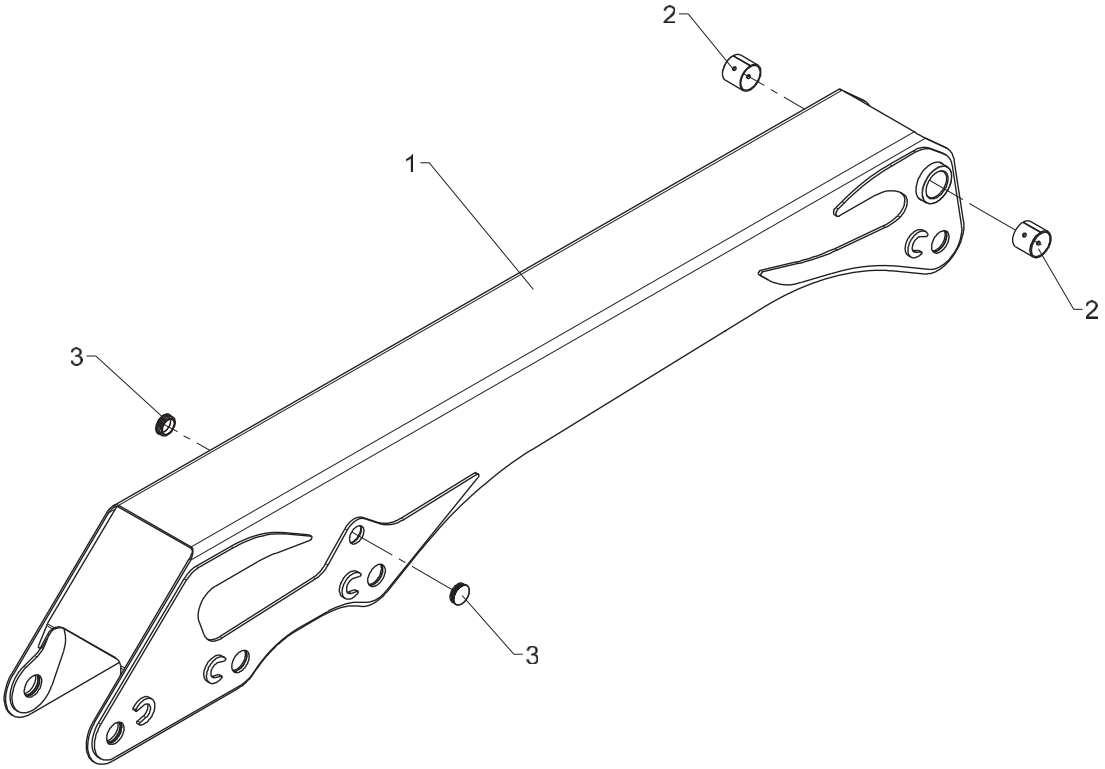

458 01 400

From loader 1170001
To loader

Main boom, cpl. for link arm system, boom

Created 29-03-2012
Modified

Pos	Qty.	Part no.	Description	Remarks
1	1	6365230	Main boom, painted	6365181
2	2	23424	Bushing	PM 5550 DX
3	2	64381	Ferrule	

1100K, 1110K, 1220K, 1230K, 1320K, 1330K

Internal ref. 63 65 190

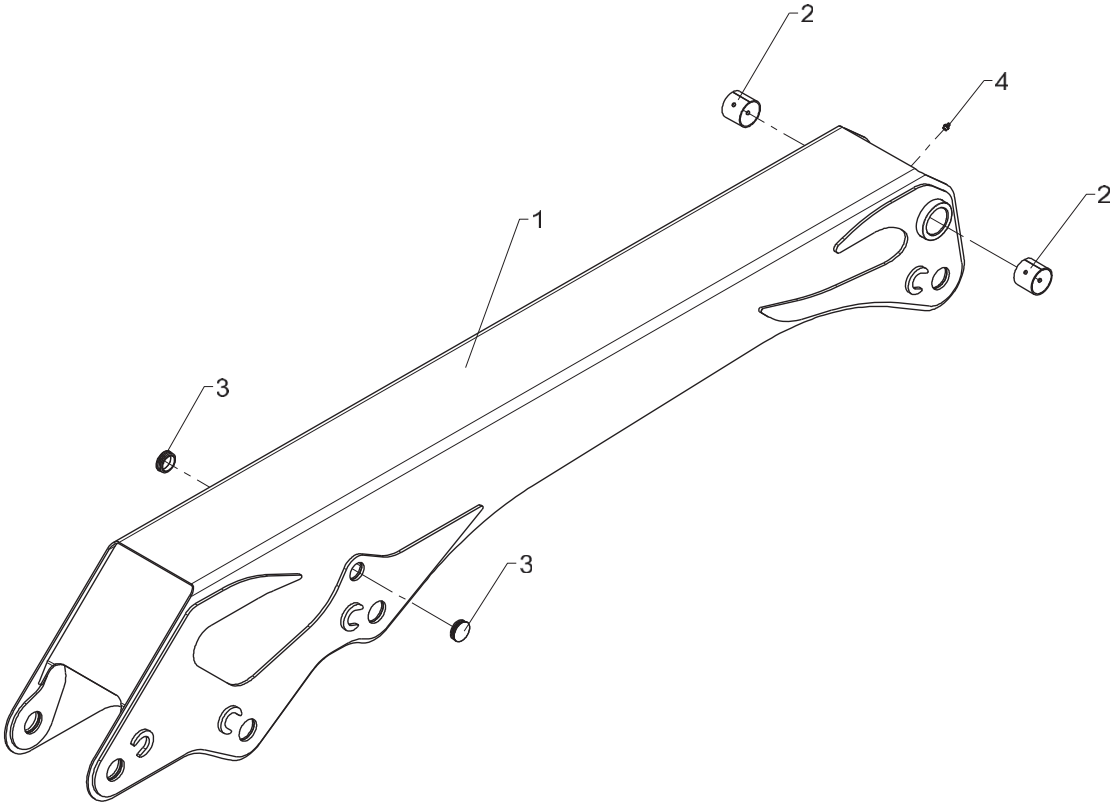

458 01 420

From loader 1170001
To loader

Created 29-03-2012
Modified

Main boom, cpl., no link arm system, boom

Pos	Qty.	Part no.	Description	Remarks
1	1	6365240	Main boom, painted	63 65 191
2	2	23424	Bushing	PM 5550 DX
3	2	64381	Ferrule	
4	1	31318	Lubricator	1/8" RG

Obsolete

458 01 450

1100K, 1110K, 1220K, 1230K, 1320K, 1330K

63 42 210
Internal ref. 63 40 210

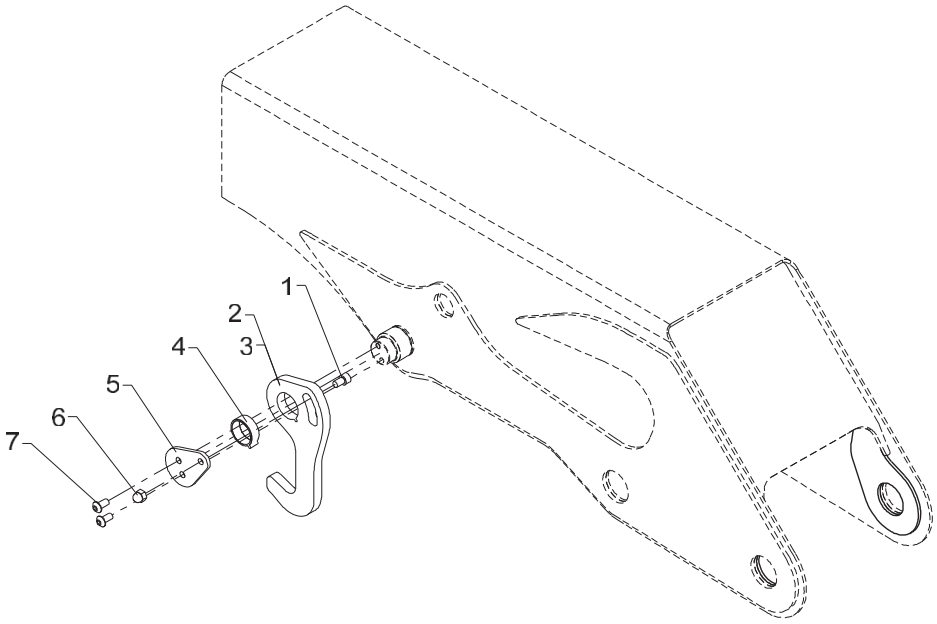

Obsolete

458 01 450

From loader 1170001
To loader

Created 11-11-2008
Modified 10-09-2013

Stowing hook, complete

Pos	Qty.	Part no.	Description	Remarks
		6340210	Stowing hook	
		6342210	Stowing hook, cpl. (+FJ)	
1	1	30964	Screw	MC10 x 16
2	1	6340208	Stowing hook	
3	1	6340948	Stowing hook (loader + FJ)	
4	1	63565	Bearing	
5	1	6340209	End plate	
6	1	30902	Nut	M10
7	2	30926	Steel bolt	M10 x 20

1100K, 1110K, 1220K, 1230K, 1320K, 1330K

63 42 210
Internal ref. 63 40 210

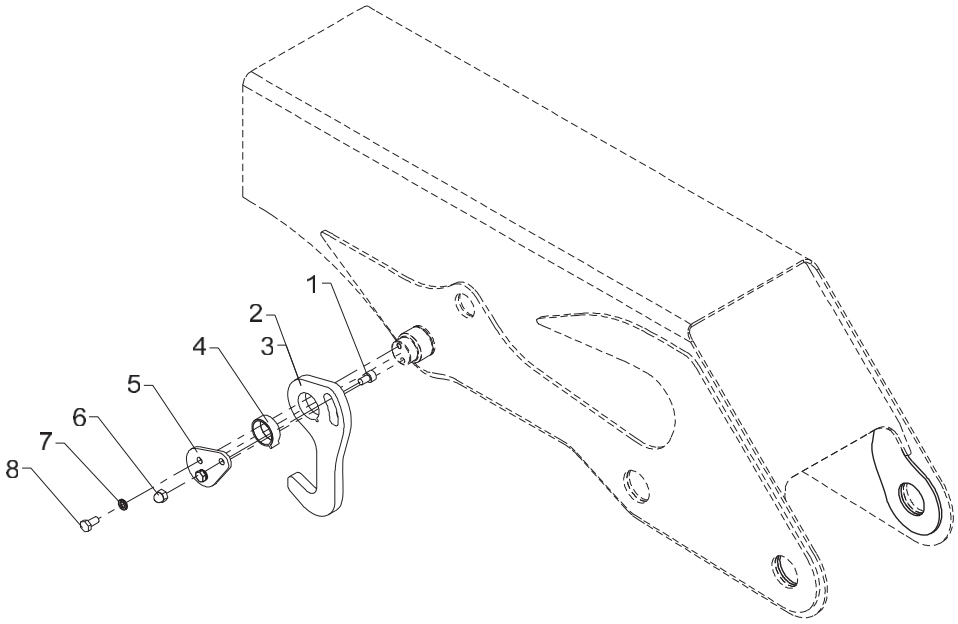

Stowing hook, complete

Pos	Qty.	Part no.	Description	Remarks
		6340210	Stowing hook	
		6342210	Stowing hook, cpl. (+FJ)	
1	1	30964	Screw	MC10 x 16
2	1	6340208	Stowing hook	
3	1	6340948	Stowing hook (loader + FJ)	
4	1	63565	Bearing	
5	1	6340209	End plate	
6	1	30902	Nut	M10
7	2	30933	Nordlock washer	
8	2	31517	Set screw, stainless	M10 x 20

1100K, 1110K, 1220K, 1230K, 1320K, 1330K

Internal ref. 63 65 140

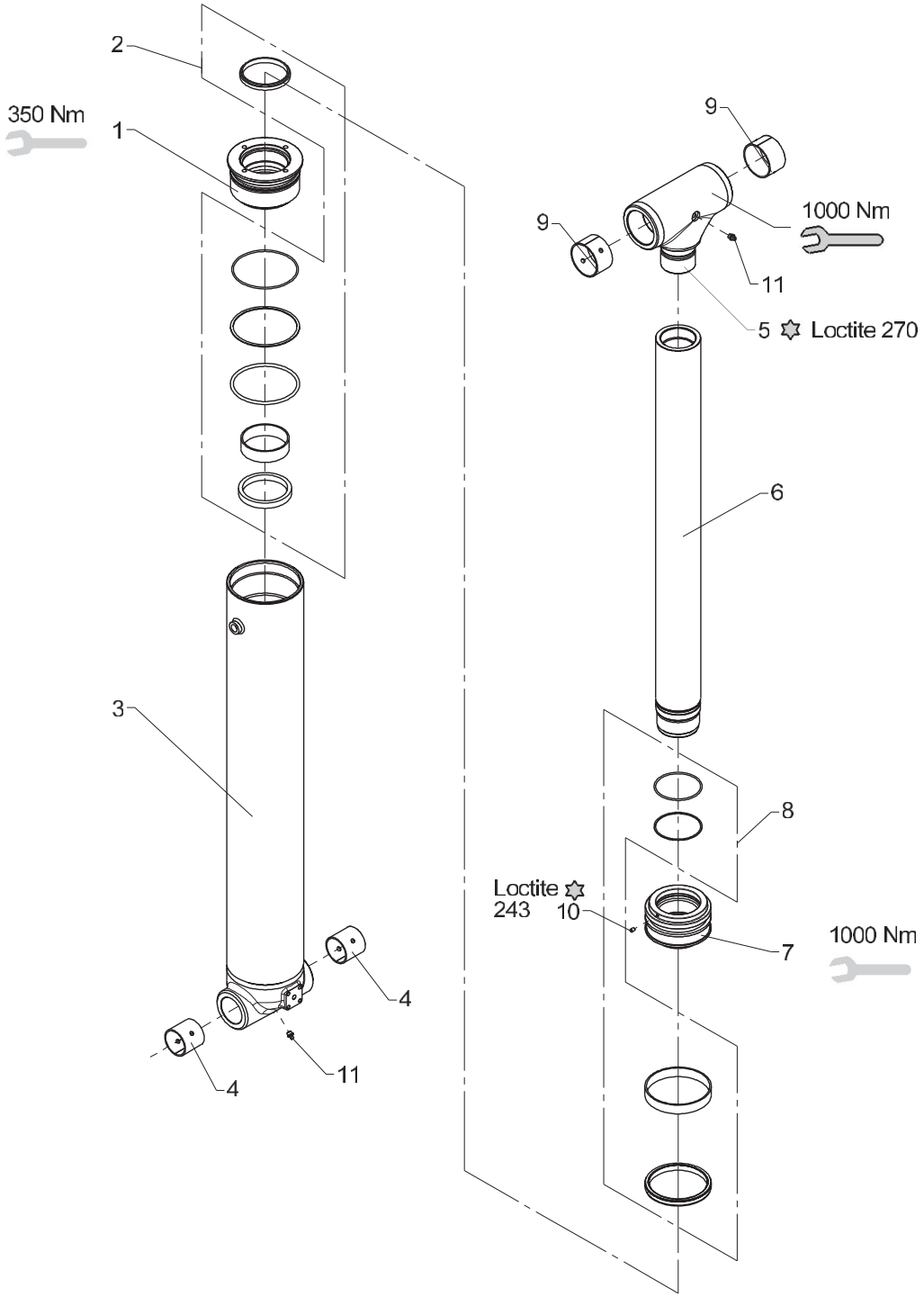

From loader 1170001
To loader
Created
Modified

Boom cylinder, C125 x 750

Pos	Qty.	Part no.	Description	Remarks
1	1	6340156	Guide	
2	1	6894050	Seal kit f. guide	
3	1	6365141	Cylinder tube	
4	2	23440	Bushing, glacier	PM 5050 DX
5	1	6365147	Piston rod head	
6	1	6365144	Piston rod	
7	1	6340155	Piston	
8	1	6894000	Seal kit f. piston	
9	2	23441	Bushing, glacier	PM 6540 DX
10	1	30903	Screw	MSP6 x 8

1100K, 1110K, 1220K, 1230K, 1320K, 1330K

Internal ref. 63 65 440

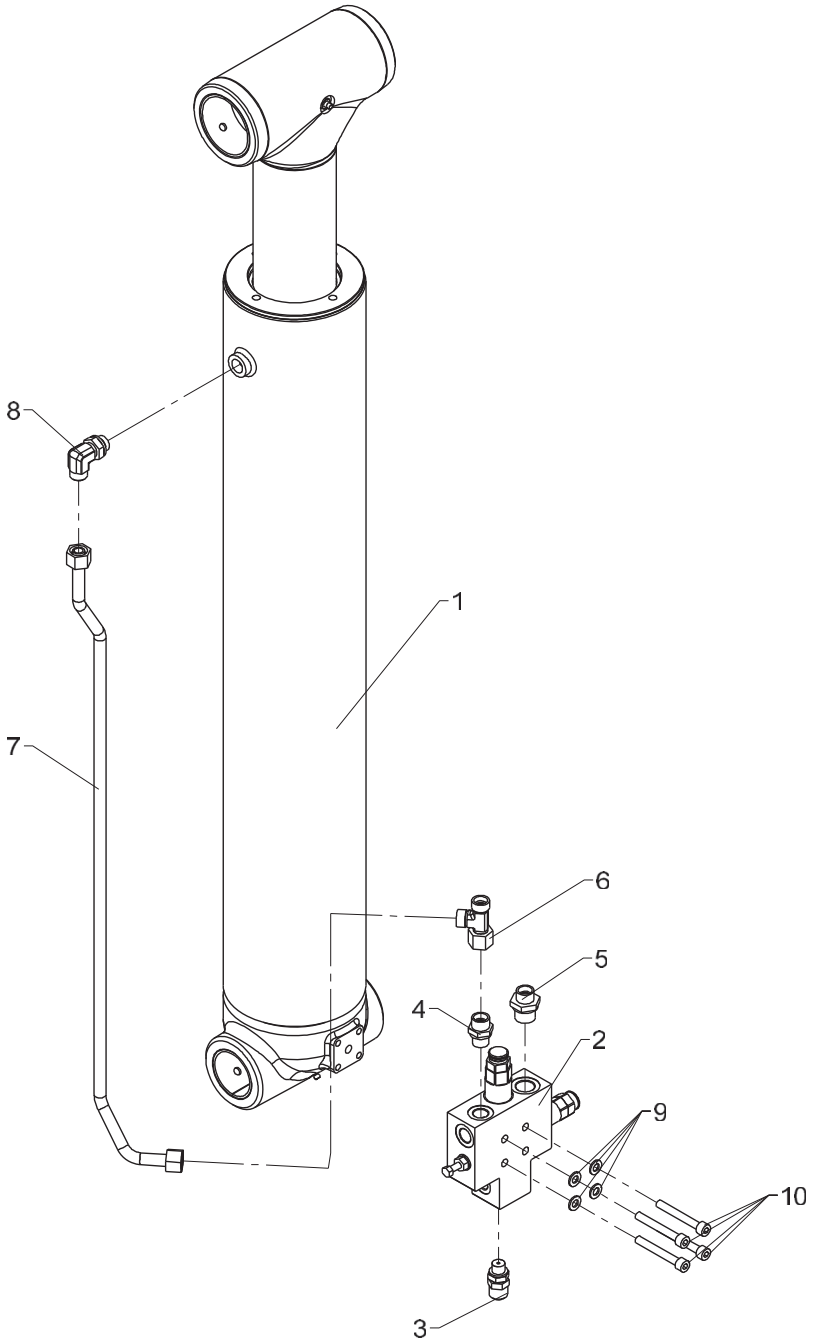

458 01 490

From loader 1170001
To loader

Boom cylinder, C125 x 750 with LHV

Created 30-10-2013
Modified

Pos	Qty.	Part no.	Description	Remarks
1	1	6365140	Boom cylinder C140x700	
2	1	55227	Valve	
3	1	26103	Pressure-gauge connect.	
4	1	25127	Connection	P-GEV 12 LR-WD
5	1	25108	Connection	GES 12 LR 1/2-WD
6	1	25270	Connection	ELSD 12 L
7	1	6365148	Pipe	
8	1	26897	Elbow connection	12 mm - 3/8"
9	4	31147	Face washer, 8 mm	
10	4	31968	Sockethead screw	MC8 x 60

1100K, 1110K, 1220K, 1230K, 1320K, 1330K

Internal ref. 63 65 200

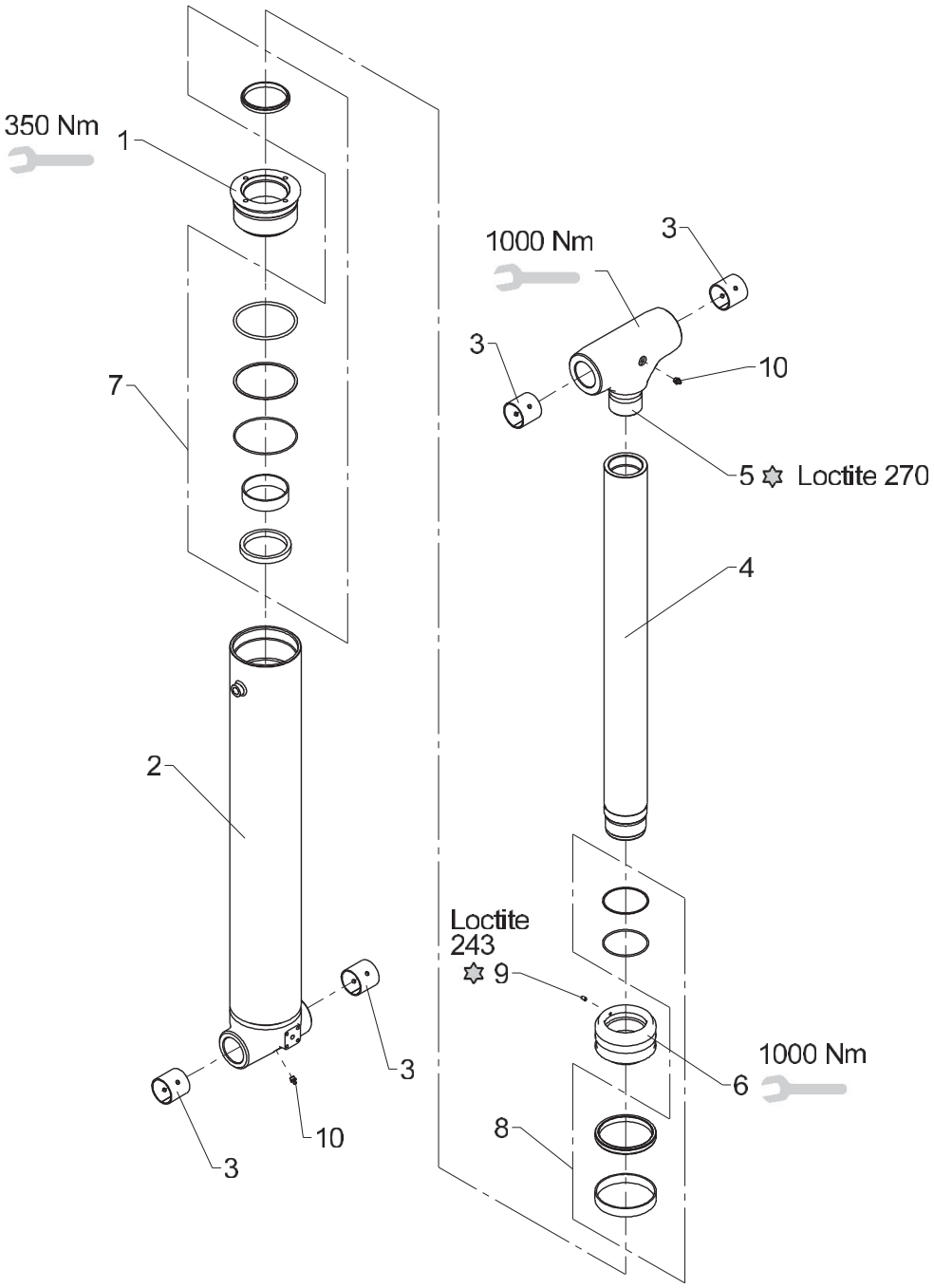

Boom cylinder, C120 x 733

Pos	Qty.	Part no.	Description	Remarks
1	1	6365156	Bracket	
2	1	6365196	Cylinder tube	
3	4	23440	Bushing, glacier	PM 5050 DX
4	1	6365199	Piston rod	
5	1	6365203	Piston rod head (ø50 x 195)	
6	1	6365155	Piston	
7	1	6894410	Seal kit for guide ø120/85	
8	1	6894420	Seal kit for piston ø120/85	
9	1	30556	Pointed screw	MSP6 x 10
10	2	31318	Lubricator	1/8" RG

1100K, 1110K, 1220K, 1230K, 1320K, 1330K

Internal ref. 63 65 450

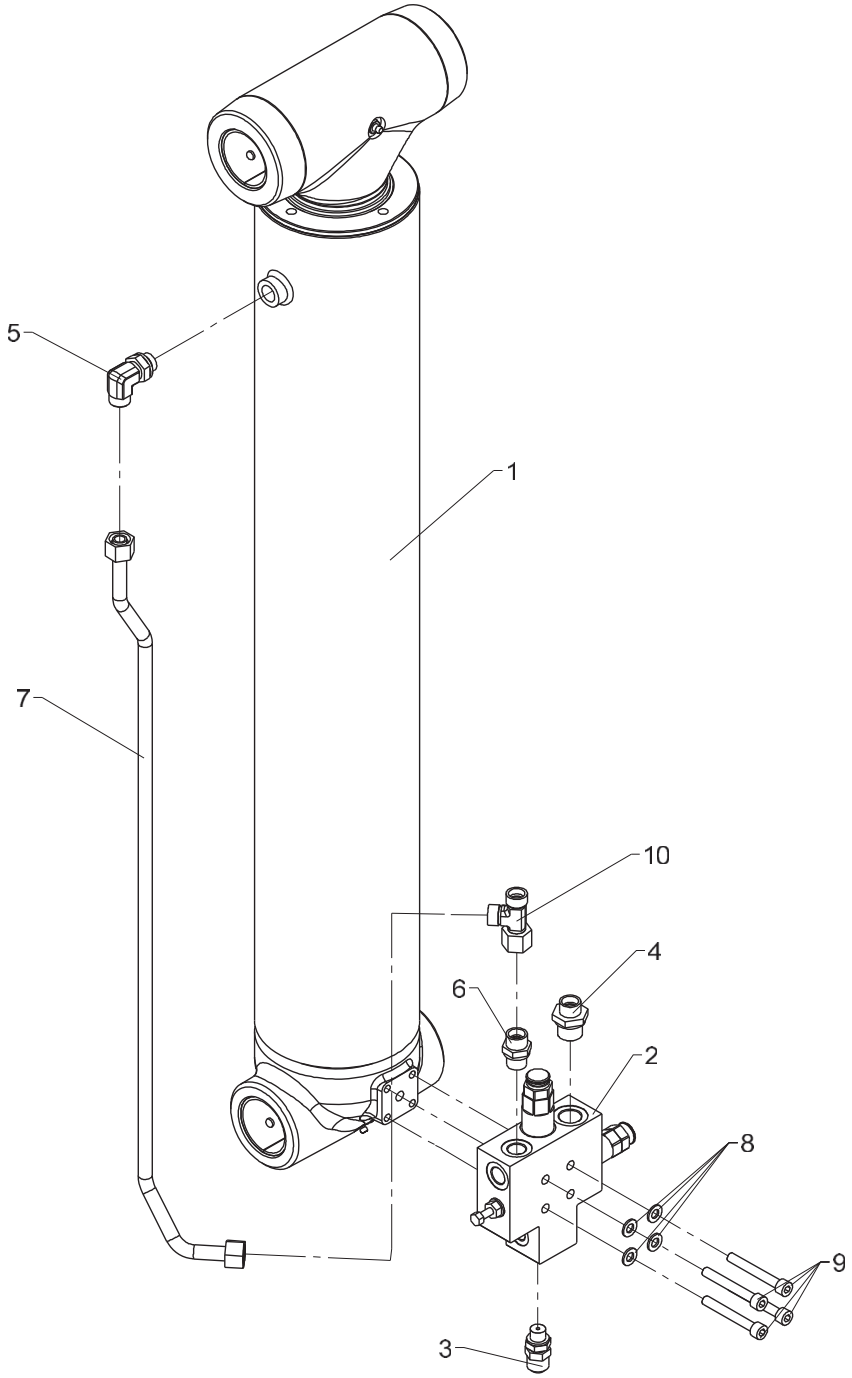

458 01 510

From loader 1170001
To loader

Created 30-10-2013
Modified

Boom cylinder, C120 x 733 with LHV

Pos	Qty.	Part no.	Description	Remarks
1	1	6365200	Boom cylinder C120 x 733	
2	1	55227	Valve	
3	1	26103	Pressure-gauge connect.	
4	1	25108	Connection	GES 12 LR 1/2-WD
5	1	26897	Elbow connection	12 mm - 3/8"
6	1	25127	Connection	P-GEV 12 LR-WD
7	1	6365154	Pipe	
8	4	31147	Face washer, 8 mm	
9	4	31968	Sockethead screw	MC8 x 60
10	1	25270	Connection	ELSD 12 L

1100K, 1110K, 1220K, 1230K, 1320K, 1330K

Internal ref. 63 65 150

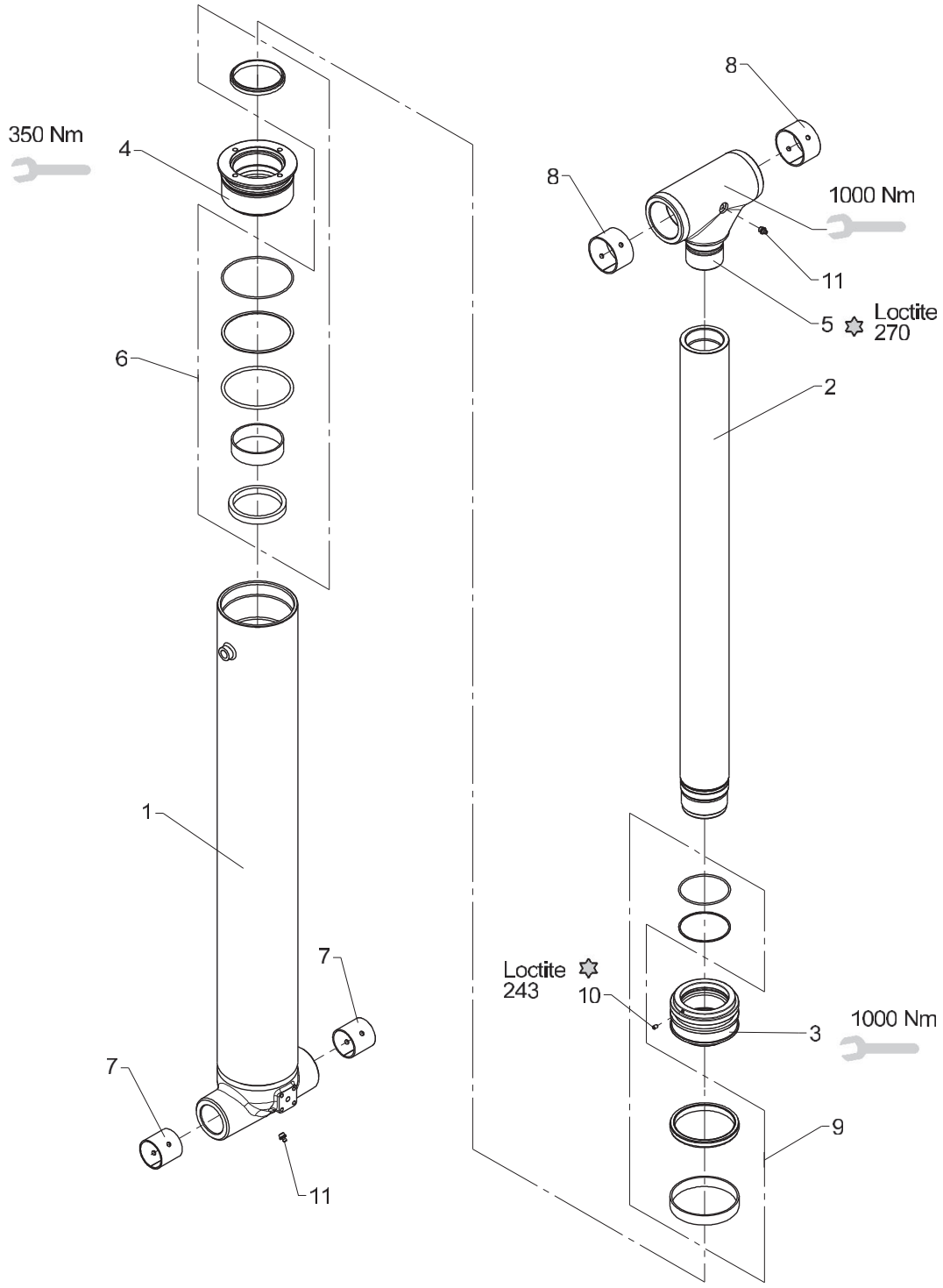

From loader 1170001
To loader
Created
Modified

Jib cylinder C120 x 848

Pos	Qty.	Part no.	Description	Remarks
1	1	6365151	Cylinder tube	
2	1	6340154	Piston rod	
3	1	6365155	Piston	
4	1	6365156	Bracket	
5	1	6365147	Piston rod head	
6	1	6894410	Seal kit for guide ø120/85	
7	2	23440	Bushing, glacier	PM 5050 DX
8	2	23441	Bushing, glacier	PM 6540 DX
9	1	6894420	Seal kit for piston ø120/85	
10	1	30903	Screw	MSP6 x 8
11	2	31318	Lubricator	1/8" RG

1100K, 1110K, 1220K, 1230K, 1320K, 1330K

Internal ref. 63 65 470

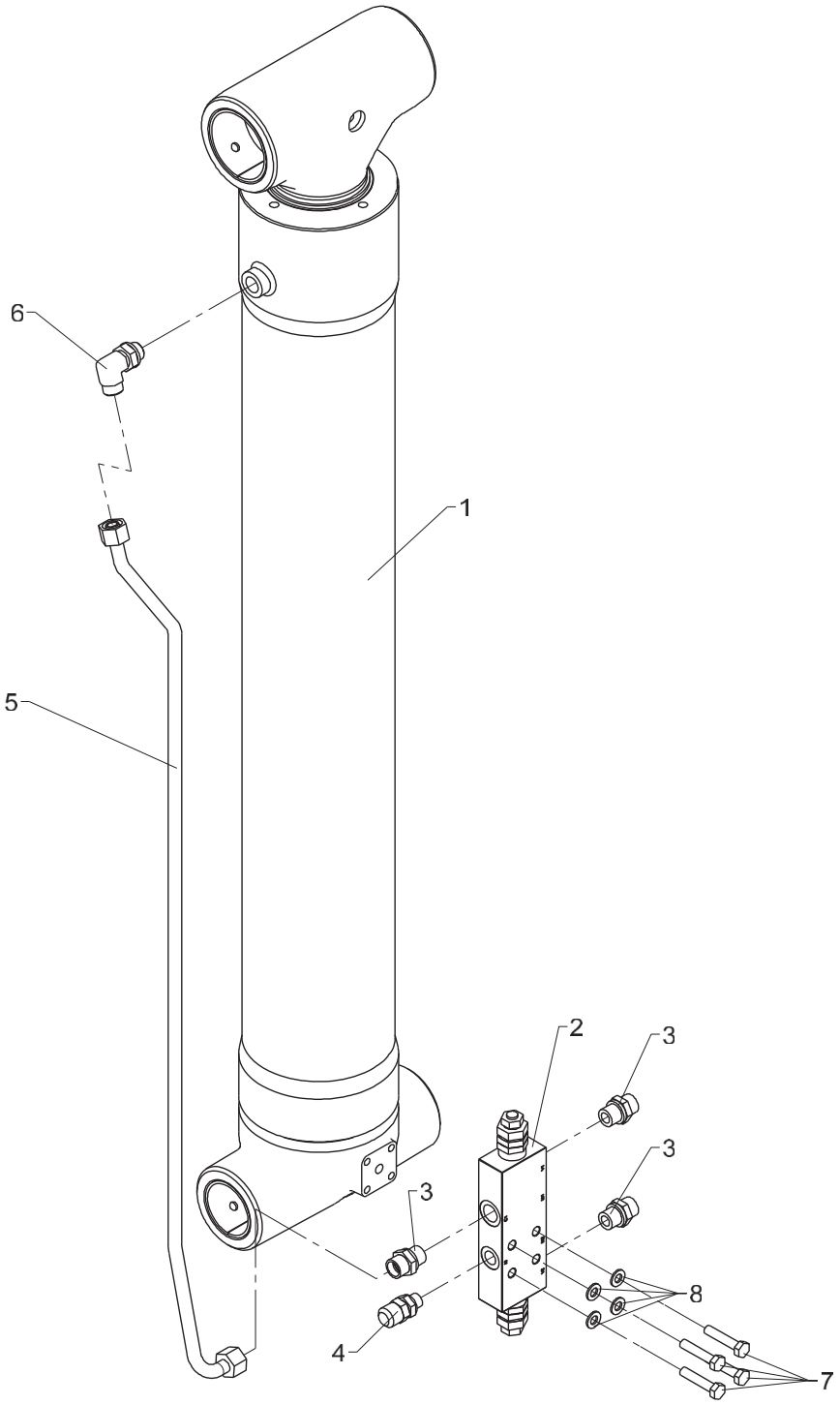

Jib cylinder with LHV

Pos	Qty.	Part no.	Description	Remarks
1	1	6365150	Jib cylinder	
2	1	59027	Load-holding valve	
3	3	25127	Connection	P-GEV 12 LR-WD
4	1	26103	Pressure-gauge connect.	
5	1	6365158	Pipe	
6	1	26897	Elbow connection	12 mm - 3/8"
7	4	30137	Set screw, stainless	M8 x 40
8	4	31147	Face washer, 8 mm	

1100K, 1110K, 1220K, 1230K, 1320K, 1330K

Internal ref. 63 65 060

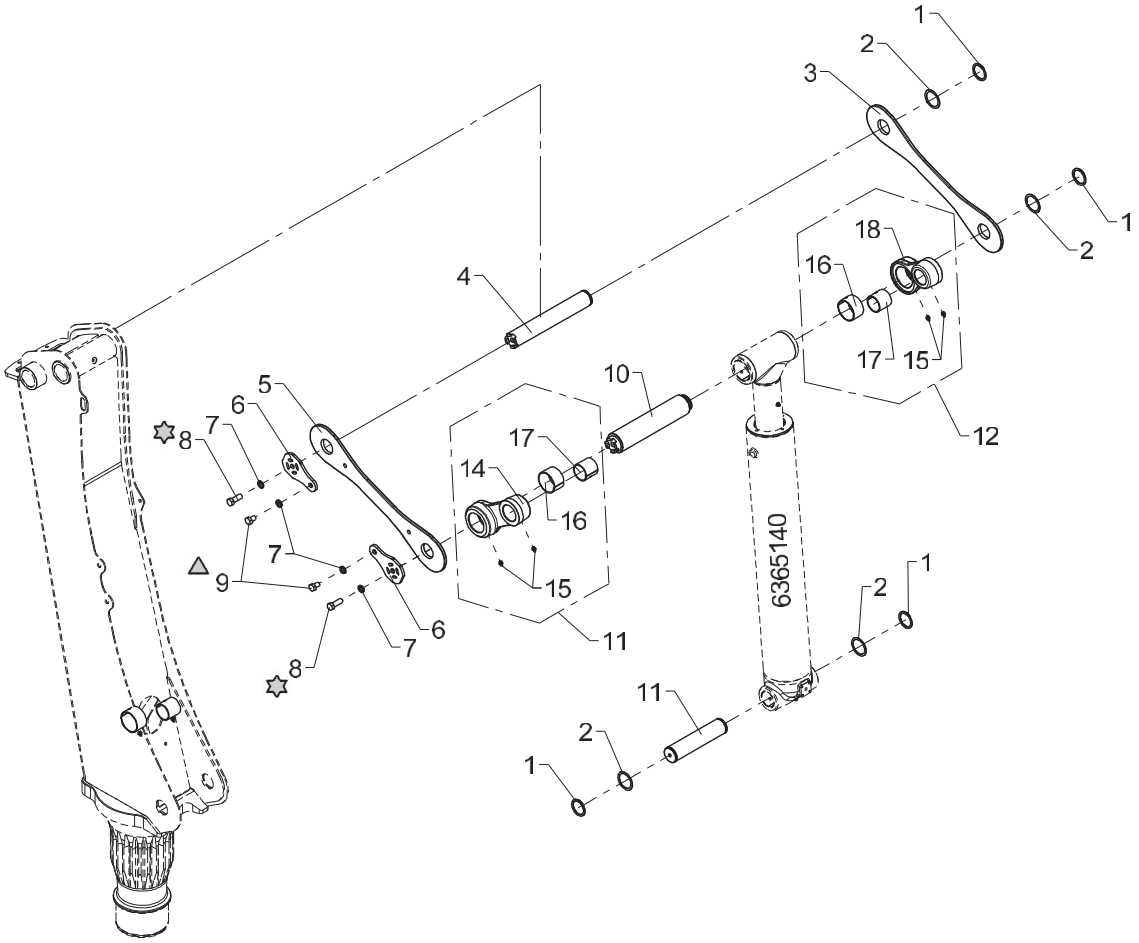

150 Nm

110 Nm

Link arm system, boom

Pos	Qty.	Part no.	Description	Remarks
1	4	33129	Circlip	50U
2	4	33276	Washer	PS 50 x 62 x 1,0
3	1	6365164	Link arm, left	
4	1	6365165	Pin	
5	1	6365163	Link arm, right	
6	2	6340169	Lock plate	
7	4	31099	Washer, 14 mm	14 mm
8	2	30207	Set screw	M14 x 40
9	2	30204	Set screw	M14 x 20
10	1	6365166	Pin	
11	1	6365149	Pin C1	
12	1	6365160	Push rod, right, cpl.	
13	1	6365460	Push rod, left, cpl.	
14	1	6365161	Push rod, right	
15	4	31318	Lubricator	1/8" RG
16	2	23441	Bushing, glacier	PM 6540 DX
17	2	23440	Bushing, glacier	PM 5050 DX
18	1	6365162	Push rod, left.	

1100K, 1110K, 1220K, 1230K, 1320K, 1330K

Internal ref. 63 65 090

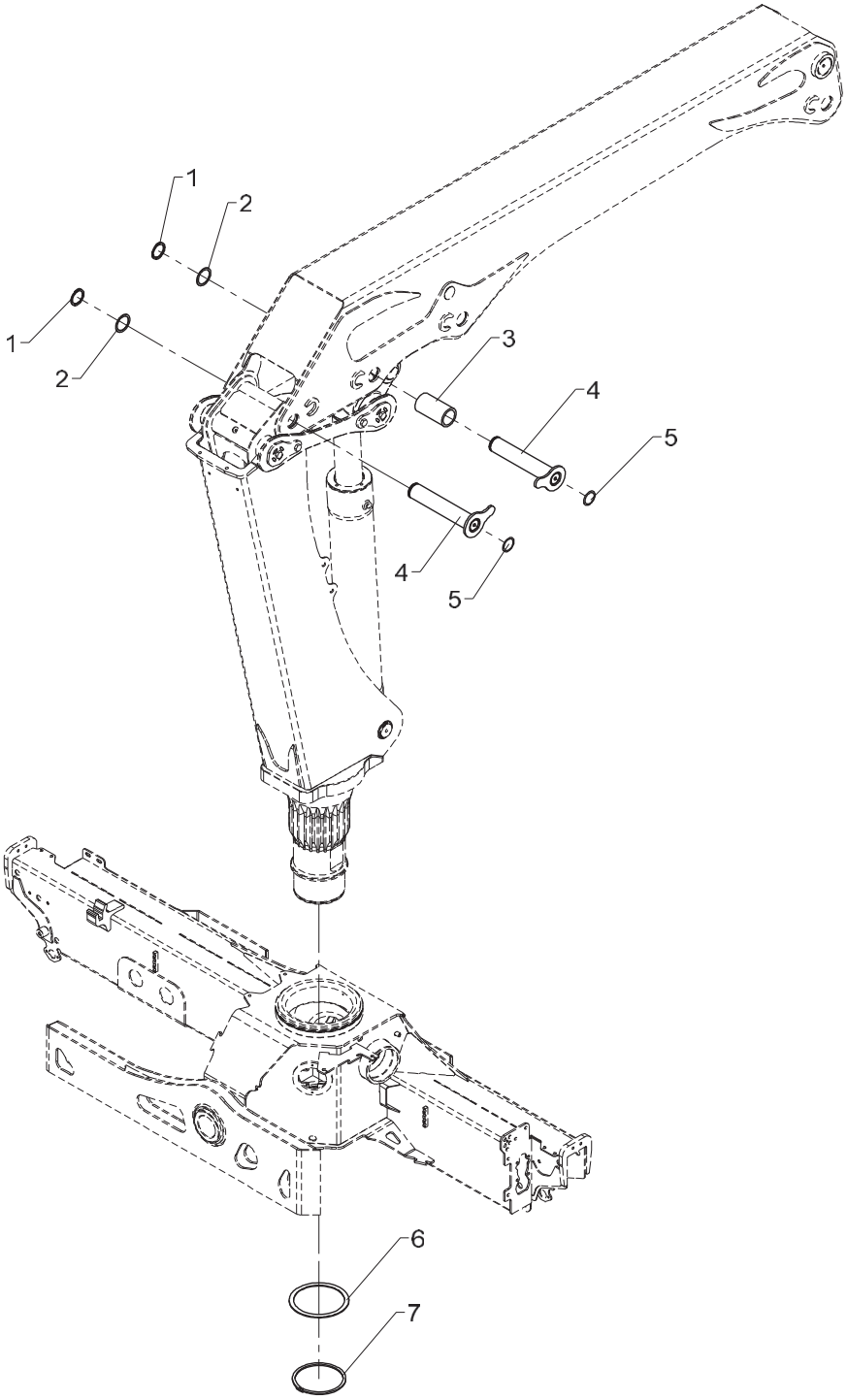

Mounting fittings, basic loader incl. link arm system

Pos	Qty.	Part no.	Description	Remarks
1	2	33129	Circlip	50U
2	2	33276	Washer	PS 50 x 62 x 1,0
3	1	68001	Bushing	
4	2	6365201	Pin	
5	2	63472	Plug	
6	1	6365049	Supporting washer	
7	1	33224	Circlip	160U

1100K, 1110K, 1220K, 1230K, 1320K, 1330K

Internal ref. 63 65 100

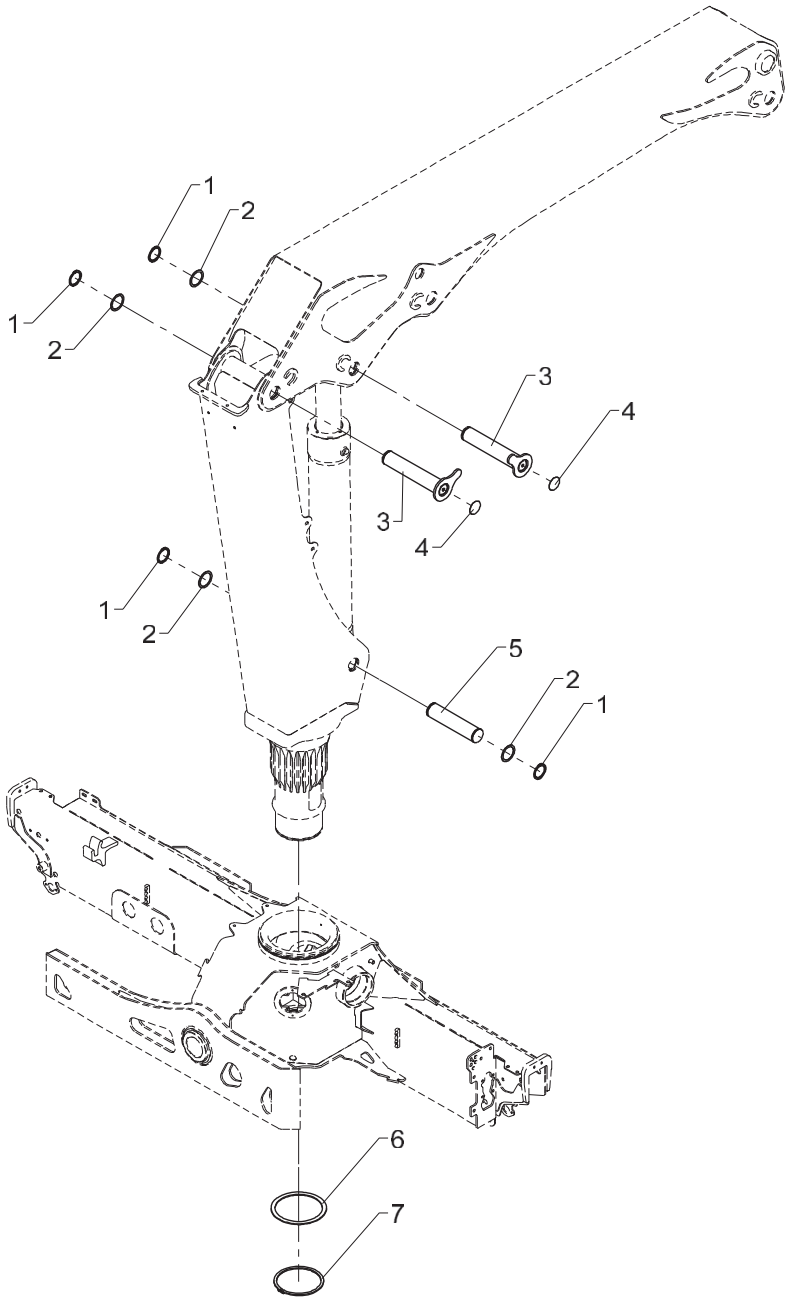

Mounting fittings, basic loader excl. link arm system

Pos	Qty.	Part no.	Description	Remarks
1	4	33129	Circlip	50U
2	4	33276	Washer	PS 50 x 62 x 1,0
3	2	6365201	Pin	
4	2	63472	Plug	
5	1	6365149	Pin C1	
6	1	6365049	Supporting washer	
7	1	33224	Circlip	160U

1100K, 1110K, 1220K, 1230K, 1320K, 1330K

63 65 210
Internal ref. 63 66 210

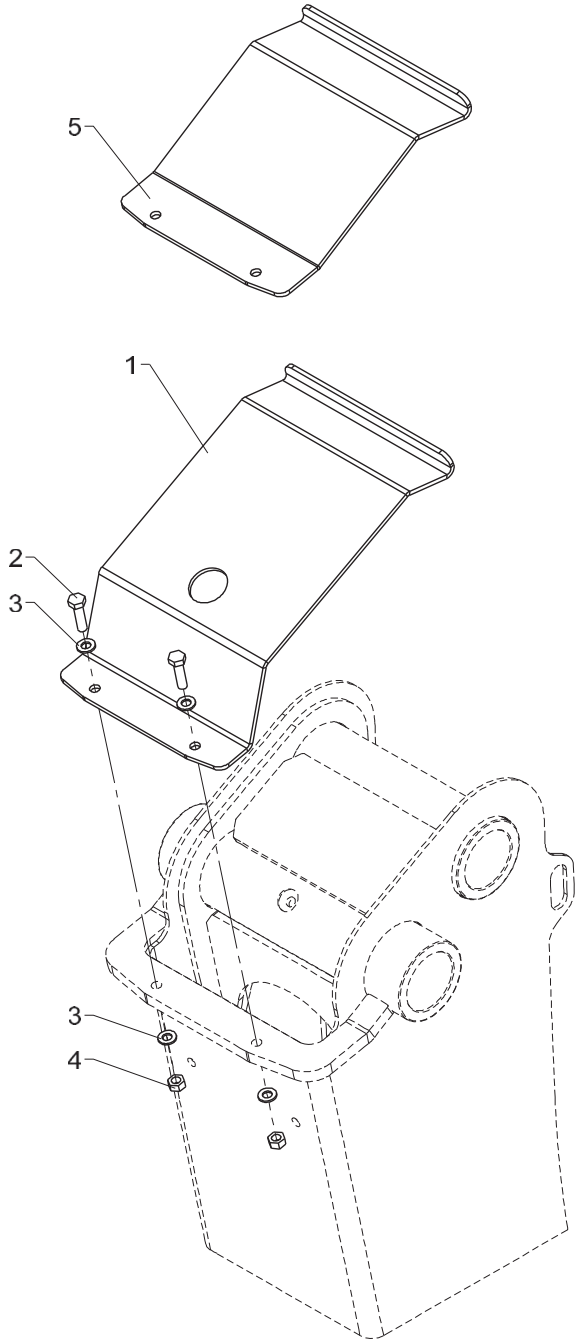

458 01 760

From loader 1170001
To loader

Hose shield, cpl.

Created 29-03-2012
Modified 29-03-2012

Pos	Qty.	Part no.	Description	Remarks
		6366210	Hose shield, cpl (2 link arms)	
		6365210	Hose shield, cpl.	
1	1	6365089	Hose shield	Serie 900 og 1100
2	2	30135	Set screw, stainless	M8 x 30
3	4	31147	Face washer, 8 mm	
4	2	30856	Nut, stainless	M8
5	1	6365088	Hose shield	Serie 910 og 1110

1100K, 1110K, 1220K, 1230K, 1320K, 1330K

Internal ref. 63 65 250

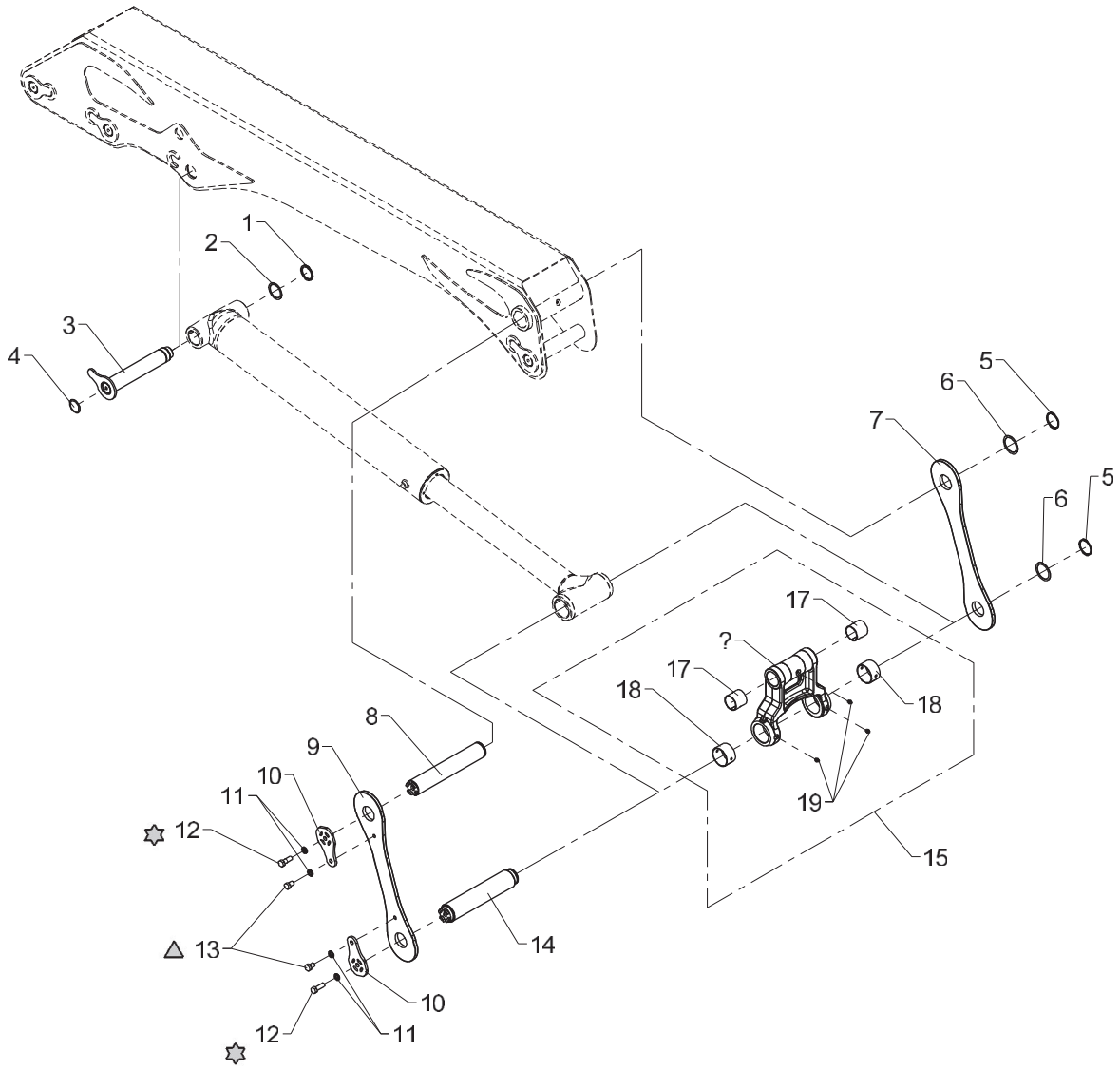

150 Nm

110 Nm

Link arm system, jib

Pos	Qty.	Part no.	Description	Remarks
1	1	33129	Circlip	
2	1	33276	Washer	PS 50 x 62 x 1,0
3	1	6365204	Pin	
4	1	63472	Plug	
5	2	33132	Circlip Din 471	55U
6	2	33277	Washer	PS 55 x 68 x 1,0
7	1	6365178	Link arm, left	
8	1	6365167	Pin	
9	1	6365177	Link arm, right	
10	2	6340169	Lock plate	
11	4	31099		14 mm
12	2	30207	Set screw	M14 x 40
13	2	30204	Set screw	M14 x 20
14	1	6365168	Pin	
15	1	6365170	Push rod, cpl.	
16	1	6365171	Push rod	
17	2	23440	Bushing, glacier	PM 5050 DX
18	2	23441	Bushing, glacier	PM 6540 DX
19	3	31318	Lubricator	1/8" RG

1100K, 1110K, 1220K, 1230K, 1320K, 1330K

63 66 030
Internal ref. 63 66 100

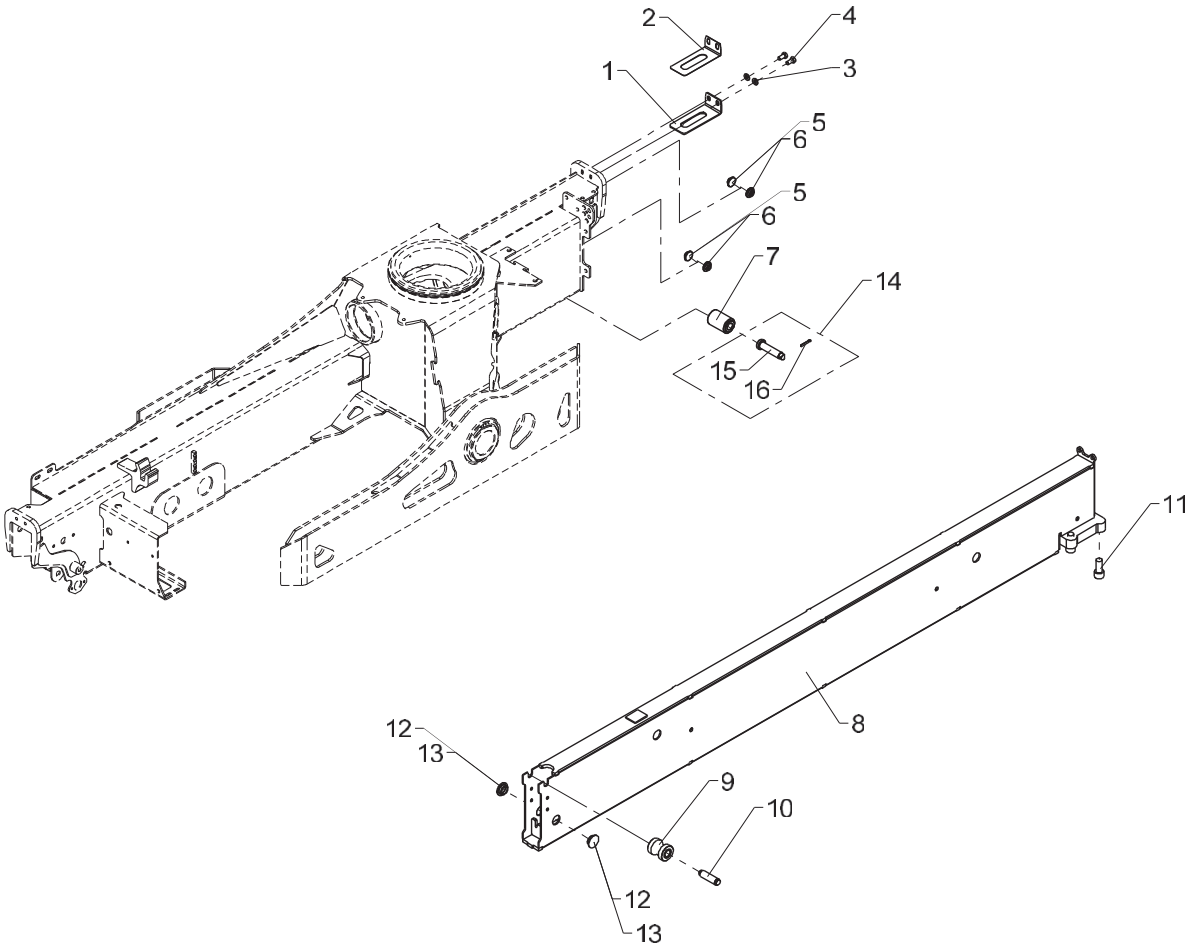

From loader 1170001
To loader
Created 10-02-2012
Modified

Stabilizer beam, type SV - 5570

Pos	Qty.	Part no.	Description	Remarks
		6366100	Stabilizer beam, type SV	
		6366030	No detection, legs down	
1	1	6365104	Spacer, 4mm	
2	1	6365105	Shim, 1mm	
3	2	31565	Washer, stainless	10 mm
4	2	31517	Set screw, stainless	M10 x 20
5	4	63429	Guide	ø30 x 3 mm
6	4	63430	Guide	ø30 x 2 mm
7	1	68009	Guide roller ø 50x73	
8	1	6365121	Stabilizer beam	
9	1	68010	Guide roller Ø50 59	
10	1	6365098	Pin for guide roller	
11	4	30339	Cylinder screw	MC18 x 40
12	2	63681	Slide block	3 mm
13	2	64424	Slide block	2 mm
14	1	6366030	No detection, legs down	
15	1	6365046	Pin for guide roller	
16	1	31615	Split pin	ø4 x 32

1100K, 1110K, 1220K, 1230K, 1320K, 1330K

63 66 030
Internal ref. 63 65 130

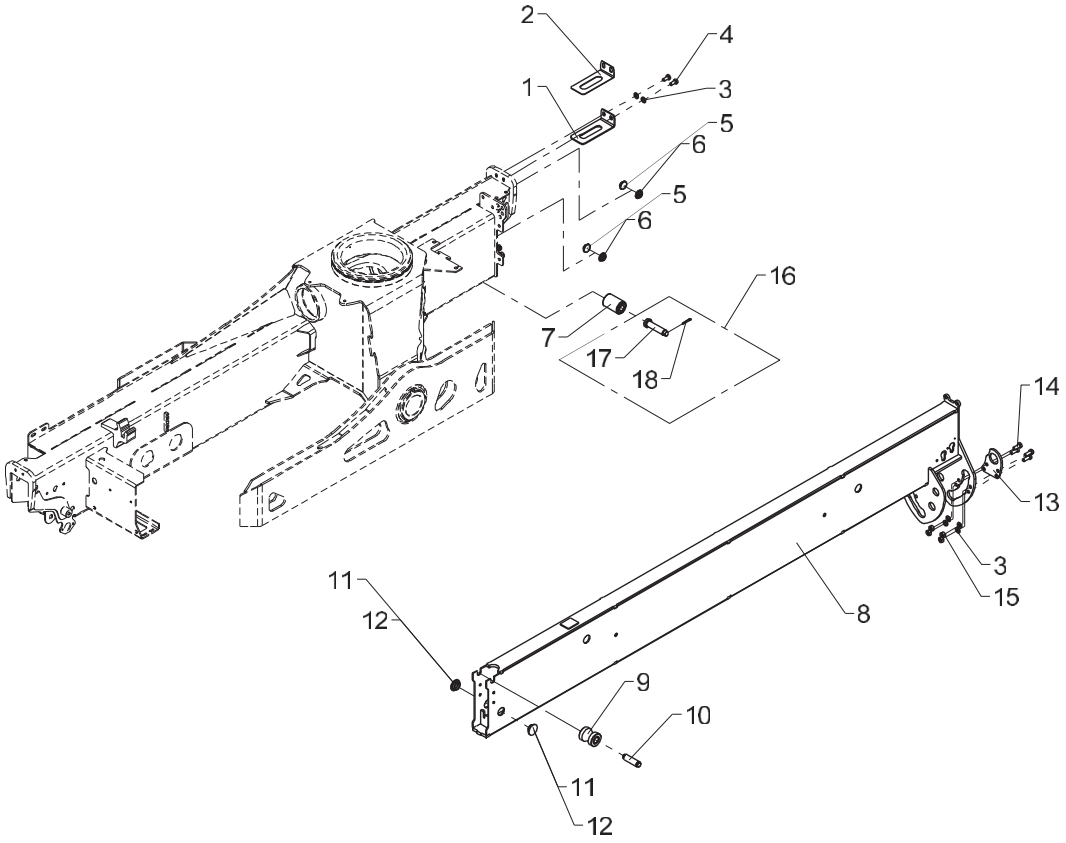

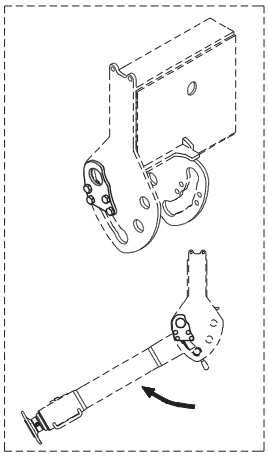

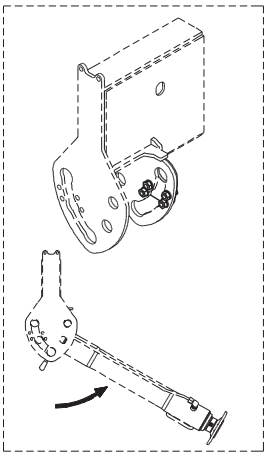

Stabilizer beam, type SR-60°, 5570

Pos	Qty.	Part no.	Description	Remarks
		6365130	Stabilizer beam, SR 5570	
		6366030	No detection, legs down	
1	1	6365104	Spacer, 4mm	
2	1	6365105	Shim, 1mm	
3	6	31565	Washer, stainless	10 mm
4	2	31517	Set screw, stainless	M10 x 20
5	4	63429	Guide	ø30 x 3 mm
6	4	63430	Guide	ø30 x 2 mm
7	1	68009	Guide roller ø 50x73	
8	1	6365131	Stabilizer beam (SR-5570)	
9	1	68010	Guide roller Ø50 59	
10	1	6365098	Pin for guide roller	
11	2	63681	Slide block	3 mm
12	2	64424	Slide block	2 mm
13	1	6342855	Plate	
14	6	30155	Set screw	M10 x 25
15	4	31551	Nut, stainless	M10
16	1	6366030	No detection, legs down	
17	1	6365046	Pin for guide roller	
18	1	31615	Split pin	ø4 x 32

1100K, 1110K, 1220K, 1230K, 1320K, 1330K

63 66 030
Internal ref. 63 65 810

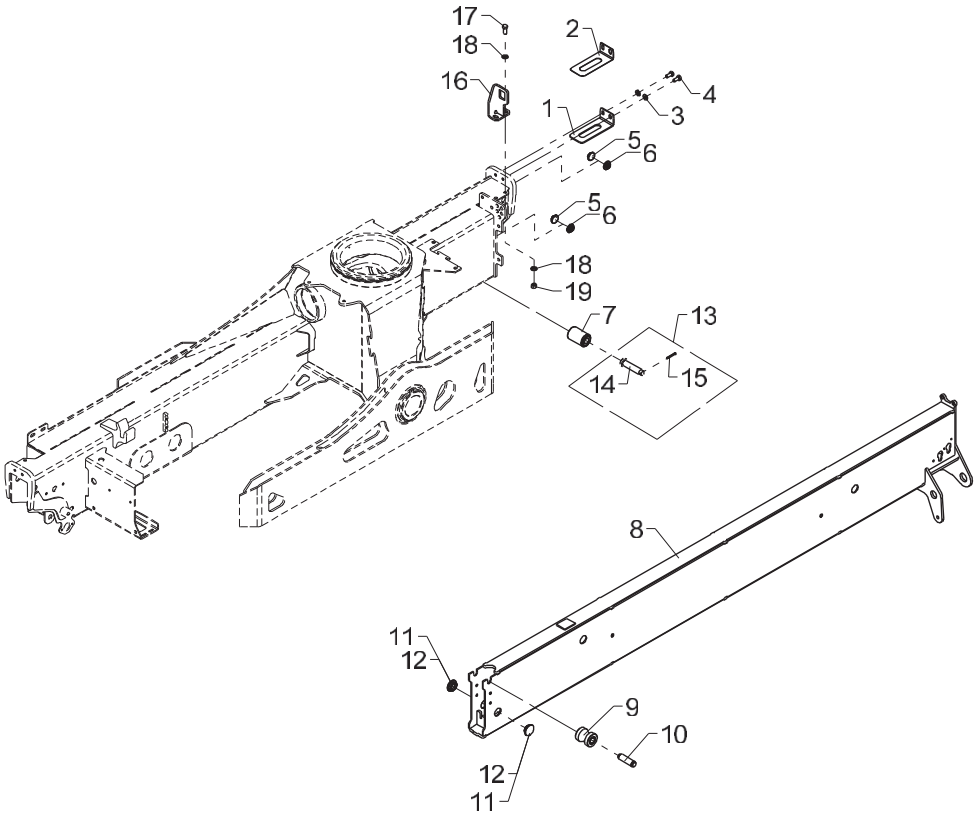

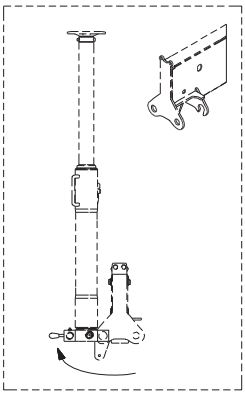

Stabilizer beam, type SR-180°, 5570

Pos	Qty.	Part no.	Description	Remarks
		6365810	Stabilizer beam, SR-180 5570	
		6366030	No detection, legs down	
1	1	6365104	Spacer, 4mm	
2	1	6365105	Shim, 1mm	
3	2	31565	Washer, stainless	10 mm
4	2	31517	Set screw, stainless	M10 x 20
5	4	63429	Guide	ø30 x 3 mm
6	4	63430	Guide	ø30 x 2 mm
7	1	68009	Guide roller ø 50x73	
8	1	6365811	Stabilizer beam	
9	1	68010	Guide roller Ø50 59	
10	1	6365098	Pin for guide roller	
11	2	63681	Slide block	3 mm
12	2	64424	Slide block	2 mm
13	1	6366030	No detection, legs down	
14	1	6365046	Pin for guide roller	
15	1	31615	Split pin	ø4 x 32
16	1	6363817	Lock plate	
17	2	31513	Set screw, stainless	M10 x 25
18	4	31177	Washer	10 mm
19	2	30888	Lock nut	

1100K, 1110K, 1220K, 1230K, 1320K, 1330K

63 66 030
Internal ref. 63 65 780

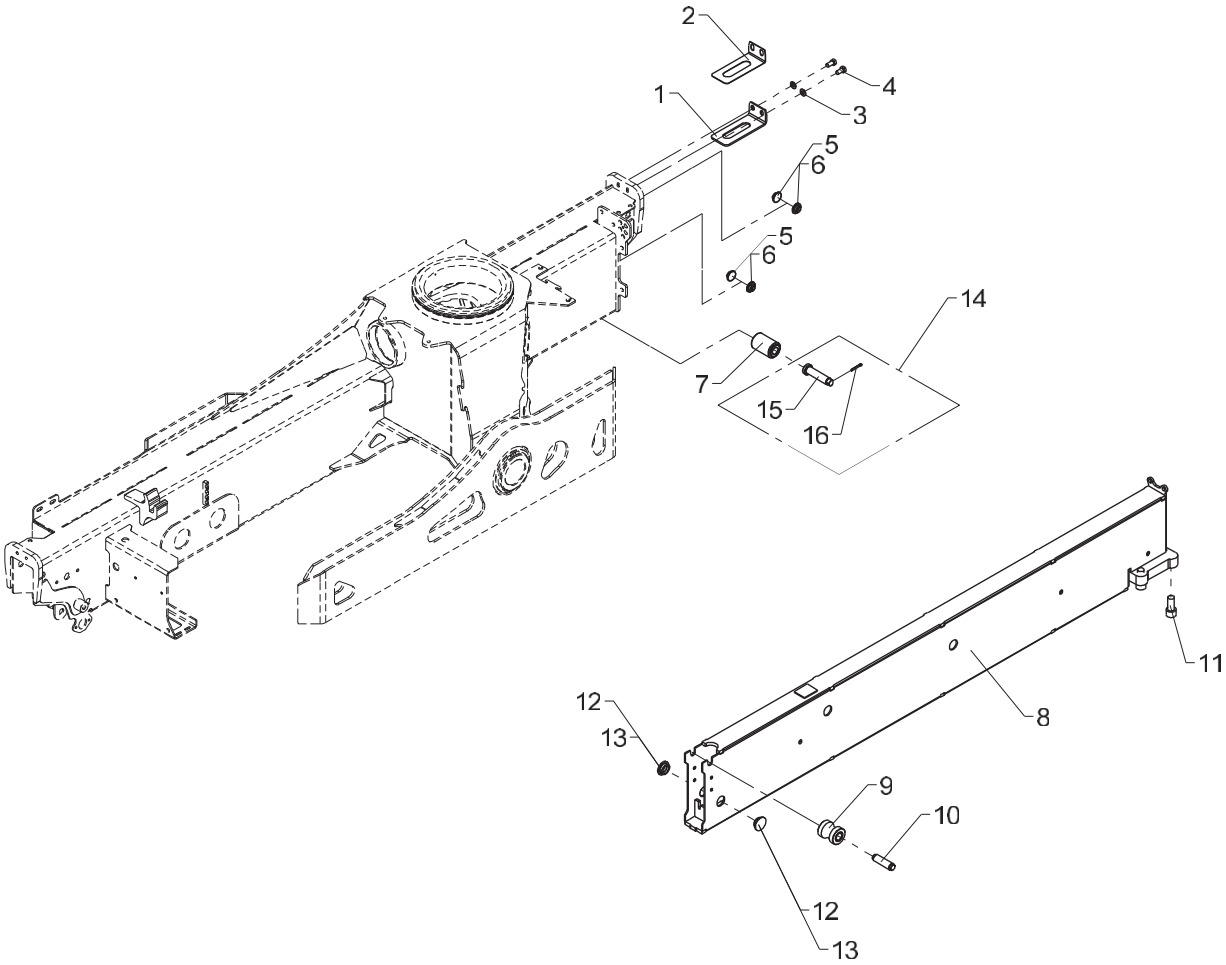

Stabilizer beam, type SV - 4600

Pos	Qty.	Part no.	Description	Remarks
		6365780	Stabilizer beam, SV 4600	
		6366030	No detection, legs down	
1	1	6365104	Spacer, 4mm	
2	1	6365105	Shim, 1mm	
3	2	31565	Washer, stainless	10 mm
4	2	31517	Set screw, stainless	M10 x 20
5	4	63429	Guide	ø30 x 3 mm
6	4	63430	Guide	ø30 x 2 mm
7	1	68009	Guide roller ø 50x73	
8	1	6365781	Stabilizer beam	
9	1	68010	Guide roller Ø50 59	
10	1	6365098	Pin for guide roller	
11	4	30339	Cylinder screw	MC18 x 40
12	2	63681	Slide block	3 mm
13	2	64424	Slide block	2 mm
14	1	6366030	No detection, legs down	
15	1	6365046	Pin for guide roller	
16	1	31615	Split pin	ø4 x 32

1100K, 1110K, 1220K, 1230K, 1320K, 1330K

63 66 030
Internal ref. 63 65 770

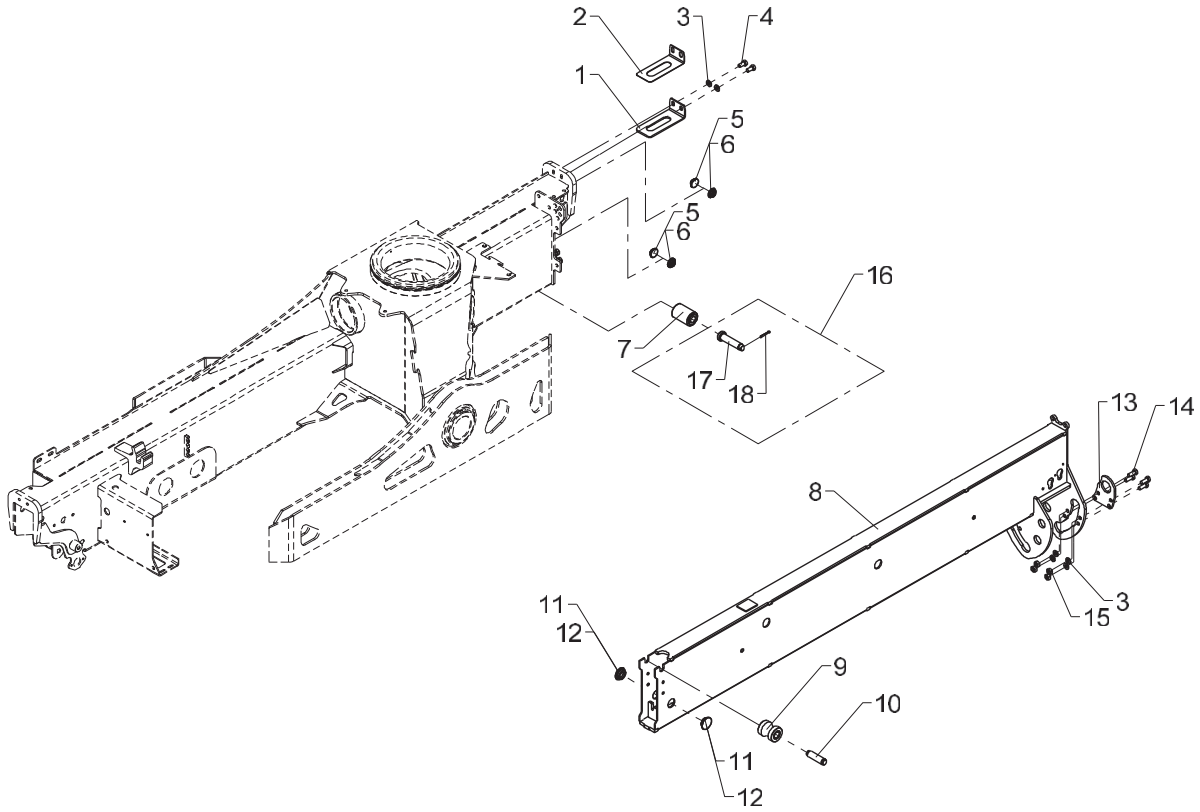

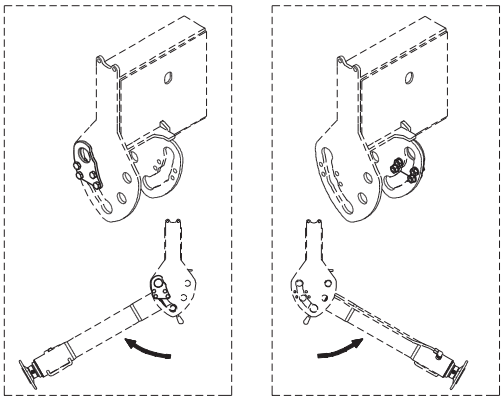

Stabilizer beam, type SR-60°, 4600

Pos	Qty.	Part no.	Description	Remarks
		6365770	Stabilizer beam, SR 4600	
		6366030	No detection, legs down	
1	1	6365104	Spacer, 4mm	
2	1	6365105	Shim, 1mm	
3	6	31565	Washer, stainless	10 mm
4	2	31517	Set screw, stainless	M10 x 20
5	4	63429	Guide	ø30 x 3 mm
6	4	63430	Guide	ø30 x 2 mm
7	1	68009	Guide roller ø 50x73	
8	1	6365791	Stabilizer beam	
9	1	68010	Guide roller Ø50 59	
10	1	6365098	Pin for guide roller	
11	2	63681	Slide block	3 mm
12	2	64424	Slide block	2 mm
13	1	6342855	Plate	
14	6	30155	Set screw	M10 x 25
15	4	31551	Nut, stainless	M10
16	1	6366030	No detection, legs down	
17	1	6365046	Pin for guide roller	
18	1	31615	Split pin	ø4 x 32

1100K, 1110K, 1220K, 1230K, 1320K, 1330K

63 66 030
Internal ref. 63 65 800

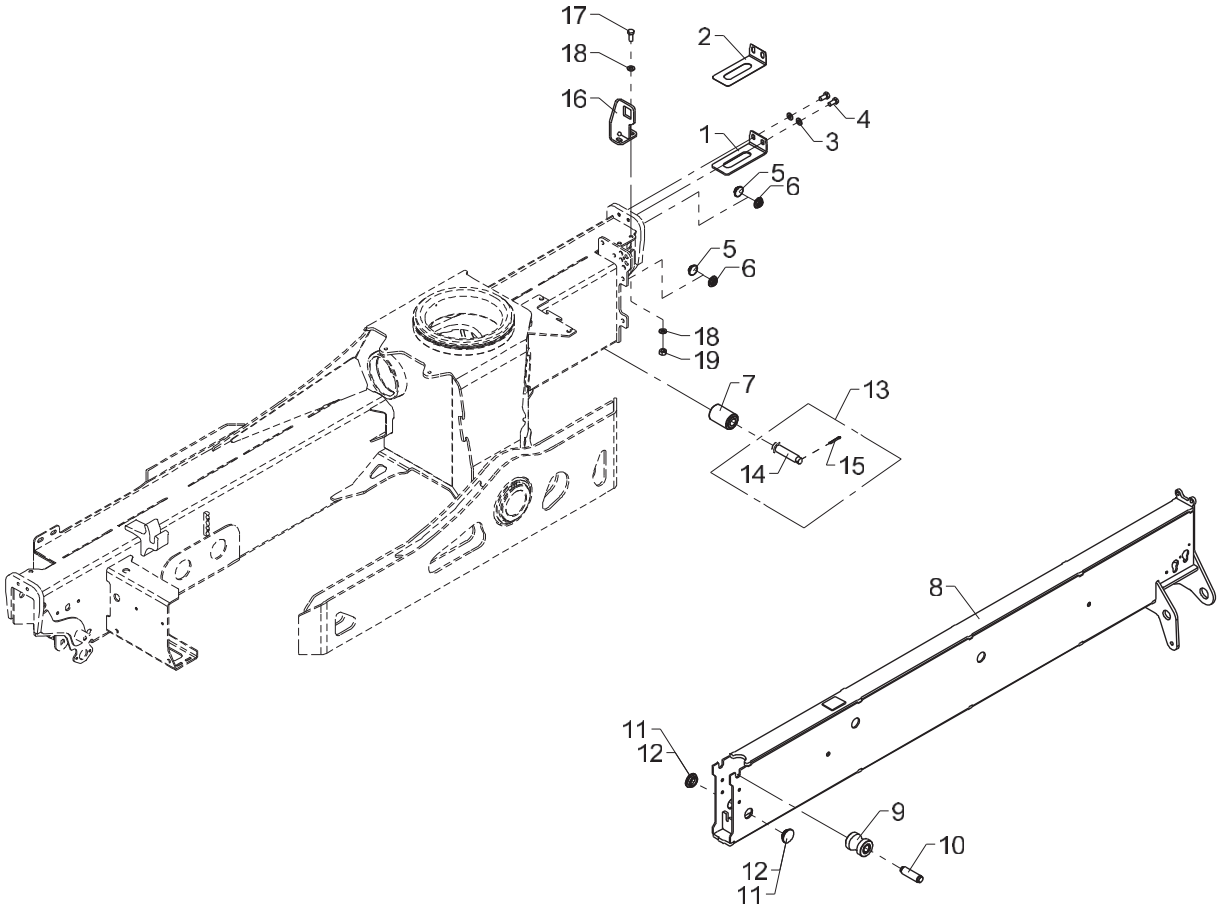

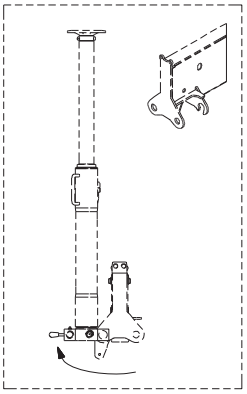

Stabilizer beam, type SR-180°, 4600

Pos	Qty.	Part no.	Description	Remarks
		6365800	Stabilizer beam, SR-180 4600	
		6366030	No detection, legs down	
1	1	6365104	Spacer, 4mm	
2	1	6365105	Shim, 1mm	
3	2	31565	Washer, stainless	10 mm
4	2	31517	Set screw, stainless	M10 x 20
5	4	63429	Guide	ø30 x 3 mm
6	4	63430	Guide	ø30 x 2 mm
7	1	68009	Guide roller ø 50x73	
8	1	6365801	Stabilizer beam	
9	1	68010	Guide roller Ø50 59	
10	1	6365098	Pin for guide roller	
11	2	63681	Slide block	3 mm
12	2	64424	Slide block	2 mm
13	1	6366030	No detection, legs down	
14	1	6365046	Pin for guide roller	
15	1	31615	Split pin	ø4 x 32
16	1	6363817	Lock plate	
17	2	31513	Set screw, stainless	M10 x 25
18	4	31177	Washer	10 mm
19	2	30888	Lock nut	

1100K, 1110K, 1220K, 1230K, 1320K, 1330K

Internal ref. 63 66 020

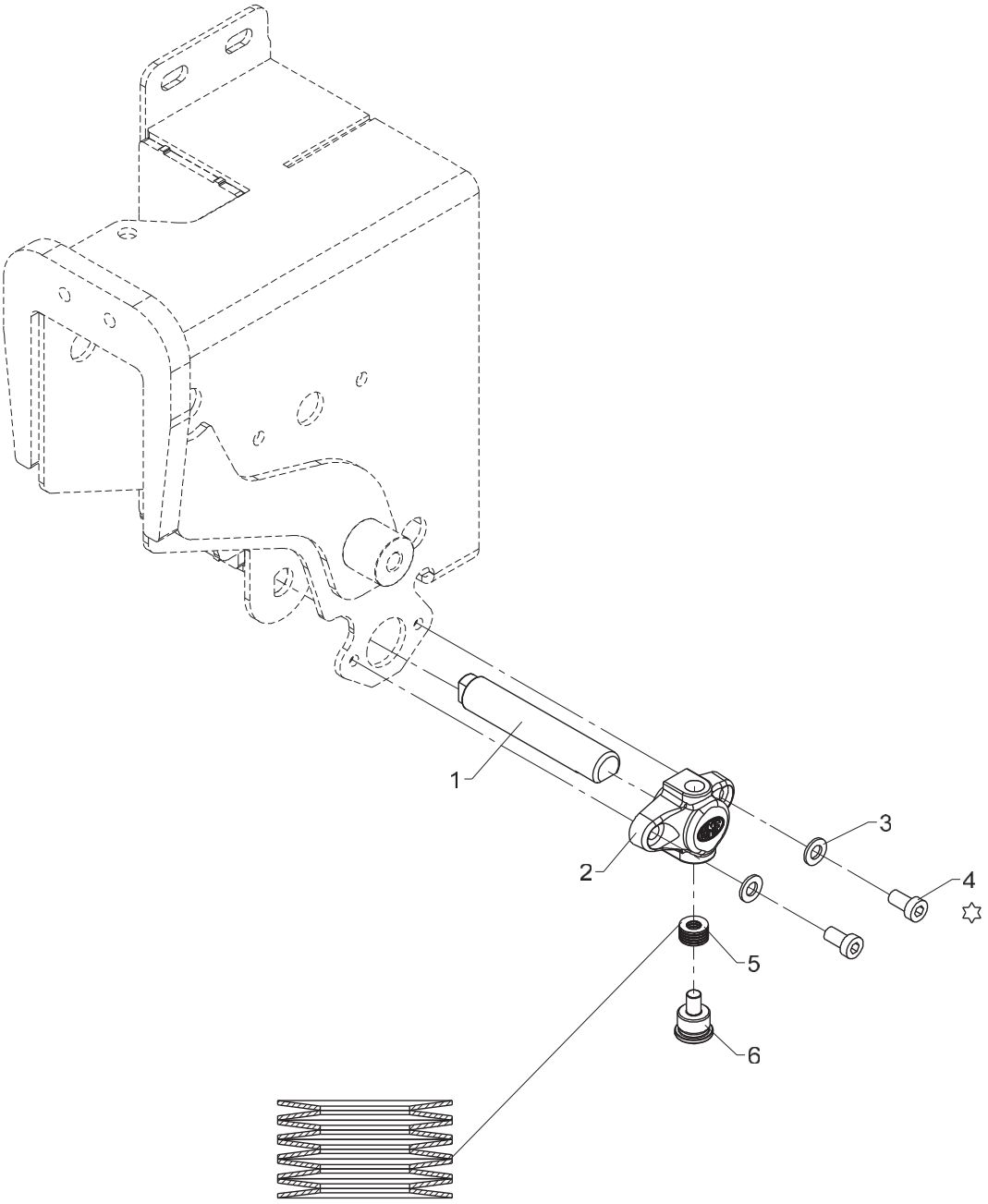

✡ Loctite 243

Detection, stabilizer down (CYL/CYBEL)

Pos	Qty.	Part no.	Description	Remarks
1	1	6365045	Pin for guide roller	
2	1	64575	Housing	
3	2	31147	Face washer, 8 mm	
4	2	32478	Screw	M8 x 16
5	10	33496	Disc spring washer	
6	1	6341979	Pin	

1100K, 1110K, 1220K, 1230K, 1320K, 1330K

Internal ref. 63 40 520

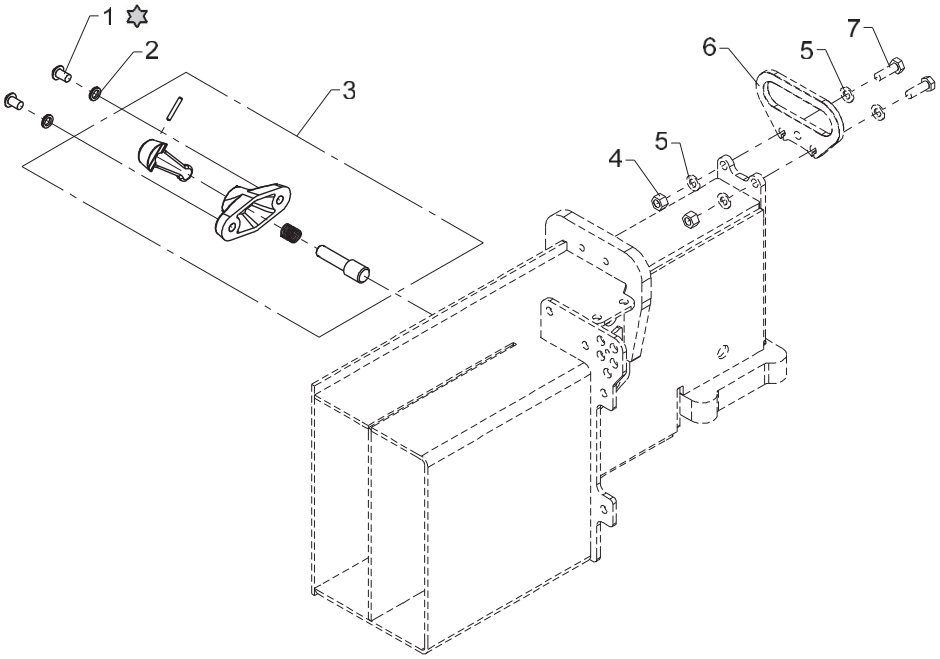

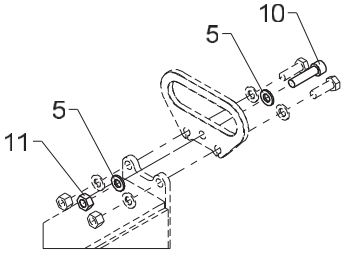

900K til 1230K

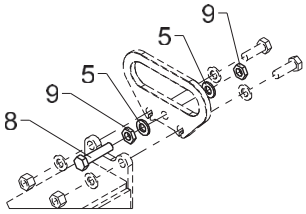

Kun til A = 4600

✡ Loctite 243

Stabilizer lock and lever

Pos	Qty.	Part no.	Description	Remarks
		6340520	Stabilizer lock + handle	
1	2	31081	Screw	M10 x 16
2	2	30933	Nordlock washer	
3	1	63451	Stabilizer lock	
4	2	30888	Lock nut	
5	8	31565	Washer, stainless	10 mm
6	1	6306169	Lever, stabilizer beam	
7	2	30156	Set screw, stainless	M10 x 30
8	1	30377	Set screw	M10 x 45
9	2	32111	Counter nut	M10
10	1	30456	Screw	MC10 x 40
11	1	30858	Nut	M10

1100K, 1110K, 1220K, 1230K, 1320K, 1330K

Internal ref. 63 41 810

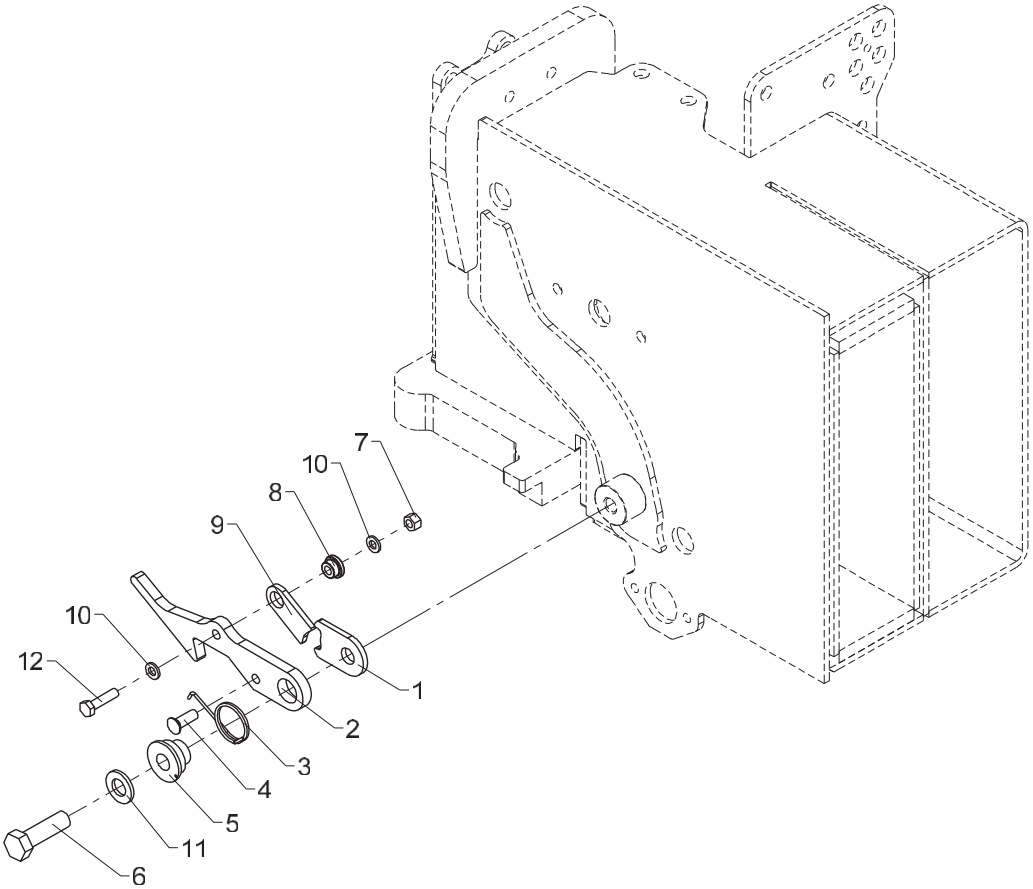

Stabilizer safety lock

Pos	Qty.	Part no.	Description	Remarks
1	1	6236044	Plate	
2	1	6245244	Hook	
3	1	33476	Spring	6247194
4	1	31290	Spike, galvanized	7 x 20
5	1	6245264	Bushing	
6	1	30179	Set screw	M12 x 40
7	1	30884	Lock nut, stainless	M6
8	1	63440	Washer	
9	1	6236054	Click	
10	2	32302	Face washer, stainless	6 mm
11	1	32338	Washer	12 mm
12	1	30114	Set screw, stainless	M6 x 25

1100K, 1110K, 1220K, 1230K, 1320K, 1330K

Internal ref. 63 42 810

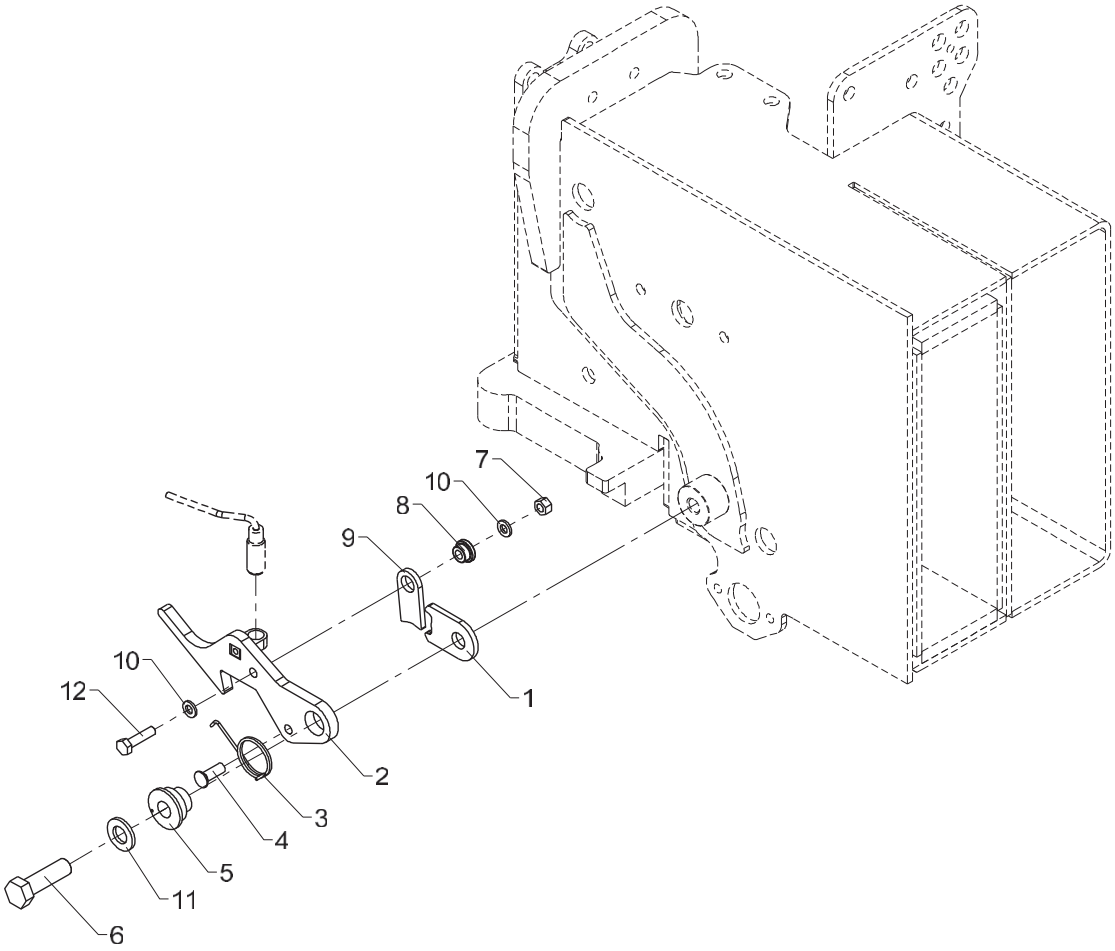

Safety lock (CE, manual extension)

Pos	Qty.	Part no.	Description	Remarks
1	1	6236044	Plate	
2	1	6341091	Latch	
3	1	33476	Spring	6247194
4	1	31290	Spike, galvanized	7 x 20
5	1	6245264	Bushing	
6	1	30179	Set screw	M12 x 40
7	1	30884	Lock nut, stainless	M6
8	1	63440	Washer	
9	1	6236054	Click	
10	2	32302	Face washer, stainless	6 mm
11	1	32338	Washer	12 mm
12	1	30114	Set screw, stainless	M6 x 25

Obsolete

1100K, 1110K, 1220K, 1230K, 1320K, 1330K

Internal ref. 63 40 500

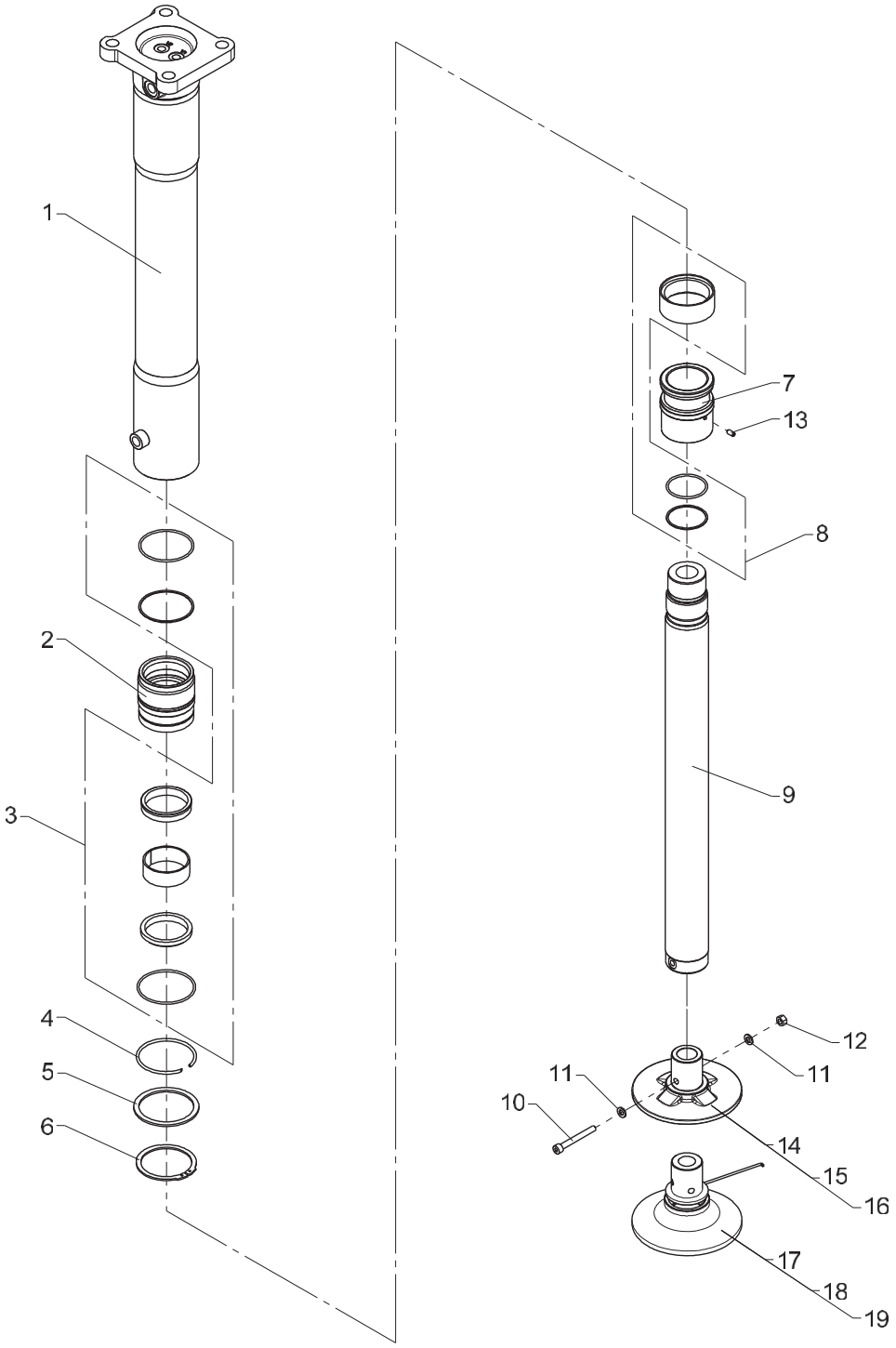

Obsolete

458 02 200

Stabilizer cylinder, C80-520, type V

From loader 1170001
To loader 1170134

Created 21-11-2008
Modified 25-10-2013

Pos	Qty.	Part no.	Description	Remarks
		6340500	Stabilizer cylinder	
1	1	6340504	Cylinder pipe, fixed leg	
2	1	6340501	Guide	
3	1	6894110	Seal kit f. guide	
4	1	33400	Lock ring	
5	1	6340515	Back ring	
6	1	33143	Circlip	80U
7	1	6340516	Piston	
8	1	6894100	Seal kit f. piston	
9	1	6340503	Piston rod	
10	1	32428	Sockethead screw	MC8 x 70
11	2	31147	Face washer, 8 mm	
12	1	30886	Lock nut, stainless	M8
13	1	32256	Pointed screw	MSP6 x 12
14	1	6340506	Footplate, standard	
15	1	6340509	Footplate, 100 mm extension	
16	1	6340512	Footplate, 200 mm extension	
17	1	6342680	Footplate + ball joint std.	
18	1	6342690	Footplate + ball joint 100 mm	
19	1	6342700	Footplate + ball joint 200 mm	

1100K, 1110K, 1220K, 1230K, 1320K, 1330K

Internal ref. 63 40 500

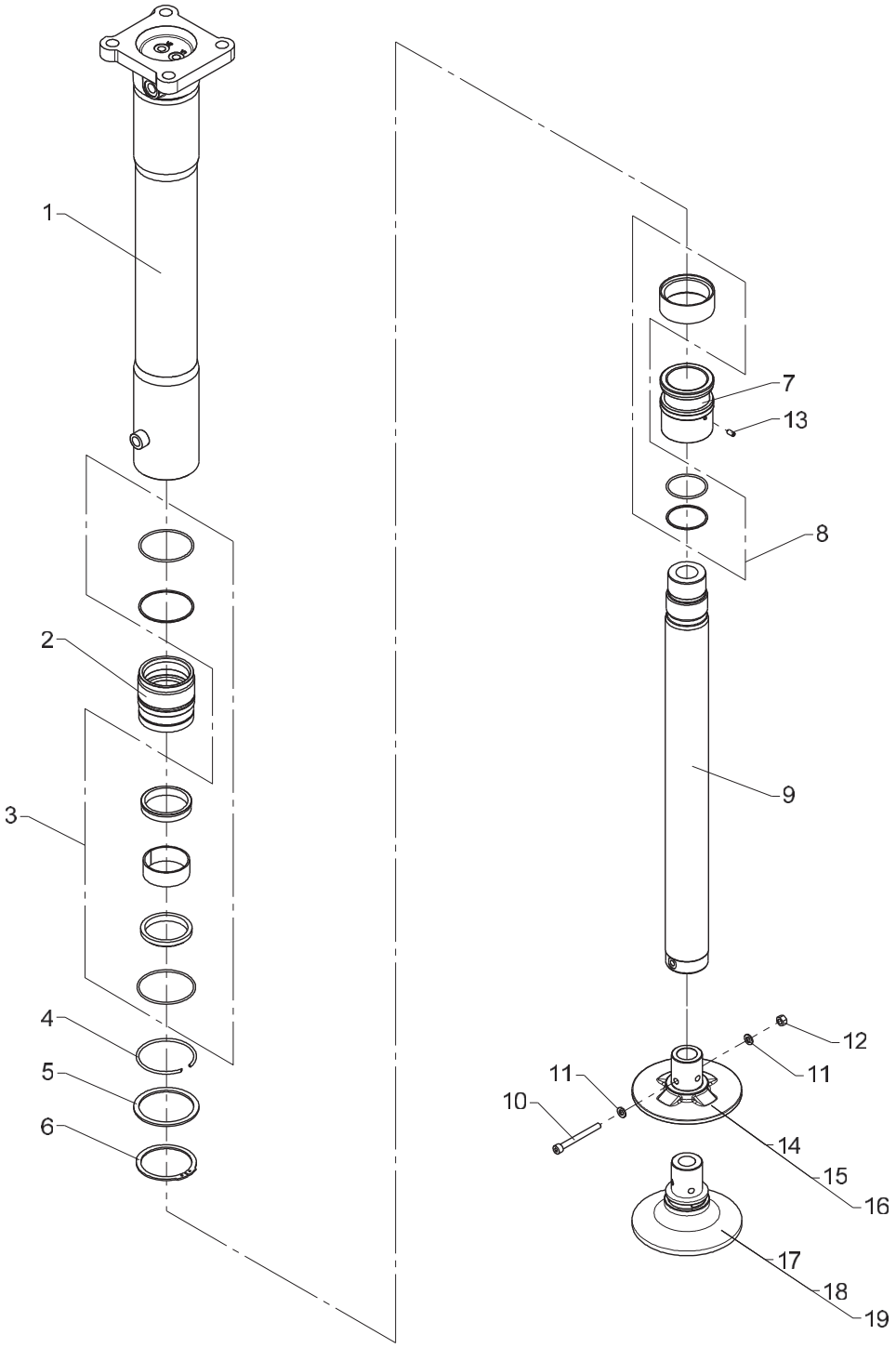

From loader 1170135
To loader

Stabilizer cylinder, C80-520, type V

Created 02-04-2013
Modified 29-01-2014

Pos	Qty.	Part no.	Description	Remarks
		6340500	Stabilizer cylinder	
1	1	6340504	Cylinder pipe, fixed leg	
2	1	6340501	Guide	
3	1	6894110	Seal kit f. guide	
4	1	33400	Lock ring	
5	1	6340515	Back ring	
6	1	33143	Circlip	80U
7	1	6340516	Piston	
8	1	6894100	Seal kit f. piston	
9	1	6340503	Piston rod	
10	1	30965	Screw	MC8 x 80
11	2	31147	Face washer, 8 mm	
12	1	30886	Lock nut, stainless	M8
13	1	32256	Pointed screw	MSP6 x 12
14	1	6340506	Footplate, standard	
15	1	6343510	Extension piece, 100 mm cpl.	
16	1	6343520	Extension piece, 200 mm cpl.	
17	1	6342680	Footplate + ball joint std.	
18	1	6343490	Foot plate with ball joint,100	
19	1	6343500	Foot plate with ball joint,200	

1100K, 1110K, 1220K, 1230K, 1320K, 1330K

Internal ref. 63 43 450

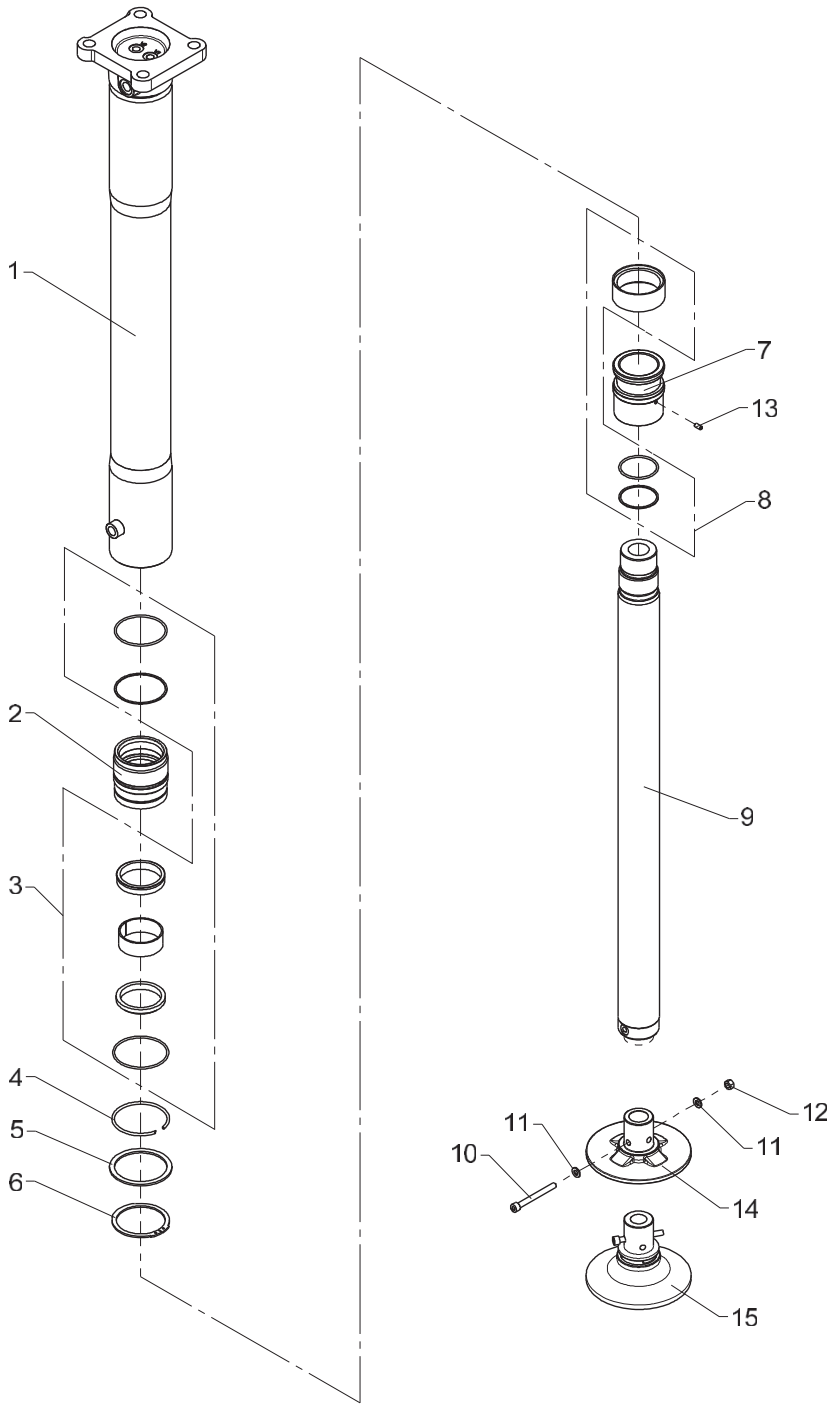

Stabilizer cylinder, C80-720, type V

Pos	Qty.	Part no.	Description	Remarks
		6343450	Stabilizer cylinder, C80-720	
1	1	6343451	Cylinder tube, fixed leg	
2	1	6340501	Guide	
3	1	6894110	Seal kit f. guide	
4	1	33400	Lock ring	
5	1	6340515	Back ring	
6	1	33143	Circlip	80U
7	1	6340516	Piston	
8	1	6894100	Seal kit f. piston	
9	1	6343453	Piston rod	
10	1	30965	Screw	MC8 x 80
11	2	31147	Face washer, 8 mm	
12	1	30886	Lock nut, stainless	M8
13	1	32256	Pointed screw	MSP6 x 12
14	1	6340506	Footplate, standard	
15	1	6342680	Footplate + ball joint std.	

1100K, 1110K, 1220K, 1230K, 1320K, 1330K

Internal ref. 63 40 510

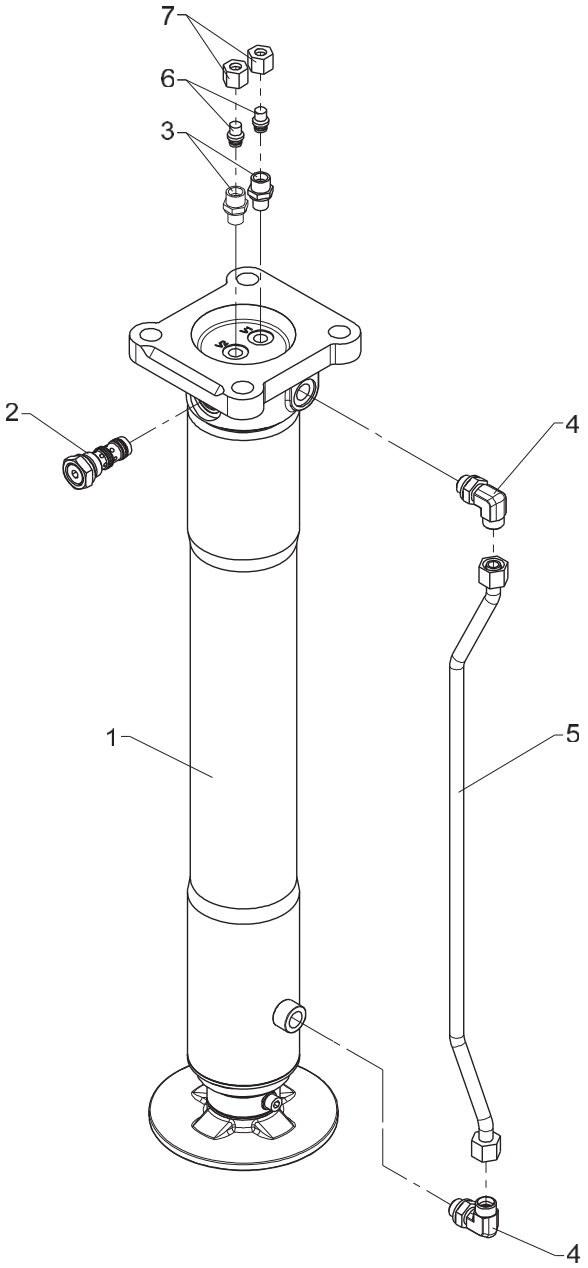

Stabilizer cylinder with check valve, C80-520, type V

Pos	Qty.	Part no.	Description	Remarks
1	1	6340500	Stabilizer cylinder	
2	1	58496	Cartridge	
3	2	25121	Connection	P-GEV 10 LR-WD
4	2	26897	Elbow connection	12 mm - 3/8"
5	1	6340514	Pipe, V	
6	2	25202	Blanking plug	VSD 10 L
7	2	25182	Coupling nut	M 10 L

1100K, 1110K, 1220K, 1230K, 1320K, 1330K

Internal ref. 63 43 460

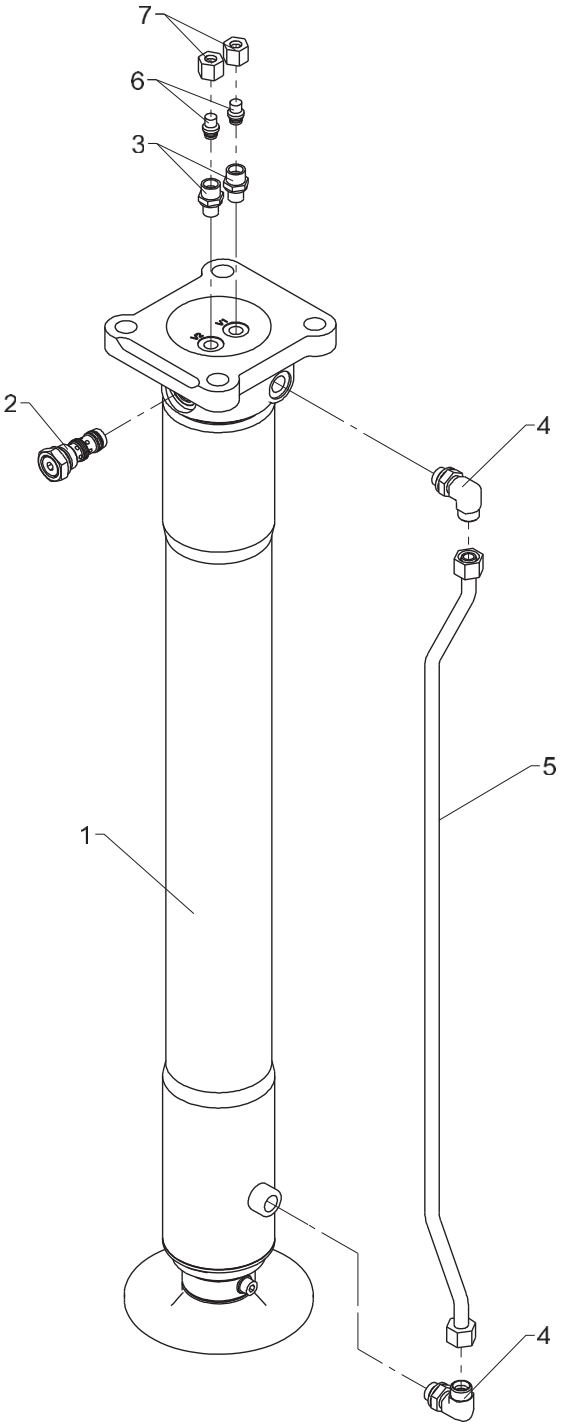

From loader 1170001
To loader
Created 07-10-2014
Modified

Stabilizer cylinder with check valve, C80-720, type V

Pos	Qty.	Part no.	Description	Remarks
1	1	6343450	Stabilizer cylinder, C80-720	
2	1	58496	Cartridge	
3	2	25121	Connection	P-GEV 10 LR-WD
4	2	26897	Elbow connection	12 mm - 3/8"
5	1	6343461	Pipe, V	
6	2	25202	Blanking plug	VSD 10 L
7	2	25182	Coupling nut	M 10 L

1100K, 1110K, 1220K, 1230K, 1320K, 1330K

Internal ref. 63 43 170

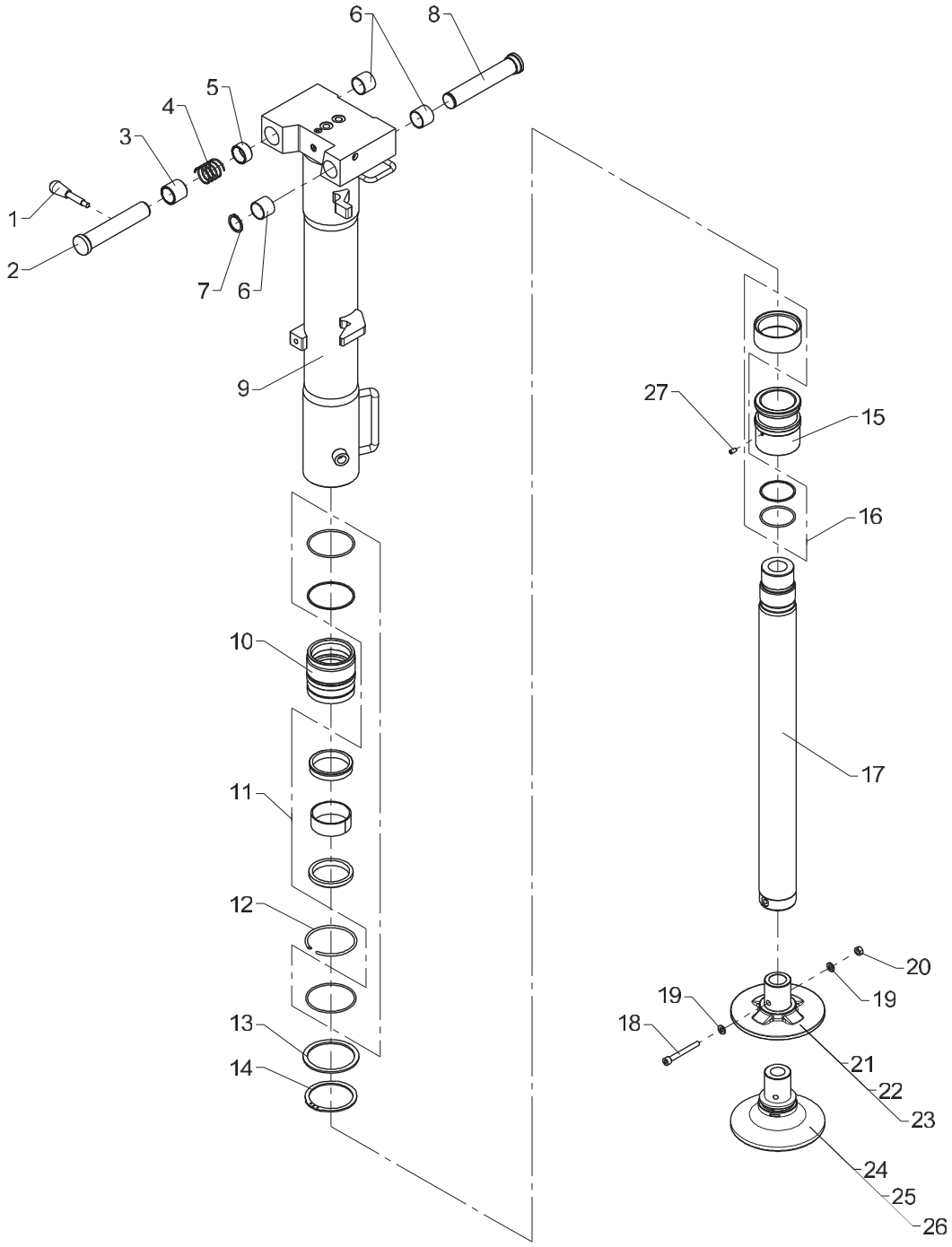

Obsolete

458 02 220

From loader 1170001
To loader 1170134

Created 06-10-2011
Modified 25-10-2013

Stabilizer cylinder, C80-520, type R-180°

Pos	Qty.	Part no.	Description	Remarks
		6343170	Stab. cyl., C80-520, type R	
1	1	64352	Lever with knob	
2	1	6340812	Pin	
3	1	6340824	Bushing	
4	1	33490	Compression spring	
5	1	6340811	Distance ring	
6	3	23417	Composite bearing	ø28/32 x 25
7	1	33122	Circlip	28U
8	1	6340813	Pin	
9	1	6340828	Cylinder tube R180	
10	1	6340501	Guide	
11	1	6894110	Seal kit f. guide	
12	1	33400	Lock ring	
13	1	6340515	Back ring	
14	1	33143	Circlip	80U
15	1	6340516	Piston	
16	1	6894100	Seal kit f. piston	
17	1	6340503	Piston rod	
18	1	32428	Sockethead screw	MC8 x 70
19	2	31147	Face washer, 8 mm	
20	1	30856	Nut, stainless	M8
21	1	6340506	Footplate, standard	
22	1	6340509	Footplate, 100 mm extension	
23	1	6340512	Footplate, 200 mm extension	
24	1	6342680	Footplate + ball joint std.	
25	1	6342690	Footplate + ball joint 100 mm	
26	1	6342700	Footplate + ball joint 200 mm	
27	1	32256	Pointed screw	MSP6 x 12

1100K, 1110K, 1220K, 1230K, 1320K, 1330K

Internal ref. 63 43 170

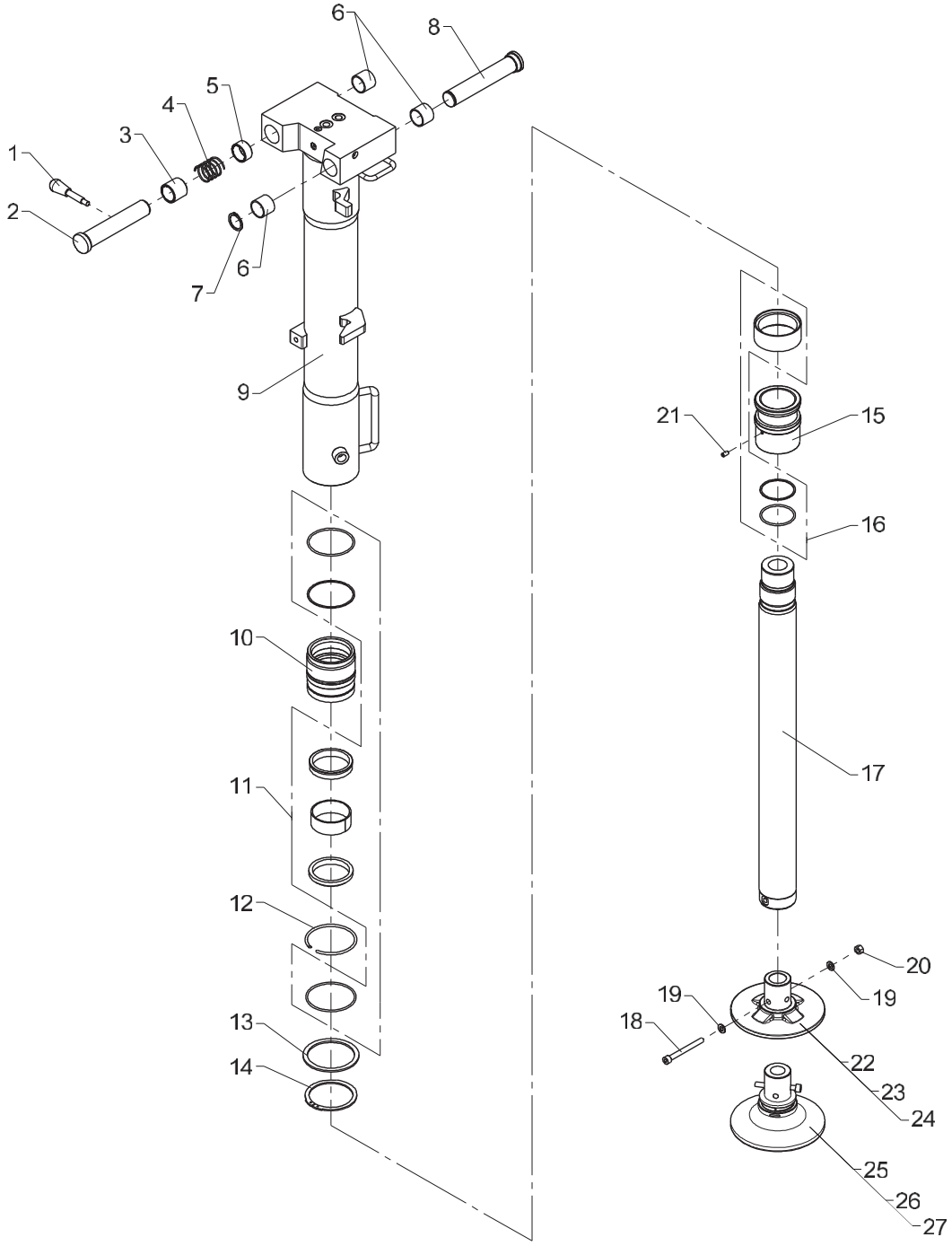

Stabilizer cylinder, C80-520, type R-180°

Pos	Qty.	Part no.	Description	Remarks
		6343170	Stab. cyl., C80-520, type R	
1	1	64352	Lever with knob	
2	1	6340812	Pin	
3	1	6340824	Bushing	
4	1	33490	Compression spring	
5	1	6340811	Distance ring	
6	3	23417	Composite bearing	ø28/32 x 25
7	1	33122	Circlip	28U
8	1	6340813	Pin	
9	1	6340828	Cylinder tube R180	
10	1	6340501	Guide	
11	1	6894110	Seal kit f. guide	
12	1	33400	Lock ring	
13	1	6340515	Back ring	
14	1	33143	Circlip	80U
15	1	6340516	Piston	
16	1	6894100	Seal kit f. piston	
17	1	6340503	Piston rod	
18	1	30965	Screw	MC8 x 80
19	2	31147	Face washer, 8 mm	
20	1	30886	Lock nut, stainless	M8
21	1	32256	Pointed screw	MSP6 x 12
22	1	6340506	Footplate, standard	
23	1	6343510	Extension piece, 100 mm cpl.	
24	1	6343520	Extension piece, 200 mm cpl.	
25	1	6342680	Footplate + ball joint std.	
26	1	6343490	Foot plate with ball joint,100	
27	1	6343500	Foot plate with ball joint,200	

1100K, 1110K, 1220K, 1230K, 1320K, 1330K

Internal ref. 63 43 800

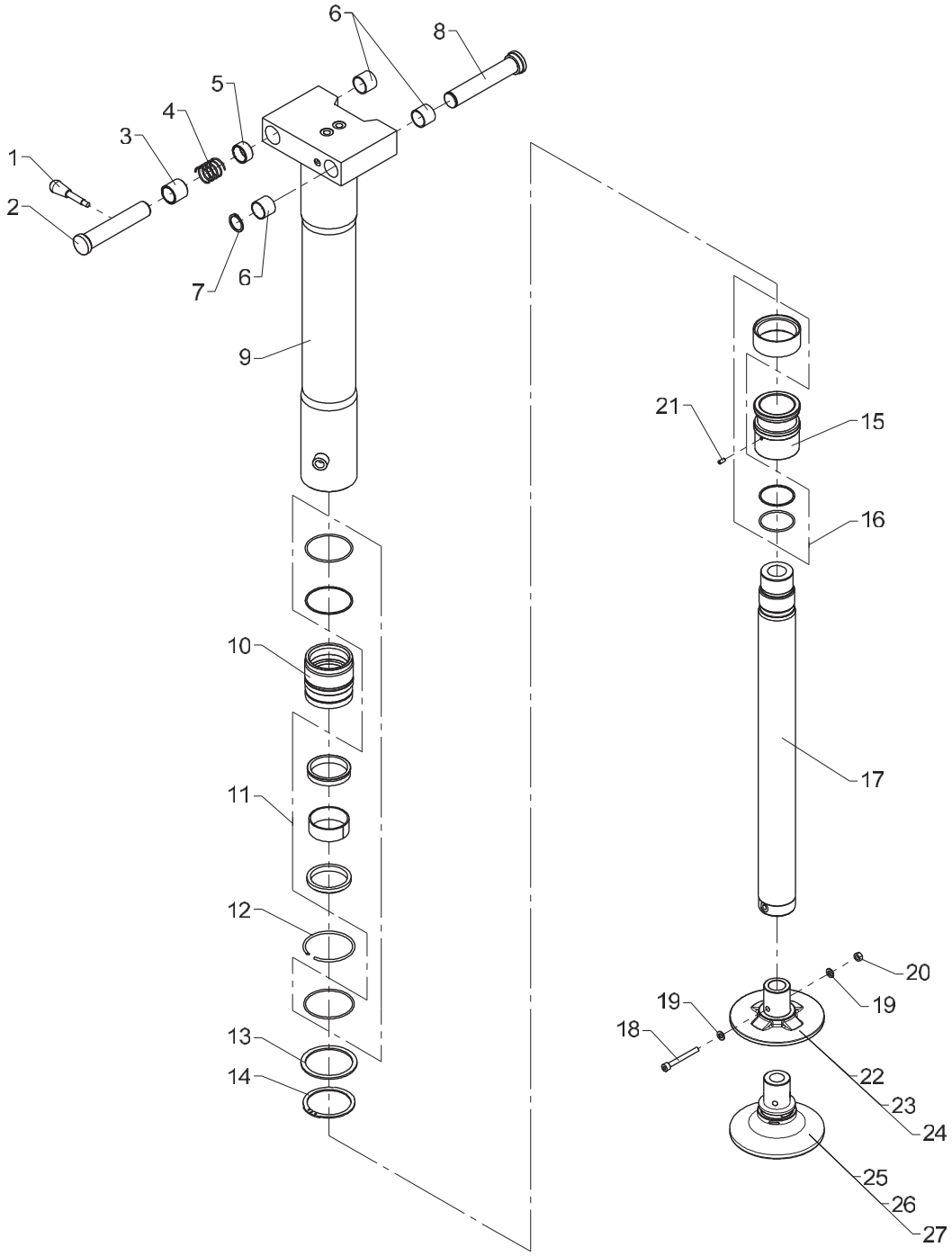

Obsolete

458 02 221

Stabilizer cylinder, C80-520, type R-60°

From loader 1170001
To loader 1170134

Created 30-06-2009
Modified 25-10-2013

Pos	Qty.	Part no.	Description	Remarks
		6343800	Stab. cylinder, C80-520, typeR	
1	1	64352	Lever with knob	
2	1	6340812	Pin	
3	1	6340824	Bushing	
4	1	33490	Compression spring	
5	1	6340811	Distance ring	
6	3	23417	Composite bearing	ø28/32 x 25
7	1	33122	Circlip	28U
8	1	6340827	Pin	
9	1	6340821	Cylinder pipe, R	
10	1	6340501	Guide	
11	1	6894110	Seal kit f. guide	
12	1	33400	Lock ring	
13	1	6340515	Back ring	
14	1	33143	Circlip	80U
15	1	6340516	Piston	
16	1	6894100	Seal kit f. piston	
17	1	6340503	Piston rod	
18	1	32428	Sockethead screw	MC8 x 70
19	2	31147	Face washer, 8 mm	
20	1	30856	Nut, stainless	M8
21	1	32256	Pointed screw	MSP6 x 12
22	1	6340506	Footplate, standard	
23	1	6340509	Footplate, 100 mm extension	
24	1	6340512	Footplate, 200 mm extension	
25	1	6342680	Footplate + ball joint std.	
26	1	6342690	Footplate + ball joint 100 mm	
27	1	6342700	Footplate + ball joint 200 mm	

1100K, 1110K, 1220K, 1230K, 1320K, 1330K

Internal ref. 63 43 800

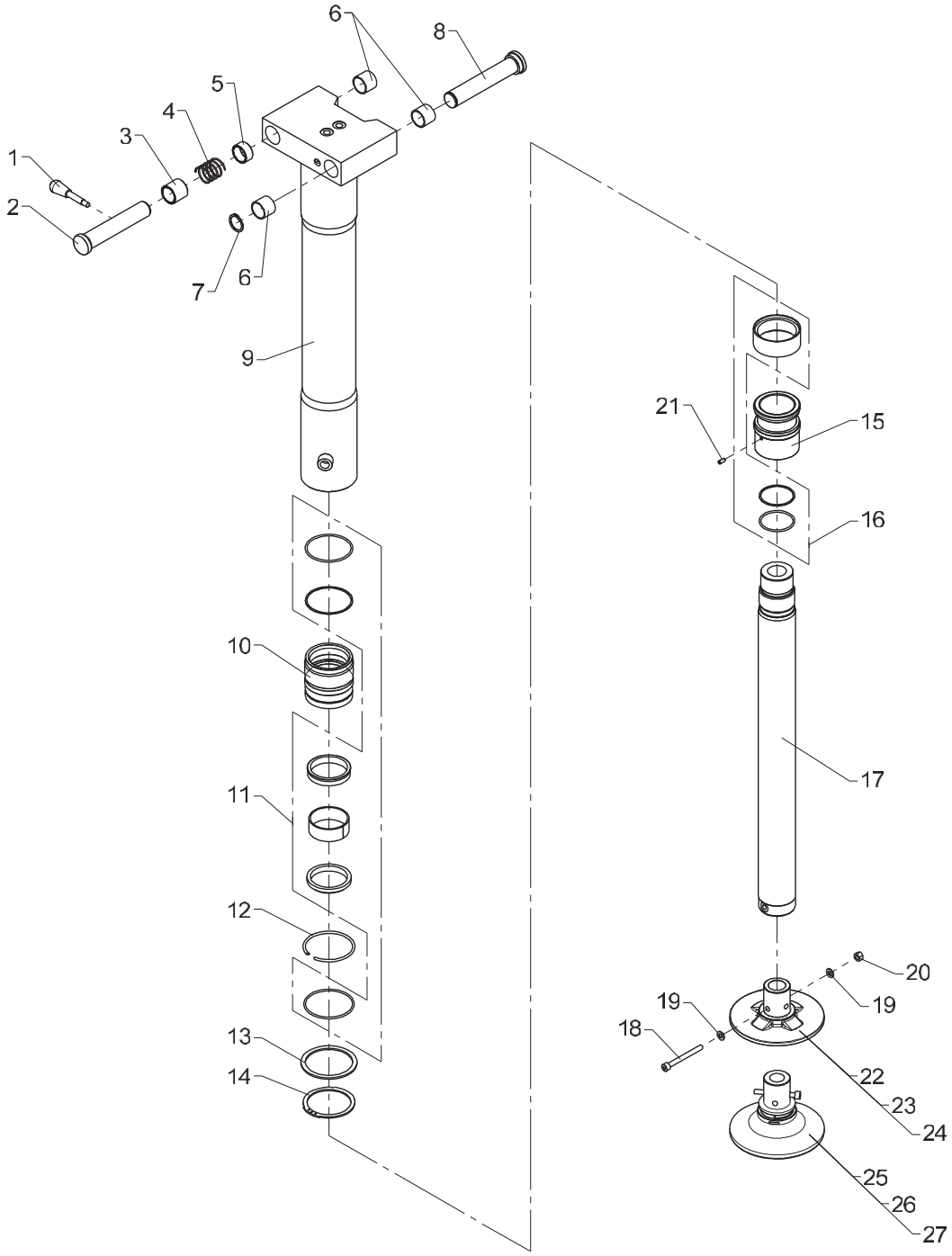

Stabilizer cylinder, C80-520, type R-60°

Pos	Qty.	Part no.	Description	Remarks
		6343800	Stab. cylinder, C80-520, typeR	
1	1	64352	Lever with knob	
2	1	6340812	Pin	
3	1	6340824	Bushing	
4	1	33490	Compression spring	
5	1	6340811	Distance ring	
6	3	23417	Composite bearing	ø28/32 x 25
7	1	33122	Circlip	28U
8	1	6340827	Pin	
9	1	6340821	Cylinder pipe, R	
10	1	6340501	Guide	
11	1	6894110	Seal kit f. guide	
12	1	33400	Lock ring	
13	1	6340515	Back ring	
14	1	33143	Circlip	80U
15	1	6340516	Piston	
16	1	6894100	Seal kit f. piston	
17	1	6340503	Piston rod	
18	1	30965	Screw	MC8 x 80
19	2	31147	Face washer, 8 mm	
20	1	30886	Lock nut, stainless	M8
21	1	32256	Pointed screw	MSP6 x 12
22	1	6340506	Footplate, standard	
23	1	6343510	Extension piece, 100 mm cpl.	
24	1	6343520	Extension piece, 200 mm cpl.	
25	1	6342680	Footplate + ball joint std.	
26	1	6343490	Foot plate with ball joint,100	
27	1	6343500	Foot plate with ball joint,200	

1100K, 1110K, 1220K, 1230K, 1320K, 1330K

Internal ref. 63 43 810

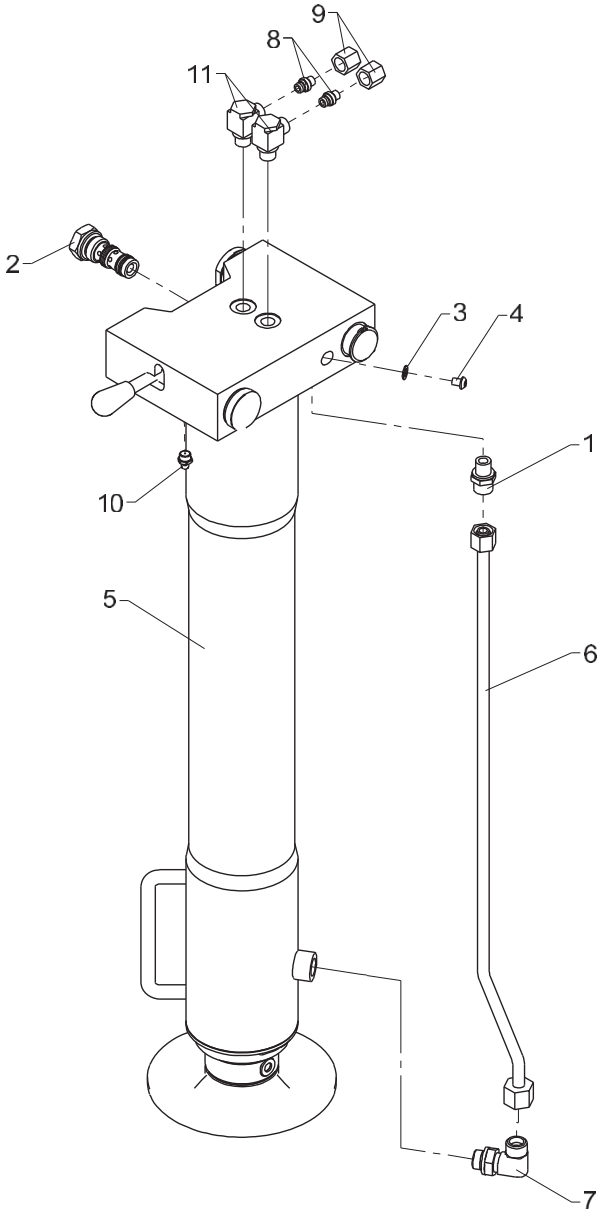

458 02 230

From loader 1170001
To loader

Created 30-06-2009
Modified

Stabilizer cylinder with check valve, type R-60°

Pos	Qty.	Part no.	Description	Remarks
1	1	25121	Connection	P-GEV 10 LR-WD
2	1	58496	Cartridge	
3	1	21109	Seal washer	ø7,1 x 12 x 1
4	1	31778	Screw, stainless	M6 x 8
5	1	6343800	Stab. cylinder, C80-520, typeR	
6	1	6340823	Pipe, R	
7	1	26899	Elbow connection	10 mm - 3/8"
8	2	26166	Blanking plug	VSD 8 L
9	2	25181	Coupling nut	M 8 L
10	1	31318	Lubricator	1/8" RG
11	2	25113	Banjo connection	RSWV 8 LR

1100K, 1110K, 1220K, 1230K, 1320K, 1330K

63 43 500
63 43 490
Internal ref. 63 42 680

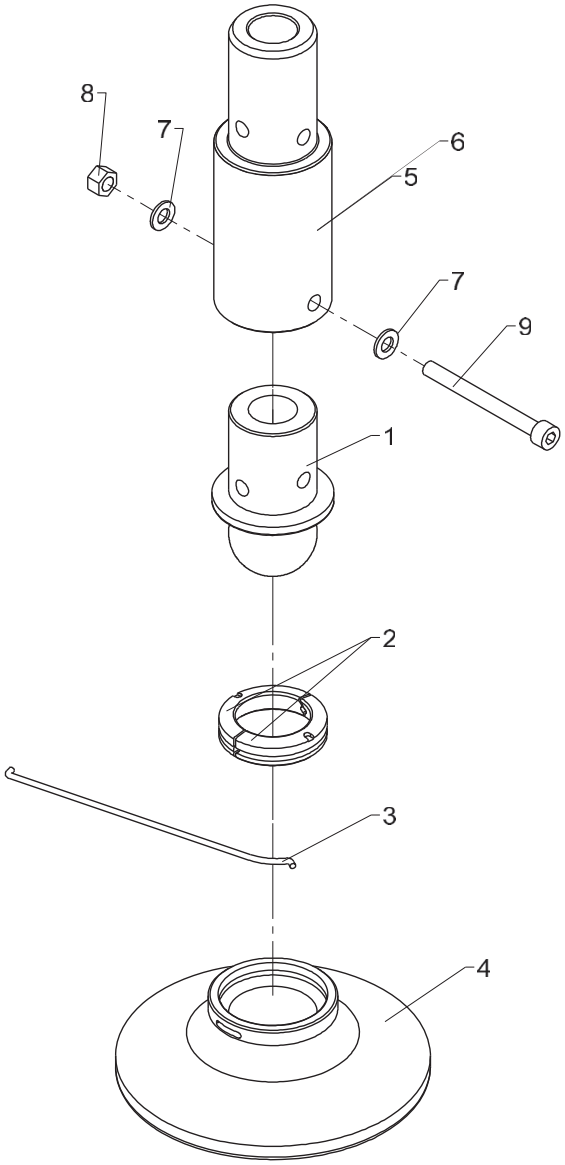

Mounting tool available, See sect. 533 25 060

Foot plate with ball joint, cpl. (ø160)

Pos	Qty.	Part no.	Description	Remarks
		6342680	Footplate + ball joint std.	
		6343490	Foot plate with ball joint,100	
		6343500	Foot plate with ball joint,200	
1	1	6341517	Ball joint, std.	
2	2	6341516	Ball seat catch	
3	1	33926	Locking wire	
4	1	68025	Footplate ø 160 mm	
5	1	6340518	Extension piece 100 mm	
6	1	6340519	Extension piece 200 mm	
7	2	31147	Face washer, 8 mm	
8	1	30886	Lock nut, stainless	M8
9	1	30965	Screw	MC8 x 80

1100K, 1110K, 1220K, 1230K, 1320K, 1330K

63 43 520
Internal ref. 63 43 510

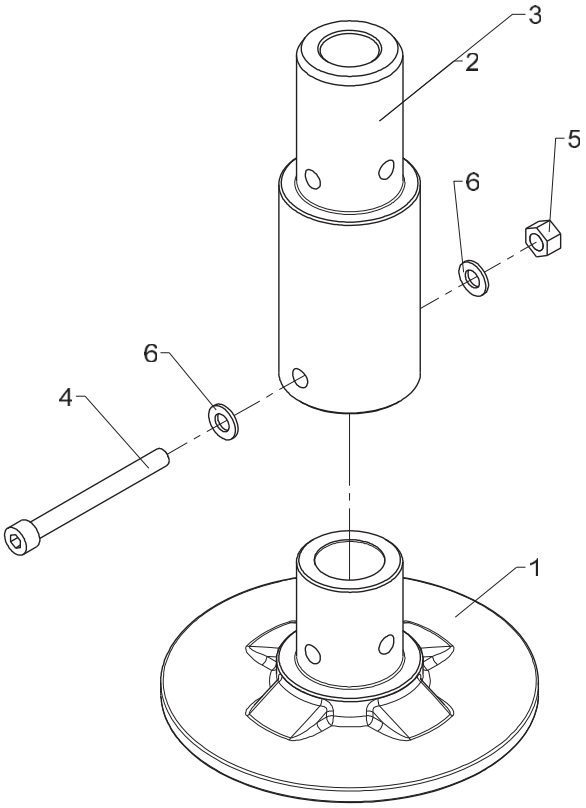

458 02 236

From loader 1170135
To loader

Extension piece, cpl.

Created 04-04-2013
Modified 29-01-2014

Pos	Qty.	Part no.	Description	Remarks
1	1	6340506	Footplate, standard	
2	1	6340518	Extension piece 100 mm	
3	1	6340519	Extension piece 200 mm	
4	1	30965	Screw	MC8 x 80
5	1	30886	Lock nut, stainless	M8
6	2	31147	Face washer, 8 mm	

1100K, 1110K, 1220K, 1230K, 1320K, 1330K

63 43 190
Internal ref. 63 43 180

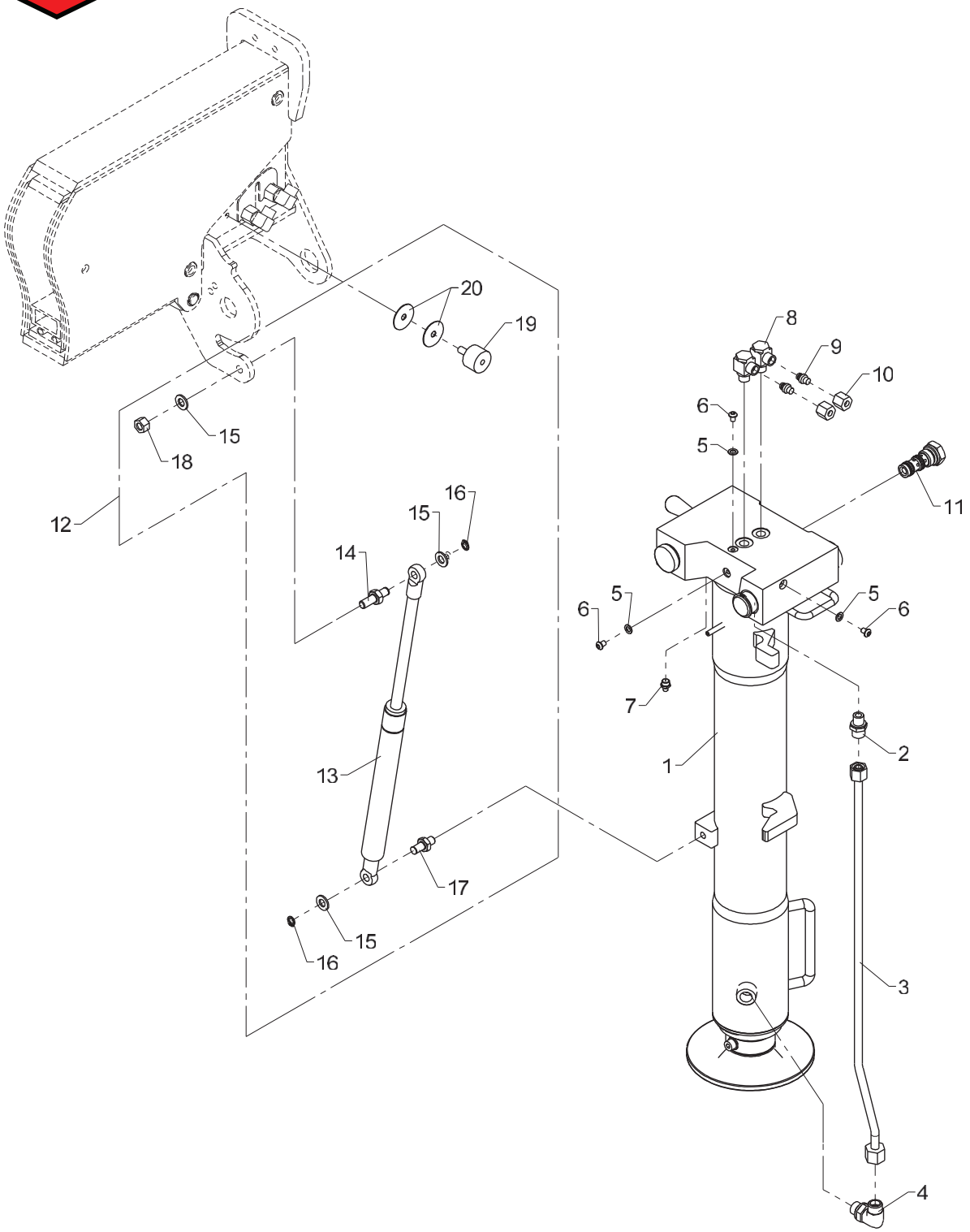

Stabilizer cylinder with check valve, C80-520, Type R-180°

Created 08-01-2014
Modified 05-03-2015

Pos	Qty.	Part no.	Description	Remarks
		6343180	Stab. cyl. w. check valve C80	
		6343190	Gas spring with fittings	
1	1	6343170	Stab. cyl., C80-520, type R	
2	1	25121	Connection	P-GEV 10 LR-WD
3	1	6340823	Pipe, R	
4	1	26899	Elbow connection	10 mm - 3/8"
5	3	21109	Seal washer	ø7,1 x 12 x 1
6	3	31778	Screw, stainless	M6 x 8
7	1	31318	Lubricator	1/8" RG
8	2	25113	Banjo connection	RSWV 8 LR
9	2	26166	Blanking plug	VSD 8 L
10	2	25181	Coupling nut	M 8 L
11	1	58496	Cartridge	
12	1	6343190	Gas spring with fittings	
13	1	48487	Gas spring	
14	1	6344067	Screw for gas spring, long	
15	3	31565	Washer, stainless	10 mm
16	2	33101	Circlip	10U
17	1	6344068	Screw for gas spring, short	
18	1	31564	Lock nut, stainless	M10
19	1	44263	Torsion balancer	
20	2	31150	Washer	8 mm

1100K, 1110K, 1220K, 1230K, 1320K, 1330K

Internal ref. 63 41 510

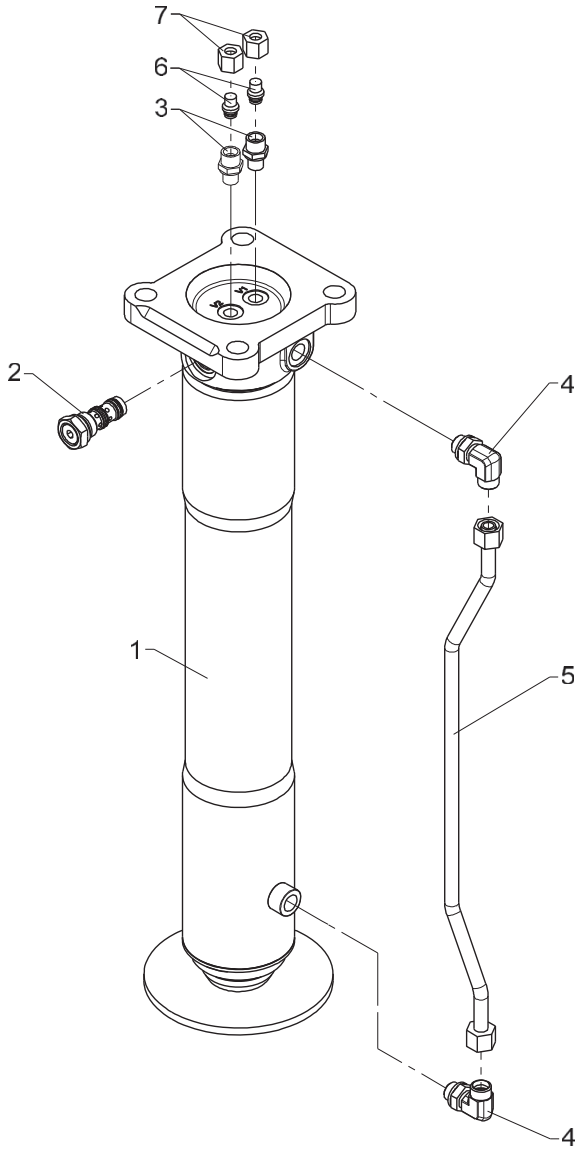

From loader 1170001
To loader
Created 12-11-2008
Modified

Stabilizer cylinder with check valve, C80-440, type V

Pos	Qty.	Part no.	Description	Remarks
1	1	6341500	Stabilizer cylinder	
2	1	58496	Cartridge	
3	2	25121	Connection	P-GEV 10 LR-WD
4	2	26897	Elbow connection	12 mm - 3/8"
5	1	6340945	Pipe	
6	2	25202	Blanking plug	VSD 10 L
7	2	25182	Coupling nut	M 10 L

1100K, 1110K, 1220K, 1230K, 1320K, 1330K

Internal ref. 63 44 210

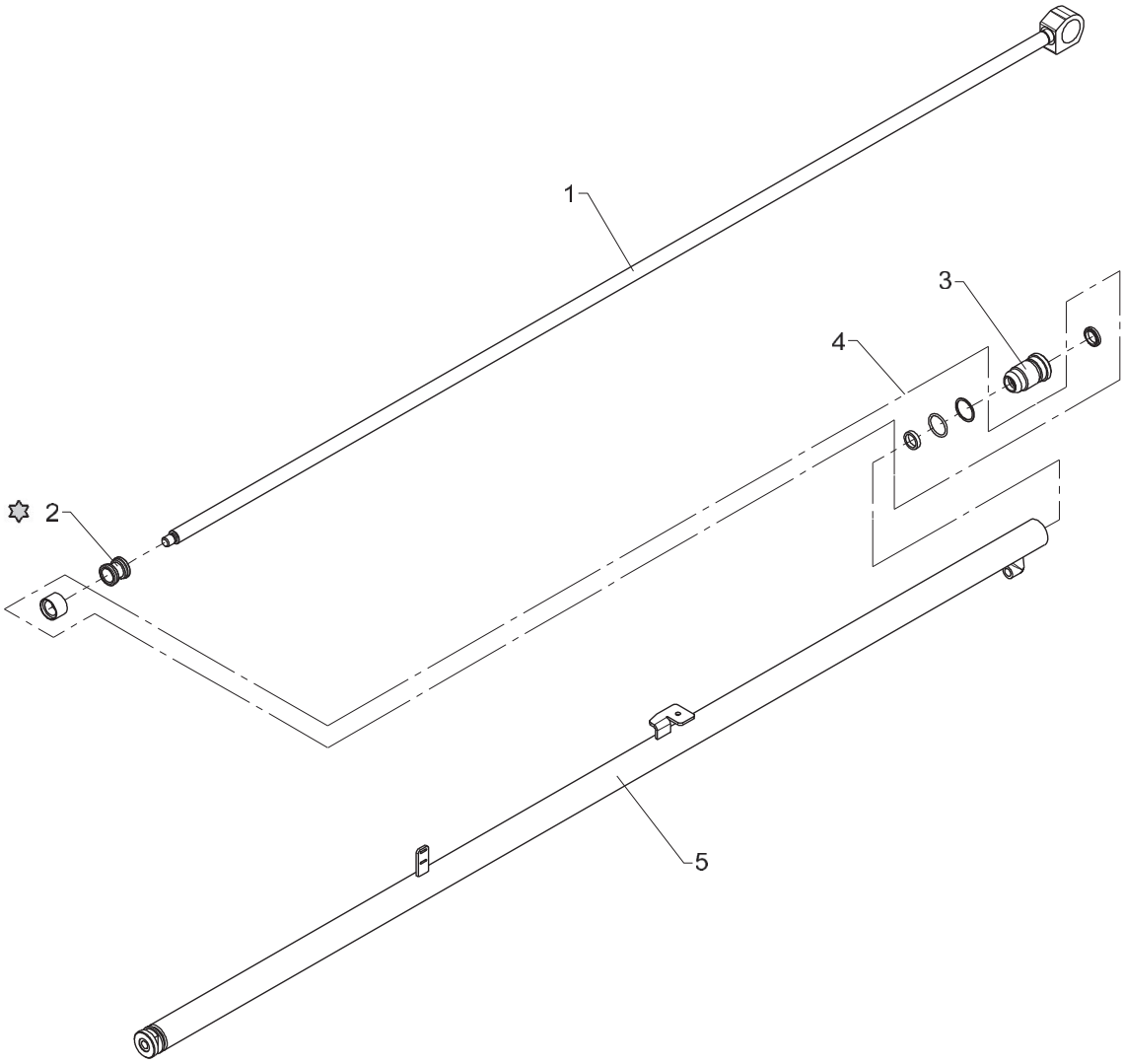

✡ Loctite 243

458 02 300

From loader 1170001
To loader

Beam cylinder C32 - 1625

Created 12-11-2008
Modified 08-02-2012

Pos	Qty.	Part no.	Description	Remarks
1	1	6344214	Piston rod	
2	1	6306242	Piston	
3	1	6043034	Guide	
4	1	6892290	Seal kit	
5	1	6344211	Cylinder pipe	

1100K, 1110K, 1220K, 1230K, 1320K, 1330K

Internal ref. 63 40 790

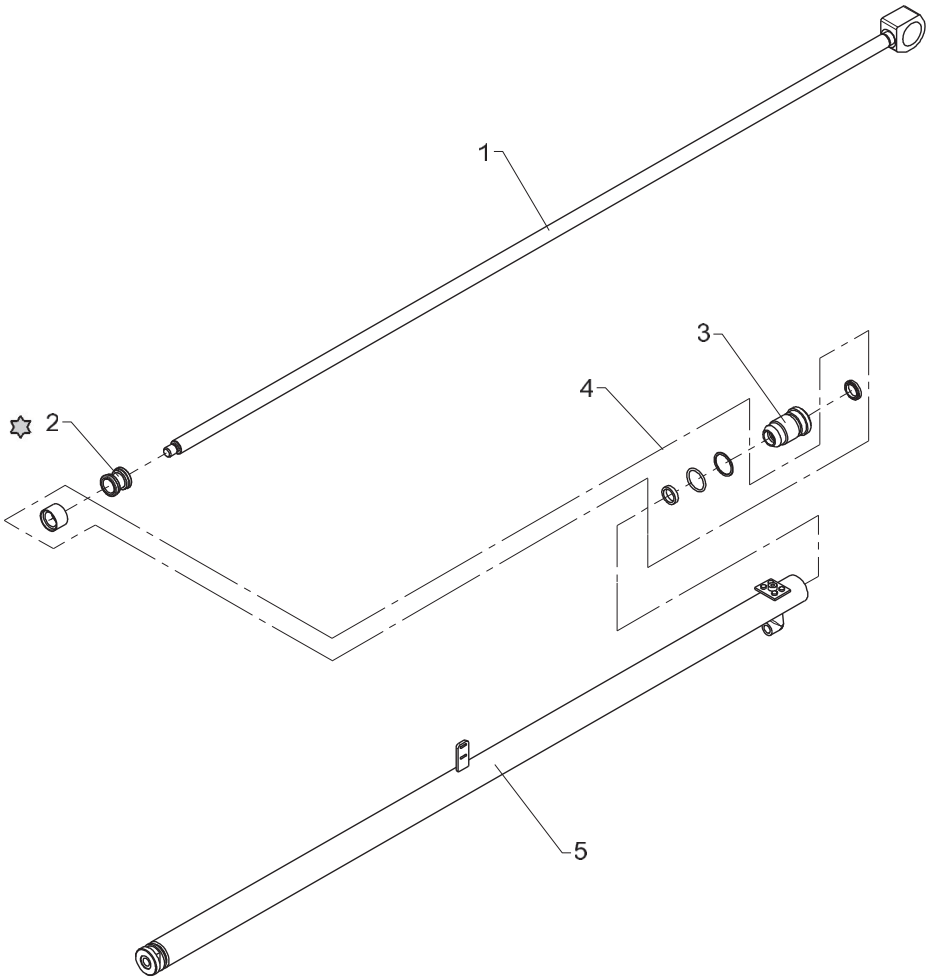

✡ Loctite 243

Beam cylinder C32 - 1137

458 02 320

From loader 1170001
To loader

Created 12-11-2008
Modified 08-02-2012

Pos	Qty.	Part no.	Description	Remarks
1	1	6340792	Piston rod	
2	1	6306242	Piston	
3	1	6043034	Guide	
4	1	6892290	Seal kit	
5	1	6340791	Cylinder tube	

1100K, 1110K, 1220K, 1230K, 1320K, 1330K

Internal ref. 63 65 290

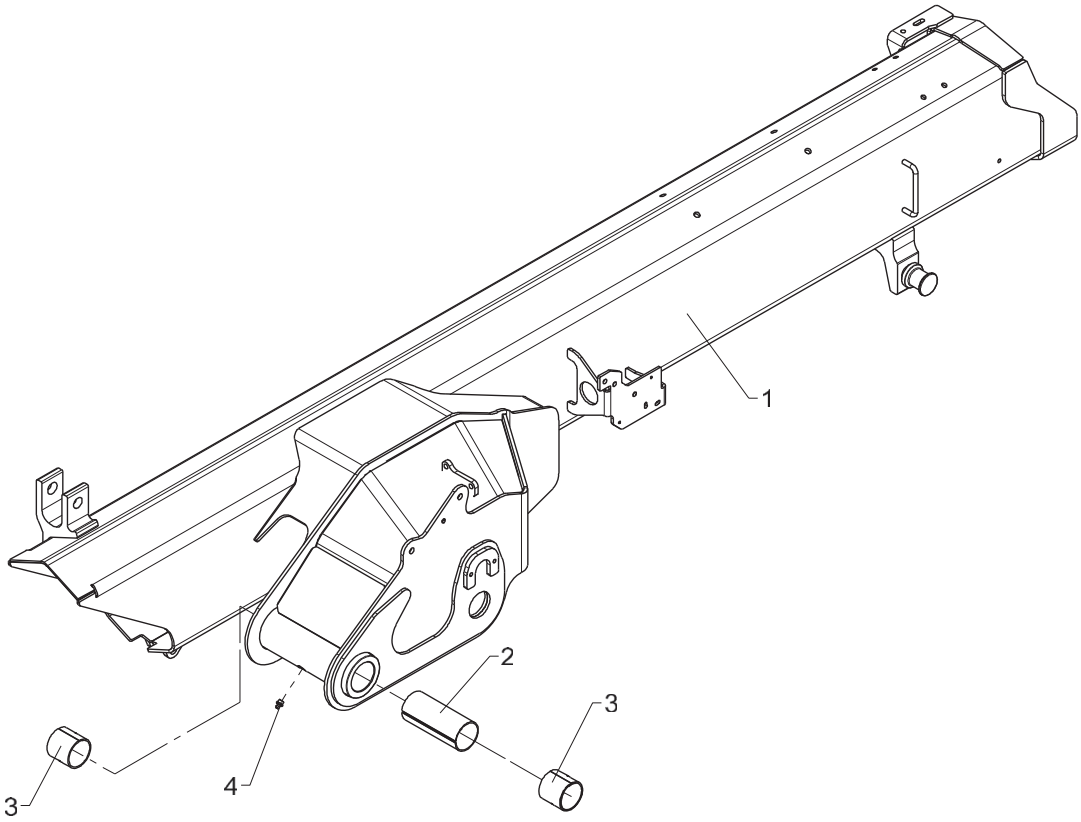

From loader 1170001
To loader

Jib, complete

Created 10-02-2012
Modified 29-03-2012

Pos	Qty.	Part no.	Description	Remarks
1	1	6365280	Jib, painted	
2	1	68029	Plate	
3	2	23440	Bushing, glacier	PM 5050 DX
4	1	31318	Lubricator	1/8" RG

1100K, 1110K, 1220K, 1230K, 1320K, 1330K

Internal ref. 63 66 720

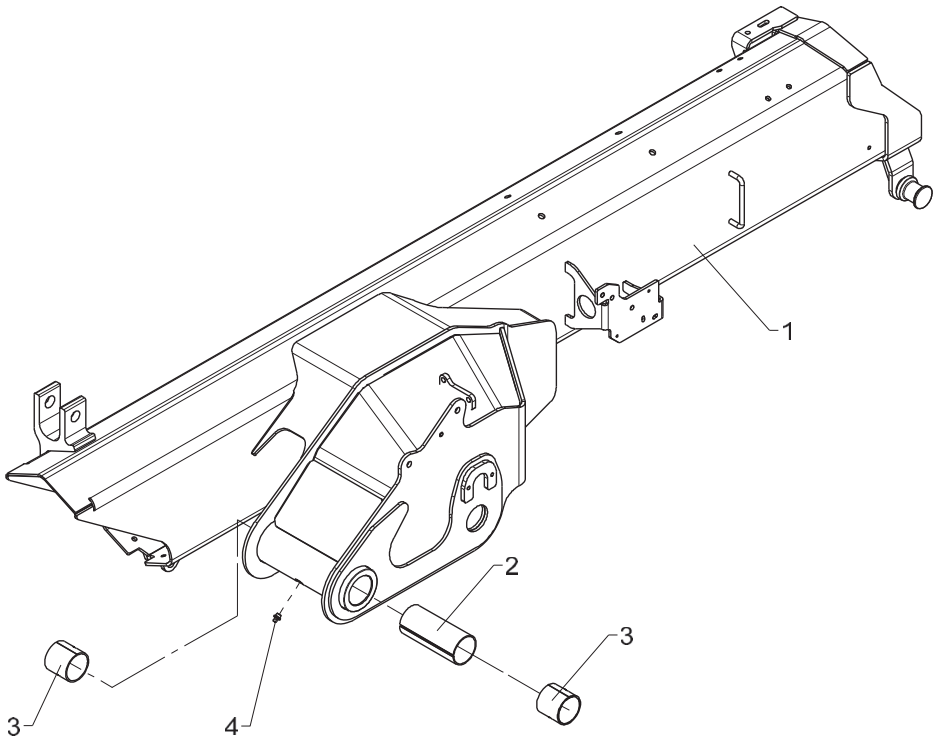

Jib, complete (KS)

458 03 015

From loader 1170001
To loader

Created 16-05-2012
Modified

Pos	Qty.	Part no.	Description	Remarks
1	1	6366710	Jib, painted (KS)	
2	1	68029	Plate	
3	2	23440	Bushing, glacier	PM 5050 DX
4	1	31318	Lubricator	1/8" RG

1100K, 1110K, 1220K, 1230K, 1320K, 1330K

Internal ref. 63 66 950

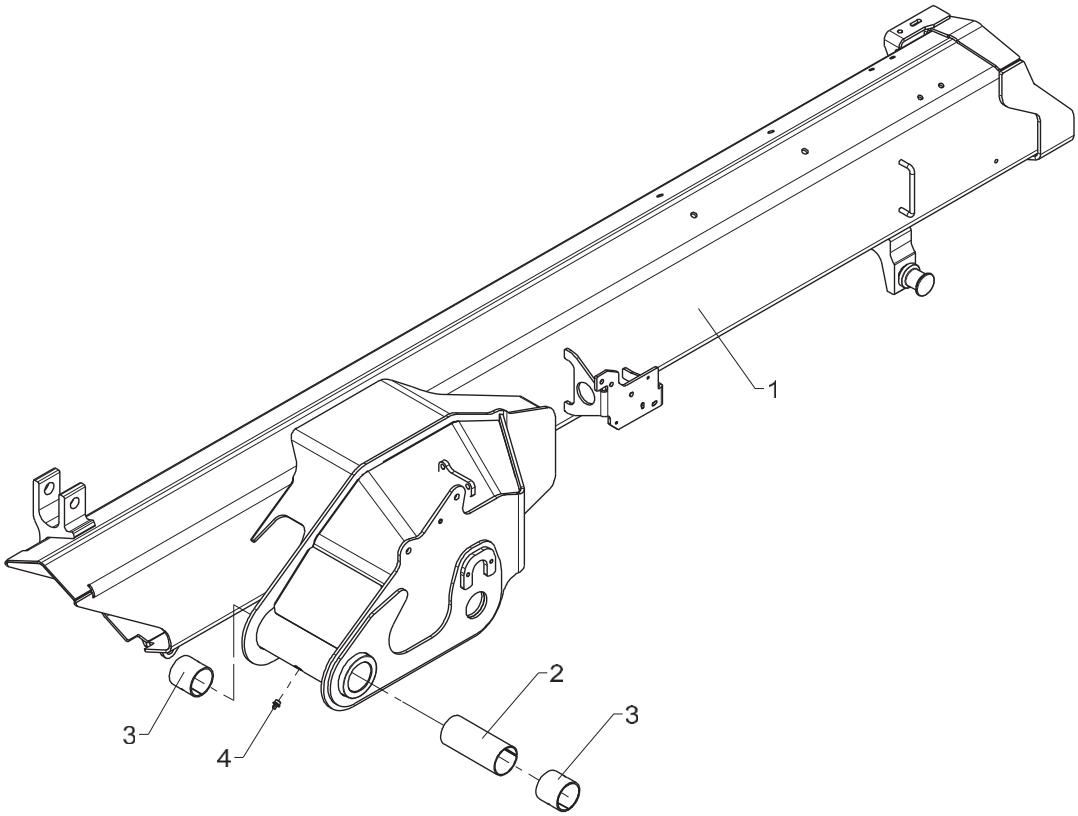

Jib, complete (winch)

Pos	Qty.	Part no.	Description	Remarks
1	1	6366940	Jib, painted (Winch)	63 65 971
2	1	68029	Plate	
3	2	23440	Bushing, glacier	PM 5050 DX
4	1	31318	Lubricator	1/8" RG

1100K, 1110K, 1220K, 1230K, 1320K, 1330K

Internal ref. 63 65 300

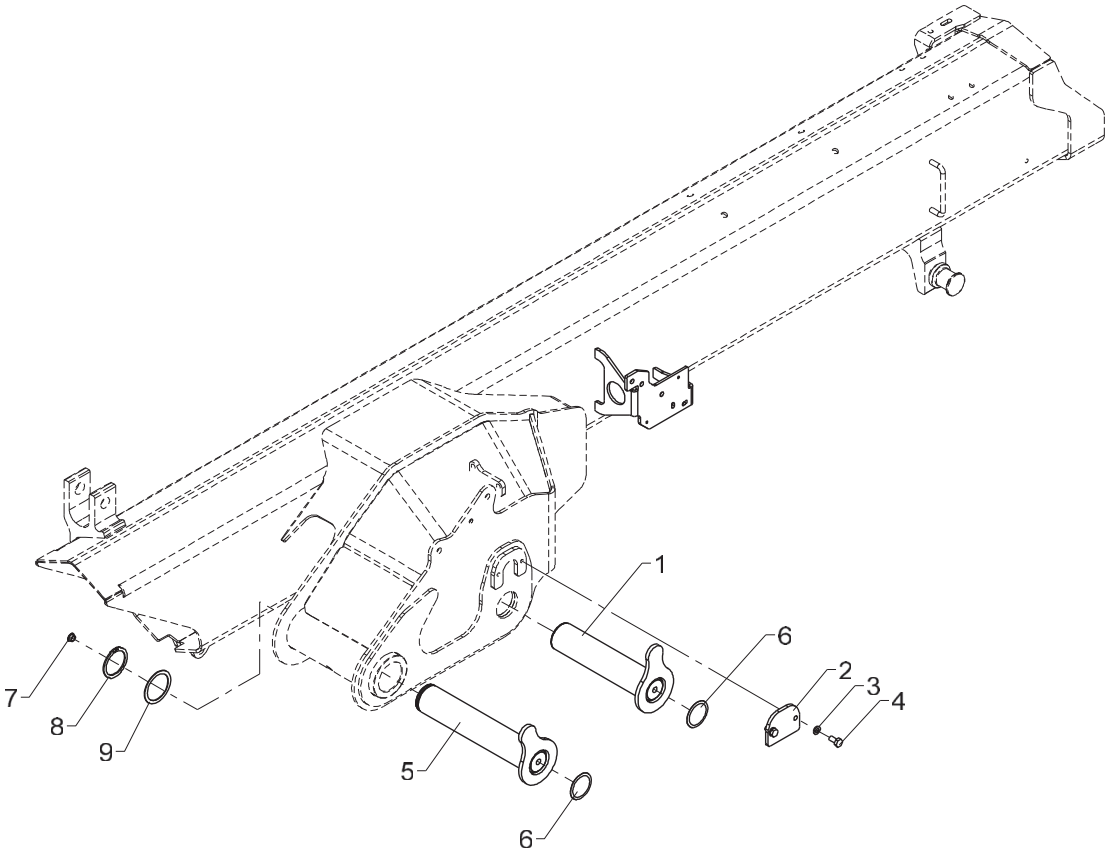

Fitting of jib and jib cylinder

Pos	Qty.	Part no.	Description	Remarks
1	1	6365206	Pin	
2	1	6340318	Lock plate	
3	2	31155	Spring washer	8 mm
4	2	30131	Set screw, stainless	M8 x 16
5	1	6365201	Pin	
6	2	63472	Plug	
7	1	64371	Plug	
8	1	33129	Circlip	50U
9	1	33276	Washer	PS 50 x 62 x 1,0

Obsolete

1100K, 1110K, 1220K, 1230K, 1320K, 1330K

Internal ref. 63 65 320

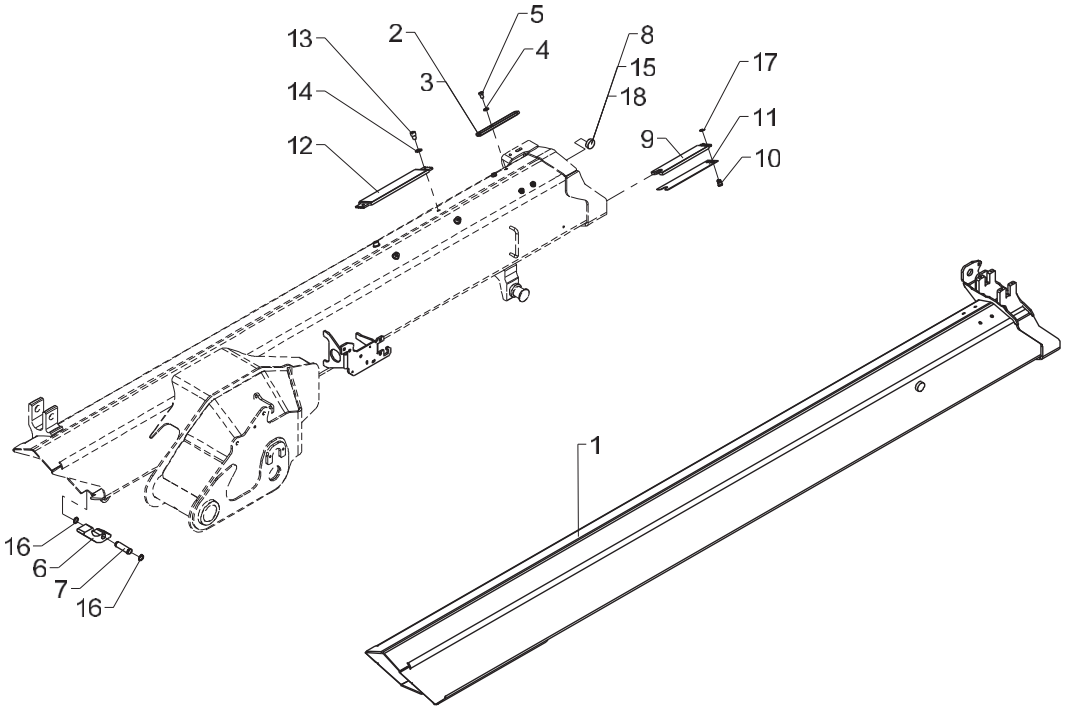

Obsolete

458 03 100

From loader 1170001
To loader 1170076

Created 10-02-2012
Modified 24-05-2011

Jib extension I incl. fittings

Pos	Qty.	Part no.	Description	Remarks
1	1	6365321	Jib extension I	
2	2	6366016	Wear plate (6mm)	
3	2	6366015	Wear plate (7mm)	
4	4	31147	Face washer, 8 mm	
5	4	32274	Cyl. screw, stainless	MC8 x 12
6	1	6365319	Stowing hook	
7	1	6366141	Pin	
8	2	68062	Slide block 8 mm	
9	2	6366001	Slide block	
10	4	6366006	Lock pin	
11	2	6366011	Shim	
12	2	6366013	Slide block	
13	4	30472	Screw	MC10 x 12
14	4	31177	Washer	10 mm
15	2	68063	Slide block 8.75 mm	
16	2	33105	Circlip	
17	4	33292	Circlip	
18	2	68064	Slide block 9,5 mm	

1100K, 1110K, 1220K, 1230K, 1320K, 1330K

Internal ref. 63 65 320

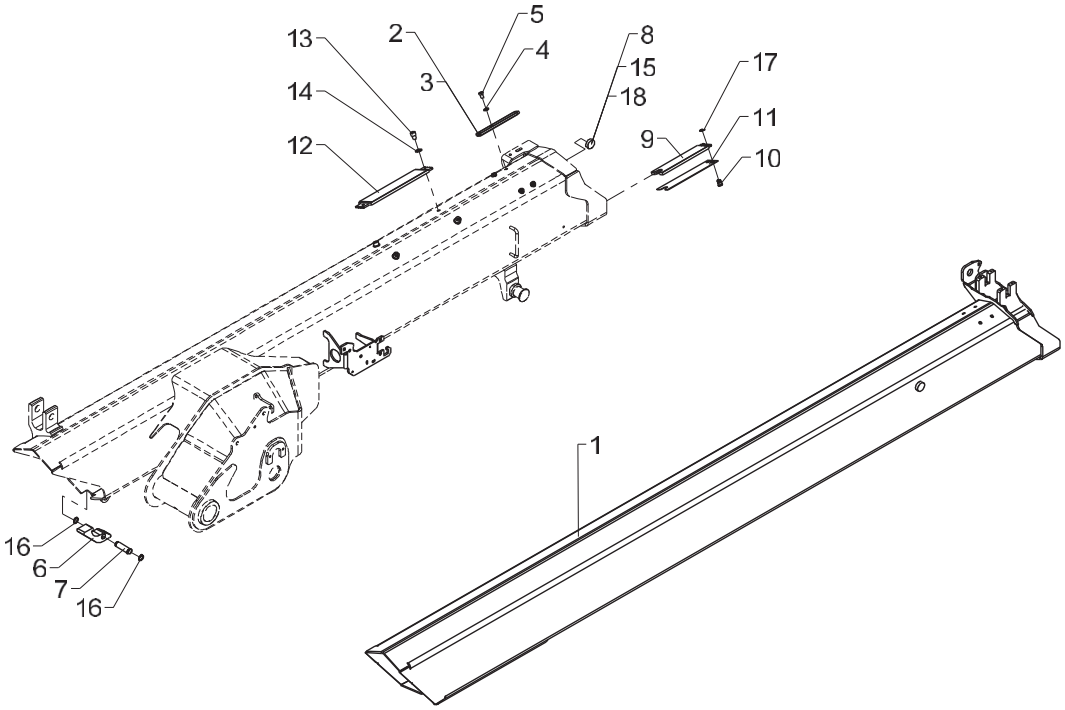

Jib extension I incl. fittings

Pos	Qty.	Part no.	Description	Remarks
1	1	6365334	Extension I	
2	2	6366016	Wear plate (6mm)	
3	2	6366015	Wear plate (7mm)	
4	4	31147	Face washer, 8 mm	
5	4	32274	Cyl. screw, stainless	MC8 x 12
6	1	6365319	Stowing hook	
7	1	6366141	Pin	
8	2	68062	Slide block 8 mm	
9	2	6366001	Slide block	
10	4	6366006	Lock pin	
11	2	6366011	Shim	
12	2	6366013	Slide block	
13	4	30472	Screw	MC10 x 12
14	4	31177	Washer	10 mm
15	2	68063	Slide block 8.75 mm	
16	2	33105	Circlip	
17	4	33292	Circlip	
18	2	68064	Slide block 9,5 mm	

1100K, 1110K, 1220K, 1230K, 1320K, 1330K

Internal ref. 63 66 730

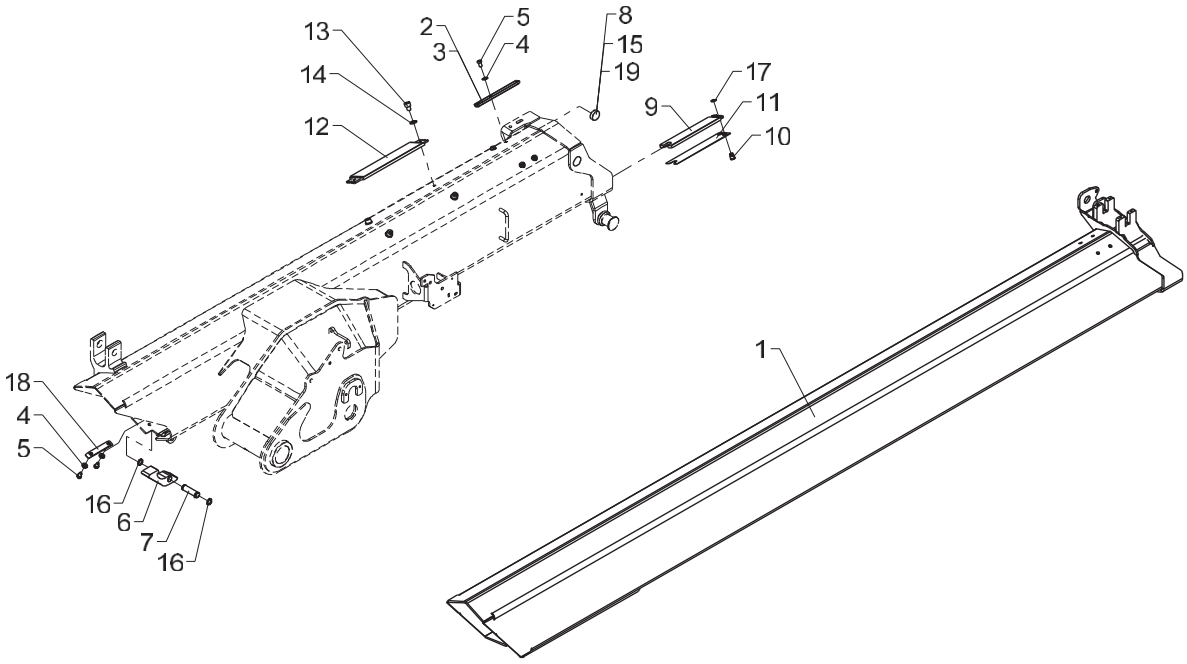

From loader 1170001
To loader

Jib extension I incl. fittings (KS)

Created 16-05-2012
Modified 08-07-2013

Pos	Qty.	Part no.	Description	Remarks
1	1	6365334	Extension I	
2	2	6366016	Wear plate (6mm)	
3	2	6366015	Wear plate (7mm)	
4	8	31147	Face washer, 8 mm	
5	8	32274	Cyl. screw, stainless	MC8 x 12
6	1	6365319	Stowing hook	
7	1	6366141	Pin	
8	2	68062	Slide block 8 mm	
9	2	6366001	Slide block	
10	4	6366006	Lock pin	
11	2	6366011	Shim	
12	2	6366013	Slide block	
13	4	30472	Screw	MC10 x 12
14	4	31177	Washer	10 mm
15	2	68063	Slide block 8.75 mm	
16	2	33105	Circlip	
17	4	33292	Circlip	
18	2	6365339	Wear plate	
19	2	68064	Slide block 9,5 mm	

1100K, 1110K, 1220K, 1230K, 1320K, 1330K

Internal ref. 63 65 220

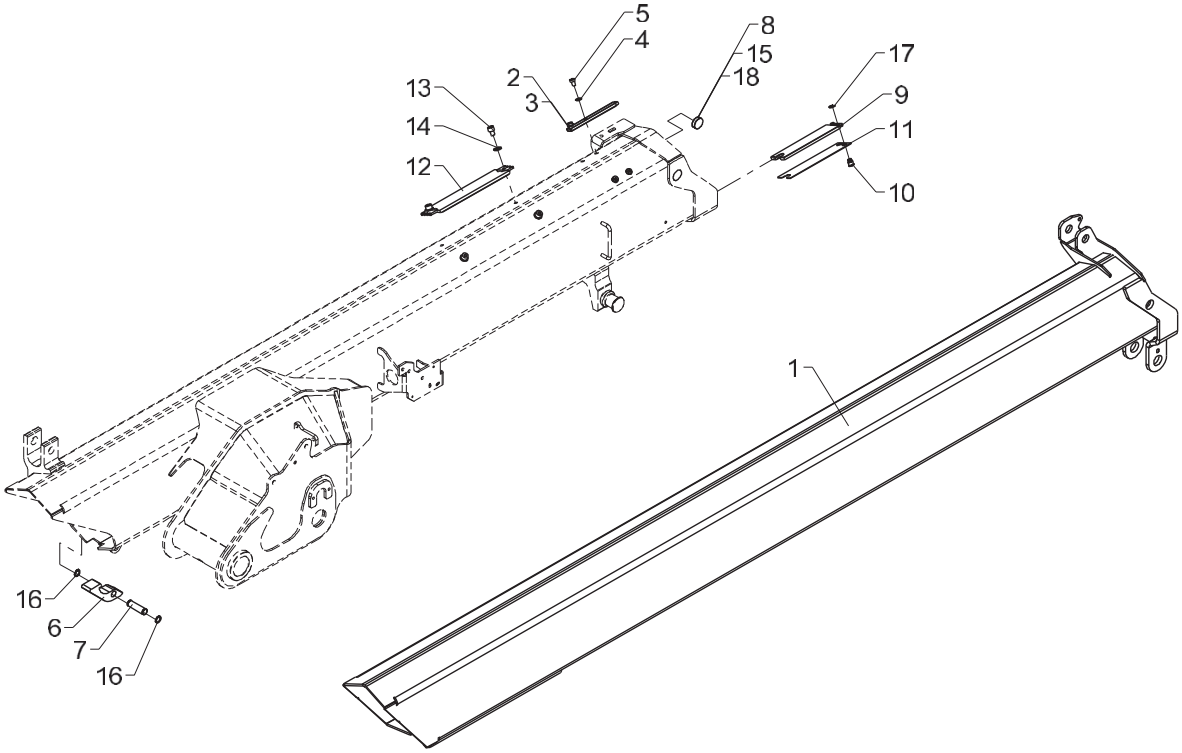

From loader 1170001
To loader

Jib extension K1 incl. fittings

Created 10-02-2012
Modified 19-11-2012

Pos	Qty.	Part no.	Description	Remarks
1	1	6365421	Jib extension Kl	
2	2	6366016	Wear plate (6mm)	
3	2	6366015	Wear plate (7mm)	
4	4	31147	Face washer, 8 mm	
5	4	32274	Cyl. screw, stainless	MC8 x 12
6	1	6365319	Stowing hook	
7	1	6366141	Pin	
8	2	68062	Slide block 8 mm	
9	2	6366001	Slide block	
10	4	6366006	Lock pin	
11	2	6366011	Shim	
12	2	6366013	Slide block	
13	4	30472	Screw	MC10 x 12
14	4	31177	Washer	10 mm
15	2	68063	Slide block 8.75 mm	
16	2	33105	Circlip	
17	4	33292	Circlip	
18	2	68064	Slide block 9,5 mm	

1100K, 1110K, 1220K, 1230K, 1320K, 1330K

Internal ref. 63 66 740

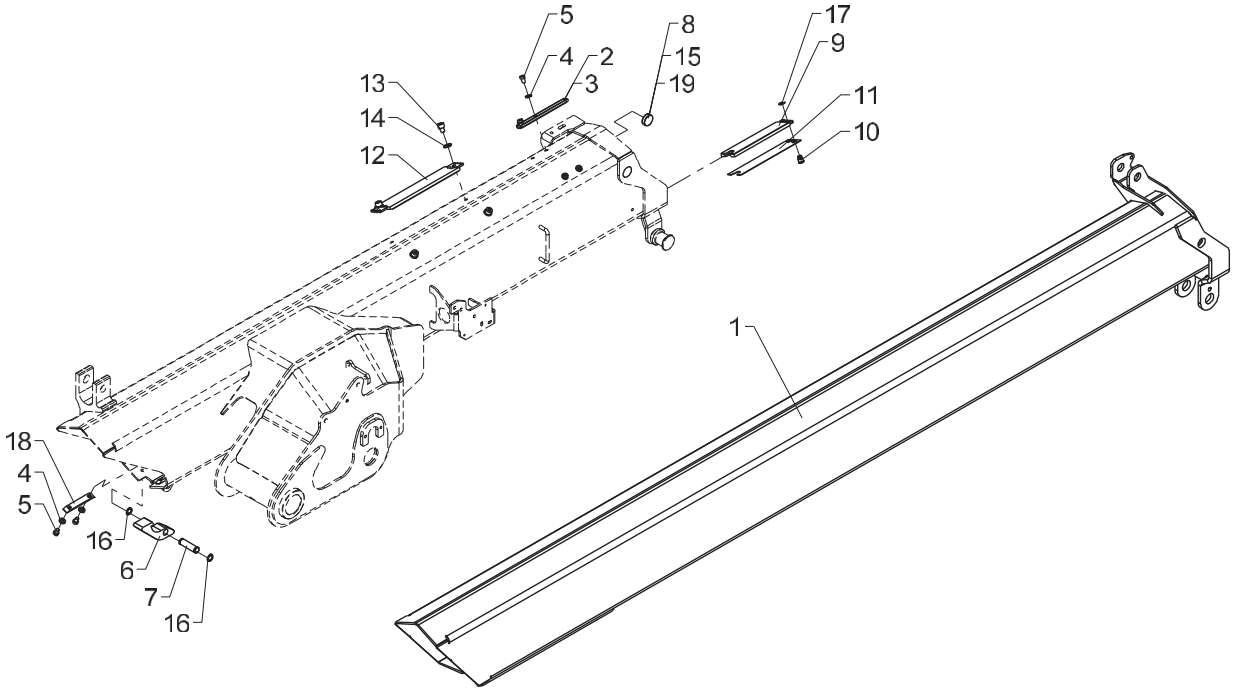

From loader 1170001
To loader

Jib extension K1 incl. fittings (KS)

Created 16-05-2012
Modified 20-11-2012

Pos	Qty.	Part no.	Description	Remarks
1	1	6365421	Jib extension Kl	
2	2	6366016	Wear plate (6mm)	
3	2	6366015	Wear plate (7mm)	
4	8	31147	Face washer, 8 mm	
5	8	32274	Cyl. screw, stainless	MC8 x 12
6	1	6365319	Stowing hook	
7	1	6366141	Pin	
8	2	68062	Slide block 8 mm	
9	2	6366001	Slide block	
10	4	6366006	Lock pin	
11	2	6366011	Shim	
12	2	6366013	Slide block	
13	4	30472	Screw	MC10 x 12
14	4	31177	Washer	10 mm
15	2	68063	Slide block 8.75 mm	
16	2	33105	Circlip	
17	4	33292	Circlip	
18	2	6365339	Wear plate	
19	2	68064	Slide block 9,5 mm	

1100K, 1110K, 1220K, 1230K, 1320K, 1330K

Internal ref. 63 65 340

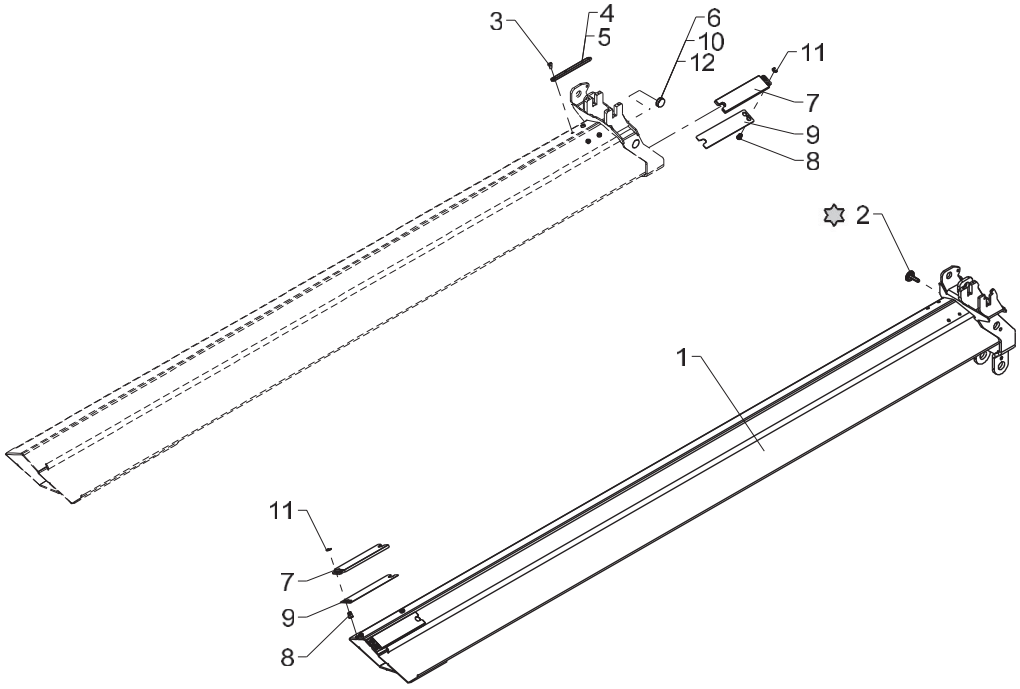

✡ Sættes kun i ved ingen ekstra ventiler og indv. slangeføring.

From loader 1170001
To loader

Jib extension K2 incl. fittings

Created 10-02-2012
Modified 19-11-2012

Pos	Qty.	Part no.	Description	Remarks
1	1	6365341	Jib extension K2	
2	1	63568	Plastic plug with logo	
3	4	32273	Cyl. screw, stainless	MC8 x 10
4	2	6366016	Wear plate (6mm)	
5	2	6366015	Wear plate (7mm)	
6	2	68062	Slide block 8 mm	
7	4	6366001	Slide block	
8	8	6366006	Lock pin	
9	4	6366011	Shim	
10	2	68063	Slide block 8.75 mm	
11	8	33292	Circlip	
12	2	68064	Slide block 9,5 mm	

1100K, 1110K, 1220K, 1230K, 1320K, 1330K

Internal ref. 63 65 360

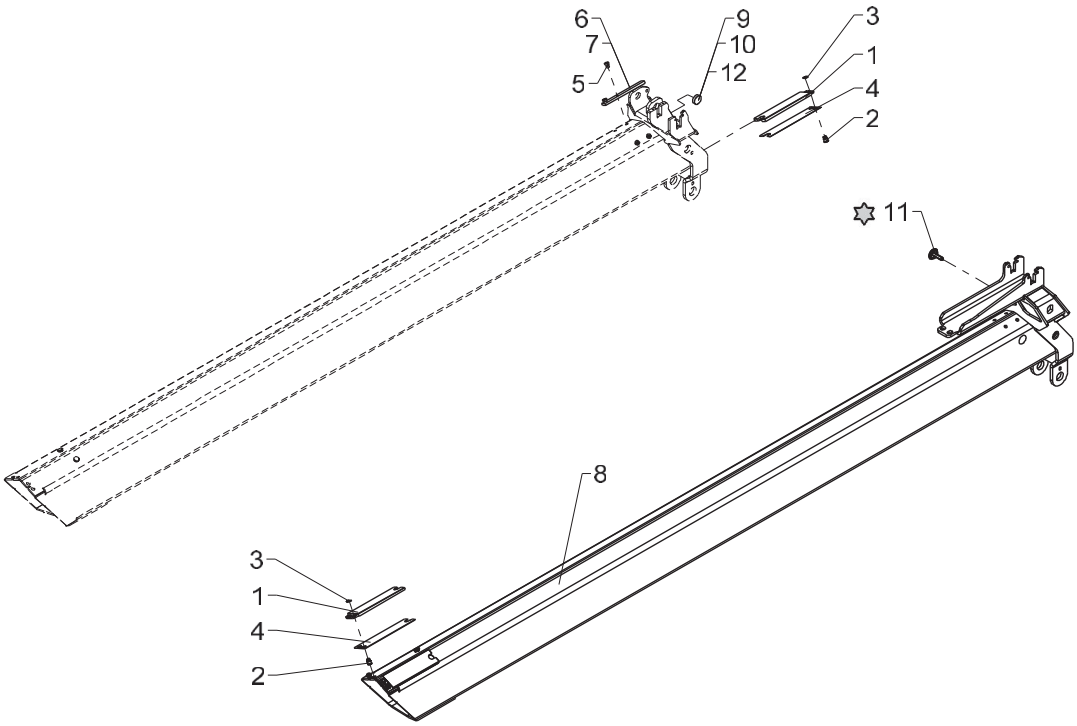

✡ Sættes kun i ved ingen ekstraventiler og indv. slangeføring.

From loader 1170001
To loader

Jib extension K3 incl. fittings

Created 10-02-2012
Modified 19-11-2012

Pos	Qty.	Part no.	Description	Remarks
		6365360	Jib ext. K3 incl. fittings	
1	4	6366001	Slide block	
2	8	6366006	Lock pin	
3	8	33292	Circlip	
4	4	6366011	Shim	
5	4	32273	Cyl. screw, stainless	MC8 x 10
6	2	6366016	Wear plate (6mm)	
7	2	6366015	Wear plate (7mm)	
8	1	6365361	Extension III	
9	2	68062	Slide block 8 mm	
10	2	68063	Slide block 8.75 mm	
11	1	63568	Plastic plug with logo	
12	2	68064	Slide block 9,5 mm	

1100K, 1110K, 1220K, 1230K, 1320K, 1330K

Internal ref. 63 65 380

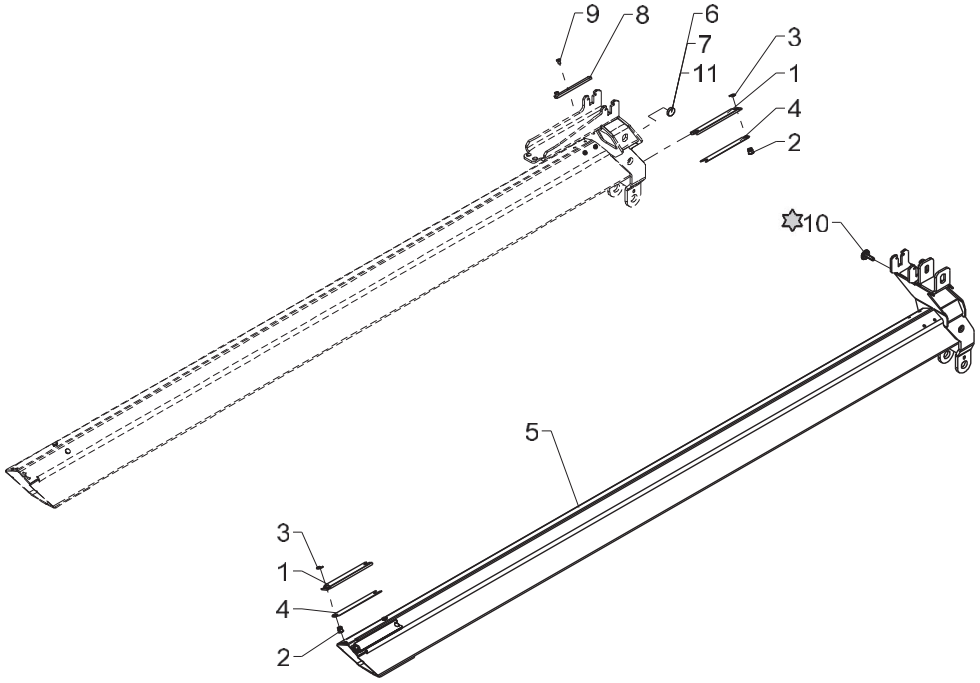

✡ Sættes kun i ved ingen ekstraventiler og indv. slangeføring.

From loader 1170001
To loader

Jib extension K4 incl. fittings

Created 10-02-2012
Modified 20-11-2012

Pos	Qty.	Part no.	Description	Remarks
		6365380	Jib extension K4 incl.fittings	
1	4	6366003	Slide block (35x200), compl.	
2	4	6366007	Lock pin (Ø16)	
3	4	33291	Circlip	
4	4	6366012	Shim for slide block	
5	1	6365381	Extension IV	
6	2	63673	Slide block	
7	2	64056	Slide block	
8	2	6366015	Wear plate (7mm)	
9	4	32273	Cyl. screw, stainless	MC8 x 10
10	1	63568	Plastic plug with logo	
11	2	63670	Slide block	

1100K, 1110K, 1220K, 1230K, 1320K, 1330K

Internal ref. 63 65 400

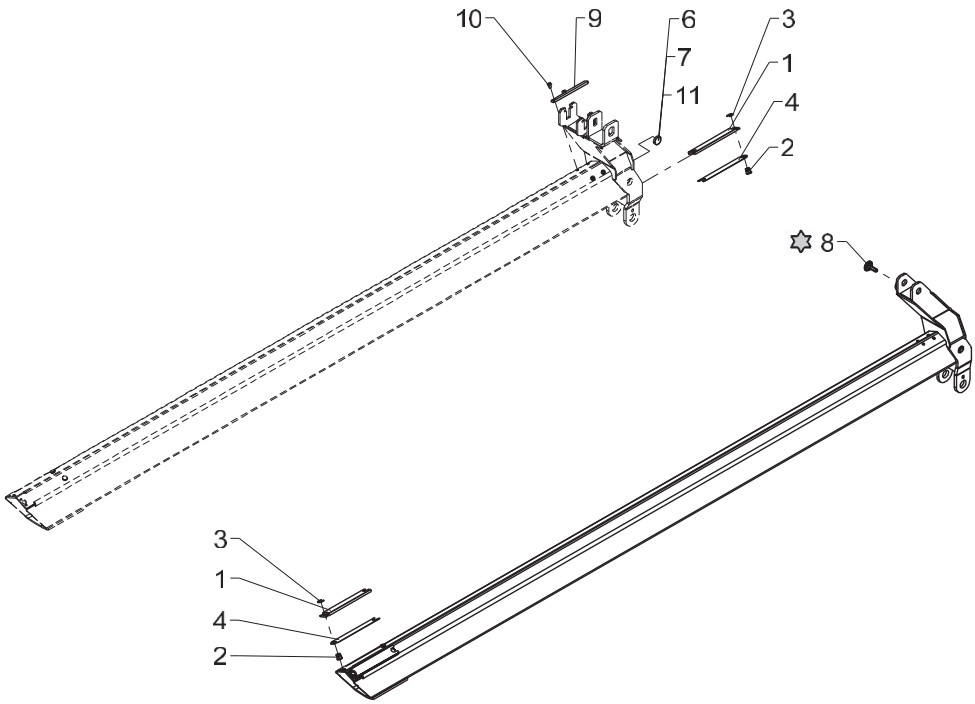

✡ Sættes kun i ved ingen ekstraventiler og indv. slangeføring.

Jib extension K5 incl. fittings

Pos	Qty.	Part no.	Description	Remarks
		6365400	Jib extension K5 incl.fittings	
1	4	6366003	Slide block (35x200), compl.	
2	4	6366007	Lock pin (Ø16)	
3	4	33291	Circlip	
4	6	6366012	Shim for slide block	
5	1	6365401	Extension V	
6	2	63673	Slide block	
7	2	64056	Slide block	
8	1	63568	Plastic plug with logo	
9	2	6366015	Wear plate (7mm)	
10	4	32273	Cyl. screw, stainless	MC8 x 10
11	2	63670	Slide block	

1100K, 1110K, 1220K, 1230K, 1320K, 1330K

Internal ref. 63 41 910

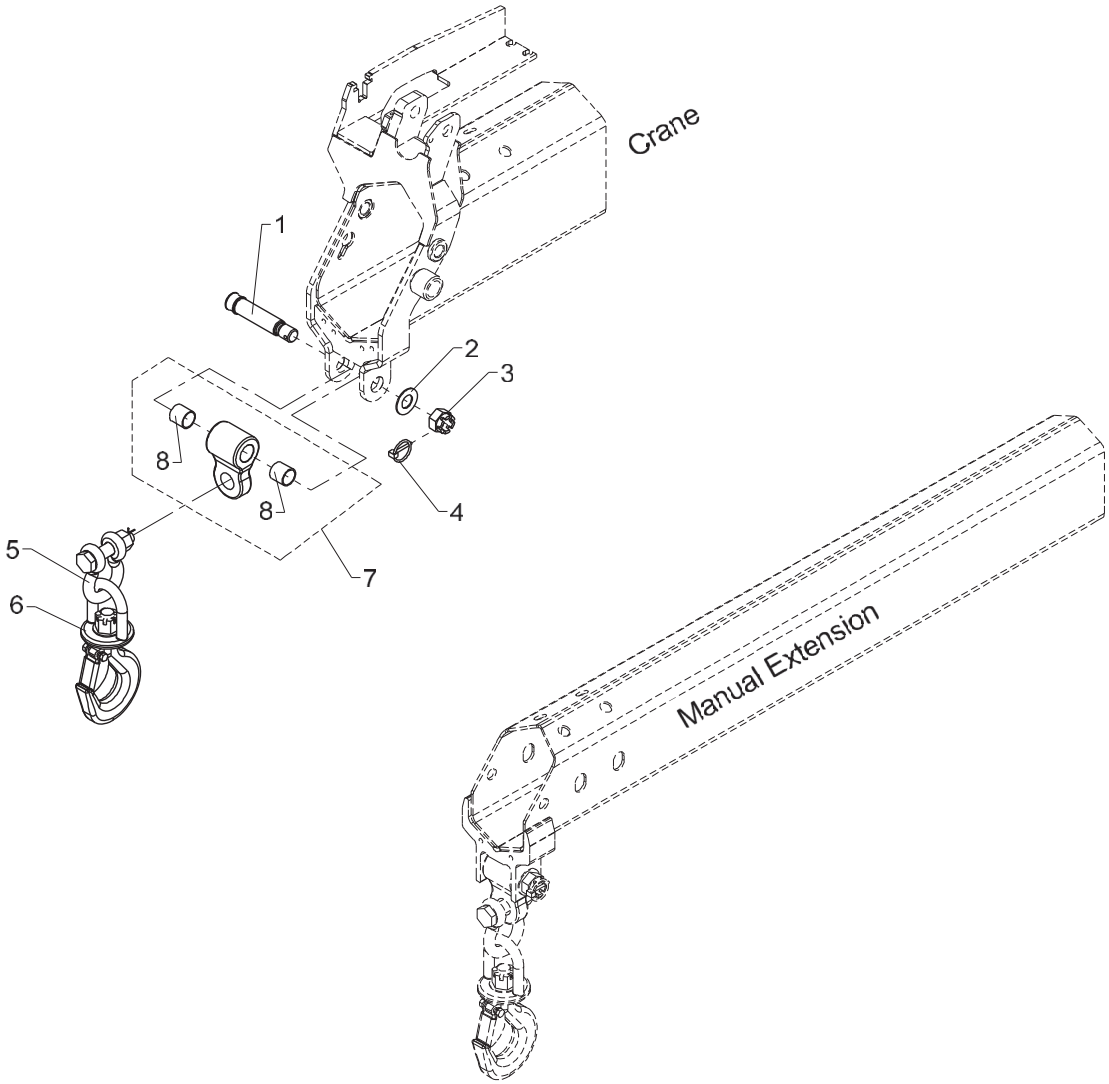

Obsolete

458 03 290

From loader 1170001
To loader

Created 12-11-2008
Modified 17-06-2011

Hook suspension

Pos	Qty.	Part no.	Description	Remarks
1	1	6304458	Pin for suspension	
2	1	31128	Washer	24 mm
3	1	30837	Nut	M24
4	1	31967	Ring split	ø4,5 x 40
5	1	62114	Shackle with nut	
6	1	62101	Hook 5 t	
7	1	6292853	Hook suspension	
8	2	23945	Composite bearing	ø28/32 x 30

1100K, 1110K, 1220K, 1230K, 1320K, 1330K

Internal ref. 63 41 910

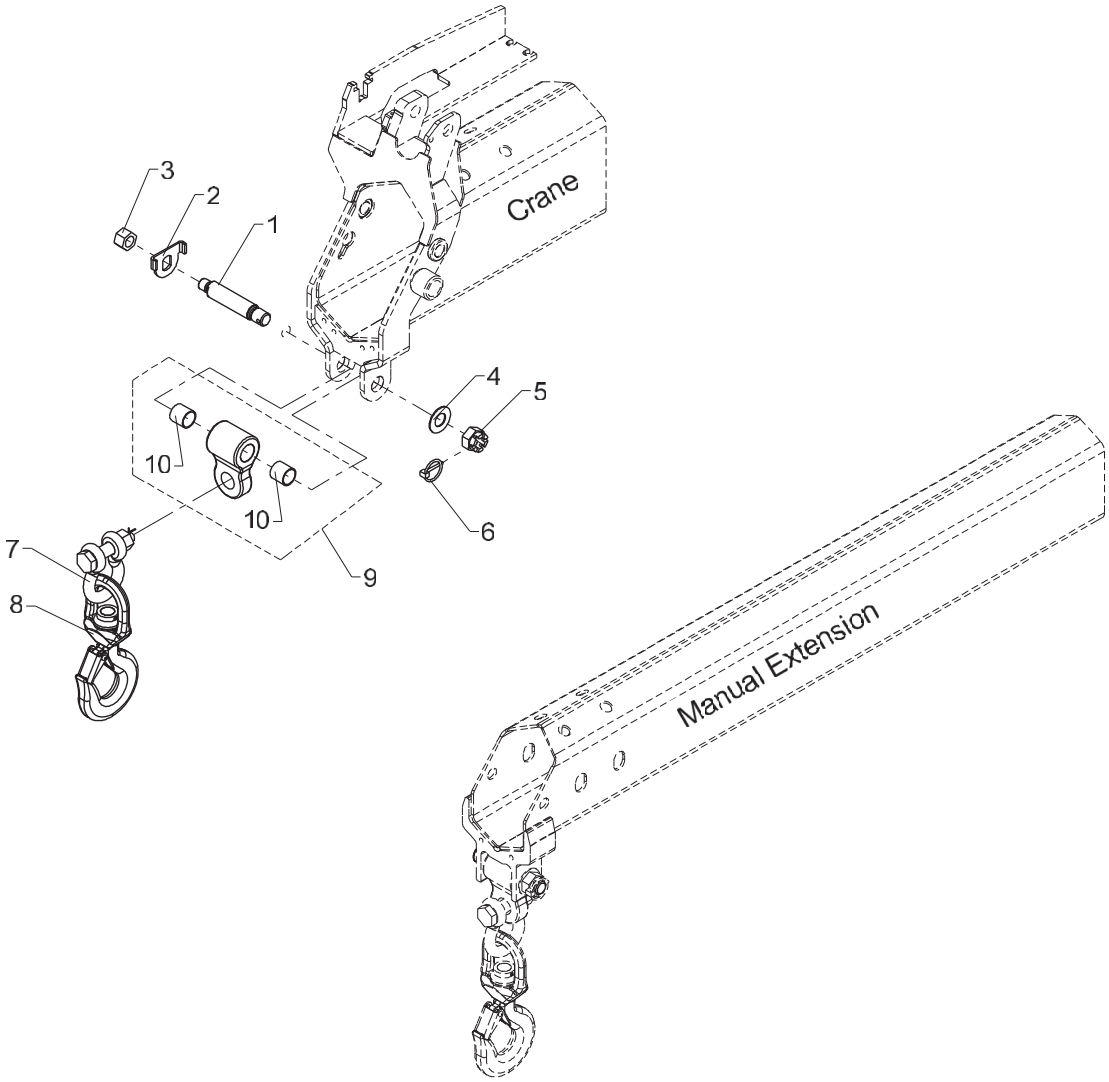

Hook suspension

Pos	Qty.	Part no.	Description	Remarks
1	1	6662114	Pin	
2	1	6662104	Plate	
3	1	30894	Lock nut	M20
4	1	31128	Washer	24 mm
5	1	30837	Nut	M24
6	1	31967	Ring split	ø4,5 x 40
7	1	62114	Shackle with nut	
8	1	62169	Hook with ball bearing	
9	1	6292853	Hook suspension	
10	2	23945	Composite bearing	ø28/32 x 30

1100K, 1110K, 1220K, 1230K, 1320K, 1330K

Internal ref. 63 65 540

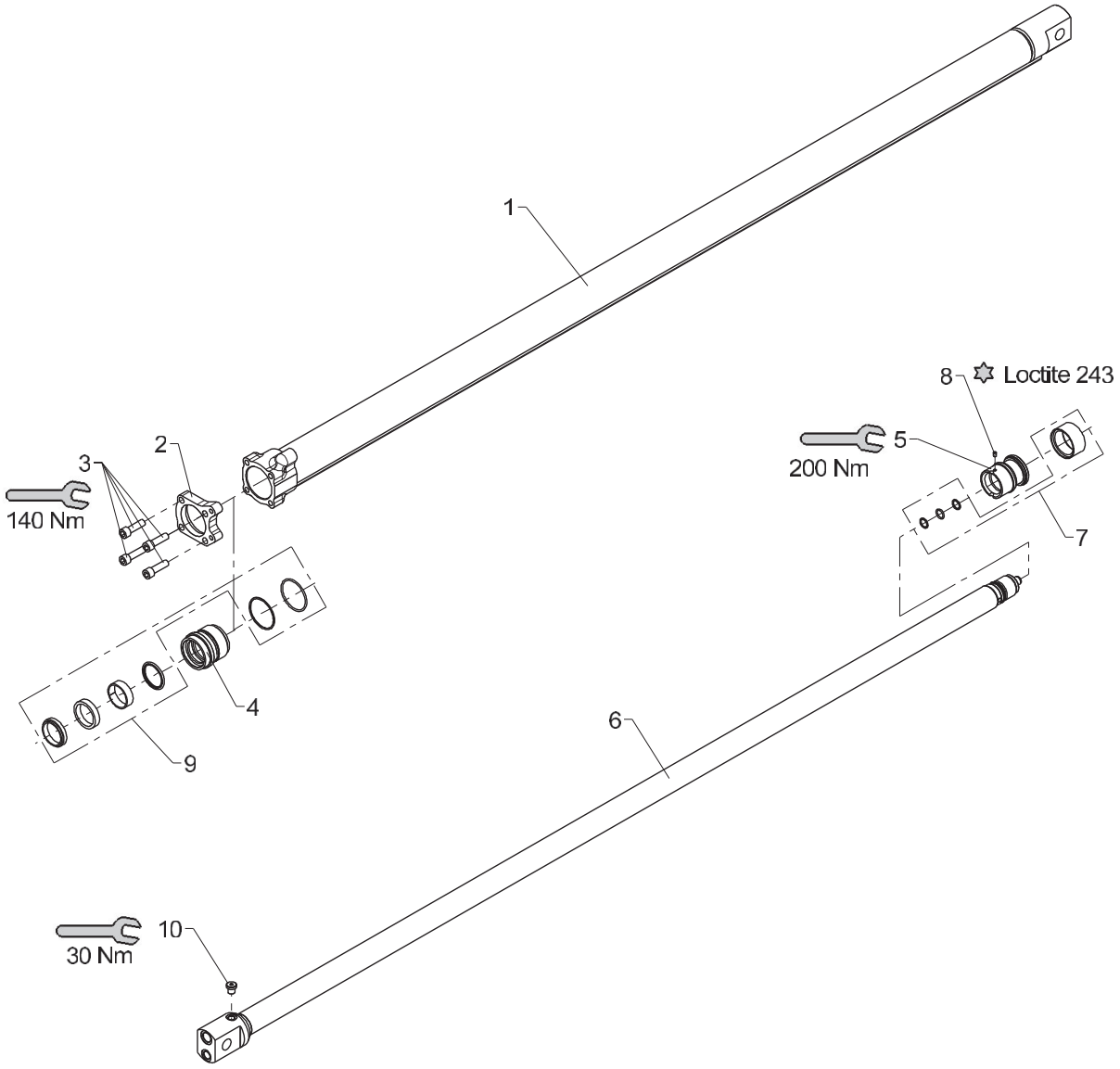

Extension cylinder II (C60/45 x 1848)

Pos	Qty.	Part no.	Description	Remarks
1	1	6365545	Cylinder tube	
2	1	6365553	Mounting flange	
3	4	30475	Screw	MC12 x 40
4	1	6365537	Guide (ø60/45)	
5	1	6365538	Piston (C60/45)	
6	1	6365547	Piston rod	
7	1	6893790	Seal kit, piston	
8	1	30903	Screw	MSP6 x 8
9	1	6894570	Seal kit for guide ø60/45	
10	1	25197	Plug	VS-R-1/4 WD

1100K, 1110K, 1220K, 1230K, 1320K, 1330K

Internal ref. 63 65 560

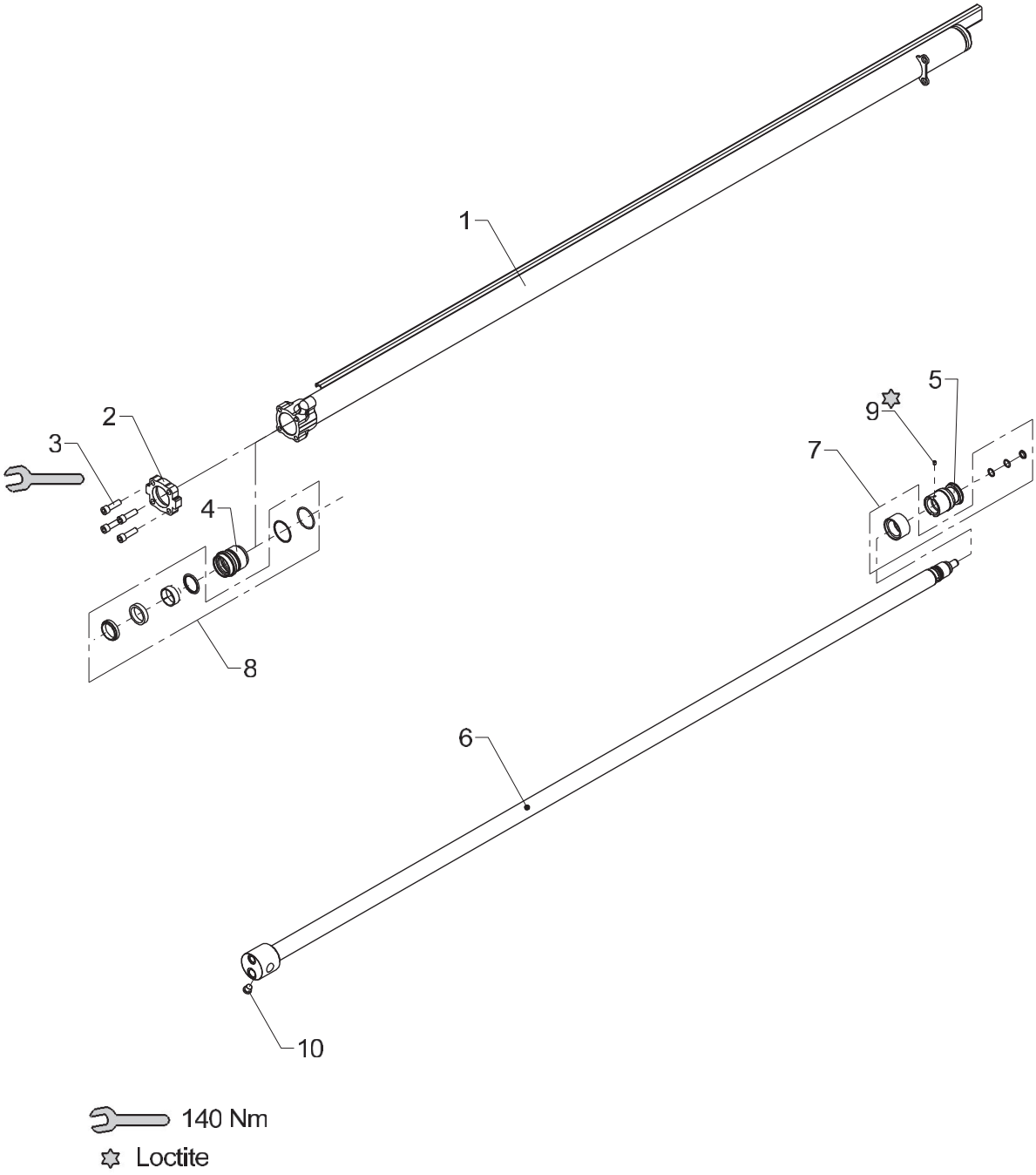

Extension cylinder II (C55/40 x 2080)

458 03 310

From loader 1170001
To loader

Created 12-03-2014
Modified

Pos	Qty.	Part no.	Description	Remarks
1	1	6365565	Cylinder tube	
2	1	6340613	Mounting flange	
3	4	30475	Screw	MC12 x 40
4	1	6365555	Guide (C55/40)	
5	1	6365559	Piston (C55/40)	
6	1	6365606	Piston rod, (C2)	
7	1	6894400	Seal kit for piston C55	
8	1	6894590	Seal kit for guide, C55/40	
9	1	30903	Screw	MSP6 x 8
10	1	25197	Plug	VS-R-1/4 WD

1100K, 1110K, 1220K, 1230K, 1320K, 1330K

Internal ref. 63 65 570

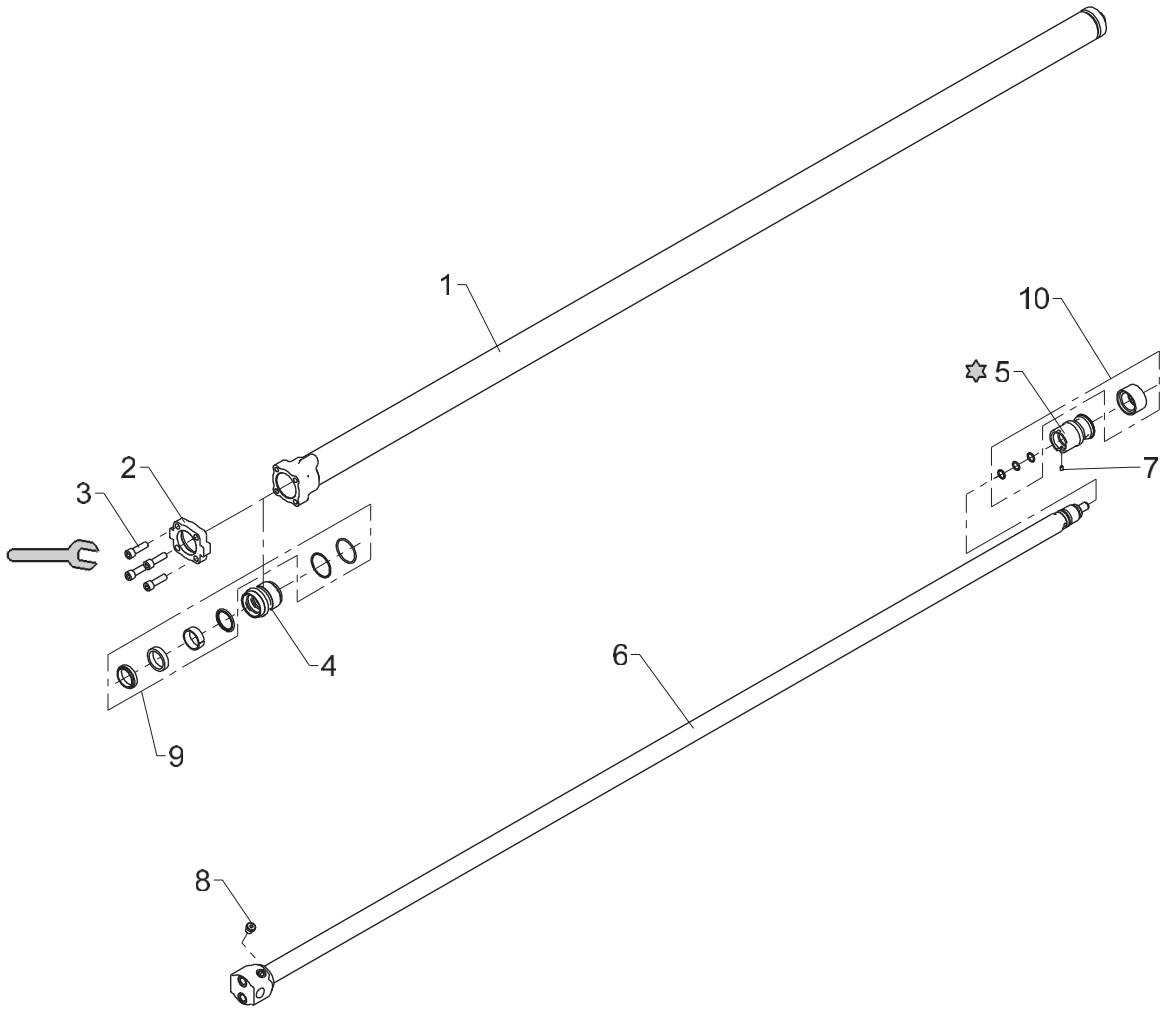

140 Nm

Loctite 243

Extension cylinder III (C55/40 x 2080)

Pos	Qty.	Part no.	Description	Remarks
1	1	6365575	Cylinder tube (C3)	
2	1	6340613	Mounting flange	
3	4	30475	Screw	MC12 x 40
4	1	6365555	Guide (C55/40)	
5	1	6365559	Piston (C55/40)	
6	1	6365571	Piston rod (C3)	
7	1	30903	Screw	MSP6 x 8
8	1	25197	Plug	VS-R-1/4 WD
9	1	6894590	Seal kit for guide, C55/40	
10	1	6894400	Seal kit for piston C55	

1100K, 1110K, 1220K, 1230K, 1320K, 1330K

Internal ref. 63 65 580

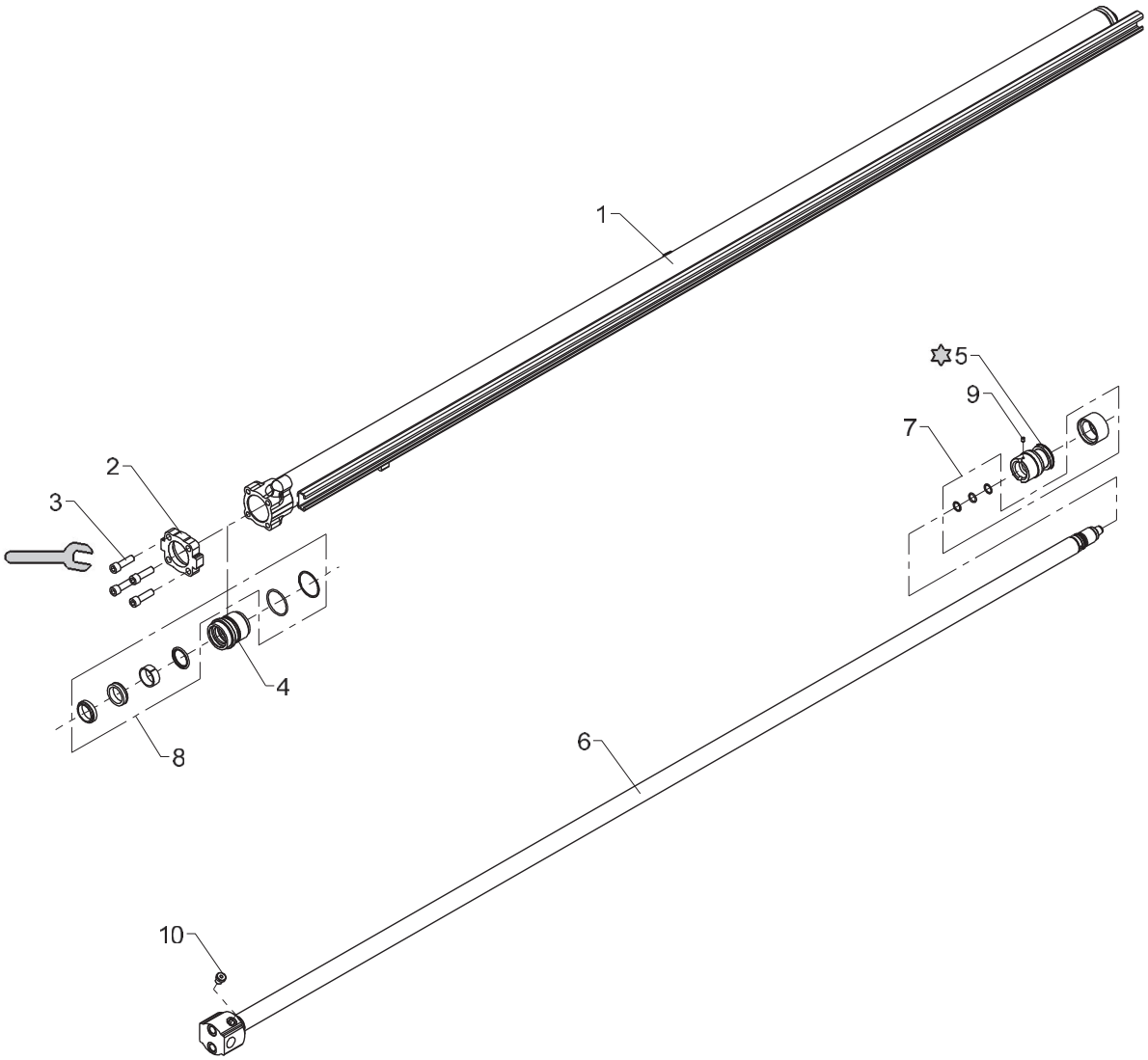

140 Nm
Loctite 243

Extension cylinder IV (C55/35)

Pos	Qty.	Part no.	Description	Remarks
1	1	6365585	Cylinder tube (C4)	
2	1	6340613	Mounting flange	
3	4	30475	Screw	MC12 x 40
4	1	6365611	Guide (C55/40)	
5	1	6365589	Piston (C55/35)	
6	1	6365581	Piston rod (C4)	
7	1	6894400	Seal kit for piston C55	
8	1	6894550	Seal kit for guide ø55/35	
9	1	30903	Screw	MSP6 x 8
10	1	25197	Plug	VS-R-1/4 WD

1100K, 1110K, 1220K, 1230K, 1320K, 1330K

Internal ref. 63 65 590

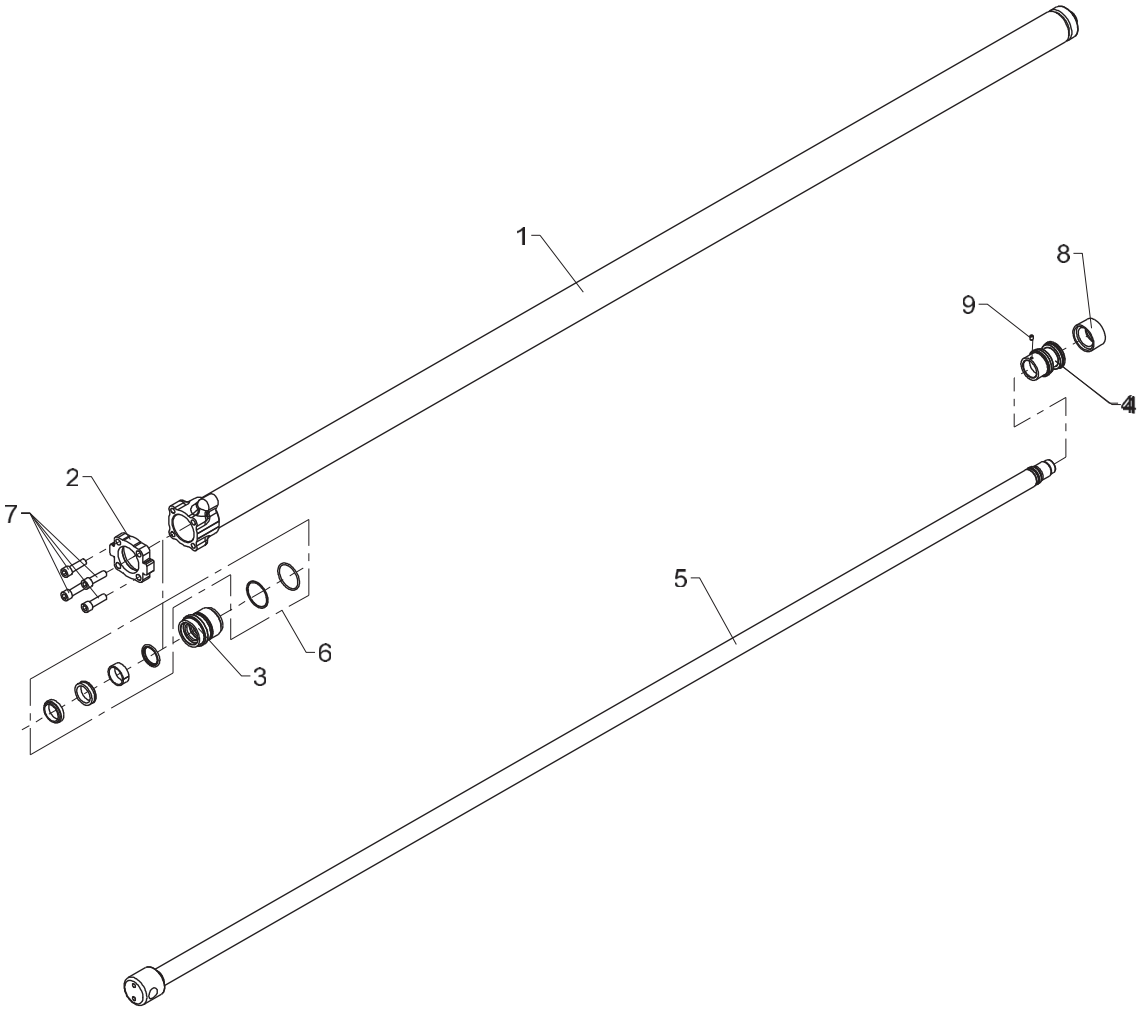

Extension cylinder V (C55/35)

Pos	Qty.	Part no.	Description	Remarks
1	1	6365575	Cylinder tube (C3)	
2	1	6340613	Mounting flange	
3	1	6365611	Guide (C55/40)	
4	1	6340612	Piston	
5	1	6365595	Piston rod (C5)	
6	1	6894550	Seal kit for guide ø55/35	
7	4	30475	Screw	MC12 x 40
8	1	20776	Seal	MD 55 X 39 X 18
9	1	30903	Screw	MSP6 x 8

1100K, 1110K, 1220K, 1230K, 1320K, 1330K

Internal ref. 63 65 610

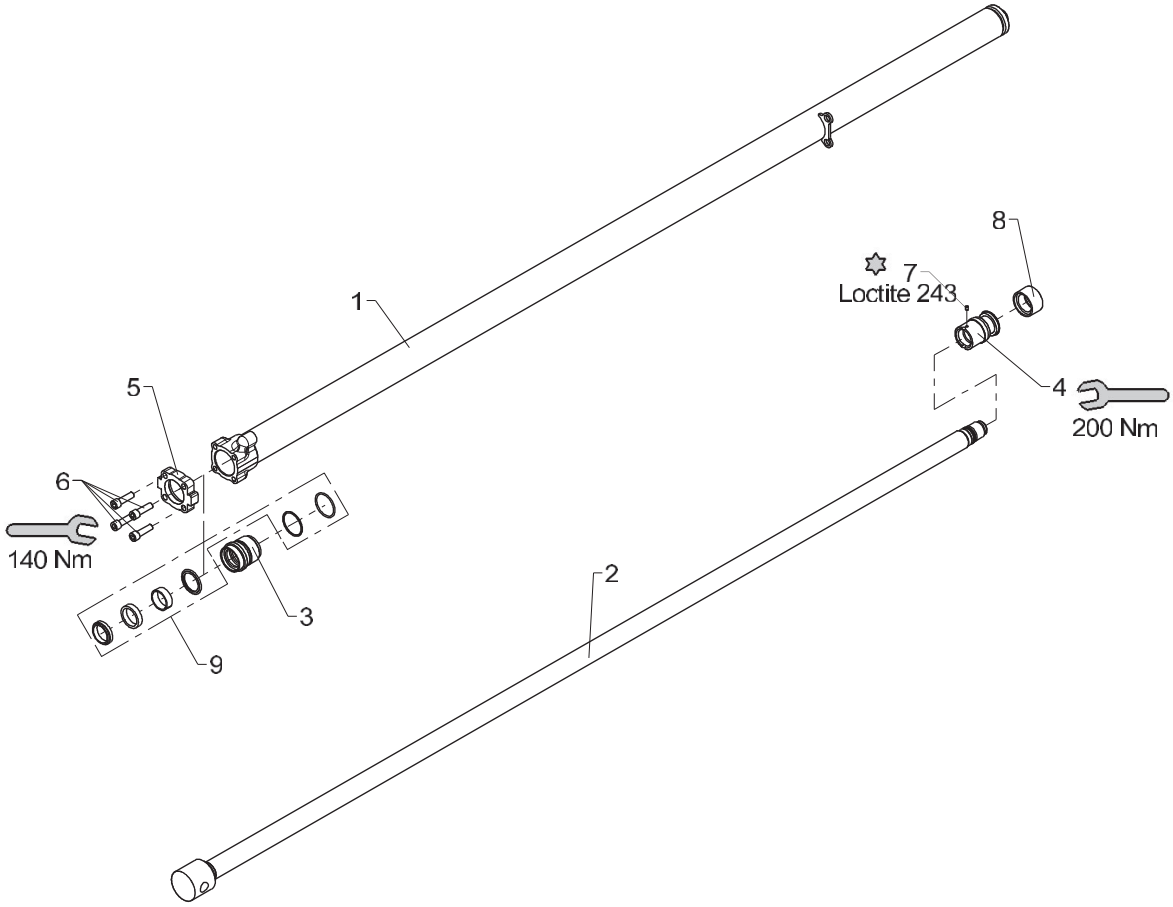

Extension cylinder K2 (C55/40 x 2080)

Pos	Qty.	Part no.	Description	Remarks
1	1	6365578	Cylinder tube	
2	1	6365568	Piston rod (C2)	
3	1	6365555	Guide (C55/40)	
4	1	6365558	Piston (C55/40)	
5	1	6340613	Mounting flange	
6	4	30475	Screw	MC12 x 40
7	1	30903	Screw	MSP6 x 8
8	1	20776	Seal	MD 55 X 39 X 18
9	1	6894590	Seal kit for guide, C55/40	

1100K, 1110K, 1220K, 1230K, 1320K, 1330K

Internal ref. 63 65 550

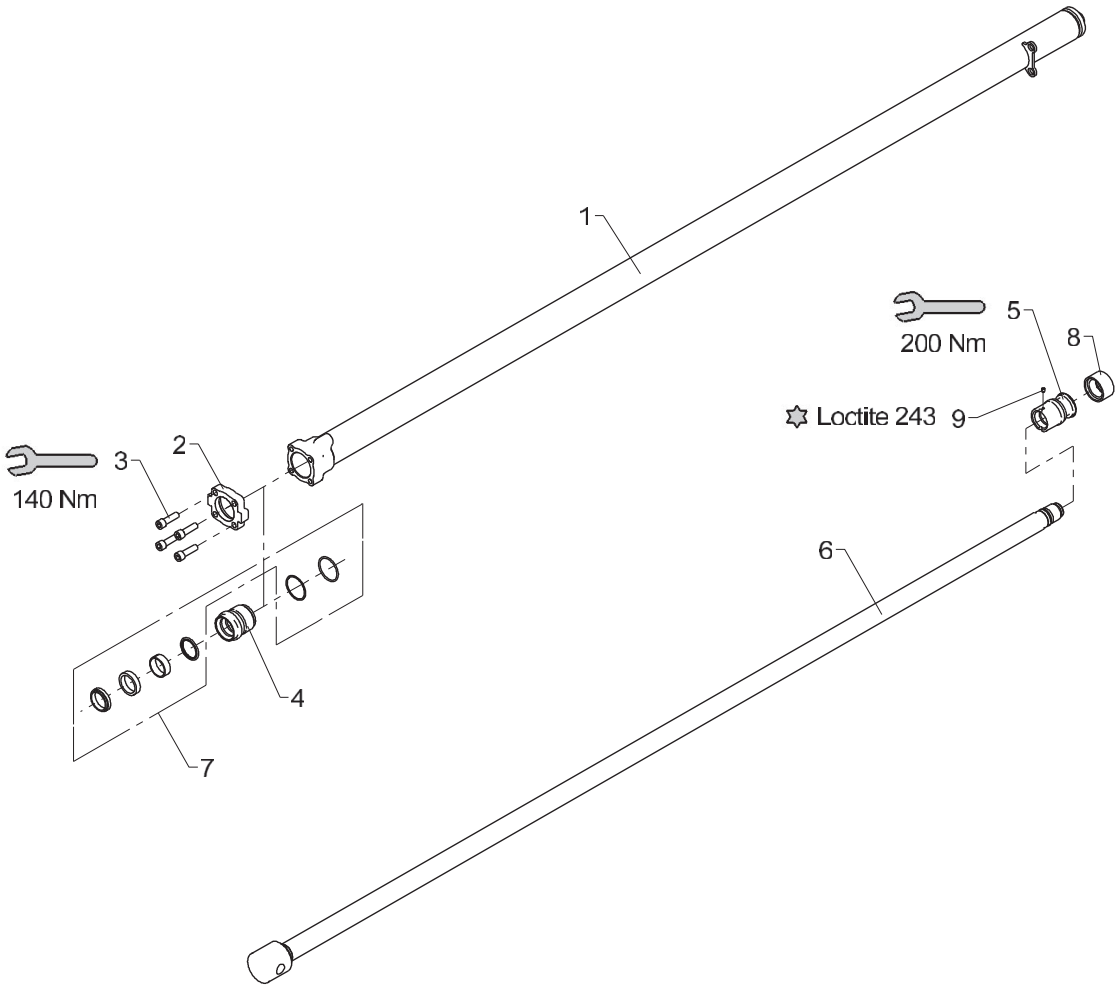

Extension cylinder K2 (C55/40 x 2080)

Pos	Qty.	Part no.	Description	Remarks
1	1	6365567	Cylinder tube (C2 m)	
2	1	6340613	Mounting flange	
3	4	30475	Screw	MC12 x 40
4	1	6365555	Guide (C55/40)	
5	1	6365558	Piston (C55/40)	
6	1	6365568	Piston rod (C2)	
7	1	6894590	Seal kit for guide, C55/40	
8	1	20776	Seal	MD 55 X 39 X 18
9	1	30903	Screw	MSP6 x 8

1100K, 1110K, 1220K, 1230K, 1320K, 1330K

Internal ref. 63 65 530

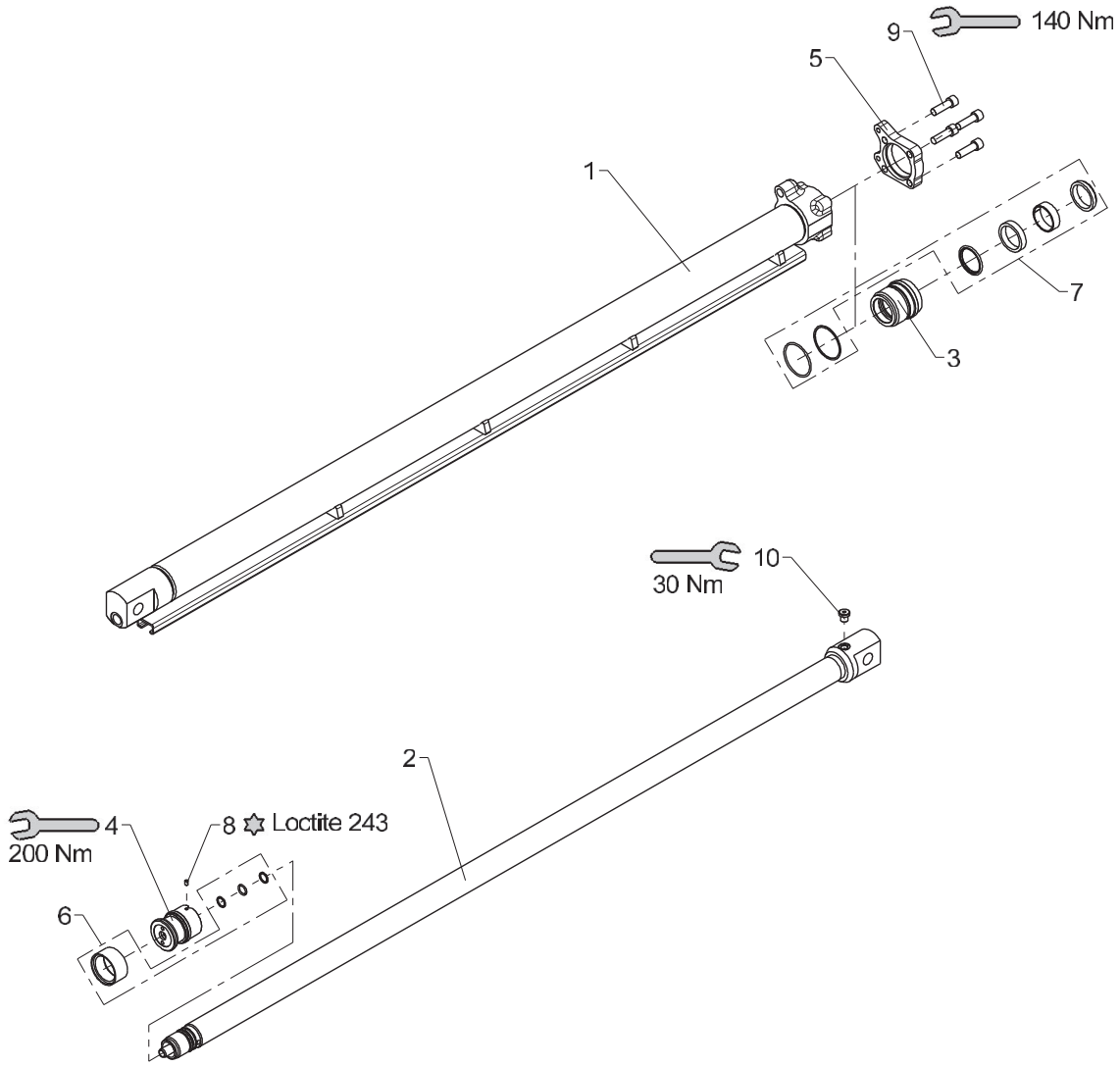

Extension cylinder I (C60/45 x 1482)

Pos	Qty.	Part no.	Description	Remarks
1	1	6365534	Cylinder tube	
2	1	6365531	Piston rod (C1)	
3	1	6365537	Guide (ø60/45)	
4	1	6365538	Piston (C60/45)	
5	1	6365553	Mounting flange	
6	1	6893790	Seal kit, piston	
7	1	6894570	Seal kit for guide ø60/45	
8	1	30903	Screw	MSP6 x 8
9	4	30475	Screw	MC12 x 40
10	1	25197	Plug	VS-R-1/4 WD

1100K, 1110K, 1220K, 1230K, 1320K, 1330K

Internal ref. 63 65 600

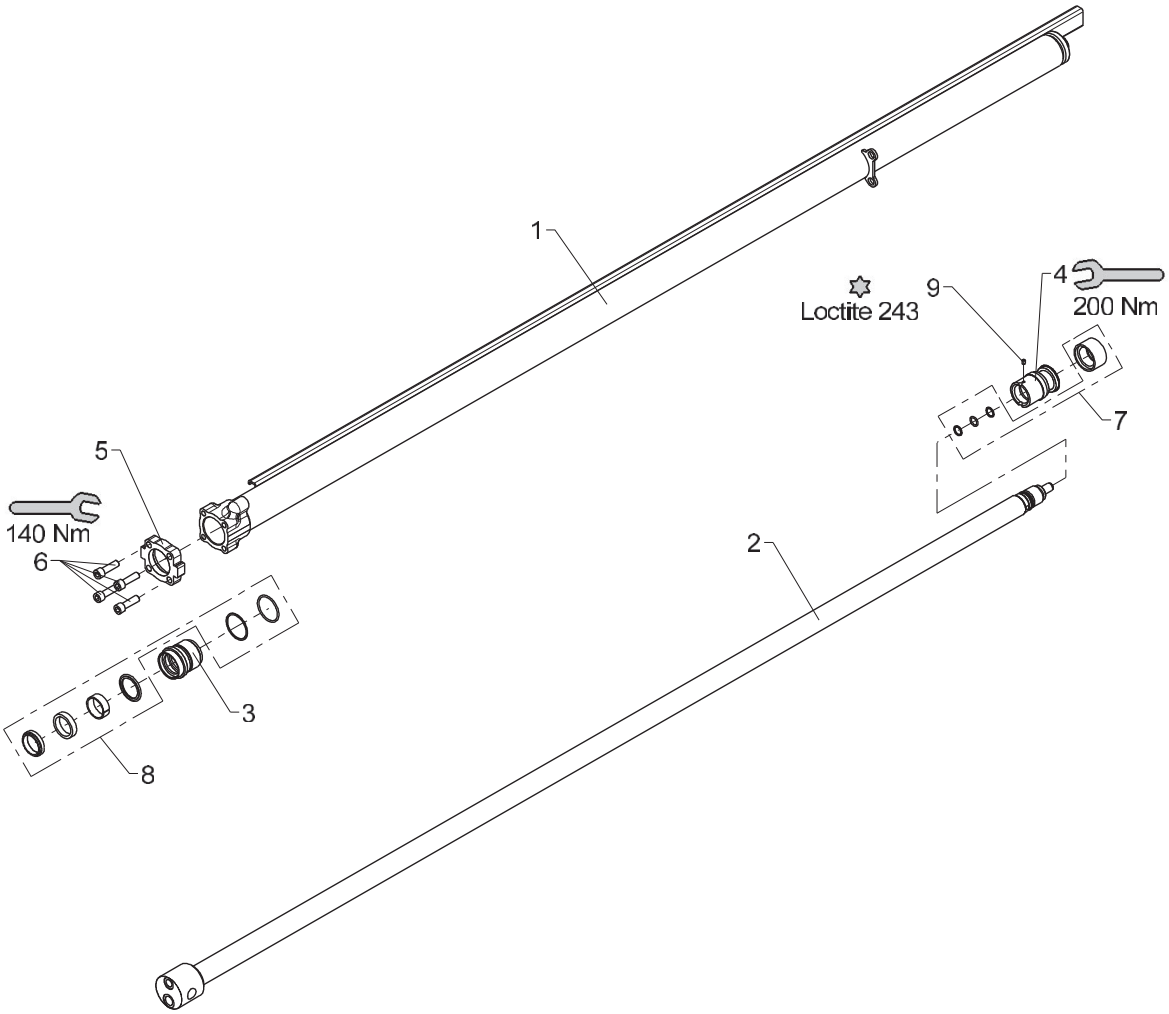

Extension cylinder II (C55/40 x 2080)

Pos	Qty.	Part no.	Description	Remarks
1	1	6365574	Cylinder tube	
2	1	6365606	Piston rod, (C2)	
3	1	6365555	Guide (C55/40)	
4	1	6365559	Piston (C55/40)	
5	1	6340613	Mounting flange	
6	4	30475	Screw	MC12 x 40
7	1	6894400	Seal kit for piston C55	
8	1	6894590	Seal kit for guide, C55/40	
9	1	30903	Screw	MSP6 x 8

1100K, 1110K, 1220K, 1230K, 1320K, 1330K

Internal ref. 63 65 330

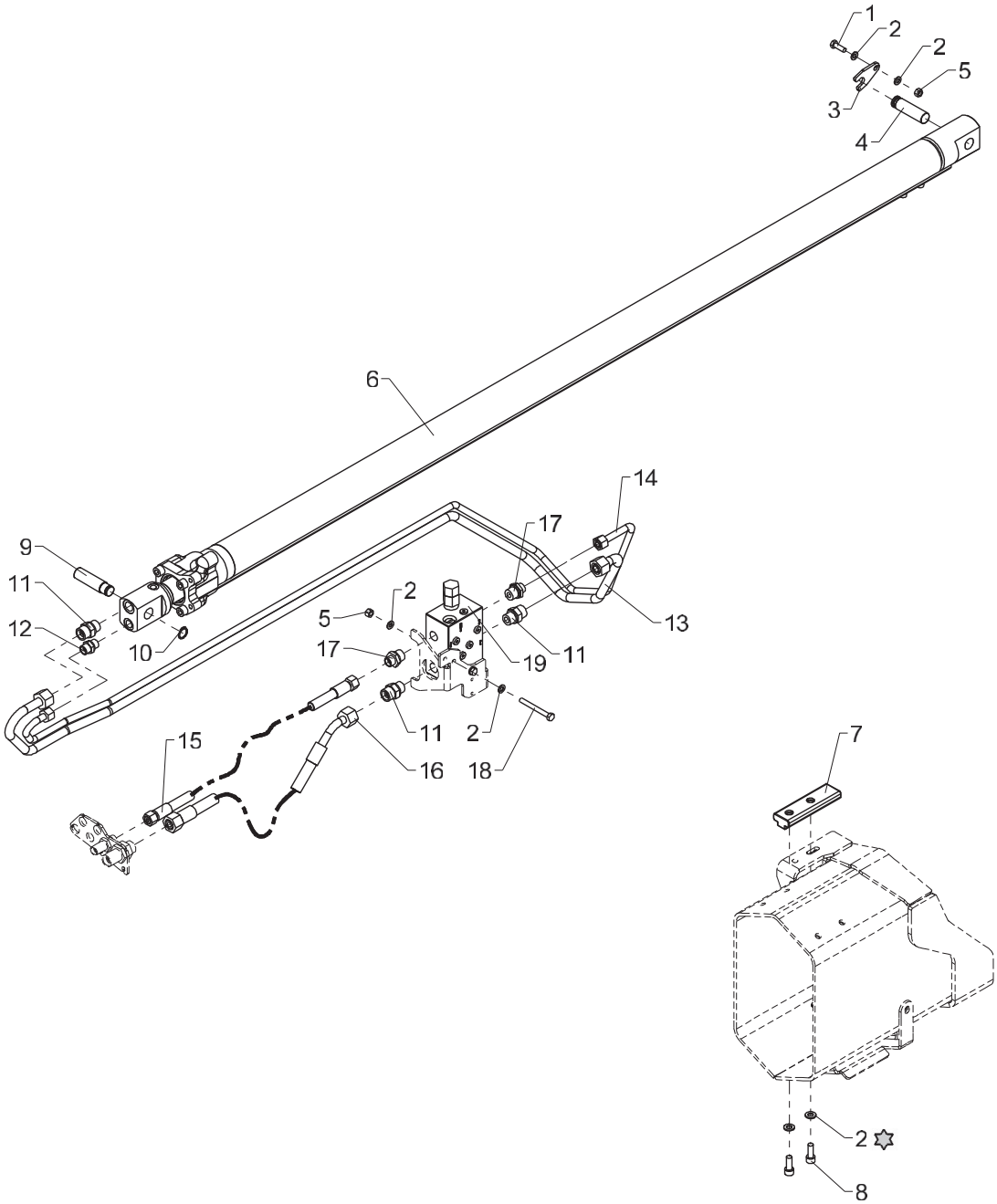

Loctite 243

Extension cylinder I incl. fittings

Pos	Qty.	Part no.	Description	Remarks
1	1	30134	Set screw, stainless	M8 x 25
2	8	31147	Face washer, 8 mm	
3	1	6340337	Lock plate	
4	1	6340522	Pin	
5	3	30886	Lock nut, stainless	M8
6	1	6365540	Extension cylinder I,(C60/45)	
7	1	63689	Slide block with bushing	
8	2	30460	Sockethead screw	MC8 x 22
9	1	6365521	Pin	
10	1	33108	Circlip	20U
11	3	26334	Connection	P-GEV 16 SR-WD
12	1	25127	Connection	P-GEV 12 LR-WD
13	1	6365659	Pipe, C1 extend	
14	1	6365661	Pipe, C1 retract	
15	1	0017970	Hose	
16	1	56592	Hose	
17	2	25108	Connection	GES 12 LR 1/2-WD
18	2	30812	Steel bolt, stainless	M8 x 75
19	1	59044	Load holding valve	

1100K, 1110K, 1220K, 1230K, 1320K, 1330K

Internal ref. 63 66 190

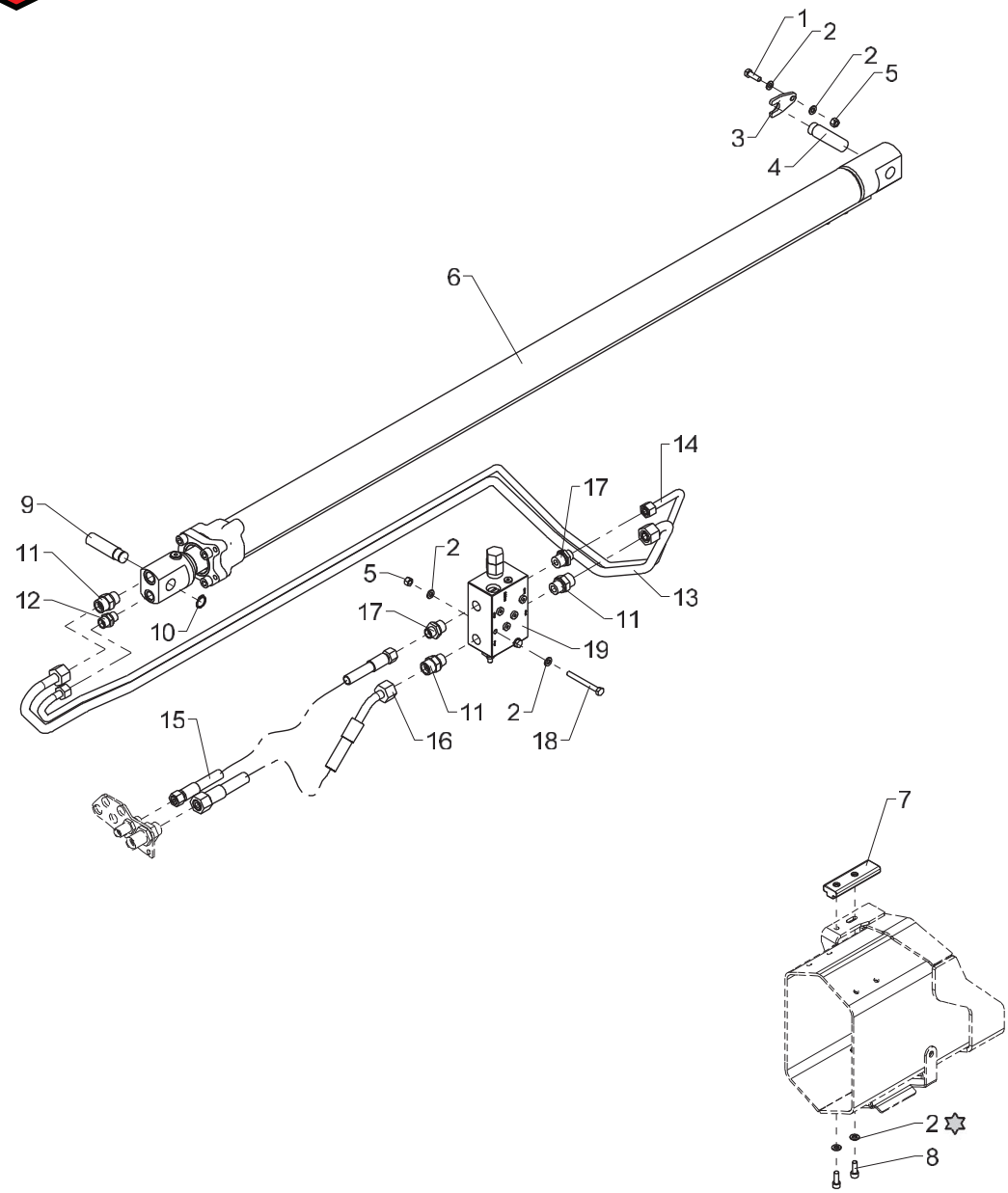

Loctite 243

Extension cylinder I C incl. fittings

Pos	Qty.	Part no.	Description	Remarks
1	1	30134	Set screw, stainless	M8 x 25
2	8	31147	Face washer, 8 mm	
3	1	6340337	Lock plate	
4	1	6340522	Pin	
5	3	30886	Lock nut, stainless	M8
6	1	6365530	Extension cylinder I, (C60/45)	
7	1	63689	Slide block with bushing	
8	2	30460	Sockethead screw	MC8 x 22
9	1	6365521	Pin	
10	1	33108	Circlip	20U
11	3	26334	Connection	P-GEV 16 SR-WD
12	1	25127	Connection	P-GEV 12 LR-WD
13	1	6365659	Pipe, C1 extend	
14	1	6365661	Pipe, C1 retract	
15	1	0017970	Hose	
16	1	56592	Hose	
17	2	25108	Connection	GES 12 LR 1/2-WD
18	2	30812	Steel bolt, stainless	M8 x 75
19	1	59044	Load holding valve	

1100K, 1110K, 1220K, 1230K, 1320K, 1330K

63 65 480
Internal ref. 63 65 350

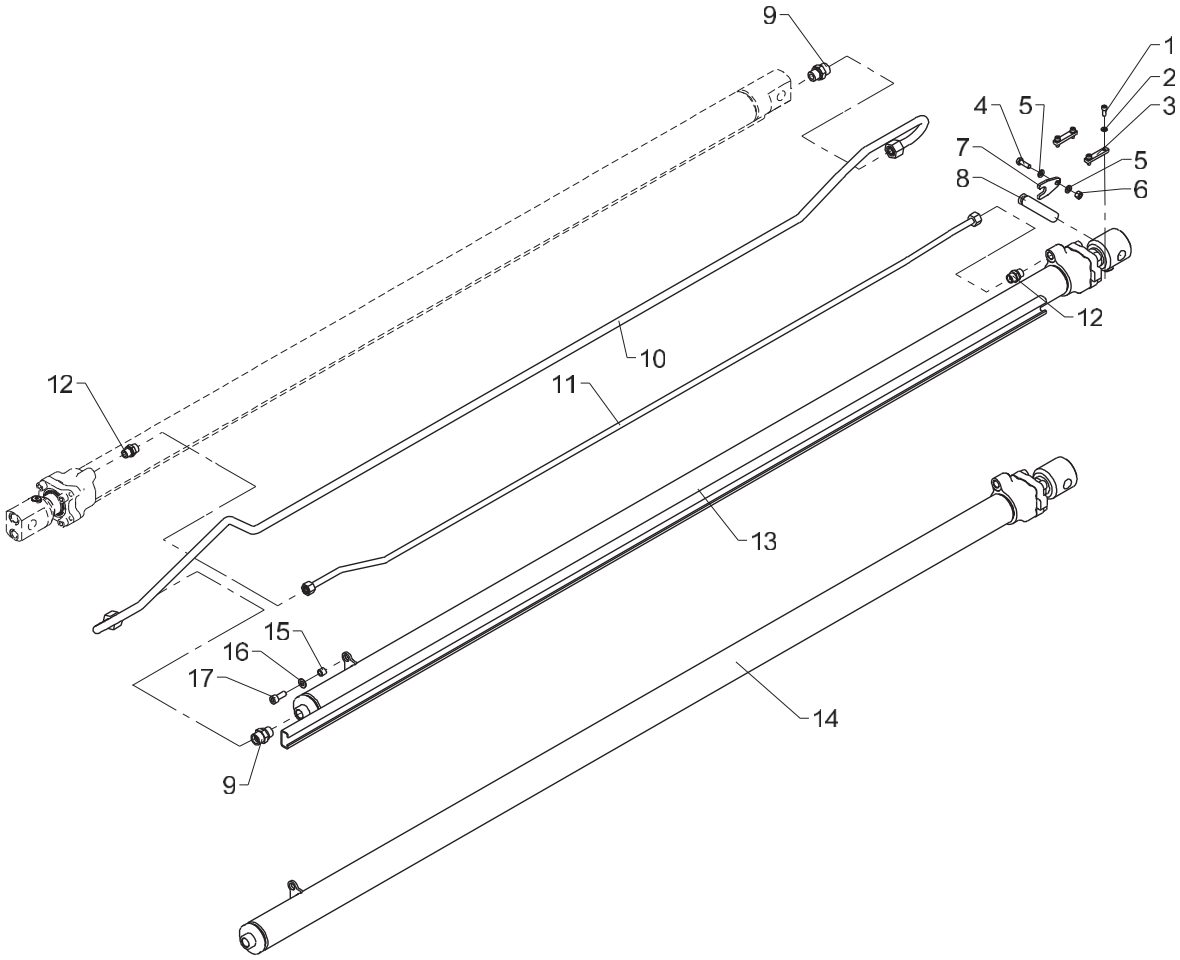

Extension cylinder II incl. fittings

Pos	Qty.	Part no.	Description	Remarks
		6365350	Extension cyl. II + fittings	
		6365480	Extension cyl. II + fittings	
1	4	31539	Screw, stainless	MC6 x 16
2	4	31154	Spring washer, stainless	6 mm
3	2	6340336	Lock plate	
4	1	30134	Set screw, stainless	M8 x 25
5	2	31147	Face washer, 8 mm	
6	1	30886	Lock nut, stainless	M8
7	1	6340337	Lock plate	
8	1	6365523	Pin	
9	2	26334	Connection	P-GEV 16 SR-WD
10	1	6365643	Pipe, extend	
11	1	6365644	Pipe, retract	
12	2	25127	Connection	P-GEV 12 LR-WD
13	1	6365560	Extension cylinder II (C55/40)	K2+
14	1	6365550	Extension cylinder II (C55/40)	K2
15	2	6302369	Spacer	
16	2	31177	Washer	10 mm
17	2	30453	Screw	MC10 x 25

1100K, 1110K, 1220K, 1230K, 1320K, 1330K

63 65 630
Internal ref. 63 65 620

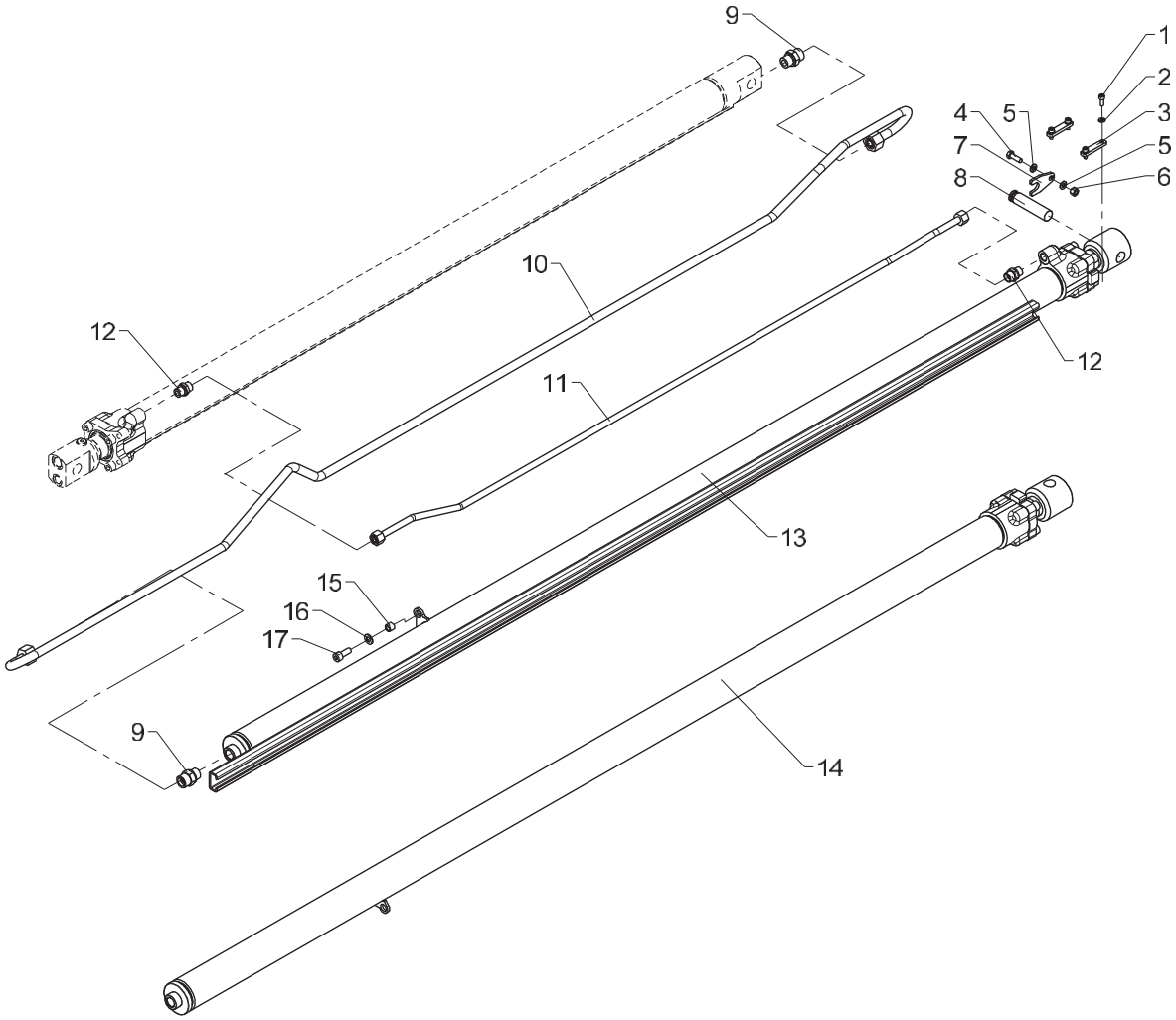

Extension cylinder II incl. fittings (KS)

Pos	Qty.	Part no.	Description	Remarks
		6365620	Ext. cylinder II C + fittings	
		6365630	Ext. cylinder II C + fittings	
1	4	31539	Screw, stainless	MC6 x 16
2	4	31154	Spring washer, stainless	6 mm
3	2	6340336	Lock plate	
4	1	30134	Set screw, stainless	M8 x 25
5	2	31147	Face washer, 8 mm	
6	1	30886	Lock nut, stainless	M8
7	1	6340337	Lock plate	
8	1	6365523	Pin	
9	2	26334	Connection	P-GEV 16 SR-WD
10	1	6365652	Pipe, CII extend	
11	1	6365653	Pipe, CII retract	
12	2	25127	Connection	P-GEV 12 LR-WD
13	1	6365600	Extension cylinder II (C55/40)	K2+
14	1	6365610	Extension cylinder II (C55/40)	K2
15	2	6302369	Spacer	
16	2	31177	Washer	10 mm
17	2	30453	Screw	MC10 x 25

1100K, 1110K, 1220K, 1230K, 1320K, 1330K

Internal ref. 63 65 370

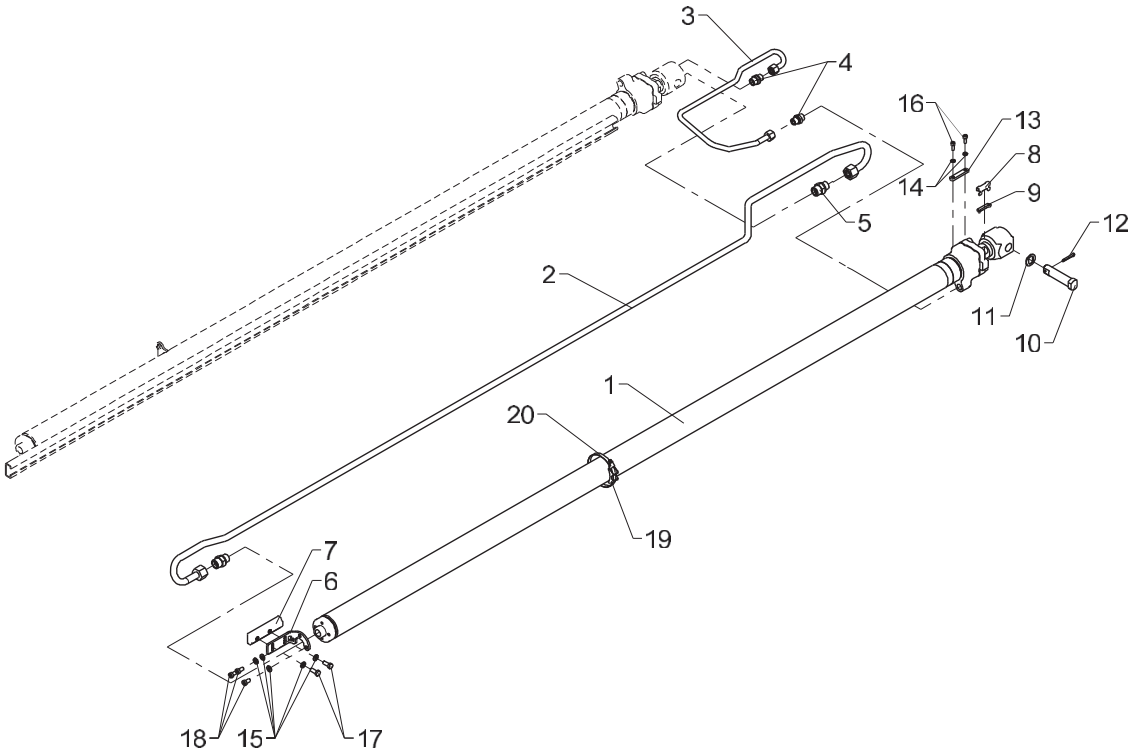

Extension cylinder III incl. fittings

Pos	Qty.	Part no.	Description	Remarks
1	1	6365570	Extension cylinder II (C55/40)	
2	1	6365645	Pipe, C3 extend	
3	1	6365646	Pipe, C3, retract	
4	2	25127	Connection	P-GEV 12 LR-WD
5	2	26334	Connection	P-GEV 16 SR-WD
6	1	6365577	Bracket for slide block (C3)	
7	1	63689	Slide block with bushing	
8	1	31932	Clip	
9	1	6348293	Lock plate	
10	1	6344525	Pin	
11	1	6340526	Spacer	
12	1	31634	Split pin	ø5 x 32
13	1	6340336	Lock plate	
14	2	31154	Spring washer, stainless	6 mm
15	5	31147	Face washer, 8 mm	
16	2	31539	Screw, stainless	MC6 x 16
17	2	30132	Set screw, stainless	
18	3	32478	Screw	M8 x 16
19	1	64409	Clamp	
20	1	31406	Clip	

1100K, 1110K, 1220K, 1230K, 1320K, 1330K

Internal ref. 63 65 390

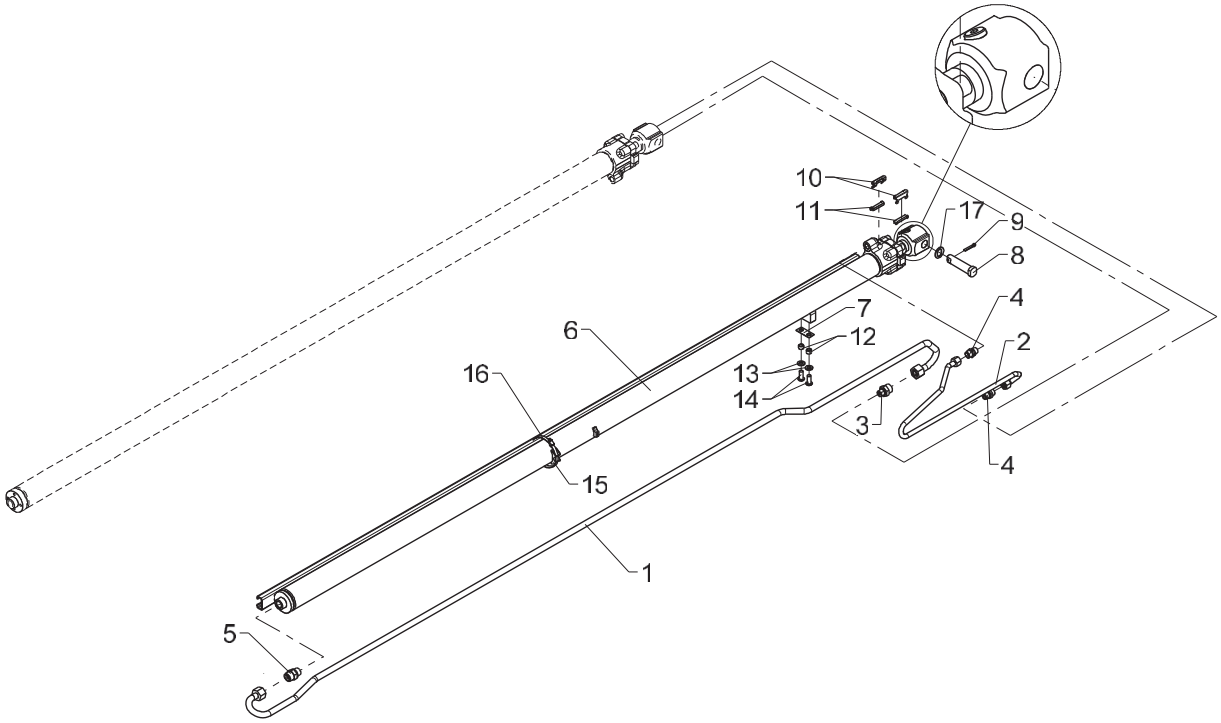

Extension cylinder IV incl. fittings

Pos	Qty.	Part no.	Description	Remarks
1	1	6365647	Pipe, C4 extend	
2	1	6365648	Pipe, C4, retract	
3	1	26368	Straight connection	P-GEV 16 SR 3/8-WD
4	2	25127	Connection	P-GEV 12 LR-WD
5	1	26334	Connection	P-GEV 16 SR-WD
6	1	6365580	Extension cylinder IV (C55/35)	
7	1	6365588	Shim	
8	1	6365525	Pin (ø22x69)	
9	1	31634	Split pin	ø5 x 32
10	2	31919	Clip, stainless, 8 mm	
11	2	6340316	Lock plate (8mm)	
12	2	6300799	Spacer	
13	2	31177	Washer	10 mm
14	2	30652	Screw	M10 x 25
15	1	64409	Clamp	
16	1	31406	Clip	
17	1	6340526	Spacer	

1100K, 1110K, 1220K, 1230K, 1320K, 1330K

Internal ref. 63 65 410

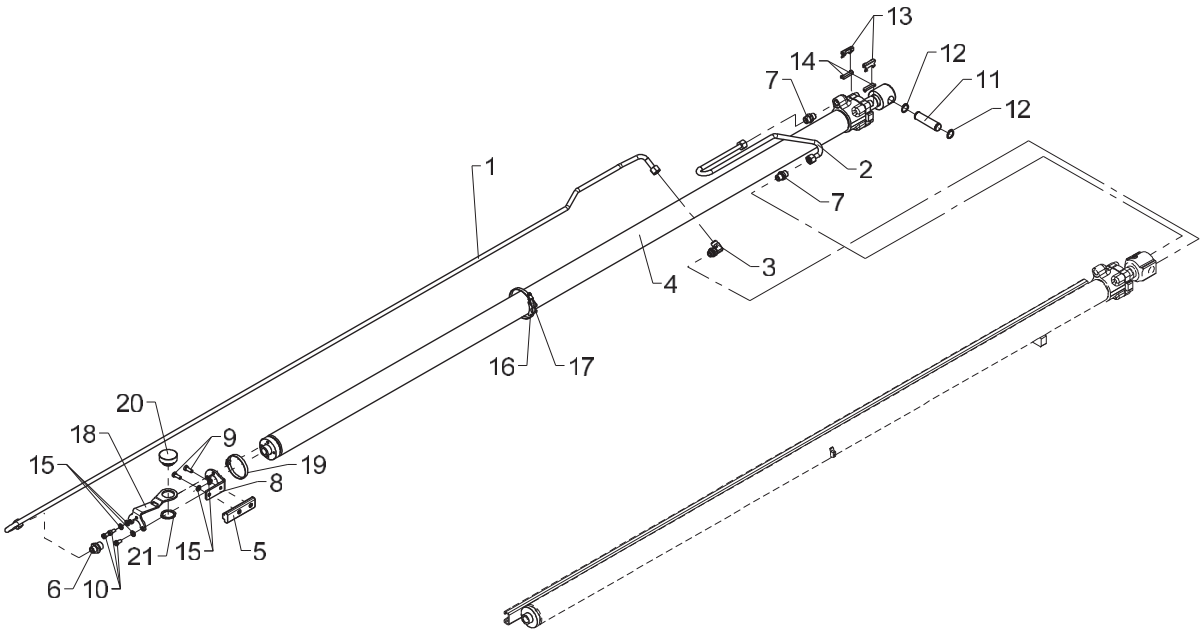

Extension cylinder V incl. Fittings for K5

458 03 540

From loader 1170001
To loader

Created 29-03-2012
Modified 24-10-2012

Pos	Qty.	Part no.	Description	Remarks
1	1	6365649	Pipe, C5 extend	
2	1	6365651	Pipe, C5 retract	
3	1	26897	Elbow connection	12 mm - 3/8"
4	1	6365590	Extension cylinder V (C55/35)	
5	1	63689	Slide block with bushing	
6	1	25108	Connection	GES 12 LR 1/2-WD
7	2	25127	Connection	P-GEV 12 LR-WD
8	1	6365597	Bracket for slide block (C5)	
9	2	30132	Set screw, stainless	
10	3	32478	Screw	M8 x 16
11	1	6304229	Pin	
12	2	33110	Circlip	22U
13	2	31932	Clip	
14	2	6348293	Lock plate	
15	5	31147	Face washer, 8 mm	
16	1	64409	Clamp	
17	1	31406	Clip	
18	1	6365596	Bracket	
19	1	31500	Clip	
20	1	68050	Buffer ø50 mm	
21	1	33117	Circlip	35U

1100K, 1110K, 1220K, 1230K, 1320K, 1330K

Internal ref. 63 65 430

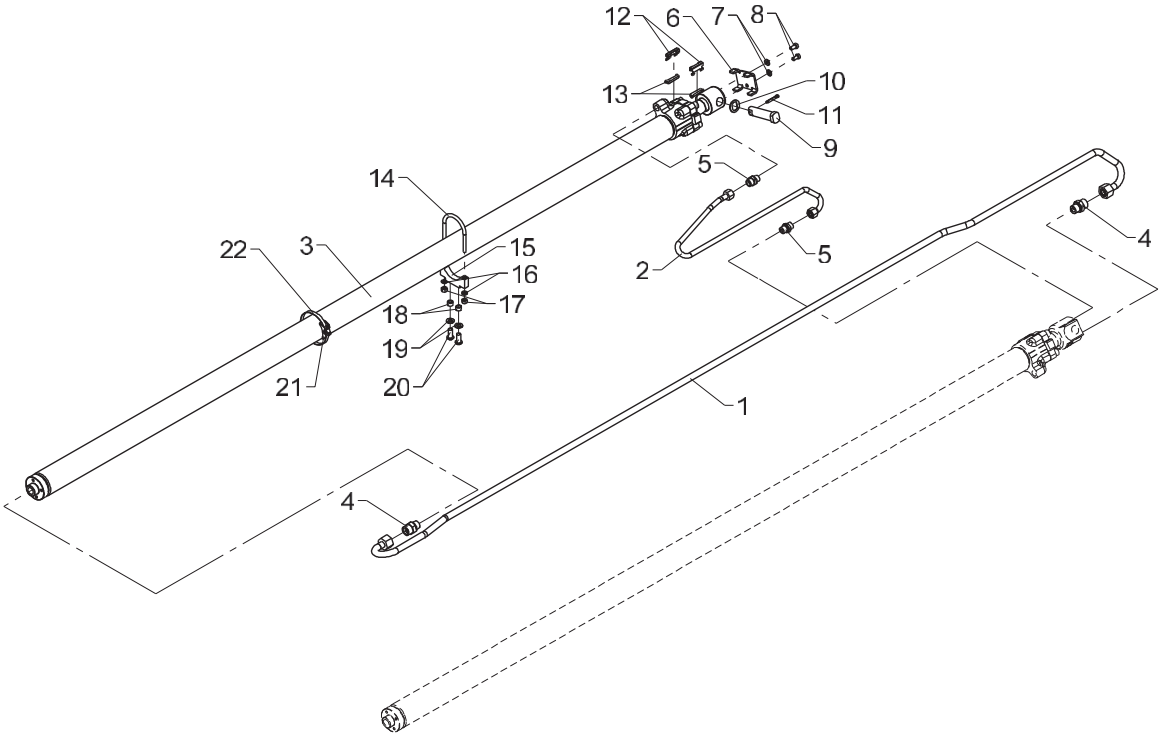

Extension cylinder V incl. Fittings for K4

458 03 560

From loader 1170001
To loader

Created 29-03-2012
Modified

Pos	Qty.	Part no.	Description	Remarks
1	1	6365647	Pipe, C4 extend	
2	1	6365648	Pipe, C4, retract	
3	1	6365590	Extension cylinder V (C55/35)	
4	2	26334	Connection	P-GEV 16 SR-WD
5	2	25127	Connection	P-GEV 12 LR-WD
6	1	6365374	Lock plate	
7	2	31147	Face washer, 8 mm	
8	2	32478	Screw	M8 x 16
9	1	6365525	Pin (ø22x69)	
10	1	6340526	Spacer	
11	1	31634	Split pin	ø5 x 32
12	2	31932	Clip	
13	2	6348293	Lock plate	
14	1	31816	Hose clip	
15	1	6365375	Bracket for cylinder	
16	2	31155	Spring washer	8 mm
17	2	30886	Lock nut, stainless	M8
18	2	6300799	Spacer	
19	2	31177	Washer	10 mm
20	2	30652	Screw	M10 x 25
21	1	64409	Clamp	
22	1	31406	Clip	

1100K, 1110K, 1220K, 1230K, 1320K, 1330K

Internal ref. 63 65 420

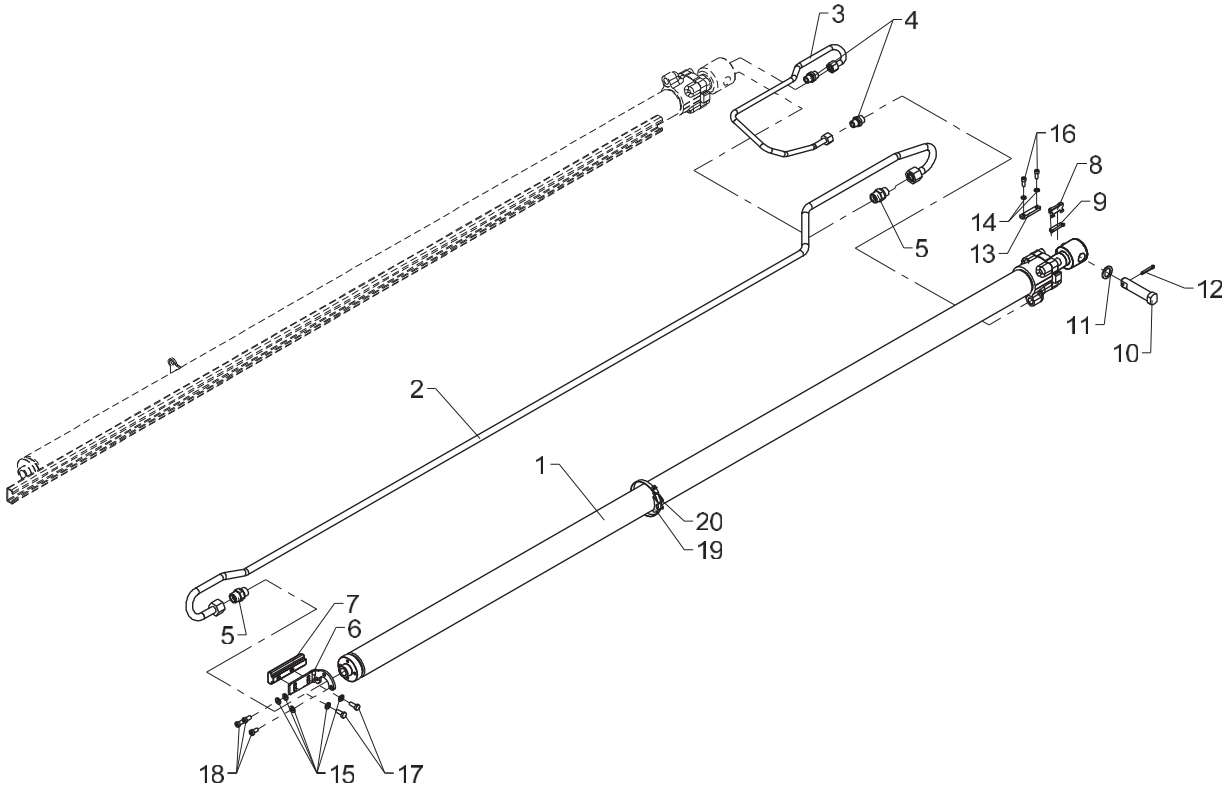

Extension cylinder V incl. Fittings for K3

458 03 570

From loader 1170001
To loader

Created 29-03-2012
Modified 10-08-2015

Pos	Qty.	Part no.	Description	Remarks
1	1	6365590	Extension cylinder V (C55/35)	
2	1	6365645	Pipe, C3 extend	
3	1	6365646		
4	2	25127	Connection	P-GEV 12 LR-WD
5	2	26334	Connection	P-GEV 16 SR-WD
6	1	6365577		
7	1	63689	Slide block with bushing	
8	1	31932	Clip	
9	1	6348293	Lock plate	
10	1	6344525	Pin	
11	1	6340526	Spacer	
12	1	31634	Split pin	ø5 x 32
13	1	6340336	Lock plate	
14	2	31154	Spring washer, stainless	6 mm
15	5	31147	Face washer, 8 mm	
16	2	31539	Screw, stainless	MC6 x 16
17	2	30132	Set screw, stainless	
18	3	32478	Screw	M8 x 16
19	1	64409	Clamp	
20	1	31406	Clip	

1100K, 1110K, 1220K, 1230K, 1320K, 1330K

Internal ref. 63 65 670

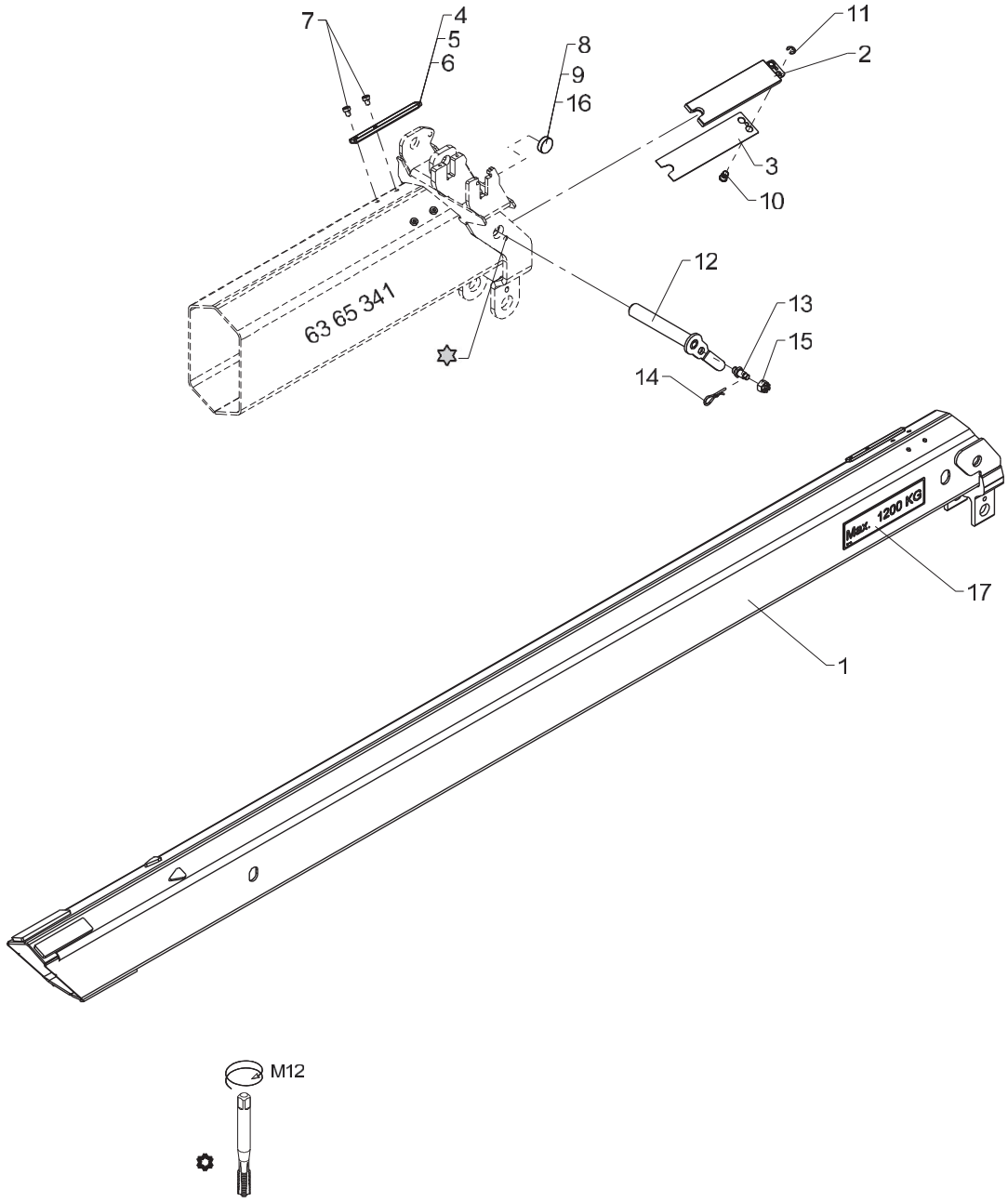

Manual extension, F3

Pos	Qty.	Part no.	Description	Remarks
		6365670	Manual extension F3	
1	1	6365671	Manual extension F3	
2	2	6366001	Slide block	
3	2	6366011	Shim	
4	2	6366017	Wear plate (5mm)	
5	2	6366016	Wear plate (6mm)	
6	2	6366015	Wear plate (7mm)	
7	4	32273	Cyl. screw, stainless	MC8 x 10
8	2	68062	Slide block 8 mm	
9	2	68063	Slide block 8.75 mm	
10	4	6366006	Lock pin	
11	4	33292	Circlip	
12	1	6365677	Pin	
13	1	6340359	Lock pin	
14	1	33379	Spring	
15	1	32127	Nut	M12
16	2	68064	Slide block 9,5 mm	
17	2	65148	Label. max. 1200 kg	

1100K, 1110K, 1220K, 1230K, 1320K, 1330K

Internal ref. 63 65 680

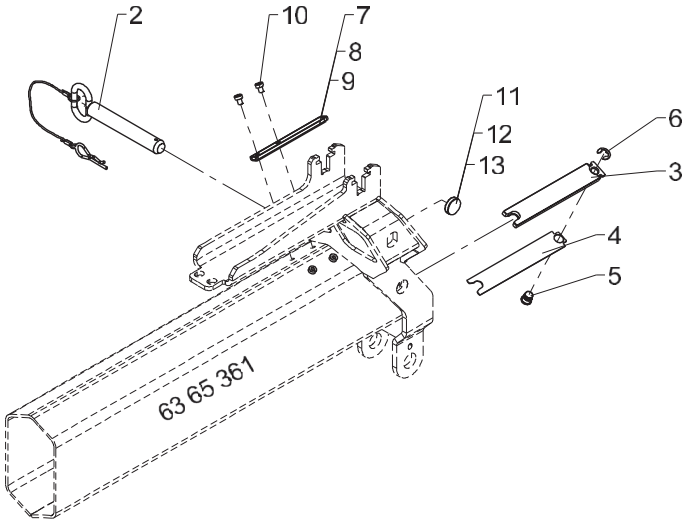

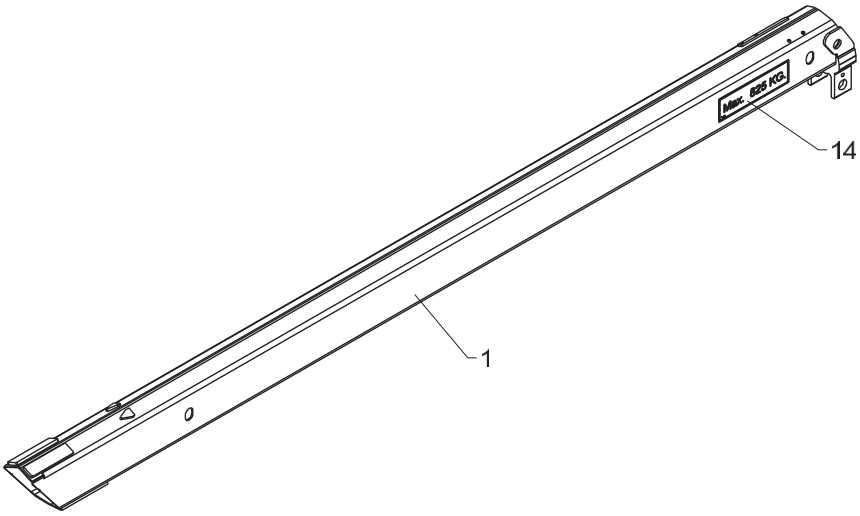

Manual extension, F4

Pos	Qty.	Part no.	Description	Remarks
		6365680	Manual extension F4	
1	1	6365681	Manual extension F4	
2	1	6657424	Lock pin with split pin	
3	2	6366003	Slide block (35x200), compl.	
4	2	6366012	Shim for slide block	
5	2	6366007	Lock pin (Ø16)	
6	2	33291	Circlip	
7	2	6366017	Wear plate (5mm)	
8	2	6366016	Wear plate (6mm)	
9	2	6366015	Wear plate (7mm)	
10	4	32273	Cyl. screw, stainless	MC8 x 10
11	2	63673	Slide block	
12	2	64056	Slide block	
13	2	63670	Slide block	
14	2	66460	Label, max. 825 kg	MAX. 825 kg

1100K, 1110K, 1220K, 1230K, 1320K, 1330K

Internal ref. 63 65 690

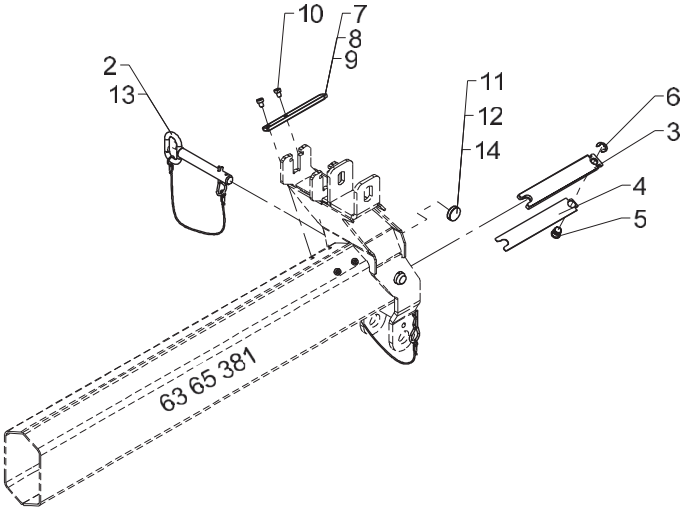

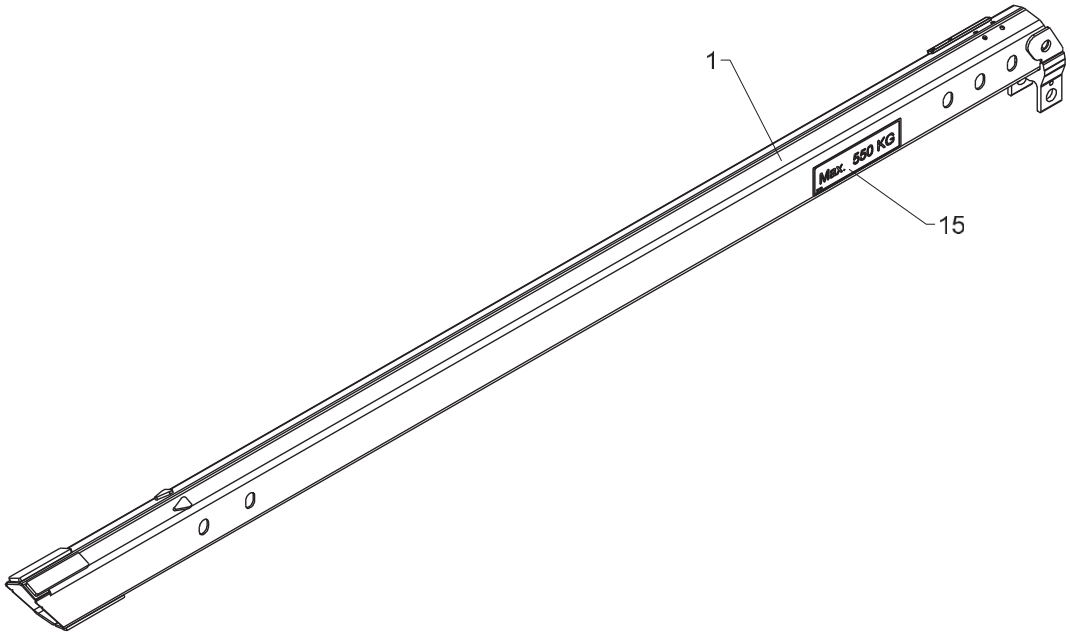

Manual extension, F5

Created 29-03-2012
Modified 27-11-2014

Pos	Qty.	Part no.	Description	Remarks
		6365690	Manual extension, F5	
1	1	6365691	Manual extension F5	
2	1	6301166	Lock pin with split pin	ø20
3	2	6366003	Slide block (35x200), compl.	
4	2	6366012	Shim for slide block	
5	2	6366007	Lock pin (Ø16)	
6	2	33291	Circlip	
7	2	6366017	Wear plate (5mm)	
8	2	6366016	Wear plate (6mm)	
9	2	6366015	Wear plate (7mm)	
10	4	32273	Cyl. screw, stainless	MC8 x 10
11	2	63673	Slide block	
12	2	64056	Slide block	
13	1	6657654	Lock pin with chain	ø25
14	2	63670	Slide block	
15	2	65490	Label, max. 550 kg	

1100K, 1110K, 1220K, 1230K, 1320K, 1330K

Internal ref. 63 65 700

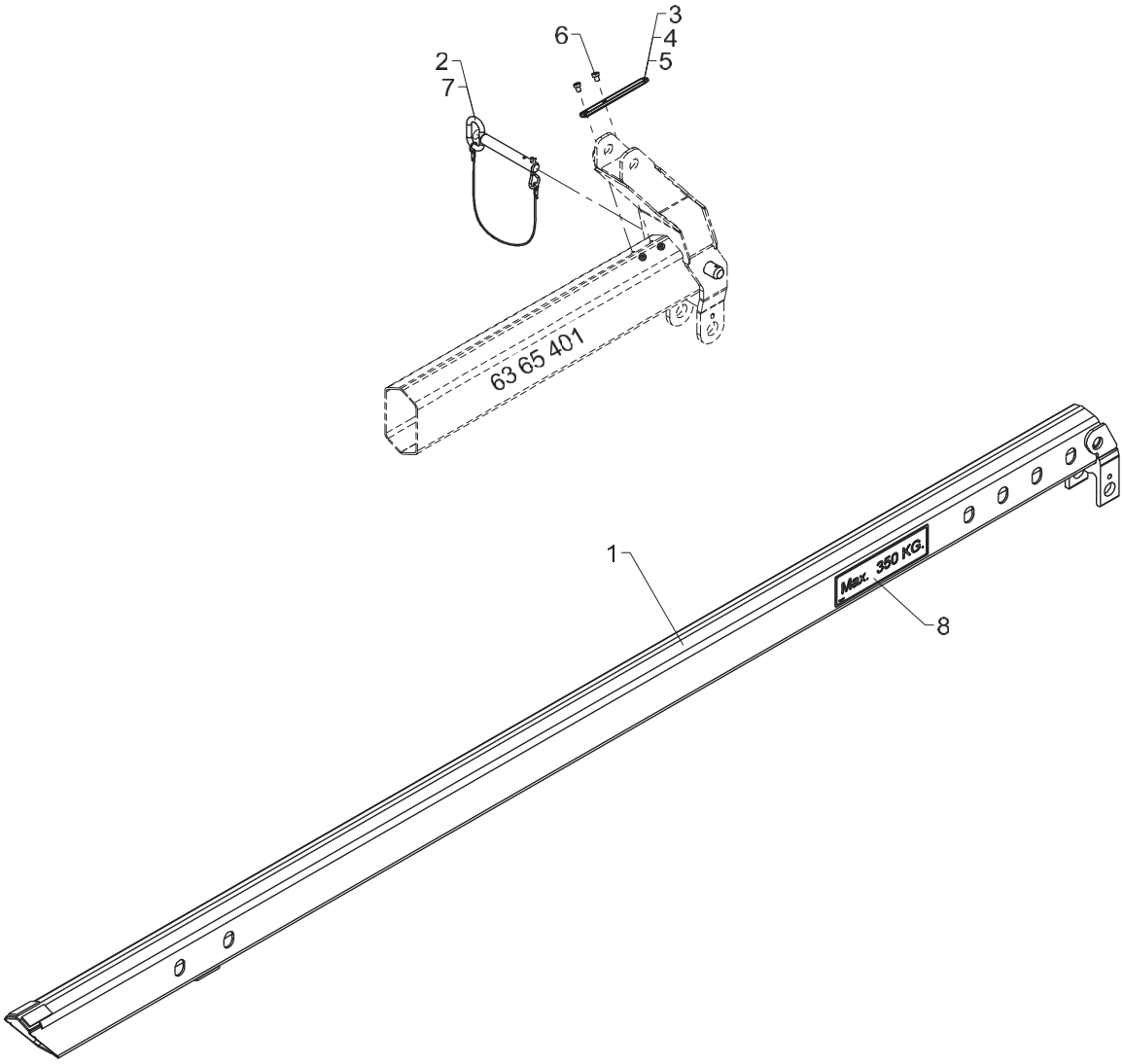

Manual extension, F6

458 03 750

From loader 1170001
To loader

Created 29-03-2012
Modified 27-11-2014

Pos	Qty.	Part no.	Description	Remarks
		6365700	Manual extension F6	
1	1	6365701	Manual extension F6	
2	1	6301166	Lock pin with split pin	ø20
3	2	6366017	Wear plate (5mm)	
4	2	6366016	Wear plate (6mm)	
5	2	6366015	Wear plate (7mm)	
6	4	32273	Cyl. screw, stainless	MC8 x 10
7	1	6657654	Lock pin with chain	ø25
8	2	65331	Label. max. 350 kg	

1100K, 1110K, 1220K, 1230K, 1320K, 1330K

63 66 490
63 66 220
Internal ref. 63 66 150

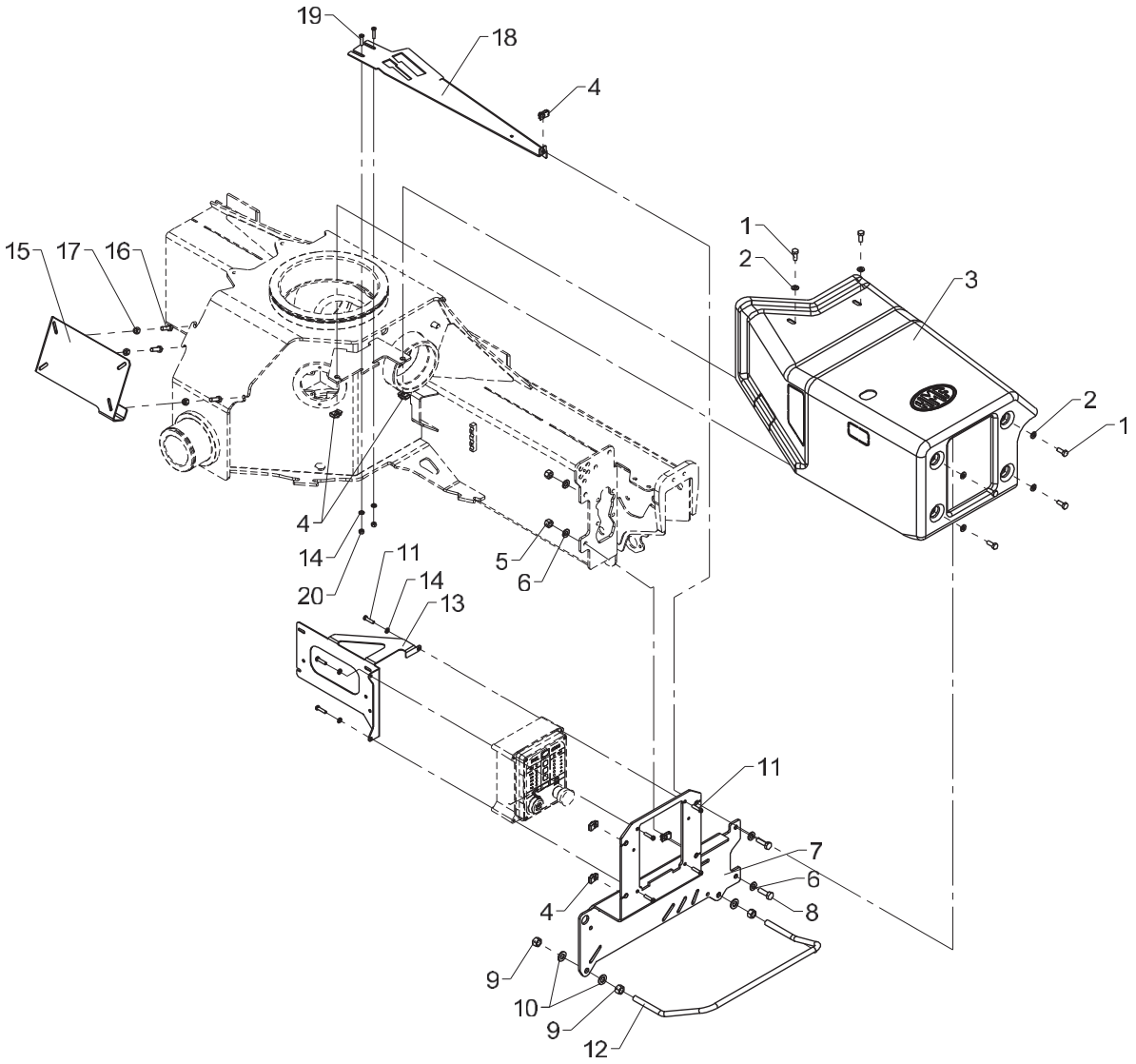

Valve brackets

Pos	Qty.	Part no.	Description	Remarks
		6366150	Valve bracket (Std. incl. CE)	
		6366220	Valve bracket (RC-d)	
		6366490	Valve bracket (RC-h & RC-d)	
1	6	30132	Set screw, stainless	
2	6	31147	Face washer, 8 mm	
3	1	64407	Shield	
4	6	31069	Clip	M8 1,5 - 5,5 mm.
5	2	31564	Lock nut, stainless	M10
6	4	31177	Washer	10 mm
7	1	6365241	Valve bracket	
8	2	30156	Set screw, stainless	M10 x 30
9	4	30860	Nut, stainless	M12
10	4	31131	Washer	12 mm
11	7	30340	Screw, stainless	6,0 x 25
12	1	6365242	Safety guard	
13	1	6340242	Mounting fittings	Danfoss PVG32
14	5	32302	Face washer, stainless	6 mm
15	1	6365086	Bracket for RC	Hydrocontrol HC-D4
16	3	30134	Set screw, stainless	M8 x 25
17	3	30886	Lock nut, stainless	M8
18	1	6340946	Reinforcement	
19	2	32509	Screw, 6 x 25	MC6 x 25
20	2	30884	Lock nut, stainless	M6

1100K, 1110K, 1220K, 1230K, 1320K, 1330K

63 66 240
Internal ref. 63 66 200

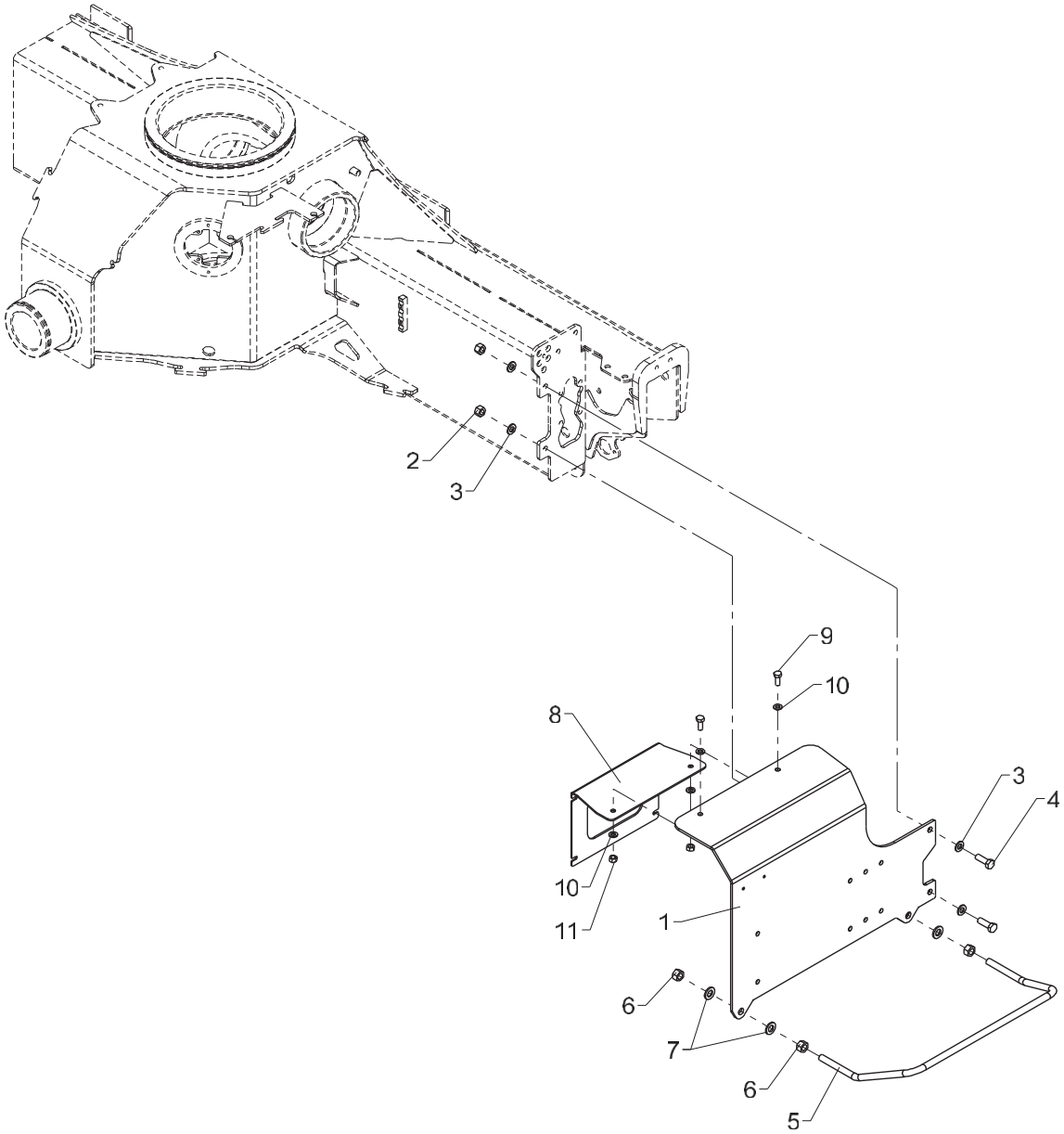

Valve brackets (excl. CE)

Pos	Qty.	Part no.	Description	Remarks
		6366200	Valve bracket (Std. excl. CE)	
		6366240	Valve bracket (Scanreco ex CE)	
1	1	6365244	Valve bracket (excl. CE)	
2	2	31564	Lock nut, stainless	M10
3	4	31565	Washer, stainless	10 mm
4	2	30156	Set screw, stainless	M10 x 30
5	1	6365242	Safety guard	
6	4	30860	Nut, stainless	M12
7	4	32338	Washer	12 mm
8	1	6340277	Mounting fittings	
9	2	30132	Set screw, stainless	
10	4	31147	Face washer, 8 mm	
11	2	30856	Nut, stainless	M8

1100K, 1110K, 1220K, 1230K, 1320K, 1330K

Internal ref. 63 66 780

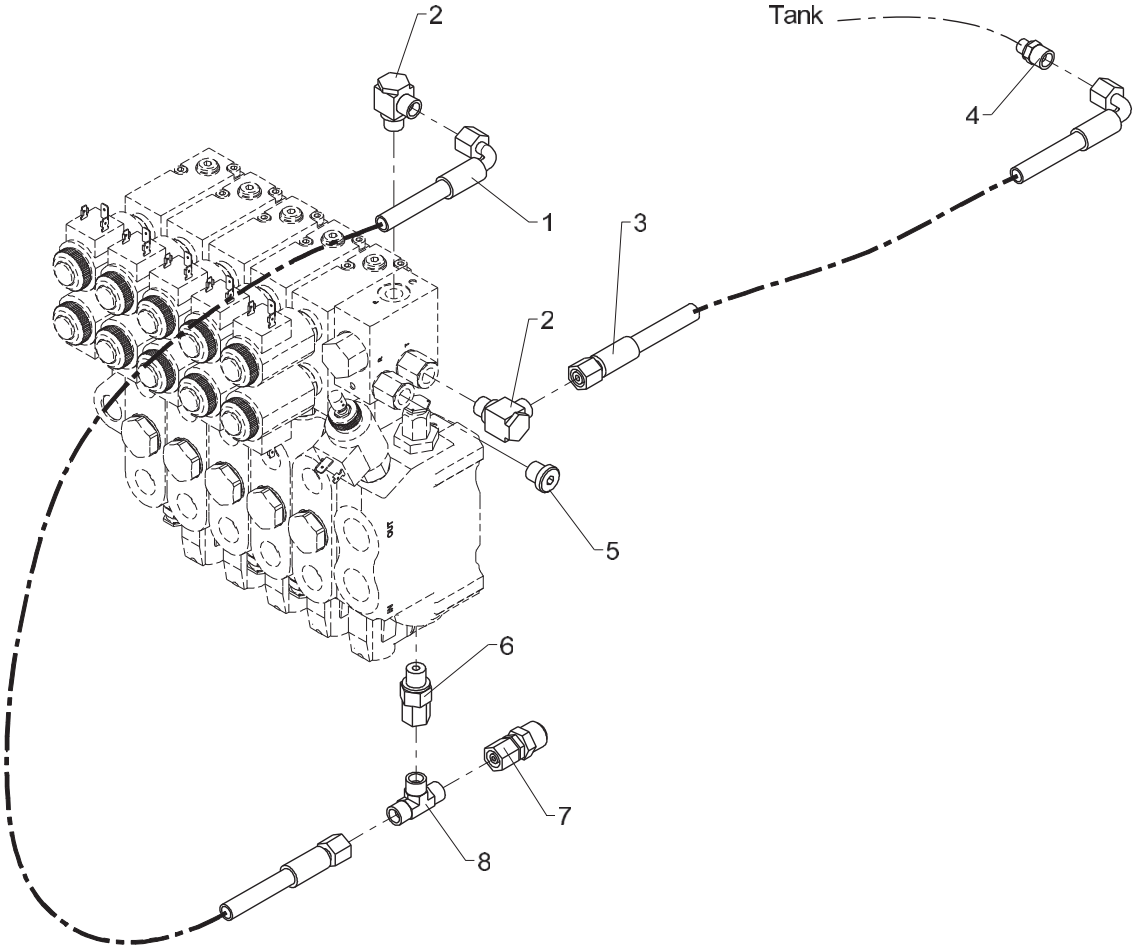

NEM-RC kit

Pos	Qty.	Part no.	Description	Remarks
1	1	62526	Hose	1/4 X 550 M14 X 1.5 L/90
2	2	25113	Banjo connection	RSWV 8 LR
3	1	62540	Hose	1/4 X 2150 M14X1.5 L/90
4	1	25584	Connection	GES 8 LR 1-8 - 25584
5	1	25197	Plug	VS-R-1/4 WD
6	1	26104	Connection	EGESD 8 LR-WD
7	1	26148	Connection	
8	1	25114	T-connection	TV 8 L

1100K, 1110K, 1220K, 1230K, 1320K, 1330K

Internal ref. 63 66 790

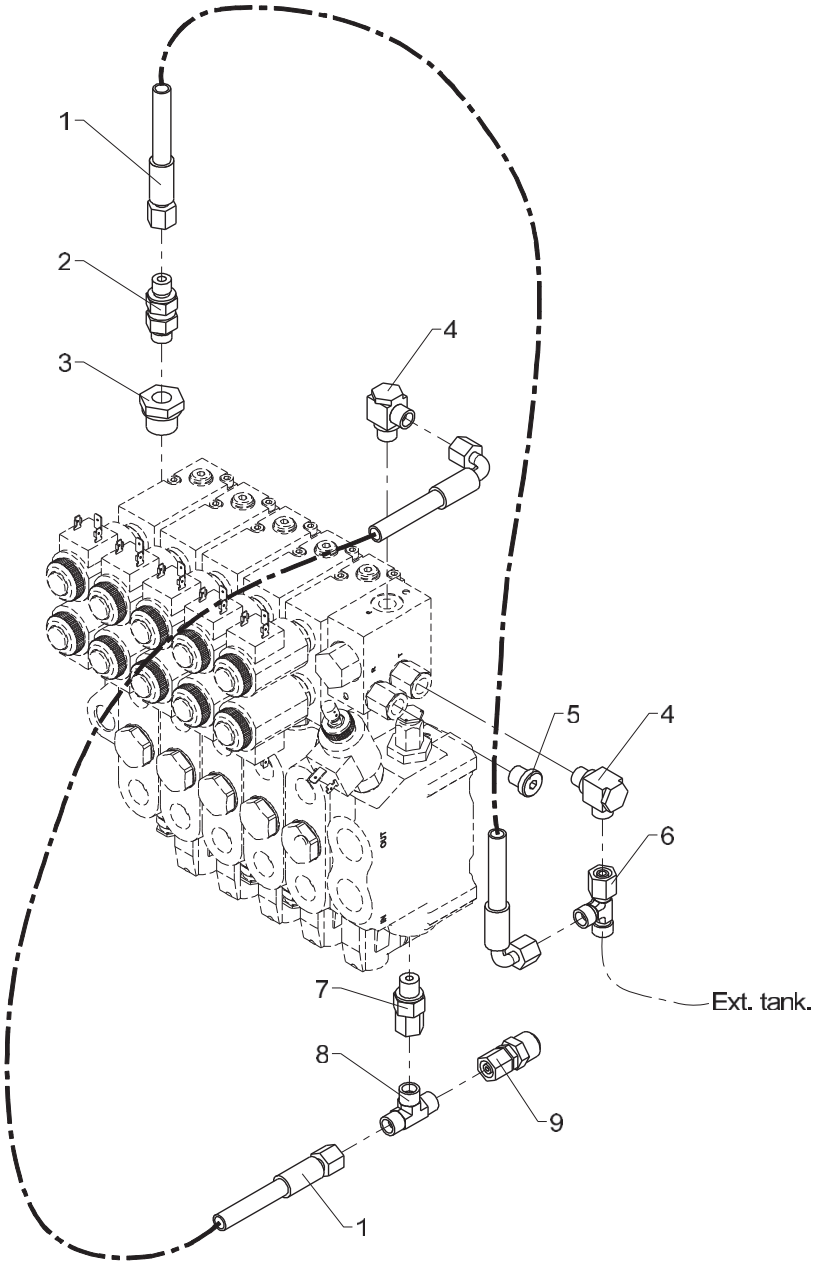

NEM-RC kit (for external tank)

Pos	Qty.	Part no.	Description	Remarks
1	2	62526	Hose	1/4 X 550 M14 X 1.5 L/90
2	1	60425	Check valve	RVZ 8 LR-WD
3	1	25180	Reducing connection	RED-R 1/2-WD/R 1/4
4	2	25113	Banjo connection	RSWV 8 LR
5	1	25197	Plug	VS-R-1/4 WD
6	1	25249	Connection	ELSD 8 L
7	1	26104	Connection	EGESD 8 LR-WD
8	1	25114	T-connection	TV 8 L
9	1	26148	Connection	

1100K, 1110K, 1220K, 1230K, 1320K, 1330K

Internal ref. 63 66 250

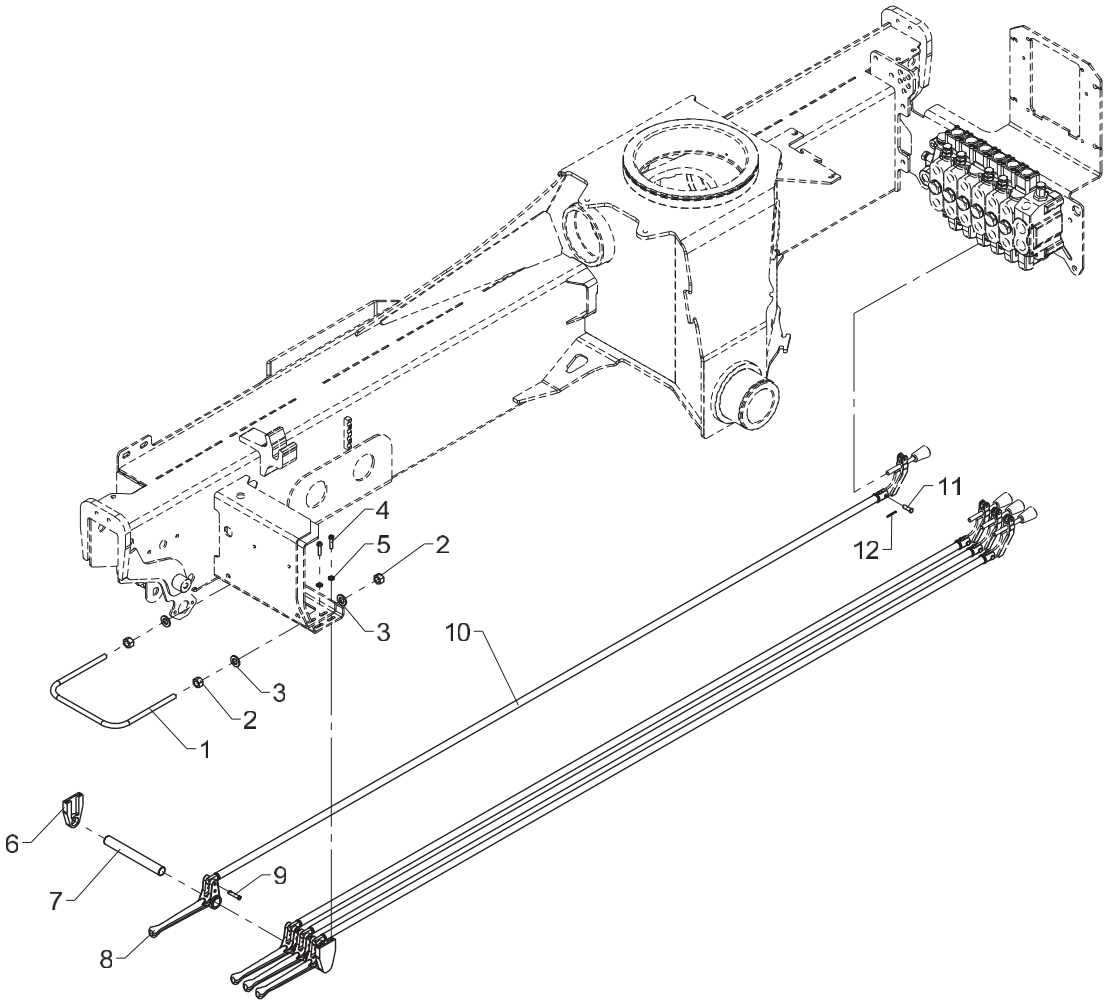

Dual control, 4 functions

Pos	Qty.	Part no.	Description	Remarks
1	1	6365247	Safety guard	
2	4	30860	Nut, stainless	M12
3	4	32338	Washer	12 mm
4	4	30340	Screw, stainless	6,0 x 25
5	4	32302	Face washer, stainless	6 mm
6	2	63564	Bracket for pin	
7	1	6340248	Pin	
8	4	63444	Lever for dual controls	
9	4	63468	Split pin with spring lock	
10	4	6340246	Connecting rod	
11	4	31271	Cotter bolt	
12	4	31601	Split pin, stainless	

1100K, 1110K, 1220K, 1230K, 1320K, 1330K

Internal ref. 63 66 260

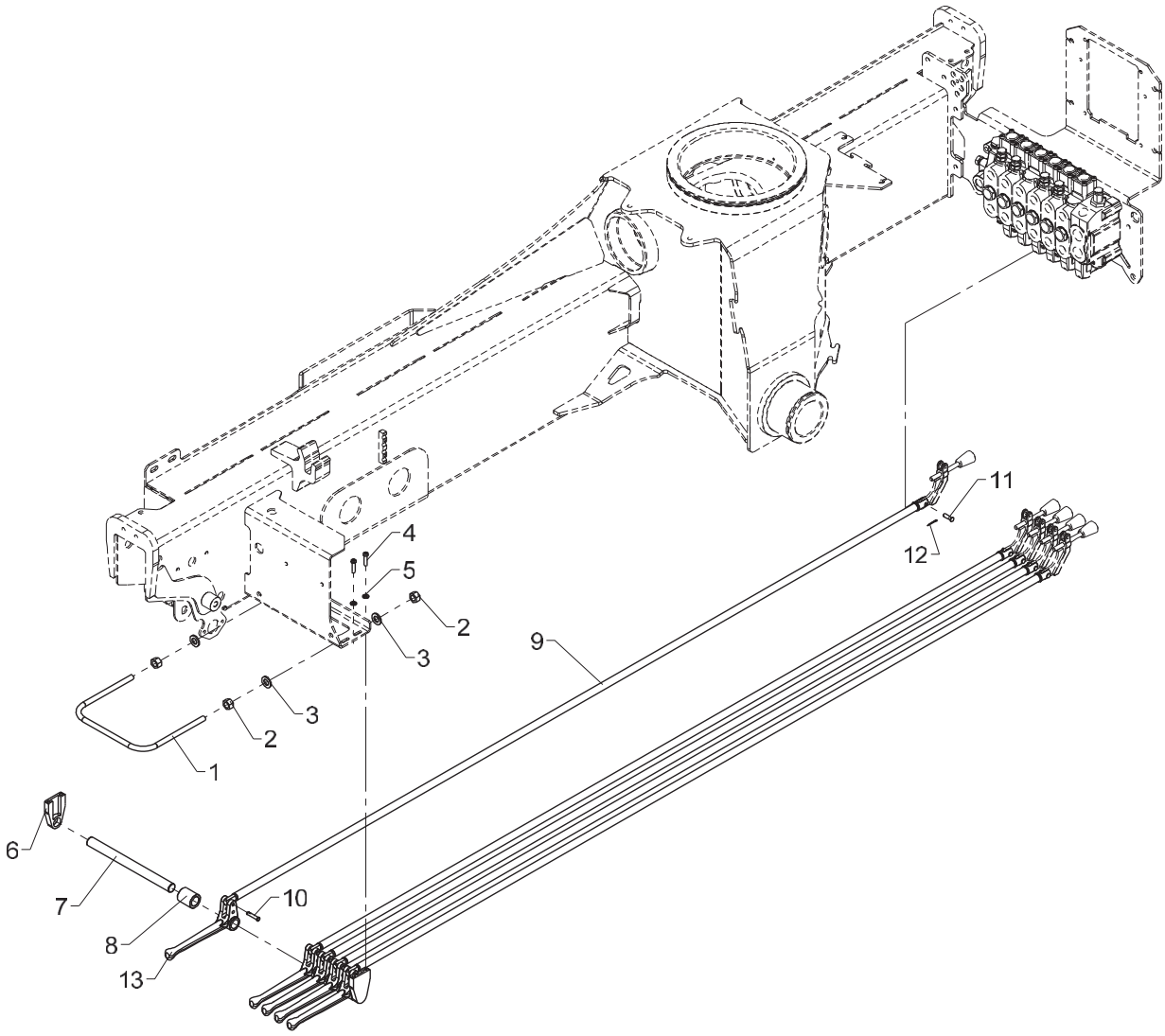

Dual control, 5 functions

Pos	Qty.	Part no.	Description	Remarks
1	1	6365247	Safety guard	
2	4	30860	Nut, stainless	M12
3	4	32338	Washer	12 mm
4	4	30340	Screw, stainless	6,0 x 25
5	4	32302	Face washer, stainless	6 mm
6	2	63564	Bracket for pin	
7	1	6340249	Pin	
8	1	63598	Bushing	ø30/ø20 x 35
9	5	6340246	Connecting rod	
10	5	63468	Split pin with spring lock	
11	5	31271	Cotter bolt	
12	5	31601	Split pin, stainless	
13	5	63444	Lever for dual controls	

1100K, 1110K, 1220K, 1230K, 1320K, 1330K

Internal ref. 63 66 270

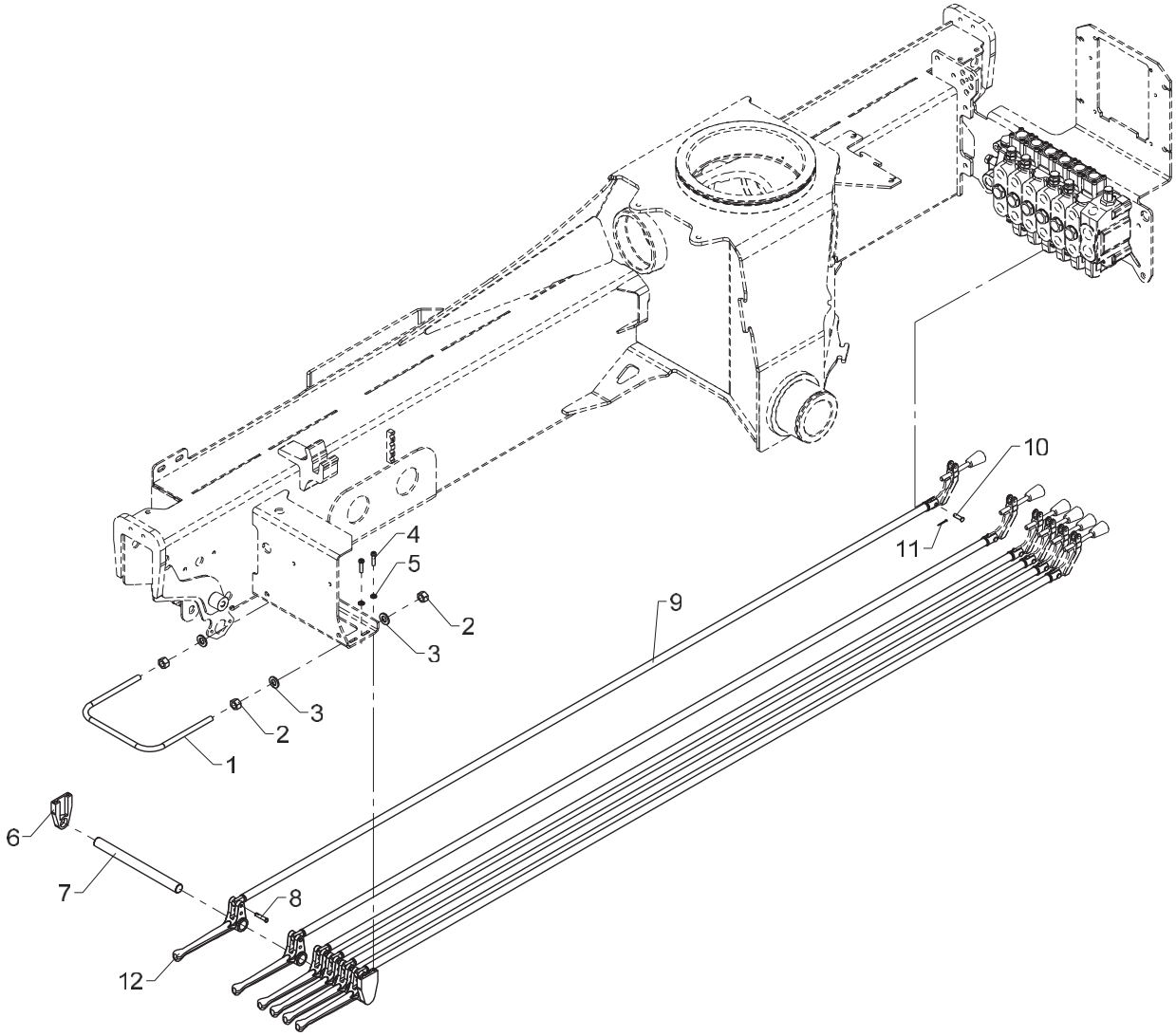

Dual control, 6 functions

Pos	Qty.	Part no.	Description	Remarks
1	1	6365247	Safety guard	
2	4	30860	Nut, stainless	M12
3	4	32338	Washer	12 mm
4	4	30340	Screw, stainless	6,0 x 25
5	4	32302	Face washer, stainless	6 mm
6	2	63564	Bracket for pin	
7	1	6340249	Pin	
8	6	63468	Split pin with spring lock	
9	6	6340246	Connecting rod	
10	6	31271	Cotter bolt	
11	6	31601	Split pin, stainless	
12	6	63444	Lever for dual controls	

1100K, 1110K, 1220K, 1230K, 1320K, 1330K

Internal ref. 63 63 260

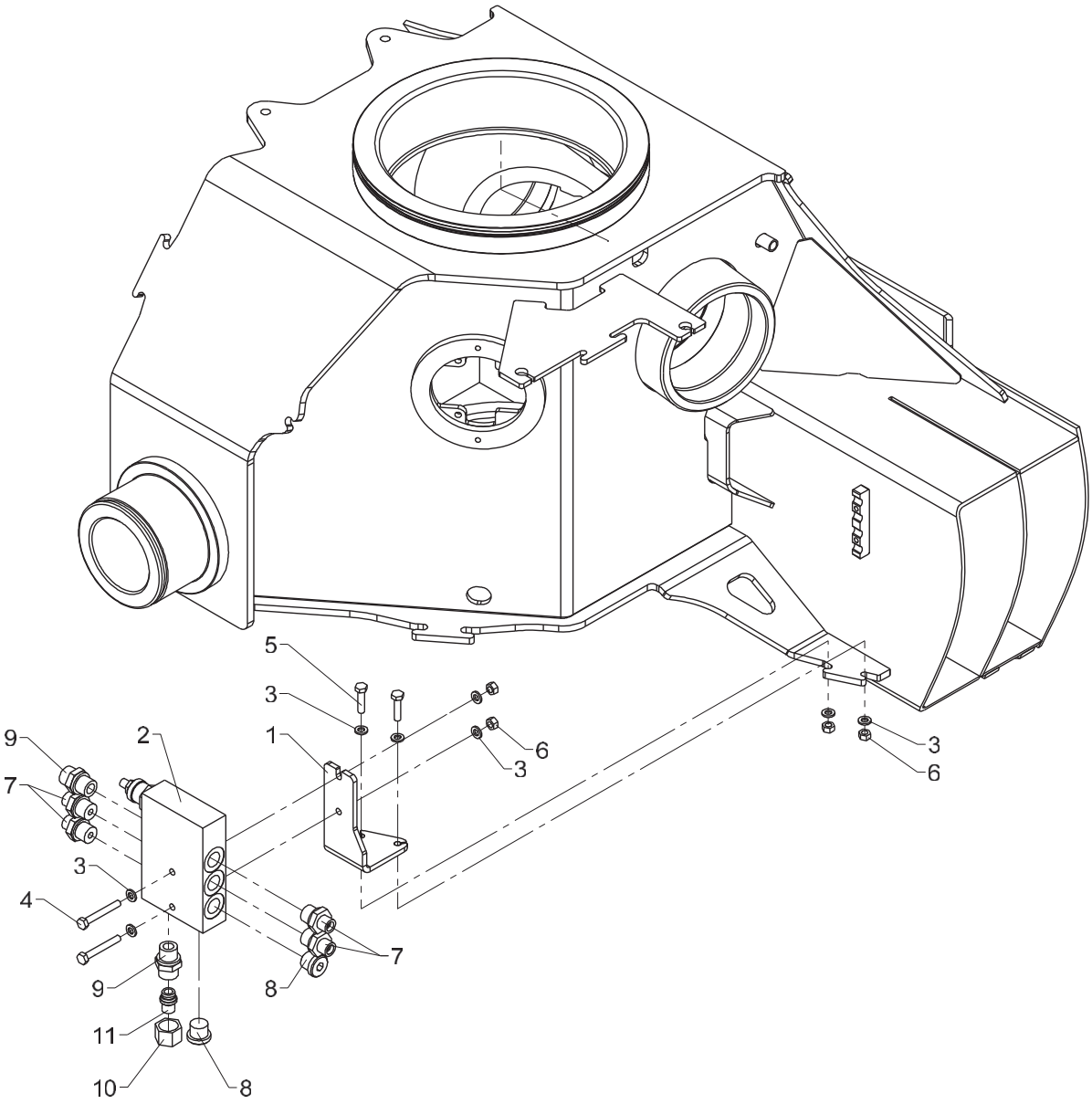

Counter-balance valve

Pos	Qty.	Part no.	Description	Remarks
1	1	6340273	Bracket (counter-balance valve	
2	1	50521	Sequence valve	
3	8	32302	Face washer, stainless	6 mm
4	2	30118	Steel pin, stainless	M6 x 45
5	2	30114	Set screw, stainless	M6 x 25
6	4	30854	Nut, stainless	M6
7	4	25244	Connection	GES 8 LR 3/8-WD
8	2	25277	Plug	VS-R-3/8 WD
9	2	25127	Connection	P-GEV 12 LR-WD
10	1	25183	Coupling nut	M 12 L
11	1	26180	Blanking plug	VSD 12 L

1100K, 1110K, 1220K, 1230K, 1320K, 1330K

Internal ref. 63 66 280

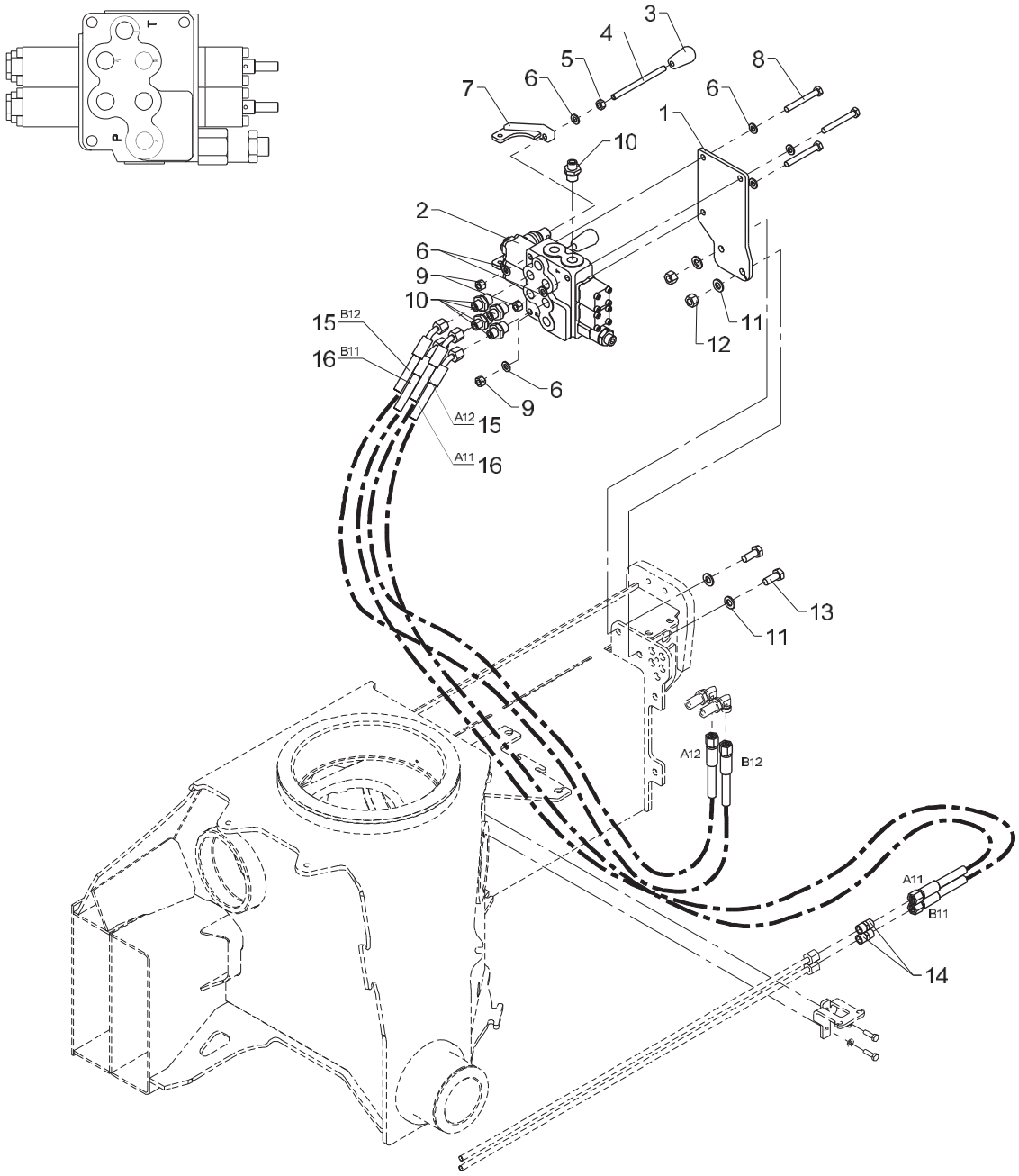

458 05 200

From loader 1170001
To loader

Valve bracket, cpl. 2 fcts.

Created 10-02-2012
Modified 30-05-2013

Pos	Qty.	Part no.	Description	Remarks
1	1	6365248	Valve bracket (2 functions)	
2	1	55701	Stabilizer control valve	
3	2	59224	Knob for lever	
4	2	1330187	Control lever, long, straight	
5	2	30856	Nut, stainless	M8
6	8	31147	Face washer, 8 mm	
7	2	63450	Adapter for dual controls	
8	3	30259	Steel bolt, stainless	M8 x 65
9	3	30886	Lock nut, stainless	M8
10	5	25244	Connection	GES 8 LR 3/8-WD
11	4	31565	Washer, stainless	10 mm
12	2	31564	Lock nut, stainless	M10
13	2	31513	Set screw, stainless	M10 x 25
14	2	25246	Double connection	GS 8 L
15	2	56596	Hose 1/4" x 950 mm	
16	2	56381	Hose	

1100K, 1110K, 1220K, 1230K, 1320K, 1330K

Internal ref. 63 66 300

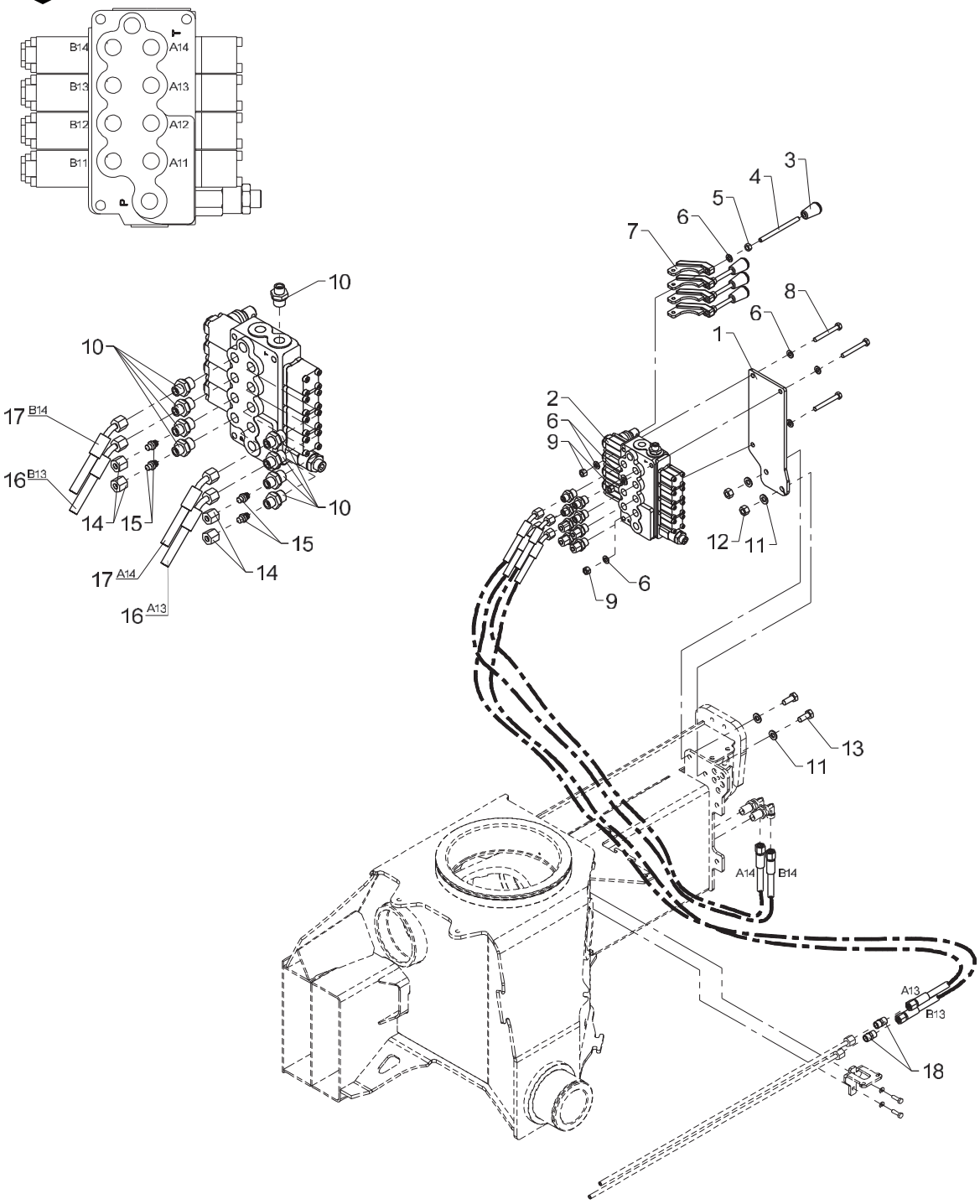

458 05 205

From loader 1170001
To loader

Valve bracket, cpl., 2 fcts. + 2 available fcts.

Created 10-02-2012
Modified 30-05-2013

Pos	Qty.	Part no.	Description	Remarks
1	1	6365249	Valve bracket (4 functions)	
2	1	55702	Stabilizer control valve	
3	4	59224	Knob for lever	
4	4	1330187	Control lever, long, straight	
5	4	30856	Nut, stainless	M8
6	10	31147	Face washer, 8 mm	
7	4	63450	Adapter for dual controls	
8	3	30259	Steel bolt, stainless	M8 x 65
9	3	30886	Lock nut, stainless	M8
10	9	25244	Connection	GES 8 LR 3/8-WD
11	4	31565	Washer, stainless	10 mm
12	2	31564	Lock nut, stainless	M10
13	2	31513	Set screw, stainless	M10 x 25
14	4	25181	Coupling nut	M 8 L
15	4	26166	Blanking plug	VSD 8 L
16	2	56381	Hose	
17	2	56596	Hose 1/4" x 950 mm	
18	2	25246	Double connection	GS 8 L

1100K, 1110K, 1220K, 1230K, 1320K, 1330K

63 66 610
Internal ref. 63 66 290

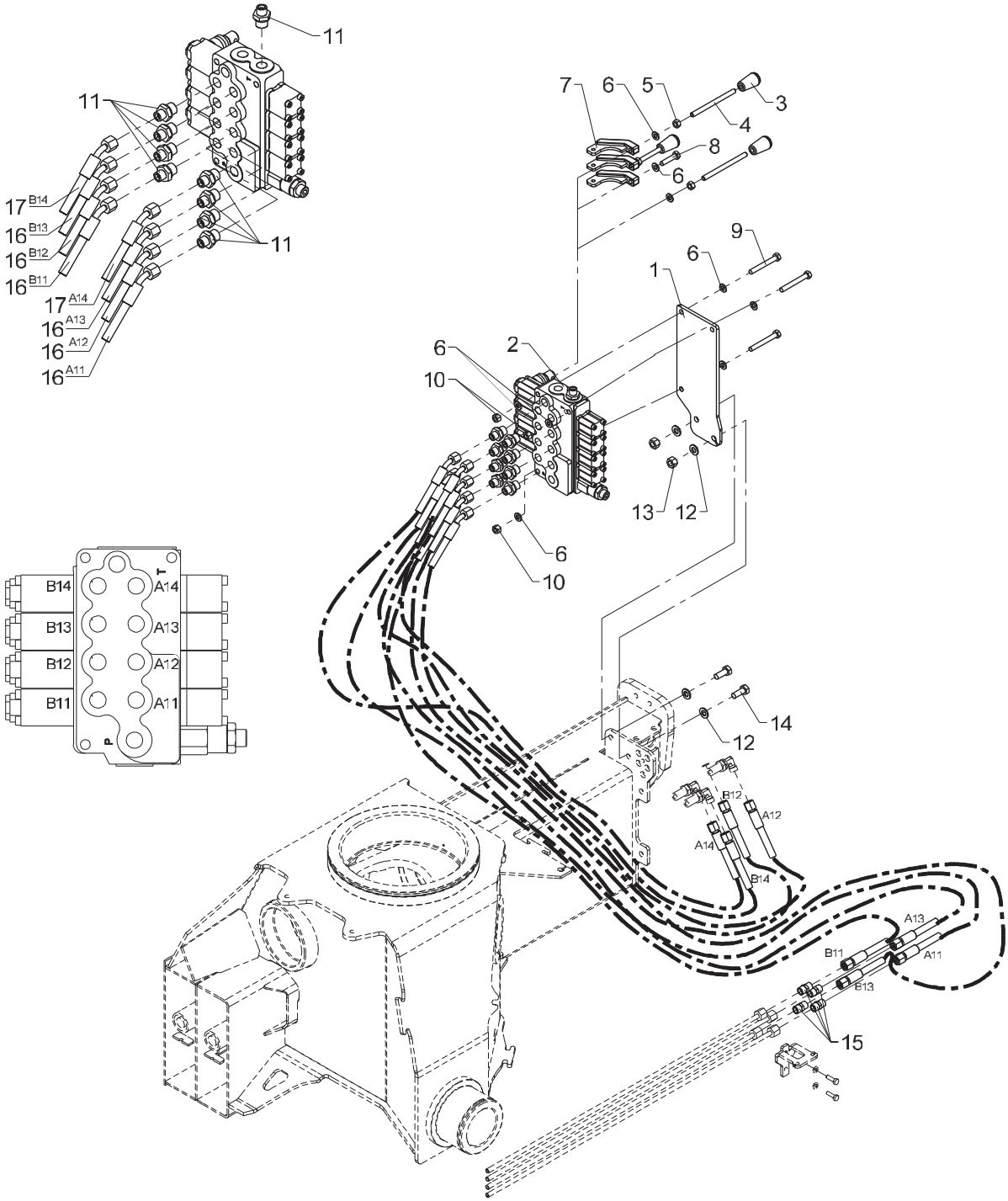

Valve bracket, cpl. 4 fcts.

Created 10-02-2012
Modified 30-05-2013

Pos	Qty.	Part no.	Description	Remarks
		6366290	Valve bracket (4 fct. / M45)	
		6366610	Hose kit, 4 functions	
1	1	6365249	Valve bracket (4 functions)	
2	1	55702	Stabilizer control valve	
3	3	59224	Knob for lever	
4	3	1330187	Control lever, long, straight	
5	3	30856	Nut, stainless	M8
6	10	31147	Face washer, 8 mm	
7	3	63450	Adapter for dual controls	
8	1	30136	Steel bolt, stainless	M8 x 35
9	3	30259	Steel bolt, stainless	M8 x 65
10	3	30886	Lock nut, stainless	M8
11	9	25244	Connection	GES 8 LR 3/8-WD
12	4	31565	Washer, stainless	10 mm
13	2	31564	Lock nut, stainless	M10
14	2	31513	Set screw, stainless	M10 x 25
15	4	25246	Double connection	GS 8 L
16	6	56381	Hose	
17	2	56596	Hose 1/4" x 950 mm	

1100K, 1110K, 1220K, 1230K, 1320K, 1330K

63 66 620
Internal ref. 63 66 310

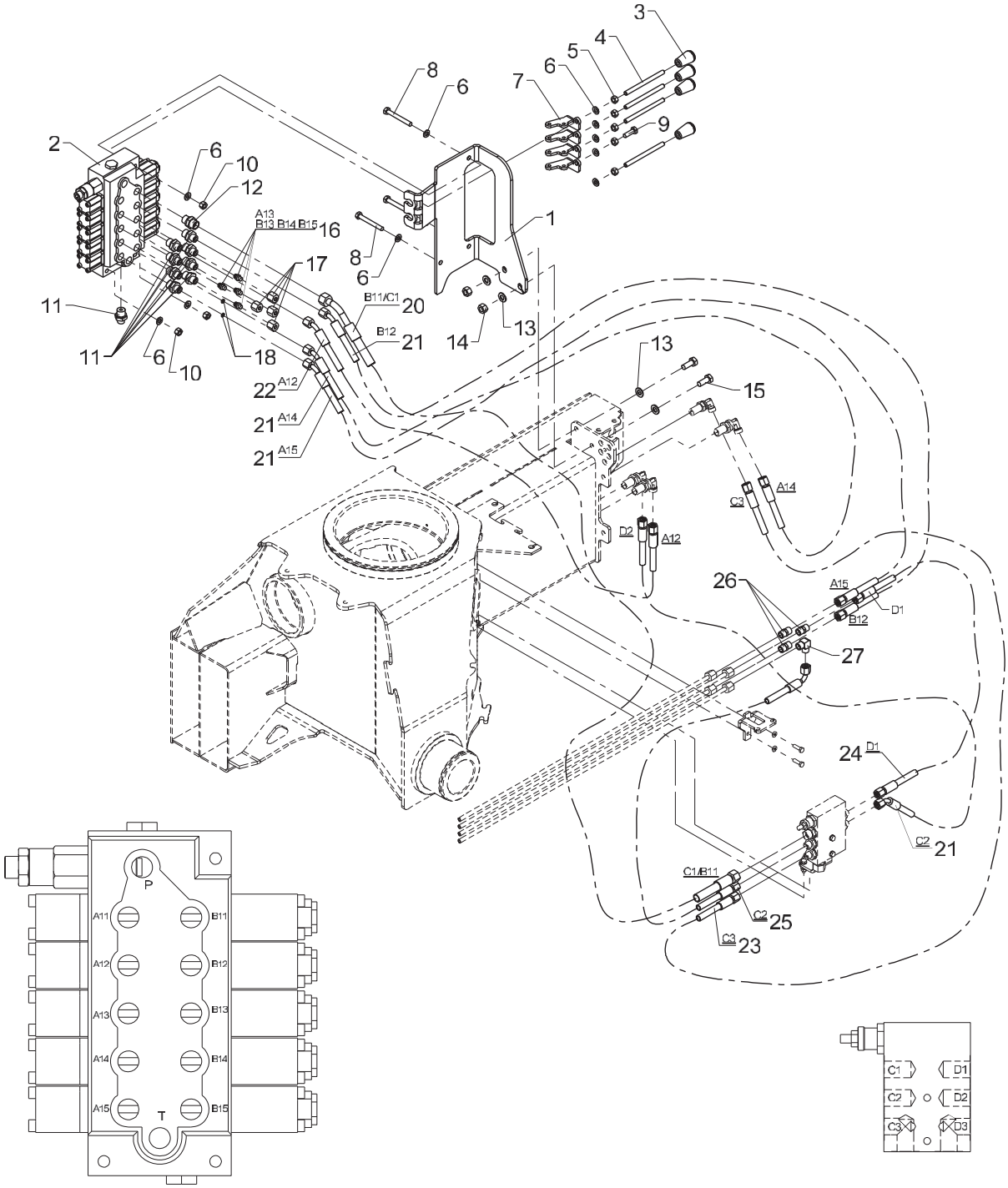

458 05 220

From loader 1170001
To loader

Valve bracket, cpl. 4 fcts. + 4 available

Created 10-02-2012
Modified 30-05-2013

Pos	Qty.	Part no.	Description	Remarks
		6366310	Valve bracket (4+4 fcts.)	
		6366620	Hose kit, 4 fcts+4/2 available	
1	1	6365245	Valve bracket (4 + 4/2 fcts.)	
2	1	55277	Valve block, complete	
3	4	59224	Knob for lever	
4	4	1330187	Control lever, long, straight	
5	5	30856	Nut, stainless	M8
6	11	31147	Face washer, 8 mm	
7	4	6340229	Adapter	
8	3	30259	Steel bolt, stainless	M8 x 65
9	1	30134	Set screw, stainless	M8 x 25
10	3	30886	Lock nut, stainless	M8
11	9	25244	Connection	GES 8 LR 3/8-WD
12	1	25127	Connection	P-GEV 12 LR-WD
13	4	31565	Washer, stainless	10 mm
14	2	31564	Lock nut, stainless	M10
15	2	31513	Set screw, stainless	M10 x 25
16	4	26166	Blanking plug	VSD 8 L
17	4	25181	Coupling nut	M 8 L
18	2	60963	Washer	
19	1	6366620	Hose kit, 4 fcts+4/2 available	
20	1	56511	Hose	3/8"x900mm V/O 12L
21	4	56381	Hose	
22	1	56596	Hose 1/4" x 950 mm	
23	1	62569	Hose	
24	1	62536	Hose	
25	1	62525	Hose	
26	3	25246	Double connection	GS 8 L
27	1	25247	Elbow connection	WV 8 L

1100K, 1110K, 1220K, 1230K, 1320K, 1330K

63 64 670
Internal ref. 63 64 480

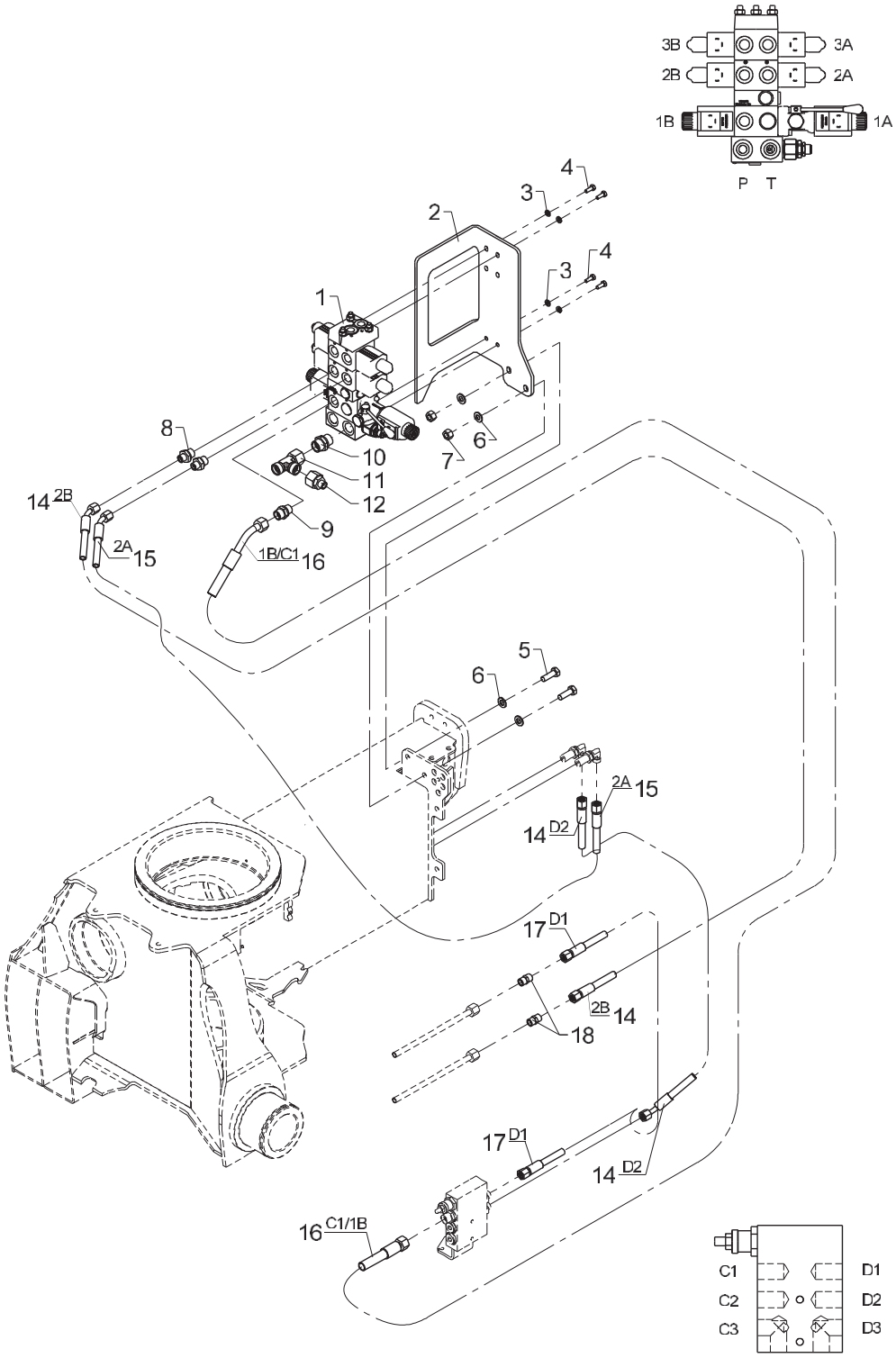

Valve bracket, cpl. 2 functions + 2 available functions - RC

Pos	Qty.	Part no.	Description	Remarks
		6364480	Valve bracket, cpl. 2+2 - RC	
		6364670	Hose kit, 2 functions	
1	1	50512	Stabilizer control valve	
2	1	6365272	Valve bracket, 2+4 functions	
3	4	32302	Face washer, stainless	6 mm
4	4	30112	Set screw, stainless	M6 x 16
5	2	30156	Set screw, stainless	M10 x 30
6	4	31565	Washer, stainless	10 mm
7	2	31564	Lock nut, stainless	M10
8	2	25244	Connection	GES 8 LR 3/8-WD
9	1	25127	Connection	P-GEV 12 LR-WD
10	1	25143	Connection	P-GEV 15 LR-WD
11	1	26142	Connection	ELSD 15 L
12	1	25285	Connection	REDSDN 15/8 L
13	1	6364670	Hose kit, 2 functions	
14	2	56381	Hose	1/4"x600mm L/V
15	1	56596	Hose 1/4" x 950 mm	1/4" x 950 mm L/V
16	1	56511	Hose	3/8"x900mm V/O 12L
17	1	62536	Hose	
18	2	25246	Double connection	GS 8 L

1100K, 1110K, 1220K, 1230K, 1320K, 1330K

63 64 680
Internal ref. 63 64 460

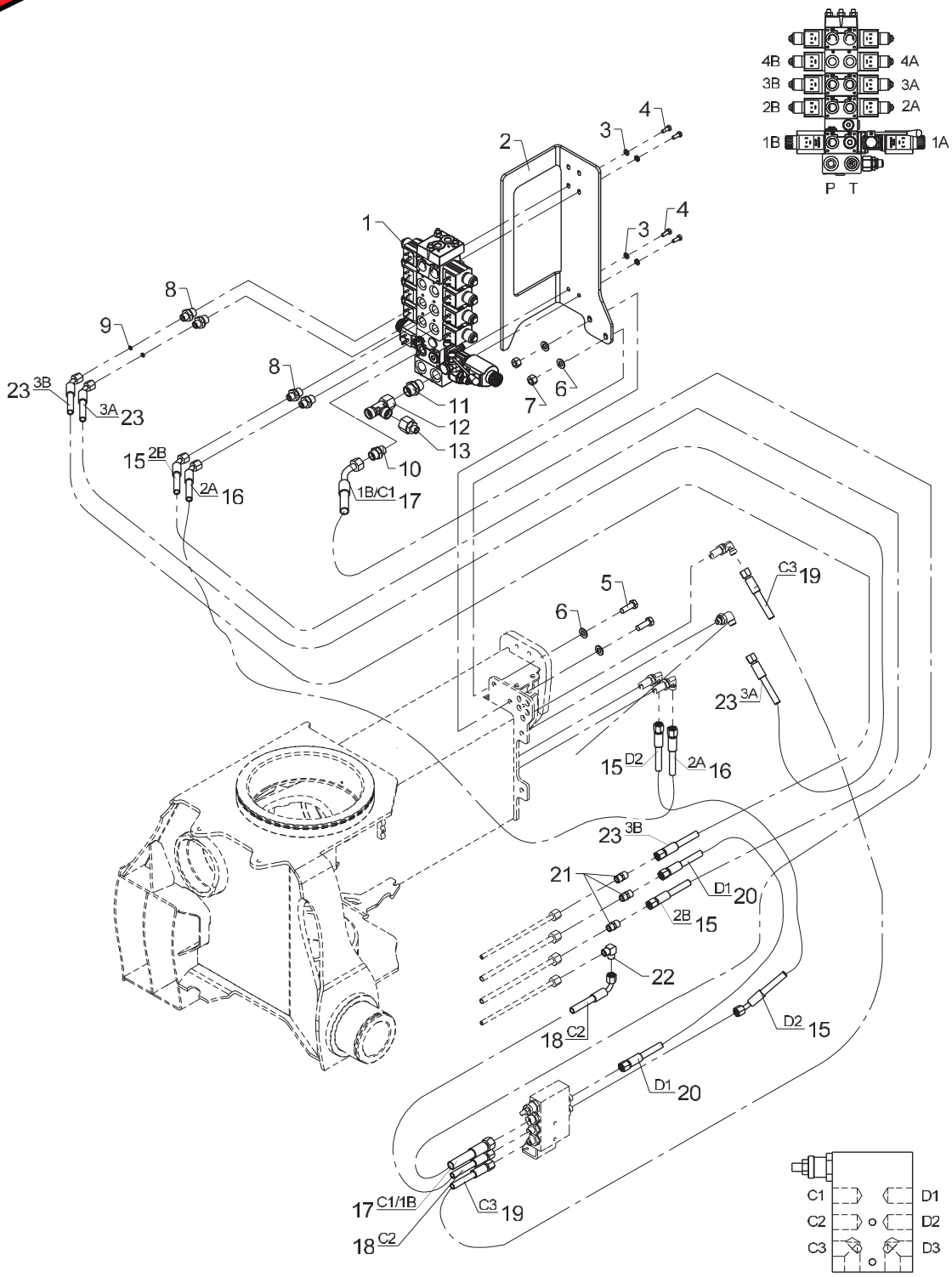

Valve bracket, cpl. 4 functions + 2 available functions - RC

Created 10-02-2012
Modified 15-09-2014

Pos	Qty.	Part no.	Description	Remarks
		6364460	Valve bracket, cpl. 4 fcts.,+2	
		6364680	Hose kit, 4 fcts.+4/2 avaible	
1	1	50513	Stabilizer valve block	
2	1	6365273	Valve bracket, 6+8 functions	
3	4	32302	Face washer, stainless	6 mm
4	4	30112	Set screw, stainless	M6 x 16
5	2	30156	Set screw, stainless	M10 x 30
6	4	31565	Washer, stainless	10 mm
7	2	31564	Lock nut, stainless	M10
8	4	25244	Connection	GES 8 LR 3/8-WD
9	2	60963	Washer	
10	1	25127	Connection	P-GEV 12 LR-WD
11	1	25143	Connection	P-GEV 15 LR-WD
12	1	26142	Connection	ELSD 15 L
13	1	25285	Connection	REDSDN 15/8 L
14	1	6364680	Hose kit, 4 fcts.+4/2 avaible	
15	2	56381	Hose	
16	1	56596	Hose 1/4" x 950 mm	
17	1	56511	Hose	3/8"x900mm V/O 12L
18	1	62525	Hose	1/4 X 400 M14 X 1.5 L/90
19	1	62652	Hose	1/4" x 750 L/L
20	1	62536	Hose	
21	3	25246	Double connection	GS 8 L
22	1	25247	Elbow connection	WV 8 L
23	2	56963	Hose 1/4"x700mm L/V	

1100K, 1110K, 1220K, 1230K, 1320K, 1330K

63 64 680
Internal ref. 63 64 470

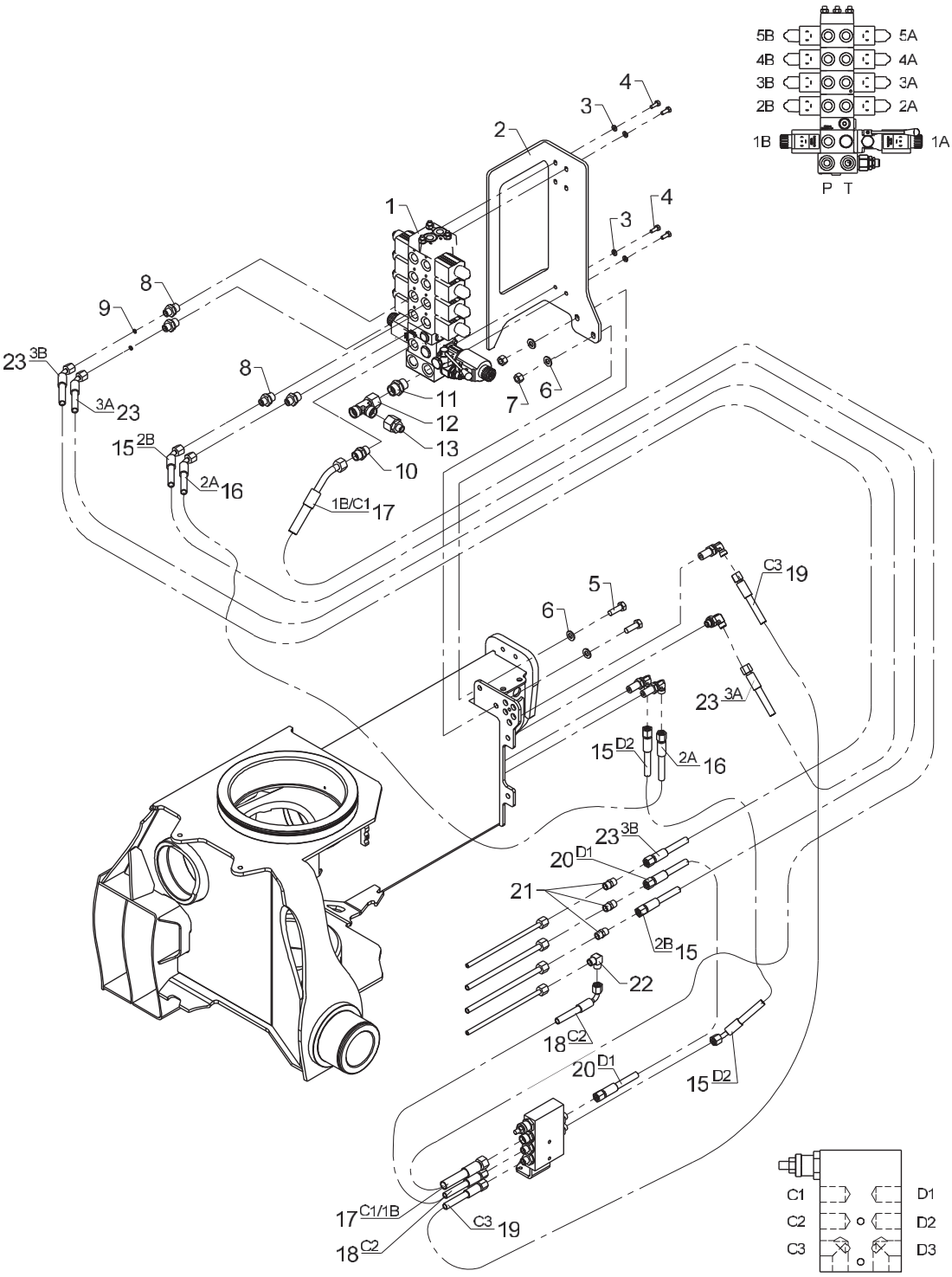

From loader 1170001
To loader

Valve bracket, cpl. 4 functions + 4 available functions - RC

Created 10-02-2012
Modified 15-09-2014

Pos	Qty.	Part no.	Description	Remarks
		6364470	Valve bracket, cpl. 4 fcts. +4	
		6364680	Hose kit, 4 fcts.+4/2 avaible	
1	1	50510	Stabilizer valve	
2	1	6365273	Valve bracket, 6+8 functions	
3	4	32302	Face washer, stainless	6 mm
4	4	30112	Set screw, stainless	M6 x 16
5	2	30156	Set screw, stainless	M10 x 30
6	4	31565	Washer, stainless	10 mm
7	2	31564	Lock nut, stainless	M10
8	4	25244	Connection	GES 8 LR 3/8-WD
9	2	60963	Washer	
10	1	25127	Connection	P-GEV 12 LR-WD
11	1	25143	Connection	P-GEV 15 LR-WD
12	1	26142	Connection	ELSD 15 L
13	1	25285	Connection	REDSDN 15/8 L
14	1	6364680	Hose kit, 4 fcts.+4/2 avaible	
15	2	56381	Hose	
16	1	56596	Hose 1/4" x 950 mm	
17	1	56511	Hose	3/8"x900mm V/O 12L
18	1	62525	Hose	1/4 X 400 M14 X 1.5 L/90
19	1	62652	Hose	1/4 x 750 L/L
20	1	62536	Hose	
21	3	25246	Double connection	GS 8 L
22	1	25247	Elbow connection	WV 8 L
23	2	56963	Hose 1/4"x700mm L/V	

1100K, 1110K, 1220K, 1230K, 1320K, 1330K

63 64 670
Internal ref. 63 64 440

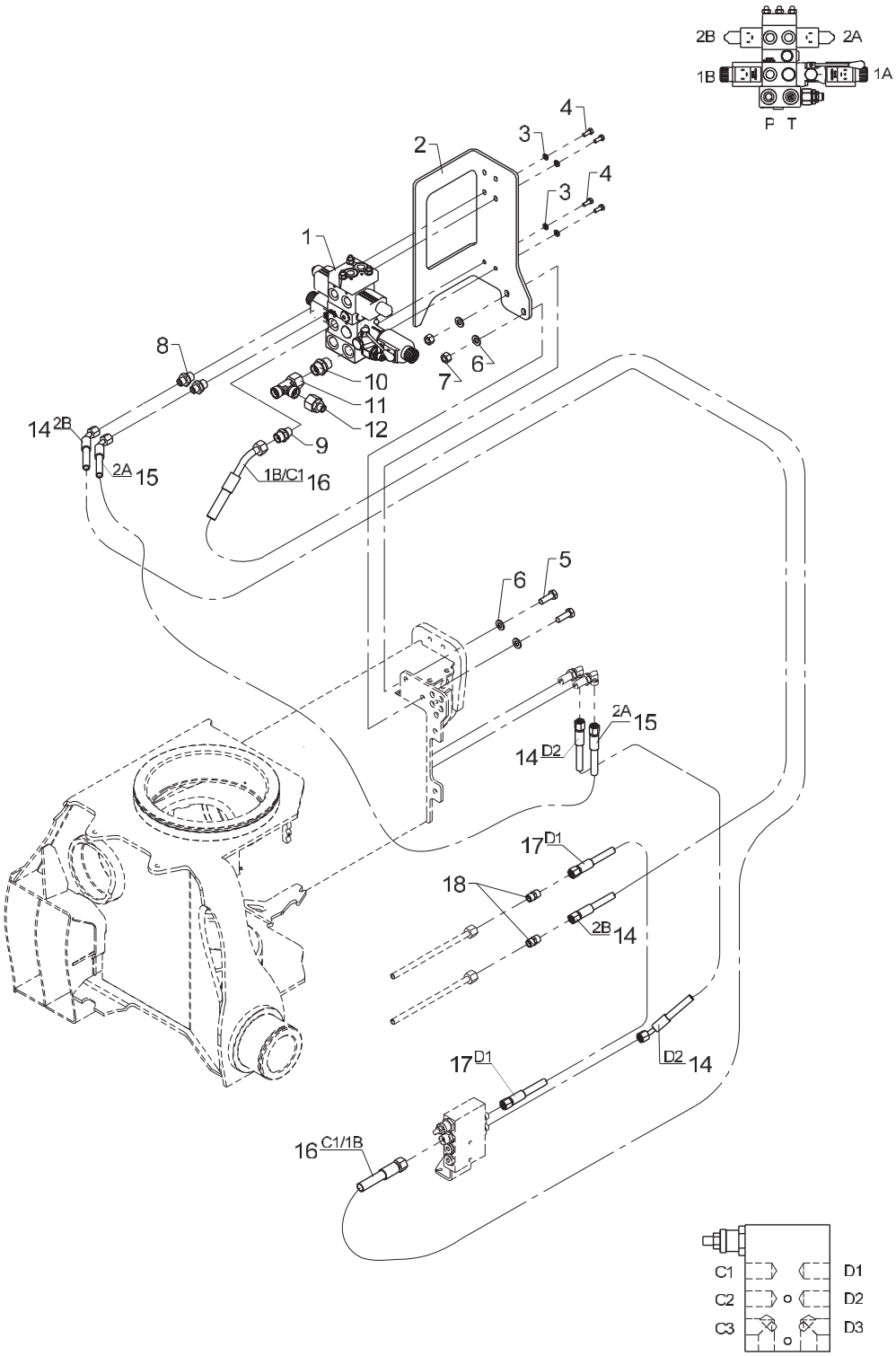

Valve bracket, cpl. 2 functions - RC

Pos	Qty.	Part no.	Description	Remarks
		6364440	Valve bracket, cpl. 2 fcts. RC	
		6364670	Hose kit, 2 functions	
1	1	50514	Stabilizer valve block	
2	1	6365272	Valve bracket, 2+4 functions	
3	4	32302	Face washer, stainless	6 mm
4	4	30112	Set screw, stainless	M6 x 16
5	2	30156	Set screw, stainless	M10 x 30
6	4	31565	Washer, stainless	10 mm
7	2	31564	Lock nut, stainless	M10
8	2	25244	Connection	GES 8 LR 3/8-WD
9	1	25127	Connection	P-GEV 12 LR-WD
10	1	25143	Connection	P-GEV 15 LR-WD
11	1	26142	Connection	ELSD 15 L
12	1	25285	Connection	REDSDN 15/8 L
13	1	6364670	Hose kit, 2 functions	
14	2	56381	Hose	
15	1	56596	Hose 1/4" x 950 mm	
16	1	56511	Hose	3/8"x900mm V/O 12L
17	1	62536	Hose	
18	2	25246	Double connection	GS 8 L

1100K, 1110K, 1220K, 1230K, 1320K, 1330K

63 64 680
Internal ref. 63 64 450

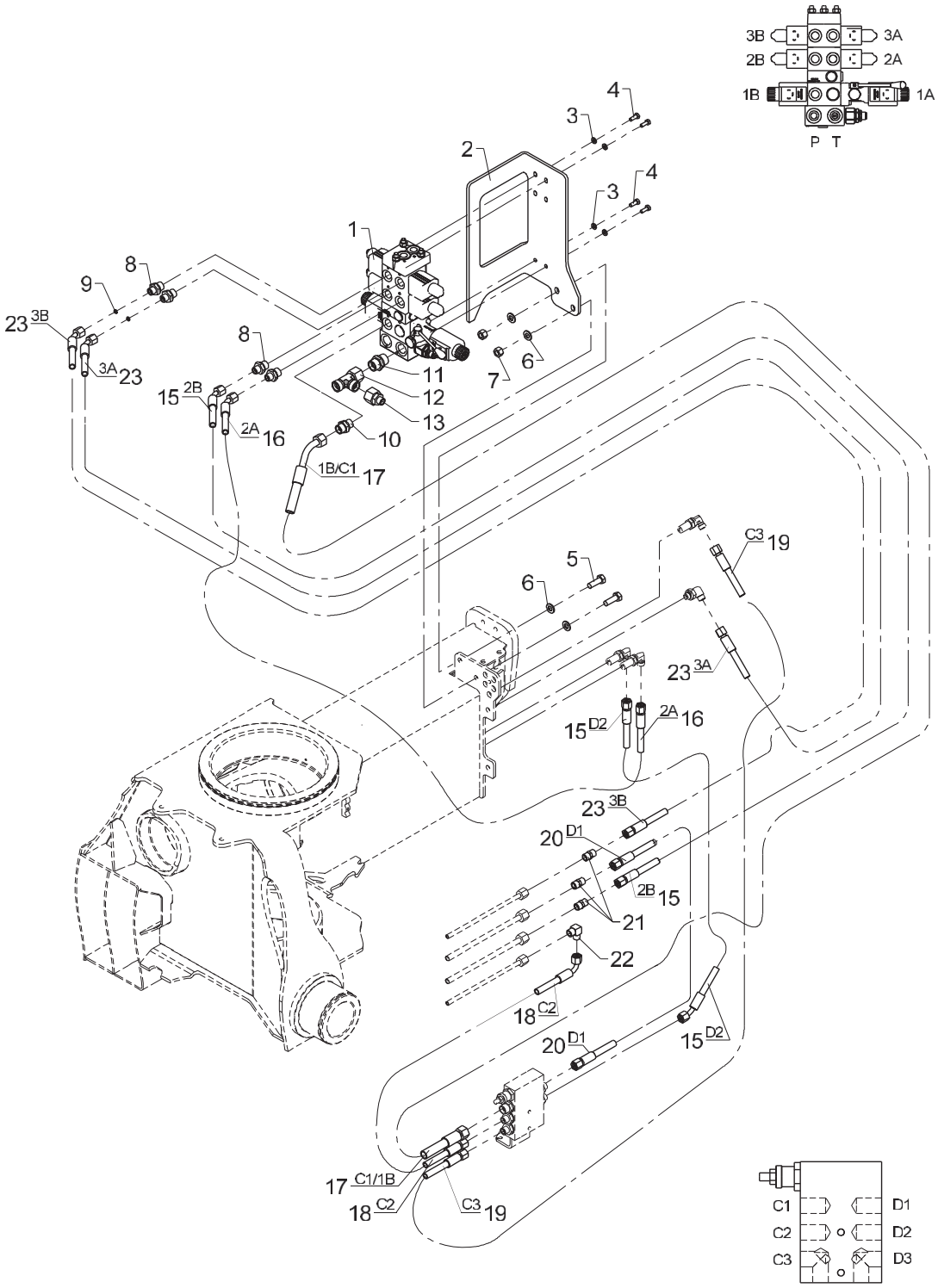

Valve bracket, cpl. 4 functions - RC

Pos	Qty.	Part no.	Description	Remarks
		6364450	Valve bracket, cpl. 4 fcts.,RC	
		6364680	Hose kit, 4 fcts.+4/2 avaible	
1	1	50512	Stabilizer control valve	
2	1	6365272	Valve bracket, 2+4 functions	
3	4	32302	Face washer, stainless	6 mm
4	4	30112	Set screw, stainless	M6 x 16
5	2	30156	Set screw, stainless	M10 x 30
6	4	31565	Washer, stainless	10 mm
7	2	31564	Lock nut, stainless	M10
8	4	25244	Connection	GES 8 LR 3/8-WD
9	2	60963	Washer	
10	1	25127	Connection	P-GEV 12 LR-WD
11	1	25143	Connection	P-GEV 15 LR-WD
12	1	26142	Connection	ELSD 15 L
13	1	25285	Connection	REDSDN 15/8 L
14	1	6364680	Hose kit, 4 fcts.+4/2 avaible	
15	2	56381	Hose	
16	1	56596	Hose 1/4" x 950 mm	
17	1	56511	Hose	3/8"x900mm V/O 12L
18	1	62525	Hose	1/4 X 400 M14 X 1.5 L/90
19	1	62652	Hose	
20	1	62536	Hose	
21	3	25246	Double connection	GS 8 L
22	1	25247	Elbow connection	WV 8 L
23	2	56963	Hose 1/4"x700mm L/V	

1100K, 1110K, 1220K, 1230K, 1320K, 1330K

Internal ref. 63 65 790

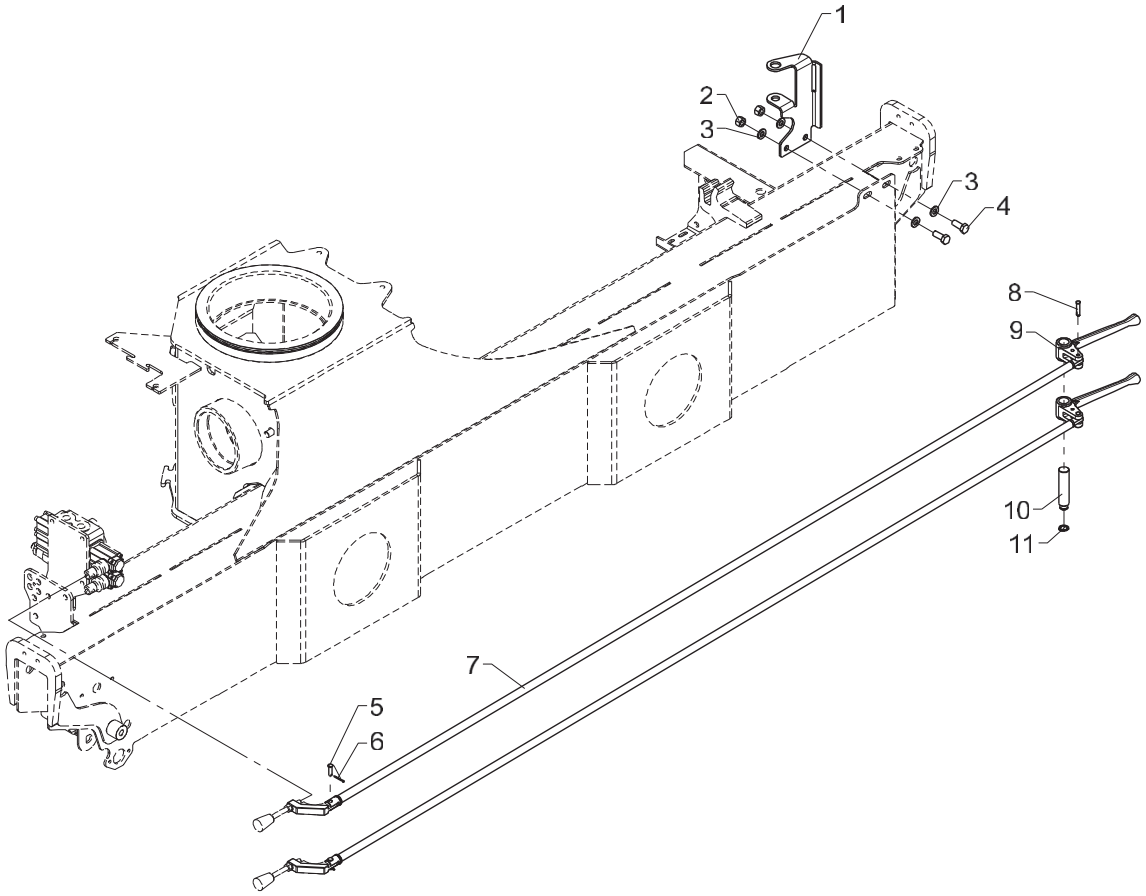

458 05 270

From loader 1170001
To loader

Created 10-02-2012
Modified

Dual control, 2 fcts. std.

Pos	Qty.	Part no.	Description	Remarks
1	1	6365251	Bracket f. dual control (2 f.)	
2	2	31564	Lock nut, stainless	M10
3	4	31565	Washer, stainless	10 mm
4	2	31513	Set screw, stainless	M10 x 25
5	2	31271	Cotter bolt	
6	2	31601	Split pin, stainless	
7	2	6365263	Connecting rod	
8	2	63468	Split pin with spring lock	
9	2	63444	Lever for dual controls	
10	1	6340261	Pin (2 functions)	
11	1	33104	Circlip	15U

1100K, 1110K, 1220K, 1230K, 1320K, 1330K

Internal ref. 63 66 850

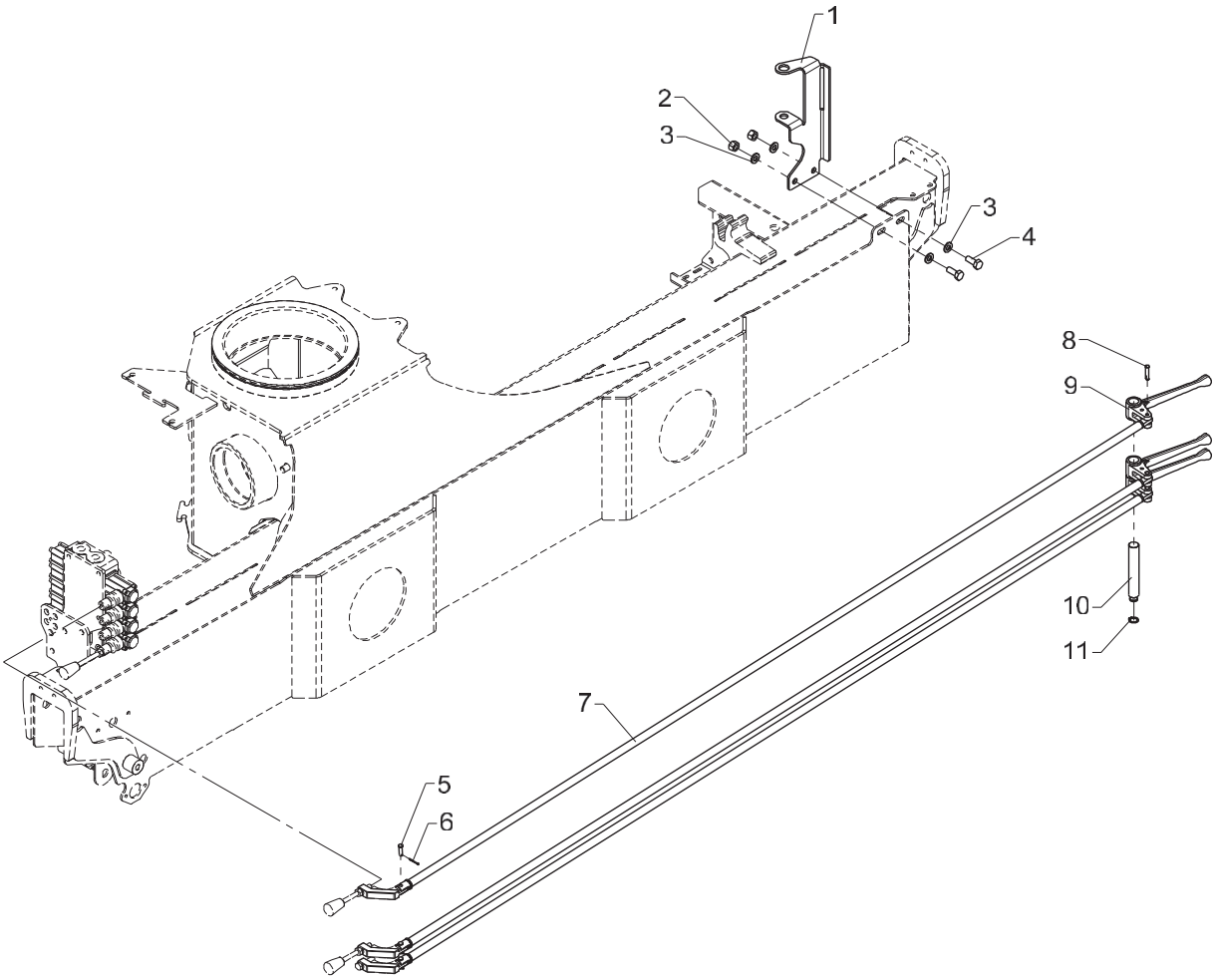

458 05 280

From loader 1170001
To loader

Created 10-02-2012
Modified

Dual control, 4 fcts. std.

Pos	Qty.	Part no.	Description	Remarks
1	1	6365254	Bracket f. dual control (4 f.)	
2	2	31564	Lock nut, stainless	M10
3	4	31565	Washer, stainless	10 mm
4	2	31513	Set screw, stainless	M10 x 25
5	3	31271	Cotter bolt	
6	3	31601	Split pin, stainless	
7	3	6365263	Connecting rod	
8	3	63468	Split pin with spring lock	
9	3	63444	Lever for dual controls	
10	1	6340262	Pin (4 functions)	
11	1	33104	Circlip	15U

1100K, 1110K, 1220K, 1230K, 1320K, 1330K

Internal ref. 63 44 860

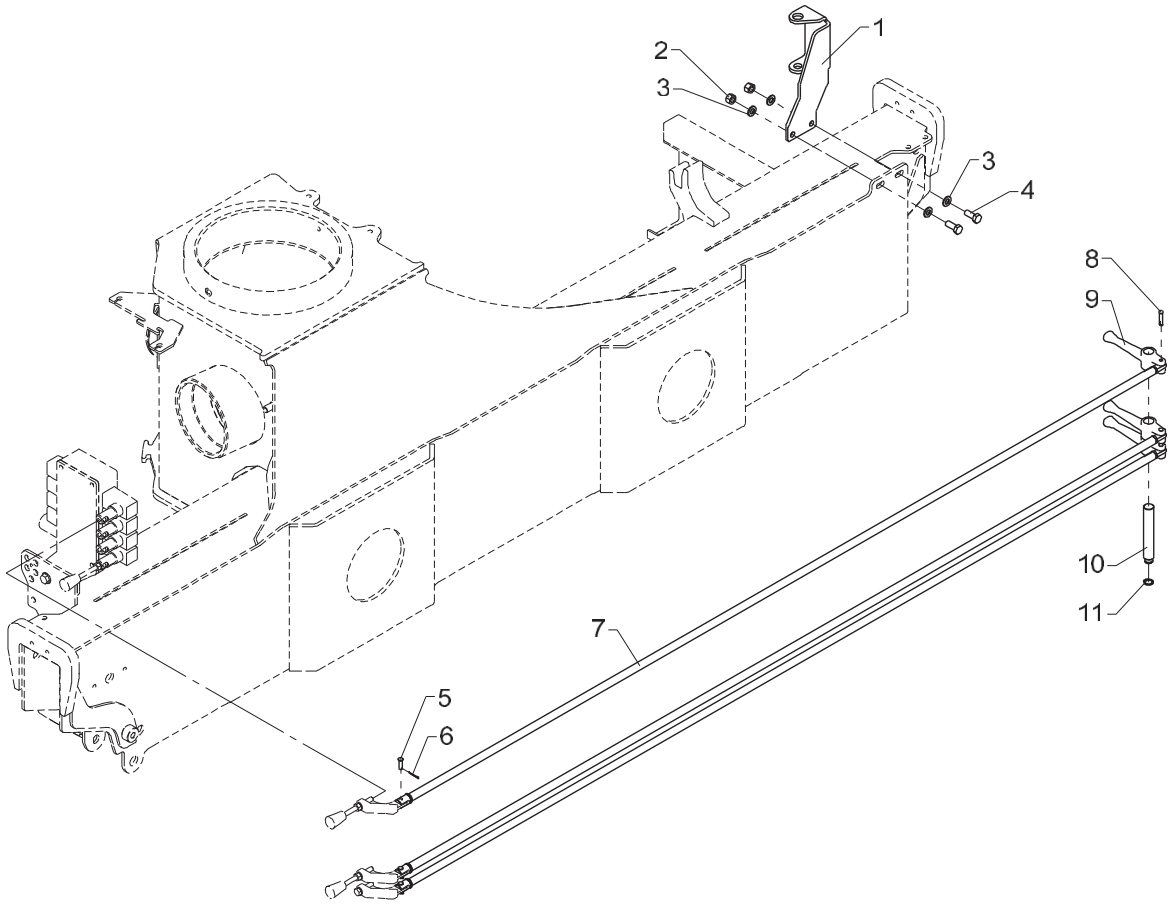

Dual control, 4 fcts., hydr. swing-up stabilizer legs

Pos	Qty.	Part no.	Description	Remarks
1	1	6340259	Bracket for dual control	
2	2	31564	Lock nut, stainless	M10
3	4	31565	Washer, stainless	10 mm
4	2	31513	Set screw, stainless	M10 x 25
5	3	31271	Cotter bolt	ø6 x 21
6	3	31601	Split pin, stainless	ø1,6 x 20
7	3	6340263	Connecting rod	
8	3	63468	Split pin with spring lock	
9	3	63483	Lever for dual control	
10	1	6340262	Pin (4 functions)	
11	1	33104	Circlip	15U

1100K, 1110K, 1220K, 1230K, 1320K, 1330K

Internal ref. 63 66 870

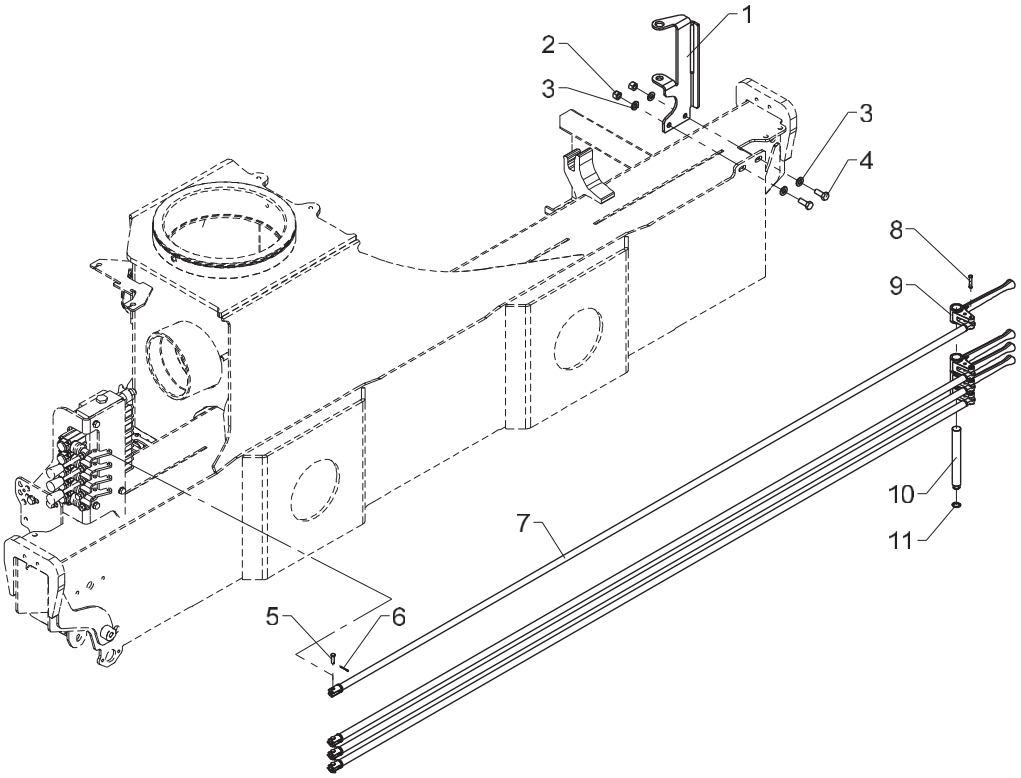

Dual control.4 fcts. + 4 available functions

Pos	Qty.	Part no.	Description	Remarks
1	1	6365255	Bracket f. dual control (5 f.)	
2	2	31564	Lock nut, stainless	M10
3	4	31565	Washer, stainless	10 mm
4	2	31513	Set screw, stainless	M10 x 25
5	4	31271	Cotter bolt	
6	4	31601	Split pin, stainless	
7	4	6365263	Connecting rod	
8	4	63468	Split pin with spring lock	
9	4	63444	Lever for dual controls	
10	1	6340264	Pin(4 fcts.+4 available fcts.)	
11	1	33104	Circlip	15U

1100K, 1110K, 1220K, 1230K, 1320K, 1330K

Internal ref. 63 45 880

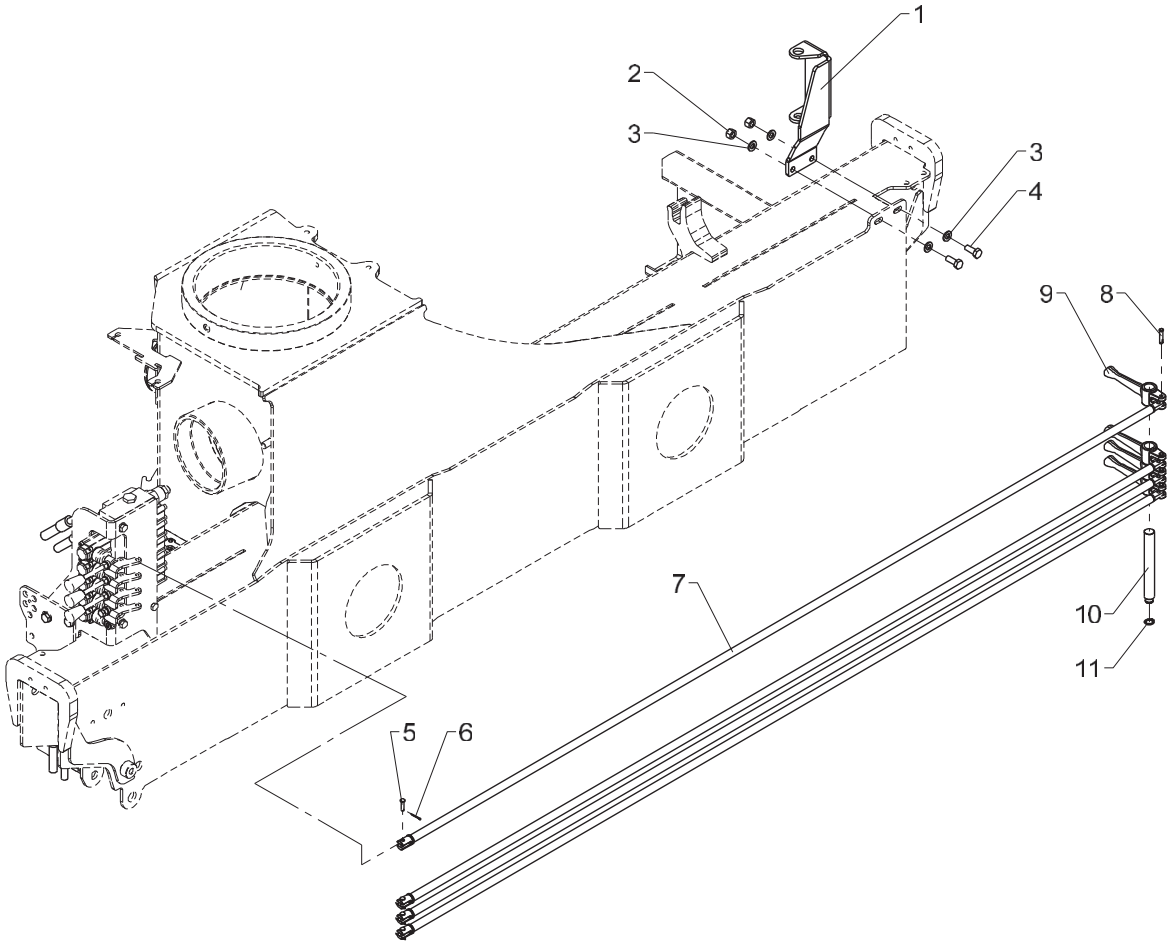

Dual control, 4 fcts. + 4 available fcts. (hydr. swing-up stabilizer legs)

Pos	Qty.	Part no.	Description	Remarks
1	1	6340269	Bracket for dual control	
2	2	31564	Lock nut, stainless	M10
3	4	31565	Washer, stainless	10 mm
4	2	31513	Set screw, stainless	M10 x 25
5	4	31271	Cotter bolt	ø6 x 21
6	4	31601	Split pin, stainless	ø1,6 x 20
7	4	6340263	Connecting rod	
8	4	63468	Split pin with spring lock	
9	4	63483	Lever for dual control	
10	1	6340264	Pin(4 fcts.+4 available fcts.)	
11	1	33104	Circlip	15U

1100K, 1110K, 1220K, 1230K, 1320K, 1330K

Internal ref. 63 65 640

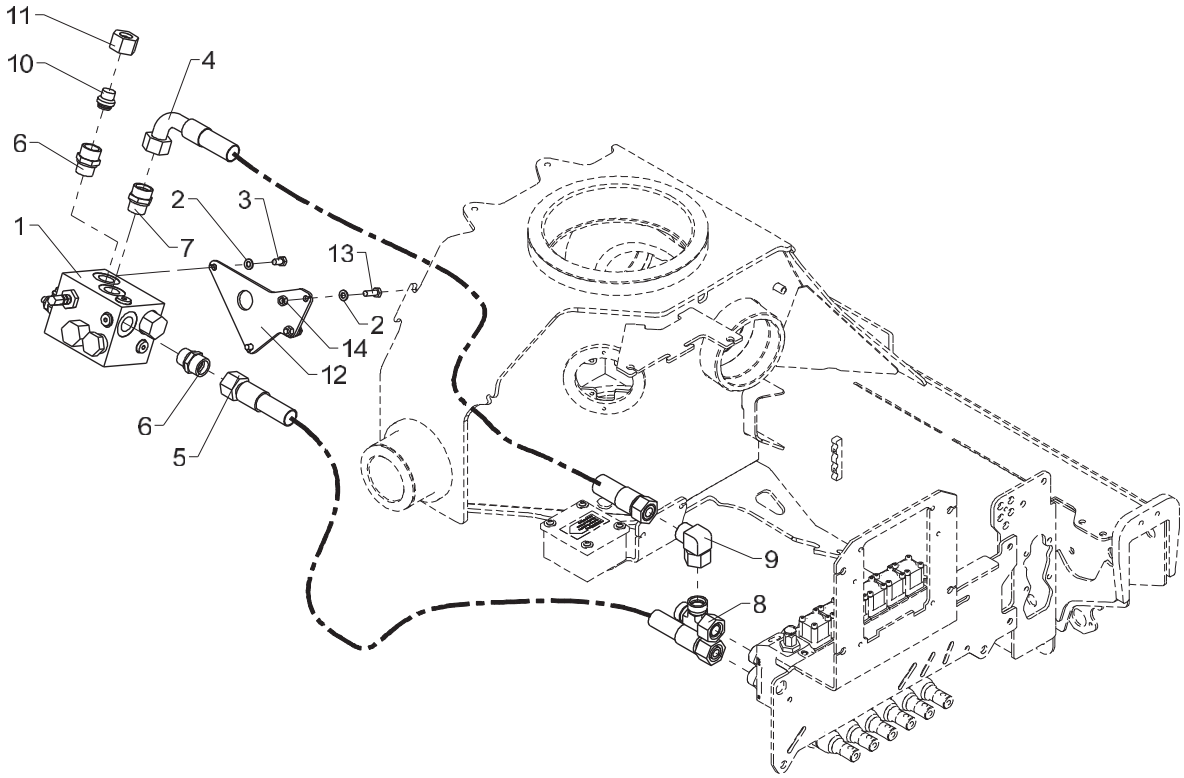

458 05 350

From loader 1170001
To loader

Created 13-02-2012
Modified

Kit for HDL-2 (std.)

Pos	Qty.	Part no.	Description	Remarks
1	1	59018	HDL-2 valve	
2	4	31147	Face washer, 8 mm	
3	2	30131	Set screw, stainless	M8 x 16
4	1	56276	Hose 3/4 x 1000 mm V90°/L	
5	1	56324	Hose 5/8" x 1000 mm L/L	
6	2	26197	Connection	P-GEV 20 SR-WD
7	1	25169	Connection	P-GEV 22 LR-WD
8	1	26149	Connection	ELSD 22 L
9	1	25209	Elbow connection	EWSD 22 L
10	1	26361	Blanking plug	VSD 20 S
11	1	26109	Coupling nut	M 20 S
12	1	6365084	Bracket f. HDL-2 valve	
13	2	30134	Set screw, stainless	M8 x 25
14	2	30856	Nut, stainless	M8

1100K, 1110K, 1220K, 1230K, 1320K, 1330K

Internal ref. 63 66 750

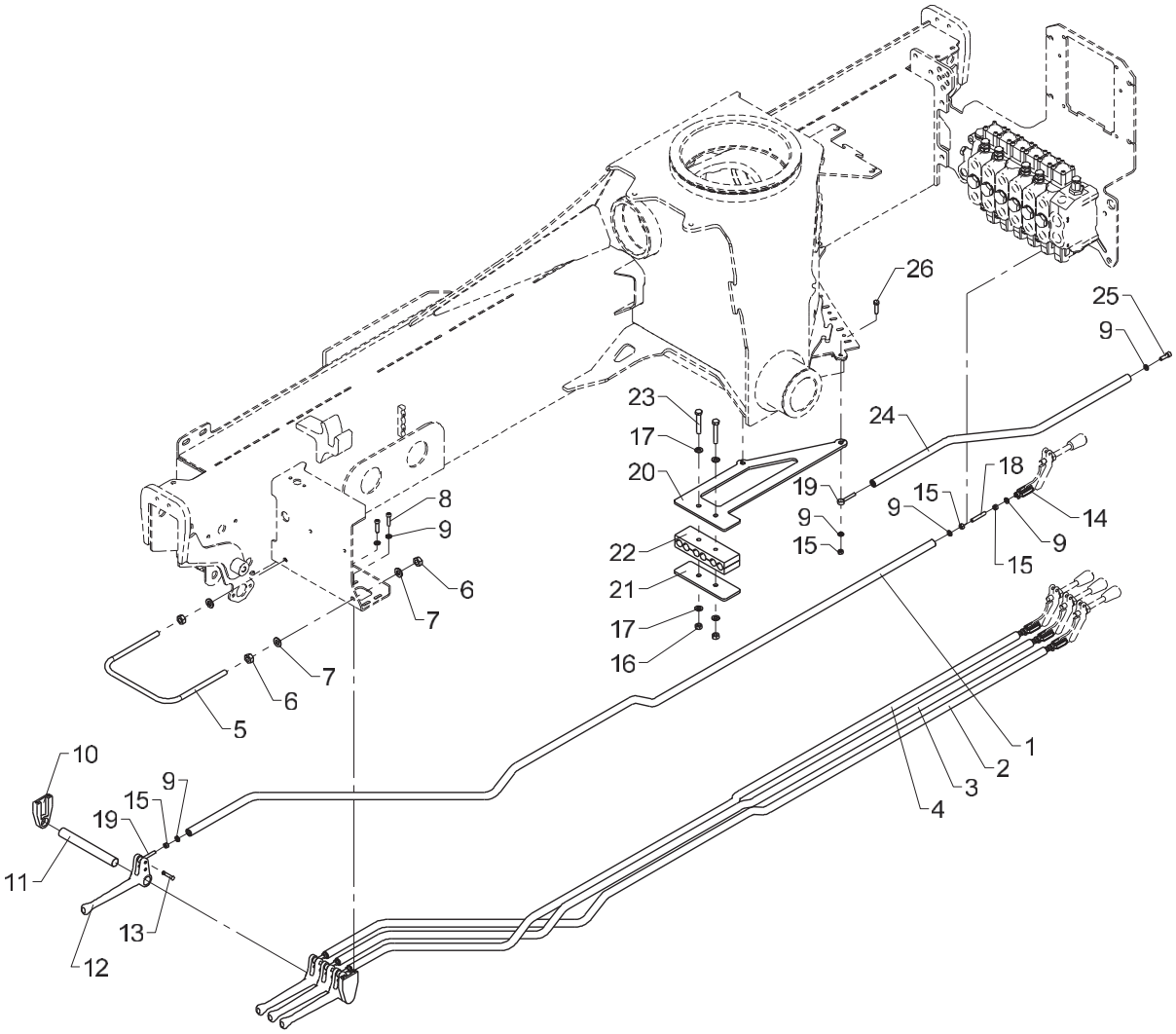

Cross-over controls, 4 functions

Created 30-05-2012
Modified 06-07-2012

Pos	Qty.	Part no.	Description	Remarks
1	1	6365461	Connecting rod, cross controls	
2	1	6365462	Connecting rod, cross controls	
3	1	6365463	Connecting rod, cross controls	
4	1	6365464	Connecting rod, cross controls	
5	1	6365247	Safety guard	
6	4	30858	Nut	M10
7	4	31565	Washer, stainless	10 mm
8	4	30340	Screw, stainless	6,0 x 25
9	18	32302	Face washer, stainless	6 mm
10	2	63564	Bracket for pin	
11	1	6340248	Pin	
12	4	63444	Lever for dual controls	
13	4	63468	Split pin with spring lock	
14	4	48414	Clevis	
15	13	30854	Nut, stainless	M6
16	2	30856	Nut, stainless	M8
17	4	31147	Face washer, 8 mm	
18	4	31007	Pointed screw	MSP6 x 40
19	5	32114	Pin	M6 x 40
20	1	6363247	Bracket for cross controls	
21	1	6363248	Top plate	
22	2	68069	Guide	
23	2	30139	Steel bolt, stainless	M8 x 50
24	1	6363258	Reinforcement	
25	1	31538	Screw, stainless	MC6 x 20
26	1	30114	Set screw, stainless	M6 x 25

1100K, 1110K, 1220K, 1230K, 1320K, 1330K

Internal ref. 63 66 760

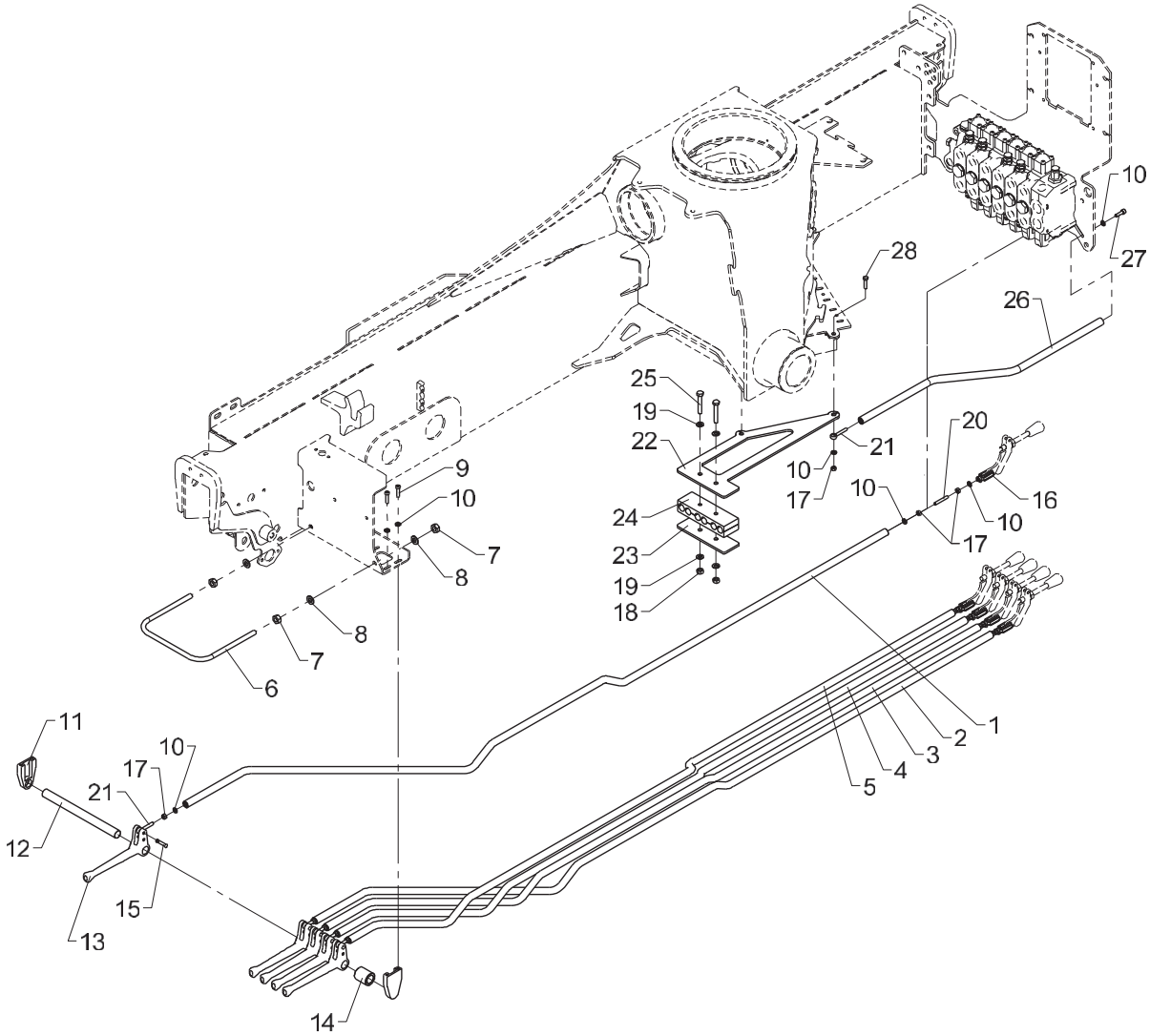

Cross-over controls, 5 functions

Created 29-05-2012
Modified 07-08-2012

Pos	Qty.	Part no.	Description	Remarks
1	1	6365461	Connecting rod, cross controls	
2	1	6365462	Connecting rod, cross controls	
3	1	6365463	Connecting rod, cross controls	
4	1	6365464	Connecting rod, cross controls	
5	1	6365465	Connecting rod, cross controls	
6	1	6365247	Safety guard	
7	4	30858	Nut	M10
8	4	31565	Washer, stainless	10 mm
9	4	30340	Screw, stainless	6,0 x 25
10	21	32302	Face washer, stainless	6 mm
11	2	63564	Bracket for pin	
12	1	6340249	Pin	
13	5	63444	Lever for dual controls	
14	1	63598	Bushing	ø30/ø20 x 35
15	5	63468	Split pin with spring lock	
16	5	48414	Clevis	
17	16	30854	Nut, stainless	M6
18	2	30856	Nut, stainless	M8
19	4	31147	Face washer, 8 mm	
20	5	31007	Pointed screw	MSP6 x 40
21	6	32114	Pin	M6 x 40
22	1	6363247	Bracket for cross controls	
23	1	6363248	Top plate	
24	2	68069	Guide	
25	2	30139	Steel bolt, stainless	M8 x 50
26	1	6363258	Reinforcement	
27	1	31538	Screw, stainless	MC6 x 20
28	1	30114	Set screw, stainless	M6 x 25

1100K, 1110K, 1220K, 1230K, 1320K, 1330K

Internal ref. 63 66 770

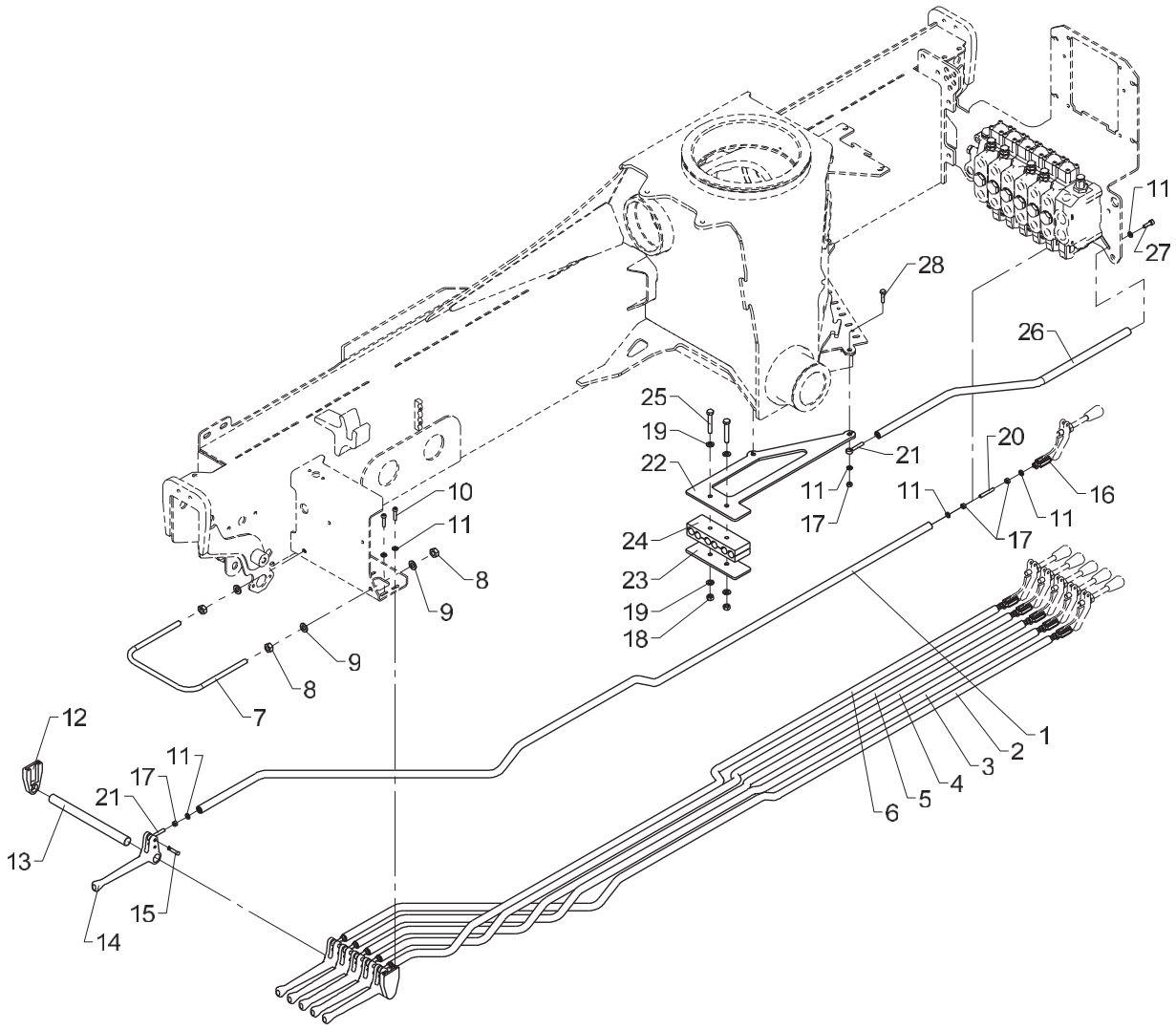

Cross-over controls, 6 functions

Pos	Qty.	Part no.	Description	Remarks
1	1	6365461	Connecting rod, cross controls	
2	1	6365462	Connecting rod, cross controls	
3	1	6365463	Connecting rod, cross controls	
4	1	6365464	Connecting rod, cross controls	
5	1	6365465	Connecting rod, cross controls	
6	1	6365466	Connecting rod, cross controls	
7	1	6365247	Safety guard	
8	4	30858	Nut	M10
9	4	31565	Washer, stainless	10 mm
10	4	30340	Screw, stainless	6,0 x 25
11	24	32302	Face washer, stainless	6 mm
12	2	63564	Bracket for pin	
13	1	6340249	Pin	
14	6	63444	Lever for dual controls	
15	6	63468	Split pin with spring lock	
16	6	48414	Clevis	
17	19	30854	Nut, stainless	M6
18	2	30856	Nut, stainless	M8
19	4	31147	Face washer, 8 mm	
20	6	31007	Pointed screw	MSP6 x 40
21	7	32114	Pin	M6 x 40
22	1	6363247	Bracket for cross controls	
23	1	6363248	Top plate	
24	2	68069	Guide	
25	2	30139	Steel bolt, stainless	M8 x 50
26	1	6363258	Reinforcement	
27	1	31538	Screw, stainless	MC6 x 20
28	1	30114	Set screw, stainless	M6 x 25

Obsolete

458 05 400

1100K, 1110K, 1220K, 1230K, 1320K, 1330K

63 66 080
63 64 070
63 64 060
Internal ref. 63 64 080

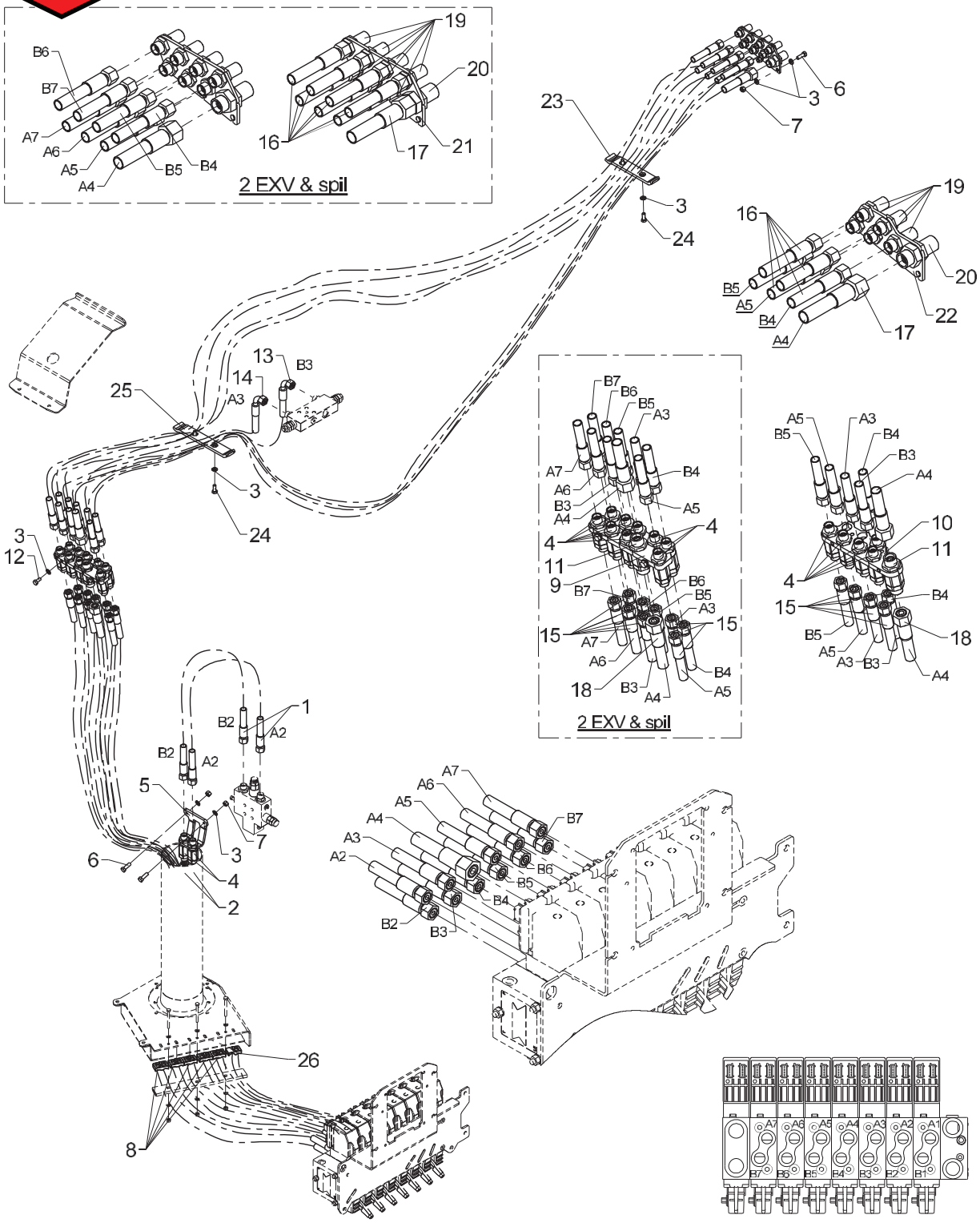

Obsolete

458 05 400

From loader 1170001
To loader

Created 13-02-2012
Modified 13-02-2012

Hose kit, 900-K and 1110-K Series

Pos	Qty.	Part no.	Description	Remarks
		6364080	Hose kit, Winch/1EXV	
		6364060	Hose kit, jib	
		6364070	Hose kit, extension	
		6366080	Hose kit, boom cylinder	
1	2	0017580	Hose	
2	2	0015110	Hose	
3	12	31147	Face washer, 8 mm	
4	11	58478	Swivel coupling	M18 x 1,5 12L
5	1	6340251	Clamp for swivel coupling	
6	4	30134	Set screw, stainless	M8 x 25
7	4	30886	Lock nut, stainless	M8
8	5	63561	Clamp	
9	1	6365253	Bracket for swivel coupling	
10	1	6365252	Bracket for swivel coupling	
11	1	58479	Swivel coupling	M24 x 1,5 16L
12	2	30131	Set screw, stainless	M8 x 16
13	1	56903	Hose 3/8 X 1150 mm	
14	1	56902	Hose 3/8 X 1050 mm	
15	9	0015360	Hose	
16	7	0015310	Hose	
17	1	62692	Hose	
18	1	62678	Hose	
19	7	25201	Bulkhead connection	GSS 12 L
20	1	26335	Bulkhead connection	P-GSV 16 S
21	1	6365316	Bracket f. bulkhead connection	
22	1	6365315	Bracket f. bulkhead connection	
23	1	6340211	Clamp, complete	
24	4	30132	Set screw, stainless	
25	1	6365211	Clamp, complete	
26	1	63562	Clamp	

1100K, 1110K, 1220K, 1230K, 1320K, 1330K

63 64 800
63 66 080
63 64 070
63 64 060
Internal ref. 63 64 080

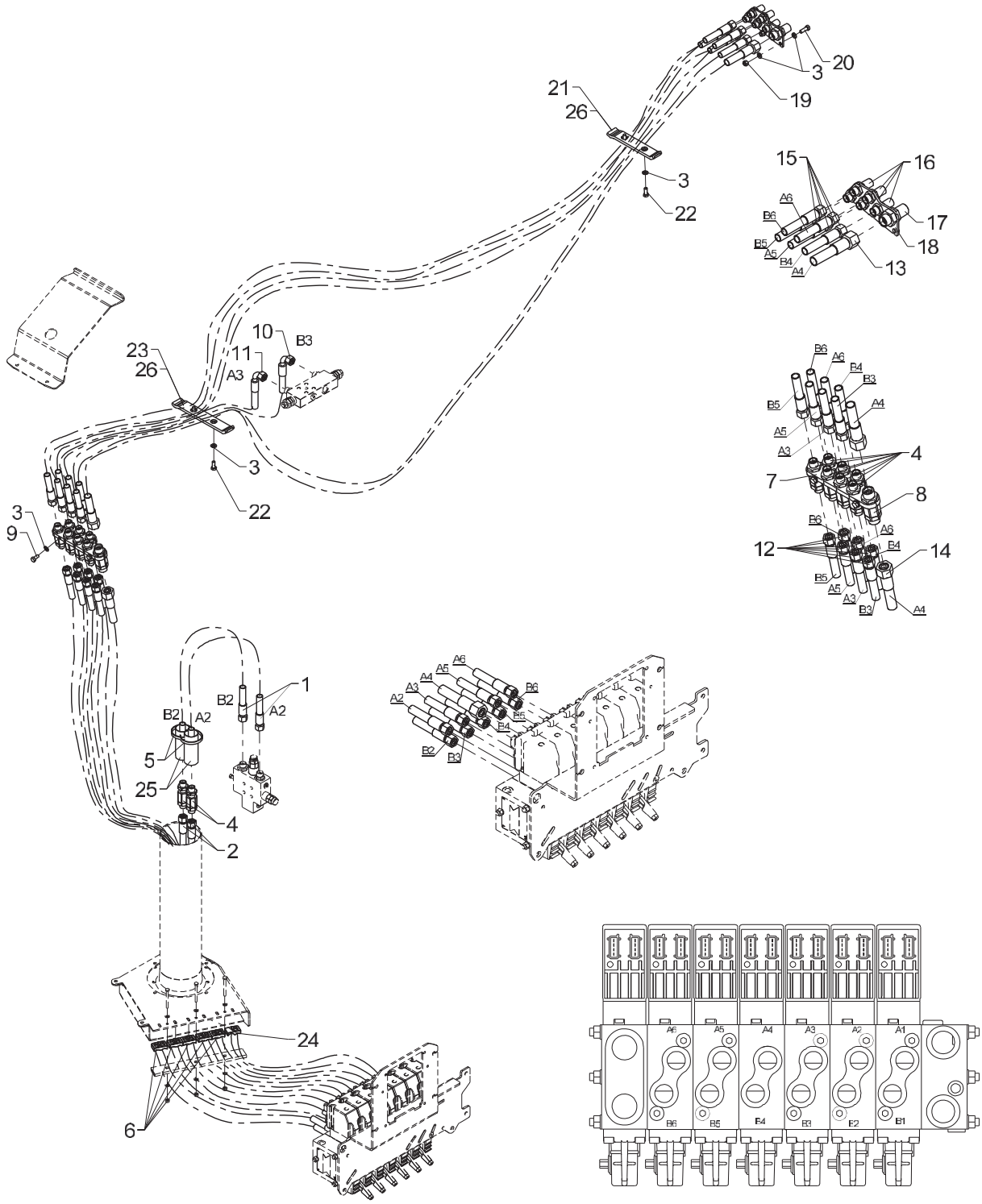

Hose kit, 900-K and 1110-K Series

Pos	Qty.	Part no.	Description	Remarks
		6364080	Hose kit, Winch/1EXV	
		6364060	Hose kit, jib	
		6364070	Hose kit, extension	
		6366080	Hose kit, boom cylinder	
		6364800		
1	2	0017580	Hose	
2	2	0015110	Hose	
3	10	31147	Face washer, 8 mm	
4	9	58478	Swivel coupling	M18 x 1,5 12L
5	2	27275	Cable tie, black, 7.6x385mm	
6	5	63561	Clamp	
7	1	6365252	Bracket for swivel coupling	
8	1	58479	Swivel coupling	M24 x 1,5 16L
9	2	30131	Set screw, stainless	M8 x 16
10	1	56903	Hose 3/8 X 1150 mm	
11	1	56902	Hose 3/8 X 1050 mm	
12	7	0015360	Hose	
13	1	62692	Hose	
14	1	62678	Hose	
15	5	0015310	Hose	
16	5	25201	Bulkhead connection	
17	1	26335	Bulkhead connection	P-GSV 16 S
18	1	6365315	Bracket f. bulkhead connection	
19	2	30886	Lock nut, stainless	M8
20	2	30134	Set screw, stainless	M8 x 25
21	1	6340211	Clamp, complete	Std. funkt. (+EXV)
22	4	30132	Set screw, stainless	
23	1	6365211	Clamp, complete	Std. funkt. (+EXV)
24	1	63562	Clamp	
25	2	29131	Protective cover	0,25 m
26	2	6340217	Clamp, complete	Std. funkt. + spil

1100K, 1110K, 1220K, 1230K, 1320K, 1330K

63 66 110
63 66 160
63 66 080
Internal ref. 63 66 120

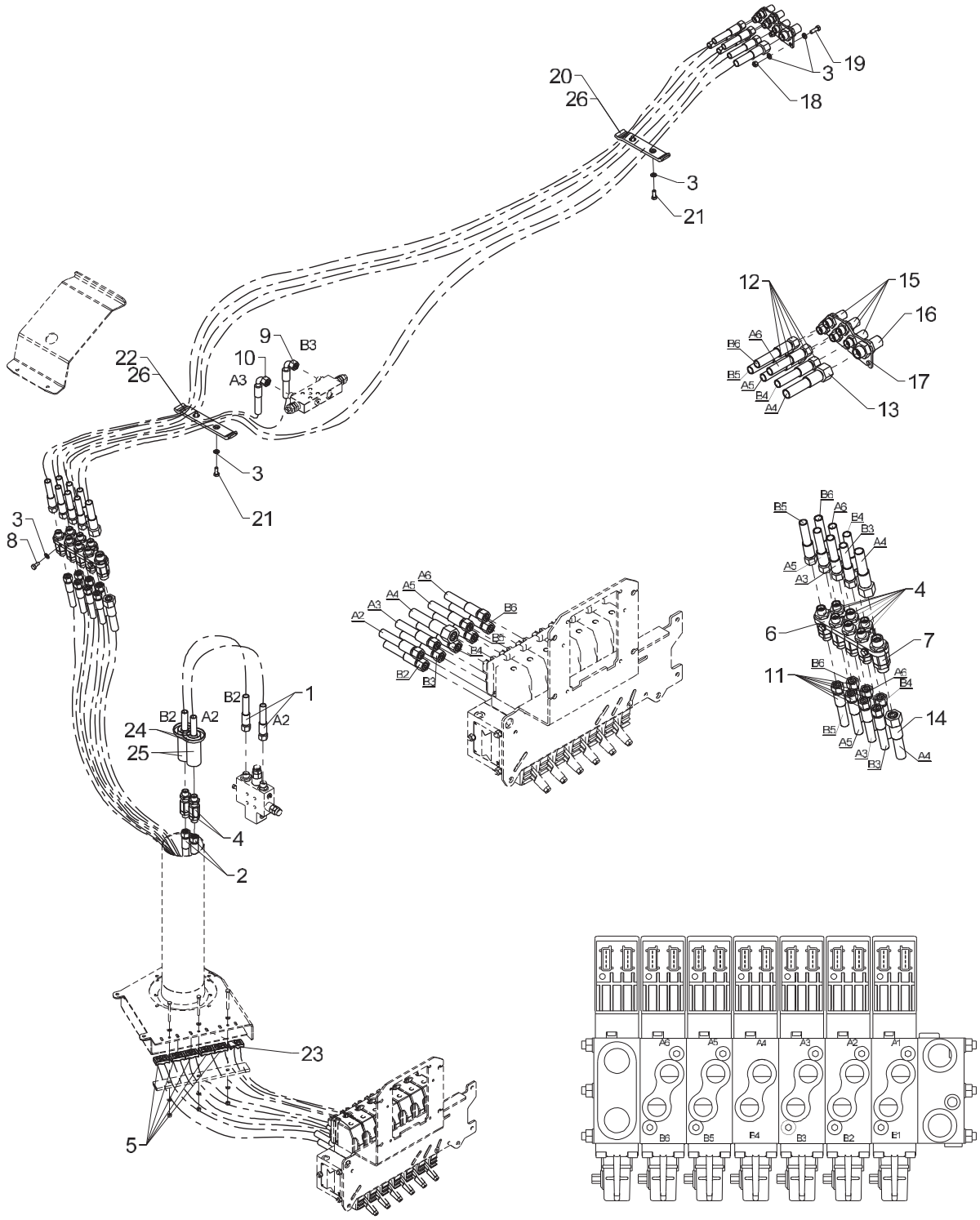

Hose kit, 1100-K Series

Pos	Qty.	Part no.	Description	Remarks
		6366120	Hose kit, winch or 1 EXV.	
		6366080	Hose kit, boom cylinder	
		6366160	Hose kit, jib	
		6366110	Hose kit, extension	
1	2	0017580	Hose	
2	2	0015110	Hose	
3	10	31147	Face washer, 8 mm	
4	9	58478	Swivel coupling	M18 x 1,5 12L
5	5	63561	Clamp	
6	1	6365252	Bracket for swivel coupling	
7	1	58479	Swivel coupling	M24 x 1,5 16L
8	2	30131	Set screw, stainless	M8 x 16
9	1	0015480	Hose	
10	1	56593	Hose 3/8" x 1200 mm 90°	
11	7	0015360	Hose	
12	5	0017600	Hose	
13	1	56382	Hose	
14	1	62678	Hose	
15	5	25201	Bulkhead connection	
16	1	26335	Bulkhead connection	P-GSV 16 S
17	1	6365315	Bracket f. bulkhead connection	
18	2	30886	Lock nut, stainless	M8
19	2	30134	Set screw, stainless	M8 x 25
20	1	6340211	Clamp, complete	Std. funkt. (+EXV)
21	4	30132	Set screw, stainless	
22	1	6365211	Clamp, complete	Std. funkt. (+EXV)
23	1	63562	Clamp	
24	2	27275	Cable tie, black, 7.6x385mm	
25	2	29131	Protective cover	0,25 m
26	2	6340217	Clamp, complete	Std. funkt. + spil

1100K, 1110K, 1220K, 1230K, 1320K, 1330K

63 64 720
63 64 730
Internal ref. 63 64 740

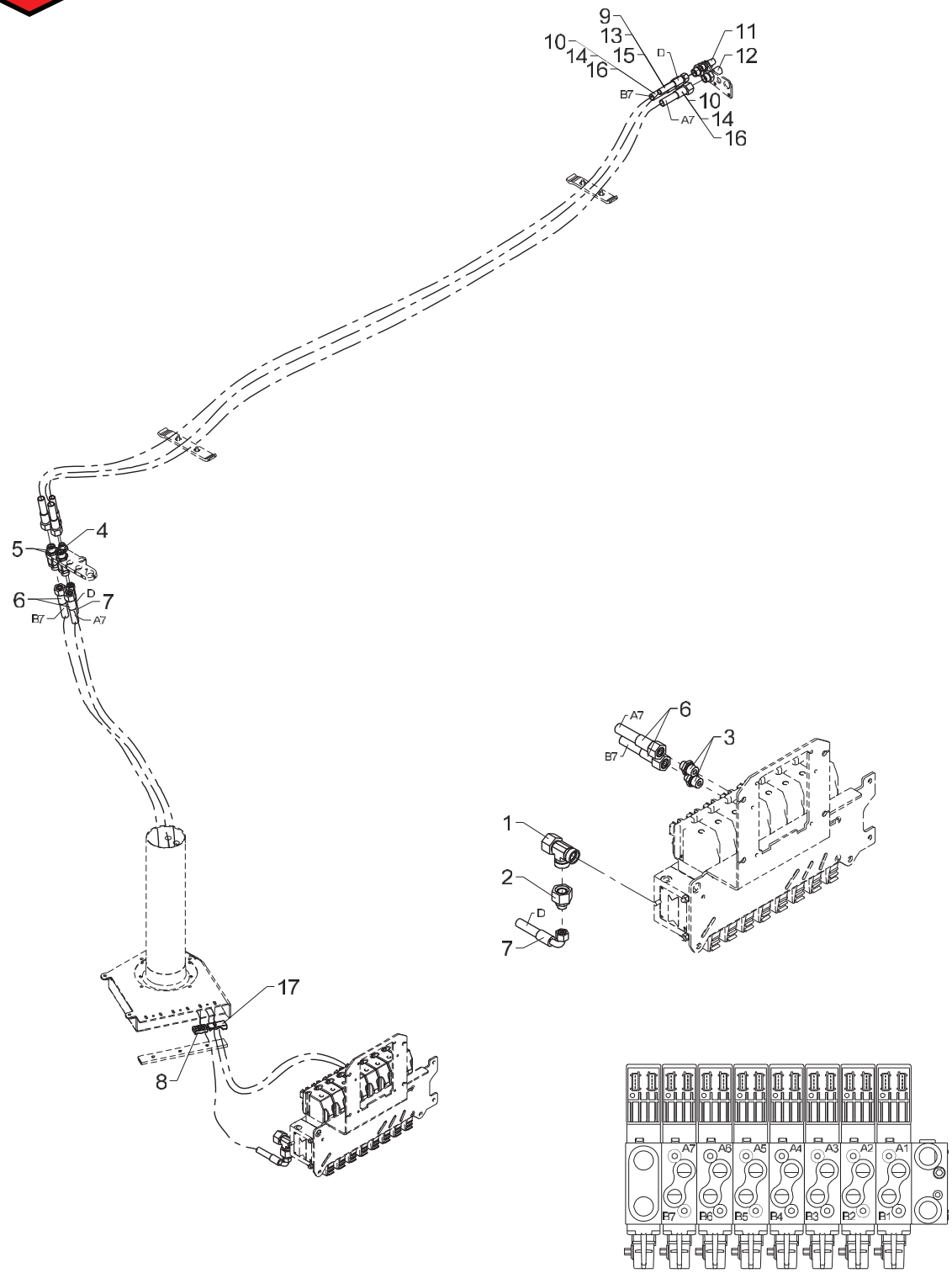

Hose kit, winch

Pos	Qty.	Part no.	Description	Remarks
		6364740		
		6364730		
		6364720		
1	1	26149	Connection	ELSD 22 L
2	1	25208	Reducing connection	REDSDN 22/12 L
3	2	25108	Connection	GES 12 LR 1/2-WD
4	1	58478	Swivel coupling	M18 x 1,5 12L
5	2	58479	Swivel coupling	M24 x 1,5 16L
6	2	62678	Hose	
7	1	0017450	Hose	
8	1	63561	Clamp	
9	1	0017600	Hose	Serie 1220
10	2	56382	Hose	Serie 1220
11	1	25201	Bulkhead connection	
12	2	26335	Bulkhead connection	P-GSV 16 S
13	1	56906	Hose 3/8" x 3000 mm	Serie 1030
14	2	62698	Hose	Serie 1030
15	1	0015310	Hose	Serie 1020 og 1230
16	2	62692	Hose	Serie 1020 og 1230
17	1	63563	Clamp	

1100K, 1110K, 1220K, 1230K, 1320K, 1330K

Internal ref. 63 65 310

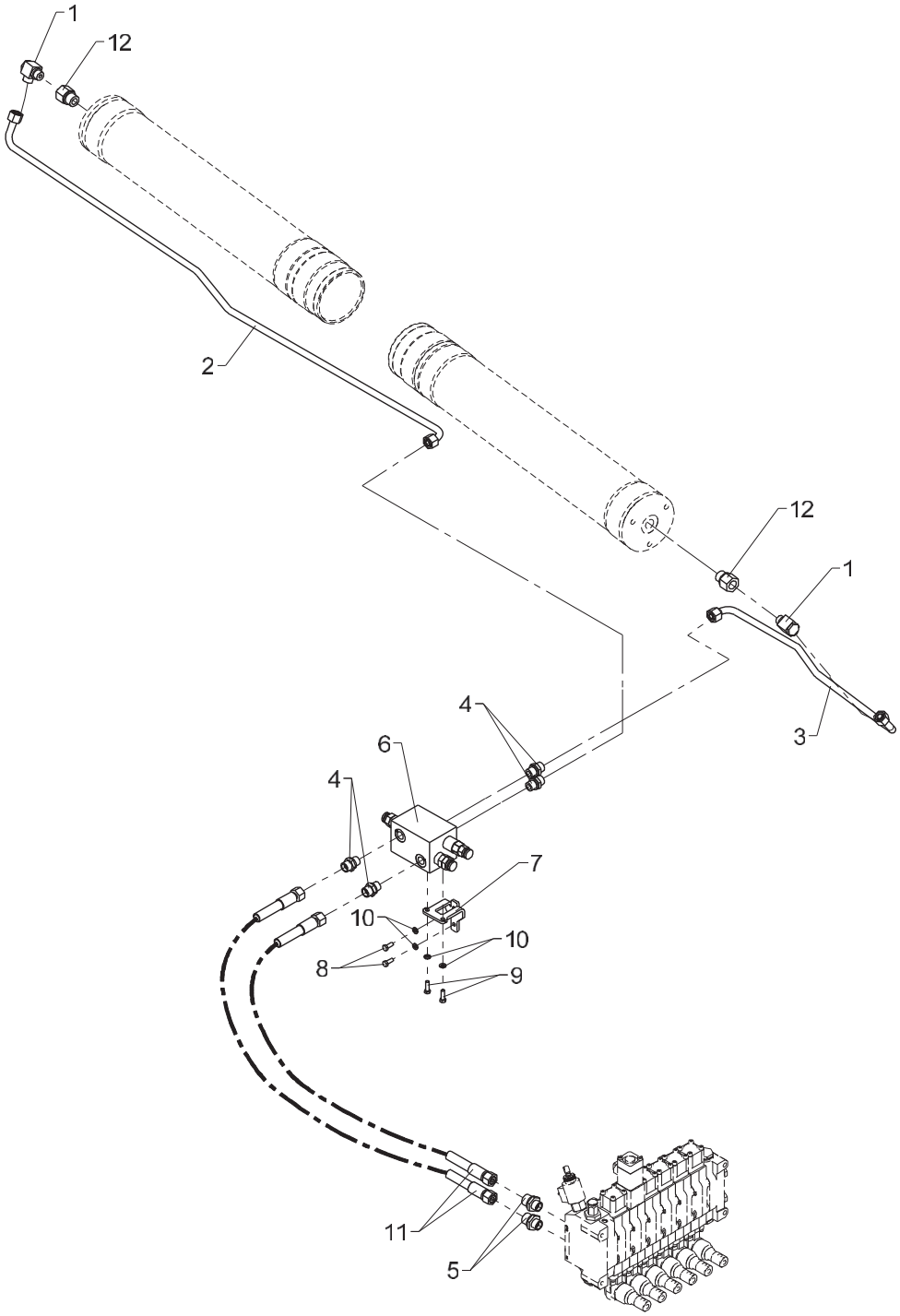

Obsolete

458 05 500

From loader 1170001
To loader

Created 13-02-2012
Modified

Hydraulic system, slewing

Pos	Qty.	Part no.	Description	Remarks
1	2	25130	Banjo connection	RSWV 12 LR
2	1	6365279	Pipe, (Slew, LHV/C2)	
3	1	6365278	Pipe, (Slew, LHV/C1)	
4	4	25127	Connection	P-GEV 12 LR-WD
5	2	25108	Connection	GES 12 LR 1/2-WD
6	1	55261	Load-holding valve	
7	1	6340237	Bracket for load-holding valve	
8	2	30112	Set screw, stainless	M6 x 16
9	2	30113	Set screw, stainless	M6 x 20
10	4	32302	Face washer, stainless	6 mm
11	2	0017970	Hose	
12	2	25243	Reducing connection	RED-R 1/2-WD/R 3/8

1100K, 1110K, 1220K, 1230K, 1320K, 1330K

Internal ref. 63 65 310

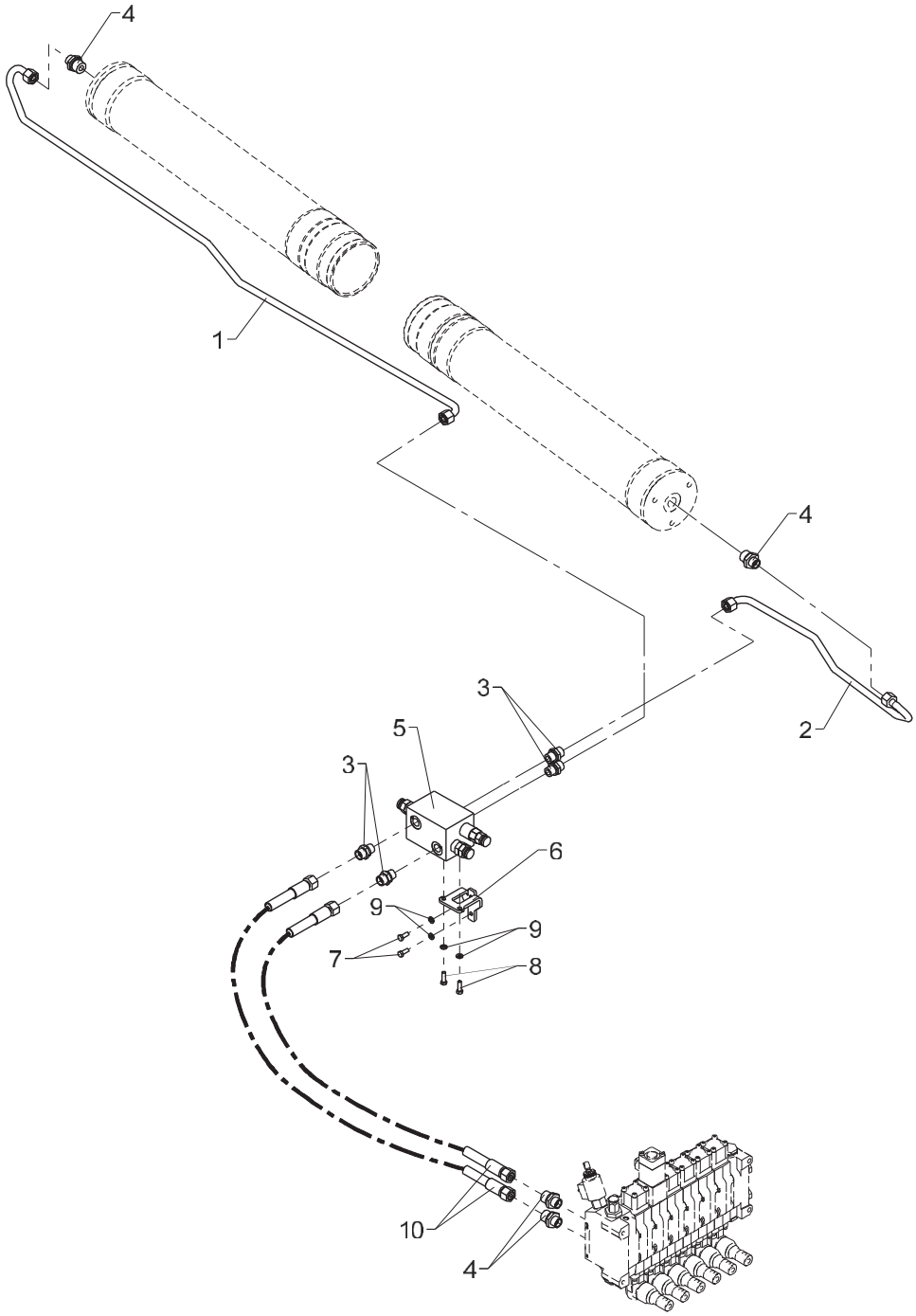

Obsolete

458 05 500 A

From loader 1170001
To loader 1170121

Created 11-12-2012
Modified 25-10-2013

Hydraulic system, slewing

Pos	Qty.	Part no.	Description	Remarks
1	1	6365277	Pipe, (Slew, LHV/C2)	
2	1	6365276	Pipe, (Slew, LHV/C1)	
3	4	25127	Connection	P-GEV 12 LR-WD
4	4	25108	Connection	GES 12 LR 1/2-WD
5	1	55261	Load-holding valve	
6	1	6340237	Bracket for load-holding valve	
7	2	30112	Set screw, stainless	M6 x 16
8	2	30113	Set screw, stainless	M6 x 20
9	4	32302	Face washer, stainless	6 mm
10	2	0017970	Hose	

1100K, 1110K, 1220K, 1230K, 1320K, 1330K

Internal ref. 63 65 310

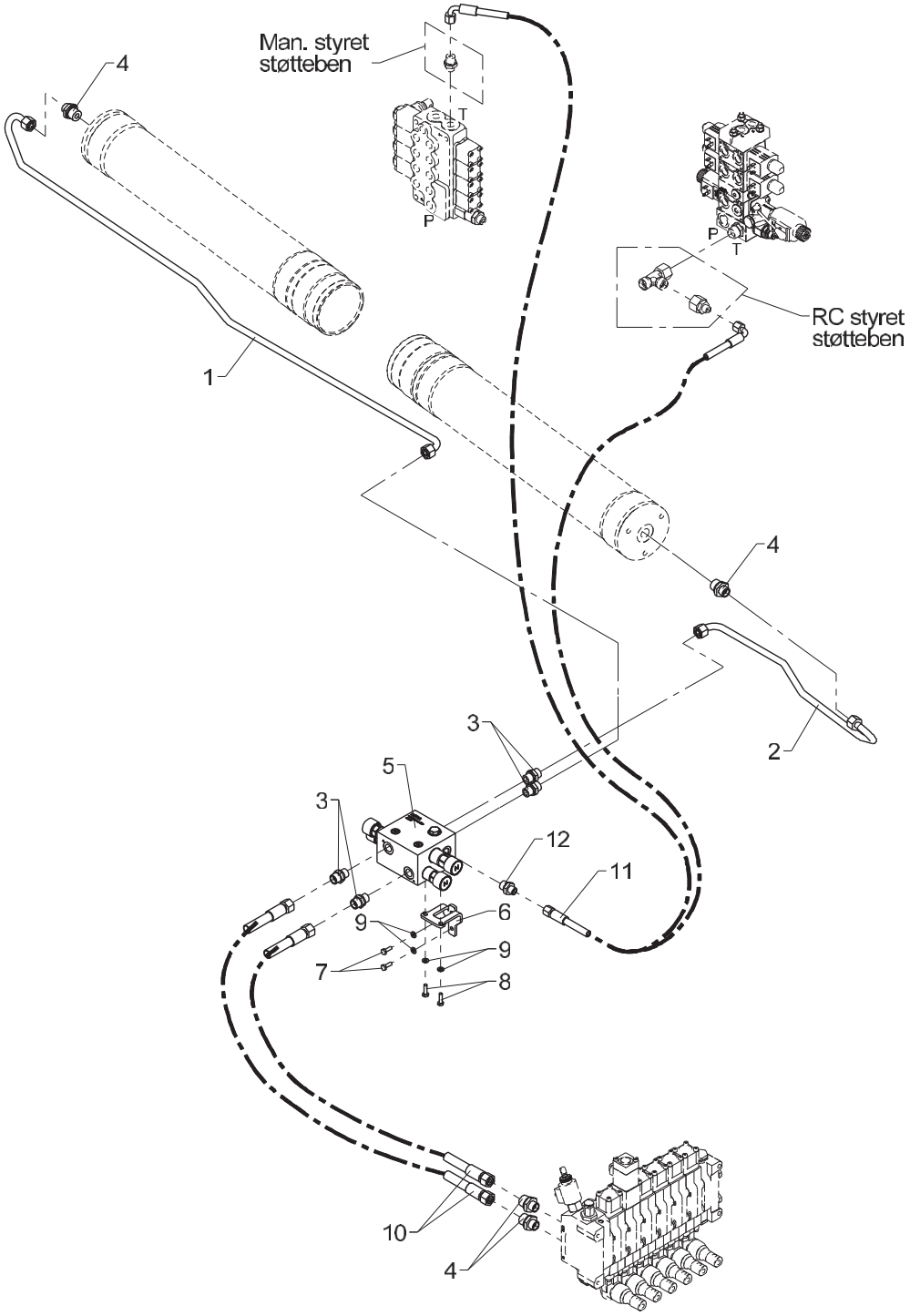

Hydraulic system, slewing

Pos	Qty.	Part no.	Description	Remarks
1	1	6365277	Pipe, (Slew, LHV/C2)	
2	1	6365276	Pipe, (Slew, LHV/C1)	
3	4	25127	Connection	P-GEV 12 LR-WD
4	4	25108	Connection	GES 12 LR 1/2-WD
5	1	55710	Load-holding valve	
6	1	6340237	Bracket for load-holding valve	
7	2	30112	Set screw, stainless	M6 x 16
8	2	30113	Set screw, stainless	M6 x 20
9	4	32302	Face washer, stainless	6 mm
10	2	0017970	Hose	
11	1	62526	Hose	1/4 X 550 M14 X 1.5 L/90
12	1	25244	Connection	GES 8 LR 3/8-WD

1100K, 1110K, 1220K, 1230K, 1320K, 1330K

Internal ref. 63 65 110

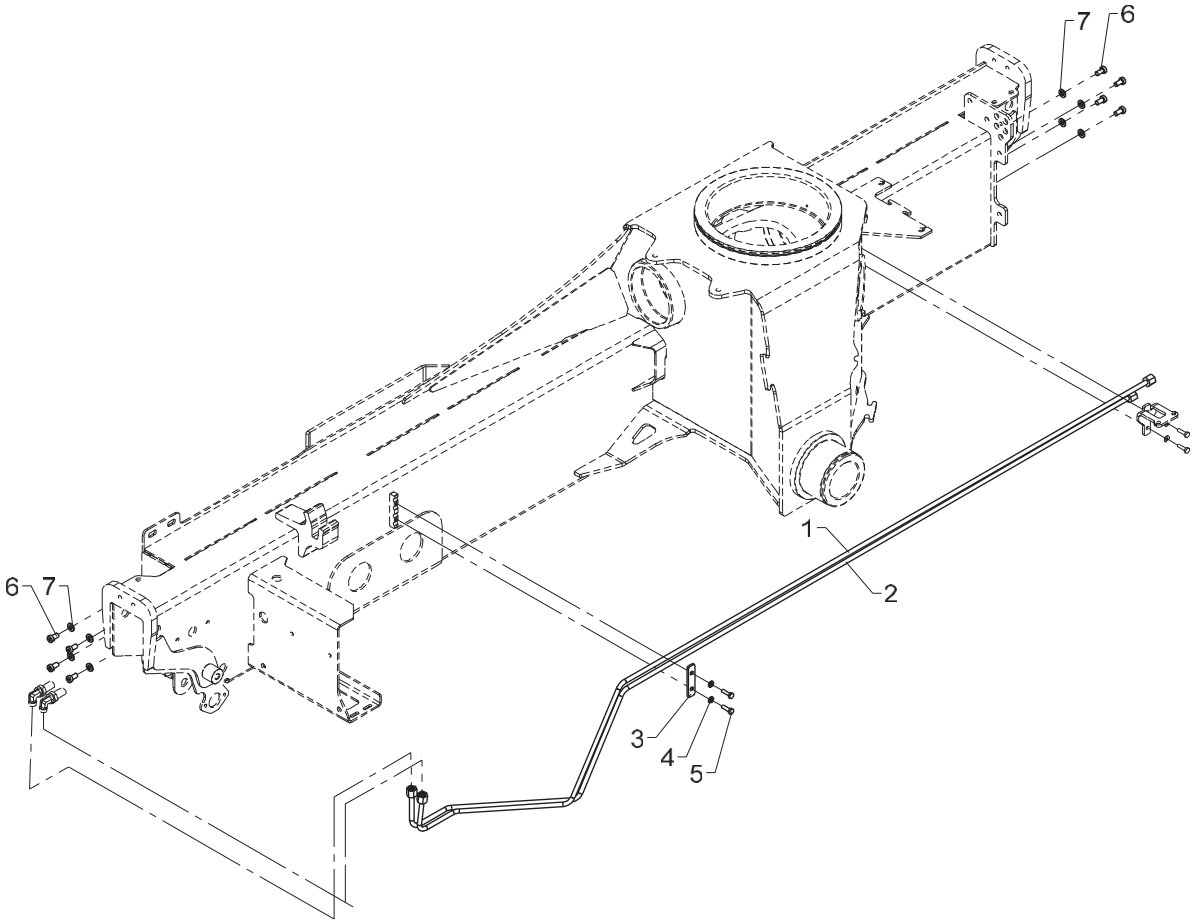

Hydr. syst., stabilizers, manual extension

Pos	Qty.	Part no.	Description	Remarks
		6365110	Hydr. system, stab., 2 func.	
1	1	6365265	Pipe, stabilizers	
2	1	6365266	Pipe, stabilizers	
3	1	6340236	Plate	
4	2	32302	Face washer, stainless	6 mm
5	2	30113	Set screw, stainless	M6 x 20
6	8	32478	Screw	M8 x 16
7	8	31147	Face washer, 8 mm	

1100K, 1110K, 1220K, 1230K, 1320K, 1330K

Internal ref. 63 65 120

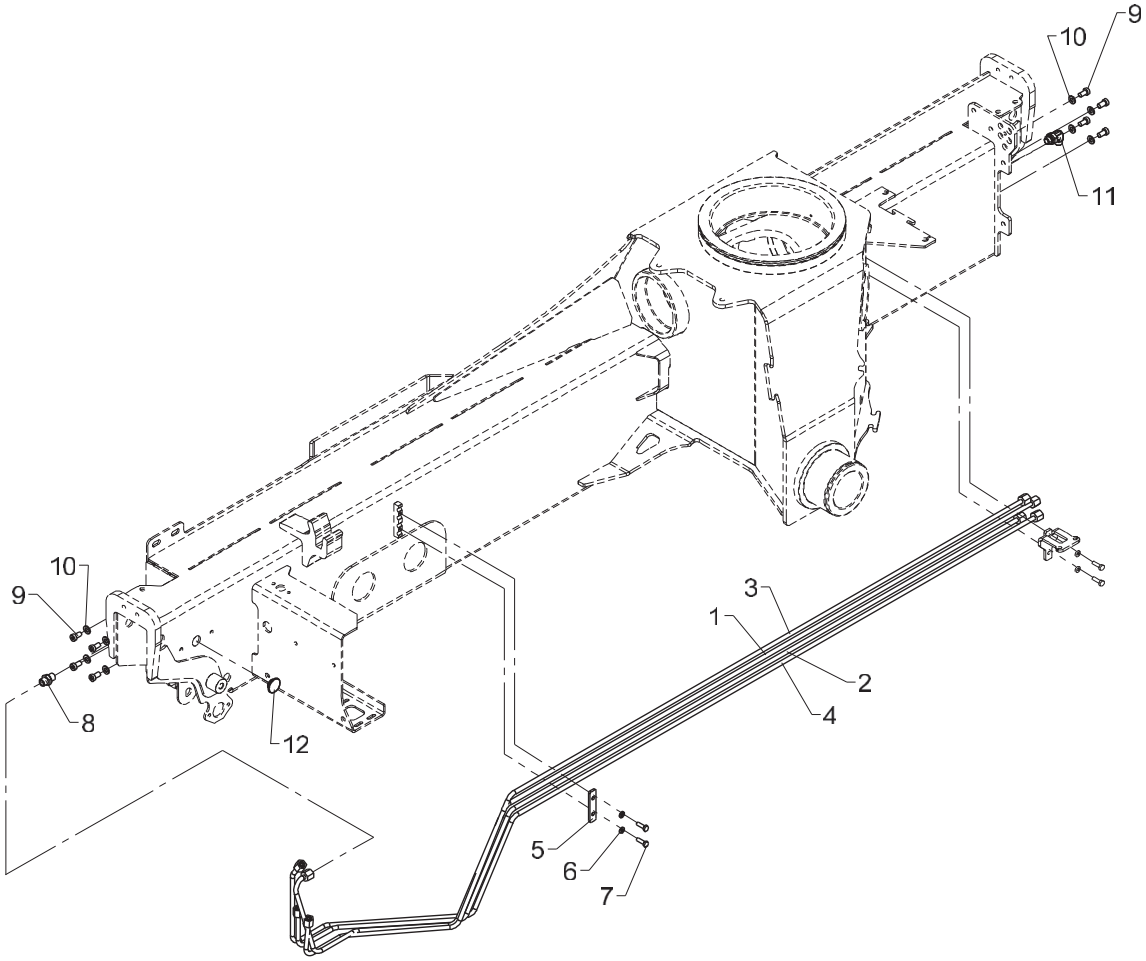

Hydr. syst., stabilizers, hydr. extension

Pos	Qty.	Part no.	Description	Remarks
		6365120	Hydr. system, stab., 4 func.	
1	1	6365265	Pipe, stabilizers	
2	1	6365266	Pipe, stabilizers	
3	1	6365267	Pipe, stabilizers	
4	1	6365268	Pipe, stabilizers	
5	1	6340236	Plate	
6	2	32302	Face washer, stainless	6 mm
7	2	30113	Set screw, stainless	M6 x 20
8	1	25109	Connection	GES 8 LR-WD
9	8	32478	Screw	M8 x 16
10	8	31147	Face washer, 8 mm	
11	1	26898	Elbow connection	8 mm - 1/4"
12	2	63430	Guide	ø30 x 2 mm

1100K, 1110K, 1220K, 1230K, 1320K, 1330K

Internal ref. 63 65 890

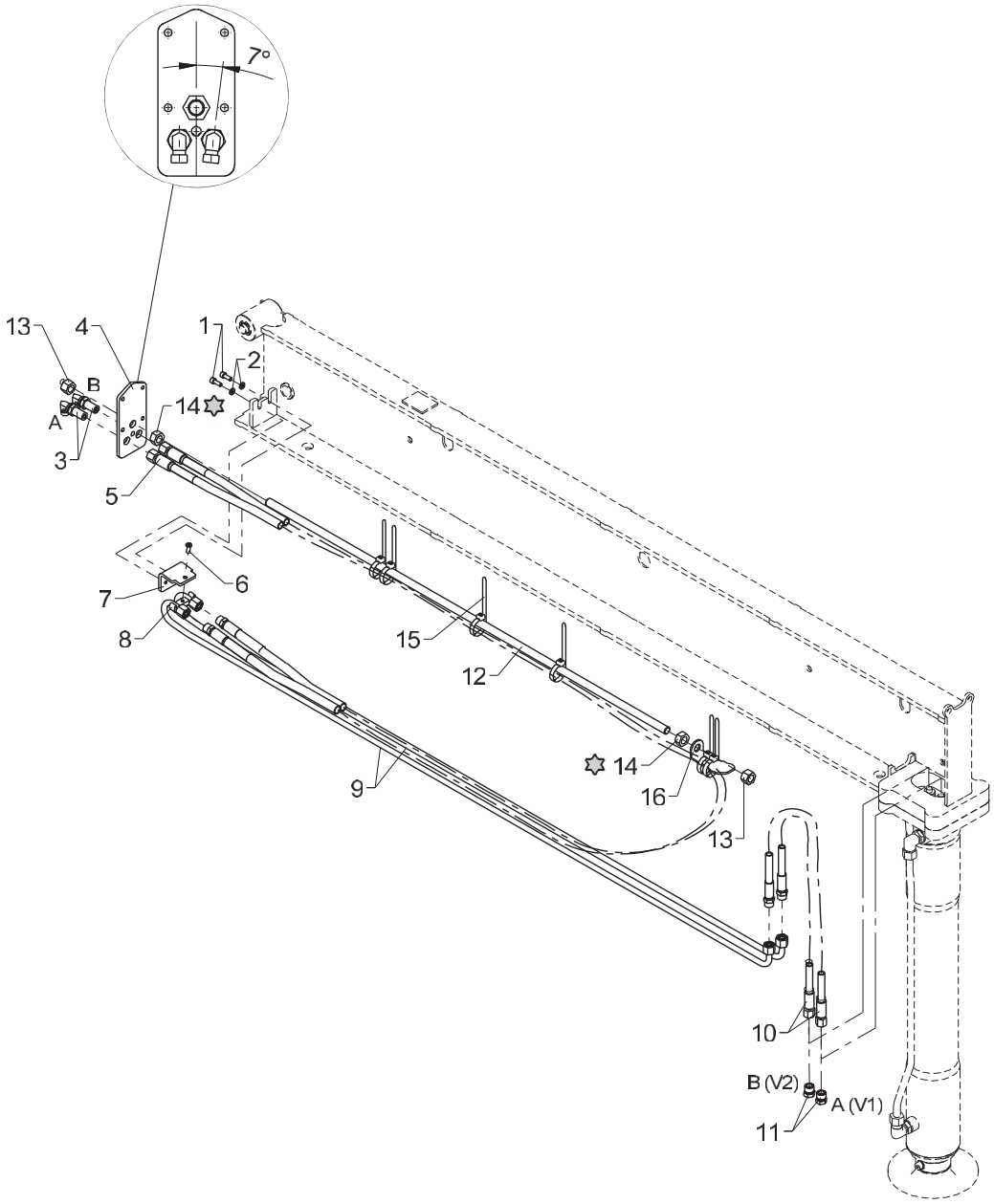

Loctite 270

Hydr. syst., SV, 4600, manual extension

458 05 750

From loader 1170001
To loader

Created 14-02-2012
Modified

Pos	Qty.	Part no.	Description	Remarks
1	2	31539	Screw, stainless	MC6 x 16
2	2	32302	Face washer, stainless	6 mm
3	2	26864	Elbow connection	WSS 8L
4	1	6365103	End plate	
5	1	56589	Twin hose 1/4 x 2300 mm	L=8mm/S=10mm
6	1	32490	Screw	MCL6 x 16
7	1	6344109	Clamp	
8	1	6306097	Clamp	
9	2	6340798	Pipe	
10	2	56460	Hose	
11	2	25635	Screw	VSK 10L
12	1	31262	Threaded pin	
13	2	32317	Lock nut	M14
14	2	32145	Nut, stainless	M14
15	6	27275	Cable tie, black, 7.6x385mm	
16	1	6344107	Clamp	

1100K, 1110K, 1220K, 1230K, 1320K, 1330K

63 64 610
Internal ref. 63 65 980

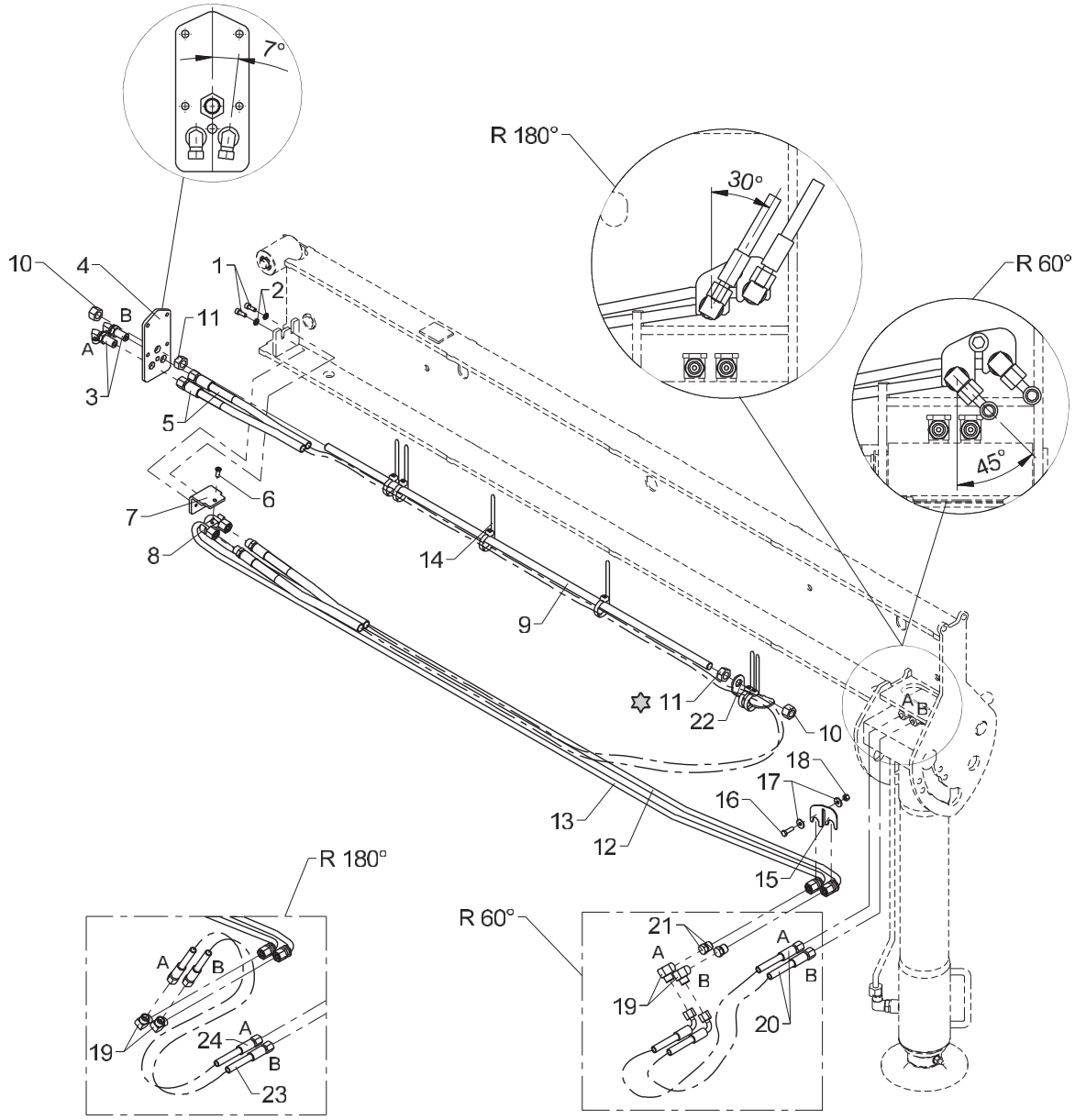

✡ Loctite 270

Hydr. syst., SR 60°/180°, 4600, manual extension

Pos	Qty.	Part no.	Description	Remarks
		6365980	Hydraulic system, SR 4600 man.	
		6364610	Hydr. syst., SR180°, 4720, man	
1	2	31539	Screw, stainless	MC6 x 16
2	2	32302	Face washer, stainless	6 mm
3	2	26864	Elbow connection	WSS 8L
4	1	6365103	End plate	
5	1	56589	Twin hose 1/4 x 2300 mm	L=8mm/S=10mm
6	1	32490	Screw	MCL6 x 16
7	1	6344109	Clamp	
8	1	6306097	Clamp	
9	1	31262	Threaded pin	
10	2	30891	Lock nut	M14
11	2	30862	Nut	M14
12	1	6340797	Pipe	
13	1	6340796	Pipe	
14	6	27275	Cable tie, black, 7.6x385mm	
15	1	6306164	Bracket	
16	1	30113	Set screw, stainless	M6 x 20
17	2	31134	Washer, stainless	
18	1	30884	Lock nut, stainless	M6
19	2	25125	Elbow connection	WV 10 L
20	2	56363	Hose	L=8mm / V=10 mm
21	2	25635	Screw	VSK 10L
22	1	6344107	Clamp	
23	1	56905	Hose 1/4 X 550 mm	L=8mm/L=10mm
24	1	56904	Hose 1/4 X 500 mm	L=8mm/L=10mm

1100K, 1110K, 1220K, 1230K, 1320K, 1330K

Internal ref. 63 65 900

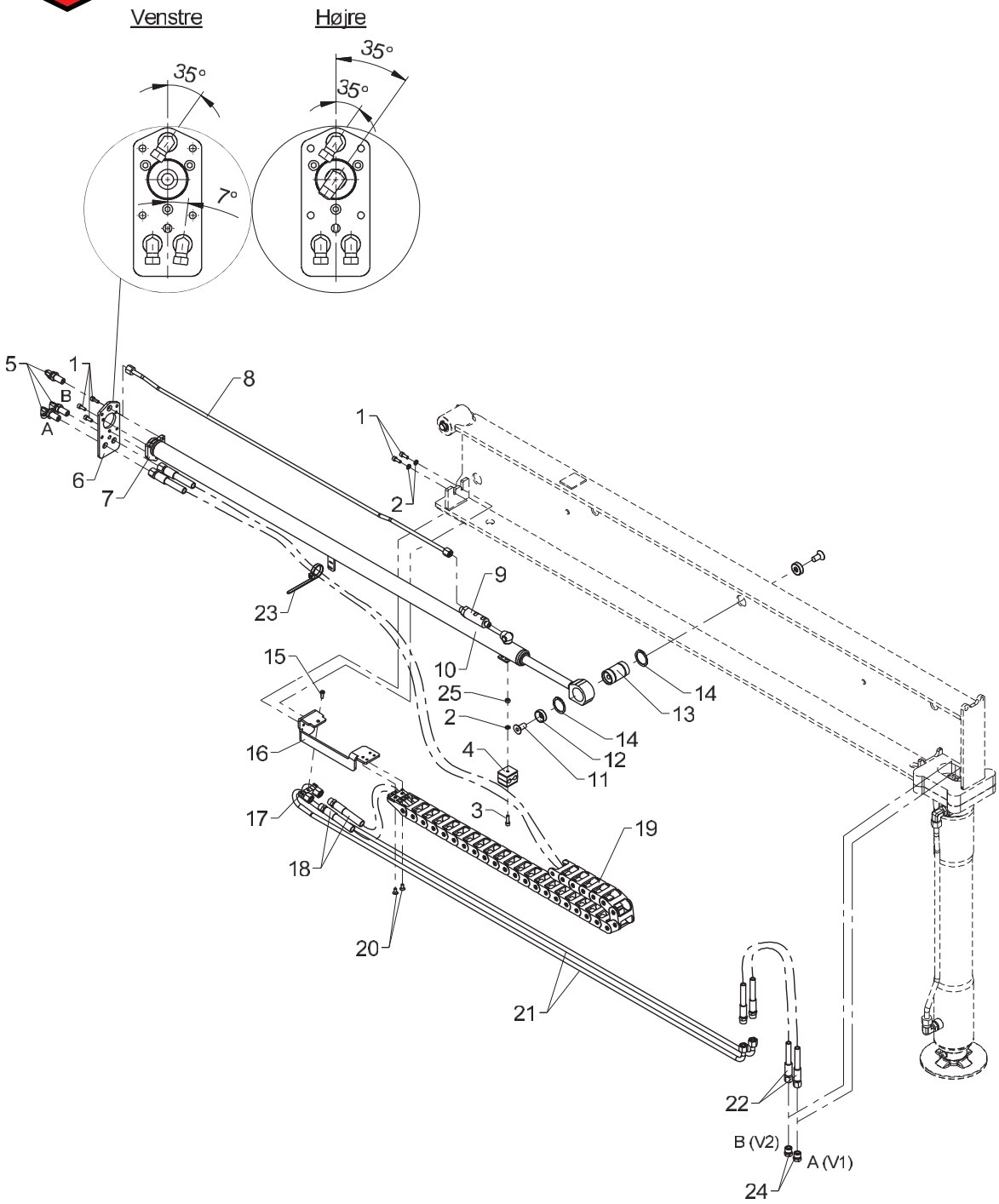

Hydr. syst., SV, 4600, hydr. extension

Pos	Qty.	Part no.	Description	Remarks
1	5	31539	Screw, stainless	MC6 x 16
2	3	32302	Face washer, stainless	6 mm
3	1	30427	Screw	MC6 x 20
4	1	31806	Double clamp	
5	3	26864	Elbow connection	WSS 8L
6	1	6365102	End plate	
7	1	6365101	Lock, beam cylinder	
8	1	6340799	Pipe, extension cylinder	
9	1	55228	Sequence valve	
10	1	6340790	Beam cylinder	
11	2	30586	Countersunk screw	MK12 x 25
12	2	6306241	Mounting plate	
13	1	6365118	Pin (ø35 x 60)	
14	2	33117	Circlip	35U
15	1	32490	Screw	MCL6 x 16
16	1	6344096	Clamp	
17	1	6306097	Clamp	
18	2	56591	Hose 1/4" x 2300 mm L/S	L=8mm / studs=10mm
19	1	28748	Nylon drag chain (32 links)	
20	2	30542	Counter-sunk screw	MK6 x 12
21	2	6340798	Pipe	
22	2	56460	Hose	
23	1	27275	Cable tie, black, 7.6x385mm	
24	2	25635	Screw	VSK 10L
25	1	30884	Lock nut, stainless	M6

1100K, 1110K, 1220K, 1230K, 1320K, 1330K

63 64 620
Internal ref. 63 65 990

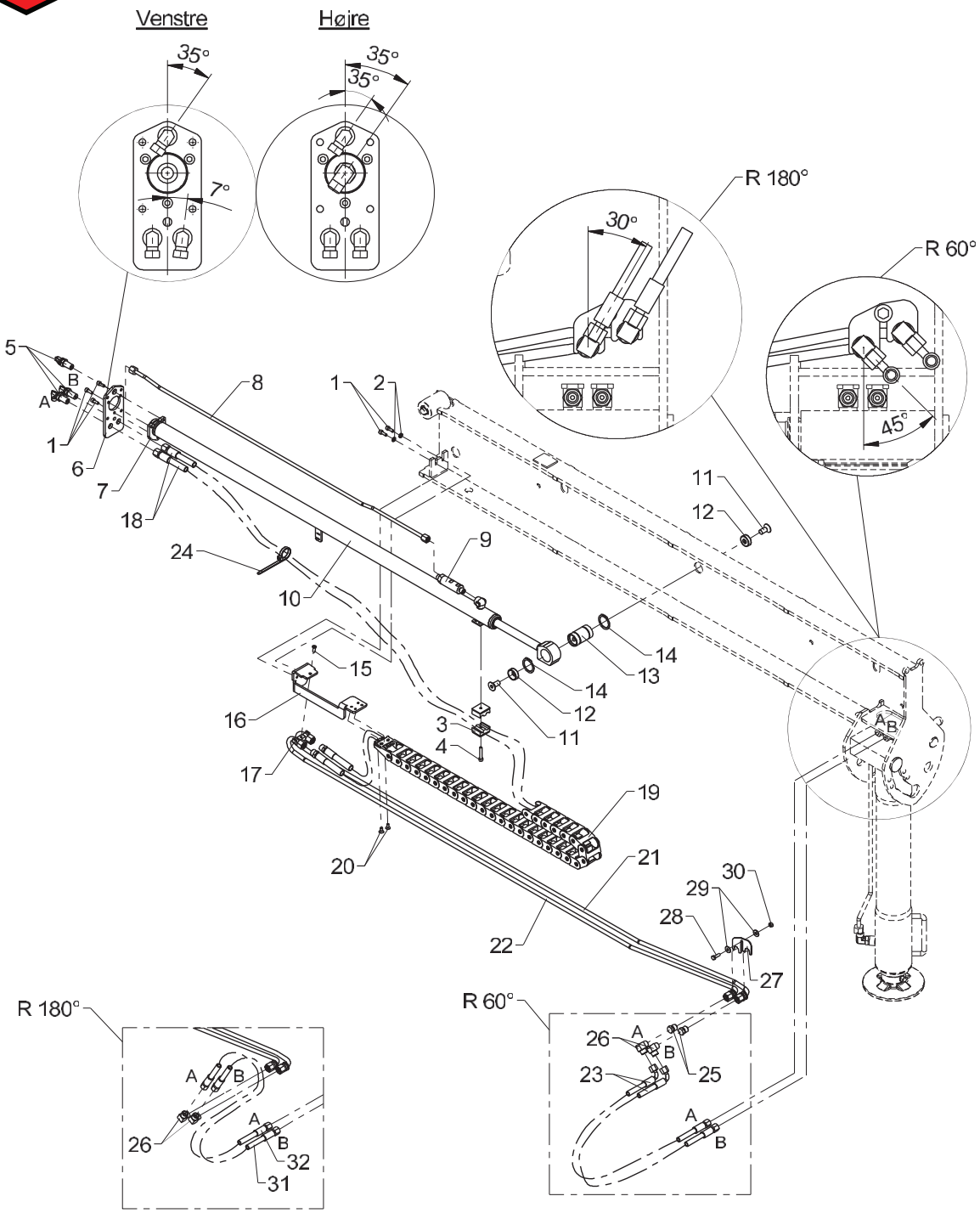

458 05 770

From loader 1170001
To loader

Hydr. syst., SR 60°/180°, 4600, hydr. extension

Created 29-03-2012
Modified 21-06-2012

Pos	Qty.	Part no.	Description	Remarks
		6365990	Hydraulic system, SR 4600 hy.	
		6364620	Hydr. syst., SR180°, 4720, man	
1	5	31539	Screw, stainless	MC6 x 16
2	2	32302	Face washer, stainless	6 mm
3	1	31806	Double clamp	
4	1	30959	Screw	MC6 x 35
5	3	26864	Elbow connection	WSS 8L
6	1	6365102	End plate	
7	1	6365101	Lock, beam cylinder	
8	1	6340799	Pipe, extension cylinder	
9	1	55228	Sequence valve	
10	1	6340790	Beam cylinder	
11	2	30586	Countersunk screw	MK12 x 25
12	2	6306241	Mounting plate	
13	1	6365118	Pin (ø35 x 60)	
14	2	33117	Circlip	35U
15	1	32490	Screw	MCL6 x 16
16	1	6344096	Clamp	
17	1	6306097	Clamp	
18	2	56591	Hose 1/4" x 2300 mm L/S	L=8mm / studs=10mm
19	1	28748	Nylon drag chain (32 links)	
20	2	30542	Counter-sunk screw	MK6 x 12
21	1	6340797	Pipe	
22	1	6340796	Pipe	
23	2	56363	Hose	L=8mm / V=10 mm
24	1	27275	Cable tie, black, 7.6x385mm	
25	2	25635	Screw	VSK 10L
26	2	25125	Elbow connection	WV 10 L
27	1	6306164	Bracket	
28	1	30113	Set screw, stainless	M6 x 20
29	2	31134	Washer, stainless	
30	1	30884	Lock nut, stainless	M6
31	1	56905	Hose 1/4 X 550 mm	L=8mm/L=10mm
32	1	56904	Hose 1/4 X 500 mm	L=8mm/L=10mm

1100K, 1110K, 1220K, 1230K, 1320K, 1330K

Internal ref. 63 65 520

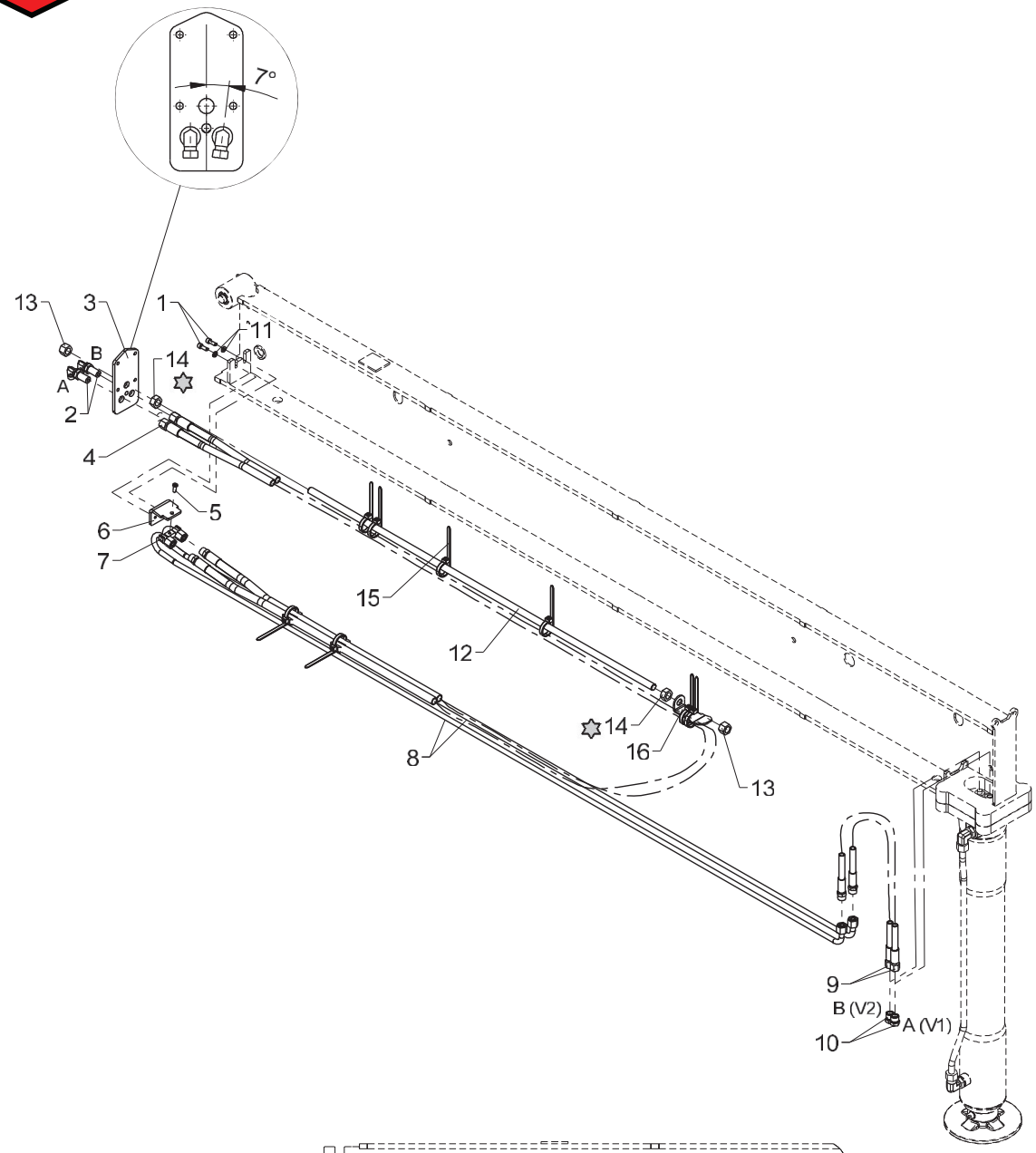

Loctite 270

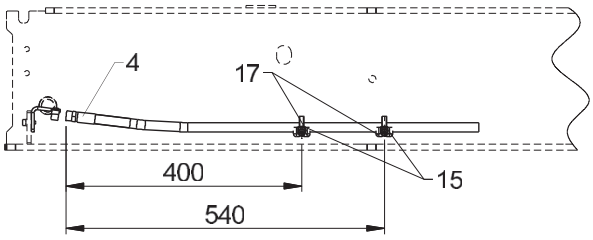

Hydr. syst., SV, 5570, manual extension

458 05 780

From loader 1170001
To loader

Created 14-02-2012
Modified

Pos	Qty.	Part no.	Description	Remarks
1	2	31539	Screw, stainless	MC6 x 16
2	2	26864	Elbow connection	WSS 8L
3	1	6365103	End plate	
4	1	56589	Twin hose 1/4 x 2300 mm	L=8mm/S=10mm
5	1	32490	Screw	MCL6 x 16
6	1	6344109	Clamp	
7	1	6306097	Clamp	
8	2	6344218	Pipe	
9	2	56460	Hose	
10	2	25635	Screw	VSK 10L
11	2	32302	Face washer, stainless	6 mm
12	1	31262	Threaded pin	
13	2	32317	Lock nut	M14
14	2	32145	Nut, stainless	M14
15	8	27275	Cable tie, black, 7.6x385mm	
16	1	6344107	Clamp	
17	2	6365099	Stop lock for stabilizer beam	

1100K, 1110K, 1220K, 1230K, 1320K, 1330K

63 64 640
Internal ref. 63 66 060

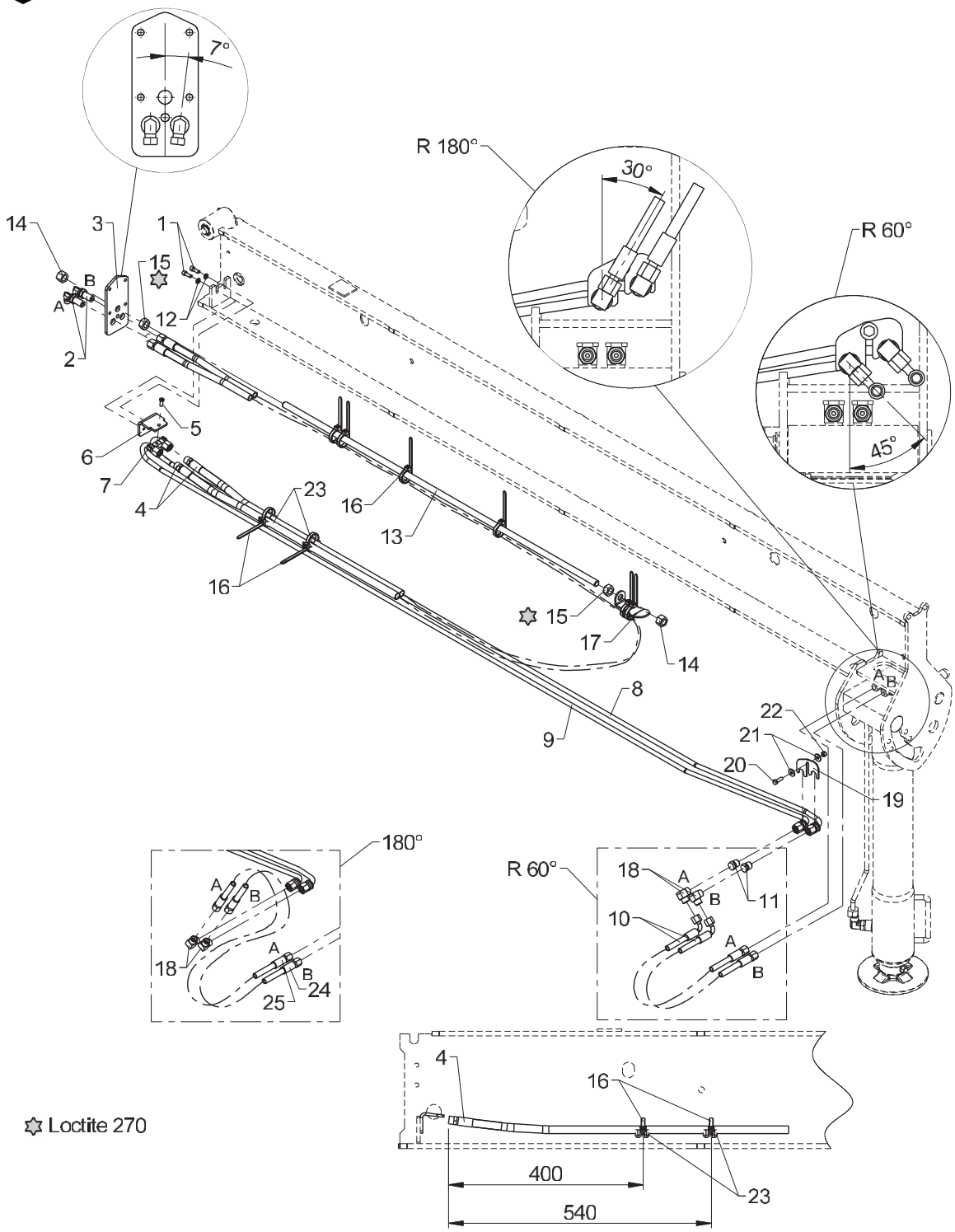

458 05 785

From loader 1170001
To loader

Hydr. syst., SR 60°/180, 5570, manual extension

Created 29-03-2012
Modified 21-06-2012

Pos	Qty.	Part no.	Description	Remarks
		6366060	Hydr. system, SR 5570, man.	
		6364640	Hydr. syst., SR180°, 5140, man	
1	2	31539	Screw, stainless	MC6 x 16
2	2	26864	Elbow connection	WSS 8L
3	1	6365103	End plate	
4	1	56589	Twin hose 1/4 x 2300 mm	L=8mm/S=10mm
5	1	32490	Screw	MCL6 x 16
6	1	6344109	Clamp	
7	1	6306097	Clamp	
8	1	6344234	Pipe	
9	1	6344233	Pipe	
10	2	56363	Hose	L=8mm / V=10 mm
11	2	25635	Screw	VSK 10L
12	2	32302	Face washer, stainless	6 mm
13	1	31262	Threaded pin	
14	2	32317	Lock nut	M14
15	2	32145	Nut, stainless	M14
16	8	27275	Cable tie, black, 7.6x385mm	
17	1	6344107	Clamp	
18	2	25125	Elbow connection	WV 10 L
19	1	6306164	Bracket	
20	1	30113	Set screw, stainless	M6 x 20
21	2	31134	Washer, stainless	
22	1	30884	Lock nut, stainless	M6
23	2	6365099	Stop lock for stabilizer beam	
24	1	56905	Hose 1/4 X 550 mm	L=8mm/L=10mm
25	1	56904	Hose 1/4 X 500 mm	L=8mm/L=10mm

1100K, 1110K, 1220K, 1230K, 1320K, 1330K

Internal ref. 63 65 880

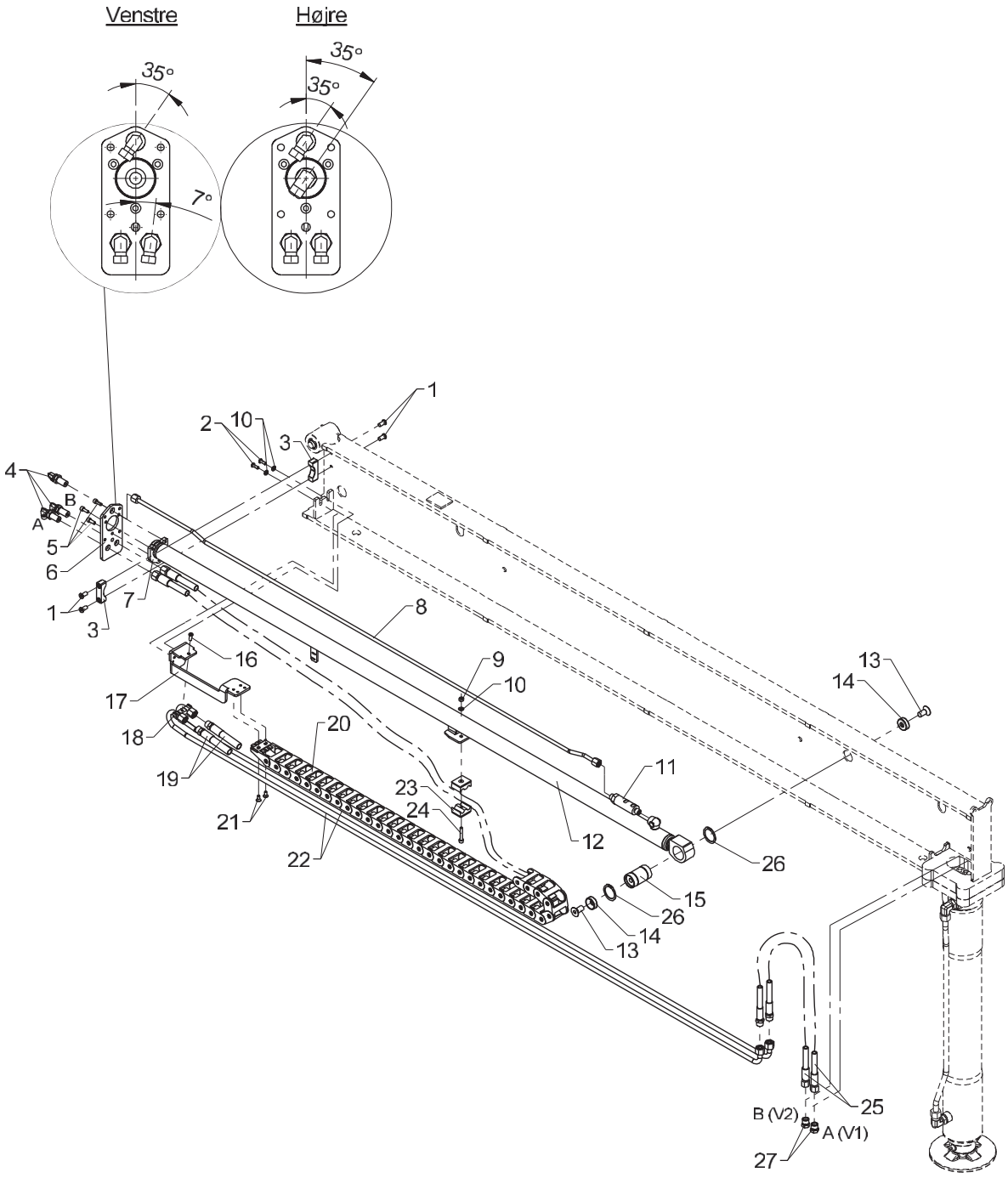

Hydr. syst., SV, 5570, hydr. extension

Pos	Qty.	Part no.	Description	Remarks
1	4	32481	Screw	MCL8 x 16
2	2	32222	Button head screw	M6 x 16
3	2	6365124	Guide	
4	3	26864	Elbow connection	WSS 8L
5	3	31539	Screw, stainless	MC6 x 16
6	1	6365102	End plate	
7	1	6365101	Lock, beam cylinder	
8	1	6344219	Pipe	
9	1	30884	Lock nut, stainless	M6
10	3	32302	Face washer, stainless	6 mm
11	1	55228	Sequence valve	
12	1	6344210	Beam cylinder	
13	2	30586	Countersunk screw	MK12 x 25
14	2	6306241	Mounting plate	
15	1	6365118	Pin (ø35 x 60)	
16	1	32490	Screw	MCL6 x 16
17	1	6344096	Clamp	
18	1	6306097	Clamp	
19	2	56591	Hose 1/4" x 2300 mm L/S	L=8mm / studs=10mm
20	1	28749	Nylon drag chain (32 links)	
21	2	30542	Counter-sunk screw	MK6 x 12
22	2	6344218	Pipe	
23	1	31806	Double clamp	
24	1	30959	Screw	MC6 x 35
25	2	56460	Hose	
26	2	33117	Circlip	35U
27	2	25635	Screw	VSK 10L

1100K, 1110K, 1220K, 1230K, 1320K, 1330K

63 64 650
Internal ref. 63 66 070

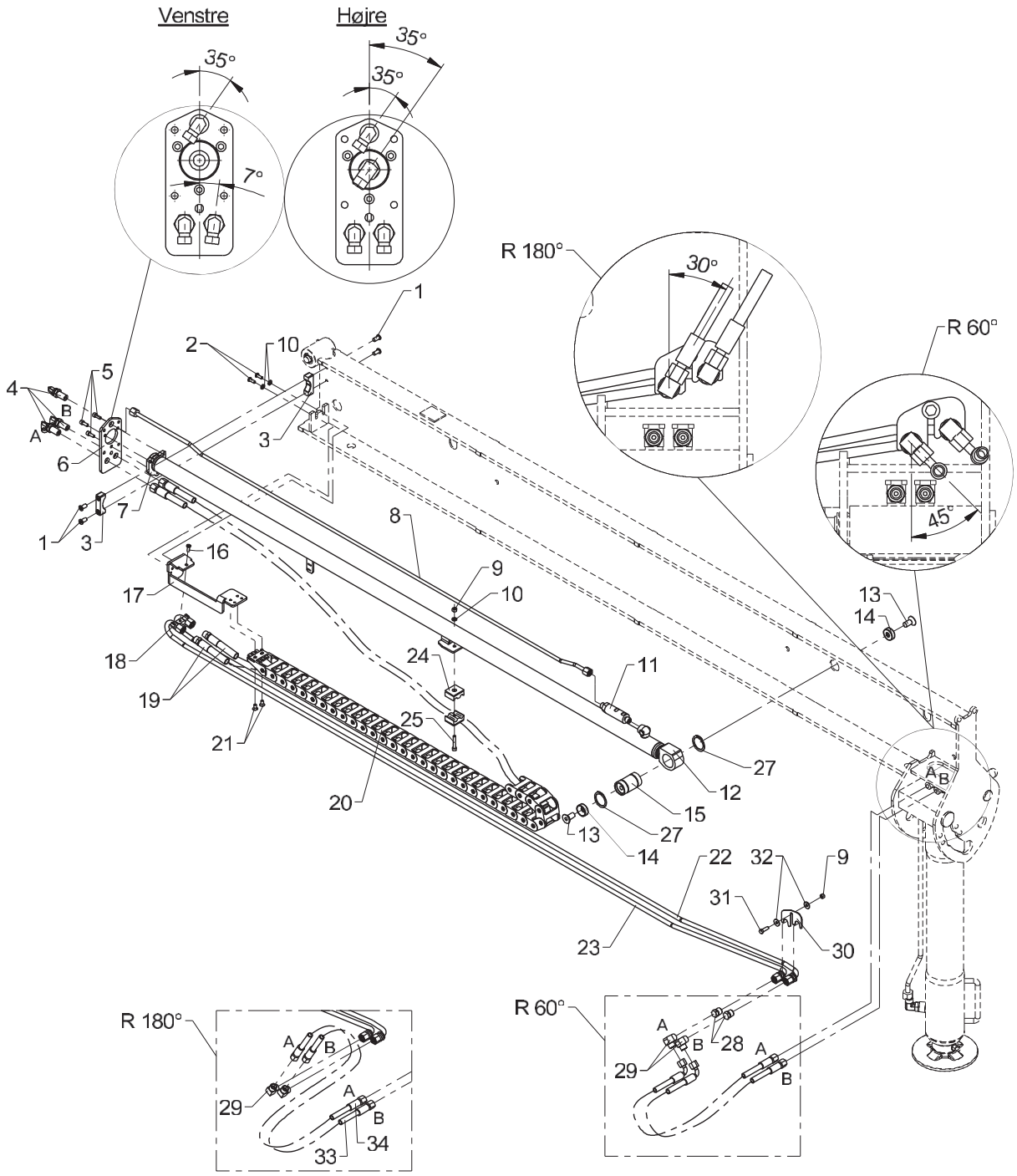

Hydraulic system, SR 60°, 5570, hydr. extension

Created 21-06-2012
Modified 24-05-2013

Pos	Qty.	Part no.	Description	Remarks
		6366070	Hydr. system, SR 5570, hydr.	
		6364650	Hydr. syst., SR180°, 5140, man	
1	4	32481	Screw	MCL8 x 16
2	2	32222	Button head screw	M6 x 16
3	2	6365124	Guide	
4	3	26864	Elbow connection	WSS 8L
5	3	31539	Screw, stainless	MC6 x 16
6	1	6365102	End plate	
7	1	6365101	Lock, beam cylinder	
8	1	6344219	Pipe	
9	2	30884	Lock nut, stainless	M6
10	3	32302	Face washer, stainless	6 mm
11	1	55228	Sequence valve	
12	1	6344210	Beam cylinder	
13	2	30586	Countersunk screw	MK12 x 25
14	2	6306241	Mounting plate	
15	1	6365118	Pin (ø35 x 60)	
16	1	32490	Screw	MCL6 x 16
17	1	6344096	Clamp	
18	1	6306097	Clamp	
19	2	56591	Hose 1/4" x 2300 mm L/S	L=8mm / studs=10mm
20	1	28749	Nylon drag chain (32 links)	
21	2	30542	Counter-sunk screw	MK6 x 12
22	1	6344234	Pipe	
23	1	6344233	Pipe	
24	1	31806	Double clamp	
25	1	30959	Screw	MC6 x 35
26	2	56363	Hose	L=8mm / V=10 mm
27	2	33117	Circlip	35U
28	2	25635	Screw	VSK 10L
29	2	25125	Elbow connection	WV 10 L
30	1	6306164	Bracket	
31	1	30113	Set screw, stainless	M6 x 20
32	2	31134	Washer, stainless	
33	1	56905	Hose 1/4 X 550 mm	L=8mm/L=10mm
34	1	56904	Hose 1/4 X 500 mm	L=8mm/L=10mm

1100K, 1110K, 1220K, 1230K, 1320K, 1330K

63 66 890
63 66 880
63 42 390
Internal ref. 63 65 490

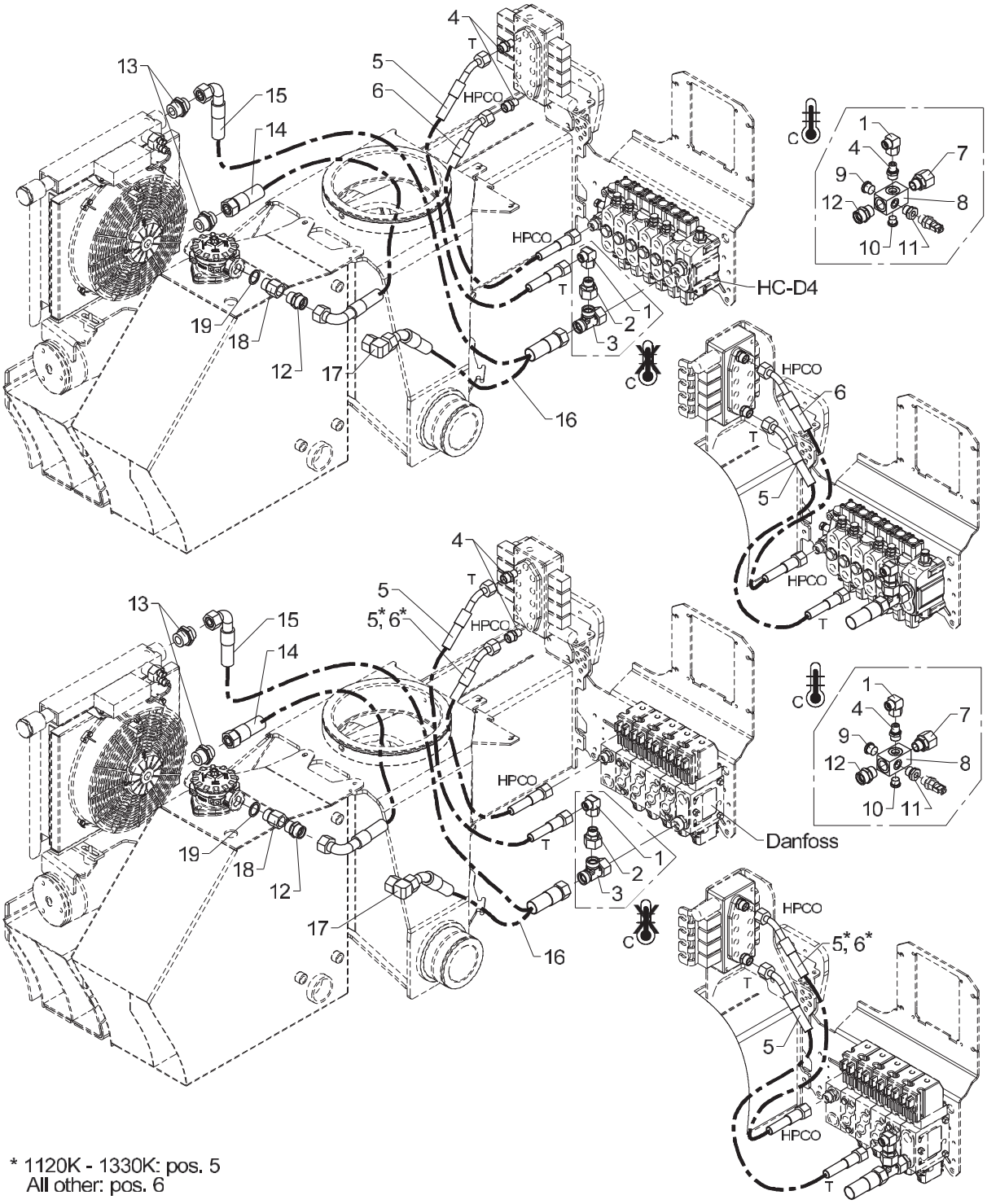

* 1120K - 1330K: pos. 5
All other: pos. 6

Hydr. syst. pump + return hoses

Pos	Qty.	Part no.	Description	Remarks
		6365490	Pump and return hose	900K - 1110K
		6342390	Pump+return hoses+temp.sensor	900K - 1110K
		6366880		1120K - 1330K
		6366890		1120K - 1330K
1	1	25284	Elbow connection	EWSD 15 L
2	1	25298	Connection	REDSDN 22/15 L
3	1	26149	Connection	ELSD 22 L
4	3	25273	Connection	GES 15 LR 3-8 A3L
5	2	56503	Hose	
6	1	56504	Hose	
7	1	25279	Connection	EGESD 22 LR-WD
8	1	59355	Return block	
9	1	25103	Plug	VS-R-1/2 WD
10	1	25277	Plug	VS-R-3/8 WD
11	1	25180	Reducing connection	RED-R 1/2-WD/R 1/4
12	2	25169	Connection	P-GEV 22 LR-WD
13	2	26122	Connection	P-GEV 22 LR 1-WD
14	1	56501	Hose	Til køler/tank
15	1	56502	Hose	Til køler
16	1	62673	Hose	Til tank
17	1	25209	Elbow connection	Til tank
18	1	25949	Reducing nipple	3/4 BSP x 3/8 BSP
19	1	21108	Seal washer	ø27,05 x 34,93 x 2,34

1100K, 1110K, 1220K, 1230K, 1320K, 1330K

Internal ref. 63 65 910

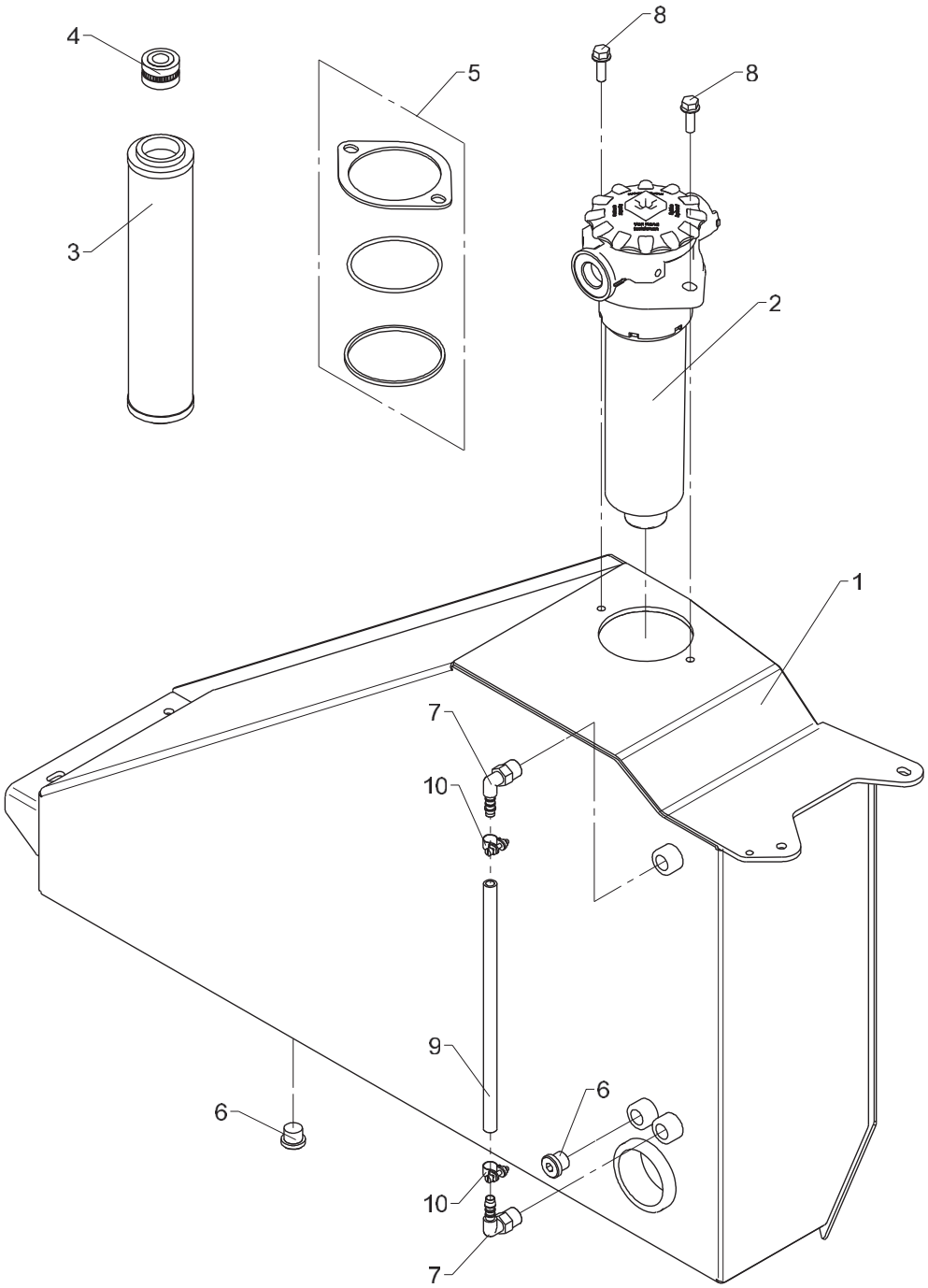

Tank, cpl.

Pos	Qty.	Part no.	Description	Remarks
1	1	6365214	Tank	
2	1	49405	Return filter	
3	1	49406	Filter	
4	1	49407	Air filter	
5	1	49418	Seal kit	
6	2	25277	Plug	VS-R-3/8 WD
7	2	64500	Elbow	WES 8/R-3/8"
8	2	30996	Screw	M8 x 25
9	1	62511	Plastic hose	
10	2	31452	Clamp	

1100K, 1110K, 1220K, 1230K, 1320K, 1330K

Internal ref. 63 65 920

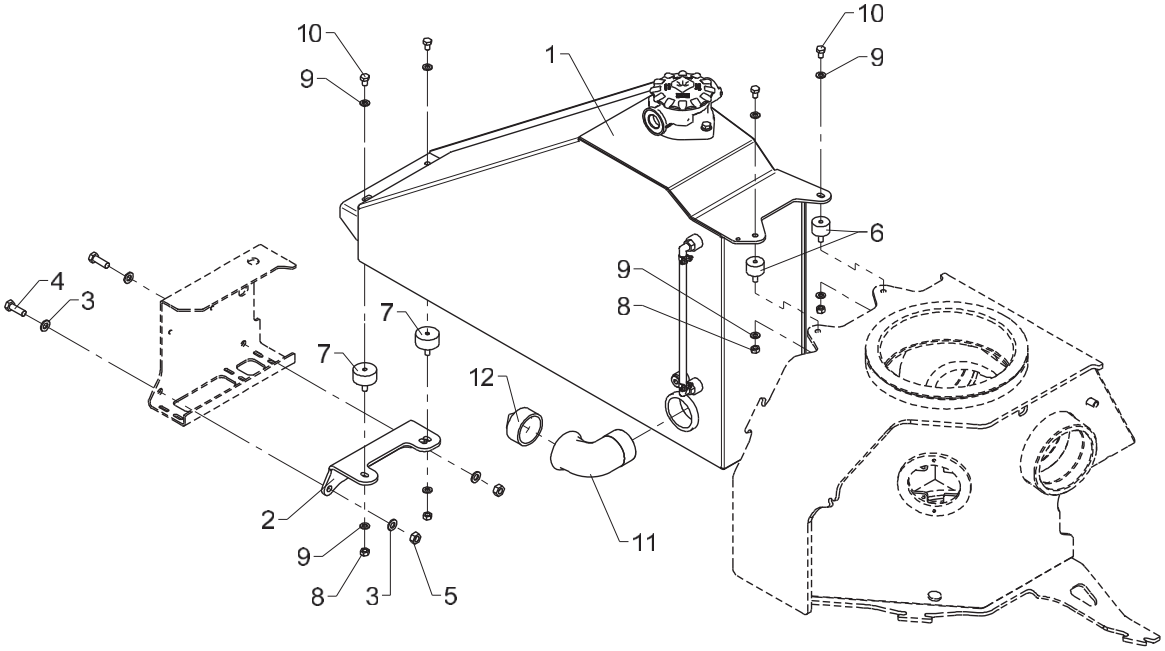

Tank incl. fittings

Pos	Qty.	Part no.	Description	Remarks
1	1	6365910	Tank, cpl.	
2	1	6365219	Mounting fittings	
3	4	31565	Washer, stainless	10 mm
4	2	30156	Set screw, stainless	M10 x 30
5	2	31551	Nut, stainless	M10
6	2	44263	Torsion balancer	
7	2	62000	Torsion balancer	
8	4	30856	Nut, stainless	M8
9	8	31147	Face washer, 8 mm	
10	4	30130	Set screw, stainless	M8 x 12
11	1	25430	Elbow	
12	1	25398	Plug	

1100K, 1110K, 1220K, 1230K, 1320K, 1330K

63 66 800
Internal ref. 63 65 270

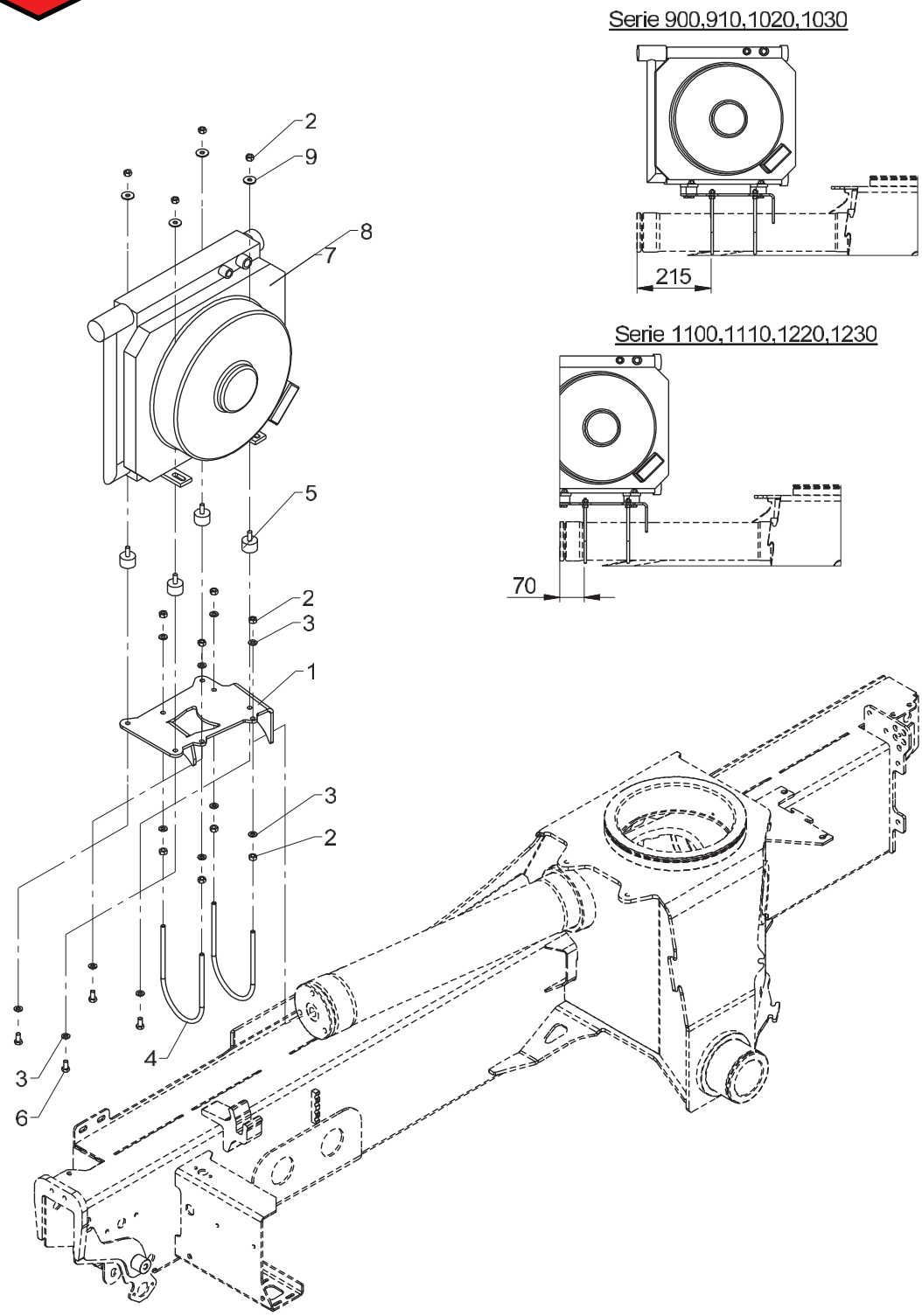

Oil cooler

Pos	Qty.	Part no.	Description	Remarks
		6365270	Oil cooler, complete	
		6366800		
1	1	6365221	Cooler bracket	
2	12	30856	Nut, stainless	M8
3	12	31147	Face washer, 8 mm	
4	2	6365222	Clamp	
5	4	44263	Torsion balancer	
6	4	30131	Set screw, stainless	M8 x 16
7	1	50272	Oil cooler, 24 V + Smartdrive	24 V
8	1	50273	Oil cooler 12 V + Smartdrive	12 V
9	4	31136	Washer, stainless	8 mm

1100K, 1110K, 1220K, 1230K, 1320K, 1330K

Internal ref. 63 40 550

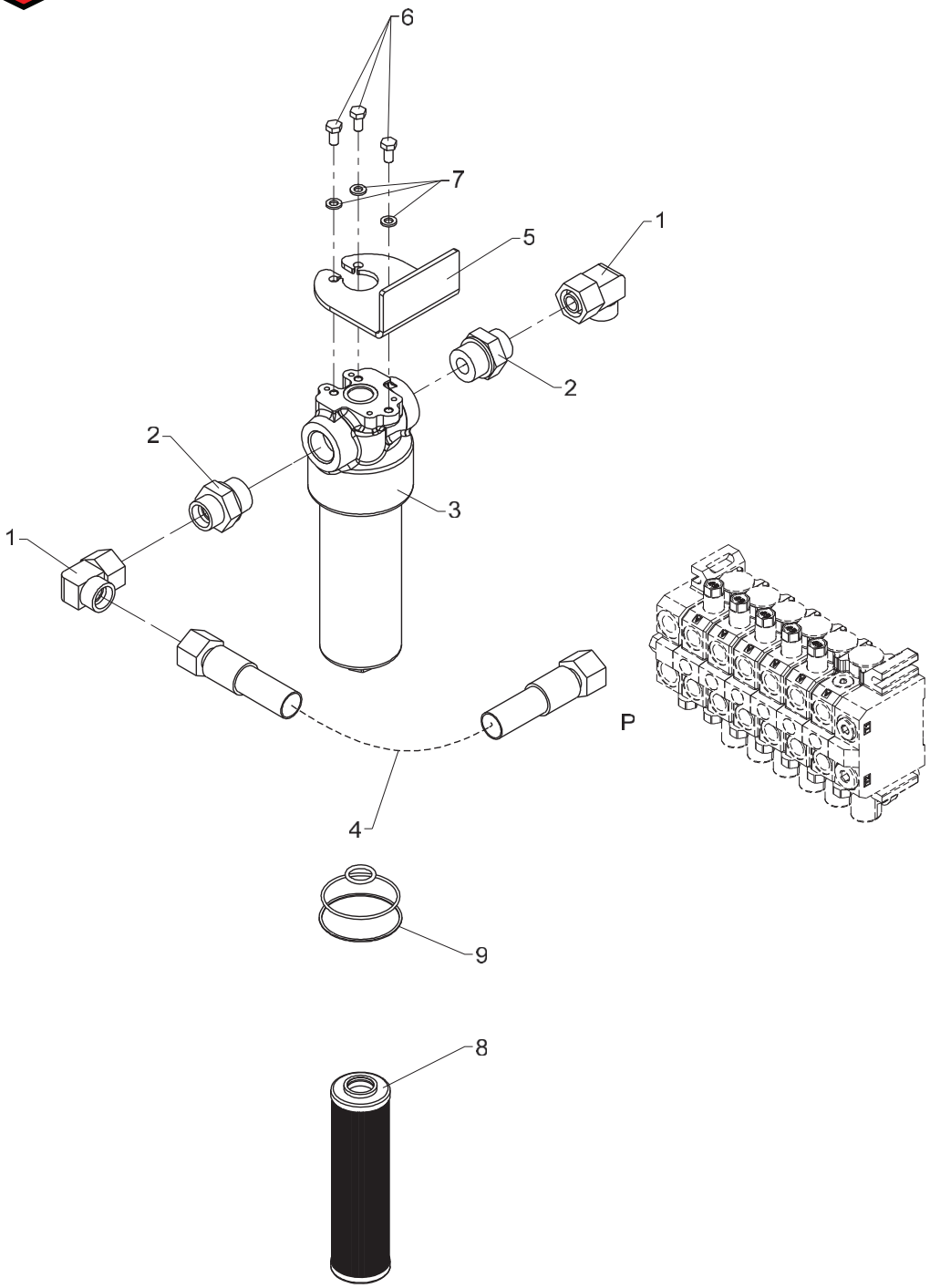

High-pressure filter

Pos	Qty.	Part no.	Description	Remarks
1	2	26198	Elbow connection	EWVD 20 S-SV
2	2	26851	Connection	GES 20 SR 1-WD
3	1	49401	High pressure filter	
4	1	62626	Hose	
5	1	6882974	Bracket, high pressure filter	
6	3	30131	Set screw, stainless	M8 x 16
7	3	31155	Spring washer	8 mm
8	1	49402	Filter	
9	1	49417	Seal kit	

1100K, 1110K, 1220K, 1230K, 1320K, 1330K

66 51 390
66 51 360
Internal ref. 66 51 330

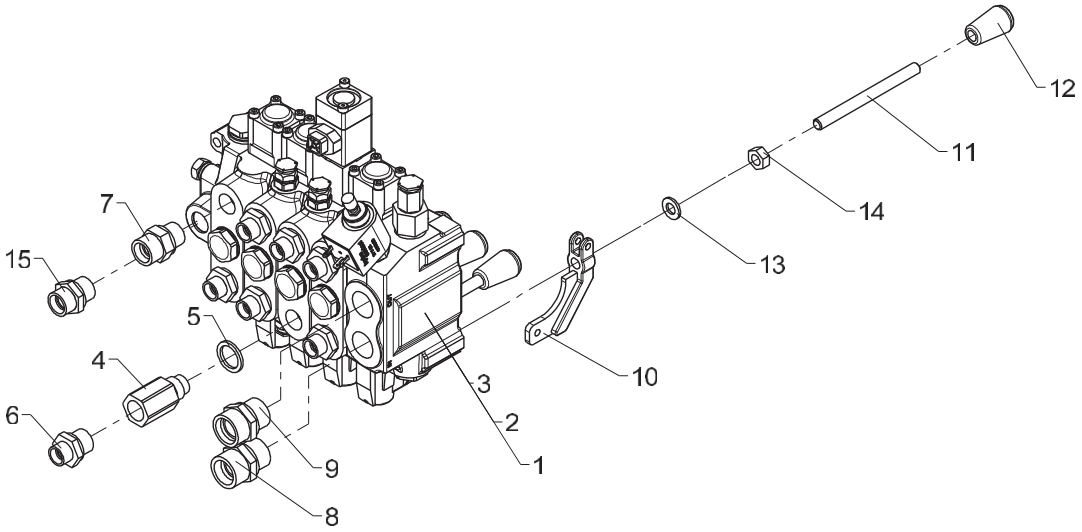

From loader 1170001
To loader

Valve block, 4 sects. HC-D4

Created 19-11-2008
Modified 08-02-2012

Pos	Qty.	Part no.	Description	Remarks
		6651330	Valve block, 4 sect./HCD4-CE	
		6651360	Valve block, 4 sect./HCD4	
		6651390	Valve block, 4 sect./HCD4_2.1	
1	1	55256	Valve block, complete	6651330
2	1	55259	Valve block, complete	6651360
3	1	55274	Valve block, complete	6651390
4	1	60295	Flow-control valve	
5	1	21106	Seal washer	ø21,5 x 28,7 x 2,5
6	7	25108	Connection	GES 12 LR 1/2-WD
7	1	26334	Connection	P-GEV 16 SR-WD
8	1	26197	Connection	P-GEV 20 SR-WD
9	1	25169	Connection	P-GEV 22 LR-WD
10	4	63499	Adapter	
11	4	6340245	Control valve lever	
12	4	64411	Knob for lever	
13	4	31565	Washer, stainless	10 mm
14	4	30858	Nut	M10
15	1	25143	Connection	P-GEV 15 LR-WD

1100K, 1110K, 1220K, 1230K, 1320K, 1330K

66 51 400
66 51 370
Internal ref. 66 51 340

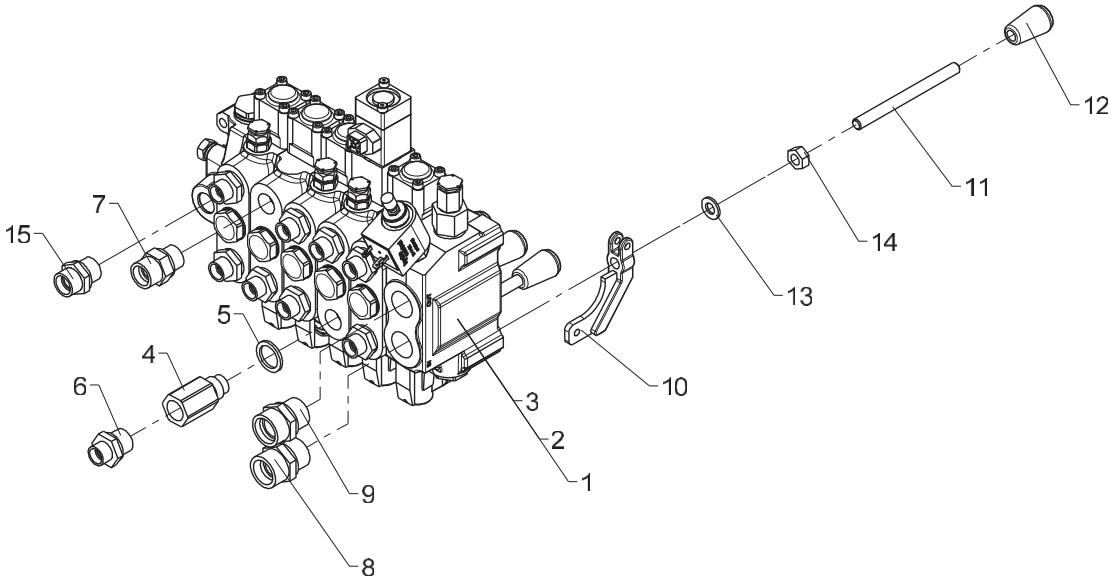

Valve block, 5 sects. HC-D4

Created 19-11-2008
Modified 08-02-2012

Pos	Qty.	Part no.	Description	Remarks
		6651340	Valve block, 5 sect./HCD4-CE	
		6651370	Valve block, 5 sect./HCD4	
		6651400	Valve block,5 sect./HCD4-CE2.1	
1	1	55257	Valve block, complete	6651340
2	1	55260	Valve block, complete	6651370
3	1	55272	Valve block, complete	6651400
4	1	60295	Flow-control valve	
5	1	21106	Seal washer	ø21,5 x 28,7 x 2,5
6	9	25108	Connection	GES 12 LR 1/2-WD
7	1	26334	Connection	P-GEV 16 SR-WD
8	1	26197	Connection	P-GEV 20 SR-WD
9	1	25169	Connection	P-GEV 22 LR-WD
10	5	63499	Adapter	
11	5	6340245	Control valve lever	
12	5	64411	Knob for lever	
13	5	31565	Washer, stainless	10 mm
14	5	30858	Nut	M10
15	1	25143	Connection	P-GEV 15 LR-WD

1100K, 1110K, 1220K, 1230K, 1320K, 1330K

66 51 380
66 51 350
Internal ref. 66 51 320

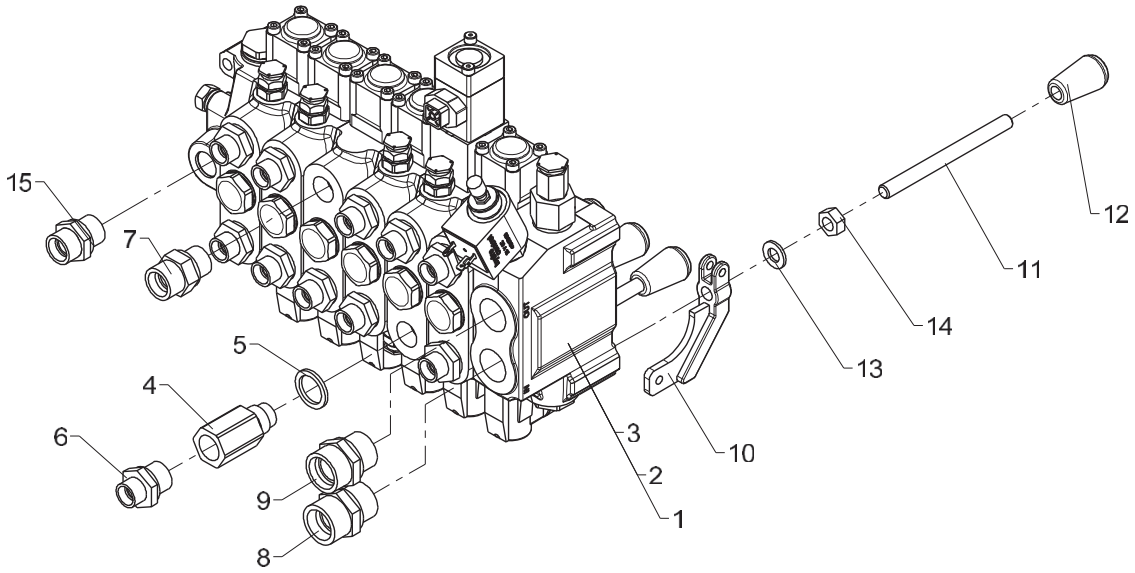

Valve block, 6 sects. HC-D4

Created 19-11-2008
Modified 08-02-2012

Pos	Qty.	Part no.	Description	Remarks
		6651320	Valve block, 6 sect./HCD4-CE	
		6651350	Valve block, 6 sect./HCD4	
		6651380	Valve block,6 sect./HCD4-CE2.1	
1	1	55255	Valve block, complete	6651320
2	1	55258	Valve block, complete	6651350
3	1	55273	Valve block, complete	6651380
4	1	60295	Flow-control valve	
5	1	21106	Seal washer	ø21,5 x 28,7 x 2,5
6	11	25108	Connection	GES 12 LR 1/2-WD
7	1	26334	Connection	P-GEV 16 SR-WD
8	1	26197	Connection	P-GEV 20 SR-WD
9	1	25169	Connection	P-GEV 22 LR-WD
10	6	63499	Adapter	
11	6	6340245	Control valve lever	
12	6	64411	Knob for lever	
13	6	31565	Washer, stainless	10 mm
14	6	30858	Nut	M10
15	1	25143	Connection	P-GEV 15 LR-WD

1100K, 1110K, 1220K, 1230K, 1320K, 1330K

Internal ref. 66 51 420

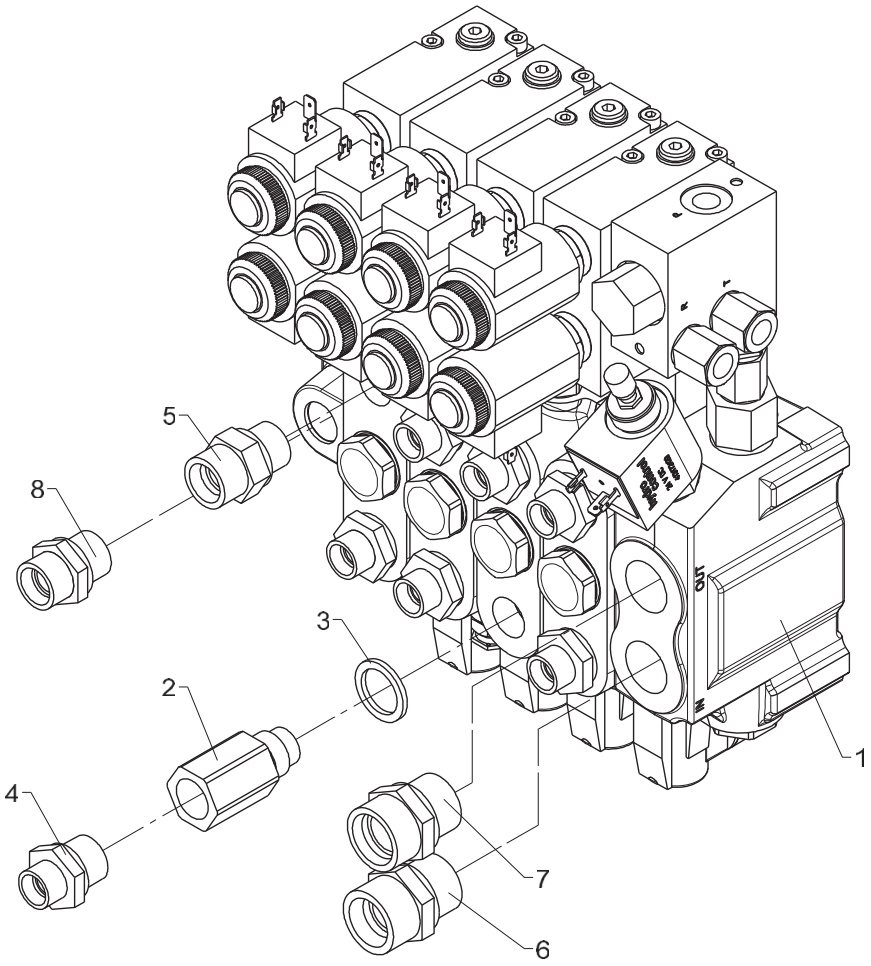

458 06 230

From loader 1170001
To loader

Valve block, 4 sects. HC-D4 NEM

Created 20-11-2008
Modified 08-02-2012

Pos	Qty.	Part no.	Description	Remarks
1	1	55266	Valve block, cpl. with NEM	
2	1	60295	Flow-control valve	
3	1	21106	Seal washer	ø21,5 x 28,7 x 2,5
4	7	25108	Connection	GES 12 LR 1/2-WD
5	1	26334	Connection	P-GEV 16 SR-WD
6	1	26197	Connection	P-GEV 20 SR-WD
7	1	25169	Connection	P-GEV 22 LR-WD
8	1	25143	Connection	P-GEV 15 LR-WD

1100K, 1110K, 1220K, 1230K, 1320K, 1330K

Internal ref. 66 51 430

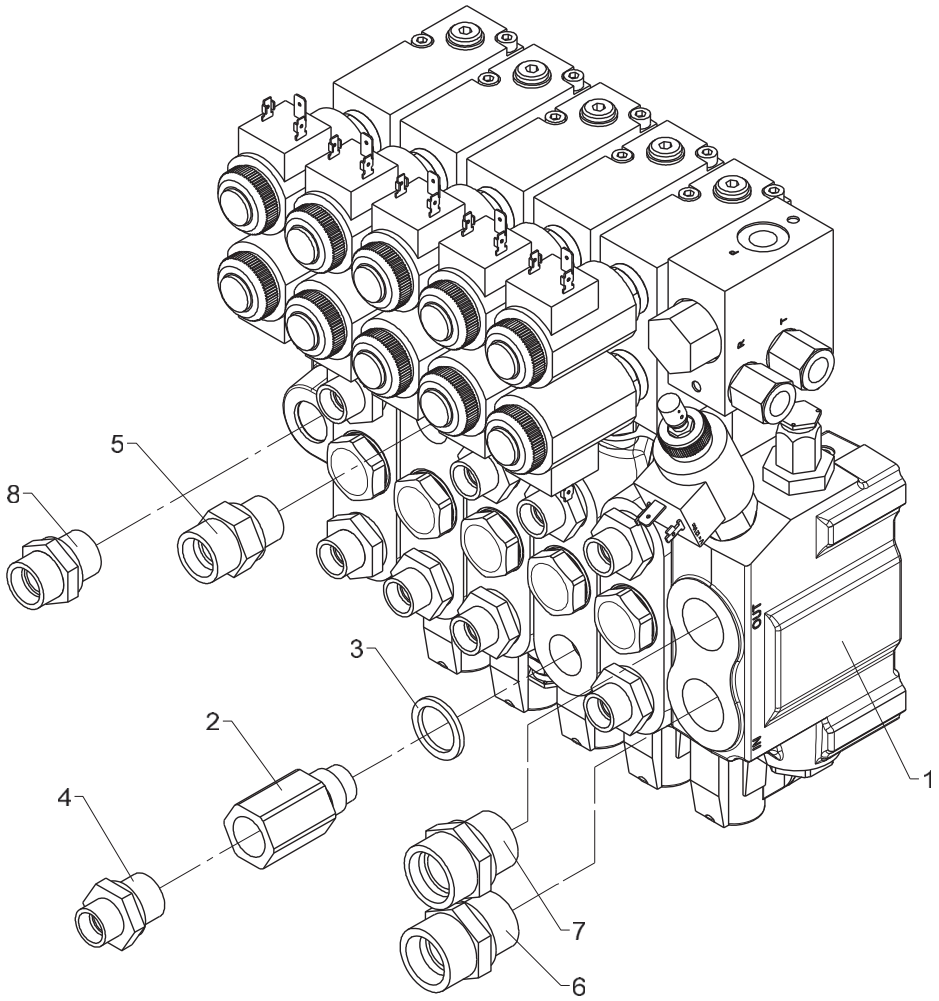

458 06 240

From loader 1170001
To loader

Valve block, 5 sects. HC-D4 NEM

Created 20-11-2008
Modified 08-02-2012

Pos	Qty.	Part no.	Description	Remarks
1	1	55267	Valve block, cpl. with NEM	
2	1	60295	Flow-control valve	
3	1	21106	Seal washer	ø21,5 x 28,7 x 2,5
4	9	25108	Connection	GES 12 LR 1/2-WD
5	1	26334	Connection	P-GEV 16 SR-WD
6	1	26197	Connection	P-GEV 20 SR-WD
7	1	25169	Connection	P-GEV 22 LR-WD
8	1	25143	Connection	P-GEV 15 LR-WD

1100K, 1110K, 1220K, 1230K, 1320K, 1330K

Internal ref. 66 51 410

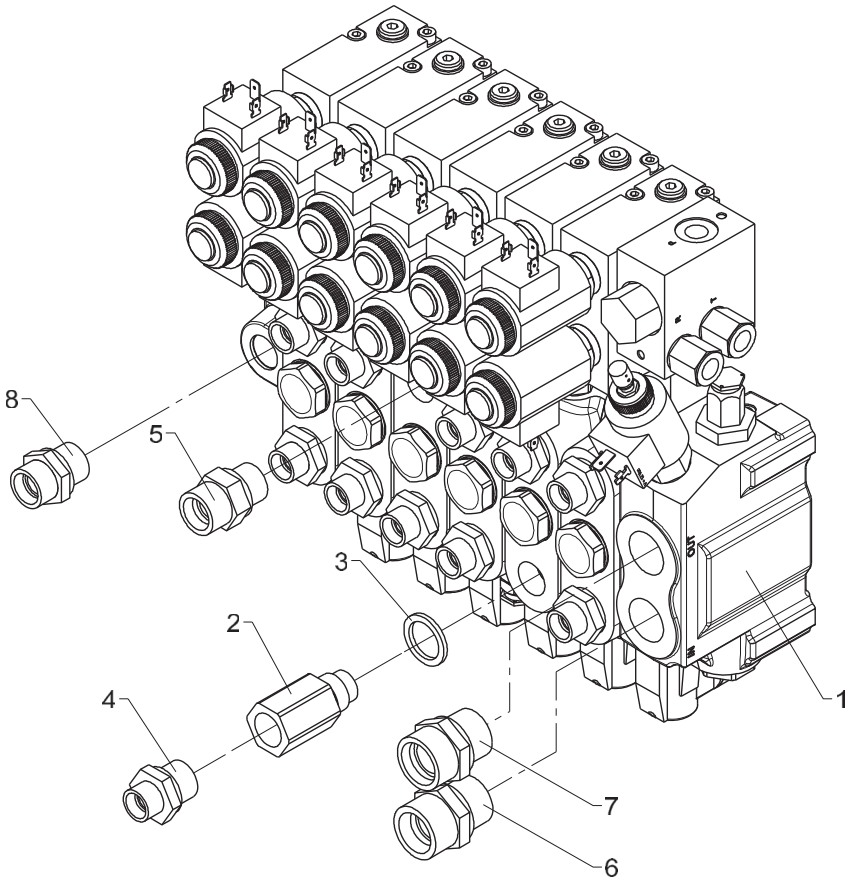

458 06 250

From loader 1170001
To loader

Valve block, 6 sects. HC-D4 NEM

Created 20-11-2008
Modified 08-02-2012

Pos	Qty.	Part no.	Description	Remarks
1	1	55265	Valve block, cpl. with NEM	
2	1	60295	Flow-control valve	
3	1	21106	Seal washer	ø21,5 x 28,7 x 2,5
4	11	25108	Connection	GES 12 LR 1/2-WD
5	1	26334	Connection	P-GEV 16 SR-WD
6	1	26197	Connection	P-GEV 20 SR-WD
7	1	25169	Connection	P-GEV 22 LR-WD
8	1	25143	Connection	P-GEV 15 LR-WD

1100K, 1110K, 1220K, 1230K, 1320K, 1330K

Internal ref. 66 52 010

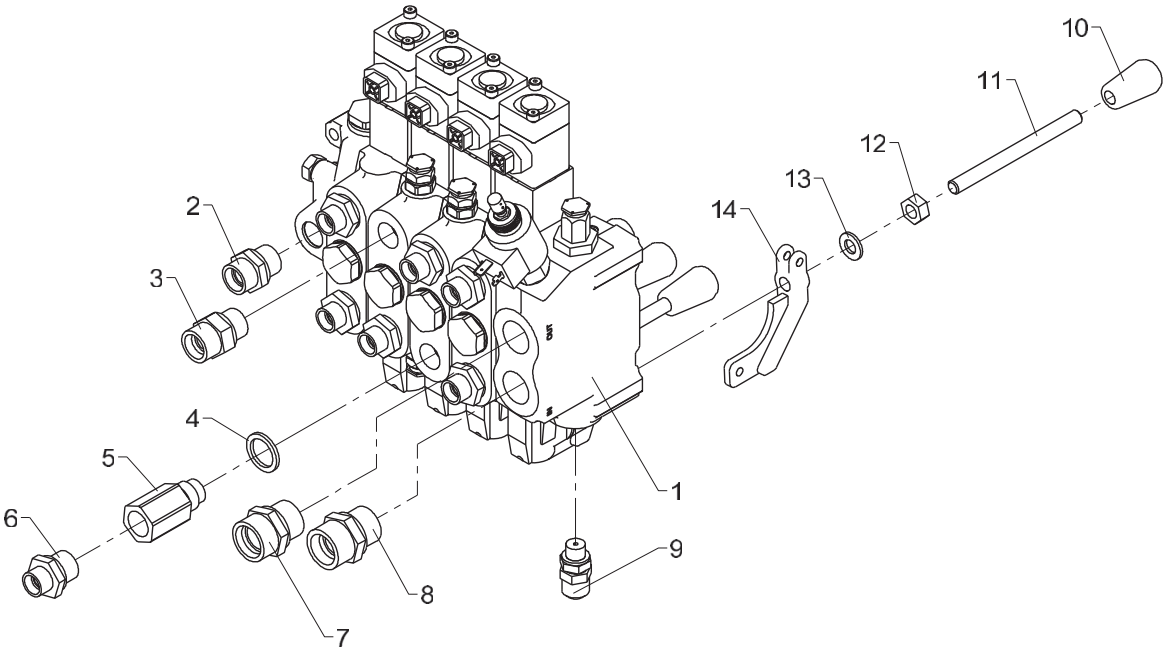

458 06 260

From loader 1170001
To loader

Valve block, 4 sects. HC-D4_CE-EVS

Created 20-09-2012
Modified

Pos	Qty.	Part no.	Description	Remarks
1	1	55722	Valve block, complete	
2	1	25143	Connection	P-GEV 15 LR-WD
3	1	26334	Connection	P-GEV 16 SR-WD
4	1	21106	Seal washer	ø21,5 x 28,7 x 2,5
5	1	60295	Flow-control valve	
6	7	25108	Connection	GES 12 LR 1/2-WD
7	1	25169	Connection	P-GEV 22 LR-WD
8	1	26197	Connection	P-GEV 20 SR-WD
9	1	26103	Pressure-gauge connect.	
10	4	64411	Knob for lever	
11	4	6340245	Control valve lever	
12	4	30858	Nut	M10
13	4	31565	Washer, stainless	10 mm
14	4	63499	Adapter	

1100K, 1110K, 1220K, 1230K, 1320K, 1330K

Internal ref. 66 52 020

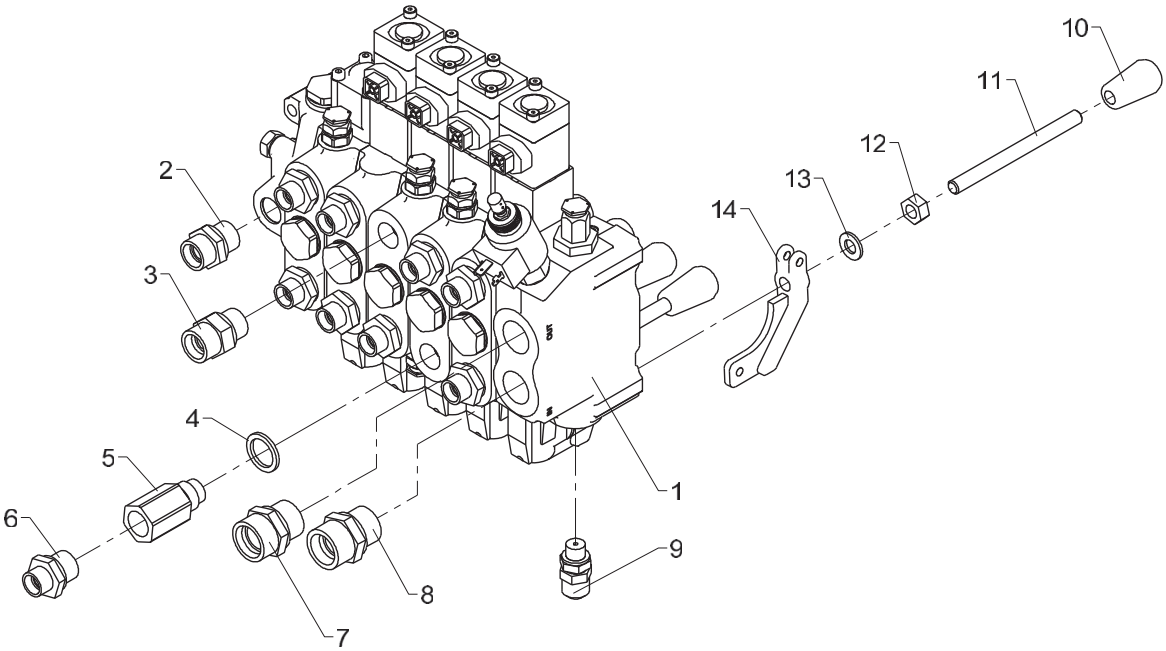

458 06 270

From loader 1170001
To loader

Valve block, 5 sects. HC-D4_CE-EVS

Created 08-10-2012
Modified

Pos	Qty.	Part no.	Description	Remarks
1	1	55723	Valve block, complete	
2	1	25143	Connection	P-GEV 15 LR-WD
3	1	26334	Connection	P-GEV 16 SR-WD
4	1	21106	Seal washer	ø21,5 x 28,7 x 2,5
5	1	60295	Flow-control valve	
6	9	25108	Connection	GES 12 LR 1/2-WD
7	1	25169	Connection	P-GEV 22 LR-WD
8	1	26197	Connection	P-GEV 20 SR-WD
9	1	26103	Pressure-gauge connect.	
10	5	64411	Knob for lever	
11	5	6340245	Control valve lever	
12	5	30858	Nut	M10
13	5	31565	Washer, stainless	10 mm
14	5	63499	Adapter	

1100K, 1110K, 1220K, 1230K, 1320K, 1330K

Internal ref. 66 52 030

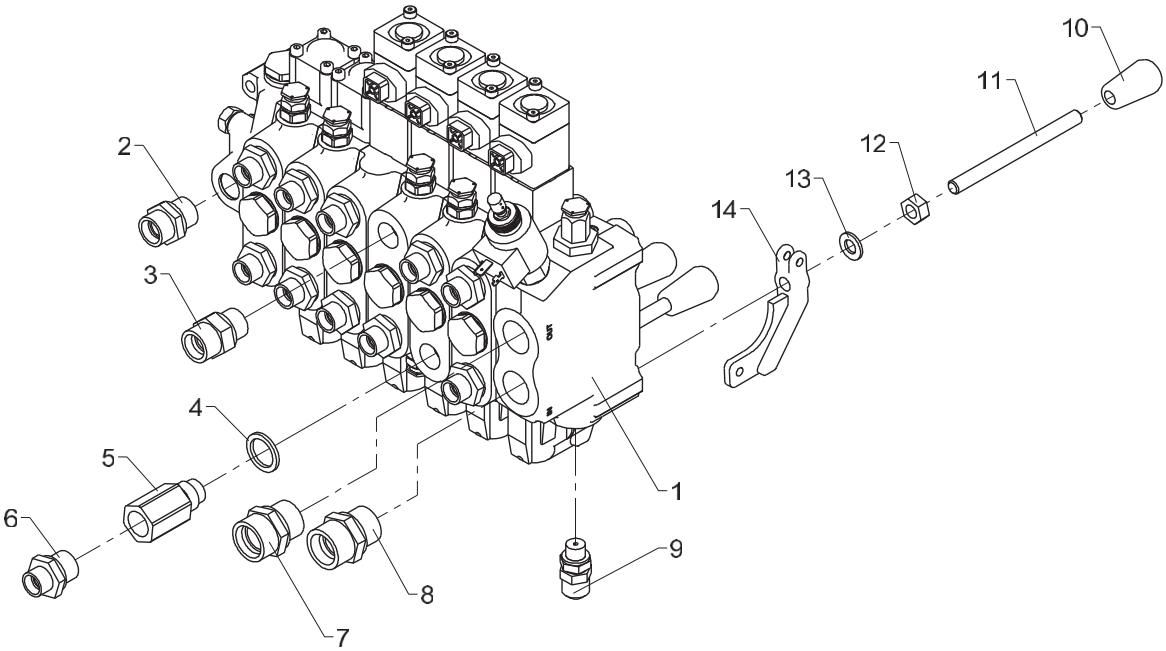

458 06 280

From loader 1170001
To loader

Valve block, 6 sects. HC-D4_CE-EVS

Created 20-09-2012
Modified

Pos	Qty.	Part no.	Description	Remarks
1	1	55721	Valve block, complete	
2	1	25143	Connection	P-GEV 15 LR-WD
3	1	26334	Connection	P-GEV 16 SR-WD
4	1	21106	Seal washer	ø21,5 x 28,7 x 2,5
5	1	60295	Flow-control valve	
6	11	25108	Connection	GES 12 LR 1/2-WD
7	1	25169	Connection	P-GEV 22 LR-WD
8	1	26197	Connection	P-GEV 20 SR-WD
9	1	26103	Pressure-gauge connect.	
10	6	64411	Knob for lever	
11	6	6340245	Control valve lever	
12	6	30858	Nut	M10
13	6	31565	Washer, stainless	10 mm
14	6	63499	Adapter	

1100K, 1110K, 1220K, 1230K, 1320K, 1330K

66 50 570
66 50 560
66 50 430
Internal ref. 66 50 420

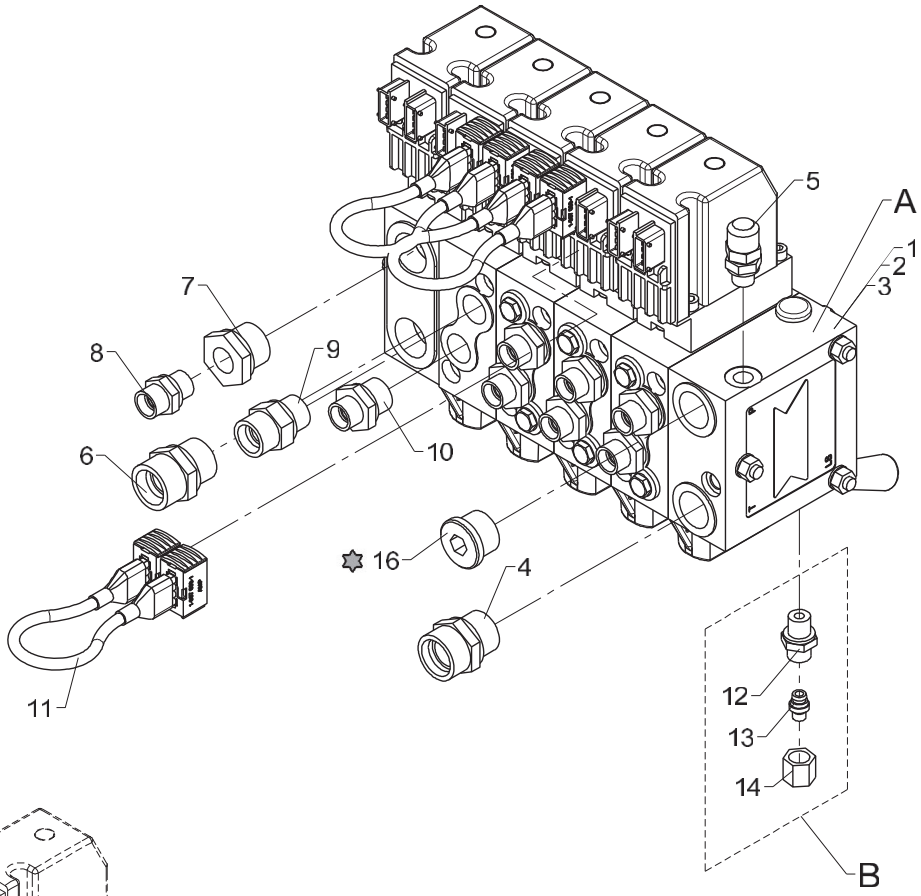

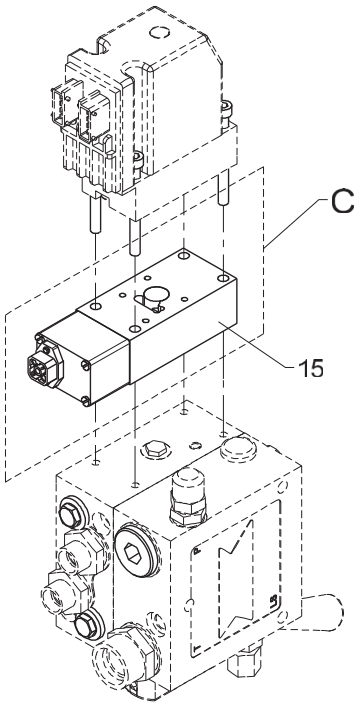

	A	B	C
66 50 420	63 301	X	
66 50 430	63 302		
66 50 560	63 301	X	X
66 50 570	63 319		

✡ Loctite 542

Control valves, Danfoss, 4 sections, fixed/variable flow (std./QOPS)

Pos	Qty.	Part no.	Description	Remarks
		6650420	Valve block, 4 sect. variable	
		6650430	Valve block, 4 sect., fixed	
		6650560	Valve block, 4 sect.,var. QOPS	
		6650570	Valve block, 4 sect. fixedQOPS	
1	1	63301	Valve block	
2	1	63302	Valve block	
3	1	63319	Valve block	
4	1	25169	Connection	P-GEV 22 LR-WD
5	1	26103	Pressure-gauge connect.	
6	1	26197	Connection	P-GEV 20 SR-WD
7	1	26319	Reducing connection	RED-R 3/4-WD/R 3/8
8	1	25127	Connection	P-GEV 12 LR-WD
9	1	26334	Connection	P-GEV 16 SR-WD
10	7	25108	Connection	GES 12 LR 1/2-WD
11	3	62296	Cable	
12	1	25109	Connection	GES 8 LR-WD
13	1	26166	Blanking plug	VSD 8 L
14	1	25181	Coupling nut	M 8 L
15	1	59676	Sensor	
16	1	26355	Plug	VS-R-3/4 WD

1100K, 1110K, 1220K, 1230K, 1320K, 1330K

66 50 590
66 50 580
66 50 450
Internal ref. 66 50 440

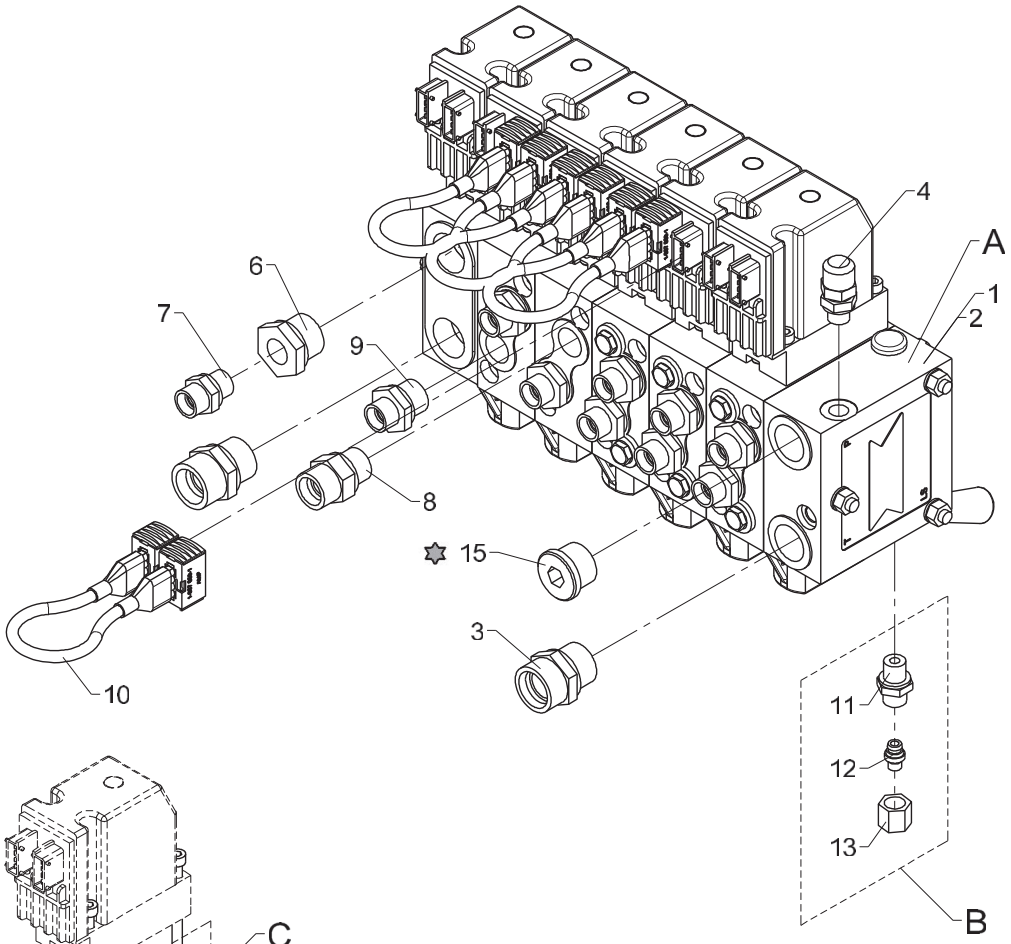

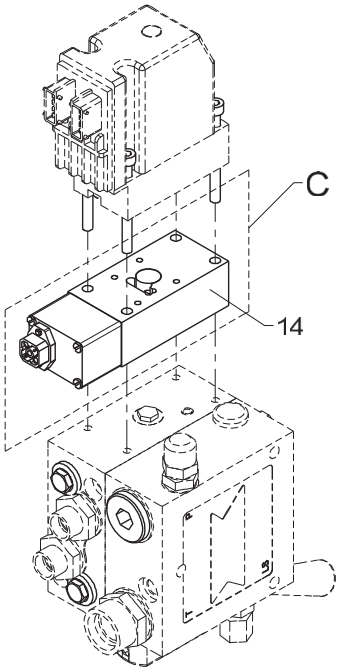

	A	B	C
66 50 440	63 303	X	
66 50 450	63 304		
66 50 580	63 303	X	X
66 50 590	63 304		X

✡ Loctite 542

Control valves, Danfoss, 5 sections, fixed/variable flow with rotator (std./QOPS)

Pos	Qty.	Part no.	Description	Remarks
		6650440	Valve block, 5 sect., variable	
		6650450	Valve block, 5 sect., fixed	
		6650580	Valve block, 5 sect.,var. QOPS	
		6650590	Valve block, 5 sect.,fix. QOPS	
1	1	63303	Valve block	
2	1	63304	Valve block	
3	1	25169	Connection	P-GEV 22 LR-WD
4	1	26103	Pressure-gauge connect.	
5	1	26197	Connection	P-GEV 20 SR-WD
6	1	26319	Reducing connection	RED-R 3/4-WD/R 3/8
7	1	25127	Connection	P-GEV 12 LR-WD
8	1	26334	Connection	P-GEV 16 SR-WD
9	9	25108	Connection	GES 12 LR 1/2-WD
10	4	62296	Cable	
11	1	25109	Connection	GES 8 LR-WD
12	1	26166	Blanking plug	VSD 8 L
13	1	25181	Coupling nut	M 8 L
14	1	59676	Sensor	
15	1	26355	Plug	VS-R-3/4 WD

1100K, 1110K, 1220K, 1230K, 1320K, 1330K

66 50 610
66 50 600
66 50 470
Internal ref. 66 50 460

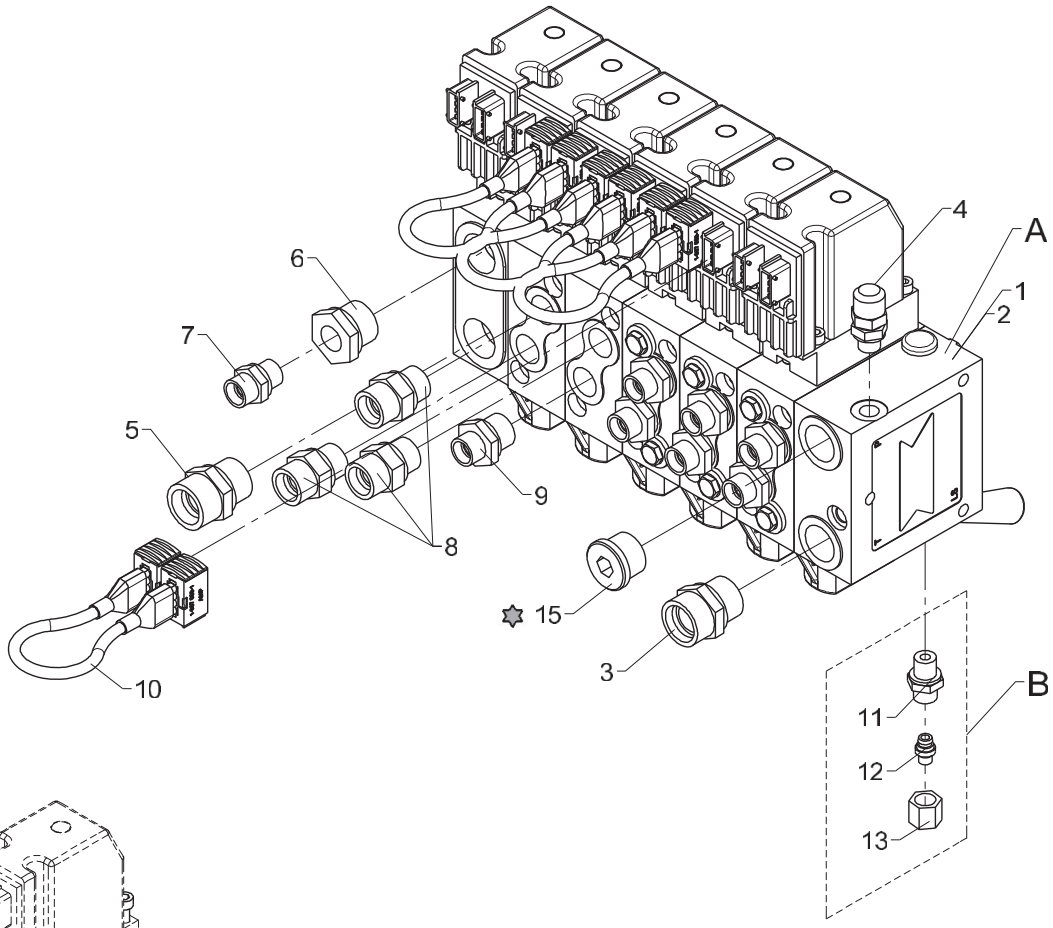

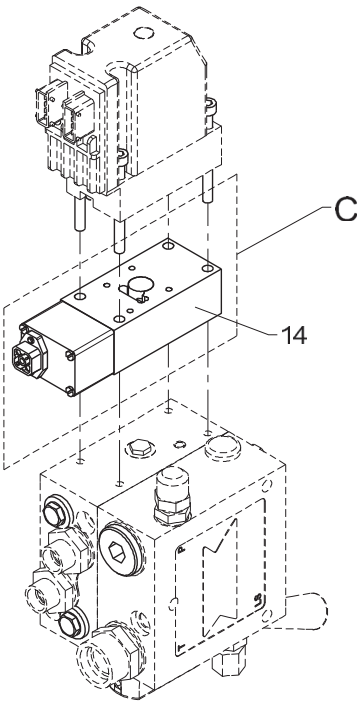

	A	B	C
66 50 460	63 305	X	
66 50 470	63 306		
66 50 600	63 305	X	X
66 50 610	63 306		X

✡ Loctite 542

Control valves, Danfoss, 5 sections, fixed/variable flow with winch (std./QOPS)

Pos	Qty.	Part no.	Description	Remarks
		6650460	Valve block, 5 sect., variable	
		6650470	Valve block, 5 sect., fixed	
		6650600	Valve block, 5 sect.,var.QOPS	
		6650610	Valve block, 5 sect.,fixedQOPS	
1	1	63305	Valve block	
2	1	63306	Valve block	
3	1	25169	Connection	P-GEV 22 LR-WD
4	1	26103	Pressure-gauge connect.	
5	1	26197	Connection	P-GEV 20 SR-WD
6	1	26319	Reducing connection	RED-R 3/4-WD/R 3/8
7	1	25127	Connection	P-GEV 12 LR-WD
8	3	26334	Connection	P-GEV 16 SR-WD
9	7	25108	Connection	GES 12 LR 1/2-WD
10	4	62296	Cable	
11	1	25109	Connection	GES 8 LR-WD
12	1	26166	Blanking plug	VSD 8 L
13	1	25181	Coupling nut	M 8 L
14	1	59676	Sensor	
15	1	26355	Plug	VS-R-3/4 WD

1100K, 1110K, 1220K, 1230K, 1320K, 1330K

66 50 550
66 50 540
66 50 410
Internal ref. 66 50 400

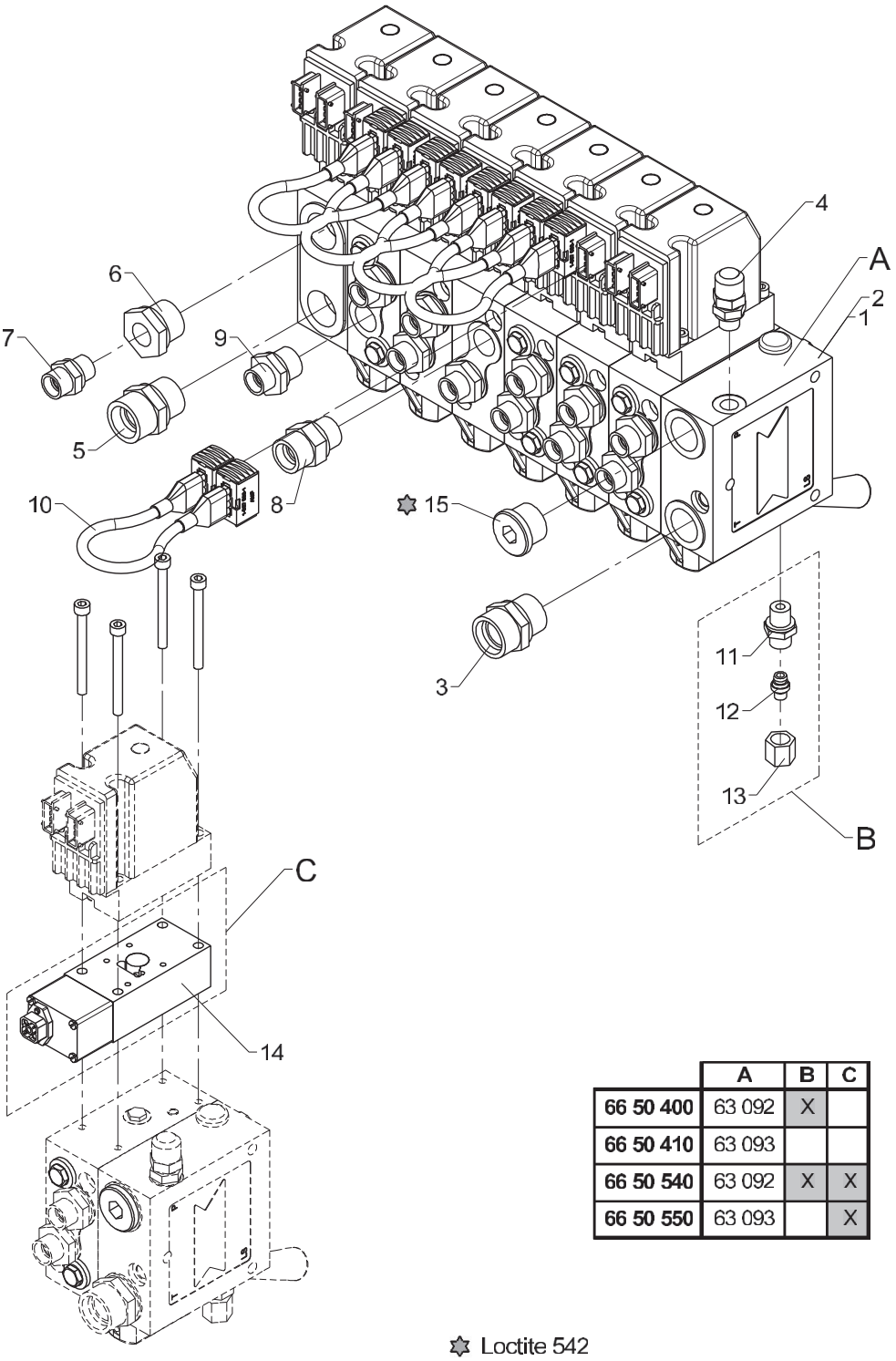

	A	B	C
66 50 400	63 092	X	
66 50 410	63 093		
66 50 540	63 092	X	X
66 50 550	63 093		X

✡ Loctite 542

Control valves, Danfoss, 6 sections, fixed/variable flow with rotator and grab

Pos	Qty.	Part no.	Description	Remarks
		6650400	Valve block, 6 sect., variable	
		6650410	Valve block, 6 sect., fixed	
		6650540	Valve block, 6 sect.,var.QOPS	
		6650550	Valve block, 6 sect.,fix.QOPS	
1	1	63092	Valve block	
2	1	63093	Valve block	
3	1	25169	Connection	P-GEV 22 LR-WD
4	1	26103	Pressure-gauge connect.	
5	1	26197	Connection	P-GEV 20 SR-WD
6	1	26319	Reducing connection	RED-R 3/4-WD/R 3/8
7	1	25127	Connection	P-GEV 12 LR-WD
8	1	26334	Connection	P-GEV 16 SR-WD
9	11	25108	Connection	GES 12 LR 1/2-WD
10	5	62296	Cable	
11	1	25109	Connection	GES 8 LR-WD
12	1	26166	Blanking plug	VSD 8 L
13	1	25181	Coupling nut	M 8 L
14	1	59676	Sensor	
15	1	26355	Plug	VS-R-3/4 WD

1100K, 1110K, 1220K, 1230K, 1320K, 1330K

66 50 670
66 50 660
66 50 530
Internal ref. 66 50 520

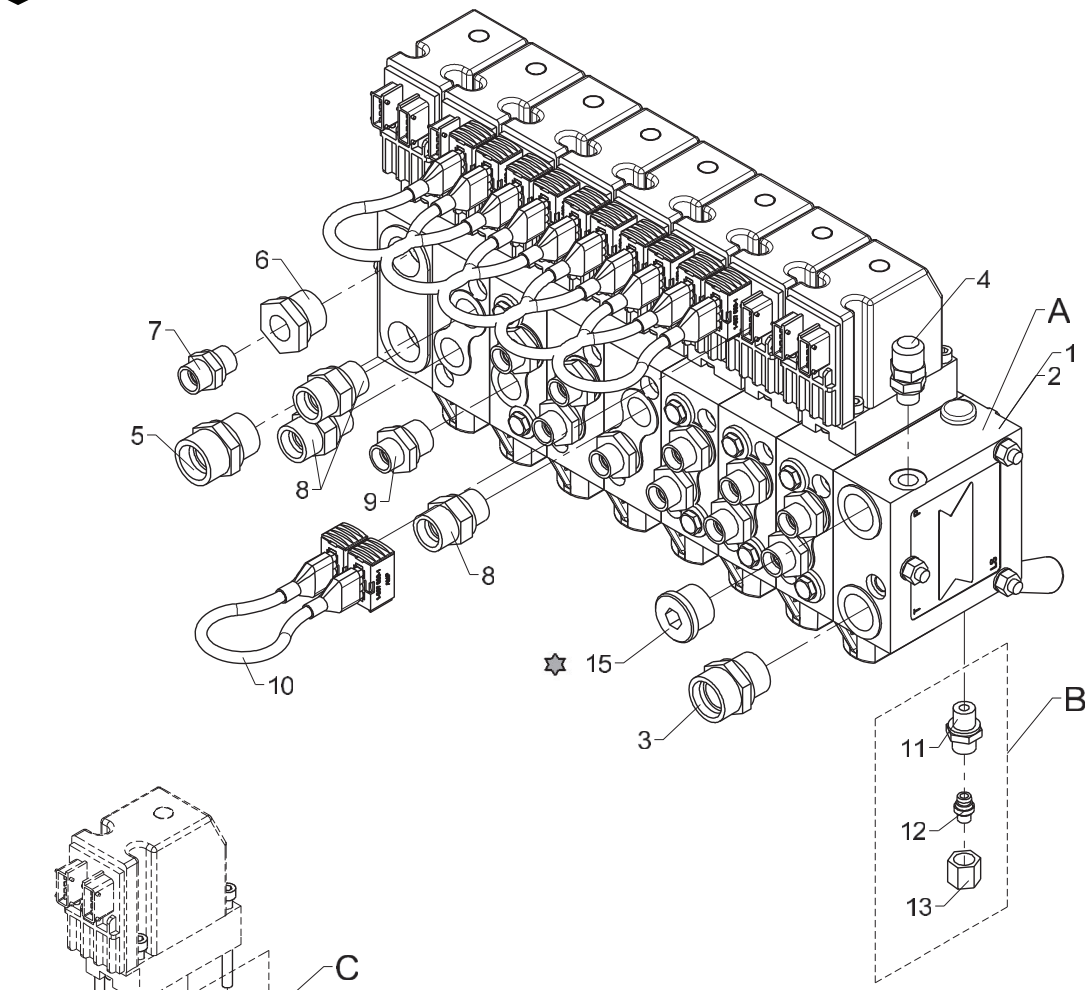

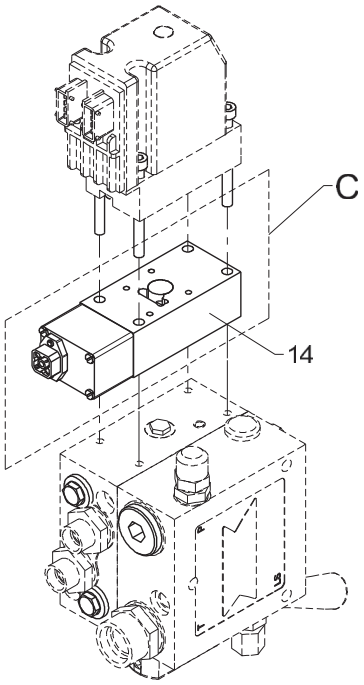

	A	B	C
66 50 520	63 311	X	
66 50 530	63 312		
66 50 660	63 311	X	X
66 50 670	63 312		X

✡ Loctite 542

Control valves, Danfoss, 7 sections, fixed/variable flow with rotator, grab and winch

Pos	Qty.	Part no.	Description	Remarks
		6650520	Valve block, 7 sect., variable	
		6650530	Valve block, 7 sect., fixed	
		6650660	Valve block, 7 sect.,var.QOPS	
		6650670	Valve block, 7 sect.,fix.QOPS	
1	1	63311	Valve block	
2	1	63312	Valve block	
3	1	25169	Connection	P-GEV 22 LR-WD
4	1	26103	Pressure-gauge connect.	
5	1	26197	Connection	P-GEV 20 SR-WD
6	1	26319	Reducing connection	RED-R 3/4-WD/R 3/8
7	1	25127	Connection	P-GEV 12 LR-WD
8	3	26334	Connection	P-GEV 16 SR-WD
9	11	25108	Connection	GES 12 LR 1/2-WD
10	6	62296	Cable	
11	1	25109	Connection	GES 8 LR-WD
12	1	26166	Blanking plug	VSD 8 L
13	1	25181	Coupling nut	M 8 L
14	1	59676	Sensor	
15	1	26355	Plug	VS-R-3/4 WD

1100K, 1110K, 1220K, 1230K, 1320K, 1330K

Internal ref. 99 99 540

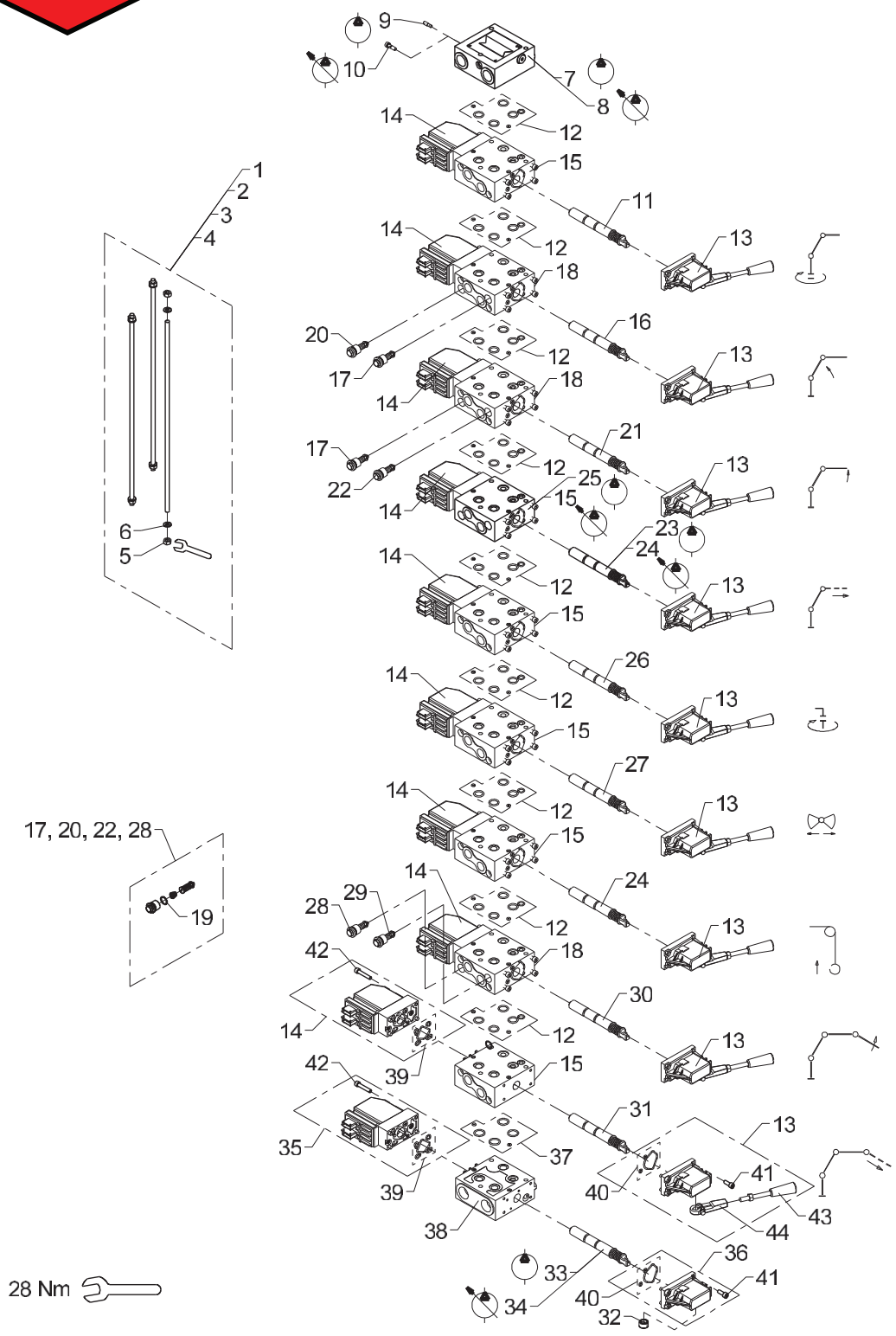

Danfoss control valve PVG32, 4-7 sections

Pos	Qty.	Part no.	Description	Remarks
1		58965	Connecting kit, 4 sections	
2		58966	Connecting kit, 5 sections	
3		58967	Connecting kit, 6 sections	
4		58968	Connecting kit, 7 sections	
5		30856	Nut, stainless	M8
6		62044	Washer	
7		58955	Inlet section, OC	Fast pumpe
8		58956	Inlet section, CC	Variabel pumpe
9		58941	Open centre kit	
10		62065	Closed center kit	
11		62207	Spool	
12		62237	Seal kit	
13		58907	Lever module inkl. lever	
14		62295	Electric activation	
15		62225	Basic module	
16		62033	Spool	
17		58931	Port-relief valve	350 bar
18		62227	Basic module	
19		62052	O-ring	
20		62274	Port-relief valve	125 bar
21		62209	Spool	
22		62286	Port-relief valve	250 bar
23		61963	Spool	Fast pumpe
24		62055	Spool	Variabel pumpe
25		62224	Basic module	
26		58902	Spool	
27		62070	Spool	
28		62283	Port-relief valve	320 bar
29		62278	Port-relief valve	190 bar
30		61964	Spool	
31		58903	Spool	
32		64416	Cover for sealing	
33		58959	Spool, OC	Fast pumpe
34		58960	Spool, CC	Variabel pumpe
35		58962	Electric activation	
36		58919	Lever module	
37		58925	Seal kit	
38		58958	PVSK valve section	
39		62240	Seal kit	
40		62239	Seal kit	
41		30424	Screw	MC6 x 16

1100K, 1110K, 1220K, 1230K, 1320K, 1330K

Internal ref. 99 99 540

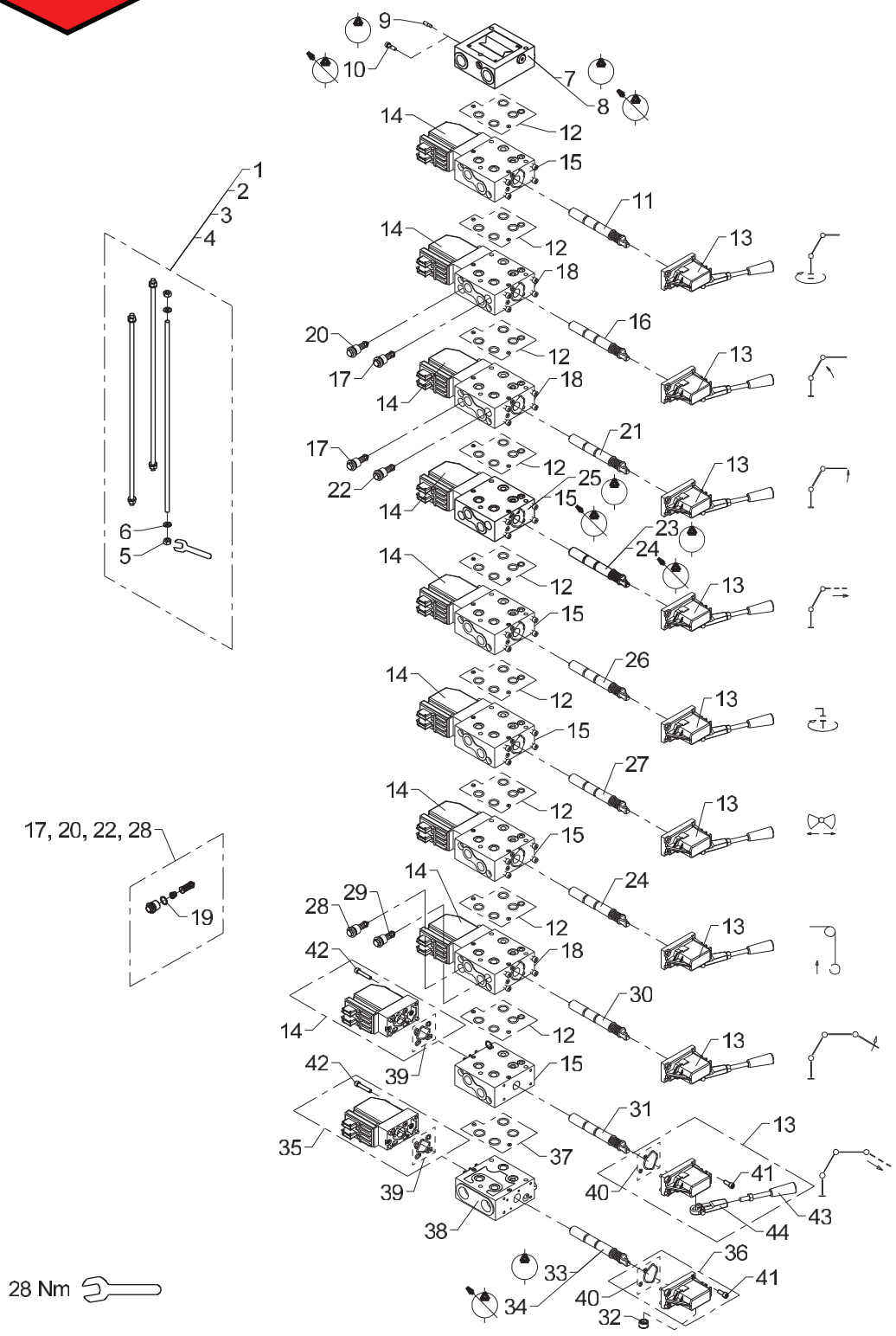

Danfoss control valve PVG32, 4-7 sections

Pos	Qty.	Part no.	Description	Remarks
42		62241	Screw	
43		62062	Lever	
44		59682	Foot for lever	

1100K, 1110K, 1220K, 1230K, 1320K, 1330K

Internal ref. 99 99 560

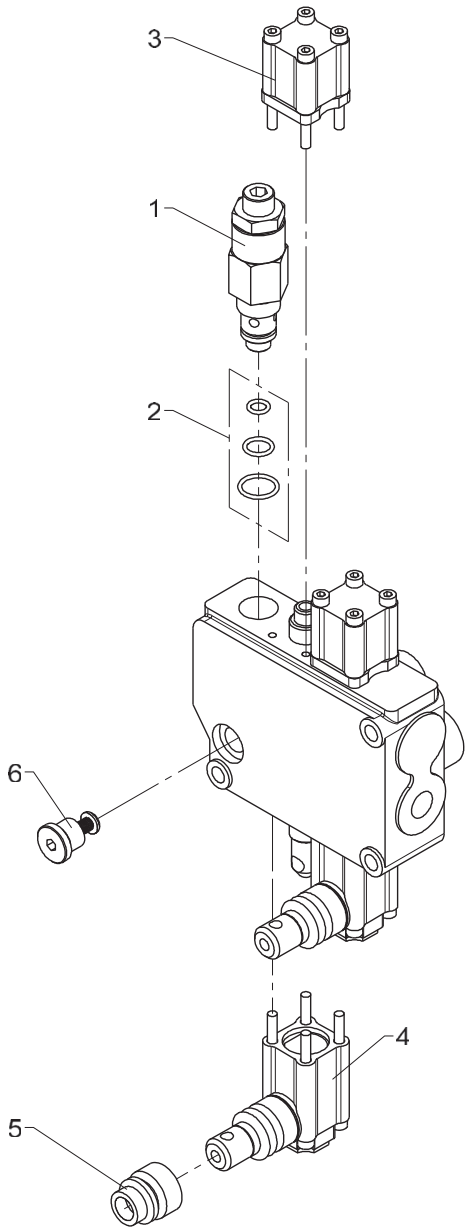

458 06 493

From loader 1170001
To loader

Created 08-02-2012
Modified

HC - M50 stabilizer valve section

Pos	Qty.	Part no.	Description	Remarks
1		55343	Main relief valve 190 bar	
2		55314	Seal kit cpl.	
3		55332	Return spring kit	
4		55334	Hand lever kit	
5		55389	Rubber bellows (M50)	
6		55339	Check valve kit	

1100K, 1110K, 1220K, 1230K, 1320K, 1330K

Internal ref. 99 99 590

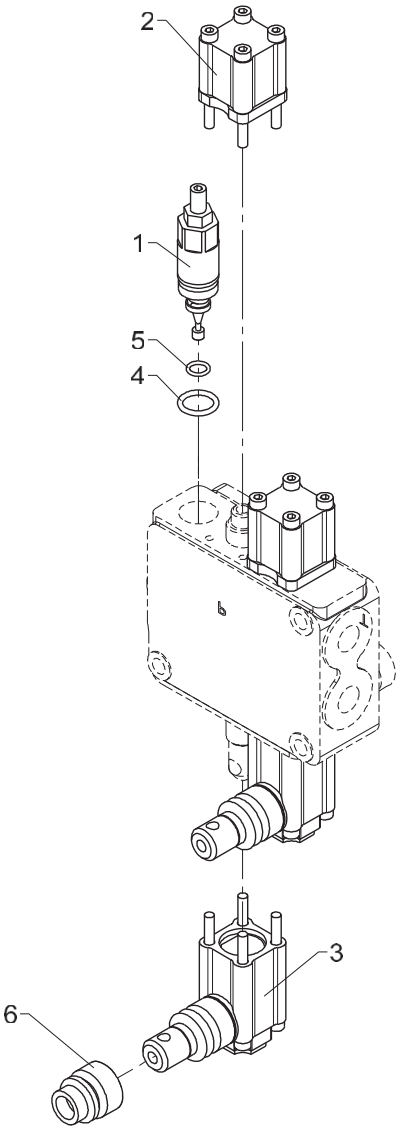

458 06 494

From loader 1170001
To loader

Created 11-07-2013
Modified

HC - M45 stabilizer valve section

Pos	Qty.	Part no.	Description	Remarks
1	1	55527	Main-relief valve	
2	2	55528	Spring kit, standard	
3	2	55530	Kit of levers	
4	1	20143	O-ring	OR 15,8 x 2,62
5	1	20114	O-ring	OR 8,73 x 1,78
6	1	55389	Rubber bellows (M50)	

1100K, 1110K, 1220K, 1230K, 1320K, 1330K

Internal ref. 99 99 570

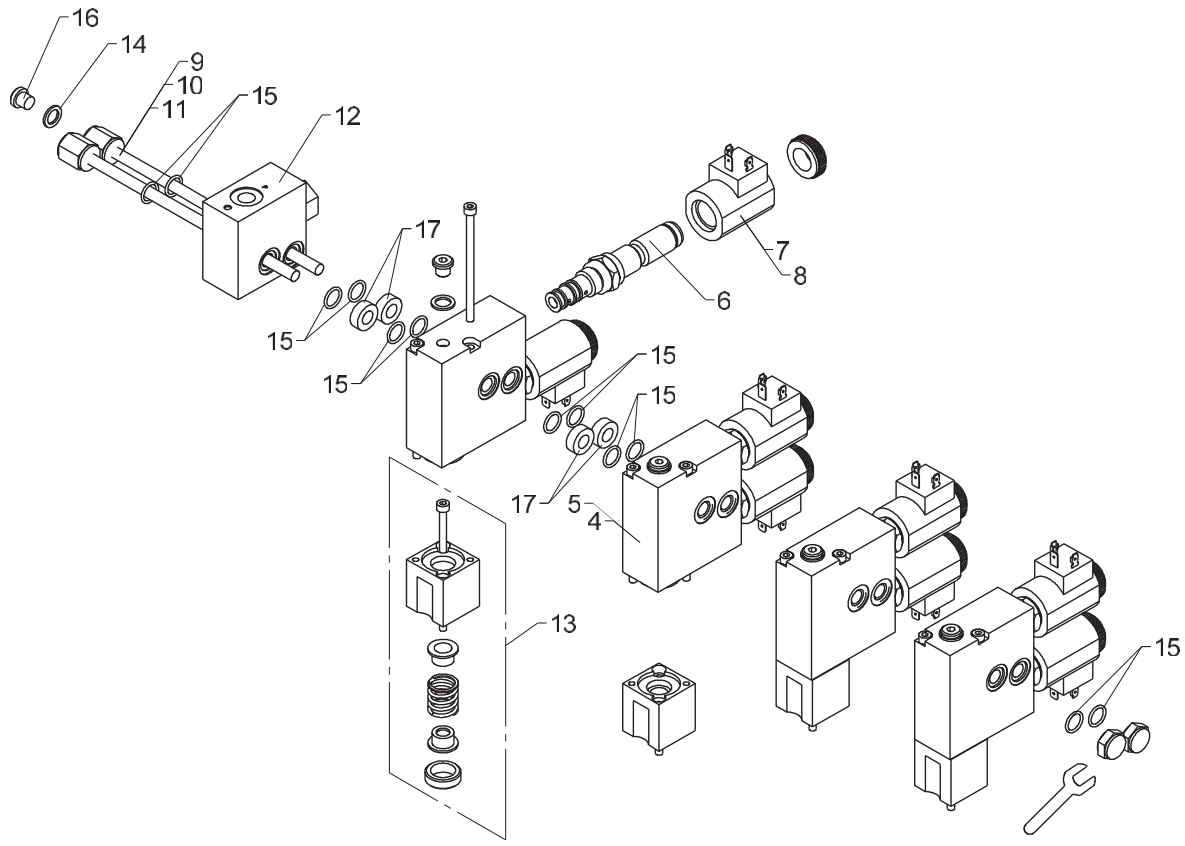

20 Nm

HC-D4 electro-hydraulic NEM-kit, NEM radio remote control

Pos	Qty.	Part no.	Description	Remarks
1		55360	El-hydr. NEM-kit, 4x24V, right	HC-D4, 4 sekt.
2		55361	El-hydr. NEM-kit, 5x24V, right	HC-D4, 5 sekt.
3		55362	El-hydr. NEM-kit, 6x24V, right	HC-D4, 6 sekt.
4		55324	Electro-hydr.module 12V	
5		55322	Electro-hydr. module 24V	
6		55320	Cartridge	
7		55323	Solenoid 12V	
8		55321	Solenoid, 24V	
9		55307	Kit of stay bolts NEM 4	
10		55312	Kit of stay bolts NEM 5	
11		55313	Kit of stay bolts NEM 6	
12		55325	Pressure reducing valve	
13		55306	Spring kit	
14		21115	Seal washer	ø10,7 x 16 x 1,5
15		20115	O-ring	OR 12,42 x 1,78
16		25187	Plug	VS-R-1/8 WD
17		55363	Centering washer	

1100K, 1110K, 1220K, 1230K, 1320K, 1330K

Internal ref. 99 99 550

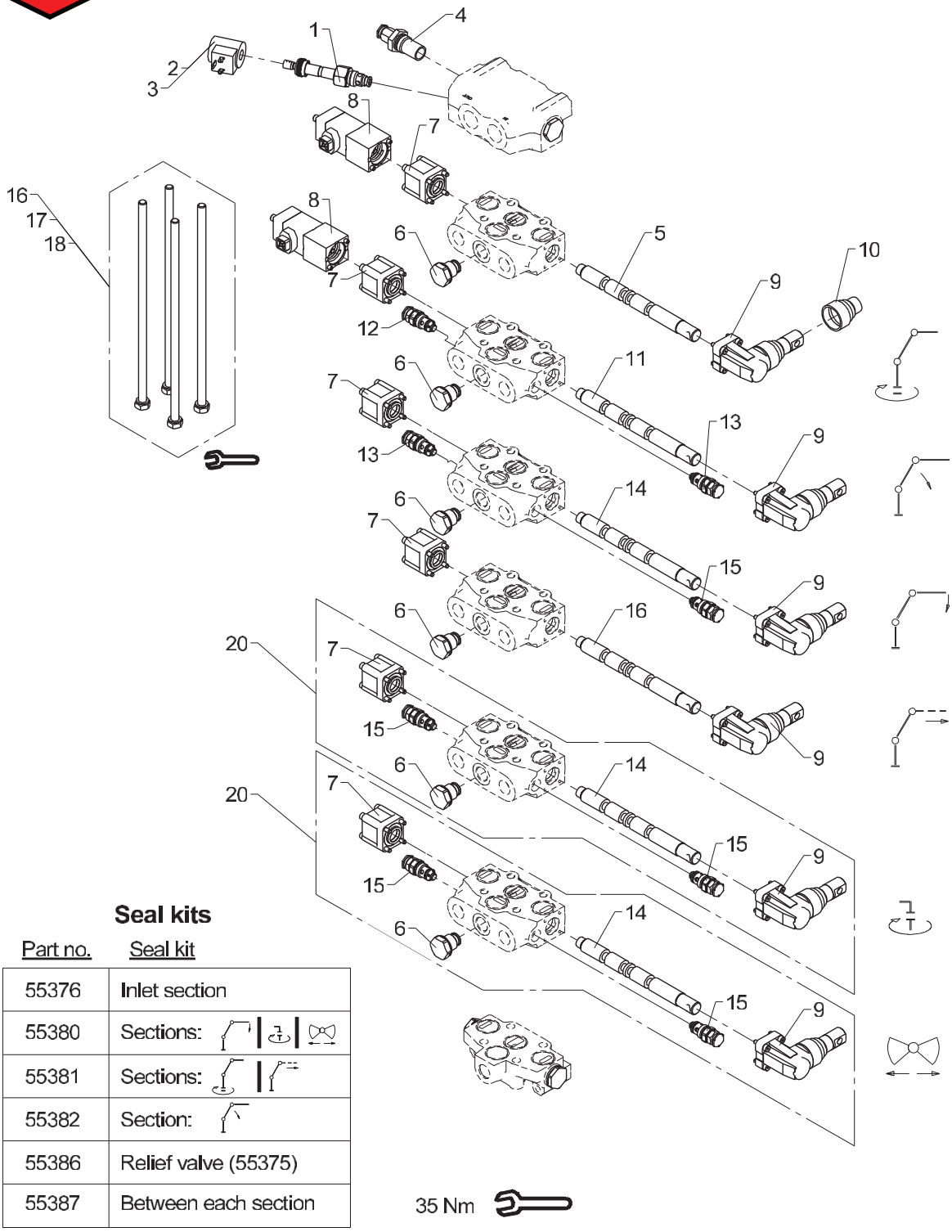

Seal kits

Part no.	Seal kit
55376	Inlet section
55380	Sections:
55381	Sections:
55382	Section:
55386	Relief valve (55375)
55387	Between each section

HC-D4 valve block, 4-6 sections

Pos	Qty.	Part no.	Description	Remarks
1	1	55346	Cartridge	
2	1	55344	Solenoid, 12V	
3	1	55345	Solenoid, 26V	
4	1	55375	Main relief valve 300 bar	
5	1	55367	Spool	
6	6	55379	Check valve	
7	6	55378	Spring center device	
8	2	55371	Spool sensor	
9	6	55377	Hand lever kit	
10	1	55340	Rubber bellows (HC-D4)	
11	1	55364	Spool	
12	1	55383	Relief valve	100 bar
13	2	55385	Relief valve	325 bar
14	3	55395	Spool, extension	
15	5	55384	Relief valve	200 bar
16	1	55388	Spool	
17	1	55397	Kit of stay bolts	4 sektioner
18	1	55398	Kit of stay bolts	5 sektioner
19	1	55399	Kit of stay bolts	6 sektioner
20	1	55510	Valve section, compl. HC-D4	

DECAL PARTS LIST

	PART NO.	DESCRIPTION	QTY.
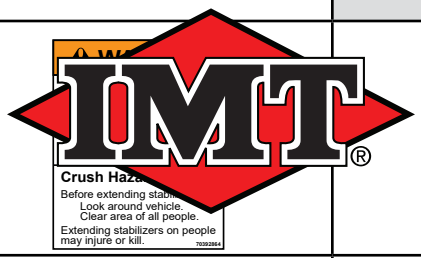	70392864	DECAL-WARNING STAB STAND CLEAR	2
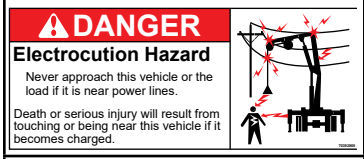	70392865	DECAL-DANGER ELEC HAZARD LG	4
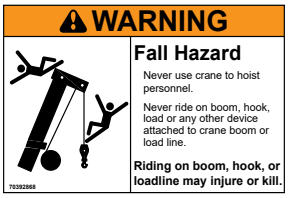	70392868	DECAL-WARNING CR LOADLINE (TRK) LARGE	4
	70392891	DECAL-DANGER DRIVE-LINE	2
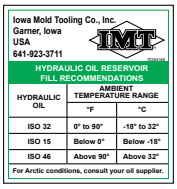	70394189	DECAL-HYDRAULIC OIL RESERVOIR	1
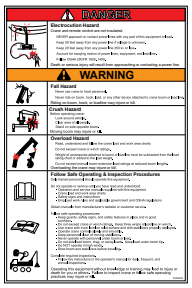	70396918	DECAL-DANGER ARTICULATED LG	2
	70396919	DECAL-DANGER ARTICULATING SM	2

DECAL PARTS LIST

	PART NO.	DESCRIPTION	QTY.
	70396021	DECAL-MADE IN DENMARK	1
	71392365	DECAL-ALIGNMENT CRANE ROTATION	1
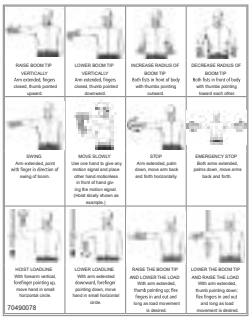	70490078	DECAL-ARTICULATING CRANE HAND SIGNALS	2
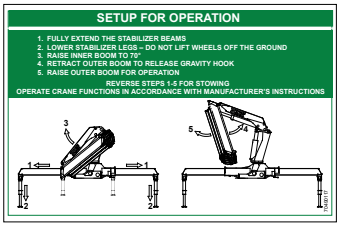	70490117	DECAL-SETUP INSTRUCTIONS	2
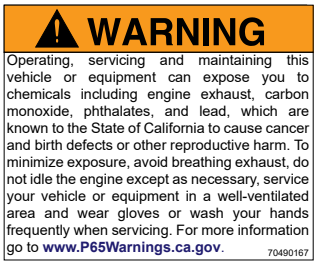	70490167	DECAL-WARNING-PROP 65	2
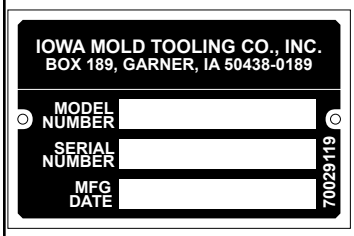	70029119	PLACARD-SERIAL NUMBER	1

DECAL PARTS LIST

	PART NO.	DESCRIPTION	QTY.
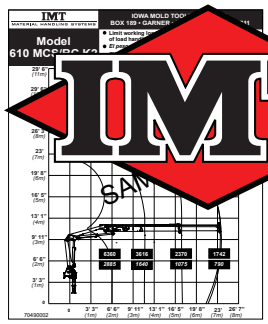	70490291-1230 MCS K1 70490292-1230 MCS K2 70490293-1230 MCS K3 70490294-1230 MCS K4 70490295-1230 MCS K5	1230-MCS K1-K5	2
 SAMPLE	70490282	DECAL-ID-1230	2
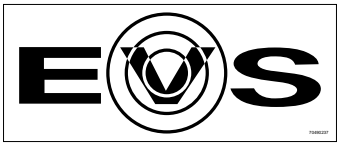	70490237	DECAL-EVS	1
	66598	MARKING TAPE - DARK-YELLOW	4
	65770	NO HIGH PRESSURE	1
	64793	SWING-UP LEG	2
	68995	EMERGENCY OPER.4 FUNC,RC	1
	66626	OPERATING LABEL	1

DECAL PARTS LIST			
	66636	STAB. OPERATION, VALVE BL.SIDE	1
	66637	STABILIZER OPERATION, DUAL CTRL SIDE	1
	66638	STAB. OPERATION, (HC-M50-2FCTS)	1
	66643	OPERATING LABEL, (PVG 32-4FCTS)	1
	66642	OPERATING LABEL, (PVG 32-6FCTS)	1
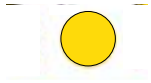	66645	LABEL	1
	66837	OPERATING LABEL	1

*MANUAL KIT NUMBER 95720380 PARTS LIST

PART NO.	DESCRIPTION
70392864	DECAL-WARNING STAB STAND CLEAR
70392865	DECAL-DANGER ELEC HAZARD LG
70392868	DECAL-WARNING CR LOADLINE (TRK) LARGE
70392891	DECAL-DANGER DRIVELINE
70394189	DECAL-HYDRAULIC OIL RESERVOIR
70396918	DECAL-DANGER ARTICULATED LG
70396919	DECAL-DANGER ARTICULATING SM
70396021	DECAL-MADE IN DENMARK
71392365	DECAL-ALIGNMENT CRANE ROTATION
70490078	DECAL-ARTICULATING CRANE HAND SIGNALS
70490117	DECAL-SETUP INSTRUCTIONS
70490167	DECAL-WARNING-PROP 65

1230 TECHNICAL SPECIFICATION MANUAL: 99906494

1100K, 1110K, 1220K, 1230K, 1320K, 1330K

Internal ref. 66 68 580

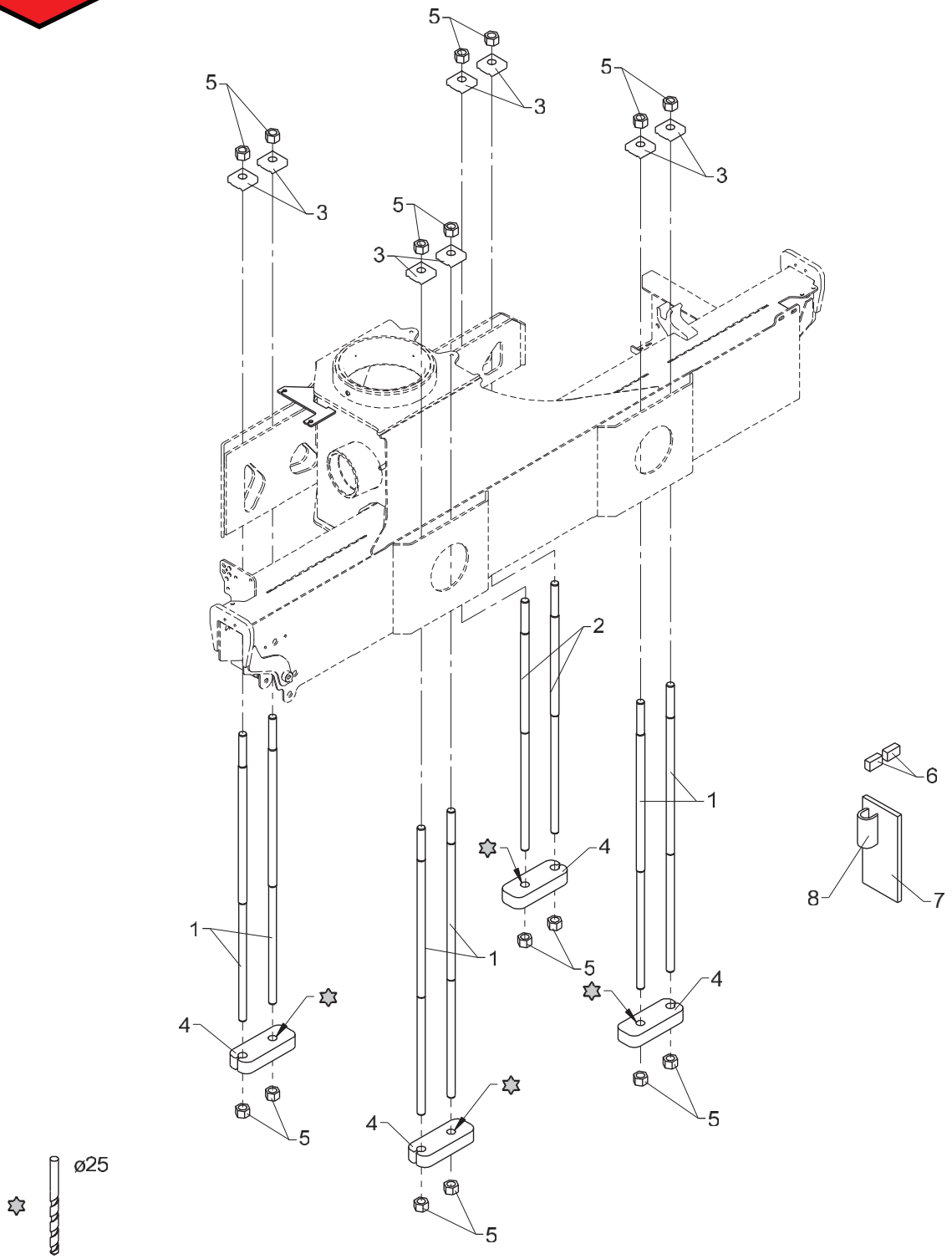

458 07 100

From loader 1170001
To loader

Mounting kit (8 M24 x 2 pins)

Created 24-11-2008
Modified 08-02-2012

Pos	Qty.	Part no.	Description	Remarks
1	6	32916	Mounting bolt	
2	2	32917	Mounting bolt	
3	8	6340496	Mounting plate	
4	4	6887384	Clamp	
5	16	31051	Lock nut	M24 x 2
6	6	6644084	Stop block	
7	4	6659924	Spacer	
8	4	6659914	U-section	

1100K, 1110K, 1220K, 1230K, 1320K, 1330K

Internal ref. 66 68 590

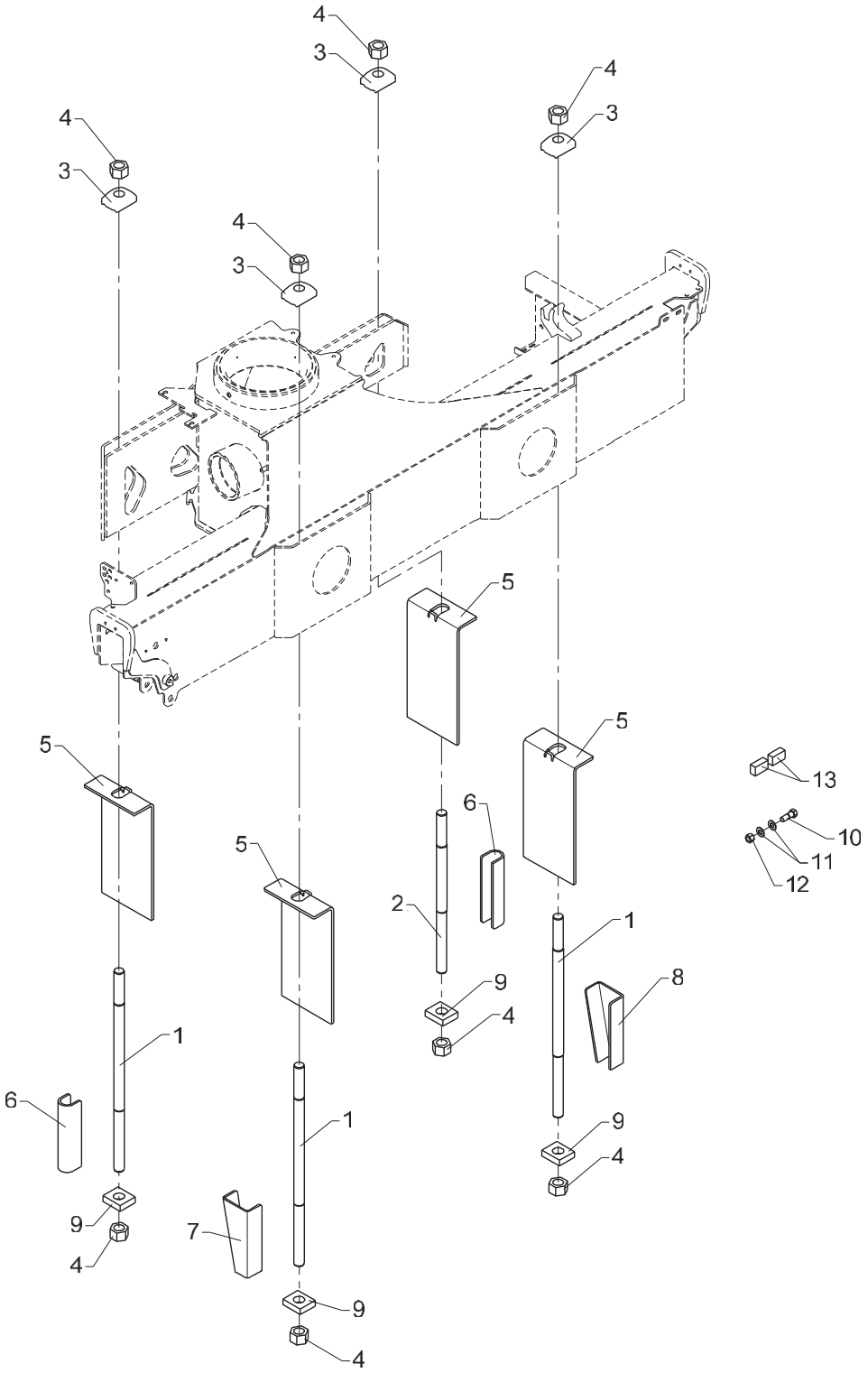

458 07 110

From loader 1170001
To loader

Mounting kit (4 M30 x 2 pins)

Created 13-11-2008
Modified 08-02-2012

Pos	Qty.	Part no.	Description	Remarks
1	3	32918	Mounting bolt	
2	1	32919	Mounting bolt	
3	4	6340497	Mounting plate	
4	8	31086	Lock nut	M30 x 2
5	4	6881704	Mounting plate	
6	2	6887354	U-profile	
7	1	6881684	Plate, left	
8	1	6881694	Plate, right	
9	4	6658094	Washer	
10	24	31497	Steel bolt	M14 x 40
11	48	31111	Washer	14 mm
12	24	30891	Lock nut	M14
13	6	6644084	Stop block	

1100K, 1110K, 1220K, 1230K, 1320K, 1330K

68 88 170
Internal ref. 68 88 000

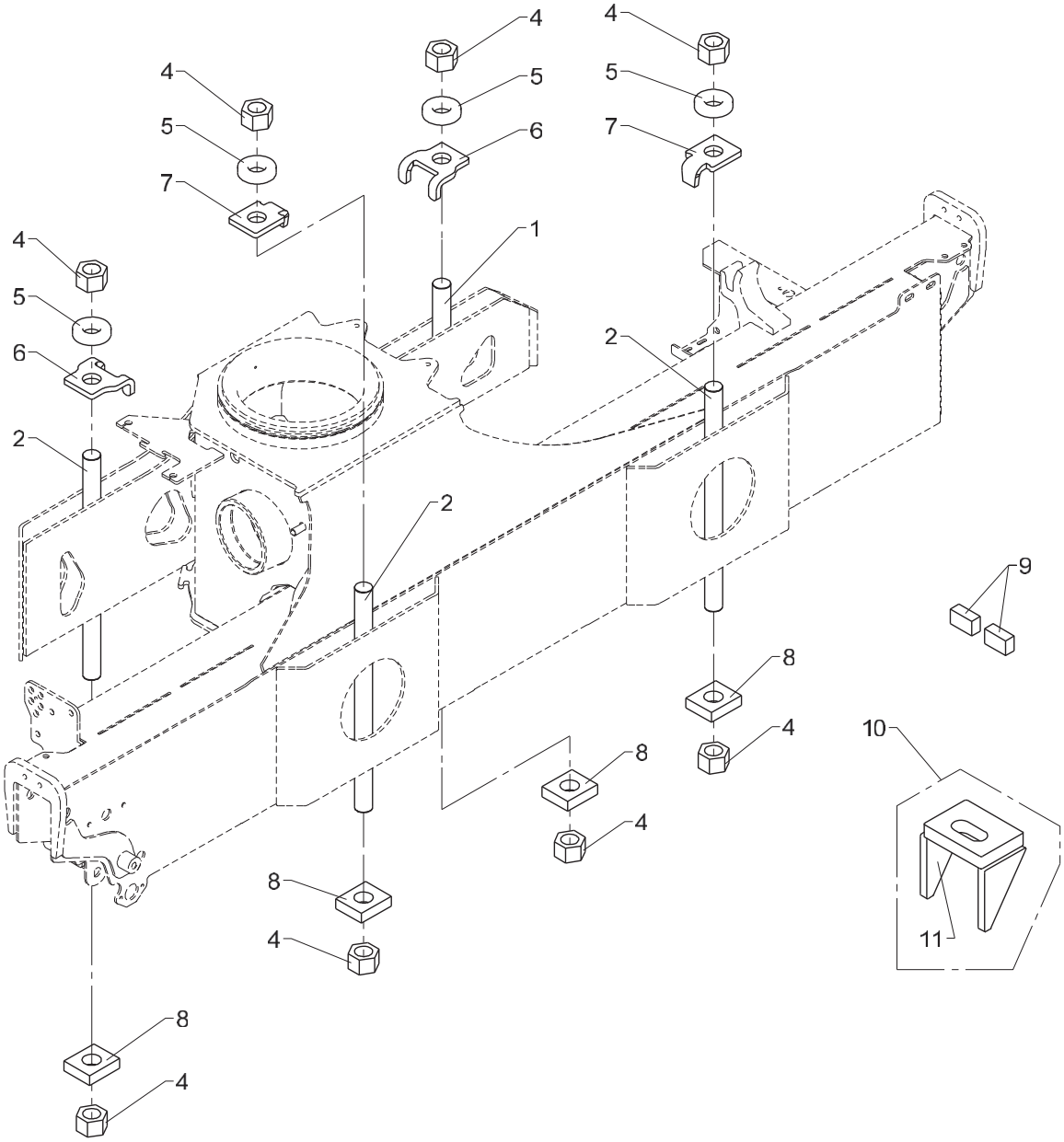

458 07 115

From loader 1170001
To loader

Created 07-02-2014
Modified

Mounting kit (4 M30 x 2 pins) - 50 mm.

Pos	Qty.	Part no.	Description	Remarks
		6888000		Pos. 1, 2, 3
		6888170	Fittings	Pos. 10
1	1	6888021	Mounting bolt, M30 x 2 x 350	
2	3	6888022	Monting bolt, M30 x 2 x 450	
3	1	6888120	Nut/washer/stop - kit	Pos. 4, 5, 6, 7, 8, 9
4	8	31086	Lock nut	M30 x 2
5	4	6394701	Mounting plate 30 mm	
6	2	6394706	Mouting plate 30 mm	
7	2	6394708	Mounting plate 30 mm	
8	4	6658094	Washer	
9	6	6644084	Stop block	
10	1	6888170	Fittings	Pos. 11
11	4	6668244	Bracket	

1100K, 1110K, 1220K, 1230K, 1320K, 1330K

68 88 180
Internal ref. 68 88 010

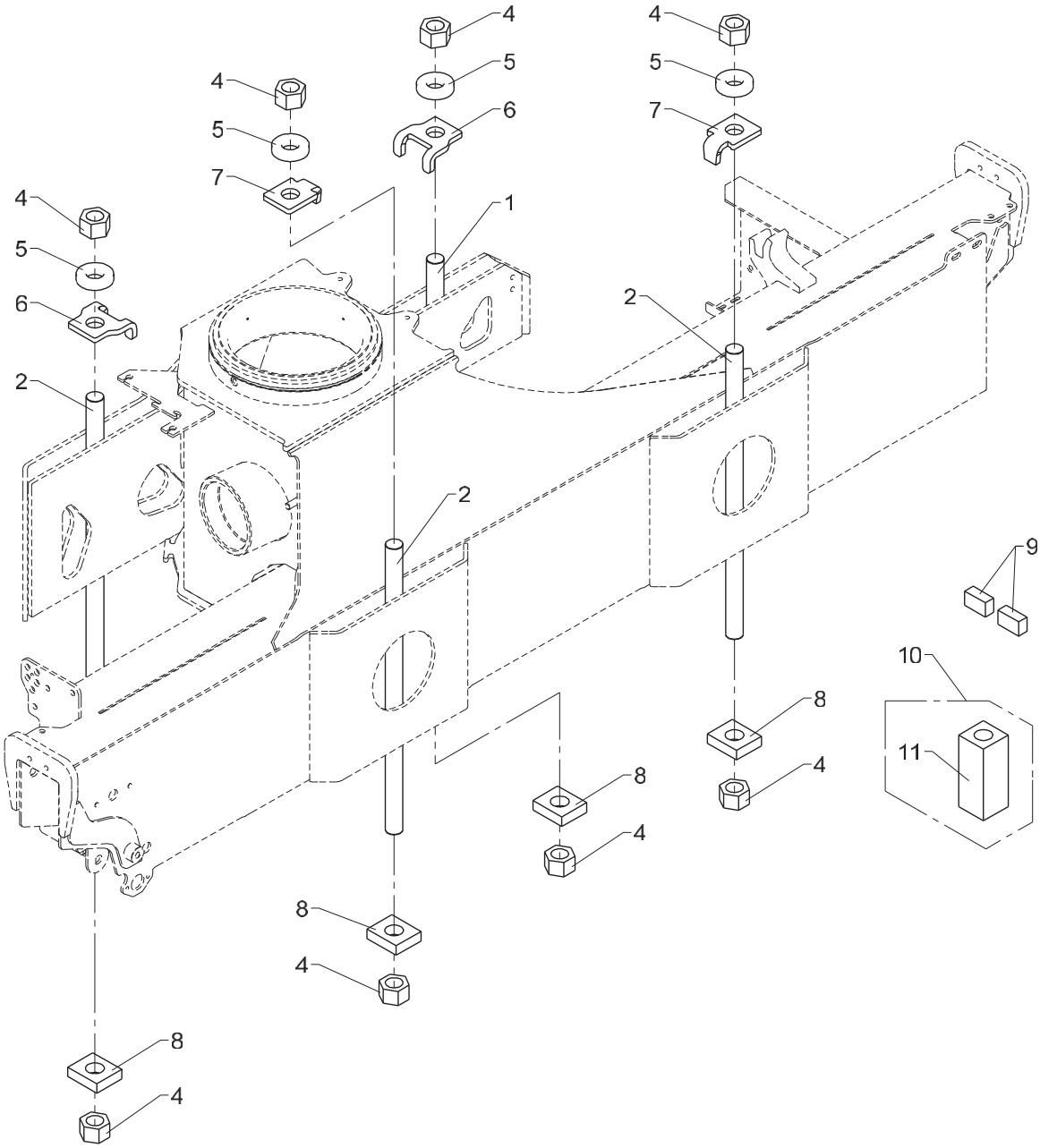

458 07 120

From loader 1170001
To loader

Created 05-02-2014
Modified

Mounting kit (4 M30 x 2 pins) - 150 mm.

Pos	Qty.	Part no.	Description	Remarks
		6888010	Kit of stay bolts, 4 pcs.150mm	Pos. 1, 2, 3
		6888180	Fittings	Pos. 10
1	1	6888022	Monting bolt, M30 x 2 x 450	
2	3	6888023	Mounting bolt, M30 x 2 x 600	
3	1	6888120	Nut/washer/stop - kit	Pos. 4, 5, 6, 7, 8, 9,
4	8	31086	Lock nut	M30 x 2
5	4	6394701	Mounting plate 30 mm	
6	2	6394706	Mouting plate 30 mm	
7	2	6394708	Mounting plate 30 mm	
8	4	6658094	Washer	
9	6	6644084	Stop block	
10	1	6888180	Fittings	Pos. 11
11	4	6887599	Mounting block	

1100K, 1110K, 1220K, 1230K, 1320K, 1330K

66 68 980
Internal ref. 68 88 020

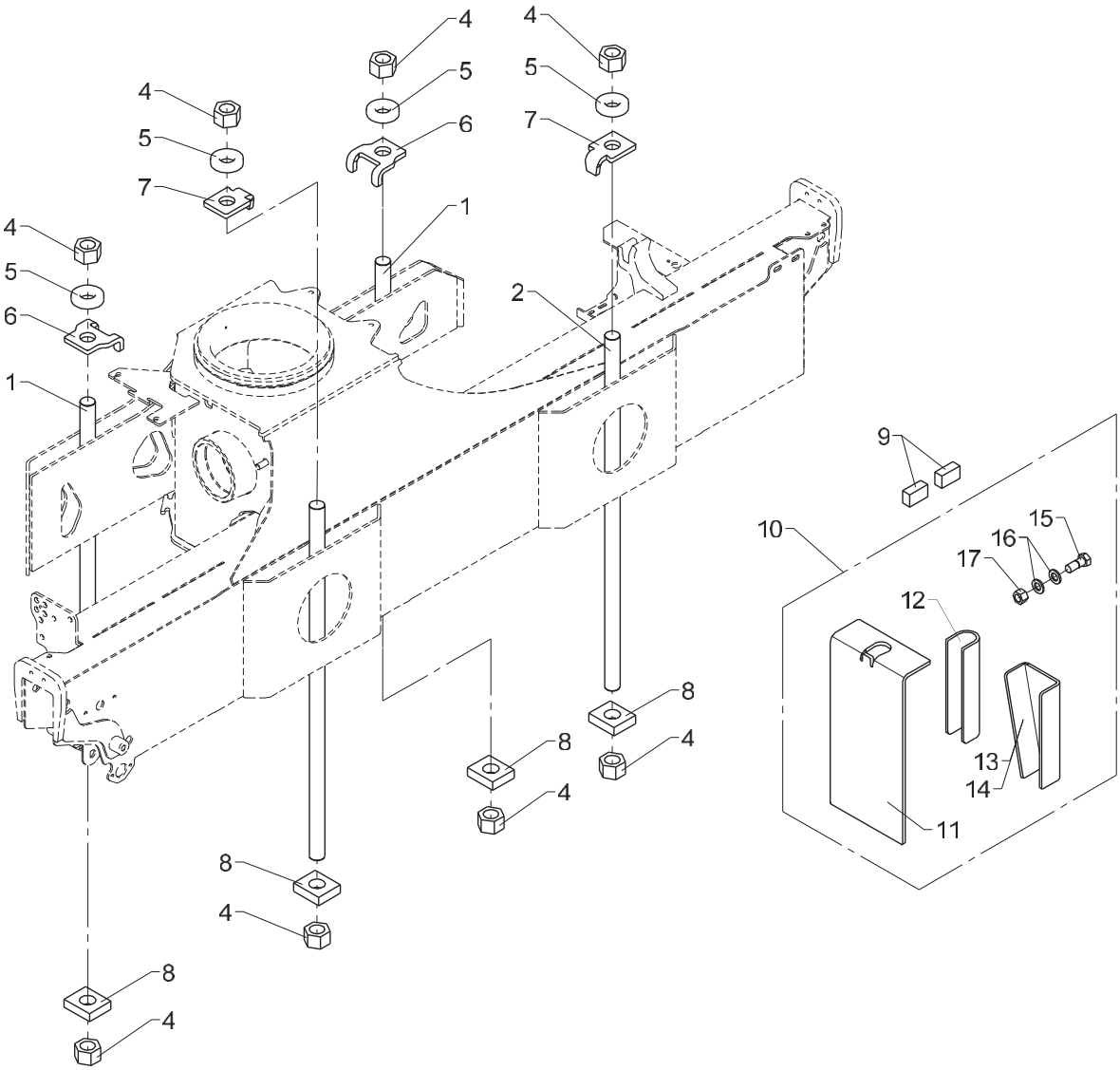

458 07 130

From loader 1170001
To loader

Created 07-02-2014
Modified

Mounting kit (4 M30 x 2 pins) - 250 mm.

Pos	Qty.	Part no.	Description	Remarks
		6888020		Pos. 1, 2, 3
		6668980	Mouting brackets	Pos. 10
1	2	6888023	Mounting bolt, M30 x 2 x 600	
2	2	6888024	Mounting bolt, M30 x 2 x 850	
3	1	6888120	Nut/washer/stop - kit	Pos. 4, 5, 6, 7, 8, 9
4	8	31086	Lock nut	M30 x 2
5	4	6394701	Mounting plate 30 mm	
6	2	6394706	Mouting plate 30 mm	
7	2	6394708	Mounting plate 30 mm	
8	4	6658094	Washer	
9	6	6644084	Stop block	
10	1	6668980	Mouting brackets	Pos. 11, 12, 13, 14, 15, 16, 17
11	4	6881704	Mounting plate	
12	2	6887354	U-profile	
13	1	6881684	Plate, left	
14	1	6881694	Plate, right	
15	24	31496	Tight-fitting bolt	M16 x 40
16	48	31103	Washer, 16 mm	16 mm
17	24	30892	Lock nut	M16

1100K, 1110K, 1220K, 1230K, 1320K, 1330K

66 68 960
Internal ref. 68 88 030

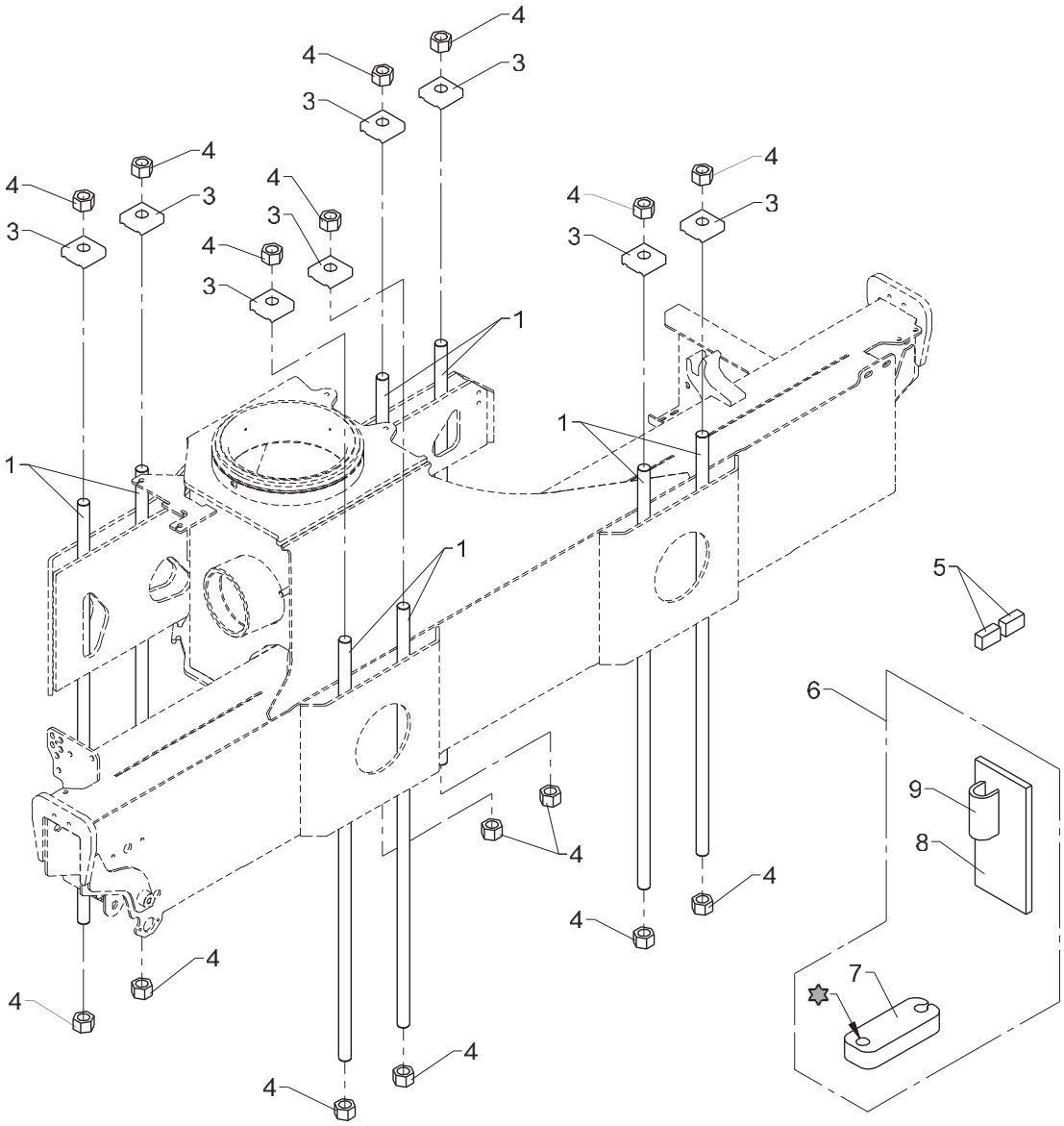

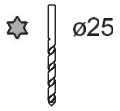

Mounting kit (8 M24 x 2 pins)

Pos	Qty.	Part no.	Description	Remarks
		6888030	Kit of stay bolts,8pcs.chassis	Pos. 1, 2
		6668960	Mounting bracket	Pos. 6
1	8	6888011	Mouting bolt, M24 x 2 x 1000	
2	1	6888130	Nut/washer/stop - kit	Pos. 3, 4, 5
3	8	6340496	Mounting plate	
4	16	31051	Lock nut	M24 x 2
5	6	6644084	Stop block	
6	1	6668960	Mounting bracket	Pos. 7, 8, 9
7	4	6887384	Clamp	
8	4	6659924	Spacer	
9	4	6659914	U-section	

1100K, 1110K, 1220K, 1230K, 1320K, 1330K

63 63 720
63 65 720
Internal ref. 63 42 720

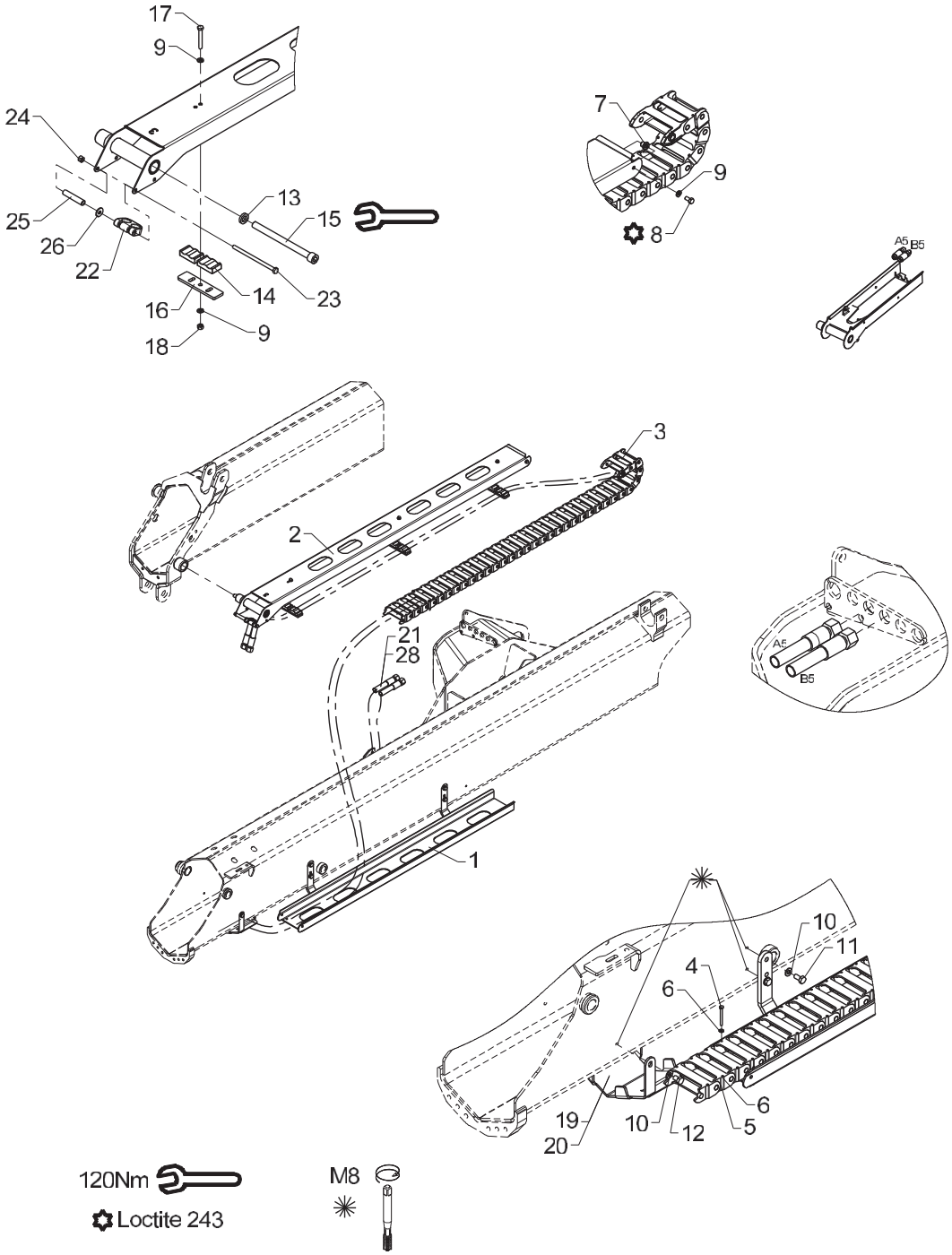

Hose guides, K1-1EXV.

Pos	Qty.	Part no.	Description	Remarks
		6342720	Hose guide, K1-1 EXV	1300K-1830K
		6365720	Hose guide, K1-1 EXV.	1100K-1330K
		6363720	Hose guide, K1-1 EXV.	900K-1130K
1	1	6340721	Guide (jib)	
2	1	6340748	Guide (extension K3)	
3	1	28713	Nylon drag chain, 34 links	
4	2	30128	Set screw	M4 x 40
5	2	30857	Lock nut	M4
6	4	31188	Washer, stainless	4 mm
7	2	6340719	Nut	
8	2	30111	Set screw, stainless	
9	8	32302	Face washer, stainless	6 mm
10	6	31147	Face washer, 8 mm	
11	4	30131	Set screw, stainless	M8 x 16
12	2	30130	Set screw, stainless	M8 x 12
13	1	6340717	Washer	
14	6	63561	Clamp	
15	1	32488	Screw	MC12 x 150
16	3	6340769	Adaptor	
17	3	30118	Steel pin, stainless	M6 x 45
18	3	30854	Nut, stainless	M6
19	1	6340299	Protective guard	Serie 1300/1500
20	1	6365299		Serie 1100/1110, 900/910
21	2	56566	Hose	Serie 1300/1500, 1100/1110
22	1	68028		
23	1	30167	Steel bolt	M6 x 60
24	1	30884	Lock nut, stainless	M6
25	1	6340724		
26	1	31134	Washer, stainless	
27	2	56910		Serie 900/910

Obsolete

458 09 110

1100K, 1110K, 1220K, 1230K, 1320K, 1330K

63 63 730
63 65 730
63 46 730
Internal ref. 63 42 730

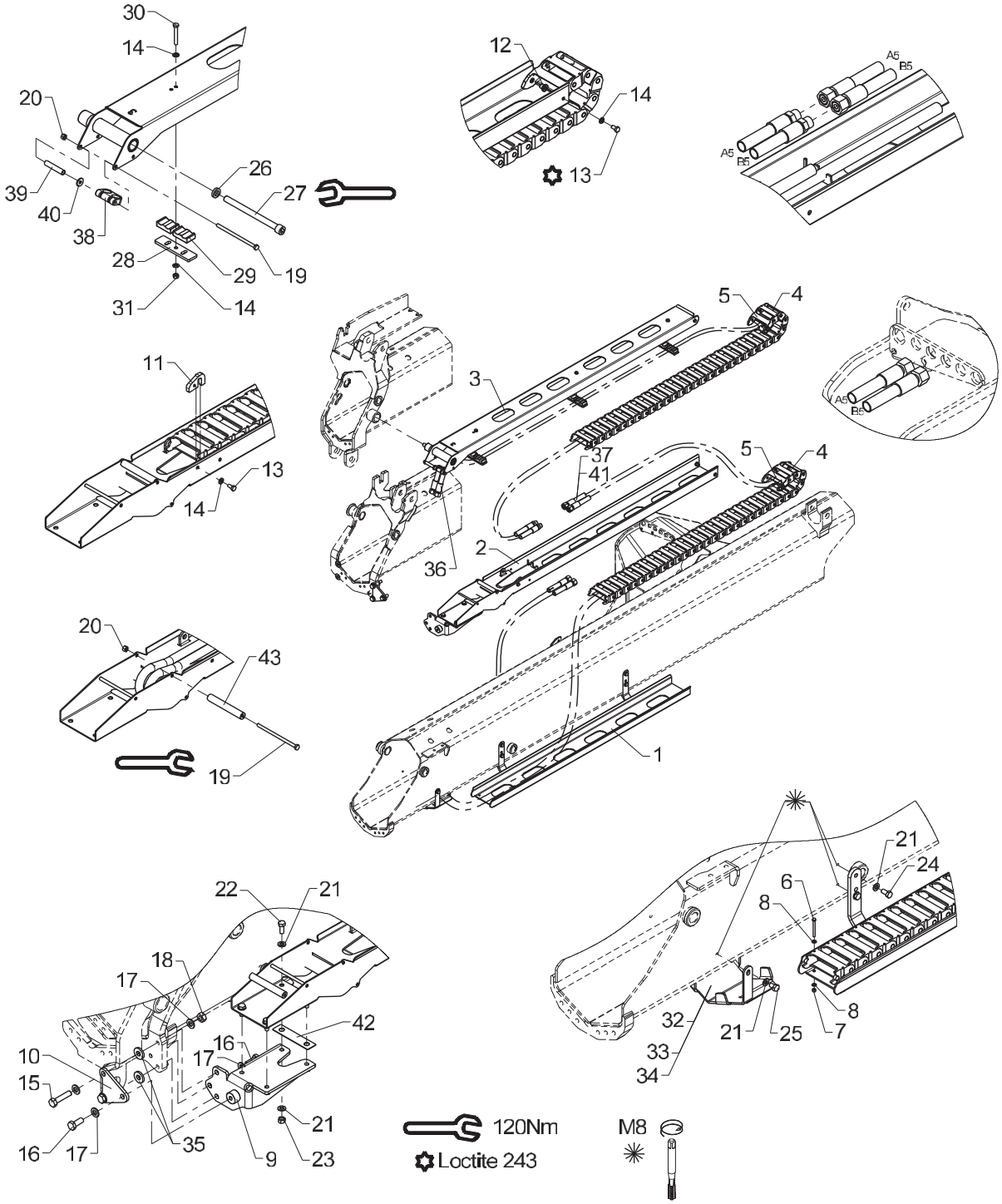

Obsolete

458 09 110

From loader 1170001
To loader 1170110

Created 16-03-2009
Modified 14-01-2013

Hose guides, K2-1EXV.

Pos	Qty.	Part no.	Description	Remarks
		6342730	Hose guide, K2-1 EXV	
		6346730	Hose guide, K2-1 EXV	
		6365730	Hose guide, K2-1 EXV.	
		6363730	Hose guide, K2-1 EXV.	
1	1	6340721	Guide (jib)	
2	1	6340731	Guide (Extension I)	
3	1	6340748	Guide (extension K3)	
4	2	28712	Nylon drag chain, 30 links	
5	2	63400	End link for nylon drag chain	
6	2	30128	Set screw	M4 x 40
7	2	30857	Lock nut	M4
8	4	31188	Washer, stainless	4 mm
9	1	6340725	Mounting bracket	
10	1	6340729	Plate	
11	1	6340718	Bracket	
12	4	6340719	Nut	
13	5	30111	Set screw, stainless	
14	11	32302	Face washer, stainless	6 mm
15	2	30377	Set screw	M10 x 45
16	2	31513	Set screw, stainless	M10 x 25
17	6	31565	Washer, stainless	10 mm
18	2	30858	Nut	M10
19	2	30167	Steel bolt	M6 x 60
20	2	30884	Lock nut, stainless	M6
21	14	31147	Face washer, 8 mm	
22	4	30132	Set screw, stainless	
23	4	30856	Nut, stainless	M8
24	4	30131	Set screw, stainless	M8 x 16
25	2	30130	Set screw, stainless	M8 x 12
26	1	6340717	Washer	
27	1	32488	Screw	MC12 x 150
28	3	6340769	Adaptor	
29	6	63561	Clamp	
30	3	30118	Steel pin, stainless	M6 x 45
31	3	30854	Nut, stainless	M6
32	1	6340299	Protective guard	Serie 1300/1500
33	1	6344299	Protective guard	Serie 1800/2200
34	1	6365299	Hose shield	Serie 1100/1110
35	2	31756	Washer	Serie 900/910/1100/1110
36	2	56568	Hose	
37	2	56569	Hose	

Obsolete

458 09 110

1100K, 1110K, 1220K, 1230K, 1320K, 1330K

63 63 730
63 65 730
63 46 730
Internal ref. 63 42 730

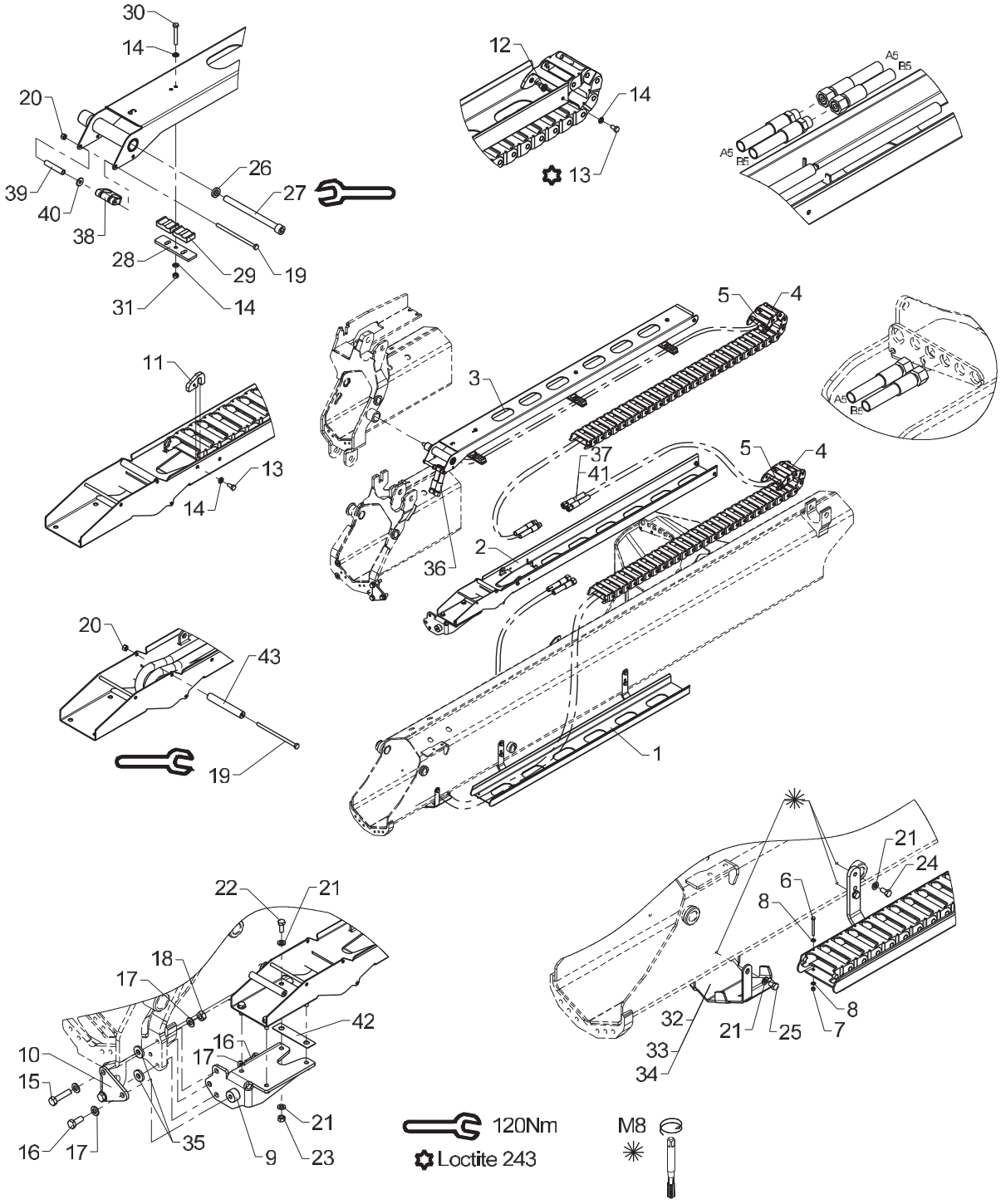

Obsolete

458 09 110

From loader 1170001
To loader 1170110

Created 16-03-2009
Modified 14-01-2013

Hose guides, K2-1EXV.

Pos	Qty.	Part no.	Description	Remarks
38	1	68028	Clamp	
39	1	6340724	Distance pipe	
40	1	31134	Washer, stainless	
41	2	56458	Hose 3/8 x 3750 mm L/L	Serie 900/910
42	1	6340764	Shim	
43	1	56513	Hose	

1100K, 1110K, 1220K, 1230K, 1320K, 1330K

63 63 730
63 65 730
63 46 730
Internal ref. 63 42 730

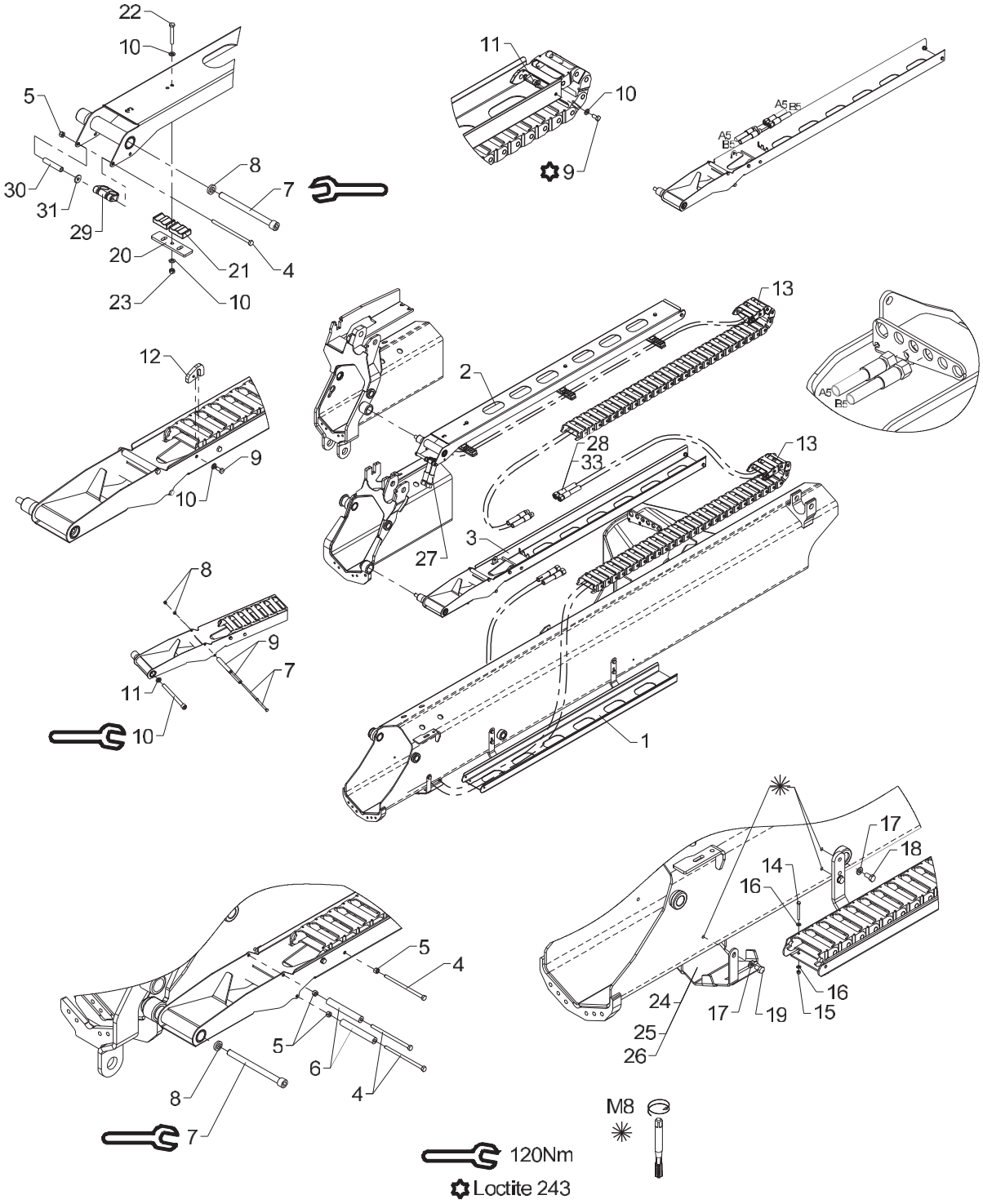

Hose guides, K2-1EXV.

Pos	Qty.	Part no.	Description	Remarks
		6342730	Hose guide, K2-1 EXV	
		6346730	Hose guide, K2-1 EXV	
		6365730	Hose guide, K2-1 EXV.	
		6363730	Hose guide, K2-1 EXV.	
1	1	6340721	Guide (jib)	
2	1	6340748	Guide (extension K3)	
3	1	6341731	Guide (Extension I)	
4	4	30167	Steel bolt	M6 x 60
5	4	30884	Lock nut, stainless	M6
6	2	56513		
7	2	32488	Screw	MC12 x 150
8	2	6340717	Washer	
9	5	30111	Set screw, stainless	
10	11	32302	Face washer, stainless	6 mm
11	4	6340719	Nut	
12	1	6340718	Bracket	
13	2	28712	Nylon drag chain, 31 links	
14	2	30128	Set screw	M4 x 40
15	2	30857	Lock nut	M4
16	4	31188	Washer, stainless	4 mm
17	6	31147	Face washer, 8 mm	
18	4	30131	Set screw, stainless	M8 x 16
19	2	30130	Set screw, stainless	M8 x 12
20	3	6340769	Adaptor	
21	6	63561	Clamp	
22	3	30118	Steel pin, stainless	M6 x 45
23	3	30854	Nut, stainless	M6
24	1	6340299	Protective guard	Serie 1300/1500
25	1	6344299	Protective guard	Serie 1800/2200
26	1	6365299		Serie 1100/1110
27	2	56568	Hose	
28	2	56569	Hose	
29	1	68028		
30	1	6340724		
31	1	31134	Washer, stainless	
32	2	56458		Serie 900/910

Obsolete

458 09 120

1100K, 1110K, 1220K, 1230K, 1320K, 1330K

63 63 740
63 65 740
63 46 740
Internal ref. 63 42 740

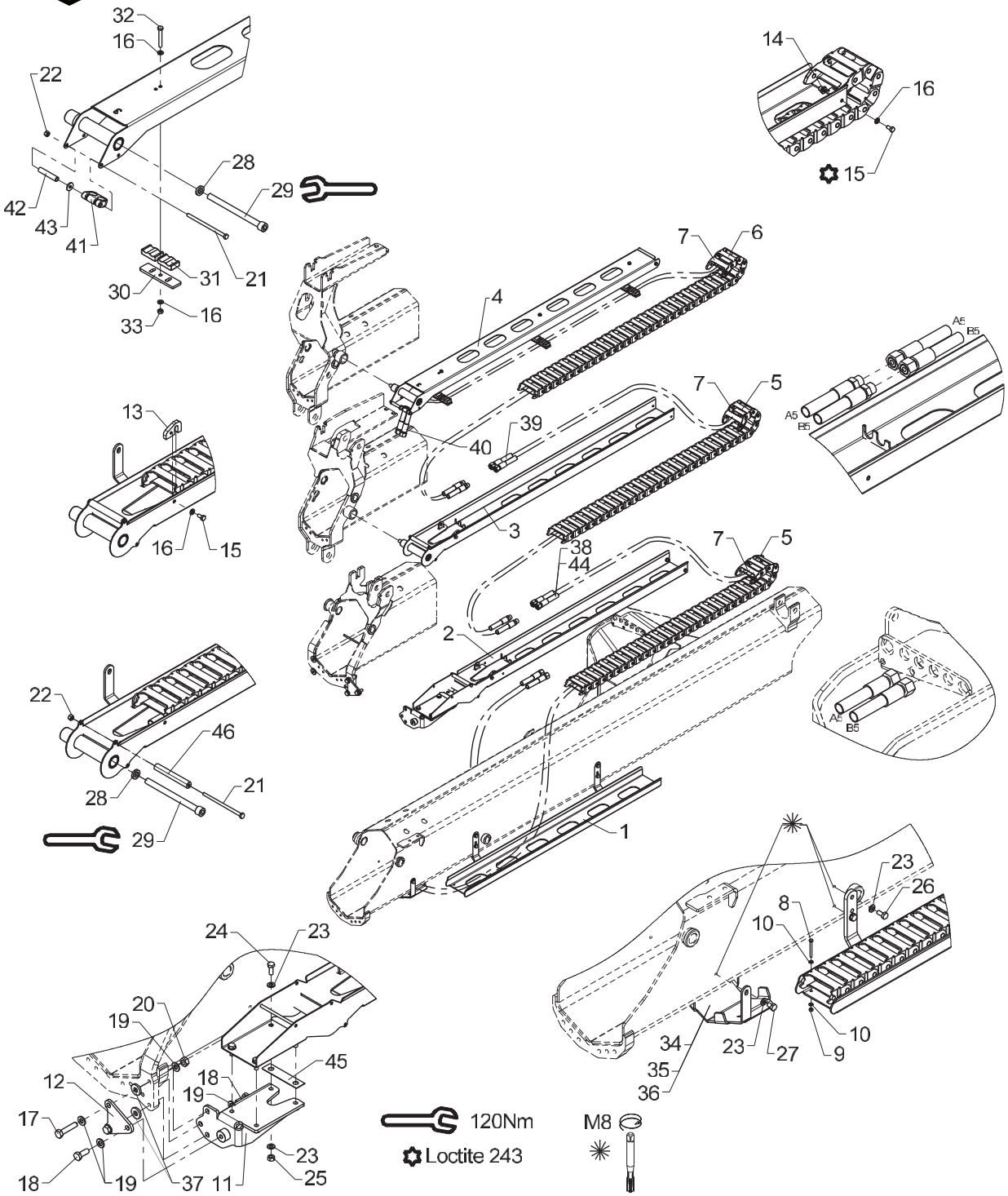

Obsolete

458 09 120

From loader 1170001
To loader 1170076

Created 16-03-2009
Modified 14-01-2013

Hose guides, K3-1 EXV.

Pos	Qty.	Part no.	Description	Remarks
		6342740	Hose guide, K3-1 EXV	
		6346740	Hose guide, K3-1 EXV	
		6365740	Hose guide, K3-1 EXV.	
		6363740	Hose guide, K3-1 EXV.	
1	1	6340721	Guide (jib)	
2	1	6340731	Guide (Extension I)	
3	1	6340741	Guide (Extension II)	
4	1	6340748	Guide (extension K3)	
5	2	28712	Nylon drag chain, 30 links	
6	1	28713	Nylon drag chain, 33 links	
7	3	63400	End link for nylon drag chain	
8	2	30128	Set screw	M4 x 40
9	2	30857	Lock nut	M4
10	4	31188	Washer, stainless	4 mm
11	1	6340725	Mounting bracket	
12	1	6340729	Plate	
13	2	6340718	Bracket	
14	6	6340719	Nut	
15	8	30111	Set screw, stainless	
16	14	32302	Face washer, stainless	6 mm
17	2	30377	Set screw	M10 x 45
18	2	31513	Set screw, stainless	M10 x 25
19	6	31565	Washer, stainless	10 mm
20	2	30858	Nut	M10
21	3	30167	Steel bolt	M6 x 60
22	3	30884	Lock nut, stainless	M6
23	14	31147	Face washer, 8 mm	
24	4	30132	Set screw, stainless	
25	4	30856	Nut, stainless	M8
26	4	30131	Set screw, stainless	M8 x 16
27	2	30130	Set screw, stainless	M8 x 12
28	2	6340717	Washer	
29	2	32488	Screw	MC12 x 150
30	3	6340769	Adaptor	
31	6	63561	Clamp	
32	3	30118	Steel pin, stainless	M6 x 45
33	3	30854	Nut, stainless	M6
34	1	6340299	Protective guard	Serie 1300/1500
35	1	6344299	Protective guard	Serie 1800/2200
36	1	6365299	Hose shield	Serie 1100/1110
37	2	31756	Washer	Serie 1100/1110

Obsolete

458 09 120

1100K, 1110K, 1220K, 1230K, 1320K, 1330K

63 63 740
63 65 740
63 46 740
Internal ref. 63 42 740

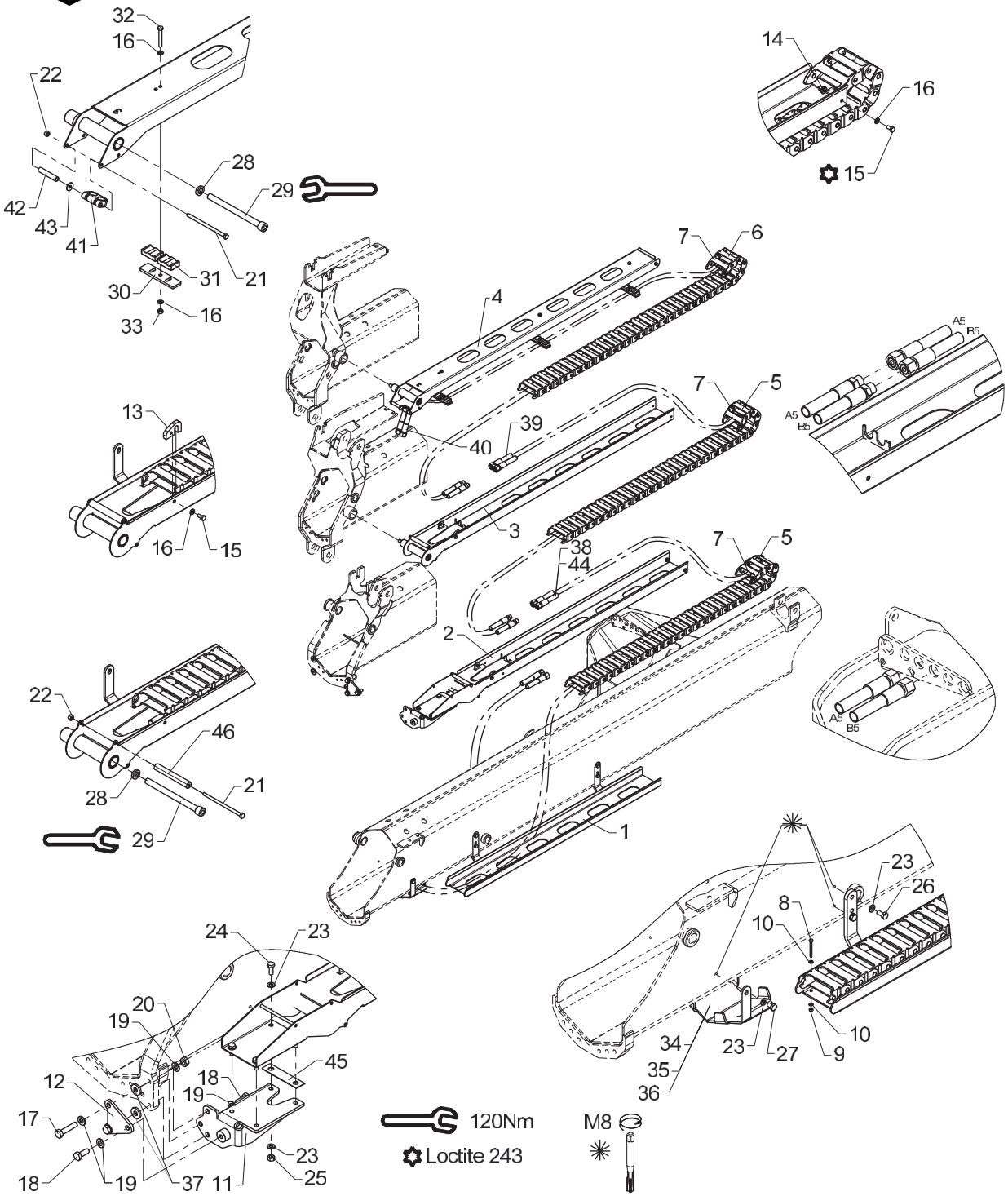

Obsolete

458 09 120

From loader 1170001
To loader 1170076

Created 16-03-2009
Modified 14-01-2013

Hose guides, K3-1 EXV.

Pos	Qty.	Part no.	Description	Remarks
38	2	56569	Hose	
39	2	56564	Hose	
40	2	56565	Hose	
41	1	68028	Clamp	
42	1	6340724	Distance pipe	
43	1	31134	Washer, stainless	
44	2	56458	Hose 3/8 x 3750 mm L/L	Serie 900/910
45	1	6340764	Shim	
46	2	56513	Hose	

1100K, 1110K, 1220K, 1230K, 1320K, 1330K

63 63 740
63 65 740
63 46 740
Internal ref. 63 42 740

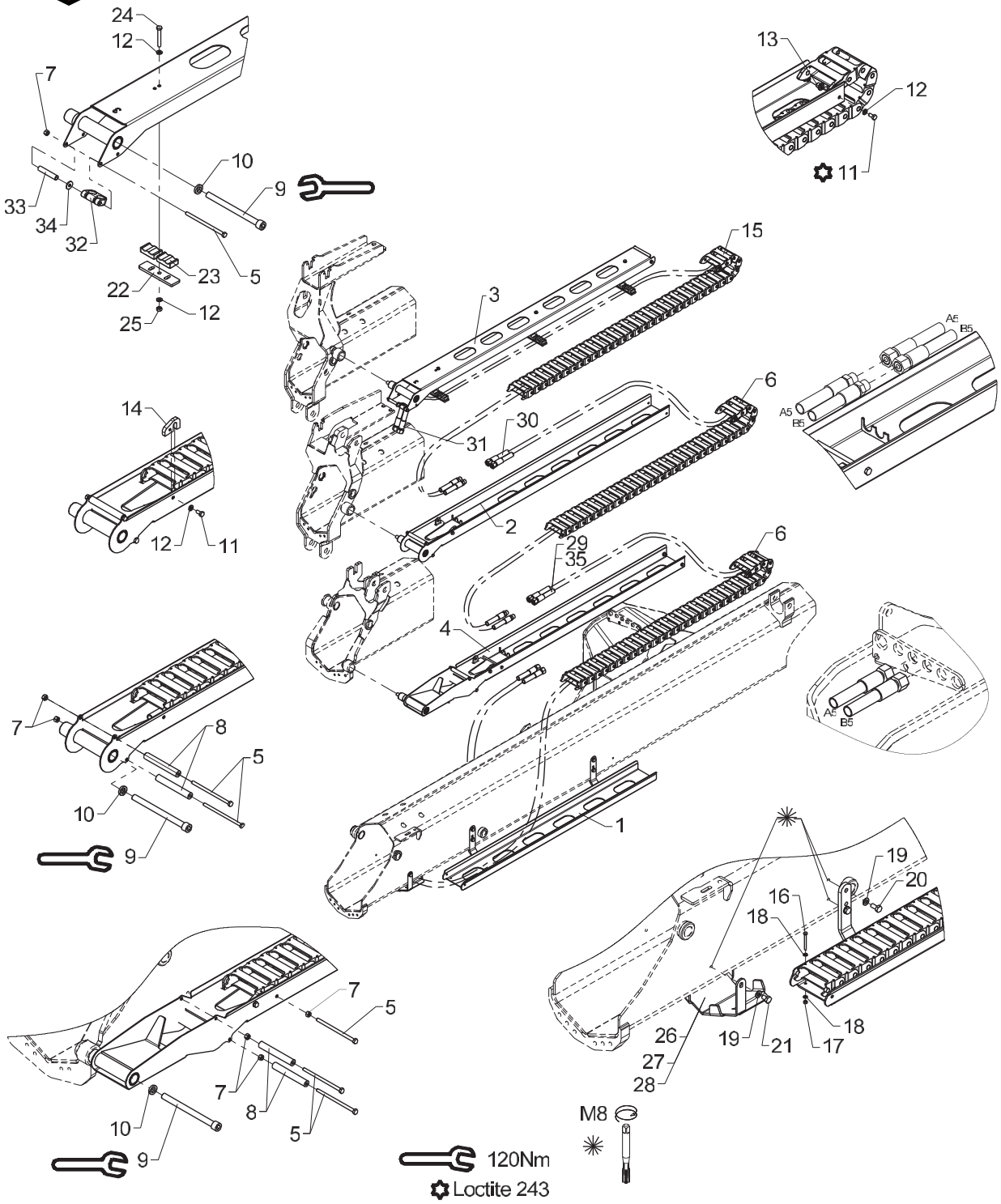

Hose guides, K3-1 EXV.

Pos	Qty.	Part no.	Description	Remarks
		6342740	Hose guide, K3-1 EXV	
		6346740	Hose guide, K3-1 EXV	
		6365740	Hose guide, K3-1 EXV.	
		6363740	Hose guide, K3-1 EXV.	
1	1	6340721	Guide (jib)	
2	1	6340741	Guide (Extension II)	
3	1	6340748	Guide (extension K3)	
4	1	6341731	Guide (Extension I)	
5	6	30167	Steel bolt	M6 x 60
6	2	28712	Nylon drag chain, 31 links	
7	6	30884	Lock nut, stainless	M6
8	4	56513		
9	3	32488	Screw	MC12 x 150
10	3	6340717	Washer	
11	8	30111	Set screw, stainless	
12	14	32302	Face washer, stainless	6 mm
13	6	6340719	Nut	
14	2	6340718	Bracket	
15	1	28713	Nylon drag chain, 34 links	
16	2	30128	Set screw	M4 x 40
17	2	30857	Lock nut	M4
18	4	31188	Washer, stainless	4 mm
19	6	31147	Face washer, 8 mm	
20	4	30131	Set screw, stainless	M8 x 16
21	2	30130	Set screw, stainless	M8 x 12
22	3	6340769	Adaptor	
23	6	63561	Clamp	
24	3	30118	Steel pin, stainless	M6 x 45
25	3	30854	Nut, stainless	M6
26	1	6340299	Protective guard	Serie 1300/1500
27	1	6344299	Protective guard	Serie 1800/2200
28	1	6365299		Serie 1100/1110
29	2	56569	Hose	
30	2	56564	Hose	
31	2	56565	Hose	
32	1	68028		
33	1	6340724		
34	1	31134	Washer, stainless	
35	2	56458		Serie 900/910

Obsolete

458 09 130

1100K, 1110K, 1220K, 1230K, 1320K, 1330K

63 63 750
63 65 750
63 46 750
Internal ref. 63 42 750

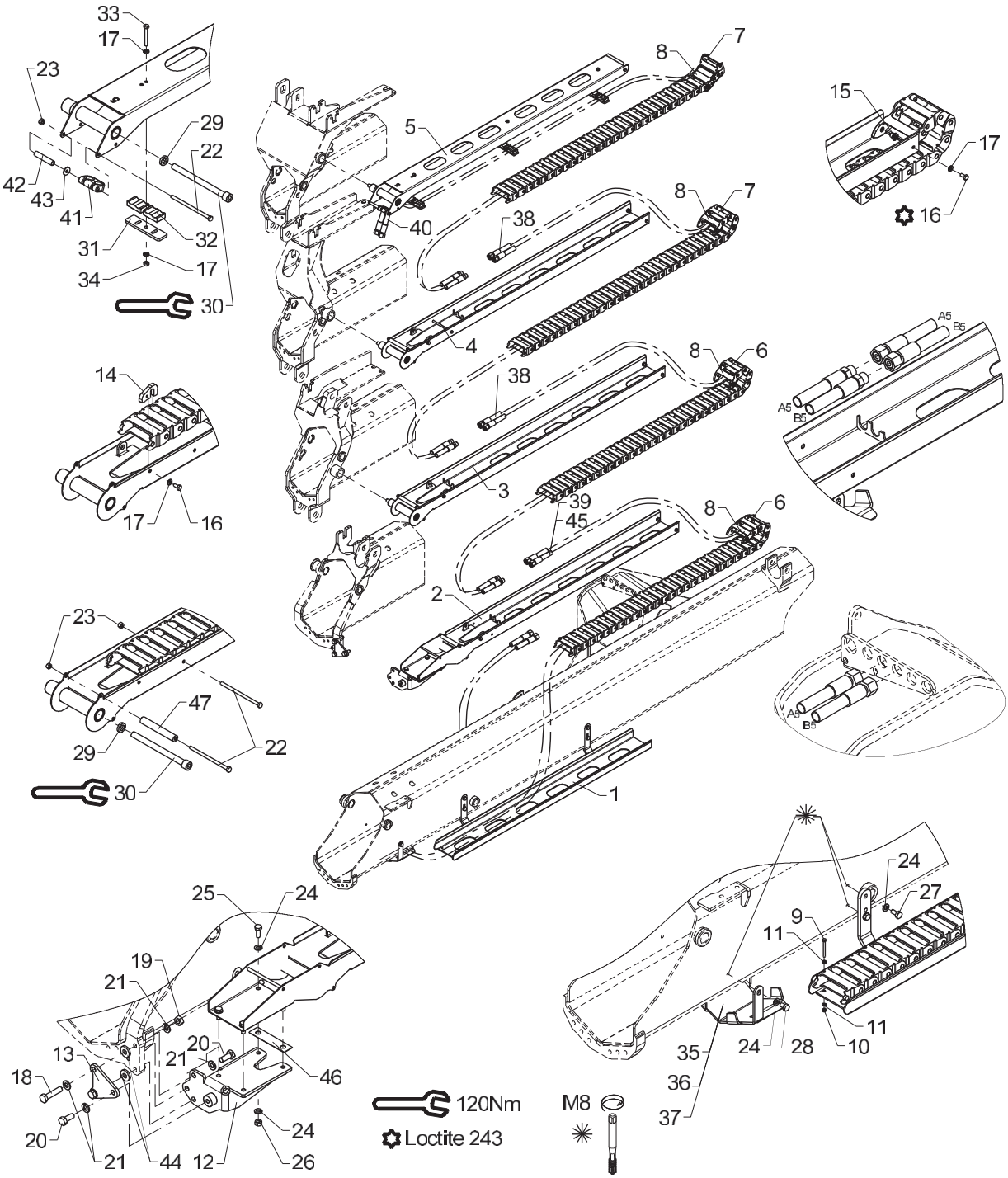

Obsolete

458 09 130

From loader 1170001
To loader 1170076

Created 16-03-2009
Modified 14-01-2013

Hose guides, K4-1 EXV.

Pos	Qty.	Part no.	Description	Remarks
		6342750	Hose guides, K4-1 EXV	
		6346750	Hose guides, K4-1 EXV	
		6365750	Hose guide, K4-1 EXV.	
		6363750	Hose guide, K4-1 EXV.	
1	1	6340721	Guide (jib)	
2	1	6340731	Guide (Extension I)	
3	1	6340741	Guide (Extension II)	
4	1	6340751	Guide (Extension III)	
5	1	6340758	Guide (extension K5)	
6	2	28712	Nylon drag chain, 30 links	
7	2	28713	Nylon drag chain, 33 links	
8	4	63400	End link for nylon drag chain	
9	2	30128	Set screw	M4 x 40
10	2	30857	Lock nut	M4
11	4	31188	Washer, stainless	4 mm
12	1	6340725	Mounting bracket	
13	1	6340729	Plate	
14	3	6340718	Bracket	
15	8	6340719	Nut	
16	11	30111	Set screw, stainless	
17	17	32302	Face washer, stainless	6 mm
18	2	30377	Set screw	M10 x 45
19	2	30858	Nut	M10
20	2	31513	Set screw, stainless	M10 x 25
21	6	31565	Washer, stainless	10 mm
22	5	30167	Steel bolt	M6 x 60
23	5	30884	Lock nut, stainless	M6
24	14	31147	Face washer, 8 mm	
25	4	30132	Set screw, stainless	
26	4	30856	Nut, stainless	M8
27	4	30131	Set screw, stainless	M8 x 16
28	2	30130	Set screw, stainless	M8 x 12
29	3	6340717	Washer	
30	3	32488	Screw	MC12 x 150
31	3	6340769	Adaptor	
32	6	63561	Clamp	
33	3	30118	Steel pin, stainless	M6 x 45
34	3	30854	Nut, stainless	M6
35	1	6340299	Protective guard	Serie 1300/1500
36	1	6344299	Protective guard	Serie 1800/2200
37	1	6365299	Hose shield	Serie 1100/1110

Obsolete

458 09 130

1100K, 1110K, 1220K, 1230K, 1320K, 1330K

63 63 750
63 65 750
63 46 750
Internal ref. 63 42 750

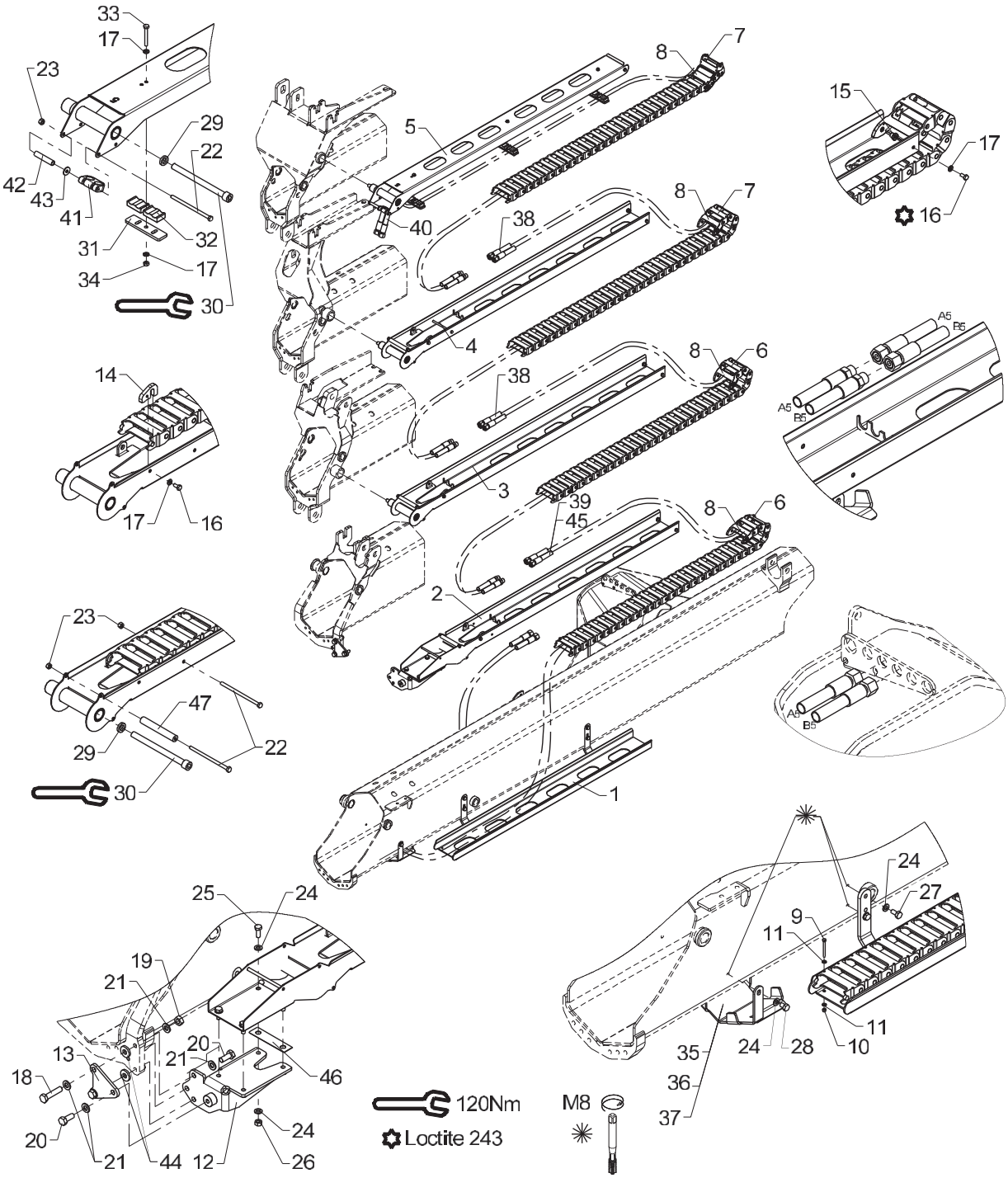

Obsolete

458 09 130

From loader 1170001
To loader 1170076

Created 16-03-2009
Modified 14-01-2013

Hose guides, K4-1 EXV.

Pos	Qty.	Part no.	Description	Remarks
38	4	56564	Hose	
39	2	56569	Hose	
40	2	56565	Hose	
41	1	68028	Clamp	
42	1	6340724	Distance pipe	
43	1	31134	Washer, stainless	
44	2	31756	Washer	Serie 1100/1110
45	2	56458	Hose 3/8 x 3750 mm L/L	Serie 900/910
46	1	6340764	Shim	
47	3	56513	Hose	

1100K, 1110K, 1220K, 1230K, 1320K, 1330K

63 63 750
63 65 750
63 46 750
Internal ref. 63 42 750

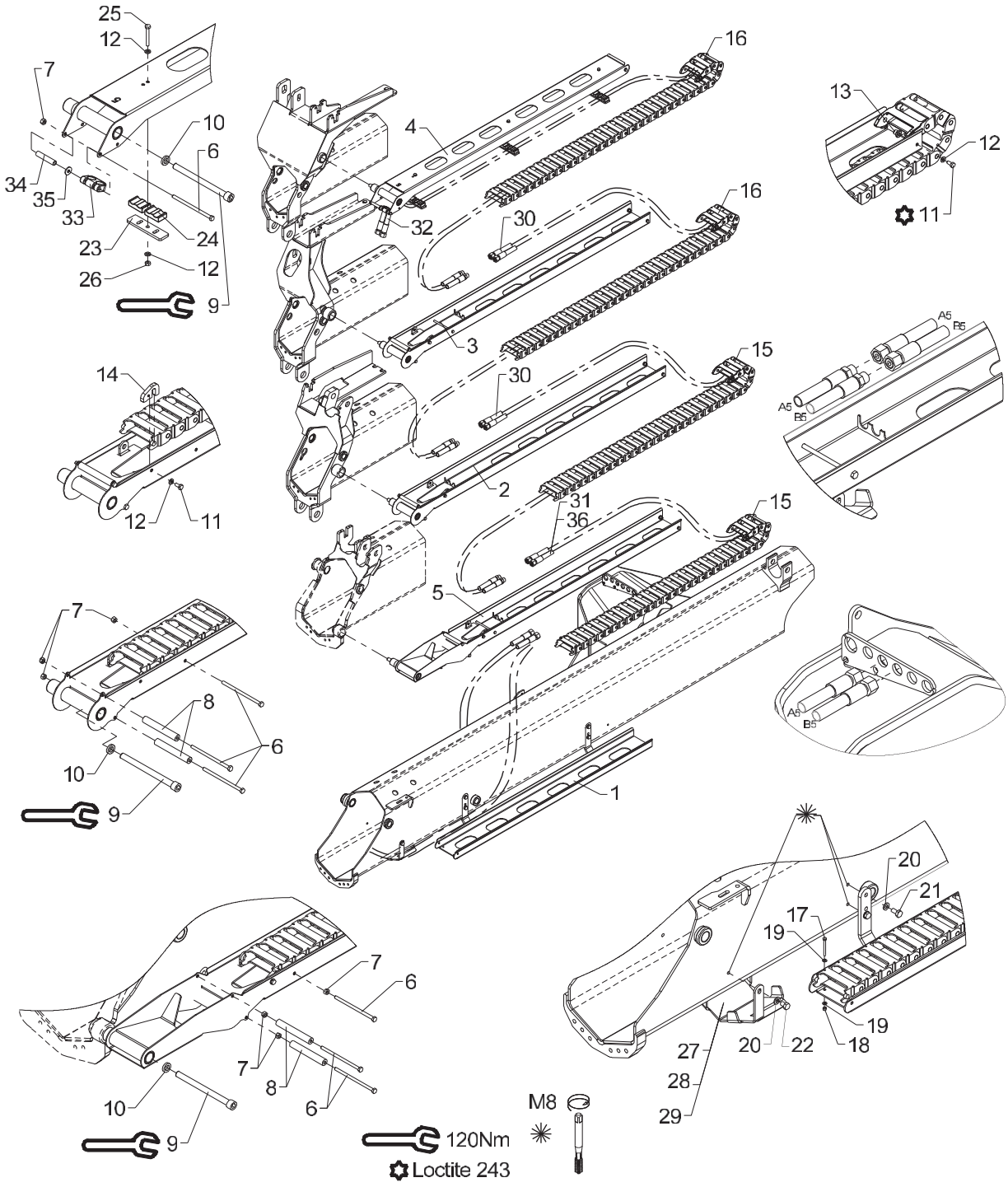

Hose guides, K4-1 EXV.

Pos	Qty.	Part no.	Description	Remarks
		6342750	Hose guides, K4-1 EXV	
		6346750	Hose guides, K4-1 EXV	
		6365750	Hose guide, K4-1 EXV.	
		6363750	Hose guide, K4-1 EXV.	
1	1	6340721	Guide (jib)	
2	1	6340741	Guide (Extension II)	
3	1	6340751	Guide (Extension III)	
4	1	6340758	Guide (extension K5)	
5	1	6341731	Guide (Extension I)	
6	9	30167	Steel bolt	M6 x 60
7	9	30884	Lock nut, stainless	M6
8	6	56513		
9	4	32488	Screw	MC12 x 150
10	4	6340717	Washer	
11	11	30111	Set screw, stainless	
12	17	32302	Face washer, stainless	6 mm
13	8	6340719	Nut	
14	3	6340718	Bracket	
15	2	28712	Nylon drag chain, 31 links	
16	2	28713	Nylon drag chain, 34 links	
17	2	30128	Set screw	M4 x 40
18	2	30857	Lock nut	M4
19	4	31188	Washer, stainless	4 mm
20	6	31147	Face washer, 8 mm	
21	4	30131	Set screw, stainless	M8 x 16
22	2	30130	Set screw, stainless	M8 x 12
23	3	6340769	Adaptor	
24	6	63561	Clamp	
25	3	30118	Steel pin, stainless	M6 x 45
26	3	30854	Nut, stainless	M6
27	1	6340299	Protective guard	Serie 1300/1500
28	1	6344299	Protective guard	Serie 1800/2200
29	1	6365299		Serie 1100/1110
30	4	56564	Hose	
31	2	56569	Hose	
32	2	56565	Hose	
33	1	68028		
34	1	6340724		
35	1	31134	Washer, stainless	
36	2	56458		Serie 900/910

Obsolete

458 09 140

1100K, 1110K, 1220K, 1230K, 1320K, 1330K

63 63 760
63 65 760
63 46 760
Internal ref. 63 42 760

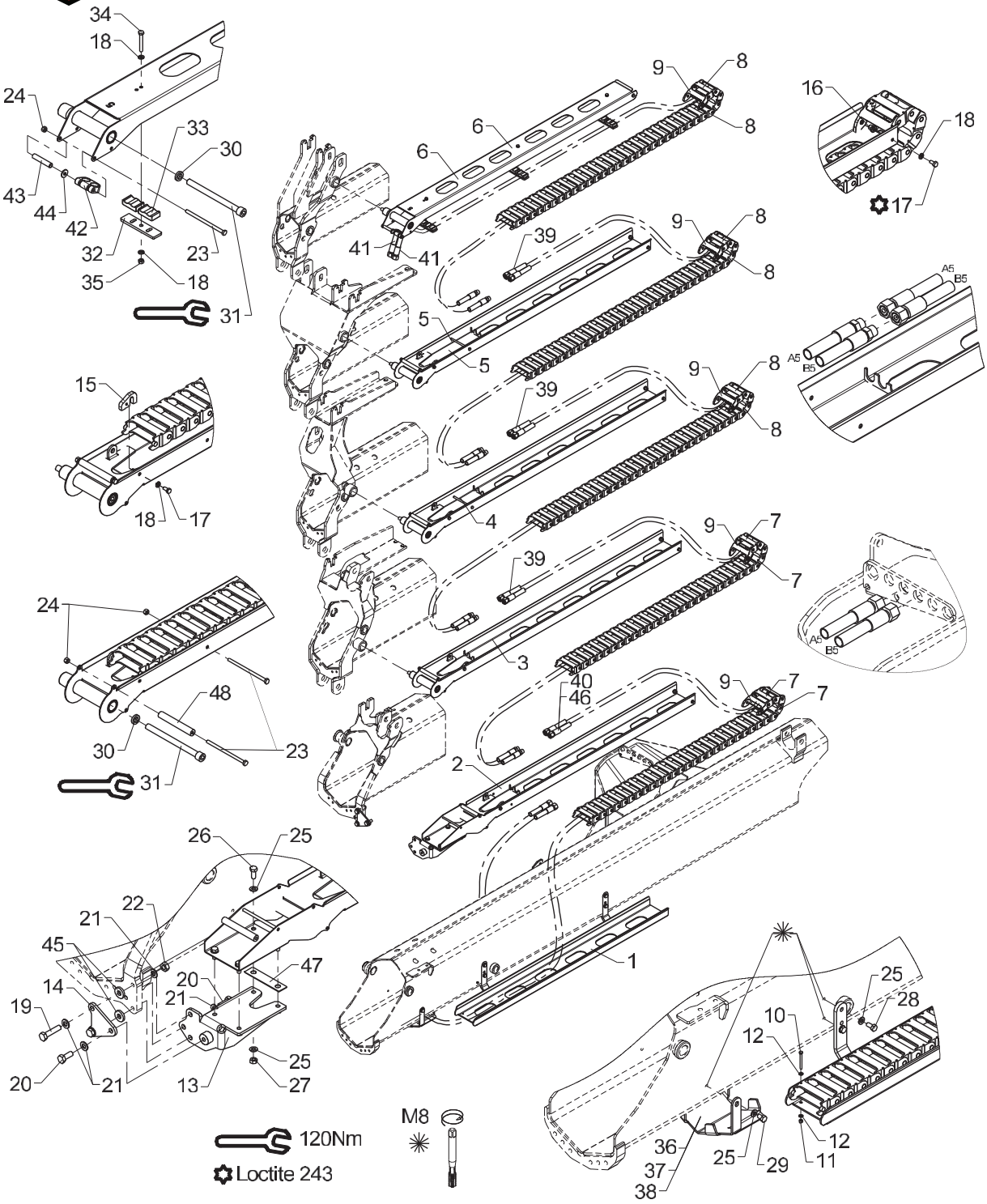

Obsolete

458 09 140

From loader 1170001
To loader 1170076

Created 17-03-2009
Modified 14-01-2013

Hose guides, K5-1 EXV.

Pos	Qty.	Part no.	Description	Remarks
		6342760	Hose guides, K5-1 EXV	
		6346760	Hose guides, K5-1 EXV	
		6365760	Hose guide, K5-1 EXV.	
		6363760	Hose guide, K5-1 EXV.	
1	1	6340721	Guide (jib)	
2	1	6340731	Guide (Extension I)	
3	1	6340741	Guide (Extension II)	
4	1	6340751	Guide (Extension III)	
5	1	6340755	Guide (Extension IV)	
6	1	6340758	Guide (extension K5)	
7	2	28712	Nylon drag chain, 30 links	
8	3	28713	Nylon drag chain, 33 links	
9	5	63400	End link for nylon drag chain	
10	2	30128	Set screw	M4 x 40
11	2	30857	Lock nut	M4
12	4	31188	Washer, stainless	4 mm
13	1	6340725	Mounting bracket	
14	1	6340729	Plate	
15	4	6340718	Bracket	
16	10	6340719	Nut	
17	14	30111	Set screw, stainless	
18	20	32302	Face washer, stainless	6 mm
19	2	30377	Set screw	M10 x 45
20	2	31513	Set screw, stainless	M10 x 25
21	6	31565	Washer, stainless	10 mm
22	2	30858	Nut	M10
23	7	30167	Steel bolt	M6 x 60
24	7	30884	Lock nut, stainless	M6
25	14	31147	Face washer, 8 mm	
26	4	30132	Set screw, stainless	
27	4	30856	Nut, stainless	M8
28	4	30131	Set screw, stainless	M8 x 16
29	2	30130	Set screw, stainless	M8 x 12
30	4	6340717	Washer	
31	4	32488	Screw	MC12 x 150
32	3	6340769	Adaptor	
33	6	63561	Clamp	
34	3	30118	Steel pin, stainless	M6 x 45
35	3	30854	Nut, stainless	M6
36	1	6340299	Protective guard	Serie 1300/1500
37	1	6344299	Protective guard	Serie 1800/2200

Obsolete

458 09 140

1100K, 1110K, 1220K, 1230K, 1320K, 1330K

63 63 760
63 65 760
63 46 760
Internal ref. 63 42 760

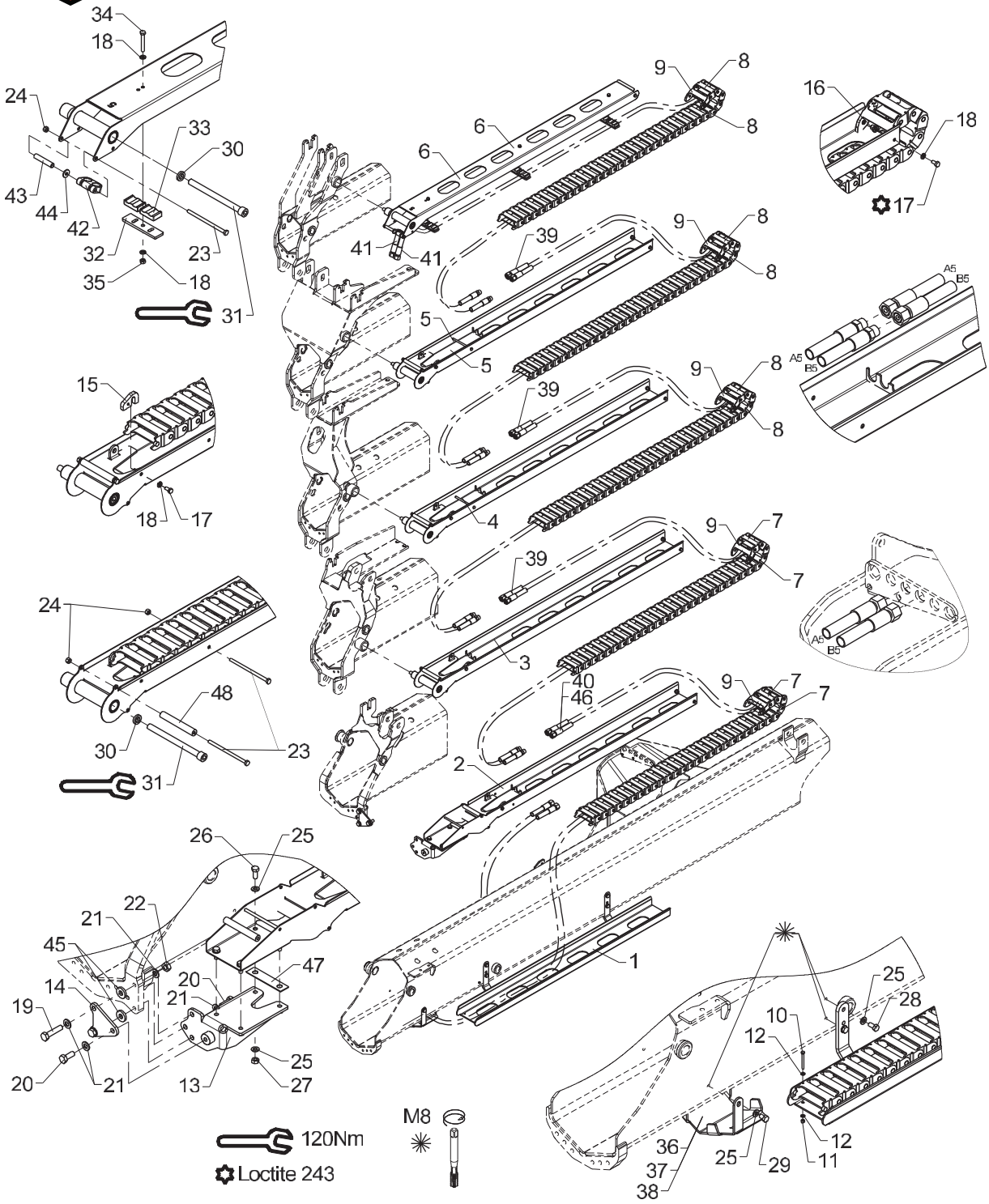

Obsolete

458 09 140

From loader 1170001
To loader 1170076

Created 17-03-2009
Modified 14-01-2013

Hose guides, K5-1 EXV.

Pos	Qty.	Part no.	Description	Remarks
38	1	6365299	Hose shield	Serie 1100/1110
39	6	56564	Hose	
40	2	56569	Hose	
41	2	56565	Hose	
42	1	68028	Clamp	
43	1	6340724	Distance pipe	
44	1	31134	Washer, stainless	
45	2	31756	Washer	Serie 1100/1110
46	2	56458	Hose 3/8 x 3750 mm L/L	Serie 900/910
47	1	6340764	Shim	
48	4	56513	Hose	

1100K, 1110K, 1220K, 1230K, 1320K, 1330K

63 63 760
63 65 760
63 46 760
Internal ref. 63 42 760

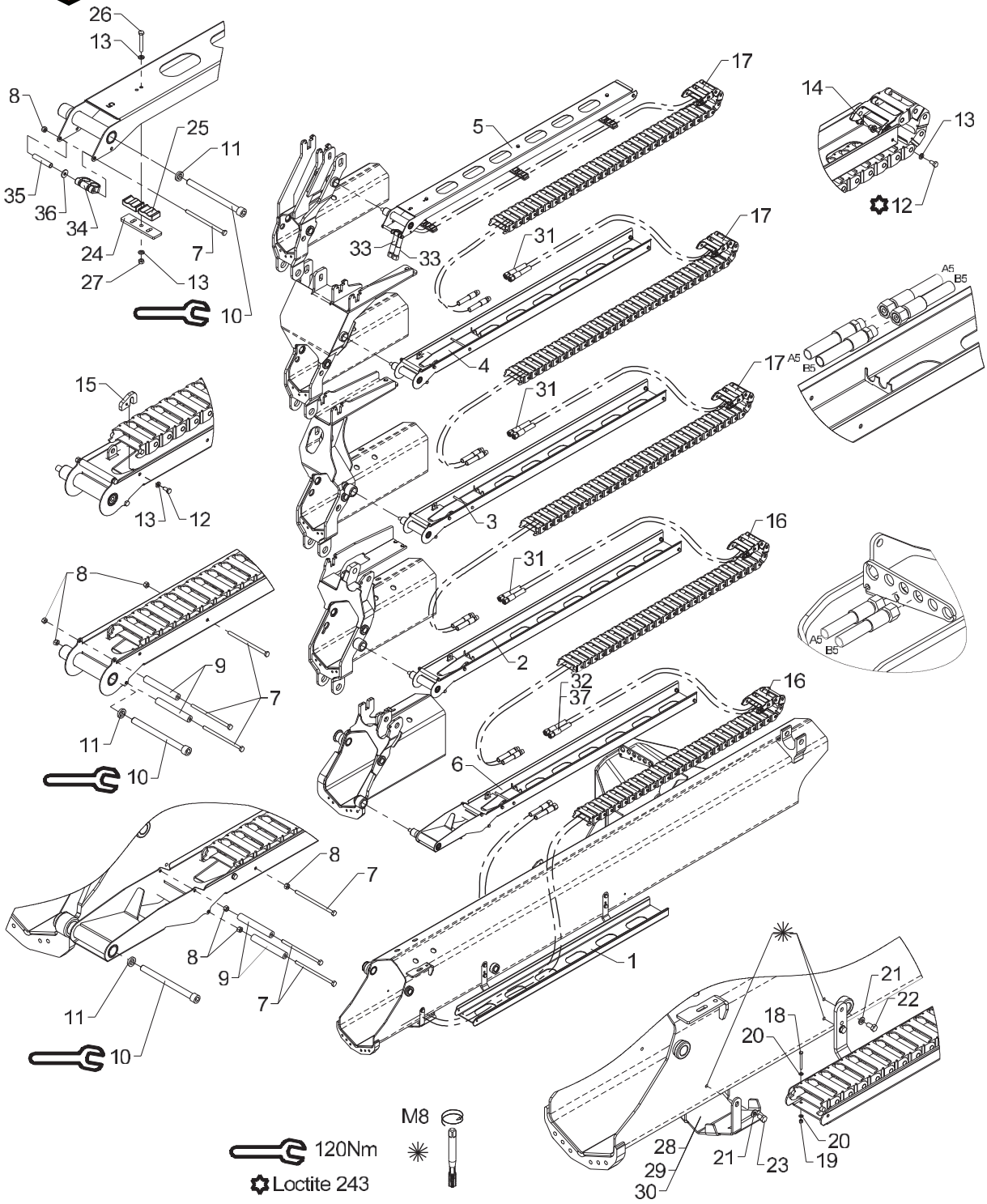

Hose guides, K5-1 EXV.

Pos	Qty.	Part no.	Description	Remarks
		6342760	Hose guides, K5-1 EXV	
		6346760	Hose guides, K5-1 EXV	
		6365760	Hose guide, K5-1 EXV.	
		6363760	Hose guide, K5-1 EXV.	
1	1	6340721	Guide (jib)	
2	1	6340741	Guide (Extension II)	
3	1	6340751	Guide (Extension III)	
4	1	6340755	Guide (Extension IV)	
5	1	6340758	Guide (extension K5)	
6	1	6341731	Guide (Extension I)	
7	12	30167	Steel bolt	M6 x 60
8	12	30884	Lock nut, stainless	M6
9	8	56513		
10	5	32488	Screw	MC12 x 150
11	5	6340717	Washer	
12	14	30111	Set screw, stainless	
13	20	32302	Face washer, stainless	6 mm
14	10	6340719	Nut	
15	4	6340718	Bracket	
16	2	28712	Nylon drag chain, 31 links	
17	3	28713	Nylon drag chain, 34 links	
18	2	30128	Set screw	M4 x 40
19	2	30857	Lock nut	M4
20	4	31188	Washer, stainless	4 mm
21	6	31147	Face washer, 8 mm	
22	4	30131	Set screw, stainless	M8 x 16
23	2	30130	Set screw, stainless	M8 x 12
24	3	6340769	Adaptor	
25	6	63561	Clamp	
26	3	30118	Steel pin, stainless	M6 x 45
27	3	30854	Nut, stainless	M6
28	1	6340299	Protective guard	Serie 1300/1500
29	1	6344299	Protective guard	Serie 1800/2200
30	1	6365299		Serie 1100/1110
31	6	56564	Hose	
32	2	56569	Hose	
33	2	56565	Hose	
34	1	68028		
35	1	6340724		
36	1	31134	Washer, stainless	
37	2	56458		Serie 900/910

1100K, 1110K, 1220K, 1230K, 1320K, 1330K

63 55 770
63 63 820
63 65 820
Internal ref. 63 40 720

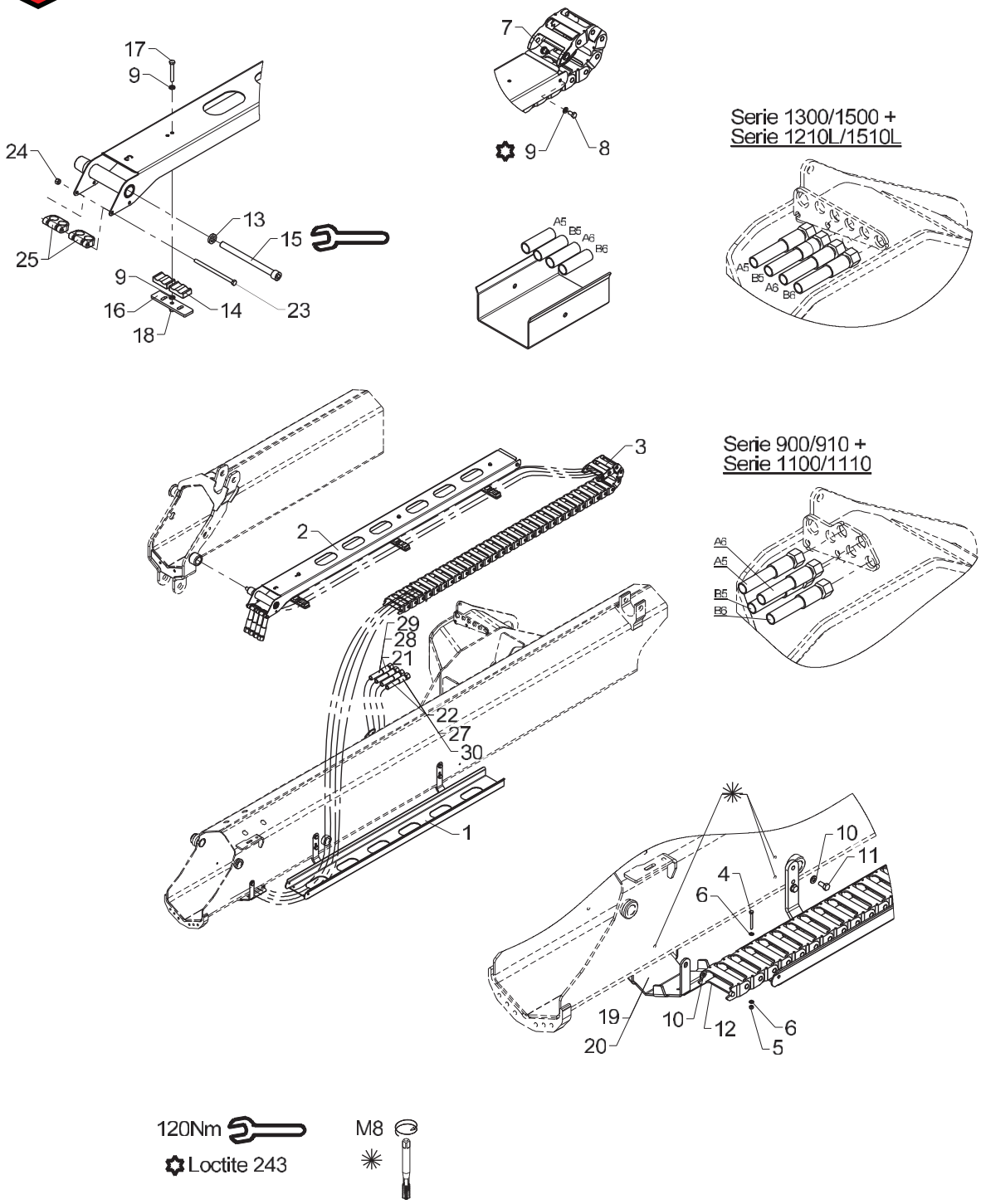

Hose guides, K1-2 EXV.

Created 17-03-2009
Modified 31-08-2015

Pos	Qty.	Part no.	Description	Remarks
		6340720	Hose guide, K1-2 EXV	1300/1500
		6365820	Hose guide, K1-2 EXV.	1100/1110
		6363820	Hose guide, K1-2 EXV.	900/910
		6355770	Hose guides, L1-2 EXV	1210L/1510L
1	1	6340721	Guide (jib)	
2	1	6340748	Guide (extension K3)	
3	1	28713	Nylon drag chain, 34 links	
4	2	30128	Set screw	M4 x 40
5	2	30857	Lock nut	M4
6	4	31188	Washer, stainless	4 mm
7	2	6340719	Nut	
8	2	30111	Set screw, stainless	
9	8	32302	Face washer, stainless	6 mm
10	6	31147	Face washer, 8 mm	
11	4	30131	Set screw, stainless	M8 x 16
12	2	30130	Set screw, stainless	M8 x 12
13	1	6340717	Washer	
14	6	63561	Clamp	
15	1	32488	Screw	MC12 x 150
16	3	6340769	Adaptor	
17	3	30118	Steel pin, stainless	M6 x 45
18	3	30854	Nut, stainless	M6
19	1	6340299	Protective guard	Serie 1300/1500/1210L/1510L
20	1	6365299		Serie 1100/1110, 900/910
21	2	56566	Hose	Serie 1300/1500, 1100/1110
22	2	56567	Hose	Serie 1300/1500, 1100/1110
23	1	30167	Steel bolt	M6 x 60
24	1	30884	Lock nut, stainless	M6
25	2	68028		
26	2	56911		Serie 900/910
27	2	56910		Serie 900/910
28	2	56957		Serie 1210L/1510L
29	2	56958		Serie 1210L/1510L

Obsolete

458 09 210

1100K, 1110K, 1220K, 1230K, 1320K, 1330K

63 63 830
63 65 830
63 45 730
Internal ref. 63 40 730

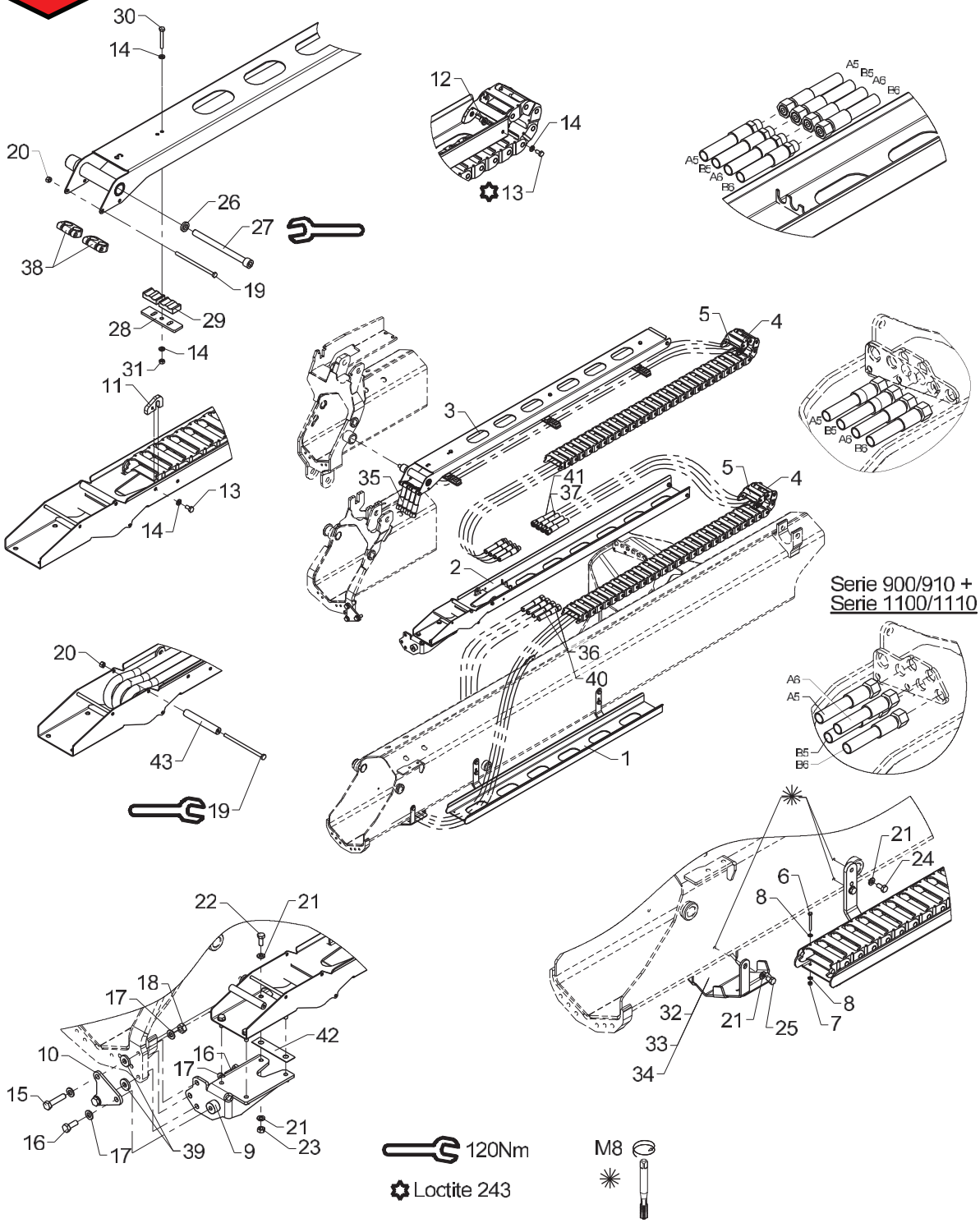

Obsolete

458 09 210

From loader 1170001
To loader 1170076

Created 17-03-2009
Modified 07-01-2013

Hose guides, K2-2 EXV.

Pos	Qty.	Part no.	Description	Remarks
		6340730	Hose guide, K2-1 EXV	
		6345730	Hose guide, K2-2 EXV	
		6365830	Hose guide, K2-2 EXV.	
		6363830	Hose guide, K2-2 EXV.	
1	1	6340721	Guide (jib)	
2	1	6340731	Guide (Extension I)	
3	1	6340748	Guide (extension K3)	
4	2	28712	Nylon drag chain, 30 links	
5	2	63400	End link for nylon drag chain	
6	2	30128	Set screw	M4 x 40
7	2	30857	Lock nut	M4
8	4	31188	Washer, stainless	4 mm
9	1	6340725	Mounting bracket	
10	1	6340729	Plate	
11	1	6340718	Bracket	
12	4	6340719	Nut	
13	5	30111	Set screw, stainless	
14	11	32302	Face washer, stainless	6 mm
15	2	30377	Set screw	M10 x 45
16	2	31513	Set screw, stainless	M10 x 25
17	6	31565	Washer, stainless	10 mm
18	2	30858	Nut	M10
19	2	30167	Steel bolt	M6 x 60
20	2	30884	Lock nut, stainless	M6
21	14	31147	Face washer, 8 mm	
22	4	30132	Set screw, stainless	
23	4	30856	Nut, stainless	M8
24	4	30131	Set screw, stainless	M8 x 16
25	2	30130	Set screw, stainless	M8 x 12
26	1	6340717	Washer	
27	1	32488	Screw	MC12 x 150
28	3	6340769	Adaptor	
29	6	63561	Clamp	
30	3	30118	Steel pin, stainless	M6 x 45
31	3	30854	Nut, stainless	M6
32	1	6340299	Protective guard	Serie 1300/1500
33	1	6344299	Protective guard	Serie 1800/2200
34	1	6365299	Hose shield	Serie 1100/1110
35	4	56568	Hose	
36	2	56563	Hose	
37	2	56569	Hose	

Obsolete

458 09 210

1100K, 1110K, 1220K, 1230K, 1320K, 1330K

63 63 830
63 65 830
63 45 730
Internal ref. 63 40 730

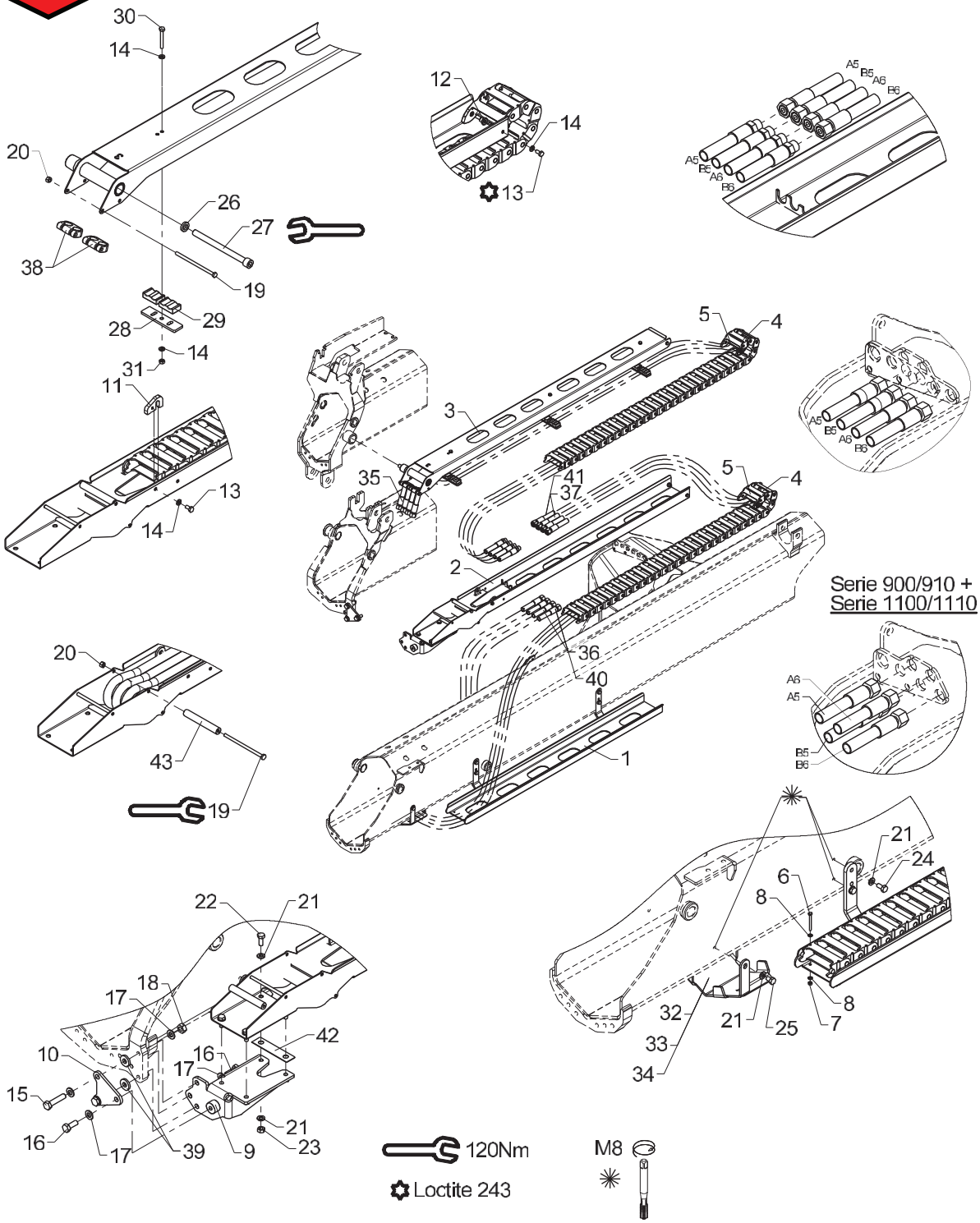

Obsolete

458 09 210

From loader 1170001
To loader 1170076

Created 17-03-2009
Modified 07-01-2013

Hose guides, K2-2 EXV.

Pos	Qty.	Part no.	Description	Remarks
38	2	68028	Clamp	
39	2	31756	Washer	Serie 1100/1110
40	2	56462	Hose 3/8 x 3850 mm	Serie 900/910
41	2	56458	Hose 3/8 x 3750 mm L/L	Serie 900/910
42	1	6340764	Shim	
43	1	56513	Hose	

1100K, 1110K, 1220K, 1230K, 1320K, 1330K

63 63 830
63 65 830
63 45 730
Internal ref. 63 40 730

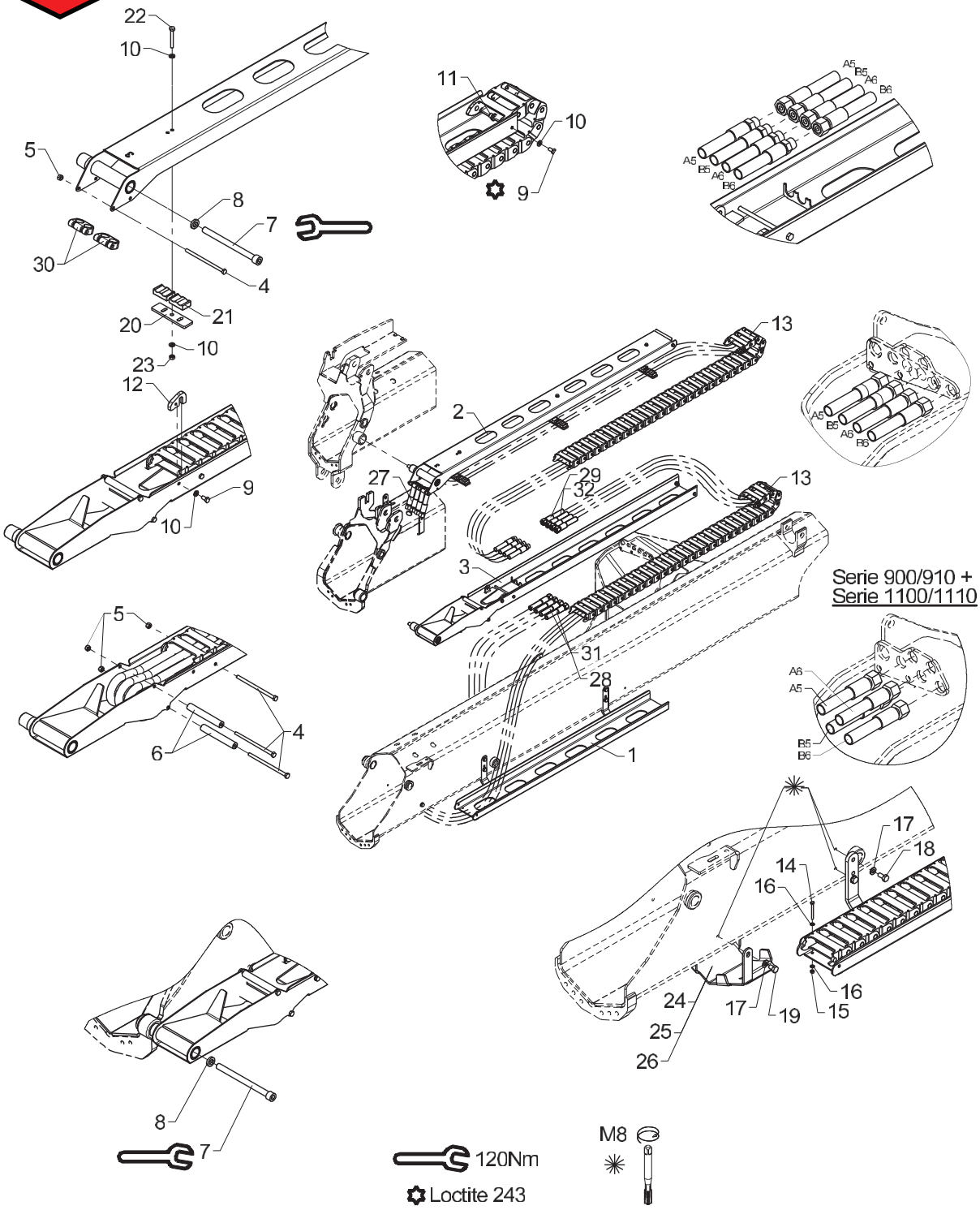

Hose guides, K2-2 EXV.

Pos	Qty.	Part no.	Description	Remarks
		6340730	Hose guide, K2-1 EXV	
		6345730	Hose guide, K2-2 EXV	
		6365830	Hose guide, K2-2 EXV.	
		6363830	Hose guide, K2-2 EXV.	
1	1	6340721	Guide (jib)	
2	1	6340748	Guide (extension K3)	
3	1	6341731	Guide (Extension I)	
4	4	30167	Steel bolt	M6 x 60
5	4	30884	Lock nut, stainless	M6
6	2	56513		
7	2	32488	Screw	MC12 x 150
8	2	6340717	Washer	
9	5	30111	Set screw, stainless	
10	11	32302	Face washer, stainless	6 mm
11	4	6340719	Nut	
12	1	6340718	Bracket	
13	2	28712	Nylon drag chain, 31 links	
14	2	30128	Set screw	M4 x 40
15	2	30857	Lock nut	M4
16	4	31188	Washer, stainless	4 mm
17	6	31147	Face washer, 8 mm	
18	4	30131	Set screw, stainless	M8 x 16
19	2	30130	Set screw, stainless	M8 x 12
20	3	6340769	Adaptor	
21	6	63561	Clamp	
22	3	30118	Steel pin, stainless	M6 x 45
23	3	30854	Nut, stainless	M6
24	1	6340299	Protective guard	Serie 1300/1500
25	1	6344299	Protective guard	Serie 1800/2200
26	1	6365299		Serie 1100/1110
27	4	56568	Hose	
28	2	56563	Hose	
29	2	56569	Hose	
30	2	68028		
31	2	56462		Serie 900/910
32	2	56458		Serie 900/910

Obsolete

458 09 220

1100K, 1110K, 1220K, 1230K, 1320K, 1330K

63 63 840
63 65 840
63 45 740
Internal ref. 63 40 740

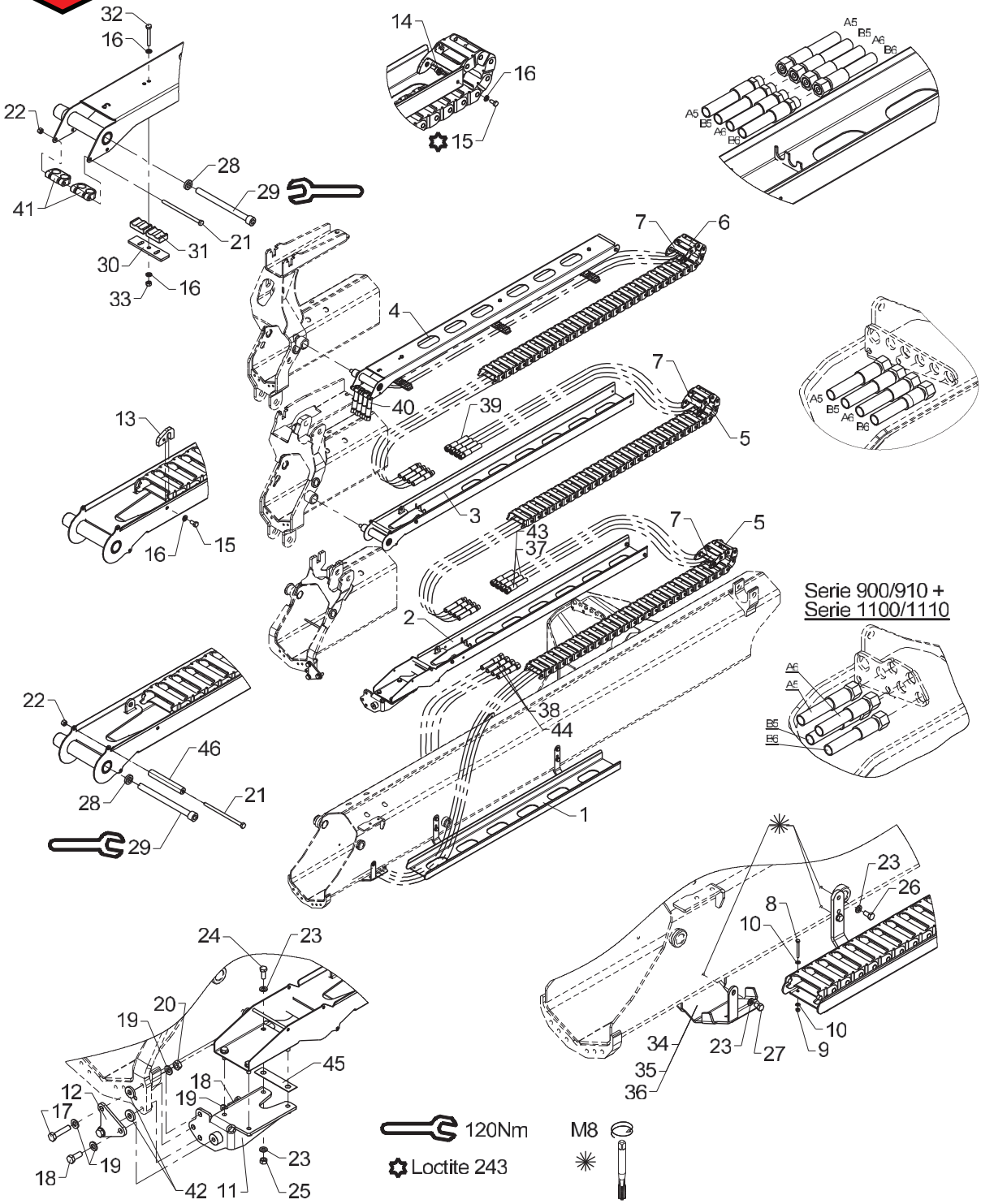

Obsolete

458 09 220

From loader 1170001
To loader 1170076

Created 17-03-2009
Modified 07-01-2013

Hose guides, K3-2 EXV.

Pos	Qty.	Part no.	Description	Remarks
		6340740	Hose guide, K3-2 EXV	
		6345740	Hose guides, K3-2 EXV	
		6365840	Hose guide, K3-2 EXV.	
		6363840	Hose guide, K3-2 EXV.	
1	1	6340721	Guide (jib)	
2	1	6340731	Guide (Extension I)	
3	1	6340741	Guide (Extension II)	
4	1	6340748	Guide (extension K3)	
5	2	28712	Nylon drag chain, 30 links	
6	1	28713	Nylon drag chain, 33 links	
7	3	63400	End link for nylon drag chain	
8	2	30128	Set screw	M4 x 40
9	2	30857	Lock nut	M4
10	4	31188	Washer, stainless	4 mm
11	1	6340725	Mounting bracket	
12	1	6340729	Plate	
13	2	6340718	Bracket	
14	6	6340719	Nut	
15	8	30111	Set screw, stainless	
16	14	32302	Face washer, stainless	6 mm
17	2	30377	Set screw	M10 x 45
18	2	31513	Set screw, stainless	M10 x 25
19	6	31565	Washer, stainless	10 mm
20	2	30858	Nut	M10
21	3	30167	Steel bolt	M6 x 60
22	3	30884	Lock nut, stainless	M6
23	14	31147	Face washer, 8 mm	
24	4	30132	Set screw, stainless	
25	4	30856	Nut, stainless	M8
26	4	30131	Set screw, stainless	M8 x 16
27	2	30130	Set screw, stainless	M8 x 12
28	2	6340717	Washer	
29	2	32488	Screw	MC12 x 150
30	3	6340769	Adaptor	
31	6	63561	Clamp	
32	3	30118	Steel pin, stainless	M6 x 45
33	3	30854	Nut, stainless	M6
34	1	6340299	Protective guard	Serie 1300/1500
35	1	6344299	Protective guard	Serie 1800/2200
36	1	6365299	Hose shield	Serie 1100/1110
37	2	56569	Hose	

Obsolete

458 09 220

1100K, 1110K, 1220K, 1230K, 1320K, 1330K

63 63 840
63 65 840
63 45 740
Internal ref. 63 40 740

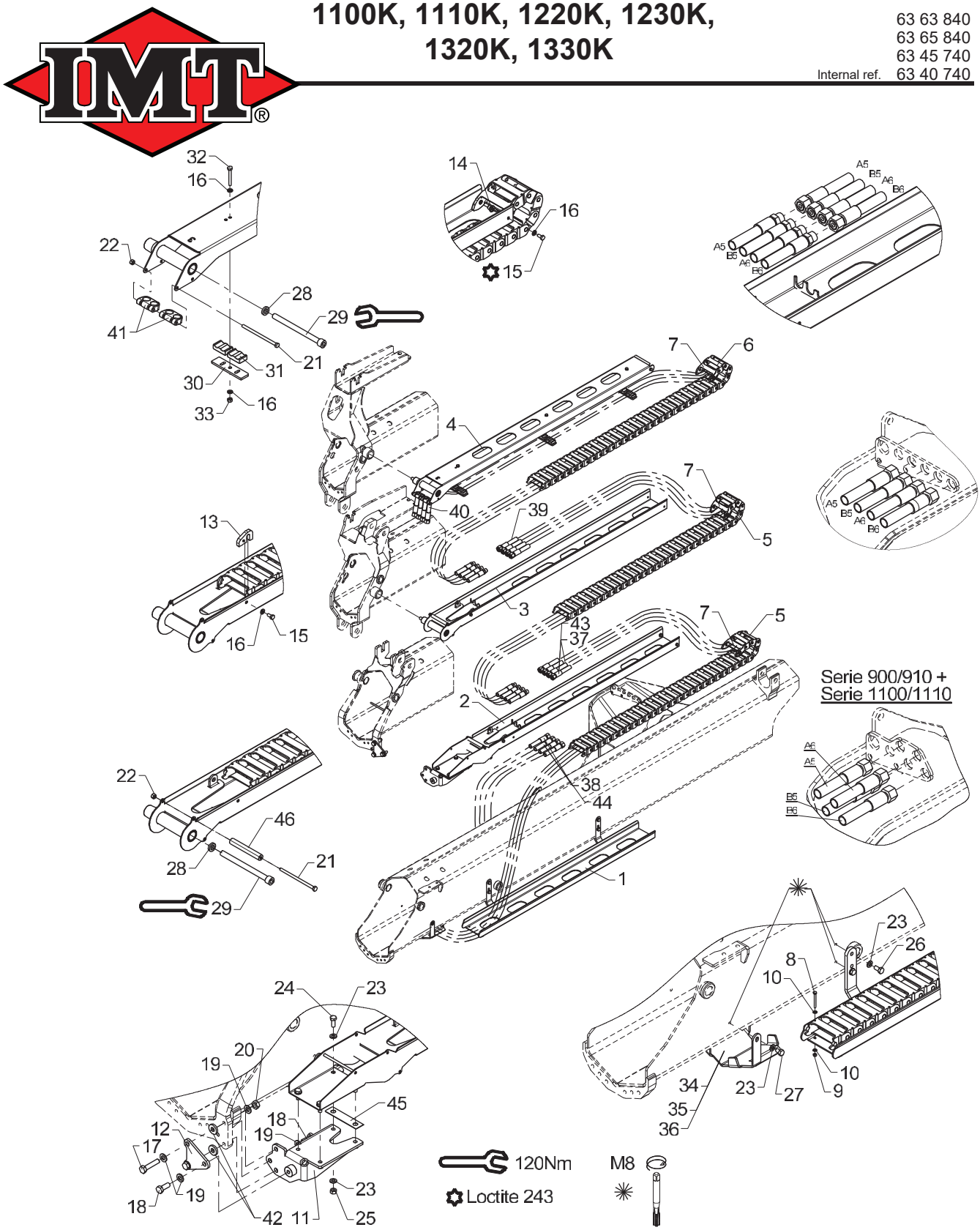

Obsolete

458 09 220

From loader 1170001
To loader 1170076

Created 17-03-2009
Modified 07-01-2013

Hose guides, K3-2 EXV.

Pos	Qty.	Part no.	Description	Remarks
38	2	56563	Hose	
39	4	56564	Hose	
40	4	56565	Hose	
41	2	68028	Clamp	
42	2	31756	Washer	Serie 1100/1110
43	2	56458	Hose 3/8 x 3750 mm L/L	Serie 900/910
44	2	56462	Hose 3/8 x 3850 mm	Serie 900/910
45	1	6340764	Shim	
46	2	56513	Hose	

1100K, 1110K, 1220K, 1230K, 1320K, 1330K

63 63 840
63 65 840
63 45 530
63 45 740
Internal ref. 63 40 740

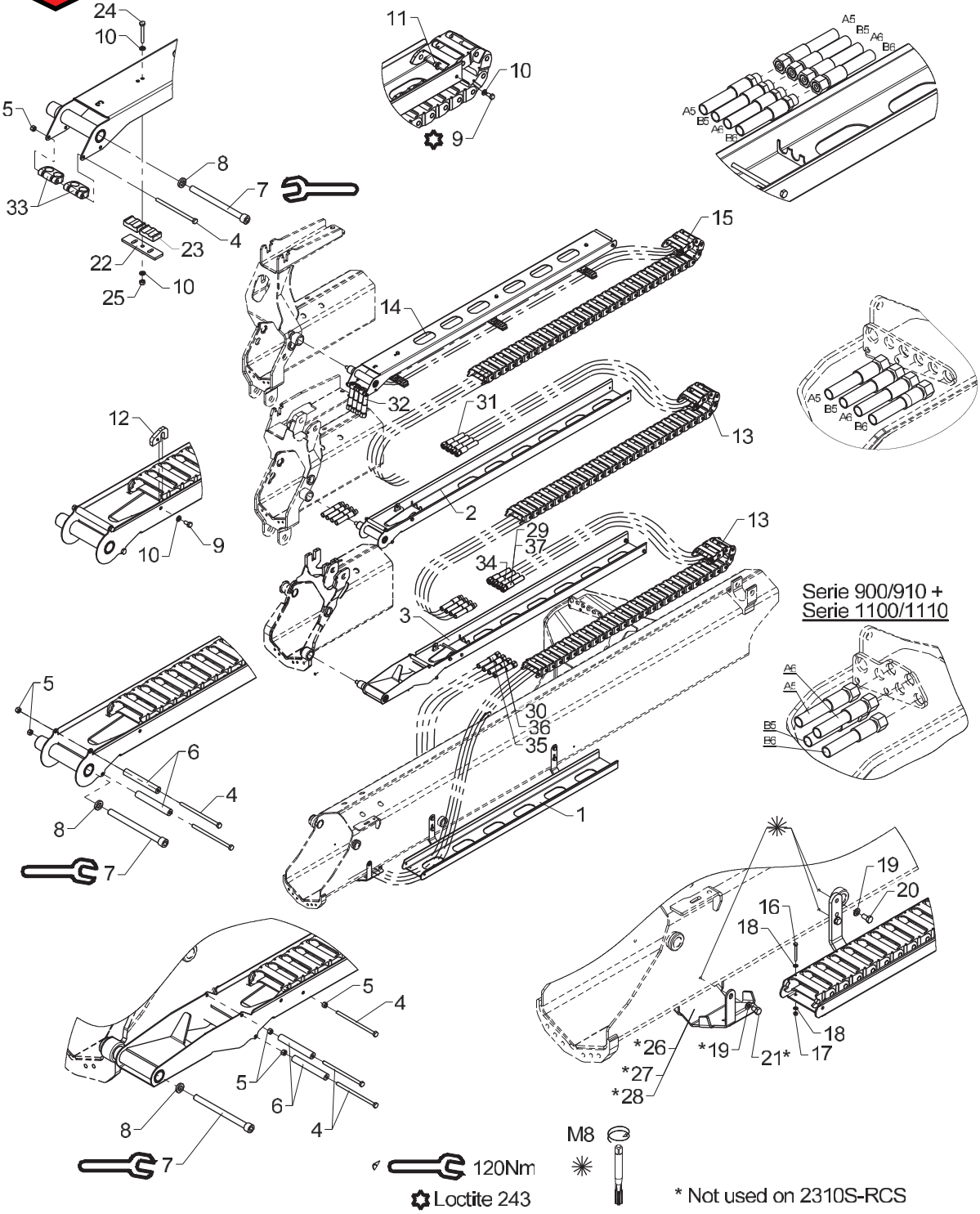

Hose guides, K3-2 EXV.

Pos	Qty.	Part no.	Description	Remarks
		6340740	Hose guide, K3-2 EXV	
		6345740	Hose guides, K3-2 EXV	
		6345530	Hose guide, K3-2 EXV.	
		6365840	Hose guide, K3-2 EXV.	
		6363840		
1	1	6340721	Guide (jib)	
2	1	6340741	Guide (Extension II)	
3	1	6341731	Guide (Extension I)	
4	6	30167	Steel bolt	M6 x 60
5	6	30884	Lock nut, stainless	M6
6	4	56513		
7	3	32488	Screw	MC12 x 150
8	3	6340717	Washer	
9	8	30111	Set screw, stainless	
10	14	32302	Face washer, stainless	6 mm
11	6	6340719	Nut	
12	2	6340718	Bracket	
13	2	28712	Nylon drag chain, 31 links	
14	1	6340748	Guide (extension K3)	
15	1	28713	Nylon drag chain, 34 links	
16	2	30128	Set screw	M4 x 40
17	2	30857	Lock nut	M4
18	4	31188	Washer, stainless	4 mm
19	6	31147	Face washer, 8 mm	
20	4	30131	Set screw, stainless	M8 x 16
21	2	30130	Set screw, stainless	M8 x 12
22	3	6340769	Adaptor	
23	6	63561	Clamp	
24	3	30118	Steel pin, stainless	M6 x 45
25	3	30854	Nut, stainless	M6
26	1	6340299	Protective guard	Serie 1300/1500
27	1	6344299	Protective guard	Serie 1800/2200
28	1	6365299		Serie 1100/1110
29	2	56569	Hose	
30	2	56563	Hose	
31	4	56564	Hose	
32	4	56565	Hose	
33	2	68028		
34	2	56458		
35	2	56462		
36	2	56906		Serie 2310S-RCS

1100K, 1110K, 1220K, 1230K, 1320K, 1330K

63 63 840
63 65 840
63 45 530
63 45 740
Internal ref. 63 40 740

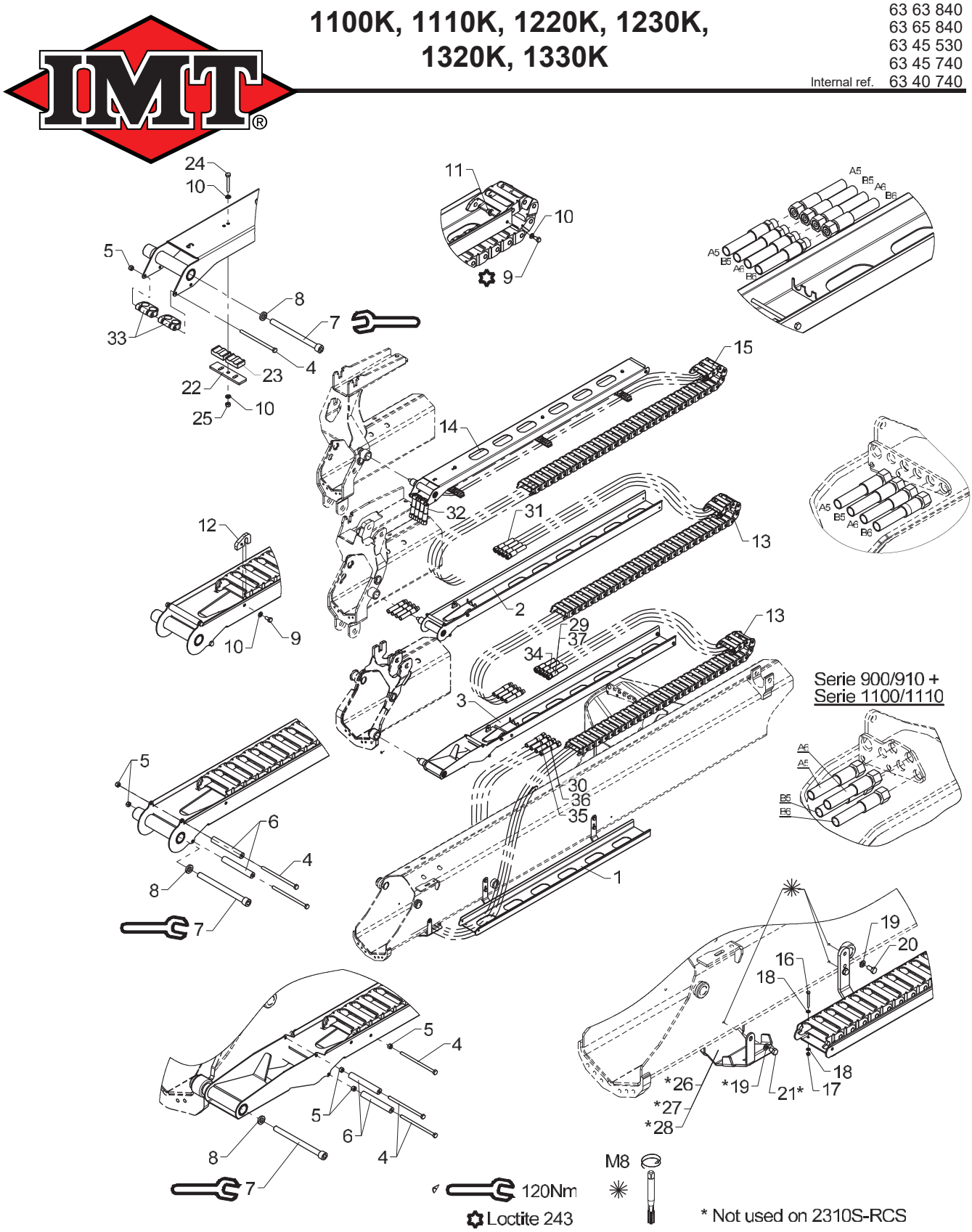

Hose guides, K3-2 EXV.

Pos	Qty.	Part no.	Description	Remarks
37	2	62595		Serie 2310S-RCS

Obsolete

458 09 230

1100K, 1110K, 1220K, 1230K, 1320K, 1330K

63 63 850
63 65 850
63 45 750
Internal ref. 63 40 750

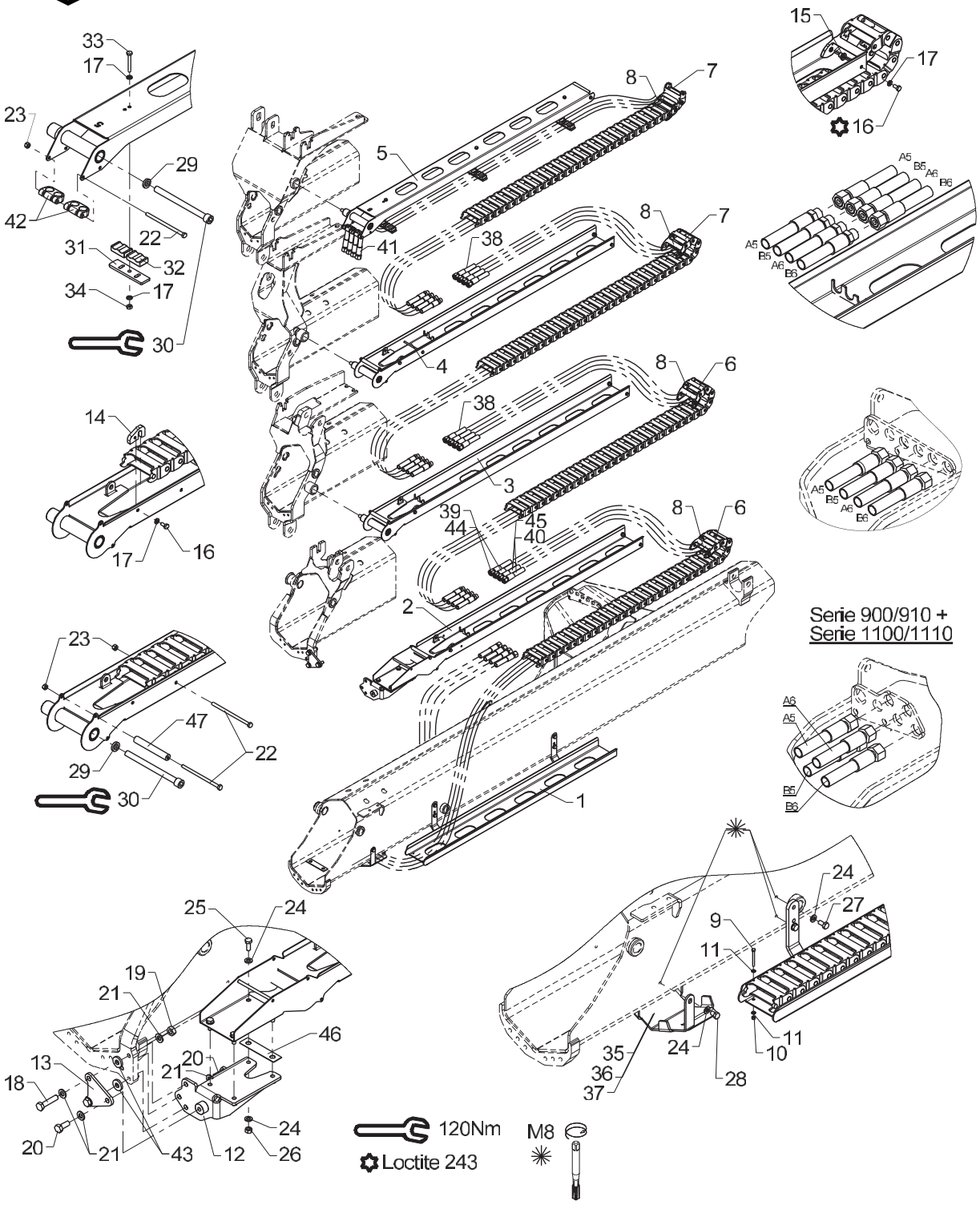

Obsolete

458 09 230

From loader 1170001
To loader 1170076

Created 17-03-2009
Modified 11-01-2013

Hose guides, K4-2 EXV.

Pos	Qty.	Part no.	Description	Remarks
		6340750	Hose guides, K4-2 EXV	
		6345750	Hose guides, K4-2 EXV	
		6365850	Hose guide, K4-2 EXV.	
		6363850	Hose guide, K4-2 EXV.	
1	1	6340721	Guide (jib)	
2	1	6340731	Guide (Extension I)	
3	1	6340741	Guide (Extension II)	
4	1	6340751	Guide (Extension III)	
5	1	6340758	Guide (extension K5)	
6	2	28712	Nylon drag chain, 30 links	
7	2	28713	Nylon drag chain, 33 links	
8	4	63400	End link for nylon drag chain	
9	2	30128	Set screw	M4 x 40
10	2	30857	Lock nut	M4
11	4	31188	Washer, stainless	4 mm
12	1	6340725	Mounting bracket	
13	1	6340729	Plate	
14	3	6340718	Bracket	
15	8	6340719	Nut	
16	11	30111	Set screw, stainless	
17	17	32302	Face washer, stainless	6 mm
18	2	30377	Set screw	M10 x 45
19	2	30858	Nut	M10
20	2	31513	Set screw, stainless	M10 x 25
21	6	31565	Washer, stainless	10 mm
22	5	30167	Steel bolt	M6 x 60
23	5	30884	Lock nut, stainless	M6
24	14	31147	Face washer, 8 mm	
25	4	30132	Set screw, stainless	
26	4	30856	Nut, stainless	M8
27	4	30131	Set screw, stainless	M8 x 16
28	2	30130	Set screw, stainless	M8 x 12
29	3	6340717	Washer	
30	3	32488	Screw	MC12 x 150
31	3	6340769	Adaptor	
32	6	63561	Clamp	
33	3	30118	Steel pin, stainless	M6 x 45
34	3	30854	Nut, stainless	M6
35	1	6340299	Protective guard	Serie 1300/1500
36	1	6344299	Protective guard	Serie 1800/2200
37	1	6365299	Hose shield	Serie 1100/1110

Obsolete

458 09 230

1100K, 1110K, 1220K, 1230K, 1320K, 1330K

63 63 850
63 65 850
63 45 750
Internal ref. 63 40 750

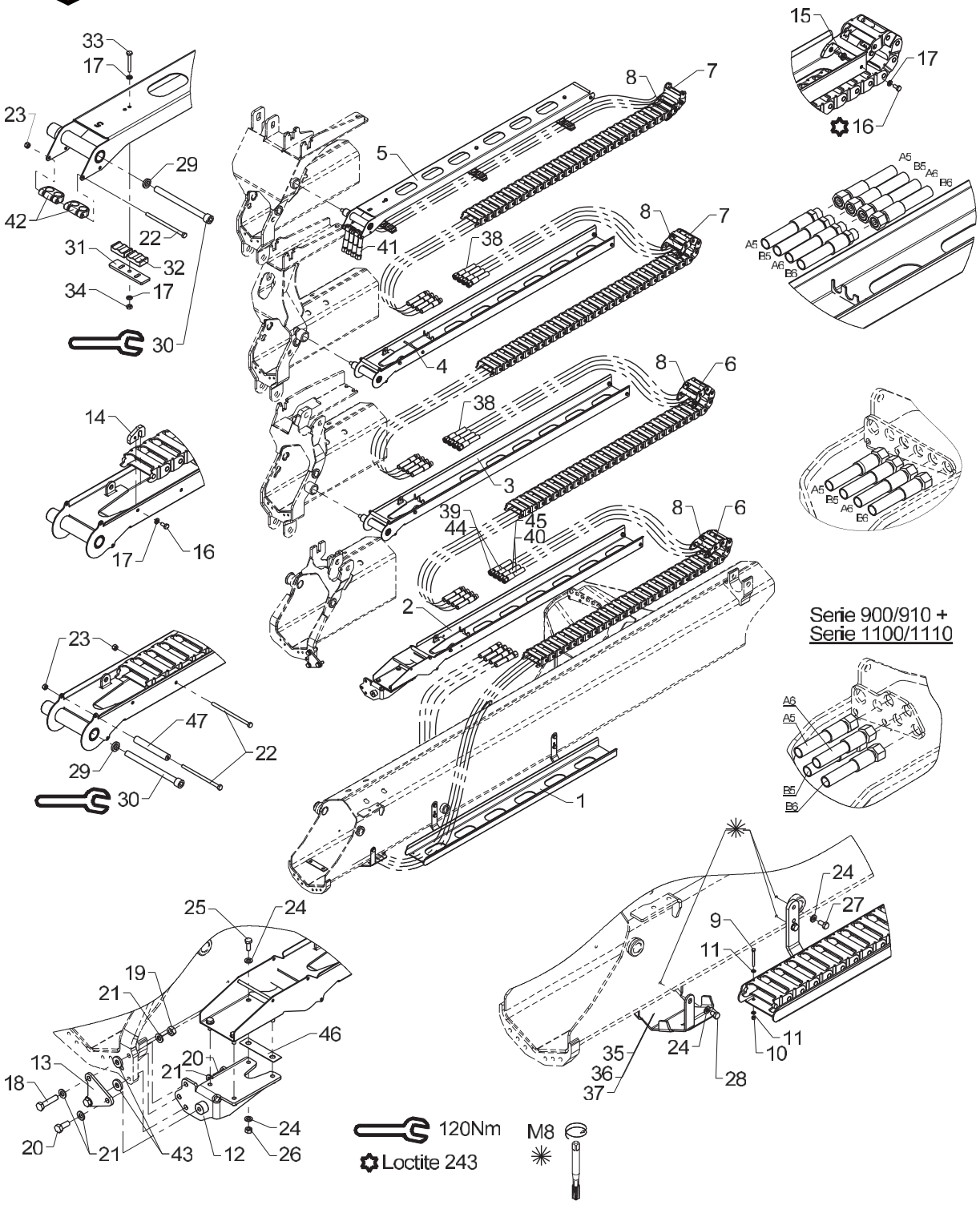

Obsolete

458 09 230

From loader 1170001
To loader 1170076

Created 17-03-2009
Modified 11-01-2013

Hose guides, K4-2 EXV.

Pos	Qty.	Part no.	Description	Remarks
38	8	56564	Hose	
39	2	56563	Hose	
40	2	56569	Hose	
41	4	56565	Hose	
42	2	68028	Clamp	
43	2	31756	Washer	Serie 1100/1110
44	2	56462	Hose 3/8 x 3850 mm	Serie 900/910
45	2	56458	Hose 3/8 x 3750 mm L/L	Serie 900/910
46	1	6340764	Shim	
47	3	56513	Hose	

1100K, 1110K, 1220K, 1230K, 1320K, 1330K

63 63 850
63 65 850
63 45 550
63 45 750
Internal ref. 63 40 750

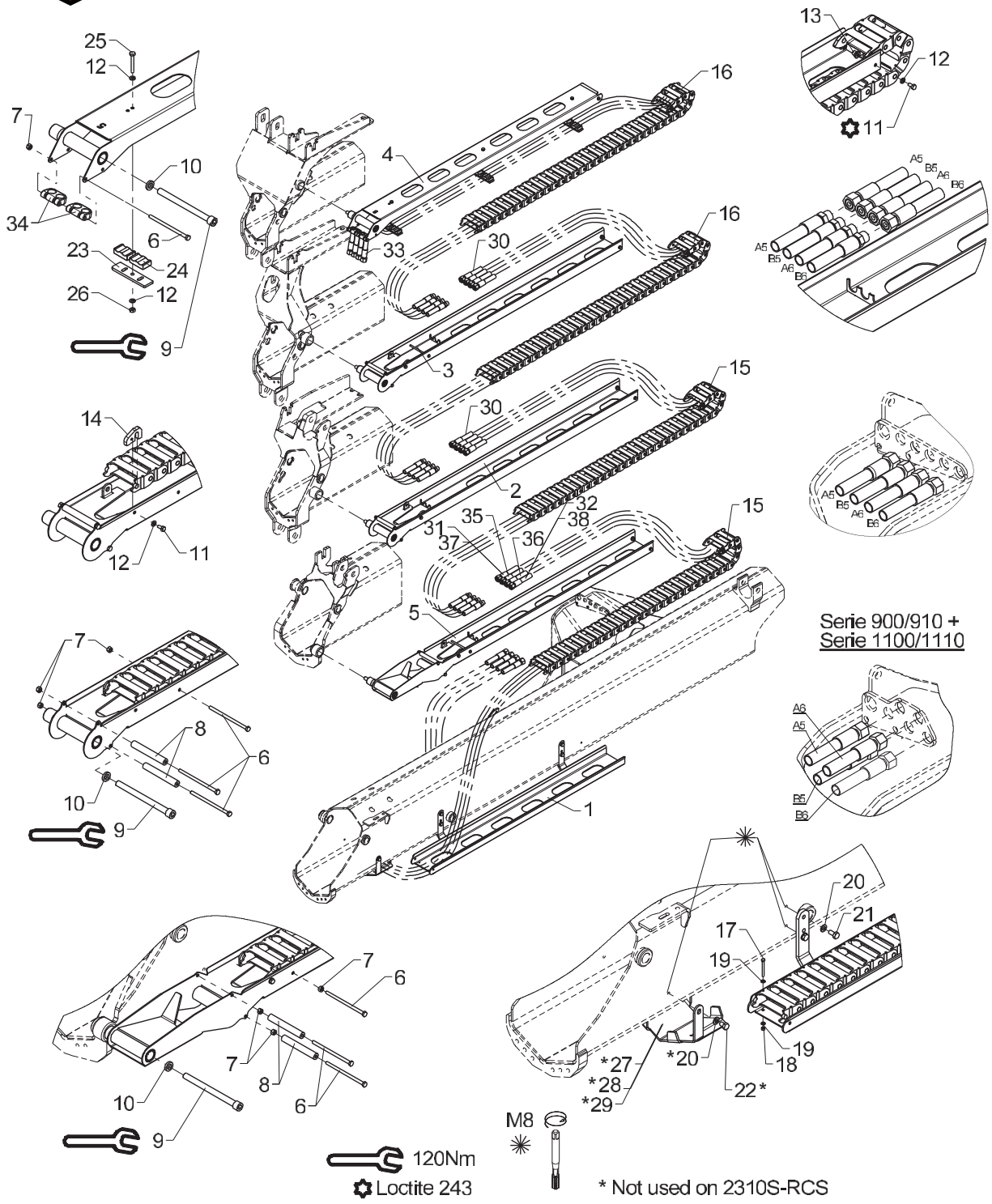

Hose guides, K4-2 EXV.

Pos	Qty.	Part no.	Description	Remarks
		6340750	Hose guides, K4-2 EXV	
		6345750	Hose guides, K4-2 EXV	
		6345550	Hose guide, K4-2 EXV.	
		6365850	Hose guide, K4-2 EXV.	
		6363850		
1	1	6340721	Guide (jib)	
2	1	6340741	Guide (Extension II)	
3	1	6340751	Guide (Extension III)	
4	1	6340758	Guide (extension K5)	
5	1	6341731	Guide (Extension I)	
6	9	30167	Steel bolt	M6 x 60
7	9	30884	Lock nut, stainless	M6
8	6	56513		
9	4	32488	Screw	MC12 x 150
10	4	6340717	Washer	
11	11	30111	Set screw, stainless	
12	17	32302	Face washer, stainless	6 mm
13	8	6340719	Nut	
14	3	6340718	Bracket	
15	2	28712	Nylon drag chain, 31 links	
16	2	28713	Nylon drag chain, 34 links	
17	2	30128	Set screw	M4 x 40
18	2	30857	Lock nut	M4
19	4	31188	Washer, stainless	4 mm
20	6	31147	Face washer, 8 mm	
21	4	30131	Set screw, stainless	M8 x 16
22	2	30130	Set screw, stainless	M8 x 12
23	3	6340769	Adaptor	
24	6	63561	Clamp	
25	3	30118	Steel pin, stainless	M6 x 45
26	3	30854	Nut, stainless	M6
27	1	6340299	Protective guard	Serie 1300/1500
28	1	6344299	Protective guard	Serie 1800/2200
29	1	6365299		Serie 1100/1110
30	8	56564	Hose	
31	2	56563	Hose	
32	2	56569	Hose	
33	4	56565	Hose	
34	2	68028		
35	2	56462		
36	2	56458		

1100K, 1110K, 1220K, 1230K, 1320K, 1330K

63 63 850
63 65 850
63 45 550
63 45 750
Internal ref. 63 40 750

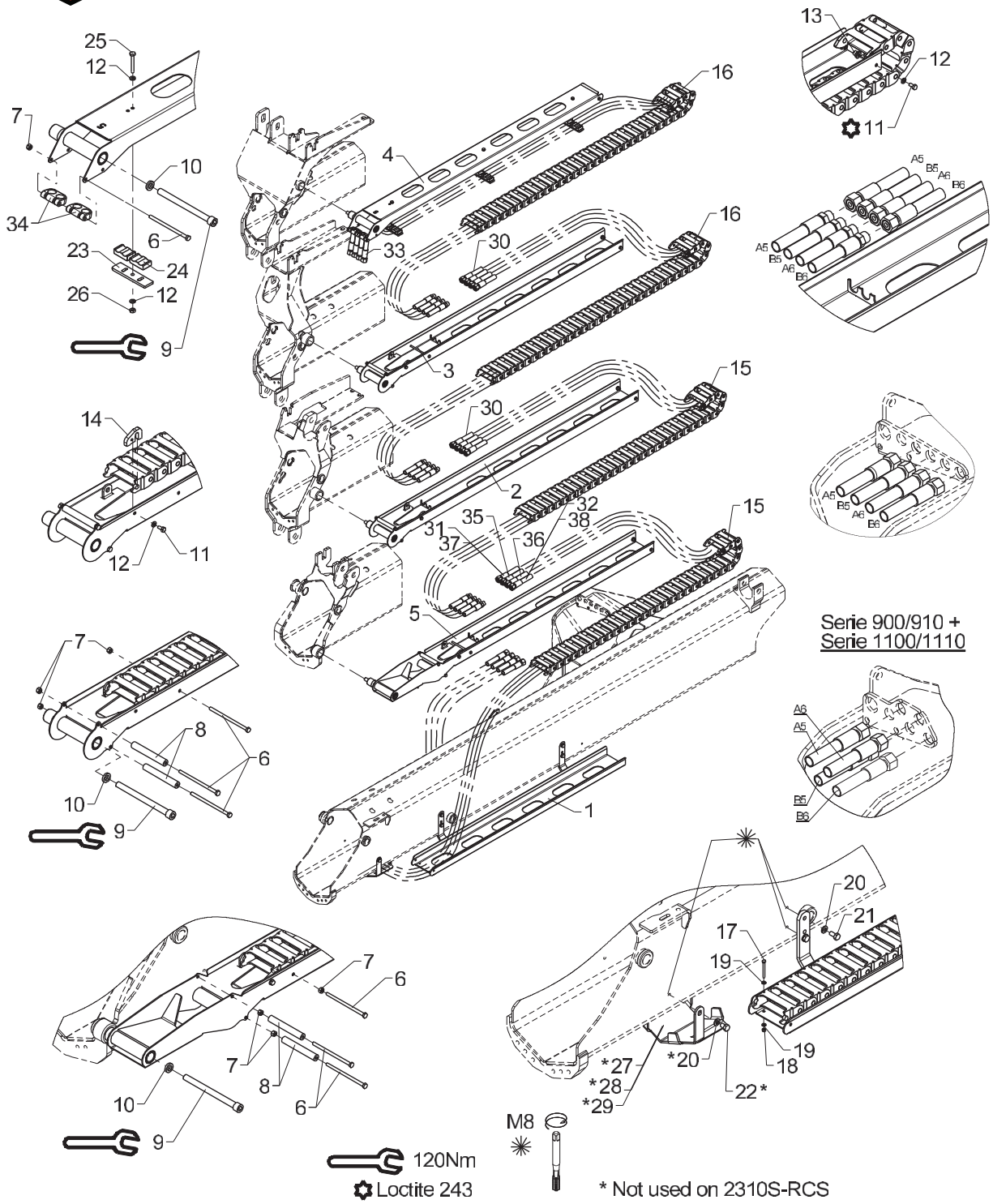

Hose guides, K4-2 EXV.

Pos	Qty.	Part no.	Description	Remarks
37	2	56906		Serie 2310S-RCS
38	2	62595		Serie 2310S-RCS

Obsolete

458 09 240

1100K, 1110K, 1220K, 1230K, 1320K, 1330K

63 63 860
63 65 860
63 45 760
Internal ref. 63 40 760

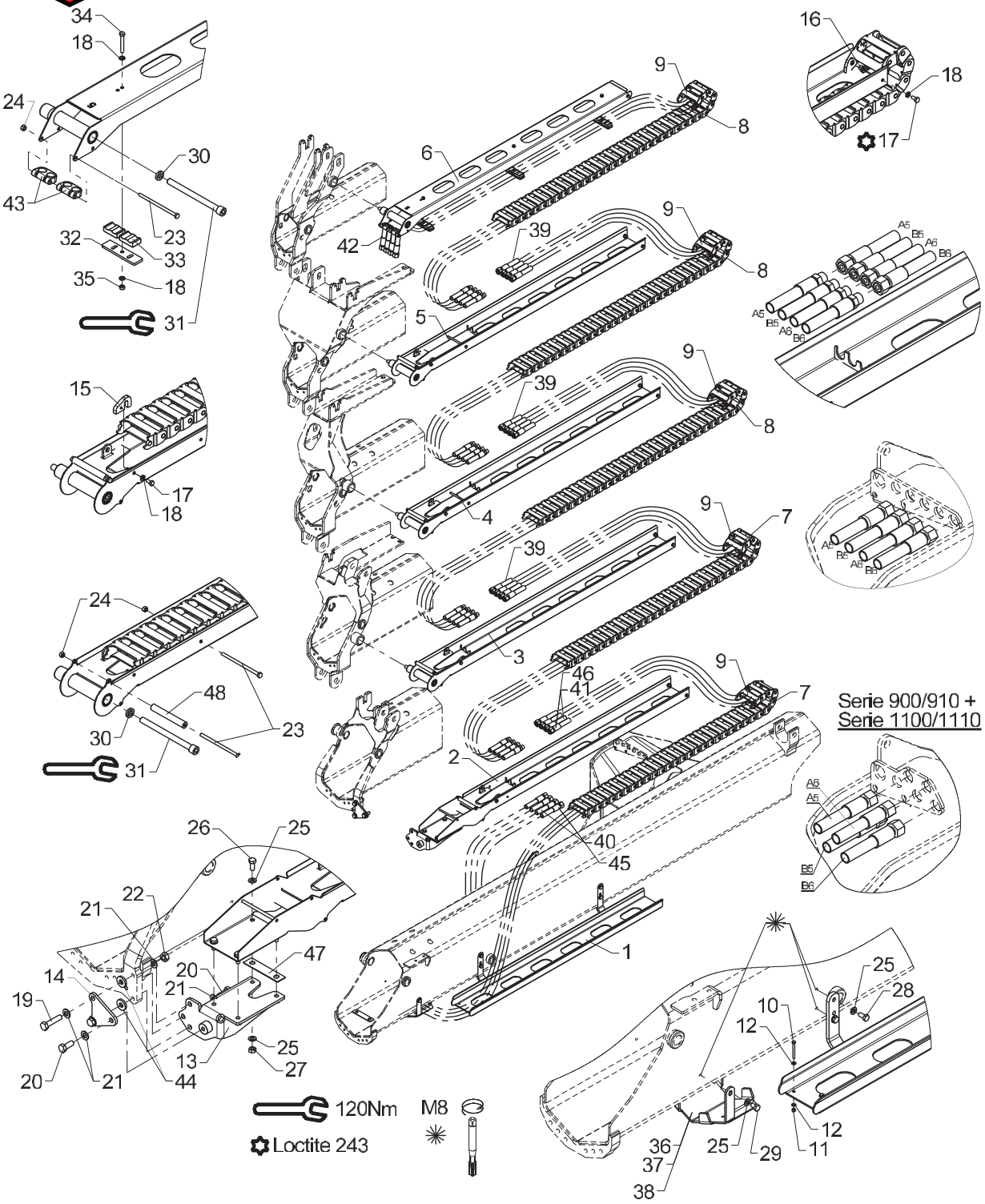

Obsolete

458 09 240

From loader 1170001
To loader 1170076

Created 19-03-2009
Modified 14-01-2013

Hose guides, K5-2 EXV.

Pos	Qty.	Part no.	Description	Remarks
		6340760	Hose guides, K5-2 EXV	
		6345760	Hose guides, K5-2 EXV	
		6365860	Hose guide, K5-2 EXV.	
		6363860	Hose guide, K5-2 EXV.	
1	1	6340721	Guide (jib)	
2	1	6340731	Guide (Extension I)	
3	1	6340741	Guide (Extension II)	
4	1	6340751	Guide (Extension III)	
5	1	6340755	Guide (Extension IV)	
6	1	6340758	Guide (extension K5)	
7	2	28712	Nylon drag chain, 30 links	
8	3	28713	Nylon drag chain, 33 links	
9	5	63400	End link for nylon drag chain	
10	2	30128	Set screw	M4 x 40
11	2	30857	Lock nut	M4
12	4	31188	Washer, stainless	4 mm
13	1	6340725	Mounting bracket	
14	1	6340729	Plate	
15	4	6340718	Bracket	
16	10	6340719	Nut	
17	14	30111	Set screw, stainless	
18	20	32302	Face washer, stainless	6 mm
19	2	30377	Set screw	M10 x 45
20	2	31513	Set screw, stainless	M10 x 25
21	6	31565	Washer, stainless	10 mm
22	2	30858	Nut	M10
23	7	30167	Steel bolt	M6 x 60
24	7	30884	Lock nut, stainless	M6
25	14	31147	Face washer, 8 mm	
26	4	30132	Set screw, stainless	
27	4	30856	Nut, stainless	M8
28	4	30131	Set screw, stainless	M8 x 16
29	2	30130	Set screw, stainless	M8 x 12
30	4	6340717	Washer	
31	4	32488	Screw	MC12 x 150
32	3	6340769	Adaptor	
33	6	63561	Clamp	
34	3	30118	Steel pin, stainless	M6 x 45
35	3	30854	Nut, stainless	M6
36	1	6340299	Protective guard	Serie 1300/1500
37	1	6344299	Protective guard	Serie 1800/2200

Obsolete

458 09 240

1100K, 1110K, 1220K, 1230K, 1320K, 1330K

63 63 860
63 65 860
63 45 760
Internal ref. 63 40 760

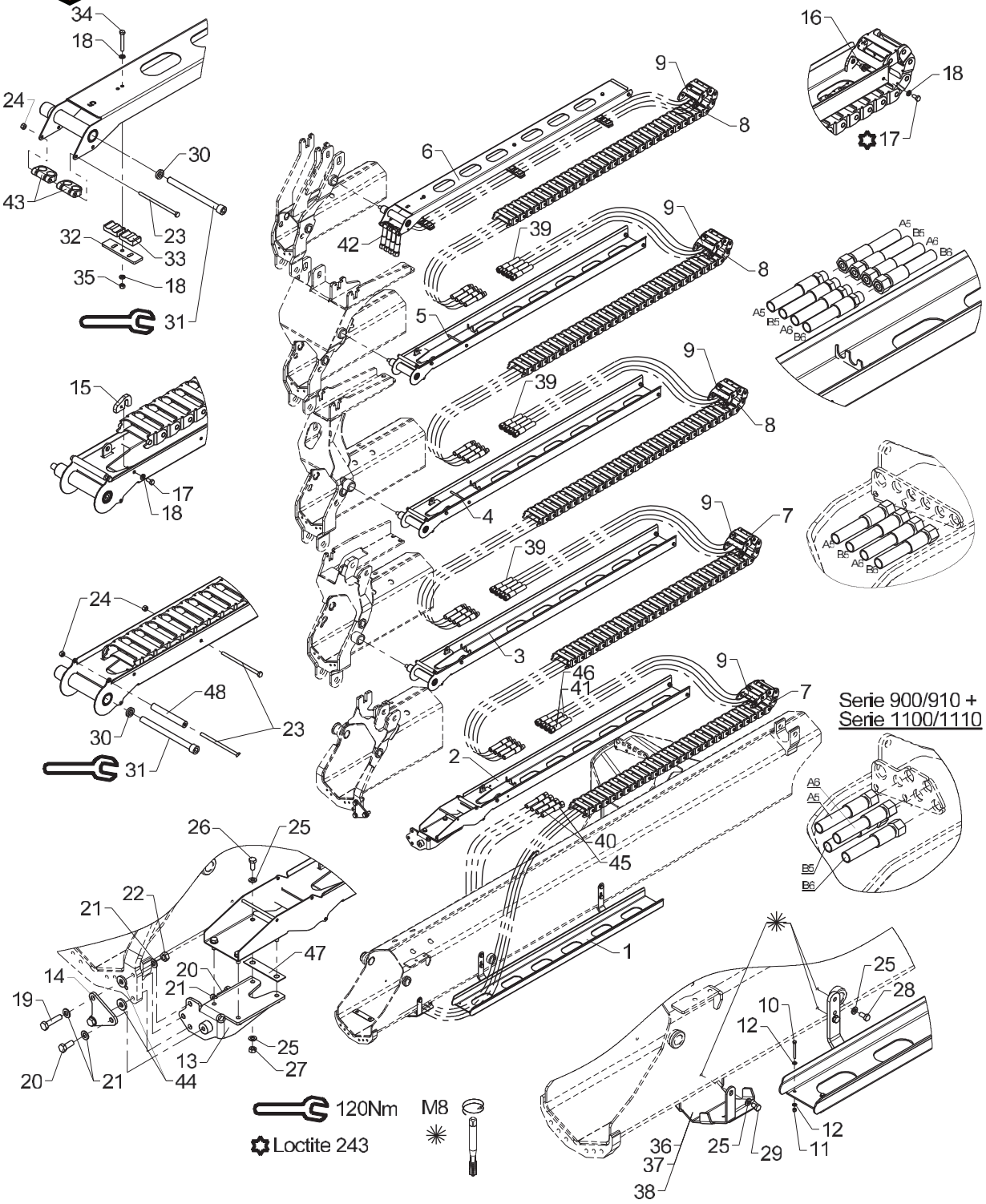

Obsolete

458 09 240

Hose guides, K5-2 EXV.

From loader 1170001
To loader 1170076

Created 19-03-2009
Modified 14-01-2013

Pos	Qty.	Part no.	Description	Remarks
38	1	6365299	Hose shield	Serie 1100/1110
39	12	56564	Hose	
40	2	56563	Hose	
41	2	56569	Hose	
42	4	56565	Hose	
43	2	68028	Clamp	
44	2	31756	Washer	Serie 1100/1110
45	2	56462	Hose 3/8 x 3850 mm	Serie 900/910
46	2	56458	Hose 3/8 x 3750 mm L/L	Serie 900/910
47	1	6340764	Shim	
48	4	56513	Hose	

1100K, 1110K, 1220K, 1230K, 1320K, 1330K

63 63 860
63 65 860
63 45 760
Internal ref. 63 40 760

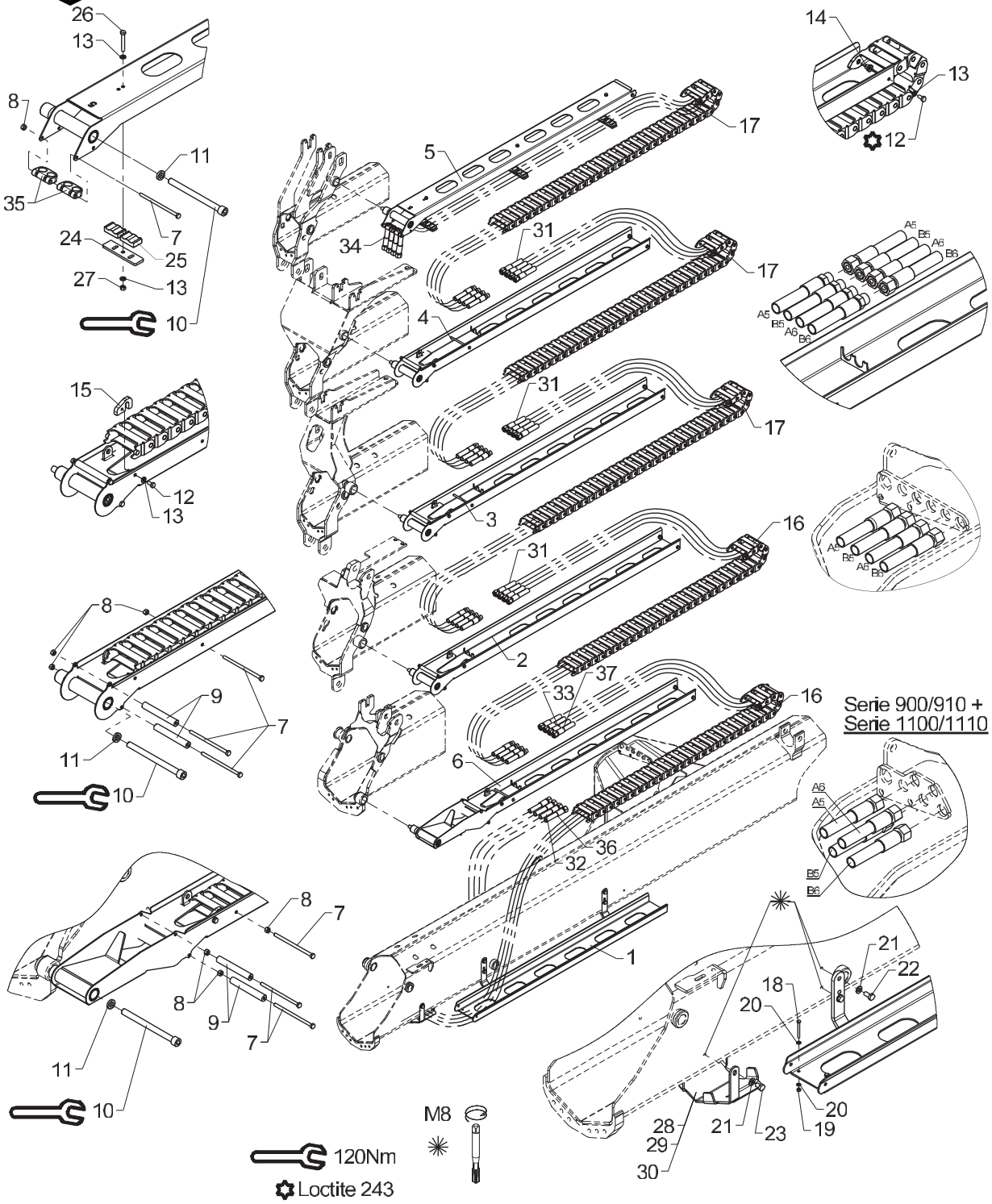

Hose guides, K5-2 EXV.

Pos	Qty.	Part no.	Description	Remarks
		6340760	Hose guides, K5-2 EXV	
		6345760	Hose guides, K5-2 EXV	
		6365860	Hose guide, K5-2 EXV.	
		6363860	Hose guide, K5-2 EXV.	
1	1	6340721	Guide (jib)	
2	1	6340741	Guide (Extension II)	
3	1	6340751	Guide (Extension III)	
4	1	6340755	Guide (Extension IV)	
5	1	6340758	Guide (extension K5)	
6	1	6341731	Guide (Extension I)	
7	12	30167	Steel bolt	M6 x 60
8	12	30884	Lock nut, stainless	M6
9	8	56513		
10	5	32488	Screw	MC12 x 150
11	5	6340717	Washer	
12	14	30111	Set screw, stainless	
13	20	32302	Face washer, stainless	6 mm
14	10	6340719	Nut	
15	4	6340718	Bracket	
16	2	28712	Nylon drag chain, 31 links	
17	3	28713	Nylon drag chain, 34 links	
18	2	30128	Set screw	M4 x 40
19	2	30857	Lock nut	M4
20	4	31188	Washer, stainless	4 mm
21	6	31147	Face washer, 8 mm	
22	4	30131	Set screw, stainless	M8 x 16
23	2	30130	Set screw, stainless	M8 x 12
24	3	6340769	Adaptor	
25	6	63561	Clamp	
26	3	30118	Steel pin, stainless	M6 x 45
27	3	30854	Nut, stainless	M6
28	1	6340299	Protective guard	Serie 1300/1500
29	1	6344299	Protective guard	Serie 1800/2200
30	1	6365299		Serie 1100/1110
31	12	56564	Hose	
32	2	56563	Hose	
33	2	56569	Hose	
34	4	56565	Hose	
35	2	68028		
36	2	56462		Serie 900/910
37	2	56458		Serie 900/910

1100K, 1110K, 1220K, 1230K, 1320K, 1330K

Internal ref. 63 66 900

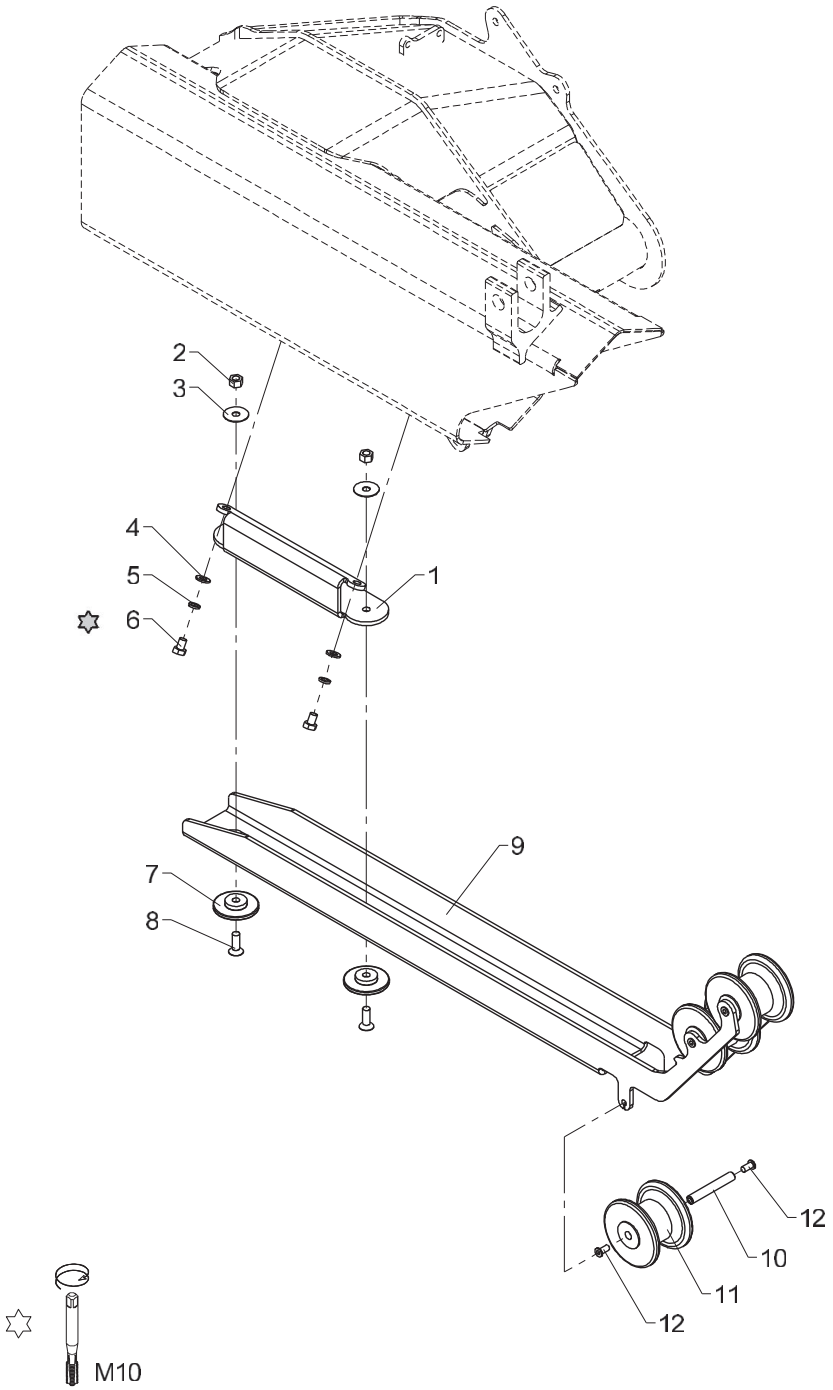

Bracket for hose reel, cpl. (jib)

Pos	Qty.	Part no.	Description	Remarks
1	1	6363626	Fittings for bracket	
2	2	30888	Lock nut	
3	2	31141	Washer	10 mm
4	2	31565	Washer, stainless	10 mm
5	2	31156	Spring washer	10 mm
6	2	30152	Set screw	M10 x 14
7	2	6340624	Guide shoe	
8	2	30581	Counter-sunk screw	MK10 x 30
9	1	6363625	Guide roller	
10	3	6301042	Pin	
11	3	68065	Guide roller	
12	6	32481	Screw	MCL8 x 16

1100K, 1110K, 1220K, 1230K, 1320K, 1330K

63 66 830
Internal ref. 63 66 920

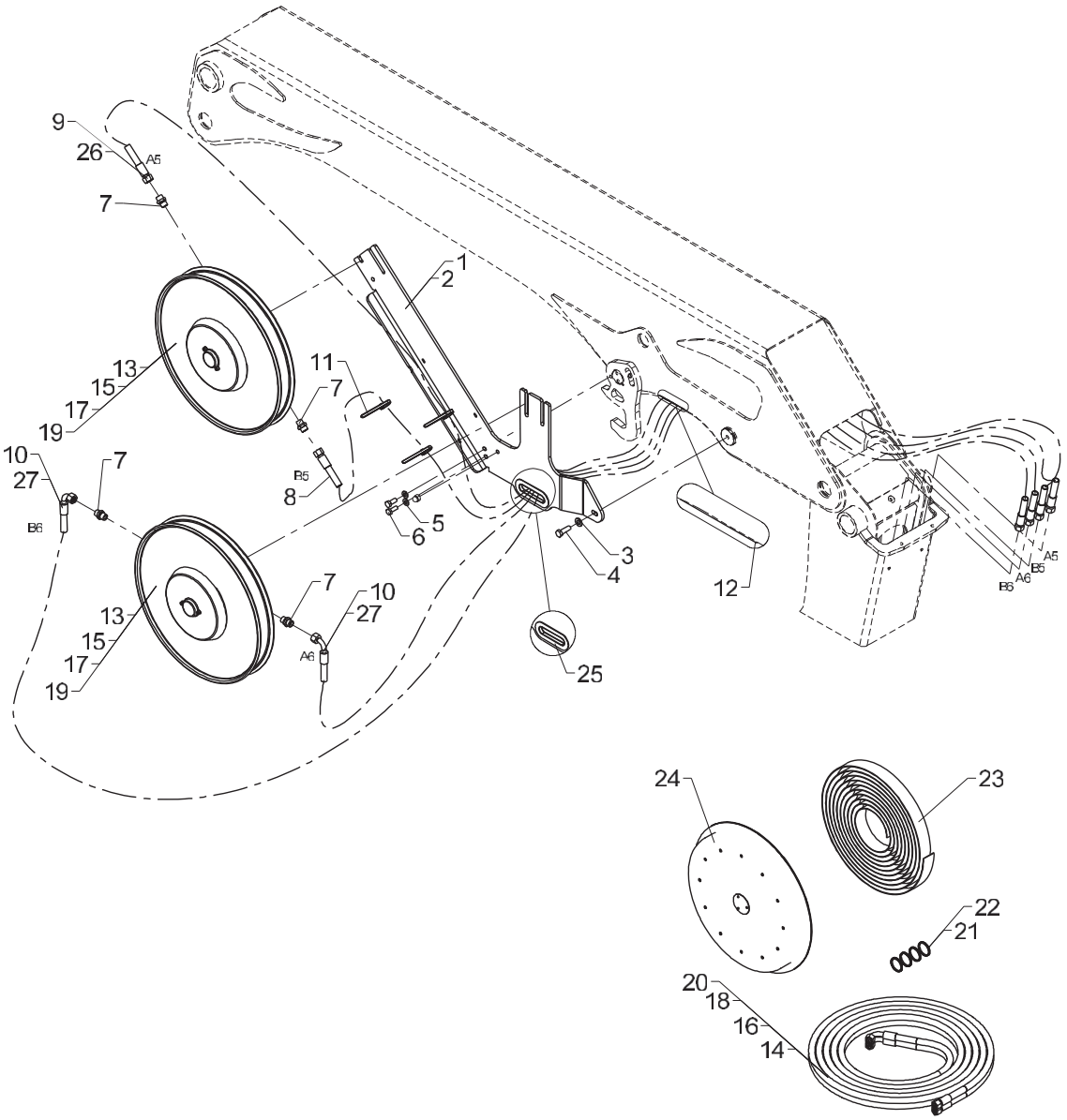

Hydr. system, hose reels, 2 EXV.

Created 14-05-2012
Modified 23-01-2015

Pos	Qty.	Part no.	Description	Remarks
		6366920	Hydr. system, hose reels 2 EXV	
		6366830		
1	1	6365621	Bracket for hose reel (2 EXV)	1100K/1220K
2	1	6366621	Bracket for hose reel (2 EXV)	1110K/1230K
3	1	31131	Washer	12 mm
4	1	31524	Set screw	M12 x 35
5	2	31177	Washer	10 mm
6	2	31513	Set screw, stainless	M10 x 25
7	4	25127	Connection	P-GEV 12 LR-WD
8	1	0017030	Hose	
9	1	0015370	Hose	1100K/1220K
10	2	0015030	Hose	1100K/1220K
11	3	27275	Cable tie, black, 7.6x385mm	
12	1	46587	Rubber protection	150 mm
13	2	56371	Hose reel	
14	1	56375	Double hose	
15	2	56372	Hose reel	
16	1	56376	Double hose	
17	2	56373	Hose reel	
18	1	56377	Double hose	
19	2	56374	Hose reel	
20	1	56378	Double hose	
21	1	56340	Seal kit	Slangerl. med serienr. før 51514
22	1	56336	Seal kit	Slangerl. med serienr. fra 51514
23	1	56345	Spring	
24	1	56486	Spring housing	
25	1	46587	Rubber protection	240 mm
26	1	0017410	Hose	1110K/1230K
27	2	0017690	Hose	1110K/1230K

1100K, 1110K, 1220K, 1230K, 1320K, 1330K

Internal ref. 63 66 090

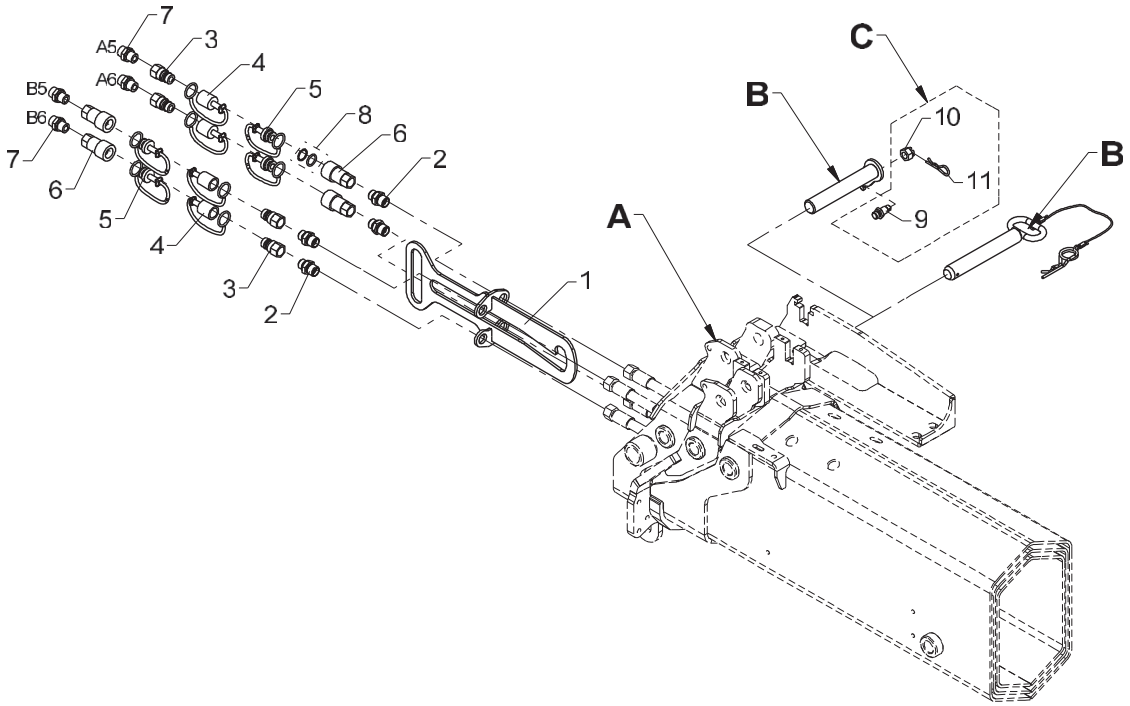

900K/910K/1020K/1030K/ 1100K/1110K/1220K/1230K

A	B	C
K1	60 92 454	
K2	63 65 677	X
K3	66 57 424	
K4	63 01 166 (ø20)	
	66 57 654 (ø25)	
K5	63 01 166 (ø20)	
	66 57 654 (ø25)	

458 09 320

From loader 1170001
To loader

Kit, quick-release coupling for internal hose routing, 2 EXV.

Created 15-05-2012
Modified 17-10-2012

Pos	Qty.	Part no.	Description	Remarks
		6366090	Kit,quick-coupl.int.hose, 2EXV	
1	1	6340631	Bracket	
2	4	6661444	Socket	
3	4	60620	Quick-release coupling,M	3/8"
4	4	60622	Dust cap, F	3/8"
5	4	60621	Dust cap, M	3/8"
6	4	60619	Quick-release coupling,F	3/8"
7	4	25127	Connection	P-GEV 12 LR-WD
8	1	60635	Seal kit	
9	1	6340359	Lock pin	
10	1	32127	Nut	M12
11	1	33379	Spring	
12	1	6365677	Pin	
13	1	6092454	Lock pin with chain	
14	1	6657424	Lock pin with split pin	
15	1	6301166	Lock pin with split pin	ø20
16	1	6657654	Lock pin with chain	ø25

1100K, 1110K, 1220K, 1230K, 1320K, 1330K

63 66 820
Internal ref. 63 66 930

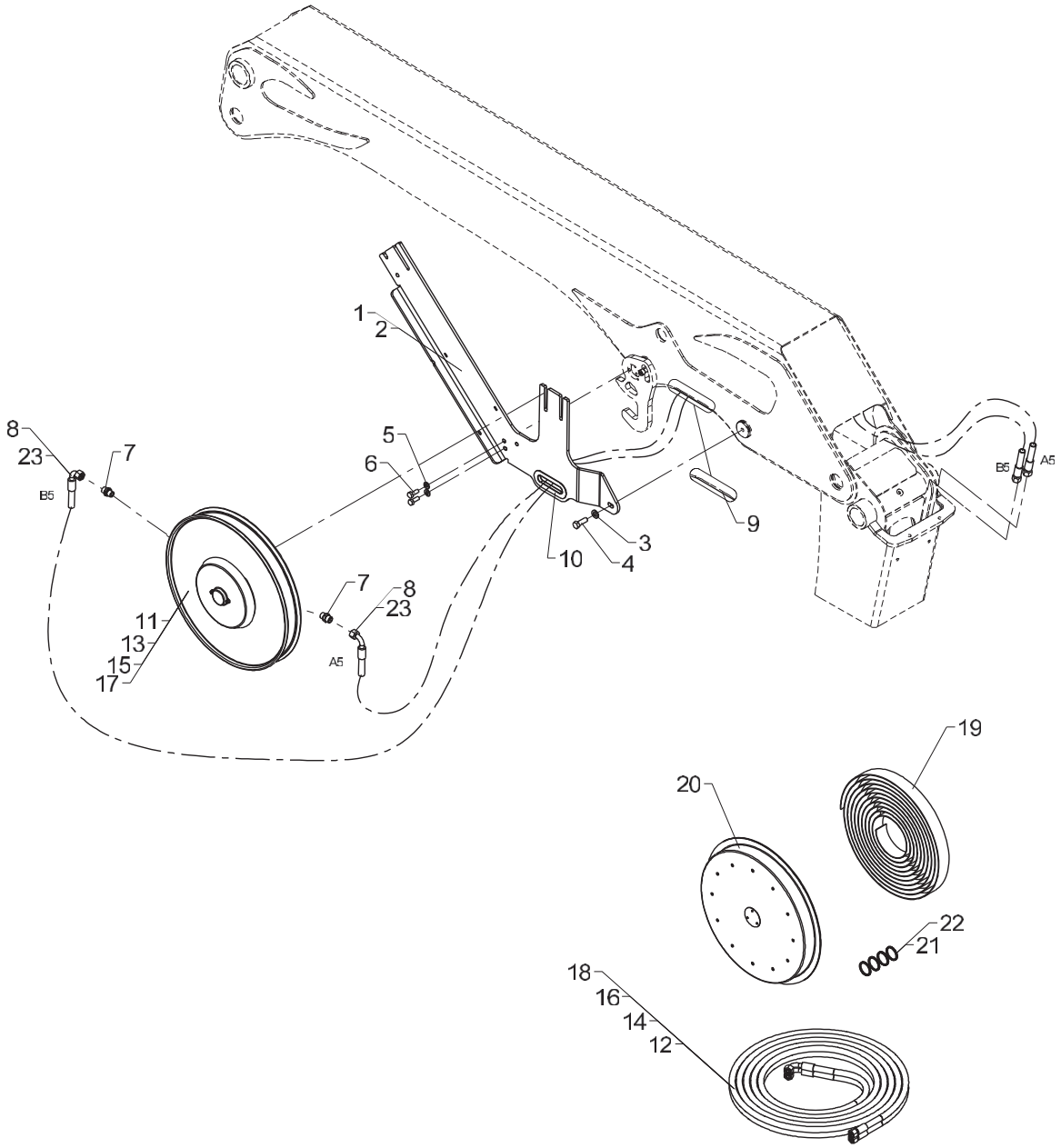

Hydr. system, hose reels, 1 EXV.

Pos	Qty.	Part no.	Description	Remarks
		6366930	Hydr. system, hose reels 1 EXV	
		6366820		
1	1	6365621	Bracket for hose reel (2 EXV)	1100K/1220K
2	1	6366621	Bracket for hose reel (2 EXV)	
3	1	31131	Washer	12 mm
4	1	31524	Set screw	M12 x 35
5	2	31177	Washer	10 mm
6	2	31513	Set screw, stainless	M10 x 25
7	2	25127	Connection	P-GEV 12 LR-WD
8	2	0015030	Hose	1100K/1220K
9	1	46587	Rubber protection	150 mm
10	1	46587	Rubber protection	240 mm
11	1	56371	Hose reel	
12	1	56375	Double hose	
13	1	56372	Hose reel	
14	1	56376	Double hose	
15	1	56373	Hose reel	
16	1	56377	Double hose	
17	1	56374	Hose reel	
18	1	56378	Double hose	
19	1	56345	Spring	
20	1	56486	Spring housing	
21	1	56340	Seal kit	Slangerl. med serienr. før 51514
22	1	56336	Seal kit	Slangerl. med serienr. fra 51514
23	2	0017690	Hose	1110K/1230K

1100K, 1110K, 1220K, 1230K, 1320K, 1330K

Internal ref. 63 65 970

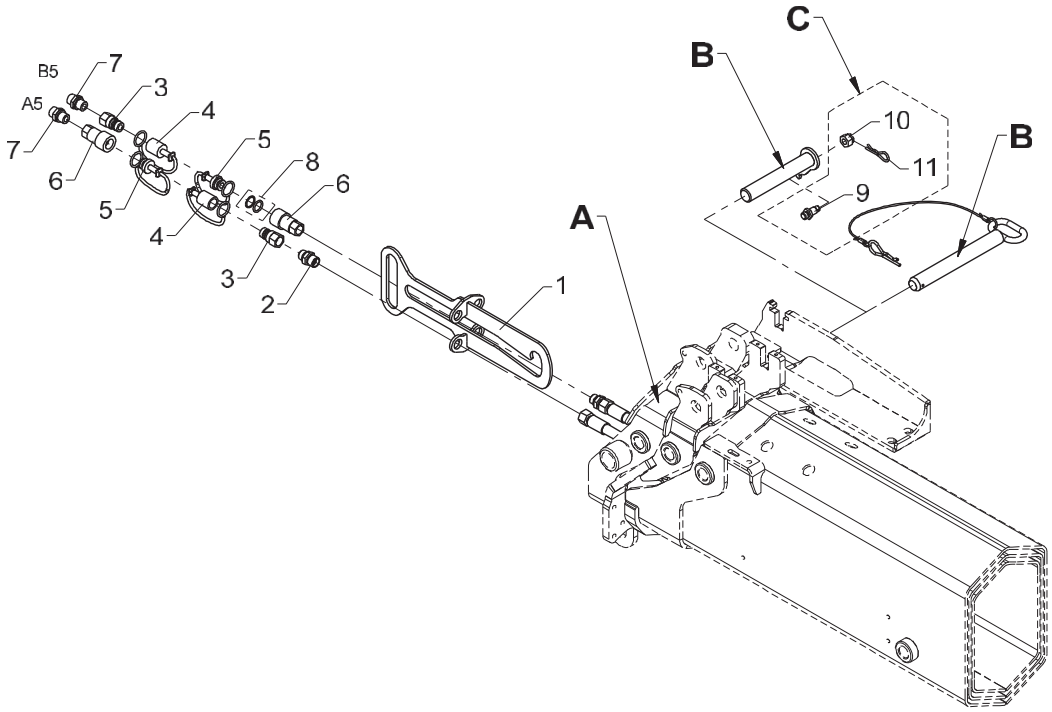

900K/910K/920K/930K/ 1100K/1110K/1220K/1230K

A	B	C
K1	60 92 454	
K2	63 65 677	X
K3	66 57 424	
K4	63 01 166 (ø20)	
	66 57 424 (ø25)	
K5	63 01 166 (ø20)	
	66 57 654 (ø25)	

458 09 340

From loader 1170001
To loader

Kit, quick-release coupling for internal hose routing, 1 EXV.

Created 15-05-2012
Modified 19-02-2015

Pos	Qty.	Part no.	Description	Remarks
		6365970	Kit,quick-coupl.int.hose, 1EXV	
1	1	6340631	Bracket	
2	2	6661444	Socket	
3	2	60620	Quick-release coupling,M	3/8"
4	2	60622	Dust cap, F	3/8"
5	2	60621	Dust cap, M	3/8"
6	2	60619	Quick-release coupling,F	3/8"
7	2	25127	Connection	P-GEV 12 LR-WD
8	1	60635	Seal kit	
9	1	6340359	Lock pin	
10	1	32127	Nut	M12
11	1	33379	Spring	
12	1	6365677	Pin	
13	1	6657424	Lock pin with split pin	
14	1	6092454	Lock pin with chain	
15	1	6301166	Lock pin with split pin	ø20
16	1	6657654	Lock pin with chain	ø25

1100K, 1110K, 1220K, 1230K, 1320K, 1330K

Internal ref. 63 43 860

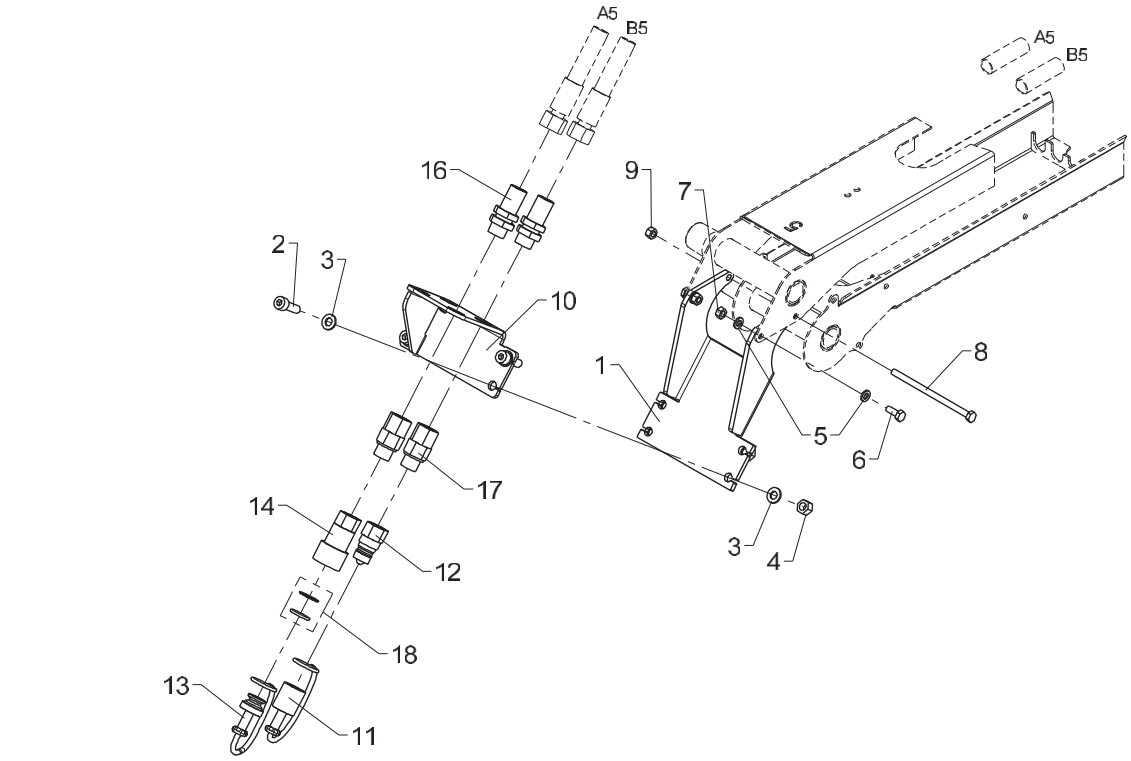

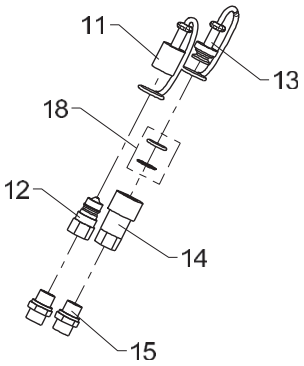

Quick-release coupling for 1 extra valve + bracket, K1-K5/T3-T4

Pos	Qty.	Part no.	Description	Remarks
1	1	6340771	Adapter	
2	4	30440	Screw	MC8 x 25
3	8	31147	Face washer, 8 mm	
4	4	30886	Lock nut, stainless	M8
5	4	32302	Face washer, stainless	6 mm
6	2	30112	Set screw, stainless	M6 x 16
7	2	30854	Nut, stainless	M6
8	1	30167	Steel bolt	M6 x 60
9	1	30884	Lock nut, stainless	M6
10	1	6394164	Bracket,quick-release coupling	
11	2	60622	Dust cap, F	3/8"
12	2	60620	Quick-release coupling,M	3/8"
13	2	60621	Dust cap, M	3/8"
14	2	60619	Quick-release coupling,F	3/8"
15	2	25127	Connection	P-GEV 12 LR-WD
16	2	25201	Bulkhead connection	
17	2	25240	Connection	EGESD 12 LR-WD
18	2	60635	Seal kit	

1100K, 1110K, 1220K, 1230K, 1320K, 1330K

Internal ref. 63 43 870

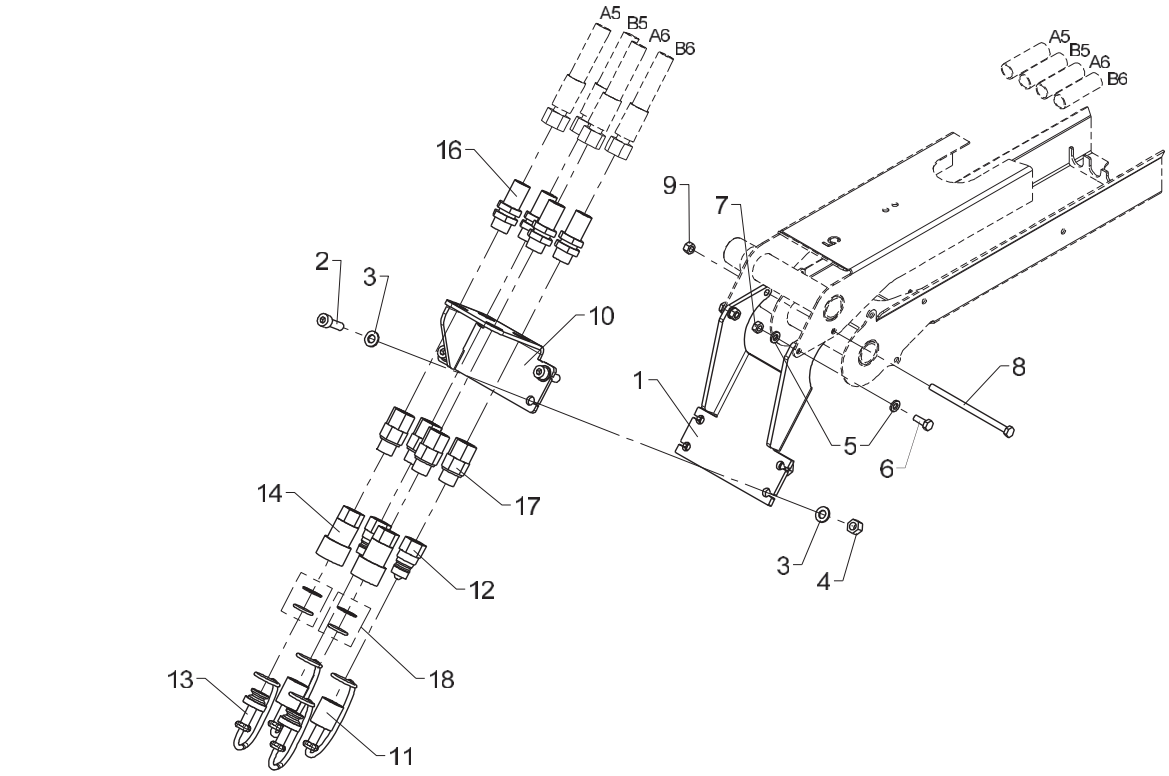

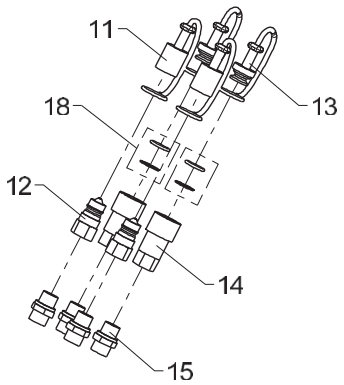

458 09 380

From loader

To loader

Created 28-05-2014

Modified

Quick-release coupling for 2 extra valves + bracket, K1-K5/T3-T4

Pos	Qty.	Part no.	Description	Remarks
1	1	6340771	Adapter	
2	4	30440	Screw	MC8 x 25
3	8	31147	Face washer, 8 mm	
4	4	30886	Lock nut, stainless	M8
5	4	32302	Face washer, stainless	6 mm
6	2	30112	Set screw, stainless	M6 x 16
7	2	30854	Nut, stainless	M6
8	1	30167	Steel bolt	M6 x 60
9	1	30884	Lock nut, stainless	M6
10	1	6394164	Bracket,quick-release coupling	
11	4	60622	Dust cap, F	3/8"
12	4	60620	Quick-release coupling,M	3/8"
13	4	60621	Dust cap, M	3/8"
14	4	60619	Quick-release coupling,F	3/8"
15	4	25127	Connection	P-GEV 12 LR-WD
16	4	25201	Bulkhead connection	
17	4	25240	Connection	EGESD 12 LR-WD
18	4	60635	Seal kit	

1100K, 1110K, 1220K, 1230K, 1320K, 1330K

Internal ref. 63 42 950

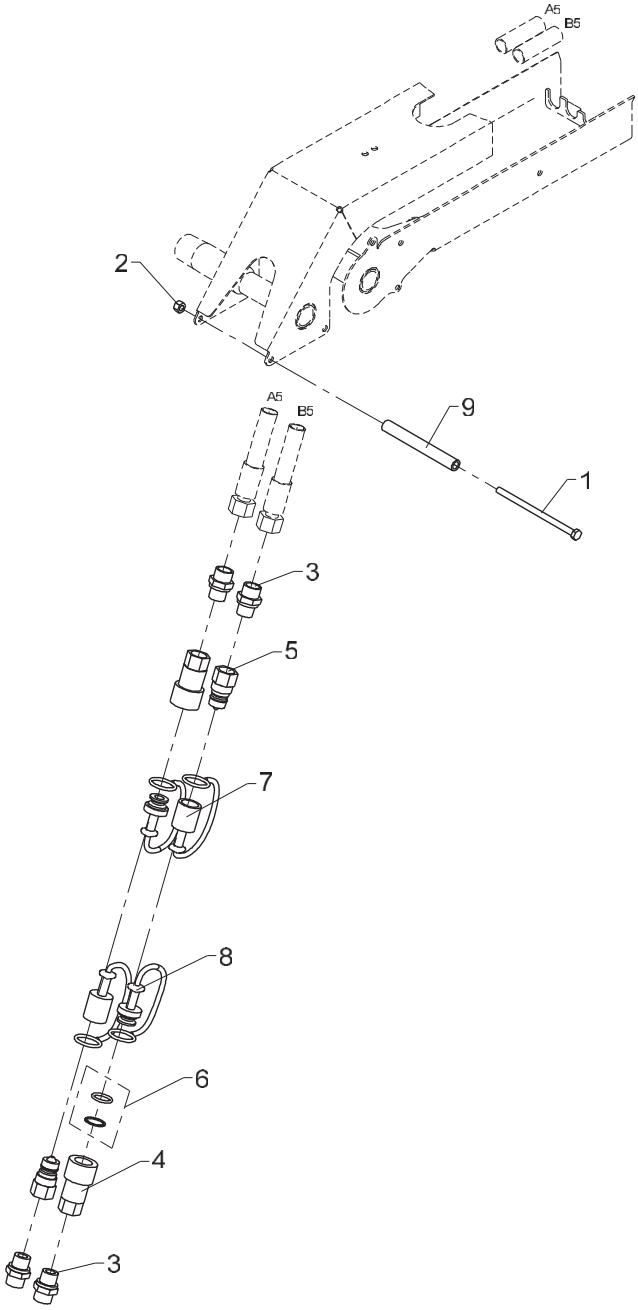

458 09 390

From loader 1170001
To loader

Quick-release coupling for 1 extra valve

Created 23-09-2009
Modified 14-03-2011

Pos	Qty.	Part no.	Description	Remarks
1	1	30167	Steel bolt	M6 x 60
2	1	30884	Lock nut, stainless	M6
3	4	25127	Connection	P-GEV 12 LR-WD
4	2	60619	Quick-release coupling,F	3/8"
5	2	60620	Quick-release coupling,M	3/8"
6	1	60635	Seal kit	
7	2	60622	Dust cap, F	3/8"
8	2	60621	Dust cap, M	3/8"
9	1	62511	Plastic hose	100 mm

1100K, 1110K, 1220K, 1230K, 1320K, 1330K

Internal ref. 63 42 960

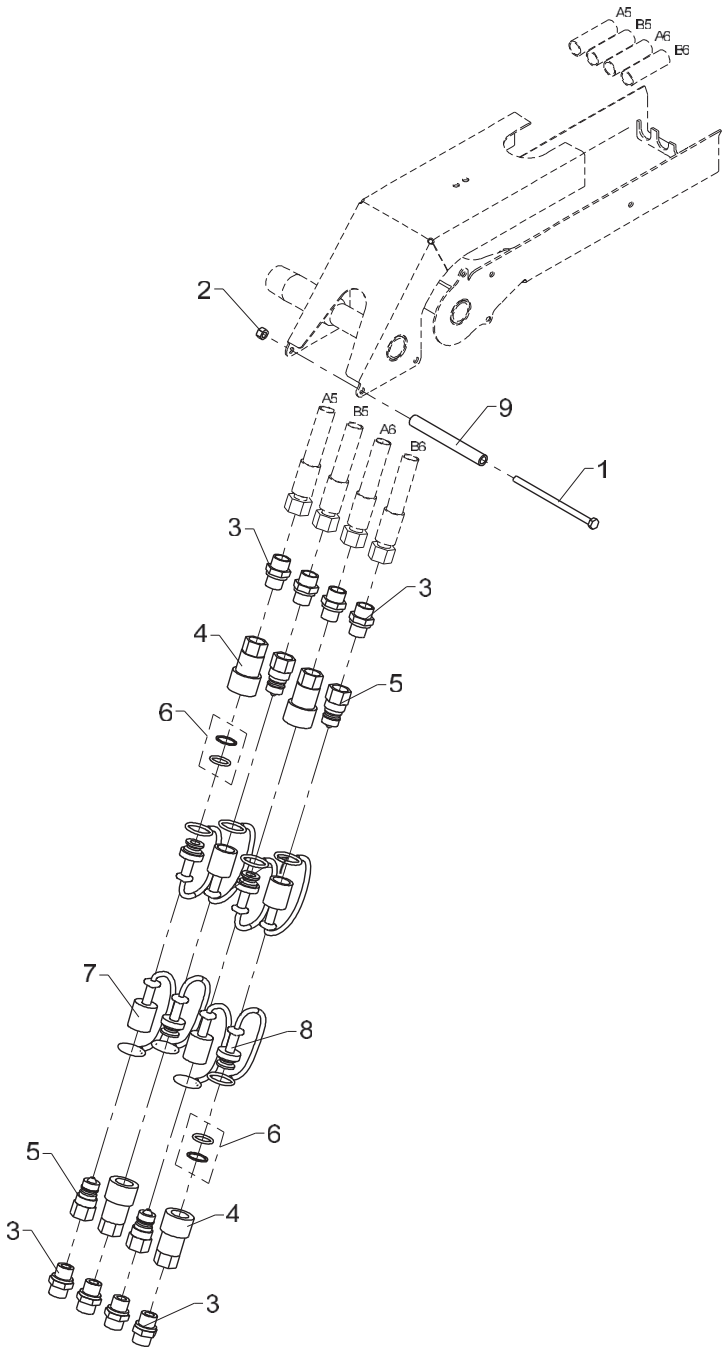

Quick-release coupling for 2 extra valves

Pos	Qty.	Part no.	Description	Remarks
1	1	30167	Steel bolt	M6 x 60
2	1	30884	Lock nut, stainless	M6
3	8	25127	Connection	P-GEV 12 LR-WD
4	4	60619	Quick-release coupling,F	3/8"
5	4	60620	Quick-release coupling,M	3/8"
6	2	60635	Seal kit	
7	4	60622	Dust cap, F	3/8"
8	4	60621	Dust cap, M	3/8"
9	1	62511	Plastic hose	100 mm

1100K, 1110K, 1220K, 1230K, 1320K, 1330K

Internal ref. 63 42 970

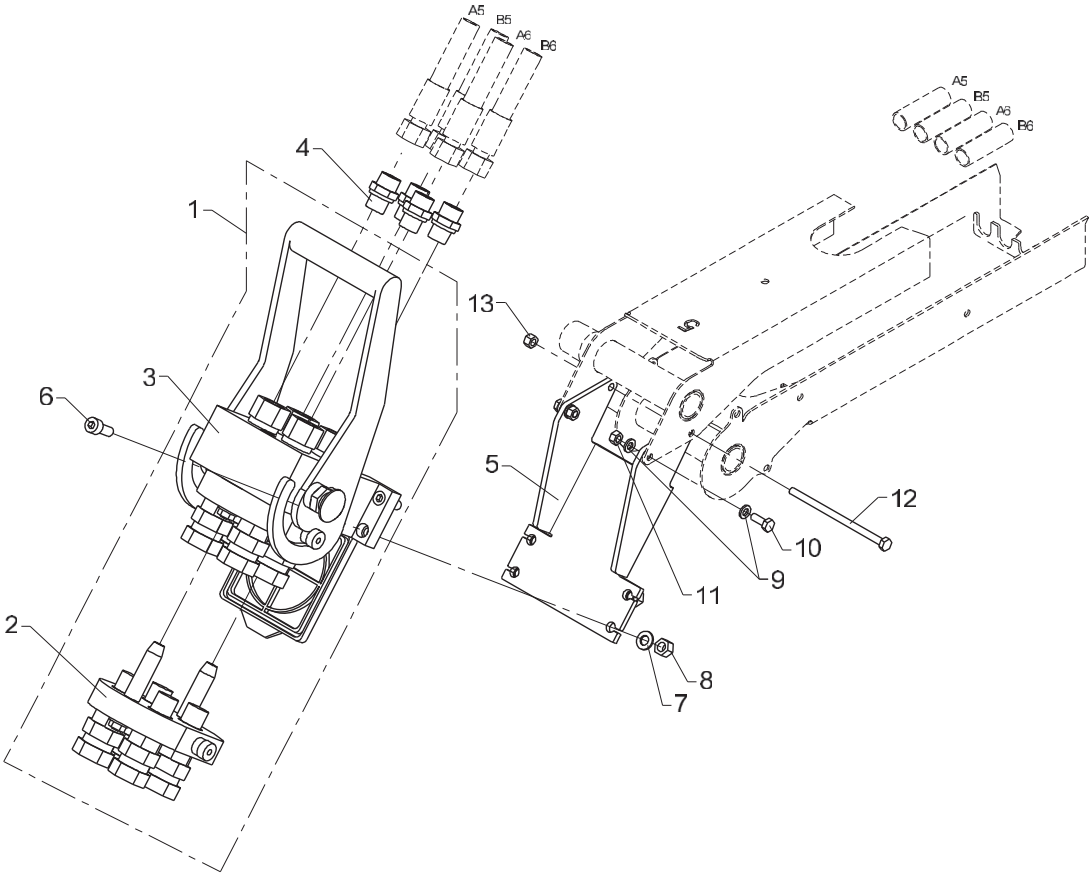

Multi-coupling for 2 extra valves K1-K5/T3-T4

Pos	Qty.	Part no.	Description	Remarks
1	1	58430	Multifaster coupling	1/2"
2	1	58431	Multifaster coupling	
3	1	58432	Multifaster coupling	
4	4	25127	Connection	P-GEV 12 LR-WD
5	1	6340771	Adapter	
6	4	30438	Screw	MC8 x 20
7	4	31147	Face washer, 8 mm	8 mm
8	4	30886	Lock nut, stainless	M8
9	4	32302	Face washer, stainless	6 mm
10	2	30112	Set screw, stainless	M6 x 16
11	2	30854	Nut, stainless	M6
12	1	30167	Steel bolt	M6 x 60
13	1	30884	Lock nut, stainless	M6

Obsolete

1100K, 1110K, 1220K, 1230K, 1320K, 1330K

Internal ref. 63 65 870

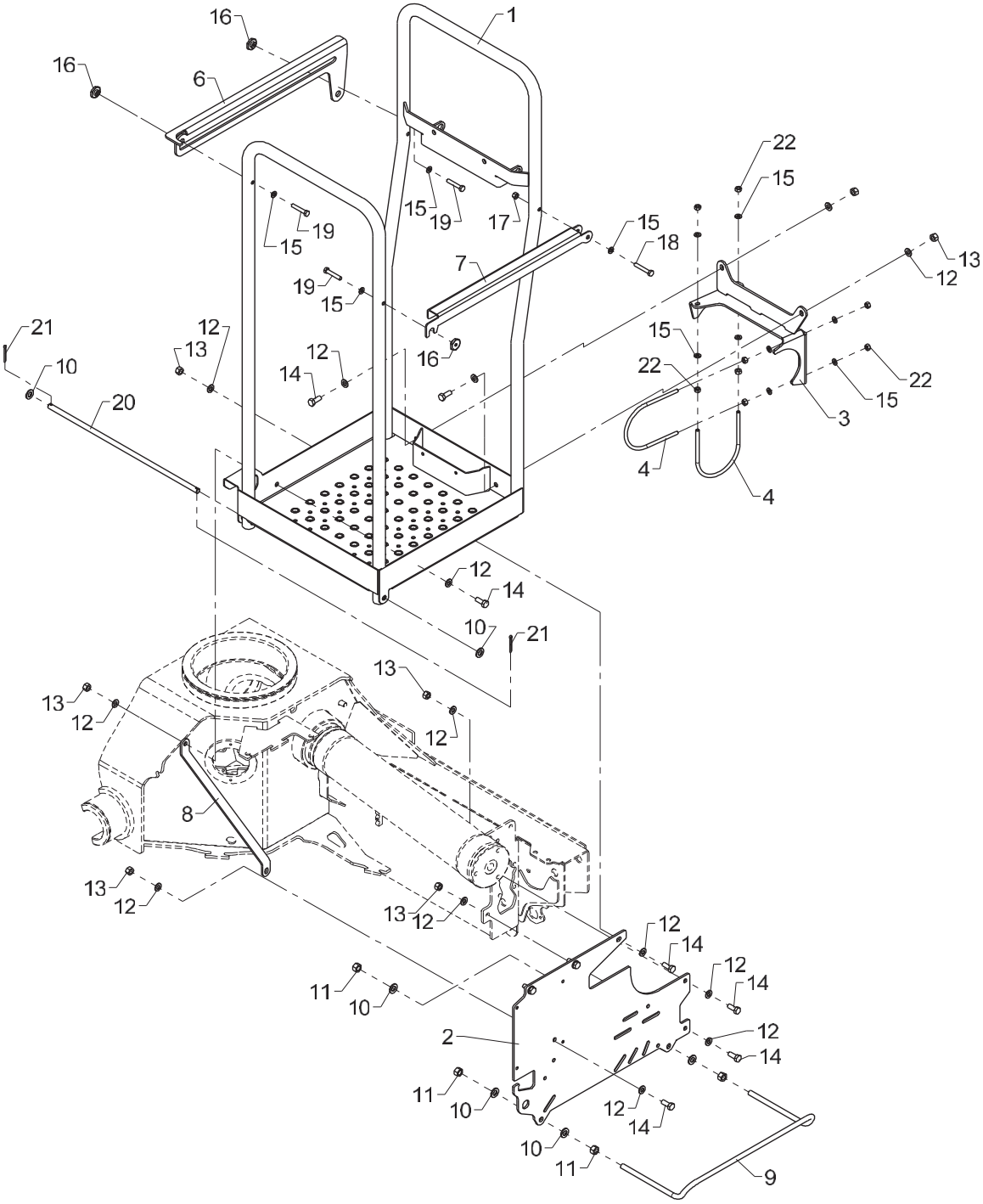

Obsolete

458 10 010

From loader 1170001
To loader

Created 29-03-2012
Modified

Stand-up controls, standard

Pos	Qty.	Part no.	Description	Remarks
		6365870	Stand-up control, standard	
1	1	6340461	Platform	
2	1	6365459	Valve bracket (HS)	
3	1	6365455	Mounting bracket	
4	2	6365224	Clamp	
5	1	6340471	Safety guard	
6	1	6340474	Railing	
7	1	6340473	Railing	
8	1	6365469	Reinforcement plate	
9	1	6239973	Clamp	
10	6	32338	Washer	12 mm
11	4	30860	Nut, stainless	M12
12	18	31565	Washer, stainless	10 mm
13	9	31564	Lock nut, stainless	M10
14	9	31513	Set screw, stainless	M10 x 25
15	12	31147	Face washer, 8 mm	
16	3	6340475	Nut	
17	1	30886	Lock nut, stainless	M8
18	1	30139	Steel bolt, stainless	M8 x 50
19	3	31511	Set screw, stainless	M8 x 45
20	1	6340472	Pin	
21	2	31638	Split pin	ø4 x 40
22	8	30856	Nut, stainless	M8

1100K, 1110K, 1220K, 1230K, 1320K, 1330K

Internal ref. 63 65 870

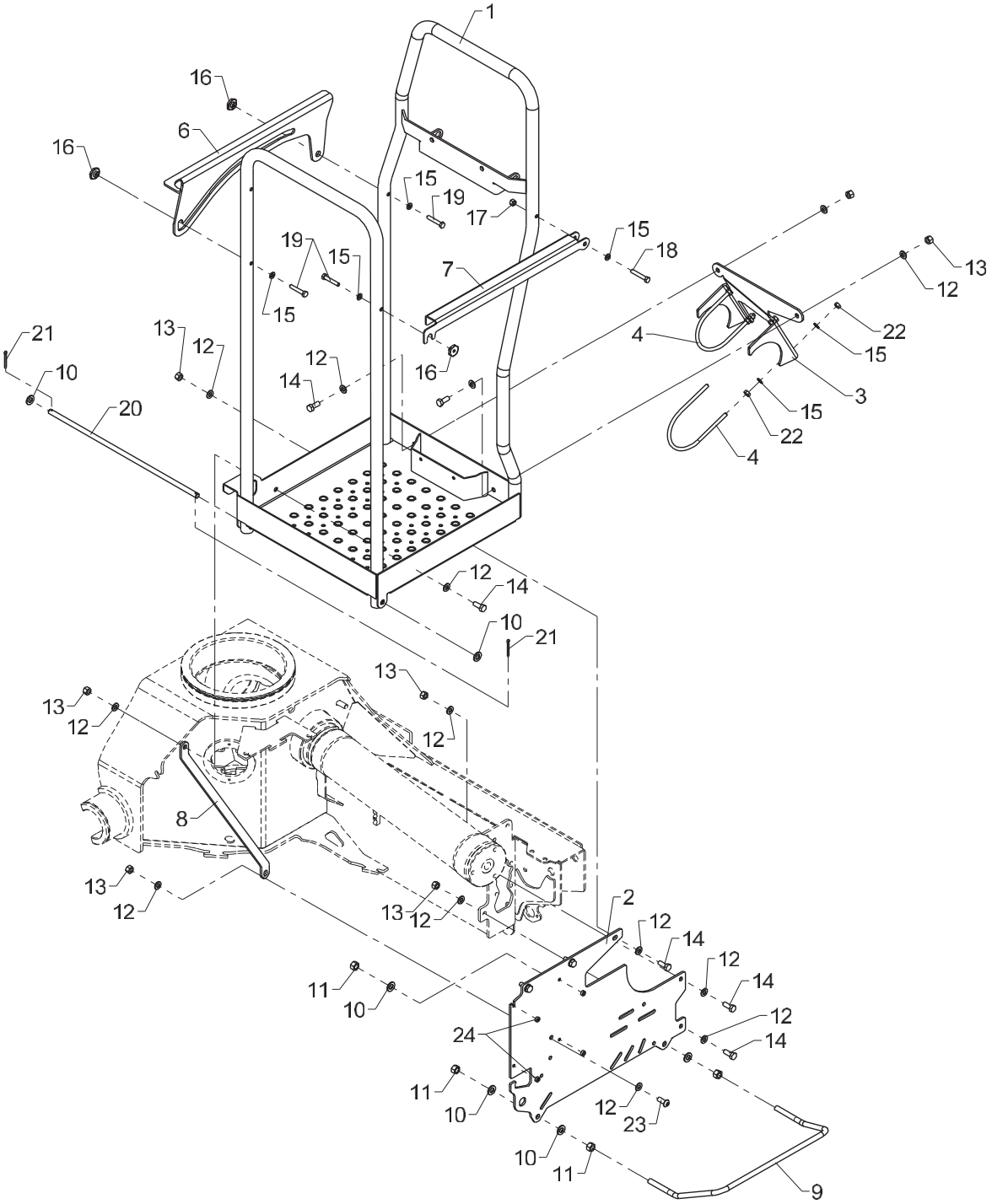

Stand-up controls, standard

Pos	Qty.	Part no.	Description	Remarks
1	1	6342461	Platform	
2	1	6365459	Valve bracket (HS)	
3	1	6366455	Mounting bracket	
4	2	6365224	Clamp	
5	1	6340471	Safety guard	
6	1	6342474	Railing	
7	1	6340473	Railing	
8	1	6365469	Reinforcement plate	
9	1	6365242	Safety guard	
10	6	32338	Washer	12 mm
11	4	30860	Nut, stainless	M12
12	18	31565	Washer, stainless	10 mm
13	9	31564	Lock nut, stainless	M10
14	8	31513	Set screw, stainless	M10 x 25
15	12	31147	Face washer, 8 mm	
16	3	6340475	Nut	
17	1	30886	Lock nut, stainless	M8
18	1	30139	Steel bolt, stainless	M8 x 50
19	3	31511	Set screw, stainless	M8 x 45
20	1	6340472	Pin	
21	2	31638	Split pin	ø4 x 40
22	8	30856	Nut, stainless	M8
23	1	30652	Screw	M10 x 25
24	4	64440	Bushing Ø12/6,5 x 5	

1100K, 1110K, 1220K, 1230K, 1320K, 1330K

Internal ref. 63 65 940

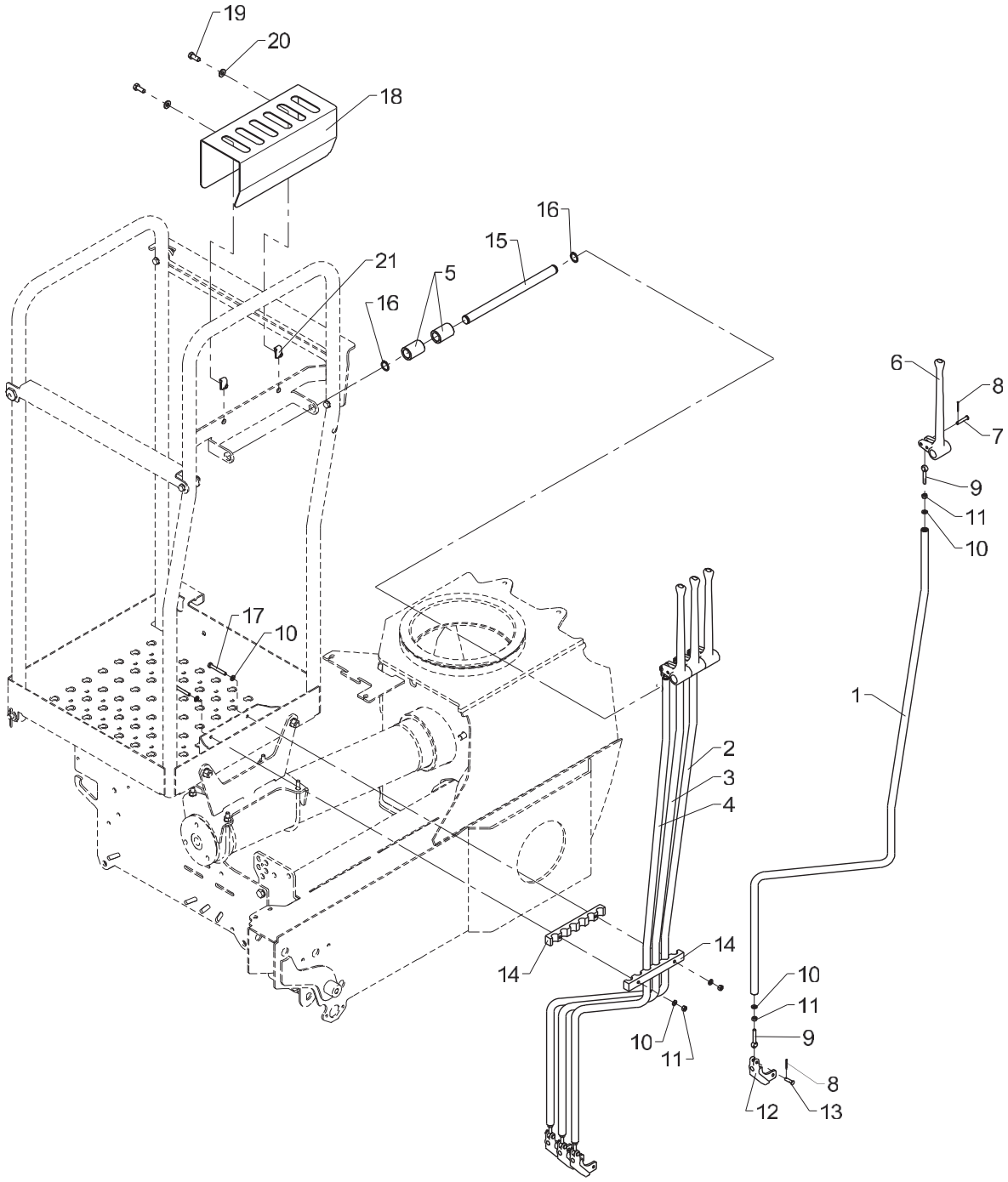

Rod control, HS std. - 4 functions

Pos	Qty.	Part no.	Description	Remarks
		6365940	Rod control, HS std.	
1	1	6365481	Connecting rod (slew)	
2	1	6365482	Connecting rod (1er bras)	
3	1	6365483	Connecting rod (jib)	
4	1	6365484	Connecting rod (extension)	
5	2	64040	Nylon bushing	
6	4	63423	Lever for dual controls	
7	4	31274	Cotter bolt	ø6 x 30
8	8	31601	Split pin, stainless	
9	8	32114	Pin	M6 x 40
10	12	32302	Face washer, stainless	6 mm
11	10	30854	Nut, stainless	M6
12	4	63499	Adapter	
13	4	31271	Cotter bolt	
14	2	63599	Guide	
15	1	6660954	Pin for 5 levers	
16	2	33107	Circlip	
17	2	30118	Steel pin, stainless	M6 x 45
18	1	6340477	Protection	
19	2	30132	Set screw, stainless	
20	2	31754	Washer	8,4 x 18 x 2
21	2	31069	Clip	M8 1,5 - 5,5 mm.

1100K, 1110K, 1220K, 1230K, 1320K, 1330K

Internal ref. 63 65 950

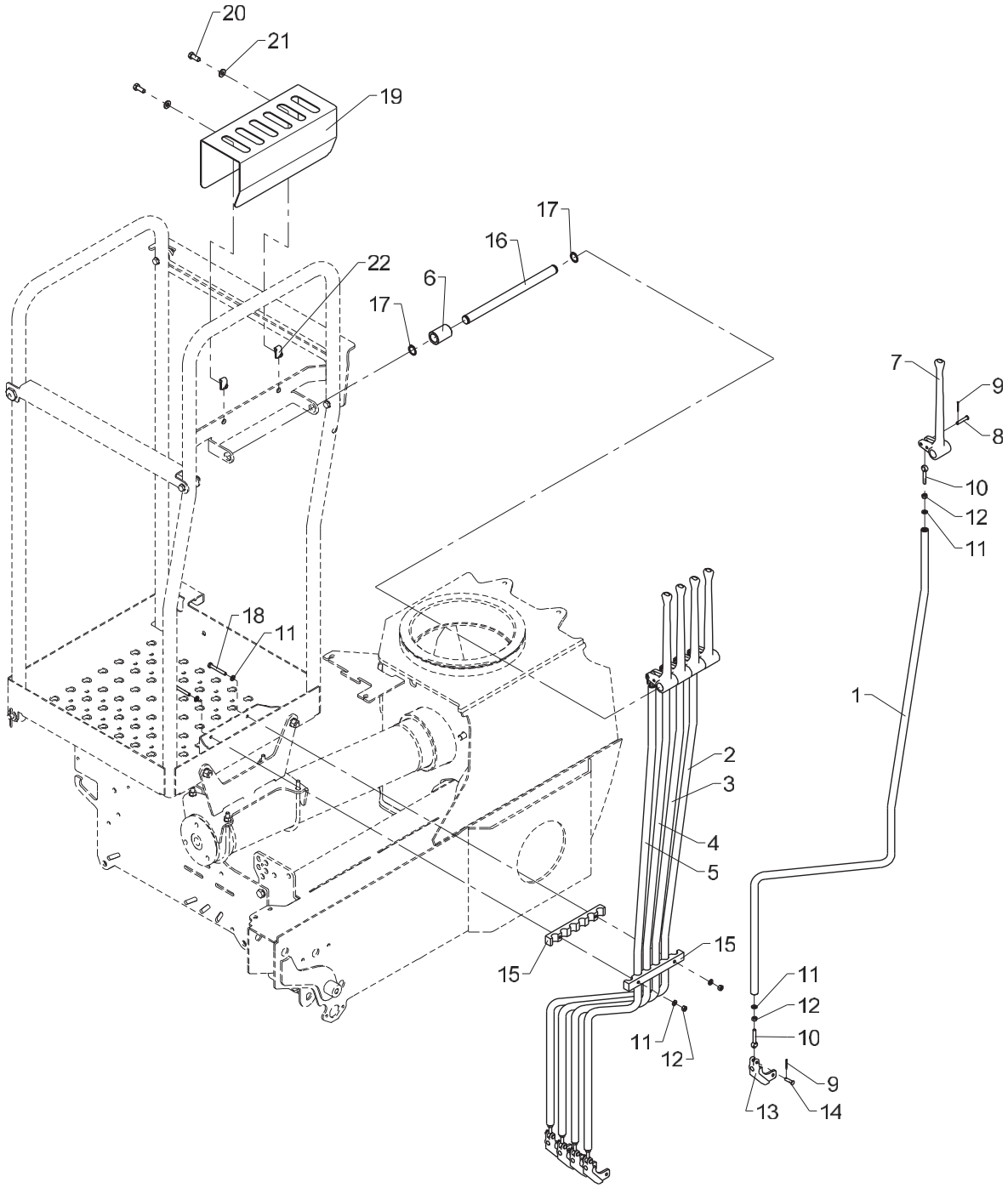

Rod control, HS std. - 5 functions

Pos	Qty.	Part no.	Description	Remarks
		6365950	Rod control, HS std.	
1	1	6365481	Connecting rod (slew)	
2	1	6365482	Connecting rod (1er bras)	
3	1	6365483	Connecting rod (jib)	
4	1	6365484	Connecting rod (extension)	
5	1	6365485	Connecting rod (1st EXV)	
6	1	64040	Nylon bushing	
7	5	63423	Lever for dual controls	
8	5	31274	Cotter bolt	ø6 x 30
9	10	31601	Split pin, stainless	
10	10	32114	Pin	M6 x 40
11	14	32302	Face washer, stainless	6 mm
12	12	30854	Nut, stainless	M6
13	5	63499	Adapter	
14	5	31271	Cotter bolt	
15	2	63599	Guide	
16	1	6660954	Pin for 5 levers	
17	2	33107	Circlip	
18	2	30118	Steel pin, stainless	M6 x 45
19	1	6340477	Protection	
20	2	30132	Set screw, stainless	
21	2	31754	Washer	8,4 x 18 x 2
22	2	31069	Clip	M8 1,5 - 5,5 mm.

1100K, 1110K, 1220K, 1230K, 1320K, 1330K

Internal ref. 63 65 960

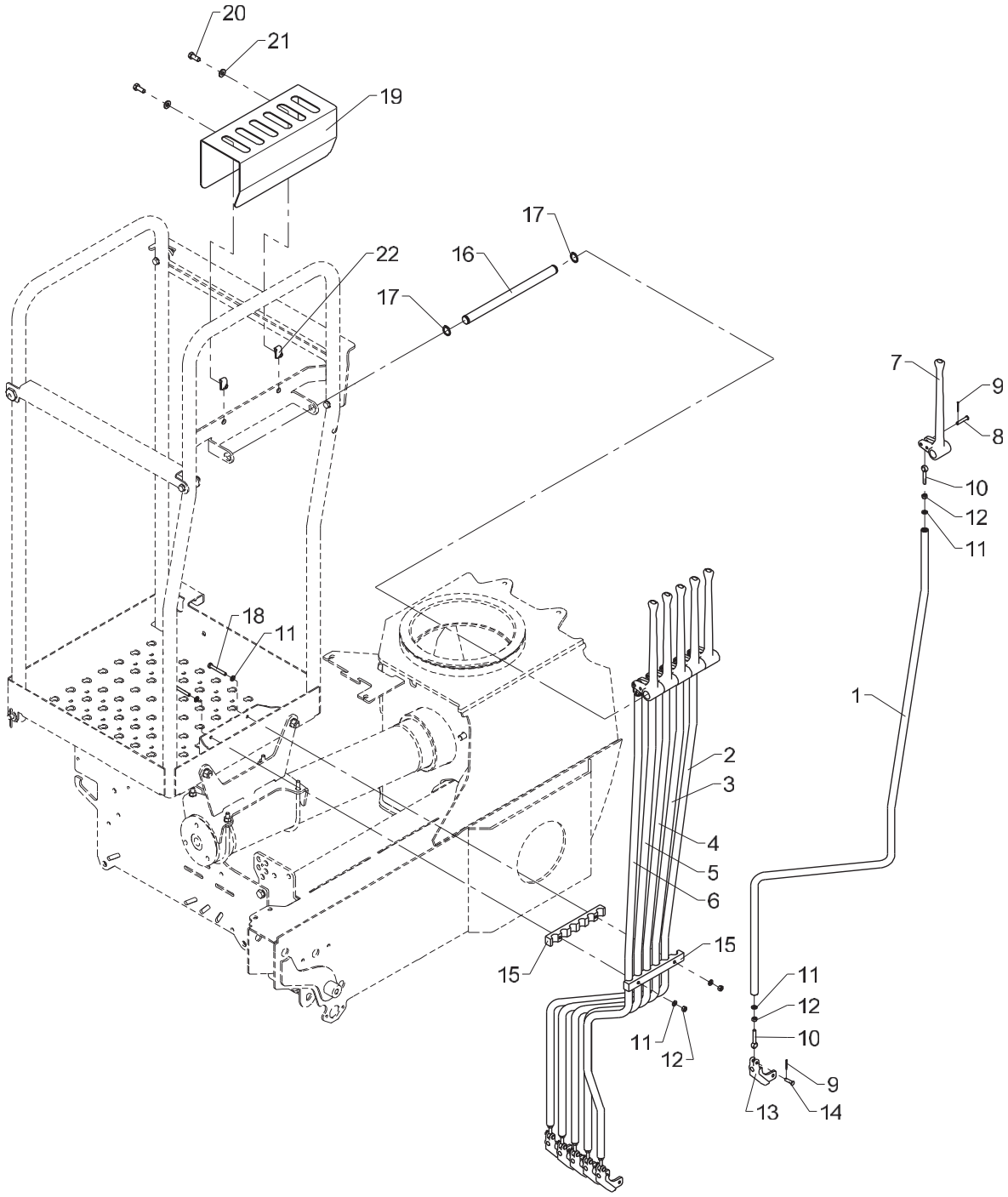

Rod control, HS std. - 6 functions

Pos	Qty.	Part no.	Description	Remarks
		6365960	Rod control, HS std.	
1	1	6365481	Connecting rod (slew)	
2	1	6365482	Connecting rod (1er bras)	
3	1	6365483	Connecting rod (jib)	
4	1	6365484	Connecting rod (extension)	
5	1	6365485	Connecting rod (1st EXV)	
6	1	6365486	Connecting rod (2nd EXV)	
7	6	63423	Lever for dual controls	
8	6	31274	Cotter bolt	ø6 x 30
9	12	31601	Split pin, stainless	
10	12	32114	Pin	M6 x 40
11	16	32302	Face washer, stainless	6 mm
12	14	30854	Nut, stainless	M6
13	6	63499	Adapter	
14	6	31271	Cotter bolt	
15	2	63599	Guide	
16	1	6660954	Pin for 5 levers	
17	2	33107	Circlip	
18	2	30118	Steel pin, stainless	M6 x 45
19	1	6340477	Protection	
20	2	30132	Set screw, stainless	
21	2	31754	Washer	8,4 x 18 x 2
22	2	31069	Clip	M8 1,5 - 5,5 mm.

1100K, 1110K, 1220K, 1230K, 1320K, 1330K

Internal ref. 63 65 500

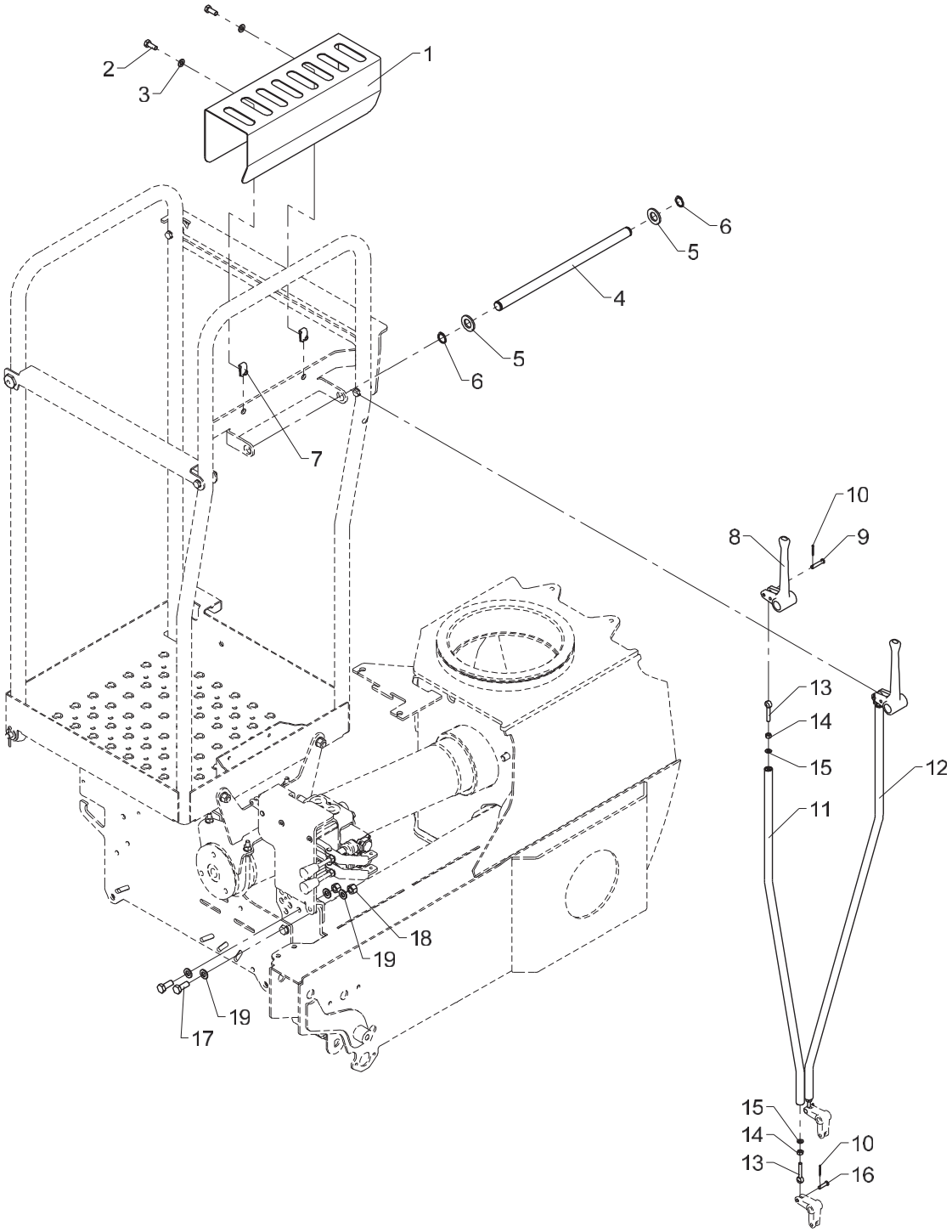

Stabilizer operation, HS std. - 2/4 fcts.

Pos	Qty.	Part no.	Description	Remarks
1	1	6340478	Protection	
2	2	30132	Set screw, stainless	
3	2	31147	Face washer, 8 mm	
4	1	6340476	Pin	
5	2	31132	Washer	18 mm
6	2	33107	Circlip	
7	2	31069	Clip	M8 1,5 - 5,5 mm.
8	2	63422	Lever for dual controls	
9	2	31274	Cotter bolt	ø6 x 30
10	4	31601	Split pin, stainless	
11	1	6365487	Connecting rod (stabilizers)	
12	1	6365488	Connecting rod (stabilizers)	
13	4	32114	Pin	M6 x 40
14	4	30854	Nut, stainless	M6
15	4	32302	Face washer, stainless	6 mm
16	2	31271	Cotter bolt	
17	2	31513	Set screw, stainless	M10 x 25
18	2	31564	Lock nut, stainless	M10
19	4	31177	Washer	10 mm

1100K, 1110K, 1220K, 1230K, 1320K, 1330K

63 66 650
Internal ref. 63 65 650

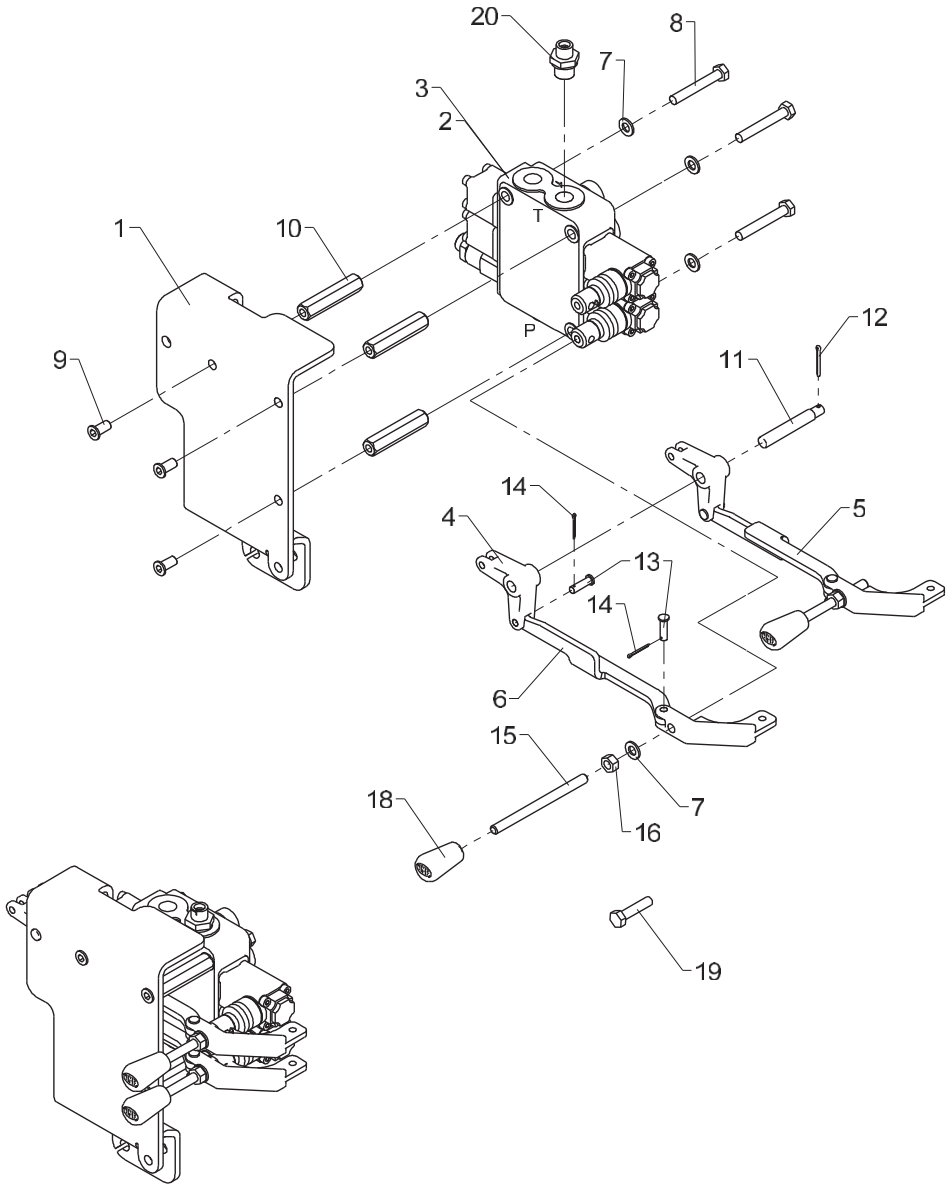

From loader 1170001
To loader

Valve bracket - HS 2 fcts./4 fcts. (oper. from HS)

Created 29-03-2012
Modified 31-05-2013

Pos	Qty.	Part no.	Description	Remarks
		6365650	Valve bracket (HS 2 fcts.)	
		6366650	Valve bracket (HS 4 fcts.)	
1	1	6365492	Valve bracket (HS)	
2	1	55701	Stabilizer control valve	HS 2 fkt.
3	1	55702	Stabilizer control valve	HS 4 fkt.
4	2	63479	Bracket	
5	1	6365494	Link	
6	1	6365493	Link	
7	5	31147	Face washer, 8 mm	
8	3	30140	Steel bolt, stainless	M8 x 55
9	3	32481	Screw	MCL8 x 16
10	3	6365491	Spacer	
11	1	6340493	Pin	
12	1	31607	Split pin	ø2,5 x 25
13	4	31271	Cotter bolt	
14	4	31601	Split pin, stainless	
15	2	1330187	Control lever, long, straight	
16	2	30856	Nut, stainless	M8
17	2	63478	Adapter	
18	2	59224	Knob for lever	
19	1	30136	Steel bolt, stainless	HS 4fkt.
20	1	25244	Connection	GES 8 LR 3/8-WD

1100K, 1110K, 1220K, 1230K, 1320K, 1330K

Internal ref. 63 66 480

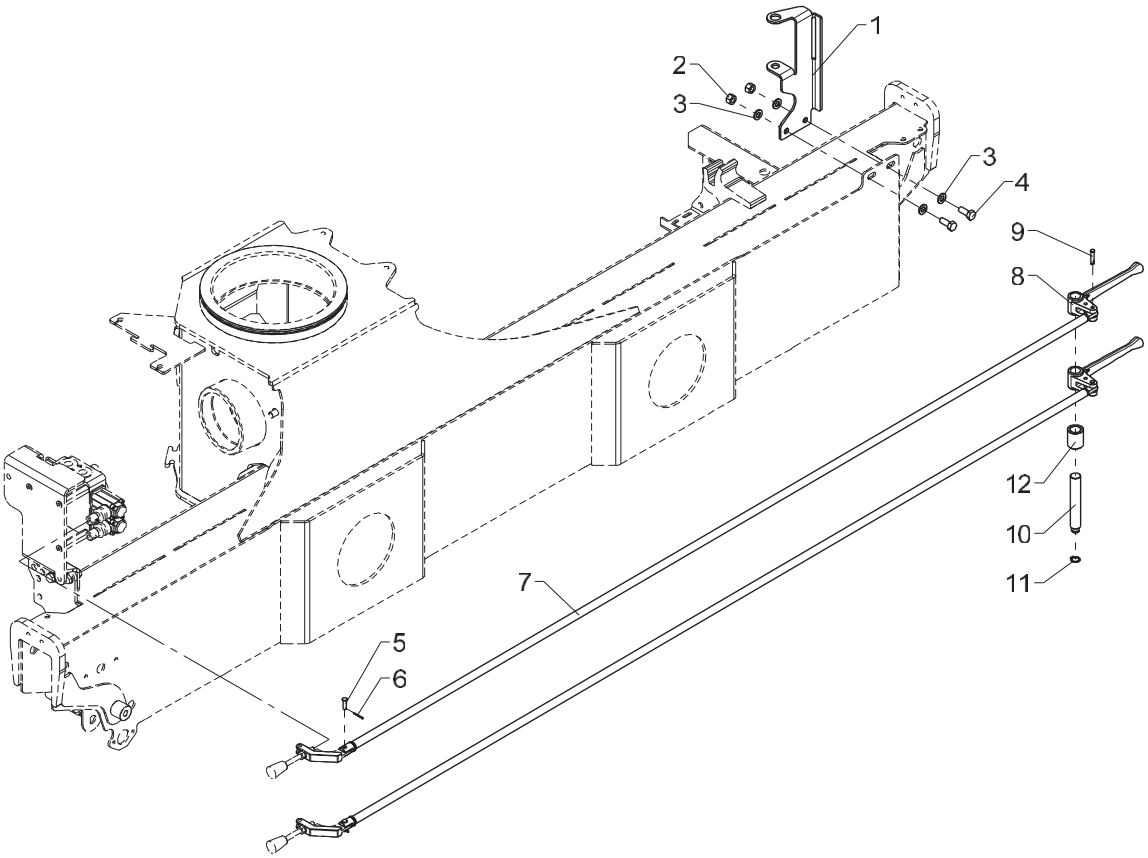

Rod control, dual control, HS 2 fcts.

Pos	Qty.	Part no.	Description	Remarks
1	1	6365254	Bracket f. dual control (4 f.)	
2	2	31564	Lock nut, stainless	M10
3	4	31565	Washer, stainless	10 mm
4	2	31513	Set screw, stainless	M10 x 25
5	2	31271	Cotter bolt	
6	2	31601	Split pin, stainless	
7	2	6365263	Connecting rod	
8	2	63444	Lever for dual controls	
9	2	63468	Split pin with spring lock	
10	1	6340262	Pin (4 functions)	
11	1	33104	Circlip	15U
12	1	63598	Bushing	ø30/ø20 x 35

1100K, 1110K, 1220K, 1230K, 1320K, 1330K

63 66 990
Internal ref. 63 66 980

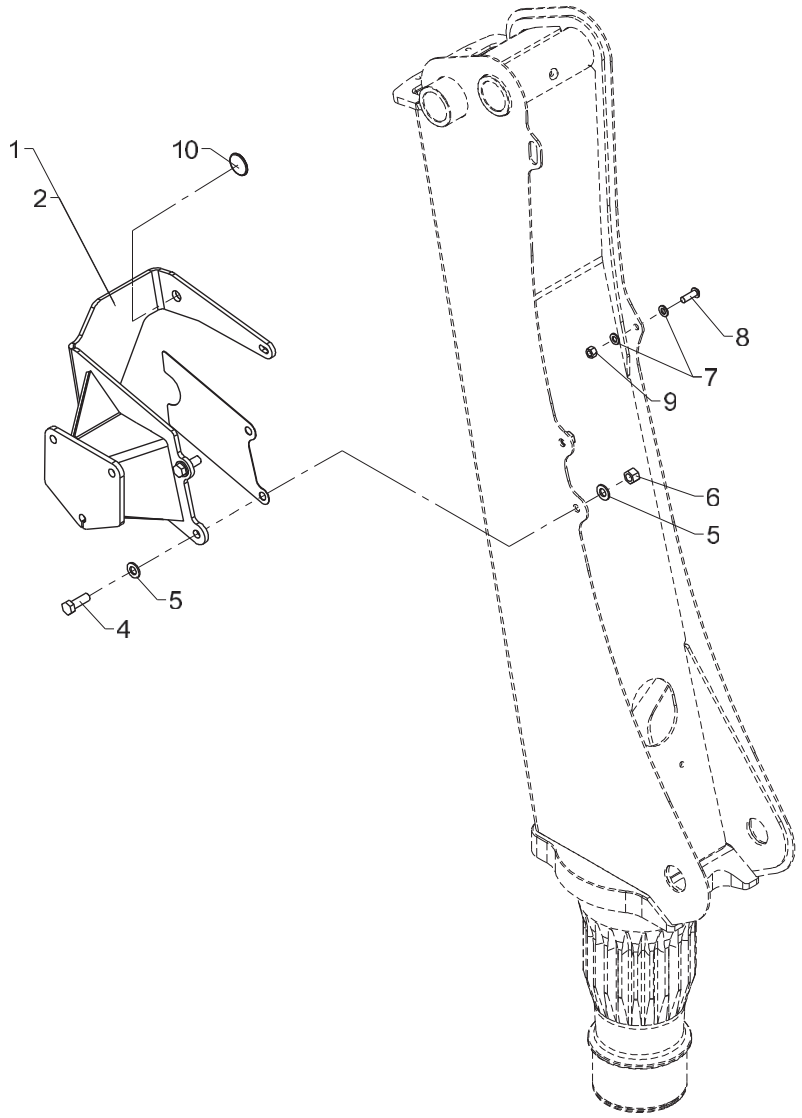

Mounting fittings, TS

Pos	Qty.	Part no.	Description	Remarks
		6366980	Fittings, TS	
		6366990	Fittings, TS	
1	1	6363081	Bracket	900K, 1020K, 1100K, 1220K
2	1	6363085	Bracket	910K, 1030K, 1110K, 1230K
3	1	6363087	Division plate	
4	2	30207	Set screw	M14 x 40
5	4	31178	Washer	14 mm
6	2	30891	Lock nut	M14
7	2	31177	Washer	10 mm
8	1	30649	Screw	M10 x 30
9	1	30888	Lock nut	
10	1	6381484	Guide	

1100K, 1110K, 1220K, 1230K, 1320K, 1330K

Internal ref. 63 41 950

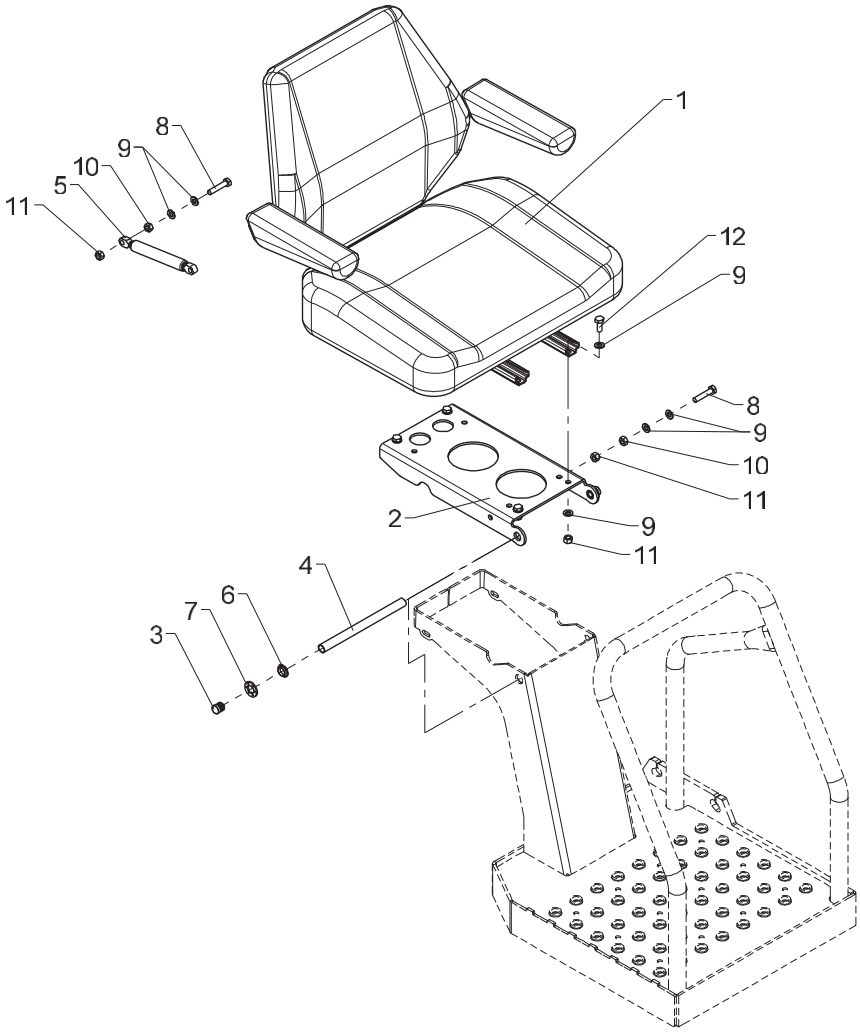

458 11 020

From loader 1170001
To loader

Seat, cpl.

Created 24-02-2009
Modified 08-02-2012

Pos	Qty.	Part no.	Description	Remarks
1	1	24134	Seat	
2	1	6306638	Plate, seat	
3	2	64520	Stopper	
4	1	6306649	Pin	
5	1	48460	Gas spring	
6	2	23416	Composite bearing	BB 1504,5
7	2	32279	Clamping ring sleeve	15 mm
8	2	30137	Set screw, stainless	M8 x 40
9	12	31147	Face washer, 8 mm	8 mm
10	2	30856	Nut, stainless	M8
11	6	30886	Lock nut, stainless	M8
12	4	30132	Set screw, stainless	M8 x 20

1100K, 1110K, 1220K, 1230K, 1320K, 1330K

Internal ref. 63 41 940

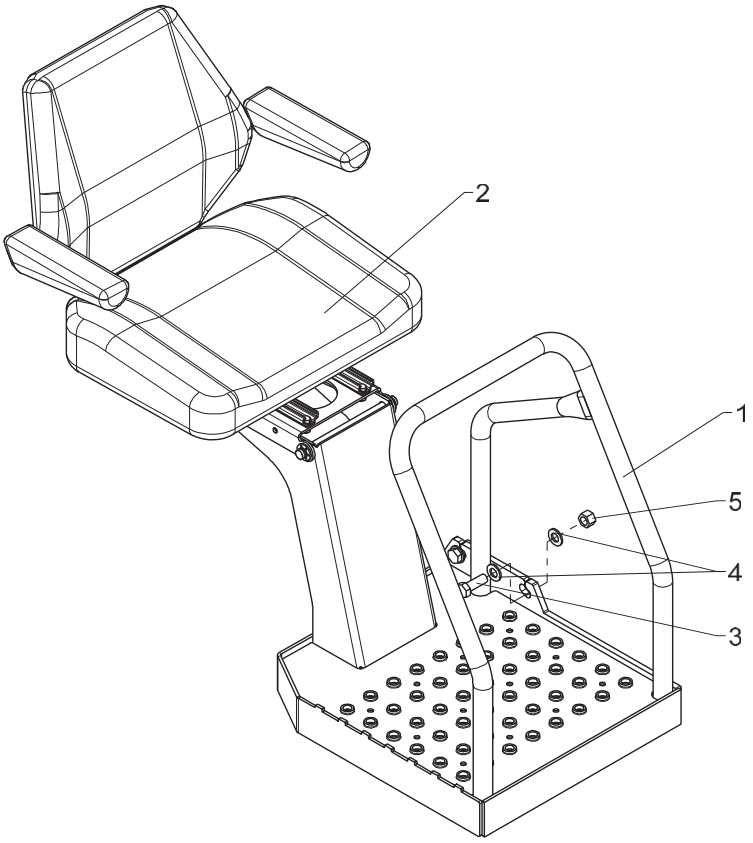

From loader 1170001
To loader

Top seat (RC), cpl.

Created 24-02-2009
Modified 08-02-2012

Pos	Qty.	Part no.	Description	Remarks
1	1	6340911	Platform, (TSRC)	
2	1	6341950	Seat, complete	
3	3	32248	Set screw	M14 x 40
4	6	31178	Washer	14 mm
5	3	32317	Lock nut	M14

1100K, 1110K, 1220K, 1230K, 1320K, 1330K

63 41 970
Internal ref. 63 41 960

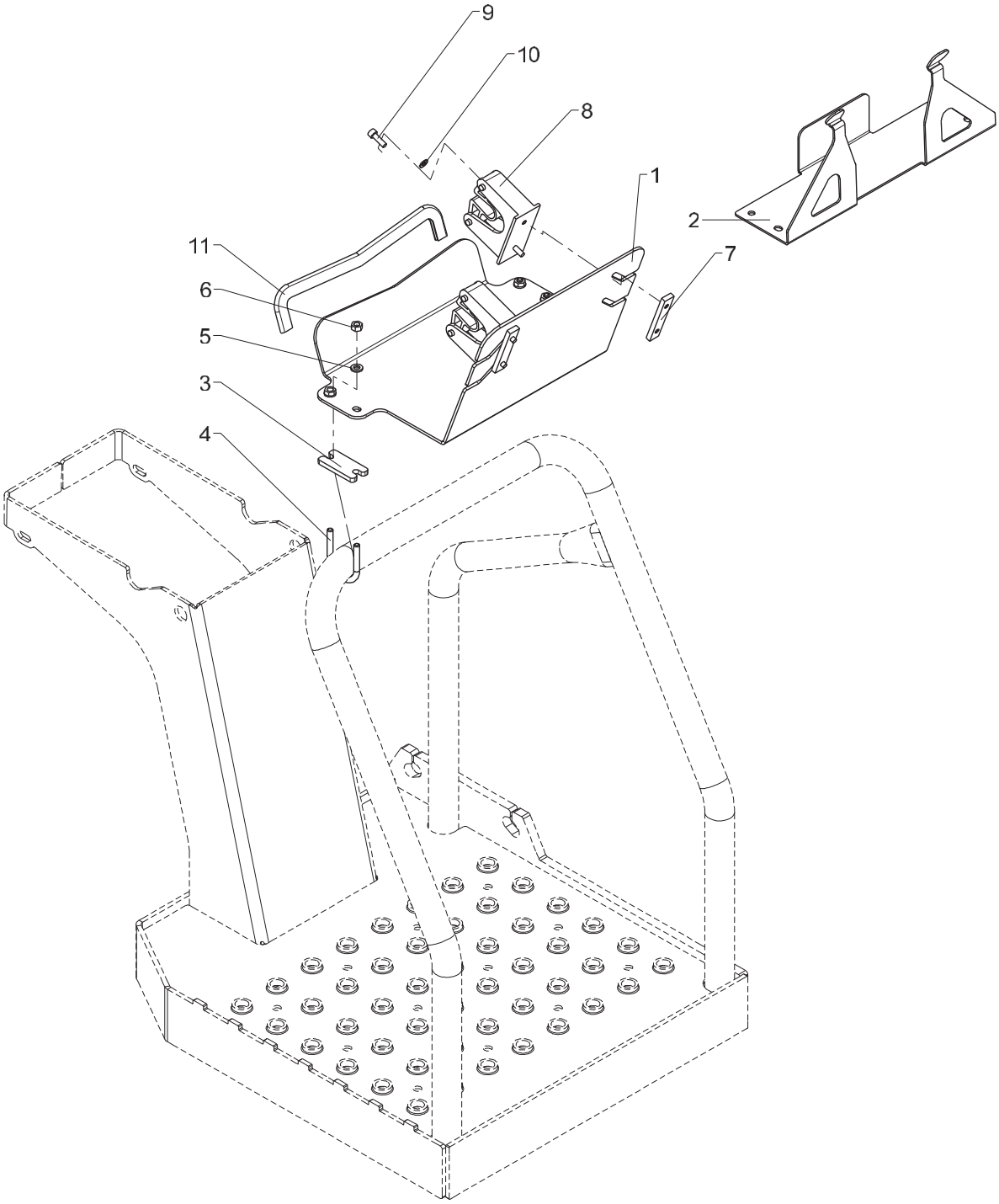

Mounting fittings, TS RC

Pos	Qty.	Part no.	Description	Remarks
		6341960	Fittings, TS RC (SR)	
		6341970	Fittings, TS RC (HETR)	
1	1	6340901	Bracket, Scanreco RC box	
2	1	6340902	Bracket(HETR.remote ctrl. box)	
3	2	6340904	Division plate	
4	2	6340903	Clamp	
5	4	32302	Face washer, stainless	6 mm
6	4	30854	Nut, stainless	M6
7	2	8507104	Threaded plate	
8	2	46453	Bracket	
9	4	30433	Screw	MC5 x 16
10	4	31189	Washer	5 mm
11	1	46596	Rubber protection	0,3 m.

1100K, 1110K, 1220K, 1230K, 1320K, 1330K

Internal ref. 63 42 360

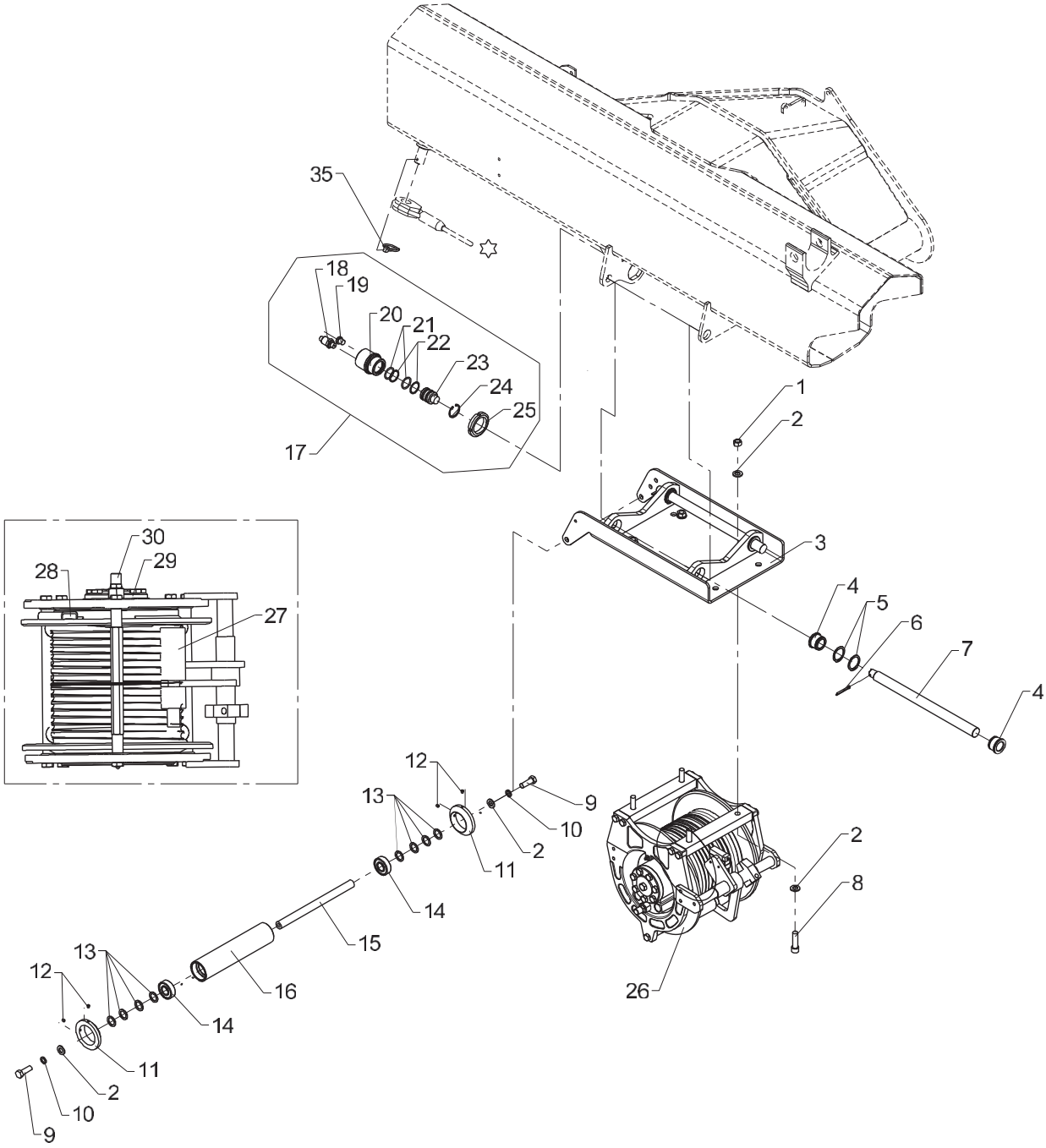

☆ 63 193

Obsolete

Winch 1.5 T + mounting fittings and weighing cell

458 13 020

From loader 1170001
To loader 1170196

Created 21-08-2007
Modified

Pos	Qty.	Part no.	Description	Remarks
		6342360	Winch1.5t, fittings/weigh.cell	
1	4	32372	Nut	M12
2	10	31131	Washer	12 mm
3	1	6340977	Winch bracket	
4	4	63485	Slide bearing	
5	4	33117	Circlip	35U
6	2	31638	Split pin	ø4 x 40
7	2	6340987	Pin	
8	4	30428	Sockethead screw	MC12 x 45
9	2	30178	Set screw	M12 x 35
10	2	31158	Spring washer	12 mm
11	2	6886764	Guide roller	
12	4	31548	Pointed screw, stainless	MSP6 x 6
13	8	33227	Back ring	SS 20 x 28 x 2
14	2	23178	Ball bearing	
15	1	6371254	Pin	
16	1	6290984	Guide roller	
17	1	6342350	Weighing cell, complete	
18	1	28850	Pressure transducer	
19	1	25197	Plug	VS-R-1/4 WD
20	1	6340988	Housing	
21	2	20175	O-ring	OR 26,2 x 3
22	2	20898	Back ring	STR 27 x 32 x 1,3
23	1	6340989	Piston	
24	1	33103	Circlip	34 I
25	1	23163	Nut	M45 x 1,5
26	1	58284	Winch	
27	1	58588	Wire guide	905201800
28	1	58589	Thimble	241000100
29	1	59398	Motor	MGLR 200/9000143
30	1	59399	Load-holding valve	438002300
31	1	58591	Seal kit for brake	600008400
32	1	58413	Seal kit for P9 motor	6000094
33	1	58238	Washers	10x02941060 + 9x02941061 + 2x4
34	1	58592	Kit for motor	600453100
35	1	33386	Ring split	ø6 x 45

1100K, 1110K, 1220K, 1230K, 1320K, 1330K

Internal ref. 63 42 360

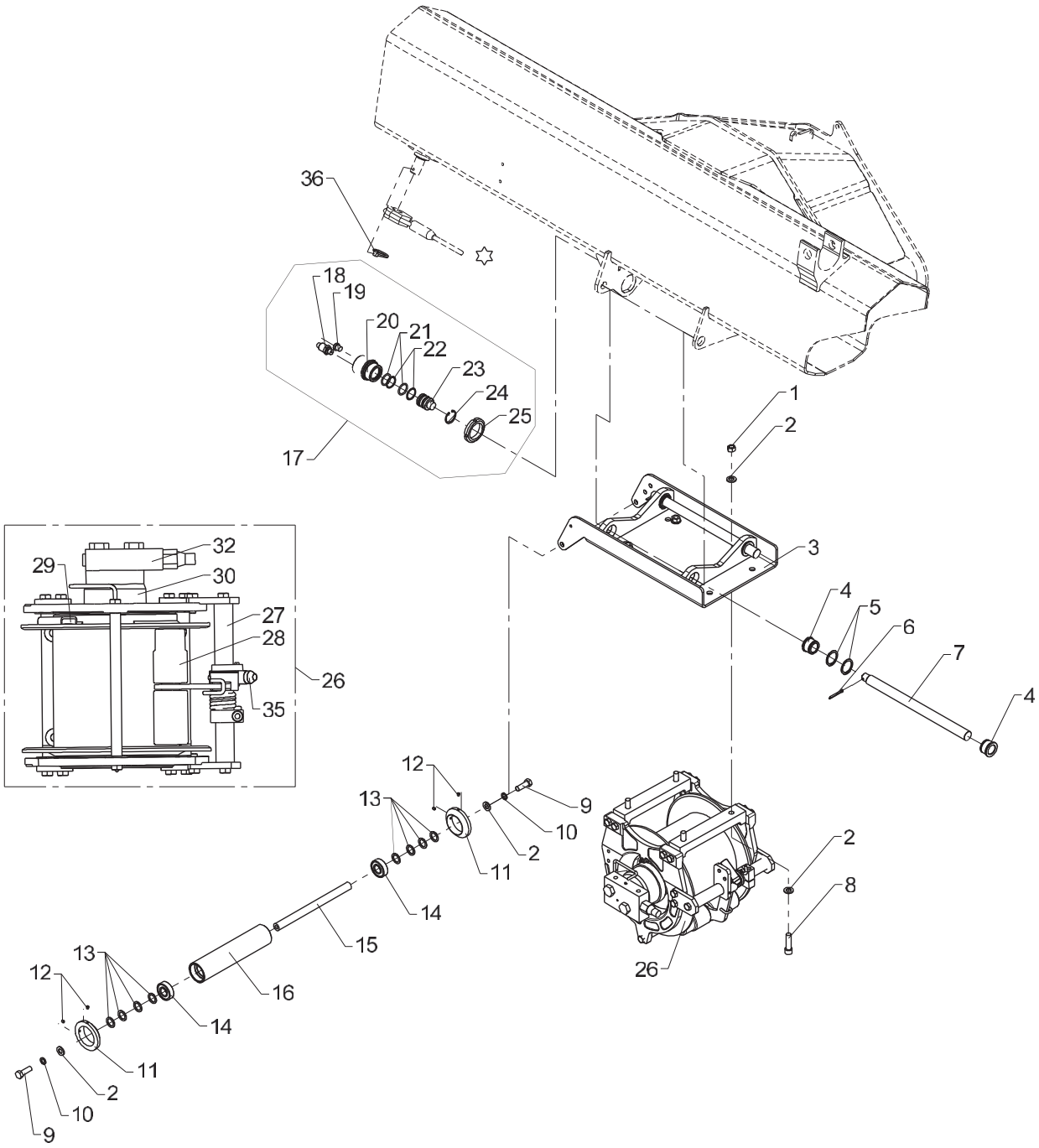

☆ 63 193

Winch 1.5 T + mounting fittings and weighing cell

Pos	Qty.	Part no.	Description	Remarks
		6342360	Winch1.5t, fittings/weigh.cell	
1	4	32372	Nut	M12
2	10	31131	Washer	12 mm
3	1	6340977	Winch bracket	
4	4	63485	Slide bearing	
5	4	33117	Circlip	35U
6	2	31638	Split pin	ø4 x 40
7	2	6340987	Pin	
8	4	30428	Sockethead screw	MC12 x 45
9	2	30178	Set screw	M12 x 35
10	2	31158	Spring washer	12 mm
11	2	6886764	Guide roller	
12	4	31548	Pointed screw, stainless	MSP6 x 6
13	8	33227	Back ring	SS 20 x 28 x 2
14	2	23178	Ball bearing	
15	1	6371254	Pin	
16	1	6290984	Guide roller	
17	1	6342350	Weighing cell, complete	
18	1	28850	Pressure transducer	
19	1	25197	Plug	VS-R-1/4 WD
20	1	6340988	Housing	
21	2	20175	O-ring	OR 26,2 x 3
22	2	20898	Back ring	STR 27 x 32 x 1,3
23	1	6340989	Piston	
24	1	33103	Circlip	34 I
25	1	23163	Nut	M45 x 1,5
26	1	56607	Winch	
27	1	58593	Wire guide	9052023DX
28	1	58594	Complete arm for P9 winch	02981320D
29	1	58589	Thimble	241000100
30	1	58596	Motor	425046200
	1	58598	Seal kit for motor	600008200
32	1	58597	Valve	438046400
	1	58238	Washers	10x02941060 + 9x02941061 + 2x4
	1	61288	Seal kit P9E	600010800
35	1	49298	Micro switch 6000	
36	1	33386	Ring split	ø6 x 45

1100K, 1110K, 1220K, 1230K, 1320K, 1330K

63 64 690
63 64 700
Internal ref. 63 64 710

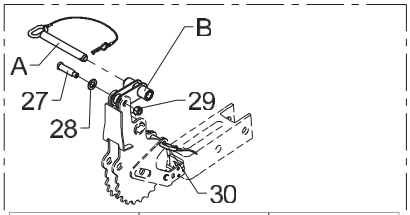

	A	B
K1	60 92 454	63 63 047
K2	63 65 677	63 63 047
K2/MF3	66 57 424	63 63 047
K3	66 57 424	63 63 047
K3/MF4	66 57 424	63 63 043
K4	66 57 424	63 63 043
K4/MF5	66 57 654	63 63 043
K5	66 57 654	63 63 043
K5/MF6	66 57 654	63 63 043

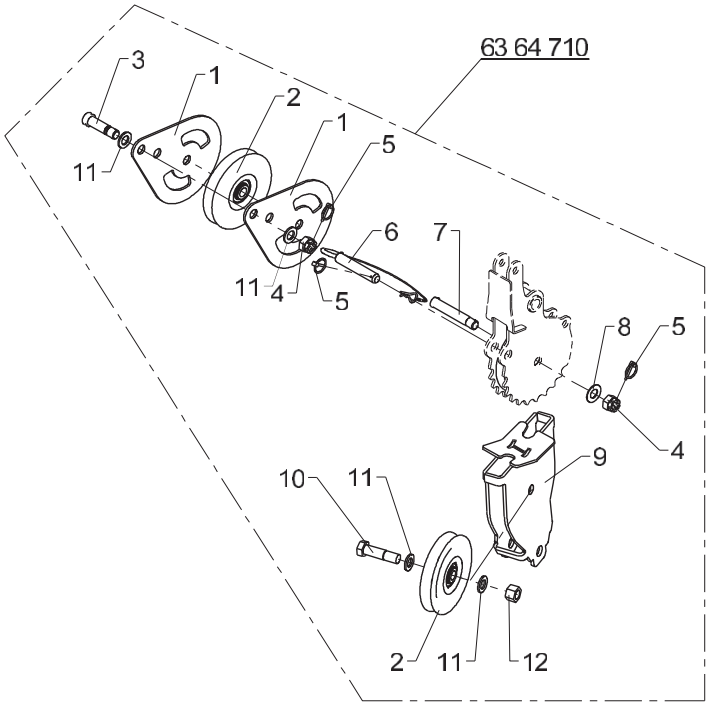

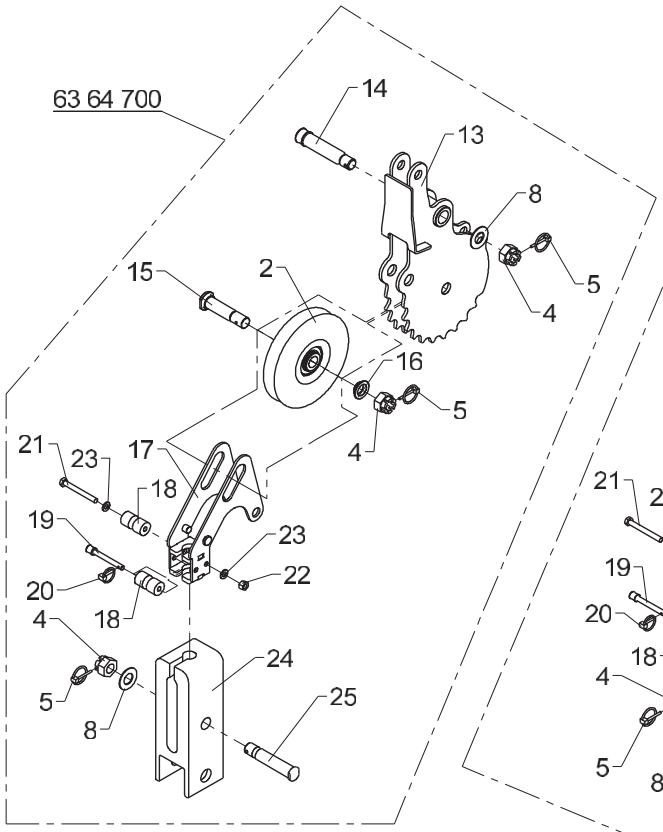

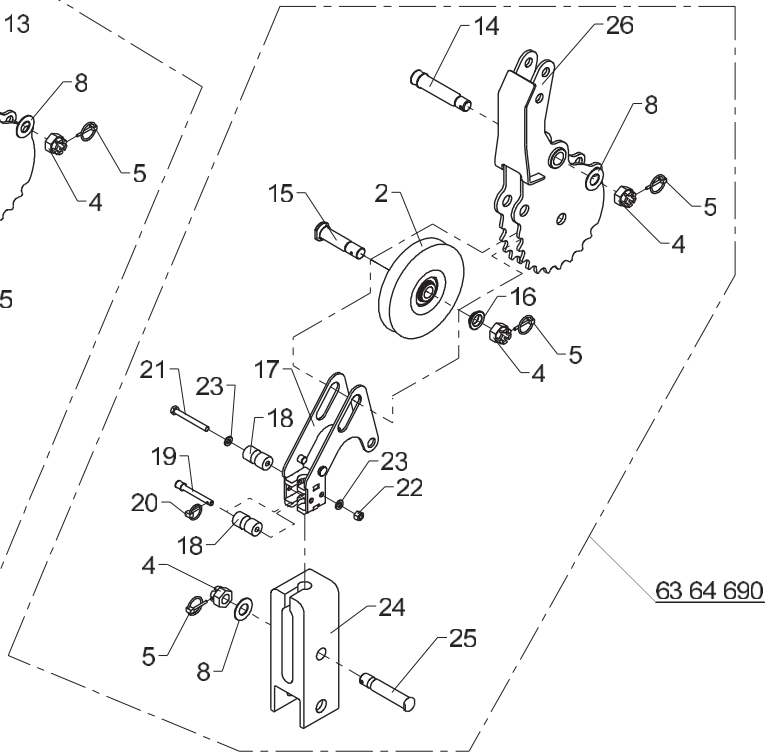

Wire sheaves, winches

Pos	Qty.	Part no.	Description	Remarks
		6364710		
		6364700		K1, K2, K3
		6364690		K3/MF4, K4, K5
1	2	6363042	Side plate	
2	3	6342290	Wire sheave with bearing	
3	1	6300558	Pin	
4	5	30837	Nut	M24
5	6	31967	Ring split	ø4,5 x 40
6	1	6657654	Lock pin with chain	ø25
7	1	6363041	Pin (ø25 x 111.5)	
8	3	31128	Washer	24 mm
9	1	6363091	Snatch block	
10	1	32476	Steel bolt	M24 x 95
11	4	31133	Washer	24 mm
12	1	30897	Lock nut	M24
13	1	6363025	Wire sheave (H190)	
14	1	6304458	Pin for suspension	
15	1	6363031	Pin (M24 x 105)	
16	1	6363032	Washer for slide block	
17	1	6363033	Stop	
18	2	68066	Wire guide	
19	1	6363037	Pin	
20	1	33385	Ring split	ø4,5 x 27
21	1	30164	Steel bolt	M10 x 90
22	1	30888	Lock nut	
23	2	31177	Washer	10 mm
24	1	6340958	Counterweight	
25	1	6340959	Pin	
26	1	6363021	Wire sheave	
27	1	6363095	Pin ((ø20 x 58)	
28	1	31179	Washer	20 mm
29	1	30892	Lock nut	M16
30	1	6301166	Lock pin with split pin	ø20

1100K, 1110K, 1220K, 1230K, 1320K, 1330K

63 63 090
Internal ref. 63 63 100

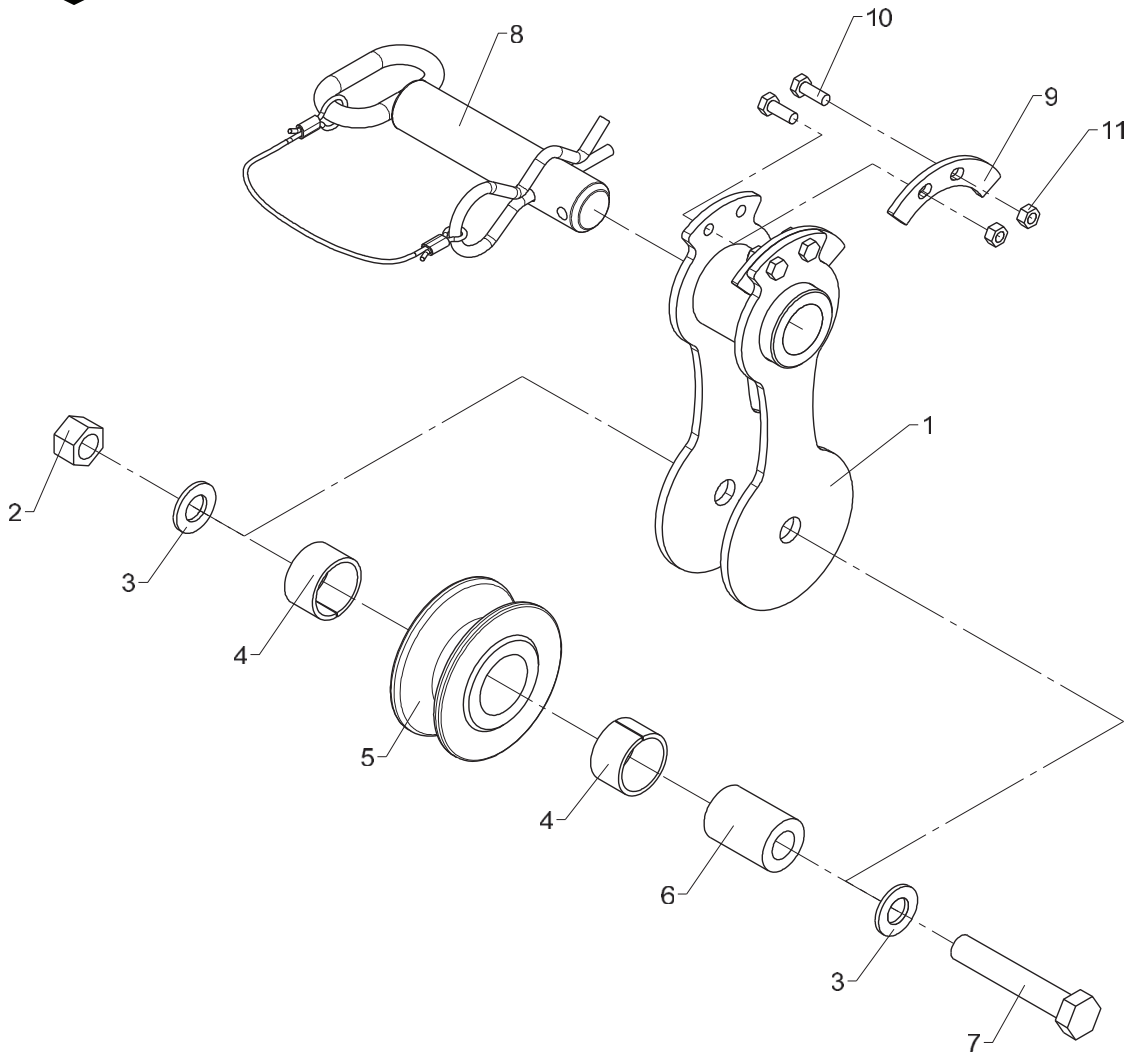

Armsystem Boom system.	K4	K5	K5/MF6	
Kran navn Boom Section.	K2	K2	K2	K4
				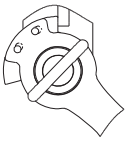

Wire roller guide

Pos	Qty.	Part no.	Description	Remarks
		6363100		
		6363090		
1	1	6363096	Suspension, wire roller guide	
2	1	30891	Lock nut	M14
3	2	31178	Washer	14 mm
4	2	23302	Bushing	MB 3020 DU
5	1	68070	Wire guide	
6	1	6885504	Distance pipe	
7	1	30214	Steel bolt	M14 x 80
8	1	6304266	Lock pin with split pin	
9	2	6363098	Lock plate	
10	4	30112	Set screw, stainless	M6 x 16
11	4	30854	Nut, stainless	M6

1100K, 1110K, 1220K, 1230K, 1320K, 1330K

Internal ref. 63 64 780

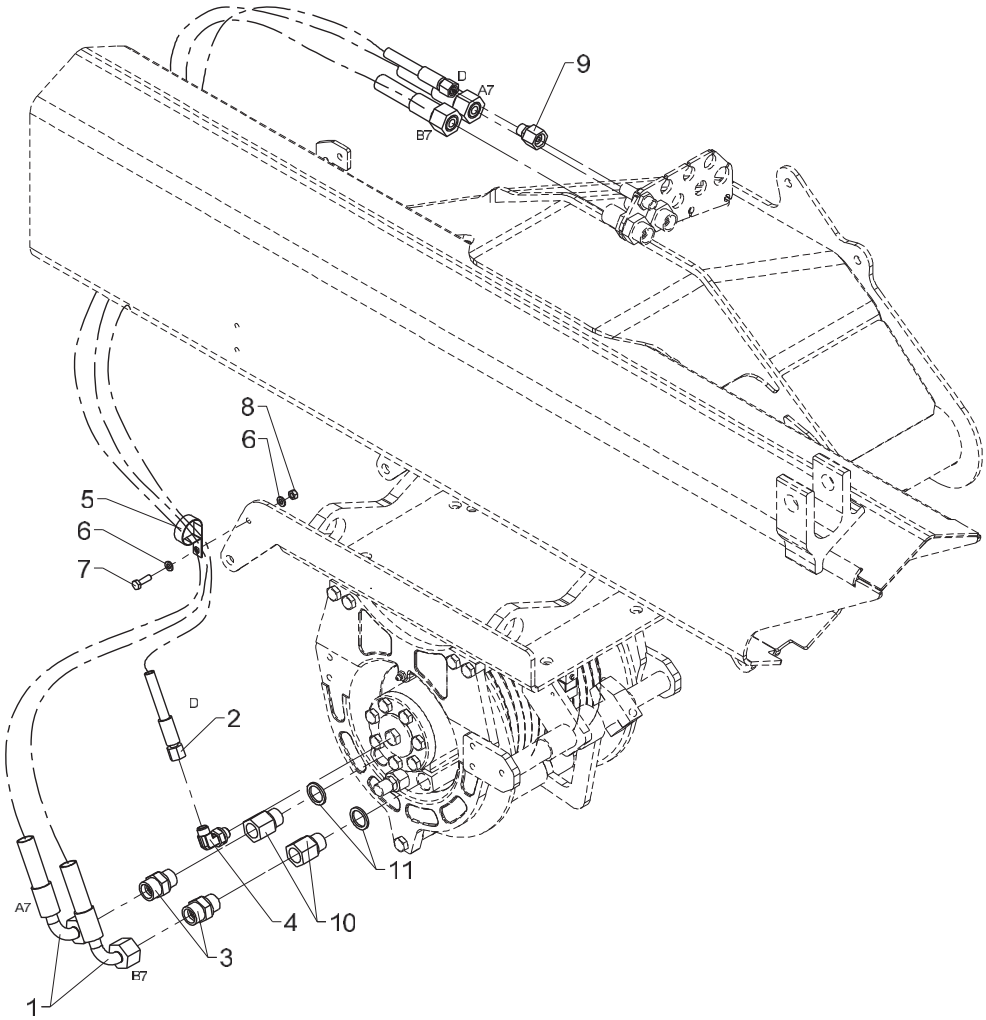

Obsolete

458 13 100

From loader 1170001
To loader

Created 07-11-2014
Modified

Hydraulic system, winch

Pos	Qty.	Part no.	Description	Remarks
1	2	62683	Hose	
2	1	62619	Hose	
3	2	26334	Connection	P-GEV 16 SR-WD
4	1	26898	Elbow connection	8 mm - 1/4"
5	1	31868	Clip 32 mm	
6	2	32302	Face washer, stainless	6 mm
7	1	30113	Set screw, stainless	M6 x 20
8	1	30854	Nut, stainless	M6
9	1	26101	Reducing connection	REDSDN 12/8 L
10	2	26922	Reducing nipple	
11	2	21106	Seal washer	ø21,5 x 28,7 x 2,5

1100K, 1110K, 1220K, 1230K, 1320K, 1330K

Internal ref. 63 64 780

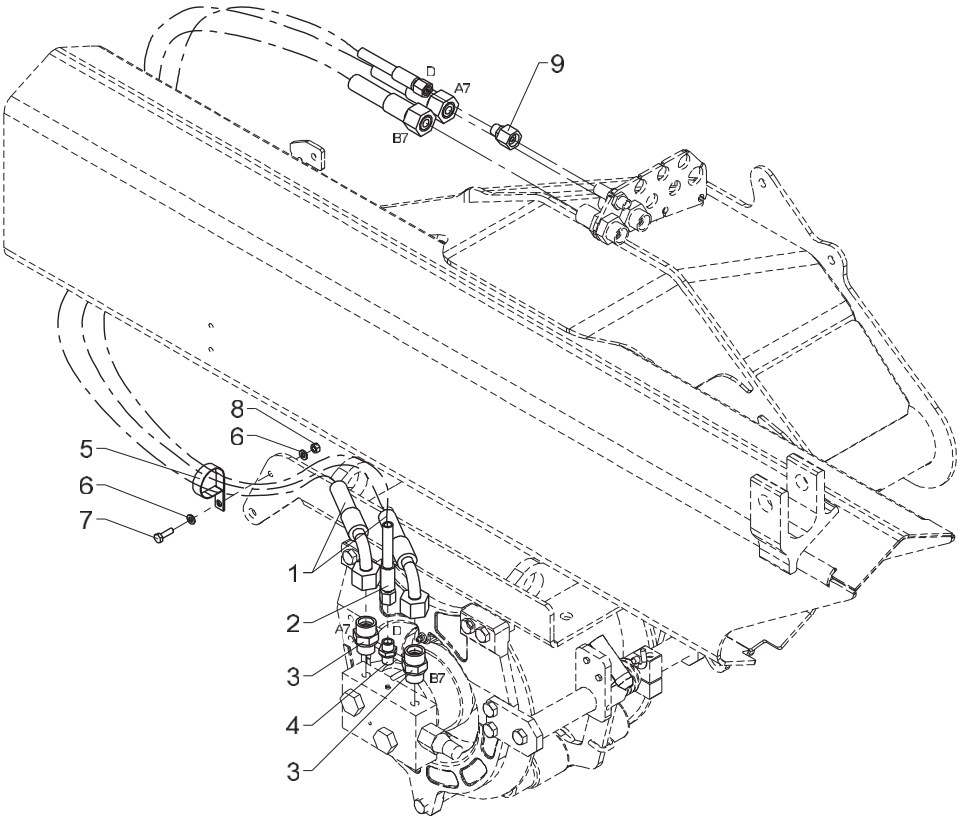

Hydraulic system, winch

Pos	Qty.	Part no.	Description	Remarks
1	2	62683	Hose	
2	1	62619	Hose	
3	2	26334	Connection	P-GEV 16 SR-WD
4	1	25109	Connection	GES 8 LR-WD
5	1	31869	Rubber clip Ø 38 mm	
6	2	32302	Face washer, stainless	6 mm
7	1	30113	Set screw, stainless	M6 x 20
8	1	30854	Nut, stainless	M6
9	1	26101	Reducing connection	REDSDN 12/8 L

1100K, 1110K, 1220K, 1230K, 1320K, 1330K

Internal ref. 63 40 780

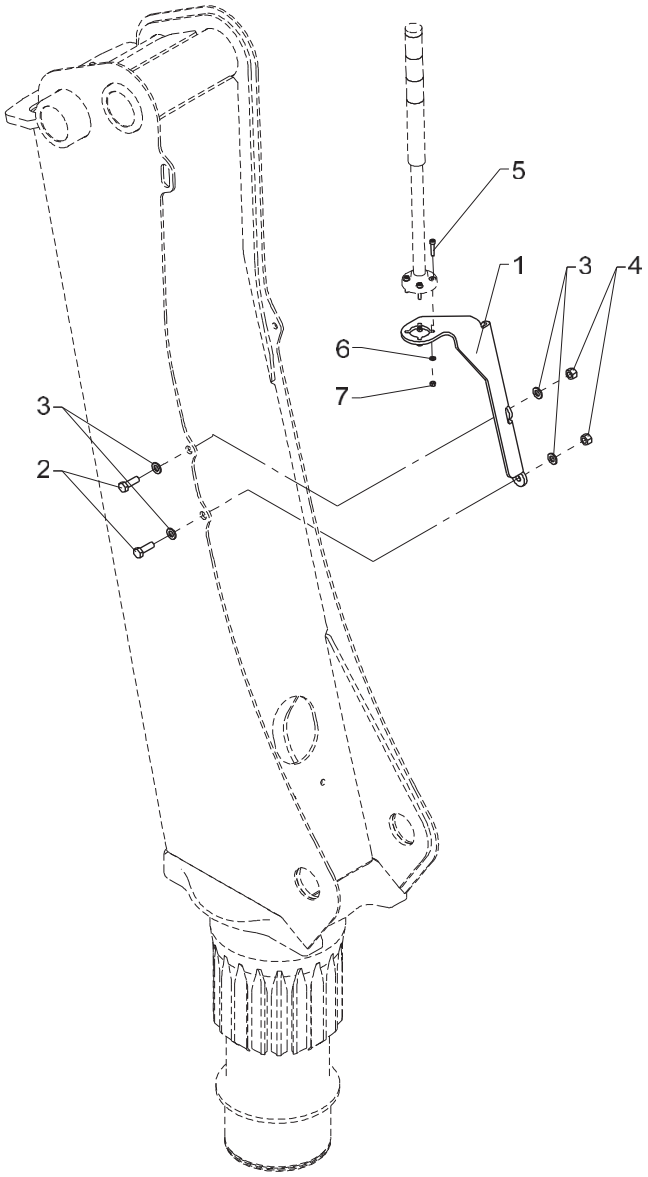

Obsolete

458 16 060

From loader 1170001
To loader

Mounting fittings, light tower

Created 04-01-2010
Modified 13-01-2014

Pos	Qty.	Part no.	Description	Remarks
1	1	6340069	Bracket (light tower)	
2	2	30156	Set screw, stainless	M10 x 30
3	4	31565	Washer, stainless	10 mm
4	2	31564	Lock nut, stainless	M10
5	4	30481	Screw	
6	4	32308	Washer	5 mm
7	4	30859	Lock nut, stainless	M5

1100K, 1110K, 1220K, 1230K, 1320K, 1330K

63 66 470
63 66 460
63 66 450
63 66 440
Internal ref. 63 66 430

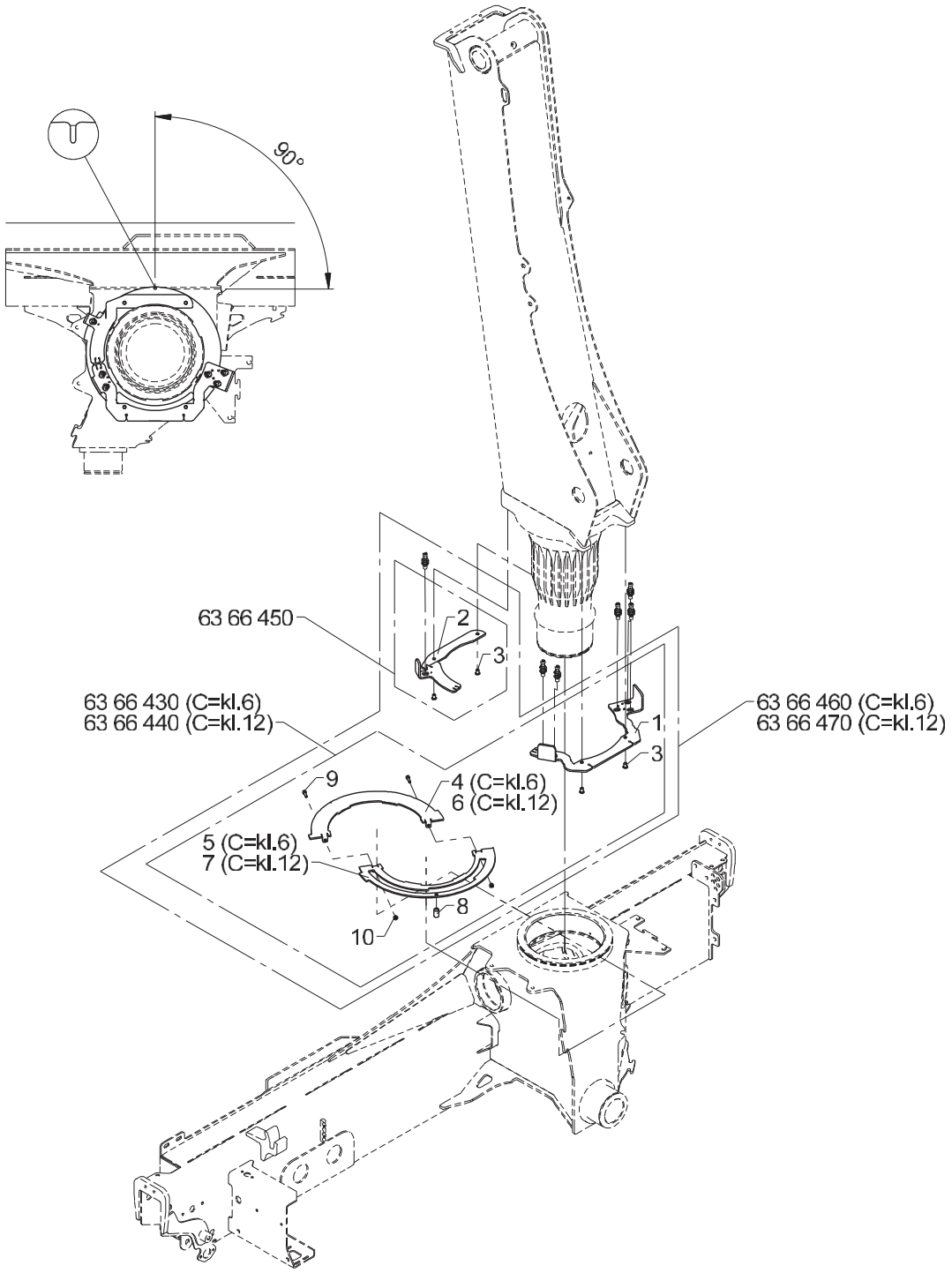

Cam disc kit

Pos	Qty.	Part no.	Description	Remarks
		6366430	Cam disc kit	(2LMB,HS,QOPS,CBS)
		6366440	Cam disc kit	(2LMB,HS,QOPS,CBS, C=12)
		6366450	Cam disc kit	(+2CYBEL)
		6366460	Cam disc kit	(2CYBEL)
		6366470	Cam disc kit	(2CYBEL, C=12)
1	1	6366081	Sensor bracket	
2	1	6366082	Sensor bracket	
3	4	32507	Cylinder screw 8 x 12	MC8 x 12
4	1	6366076	Cam disc, part 1/2	
5	1	6366077	Cam disc, part 2/2	
6	1	6366078	Cam disc, part 1/2 C=12o'clock	
7	1	6366079	Cam disc, part 2/2 C=12o'clock	
8	1	68059	Spacer	
9	2	31538	Screw, stainless	MC6 x 20
10	2	30884	Lock nut, stainless	M6

1100K, 1110K, 1220K, 1230K, 1320K, 1330K

85 02 960
Internal ref. 85 02 910

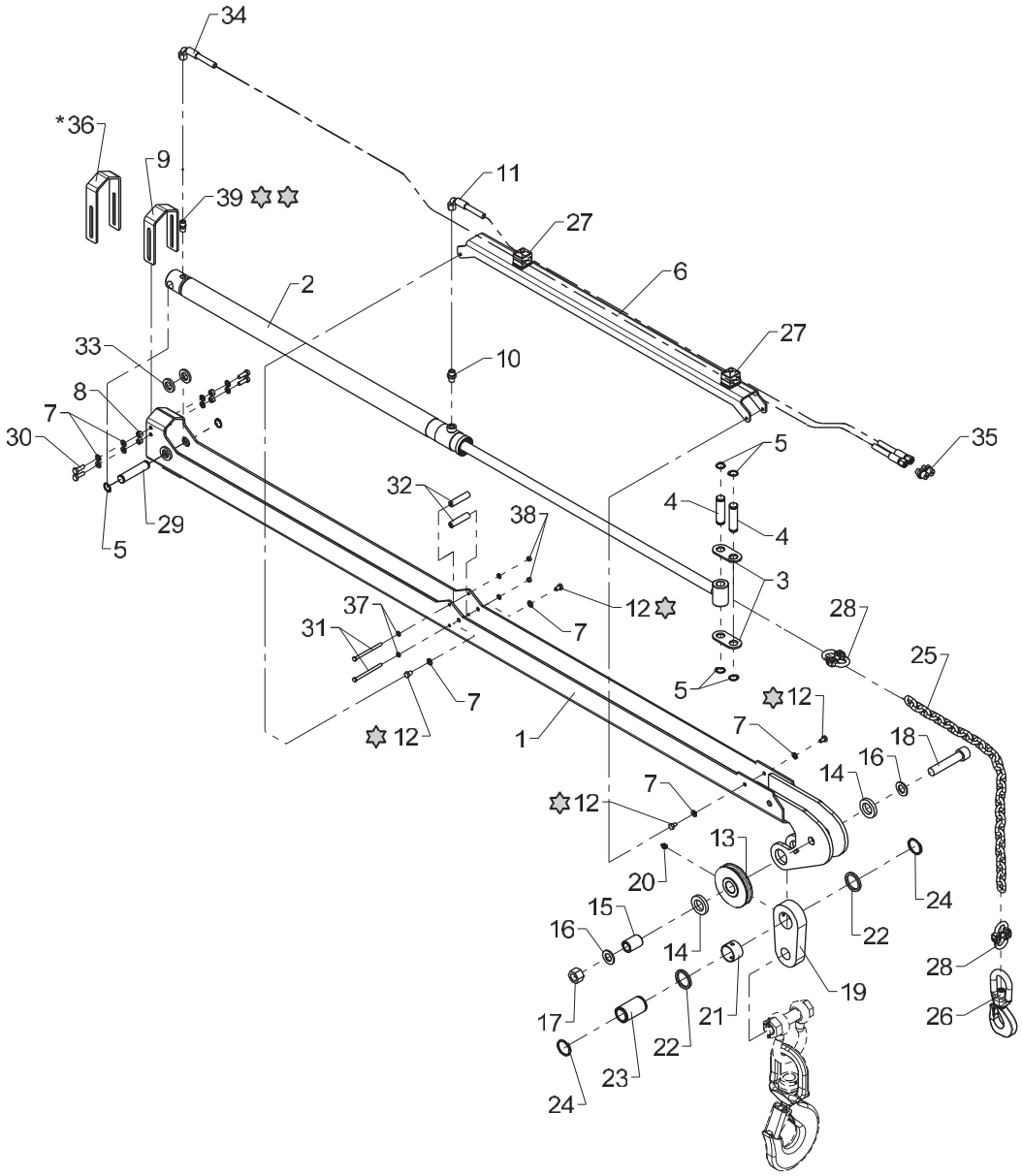

Loctite 243

Loctite 577

*K3 - 1800K/2630K

Pos	Qty.	Part no.	Description	Remarks
		8502910		
		8502960		K3 - 1800K/2630K
1	1	8502842	Boom,bottle contain.handl.syst	
2	1	1243204	Telescopic cylinder	
3	2	8502874	Fitting	
4	2	8502804	Bolt	Ø20 x 75
5	6	33108	Circlip	20U
6	1	8502934	End plate	
7	12	31147	Face washer, 8 mm	
8	4	30886	Lock nut, stainless	M8
9	1	8502894	Bracket	
10	1	25109	Connection	GES 8 LR-WD
11	1	62579	Hose	1/4X1800
12	4	30130	Set screw, stainless	M8 x 12
13	1	64074	Wire sheave	
14	2	64556	Distance ring ø50x10	Ø50/30,3 x 8
15	1	8502794	Hub	Ø30/20,5 x 41,5
16	2	31179	Washer	20 mm
17	1	30894	Lock nut	M20
18	1	30474	Sockethead screw	MC20 x 100
19	1	8502784	Hook suspension	
20	1	31318	Lubricator	1/8" RG
21	1	23333	Bushing	PM 4030 DX
22	2	64557	Distance ring ø50x5	Ø50/40,03 x 4,5
23	1	8502774	Hub	Ø40/30,5 x 70
24	2	33121	Circlip	40U
25	1	62177	Steel chain	KL 7-8 (mtr.) 1 1/2 meter pr.enhe
26	1	62128	Hook	
27	2	31418	Clamp, double	2 x 12 mm
28	2	62178	Connection for steel chain	
29	1	8502864	Bolt	Ø20 x 91
30	4	31009	Set screw	M8 x 25
31	2	30124	Steel bolt, stainless	M6 x 90
32	2	56513	Hose	
33	2	8502954	Spacer	Ø35/20,5 x 5
34	1	62552	Hose	1/4" x 2650 V/O
35	2	25244	Connection	GES 8 LR 3/8-WD
36	1	8502884	Profile	K3 - 1800K/2630K
37	4	32302	Face washer, stainless	6 mm
38	2	30884	Lock nut, stainless	M6
39	1	25112	Connection	GES 8 LRK - 25112

1100K, 1110K, 1220K, 1230K, 1320K, 1330K

Internal ref. 70 05 490

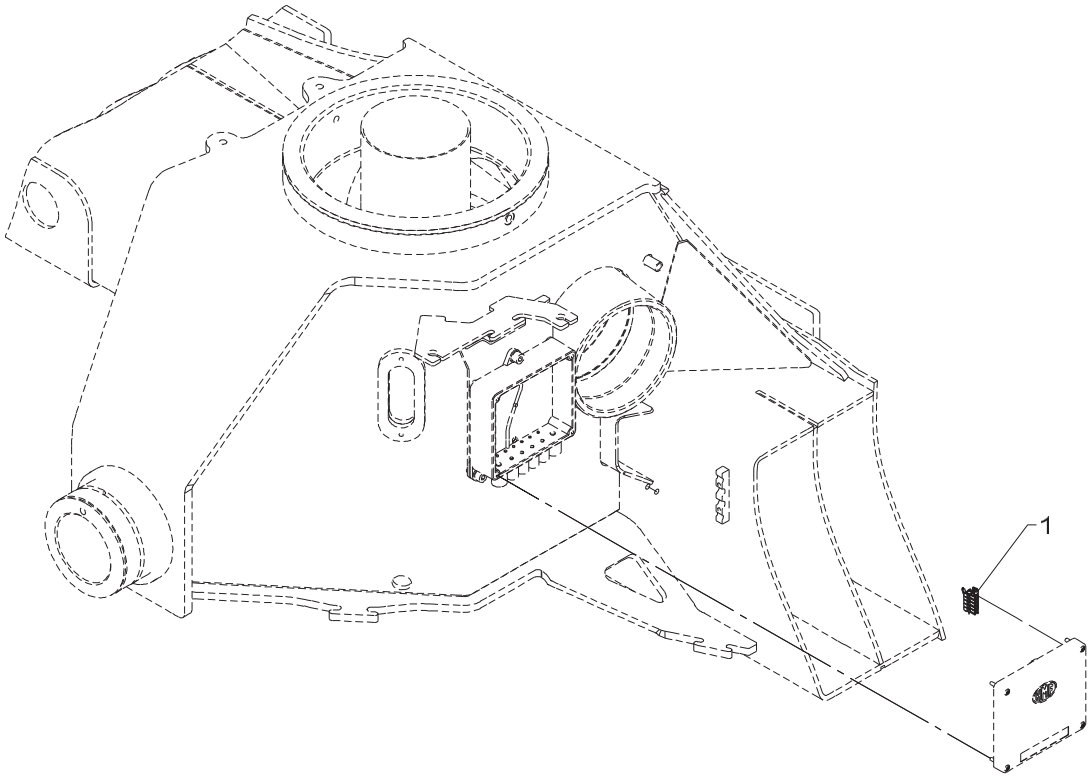

CAN termination, CIO5376

458 20 040

From loader 1170001
To loader

Created 13-02-2013
Modified

Pos	Qty.	Part no.	Description	Remarks
1	1	29341	CAN termination FJC	

Obsolete

458 20 049

1100K, 1110K, 1220K, 1230K, 1320K, 1330K

Internal ref. 70 06 302

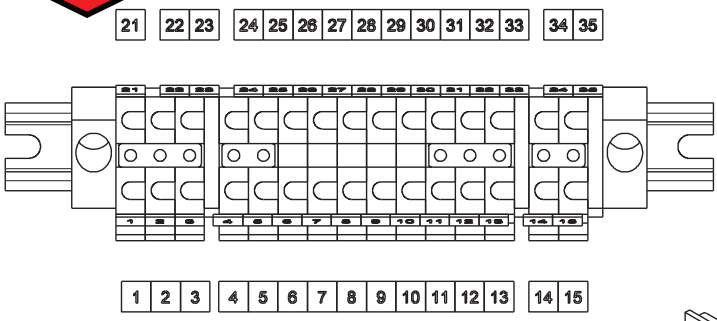

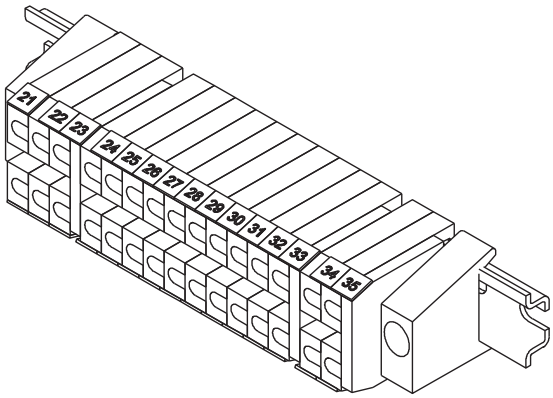

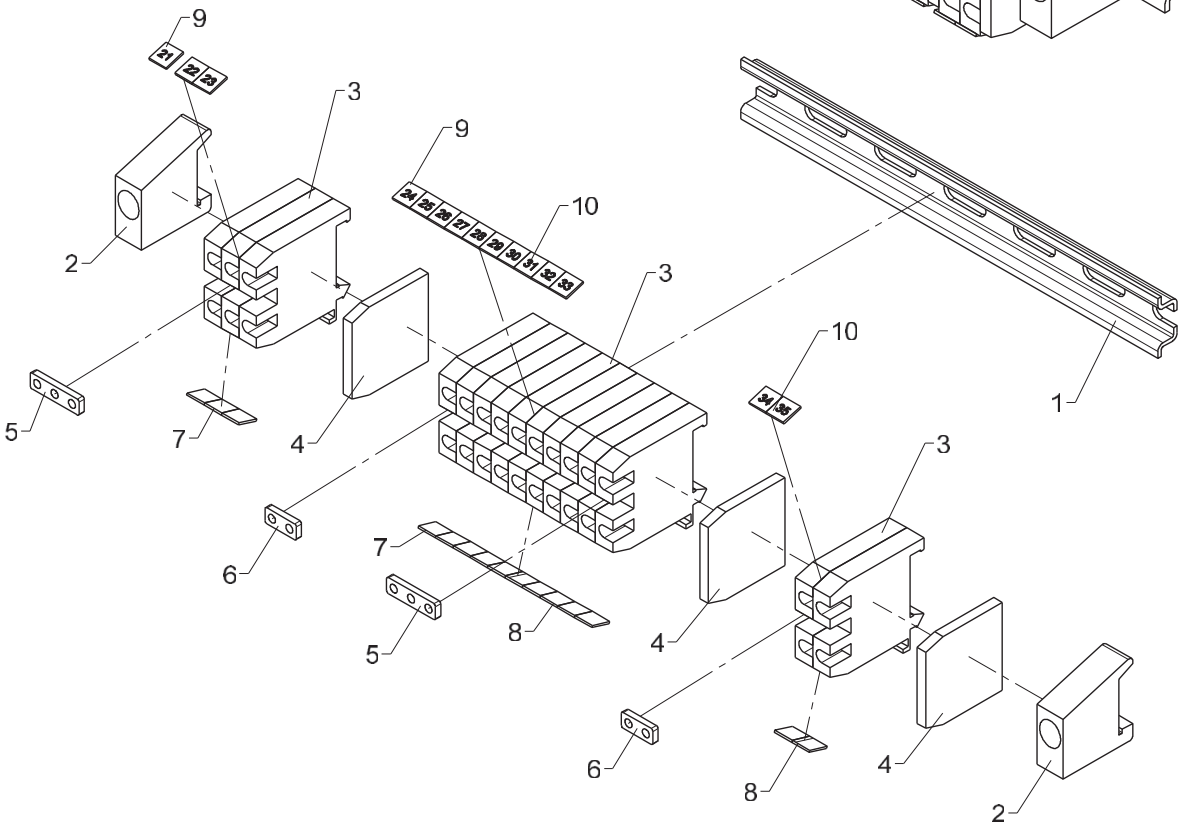

Obsolete

458 20 049

From loader 1170001
To loader

Created 09-07-2012
Modified

Terminal block, Box 1

Pos	Qty.	Part no.	Description	Remarks
1	1	28013	Guide rail	120 mm.
2	2	28012	End angle	
3	15	28010	Terminal	
4	3	28011	End plate	
5	2	28014	Fish plate	
6	2	28208	Fish plate	
7	1	28019	Labels nos. 1-10	
8	1	28020	Labels nos. 11-20	
9	1	28965	Dekafix labels 21-30	
10	1	29427	Dekafix marker 31-40	

1100K, 1110K, 1220K, 1230K, 1320K, 1330K

Internal ref. 70 06 306

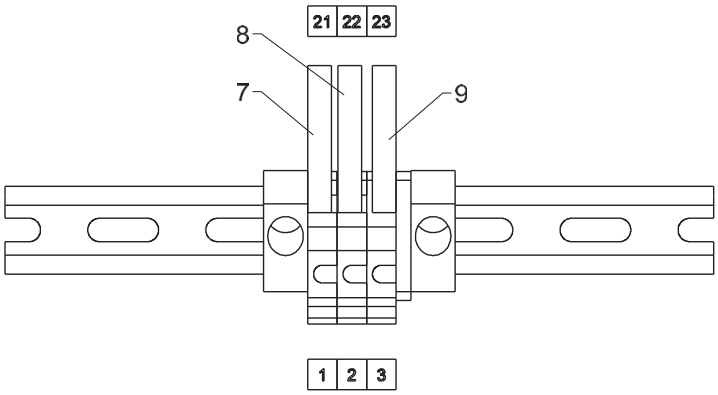

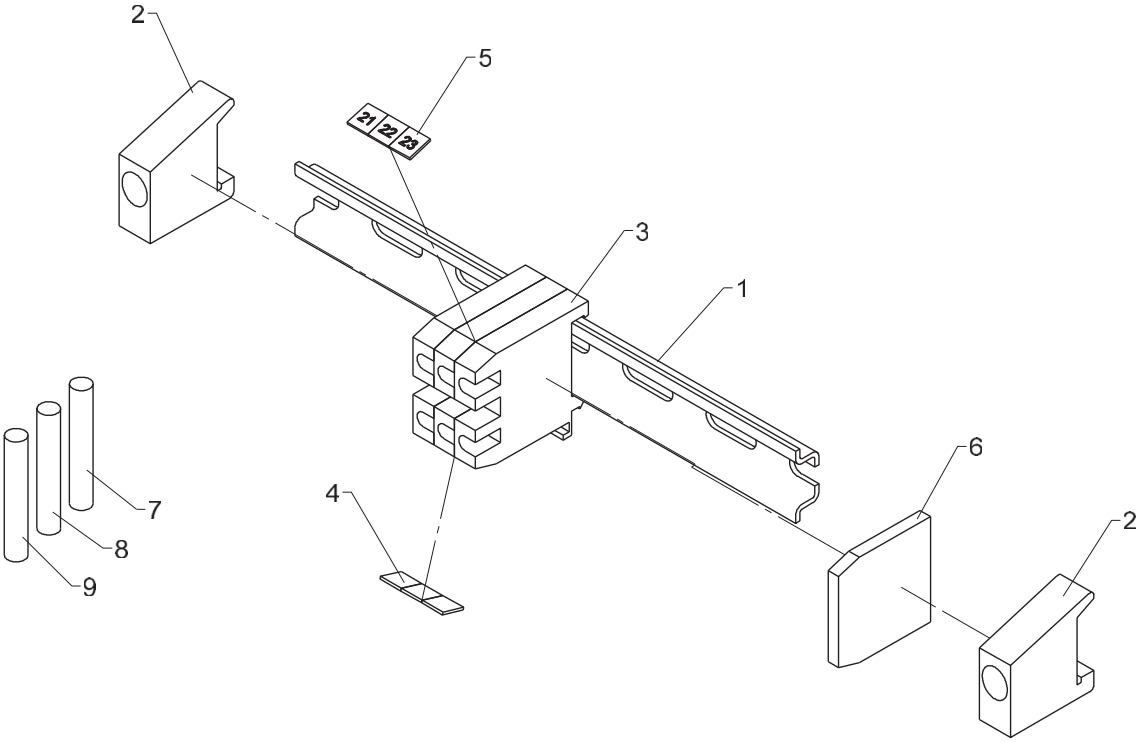

458 20 050

From loader

To loader

Terminal block for RCL box with RC

Created 17-04-2013

Modified 08-07-2014

Pos	Qty.	Part no.	Description	Remarks
1	1	28013	Guide rail	120 mm.
2	2	28012	End angle	
3	3	28010	Terminal	
4	1	28019	Labels nos. 1-10	
5	1	28965	Dekafix labels 21-30	
6	1	28011	End plate	
7	1	27202	Cable	0,3 m
8	1	27204	Wire, 1 x1.5mm2	0,3 m
9	1	27120	Cable	0,3 m

1100K, 1110K, 1220K, 1230K, 1320K, 1330K

Internal ref. 70 08 250

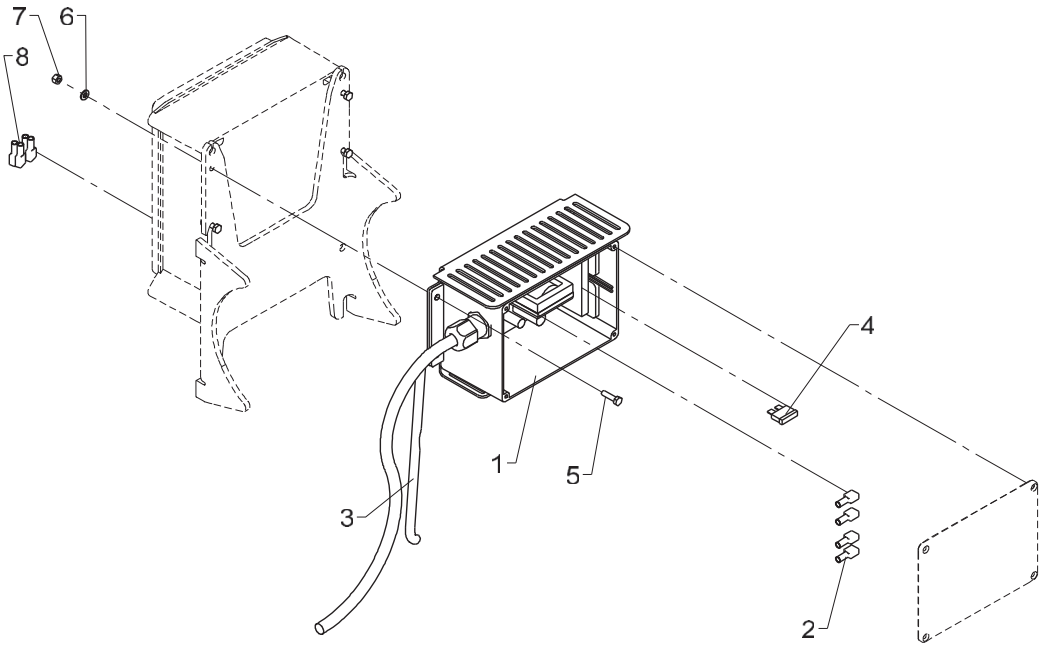

12 V converter

Pos	Qty.	Part no.	Description	Remarks
1	1	29478	Converter, 12-24 V, complete	
2	4	27428	Clip	
3	1	28278	Cable 4 x 2.5	
4	1	27378	Fuse 25 Amp	
5	4	30125	Set screw	M4 x 16
6	4	31188	Washer, stainless	4 mm
7	4	30857	Lock nut	M4
8	4	27428	Clip	

1100K, 1110K, 1220K, 1230K, 1320K, 1330K

Internal ref. 70 06 310

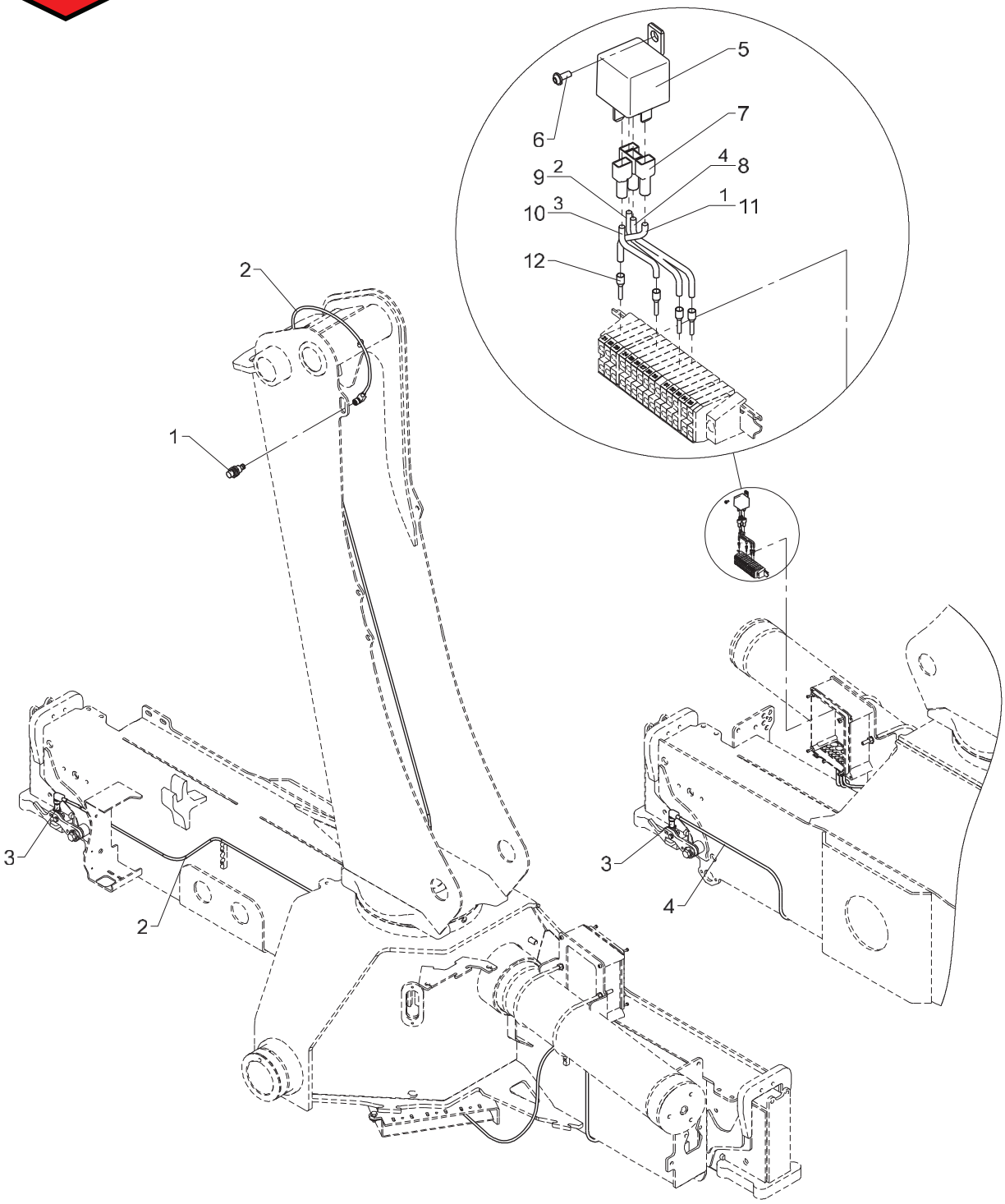

Obsolete

458 20 060

From loader

To loader

BEHEW

Created 08-12-2011

Modified 14-11-2012

Pos	Qty.	Part no.	Description	Remarks
1	1	28980	Proximity switch	
2	2	28077	Cable with plug	
3	2	29257	Proximity switch M12x44, 4mm	
4	1	28117	Cable with plug	
5	1	27342	Relay, 24V	
6	1	30361	Screw, stainless	3,0 x 8
7	4	27429	Clamp	
8	1	27209	Wire 1 x 1,5 mm2	300 mm
9	1	27206	Wire, 1 x 1.5mm2	300 mm
10	1	27204	Wire, 1 x1.5mm2	300 mm
11	1	27202	Cable	300 mm
12	4	27715	Cable end	

1100K, 1110K, 1220K, 1230K, 1320K, 1330K

Internal ref. 70 06 310

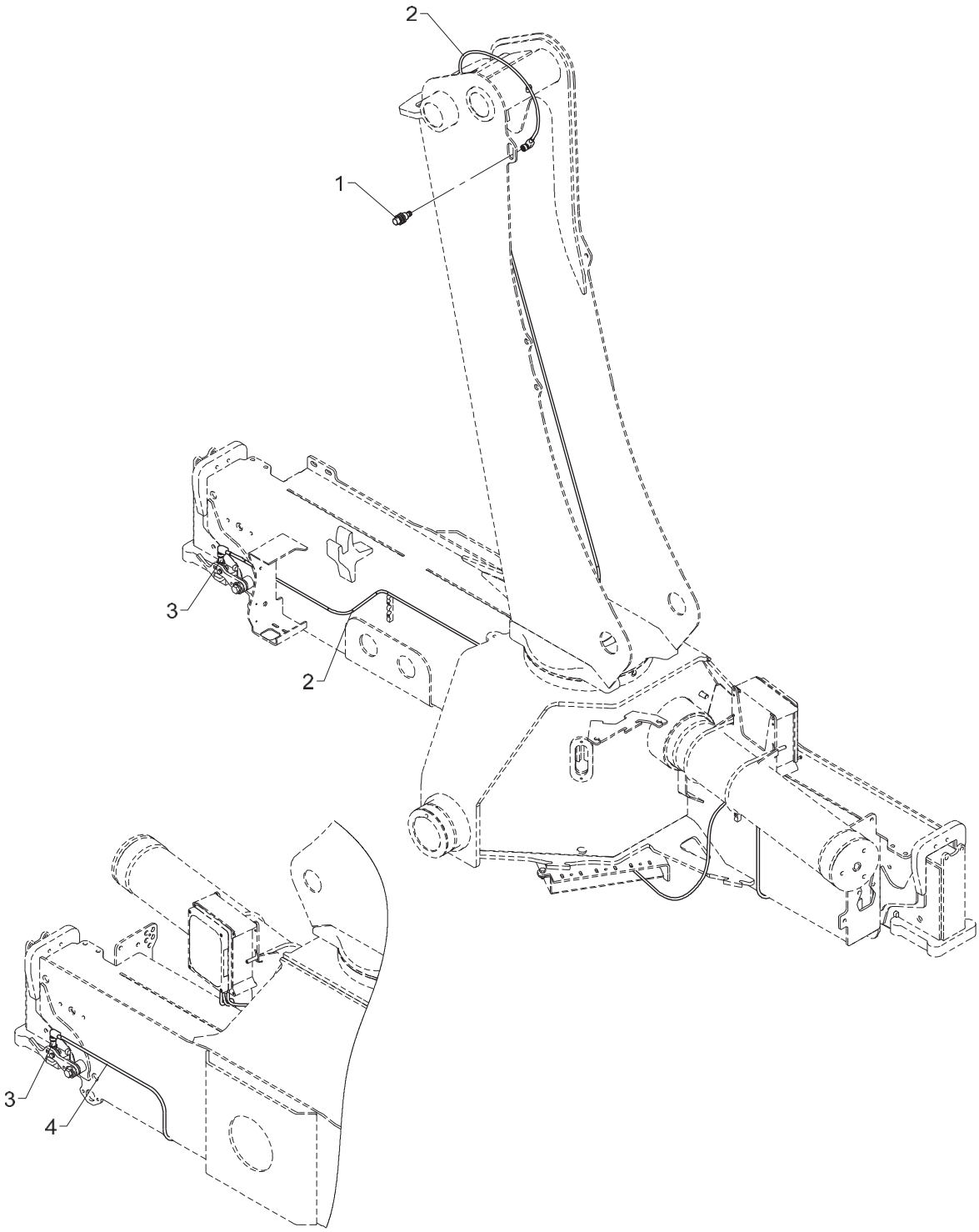

BEHEW

Pos	Qty.	Part no.	Description	Remarks
1	1	28980	Proximity switch	
2	2	28077	Cable with plug	
3	2	29257	Proximity switch M12x44, 4mm	
4	1	28117	Cable with plug	

1100K, 1110K, 1220K, 1230K, 1320K, 1330K

Internal ref. 70 06 330

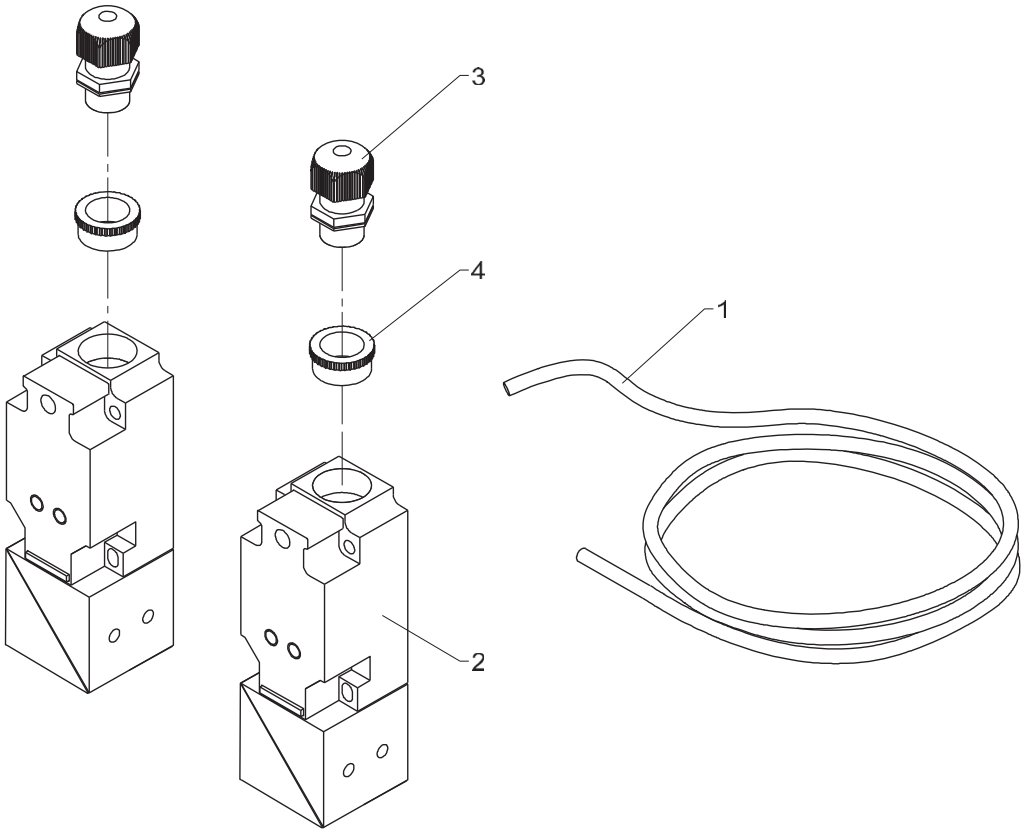

Obsolete

458 20 080

From loader 1170001
To loader

Created 16-07-2012
Modified

CYW

Pos	Qty.	Part no.	Description	Remarks
1	1	28262	Cable 4 x 0.75	8 m
2	2	27598	Proximity switch	
3	2	28246	Bushing	
4	2	27866	Socket	

1100K, 1110K, 1220K, 1230K, 1320K, 1330K

Internal ref. 70 06 330

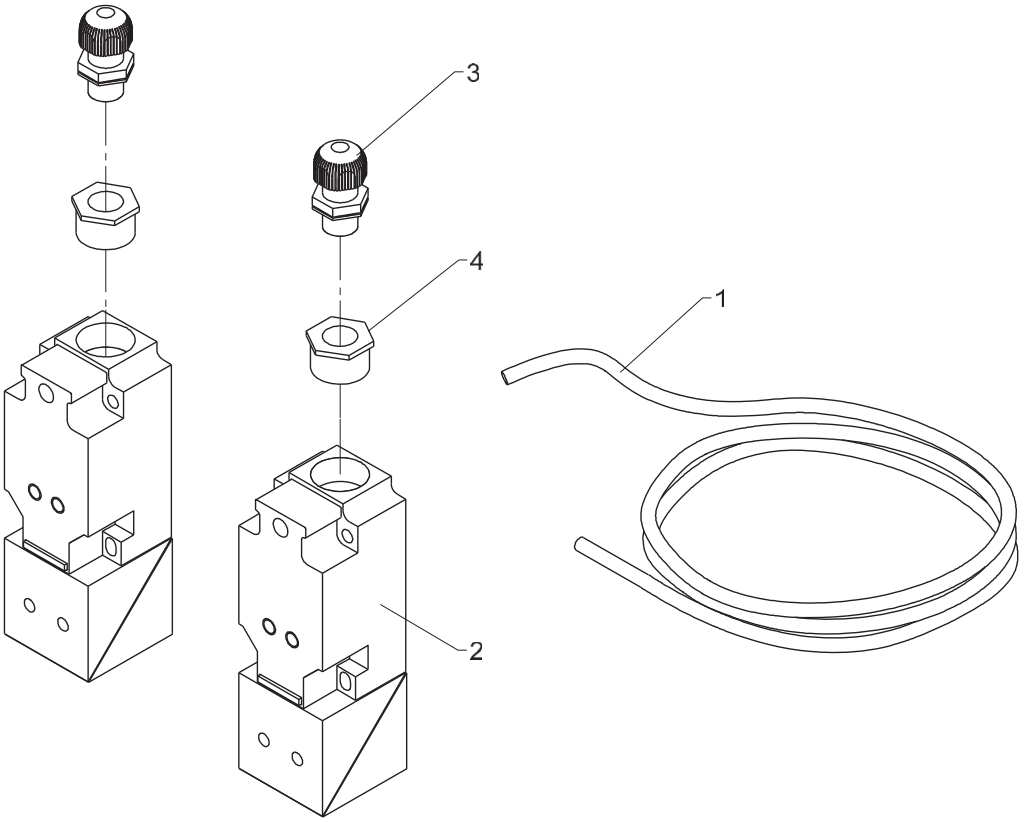

CYW

Pos	Qty.	Part no.	Description	Remarks
1	1	28262	Cable 4 x 0.75	8 m
2	2	27598	Proximity switch	
3	2	28459	Connection	
4	2	29200	Socket M12/M20	

1100K, 1110K, 1220K, 1230K, 1320K, 1330K

Internal ref. 70 06 370

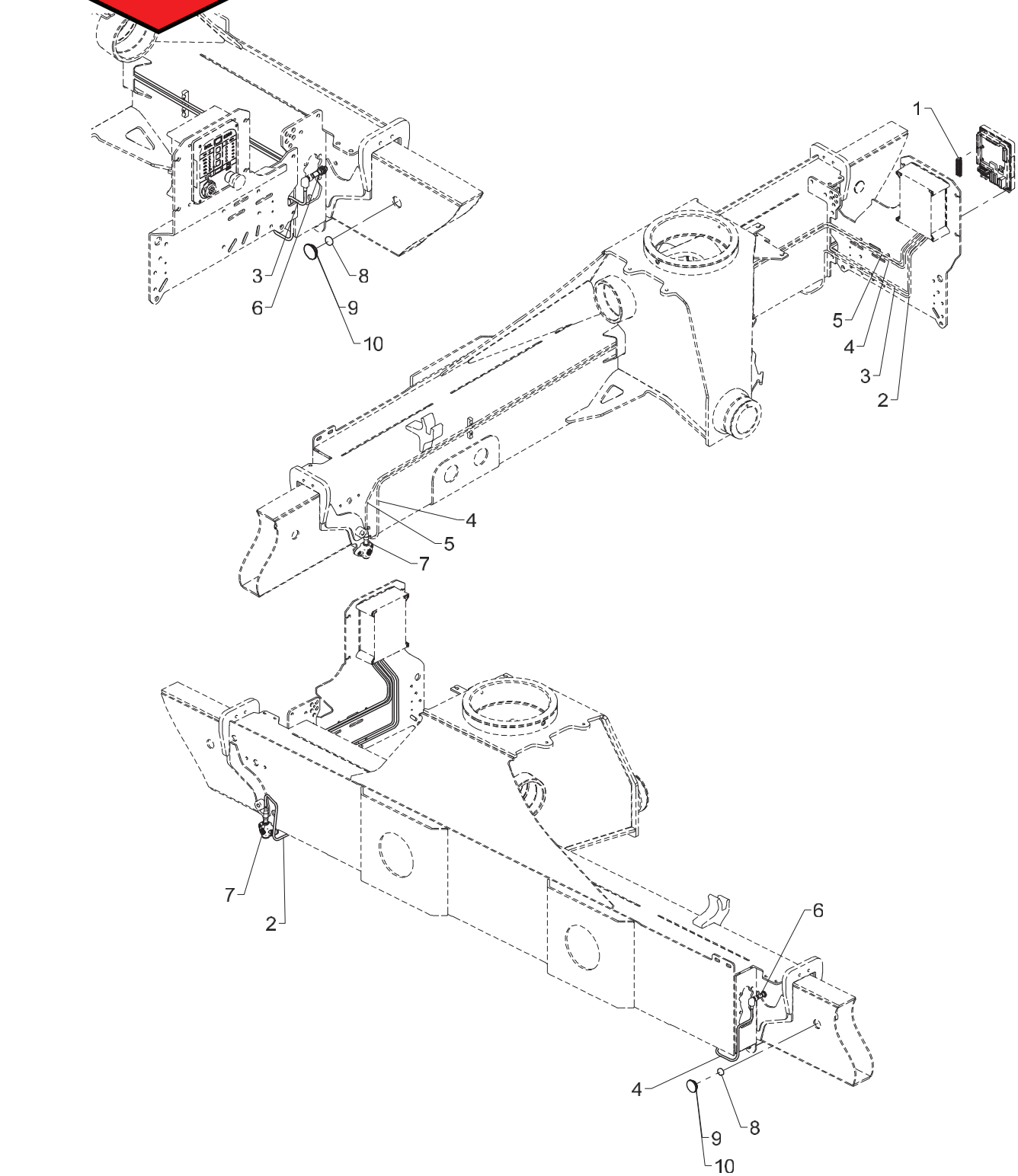

CYBEL, single extension

Pos	Qty.	Part no.	Description	Remarks
1	1	29322	Plug, 12-polar for RCL 53XX	
2	1	29223	Cable with socket, 2 m	1,4
3	1	28117	Cable with plug	
4	1	28077	Cable with plug	3,3
5	1	29224	Cable with socket, 5 m	2,7
6	2	29259	Magnet proximity switch M12	
7	2	29257	Proximity switch M12x44, 4mm	
8	2	29262	Solenoid Ø22x5	
9	2	64424	Slide block	2 mm
10	2	63681	Slide block	3 mm

1100K, 1110K, 1220K, 1230K, 1320K, 1330K

Internal ref. 70 06 210

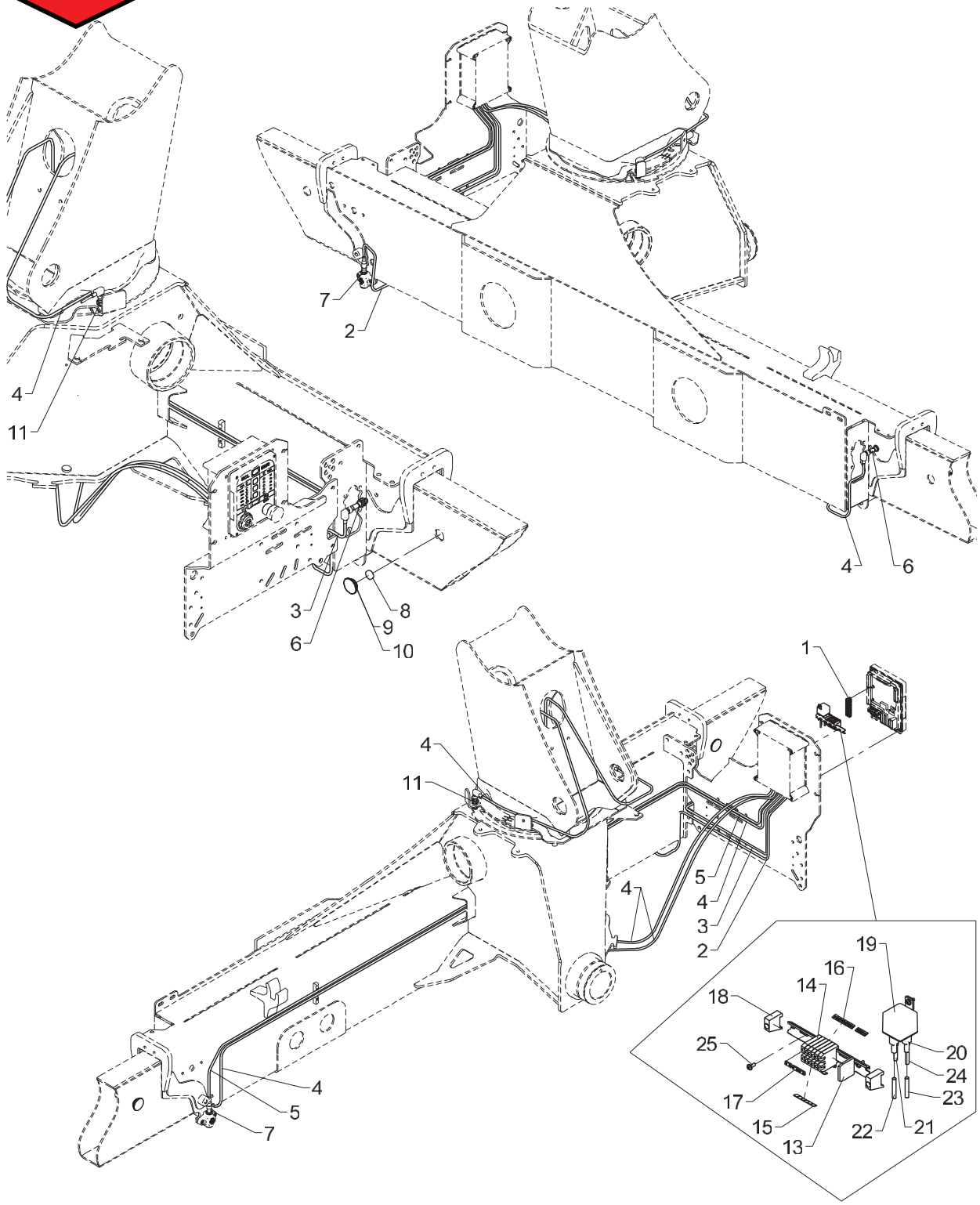

2CYBEL, single extension (2LMB)

Pos	Qty.	Part no.	Description	Remarks
1	1	29322	Plug, 12-polar for RCL 53XX	
2	1	29223	Cable with socket, 2 m	1,4
3	1	28117	Cable with plug	
4	3	28077	Cable with plug	2,7 m
5	1	29224	Cable with socket, 5 m	2,7
6	2	29259	Magnet proximity switch M12	
7	2	29257	Proximity switch M12x44, 4mm	
8	2	29262	Solenoid Ø22x5	
9	2	64424	Slide block	2 mm
10	2	63681	Slide block	3 mm
11	2	29447	Proximity switchM12 8mm PNP-NO	
12	1	28013	Guide rail	120 mm.
13	1	28011	End plate	
14	6	28010	Terminal	
15	1	28020	Labels nos. 11-20	
16	1	29427	Dekafix marker 31-40	
17	3	28208	Fish plate	
18	2	28012	End angle	
19	1	27342	Relay, 24V	
20	4	27429	Clamp	
21	1	27202	Cable	0,3 m
22	1	27203	Cable	0,3 m
23	1	27206	Wire, 1 x 1.5mm2	0,3 m
24	1	27209	Wire 1 x 1,5 mm2	0,3 m
25	3	30361	Screw, stainless	3,0 x 8

1100K, 1110K, 1220K, 1230K, 1320K, 1330K

Internal ref. 70 06 200

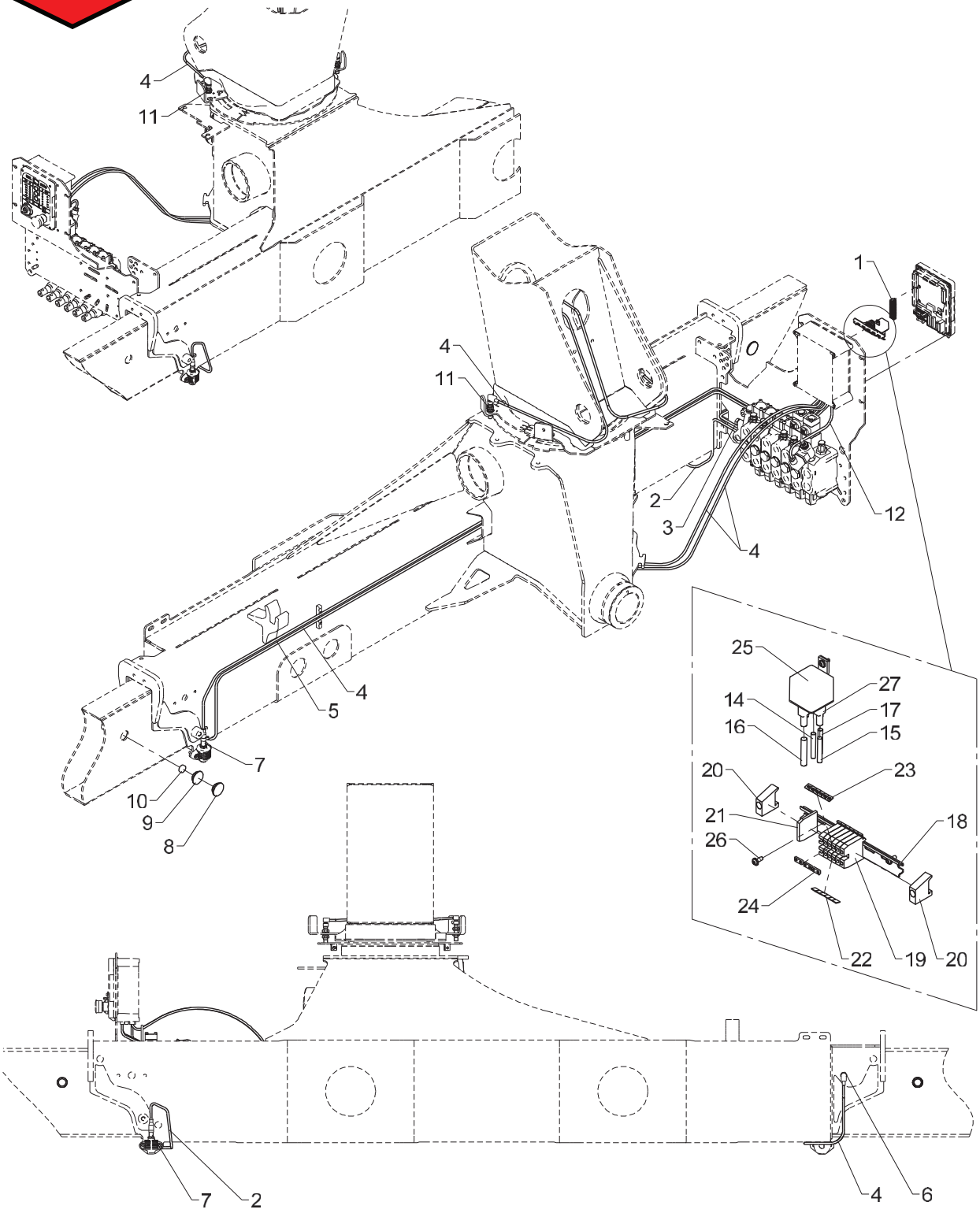

2CYBEL, single extension (manual)

Pos	Qty.	Part no.	Description	Remarks
1	1	29322	Plug, 12-polar for RCL 53XX	
2	1	29223	Cable with socket, 2 m	1,4
3	1	28117	Cable with plug	
4	3	28077	Cable with plug	
5	1	29224	Cable with socket, 5 m	2,7
6	2	29259	Magnet proximity switch M12	
7	2	29257	Proximity switch M12x44, 4mm	
8	2	63681	Slide block	3 mm
9	2	64424	Slide block	2 mm
10	2	29262	Solenoid Ø22x5	
11	2	29447	Proximity switchM12 8mm PNP-NO	
12	1	28294	Cable, spool sensor	
13	1	27202	Cable	0,3 m
14	1	27203	Cable	0,3 m
15	1	27209	Wire 1 x 1,5 mm2	0,3 m
16	1	27205	Wire, 1 x 1.5mm2	0,3 m
17	1	27206	Wire, 1 x 1.5mm2	0,3 m
18	1	28013	Guide rail	120 mm.
19	6	28010	Terminal	
20	2	28012	End angle	
21	1	28011	End plate	
22	1	29427	Dekafix marker 31-40	
23	1	28020	Labels nos. 11-20	
24	3	28208	Fish plate	
25	1	27342	Relay, 24V	
26	3	30361	Screw, stainless	3,0 x 8
27	4	27429	Clamp	

1100K, 1110K, 1220K, 1230K, 1320K, 1330K

Internal ref. 70 06 220

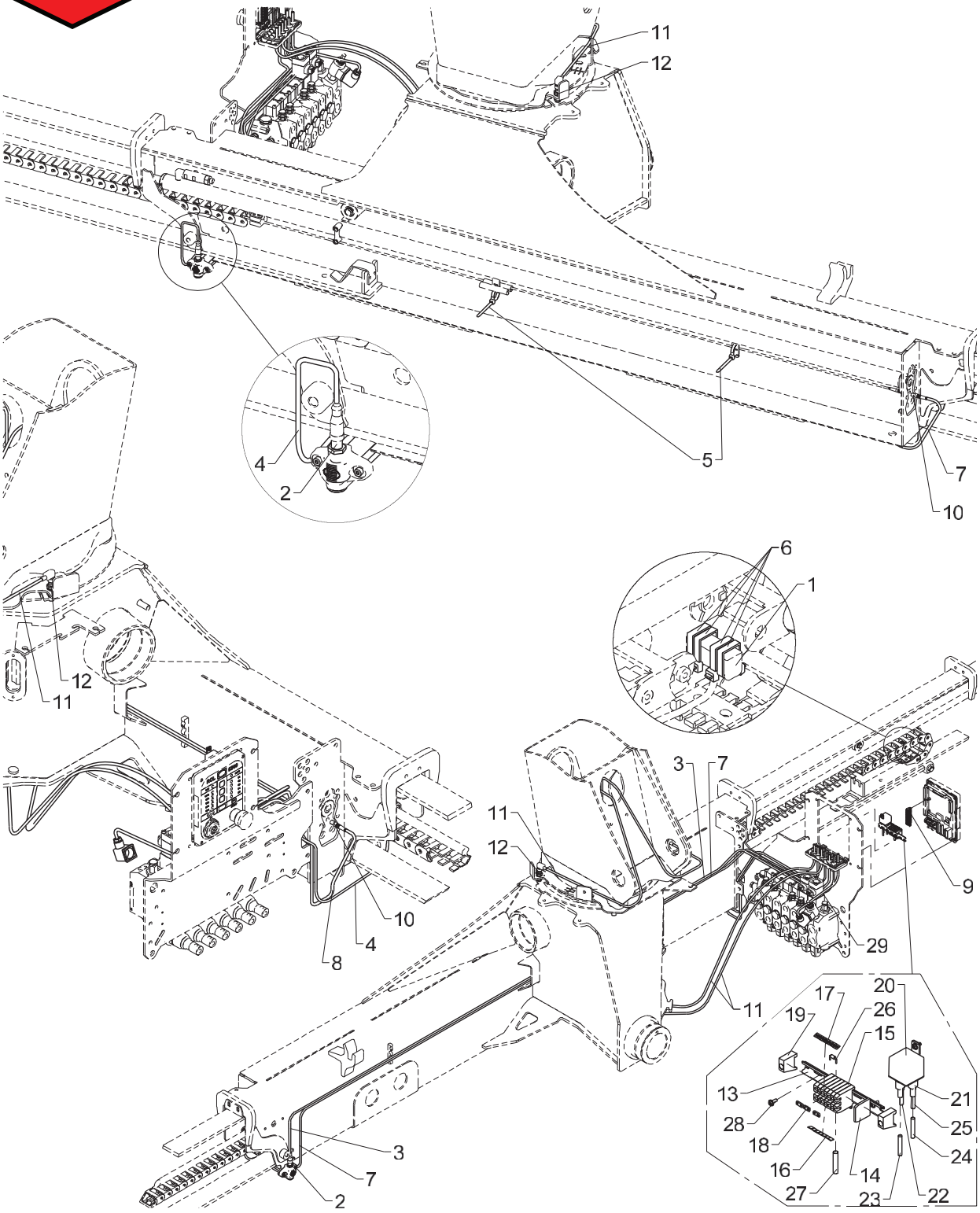

2CYBEL, double extension (man.)

Pos	Qty.	Part no.	Description	Remarks
1	2	29253	Tilt sensor, nylon drag chain	
2	2	29257	Proximity switch M12x44, 4mm	
3	1	29224	Cable with socket, 5 m	
4	1	29223	Cable with socket, 2 m	
5	4	27275	Cable tie, black, 7.6x385mm	
6	8	27274	Clip	
7	1	29264	Cable 5 m, M8 socket	
8	1	29265	Cable 2 m, M8 socket	
9	1	29322	Plug, 12-polar for RCL 53XX	
10	2	29443	Panel lead-in M8 - 3-polar	
11	2	28077	Cable with plug	
12	2	29447	Proximity switchM12 8mm PNP-NO	
13	1	28013	Guide rail	120 mm.
14	1	28011	End plate	
15	7	28010	Terminal	
16	1	28020	Labels nos. 11-20	
17	1	29427	Dekafix marker 31-40	
18	3	28208	Fish plate	
19	2	28012	End angle	
20	1	27342	Relay, 24V	
21	4	27429	Clamp	
22	1	27202	Cable	0,3 m
23	1	27203	Cable	0,3 m
24	1	27206	Wire, 1 x 1.5mm2	0,3 m
25	1	27209	Wire 1 x 1,5 mm2	0,3 m
26	1	27944	Diode	
27	1	27205	Wire, 1 x 1.5mm2	0,3 m
28	3	30361	Screw, stainless	3,0 x 8
29	1	28294	Cable, spool sensor	

1100K, 1110K, 1220K, 1230K, 1320K, 1330K

Internal ref. 70 06 260

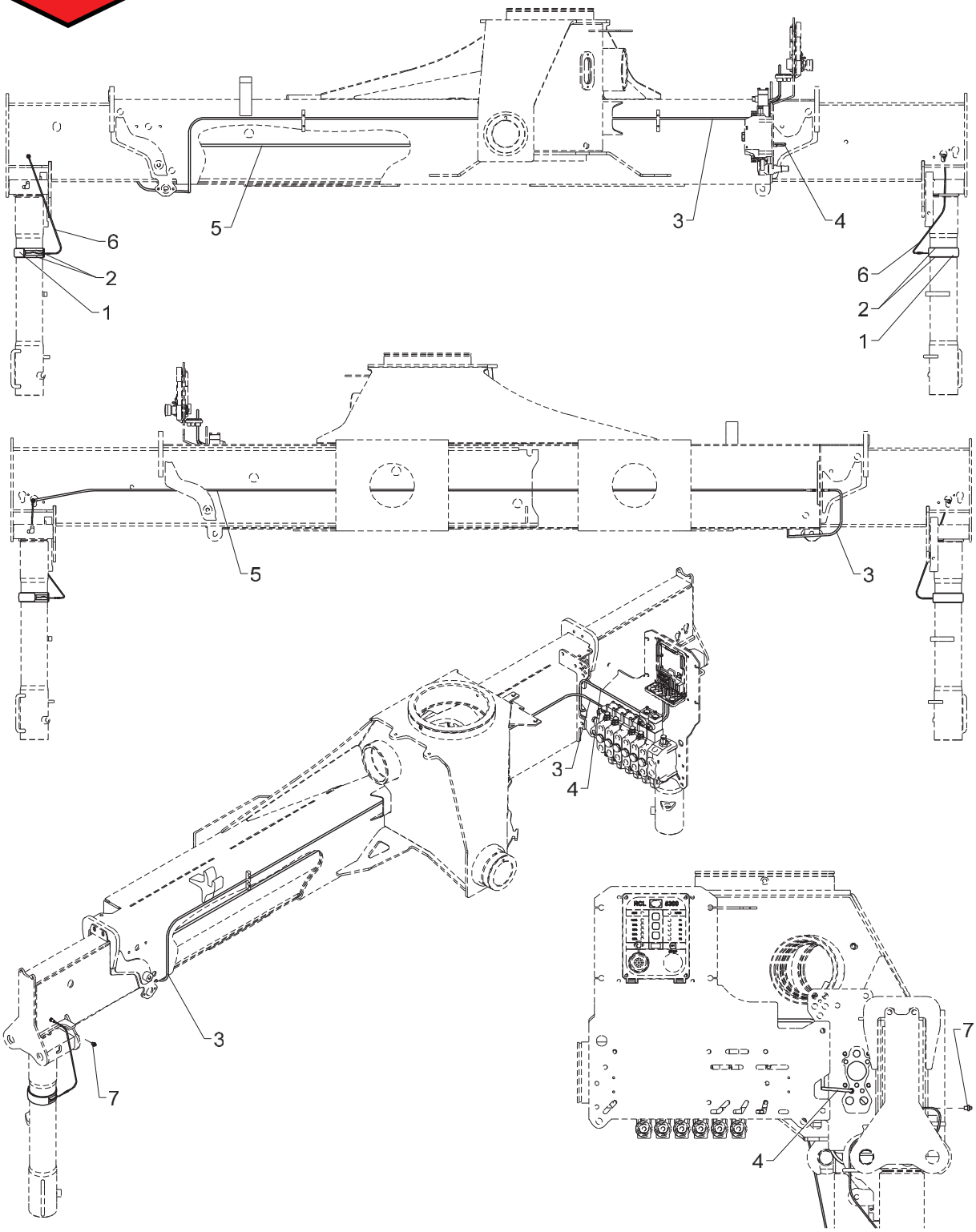

From loader 1170001
To loader

Created 18-02-2013
Modified

Alarm flash on stabilizer legs

Pos	Qty.	Part no.	Description	Remarks
1	2	29432	Alarm flash, yellow 24V, 24 cm	
2	4	27275	Cable tie, black, 7.6x385mm	
3	1	29483	Cable M8, 5 m, female, 3 polar	
4	1	29482	Cable M8, 2 m, female, 3 polar	
5	2	29436	Cable M8, socket and plug 6.3m	
6	2	29444	Cable M8 - 3-polar	
7	2	29437	Safety plug M8x1, socket	

Obsolete

1100K, 1110K, 1220K, 1230K, 1320K, 1330K

Internal ref. 70 06 590

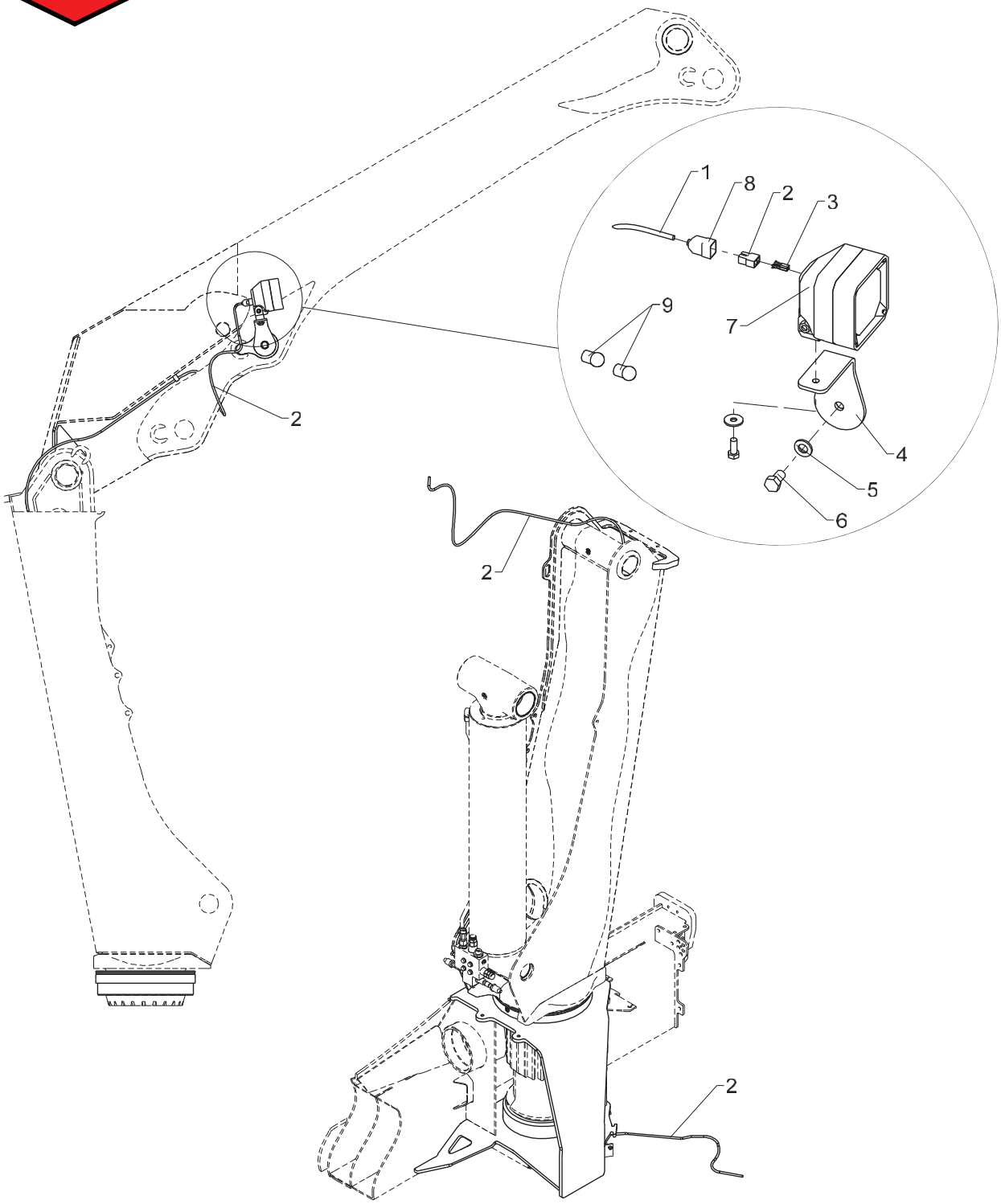

Obsolete

458 20 150

From loader 1170001
To loader

Created 20-06-2012
Modified

Spotlight, boom

Pos	Qty.	Part no.	Description	Remarks
1	1	27447	Multisocket - male	
2	1	27215	Wire 2 x 1.5	7,0 m
3	2	27422	Plug	
4	1	6340219	Fittings	
5	1	32338	Washer	12 mm
6	1	30175	Set screw	M12 x 20
7	1	27138	Spotlight	
8	1	29182	Cable lead-in	
9	2	27828	Bulb 24V, 70W	

1100K, 1110K, 1220K, 1230K, 1320K, 1330K

Internal ref. 70 06 590

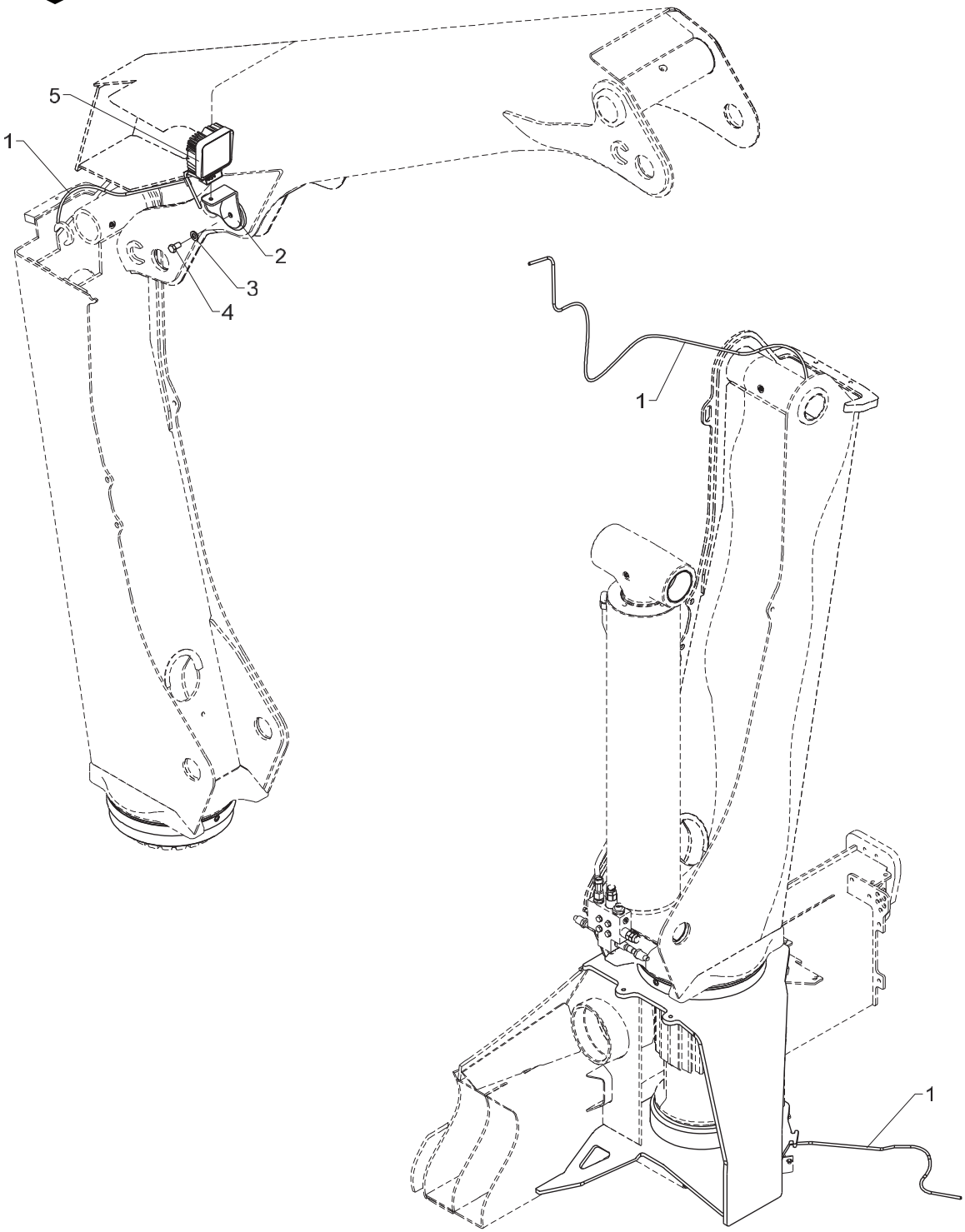

Spotlight, boom

Pos	Qty.	Part no.	Description	Remarks
1	1	29462	Cable, LED spotlight, 9.0m	
2	1	6340219	Fittings	
3	1	32338	Washer	12 mm
4	1	30175	Set screw	M12 x 20
5	1	29400	Spotlight LED 27 W	

1100K, 1110K, 1220K, 1230K, 1320K, 1330K

Internal ref. 70 06 580

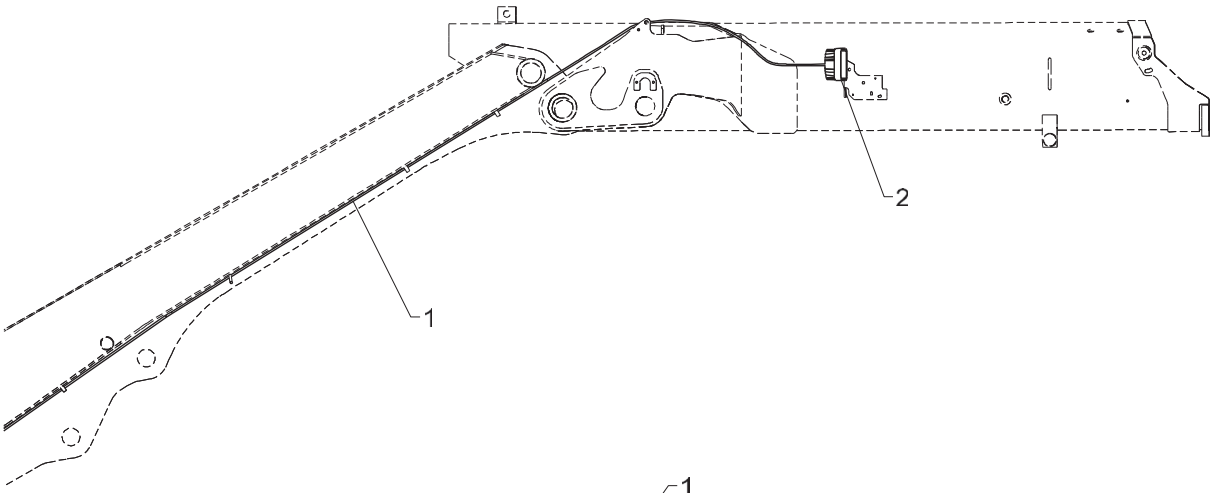

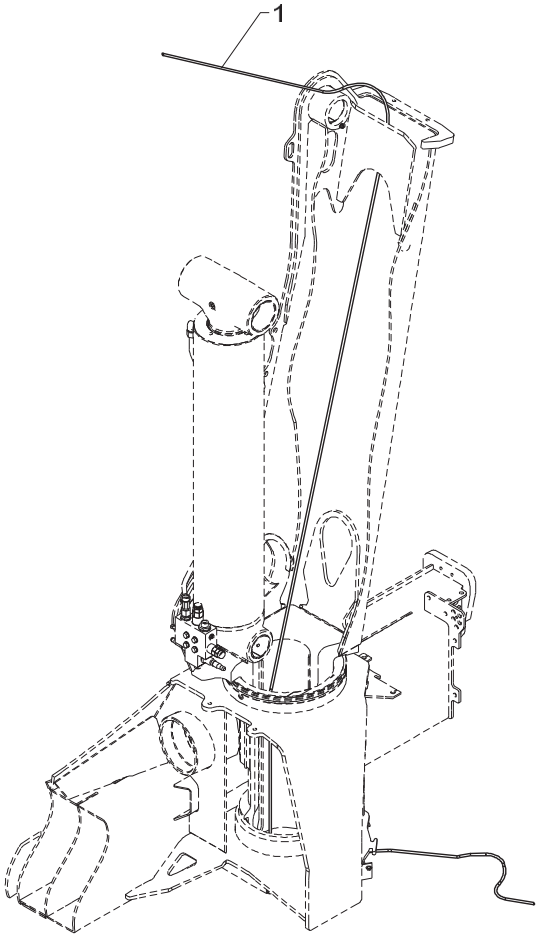

Spotlight, jib

Pos	Qty.	Part no.	Description	Remarks
1	1	29462	Cable, LED spotlight, 9.0m	
2	1	29400	Spotlight LED 27 W	

1100K, 1110K, 1220K, 1230K, 1320K, 1330K

Internal ref. 70 03 290

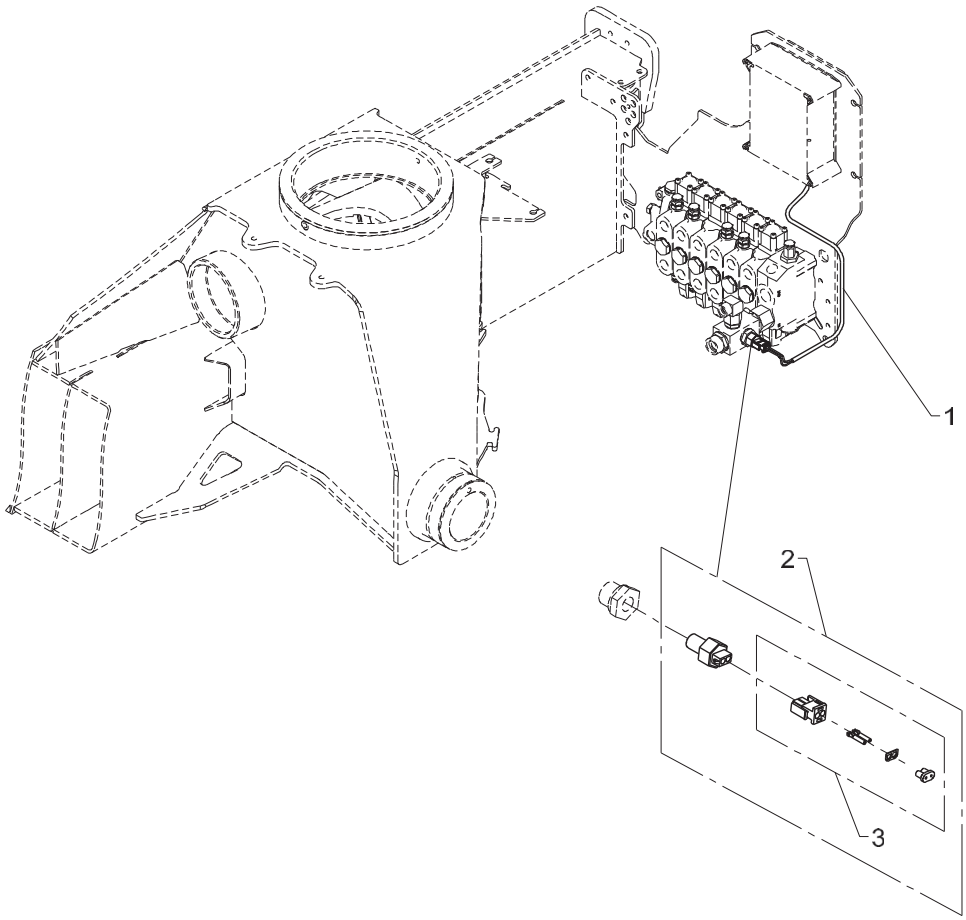

Temperature monitoring without oil cooler

Pos	Qty.	Part no.	Description	Remarks
1	1	28249	Cable 2 x 0.75	2 m
2	1	50290	Temperature sensor, oil cooler	
3	1	50293	Plug for oil cooler	

1100K, 1110K, 1220K, 1230K, 1320K, 1330K

70 04 200
Internal ref. 70 03 300

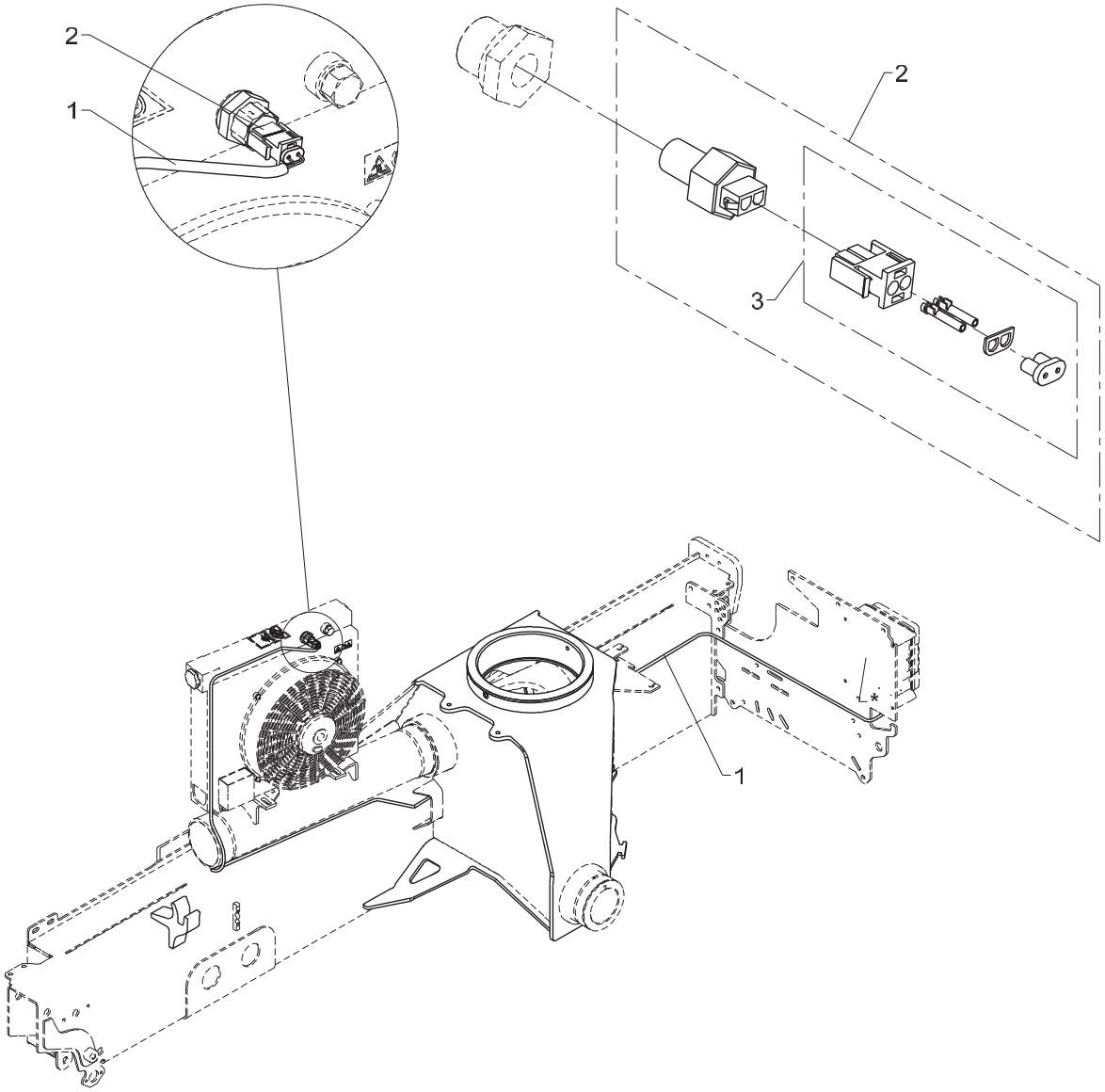

Temperature monitoring for oil cooler

Pos	Qty.	Part no.	Description	Remarks
1	1	28249	Cable 2 x 0.75	3 m
2	1	50290	Temperature sensor, oil cooler	
3	1	50293	Plug for oil cooler	

1100K, 1110K, 1220K, 1230K, 1320K, 1330K

Internal ref. 70 07 330

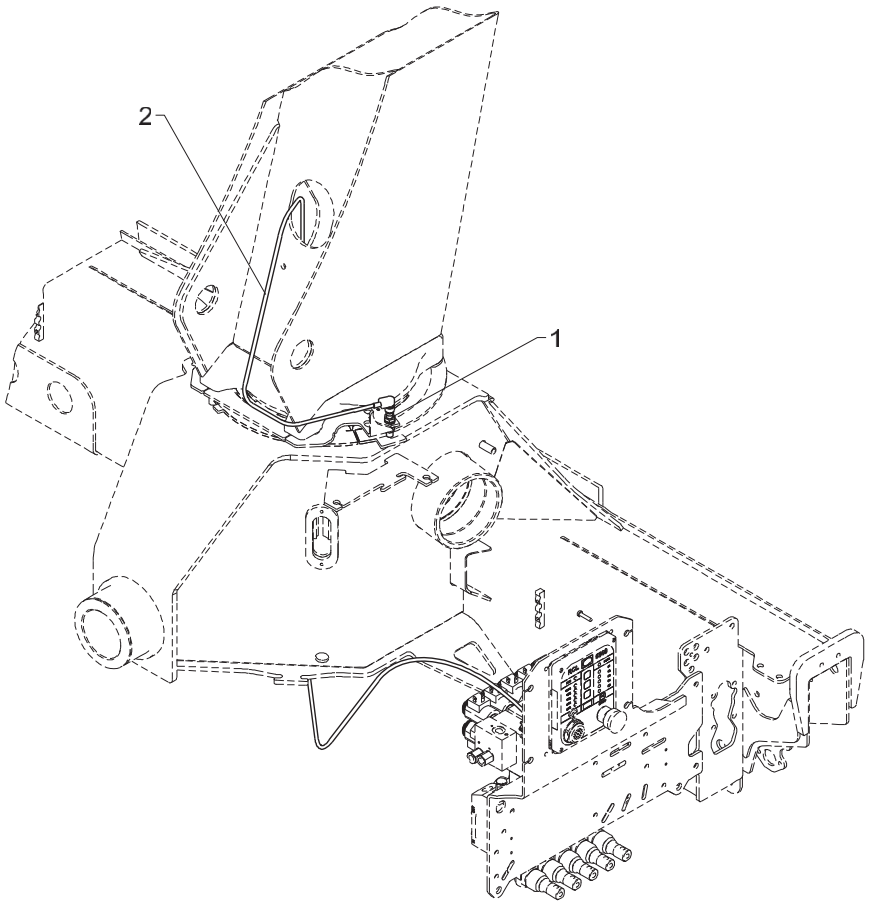

CBS - Calibrate Bypass Sensor

458 20 190

From loader 1170001
To loader

Created 04-10-2012
Modified

Pos	Qty.	Part no.	Description	Remarks
1	1	29447	Proximity switchM12 8mm PNP-NO	
2	1	28077	Cable with plug	2,7 m

1100K, 1110K, 1220K, 1230K, 1320K, 1330K

Internal ref. 70 06 320

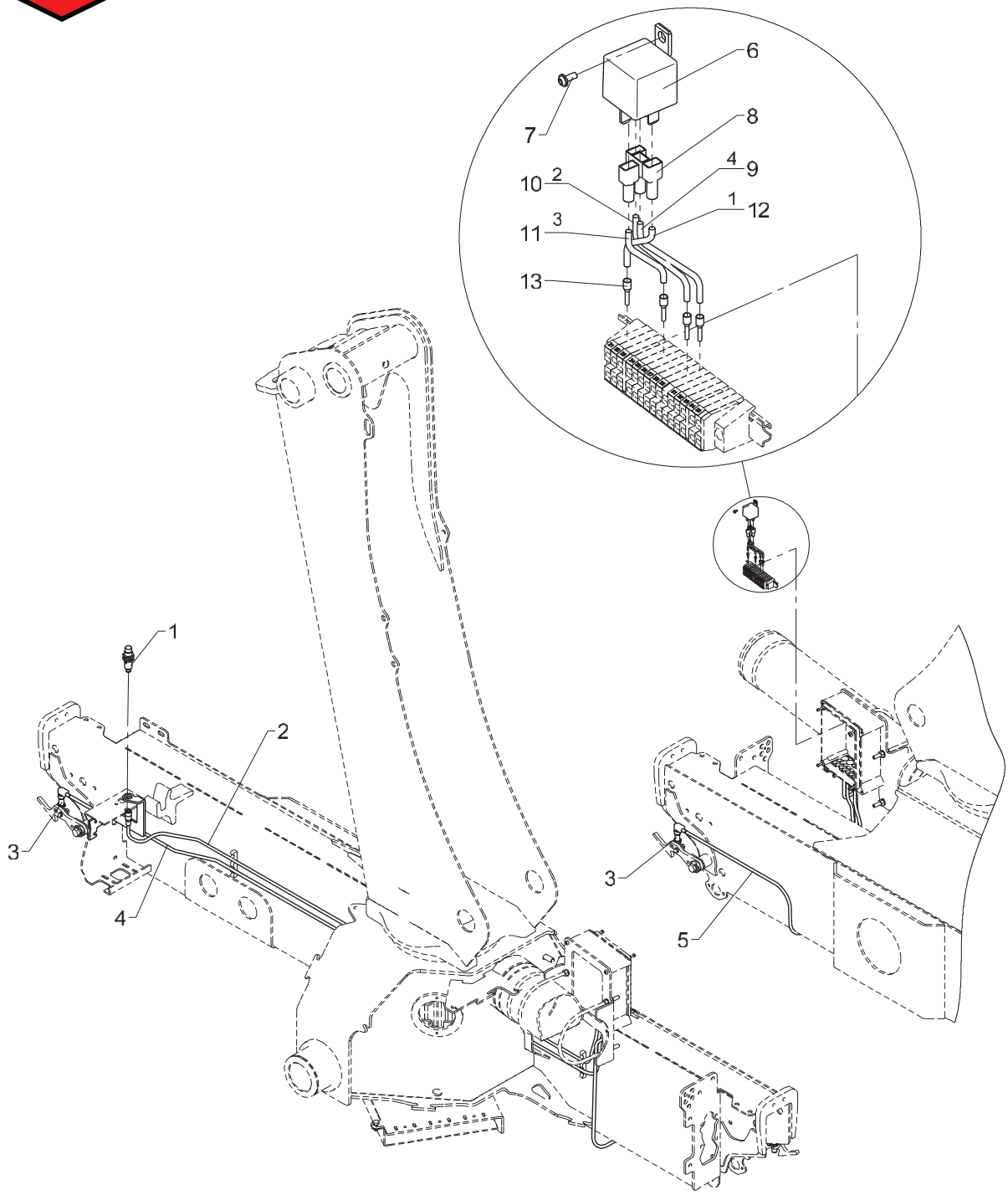

Obsolete

458 20 400

From loader 1170001
To loader

Created 12-12-2011
Modified

BEPAW

Pos	Qty.	Part no.	Description	Remarks
1	1	28210	Proximity switch	
2	1	29224	Cable with socket, 5 m	
3	2	29257	Proximity switch M12x44, 4mm	
4	1	28077	Cable with plug	
5	1	28117	Cable with plug	
6	1	27342	Relay, 24V	
7	1	30361	Screw, stainless	3,0 x 8
8	4	27429	Clamp	
9	1	27209	Wire 1 x 1,5 mm2	300 mm
10	1	27206	Wire, 1 x 1.5mm2	300 mm
11	1	27204	Wire, 1 x1.5mm2	300 mm
12	1	27202	Cable	300 mm
13	4	27715	Cable end	

1100K, 1110K, 1220K, 1230K, 1320K, 1330K

Internal ref. 70 06 320

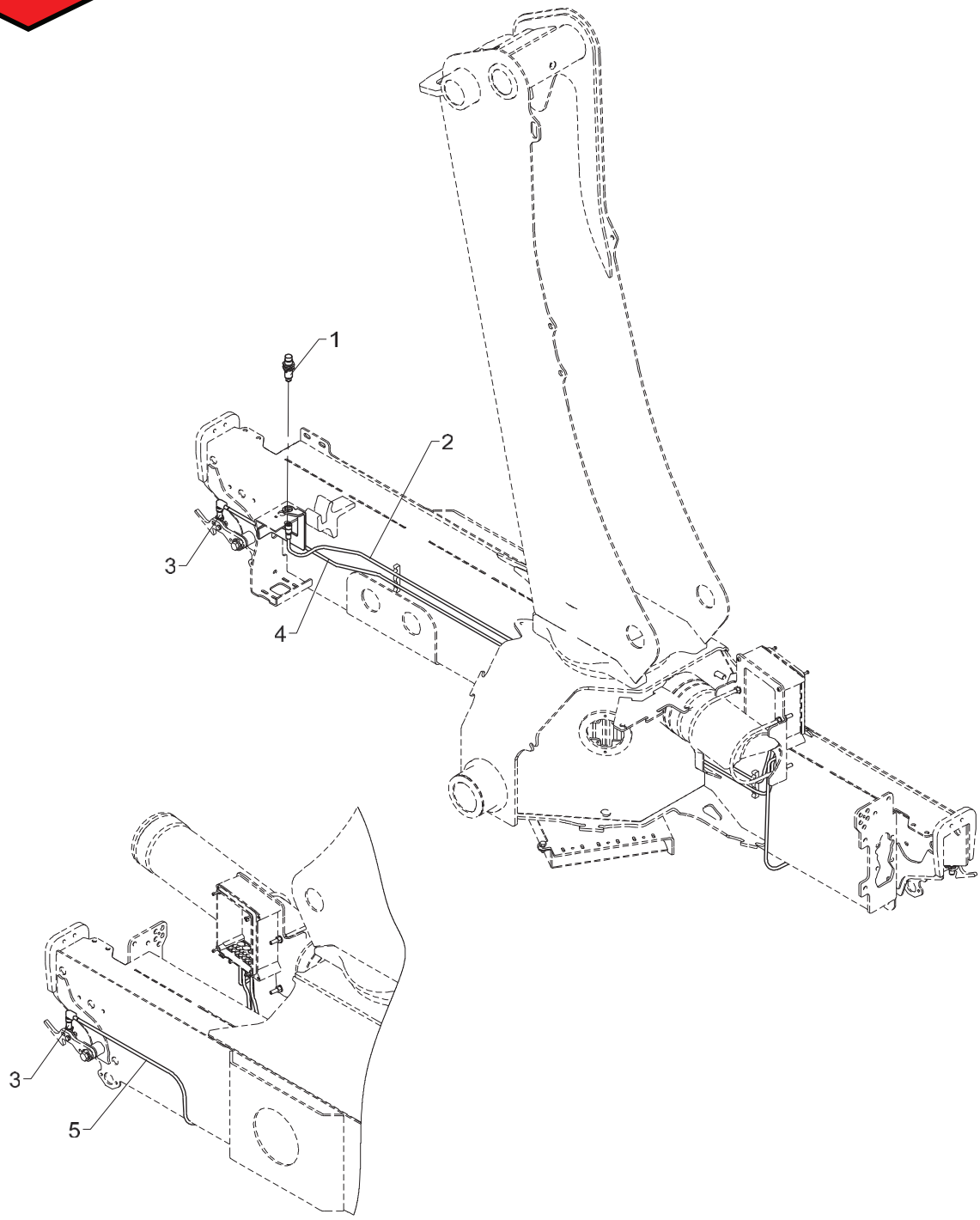

BEPAW

Pos	Qty.	Part no.	Description	Remarks
1	1	28210	Proximity switch	
2	1	29224	Cable with socket, 5 m	
3	2	29257	Proximity switch M12x44, 4mm	
4	1	28077	Cable with plug	
5	1	28117	Cable with plug	

1100K, 1110K, 1220K, 1230K, 1320K, 1330K

Internal ref. 63 65 710

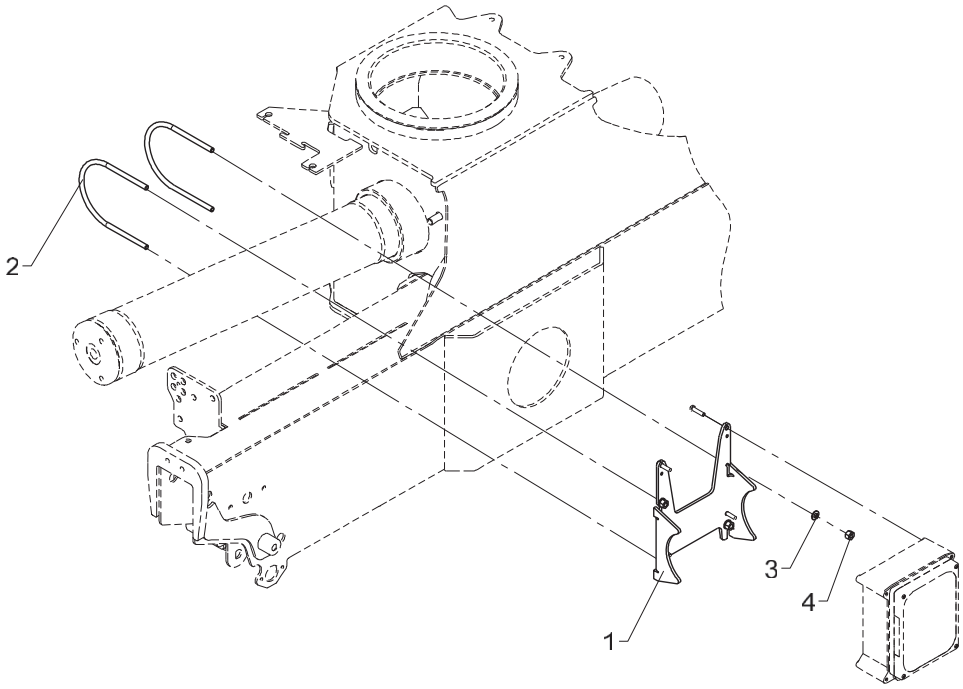

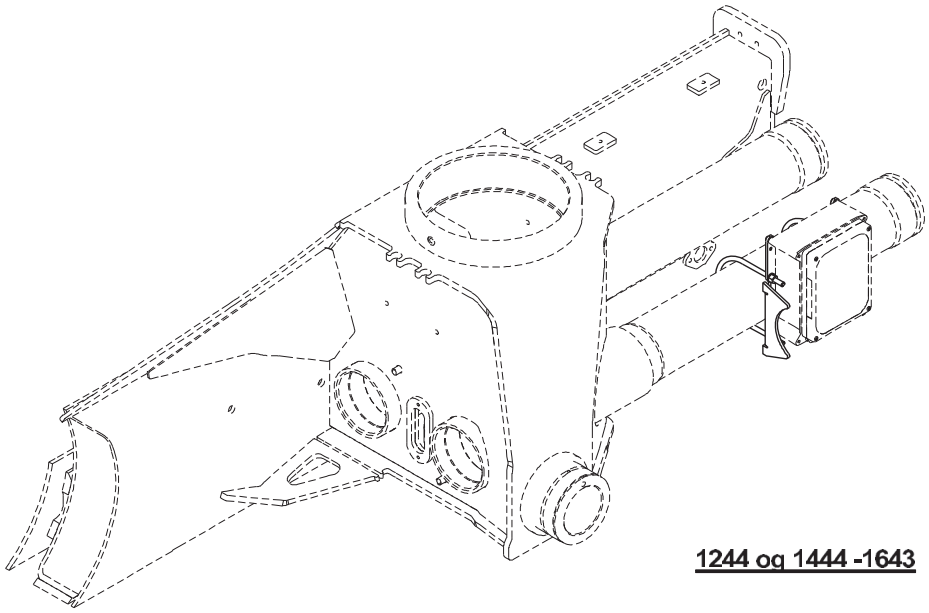

1244 og 1444 -1643

Mounting fittings for junction box

Pos	Qty.	Part no.	Description	Remarks
1	1	6365257	Bracket for connection box	
2	2	6365224	Clamp	
3	4	31147	Face washer, 8 mm	
4	4	30886	Lock nut, stainless	M8

1100K, 1110K, 1220K, 1230K, 1320K, 1330K

Internal ref. 70 06 400

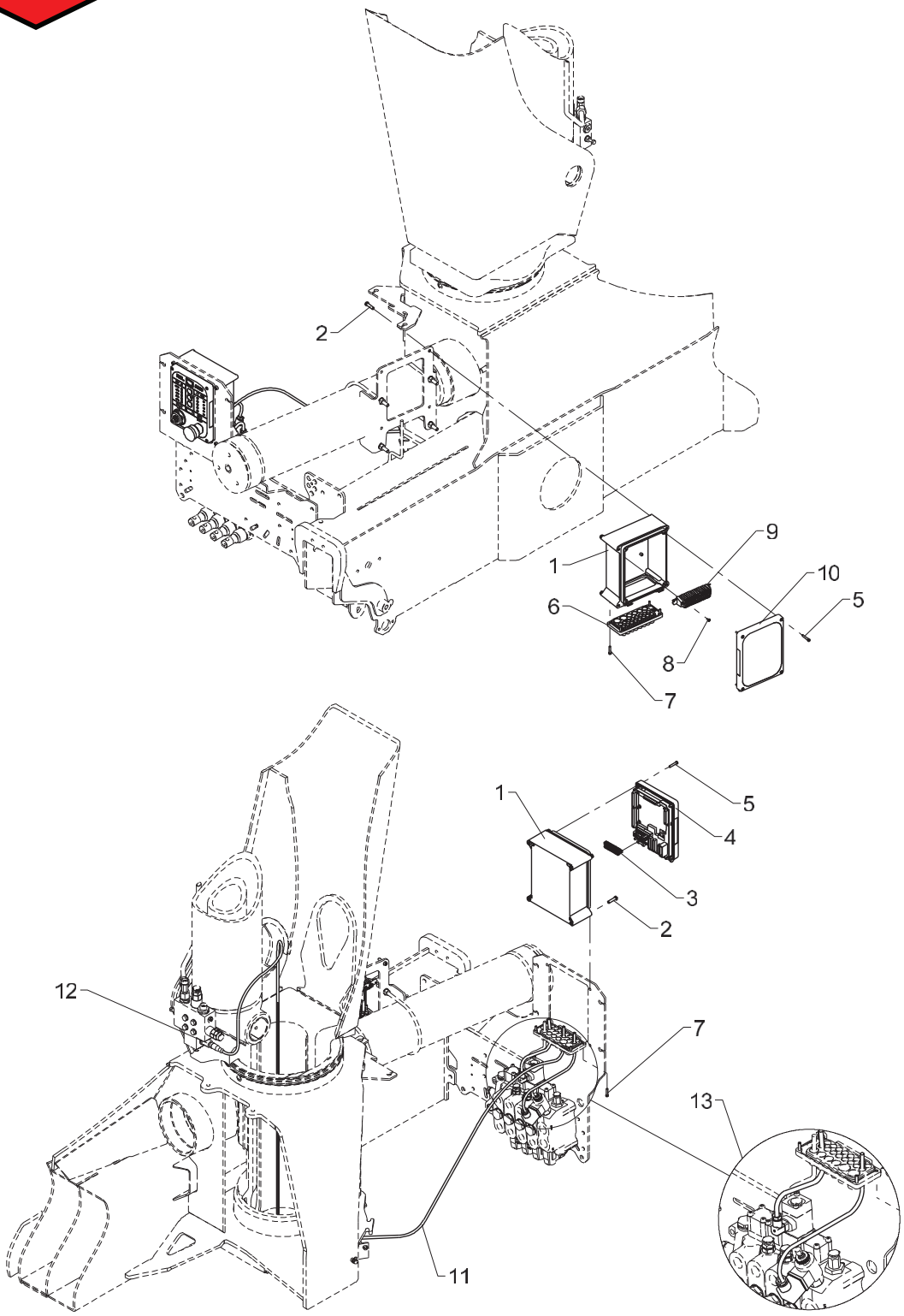

Obsolete

458 20 510

From loader 1170001
To loader

Basic electronic parts, crane without RC

Created 25-02-2013
Modified 17-05-2013

Pos	Qty.	Part no.	Description	Remarks
1	2	29304	Bottom f. RCL-box incl. hinge	
2	8	30340	Screw, stainless	6,0 x 25
3	1	29321	Plug, 10-polar for RCL 53XX	
4	1	29301	Front complete, RCL 5300	
5	8	30347	Screw, stainless	4,0 x 25
6	1	29307	Cable lead-in	
7	8	30346	Screw, stainless	4,0 x 20
8	2	30361	Screw, stainless	3,0 x 8
9	1	7006302	Terminal block, Box1	
10	1	29347	RCL 5300 indicator panel	
11	1	29224	Cable with socket, 5 m	
12	1	28850	Pressure transducer	
13	1	28719	Wiring, standard	

1100K, 1110K, 1220K, 1230K, 1320K, 1330K

70 07 940
70 07 930
Internal ref. 70 06 400

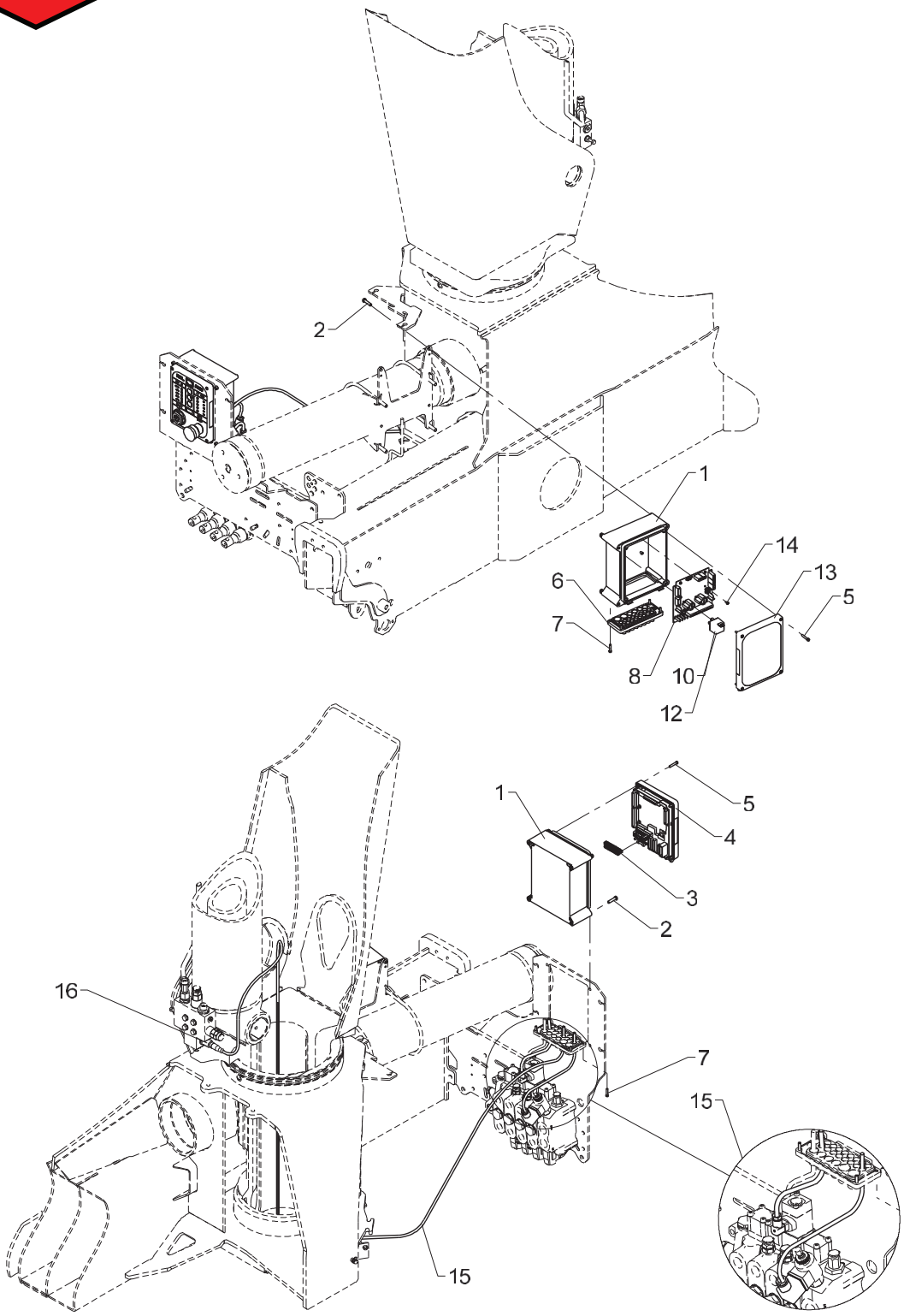

Basic electronic parts, crane without RC

Pos	Qty.	Part no.	Description	Remarks
		7006400	Basic parts,crane withoutRC+CE	
		7007930	Relay, 12 V	
		7007940	Relay, 24 V	
1	2	29304	Bottom f. RCL-box incl. hinge	
2	8	30340	Screw, stainless	6,0 x 25
3	1	29321	Plug, 10-polar for RCL 53XX	
4	1	29301	Front complete, RCL 5300	
5	8	30347	Screw, stainless	4,0 x 25
6	1	29307	Cable lead-in	
7	8	30346	Screw, stainless	4,0 x 20
8	1	29473	EJB5380	
9	1	7007930	Relay, 12 V	
10	1	27340	Relay, 12 V	
11	1	7007940	Relay, 24 V	
12	1	27342	Relay, 24V	
13	1	29347	RCL 5300 indicator panel	
14	6	30361	Screw, stainless	3,0 x 8
15	1	29224	Cable with socket, 5 m	
16	1	28850	Pressure transducer	
17	1	28719	Wiring, standard	

1100K, 1110K, 1220K, 1230K, 1320K, 1330K

Internal ref. 70 03 060

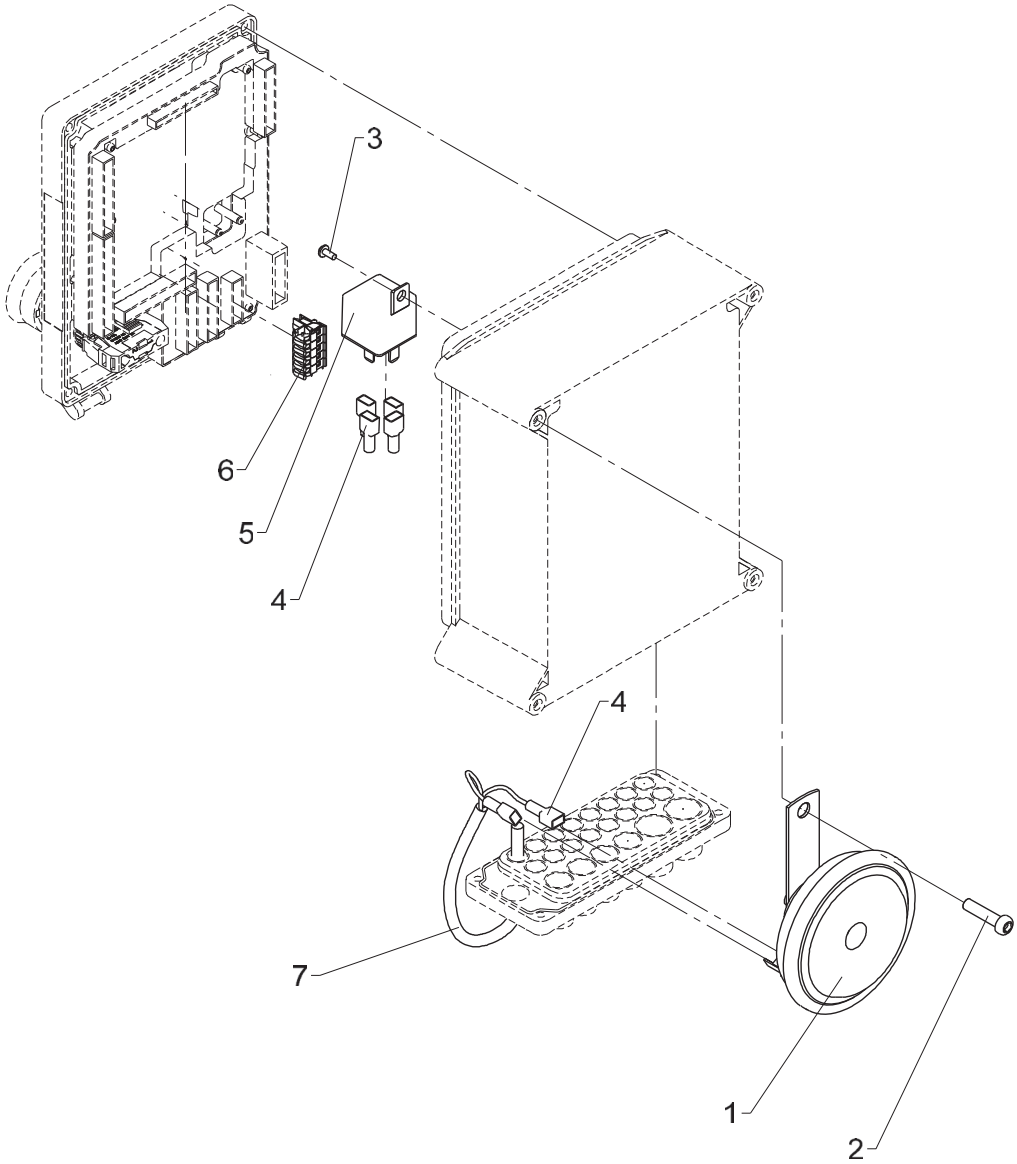

458 20 520

From loader 1170001
To loader

Horn, no RC

Created 01-05-2009
Modified

Pos	Qty.	Part no.	Description	Remarks
1	1	28971	Horn, 24 V, 2.5 Amp.	
2	1	30340	Screw, stainless	6,0 x 25
3	1	30361	Screw, stainless	3,0 x 8
4	6	27429	Clamp	
5	1	27342	Relay, 24V	
6	1	29317	Plug, 5-polar for RCL 53XX	
7	1	28249	Cable 2 x 0.75	0,8 m

1100K, 1110K, 1220K, 1230K, 1320K, 1330K

63 42 120
Internal ref. 63 40 130

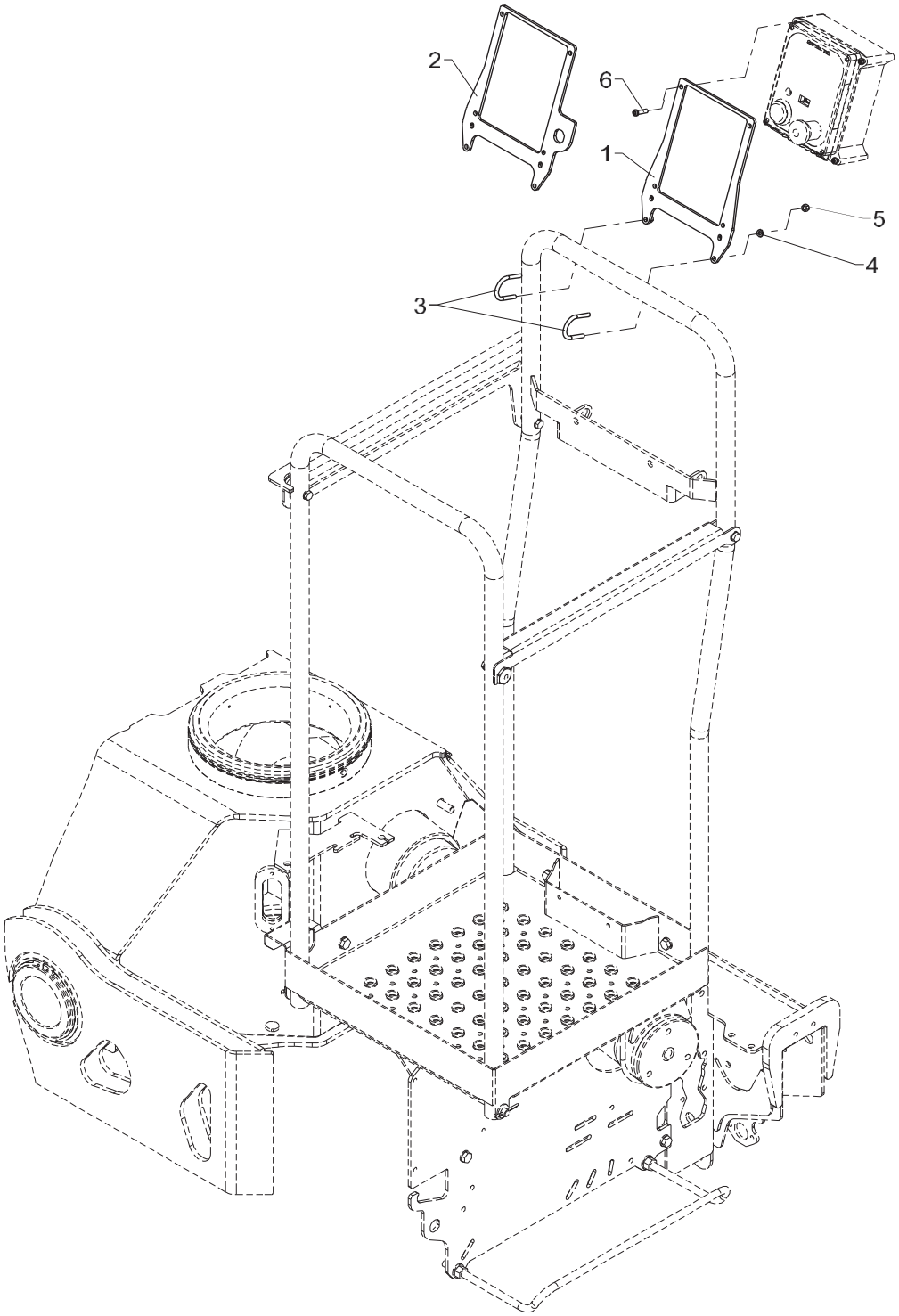

Mounting fittings for ECT 5320 (HS std.)

Pos	Qty.	Part no.	Description	Remarks
		6340130	Fittings for ECT 5320	
		6342120	Fittings ECT5320(HSL-Q,dual c)	
1	1	6340479	Bracket for ECT 5320	(HS, std.)
2	1	6340579	Mounting fittings (ECT 5320)	(HSL-Q, dobb.styring)
3	2	6340903	Clamp	
4	4	32302	Face washer, stainless	6 mm
5	4	30884	Lock nut, stainless	M6
6	4	30340	Screw, stainless	6,0 x 25

1100K, 1110K, 1220K, 1230K, 1320K, 1330K

70 04 340
Internal ref. 70 05 330

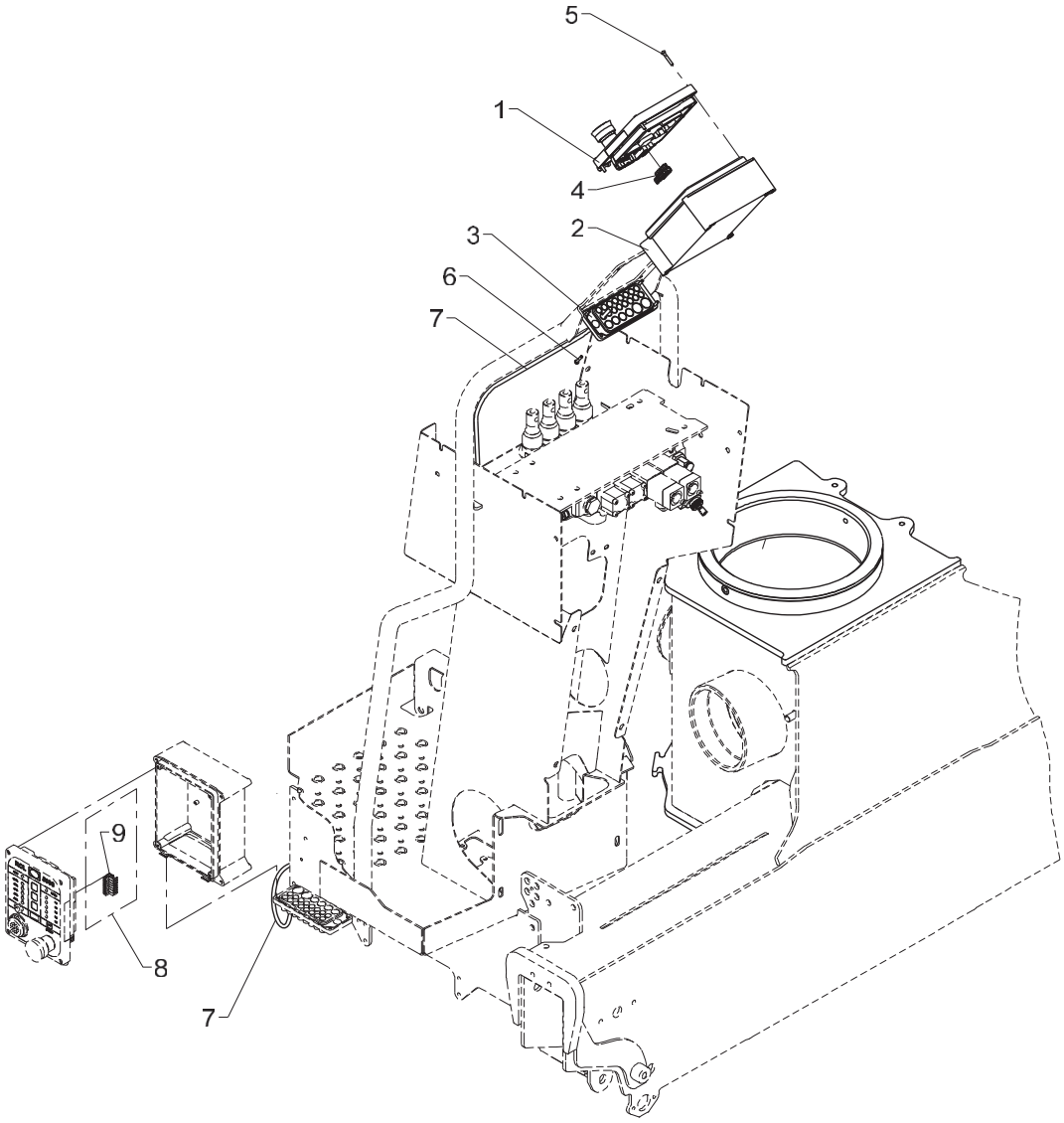

ECT 5320 on stand-up platform (HS)

Pos	Qty.	Part no.	Description	Remarks
1	1	29303	Front complete, ECT5320	
2	1	29304	Bottom f. RCL-box incl. hinge	
3	1	29307	Cable lead-in	
4	1	29318	Plug, 7-polar for RCL 53XX	
5	4	30347	Screw, stainless	4,0 x 25
6	4	30346	Screw, stainless	4,0 x 20
7	1	28263	CAN BUS cable	4,5 m
8	1	7004340	Plug, 7-polar for RCL	
9	1	29318	Plug, 7-polar for RCL 53XX	

1100K, 1110K, 1220K, 1230K, 1320K, 1330K

Internal ref. 70 06 430

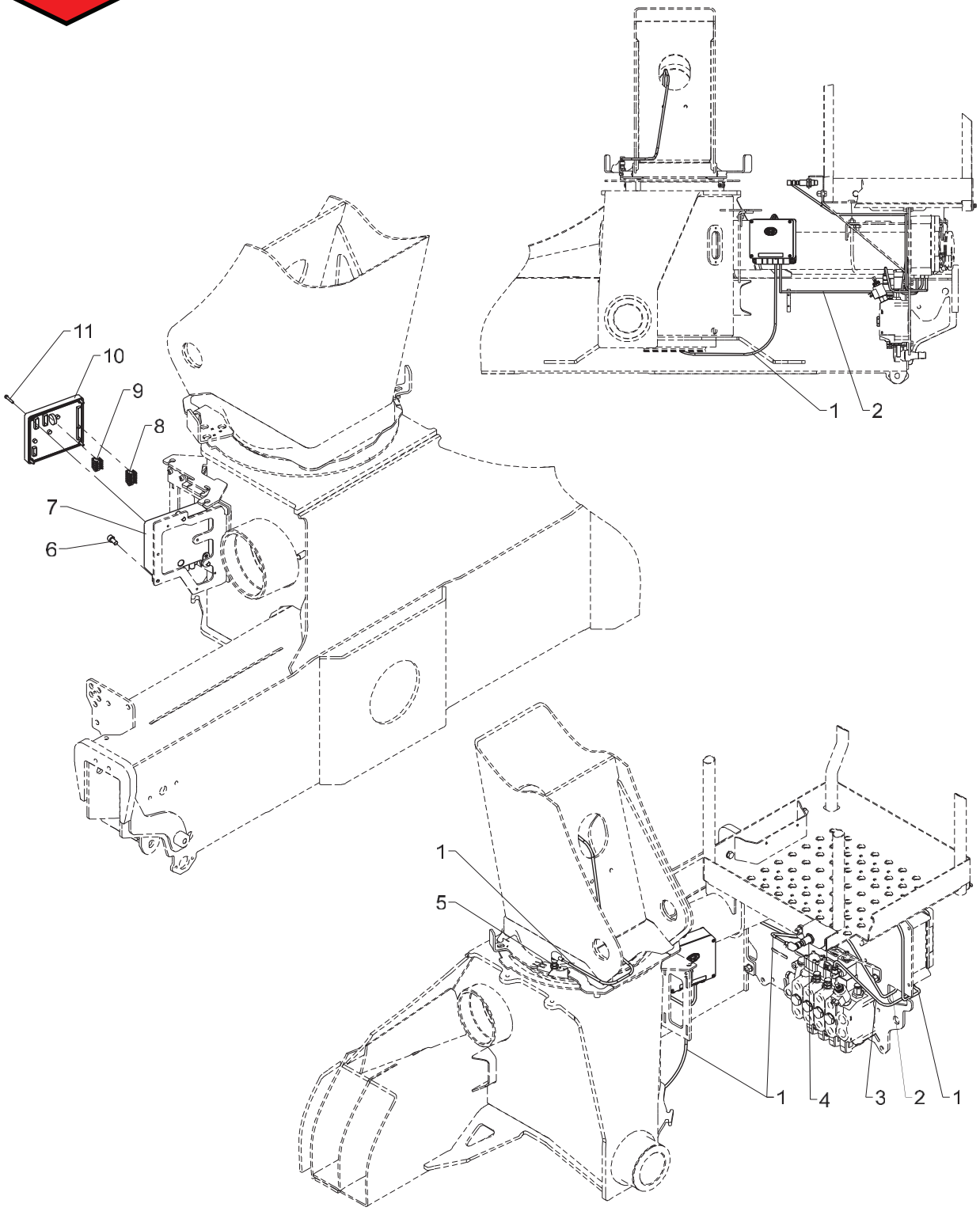

HSL

Pos	Qty.	Part no.	Description	Remarks
1	2	28117	Cable with plug	
2	1	28263	CAN BUS cable	2 m
3	1	28294	Cable, spool sensor	
4	1	28210	Proximity switch	
5	1	29447	Proximity switchM12 8mm PNP-NO	
6	3	30449	Screw	MC8 x 16
7	1	29313	Bottom f. Fly-Jib box	
8	1	29324	Plug, 6-polar for RCL 53XX	
9	1	29317	Plug, 5-polar for RCL 53XX	
10	1	29346	CIO5376 controller cover cpl.	
11	4	30347	Screw, stainless	4,0 x 25

1100K, 1110K, 1220K, 1230K, 1320K, 1330K

Internal ref. 70 06 710

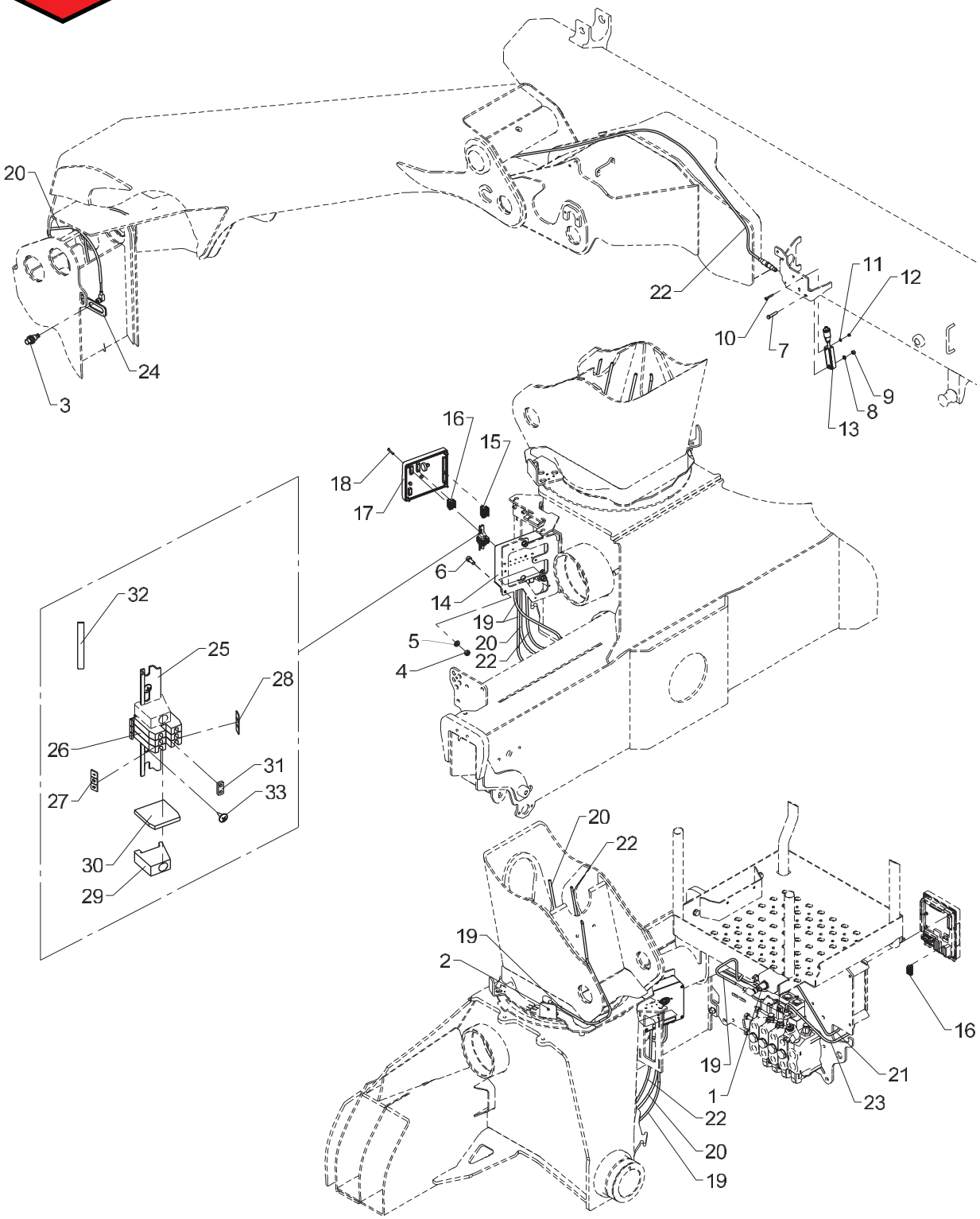

HSL-Q, single

Pos	Qty.	Part no.	Description	Remarks
1	1	28210	Proximity switch	
2	1	29447	Proximity switchM12 8mm PNP-NO	
3	1	28980	Proximity switch	
4	3	30856	Nut, stainless	M8
5	3	31147	Face washer, 8 mm	
6	3	30438	Screw	MC8 x 20
7	1	30116	Steel pin, stainless	M6 x 35
8	1	32302	Face washer, stainless	6 mm
9	1	30884	Lock nut, stainless	M6
10	1	31790	Set screw M4 x 30	M4 x 30
11	1	31188	Washer, stainless	4 mm
12	1	30857	Lock nut	M4
13	1	29295	Tilt sensor + 0.25 m cable	
14	1	29313	Bottom f. Fly-Jib box	
15	1	29324	Plug, 6-polar for RCL 53XX	
16	2	29317	Plug, 5-polar for RCL 53XX	
17	1	29346	CIO5376 controller cover cpl.	
18	4	30347	Screw, stainless	4,0 x 25
19	2	28117	Cable with plug	
20	1	28077	Cable with plug	
21	1	28263	CAN BUS cable	2 m
22	1	28730	Cable + socket, 10 m	9,0 m
23	1	28294	Cable, spool sensor	
24	1	6306803	Bracket for proximity switch	
25	1	28013	Guide rail	80 mm
26	3	28010	Terminal	
27	1	28019	Labels nos. 1-10	
28	1	28965	Dekafix labels 21-30	
29	1	28012	End angle	
30	1	28011	End plate	
31	1	28208	Fish plate	
32	1	27202	Cable	0,3 m
33	2	28693	Screw	Ø2.9 x 6.5

Obsolete

458 20 580

1100K, 1110K, 1220K, 1230K, 1320K, 1330K

Internal ref. 70 06 720

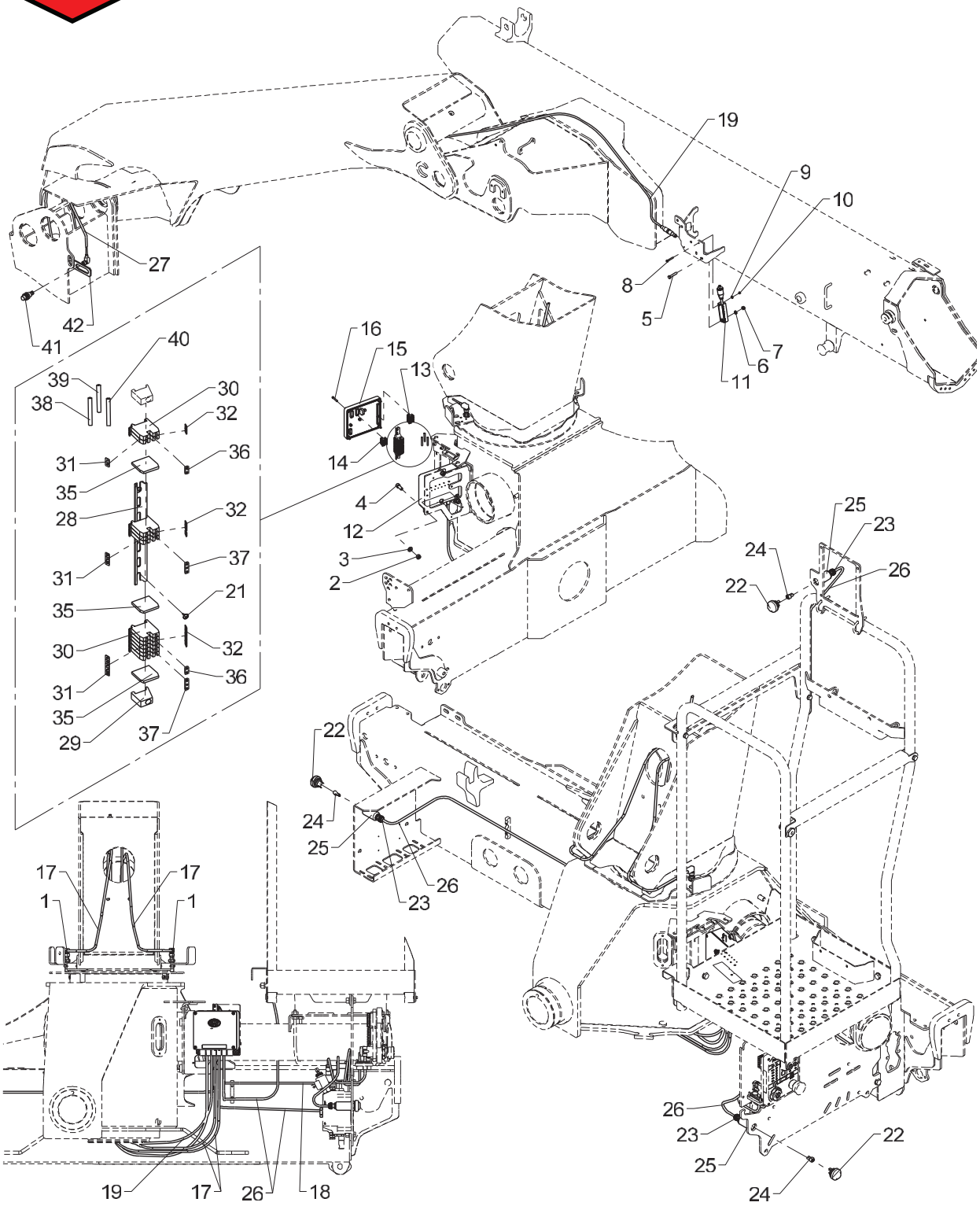

Obsolete

458 20 580

From loader 1170001
To loader

Created 22-10-2012
Modified 01-01-2014

HSL-Q, double

Pos	Qty.	Part no.	Description	Remarks
1	2	29447	Proximity switchM12 8mm PNP-NO	
2	3	30856	Nut, stainless	M8
3	3	31147	Face washer, 8 mm	
4	3	30438	Screw	MC8 x 20
5	1	30116	Steel pin, stainless	M6 x 35
6	1	32302	Face washer, stainless	6 mm
7	1	30884	Lock nut, stainless	M6
8	1	31790	Set screw M4 x 30	M4 x 30
9	1	31188	Washer, stainless	4 mm
10	1	30857	Lock nut	M4
11	1	29295	Tilt sensor + 0.25 m cable	
12	1	29313	Bottom f. Fly-Jib box	
13	1	29324	Plug, 6-polar for RCL 53XX	
14	2	29317	Plug, 5-polar for RCL 53XX	
15	1	29346	CIO5376 controller cover cpl.	
16	4	30347	Screw, stainless	4,0 x 25
17	2	28117	Cable with plug	
18	1	28263	CAN BUS cable	2 m
19	1	28730	Cable + socket, 10 m	9,0 m
20	1	28294	Cable, spool sensor	
21	2	28693	Screw	Ø2.9 x 6.5
22	3	27333	Push button	
23	3	28459	Connection	
24	6	27429	Clamp	
25	3	64574	Housing	
26	1	28148	Cable	6 m
27	1	28077	Cable with plug	
28	1	28013	Guide rail	110 mm.
29	1	28012	End angle	
30	11	28010	Terminal	
31	1	28019	Labels nos. 1-10	
32	1	28965	Dekafix labels 21-30	
33	1	29427	Dekafix marker 31-40	
34	1	28020	Labels nos. 11-20	
35	3	28011	End plate	
36	2	28208	Fish plate	
37	2	28014	Fish plate	
38	1	27202	Cable	0,3 m
39	1	27209	Wire 1 x 1,5 mm2	0,3 m
40	1	27204	Wire, 1 x1.5mm2	0,3 m
41	1	28980	Proximity switch	

Obsolete

458 20 580

1100K, 1110K, 1220K, 1230K, 1320K, 1330K

Internal ref. 70 06 720

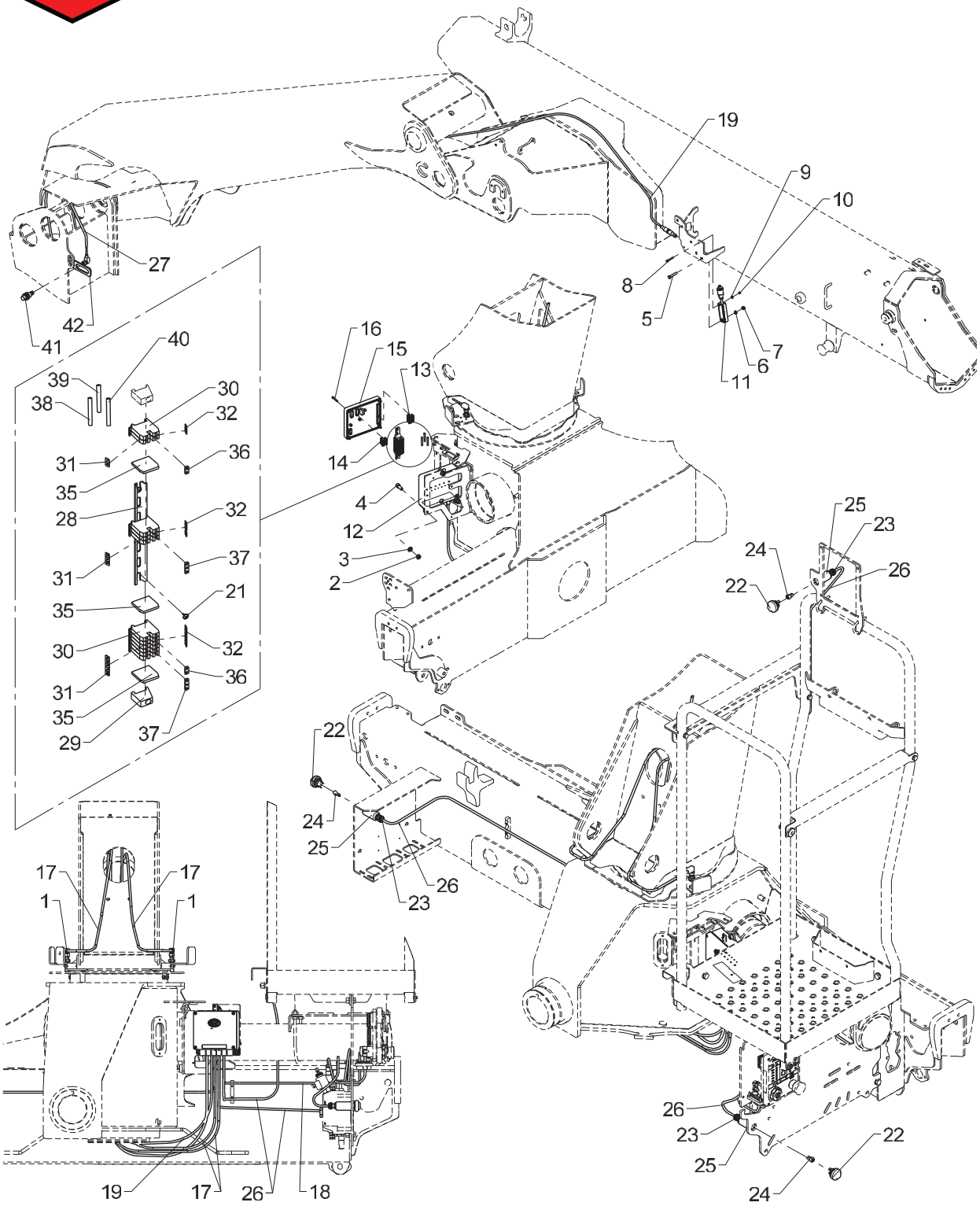

Obsolete

458 20 580

From loader 1170001
To loader

HSL-Q, double

Created 22-10-2012
Modified 01-01-2014

Pos	Qty.	Part no.	Description	Remarks
42	1	6306803	Bracket for proximity switch	

1100K, 1110K, 1220K, 1230K, 1320K, 1330K

Internal ref. 70 06 720

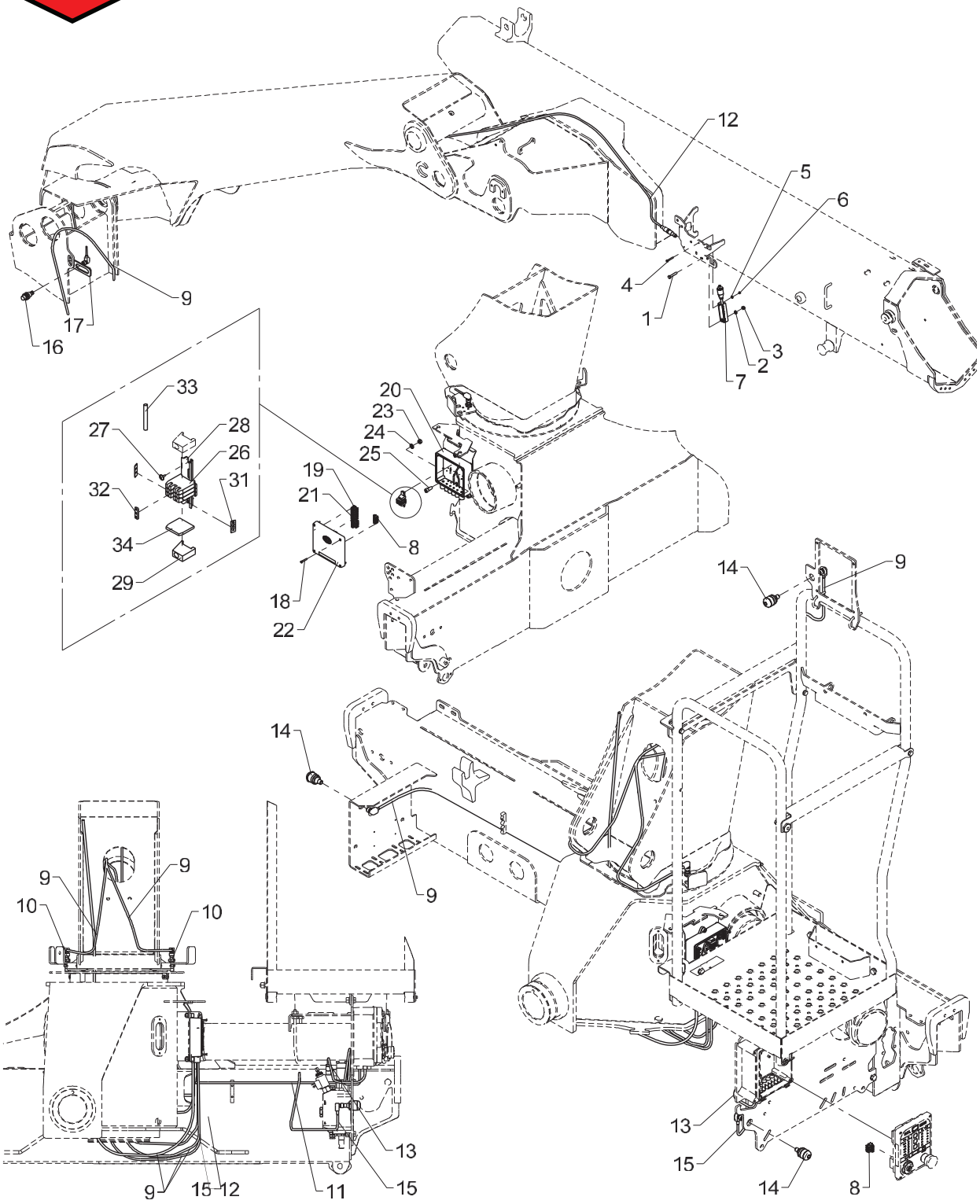

HSL-Q, double

Pos	Qty.	Part no.	Description	Remarks
1	1	30116	Steel pin, stainless	M6 x 35
2	1	32302	Face washer, stainless	6 mm
3	1	30884	Lock nut, stainless	M6
4	1	31790	Set screw M4 x 30	M4 x 30
5	1	31188	Washer, stainless	4 mm
6	1	30857	Lock nut	M4
7	1	29295	Tilt sensor + 0.25 m cable	
8	2	29317	Plug, 5-polar for RCL 53XX	
9	5	28077	Cable with plug	
10	2	29447	Proximity switchM12 8mm PNP-NO	
11	1	28263	CAN BUS cable	2 m
12	1	28730	Cable + socket, 10 m	
13	1	28294	Cable, spool sensor	
14	3	29498	Touch button with light	
15	1	28117	Cable with plug	0,45 m
16	1	28980	Proximity switch	
17	1	6306803	Bracket for proximity switch	
18	4	30347	Screw, stainless	4,0 x 25
19	1	29321	Plug, 10-polar for RCL 53XX	
20	1	29313	Bottom f. Fly-Jib box	
21	1	29324	Plug, 6-polar for RCL 53XX	
22	1	29346	CIO5376 controller cover cpl.	
23	3	30856	Nut, stainless	M8
24	3	31147	Face washer, 8 mm	
25	3	30438	Screw	MC8 x 20
26	3	28010	Terminal	
27	2	28693	Screw	Ø2.9 x 6.5
28	1	28013	Guide rail	60 mm.
29	1	28012	End angle	
30	1	28019	Labels nos. 1-10	
31	1	28965	Dekafix labels 21-30	
32	1	28014	Fish plate	
33	1	27209	Wire 1 x 1,5 mm2	0,3 m
34	1	28011	End plate	

Obsolete

458 20 590

1100K, 1110K, 1220K, 1230K, 1320K, 1330K

Internal ref. 70 06 750

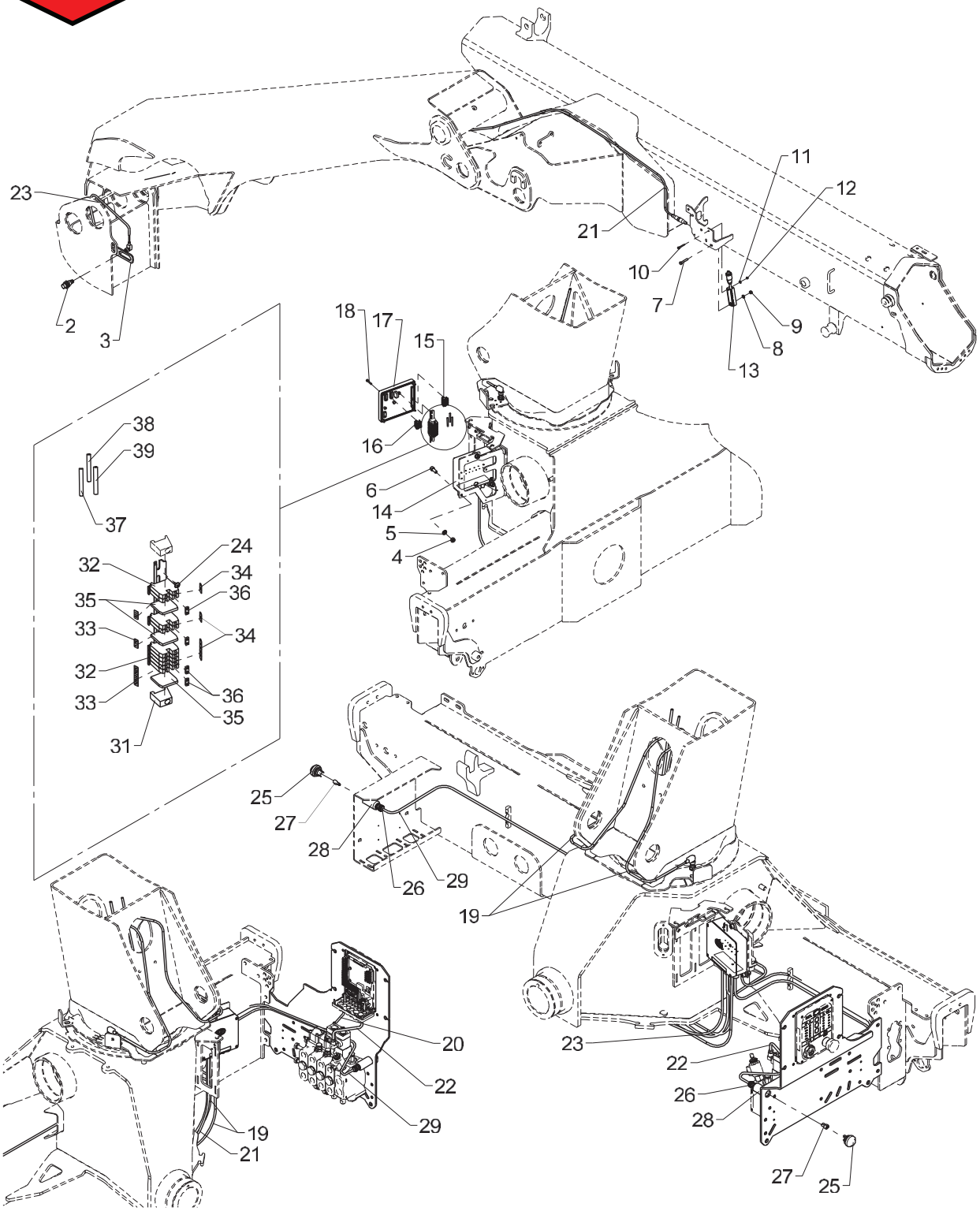

Obsolete

458 20 590

From loader 1170001
To loader

QOPS, STD.

Created 22-10-2012
Modified 01-01-2014

Pos	Qty.	Part no.	Description	Remarks
1	2	29447	Proximity switchM12 8mm PNP-NO	
2	1	28980	Proximity switch	
3	1	6306803	Bracket for proximity switch	
4	3	30856	Nut, stainless	M8
5	3	31147	Face washer, 8 mm	
6	3	30438	Screw	MC8 x 20
7	1	30116	Steel pin, stainless	M6 x 35
8	1	32302	Face washer, stainless	6 mm
9	1	30884	Lock nut, stainless	M6
10	1	31790	Set screw M4 x 30	M4 x 30
11	1	31188	Washer, stainless	4 mm
12	1	30857	Lock nut	M4
13	1	29295	Tilt sensor + 0.25 m cable	
14	1	29313	Bottom f. Fly-Jib box	
15	1	29324	Plug, 6-polar for RCL 53XX	
16	2	29317	Plug, 5-polar for RCL 53XX	
17	1	29346	CIO5376 controller cover cpl.	
18	4	30347	Screw, stainless	4,0 x 25
19	2	28117	Cable with plug	
20	1	28263	CAN BUS cable	2 m
21	1	28730	Cable + socket, 10 m	9,0 m
22	1	28294	Cable, spool sensor	
23	1	28077	Cable with plug	
24	2	28693	Screw	Ø2.9 x 6.5
25	2	27333	Push button	
26	2	28459	Connection	
27	4	27429	Clamp	
28	2	64574	Housing	
29	2	28148	Cable	4 m
30	1	28013	Guide rail	110 mm.
31	1	28012	End angle	
32	9	28010	Terminal	
33	1	28019	Labels nos. 1-10	
34	1	28965	Dekafix labels 21-30	
35	3	28011	End plate	
36	4	28208	Fish plate	
37	1	27202	Cable	0,3 m
38	1	27209	Wire 1 x 1,5 mm2	0,3 m
39	1	27204	Wire, 1 x1.5mm2	0,3 m

1100K, 1110K, 1220K, 1230K, 1320K, 1330K

Internal ref. 70 06 750

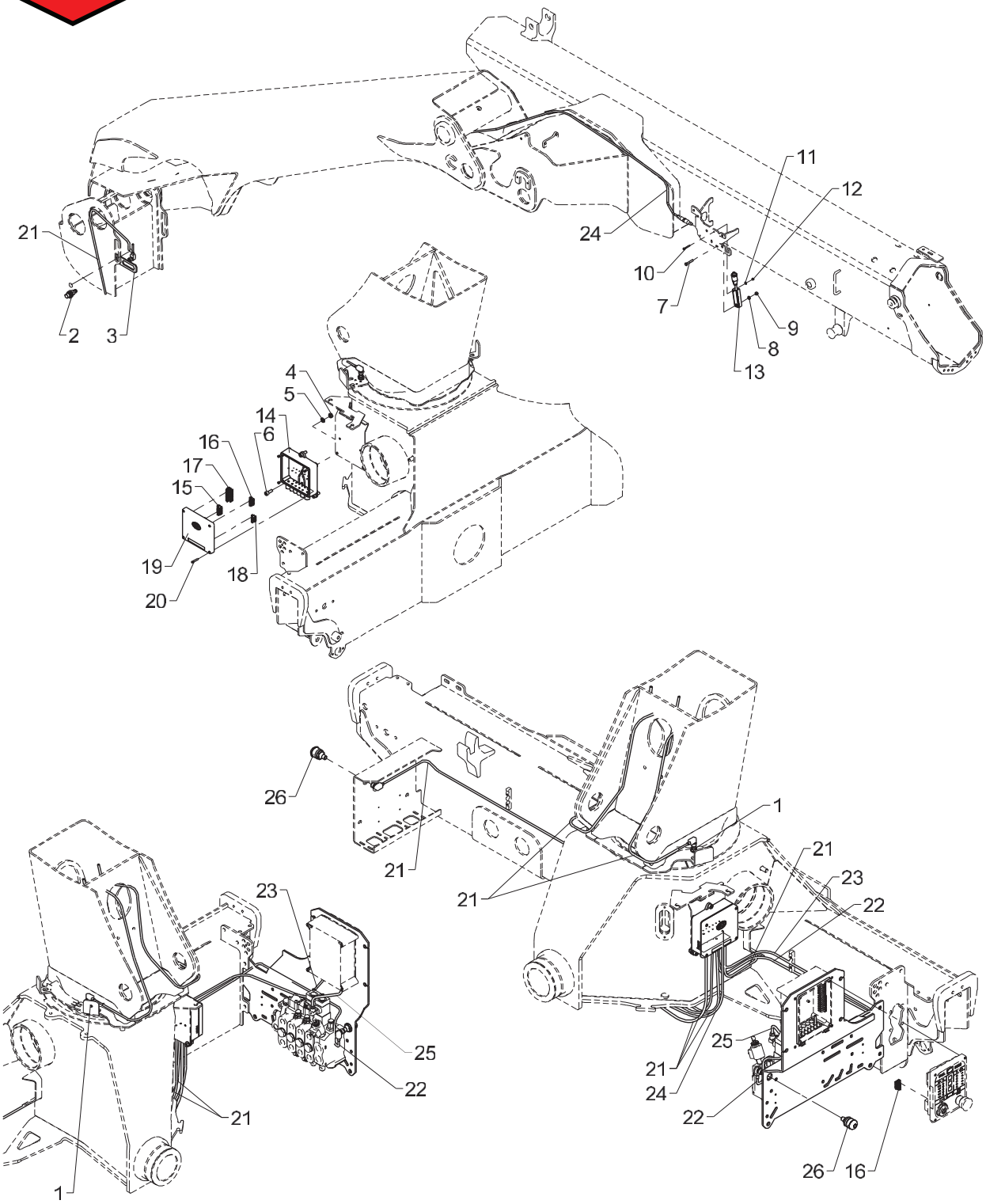

QOPS, STD.

Pos	Qty.	Part no.	Description	Remarks
1	2	29447	Proximity switchM12 8mm PNP-NO	
2	1	28980	Proximity switch	
3	1	6306803	Bracket for proximity switch	
4	3	30856	Nut, stainless	M8
5	3	31147	Face washer, 8 mm	
6	3	30438	Screw	MC8 x 20
7	1	30116	Steel pin, stainless	M6 x 35
8	1	32302	Face washer, stainless	6 mm
9	1	30884	Lock nut, stainless	M6
10	1	31790	Set screw M4 x 30	M4 x 30
11	1	31188	Washer, stainless	4 mm
12	1	30857	Lock nut	M4
13	1	29295	Tilt sensor + 0.25 m cable	
14	1	29313	Bottom f. Fly-Jib box	
15	1	29324	Plug, 6-polar for RCL 53XX	
16	2	29317	Plug, 5-polar for RCL 53XX	
17	1	29321	Plug, 10-polar for RCL 53XX	
18	1	29323	Plug, 4-polar for RCL 53XX	
19	1	29346	CIO5376 controller cover cpl.	
20	4	30347	Screw, stainless	4,0 x 25
21	4	28077	Cable with plug	
22	1	28117	Cable with plug	
23	1	28263	CAN BUS cable	2 m
24	1	28730	Cable + socket, 10 m	
25	1	28294	Cable, spool sensor	
26	2	29498	Touch button with light	

1100K, 1110K, 1220K, 1230K, 1320K, 1330K

Internal ref. 70 07 310

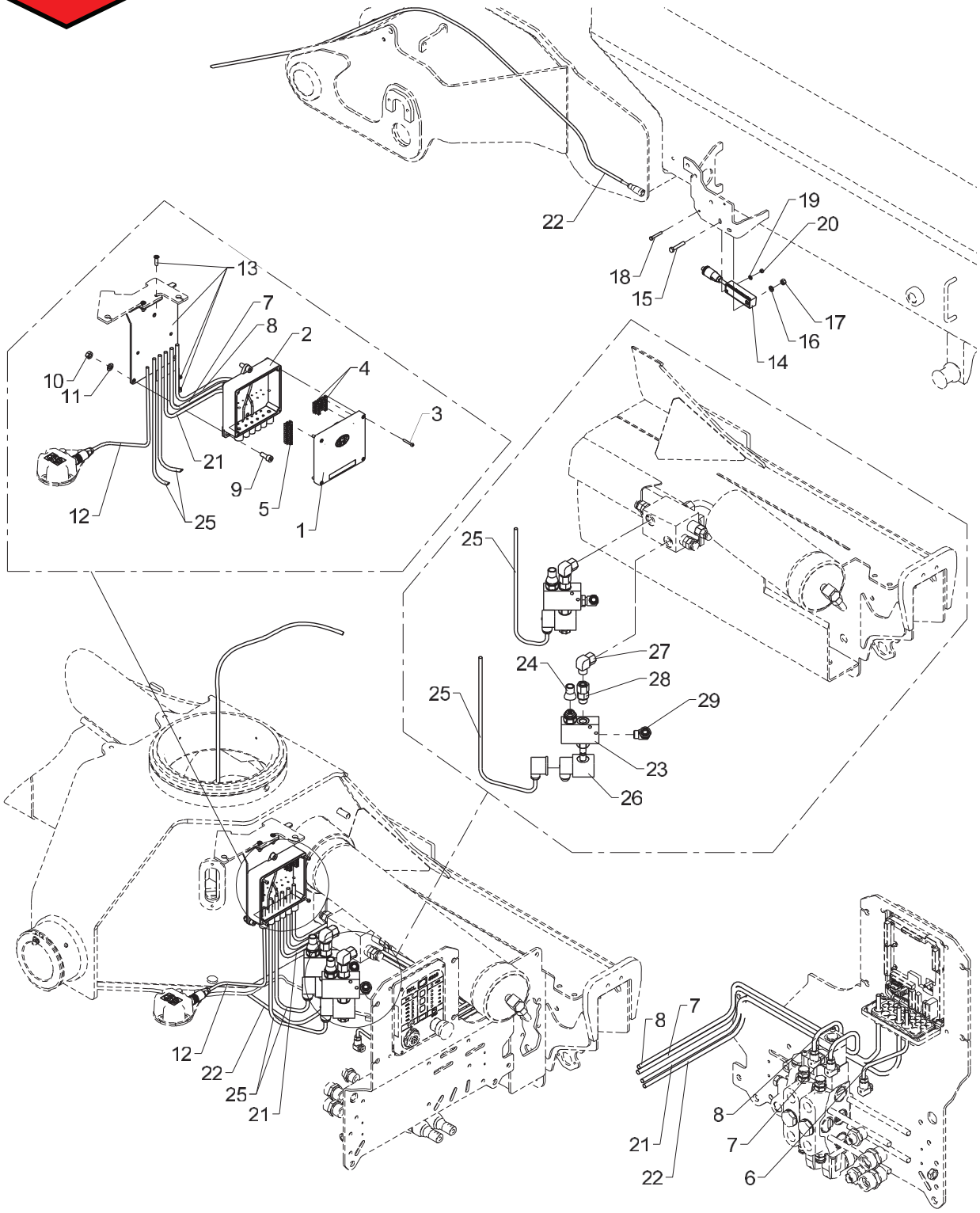

EVS, knuckle boom crane without RC

Created 21-08-2012
Modified 23-10-2012

Pos	Qty.	Part no.	Description	Remarks
1	1	29346	CIO5376 controller cover cpl.	
2	1	29313	Bottom f. Fly-Jib box	
3	4	30347	Screw, stainless	4,0 x 25
4	2	29317	Plug, 5-polar for RCL 53XX	
5	1	29321	Plug, 10-polar for RCL 53XX	
6	1	28294	Cable, spool sensor	
7	1	28268	Cable, spool sensor, jib	
8	1	28269	Cable, spool sensor, extension	
9	3	30438	Screw	MC8 x 20
10	3	30856	Nut, stainless	M8
11	3	31147	Face washer, 8 mm	
12	1	29456	CAN cable, M12, 2 m, female	
13	1	6341740	Fittings for junction box	
14	1	29295	Tilt sensor + 0.25 m cable	
15	1	30116	Steel pin, stainless	M6 x 35
16	1	32302	Face washer, stainless	6 mm
17	1	30884	Lock nut, stainless	M6
18	1	31790	Set screw M4 x 30	M4 x 30
19	1	31188	Washer, stainless	4 mm
20	1	30857	Lock nut	M4
21	1	28263	CAN BUS cable	2 m
22	1	28730	Cable + socket, 10 m	
23	2	50517	Valve	
24	2	50518	Cover for sealing	
25	2	28265	Cable, dump valve, 1.35 m	
26	2	61778	Solenoid	
27	2	25242	Elbow connection	EWSD 12 L
28	2	25240	Connection	EGESD 12 LR-WD
29	2	26897	Elbow connection	12 mm - 3/8"

1100K, 1110K, 1220K, 1230K, 1320K, 1330K

Internal ref. 70 07 370

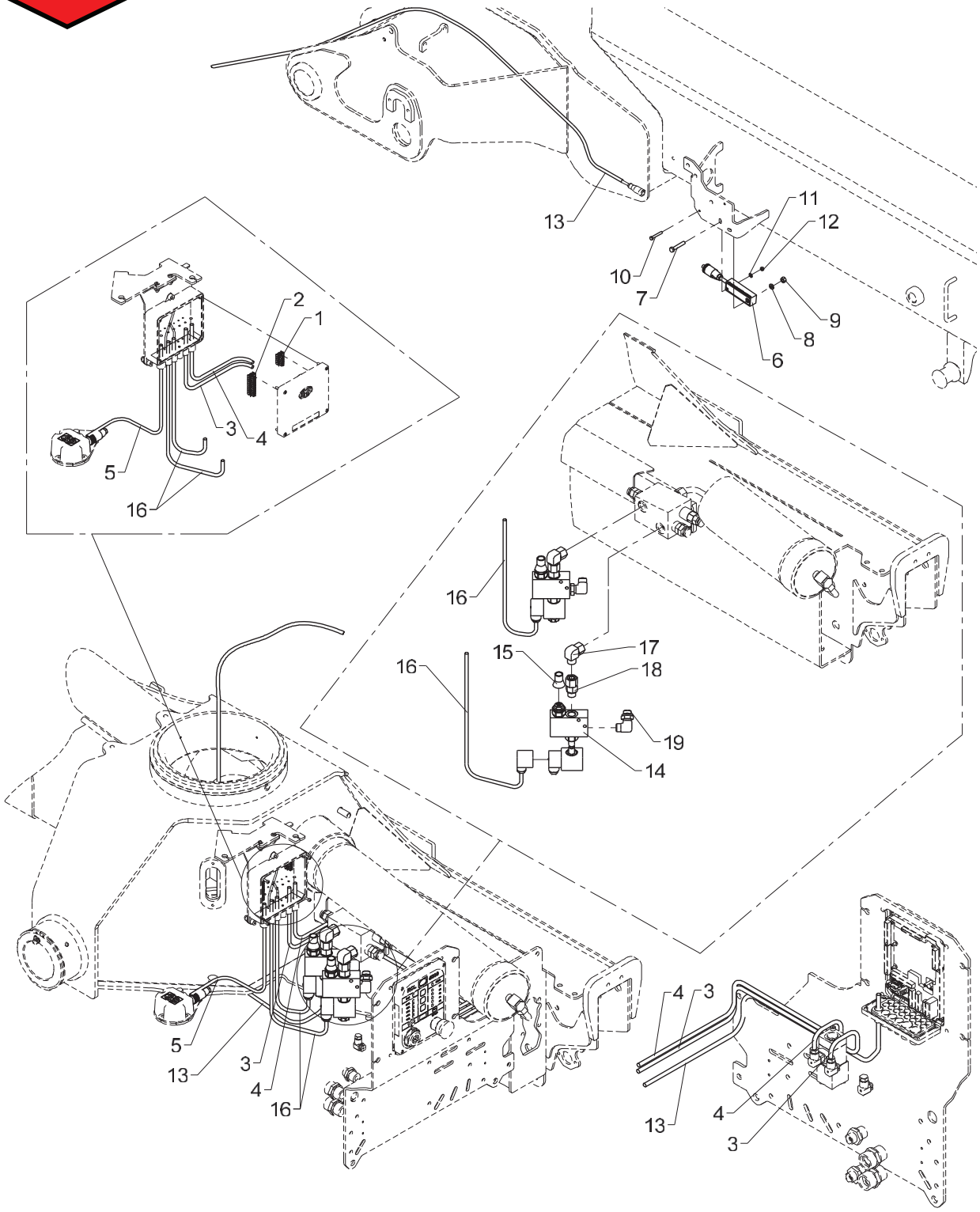

EVS, knuckle boom crane without RC with HS or QOPS

Created 21-08-2012
Modified 23-10-2012

Pos	Qty.	Part no.	Description	Remarks
1	1	29317	Plug, 5-polar for RCL 53XX	
2	1	29321	Plug, 10-polar for RCL 53XX	
3	1	28268	Cable, spool sensor, jib	
4	1	28269	Cable, spool sensor, extension	
5	1	29456	CAN cable, M12, 2 m, female	
6	1	29295	Tilt sensor + 0.25 m cable	
7	1	30116	Steel pin, stainless	M6 x 35
8	1	32302	Face washer, stainless	6 mm
9	1	30884	Lock nut, stainless	M6
10	1	31790	Set screw M4 x 30	M4 x 30
11	1	31188	Washer, stainless	4 mm
12	1	30857	Lock nut	M4
13	1	28730	Cable + socket, 10 m	
14	2	50517	Valve	
15	2	50518	Cover for sealing	
16	2	28265	Cable, dump valve, 1.35 m	
17	2	25242	Elbow connection	EWSD 12 L
18	2	25240	Connection	EGESD 12 LR-WD
19	2	26897	Elbow connection	12 mm - 3/8"

1100K, 1110K, 1220K, 1230K, 1320K, 1330K

Internal ref. 70 06 240

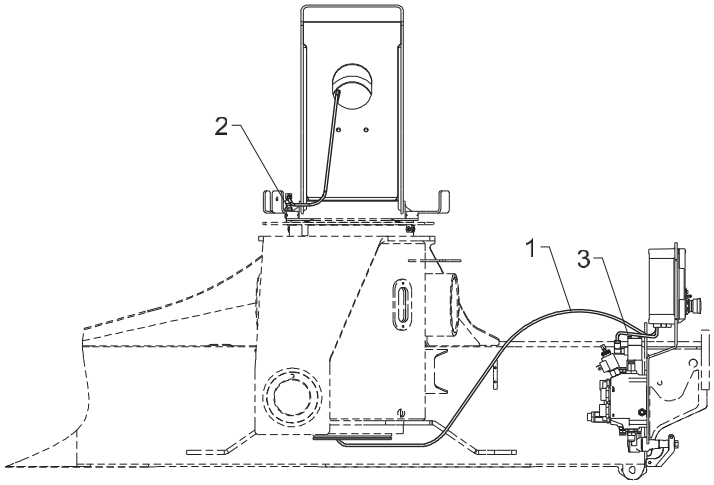

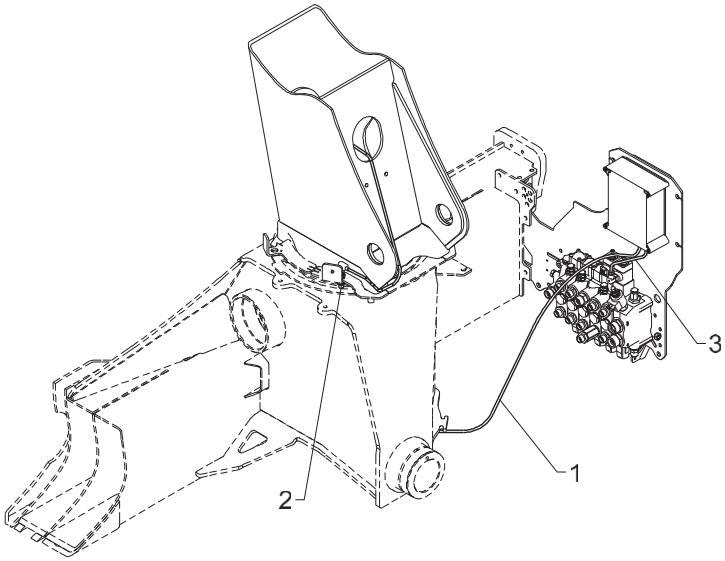

458 20 620

From loader 1170001
To loader

Created 18-07-2014
Modified

2-stage LMB, without RC

Pos	Qty.	Part no.	Description	Remarks
1	1	28077	Cable with plug	2,7 m
2	1	29447	Proximity switchM12 8mm PNP-NO	
3	1	28294	Cable, spool sensor	

Obsolete

458 22 010

1100K, 1110K, 1220K, 1230K, 1320K, 1330K

Internal ref. 70 06 300

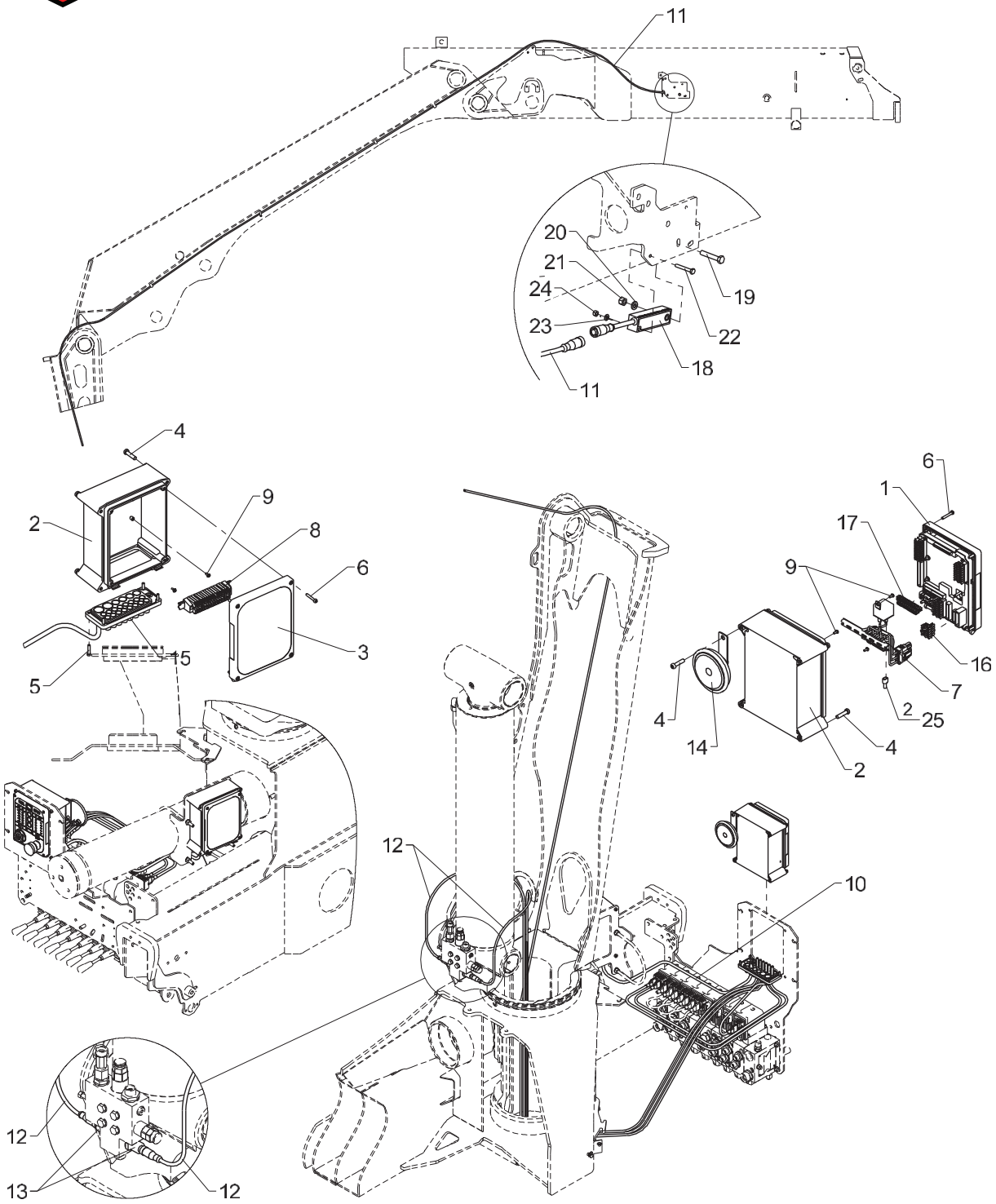

Obsolete

458 22 010

From loader 1170001
To loader

Created 16-07-2012
Modified

Basic electronic parts, crane with RC

Pos	Qty.	Part no.	Description	Remarks
1	1	29301	Front complete, RCL 5300	
2	2	29304	Bottom f. RCL-box incl. hinge	
3	1	29347	RCL 5300 indicator panel	
4	9	30340	Screw, stainless	6,0 x 25
5	8	30346	Screw, stainless	4,0 x 20
6	8	30347	Screw, stainless	4,0 x 25
7	1	7006301	Terminal block for RC 24 V	
8	1	7006302	Terminal block, Box1	
9	5	30361	Screw, stainless	3,0 x 8
10	1	28722	Wiring, RC base	
11	1	28730	Cable + socket, 10 m	10 m
12	2	29224	Cable with socket, 5 m	5 m
13	2	28850	Pressure transducer	
14	1	28971	Horn, 24 V, 2.5 Amp.	
15	1	29307	Cable lead-in	
16	1	29341	CAN termination FJC	
17	1	29321	Plug, 10-polar for RCL 53XX	
18	1	29295	Tilt sensor + 0.25 m cable	
19	1	30116	Steel pin, stainless	M6 x 35
20	1	32302	Face washer, stainless	6 mm
21	1	30884	Lock nut, stainless	M6
22	1	31790	Set screw M4 x 30	M4 x 30
23	1	31188	Washer, stainless	4 mm
24	1	30857	Lock nut	M4
25	1	27428	Clip	

1100K, 1110K, 1220K, 1230K, 1320K, 1330K

70 07 940
70 07 930
Internal ref. 70 06 300

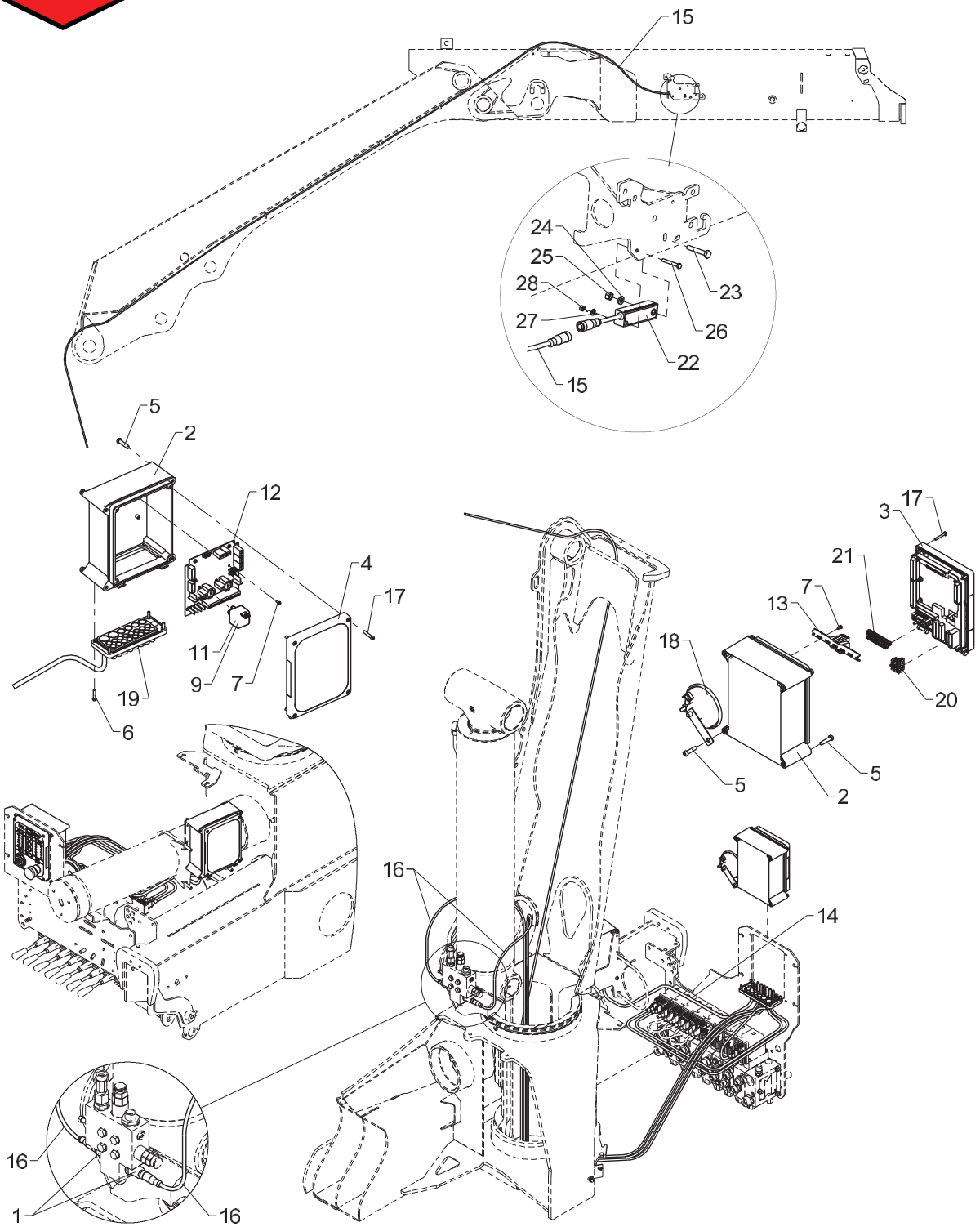

Basic electronic parts, crane with RC

Pos	Qty.	Part no.	Description	Remarks
		7006300	Basic parts, crane + RC	
		7007930	Relay, 12 V	
		7007940	Relay, 24 V	
1	2	28850	Pressure transducer	
2	2	29304	Bottom f. RCL-box incl. hinge	
3	1	29301	Front complete, RCL 5300	
4	1	29347	RCL 5300 indicator panel	
5	9	30340	Screw, stainless	6,0 x 25
6	8	30346	Screw, stainless	4,0 x 20
7	8	30361	Screw, stainless	3,0 x 8
8	1	7007940	Relay, 24 V	
9	1	27342	Relay, 24V	
10	1	7007930	Relay, 12 V	
11	1	27340	Relay, 12 V	
12	1	29473	EJB5380	
13	1	7006306	Terminal block for RCL + RC	
14	1	28722	Wiring, RC base	
15	1	28730	Cable + socket, 10 m	10 m
16	2	29224	Cable with socket, 5 m	5 m
17	8	30347	Screw, stainless	4,0 x 25
18	1	28971	Horn, 24 V, 2.5 Amp.	
19	1	29307	Cable lead-in	
20	1	29341	CAN termination FJC	
21	1	29321	Plug, 10-polar for RCL 53XX	
22	1	29295	Tilt sensor + 0.25 m cable	
23	1	30116	Steel pin, stainless	M6 x 35
24	1	32302	Face washer, stainless	6 mm
25	1	30884	Lock nut, stainless	M6
26	1	31790	Set screw M4 x 30	M4 x 30
27	1	31188	Washer, stainless	4 mm
28	1	30857	Lock nut	M4

1100K, 1110K, 1220K, 1230K, 1320K, 1330K

Internal ref. 70 06 301

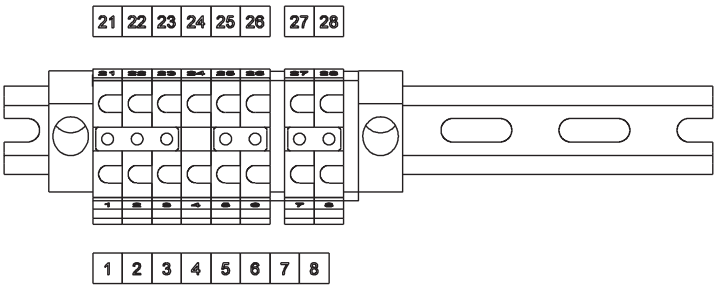

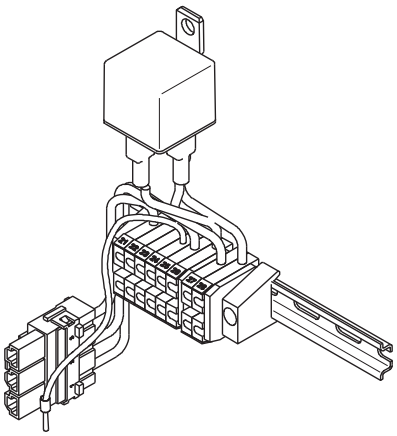

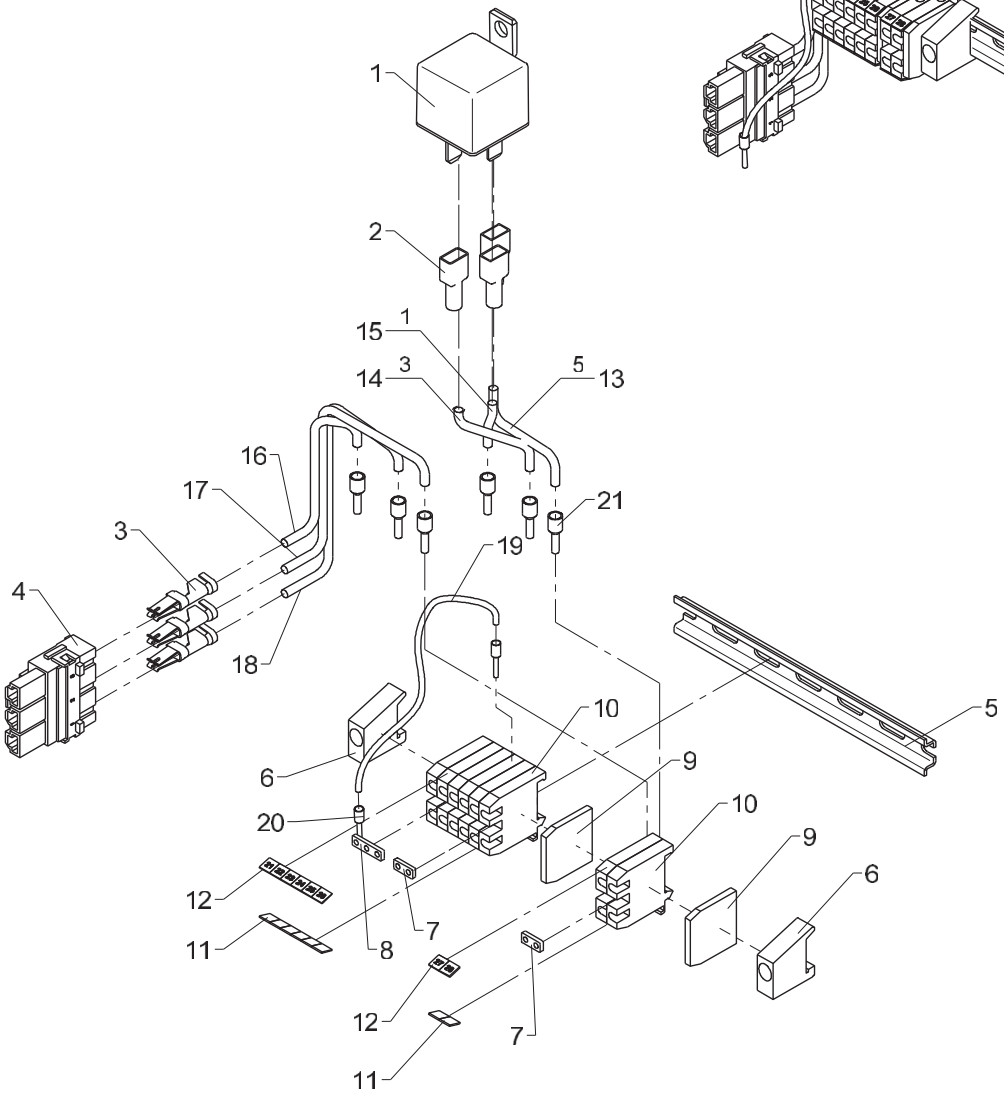

Obsolete

458 22 015

From loader 1170001
To loader

Created 24-11-2011
Modified

Terminal block for RC, 24 V

Pos	Qty.	Part no.	Description	Remarks
1	1	27342	Relay, 24V	
2	3	27428	Clip	
3	3	29316	Pin	
4	1	29315	Plug, 3-polar for RCL 53XX	
5	1	28013	Guide rail	120 mm.
6	2	28012	End angle	
7	2	28208	Fish plate	
8	1	28014	Fish plate	
9	2	28011	End plate	
10	8	28010	Terminal	
11	1	28019	Labels nos. 1-10	
12	1	28965	Dekafix labels 21-30	
13	1	29460	Wire 1 x 2.5 mm2	150 mm
14	1	28594	Wire - green	150 mm
15	1	28445	Cable	150 mm
16	1	28445	Cable	250 mm
17	1	29460	Wire 1 x 2.5 mm2	250 mm
18	1	28594	Wire - green	250 mm
19	1	27120	Cable	300 mm
20	2	27762	Cable end	
21	6	27776	Cable lead-in	

Obsolete

1100K, 1110K, 1220K, 1230K, 1320K, 1330K

Internal ref. 70 06 410

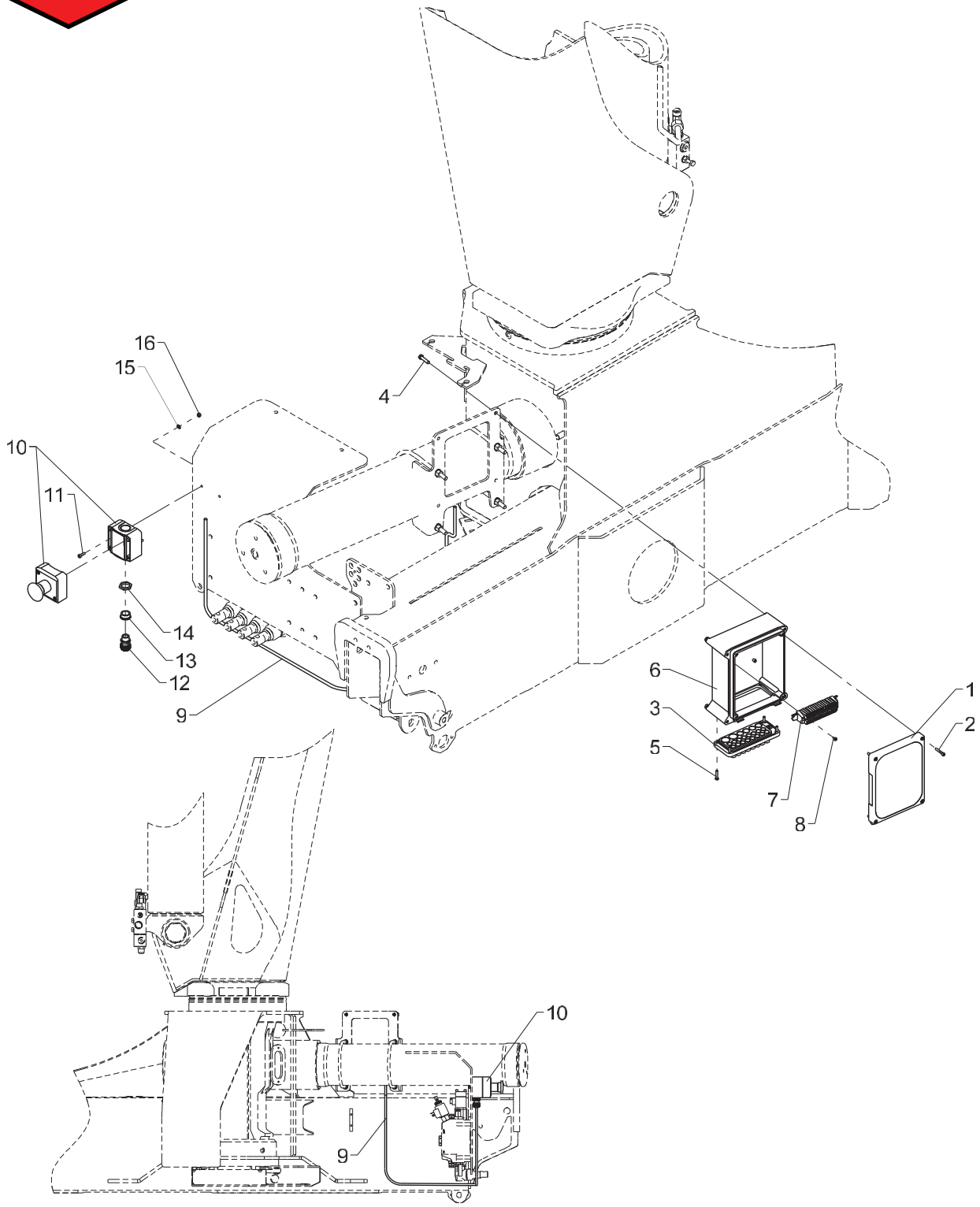

Obsolete

Basic electronic parts, NEMRC without CE

458 22 040

From loader 1170001
To loader

Created 31-05-2012
Modified 17-05-2013

Pos	Qty.	Part no.	Description	Remarks
1	1	29347	RCL 5300 indicator panel	
2	4	30347	Screw, stainless	4,0 x 25
3	1	29307	Cable lead-in	
4	4	30340	Screw, stainless	6,0 x 25
5	4	30346	Screw, stainless	4,0 x 20
6	1	29304	Bottom f. RCL-box incl. hinge	
7	1	7006302	Terminal block, Box1	
8	2	30361	Screw, stainless	3,0 x 8
9	1	27215	Wire 2 x 1.5	2 m
10	1	28992	Emergency stop box	
11	2	32406	Sockethead screw	MC4 x 12
12	1	28246	Bushing	
13	1	27866	Socket	
14	1	28081	Plastic nut	PG13,5
15	2	31188	Washer, stainless	4 mm
16	2	30857	Lock nut	M4

1100K, 1110K, 1220K, 1230K, 1320K, 1330K

70 07 940
70 07 930
Internal ref. 70 06 410

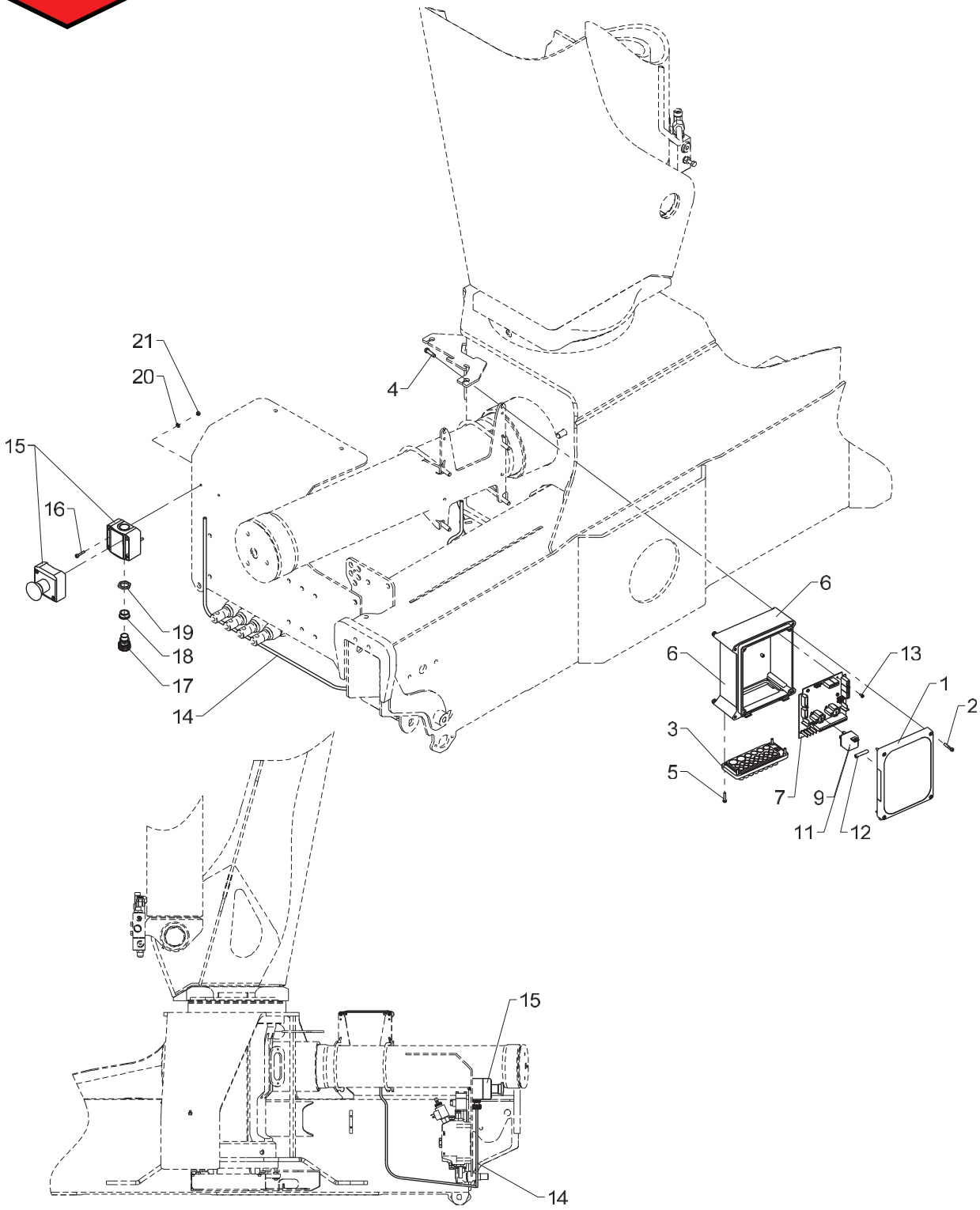

Basic electronic parts, NEMRC without CE

Pos	Qty.	Part no.	Description	Remarks
		7006410	Basic parts, NEMRC without CE	
		7007930	Relay, 12 V	
		7007940	Relay, 24 V	
1	1	29347	RCL 5300 indicator panel	
2	4	30347	Screw, stainless	4,0 x 25
3	1	29307	Cable lead-in	
4	4	30340	Screw, stainless	6,0 x 25
5	4	30346	Screw, stainless	4,0 x 20
6	1	29304	Bottom f. RCL-box incl. hinge	
7	1	29473	EJB5380	
8	1	7007930	Relay, 12 V	
9	1	27340	Relay, 12 V	
10	1	7007940	Relay, 24 V	
11	1	27342	Relay, 24V	
12	1	27497	Insulation joint, blue	
13	6	30361	Screw, stainless	3,0 x 8
14	1	27215	Wire 2 x 1.5	2 m
15	1	28992	Emergency stop box	
16	2	30700	Screw, stainless	MC4 x 20
17	1	28246	Bushing	
18	1	27866	Socket	
19	1	28081	Plastic nut	PG13,5
20	2	31188	Washer, stainless	4 mm
21	2	30857	Lock nut	M4

Obsolete

458 22 045

1100K, 1110K, 1220K, 1230K, 1320K, 1330K

Internal ref. 70 06 420

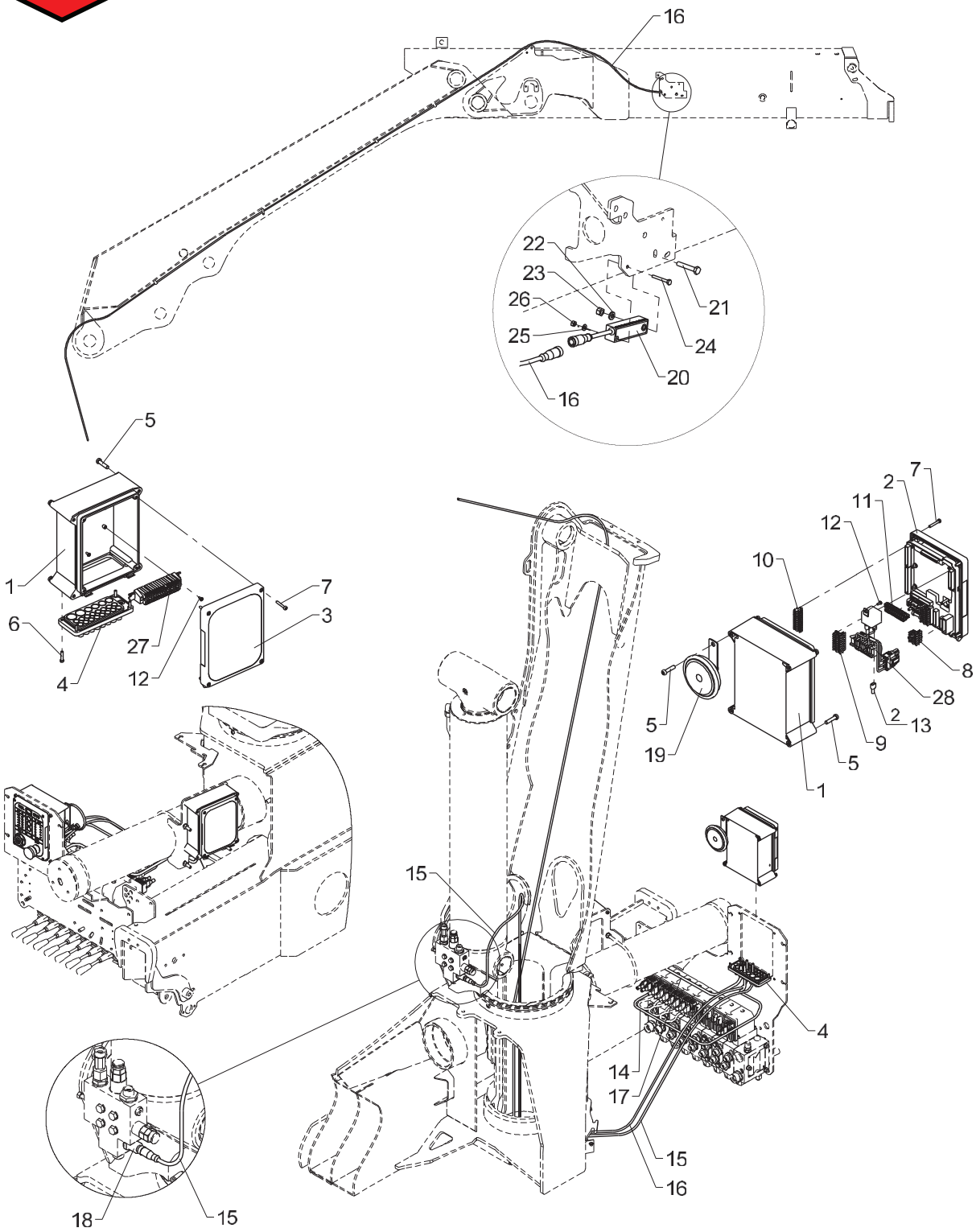

Obsolete

458 22 045

From loader 1170001
To loader

Created 21-03-2013
Modified

Basic electronic parts, NEMRC with CE

Pos	Qty.	Part no.	Description	Remarks
1	2	29304	Bottom f. RCL-box incl. hinge	
2	1	29301	Front complete, RCL 5300	
3	1	29347	RCL 5300 indicator panel	
4	2	29307	Cable lead-in	
5	9	30340	Screw, stainless	6,0 x 25
6	8	30346	Screw, stainless	4,0 x 20
7	8	30347	Screw, stainless	4,0 x 25
8	1	29341	CAN termination FJC	
9	1	29319	Plug, 8-polar for RCL 53XX	
10	1	29320	Plug, 9-polar for RCL 53XX	
11	1	29321	Plug, 10-polar for RCL 53XX	
12	5	30361	Screw, stainless	3,0 x 8
13	1	27428	Clip	
14	1	28265	Cable, dump valve, 1.35 m	
15	1	29224	Cable with socket, 5 m	
16	1	28730	Cable + socket, 10 m	9,0 m
17	1	28278	Cable 4 x 2.5	2 m
18	1	28850	Pressure transducer	
19	1	28971	Horn, 24 V, 2.5 Amp.	
20	1	29295	Tilt sensor + 0.25 m cable	
21	1	30116	Steel pin, stainless	M6 x 35
22	1	32302	Face washer, stainless	6 mm
23	1	30884	Lock nut, stainless	M6
24	1	31790	Set screw M4 x 30	M4 x 30
25	1	31188	Washer, stainless	4 mm
26	1	30857	Lock nut	M4
27	1	7006302	Terminal block, Box1	
28	1	7006301	Terminal block for RC 24 V	

1100K, 1110K, 1220K, 1230K, 1320K, 1330K

70 07 940
70 07 930
Internal ref. 70 06 420

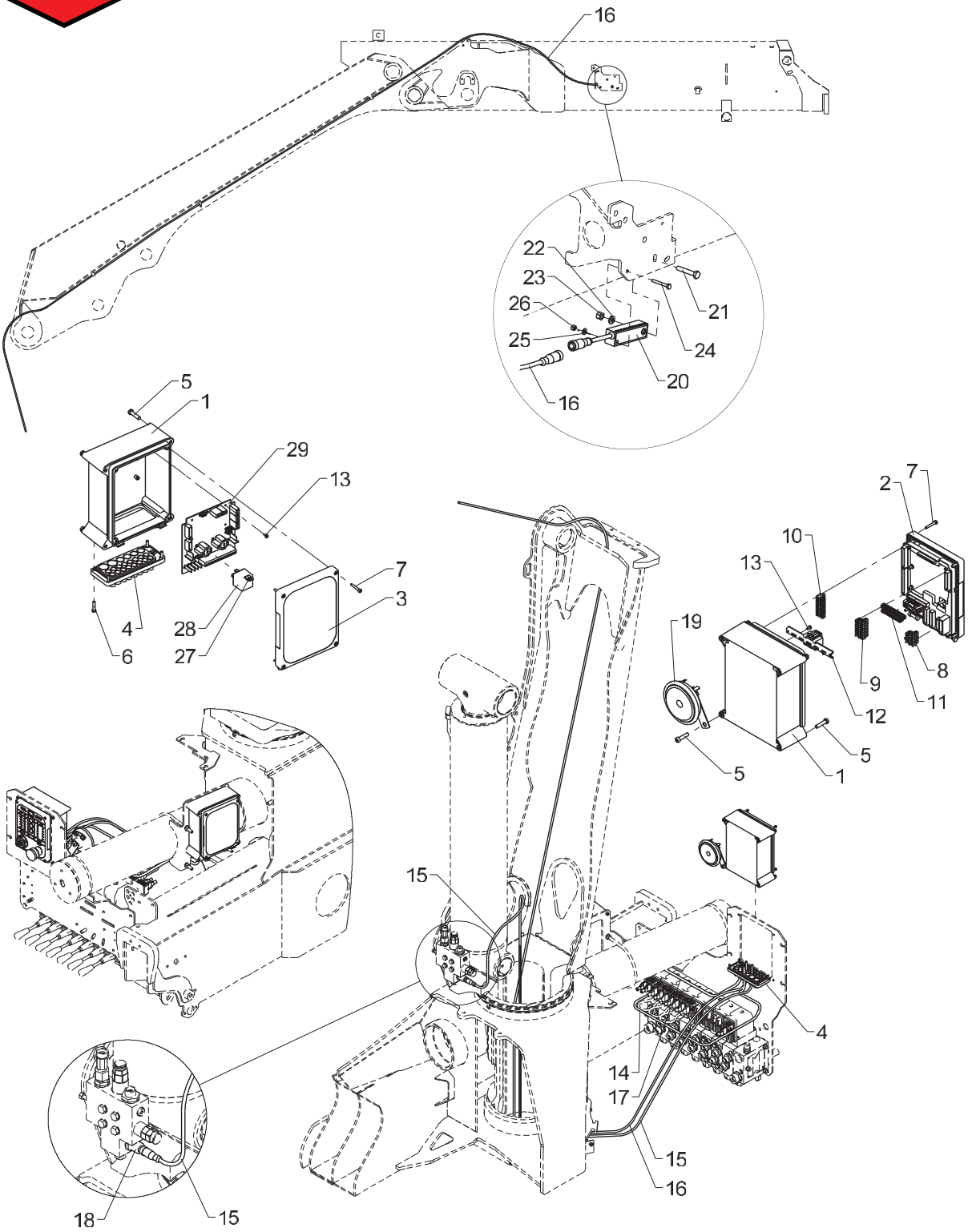

Basic electronic parts, NEMRC with CE

Pos	Qty.	Part no.	Description	Remarks
		7006420	Basic parts, NEMRC with CE	
		7007930	Relay, 12 V	
		7007940	Relay, 24 V	
1	2	29304	Bottom f. RCL-box incl. hinge	
2	1	29301	Front complete, RCL 5300	
3	1	29347	RCL 5300 indicator panel	
4	2	29307	Cable lead-in	
5	9	30340	Screw, stainless	6,0 x 25
6	8	30346	Screw, stainless	4,0 x 20
7	8	30347	Screw, stainless	4,0 x 25
8	1	29341	CAN termination FJC	
9	1	29319	Plug, 8-polar for RCL 53XX	
10	1	29320	Plug, 9-polar for RCL 53XX	
11	1	29321	Plug, 10-polar for RCL 53XX	
12	1	7006306	Terminal block for RCL + RC	
13	8	30361	Screw, stainless	3,0 x 8
14	1	28265	Cable, dump valve, 1.35 m	
15	1	29224	Cable with socket, 5 m	
16	1	28730	Cable + socket, 10 m	9,0 m
17	1	28278	Cable 4 x 2.5	2 m
18	1	28850	Pressure transducer	
19	1	28971	Horn, 24 V, 2.5 Amp.	
20	1	29295	Tilt sensor + 0.25 m cable	
21	1	30116	Steel pin, stainless	M6 x 35
22	1	32302	Face washer, stainless	6 mm
23	1	30884	Lock nut, stainless	M6
24	1	31790	Set screw M4 x 30	M4 x 30
25	1	31188	Washer, stainless	4 mm
26	1	30857	Lock nut	M4
27	1	27340	Relay, 12 V	
28	1	27342	Relay, 24V	
29	1	29473	EJB5380	

1100K, 1110K, 1220K, 1230K, 1320K, 1330K

Internal ref. 70 06 440

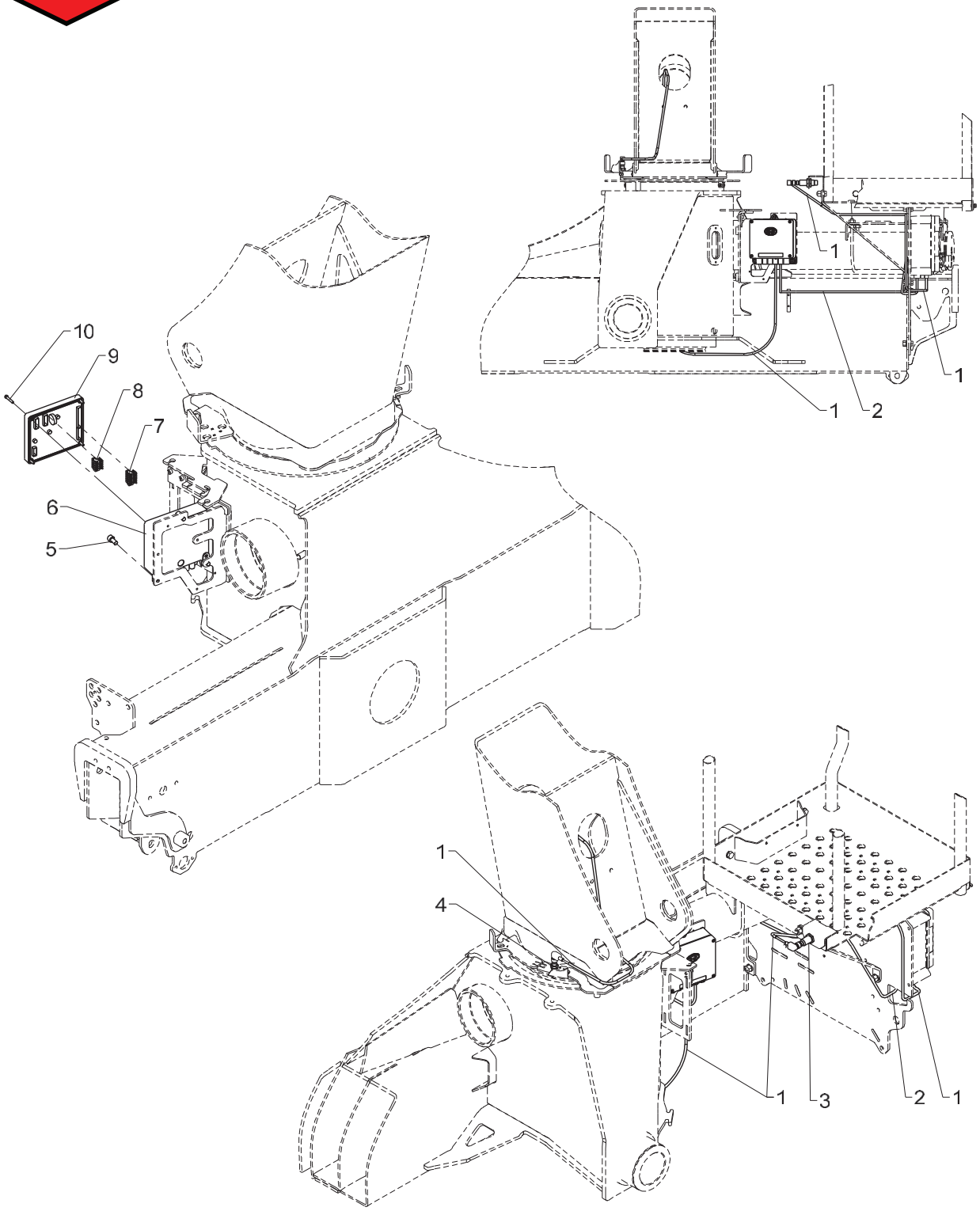

HSL, HSRC

Pos	Qty.	Part no.	Description	Remarks
1	2	28117	Cable with plug	
2	1	28263	CAN BUS cable	2 m
3	1	28210	Proximity switch	
4	1	29447	Proximity switchM12 8mm PNP-NO	
5	3	30449	Screw	MC8 x 16
6	1	29313	Bottom f. Fly-Jib box	
7	1	29324	Plug, 6-polar for RCL 53XX	
8	1	29317	Plug, 5-polar for RCL 53XX	
9	1	29346	CIO5376 controller cover cpl.	
10	4	30347	Screw, stainless	4,0 x 25

1100K, 1110K, 1220K, 1230K, 1320K, 1330K

Internal ref. 70 06 740

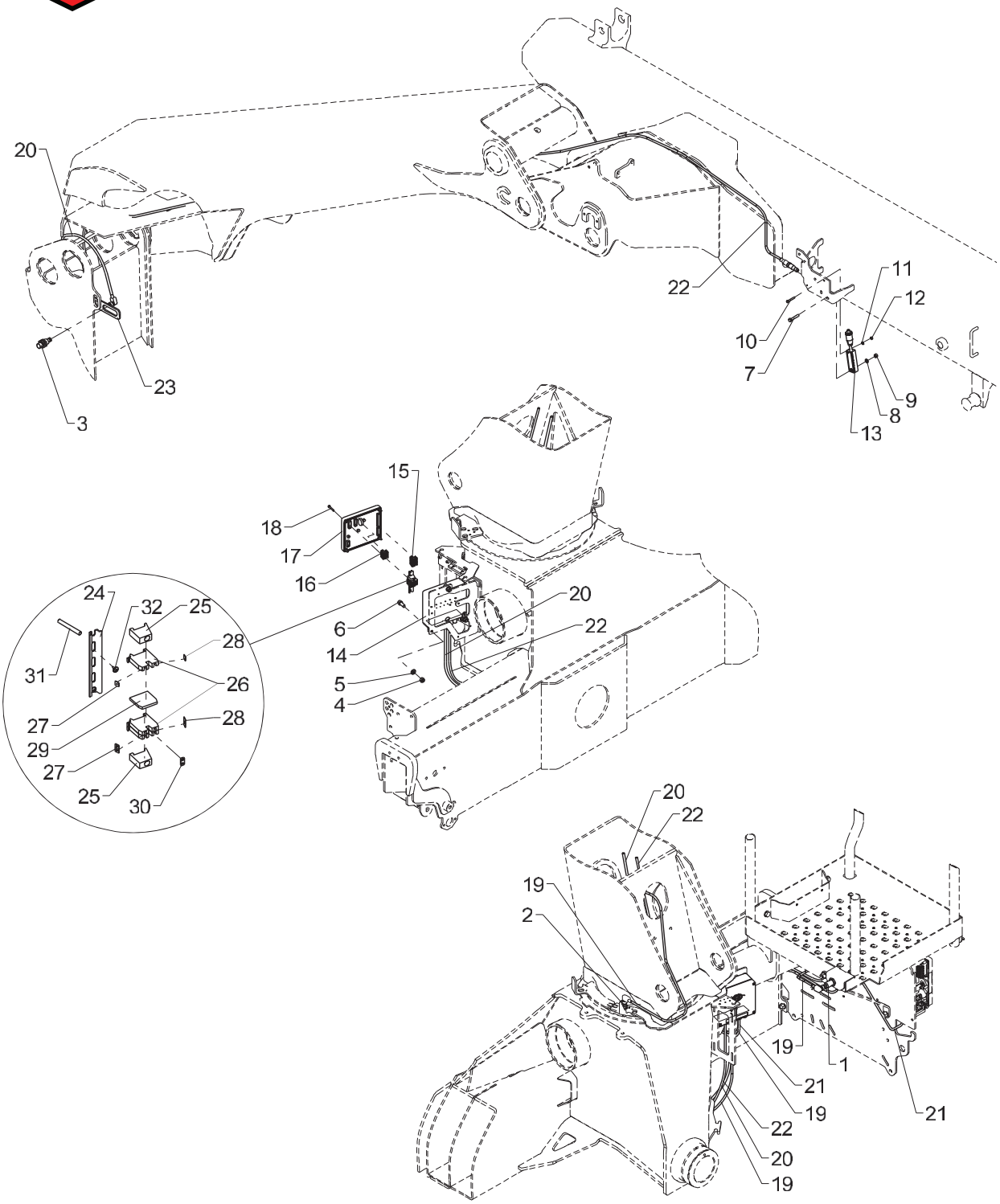

HSL-E, HS NEMRC

Pos	Qty.	Part no.	Description	Remarks
1	1	28210	Proximity switch	
2	1	29447	Proximity switchM12 8mm PNP-NO	
3	1	28980	Proximity switch	
4	3	30856	Nut, stainless	M8
5	3	31147	Face washer, 8 mm	
6	3	30438	Screw	MC8 x 20
7	1	30116	Steel pin, stainless	M6 x 35
8	1	32302	Face washer, stainless	6 mm
9	1	30884	Lock nut, stainless	M6
10	1	31790	Set screw M4 x 30	M4 x 30
11	1	31188	Washer, stainless	4 mm
12	1	30857	Lock nut	M4
13	1	29295	Tilt sensor + 0.25 m cable	
14	1	29313	Bottom f. Fly-Jib box	
15	1	29324	Plug, 6-polar for RCL 53XX	
16	1	29317	Plug, 5-polar for RCL 53XX	
17	1	29346	CIO5376 controller cover cpl.	
18	4	30347	Screw, stainless	4,0 x 25
19	2	28117	Cable with plug	
20	1	28077	Cable with plug	
21	1	28263	CAN BUS cable	2 m
22	1	28730	Cable + socket, 10 m	9,0 m
23	1	6306803	Bracket for proximity switch	
24	1	28013	Guide rail	80 mm
25	2	28012	End angle	
26	3	28010	Terminal	
27	1	28019	Labels nos. 1-10	
28	1	28965	Dekafix labels 21-30	
29	1	28011	End plate	
30	1	28208	Fish plate	
31	1	27202	Cable	0,3 m
32	2	28693	Screw	Ø2.9 x 6.5

1100K, 1110K, 1220K, 1230K, 1320K, 1330K

Internal ref. 70 06 530

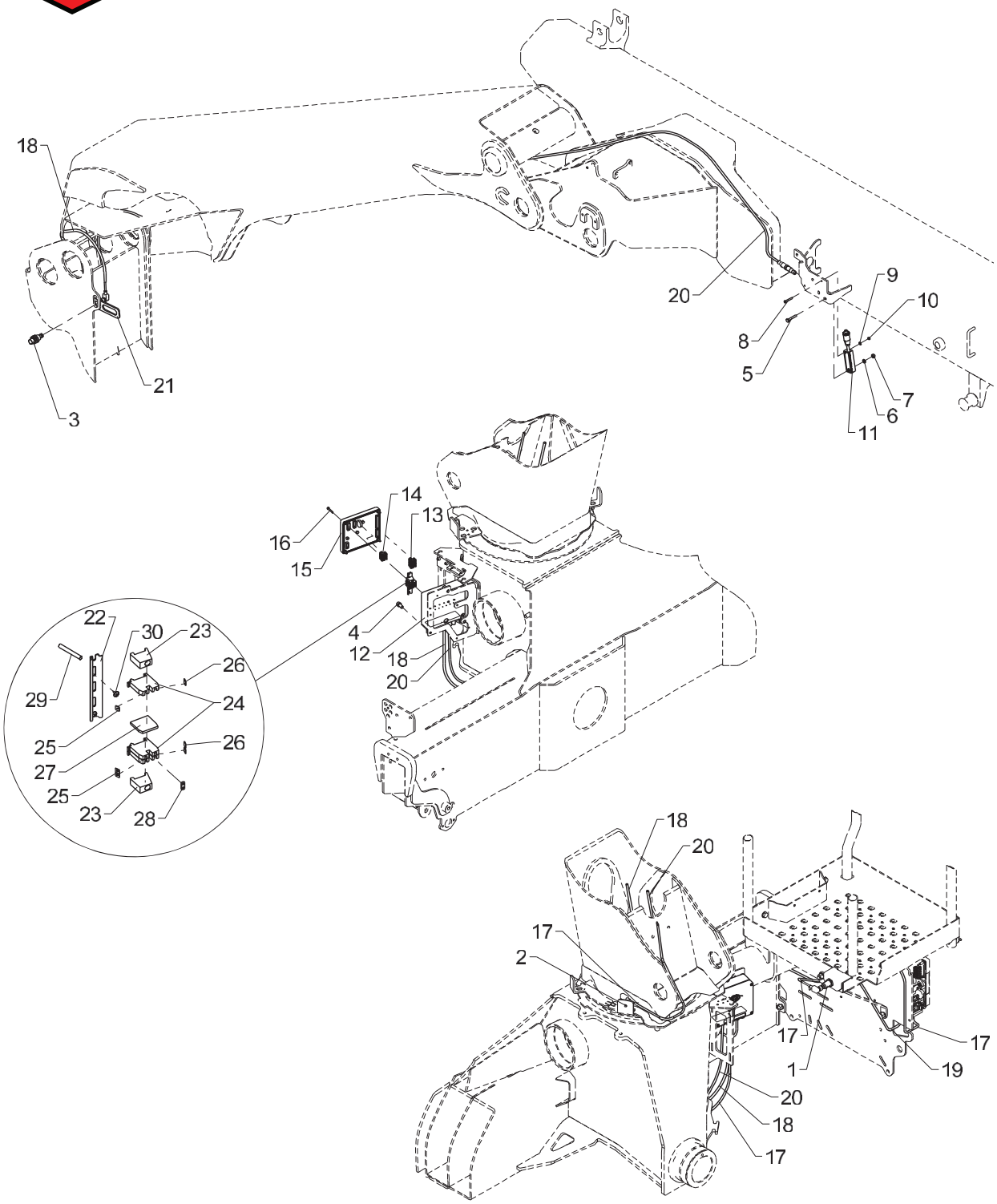

HSL-E, HSRC

Pos	Qty.	Part no.	Description	Remarks
1	1	28210	Proximity switch	
2	1	29447	Proximity switchM12 8mm PNP-NO	
3	1	28980	Proximity switch	
4	3	30449	Screw	MC8 x 16
5	1	30116	Steel pin, stainless	M6 x 35
6	1	32302	Face washer, stainless	6 mm
7	1	30884	Lock nut, stainless	M6
8	1	31790	Set screw M4 x 30	M4 x 30
9	1	31188	Washer, stainless	4 mm
10	1	30857	Lock nut	M4
11	1	29295	Tilt sensor + 0.25 m cable	
12	1	29313	Bottom f. Fly-Jib box	
13	1	29324	Plug, 6-polar for RCL 53XX	
14	1	29317	Plug, 5-polar for RCL 53XX	
15	1	29346	CIO5376 controller cover cpl.	
16	4	30347	Screw, stainless	4,0 x 25
17	2	28117	Cable with plug	
18	1	28077	Cable with plug	
19	1	28263	CAN BUS cable	2 m
20	1	28730	Cable + socket, 10 m	9,0 m
21	1	6306803	Bracket for proximity switch	
22	1	28013	Guide rail	80 mm
23	2	28012	End angle	
24	3	28010	Terminal	
25	1	28019	Labels nos. 1-10	
26	1	28965	Dekafix labels 21-30	
27	1	28011	End plate	
28	1	28208	Fish plate	
29	1	27202	Cable	0,3 m
30	2	28693	Screw	Ø2.9 x 6.5

Obsolete

1100K, 1110K, 1220K, 1230K, 1320K, 1330K

Internal ref. 70 06 540

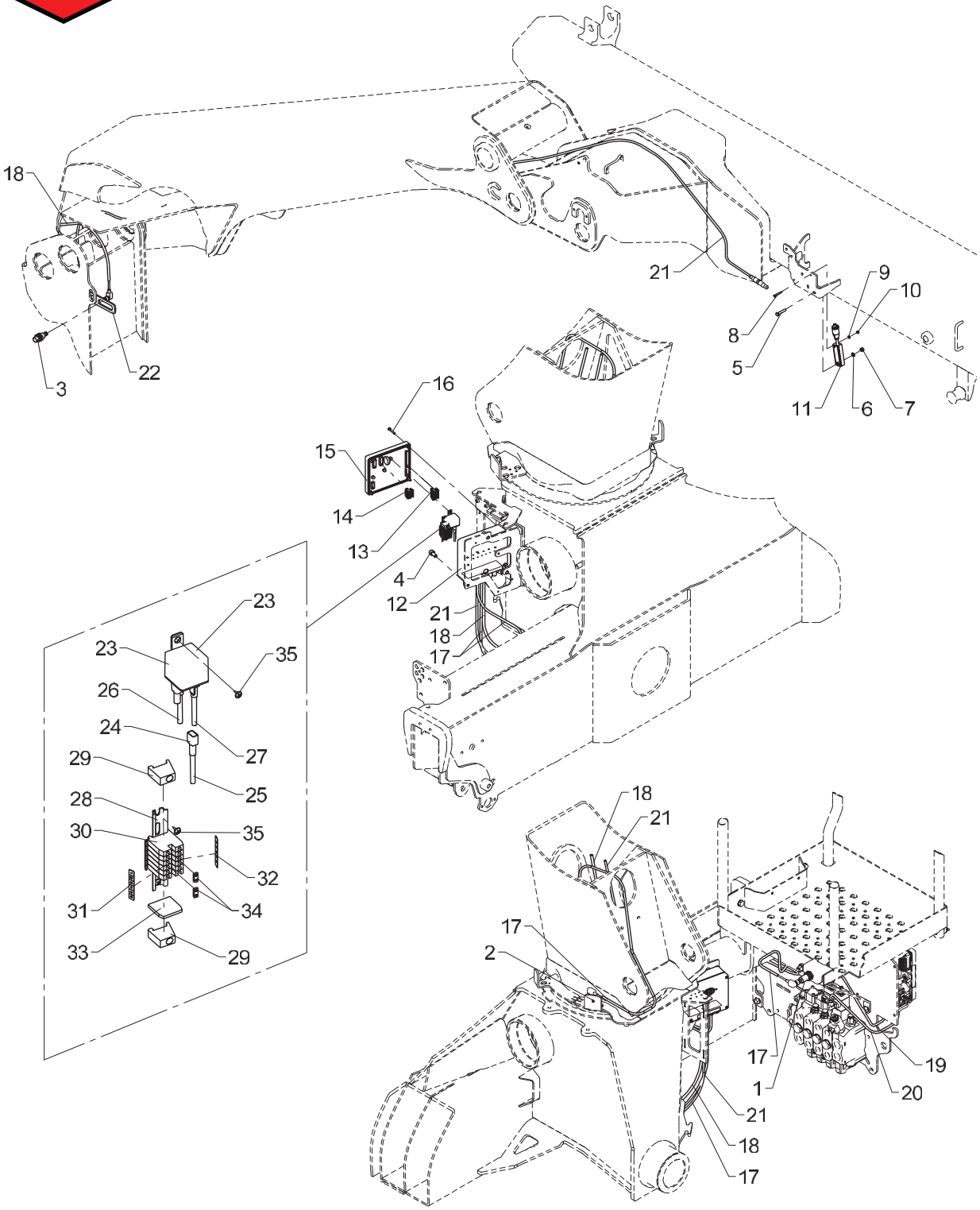

Obsolete

458 22 100

From loader 1170001
To loader

Created 22-10-2012
Modified 23-06-2014

HSL-Q, HSRC

Pos	Qty.	Part no.	Description	Remarks
1	1	28210	Proximity switch	
2	1	29447	Proximity switchM12 8mm PNP-NO	
3	1	28980	Proximity switch	
4	3	30449	Screw	MC8 x 16
5	1	30116	Steel pin, stainless	M6 x 35
6	1	32302	Face washer, stainless	6 mm
7	1	30884	Lock nut, stainless	M6
8	1	31790	Set screw M4 x 30	M4 x 30
9	1	31188	Washer, stainless	4 mm
10	1	30857	Lock nut	M4
11	1	29295	Tilt sensor + 0.25 m cable	
12	1	29313	Bottom f. Fly-Jib box	
13	1	29324	Plug, 6-polar for RCL 53XX	
14	1	29317	Plug, 5-polar for RCL 53XX	
15	1	29346	CIO5376 controller cover cpl.	
16	4	30347	Screw, stainless	4,0 x 25
17	2	28117	Cable with plug	
18	1	28077	Cable with plug	
19	1	28263	CAN BUS cable	2 m
20	1	28294	Cable, spool sensor	
21	1	28730	Cable + socket, 10 m	9,0 m
22	1	6306803	Bracket for proximity switch	
23	1	27342	Relay, 24V	
24	4	27429	Clamp	
25	1	27202	Cable	0,2 m
26	1	27204	Wire, 1 x1.5mm2	0,3 m
27	1	27203	Cable	0,2 m
28	1	28013	Guide rail	80 mm
29	2	28012	End angle	
30	6	28010	Terminal	
31	2	28019	Labels nos. 1-10	
32	2	28965	Dekafix labels 21-30	
33	1	28011	End plate	
34	2	28208	Fish plate	
35	3	28693	Screw	Ø2.9 x 6.5

1100K, 1110K, 1220K, 1230K, 1320K, 1330K

Internal ref. 70 06 540

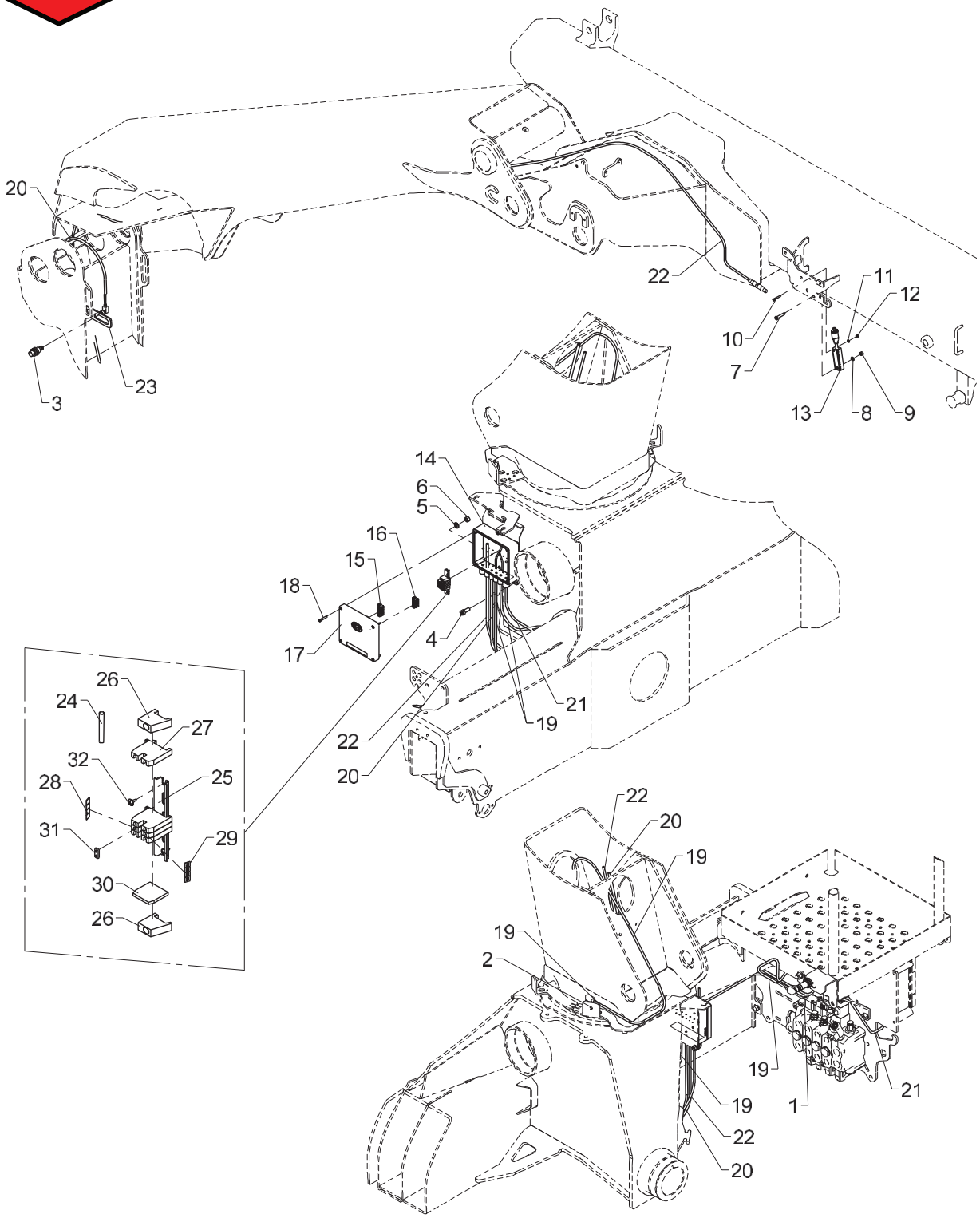

HSL-Q, HSRC

Pos	Qty.	Part no.	Description	Remarks
1	1	28210	Proximity switch	
2	1	29447	Proximity switchM12 8mm PNP-NO	
3	1	28980	Proximity switch	
4	3	30438	Screw	MC8 x 20
5	3	31147	Face washer, 8 mm	
6	3	30856	Nut, stainless	M8
7	1	30116	Steel pin, stainless	M6 x 35
8	1	32302	Face washer, stainless	6 mm
9	1	30884	Lock nut, stainless	M6
10	1	31790	Set screw M4 x 30	M4 x 30
11	1	31188	Washer, stainless	4 mm
12	1	30857	Lock nut	M4
13	1	29295	Tilt sensor + 0.25 m cable	
14	1	29313	Bottom f. Fly-Jib box	
15	1	29324	Plug, 6-polar for RCL 53XX	
16	1	29317	Plug, 5-polar for RCL 53XX	
17	1	29346	CIO5376 controller cover cpl.	
18	4	30347	Screw, stainless	4,0 x 25
19	2	28117	Cable with plug	
20	1	28077	Cable with plug	
21	1	28263	CAN BUS cable	2 m
22	1	28730	Cable + socket, 10 m	9,0 m
23	1	6306803	Bracket for proximity switch	
24	1	27202	Cable	0,3 m
25	1	28013	Guide rail	80 mm
26	2	28012	End angle	
27	4	28010	Terminal	
28	1	28019	Labels nos. 1-10	
29	1	28965	Dekafix labels 21-30	
30	1	28011	End plate	
31	1	28208	Fish plate	
32	2	28693	Screw	Ø2.9 x 6.5

1100K, 1110K, 1220K, 1230K, 1320K, 1330K

Internal ref. 70 06 600

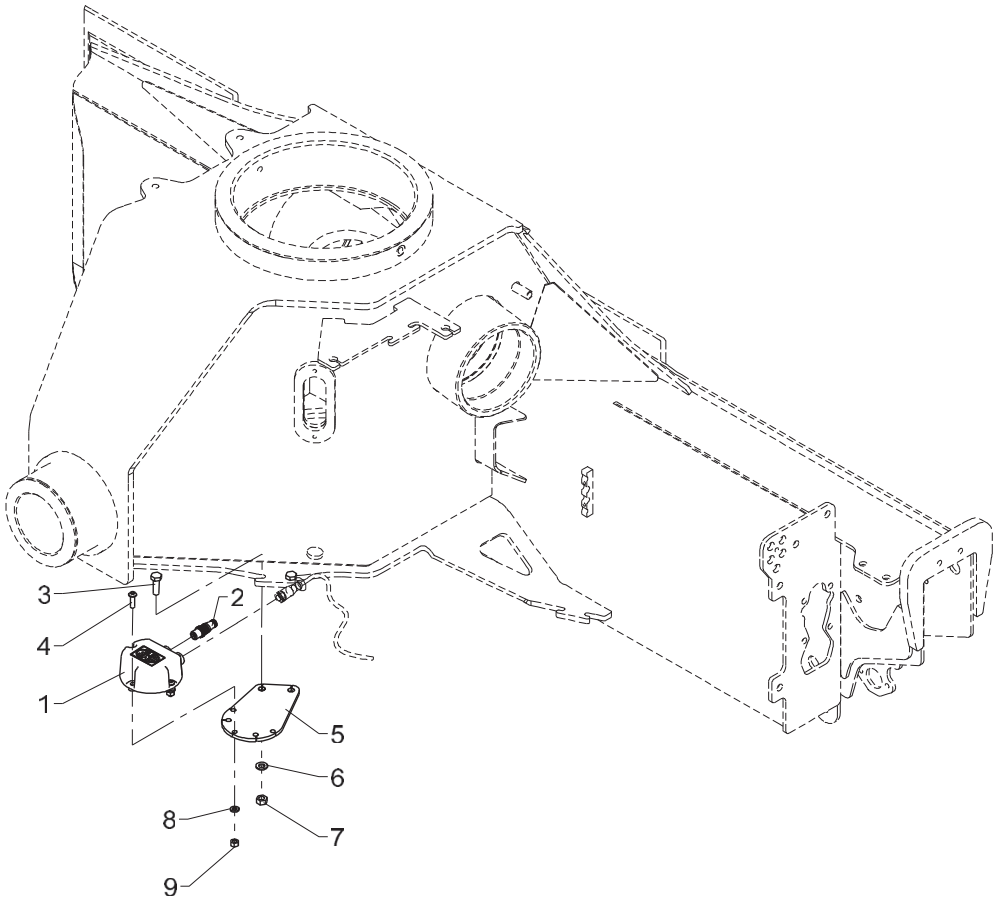

EVS, G2

Pos	Qty.	Part no.	Description	Remarks
1	1	29426	Electronic inclinometer,single	
2	1	29486	Plug M12, termination	
3	2	30134	Set screw, stainless	M8 x 25
4	3	32491	Round-head screw	M6 x 20
5	1	6340274	Mounting fittings (AIC 5062)	
6	2	31147	Face washer, 8 mm	
7	2	30856	Nut, stainless	M8
8	3	32302	Face washer, stainless	6 mm
9	3	30884	Lock nut, stainless	M6

1100K, 1110K, 1220K, 1230K, 1320K, 1330K

70 06 490
Internal ref. 70 06 480

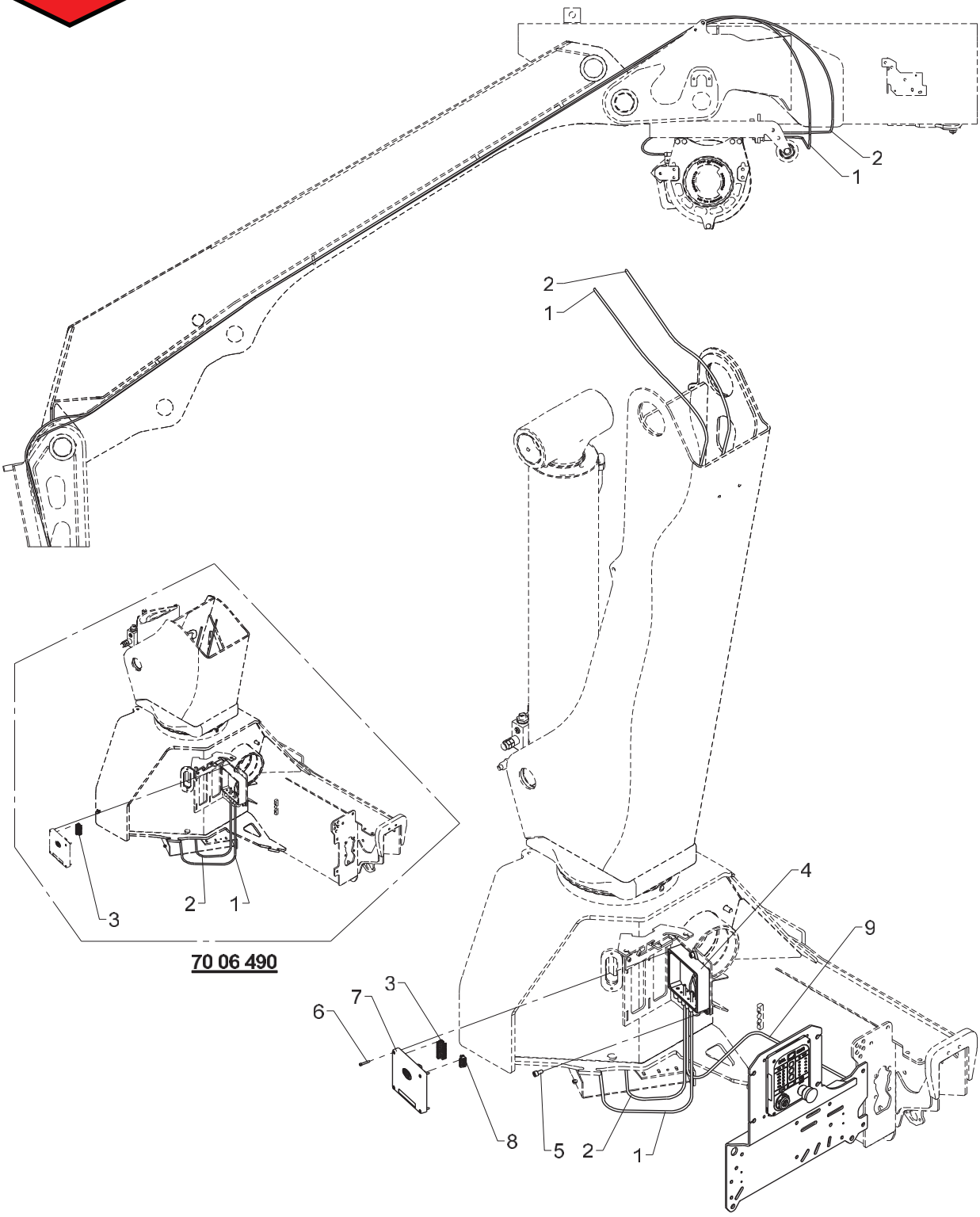

Winch, electric parts

Pos	Qty.	Part no.	Description	Remarks
1	1	28249	Cable 2 x 0.75	10 m
2	1	28730	Cable + socket, 10 m	
3	1	29321	Plug, 10-polar for RCL 53XX	
4	1	29313	Bottom f. Fly-Jib box	
5	3	30449	Screw	MC8 x 16
6	4	30347	Screw, stainless	4,0 x 25
7	1	29346	CIO5376 controller cover cpl.	
8	1	29317	Plug, 5-polar for RCL 53XX	
9	1	28263	CAN BUS cable	1,5 m

1100K, 1110K, 1220K, 1230K, 1320K, 1330K

Internal ref. 70 06 570

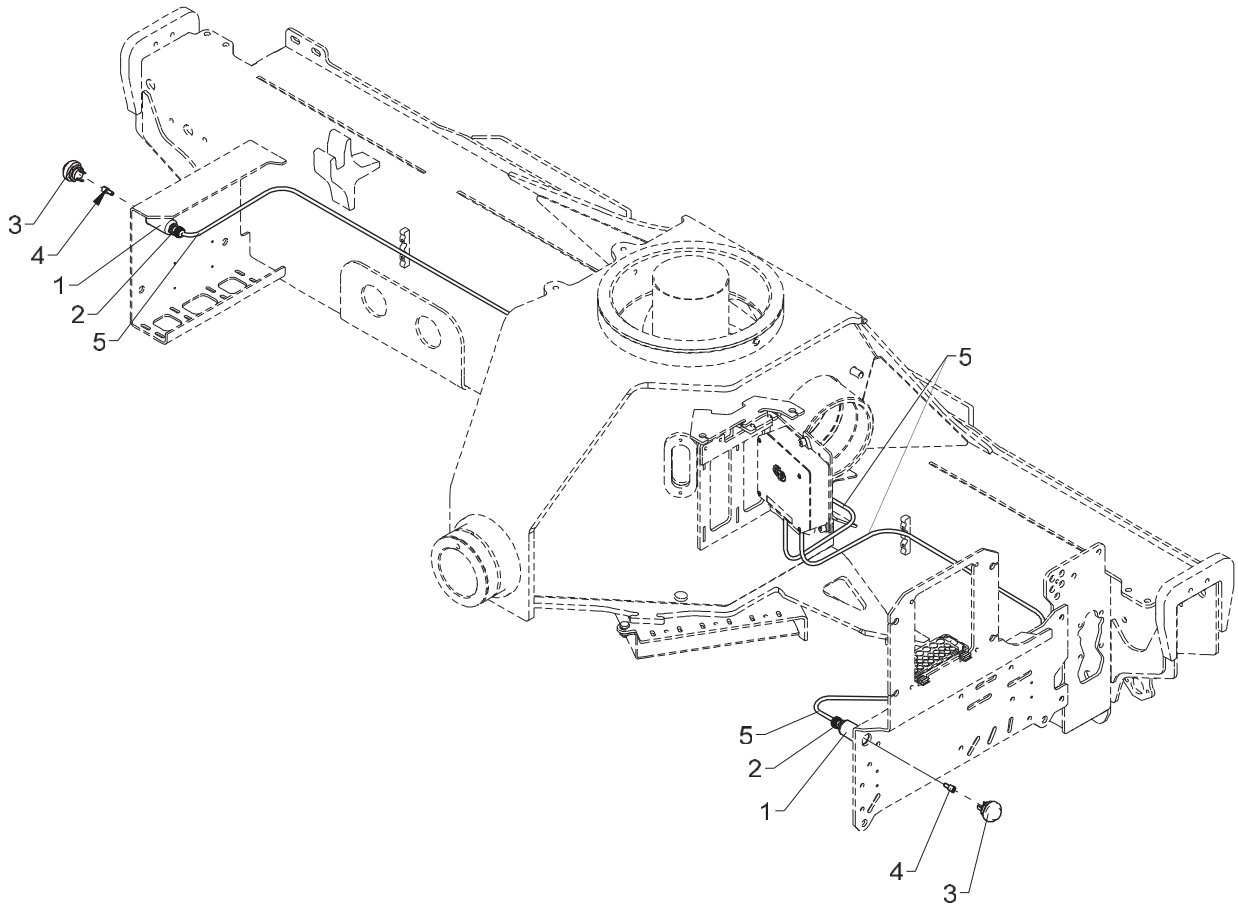

Obsolete

458 22 156

From loader 1170001
To loader

Stabilizer operation via RC (with winch)

Created 01-03-2013
Modified 01-01-2014

Pos	Qty.	Part no.	Description	Remarks
1	2	64574	Housing	
2	2	28459	Connection	
3	2	27333	Push button	
4	4	27429	Clamp	
5	2	28249	Cable 2 x 0.75	3 m

1100K, 1110K, 1220K, 1230K, 1320K, 1330K

Internal ref. 70 06 570

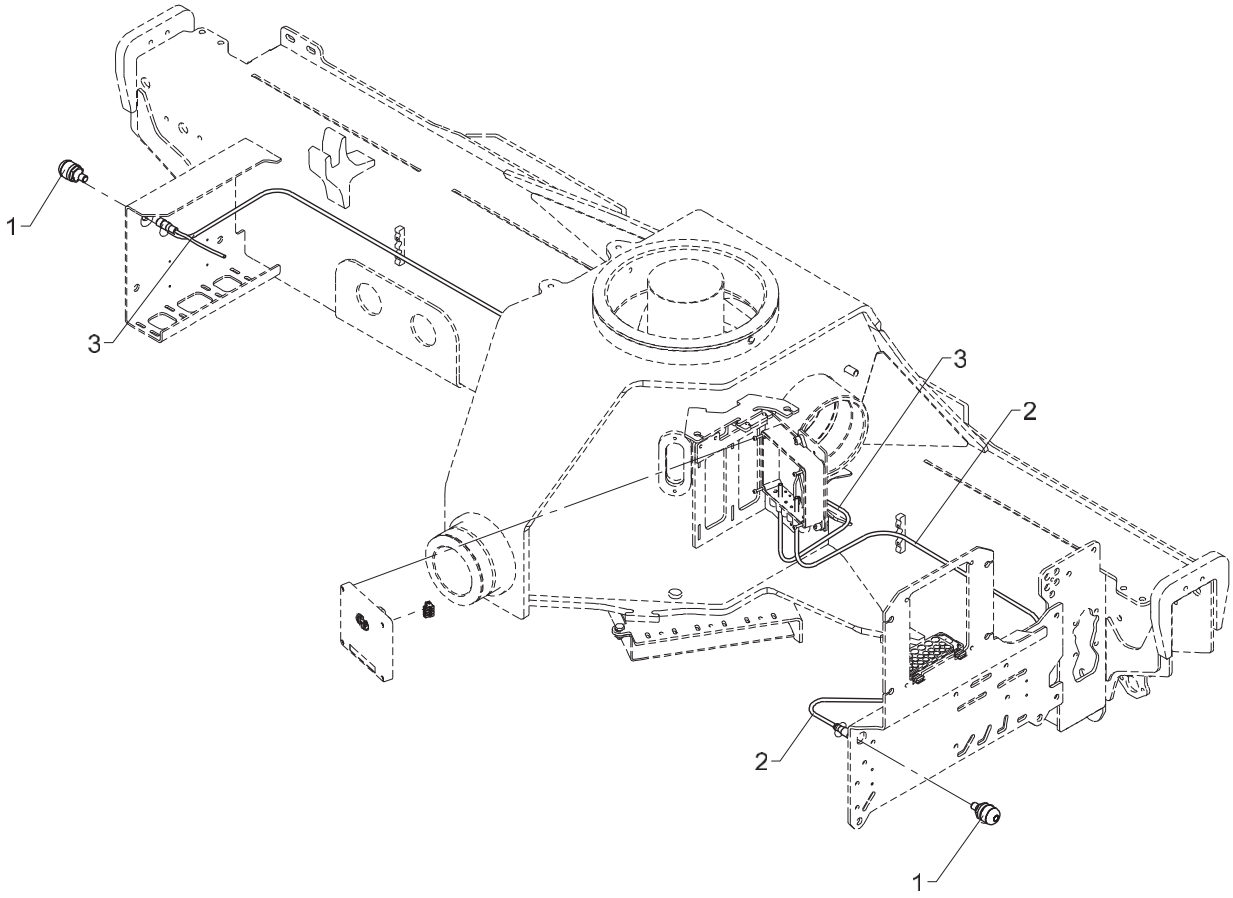

Stabilizer operation via RC (with winch)

Pos	Qty.	Part no.	Description	Remarks
1	2	29498	Touch button with light	
2	1	29223	Cable with socket, 2 m	
3	1	29224	Cable with socket, 5 m	
4	1	29323	Plug, 4-polar for RCL 53XX	

1100K, 1110K, 1220K, 1230K, 1320K, 1330K

Internal ref. 70 06 340

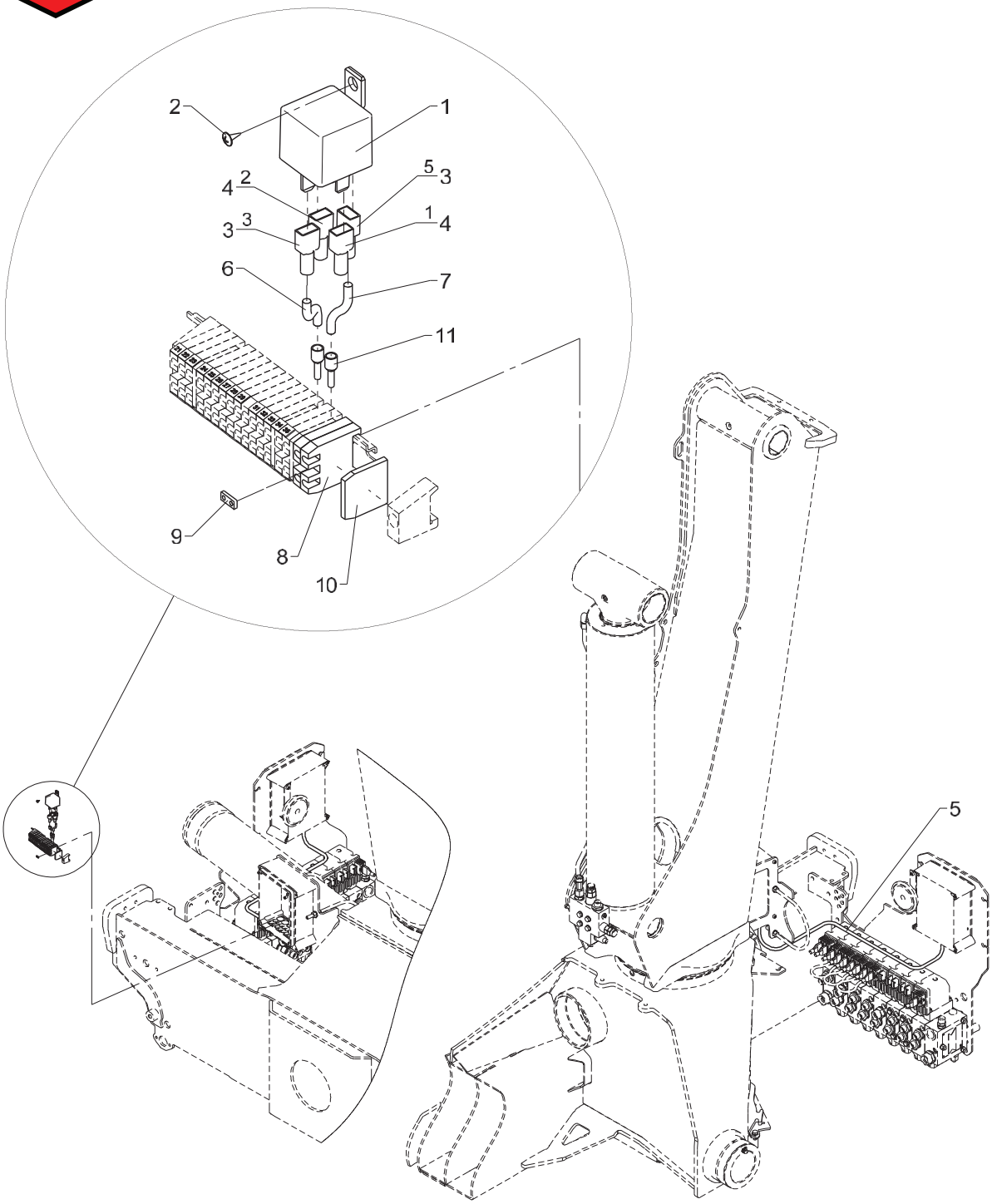

Obsolete

458 22 170

From loader 1170001
To loader

Created 14-12-2011
Modified

Spotlight, radio remote controlled.

Pos	Qty.	Part no.	Description	Remarks
1	1	27342	Relay, 24V	
2	1	28693	Screw	Ø2.9 x 6.5
3	2	27428	Clip	
4	2	27429	Clamp	
5	1	28262	Cable 4 x 0.75	2 m
6	1	27212	Wire 1 x 2.5 mm2	150 mm
7	1	29460	Wire 1 x 2.5 mm2	150 mm
8	2	28010	Terminal	
9	1	28208	Fish plate	
10	1	28011	End plate	
11	2	27776	Cable lead-in	

1100K, 1110K, 1220K, 1230K, 1320K, 1330K

Internal ref. 70 06 340

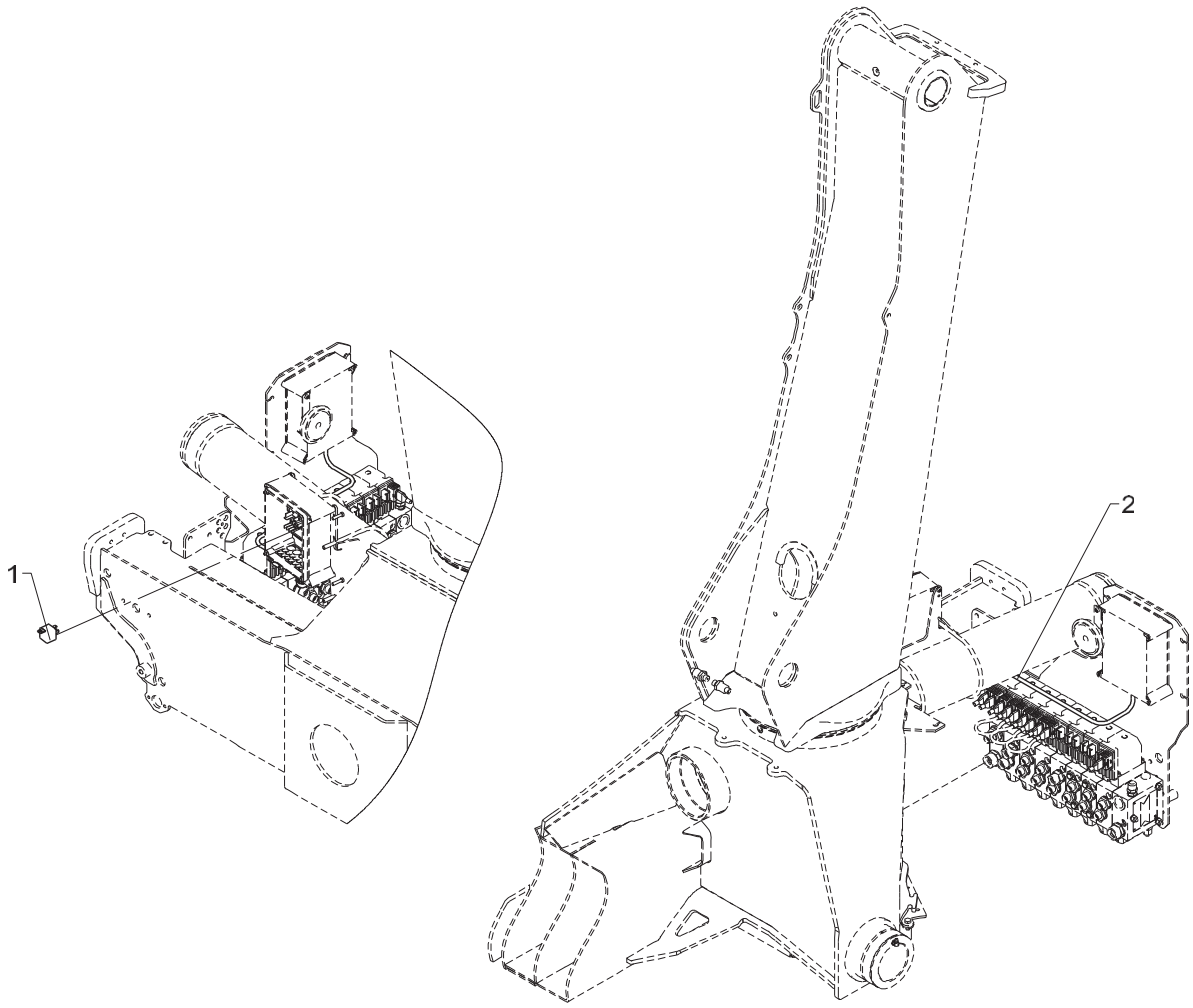

458 22 170 A

From loader 1170001
To loader

Spotlight, radio remote controlled.

Created 20-05-2013
Modified 20-06-2013

Pos	Qty.	Part no.	Description	Remarks
1	1	27342	Relay, 24V	
2	1	28262	Cable 4 x 0.75	2 m

1100K, 1110K, 1220K, 1230K, 1320K, 1330K

Internal ref. 70 06 350

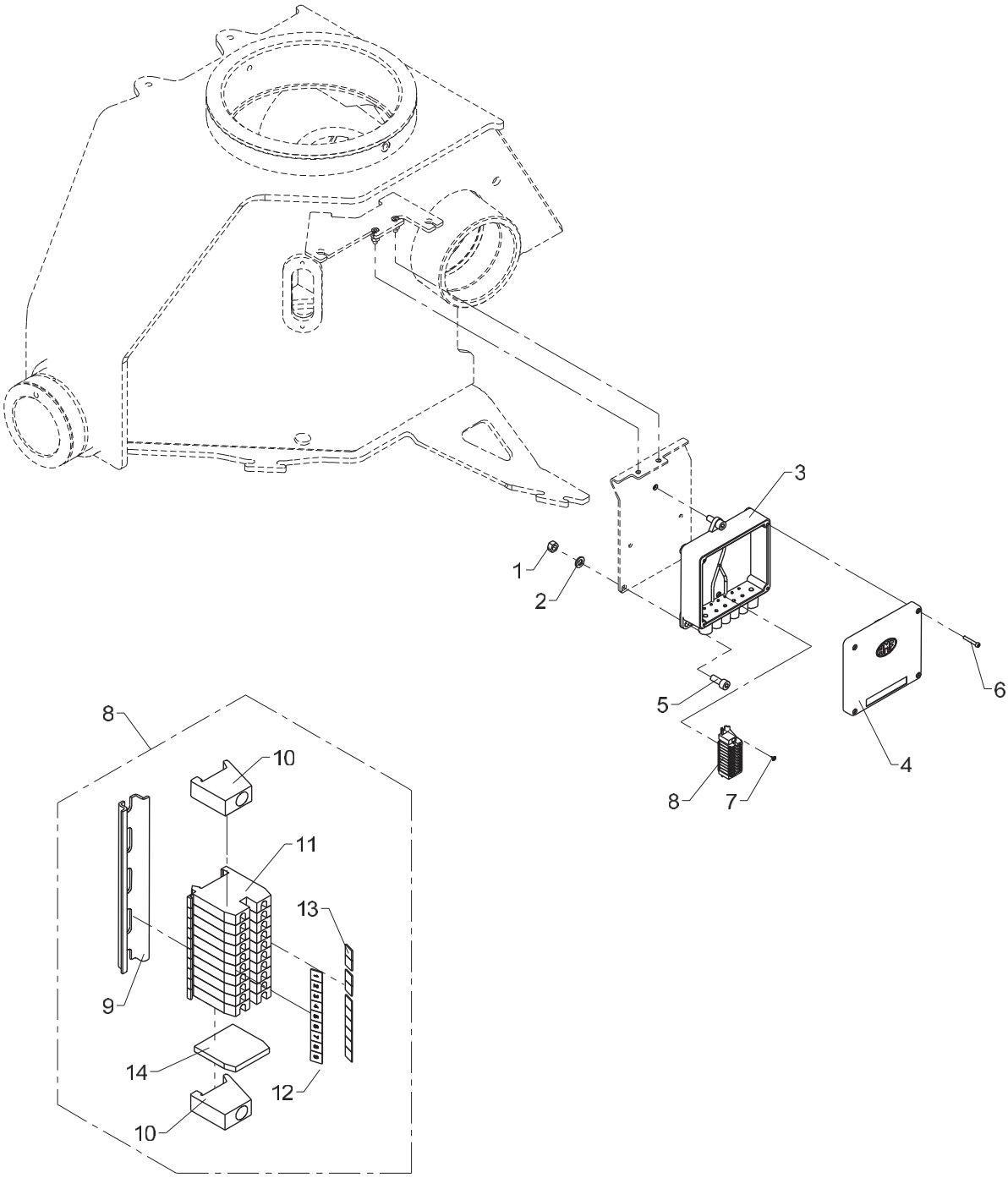

Junction box 2, G2

Pos	Qty.	Part no.	Description	Remarks
1	3	30856	Nut, stainless	M8
2	3	31147	Face washer, 8 mm	
3	1	29313	Bottom f. Fly-Jib box	
4	1	29314	Cover for Fly-Jib box	
5	3	30438	Screw	MC8 x 20
6	4	30347	Screw, stainless	4,0 x 25
7	2	28693	Screw	Ø2.9 x 6.5
8	1	7006303	Terminal block,junction box II	
9	1	28013	Guide rail	120 mm.
10	2	28012	End angle	
11	10	28010	Terminal	
12	1	28019	Labels nos. 1-10	
13	1	28965	Dekafix labels 21-30	
14	1	28011	End plate	

1100K, 1110K, 1220K, 1230K, 1320K, 1330K

Internal ref. 70 06 550

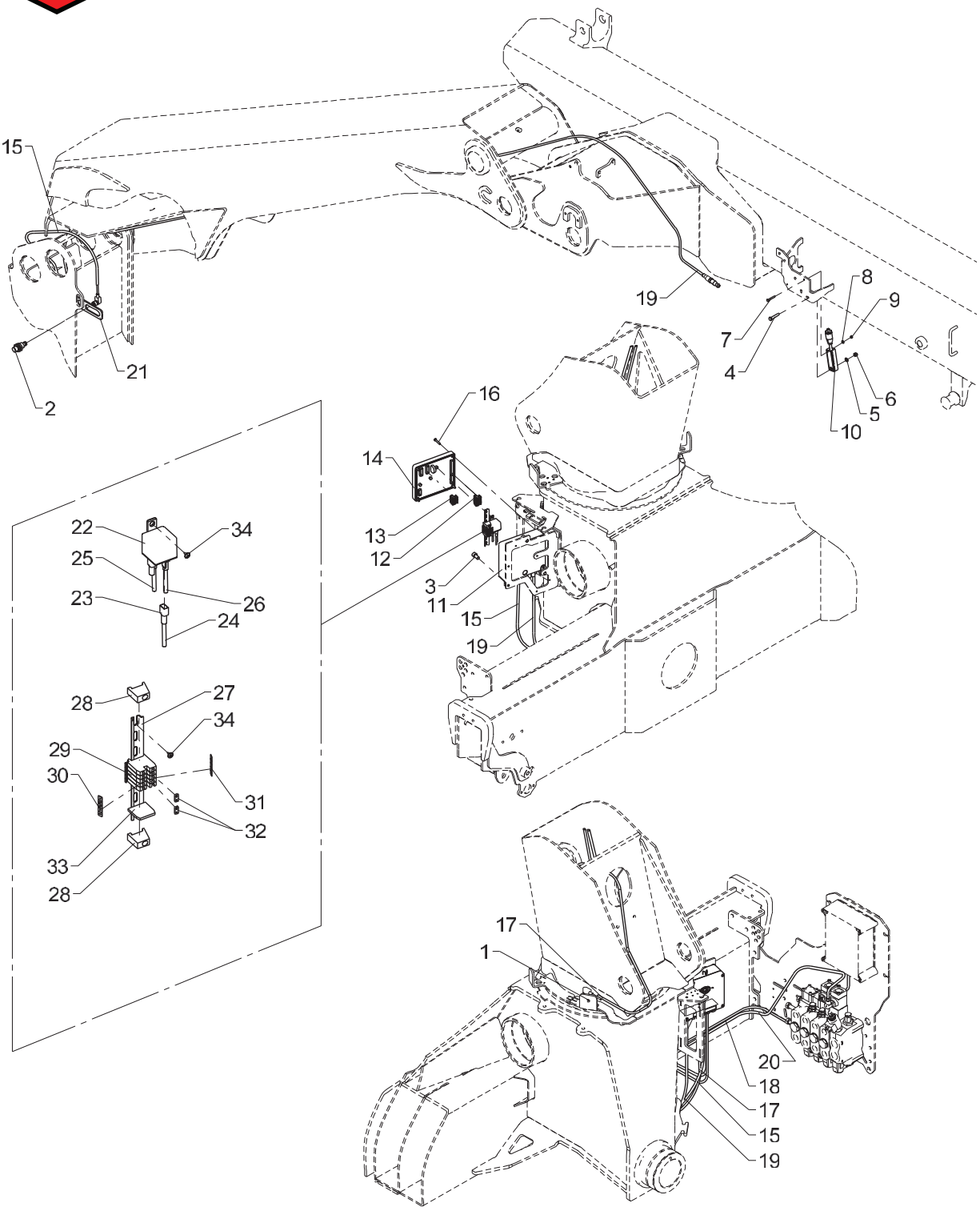

Obsolete

458 22 220

From loader 1170001
To loader

QOPS, STDRC

Created 22-10-2012
Modified 23-06-2014

Pos	Qty.	Part no.	Description	Remarks
1	1	29447	Proximity switchM12 8mm PNP-NO	
2	1	28980	Proximity switch	
3	3	30449	Screw	MC8 x 16
4	1	30116	Steel pin, stainless	M6 x 35
5	1	32302	Face washer, stainless	6 mm
6	1	30884	Lock nut, stainless	M6
7	1	31790	Set screw M4 x 30	M4 x 30
8	1	31188	Washer, stainless	4 mm
9	1	30857	Lock nut	M4
10	1	29295	Tilt sensor + 0.25 m cable	
11	1	29313	Bottom f. Fly-Jib box	
12	1	29324	Plug, 6-polar for RCL 53XX	
13	1	29317	Plug, 5-polar for RCL 53XX	
14	1	29346	CIO5376 controller cover cpl.	
15	1	28077	Cable with plug	
16	4	30347	Screw, stainless	4,0 x 25
17	1	28117	Cable with plug	
18	1	28263	CAN BUS cable	2 m
19	1	28730	Cable + socket, 10 m	
20	1	28294	Cable, spool sensor	
21	1	6306803	Bracket for proximity switch	
22	1	27342	Relay, 24V	
23	4	27429	Clamp	
24	1	27202	Cable	0,2 m
25	1	27204	Wire, 1 x1.5mm2	0,3 m
26	1	27203	Cable	0,2 m
27	1	28013	Guide rail	110 mm.
28	2	28012	End angle	
29	5	28010	Terminal	
30	2	28019	Labels nos. 1-10	
31	2	28965	Dekafix labels 21-30	
32	2	28208	Fish plate	
33	1	28011	End plate	
34	3	28693	Screw	Ø2.9 x 6.5

1100K, 1110K, 1220K, 1230K, 1320K, 1330K

Internal ref. 70 06 550

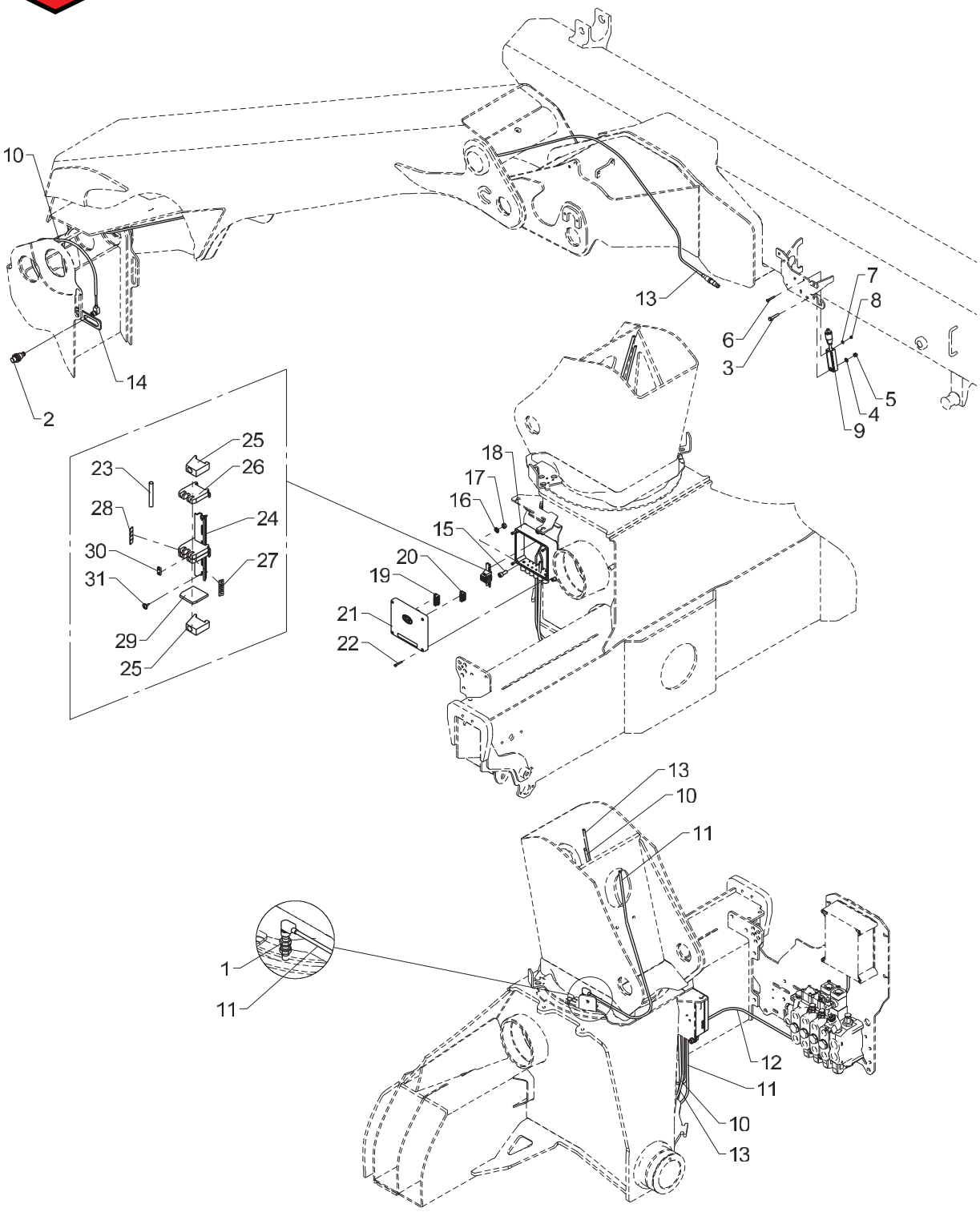

QOPS, STDRC

Pos	Qty.	Part no.	Description	Remarks
1	1	29447	Proximity switchM12 8mm PNP-NO	
2	1	28980	Proximity switch	
3	1	30116	Steel pin, stainless	M6 x 35
4	1	32302	Face washer, stainless	6 mm
5	1	30884	Lock nut, stainless	M6
6	1	31790	Set screw M4 x 30	M4 x 30
7	1	31188	Washer, stainless	4 mm
8	1	30857	Lock nut	M4
9	1	29295	Tilt sensor + 0.25 m cable	
10	1	28077	Cable with plug	
11	1	28117	Cable with plug	
12	1	28263	CAN BUS cable	2 m
13	1	28730	Cable + socket, 10 m	
14	1	6306803	Bracket for proximity switch	
15	3	30438	Screw	MC8 x 20
16	3	31147	Face washer, 8 mm	
17	3	30856	Nut, stainless	M8
18	1	29313	Bottom f. Fly-Jib box	
19	1	29324	Plug, 6-polar for RCL 53XX	
20	1	29317	Plug, 5-polar for RCL 53XX	
21	1	29346	CIO5376 controller cover cpl.	
22	4	30347	Screw, stainless	4,0 x 25
23	1	27202	Cable	0,3 m
24	1	28013	Guide rail	80 mm
25	2	28012	End angle	
26	3	28010	Terminal	
27	1	28019	Labels nos. 1-10	
28	1	28965	Dekafix labels 21-30	
29	1	28011	End plate	
30	1	28208	Fish plate	
31	2	28693	Screw	Ø2.9 x 6.5

1100K, 1110K, 1220K, 1230K, 1320K, 1330K

Internal ref. 70 08 840

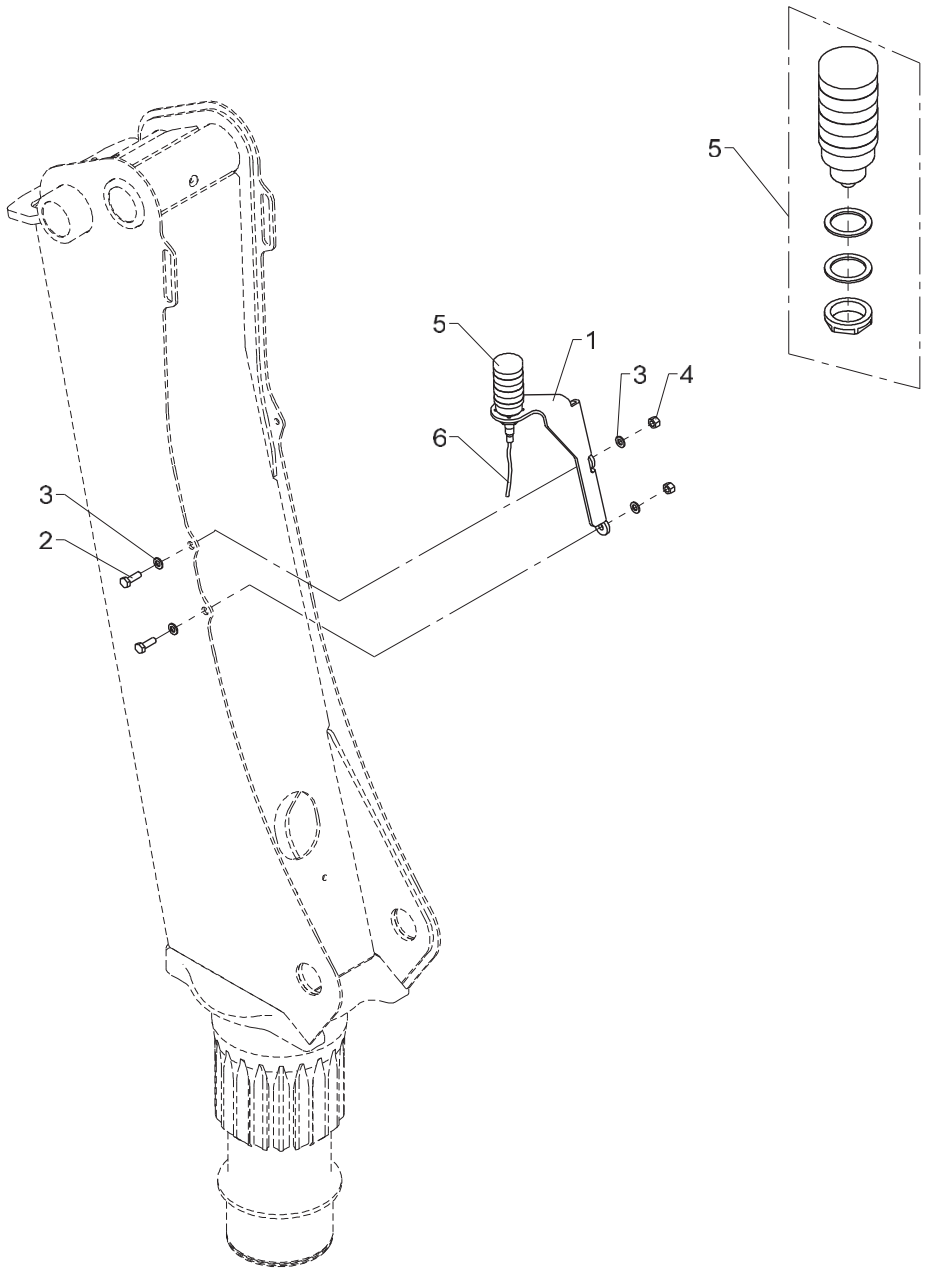

Light tower

Pos	Qty.	Part no.	Description	Remarks
1	1	6340069	Bracket (light tower)	
2	2	30156	Set screw, stainless	M10 x 30
3	4	31565	Washer, stainless	10 mm
4	2	31564	Lock nut, stainless	M10
5	1	29542	Light tower	
6	1	29224	Cable with socket, 5 m	

1100K, 1110K, 1220K, 1230K, 1320K, 1330K

Internal ref. 63 65 930

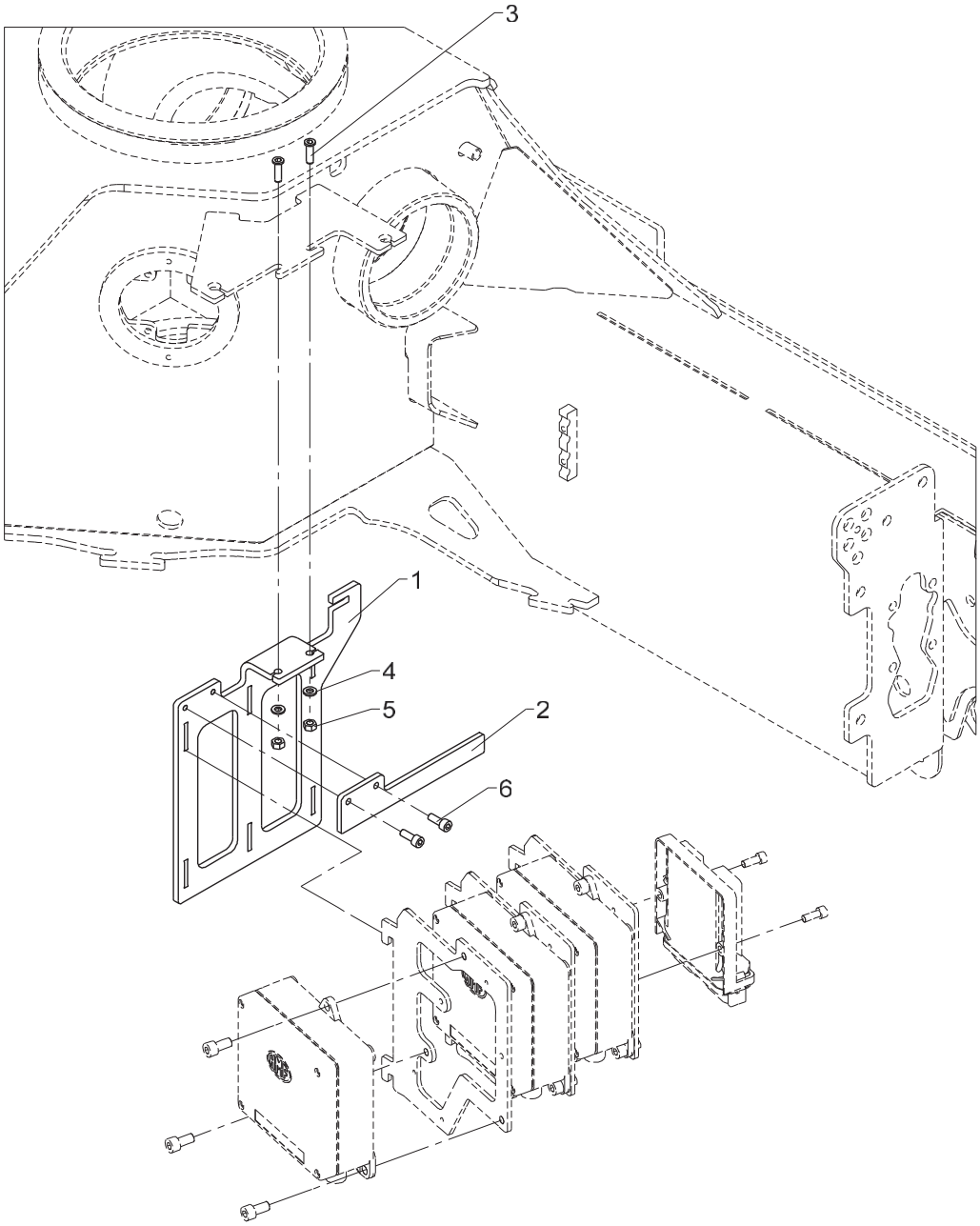

Bracket for mounting of electric parts

Pos	Qty.	Part no.	Description	Remarks
1	1	6365931	Plate	
2	1	6365932	Lock for plate	
3	2	32483	Screw	MCL6 x 20
4	2	32302	Face washer, stainless	6 mm
5	2	30854	Nut, stainless	M6
6	2	30424	Screw	MC6 x 16

1100K, 1110K, 1220K, 1230K, 1320K, 1330K

82 00 120
Internal ref. 82 00 110

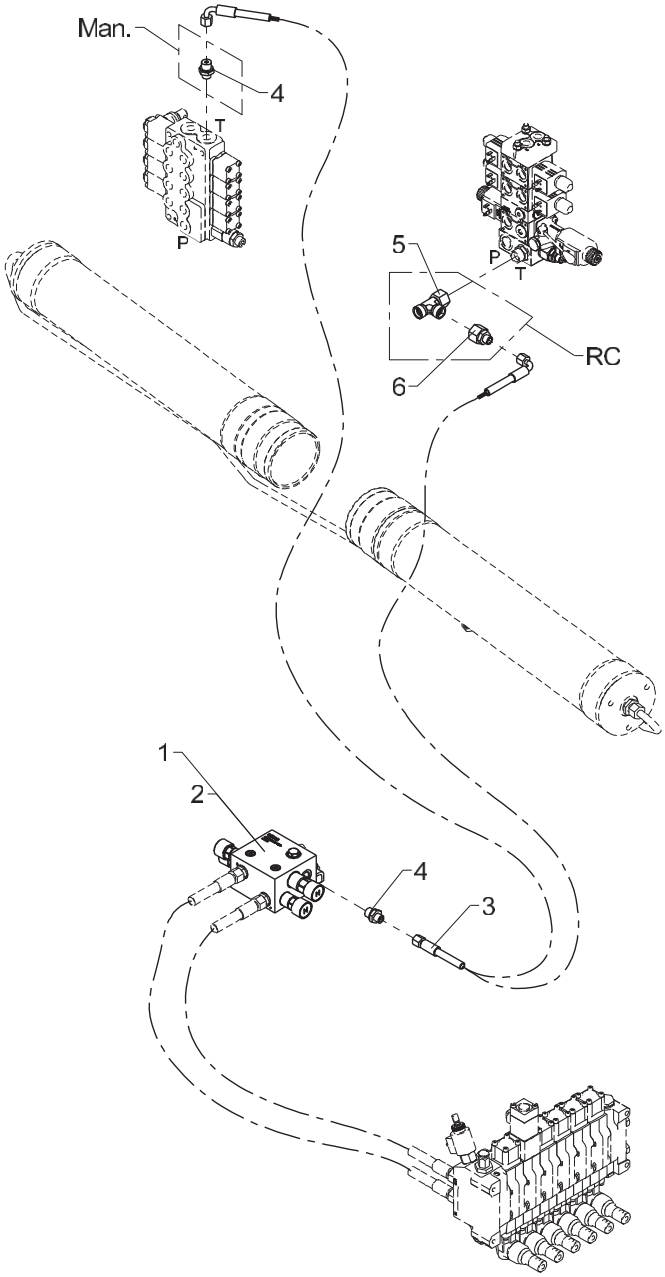

458 25 080

From loader 1170001
To loader

Created 26-09-2014
Modified

Kit for replacement of load-holding valve

Pos	Qty.	Part no.	Description	Remarks
		8200110		fra 55261 til 55710
		8200120		fra 55262 til 55711
1	1	55710	Load-holding valve	
2	1	55711	Load-holding valve	
3	1	62526	Hose	1/4 X 550 M14 X 1.5 L/90
4	2	25244	Connection	GES 8 LR 3/8-WD
5	1	26142	Connection	ELSD 15 L
6	1	25285	Connection	REDSDN 15/8 L