IOWA MOLD TOOLING CO., INC.

P.O. Box 189
Garner, IA 50438
Tel: 641.923.3711
Fax: 641.923.2424
www.imt.com

Manual # 99906326

2530L
Spare Parts Manual

Revised 01-25-2018

Published on January 25, 2018

Copyright © 2018 Iowa Mold Tooling Co., Inc.
All rights reserved

No part of this publication may be reproduced, stored in a retrieval system, or transmitted in any form or by any means, electronic, mechanical, photocopying, recording or otherwise without the prior written permission of Iowa Mold Tooling Co., Inc.

Iowa Mold Tooling Co., Inc. is an Oshkosh Corporation Company

Description	Page no.	From loader	To loader
Basic loader			
Base, complete	553 01 030	1270001	
Protection plate, complete (RC)	553 01 050	1270001	
Protection plate, complete (TS)	553 01 060	1270001	
Central lubrication and lubricating brush	553 01 080	1270001	
Slewing system, 400°	553 01 100	1270001	1270010
Slewing system, 450°	553 01 110		
Column, cpl. excl. link arm system, boom	553 01 350	1270001	
Main boom, cpl., no link arm system, boom	553 01 420	1270001	
Stowing hook, complete	553 01 450	1270001	
Boom cylinder C160 x 805 (2210K, 2430K, 2630K)	553 01 500 A	1270001	
Boom cylinder C160 x 805 with LHV (2210K, 2430K, 2630K)	553 01 510	1270001	
Jib cylinder C160 x 863	553 01 600	1270001	
Jib cylinder with LHV	553 01 610	1270001	
Mounting fittings, basic loader excl. link arm system	553 01 750	1270001	
Hose shield, cpl.	553 01 760	1270001	
Link arm system, jib	553 01 800	1270001	
Stabilizers			
Stabilizer beam, type SV - 5570	553 02 010	1270001	
Stabilizer beam, type SV - 5570	553 02 010 A		
Stabilizer beam, type SR-60°, 5570	553 02 021	1270001	
Stabilizer beam, type SR-60°, 5570	553 02 021 A		
Stabilizer beam, type SH - 5570	553 02 030	1270001	
Stabilizer beam, type SH - 5570	553 02 030 A		
Stabilizer beam, type DV - 6450	553 02 040	1270001	
Stabilizer beam, type DV - 6450	553 02 040 A		
Stabilizer beam, type DR-60°, 6450	553 02 051	1270001	
Stabilizer beam, type DR-60°, 6450	553 02 051 A		

Description	Page no.	From loader	To loader
Stabilizer beam, type DH - 6450	553 02 060	1270001	
Stabilizer beam, type DH - 6450	553 02 060 A		
Detection, stabilizer down (CYL/CYBEL)	553 02 130	1270001	
Stabilizer lock and lever	553 02 140	1270001	
Stabilizer safety lock	553 02 150	1270001	
Safety lock (CE, manual extension)	553 02 165	1270001	
Stabilizer cylinder, C90-520, type V	553 02 200	1270001	
Stabilizer cylinder, C90-720, type V	553 02 201	1270001	
Stabilizer cylinder with check valve, C90-520, type V	553 02 210	1270001	
Stabilizer cylinder with check valve, C90-720, type V	553 02 211	1270001	
Stabilizer cylinder, C90-520, type R-60°	553 02 220	1270001	
Stabilizer cylinder, C90-520, type R-180°	553 02 222	1270001	
Stabilizer cylinder with check valve, type R-60°	553 02 230	1270001	
Stabilizer cylinder, C90-520, type HR	553 02 240	1270001	
Stabilizer cylinder, C90-720, type HR	553 02 241	1270001	
Stabilizer cylinder incl. swing-up mechanism, type HR	553 02 245	1270001	
Stabilizer cylinder incl. swing-up mechanism, type HR	553 02 246	1270001	
Stabilizer cylinder with check valve, C90-520, Type R-180°	553 02 250	1270001	
Stabilizer cylinder, C90-440, type V	553 02 260	1270001	
Stabilizer cylinder with check valve, C90-440, type V	553 02 270	1270001	
Boom System			
Jib, complete	553 03 010	1270001	
Fitting of jib and jib cylinder	553 03 030	1270001	
Jib extension I incl. fittings	553 03 100	1270001	
Jib extension K2 incl. fittings	553 03 110	1270001	
Jib extension III incl. fittings	553 03 125	1270001	
Jib extension IV incl. fittings	553 03 135	1270001	

Description	Page no.	From loader	To loader
Jib extension V incl. fittings	553 03 145	1270001	
Hook suspension	553 03 290	1270001	
Extension cylinder I (C70/55 x 1885)	553 03 300	1270001	
Extension cylinder II (C70/55 x 1950)	553 03 310	1270001	
Extension cylinder III (C70/50 x 2000)	553 03 320	1270001	
Extension cylinder IVi (C60/45 x 1857)	553 03 330	1270001	1270017
Extension cylinder IVi (C60/45 x 1857)	553 03 330 A	1270018	
Extension cylinder Vi (C60/45 x 1911)	553 03 340	1270001	
Extension cylinder I incl. fittings	553 03 500	1270001	
Extension cylinder II incl. fittings	553 03 510	1270001	
Extension cylinder III incl. fittings	553 03 520	1270001	
Extension cylinder IVi incl. Fittings for K5	553 03 530	1270001	
Extension cylinder IVi incl. Fittings for K4	553 03 535	1270001	
Extension cylinder Vi incl. fittings	553 03 540	1270001	
Hydraulic systems, valve brackets and dual controls			
Valve brackets	553 05 010	1270001	
Counter-balance valve	553 05 190	1270001	
Valve bracket, cpl. 2 fcts.	553 05 200	1270001	
Valve bracket, cpl., 2 fcts. + 2 available fcts.	553 05 205	1270001	
Valve bracket, cpl. 4 fcts.	553 05 210	1270001	
Valve bracket, cpl. 4 fcts. + 4 available	553 05 220	1270001	
Dual control, 2 fcts.	553 05 270	1270001	
Dual control, 4 fcts.	553 05 280	1270001	
Dual control.4 fcts. + 4 available functions	553 05 290	1270001	
Hydraulic systems, loader functions			
Hose kit, loader functions, std.	553 05 400	1270001	
Hose kit, crane functions, RC, 2 EXV	553 05 420	1270001	
Hose kit, loader functions, TS (1-circuit variable)	553 05 460	1270001	

Description	Page no.	From loader	To loader
Hose kit, loader functions, TS (2-circuits, fixed)	553 05 480	1270001	
Hydraulic system, slewing	553 05 490	1270001	1270010
Hydraulic system, slewing	553 05 490 A	1270011	
Hydraulic system, slewing - RC	553 05 500	1270001	
Hydraulic systems, stabilizer beams			
Hydraulic system, SV (+ SR-20° -Obsolete) 5570, manual extension	553 05 780	1270001	
Hydraulic system, SR-60°/180°, 5570, manual extension	553 05 785	1270001	
Hydraulic system, SV (+ SR-20° -Obsolete) 5570, hydr. extension	553 05 790	1270001	
Hydraulic system, SH + SR-60°/180° - 5570, hydr. extension	553 05 800	1270001	
Hydraulic system, DV (+ DR-20° -Obsolete) 6450, hydr. extension	553 05 810	1270001	
Hydraulic system, DH + DR-60°/180° - 6450, hydr. extension	553 05 820	1270001	
Hydraulic system, stabilizers, 2 fcts.	553 05 830	1270001	
Hydraulic system, stabilizers, 4 fcts.	553 05 840	1270001	
Hydraulic systems, pump and tank			
Hydr. syst. pump + return hoses	553 06 020	1270001	
Hydr. syst. pump + return hoses (TS)	553 06 030	1270001	
Oil cooler	553 06 100	1270001	
High-pressure filter	553 06 120	1270001	
Hydraulic systems, valve blocks			
Control valves, Danfoss, 6 sections, fixed/variable	553 06 460	1270001	
Control valve, Danfoss, 3 sections, 1 circuit, variable flow, left	553 06 470	1270001	
Control valve, Danfoss, 3 sections, 1 circuit, variable flow, right	553 06 480	1270001	
Control valve, Danfoss, 3 sections, 1 circuit, variable flow, left	553 06 490	1270001	
Control valve, Danfoss, 3 sections, 1 circuit, variable flow, left	553 06 492	1270001	
Control valve, Danfoss, 3 sections, 1 circuit, variable flow, right	553 06 494	1270001	
Labels and mounting kits			
Standard labels	553 07 010	1270001	
Operating labels	553 07 020	1270001	

Description	Page no.	From loader	To loader
Type plates, marking tape, warning signs	553 07 030	1270001	
Lifting capacity diagrams	553 07 040	1270001	
Mounting kit (3 M33 x 2 + 1 M30 x 2) - 50 mm.	553 07 115	1270001	
Mounting kit (3 M33 x 2 + 1 M30 x 2) - 150 mm.	553 07 120	1270001	
Mounting kit (3 M33 x 2 + 1 M30 x 2) - 250 mm.	553 07 130	1270001	
Mounting kit (8 M24 x 2 pins)	553 07 140	1270001	
Accessories, extra valves			
Hose guides, K2-2 EXV.	553 09 210	1270001	
Hose guides, K3-2 EXV.	553 09 220	1270001	
Hose guides, K4-2 EXV.	553 09 230	1270001	
Hose guides, L5-2 EXV	553 09 240	1270001	
Bracket for hose reel, cpl. (jib)	553 09 280	1270001	1270029
Bracket for hose reel, cpl. (jib)	553 09 280 A	1270030	
Attachment for hose reel, cpl. (extension 2)	553 09 290	1270001	1270029
Attachment for hose reel, cpl. (extension 2)	553 09 290 A	1270030	
Kit, quick-release coupling for internal hose routing, 2 EXV.	553 09 320	1270001	
Quick-release coupling for 2 extra valves	553 09 400	1270001	
Hose reels, 2 EXV.	553 09 520	1270001	
Accessories, stand-up controls, HS			
Valve bracket, cpl., direct valve control - 2 fcts.	553 10 350	1270001	
Valve bracket, cpl., direct valve control - 4 fcts.	553 10 360	1270001	
Valve bracket, cpl., direct valve control - 4 fcts. + 4 available fcts.	553 10 370	1270001	
Accessories, top seat, TS			
Mounting fittings, TS	553 11 010	1270001	
Mounting fittings, TS	553 11 010 A		
Seat, cpl.	553 11 020	1270001	
Top seat (HC X), cpl.	553 11 060	1270001	
Top seat (Danfoss X), cpl.	553 11 070	1270001	

Description	Page no.	From loader	To loader
Top seat (Danfoss X), cpl.	553 11 070 A		
Top seat (Danfoss X), cpl.	553 11 075	1270001	
Bracket, complete (ECT 5320 - TS)	553 11 080	1270001	1270011
Bracket, complete (ECT 5320 - TS)	553 11 080 A	1270012	
Ladder for TS, cpl.	553 11 095	1270001	1270011
Ladder for TS, cpl.	553 11 095 A	1270012	
Hose kit, loader functions (TS HC joystick)	553 11 110	1270001	
Hose kit for pump and tank, (TS HC joystick)	553 11 120	1270001	
Hose kit, loader functions (TS Danfoss 1 circuit, fixed and variable flow)	553 11 130	1270001	
Hose kit for pump and tank (TS, Danfoss 1 circuit, fixed flow)	553 11 140	1270001	
Hose kit for pump and tank (TS, Danfoss 1 circuit, variable flow)	553 11 150	1270001	
Stabilizer operation (TS joystick) 4 functions	553 11 180	1270001	
Stabilizer operation (TS joystick)	553 11 190	1270001	
Hose shield (TS), cpl.	553 11 200	1270001	
Hose shield (TS), cpl.	553 11 200 A		
Accessories, miscellaneous			
Mounting fittings, light tower	553 16 060	1270001	
Cam disc kit	553 16 070	1270001	
Protective guard, jib cylinder, cpl.	553 16 090	1270001	
Protective guard (LHV boom), cpl.	553 16 100	1270001	
Electronic parts, in general			
12 V converter	553 20 055	1270001	
BEHEW	553 20 060 A	1270001	
BEHEW	553 20 065	1270001	
CYW	553 20 080 A	1270001	
CYL	553 20 085	1270001	
CYL	553 20 085 A		
CYBEL, single extension	553 20 090	1270001	

Description	Page no.	From loader	To loader
CYBEL, single extension	553 20 090 A		
CYBEL double extension	553 20 100	1270001	
CYBEL double extension	553 20 100 A		
BEHEW	553 20 130	1270001	
Alarm flash on stabilizer legs	553 20 140	1270001	
Spotlight, boom	553 20 150 A	1270001	
Spotlight, jib	553 20 160 A	1270001	
Temperature monitoring for oil cooler	553 20 180	1270001	
CBS - Calibrate Bypass Sensor	553 20 190	1270001	
Mounting fittings for junction box	553 20 250	1270001	
CAN termination, RCL53xx	553 20 340	1270001	
PAS	553 20 392	1270001	
Electronic parts, manual crane			
Horn, no RC	553 20 520	1270001	
Electronic parts, TS crane			
Electronic parts, TS, base	553 21 710	1270001	
Electronic parts, TS, Danfoss	553 21 720	1270001	
2CYBEL, single extension, TS	553 21 770	1270001	
2CYBEL, single extension, TS	553 21 770 A		
2CYBEL, double extension, TS	553 21 780	1270001	
2CYBEL, double extension, TS	553 21 780 A		
2-stage LMB, TS, Danfoss	553 21 790	1270001	
EVS-H, TS, Danfoss	553 21 800	1270001	
Temperature monitoring	553 21 810	1270001	
Electronic parts, RC crane			
Basic electronic parts, crane with RC	553 22 010	1270001	
Basic electronic parts, crane with RC	553 22 010 A		
Light tower	553 22 100	1270001	

Description	Page no.	From loader	To loader
Basic electronic parts, L-RC	553 22 410	1270001	
CR2033	553 22 420	1270001	
EVS	553 22 430	1270001	
2-stage LMB	553 22 440	1270001	
CBS	553 22 470	1270001	
CYL	553 22 490	1270001	
CYL	553 22 490 A		
CYBEL, single extension	553 22 500	1270001	
CYBEL, single extension	553 22 500 A		
CYBEL double extension	553 22 510	1270001	
CYBEL double extension	553 22 510 A		
2CYBEL, single extension	553 22 520	1270001	
2CYBEL, single extension	553 22 520 A		
2CYBEL, double extension	553 22 530	1270001	
2CYBEL, double extension	553 22 530 A		
Stabilizer operation via RC	553 22 540	1270001	
Alarm flash on stabilizer legs	553 22 550	1270001	
Spotlight, radio remote controlled.	553 22 555	1270001	
Temperature monitoring	553 22 560	1270001	
EJB5385, installation	553 22 575	1270001	
Termination, G2	553 22 580	1270001	
Tools			
Dismounting tools, cpl.(EXV)	553 25 030	1270001	
Lifting tools cpl. (Change of hoses inside the column)	553 25 040	1270001	
Holding kit (pin in hydr. extension)	553 25 050	1270001	
Spanner wrench, footplate + ball joint	553 25 060	1270001	

An Oshkosh Corportation Company

2530L

Internal ref. 63 55 500

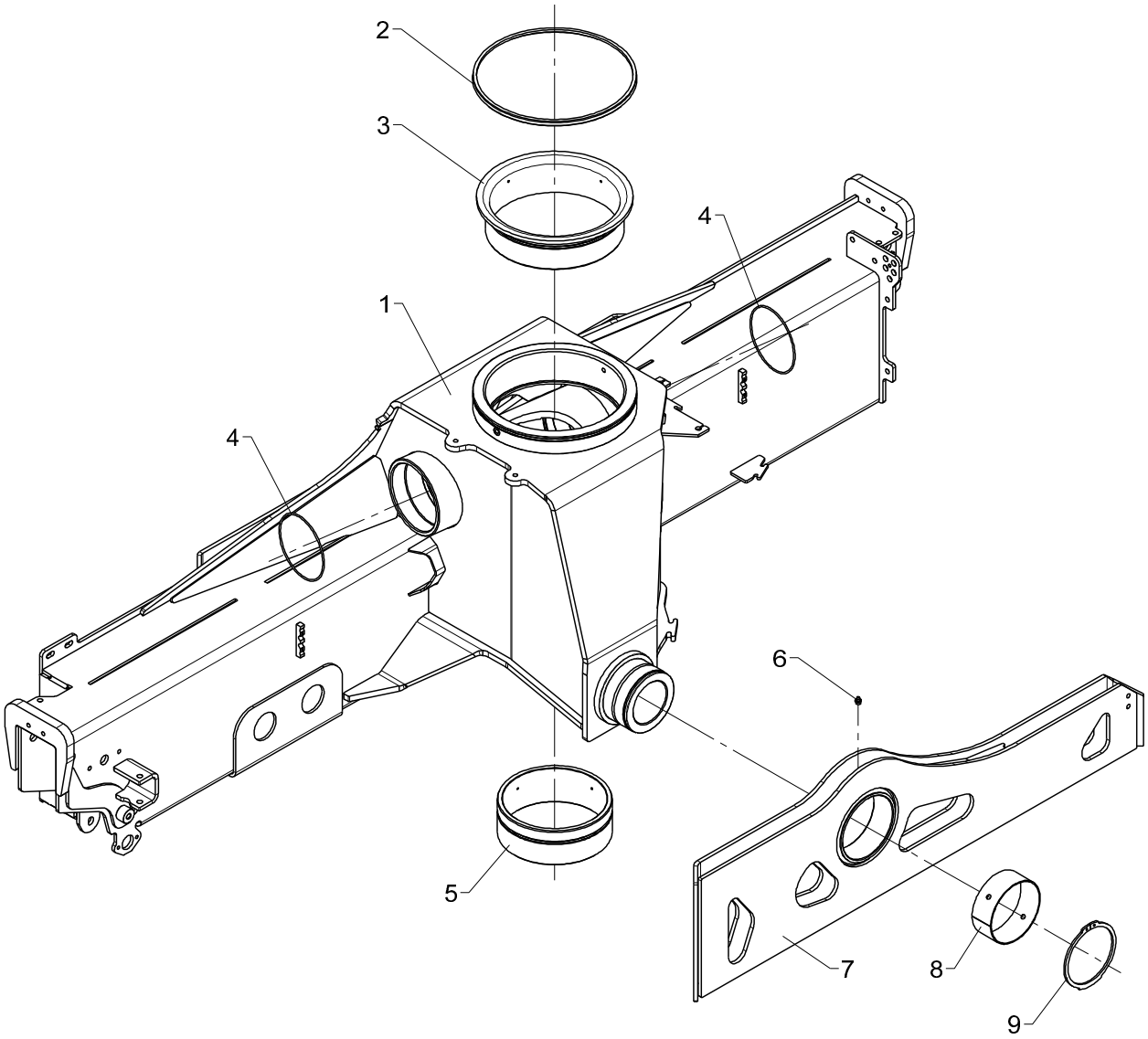

From loader 1270001
To loader

Base, complete

2530L

Created 09-12-2013
Modified 25-11-2014

Pos	Qty.	Part no.	Description	Remarks
1	1	6355510	Base, painted	63 55 501
2	1	22154	V-ring	VL-0300
3	1	63433	Top bearing	
4	2	20205	O-ring	OR 134,5 x 3
5	1	63434	Bottom bearing	
6	1	31318	Lubricator	1/8" RG
7	1	6306135	Suspension traverse	
8	1	23362	Bushing	PM 13050 DX
9	1	33151	Circlip	130U

2530L

Internal ref. 63 55 270

An Oshkosh Corportation Company

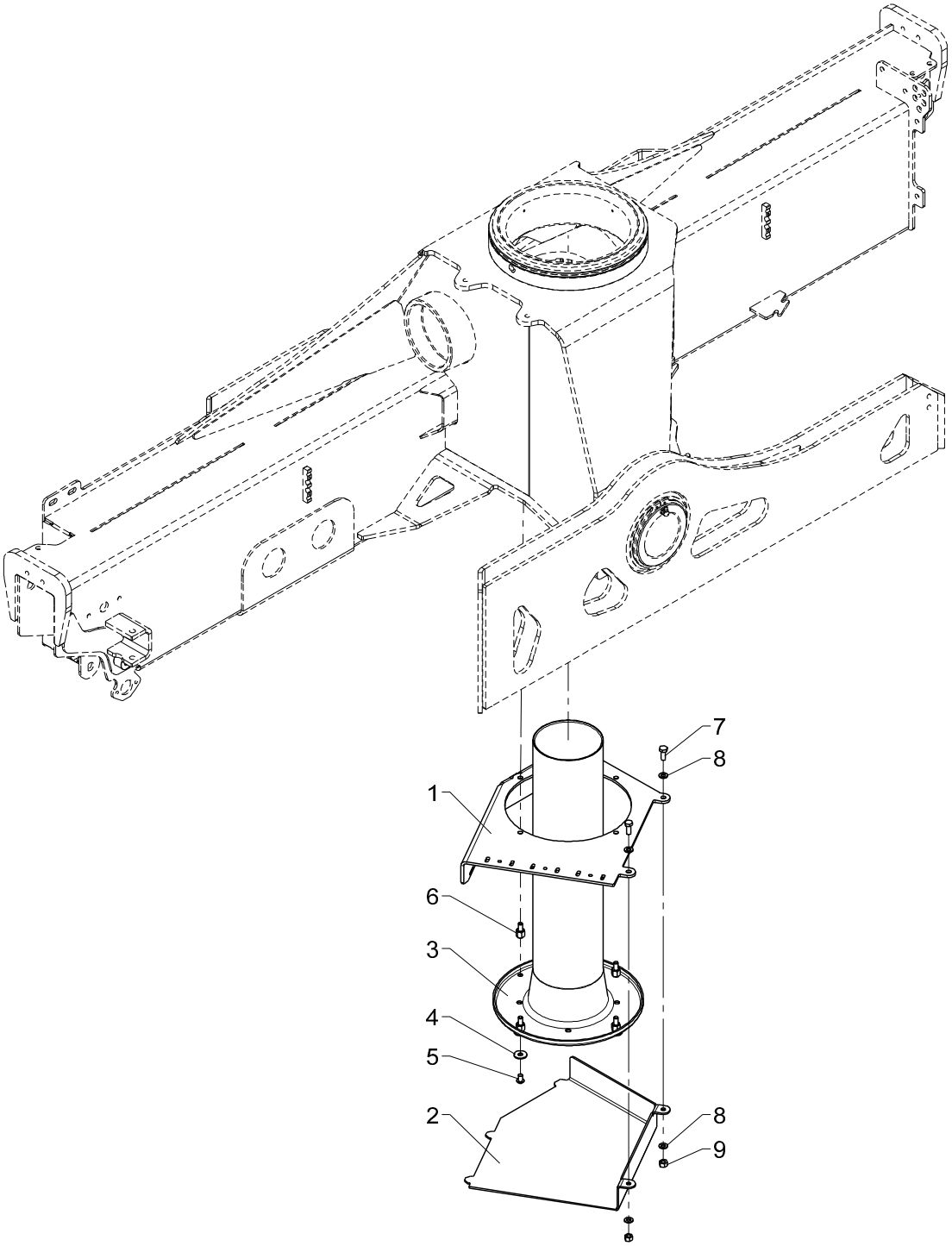

Protection plate, complete (RC)

2530L

Pos	Qty.	Part no.	Description	Remarks
1	1	6355331	Bottom cover	
2	1	6355233	Protective plate	
3	1	63491	Bushing	
4	4	31136	Washer, stainless	8 mm
5	4	30924	Screw	M8 x 12
6	4	6340223	Spacer	
7	2	30132	Set screw, stainless	
8	4	31147	Face washer, 8 mm	
9	2	30886	Lock nut, stainless	M8

2530L

Internal ref. 63 45 570

An Oshkosh Corportation Company

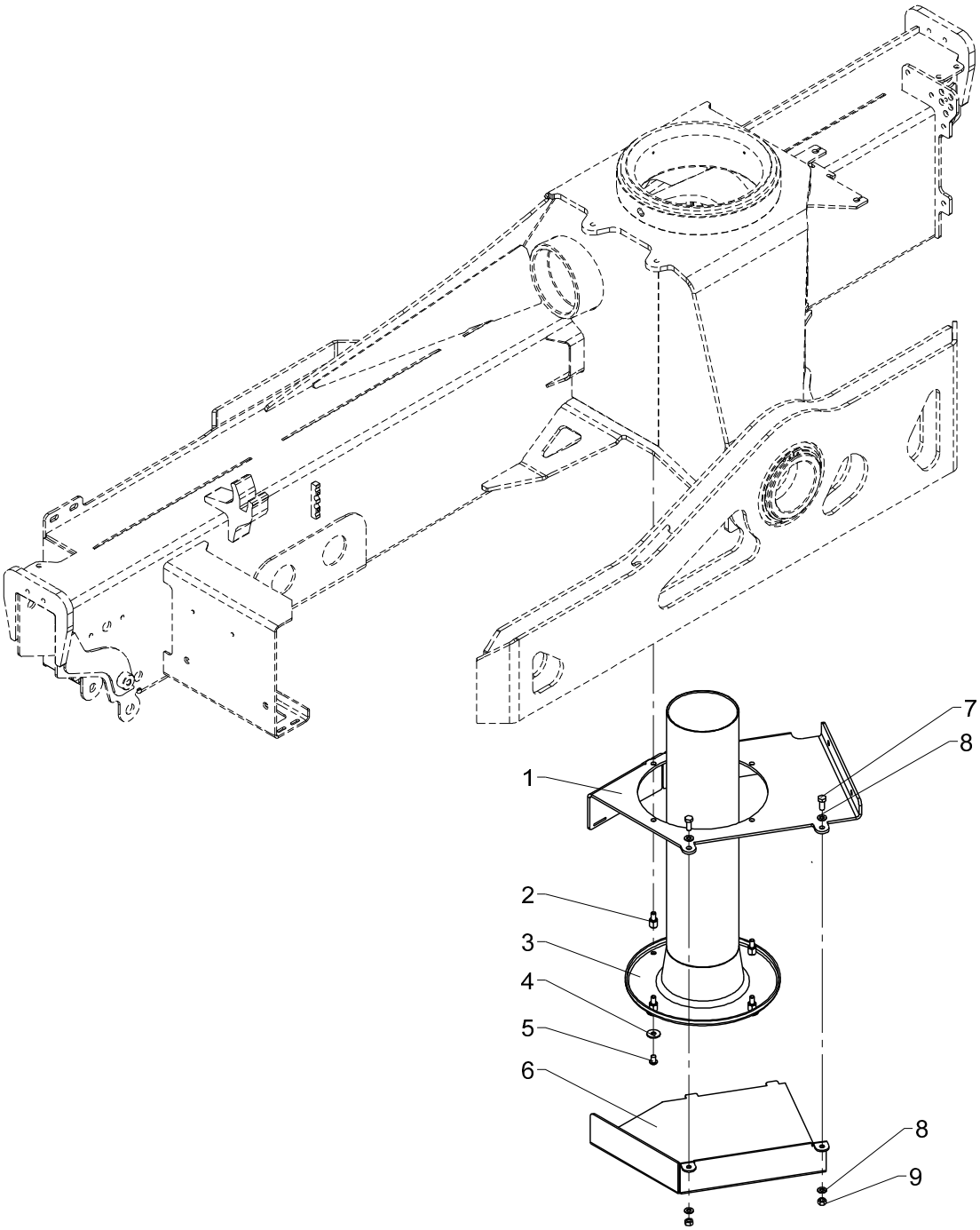

553 01 060

From loader 1270001
To loader
Created 12-12-2008
Modified

Protection plate, complete (TS)

2530L

Pos	Qty.	Part no.	Description	Remarks
1	1	6344841	Cover	
2	4	6340223	Spacer	
3	1	63491	Bushing	
4	4	31136	Washer, stainless	8 mm
5	4	30924	Screw	M8 x 12
6	1	6340843	Protection plate (TS)	
7	2	30132	Set screw, stainless	M8 x 20
8	4	31147	Face washer, 8 mm	8 mm
9	2	30856	Nut, stainless	M8

2530L

Internal ref. 63 55 020

An Oshkosh Corportation Company

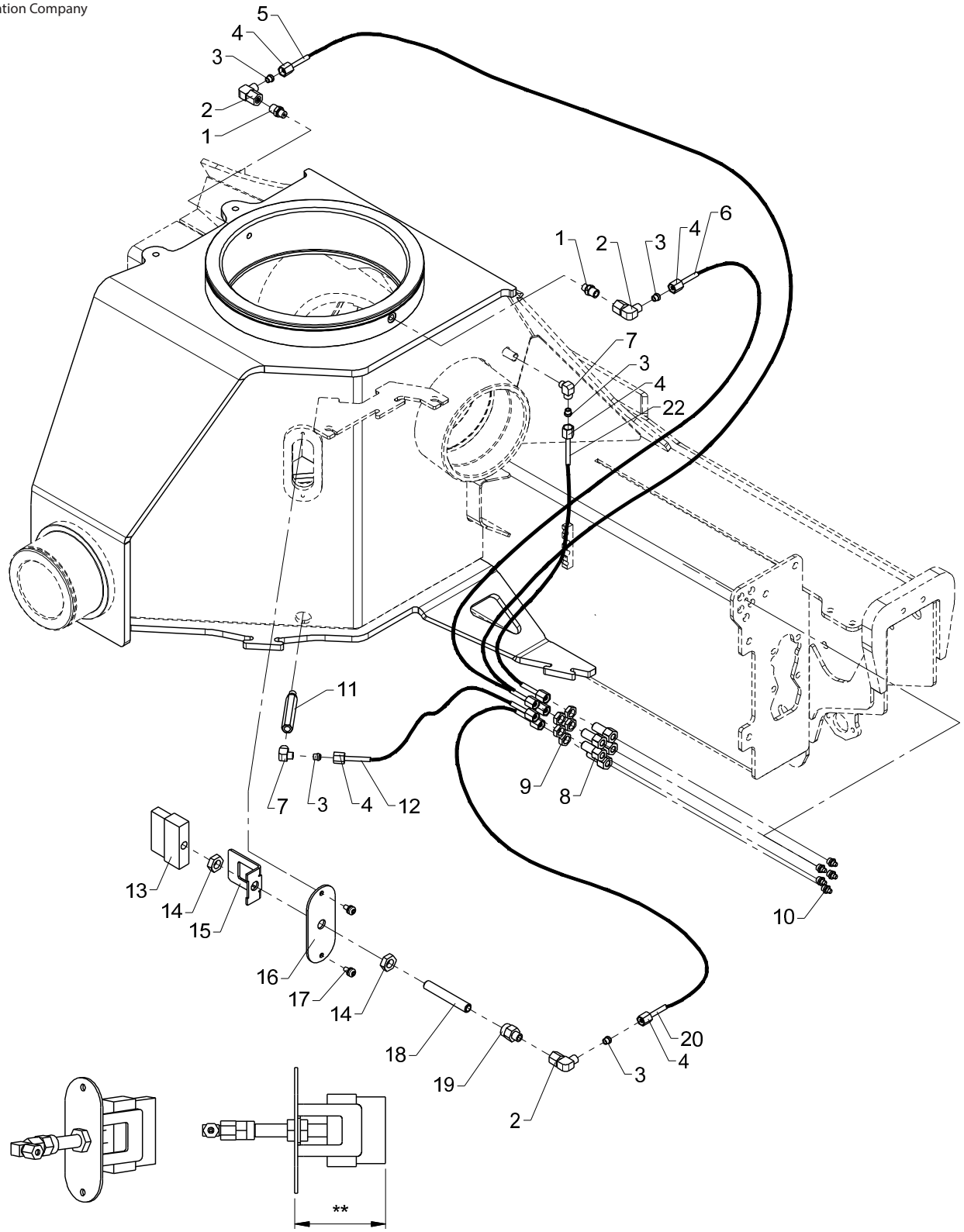

Central lubrication and lubricating brush
2530L

Pos	Qty.	Part no.	Description	Remarks
1	2	26189	Connection	P-GEV 6 LR-WD
2	3	26174	Elbow connection	EWSD 6 L
3	10	26114	Profile ring	P-R 6 L/S
4	10	26164	Coupling nut	M 6 L
5	1	62821	Nylon pipe	1550 mm
6	1	62821	Nylon pipe	1260 mm
7	2	26186	Elbow connection	WEV 6 LRK
8	5	26891	Bulkhead connection	
9	5	26890	Counter nut	M12 x 1,5
10	5	31318	Lubricator	1/8" RG
11	1	6340046	Nipple (1/8" RG - 90 mm)	
12	1	62821	Nylon pipe	1170 mm
13	1	31395	Brush	
14	2	25354	Counter nut	1/4"
15	1	6306047	Safety device, lubrica. brush	
16	1	6306046	Cover for lubricating brush	
17	2	32479	Screw	M6 x 12
18	1	6306048	Threaded pipe	
19	1	26372	Pressure gauge connection	P-MAV 6 LR
20	1	62821	Nylon pipe	1490 mm
22	1	62821	Nylon pipe	930 mm

2530L

Internal ref. 63 44 030

Obsolete

An Oshkosh Corportation Company

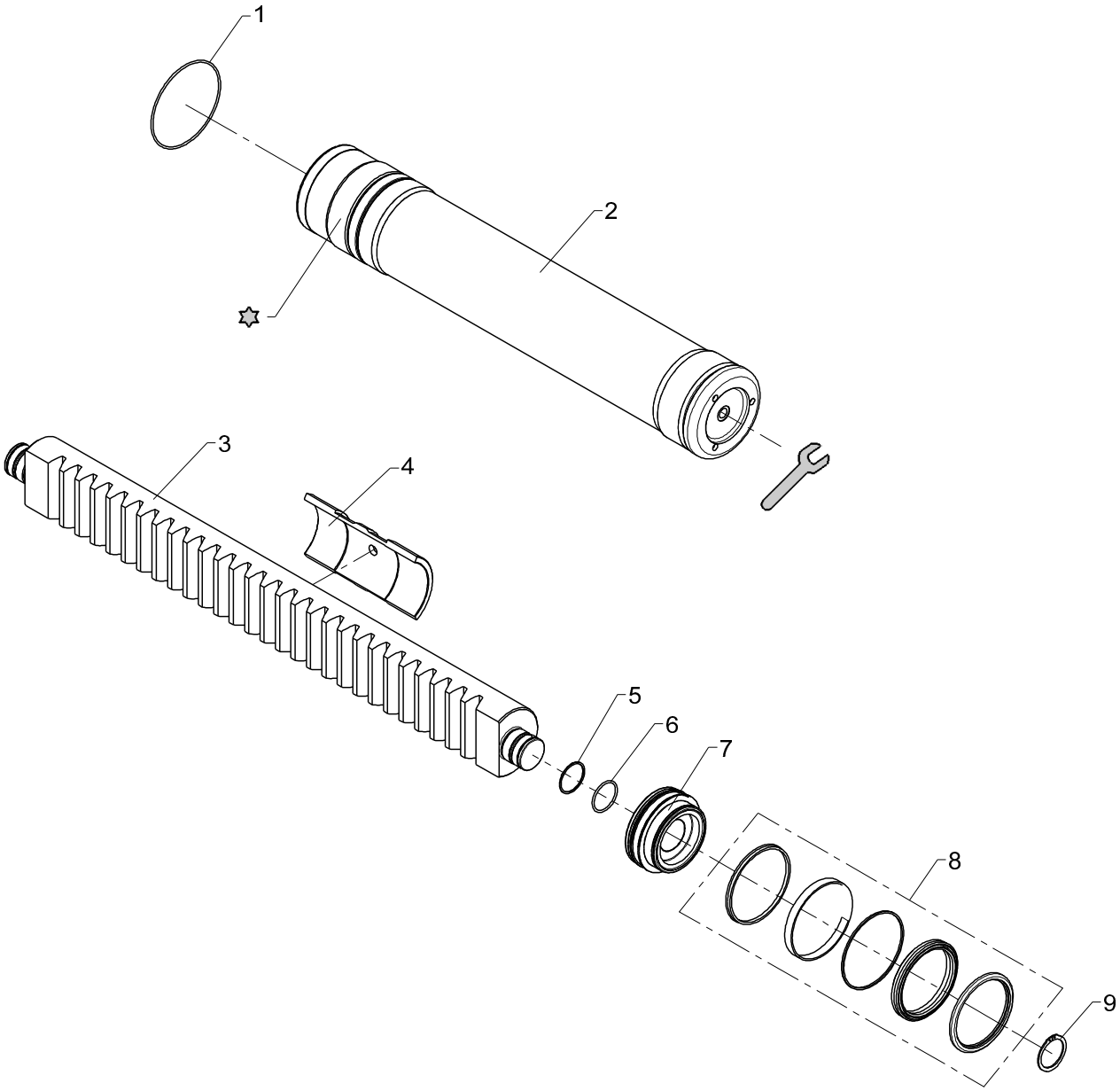

Loctite 8156

600 Nm

Obsolete

553 01 100

From loader 1270001
To loader 1270010

Slewing system, 400°

2530L

Created 15-06-2012
Modified 07-10-2014

Pos	Qty.	Part no.	Description	Remarks
1	2	20205	O-ring	OR 134,5 x 3
2	2	6346041	Slewing cylinder	
3	1	6344044	Rack	
4	1	63555	Guide block	
5	2	20868	Back ring	STR 45 x 50 x 1,3-Y95A
6	2	20181	O-ring	OR 44,2 x 3
7	2	6346085	Piston	
8	2	6894690	Seal kit f. slewing cyl.(ø125)	
9	2	33129	Circlip	50U

2530L

Internal ref. 63 55 180

An Oshkosh Corportation Company

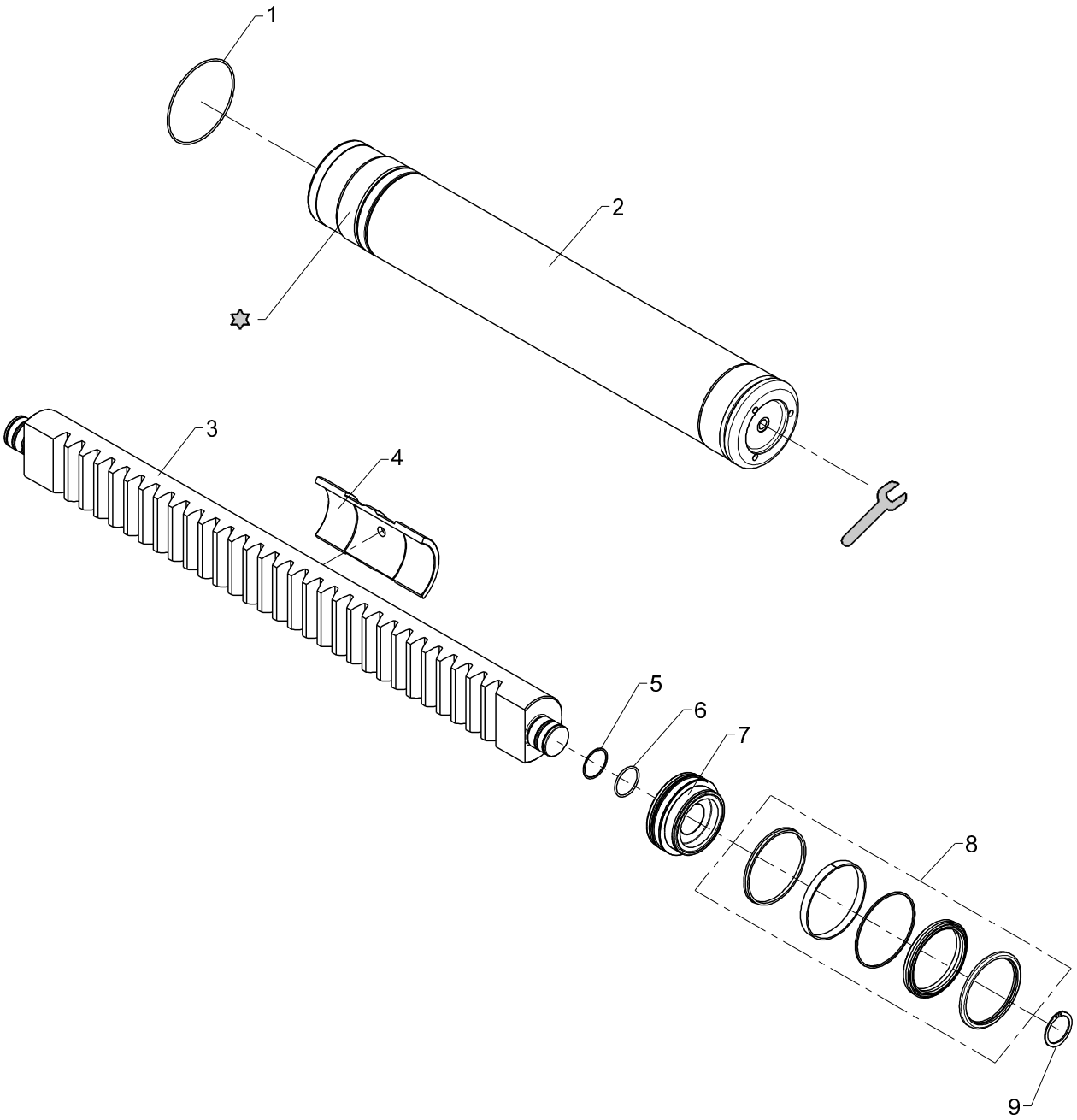

Loctite 8156

600 Nm

From loader
To loader
Created 18-08-2014
Modified

Slewing system, 450°

2530L

Pos	Qty.	Part no.	Description	Remarks
1	2	20205	O-ring	OR 134,5 x 3
2	2	6355141	Slewing cylinder - 450	
3	1	6355144	Rack (ø110-M10-450)	
4	1	63555	Guide block	
5	2	20868	Back ring	STR 45 x 50 x 1,3-Y95A
6	2	20181	O-ring	OR 44,2 x 3
7	2	6346085	Piston	
8	2	6894690	Seal kit f. slewing cyl.(ø125)	
9	2	33129	Circlip	

2530L

Internal ref. 63 46 070

An Oshkosh Corportation Company

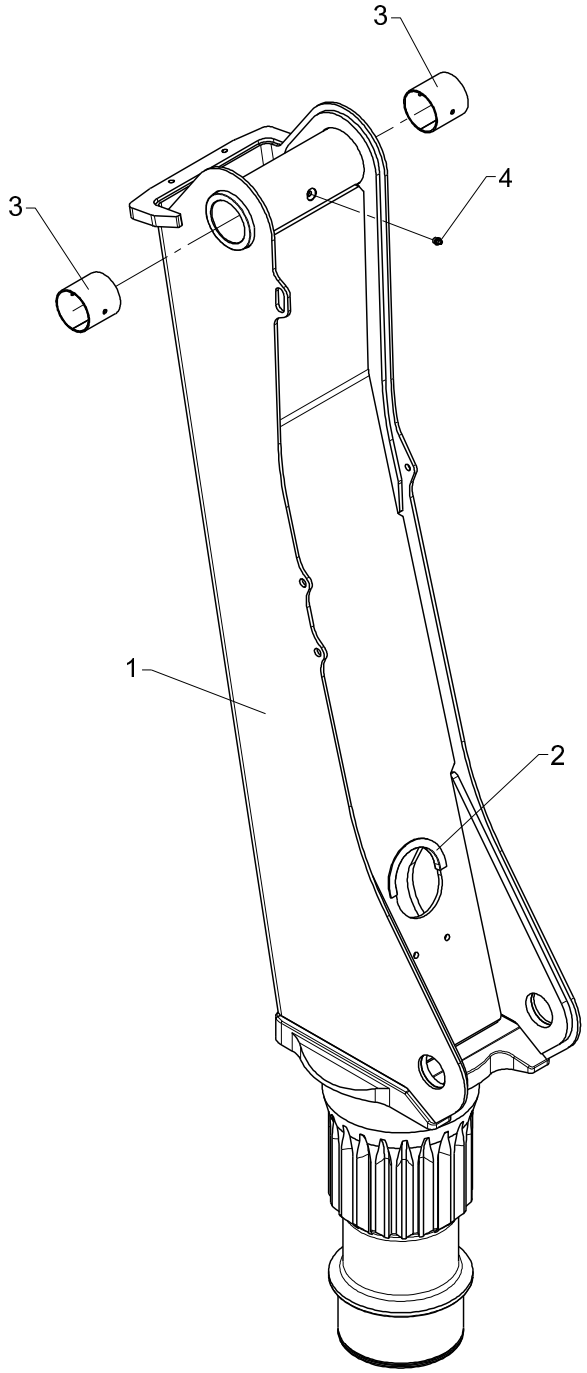

Column, cpl. excl. link arm system, boom
2530L

Pos	Qty.	Part no.	Description	Remarks
1	1	6346080	Column, painted	6346071
2	1	46587	Rubber protection	180 mm
3	2	23338	Bushing	PM 7070 DX
4	1	31318	Lubricator	1/8" RG

2530L

Internal ref. 63 55 690

An Oshkosh Corportation Company

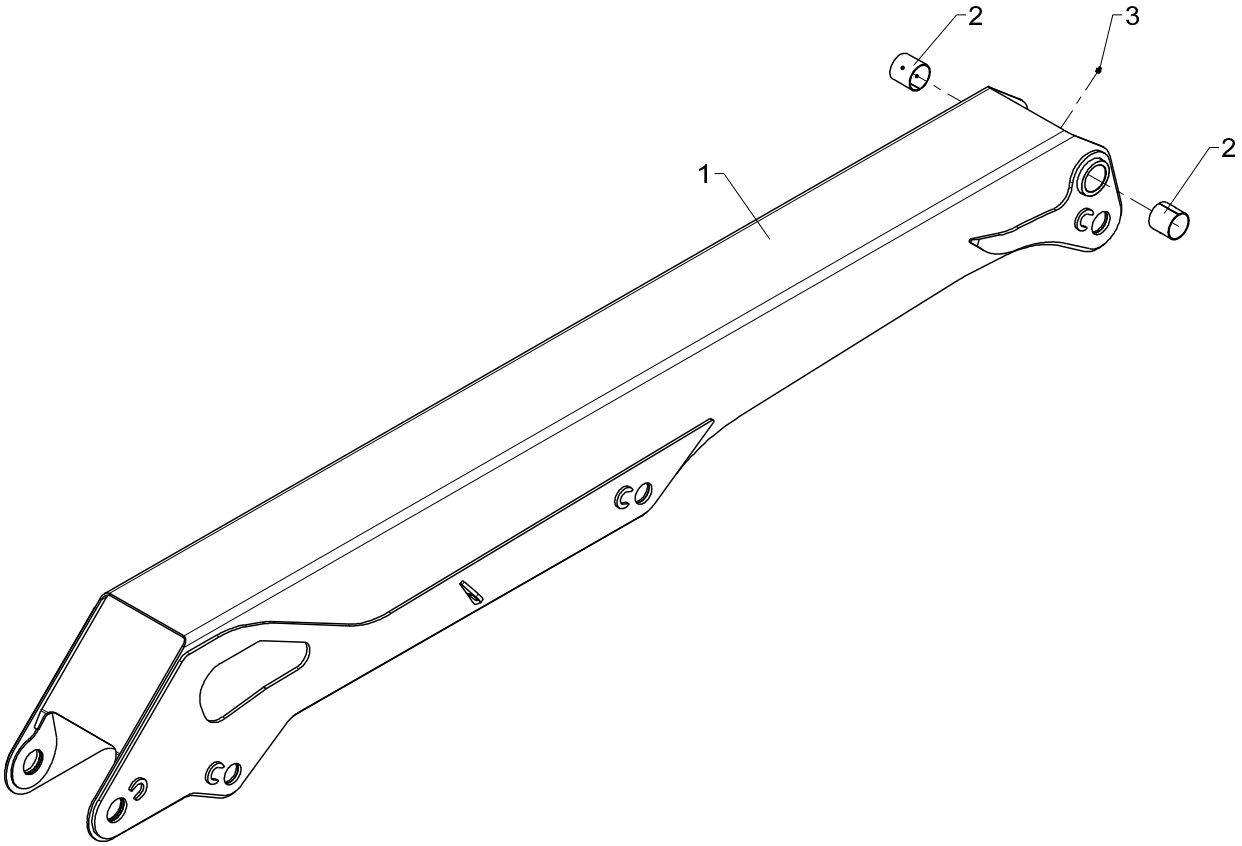

Main boom, cpl., no link arm system, boom
2530L

Pos	Qty.	Part no.	Description	Remarks
1	1	6355740	Main boom painted	63 55 211
2	2	23338	Bushing	PM 7070 DX
3	1	31318	Lubricator	1/8" RG

2530L

63 42 210
Internal ref. 63 40 210

An Oshkosh Corportation Company

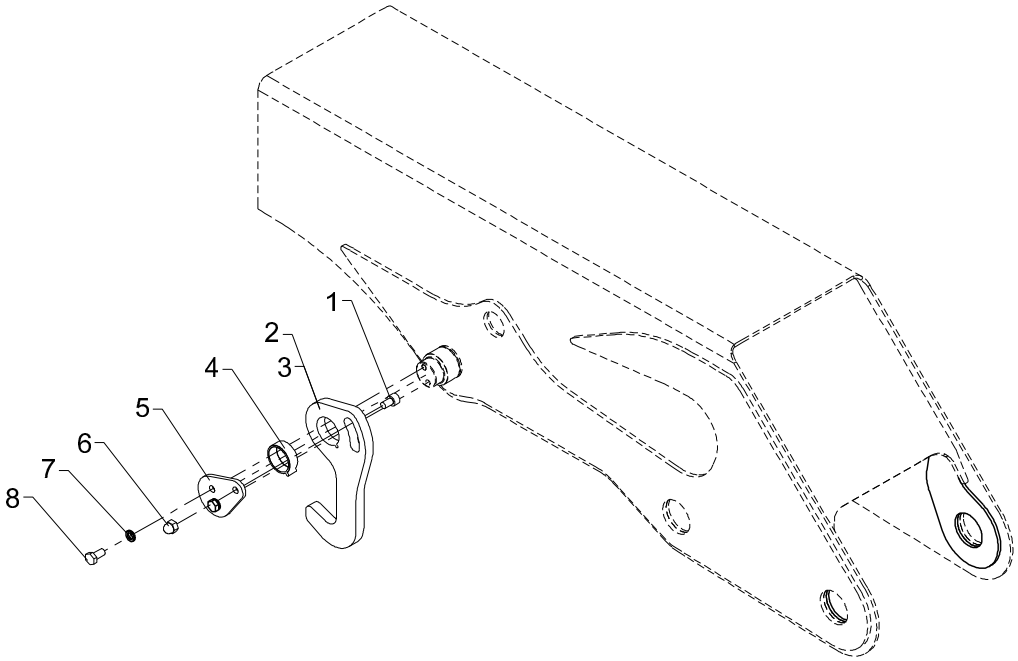

Stowing hook, complete

2530L

Pos	Qty.	Part no.	Description	Remarks
		6340210	Stowing hook	
		6342210	Stowing hook, cpl. (+FJ)	
1	1	30964	Screw	MC10 x 16
2	1	6340208	Stowing hook	
3	1	6340948	Stowing hook (loader + FJ)	
4	1	63565	Bearing	
5	1	6340209	End plate	
6	1	30902	Nut	M10
7	2	30933	Nordlock washer	
8	2	31517	Set screw, stainless	M10 x 20

2530L

Internal ref. 63 46 200

An Oshkosh Corportation Company

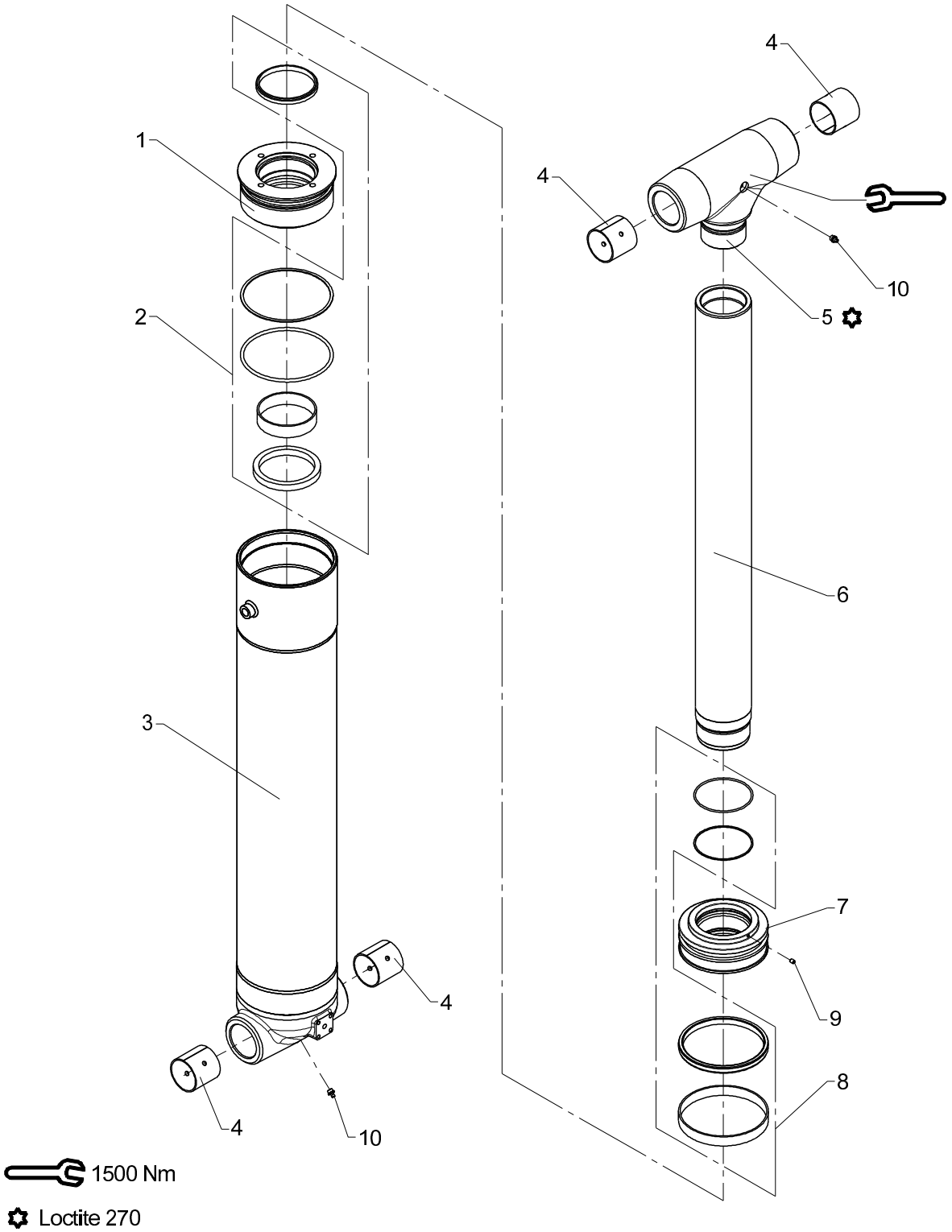

From loader 1270001
To loader

Boom cylinder C160 x 805 (2210K, 2430K, 2630K) 2530L

Created 19-07-2010
Modified 02-11-2010

Pos	Qty.	Part no.	Description	Remarks
1	1	6344146	Guide	
2	1	6894080	Seal kit	
3	1	6346195	Cylinder tube	
4	4	23330	Bushing	PM 6060 DX
5	1	6344199	Piston rod head	
6	1	6346198	Piston rod	
7	1	6344145	Piston	
8	1	6894030	Seal kit	
9	1	30903	Screw	MSP6 x 8
10	2	31318	Lubricator	1/8" RG

2530L

Internal ref. 63 47 450

An Oshkosh Corportation Company

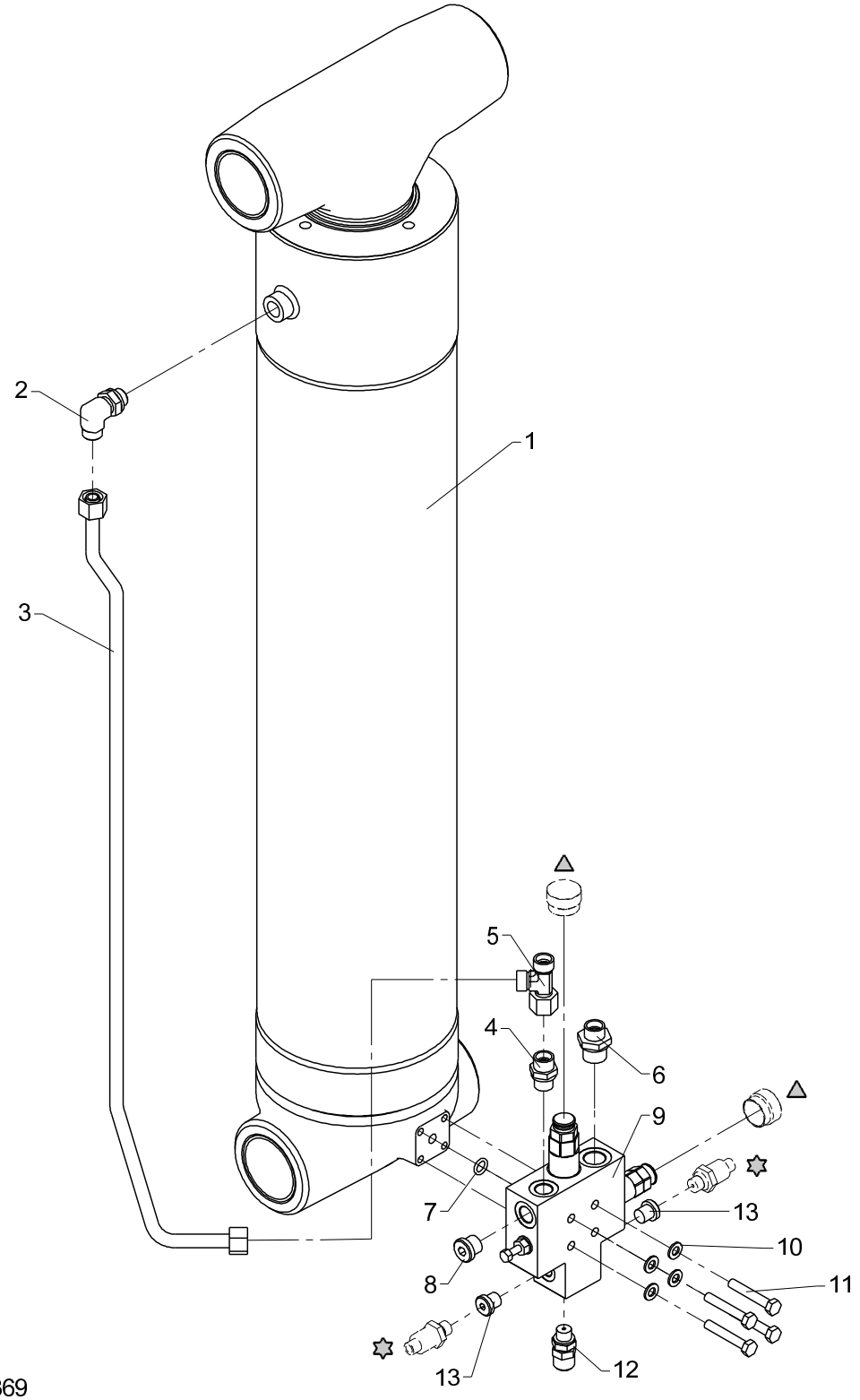

△ 55369
✡ 28850

From loader 1270001
To loader
Created 07-01-2009
Modified

Boom cylinder C160 x 805 with LHV (2210K, 2430K, 2630K) 2530L

Pos	Qty.	Part no.	Description	Remarks
1	1	6346200	Boom cylinder	
2	1	26897	Elbow connection	12 mm - 3/8"
3	1	6346176	Pipe, boom retract	
4	1	25127	Connection	P-GEV 12 LR-WD
5	1	25270	Connection	ELSD 12 L
6	1	25108	Connection	GES 12 LR 1/2-WD
7	1	20138	O-ring	OR 10,77 x 2,62
8	1	25277	Plug	VS-R-3/8 WD
9	1	55227	Valve	
10	4	31147	Face washer, 8 mm	8 mm
11	4	30139	Steel bolt, stainless	M8 x 50
12	1	26103	Pressure-gauge connect.	
13	2	25197	Plug	VS-R-1/4 WD

2530L

Internal ref. 63 46 150

An Oshkosh Corportation Company

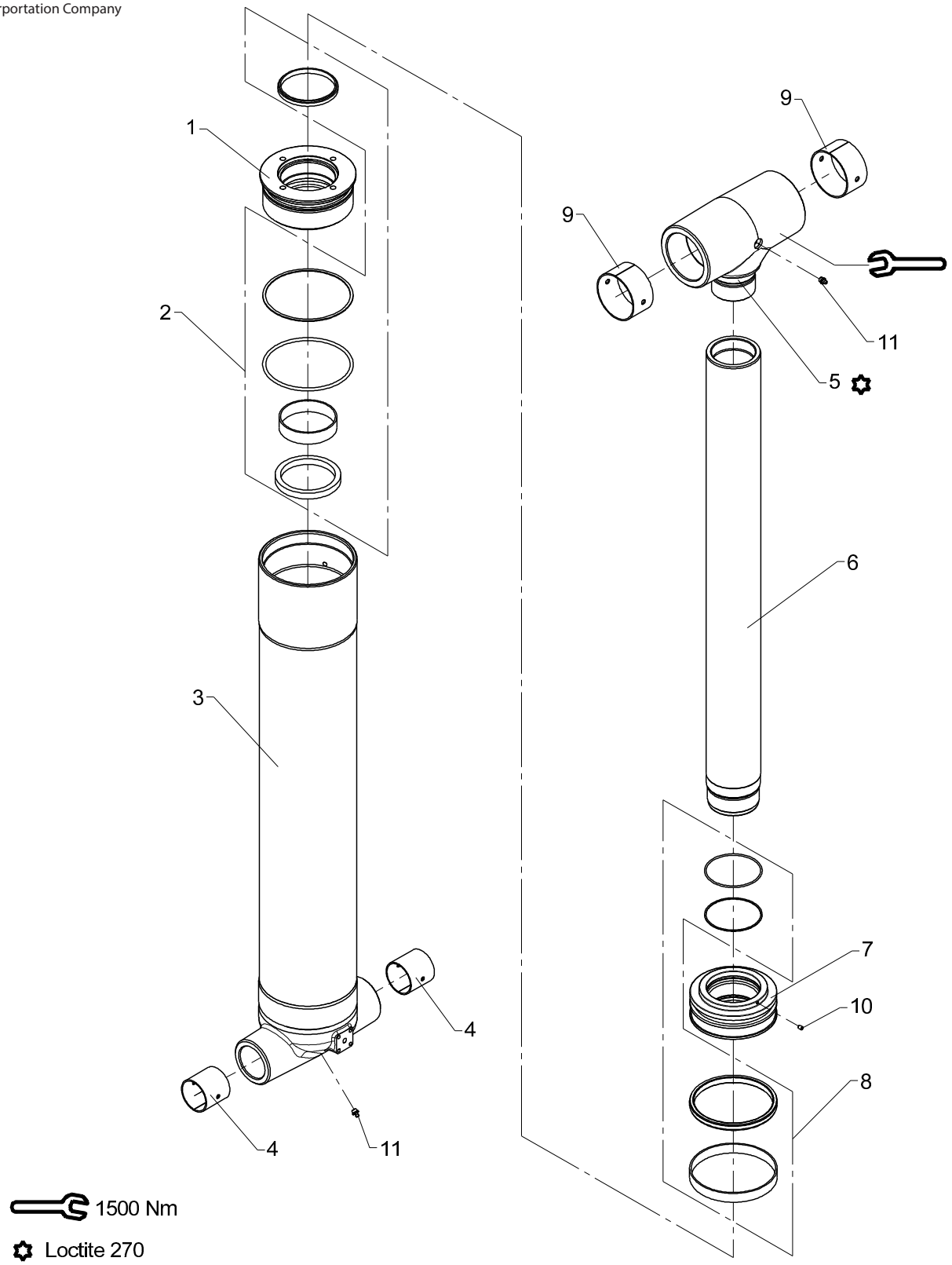

Jib cylinder C160 x 863

2530L

Pos	Qty.	Part no.	Description	Remarks
1	1	6344146	Guide	
2	1	6894080	Seal kit	
3	1	6346151	Cylinder tube	
4	2	23330	Bushing	PM 6060 DX
5	1	6346147	Piston rod head	
6	1	6346154	Piston rod	
7	1	6344145	Piston	
8	1	6894030	Seal kit	
9	2	23422	Bushing	PM 9050 DX
10	1	30903	Screw	MSP6 x 8
11	2	31318	Lubricator	1/8" RG

2530L

Internal ref. 63 46 270

An Oshkosh Corportation Company

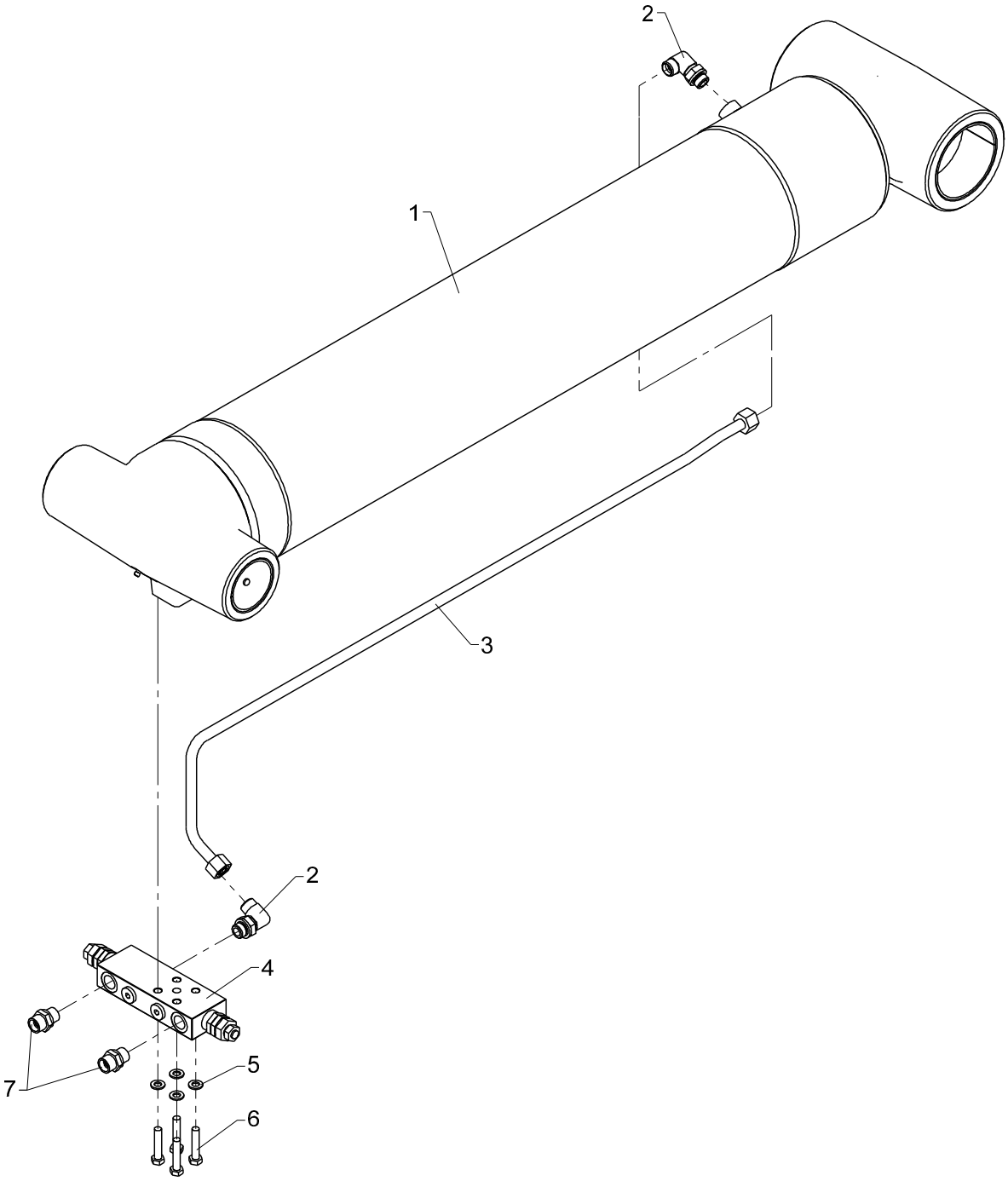

Jib cylinder with LHV

2530L

Pos	Qty.	Part no.	Description	Remarks
1	1	6346150	Jib cylinder	
2	2	26897	Elbow connection	12 mm - 3/8"
3	1	6346158	Pipe	
4	1	59027	Load-holding valve	
5	4	31147	Face washer, 8 mm	8 mm
6	4	30137	Set screw, stainless	M8 x 40
7	2	25127	Connection	P-GEV 12 LR-WD

2530L

Internal ref. 63 46 100

An Oshkosh Corportation Company

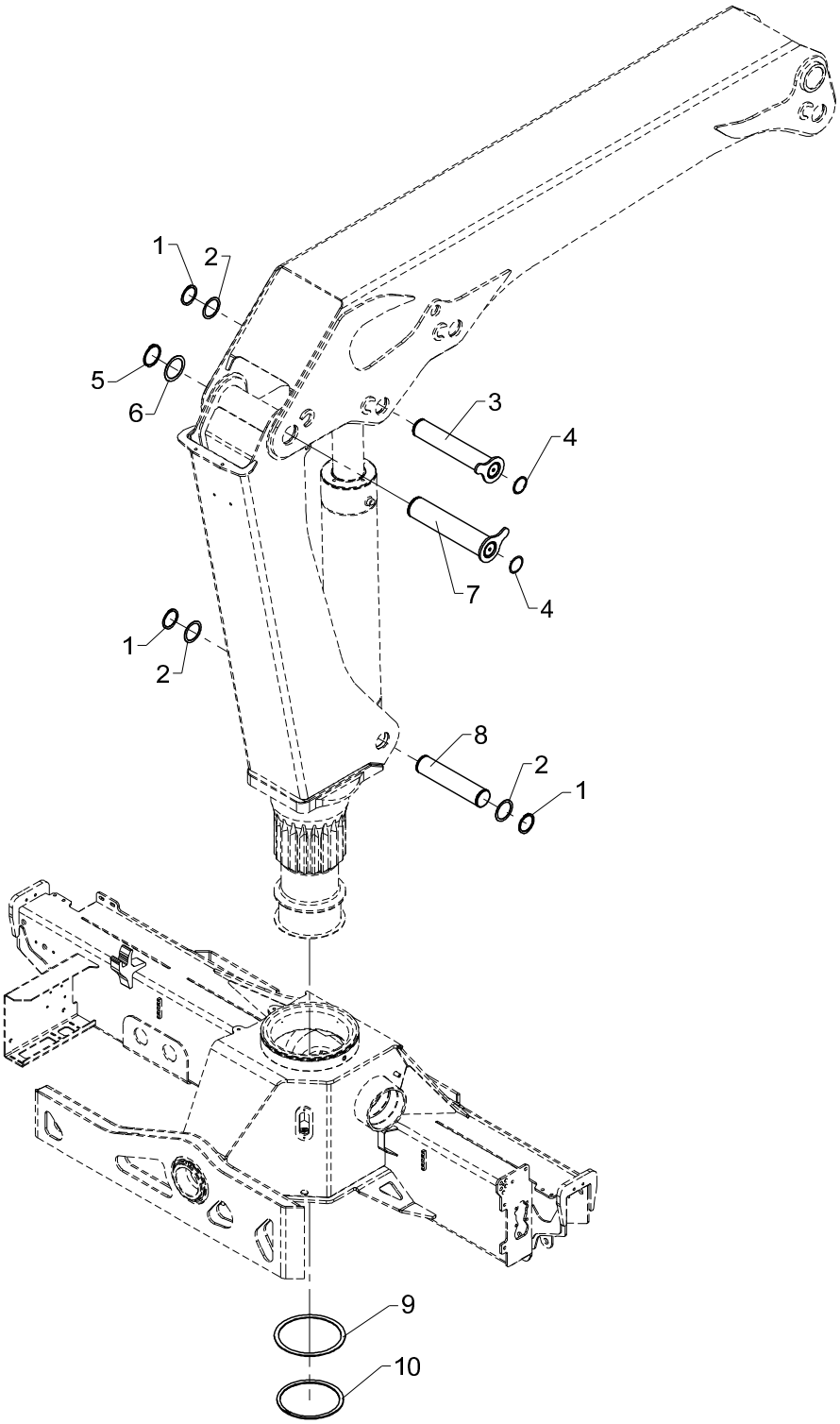

Mounting fittings, basic loader excl. link arm system

2530L

Pos	Qty.	Part no.	Description	Remarks
1	3	33135	Circlip	60U
2	3	33266	Washer	PS 60 x 75 x 1,0
3	1	6344208	Pin	
4	2	63473	Plug	
5	1	33139	Circlip	70U
6	1	33248	Washer	PS 70 x 90 x 1,0
7	1	6346201	Pin	
8	1	6344149	Pin	
9	1	6344049	Supporting washer	
10	1	33274	Circlip	200U

2530L

63 43 240
Internal ref. 63 43 220

An Oshkosh Corportation Company

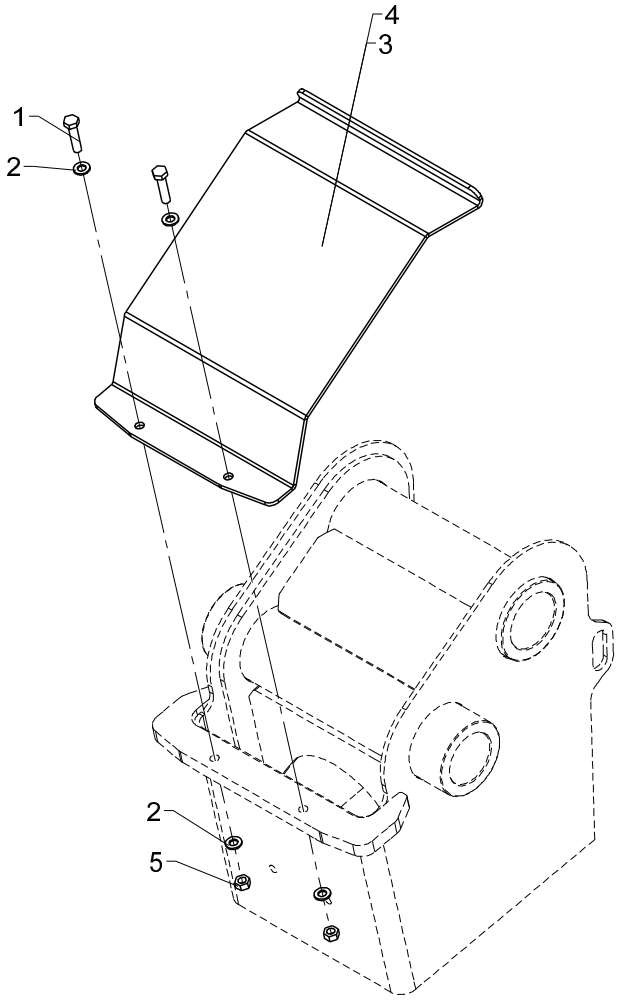

Hose shield, cpl.

2530L

Pos	Qty.	Part no.	Description	Remarks
		6343220	Protective plate	
		6343240	Protective plate	
1	2	30136	Steel bolt, stainless	M8 x 35
2	4	31147	Face washer, 8 mm	8 mm
3	1	6344089	Hose shield	1800K/2020K/2200K/2420K
4	1	6344079	Hose shield	1810K/2030K/2210K/2430K/1910T/
5	2	30856	Nut, stainless	M8

2530L

Internal ref. 63 46 250

An Oshkosh Corportation Company

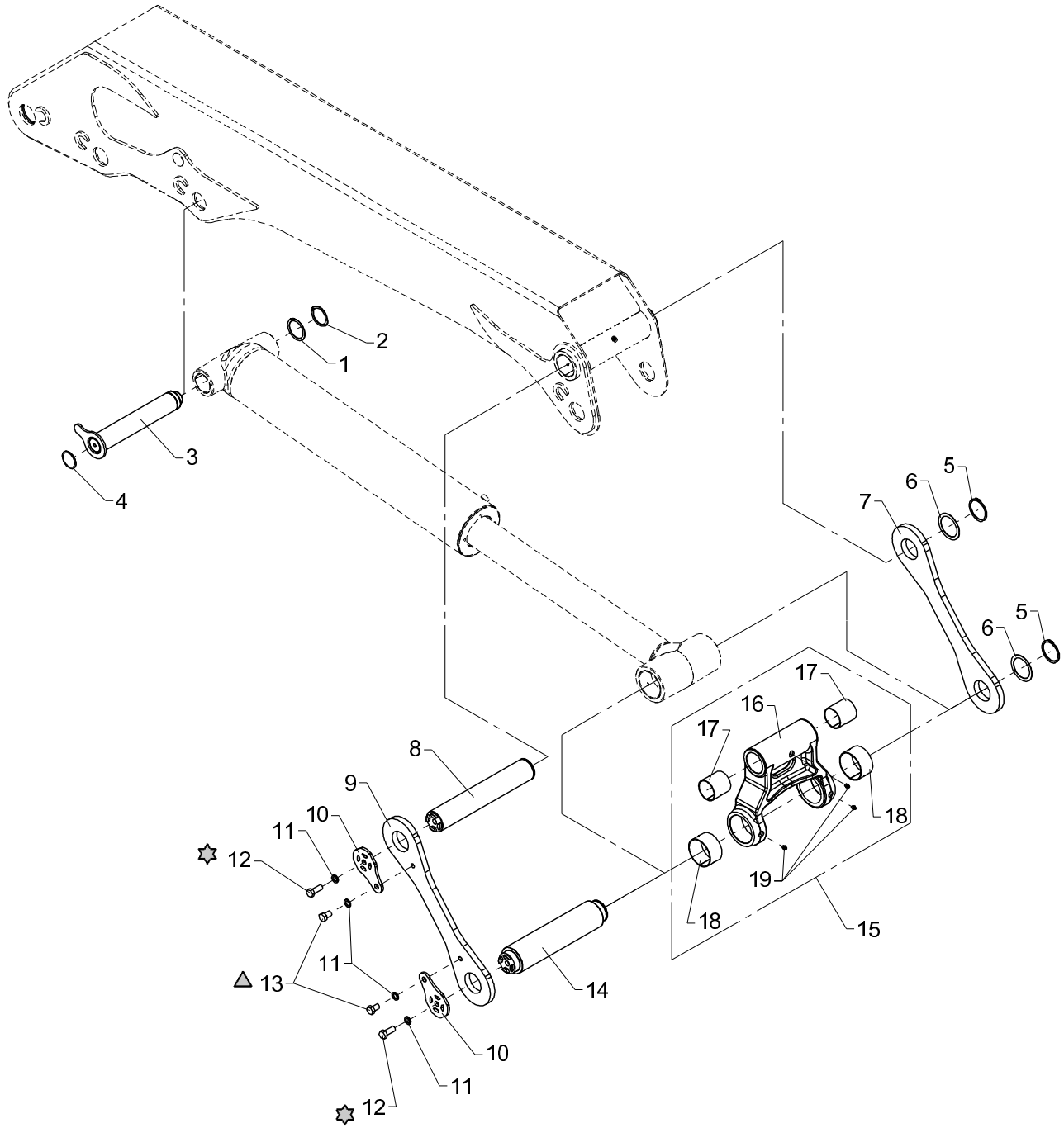

230 Nm

170 Nm

Link arm system, jib

2530L

Pos	Qty.	Part no.	Description	Remarks
1	1	33266	Washer	PS 60 x 75 x 1,0
2	1	33135	Circlip	60U
3	1	6344204	Pin	
4	1	63473	Plug	
5	2	33139	Circlip	70U
6	2	33248	Washer	PS 70 x 90 x 1,0
7	1	6346178	Link arm, left	
8	1	6346167	Pin	
9	1	6346177	Link arm, right	
10	2	6340179	Lock plate	
11	4	31098	Washer, 16 mm	16 mm
12	2	30222	Set screw	M16 x 40
13	2	30266	Set screw	M16 x 25
14	1	6346168	Pin	
15	1	6346170	Push rod	
16	1	6346171	Push rod	
17	2	23418	Bushing	PM 6570 DX
18	2	23422	Bushing	PM 9050 DX
19	3	31318	Lubricator	1/8" RG

2530L

63 46 030
Internal ref. 63 47 100

An Oshkosh Corportation Company

Obsolete

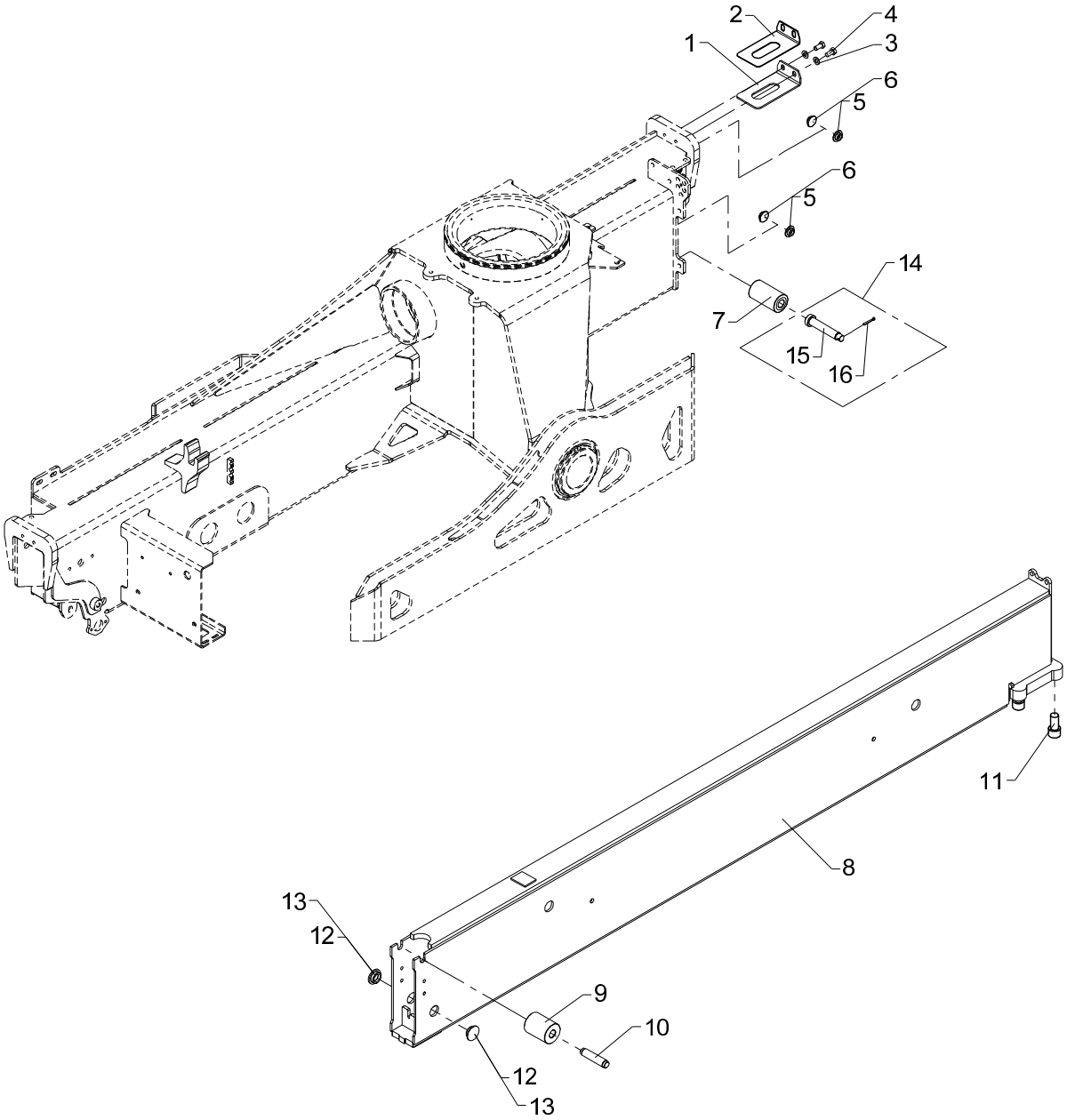

Obsolete

553 02 010

From loader 1270001
To loader

Created 17-11-2008
Modified 08-01-2014

Stabilizer beam, type SV - 5570

2530L

Pos	Qty.	Part no.	Description	Remarks
		6347100	Stabilizer beam, type SV	
		6346030	No detection, legs down	
1	1	6306156	Spacer	
2	1	6306722	Adjusting plate	
3	2	31565	Washer, stainless	10 mm
4	2	31517	Set screw, stainless	M10 x 20
5	4	63429	Guide	ø30 x 3 mm
6	4	63430	Guide	ø30 x 2 mm
7	1	63553	Guide roller	
8	1	6346121	Stabilizer beam (SV5570)	
9	1	63554	Guide roller	
10	1	6306167	Pin for guide roller	
11	4	30495	Screw	MC20 x 40
12	2	63681	Slide block	3 mm
13	2	64424	Slide block	3 mm
14	1	6346030	No detection, legs down	
15	1	6345982	Pin for guide roller	
16	1	31615	Split pin	ø4 x 32

2110L, 2530L

2530L

63 42 030
Internal ref. 63 47 100

An Oshkosh Corportation Company

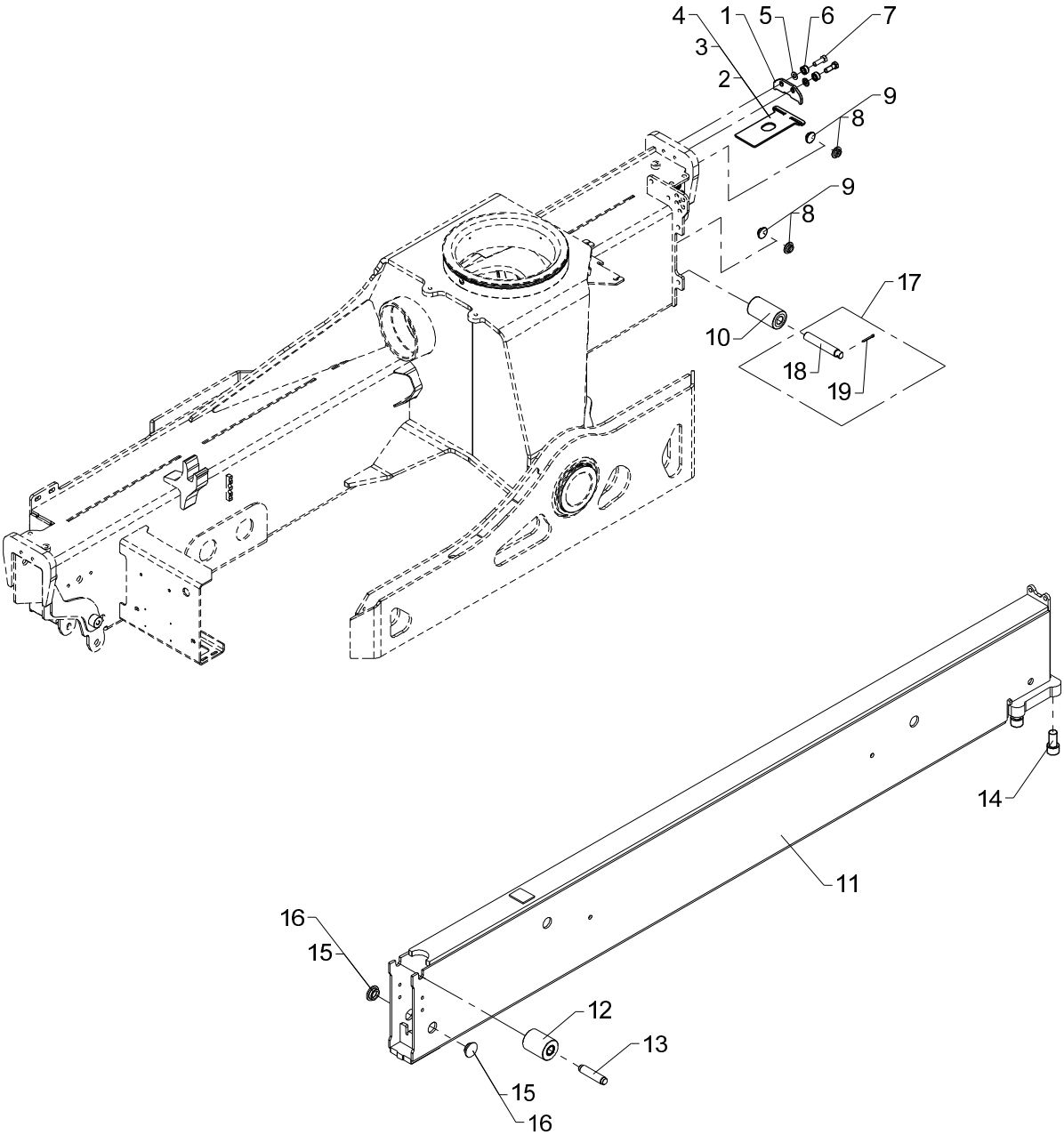

Stabilizer beam, type SV - 5570

2530L

Pos	Qty.	Part no.	Description	Remarks
		6347100	Stabilizer beam, type SV	
		6342030	No detection, legs down	
1	1	6353091	Bracket	
2	1	6353092	Spacer, 4 mm	4 mm
3	1	6353093	Spacer, 5 mm	5 mm
4	1	6353099	Spacer, 6 mm	6 mm
5	2	31565	Washer, stainless	10 mm
6	2	6344747	Spacer	
7	2	30156	Set screw, stainless	M10 x 30
8	4	63429	Guide	ø30 x 3 mm
9	4	63430	Guide	ø30 x 2 mm
10	1	63553	Guide roller	
11	1	6346121	Stabilizer beam (SV5570)	
12	1	63554	Guide roller	
13	1	6306167	Pin for guide roller	
14	4	30495	Screw	MC20 x 40
15	2	63681	Slide block	3 mm
16	2	64424	Slide block	2 mm
17	1	6342030	No detection, legs down	
18	1	6344048	Pin for guide roller	
19	1	31615	Split pin	ø4 x 32

2530L

63 46 030
Internal ref. 63 46 820

Obsolete

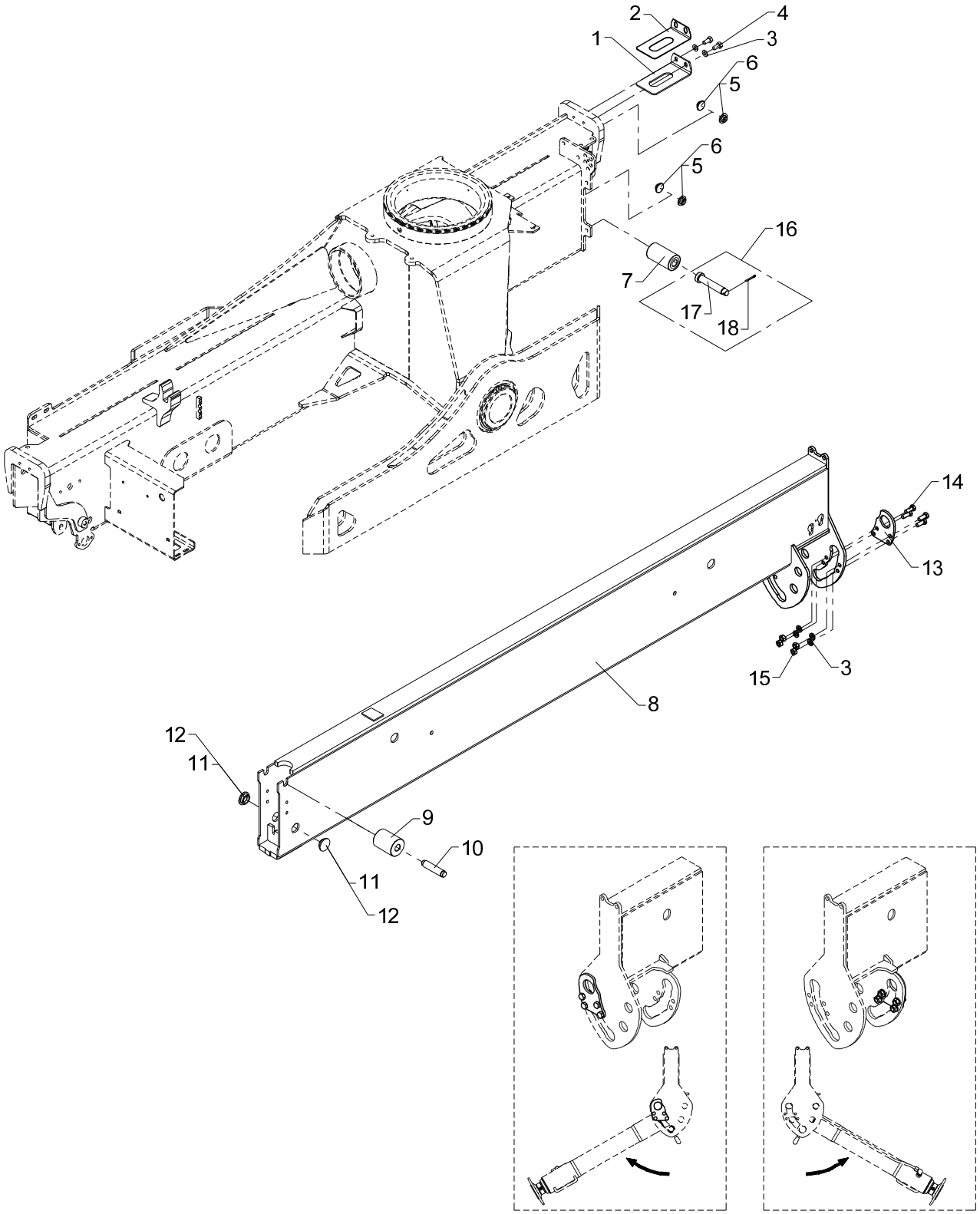

Obsolete

553 02 021

From loader 1270001
To loader

Created 10-07-2009
Modified 08-01-2014

Stabilizer beam, type SR-60°, 5570
2530L

Pos	Qty.	Part no.	Description	Remarks
		6346820	Stabilizer beam, type SR-60°	
		6346030	No detection, legs down	
1	1	6306156	Spacer	
2	1	6306722	Adjusting plate	
3	6	31565	Washer, stainless	10 mm
4	2	31517	Set screw, stainless	M10 x 20
5	4	63429	Guide	ø30 x 3 mm
6	4	63430	Guide	ø30 x 2 mm
7	1	63553	Guide roller	
8	1	6346861	Stabilizer beam, SR,reversible	
9	1	63554	Guide roller	
10	1	6306167	Pin for guide roller	
11	2	63681	Slide block	3 mm
12	2	64424	Slide block	3 mm
13	1	6342855	Plate	
14	4	30155	Set screw	M10 x 25
15	4	31551	Nut, stainless	M10
16	1	6346030	No detection, legs down	
17	1	6345982	Pin for guide roller	
18	1	31615	Split pin	ø4 x 32

2530L

63 42 030
Internal ref. 63 46 820

An Oshkosh Corportation Company

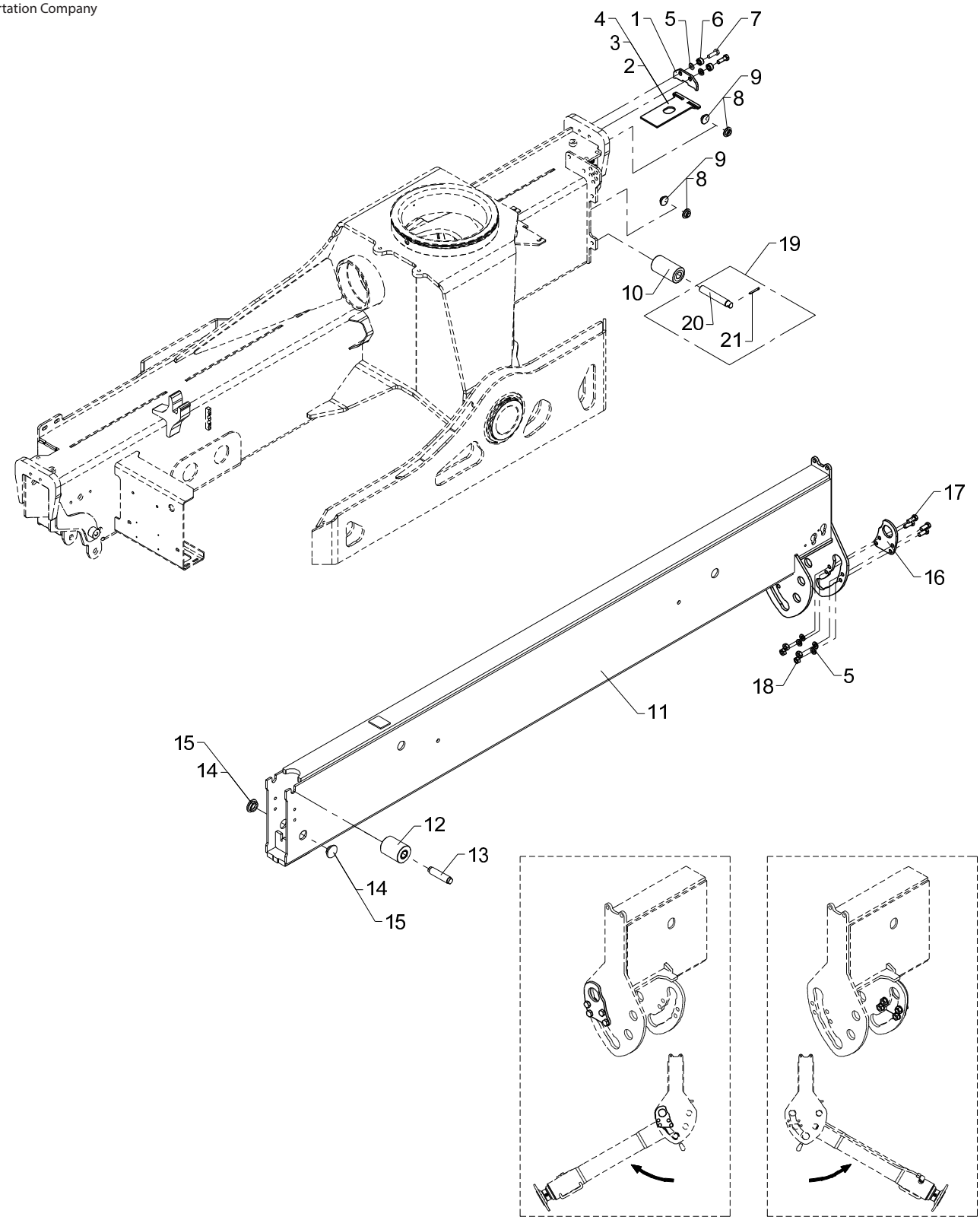

Stabilizer beam, type SR-60°, 5570
2530L

Pos	Qty.	Part no.	Description	Remarks
		6346820	Stabilizer beam, type SR-60°	
		6342030	No detection, legs down	
1	1	6353091	Bracket	
2	1	6353092	Spacer, 4 mm	4 mm
3	1	6353093	Spacer, 5 mm	5 mm
4	1	6353099	Spacer, 6 mm	6 mm
5	6	31565	Washer, stainless	10 mm
6	2	6344747	Spacer	
7	2	30156	Set screw, stainless	M10 x 30
8	4	63429	Guide	ø30 x 3 mm
9	4	63430	Guide	ø30 x 2 mm
10	1	63553	Guide roller	
11	1	6346861	Stabilizer beam, SR,reversible	
12	1	63554	Guide roller	
13	1	6306167	Pin for guide roller	
14	2	63681	Slide block	3 mm
15	2	64424	Slide block	2 mm
16	1	6342855	Plate	
17	4	30155	Set screw	M10 x 25
18	4	31551	Nut, stainless	M10
19	1	6342030	No detection, legs down	
20	1	6344048	Pin for guide roller	
21	1	31615	Split pin	ø4 x 32

2530L

63 46 030
Internal ref. 63 47 120

Obsolete

An Oshkosh Corportation Company

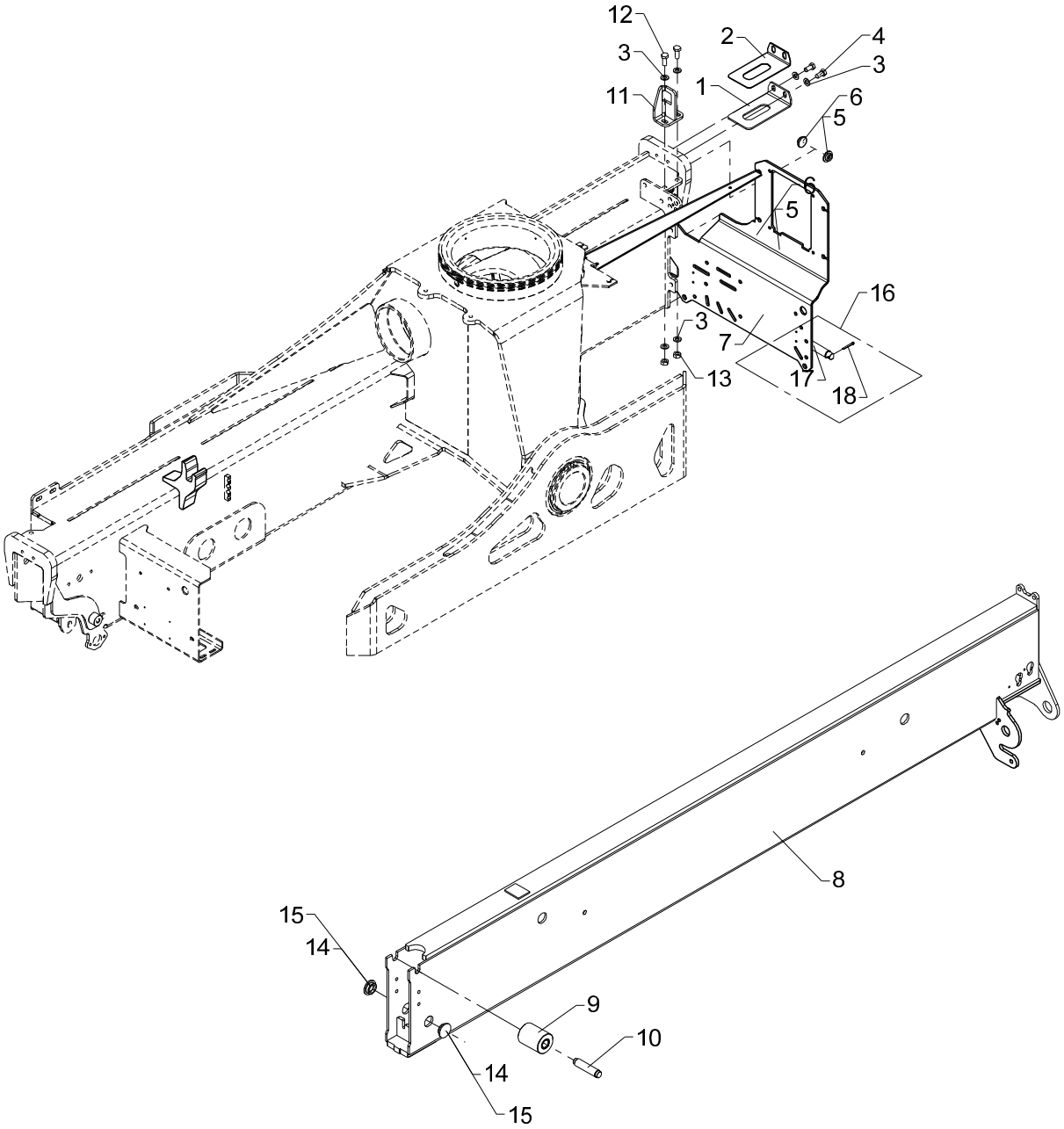

Obsolete

553 02 030

From loader 1270001
To loader

Created 17-11-2008
Modified 08-01-2014

Stabilizer beam, type SH - 5570

2530L

Pos	Qty.	Part no.	Description	Remarks
		6347120	Stabilizer beam, type SH	
		6346030	No detection, legs down	
1	1	6306156	Spacer	
2	1	6306722	Adjusting plate	
3	6	31565	Washer, stainless	10 mm
4	2	31517	Set screw, stainless	M10 x 20
5	4	63429	Guide	ø30 x 3 mm
6	4	63430	Guide	ø30 x 2 mm
7	1	63553	Guide roller	
8	1	6346135	Stabilizer beam (SH)	
9	1	63554	Guide roller	
10	1	6306167	Pin for guide roller	
11	1	6340817	Bracket	
12	2	30155	Set screw	M10 x 25
13	2	30858	Nut	M10
14	2	63681	Slide block	3 mm
15	2	64424	Slide block	2 mm
16	1	6346030	No detection, legs down	
17	1	6345982	Pin for guide roller	
18	1	31615	Split pin	ø4 x 32

2530L

63 42 030
Internal ref. 63 47 120

An Oshkosh Corportation Company

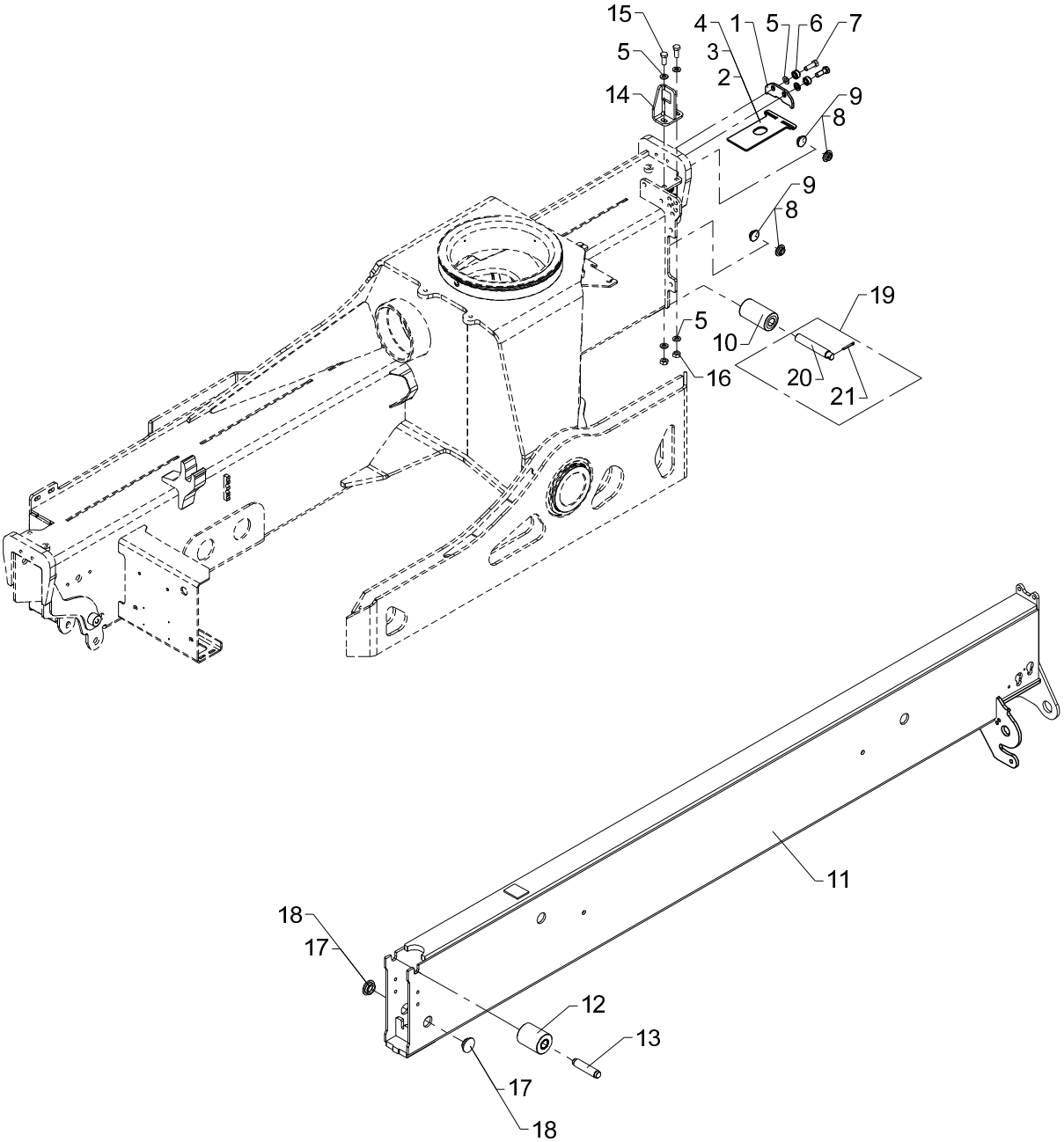

Stabilizer beam, type SH - 5570

2530L

Pos	Qty.	Part no.	Description	Remarks
		6347120	Stabilizer beam, type SH	
		6342030	No detection, legs down	
1	1	6353091	Bracket	
2	1	6353092	Spacer, 4 mm	4 mm
3	1	6353093	Spacer, 5 mm	5 mm
4	1	6353099	Spacer, 6 mm	6 mm
5	6	31565	Washer, stainless	10 mm
6	2	6344747	Spacer	
7	2	30156	Set screw, stainless	M10 x 30
8	4	63429	Guide	ø30 x 3 mm
9	4	63430	Guide	ø30 x 2 mm
10	1	63553	Guide roller	
11	1	6346135	Stabilizer beam (SH)	
12	1	63554	Guide roller	
13	1	6306167	Pin for guide roller	
14	1	6340817	Bracket	
15	2	30155	Set screw	M10 x 25
16	2	30858	Nut	M10
17	2	63681	Slide block	3 mm
18	2	64424	Slide block	2 mm
19	1	6342030	No detection, legs down	
20	1	6344048	Pin for guide roller	
21	1	31615	Split pin	ø4 x 32

2530L

63 46 030
Internal ref. 63 47 130

Obsolete

An Oshkosh Corportation Company

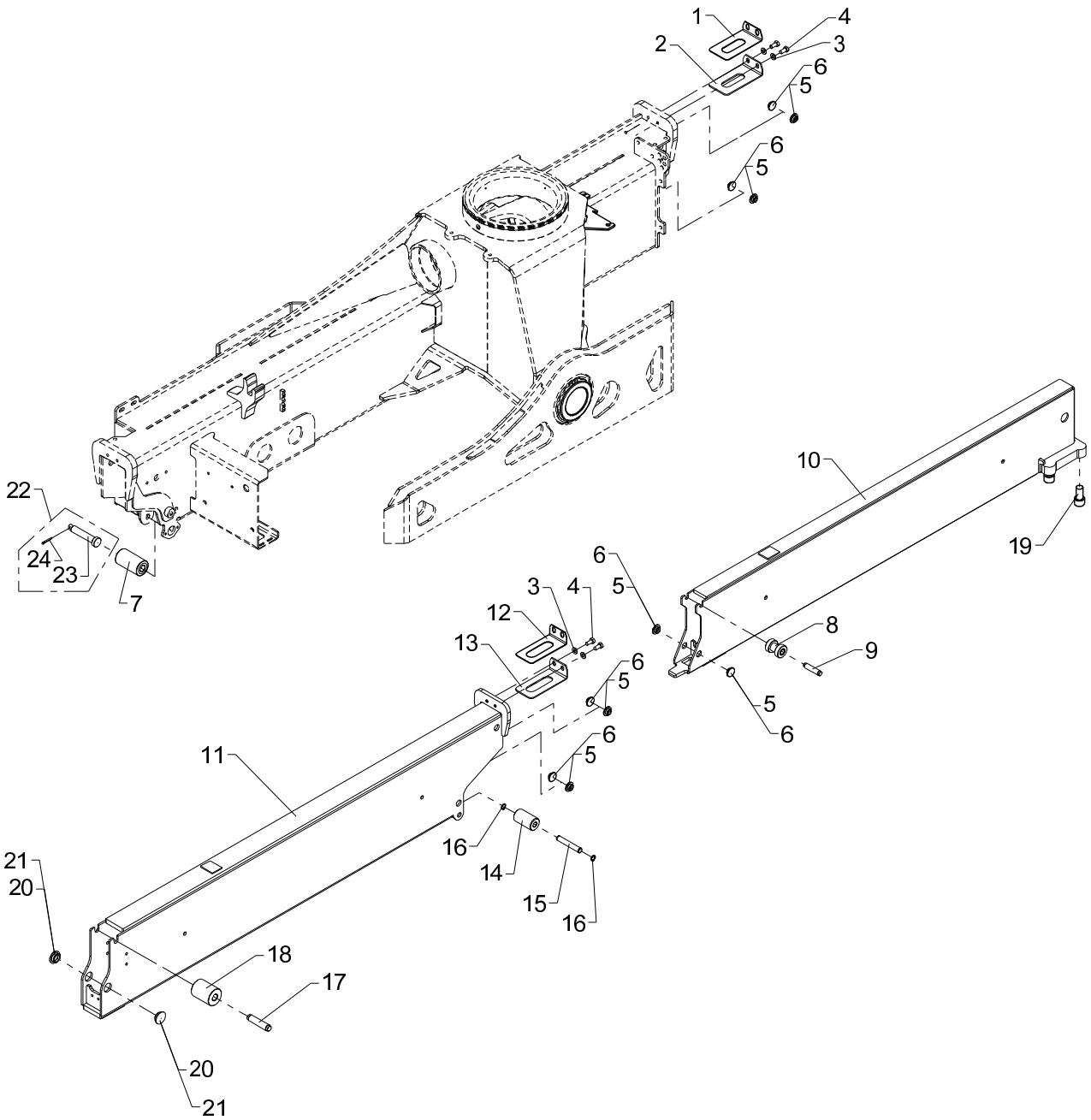

Obsolete

553 02 040

From loader 1270001
To loader

Stabilizer beam, type DV - 6450

2530L

Created 17-11-2008
Modified 08-01-2014

Pos	Qty.	Part no.	Description	Remarks
		6347130	Stabilizer beam, type DV	
		6346030	No detection, legs down	
1	1	6306722	Adjusting plate	
2	1	6306156	Spacer	
3	4	31565	Washer, stainless	10 mm
4	4	31517	Set screw, stainless	M10 x 20
5	10	63429	Guide	ø30 x 3 mm
6	10	63430	Guide	ø30 x 2 mm
7	1	63553	Guide roller	
8	1	63426	Guide roller	
9	1	6306168	Pin for guide roller	
10	1	6344101	Stabilizer beam II (DV-6450)	
11	1	6346091	Stabilizer beam I	
12	1	6306721	Adjusting plate	
13	1	6306157	Spacer	
14	1	63986	Guide roller	
15	1	6306166	Pin for guide roller	
16	2	33104	Circlip	15U
17	1	6306167	Pin for guide roller	
18	1	63554	Guide roller	
19	4	30495	Screw	MC20 x 40
20	2	63681	Slide block	3 mm
21	2	64424	Slide block	3 mm
22	1	6346030	No detection, legs down	
23	1	6345982	Pin for guide roller	
24	1	31615	Split pin	ø4 x 32

2530L

63 42 030
Internal ref. 63 47 130

An Oshkosh Corportation Company

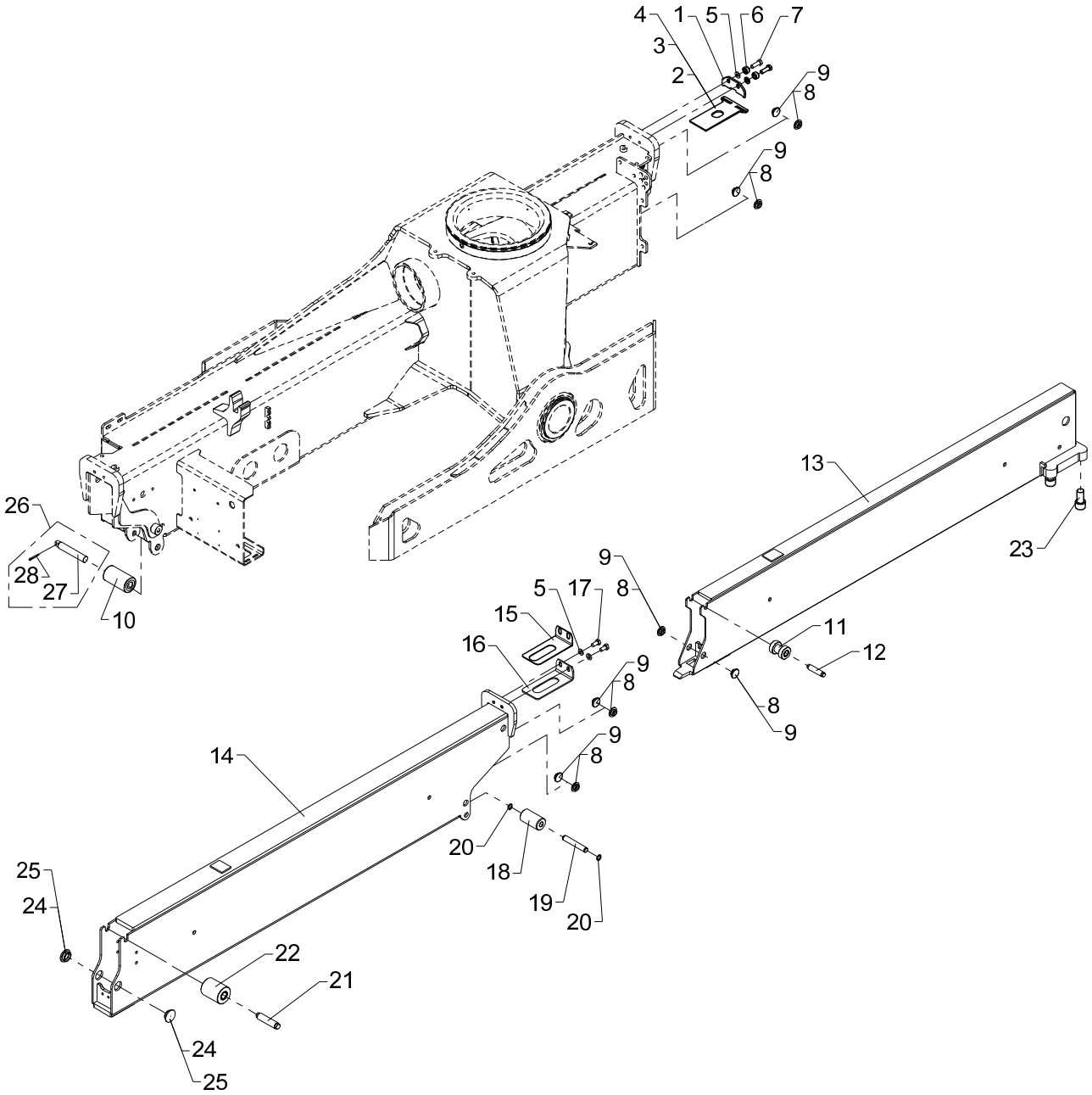

Stabilizer beam, type DV - 6450

2530L

Pos	Qty.	Part no.	Description	Remarks
		6347130	Stabilizer beam, type DV	
		6342030	No detection, legs down	
1	1	6353091	Bracket	
2	1	6353092	Spacer, 4 mm	4 mm
3	1	6353093	Spacer, 5 mm	5 mm
4	1	6353099	Spacer, 6 mm	6 mm
5	4	31565	Washer, stainless	10 mm
6	2	6344747	Spacer	
7	2	30156	Set screw, stainless	M10 x 30
8	10	63429	Guide	ø30 x 3 mm
9	10	63430	Guide	ø30 x 2 mm
10	1	63553	Guide roller	
11	1	63426	Guide roller	
12	1	6306168	Pin for guide roller	
13	1	6344101	Stabilizer beam II (DV-6450)	
14	1	6346091	Stabilizer beam I	
15	1	6306721	Adjusting plate	
16	1	6306157	Spacer	
17	2	31517	Set screw, stainless	M10 x 20
18	1	63986	Guide roller	
19	1	6306166	Pin for guide roller	
20	2	33104	Circlip	15U
21	1	6306167	Pin for guide roller	
22	1	63554	Guide roller	
23	4	30495	Screw	MC20 x 40
24	2	63681	Slide block	3 mm
25	2	64424	Slide block	2 mm
26	1	6342030	No detection, legs down	
27	1	6344048	Pin for guide roller	
28	1	31615	Split pin	ø4 x 32

An Oshkosh Corportation Company

2530L

63 46 030
Internal ref. 63 46 830

Obsolete

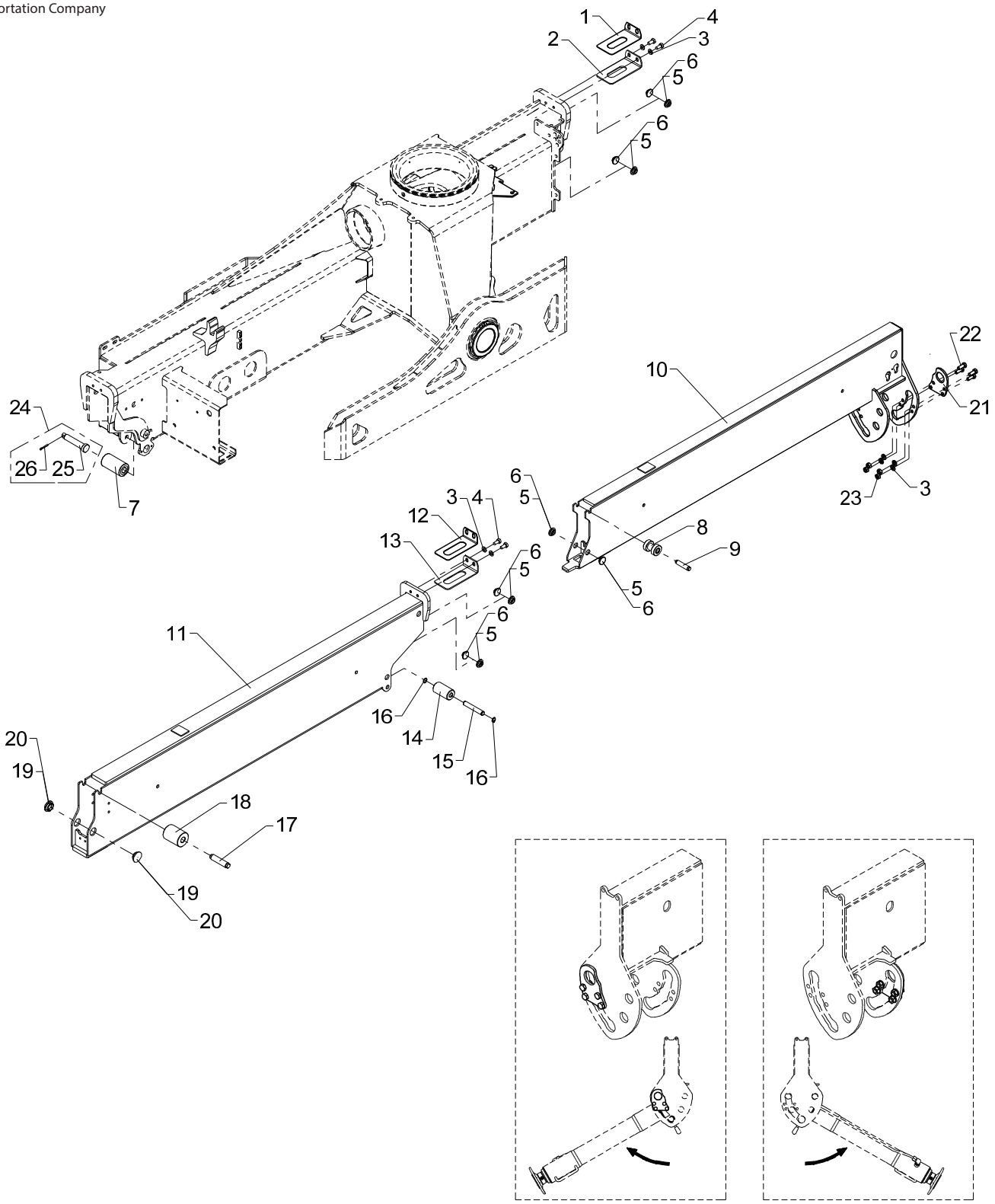

Obsolete

553 02 051

From loader 1270001
To loader

Created 10-07-2009
Modified 08-01-2014

Stabilizer beam, type DR-60°, 6450
2530L

Pos	Qty.	Part no.	Description	Remarks
		6346830	Stabilizer beam, type DR-60°	
		6346030	No detection, legs down	
1	1	6306722	Adjusting plate	
2	1	6306156	Spacer	
3	8	31565	Washer, stainless	10 mm
4	4	31517	Set screw, stainless	M10 x 20
5	10	63429	Guide	ø30 x 3 mm
6	10	63430	Guide	ø30 x 2 mm
7	1	63553	Guide roller	
8	1	63426	Guide roller	
9	1	6306168	Pin for guide roller	
10	1	6344851	Stabilizer beam, DR,reversible	
11	1	6346091	Stabilizer beam I	
12	1	6306721	Adjusting plate	
13	1	6306157	Spacer	
14	1	63986	Guide roller	
15	1	6306166	Pin for guide roller	
16	2	33104	Circlip	15U
17	1	6306167	Pin for guide roller	
18	1	63554	Guide roller	
19	2	63681	Slide block	3 mm
20	2	64424	Slide block	3 mm
21	1	6342855	Plate	
22	4	30155	Set screw	M10 x 25
23	4	31551	Nut, stainless	M10
24	1	6346030	No detection, legs down	
25	1	6345982	Pin for guide roller	
26	1	31615	Split pin	ø4 x 32

2530L

63 42 030
Internal ref. 63 46 830

An Oshkosh Corportation Company

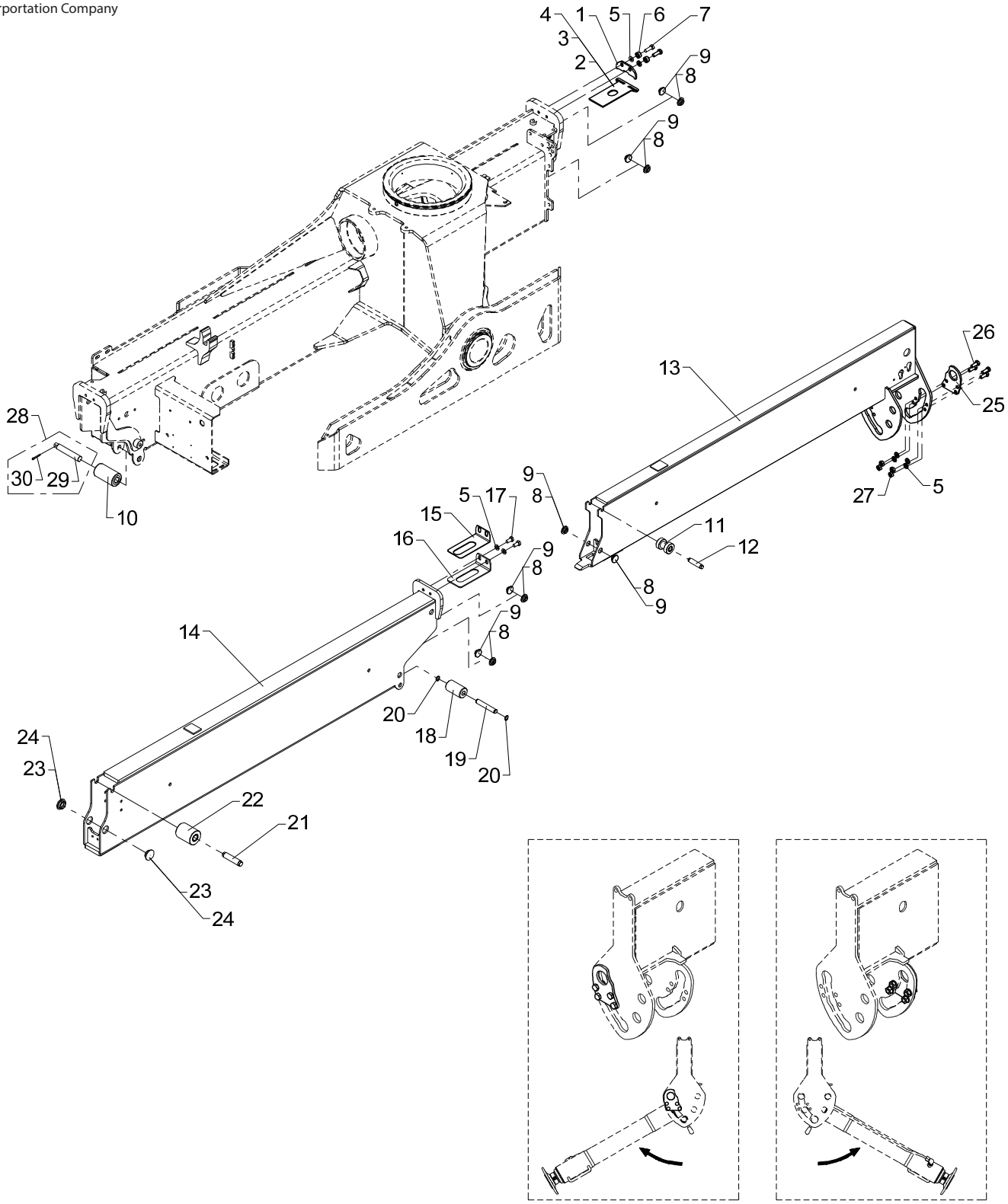

Stabilizer beam, type DR-60°, 6450
2530L

Pos	Qty.	Part no.	Description	Remarks
		6346830	Stabilizer beam, type DR-60°	
		6342030	No detection, legs down	
1	1	6353091	Bracket	
2	1	6353092	Spacer, 4 mm	4 mm
3	1	6353093	Spacer, 5 mm	5 mm
4	1	6353099	Spacer, 6 mm	6 mm
5	8	31565	Washer, stainless	10 mm
6	2	6344747	Spacer	
7	2	30156	Set screw, stainless	M10 x 30
8	10	63429	Guide	ø30 x 3 mm
9	10	63430	Guide	ø30 x 2 mm
10	1	63553	Guide roller	
11	1	63426	Guide roller	
12	1	6306168	Pin for guide roller	
13	1	6344851	Stabilizer beam, DR,reversible	
14	1	6346091	Stabilizer beam I	
15	1	6306721	Adjusting plate	
16	1	6306157	Spacer	
17	2	31517	Set screw, stainless	M10 x 20
18	1	63986	Guide roller	
19	1	6306166	Pin for guide roller	
20	2	33104	Circlip	15U
21	1	6306167	Pin for guide roller	
22	1	63554	Guide roller	
23	2	63681	Slide block	3 mm
24	2	64424	Slide block	2 mm
25	1	6342855	Plate	
26	4	30155	Set screw	M10 x 25
27	4	31551	Nut, stainless	M10
28	1	6342030	No detection, legs down	
29	1	6344048	Pin for guide roller	
30	1	31615	Split pin	ø4 x 32

2530L

63 46 030
Internal ref. 63 47 150

Obsolete

An Oshkosh Corportation Company

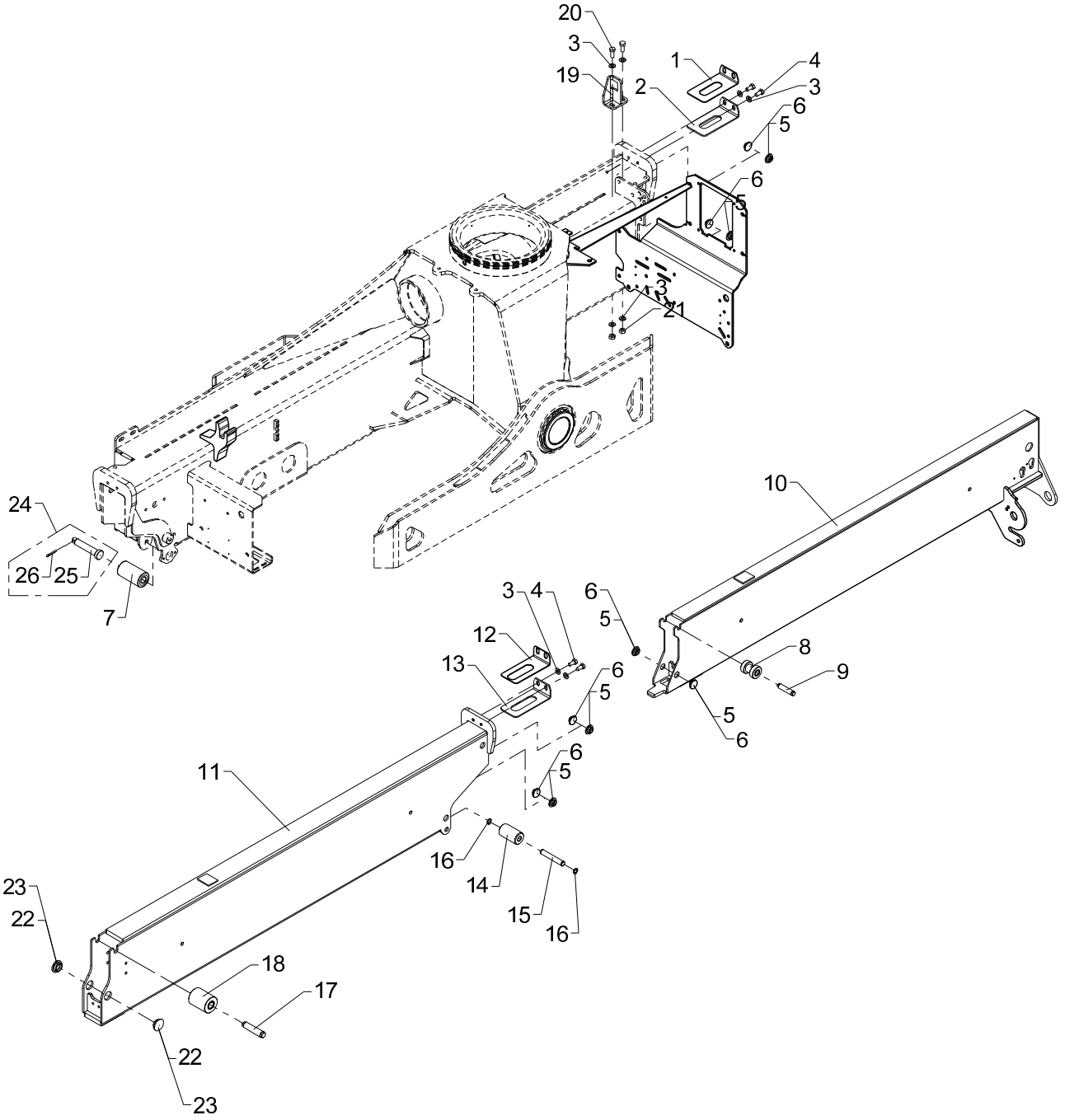

Obsolete

553 02 060

From loader 1270001
To loader

Created 17-11-2008
Modified 08-01-2014

Stabilizer beam, type DH - 6450

2530L

Pos	Qty.	Part no.	Description	Remarks
		6347150	Stabilizer beam, type DH	
		6346030	No detection, legs down	
1	1	6306722	Adjusting plate	
2	1	6306156	Spacer	
3	8	31565	Washer, stainless	10 mm
4	4	31517	Set screw, stainless	M10 x 20
5	10	63429	Guide	ø30 x 3 mm
6	10	63430	Guide	ø30 x 2 mm
7	1	63553	Guide roller	
8	1	63426	Guide roller	
9	1	6306168	Pin for guide roller	
10	1	6344115	Stabilizer beam II (DH)	
11	1	6346091	Stabilizer beam I	
12	1	6306721	Adjusting plate	
13	1	6306157	Spacer	
14	1	63986	Guide roller	
15	1	6306166	Pin for guide roller	
16	2	33104	Circlip	15U
17	1	6306167	Pin for guide roller	
18	1	63554	Guide roller	
19	1	6340817	Bracket	
20	2	30155	Set screw	M10 x 25
21	2	30858	Nut	M10
22	2	63681	Slide block	3 mm
23	2	64424	Slide block	2 mm
24	1	6346030	No detection, legs down	
25	1	6345982	Pin for guide roller	
26	1	31615	Split pin	ø4 x 32

2530L

63 42 030
Internal ref. 63 47 150

An Oshkosh Corportation Company

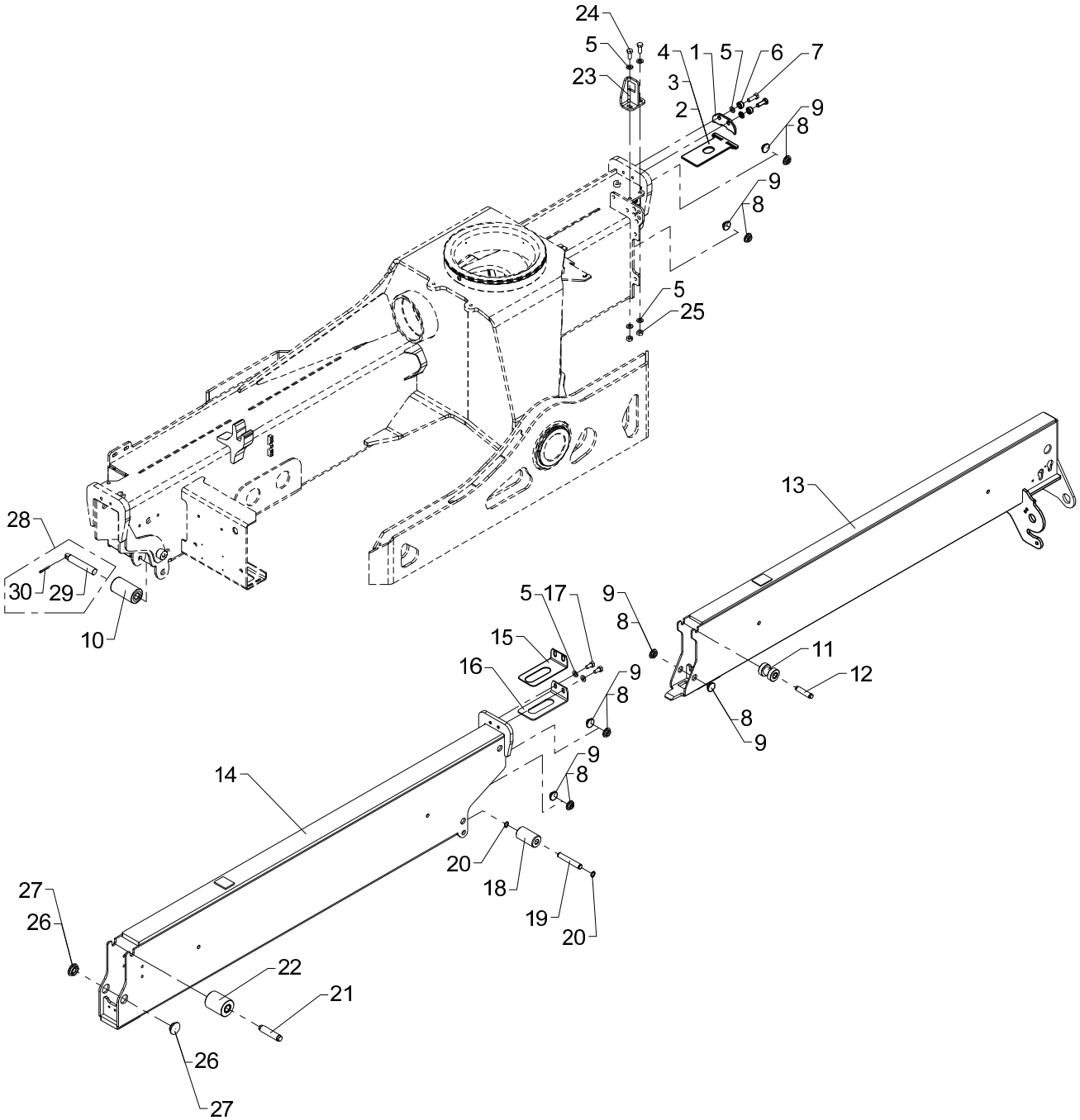

Stabilizer beam, type DH - 6450

2530L

Pos	Qty.	Part no.	Description	Remarks
		6347150	Stabilizer beam, type DH	
		6342030	No detection, legs down	
1	1	6353091	Bracket	
2	1	6353092	Spacer, 4 mm	4 mm
3	1	6353093	Spacer, 5 mm	5 mm
4	1	6353099	Spacer, 6 mm	6 mm
5	8	31565	Washer, stainless	10 mm
6	2	6344747	Spacer	
7	2	30156	Set screw, stainless	M10 x 30
8	10	63429	Guide	ø30 x 3 mm
9	10	63430	Guide	ø30 x 2 mm
10	1	63553	Guide roller	
11	1	63426	Guide roller	
12	1	6306168	Pin for guide roller	
13	1	6344115	Stabilizer beam II (DH)	
14	1	6346091	Stabilizer beam I	
15	1	6306721	Adjusting plate	
16	1	6306157	Spacer	
17	2	31517	Set screw, stainless	M10 x 20
18	1	63986	Guide roller	
19	1	6306166	Pin for guide roller	
20	2	33104	Circlip	15U
21	1	6306167	Pin for guide roller	
22	1	63554	Guide roller	
23	1	6340817	Bracket	
24	2	30155	Set screw	M10 x 25
25	2	30858	Nut	M10
26	2	63681	Slide block	3 mm
27	2	64424	Slide block	2 mm
28	1	6342030	No detection, legs down	
29	1	6344048	Pin for guide roller	
30	1	31615	Split pin	ø4 x 32

2530L

63 46 020
Internal ref. 63 42 020

Obsolete

An Oshkosh Corportation Company

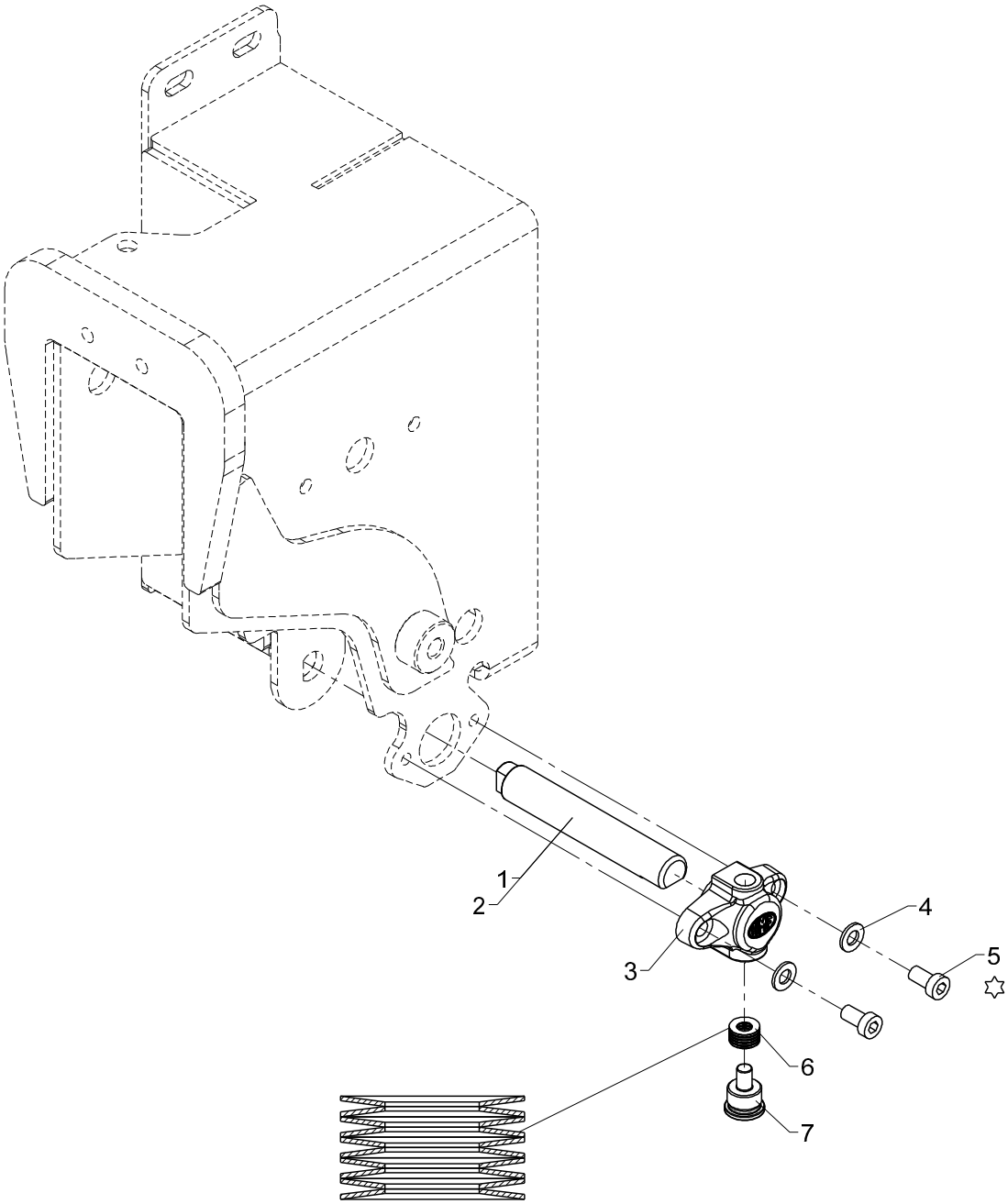

✡ Loctite 243

Obsolete

553 02 130

From loader 1270001
To loader

Created 18-11-2009
Modified 06-05-2014

Detection, stabilizer down (CYL/CYBEL)
2530L

Pos	Qty.	Part no.	Description	Remarks
		6342020	Detection, legs down CYL/CYBEL	
		6346020	Detection, legs down CYL/CYBEL	
1	1	6341981	Pin for guide roller	1300/1730
2	1	6345981	Pin for guide roller	1800/2430
3	1	64575	Housing	
4	2	31147	Face washer, 8 mm	8 mm
5	2	32478	Screw	M8 x 15
6	10	33496	Disc spring washer	
7	1	6341979	Pin	

2530L

Internal ref. 63 40 520

An Oshkosh Corportation Company

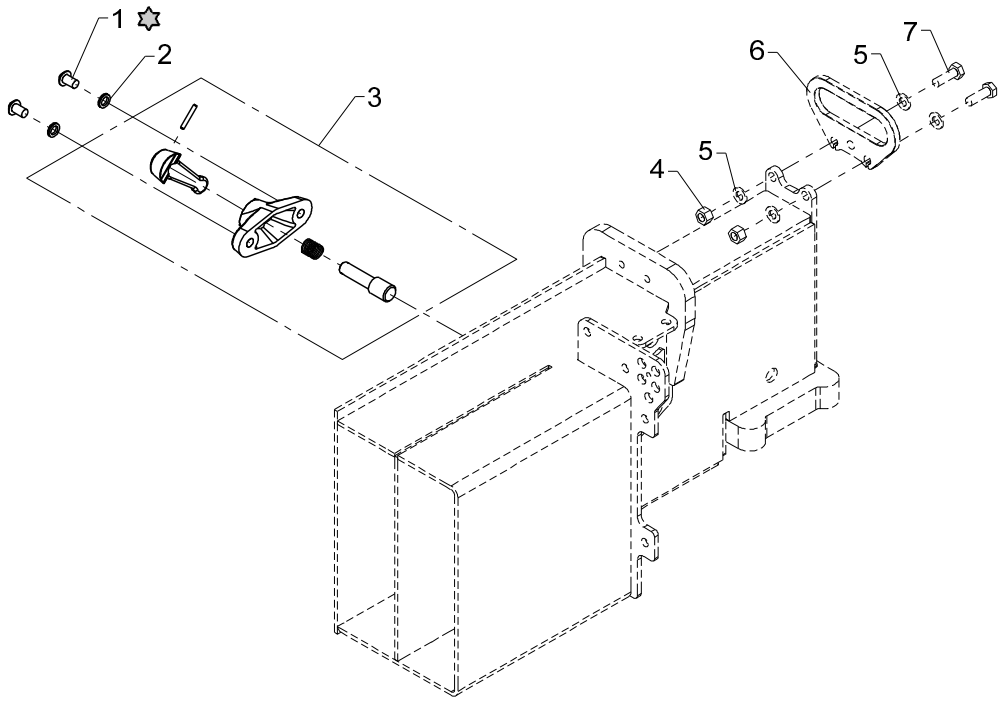

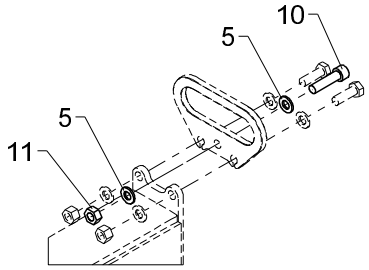

900K til 1230K

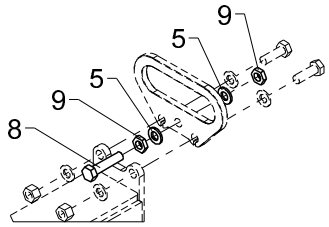

Kun til A = 4600

Loctite 243

Stabilizer lock and lever

2530L

Pos	Qty.	Part no.	Description	Remarks
		6340520	Stabilizer lock + handle	
1	2	31081	Screw	M10 x 16
2	2	30933	Nordlock washer	
3	1	63451	Stabilizer lock	
4	2	30888	Lock nut	
5	8	31565	Washer, stainless	10 mm
6	1	6306169	Lever, stabilizer beam	
7	2	30156	Set screw, stainless	M10 x 30
8	1	30377	Set screw	M10 x 45
9	2	32111	Counter nut	M10
10	1	30456	Screw	MC10 x 40
11	1	30858	Nut	M10

2530L

Internal ref. 63 41 810

An Oshkosh Corportation Company

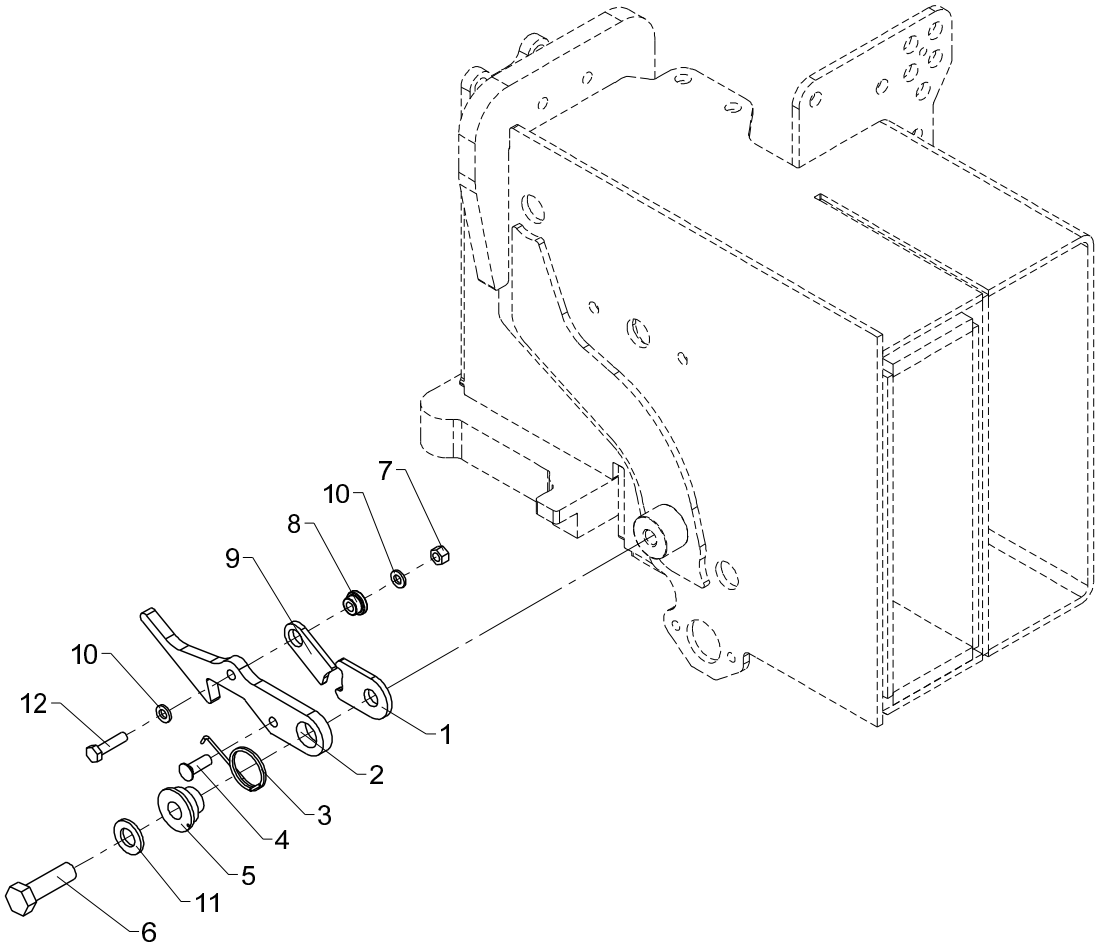

Stabilizer safety lock

2530L

Pos	Qty.	Part no.	Description	Remarks
1	1	6236044	Plate	
2	1	6245244	Hook	
3	1	33476	Spring	6247194
4	1	31290	Spike, galvanized	7 x 20
5	1	6245264	Bushing	
6	1	30179	Set screw	M12 x 40
7	1	30884	Lock nut, stainless	M6
8	1	63440	Washer	
9	1	6236054	Click	
10	2	32302	Face washer, stainless	6 mm
11	1	32338	Washer	12 mm
12	1	30114	Set screw, stainless	M6 x 25

2530L

Internal ref. 63 43 880

An Oshkosh Corportation Company

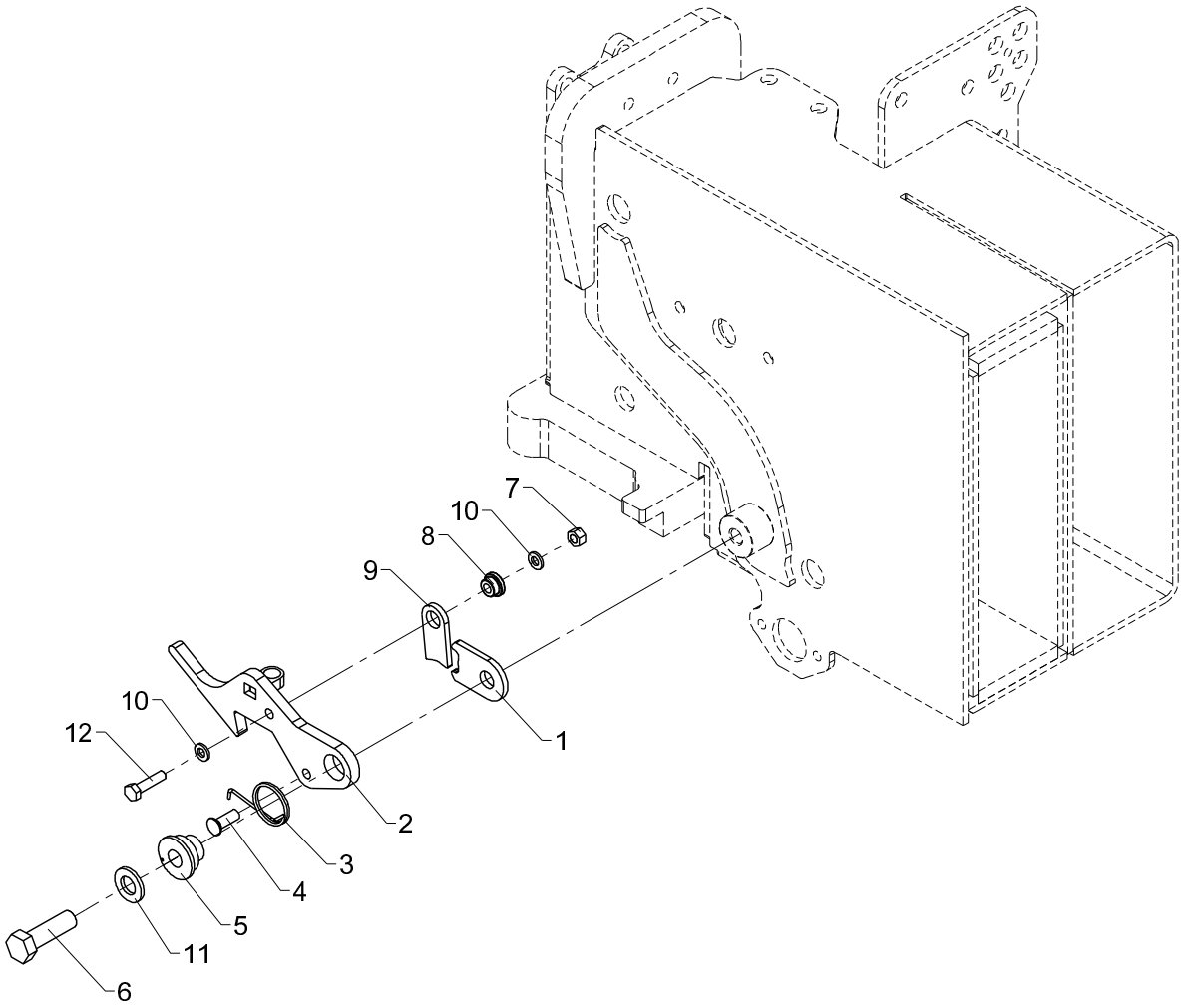

Safety lock (CE, manual extension)

2530L

Pos	Qty.	Part no.	Description	Remarks
1	1	6236044	Plate	
2	1	6341091	Latch	
3	1	33476	Spring	6247194
4	1	31290	Spike, galvanized	7 x 20
5	1	6245264	Bushing	
6	1	30179	Set screw	M12 x 40
7	1	30884	Lock nut, stainless	M6
8	1	63440	Washer	
9	1	6236054	Click	
10	2	32302	Face washer, stainless	6 mm
11	1	32338	Washer	12 mm
12	1	30114	Set screw, stainless	M6 x 25

2530L

Internal ref. 63 44 500

An Oshkosh Corportation Company

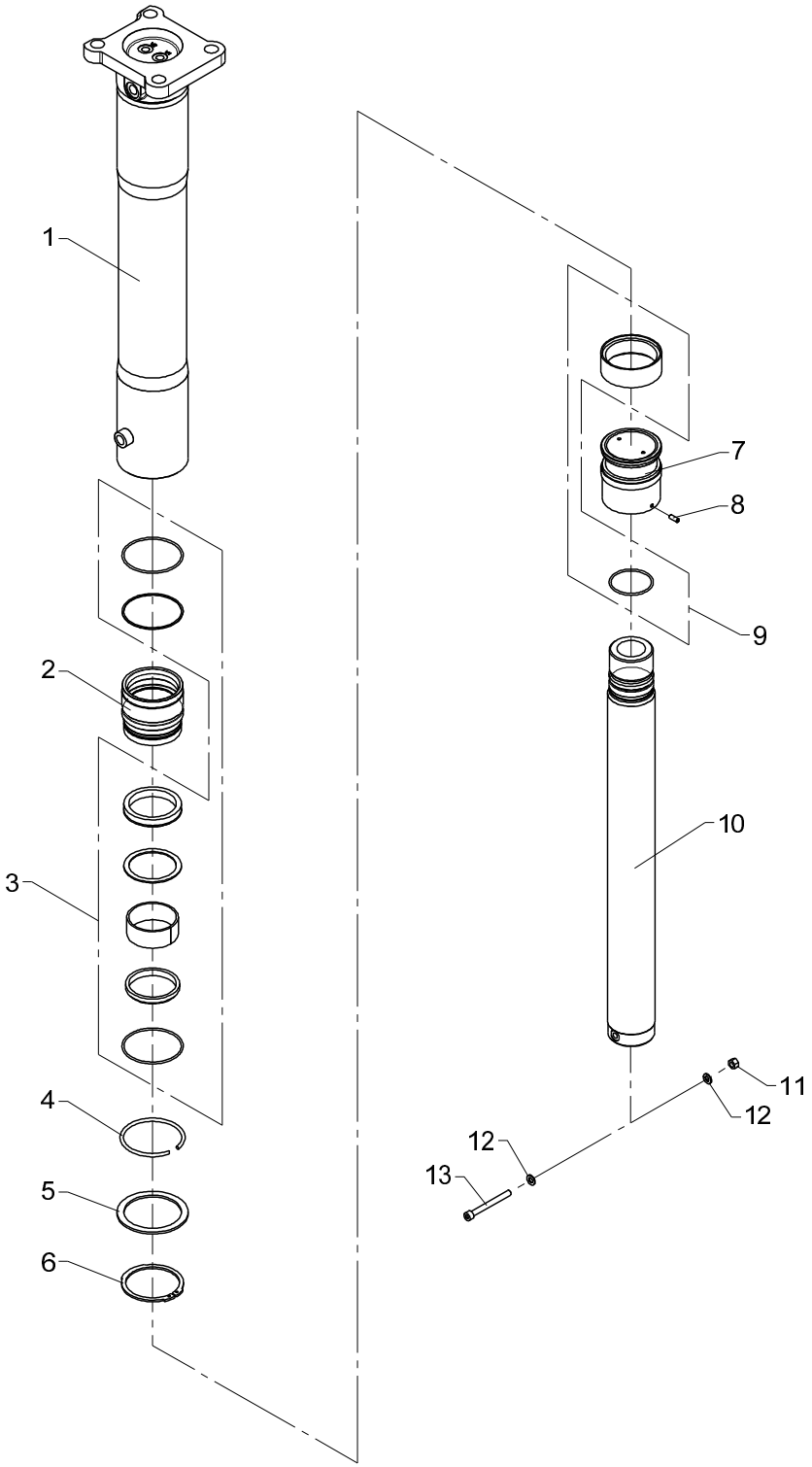

* 1244Z/1444Z: no footplate with ball joint.

Stabilizer cylinder, C90-520, type V
2530L

Pos	Qty.	Part no.	Description	Remarks
1	1	6344504	Cylinder pipe, fixed leg	
2	1	6306501	Guide	
3	1	6893840	Seal kit, guide	
4	1	33488	Lock ring, black	
5	1	33236	Back ring	SS 85 x 105 x 3,5
6	1	33145	Circlip	80U
7	1	6306502	Piston	
8	1	30562	Pointed screw, stainless	MPS6 x 16
9	1	6893850	Seal kit, piston + rod	
10	1	6306503	Piston rod	
11	1	30886	Lock nut, stainless	M8
12	2	31147	Face washer, 8 mm	
13	1	30965	Screw	MC8 x 80

2530L

Internal ref. 63 43 470

An Oshkosh Corportation Company

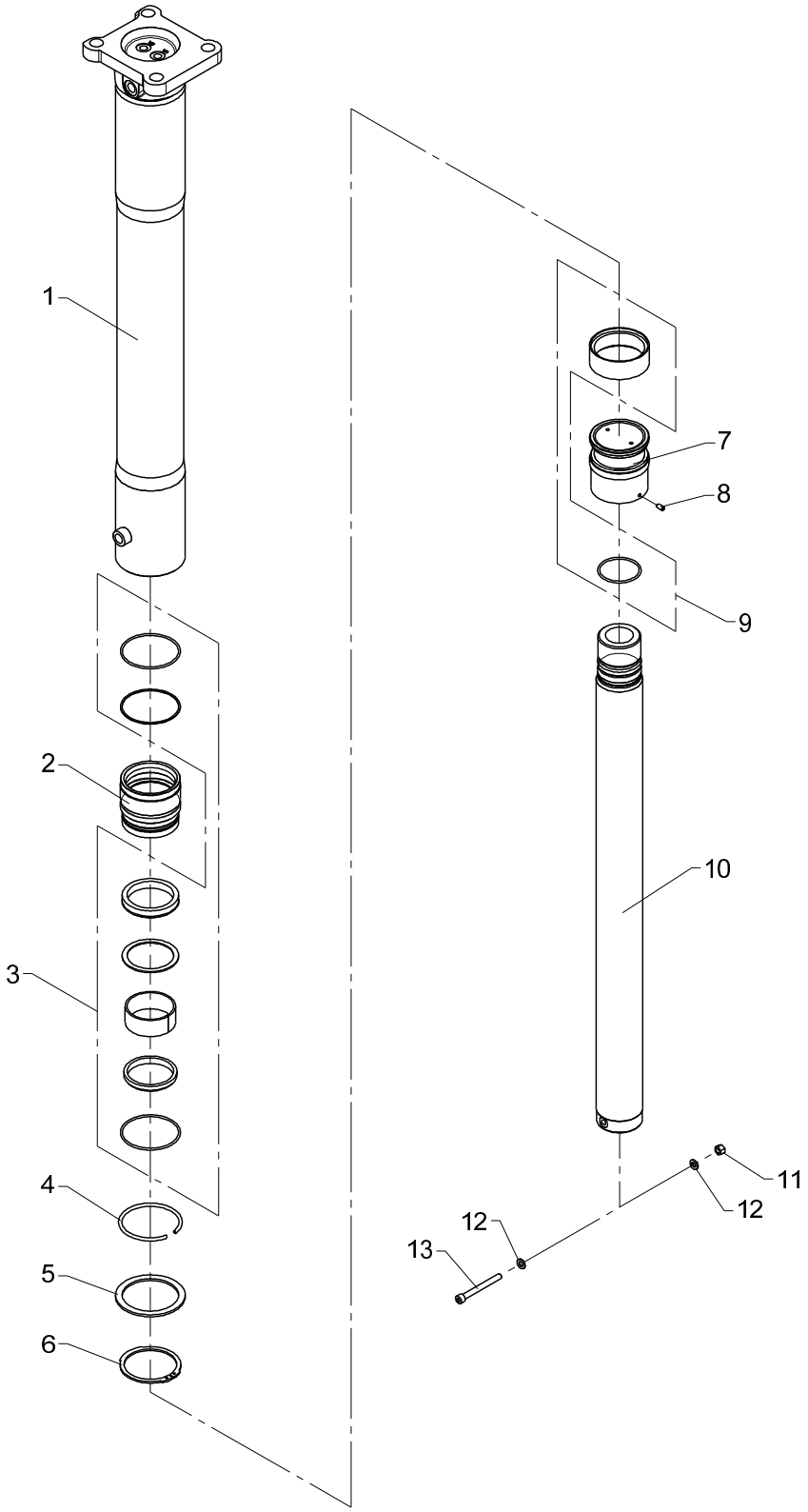

From loader 1270001
To loader

Stabilizer cylinder, C90-720, type V
2530L

Created 07-10-2014
Modified 28-01-2016

Pos	Qty.	Part no.	Description	Remarks
1	1	6343471	Cylinder tube, fixed leg	
2	1	6306501	Guide	
3	1	6893840	Seal kit, guide	
4	1	33488	Lock ring, black	
5	1	33236	Back ring	SS 85 x 105 x 3,5
6	1	33145	Circlip	80U
7	1	6306502	Piston	
8	1	32256	Pointed screw	MSP6 x 12
9	1	6893850	Seal kit, piston + rod	
10	1	6343473	Piston rod	
11	1	30886	Lock nut, stainless	M8
12	2	31147	Face washer, 8 mm	
13	1	30965	Screw	MC8 x 80

2530L

Internal ref. 63 44 510

An Oshkosh Corportation Company

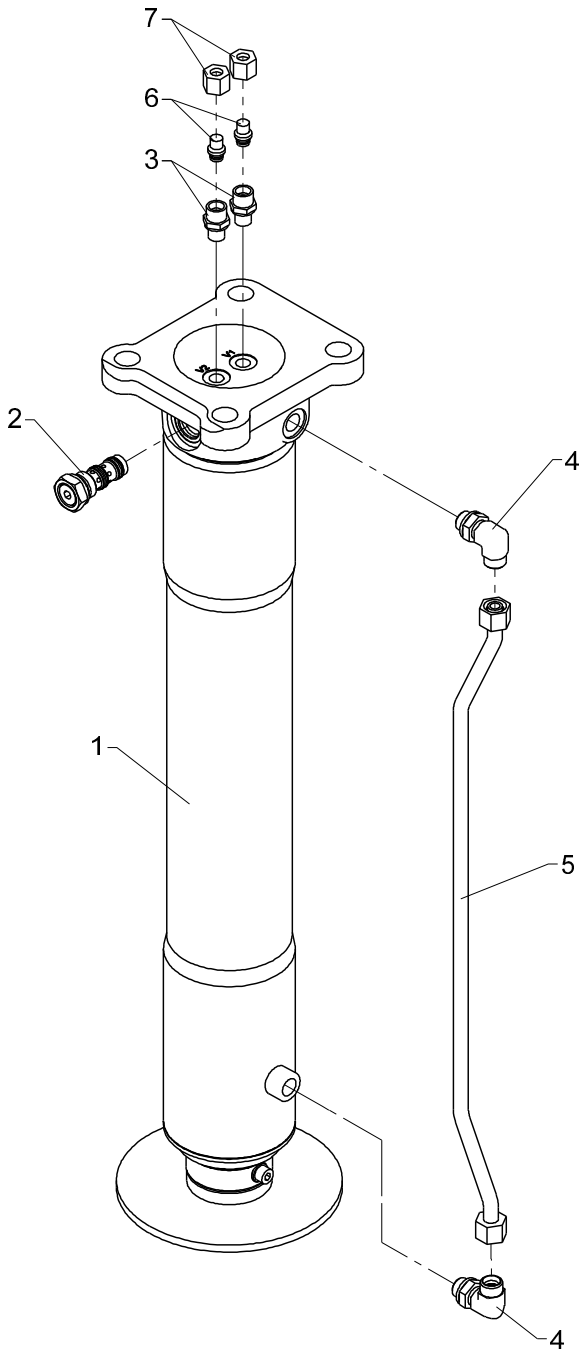

From loader 1270001
To loader

Stabilizer cylinder with check valve, C90-520, type V

2530L

Created 06-01-2009
Modified 02-05-2014

Pos	Qty.	Part no.	Description	Remarks
1	1	6344500	Stabilizer cylinder C90-520	
2	1	58496	Cartridge	
3	2	25121	Connection	P-GEV 10 LR-WD
4	2	26897	Elbow connection	12 mm - 3/8"
5	1	6344514	Pipe	
6	2	25202	Blanking plug	VSD 10 L
7	2	25182	Coupling nut	M 10 L

2530L

Internal ref. 63 43 480

An Oshkosh Corportation Company

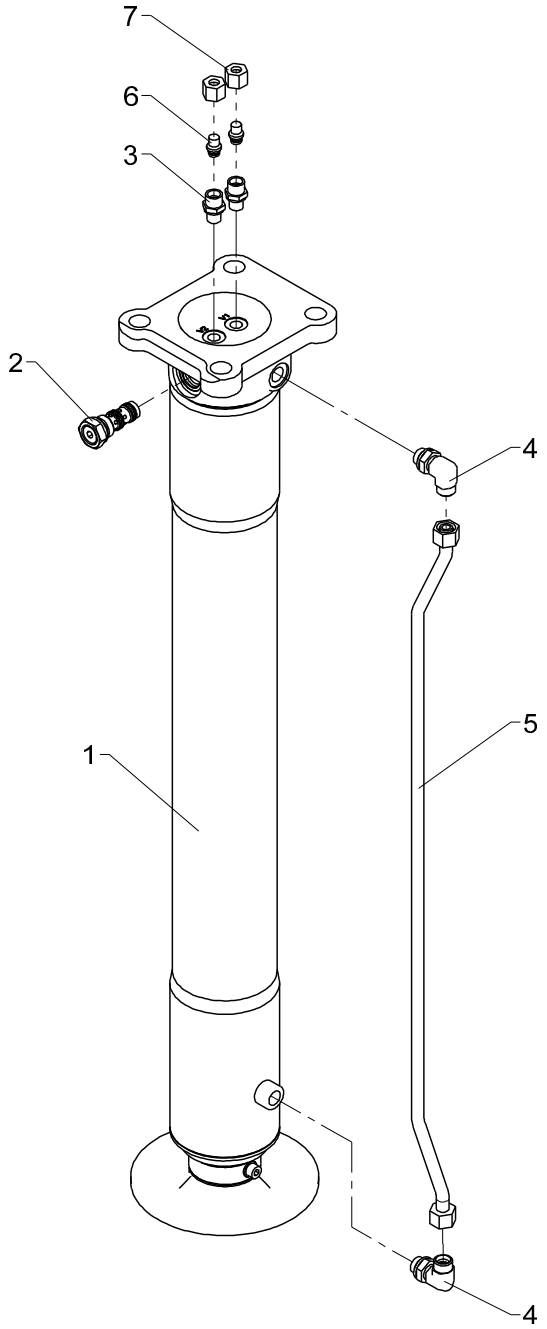

Stabilizer cylinder with check valve, C90-720, type V

2530L

Pos	Qty.	Part no.	Description	Remarks
1	1	6343470	Stabilizer cylinder, C90-720	
2	1	58496	Cartridge	
3	2	25121	Connection	P-GEV 10 LR-WD
4	2	26897	Elbow connection	12 mm - 3/8"
5	1	6343481	Pipe, V	
6	2	25202	Blanking plug	VSD 10 L
7	2	25182	Coupling nut	M 10 L

2530L

Internal ref. 63 45 800

An Oshkosh Corportation Company

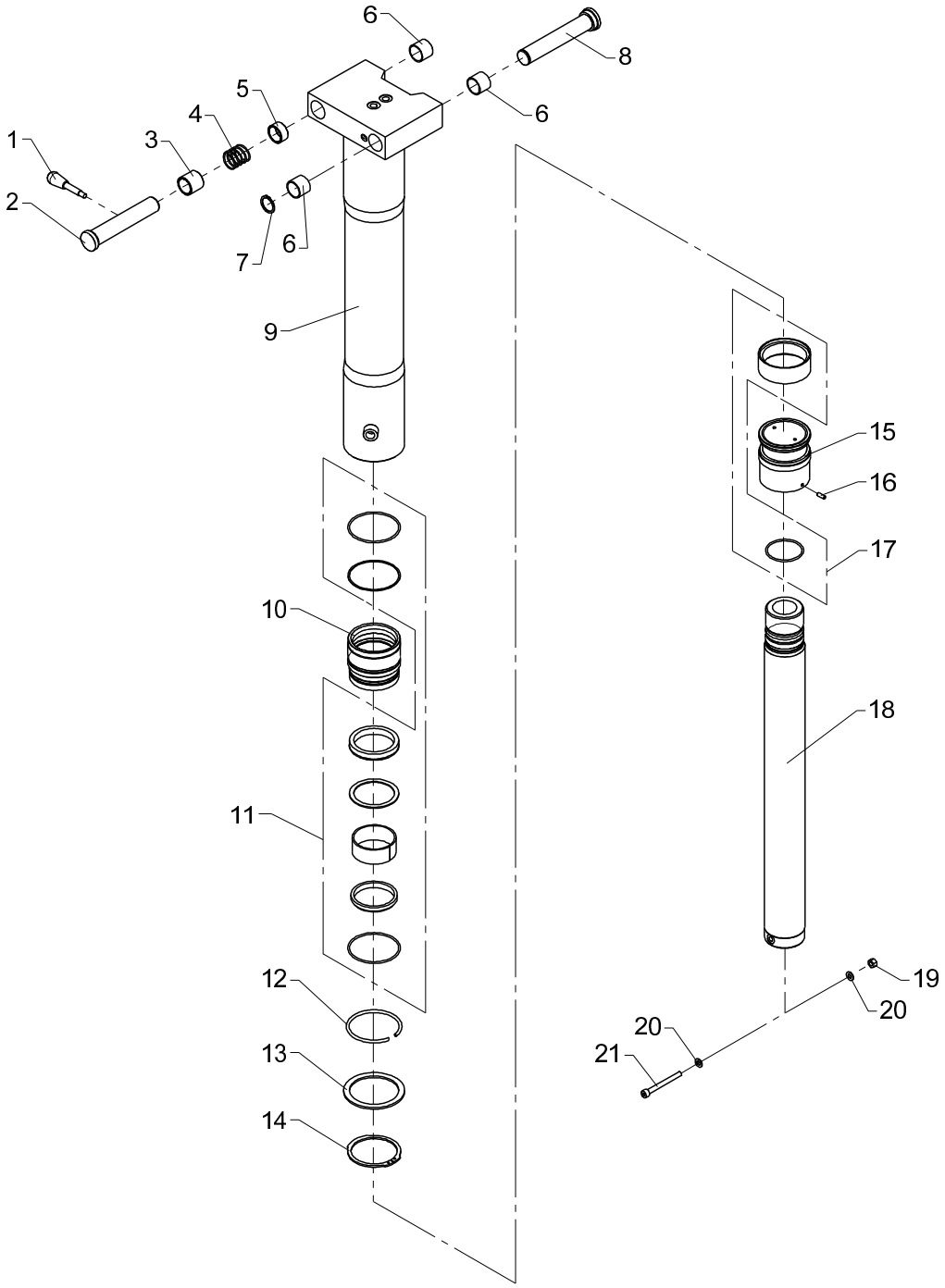

Stabilizer cylinder, C90-520, type R-60°
2530L

Pos	Qty.	Part no.	Description	Remarks
1	1	64352	Lever with knob	
2	1	6344812	Pin	
3	1	6340824	Bushing	
4	1	33490	Compression spring	
5	1	6340811	Distance ring	
6	3	23417	Composite bearing	ø28/32 x 25
7	1	33122	Circlip	28U
8	1	6344814	Pin	
9	1	6344821	Cylinder tube	
10	1	6306501	Guide	
11	1	6893840	Seal kit, guide	
12	1	33488	Lock ring, black	
13	1	33236	Back ring	SS 85 x 105 x 3,5
14	1	33145	Circlip	80U
15	1	6306502	Piston	
16	1	30562	Pointed screw, stainless	MPS6 x 16
17	1	6893850	Seal kit, piston + rod	
18	1	6306503	Piston rod	
19	1	30886	Lock nut, stainless	M8
20	2	31147	Face washer, 8 mm	
21	1	30965	Screw	MC8 x 80

2530L

Internal ref. 63 45 170

An Oshkosh Corportation Company

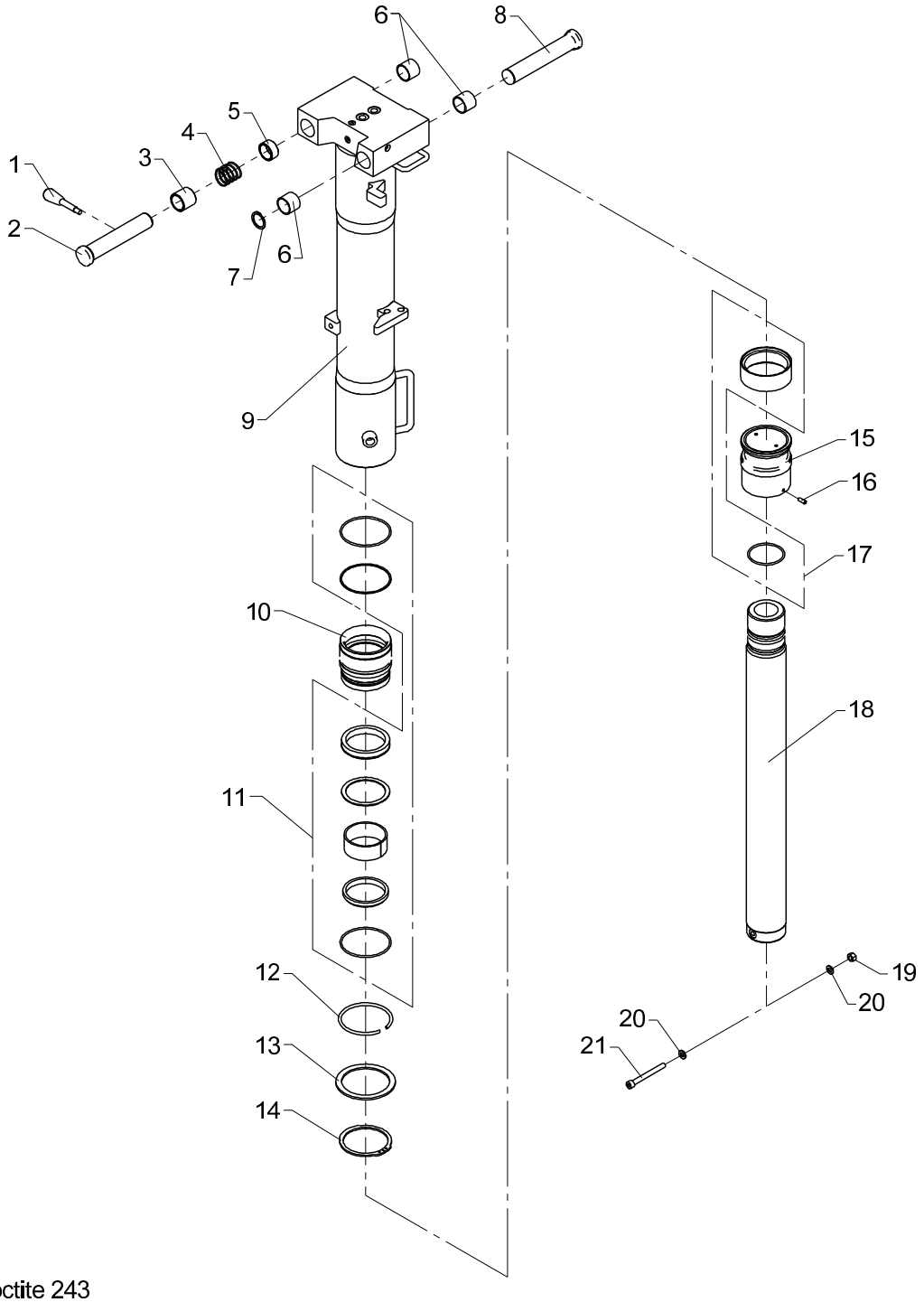

✡ Loctite 243

Stabilizer cylinder, C90-520, type R-180°

2530L

Pos	Qty.	Part no.	Description	Remarks
1	1	64352	Lever with knob	
2	1	6344812	Pin	
3	1	6340824	Bushing	
4	1	33490	Compression spring	
5	1	6340811	Distance ring	
6	3	23417	Composite bearing	ø28/32 x 25
7	1	33122	Circlip	28U
8	1	6344813	Pin	
9	1	6344828	Cylinder tube R180	
10	1	6306501	Guide	
11	1	6893840	Seal kit, guide	
12	1	33488	Lock ring, black	
13	1	33236	Back ring	SS 85 x 105 x 3,5
14	1	33145	Circlip	80U
15	1	6306502	Piston	
16	1	30562	Pointed screw, stainless	MPS6 x 16
17	1	6893850	Seal kit, piston + rod	
18	1	6306503	Piston rod	
19	1	30886	Lock nut, stainless	M8
20	2	31147	Face washer, 8 mm	
21	1	30965	Screw	MC8 x 80

2530L

Internal ref. 63 45 810

An Oshkosh Corportation Company

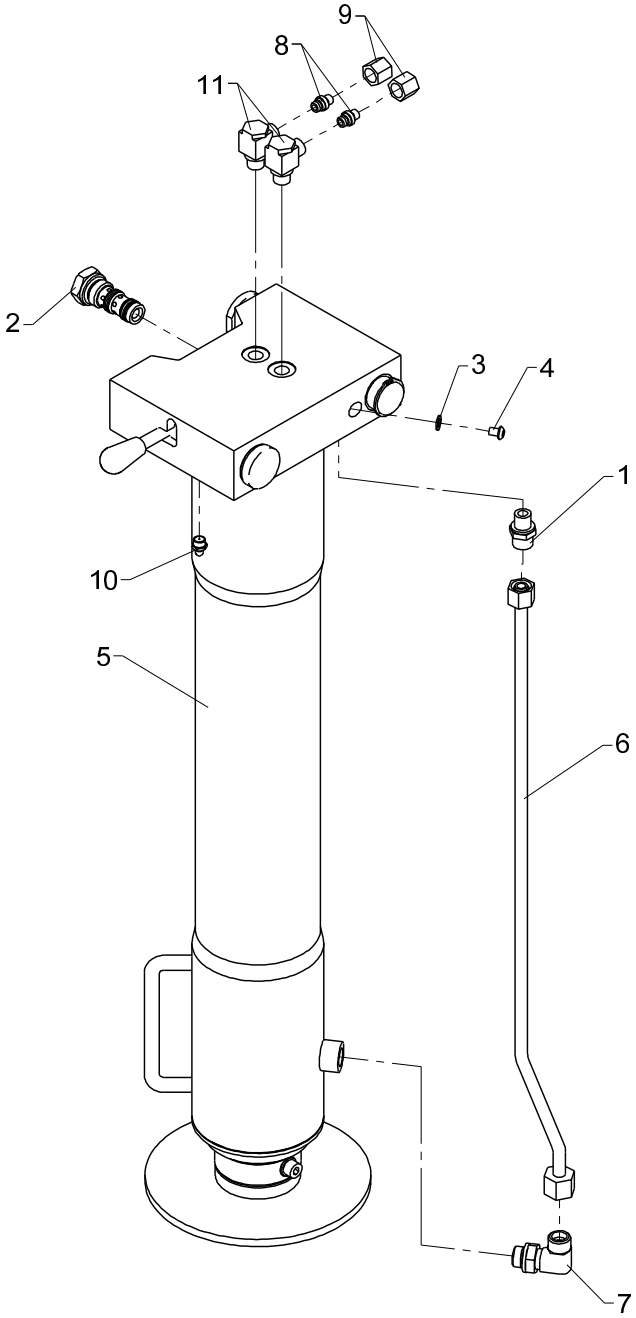

From loader 1270001
To loader

Stabilizer cylinder with check valve, type R-60°
2530L

Created 30-06-2009
Modified 02-05-2014

Pos	Qty.	Part no.	Description	Remarks
1	1	25121	Connection	P-GEV 10 LR-WD
2	1	58496	Cartridge	
3	1	21109	Seal washer	ø7,1 x 12 x 1
4	1	31778	Screw, stainless	M6 x 8
5	1	6345800	Stabilizer cylinder C90-520, R	
6	1	6340823	Pipe, R	
7	1	26899	Elbow connection	12 mm - 3/8"
8	2	26166	Blanking plug	VSD 8 L
9	2	25181	Coupling nut	M 8 L
10	1	31318	Lubricator	1/8" RG
11	2	25113	Banjo connection	RSWV 8 LR

2530L

Internal ref. 63 44 930

An Oshkosh Corportation Company

Patentanmeldt.
Patent pending.
Patentangemeldet.
La demande de brêvet a été déposée.
Solicitud de patente.

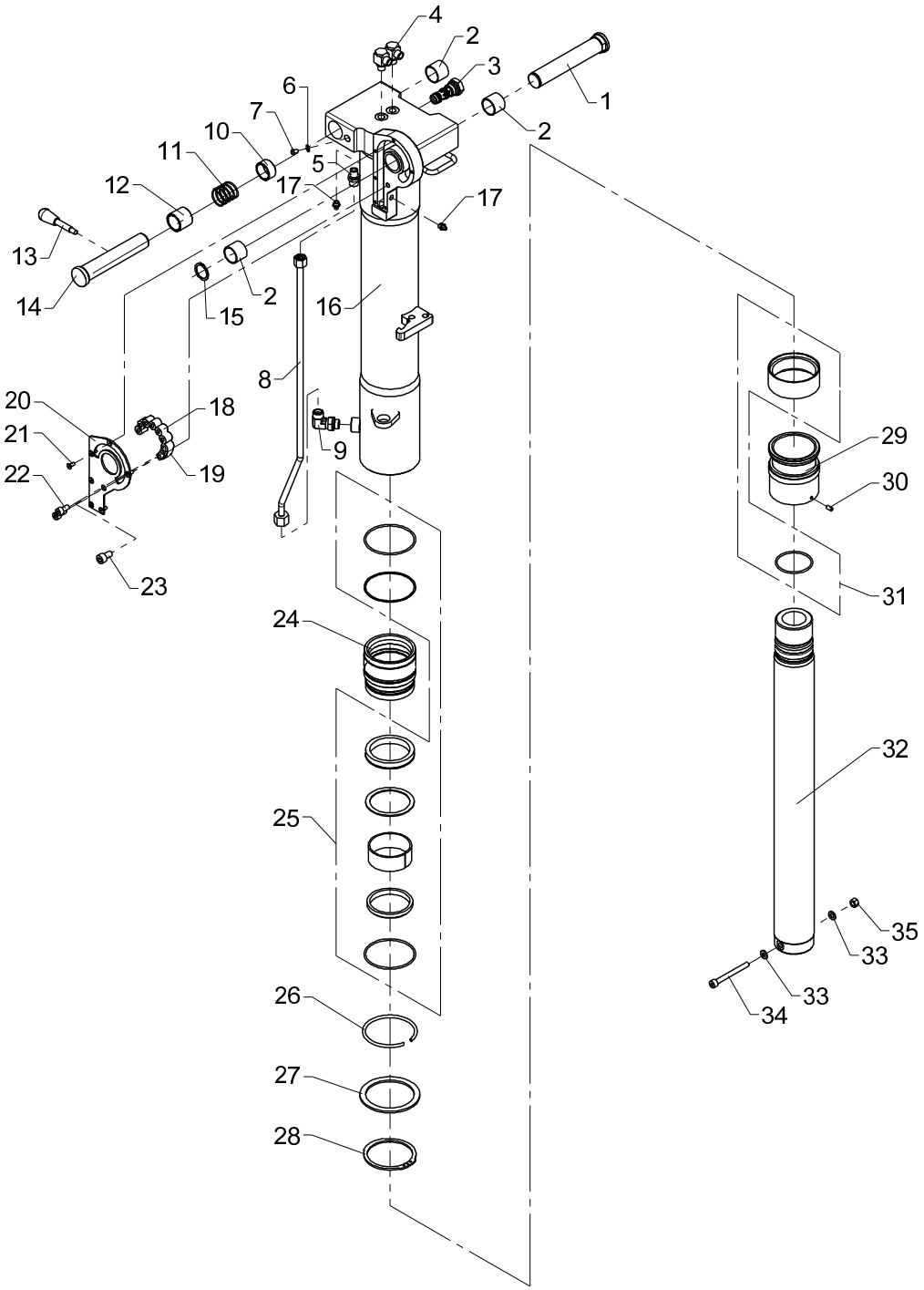

Stabilizer cylinder, C90-520, type HR
2530L

Pos	Qty.	Part no.	Description	Remarks
1	1	6344813	Pin	
2	3	23417	Composite bearing	ø28/32 x 25
3	1	58496	Cartridge	
4	2	25113	Banjo connection	RSWV 8 LR
5	1	25121	Connection	P-GEV 10 LR-WD
6	1	21109	Seal washer	ø7,1 x 12 x 1
7	1	31778	Screw, stainless	M6 x 8
8	1	6344825	Pipe	
9	1	26899	Elbow connection	12 mm - 3/8"
10	1	6340811	Distance ring	
11	1	33490	Compression spring	
12	1	6340824	Bushing	
13	1	64352	Lever with knob	
14	1	6344812	Pin	
15	1	33122	Circlip	28U
16	1	6344806	Cylinder pipe, HR	
17	2	31318	Lubricator	1/8" RG
18	7	23120	Cylindrical roller	RC 16 x 16 CD
19	1	6340808	Stop	
20	1	6340807	Cover	
21	6	32405	Sockethead screw	MK5 x 12
22	2	30449	Screw	MC8 x 16
23	1	30964	Screw	MC10 x 16
24	1	6306501	Guide	
25	1	6893840	Seal kit, guide	
26	1	33488	Lock ring, black	
27	1	33236	Back ring	SS 85 x 105 x 3,5
28	1	33145	Circlip	80U
29	1	6306502	Piston	
30	1	32256	Pointed screw	MSP6 x 12
31	1	6893850	Seal kit, piston + rod	
32	1	6306503	Piston rod	
33	2	31147	Face washer, 8 mm	
34	1	30965	Screw	MC8 x 80
35	1	30886	Lock nut, stainless	M8

2530L

Internal ref. 63 43 980

An Oshkosh Corportation Company

Patentanmeldt.
Patent pending.
Patentangemeldet.
La demande de brêvet a été déposée.
Solicitud de patente.

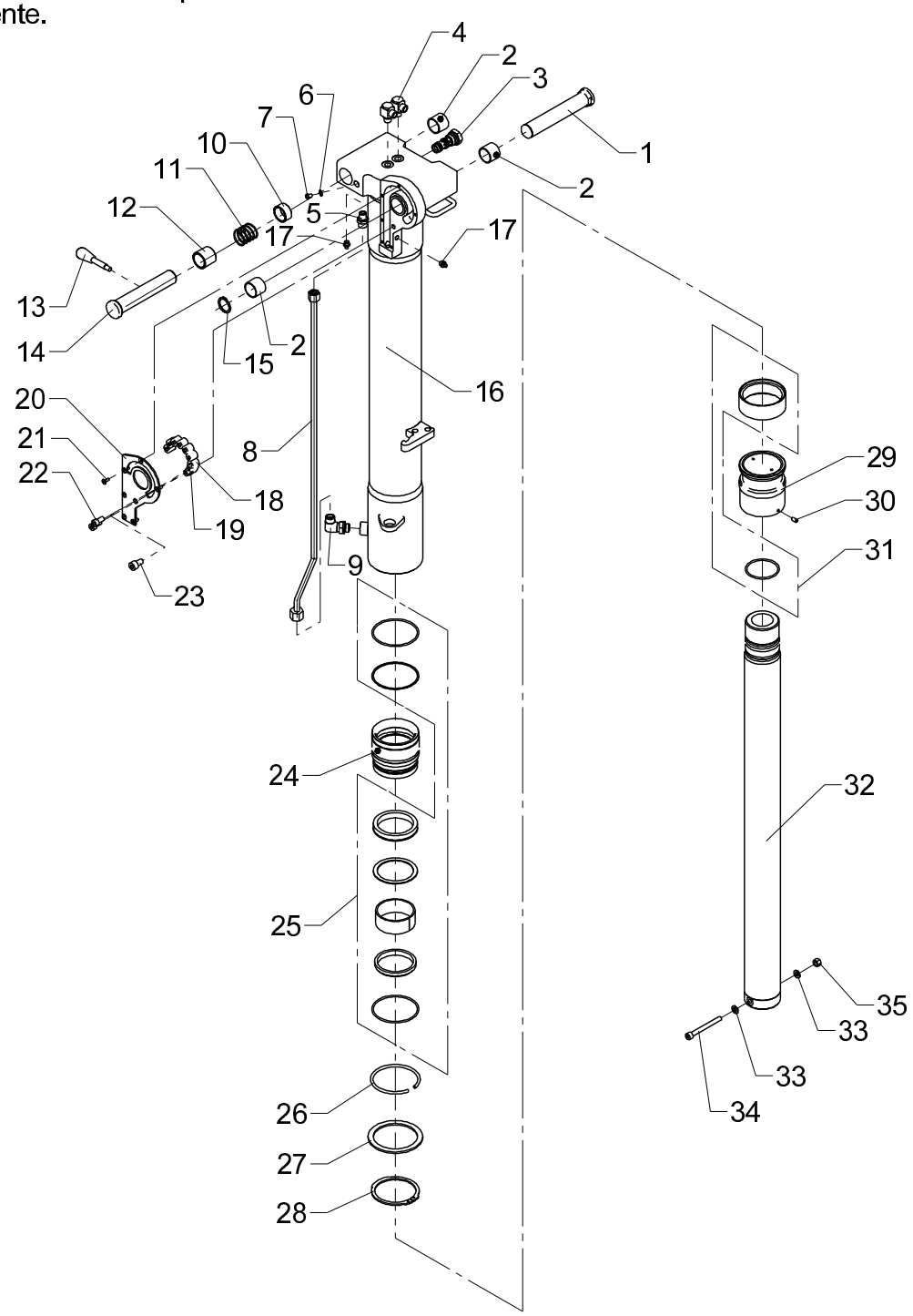

Stabilizer cylinder, C90-720, type HR
2530L

Pos	Qty.	Part no.	Description	Remarks
1	1	6344813	Pin	
2	3	23417	Composite bearing	ø28/32 x 25
3	1	58496	Cartridge	
4	2	25113	Banjo connection	RSWV 8 LR
5	1	25121	Connection	P-GEV 10 LR-WD
6	1	21109	Seal washer	ø7,1 x 12 x 1
7	1	31778	Screw, stainless	M6 x 8
8	1	6343982	Pipe, HR	
9	1	26899	Elbow connection	10 mm - 3/8"
10	1	6340811	Distance ring	
11	1	33490	Compression spring	
12	1	6340824	Bushing	
13	1	64352	Lever with knob	
14	1	6344812	Pin	
15	1	33122	Circlip	28U
16	1	6343981	Cylinder tube, HR	
17	2	31318	Lubricator	1/8" RG
18	7	23120	Cylindrical roller	RC 16 x 16 CD
19	1	6340808	Stop	
20	1	6340807	Cover	
21	6	32405	Sockethead screw	MK5 x 12
22	2	30449	Screw	MC8 x 16
23	1	30964	Screw	MC10 x 16
24	1	6306501	Guide	
25	1	6893840	Seal kit, guide	
26	1	33488	Lock ring, black	
27	1	33236	Back ring	SS 85 x 105 x 3,5
28	1	33145	Circlip	80U
29	1	6306502	Piston	
30	1	32256	Pointed screw	MSP6 x 12
31	1	6893850	Seal kit, piston + rod	
32	1	6343473	Piston rod	
33	2	31147	Face washer, 8 mm	
34	1	30965	Screw	MC8 x 80
35	1	30886	Lock nut, stainless	M8

2530L

Internal ref. 63 47 920

An Oshkosh Corportation Company

Patentanmeldt.
Patent pending.
Patentangemeldet.
La demande de brêvet a été déposée.
Solicitud de patente.

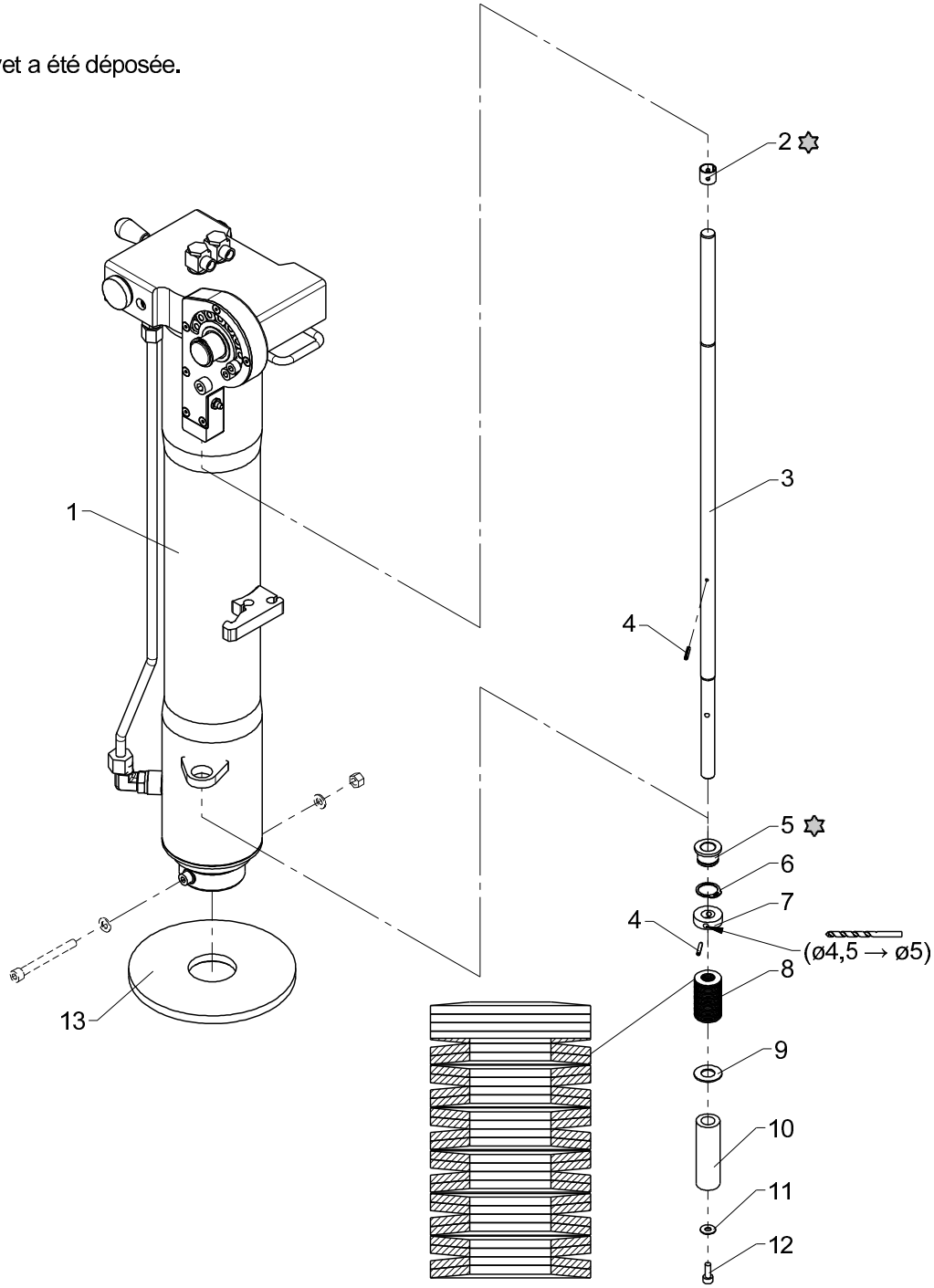

Loctite 601

Stabilizer cylinder incl. swing-up mechanism, type HR

2530L

Pos	Qty.	Part no.	Description	Remarks
1	1	6344930	Stabilizer cylinder, type HR	
2	1	23948	Bushing	PM 1515 DX
3	1	6340539	Compression rod, std.	
4	2	31202	Retaining pin	ø3 x 20
5	1	63597	Bushing	
6	1	33110	Circlip	22U
7	1	6340816	Washer	
8	26	33489	Disc spring	
9	1	31111	Washer	14 mm
10	1	6340815	Pipe	
11	1	32306	Washer	6 mm
12	1	30424	Screw	MC6 x 16
13	1	6346538	Compression plate, HR	

2530L

Internal ref. 63 43 970

An Oshkosh Corportation Company

Patentanmeldt.
Patent pending.
Patentangemeldet.
La demande de brêvet a été déposée.
Solicitud de patente.

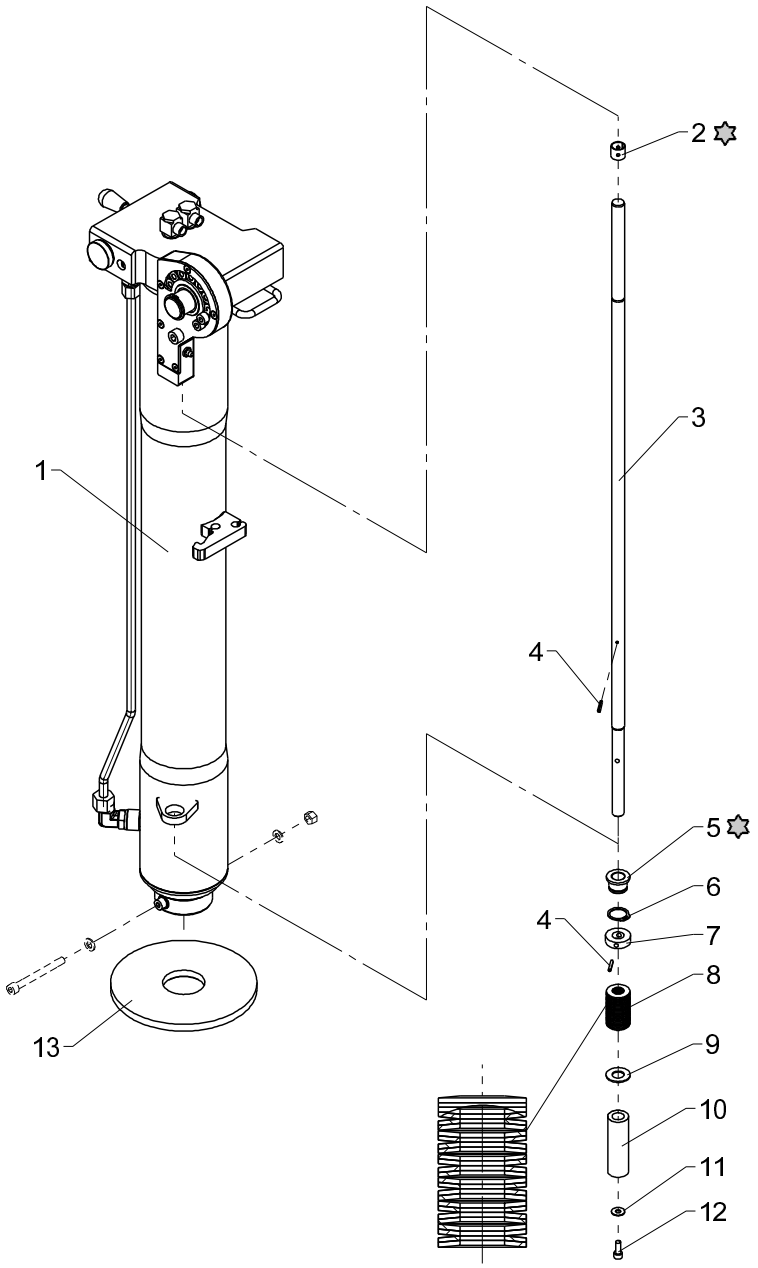

✡ Loctite

Stabilizer cylinder incl. swing-up mechanism, type HR

2530L

Pos	Qty.	Part no.	Description	Remarks
1	1	6343980	Stab. cylinder C90-720,type HR	
2	1	23948	Bushing	PM 1515 DX
3	1	6343962	Copression rod	
4	2	31202	Retaining pin	ø3 x 20
5	1	63597	Bushing	
6	1	33110	Circlip	22U
7	1	6340816	Washer	
8	26	33489	Disc spring	
9	1	31111	Washer	14 mm
10	1	6340815	Pipe	
11	1	32306	Washer	6 mm
12	1	30424	Screw	MC6 x 16
13	1	6346538	Compression plate, HR	

2530L

63 43 190
Internal ref. 63 45 180

An Oshkosh Corportation Company

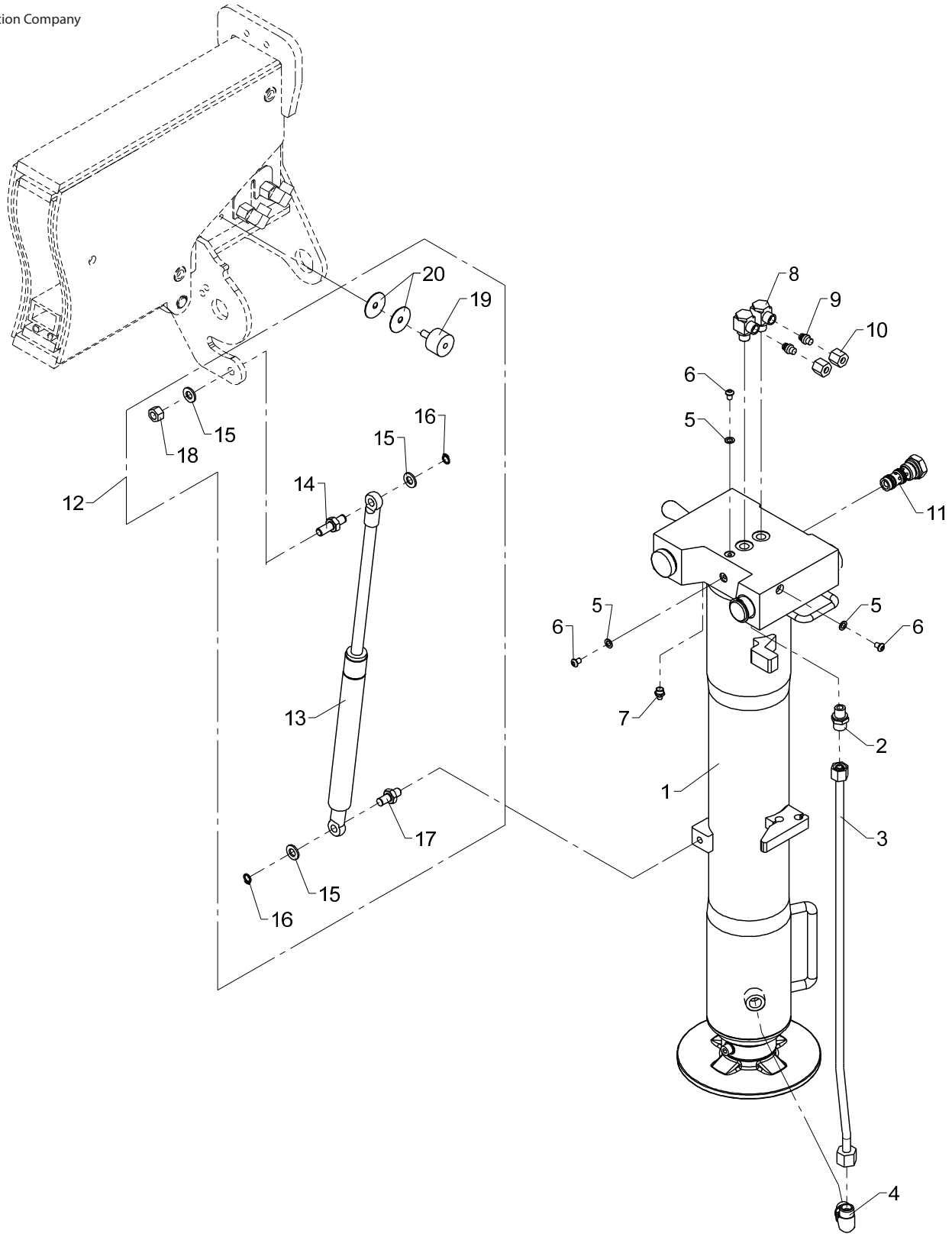

Stabilizer cylinder with check valve, C90-520, Type R-180°

2530L

Pos	Qty.	Part no.	Description	Remarks
		6345180	Stab. cyl. w. check valve C90	
		6343190	Gas spring with fittings	
1	1	6345170	Stab. cyl., C90-520, R	
2	1	25121	Connection	P-GEV 10 LR-WD
3	1	6340823	Pipe, R	
4	1	26899	Elbow connection	10 mm - 3/8"
5	3	21109	Seal washer	ø7,1 x 12 x 1
6	3	31778	Screw, stainless	M6 x 8
7	1	31318	Lubricator	1/8" RG
8	2	25113	Banjo connection	RSWV 8 LR
9	2	26166	Blanking plug	VSD 8 L
10	2	25181	Coupling nut	M 8 L
11	1	58496	Cartridge	
12	1	6343190	Gas spring with fittings	
13	1	48487	Gas spring	
14	1	6344067	Screw for gas spring, long	
15	3	31565	Washer, stainless	10 mm
16	2	33101	Circlip	10U
17	1	6344068	Screw for gas spring, short	
18	1	31564	Lock nut, stainless	M10
19	1	44263	Torsion balancer Type 2	
20	2	31150	Washer	8 mm

2530L

Internal ref. 63 45 500

An Oshkosh Corportation Company

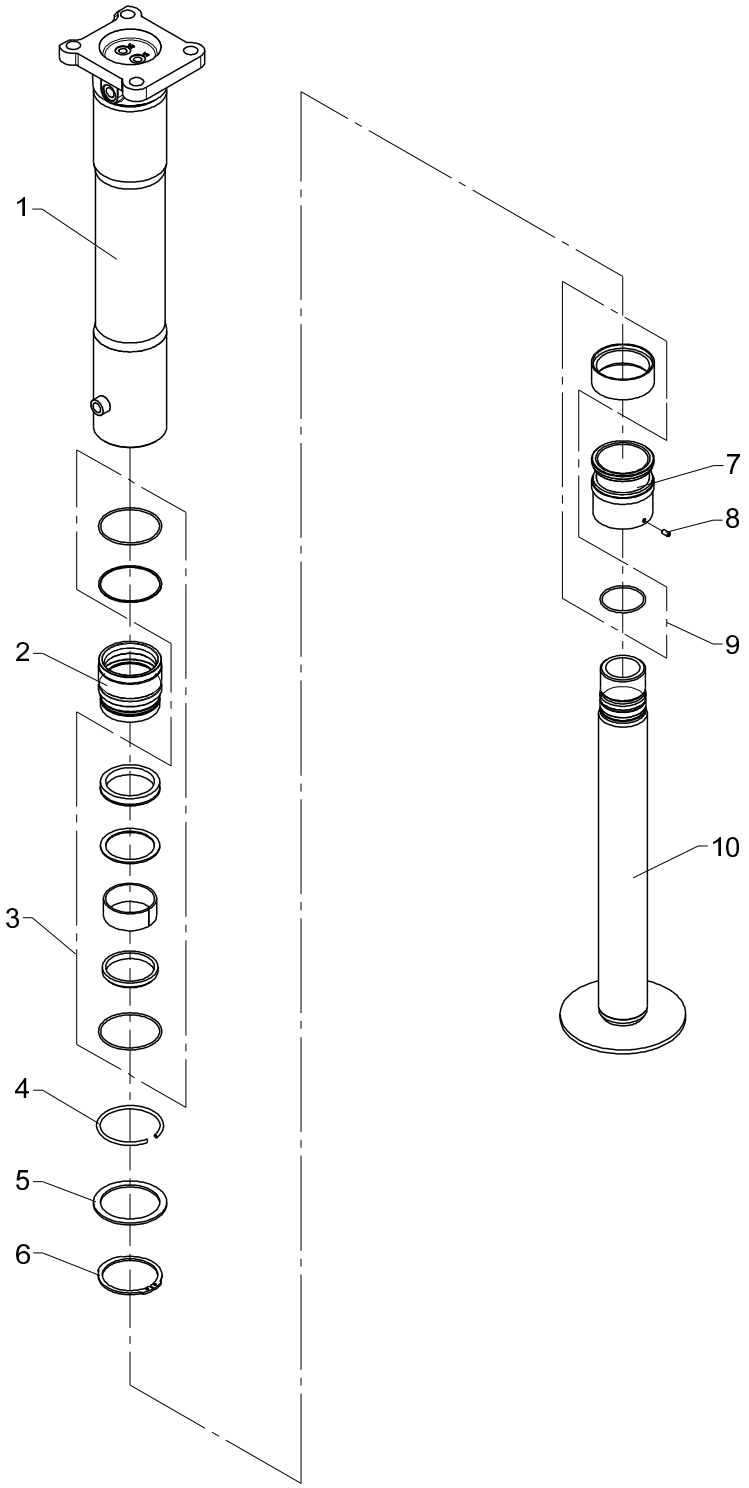

From loader 1270001
To loader

Stabilizer cylinder, C90-440, type V
2530L

Created 06-01-2009
Modified 02-05-2014

Pos	Qty.	Part no.	Description	Remarks
1	1	6344941	Cylinder tube, fixed leg	
2	1	6306501	Guide	
3	1	6893840	Seal kit, guide	
4	1	33488	Lock ring, black	
5	1	33236	Back ring	SS 85 x 105 x 3,5
6	1	33145	Circlip	80U
7	1	6306502	Piston	
8	1	32256	Pointed screw	MSP6 x 12
9	1	6893850	Seal kit, piston + rod	
10	1	6344943	Piston rod	

2530L

Internal ref. 63 45 510

An Oshkosh Corportation Company

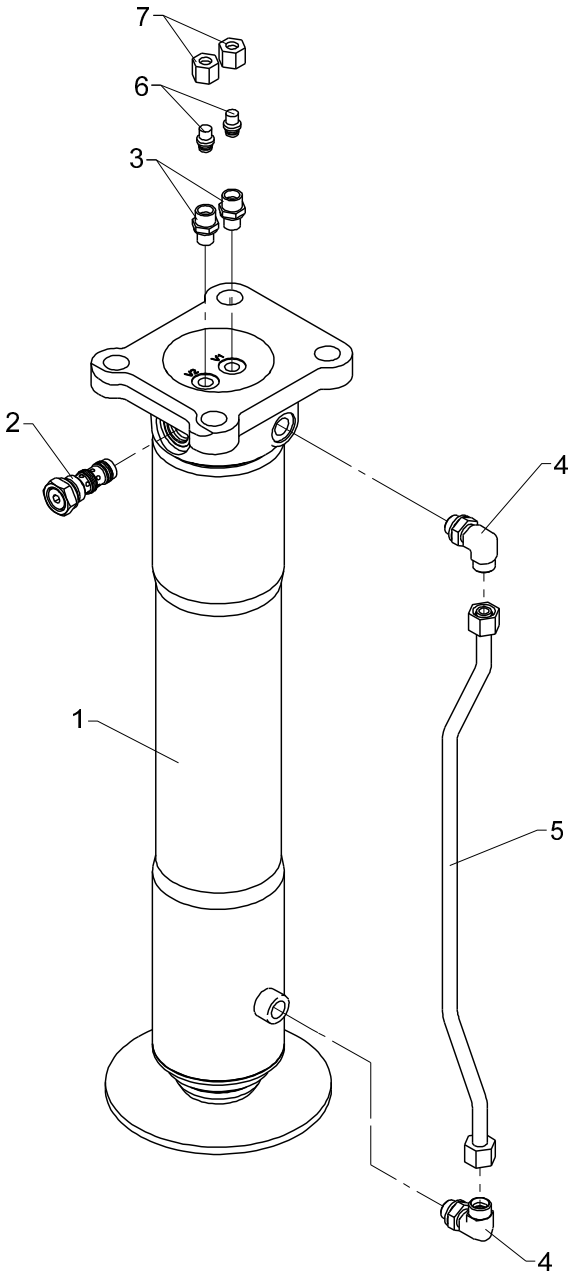

From loader 1270001
To loader

Stabilizer cylinder with check valve, C90-440, type V

2530L

Created 06-01-2009
Modified 02-05-2014

Pos	Qty.	Part no.	Description	Remarks
1	1	6345500	Stabilizer cylinder	
2	1	58496	Cartridge	
3	2	25121	Connection	P-GEV 10 LR-WD
4	2	26897	Elbow connection	12 mm - 3/8"
5	1	6344945	Pipe	
6	2	25202	Blanking plug	VSD 10 L
7	2	25182	Coupling nut	M 10 L

2530L

Internal ref. 63 44 290

An Oshkosh Corportation Company

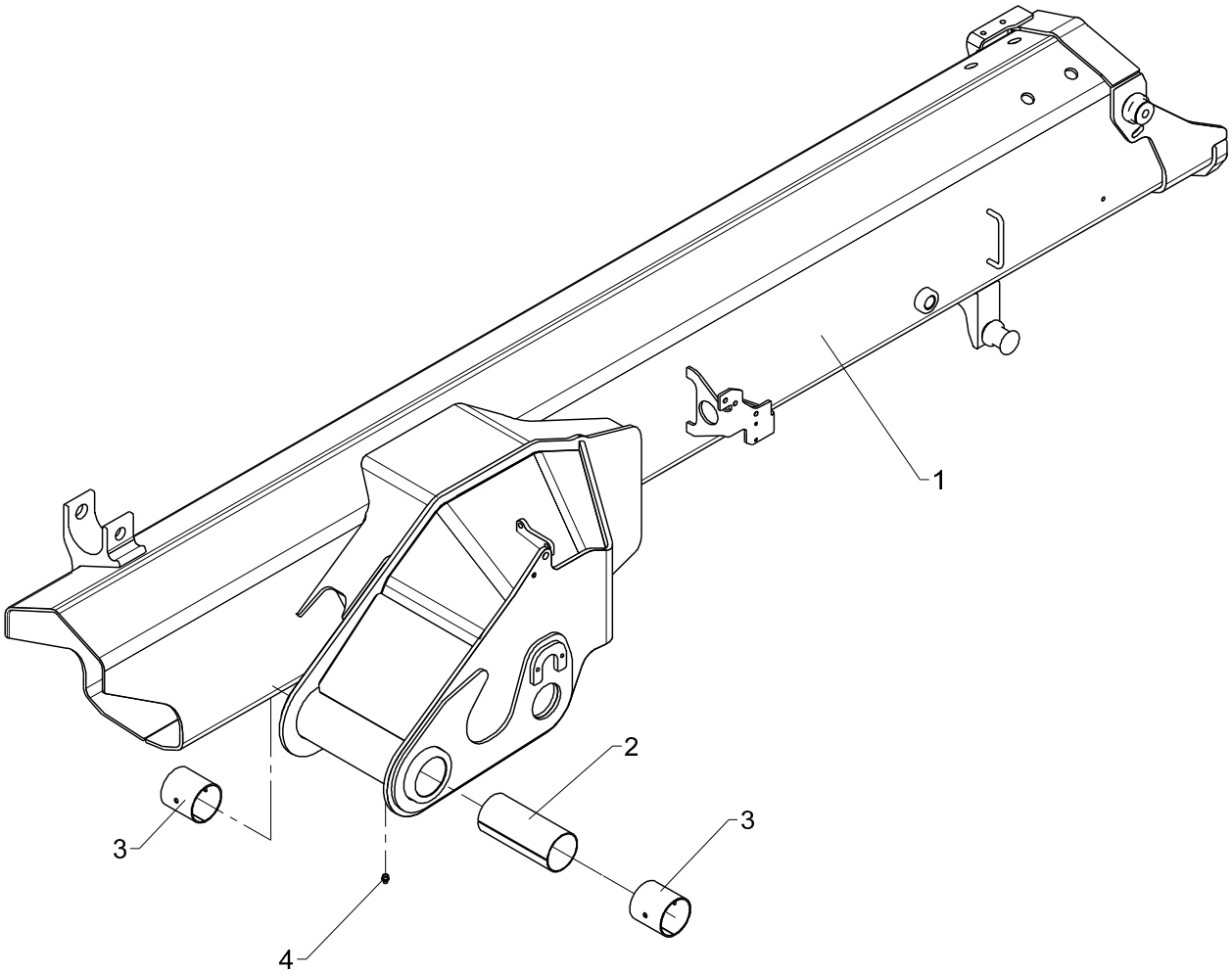

From loader 1270001
To loader

Jib, complete

2530L

Created 15-07-2010
Modified 02-05-2014

Pos	Qty.	Part no.	Description	Remarks
1	1	6344280	Jib, painted	6344281
2	1	63476	Plate	
3	2	23418	Bushing	PM 6570 DX
4	1	31318	Lubricator	1/8" RG

2530L

Internal ref. 63 44 300

An Oshkosh Corportation Company

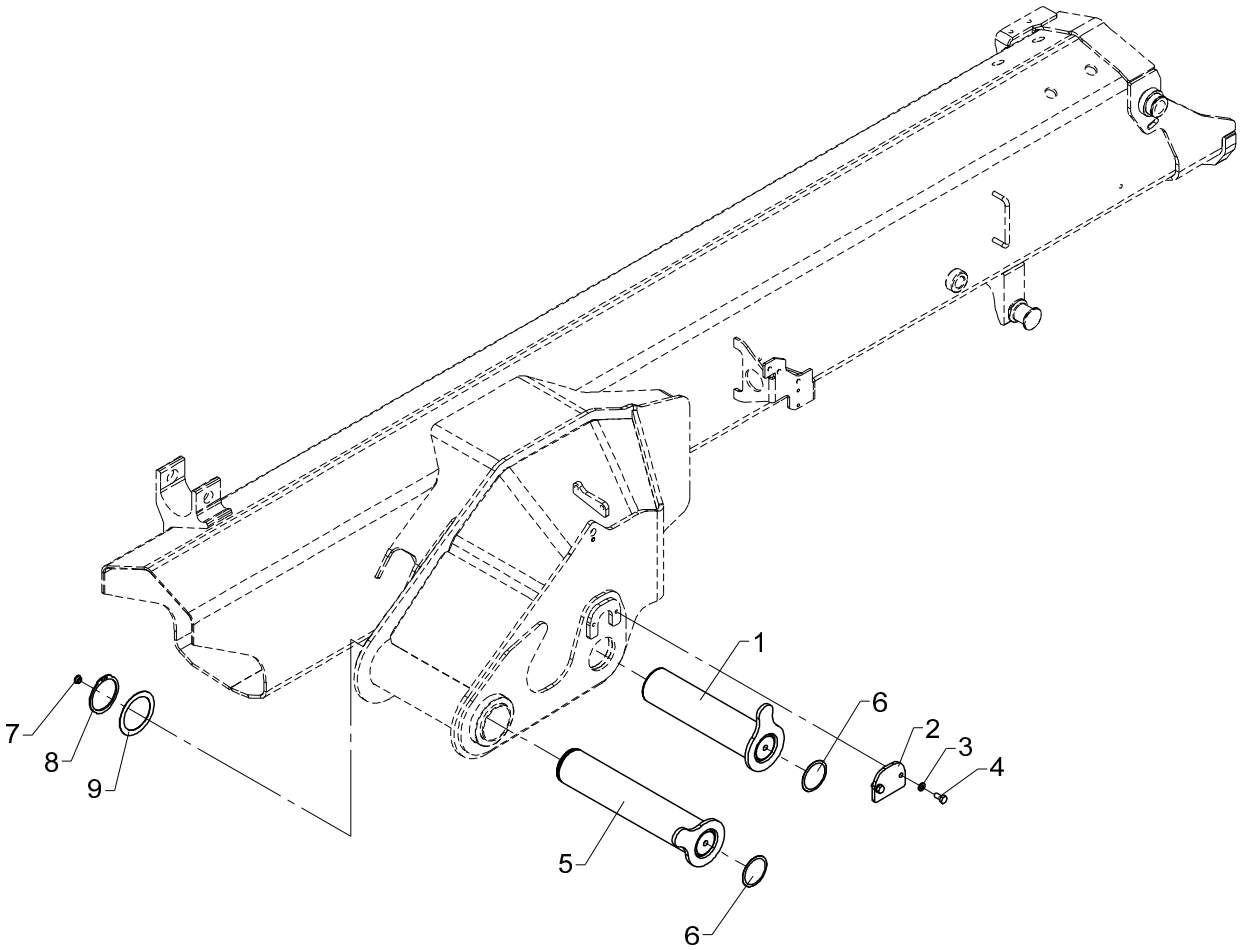

From loader 1270001
To loader
Created 06-01-2009
Modified

Fitting of jib and jib cylinder

2530L

Pos	Qty.	Part no.	Description	Remarks
1	1	6344206	Pin	
2	1	6340318	Lock plate	
3	2	31155	Spring washer	8 mm
4	2	30131	Set screw, stainless	M8 x 16
5	1	6344201	Pin	
6	2	63473	Plug	
7	1	64371	Plug	
8	1	33137	Circlip	65U
9	1	33278	Washer	PS 65 x 85 x 1,0

2530L

Internal ref. 63 55 220

An Oshkosh Corportation Company

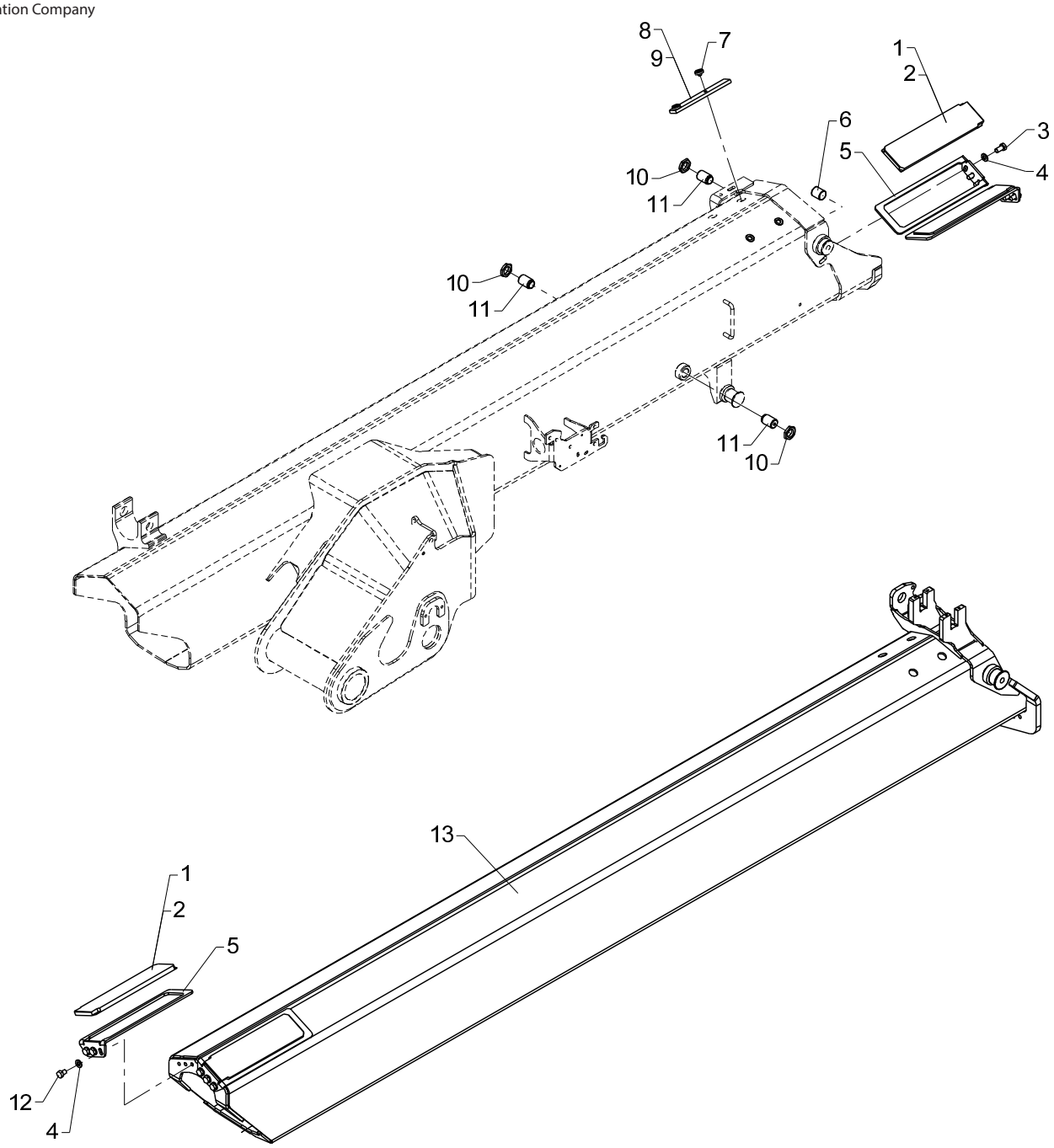

Jib extension I incl. fittings

2530L

Pos	Qty.	Part no.	Description	Remarks
1	4	63583	Slide block	9 mm
2	4	63584	Slide block	10 mm
3	6	31517	Set screw, stainless	M10 x 20
4	12	31177	Washer	10 mm
5	4	6300366	Bracket for slide block	
6	1	6340335	Guide	
7	4	31864	Allen screw	M8 x 6
8	2	6244064	Wear plate	7 mm
9	2	6243014	Wear plate	8 mm
10	3	32364	Counter nut	M24 x 2
11	3	6304409	Guide	
12	6	30152	Set screw	M10 x 14
13	1	6344531	Jib extension I	

2530L

Internal ref. 63 44 340

An Oshkosh Corportation Company

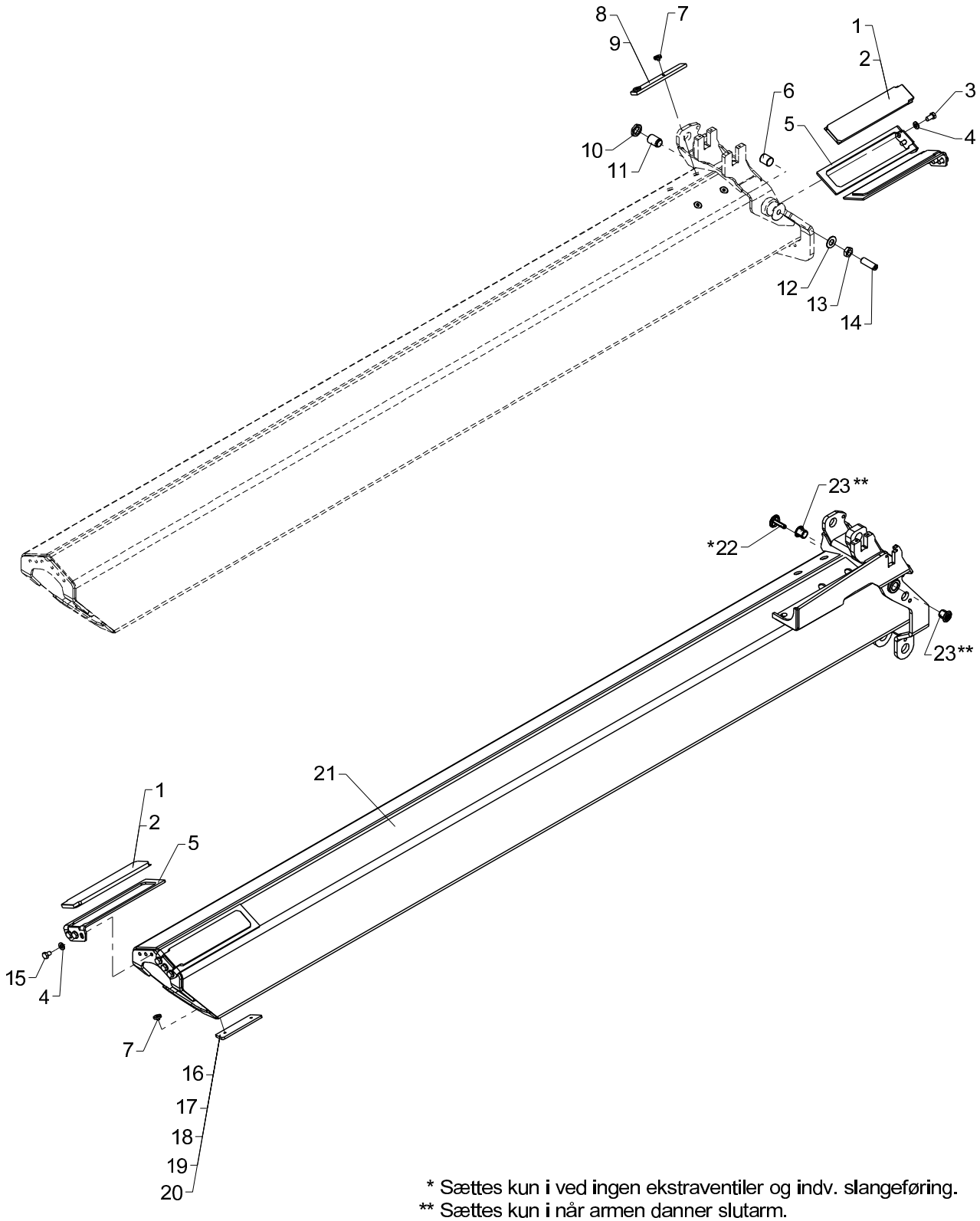

* Sættes kun i ved ingen ekstraventiler og indv. slangeføring.
** Sættes kun i når armen danner slutarm.

Jib extension K2 incl. fittings

2530L

Pos	Qty.	Part no.	Description	Remarks
		6344340	Jib extension K2incl. fittings	
1	4	63586	Slide block	9 mm
2	4	63587	Slide block	10 mm
3	6	31517	Set screw, stainless	M10 x 20
4	12	31177	Washer	10 mm
5	4	6300399	Bracket for slide block	
6	1	6340335	Guide	
7	8	31865	Torx screw M8 x 6 m	M8 x 6
8	2	6244064	Wear plate	7 mm
9	2	6243014	Wear plate	8 mm
10	1	32364	Counter nut	M24 x 2
11	1	6304409	Guide	
12	1	31196	Washer	16 mm
13	1	30821	Counter nut	M16
14	1	32495	Pointed screw	MSP16 x 50
15	6	30152	Set screw	M10 x 14
16	2	6340396	Spacer, 1.5mm	1,5 mm
17	2	6340416	Spacer	5 mm
18	2	6340377	Spacer	6 mm
19	2	6340378	Spacer	7 mm
20	2	6340379	Spacer	8 mm
21	1	6344341	Extension II	
22	1	63568	Plastic plug with logo	
23	2	63487	Plug	

2530L

Internal ref. 63 55 560

An Oshkosh Corportation Company

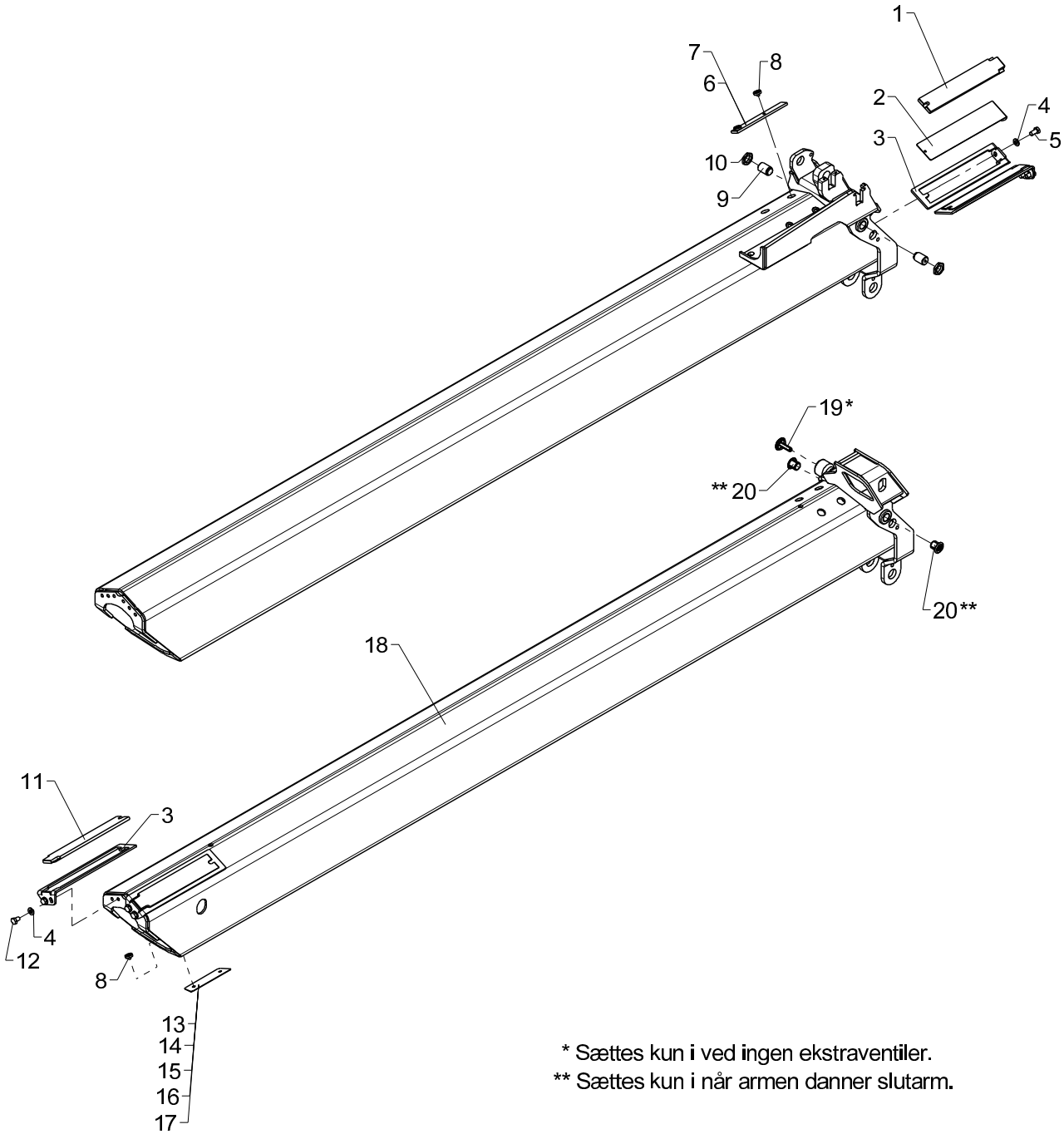

* Sættes kun i ved ingen ekstraventiler.
** Sættes kun i når armen danner slutarm.

Jib extension III incl. fittings

2530L

Pos	Qty.	Part no.	Description	Remarks
1	2	63589	Slide block	9 mm
2	2	6300568	Shim	
3	4	6300368	Bracket for slide block	
4	8	31177	Washer	10 mm
5	4	31517	Set screw, stainless	M10 x 20
6	2	6243004	Wear plate	6 mm
7	2	6244064	Wear plate	7 mm
8	8	31864	Allen screw	M8 x 6
9	2	6304409	Guide	
10	2	32364	Counter nut	M24 x 2
11	2	63588	Slide block	8 mm
12	4	30152	Set screw	M10 x 14
13	2	6340396	Spacer, 1.5mm	1,5 mm
14	2	6340416	Spacer	5 mm
15	2	6340377	Spacer	6 mm
16	2	6340378	Spacer	7 mm
17	2	6340379	Spacer	8 mm
18	1	6355361		
19	1	63568	Plastic plug with logo	
20	2	63487	Plug	

2530L

Internal ref. 63 55 570

An Oshkosh Corportation Company

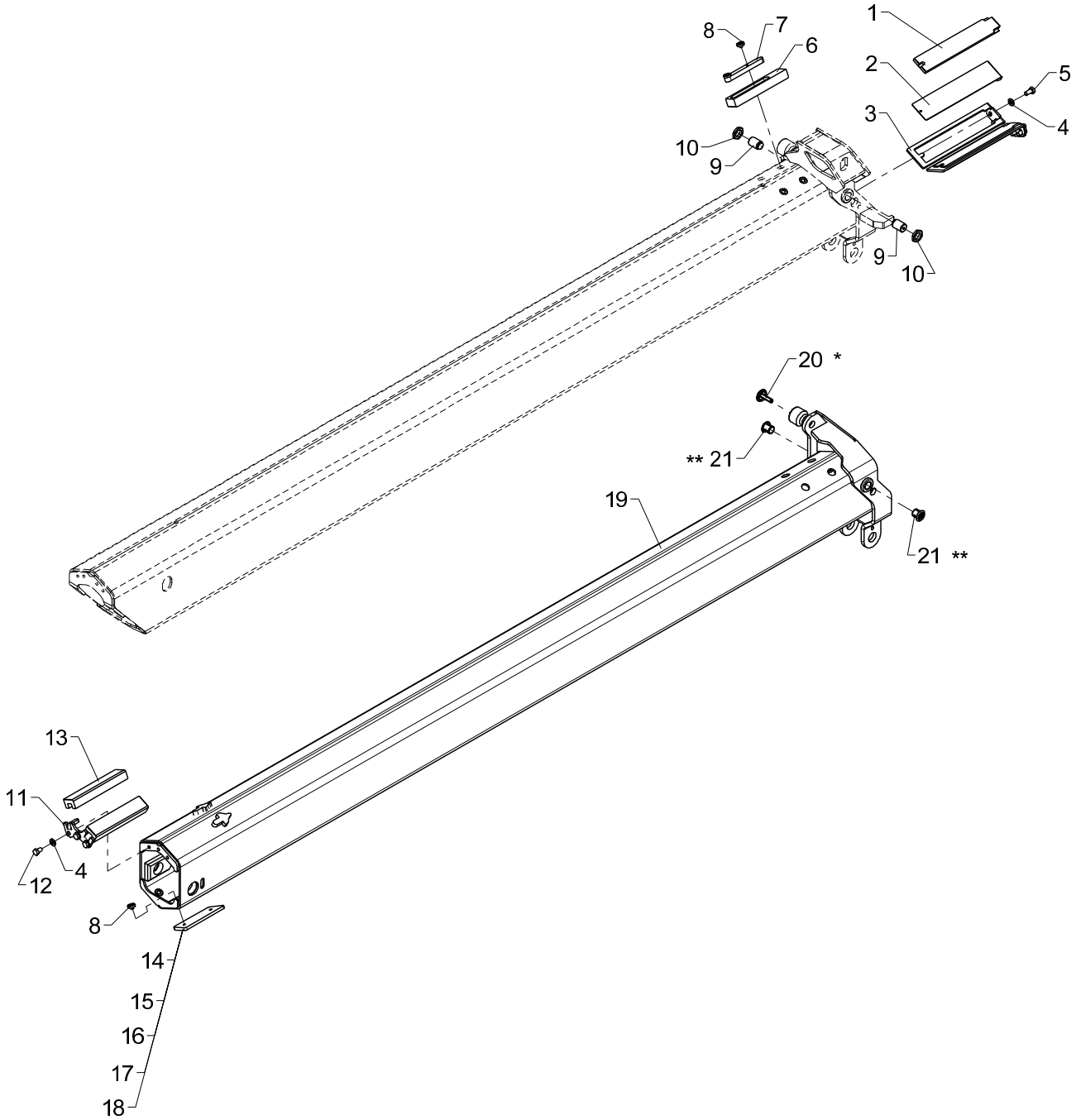

* Sættes kun i ved ingen ekstraventiler.
** Sættes kun i når armen danner slutarm.

Jib extension IV incl. fittings

2530L

Pos	Qty.	Part no.	Description	Remarks
1	2	63589	Slide block	9 mm
2	2	6300568	Shim	
3	2	6300368	Bracket for slide block	
4	7	31177	Washer	10 mm
5	4	31517	Set screw, stainless	M10 x 20
6	2	68019	Slide block	
7	2	6341397	Spacer	
8	8	31864	Allen screw	M8 x 6
9	2	6304409	Guide	
10	2	32364	Counter nut	M24 x 2
11	1	6341396	Bracket for slide block	
12	3	30153	Set screw	M10 x 16
13	2	68018	Slide block	6299064, 9 mm
14	2	6340396	Spacer, 1.5mm	1,5 mm
15	2	6340416	Spacer	5 mm
16	2	6340377	Spacer	6 mm
17	2	6340378	Spacer	7 mm
18	2	6340379	Spacer	8 mm
19	1	6355381		
20	1	63568	Plastic plug with logo	
21	2	63487	Plug	

2530L

Internal ref. 63 55 580

An Oshkosh Corportation Company

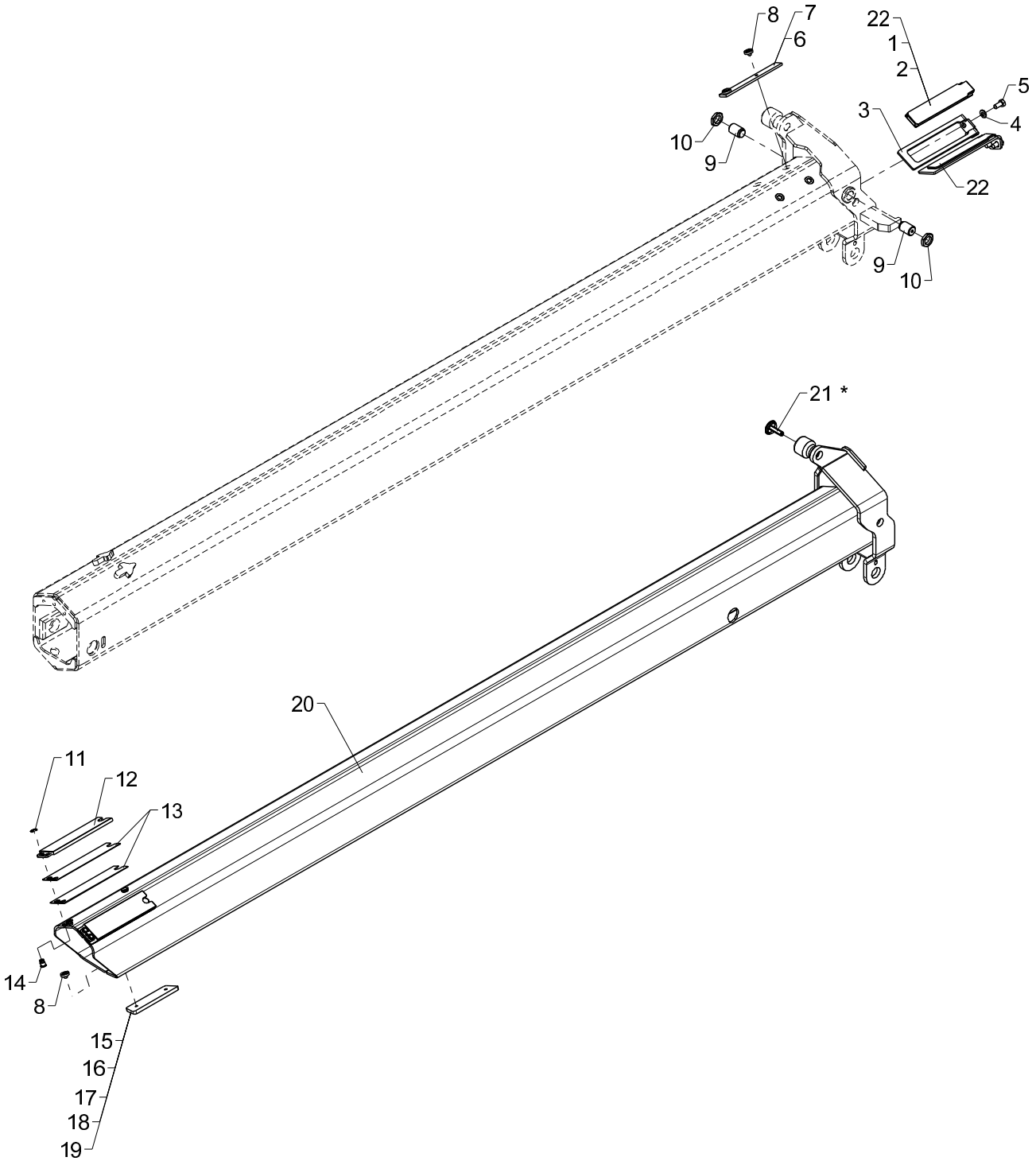

* Sættes kun i ved ingen ekstraventiler.

Jib extension V incl. fittings

2530L

Pos	Qty.	Part no.	Description	Remarks
1	2	63518	Slide block	8 mm
2	2	63762	Slide block	9 mm
3	2	6340441	Bracket for slide block	
4	4	31177	Washer	10 mm
5	4	31517	Set screw, stainless	M10 x 20
6	2	6243004	Wear plate	6 mm
7	2	6244064	Wear plate	7 mm
8	8	31864	Allen screw	M8 x 6
9	2	6304409	Guide	
10	2	32364	Counter nut	M24 x 2
11	4	33292	Circlip	
12	2	6366001	Slide block	
13	4	6366011	Shim	
14	4	6366006	Lock pin	
15	2	6340396	Spacer, 1.5mm	1,5 mm
16	2	6340416	Spacer	5 mm
17	2	6340377	Spacer	6 mm
18	2	6340378	Spacer	7 mm
19	2	6340379	Spacer	8 mm
20	1	6355591		
21	1	63568	Plastic plug with logo	
22	2	63593	Slide block	10 mm

2530L

63 44 650
Internal ref. 63 44 910

An Oshkosh Corporation Company

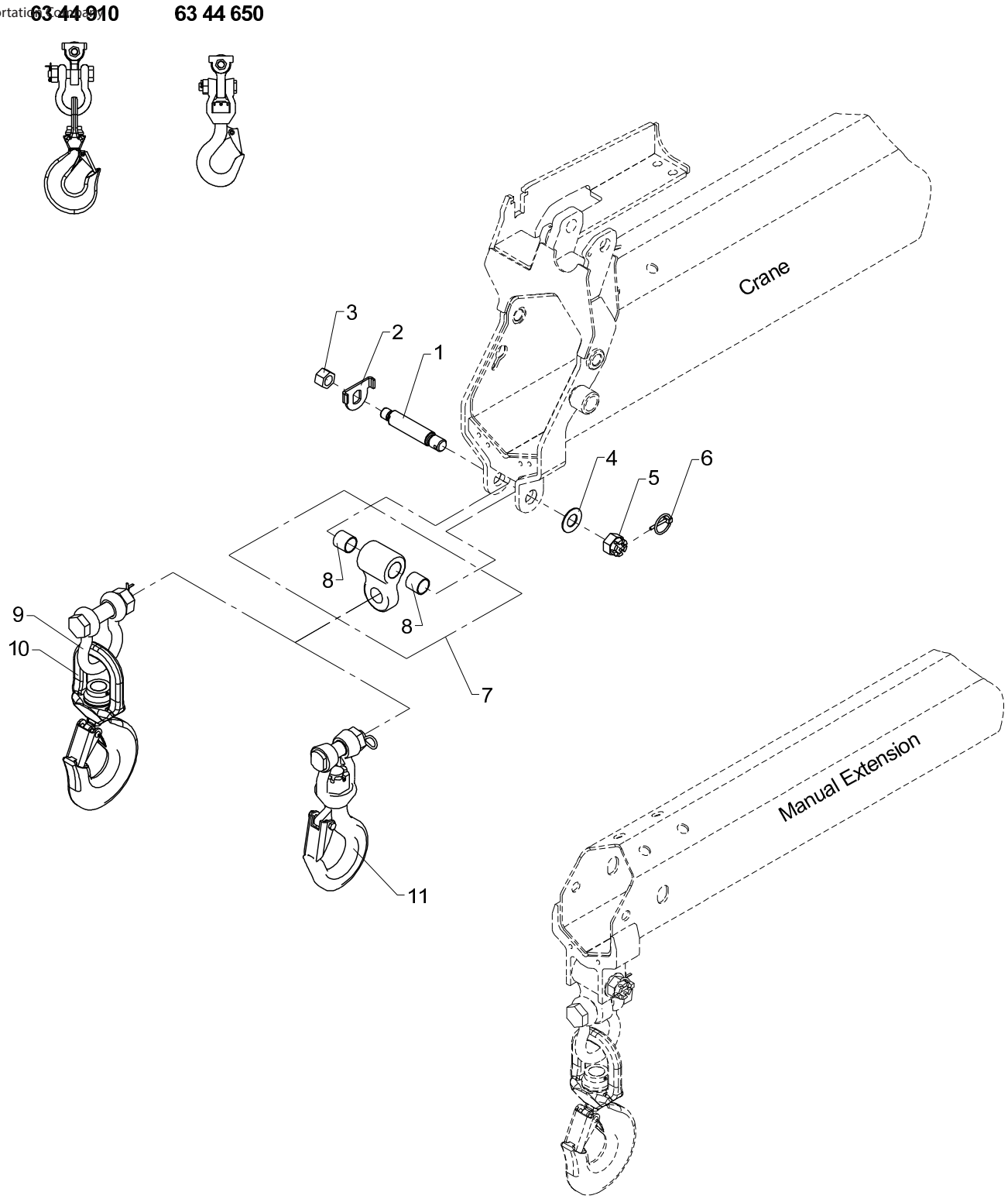

Hook suspension

2530L

Pos	Qty.	Part no.	Description	Remarks
		6344910	Hook suspension	
		6344650	Hook suspension	
1	1	6662114	Pin	
2	1	6662104	Plate	
3	1	30894	Lock nut	M20
4	1	31128	Washer	24 mm
5	1	30837	Nut	M24
6	1	31967	Ring split	ø4,5 x 40
7	1	6292853	Hook suspension	
8	2	23945	Composite bearing	ø28/32 x 30
9	1	62118	Shackle	
10	1	63292	Hook, 8 t incl. bearing	
11	1	62100	Hook with suspension	

2530L

Internal ref. 63 44 540

An Oshkosh Corportation Company

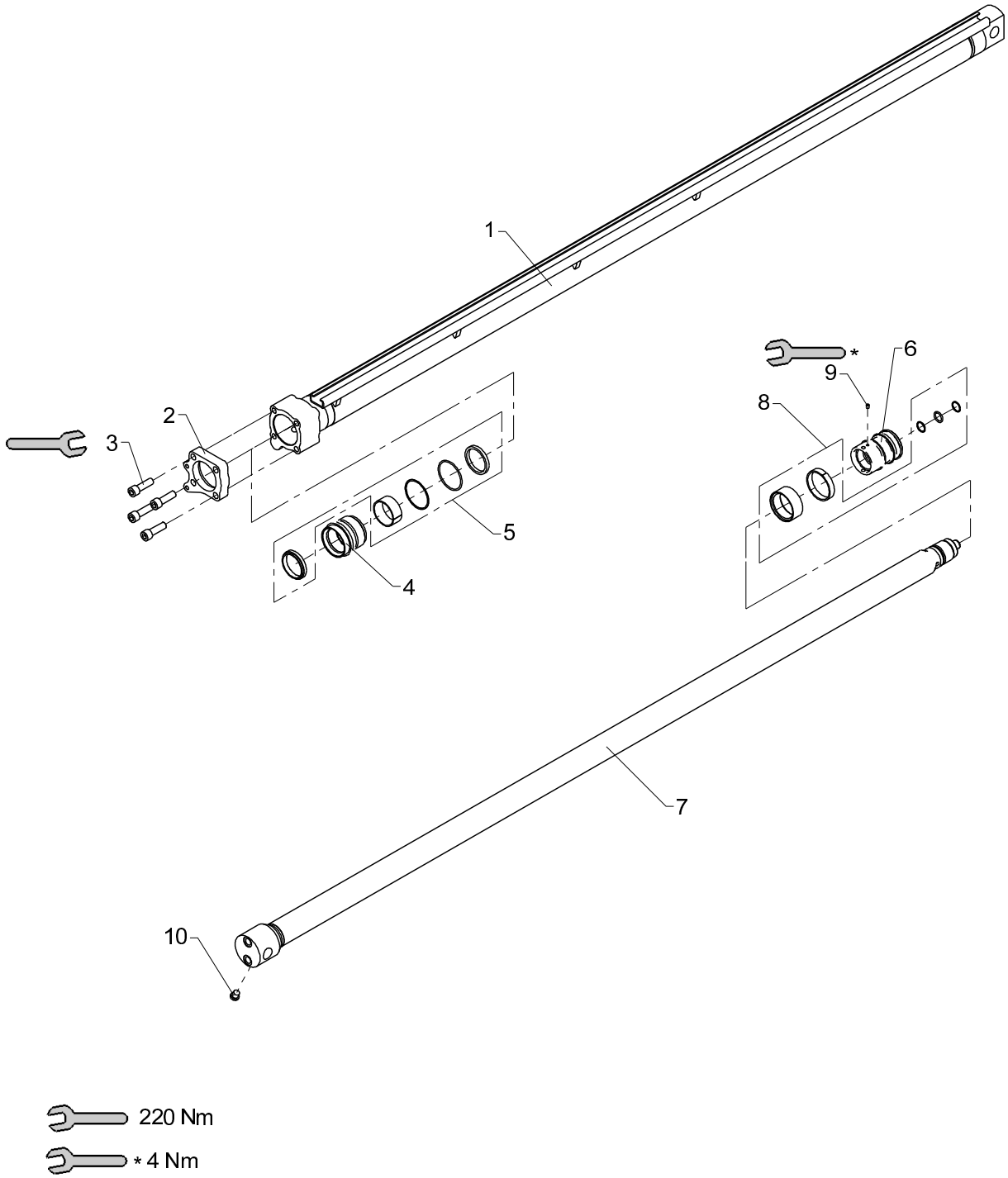

From loader 1270001
To loader

Extension cylinder I (C70/55 x 1885)

2530L

Created 26-02-2013
Modified 25-06-2014

Pos	Qty.	Part no.	Description	Remarks
1	1	6344545	Cylinder tube	
2	1	6344553	Mounting flange	
3	4	32487	Screw	MC14 x 45
4	1	6344551	Guide	
5	1	6894180	Seal kit	
6	1	6354506	Piston (C70)	
7	1	6344538	Piston rod	
8	1	6894700	Seal kit, C70/50	
9	1	30903	Screw	MSP6 x 8
10	1	25197	Plug	VS-R-1/4 WD

2530L

Internal ref. 63 44 560

An Oshkosh Corportation Company

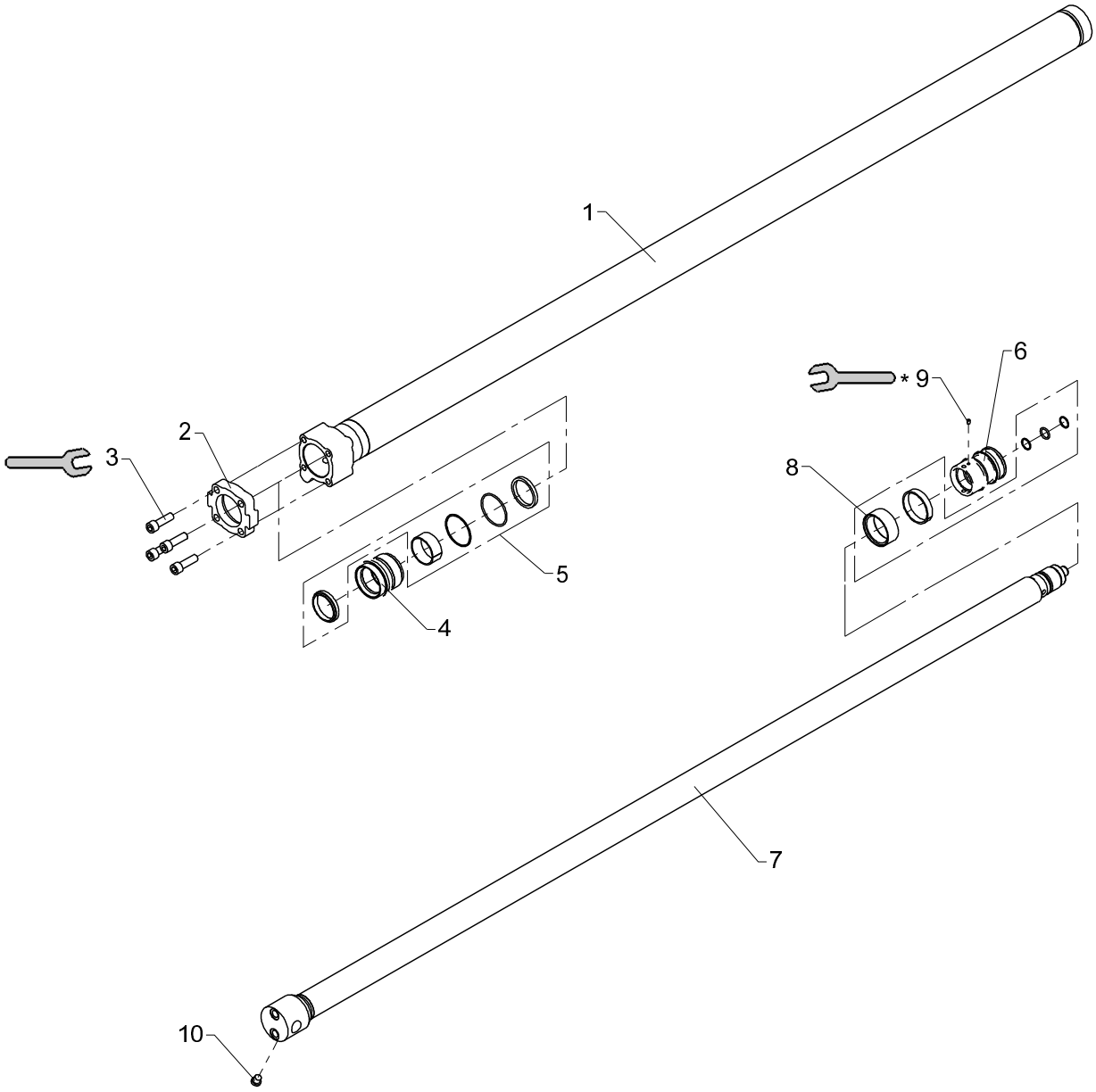

220 Nm

* 4 Nm

Extension cylinder II (C70/55 x 1950)

2530L

Pos	Qty.	Part no.	Description	Remarks
1	1	6344565	Cylinder tube	
2	1	6344567	Mounting flange	
3	4	32487	Screw	MC14 x 45
4	1	6344551	Guide	
5	1	6894180	Seal kit	
6	1	6354506	Piston (C70)	
7	1	6344568	Piston rod	
8	1	6894700	Seal kit, C70/50	
9	1	30903	Screw	MSP6 x 8
10	1	25197	Plug	VS-R-1/4 WD

2530L

Internal ref. 63 44 570

An Oshkosh Corportation Company

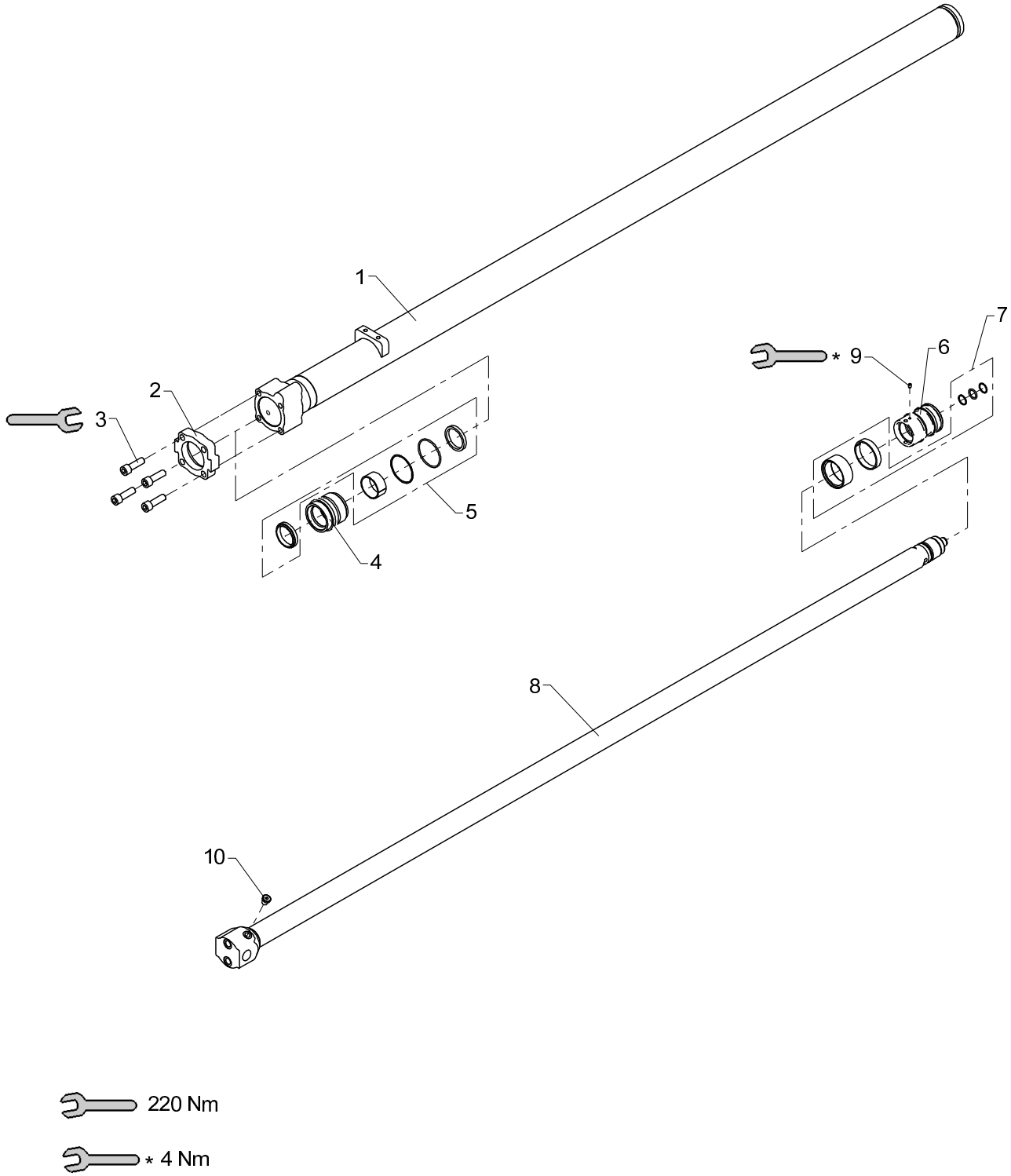

Extension cylinder III (C70/50 x 2000)

2530L

Pos	Qty.	Part no.	Description	Remarks
1	1	6344575	Cylinder tube	
2	1	6344567	Mounting flange	
3	4	32487	Screw	MC14 x 45
4	1	6344577	Guide	
5	1	6894190	Seal kit	
6	1	6354506	Piston (C70)	
7	1	6894700	Seal kit, C70/50	
8	1	6344578	Piston rod	
9	1	30903	Screw	MSP6 x 8
10	1	25197	Plug	VS-R-1/4 WD

2530L

Internal ref. 63 53 480

Obsolete

An Oshkosh Corportation Company

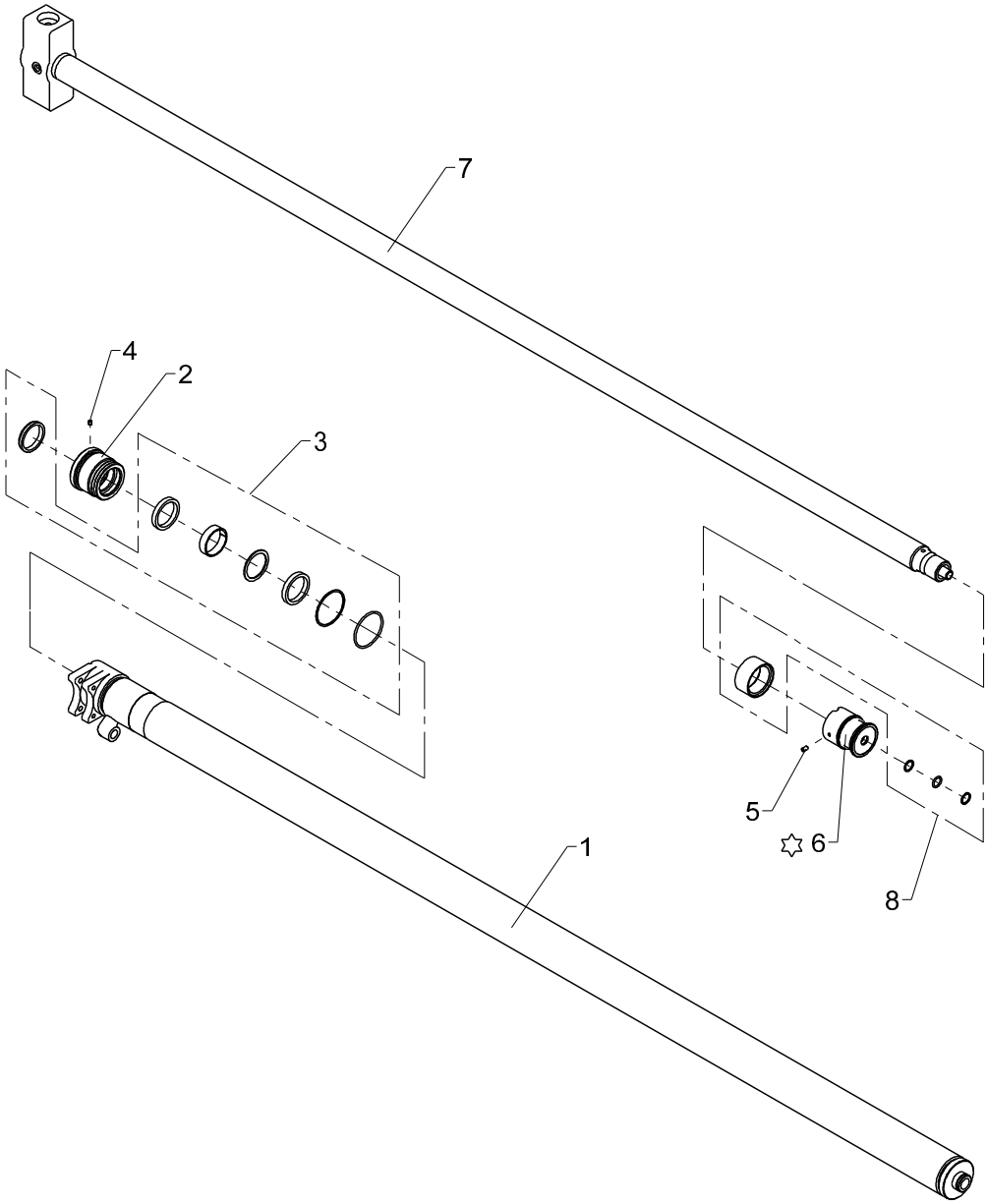

✡ Loctite 243

Obsolete

553 03 330

From loader 1270001
To loader 1270017

Created 21-02-2011
Modified 02-05-2014

Extension cylinder IVi (C60/45 x 1857)
2530L

Pos	Qty.	Part no.	Description	Remarks
1	1	6353481	Cylinder tube	
2	1	6247633	Guide	
3	1	6893780	Seal kit, guide	
4	1	31548	Pointed screw, stainless	MSP6 x 6
5	1	30556	Pointed screw	MSP6 x 10
6	1	6306741	Piston	
7	1	6353487	Piston rod	
8	1	6893790	Seal kit, piston	

2530L

Internal ref. 63 53 480

An Oshkosh Corportation Company

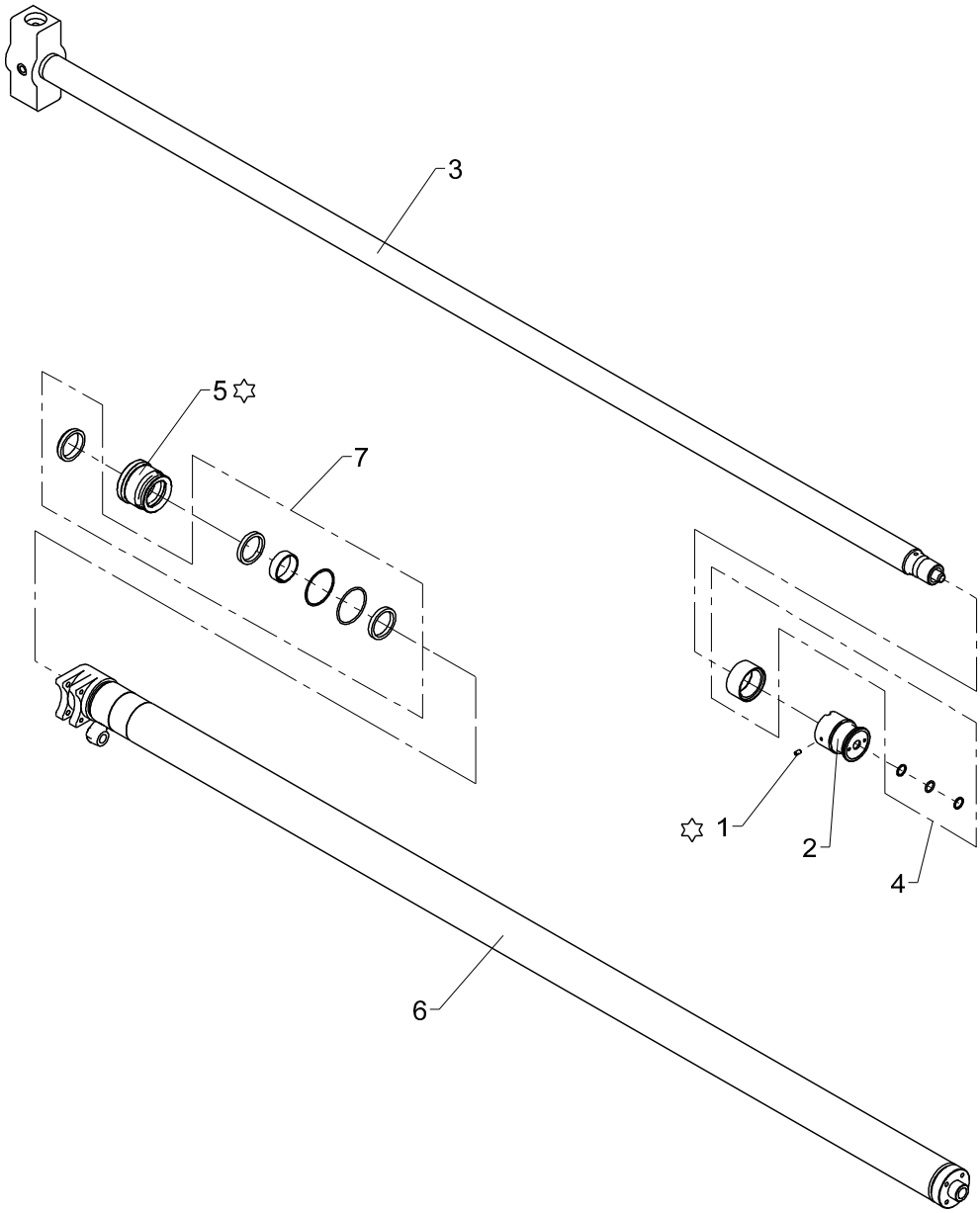

✡ Loctite 243

Extension cylinder IVi (C60/45 x 1857)

2530L

Pos	Qty.	Part no.	Description	Remarks
1	1	30556	Pointed screw	MSP6 x 10
2	1	6306741	Piston	
3	1	6353487	Piston rod	
4	1	6893790	Seal kit, piston	
5	1	6304584	Guide	
6	1	6353507	Cylinder tube	
7	1	6894810	Seal kit for guide Ø 60/45	

2530L

Internal ref. 63 53 490

An Oshkosh Corportation Company

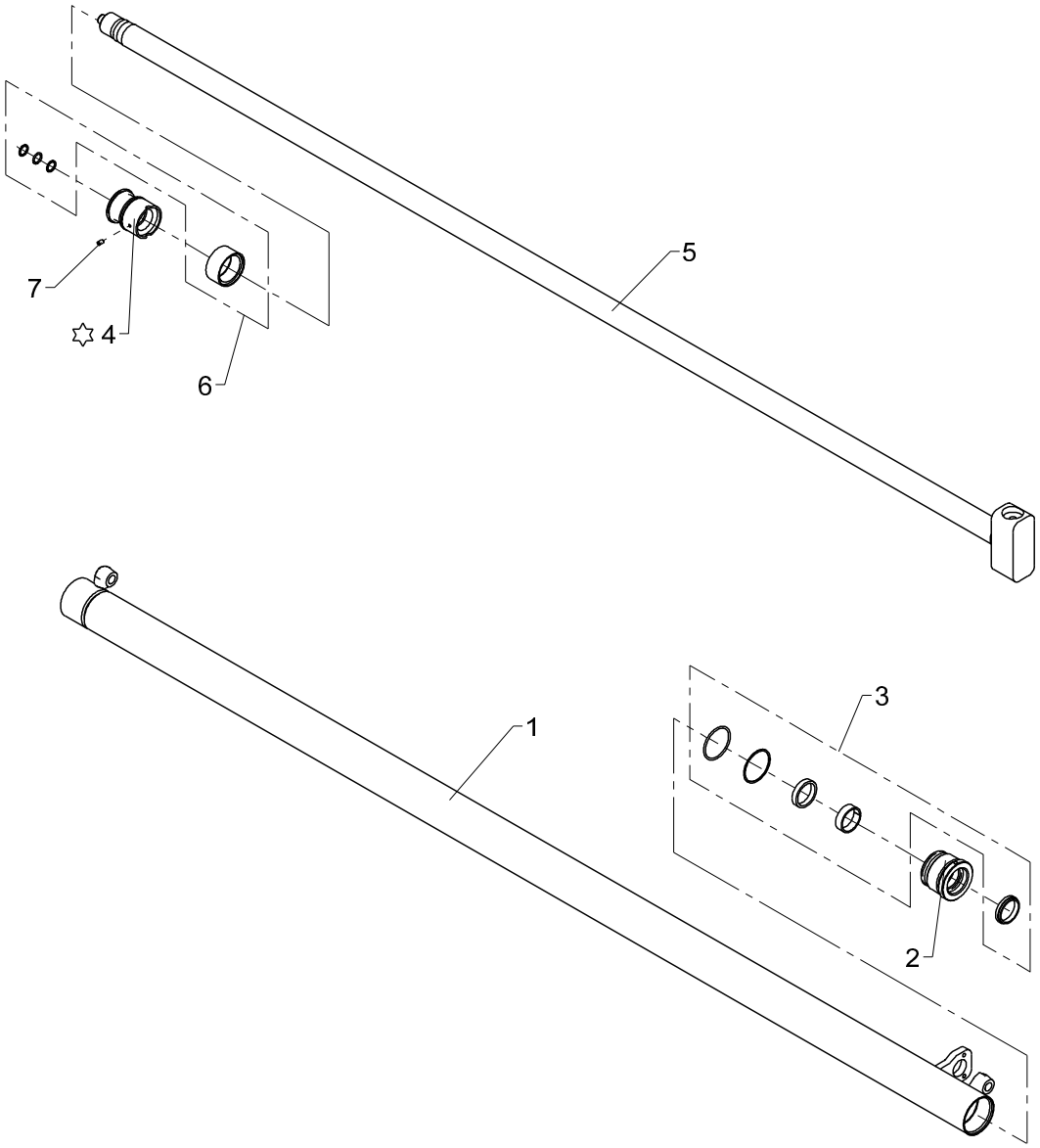

✡ Loctite 243

Extension cylinder Vi (C60/45 x 1911)

2530L

Pos	Qty.	Part no.	Description	Remarks
1	1	6353491	Cylinder tube	
2	1	6306131	Guide	
3	1	6893800	Seal kit, guide	
4	1	6306741	Piston	
5	1	6353505	Piston rod	
6	1	6893790	Seal kit, piston	
7	1	30556	Pointed screw	MSP6 x 10

2530L

63 47 330
Internal ref. 63 44 330

An Oshkosh Corportation Company

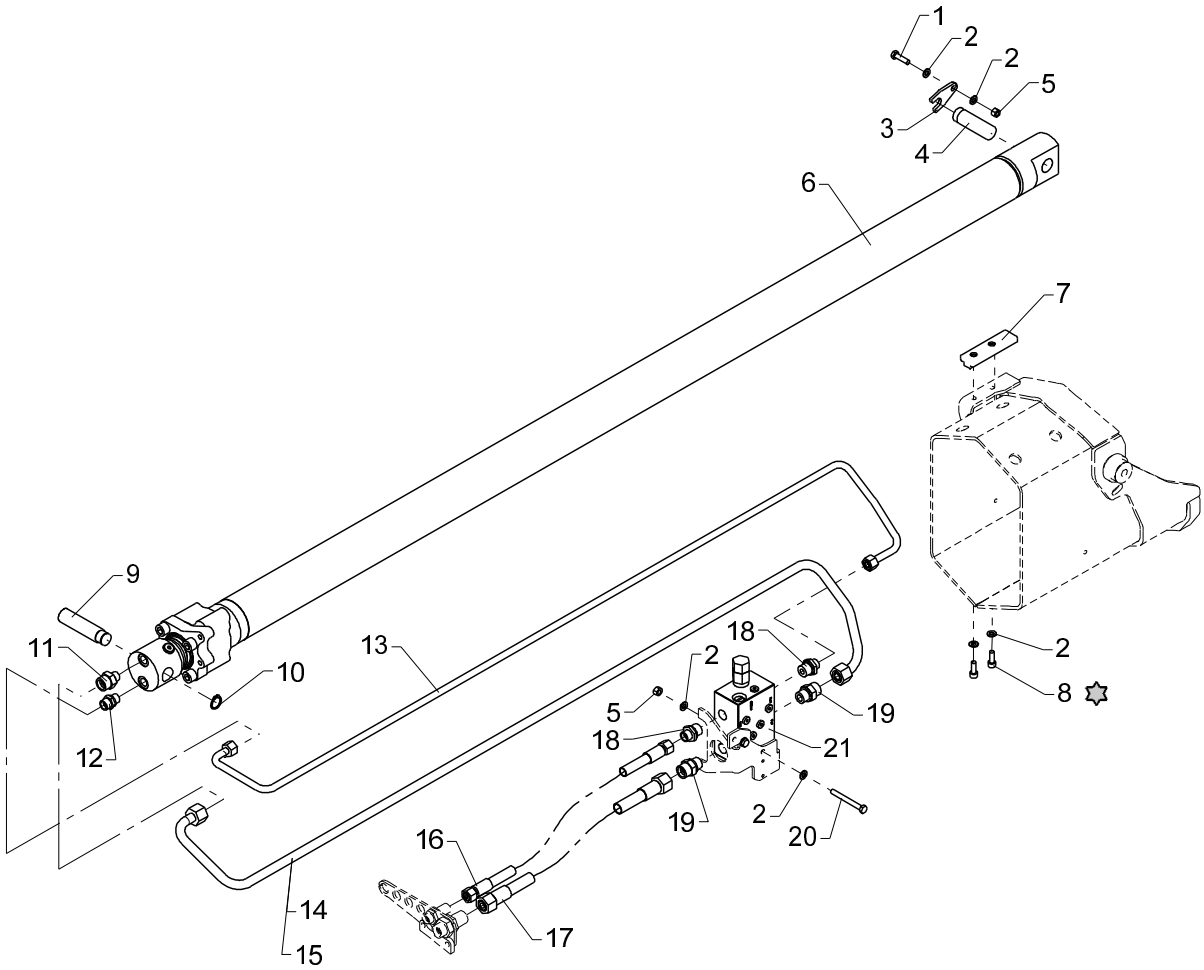

✡ Loctite 243

Extension cylinder I incl. fittings

2530L

Pos	Qty.	Part no.	Description	Remarks
		6344330	Extension cylinder I +fittings	
		6347330	Ext. cyl. I +fittings, basket	
1	1	30135	Set screw, stainless	M8 x 30
2	8	31147	Face washer, 8 mm	8 mm
3	1	6340337	Lock plate	
4	1	6344522	Pin	
5	3	30886	Lock nut, stainless	M8
6	1	6344540	Extension cylinder I	
7	1	63689	Slide block with bushing	
8	2	30460	Sockethead screw	MC8 x 22
9	1	6344521	Pin	
10	1	33110	Circlip	22U
11	1	26368	Straight connection	P-GEV 16 SR 3/8-WD
12	1	25127	Connection	P-GEV 12 LR-WD
13	1	6344642	Pipe	
14	1	6344641	Pipe	
15	1	6345641	Pipe, CI extend	Kurvekan/Man basket
16	1	56383	Hose	3/8 X 650 mm L/L
17	1	56384	Hose	1/2 X 680 mm L/L
18	2	25108	Connection	GES 12 LR 1/2-WD
19	2	26334	Connection	P-GEV 16 SR-WD
20	2	30812	Steel bolt, stainless	M8 x 75
21	1	59044	Load holding valve	

2530L

63 47 350
Internal ref. 63 44 350

An Oshkosh Corportation Company

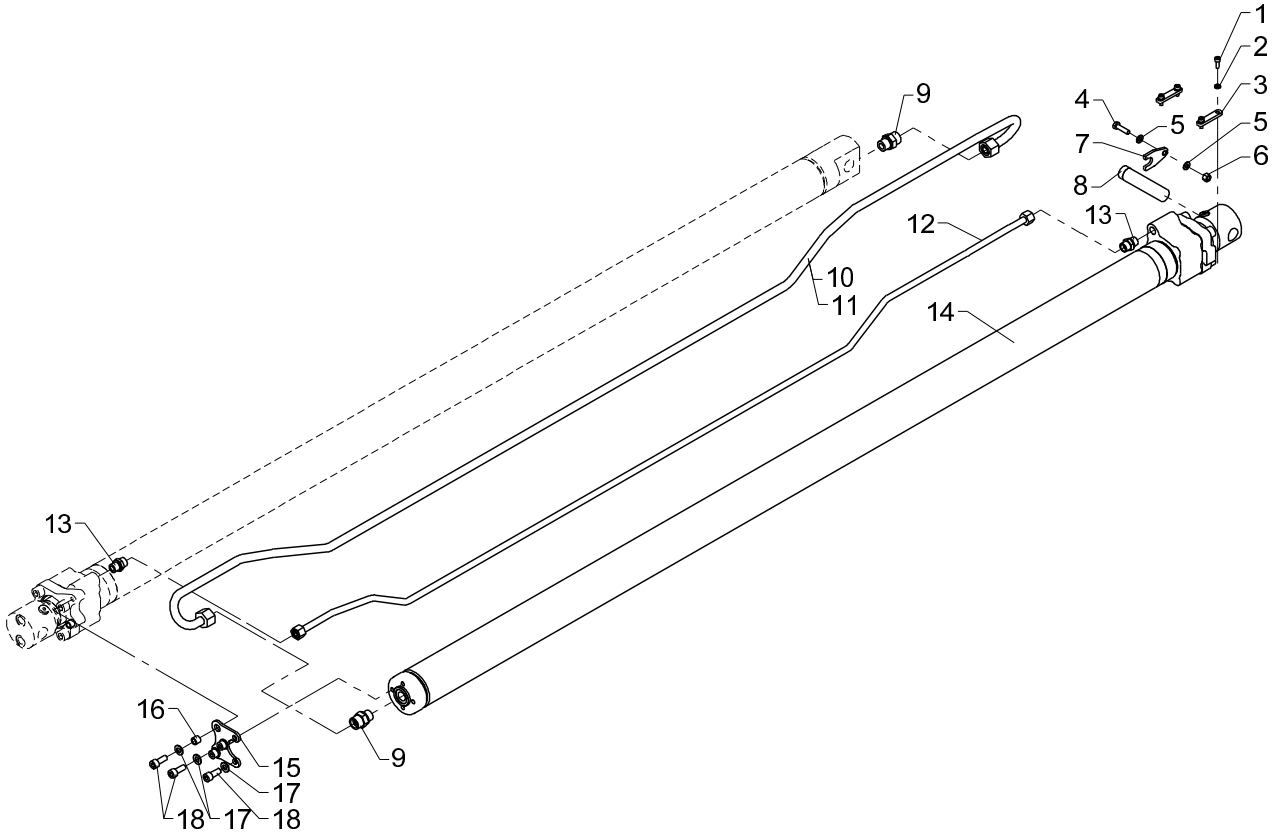

Extension cylinder II incl. fittings

2530L

Pos	Qty.	Part no.	Description	Remarks
		6344350	Extension cylinder II+fittings	
		6347350	Ext. cyl. II+fittings, basket	
1	4	31539	Screw, stainless	MC6 x 16
2	4	31154	Spring washer, stainless	6 mm
3	2	6340336	Lock plate	
4	1	30135	Set screw, stainless	M8 x 30
5	2	31147	Face washer, 8 mm	8 mm
6	1	30886	Lock nut, stainless	M8
7	1	6340337	Lock plate	
8	1	6344523	Pin	
9	2	26334	Connection	GEV 16 SR-WD
10	1	6344643	Pipe	
11	1	6345643	Pipe, CII extend	Kurvekran/Man basket
12	1	6344644	Pipe	
13	2	25127	Connection	GES 12 LR-WD
14	1	6344560	Extension cylinder II	
15	1	6344524	Plate	
16	2	6302369	Spacer	
17	5	31177	Washer	10 mm
18	5	30453	Screw	MC10 x 25

2530L

63 47 370
Internal ref. 63 44 370

An Oshkosh Corportation Company

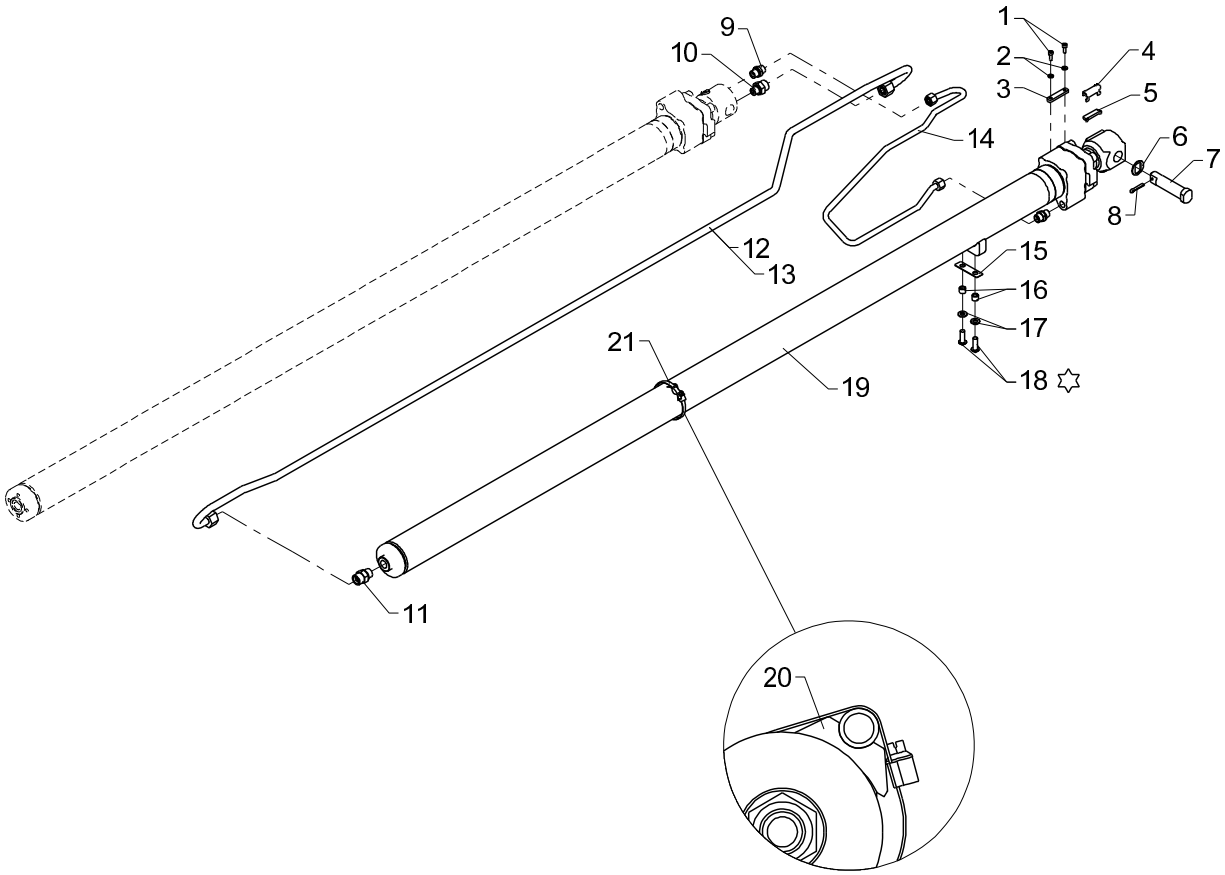

✡ Loctite 243

Extension cylinder III incl. fittings

2530L

Pos	Qty.	Part no.	Description	Remarks
		6344370	Extension cylinderIII+fittings	
		6347370	Ext. cyl. III+fittings, basket	
1	2	31539	Screw, stainless	MC6 x 16
2	2	31154	Spring washer, stainless	6 mm
3	1	6340336	Lock plate	
4	1	31920	Clip, stainless, 10mm	
5	1	6340317	Lock plate (10 mm)	
6	1	6304289	Spacer	
7	1	6304062	Pin	
8	1	31634	Split pin	ø5 x 32
9	2	25127	Connection	P-GEV 12 LR-WD
10	1	26368	Straight connection	P-GEV 16 SR 3/8-WD
11	1	26334	Connection	P-GEV 16 SR-WD
12	1	6344645	Pipe	
13	1	6345645	Pipe, CIII extend	Kurvekan/Man basket
14	1	6344646	Pipe	
15	1	6304279	Shim	
16	2	6302369	Spacer	
17	2	31177	Washer	10 mm
18	2	30649	Screw	M10 x 30
19	1	6344570	Extension cylinder III	
20	1	64409	Clamp	
21	1	31406	Clip	

2530L

Internal ref. 63 53 460

An Oshkosh Corportation Company

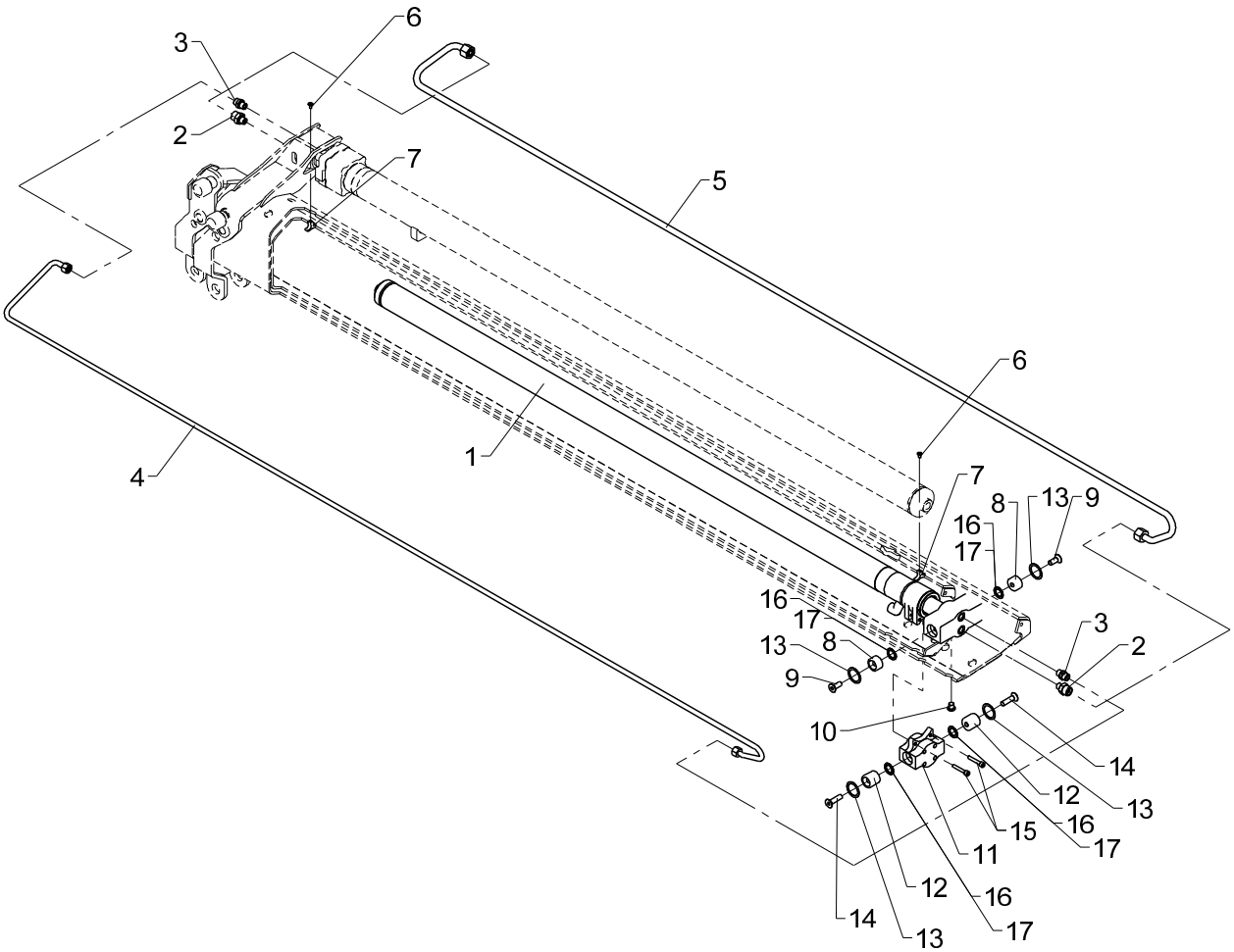

Extension cylinder IVi incl. Fittings for K5
2530L

Pos	Qty.	Part no.	Description	Remarks
1	1	6353480	Extension cyl. IVi (C60/45)	
2	2	26368	Straight connection	P-GEV 16 SR 3/8-WD
3	2	25127	Connection	P-GEV 12 LR-WD
4	1	6353488	Pipe, C4i retract	
5	1	6353484	Pipe, C4i extend	
6	2	30542	Counter-sunk screw	MK6 x 12
7	2	6341395	Clamp	
8	2	6353501	Mounting plate	
9	2	30539	Countersunk screw	MK12 x 30
10	1	25197	Plug	VS-R-1/4 WD
11	1	6353483	Cylinder bracket	
12	2	6353502	Mounting plate	
13	4	31767	Washer	ø35 x 45 x 1,0
14	2	31033	Countersunk screw	MK12 x 45
15	2	32205	Screw, stainless	MC8 x 45
16	4	31770	Washer	ø22 x 32 x 0,5
17	4	30916	Washer	PS 22 x 32 x 1,0

2530L

Internal ref. 63 53 470

An Oshkosh Corportation Company

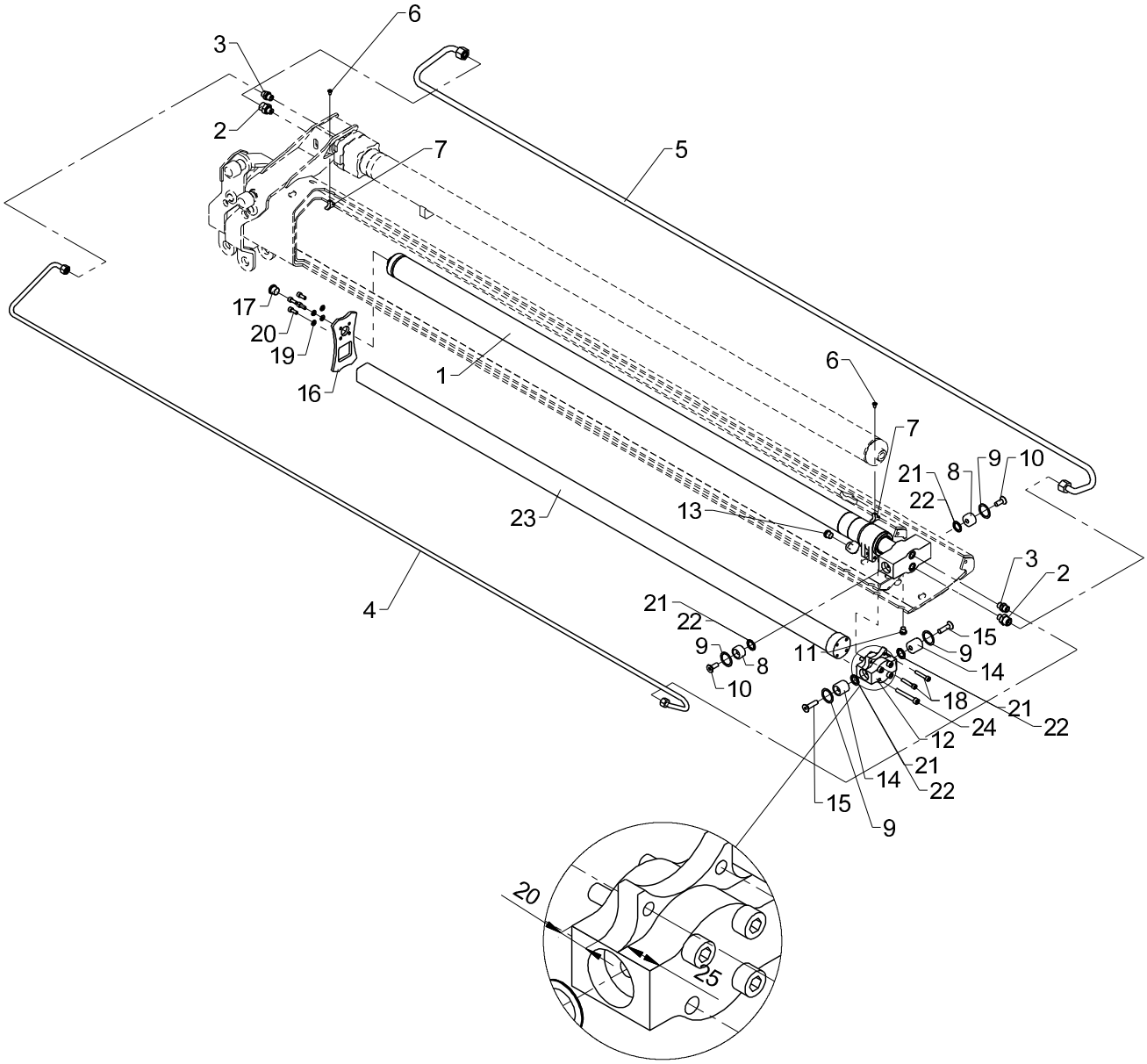

Extension cylinder IVi incl. Fittings for K4
2530L

Pos	Qty.	Part no.	Description	Remarks
1	1	6353480	Extension cyl. IVi (C60/45)	
2	2	26368	Straight connection	P-GEV 16 SR 3/8-WD
3	2	25127	Connection	P-GEV 12 LR-WD
4	1	6353488	Pipe, C4i retract	
5	1	6353484	Pipe, C4i extend	
6	2	30542	Counter-sunk screw	MK6 x 12
7	2	6341395	Clamp	
8	2	6353501	Mounting plate	
9	4	31767	Washer	ø35 x 45 x 1,0
10	2	30539	Countersunk screw	MK12 x 30
11	1	25197	Plug	VS-R-1/4 WD
12	1	6353483	Cylinder bracket	
13	1	25277	Plug	VS-R-3/8 WD
14	2	6353502	Mounting plate	
15	2	31033	Countersunk screw	MK12 x 45
16	1	6353496	Plate	
17	1	25103	Plug	VS-R-1/2 WD
18	2	32205	Screw, stainless	MC8 x 45
19	4	31147	Face washer, 8 mm	
20	4	30438	Screw	MC8 x 20
21	4	31770	Washer	ø22 x 32 x 0,5
22	4	30916	Washer	PS 22 x 32 x 1,0
23	1	6345497		
24	4	30499	Sockethead screw	MC10 x 75

2530L

Internal ref. 63 53 500

An Oshkosh Corportation Company

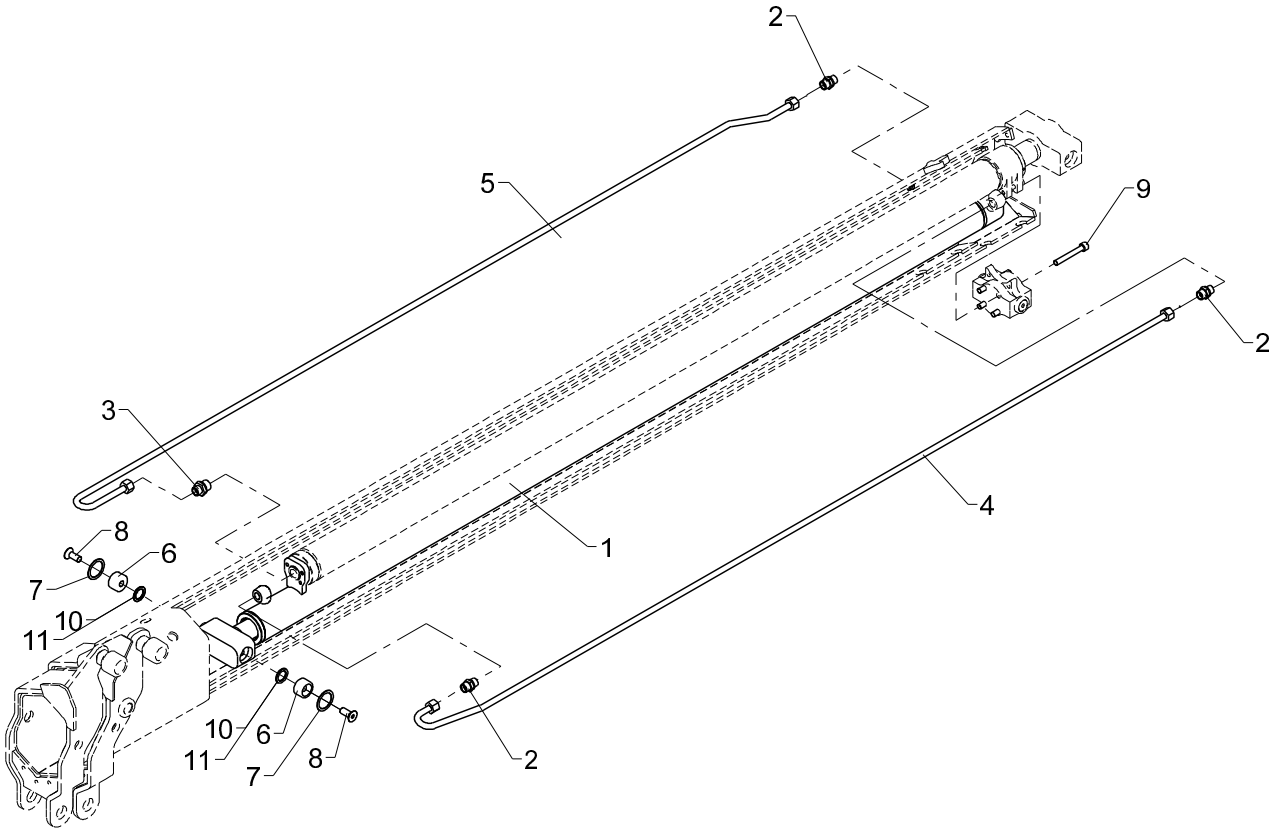

Extension cylinder Vi incl. fittings

2530L

Pos	Qty.	Part no.	Description	Remarks
1	1	6353490	Extension cylinder Vi (C60/45)	
2	3	25127	Connection	P-GEV 12 LR-WD
3	1	25108	Connection	GES 12 LR 1/2-WD
4	1	6353494	Pipe, C5i retract	
5	1	6353492	Pipe, C5i extend	
6	2	6353501	Mounting plate	
7	2	31767	Washer	ø35 x 45 x 1,0
8	2	30539	Countersunk screw	MK12 x 30
9	4	30499	Sockethead screw	MC10 x 75
10	2	31770	Washer	ø22 x 32 x 0,5
11	2	30916	Washer	PS 22 x 32 x 1,0

2530L

Internal ref. 63 55 930

An Oshkosh Corportation Company

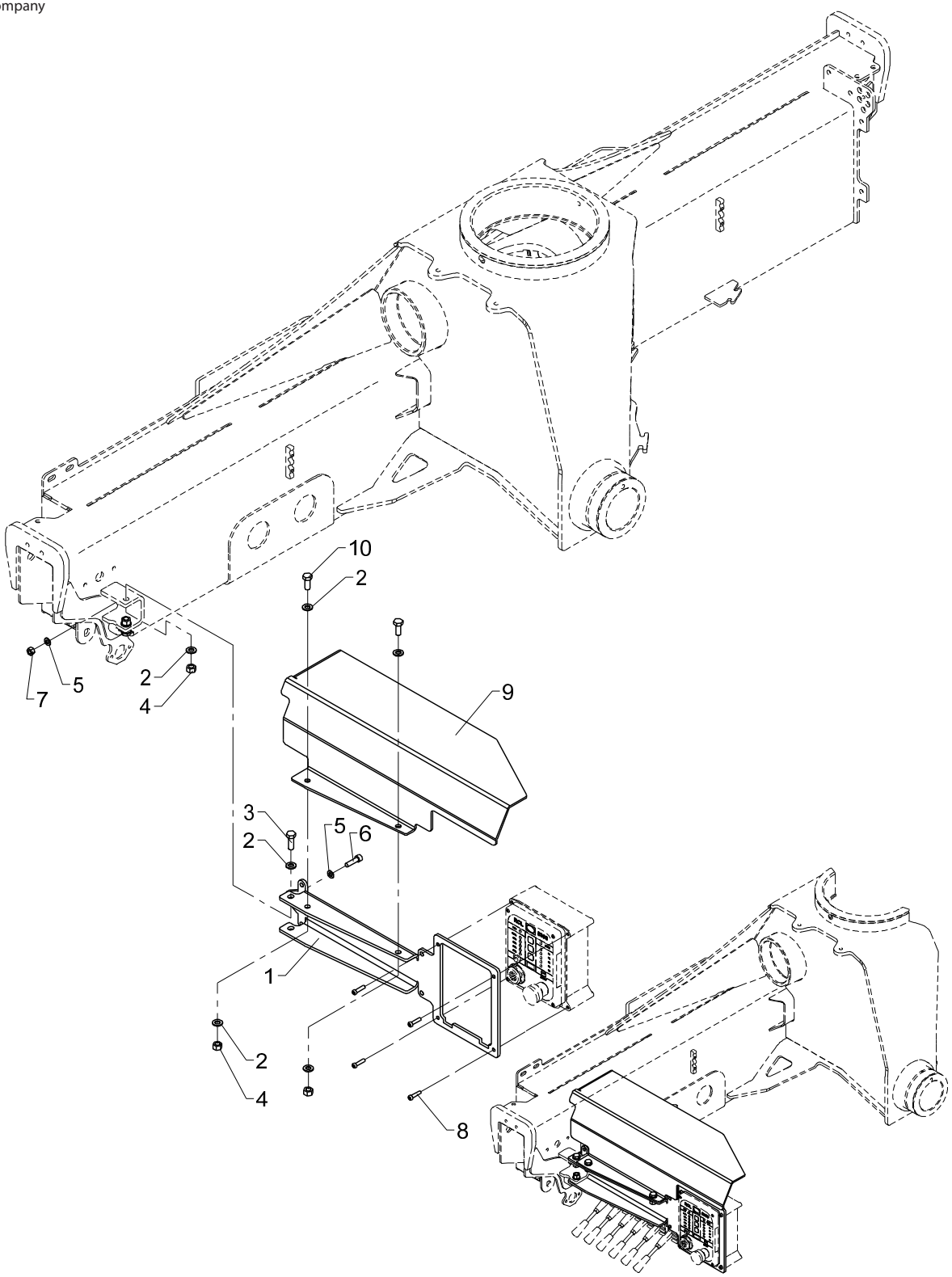

Valve brackets

2530L

Pos	Qty.	Part no.	Description	Remarks
1	1	6355932	Valve bracket	
2	8	31565	Washer, stainless	10 mm
3	2	30156	Set screw, stainless	M10 x 30
4	4	30888	Lock nut	
5	2	31147	Face washer, 8 mm	
6	1	30442	Screw	MC8 x 30
7	1	30886	Lock nut, stainless	M8
8	4	30340	Screw, stainless	6,0 x 25
9	1	6355937	Protection plate	
10	2	30155	Set screw	M10 x 25

2530L

Internal ref. 63 41 260

An Oshkosh Corportation Company

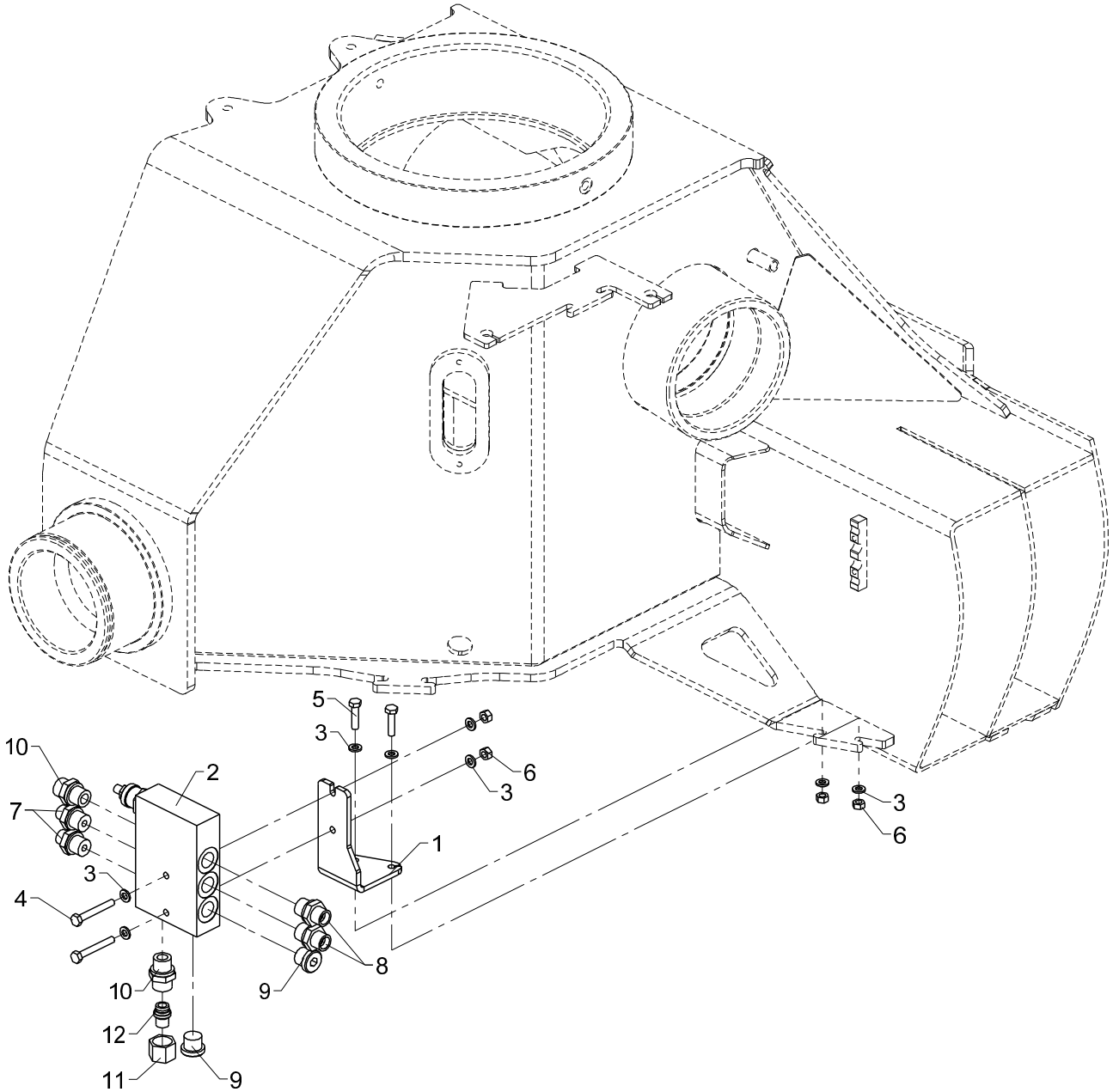

Counter-balance valve

2530L

Pos	Qty.	Part no.	Description	Remarks
1	1	6340273	Bracket (counter-balance valve	
2	1	50521	Sequence valve	
3	8	32302	Face washer, stainless	6 mm
4	2	30118	Steel pin, stainless	M6 x 45
5	2	30114	Set screw, stainless	M6 x 25
6	4	30854	Nut, stainless	M6
7	2	25244	Connection	GES 8 LR 3/8-WD
8	2	25253	Connection	P-GEV 10 LR 3/8-WD
9	2	25277	Plug	VS-R-3/8 WD
10	2	25127	Connection	P-GEV 12 LR-WD
11	1	25183	Coupling nut	M 12 L
12	1	26180	Blanking plug	VSD 12 L

2530L

63 41 600
Internal ref. 63 41 210

An Oshkosh Corportation Company

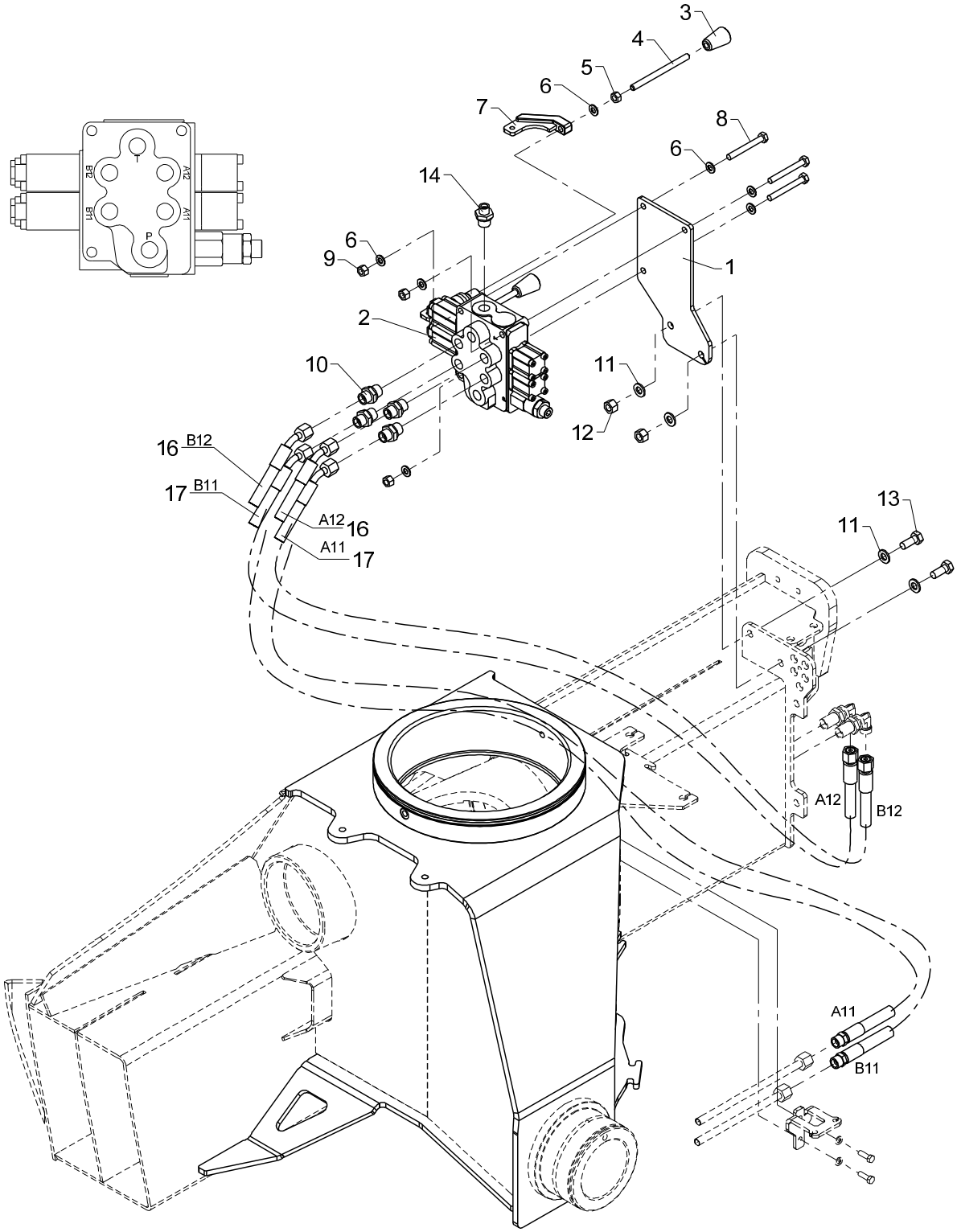

Valve bracket, cpl. 2 fcts.

2530L

Pos	Qty.	Part no.	Description	Remarks
		6341210	Valve bracket, compl. 2 functs	
		6341600	Hose kit, 2 functions	
1	1	6340254	Valve bracket (2 functions)	
2	1	55225	Stabilizer valve	
3	2	59224	Knob for lever	
4	2	1330187	Control lever, long, straight	
5	2	30856	Nut, stainless	M8
6	8	31147	Face washer, 8 mm	8 mm
7	2	63450	Adapter for dual controls	
8	3	30259	Steel bolt, stainless	M8 x 65
9	3	30886	Lock nut, stainless	M8
10	4	25253	Connection	P-GEV 10 LR 3/8-WD
11	4	31565	Washer, stainless	10 mm
12	2	31564	Lock nut, stainless	M10
13	2	31513	Set screw, stainless	M10 x 25
14	1	25244	Connection	GES 8 LR 3/8-WD
15	1	6341600	Hose kit, 2 functions	
16	2	56393	Hose	5/16"x950mm L/V 10Let / vinkel 45
17	2	56394	Hose	5/16"x600mm S/V 10L studs / vink

2530L

63 41 600
Internal ref. 63 41 060

An Oshkosh Corportation Company

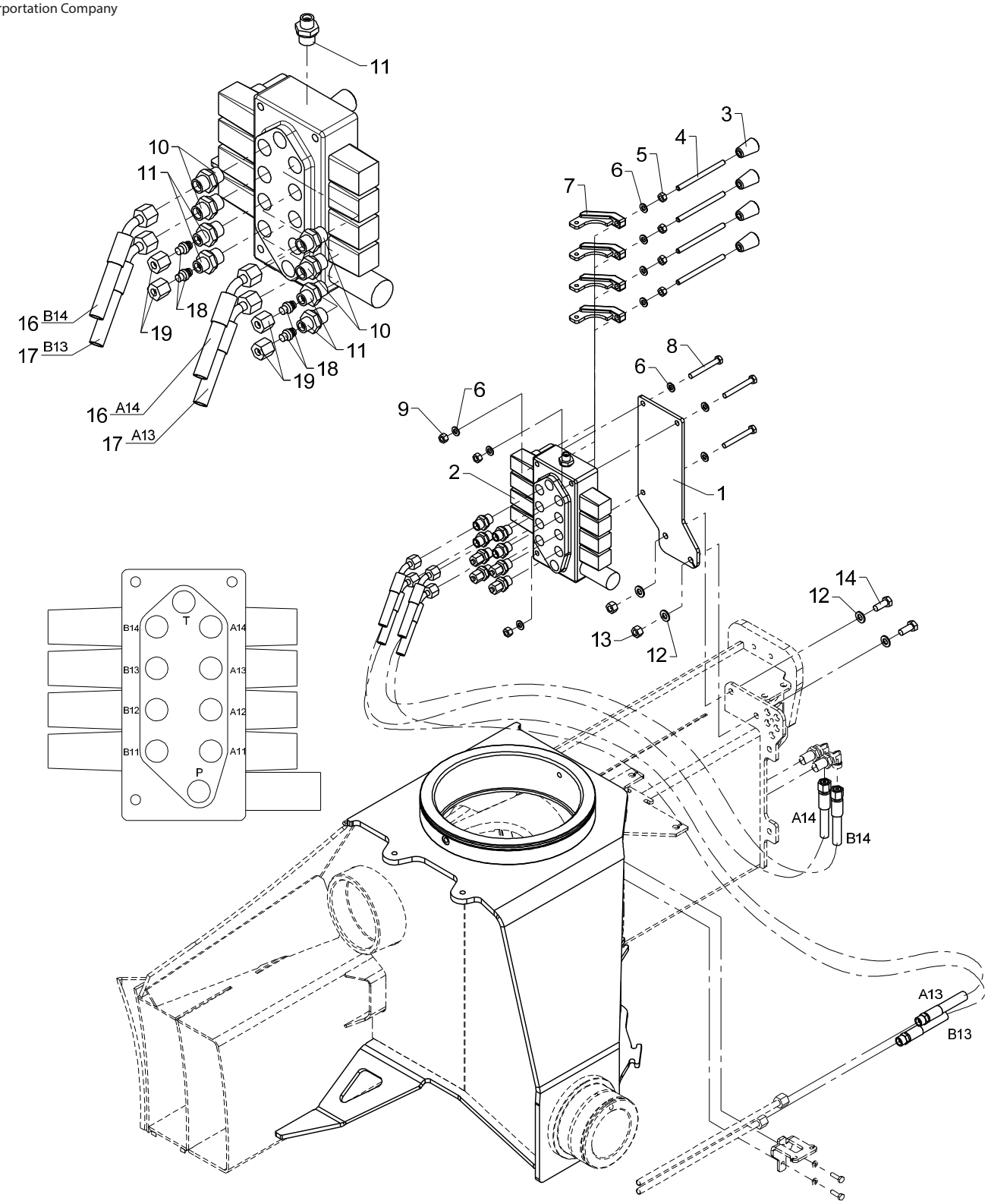

From loader 1270001
To loader
Created
Modified 05-05-2014

Valve bracket, cpl., 2 fcts. + 2 available fcts.

2530L

Pos	Qty.	Part no.	Description	Remarks
		6341060	Valve br., cpl.2fcts.+2 avail.	
		6341600	Hose kit, 2 functions	
1	1	6340255	Valve bracket (4 functions)	
2	1	55226	Stabilizer valve	
3	4	59224	Knob for lever	
4	4	1330187	Control lever, long, straight	
5	4	30856	Nut, stainless	M8
6	10	31147	Face washer, 8 mm	8 mm
7	4	63450	Adapter for dual controls	
8	3	30259	Steel bolt, stainless	M8 x 65
9	3	30886	Lock nut, stainless	M8
10	4	25253	Connection	P-GEV 10 LR 3/8-WD
11	5	25244	Connection	GES 8 LR 3/8-WD
12	4	31565	Washer, stainless	10 mm
13	2	31564	Lock nut, stainless	M10
14	2	31513	Set screw, stainless	M10 x 25
15	1	6341600	Hose kit, 2 functions	
16	2	56393	Hose	5/16"x950mm L/V
17	2	56394	Hose	5/16"x600mm S/V
18	4	26166	Blanking plug	VSD 8 L
19	4	25181	Coupling nut	M 8 L

2530L

63 41 610
Internal ref. 63 41 220

An Oshkosh Corportation Company

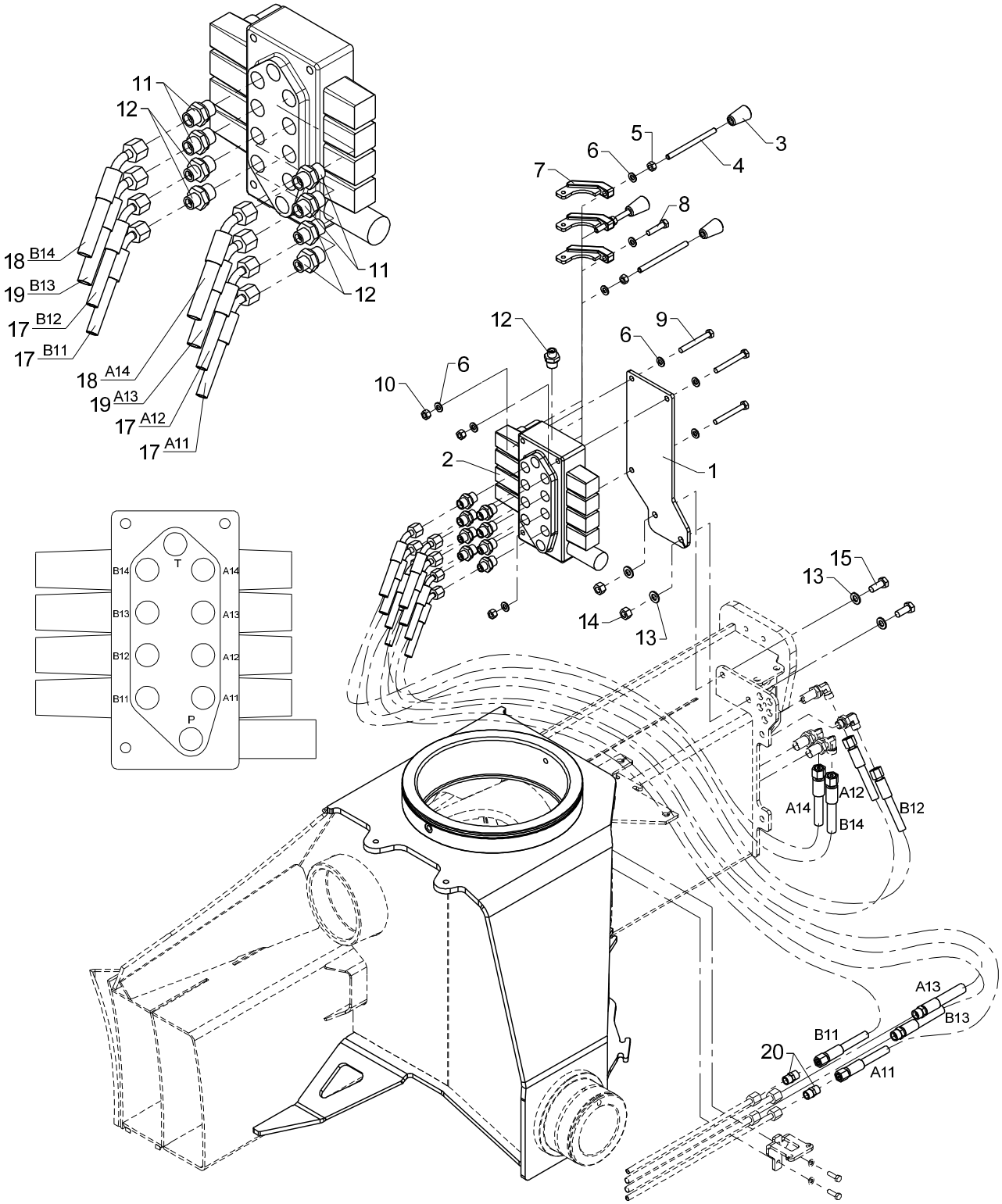

Valve bracket, cpl. 4 fcts.

2530L

Pos	Qty.	Part no.	Description	Remarks
		6341220	Valve bracket, cpl., 4 funct.	
		6341610	Hose kit, 4 functions	
1	1	6340255	Valve bracket (4 functions)	
2	1	55226	Stabilizer valve	
3	3	59224	Knob for lever	
4	3	1330187	Control lever, long, straight	
5	3	30856	Nut, stainless	M8
6	10	31147	Face washer, 8 mm	8 mm
7	3	63450	Adapter for dual controls	
8	1	30136	Steel bolt, stainless	M8 x 35
9	3	30259	Steel bolt, stainless	M8 x 65
10	3	30886	Lock nut, stainless	M8
11	4	25253	Connection	P-GEV 10 LR 3/8-WD
12	5	25244	Connection	GES 8 LR 3/8-WD
13	4	31565	Washer, stainless	10 mm
14	2	31564	Lock nut, stainless	M10
15	2	31513	Set screw, stainless	M10 x 25
16	1	6341610	Hose kit, 4 functions	
17	4	56381	Hose	1/4"x600mm L/V 8Let / vinkel 45 gr
18	2	56393	Hose	5/16"x950mm L/V 10Let / vinkel 45
19	2	56394	Hose	5/16"x600mm S/V 10L studs / vink
20	2	25246	Double connection	GS 8 L

2530L

63 41 620
Internal ref. 63 41 250

An Oshkosh Corportation Company

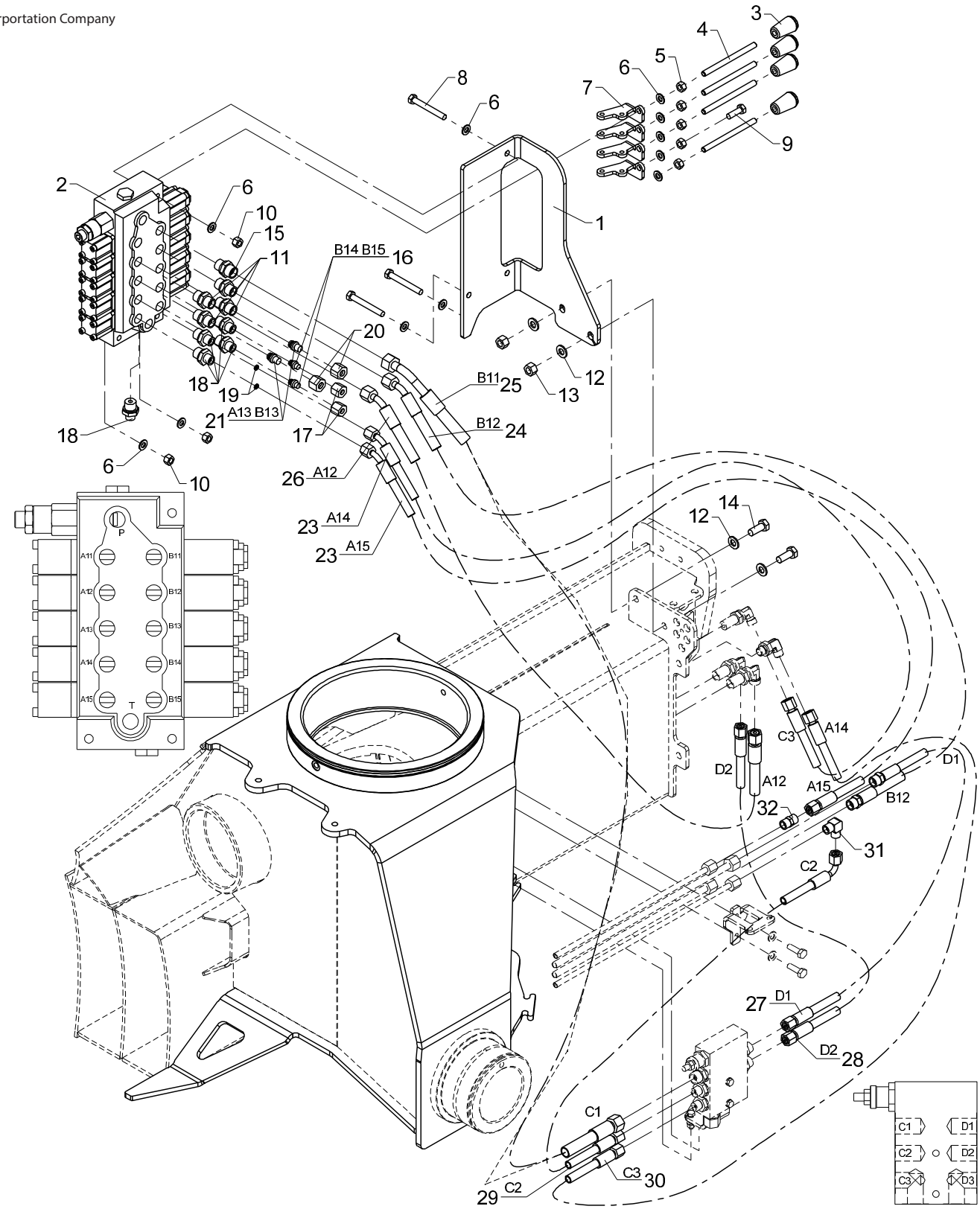

Valve bracket, cpl. 4 fcts. + 4 available
2530L

Pos	Qty.	Part no.	Description	Remarks
		6341250	Valve br., cpl.4fcts.+4 avail.	
		6341620	Hose kit, 4 fcts + 4 available	
1	1	6340271	Valve bracket (4 + 4 fcts.)	
2	1	55277	Valve block, complete	
3	4	59224	Knob for lever	
4	4	1330187	Control lever, long, straight	
5	5	30856	Nut, stainless	M8
6	11	31147	Face washer, 8 mm	8 mm
7	4	6340229	Adapter	
8	3	30259	Steel bolt, stainless	M8 x 65
9	1	30134	Set screw, stainless	M8 x 25
10	3	30886	Lock nut, stainless	M8
11	4	25253	Connection	P-GEV 10 LR 3/8-WD
12	4	31565	Washer, stainless	10 mm
13	2	31564	Lock nut, stainless	M10
14	2	31513	Set screw, stainless	M10 x 25
15	1	25127	Connection	P-GEV 12 LR-WD
16	2	26166	Blanking plug	VSD 8 L
17	2	25181	Coupling nut	M 8 L
18	5	25244	Connection	GES 8 LR 3/8-WD
19	2	60963	Washer	
20	2	25182	Coupling nut	M 10 L
21	2	25202	Blanking plug	VSD 10 L
22	1	6341620	Hose kit, 4 fcts + 4 available	
23	2	56381	Hose	1/4"x600mm L/V 8Let / vinkel 45 gr
24	1	56394	Hose	5/16"x600mm S/V 10L studs / vink
25	1	56511	Hose	3/8 X 900 mm 45/L 12Let
26	1	56393	Hose	5/16"x950mm L/V 10Let / vinkel 45
27	1	56460	Hose	1/4" x 550mm L/S-10mm
28	1	56510	Hose	1/4 X 600 mm L/L 10Let
29	1	62525	Hose	1/4 X 400 M14 X 1.5 L/90
30	1	62569	Hose	1/4 X 800 M14 X 1.5 L/L
31	1	25247	Elbow connection	WV 8 L
32	1	25246	Double connection	GS 8 L

2530L

Internal ref. 63 55 700

An Oshkosh Corportation Company

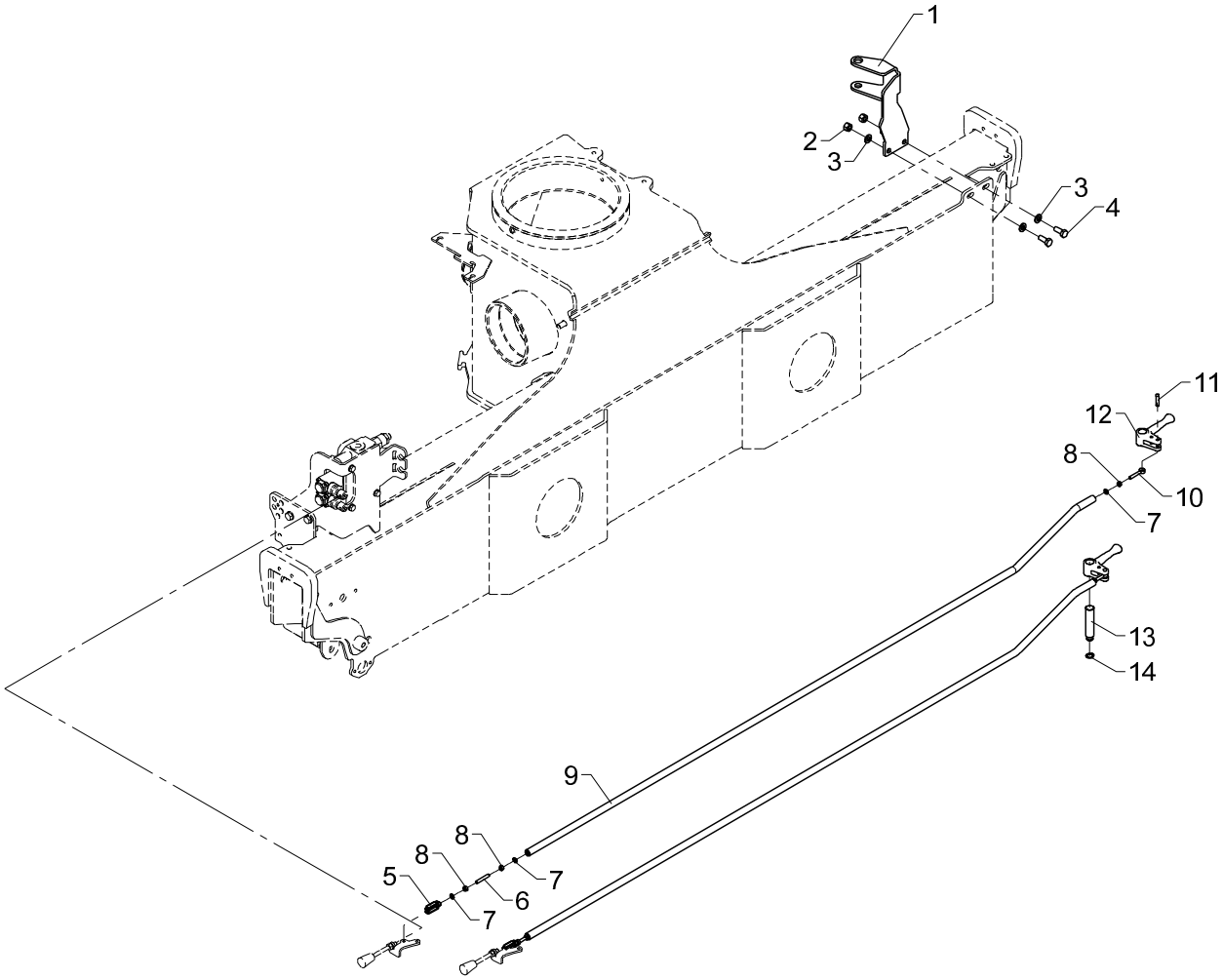

From loader 1270001
To loader
Created 05-05-2014
Modified

Dual control, 2 fcts.

2530L

Pos	Qty.	Part no.	Description	Remarks
1	1	6355158	Bracket f. dual contr. 2-fcts.	
2	2	31564	Lock nut, stainless	M10
3	4	31565	Washer, stainless	10 mm
4	2	31513	Set screw, stainless	M10 x 25
5	2	48414	Clevis	
6	2	31007	Pointed screw	MSP6 x 40
7	6	32302	Face washer, stainless	6 mm
8	6	30854	Nut, stainless	M6
9	2	6355246	Connecting rod, dual control	
10	2	32114	Pin	M6 x 40
11	2	63468	Split pin with spring lock	
12	2	63446	Lever for dual controls	
13	1	6340261	Pin (2 functions)	
14	1	33104	Circlip	15U

2530L

Internal ref. 63 55 710

An Oshkosh Corportation Company

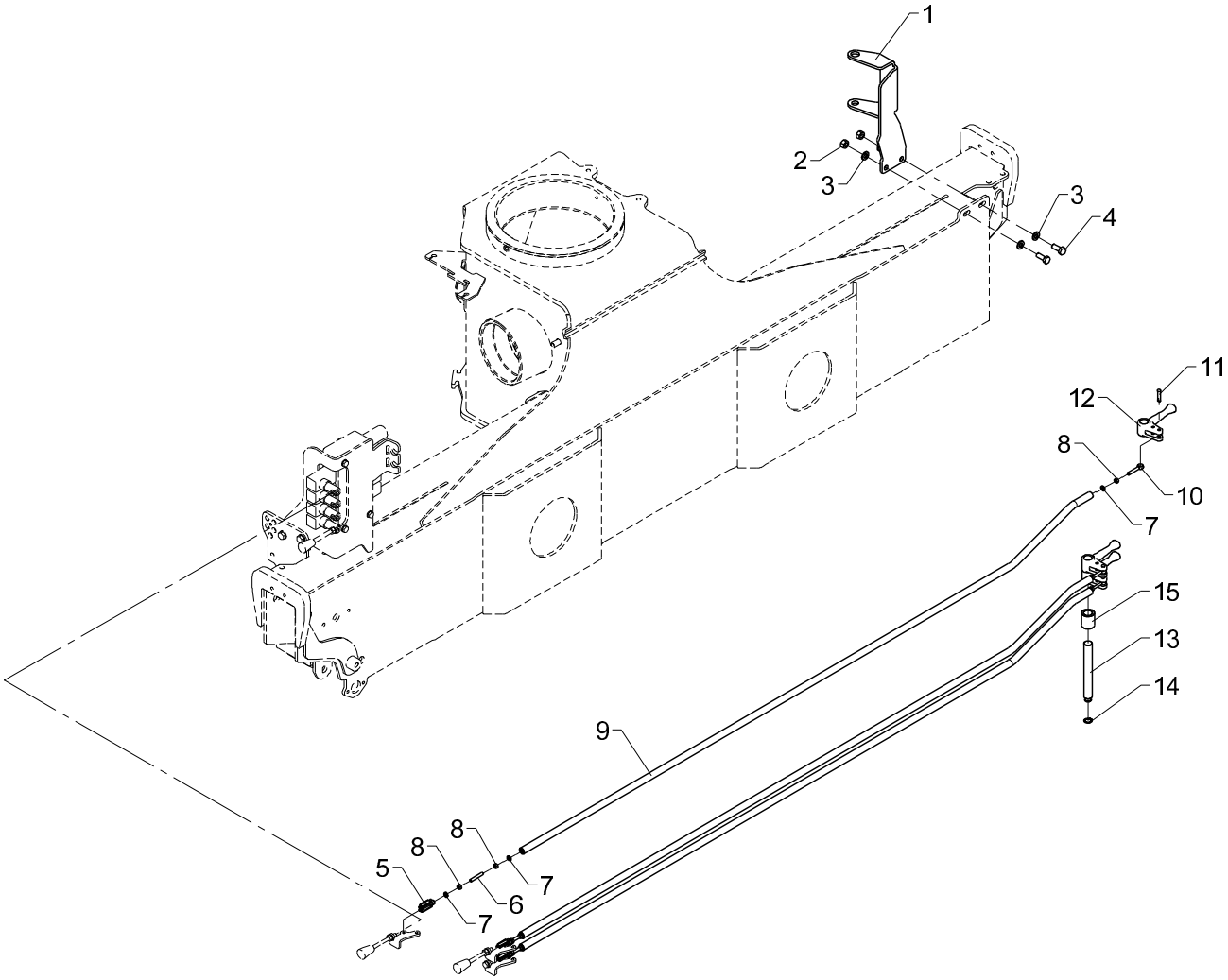

Dual control, 4 fcts.

2530L

Pos	Qty.	Part no.	Description	Remarks
1	1	6355159	Bracket f. dual contr. 4-fcts.	
2	2	31564	Lock nut, stainless	M10
3	4	31565	Washer, stainless	10 mm
4	2	31513	Set screw, stainless	M10 x 25
5	3	48414	Clevis	
6	3	31007	Pointed screw	MSP6 x 40
7	9	32302	Face washer, stainless	6 mm
8	9	30854	Nut, stainless	M6
9	3	6355246	Connecting rod, dual control	
10	3	32114	Pin	M6 x 40
11	3	63468	Split pin with spring lock	
12	3	63446	Lever for dual controls	
13	1	6340264	Pin(4 fcts.+4 available fcts.)	
14	1	33104	Circlip	15U
15	1	63598	Bushing	ø30/ø20 x 35

2530L

Internal ref. 63 55 720

An Oshkosh Corportation Company

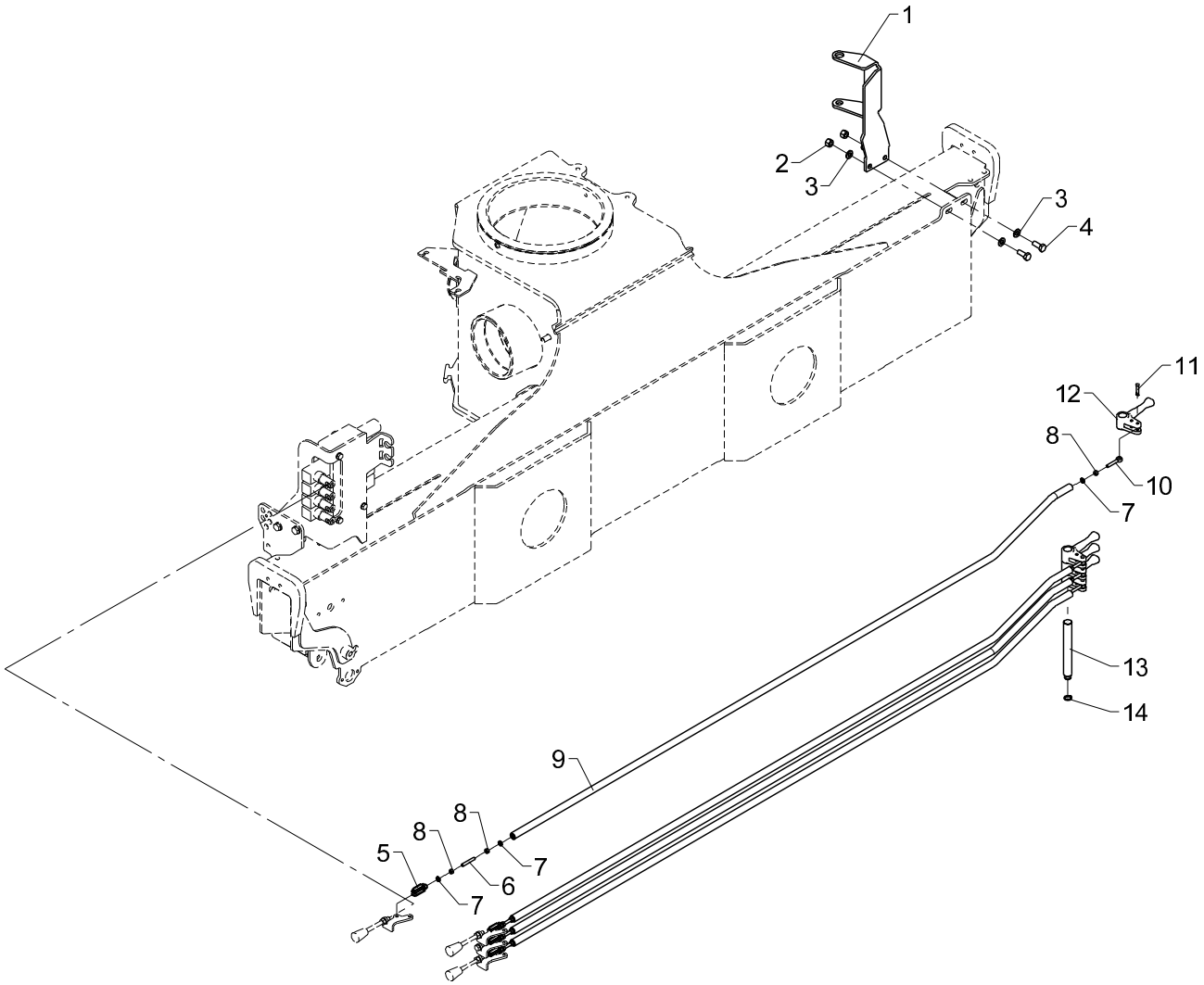

Dual control.4 fcts. + 4 available functions

2530L

Pos	Qty.	Part no.	Description	Remarks
1	1	6355159	Bracket f. dual contr. 4-fcts.	
2	2	31564	Lock nut, stainless	M10
3	4	31565	Washer, stainless	10 mm
4	2	31513	Set screw, stainless	M10 x 25
5	4	48414	Clevis	
6	4	31007	Pointed screw	MSP6 x 40
7	11	32302	Face washer, stainless	6 mm
8	11	30854	Nut, stainless	M6
9	4	6355246	Connecting rod, dual control	
10	4	32114	Pin	M6 x 40
11	4	63468	Split pin with spring lock	
12	4	63446	Lever for dual controls	
13	1	6340264	Pin(4 fcts.+4 available fcts.)	
14	1	33104	Circlip	15U

63 55 110
63 46 450
63 43 250 63 43 090
63 55 470 63 43 080
Internal ref. 63 43 010

2530L

An Oshkosh Corportation Company

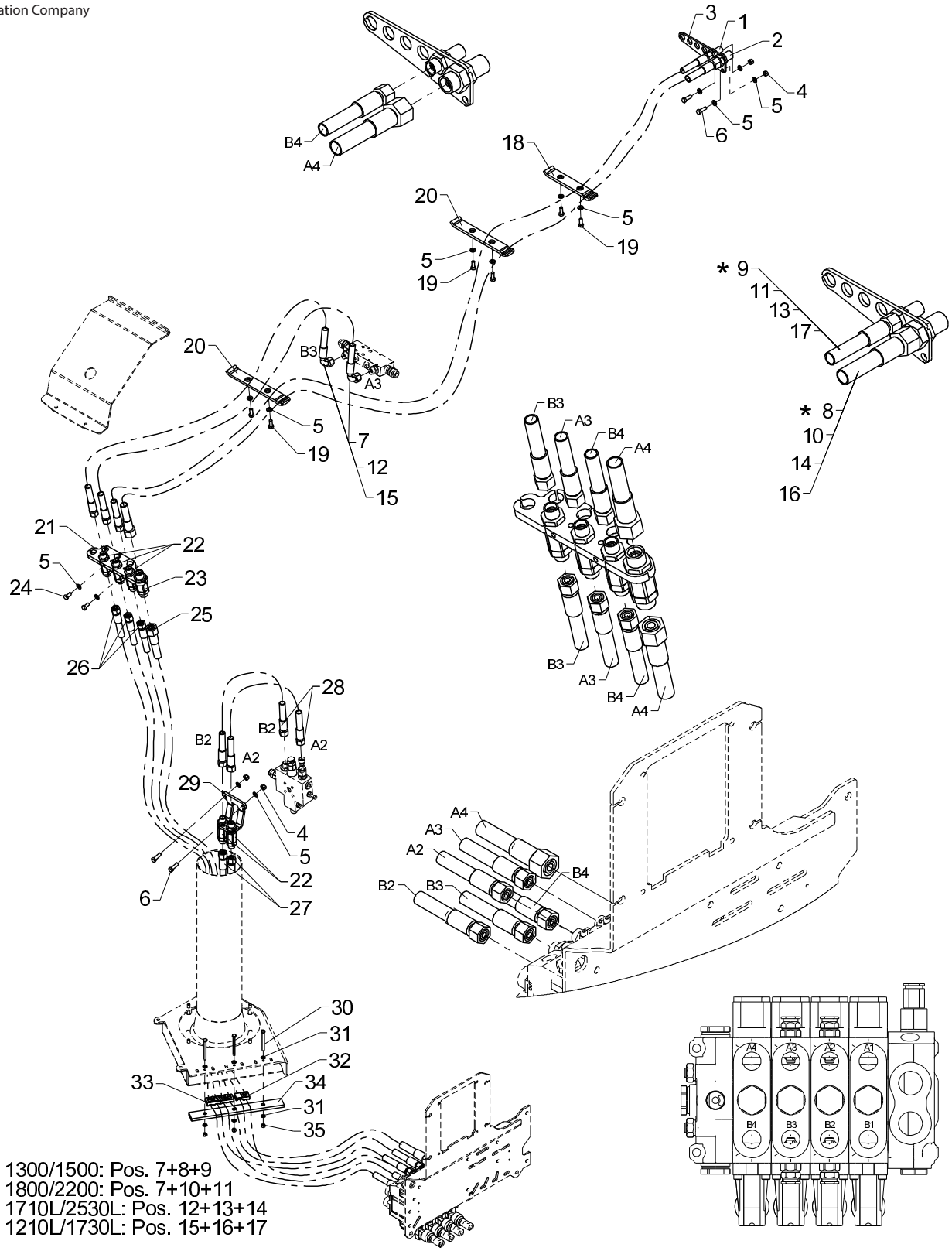

* 1300/1500: Pos. 7+8+9
1800/2200: Pos. 7+10+11
1710L/2530L: Pos. 12+13+14
1210L/1730L: Pos. 15+16+17

Hose kit, loader functions, std.

2530L

Pos	Qty.	Part no.	Description	Remarks
		6343010	Hose kit, column, std.	
		6343080	Hose kit, boom cylinder	
		6343090	Hose kit, main boom, std.	
		6346450	Hose kit, main boom, std.V	
		6355110	Hose kit, main boom, std.	1210L/1730L
		6355470	Hose kit, main boom, std.	1710L/2530L
		6343250	Clamp kit, std.	
1	1	25201	Bulkhead connection	GSS 12 L
2	1	26335	Bulkhead connection	P-GSV 16 S
3	1	6340315	Bracket, bulkhead connections	
4	4	30886	Lock nut, stainless	M8
5	14	31147	Face washer, 8 mm	8 mm
6	4	30134	Set screw, stainless	M8 x 25
7	2	0017690	Hose	3/8" x 1300 mm V90/L
8	1	56382	Hose	
9	1	0017600	Hose	
10	1	56529	Hose	1/2 X 3500 mm L/L
11	1	0017770	Hose	
12	2	56950	Hose 3/8" x 2450 L/90 (12L)	
13	1	56951	Hose 3/8" x 4650 L/L (12L)	
14	1	56952	Hose 1/2" x 4650 L/L(16S)	
15	2	56917	Hose	
16	1	56918	Hose	
17	1	56916	Hose	
18	1	6340211	Clamp, complete	
19	6	30132	Set screw, stainless	
20	2	6340213	Clamp, complete	
21	1	6340252	Bracket for swivel coupling	
22	5	58478	Swivel coupling	M18 x 1,5 12L
23	1	58479	Swivel coupling	M24 x 1,5 16L
24	2	30131	Set screw, stainless	M8 x 16
25	1	62846	Hose	1/2" x 2750 L/L (16S, M24X1.5)
26	3	0015130	Hose	3/8" x 2750 L/L (12L)
27	2	0015120	Hose	3/8" x 1400 L/L (12L)
28	2	0015500	Hose	
29	1	6340251	Clamp for swivel coupling	
30	3	30199	Steel bolt, stainless	M6 x 65
31	6	32302	Face washer, stainless	6 mm
32	1	63562	Clamp	
33	2	63561	Clamp	
34	1	6340238	Clamp, complete	

63 55 110
63 46 450
63 43 250 63 43 090
63 55 470 63 43 080
Internal ref. 63 43 010

2530L

An Oshkosh Corportation Company

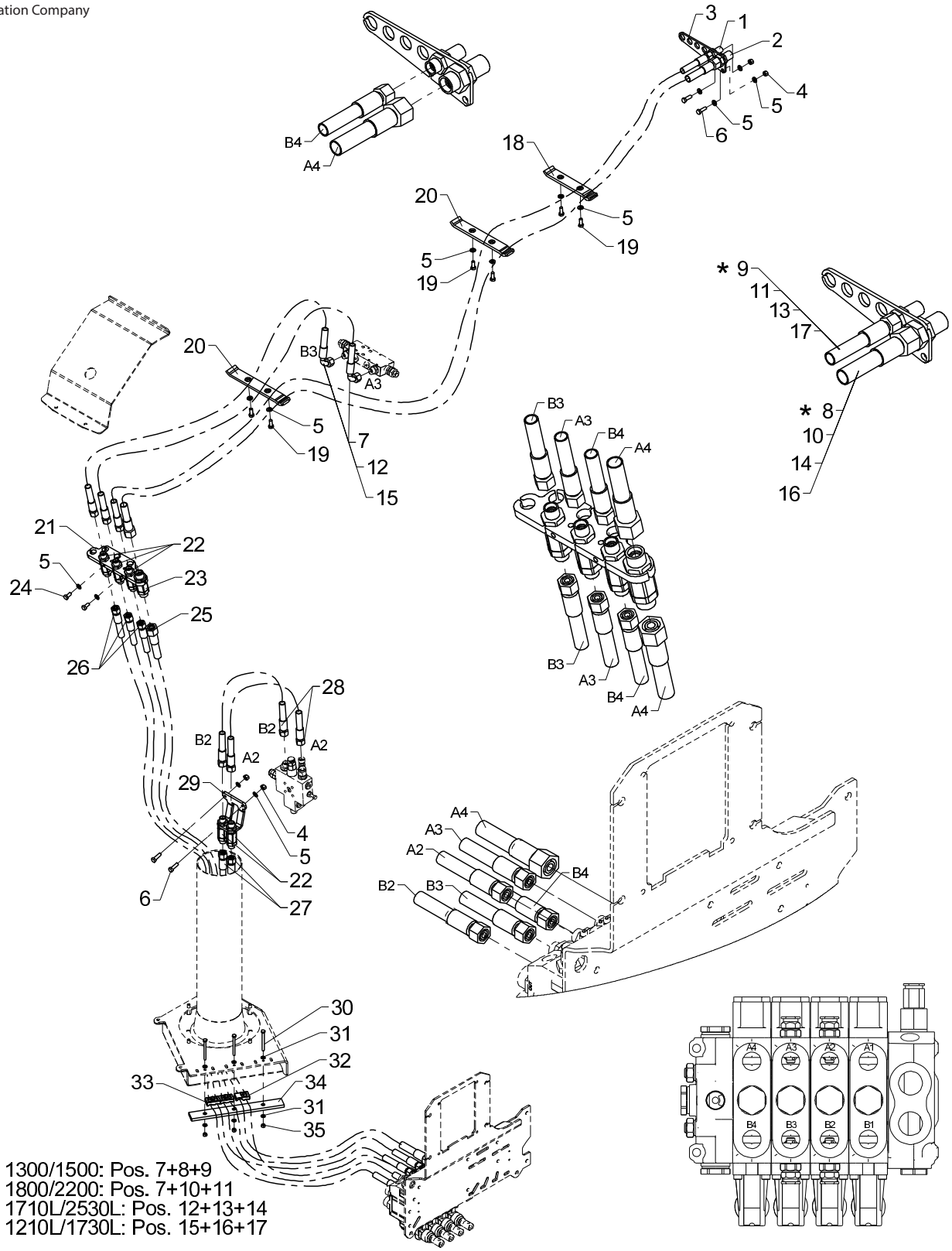

* 1300/1500: Pos. 7+8+9
1800/2200: Pos. 7+10+11
1710L/2530L: Pos. 12+13+14
1210L/1730L: Pos. 15+16+17

Hose kit, loader functions, std.

2530L

Pos	Qty.	Part no.	Description	Remarks
35	3	30884	Lock nut, stainless	M6

2530L

63 43 270
63 55 460
63 55 480
Internal ref. 63 55 060

An Oshkosh Corportation Company

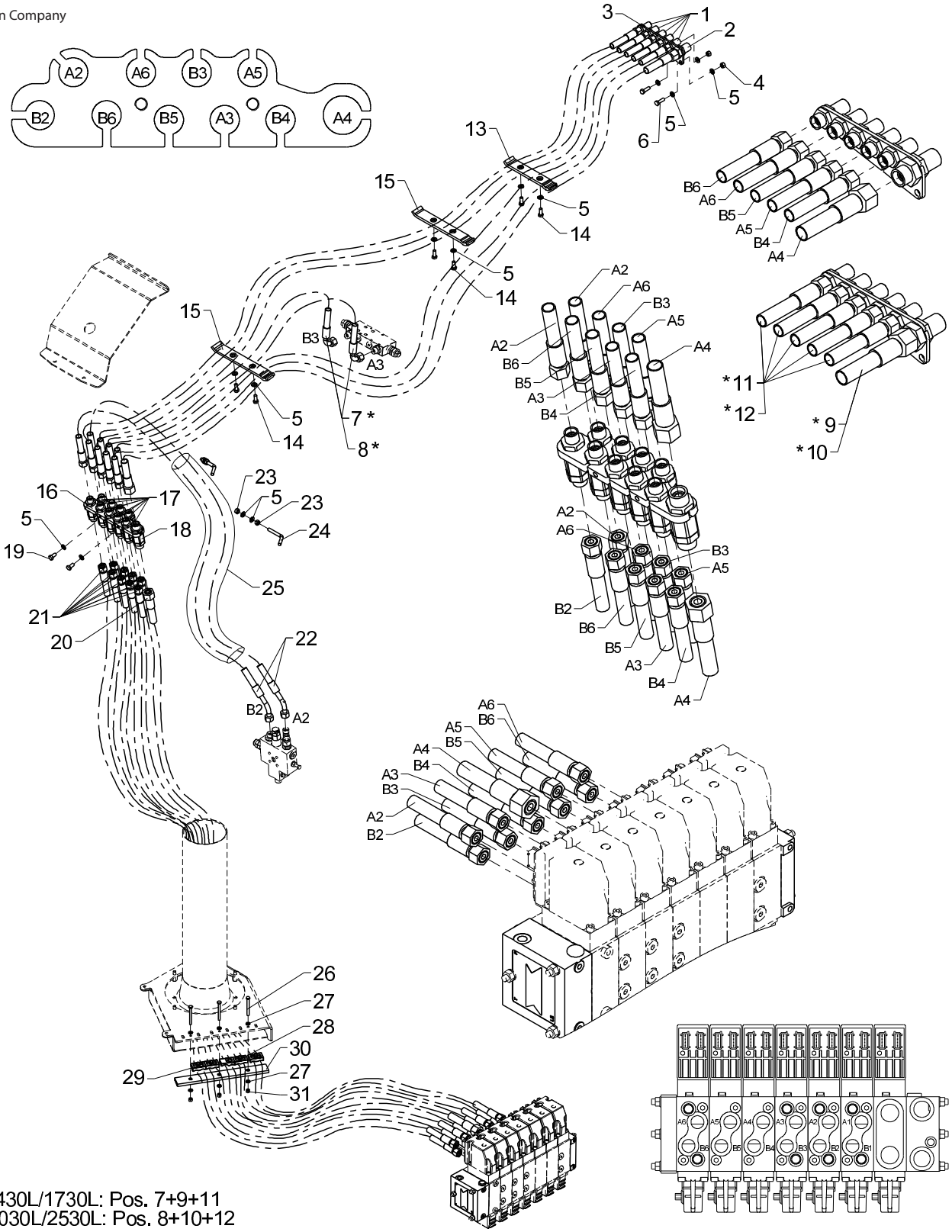

* 1430L/1730L: Pos. 7+9+11
2030L/2530L: Pos. 8+10+12

Hose kit, crane functions, RC, 2 EXV
2530L

Pos	Qty.	Part no.	Description	Remarks
		6355060	Hose kit, column + boom, 2EXV	
		6355480	Hose kit, main boom, 2EXV	2030L/2530L
		6355460	Hose kit, main boom 2 EXV	1430L/1730L
		6343270	Clamp, 2 EXV	
1	5	25201	Bulkhead connection	
2	1	26335	Bulkhead connection	P-GSV 16 S
3	1	6340315	Bracket, bulkhead connections	
4	2	30886	Lock nut, stainless	M8
5	20	31147	Face washer, 8 mm	
6	2	30134	Set screw, stainless	M8 x 25
7	2	56950	Hose 3/8" x 2450 L/90 (12L)	
8	2	56917	Hose	
9	1	56952	Hose 1/2" x 4650 L/L(16S)	
10	1	56918	Hose	
11	5	56951	Hose 3/8" x 4650 L/L (12L)	
12	5	56916	Hose	
13	1	6340211	Clamp, complete	
14	10	30132	Set screw, stainless	
15	4	6340213	Clamp, complete	
16	1	6355252	Bracket for swivel coupling	
17	9	58478	Swivel coupling	M18 x 1,5 12L
18	1	58479	Swivel coupling	M24 x 1,5 16L
19	2	30131	Set screw, stainless	M8 x 16
20	1	56921	Hose	1/2 X 2750 M24X1.5 L/L
21	9	56920	Hose	
22	2	56939	Hose	3/8" x 2000 L/45° (12L)
23	4	30856	Nut, stainless	M8
24	2	6354225	Hose clamp	
25	1	62597	Protective cover	105 x2200 mm
26	3	30120	Steel pin, stainless	M6 x 60
27	6	32302	Face washer, stainless	6 mm
28	1	63562	Clamp	
29	4	63561	Clamp	
30	1	6340238	Clamp, complete	
31	3	30884	Lock nut, stainless	M6

2530L

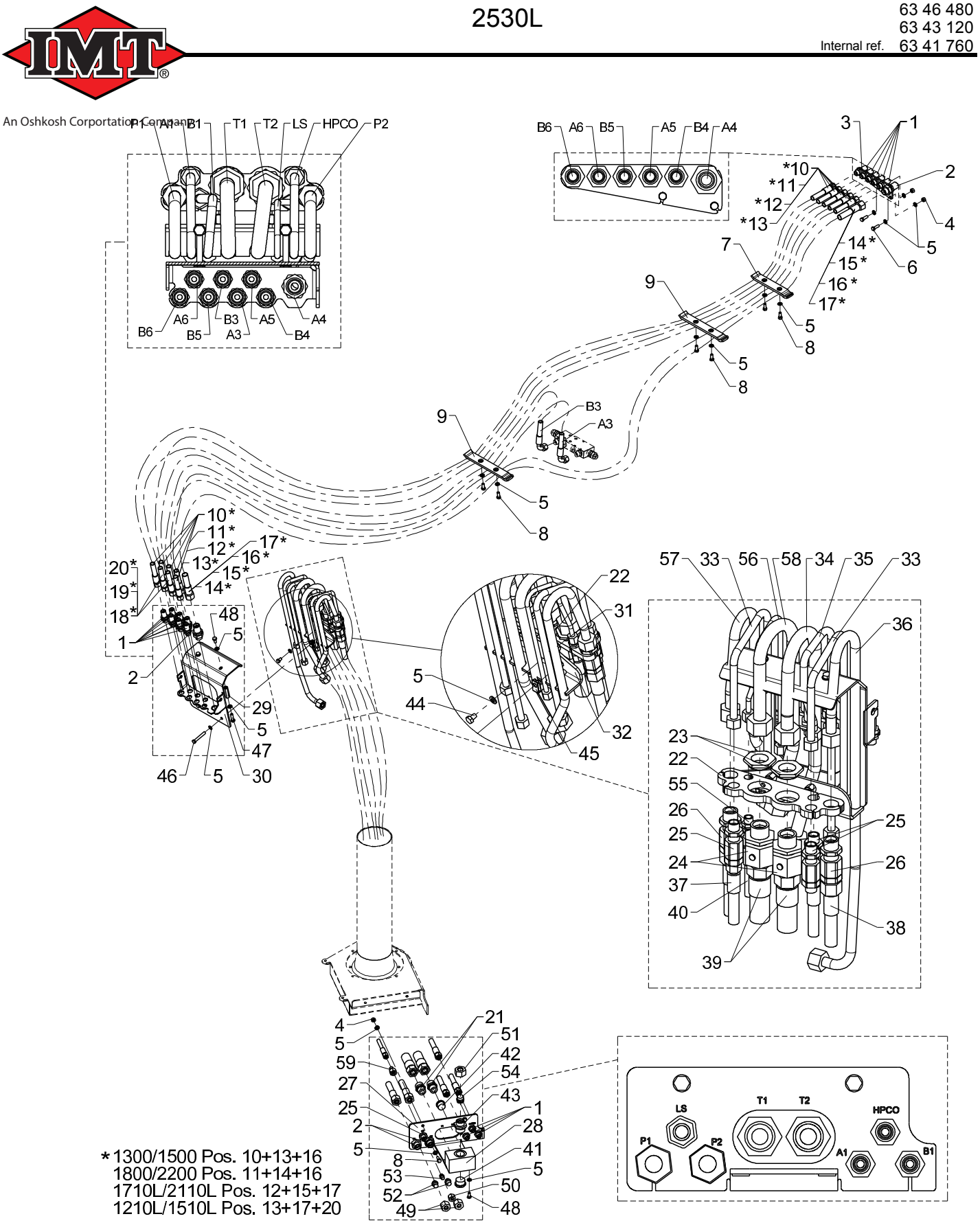

*1300/1500 Pos. 10+13+16
1800/2200 Pos. 11+14+16
1710L/2110L Pos. 12+15+17
1210L/1510L Pos. 13+17+20

Hose kit, loader functions, TS (1-circuit variable)
2530L

Pos	Qty.	Part no.	Description	Remarks
		6341760	Hose kit, loader fcts.TS/1circ	1 kreds variabel
		6343120	Hose kit, main boom, 2 EXV	1300K/1500K
		6346480	Hose kit, main boom, 2 EXV	1800K/2200K
		6355480	Hose kit, main boom, 2EXV	1710L/2110L
		6355460	Hose kit, main boom 2 EXV	1210L/1510L
1	15	25201	Bulkhead connection	GSS 12 L
2	5	26335	Bulkhead connection	P-GSV 16 S
3	1	6340315	Bracket, bulkhead connections	
4	4	30886	Lock nut, stainless	M8
5	28	31147	Face washer, 8 mm	8 mm
6	2	30134	Set screw, stainless	M8 x 25
7	1	6340211	Clamp, complete	
8	12	30132	Set screw, stainless	M8 x 20
9	4	6340213	Clamp, complete	
10	5	0017600	Hose	
11	5	0017770	Hose	
12	5	56951	Hose 3/8" x 4650 L/L (12L)	
13	5	56916	Hose	
14	1	56382	Hose	
15	1	56529	Hose	1/2 X 3500 mm L/L
16	1	56952	Hose 1/2" x 4650 L/L(16S)	
17	1	56918	Hose	
18	2	0017690	Hose	3/8" x 1300 mm V90/L
19	2	56950	Hose 3/8" x 2450 L/90 (12L)	
20	2	56917	Hose	
21	2	26197	Connection	P-GEV 20 SR-WD
22	1	6340221	Bracket for swivel couplingTS	
23	2	6340839	Nut	
24	2	59823	Swivel coupling	M30 x 2 20S
25	4	58478	Swivel coupling	M18 x 1,5 12L
26	2	58479	Swivel coupling	M24 x 1,5 16L
27	1	6340842	Plate (TS)	
28	1	6340844	Connecting block	
29	2	6340222	Spacer	
30	1	6340224	Bracket (TS)	
31	2	6340223	Spacer	
32	1	6340225	Clamp	
33	2	6340837	Pipe (slewing - TS)	
34	1	6340833	Pipe (T1 - TS)	
35	1	6340836	Pipe (HPCO - TS)	
36	1	6340831	Pipe (P1 - TS)	

2530L

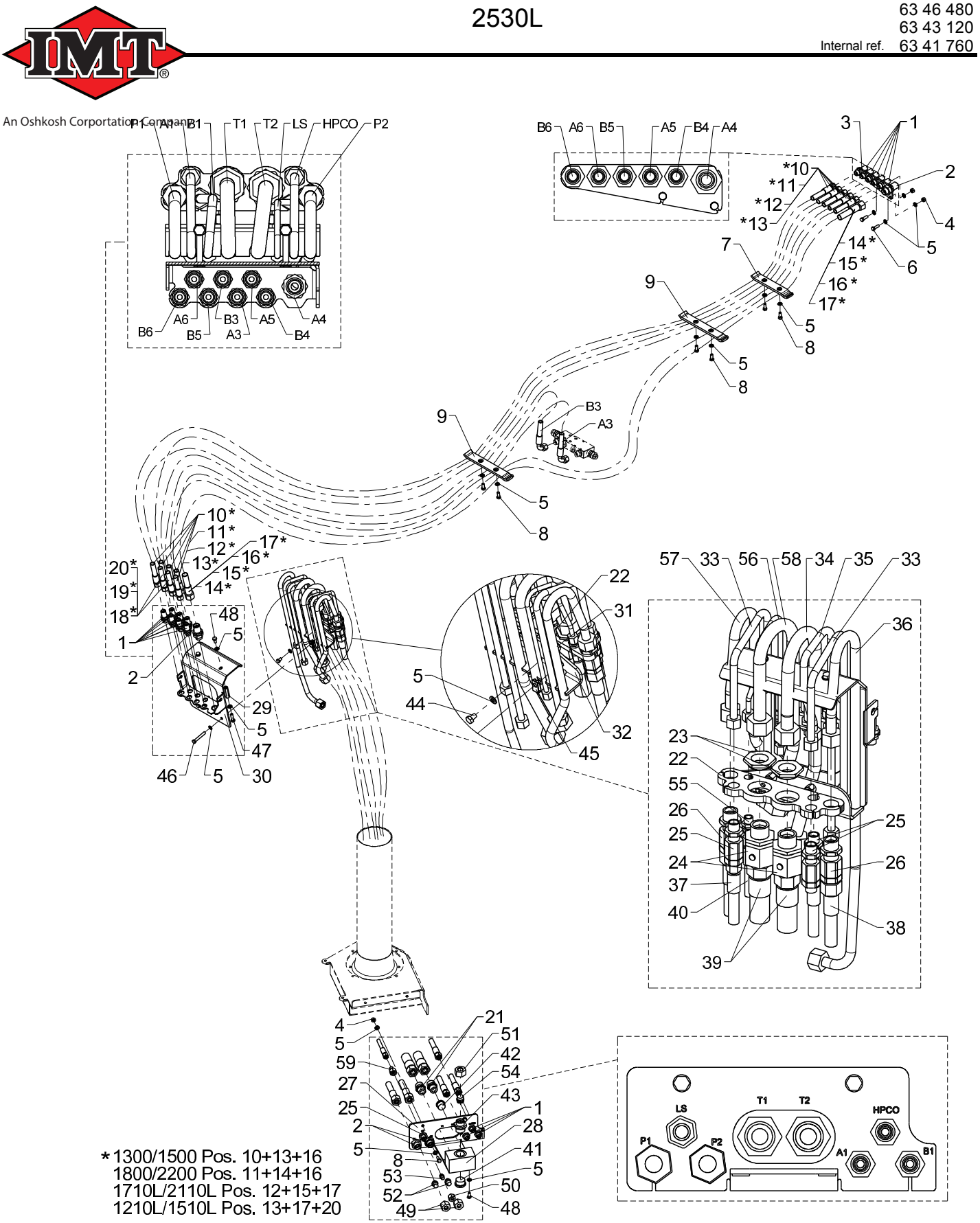

*1300/1500 Pos. 10+13+16
1800/2200 Pos. 11+14+16
1710L/2110L Pos. 12+15+17
1210L/1510L Pos. 13+17+20

Hose kit, loader functions, TS (1-circuit variable)
2530L

Pos	Qty.	Part no.	Description	Remarks
37	3	0017240	Hose	
38	2	56519	Hose	
39	2	56518	Hose	
40	1	56517	Hose	
41	1	26321	Plug	VS-R 1" WD
42	1	26355	Plug	VS-R-3/4 WD
43	1	26122	Connection	P-GEV 22 LR 1-WD
44	2	30130	Set screw, stainless	M8 x 12
45	2	31069	Clip	M8 1,5 - 5,5 mm.
46	2	30140	Steel bolt, stainless	M8 x 55
47	2	30135	Set screw, stainless	M8 x 30
48	4	30131	Set screw, stainless	M8 x 16
49	2	26338	Coupling nut	M 16 S
50	1	25183	Coupling nut	M 12 L
51	1	25186	Coupling nut	M 22 L
52	2	26343	Blanking plug	VSD 16 S
53	1	26180	Blanking plug	VSD 12 L
54	1	26301	Blanking plug	VSD 22 L
55	1	25261	Bulkhead connection	P-GSV 8 L
56	1	6340835	Pipe (LS - TS)	
57	1	6340832	Pipe (P2 - TS)	
58	1	6340834	Pipe (T2 - TS)	
59	1	26101	Reducing connection	REDSDN 12/8 L

2530L

An Oshkosh Corporation Company

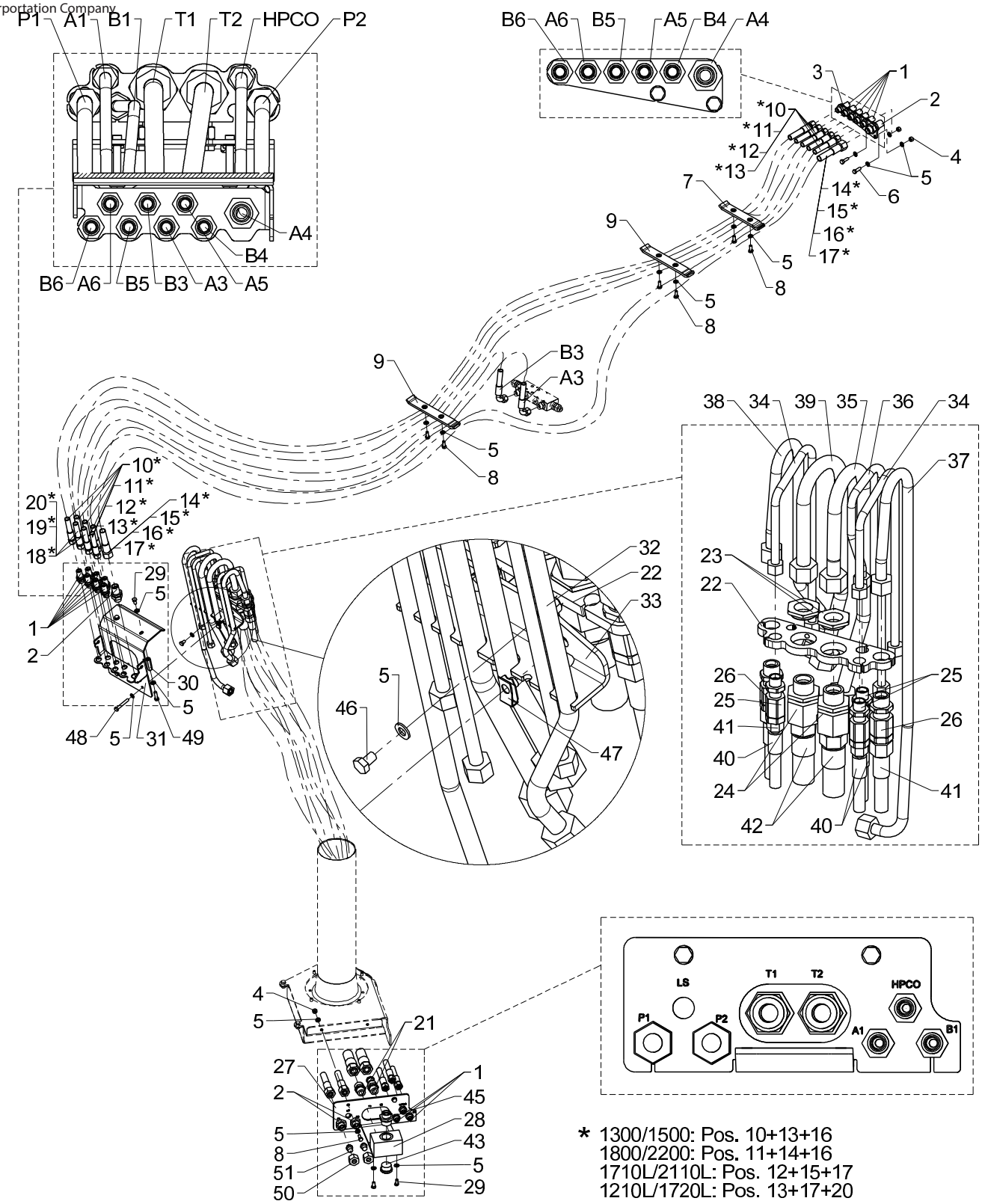

* 1300/1500: Pos. 10+13+16
1800/2200: Pos. 11+14+16
1710L/2110L: Pos. 12+15+17
1210L/1720L: Pos. 13+17+20

Hose kit, loader functions, TS (2-circuits, fixed)
2530L

Pos	Qty.	Part no.	Description	Remarks
		6341770	Hose kit, TS 2 circuits	Danfoss 1 kreds fast/HC 2 kreds fa
		6343120	Hose kit, main boom, 2 EXV	1300K/1500K
		6346480	Hose kit, main boom, 2 EXV	1800K/2200K
		6355480	Hose kit, main boom, 2EXV	1710L/2110L
		6355460	Hose kit, main boom 2 EXV	1210L/1510L
1	15	25201	Bulkhead connection	GSS 12 L
2	4	26335	Bulkhead connection	P-GSV 16 S
3	1	6340315	Bracket, bulkhead connections	
4	4	30886	Lock nut, stainless	M8
5	28	31147	Face washer, 8 mm	8 mm
6	2	30134	Set screw, stainless	M8 x 25
7	1	6340211	Clamp, complete	
8	12	30132	Set screw, stainless	M8 x 20
9	4	6340213	Clamp, complete	
10	5	0017600	Hose	
11	5	0017770	Hose	
12	5	56951	Hose 3/8" x 4650 L/L (12L)	
13	5	56916	Hose	
14	1	56382	Hose	
15	1	56529	Hose	1/2 X 3500 mm L/L
16	1	56952	Hose 1/2" x 4650 L/L(16S)	
17	1	56918	Hose	
18	2	0017690	Hose	3/8" x 1300 mm V90/L
19	2	56950	Hose 3/8" x 2450 L/90 (12L)	
20	2	56917	Hose	
21	2	26197	Connection	P-GEV 20 SR-WD
22	1	6340221	Bracket for swivel couplingTS	
23	2	6340839	Nut	
24	2	59823	Swivel coupling	M30 x 2 20S
25	3	58478	Swivel coupling	M18 x 1,5 12L
26	2	58479	Swivel coupling	M24 x 1,5 16L
27	1	6340842	Plate (TS)	
28	1	6340844	Connecting block	
29	4	30131	Set screw, stainless	M8 x 16
30	2	6340222	Spacer	
31	1	6340224	Bracket (TS)	
32	2	6340223	Spacer	
33	1	6340225	Clamp	
34	2	6340837	Pipe (slewing - TS)	
35	1	6340833	Pipe (T1 - TS)	
36	1	6340836	Pipe (HPCO - TS)	

2530L

An Oshkosh Corporation Company

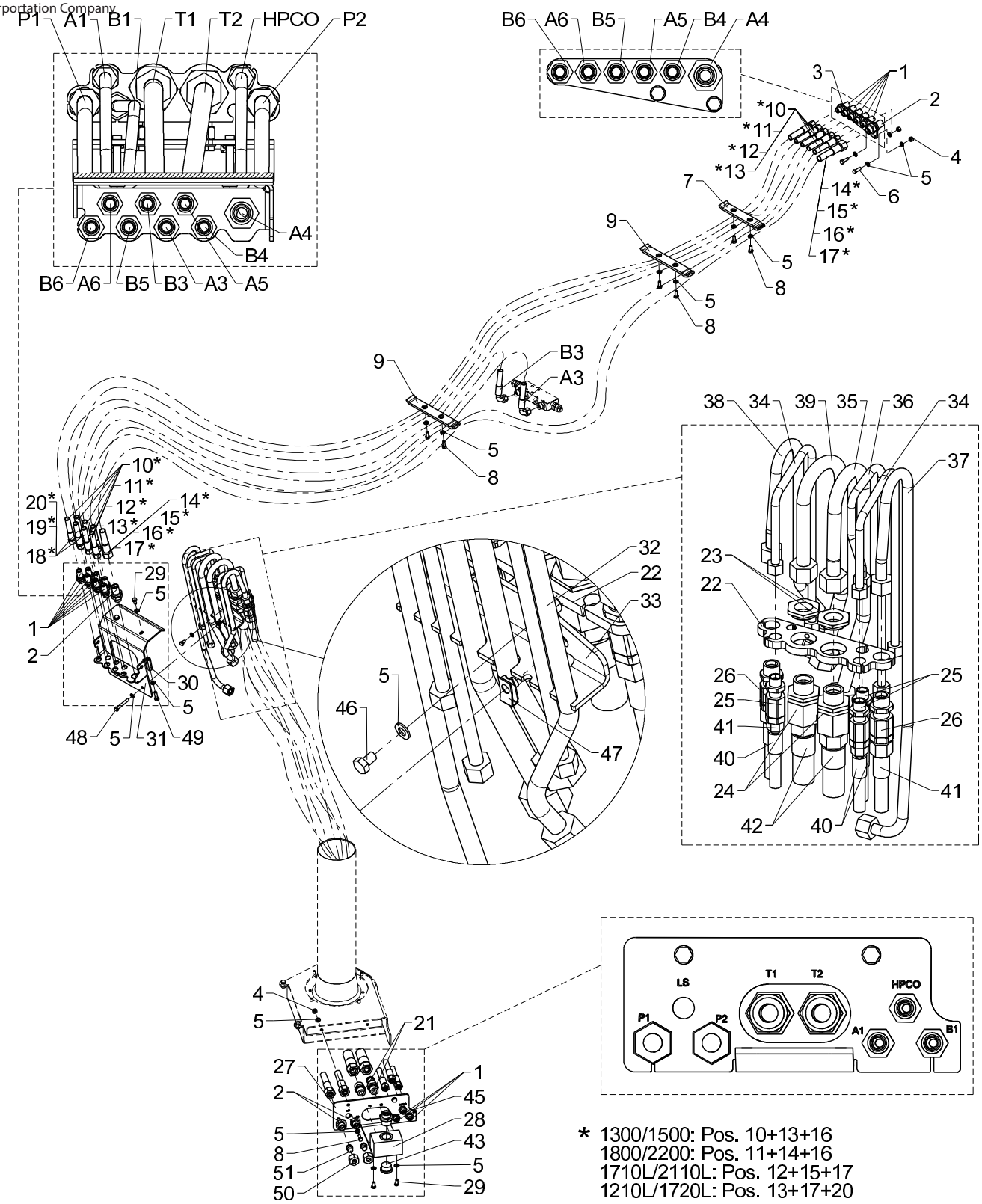

* 1300/1500: Pos. 10+13+16
1800/2200: Pos. 11+14+16
1710L/2110L: Pos. 12+15+17
1210L/1720L: Pos. 13+17+20

Hose kit, loader functions, TS (2-circuits, fixed)
2530L

Pos	Qty.	Part no.	Description	Remarks
37	1	6340831	Pipe (P1 - TS)	
38	1	6340832	Pipe (P2 - TS)	
39	1	6340834	Pipe (T2 - TS)	
40	3	0017240	Hose	
41	2	56519	Hose	
42	2	56518	Hose	
43	1	26321	Plug	VS-R 1" WD
44	1	25103	Plug	VS-R-1/2 WD
45	1	26122	Connection	P-GEV 22 LR 1-WD
46	2	30130	Set screw, stainless	M8 x 12
47	2	31069	Clip	M8 1,5 - 5,5 mm.
48	2	30140	Steel bolt, stainless	M8 x 55
49	2	30135	Set screw, stainless	M8 x 30
50	2	26338	Coupling nut	M 16 S
51	2	26343	Blanking plug	VSD 16 S

2530L

Internal ref. 63 55 140

Obsolete

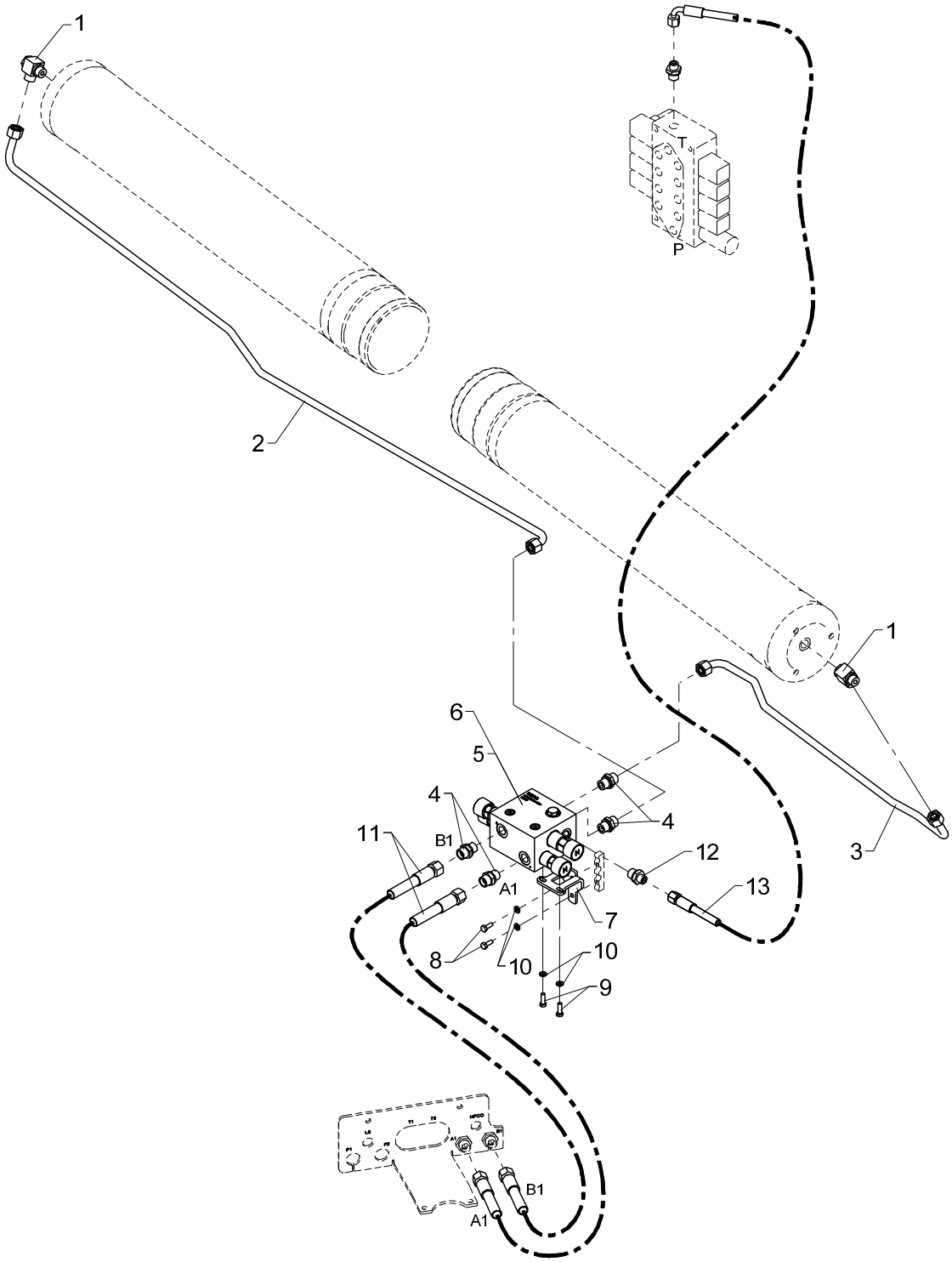

Obsolete

553 05 490

From loader 1270001
To loader 1270010

Hydraulic system, slewing

2530L

Created 31-03-2014
Modified 07-10-2014

Pos	Qty.	Part no.	Description	Remarks
1	2	25130	Banjo connection	RSWV 12 LR
2	1	6344279	Pipe	400°
3	1	6344278	Pipe	400°
4	4	25127	Connection	P-GEV 12 LR-WD
5	1	55710	Load-holding valve	
6	1	55711	Load-holding valve	
7	1	6340237	Bracket for load-holding valve	
8	2	30112	Set screw, stainless	M6 x 16
9	2	30113	Set screw, stainless	M6 x 20
10	4	32302	Face washer, stainless	6 mm
11	2	0017970	Hose	
12	1	25244	Connection	GES 8 LR 3/8-WD
13	1	56520	Hose	1/4 x 900mm L/90

2530L

63 55 160
Internal ref. 63 55 140

An Oshkosh Corportation Company

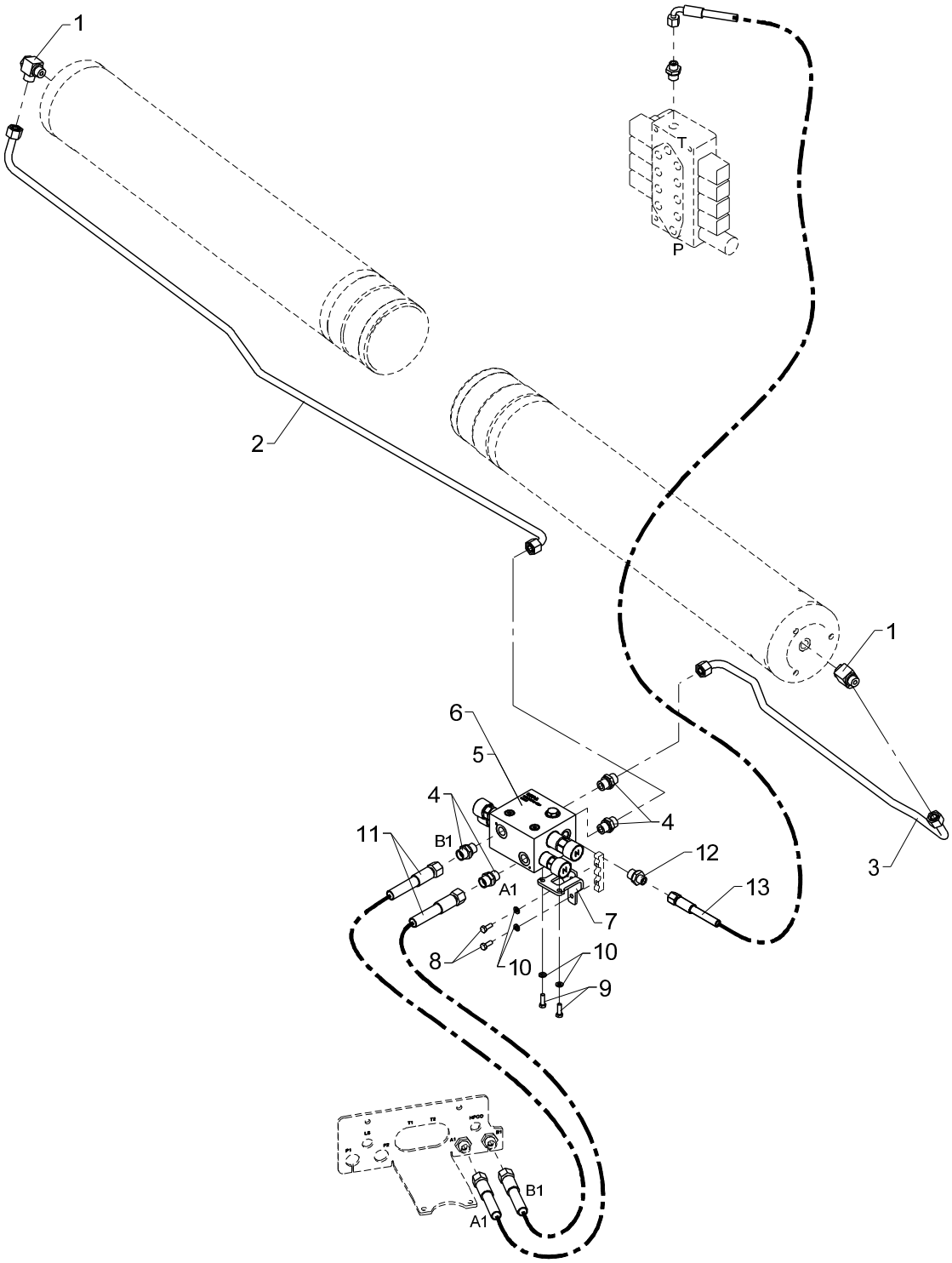

Hydraulic system, slewing

2530L

Pos	Qty.	Part no.	Description	Remarks
		6355140	Hydraulic system, slewing	Serie 2110L, 450°
		6355160		Serie 1710L, 450°
1	2	25130	Banjo connection	RSWV 12 LR
2	1	6355179	Hydr. pipe (slew-LHV, 4)	
3	1	6355178	Hydr. pipe (slew-LHV, 4)	
4	4	25127	Connection	P-GEV 12 LR-WD
5	1	55710	Load-holding valve	
6	1	55711	Load-holding valve	
7	1	6340237	Bracket for load-holding valve	
8	2	30112	Set screw, stainless	M6 x 16
9	2	30113	Set screw, stainless	M6 x 20
10	4	32302	Face washer, stainless	6 mm
11	2	0017970	Hose	
12	1	25244	Connection	GES 8 LR 3/8-WD
13	1	56520	Hose	1/4 x 900mm L/90

2530L

63 55 550
Internal ref. 63 55 300

An Oshkosh Corportation Company

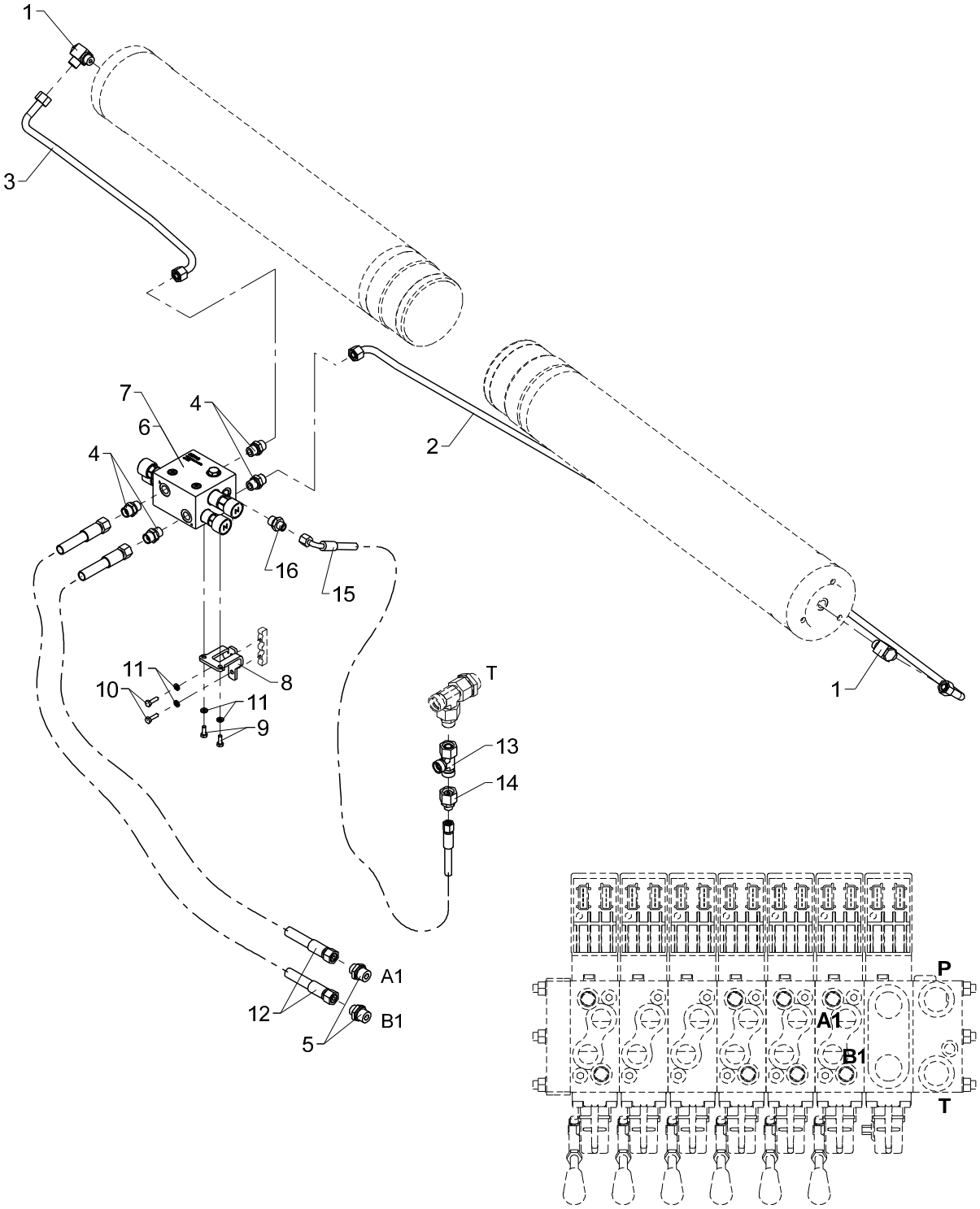

Hydraulic system, slewing - RC

2530L

Pos	Qty.	Part no.	Description	Remarks
		6355300	Hydraulic system, slewing - RC	Serie 2530L, 450°
		6355550		Serie 2030L, 450°
1	2	25130	Banjo connection	RSWV 12 LR
2	1	6355177	Hydr. pipe (slew-LHV,RC450)	
3	1	6355176	Hydr. pipe (slew-LHV,RC450)	
4	4	25127	Connection	P-GEV 12 LR-WD
5	2	25108	Connection	GES 12 LR 1/2-WD
6	1	55710	Load-holding valve	Serie 2530L
7	1	55711	Load-holding valve	Serie 2030L
8	1	6340237	Bracket for load-holding valve	
9	2	30112	Set screw, stainless	M6 x 16
10	2	30113	Set screw, stainless	M6 x 20
11	4	32302	Face washer, stainless	6 mm
12	2	0017970	Hose	
13	1	26142	Connection	ELSD 15 L
14	1	25285	Connection	REDSDN 15/8 L
15	1	62526	Hose	1/4 X 550 M14 X 1.5 L/90
16	1	25244	Connection	GES 8 LR 3/8-WD

2530L

Internal ref. 63 44 520

An Oshkosh Corportation Company

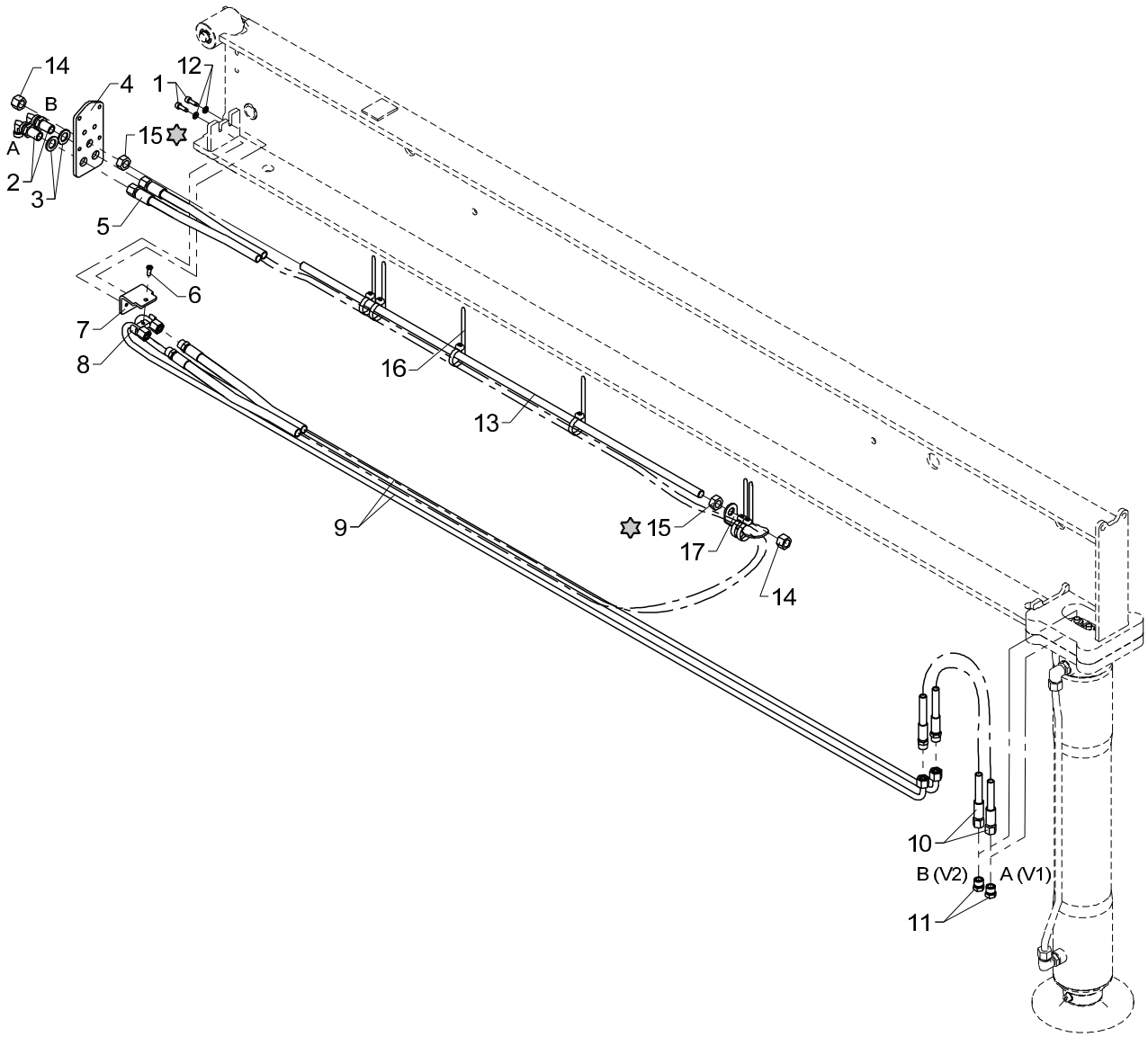

Loctite 270

Hydraulic system, SV (+ SR-20° -Obsolete) 5570, 2530L manual extension

Pos	Qty.	Part no.	Description	Remarks
1	2	31539	Screw, stainless	MC6 x 16
2	2	26894	Elbow connection	10mm - 90 gr.
3	2	31791	Washer M16, stainless	16 mm
4	1	6344095	End plate	
5	1	56279	Hose	
6	1	32490	Screw	MC6 x 16
7	1	6344109	Clamp	
8	1	6306097	Clamp	
9	2	6344218	Pipe	
10	2	56460	Hose	1/4" x 550 mm L/S - 10
11	2	25635	Screw	VSK 10L
12	2	32302	Face washer, stainless	6 mm
13	1	31262	Threaded pin	
14	2	32317	Lock nut	M14
15	2	32145	Nut, stainless	M14
16	6	27275	Cable tie, black, 7.6x385mm	
17	1	6344107	Clamp	

2530L

63 43 620
Internal ref. 63 45 520

An Oshkosh Corportation Company

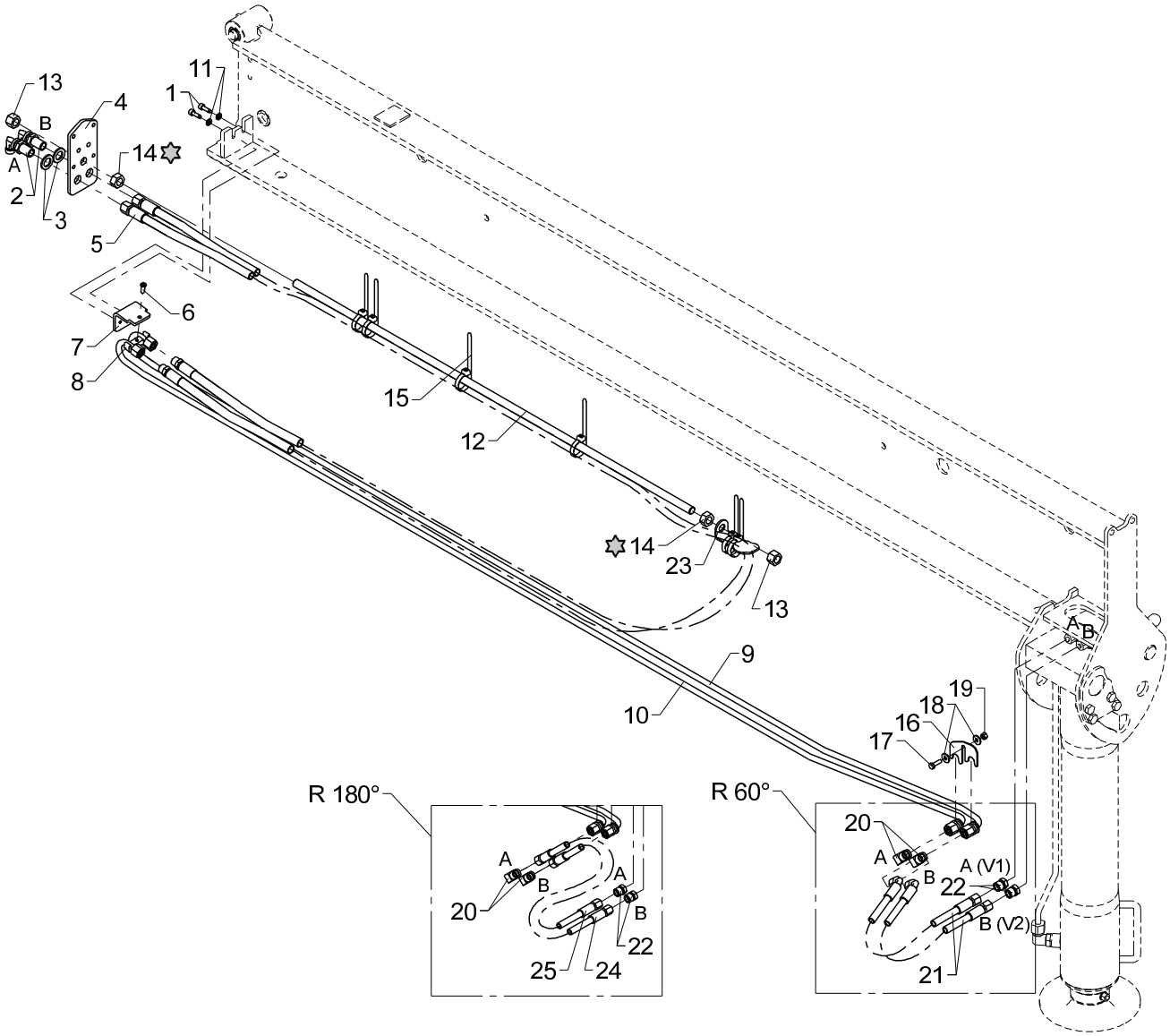

Loctite 270

Hydraulic system, SR-60°/180°, 5570, manual extension 2530L

Pos	Qty.	Part no.	Description	Remarks
		6345520	Hydr. syst., SR-60°- 5570 man	
		6343620	Hydraulic syst.,SR180°,5570man	
1	2	31539	Screw, stainless	MC6 x 16
2	2	26894	Elbow connection	10mm - 90 gr.
3	2	31791	Washer M16, stainless	16 mm
4	1	6344095	End plate	
5	1	56279	Hose	
6	1	32490	Screw	MC6 x 16
7	1	6344109	Clamp	
8	1	6306097	Clamp	
9	1	6344234	Pipe	
10	1	6344233	Pipe	
11	2	32302	Face washer, stainless	6 mm
12	1	31262	Threaded pin	
13	2	32317	Lock nut	M14
14	2	32145	Nut, stainless	M14
15	6	27275	Cable tie, black, 7.6x385mm	
16	1	6306164	Bracket	
17	1	30113	Set screw, stainless	M6 x 20
18	2	31134	Washer, stainless	6 mm
19	1	30884	Lock nut, stainless	M6
20	2	25125	Elbow connection	WV 10 L
21	2	56363	Hose	L=8mm / V=10 mm
22	2	25635	Screw	VSK 10L
23	1	6344107	Clamp	
24	1	56905	Hose 1/4 X 550 mm	L=8mm/L=10mm
25	1	56904	Hose 1/4 X 500 mm	L=8mm/L=10mm

2530L

63 44 530
Internal ref. 63 40 880

An Oshkosh Corportation Company

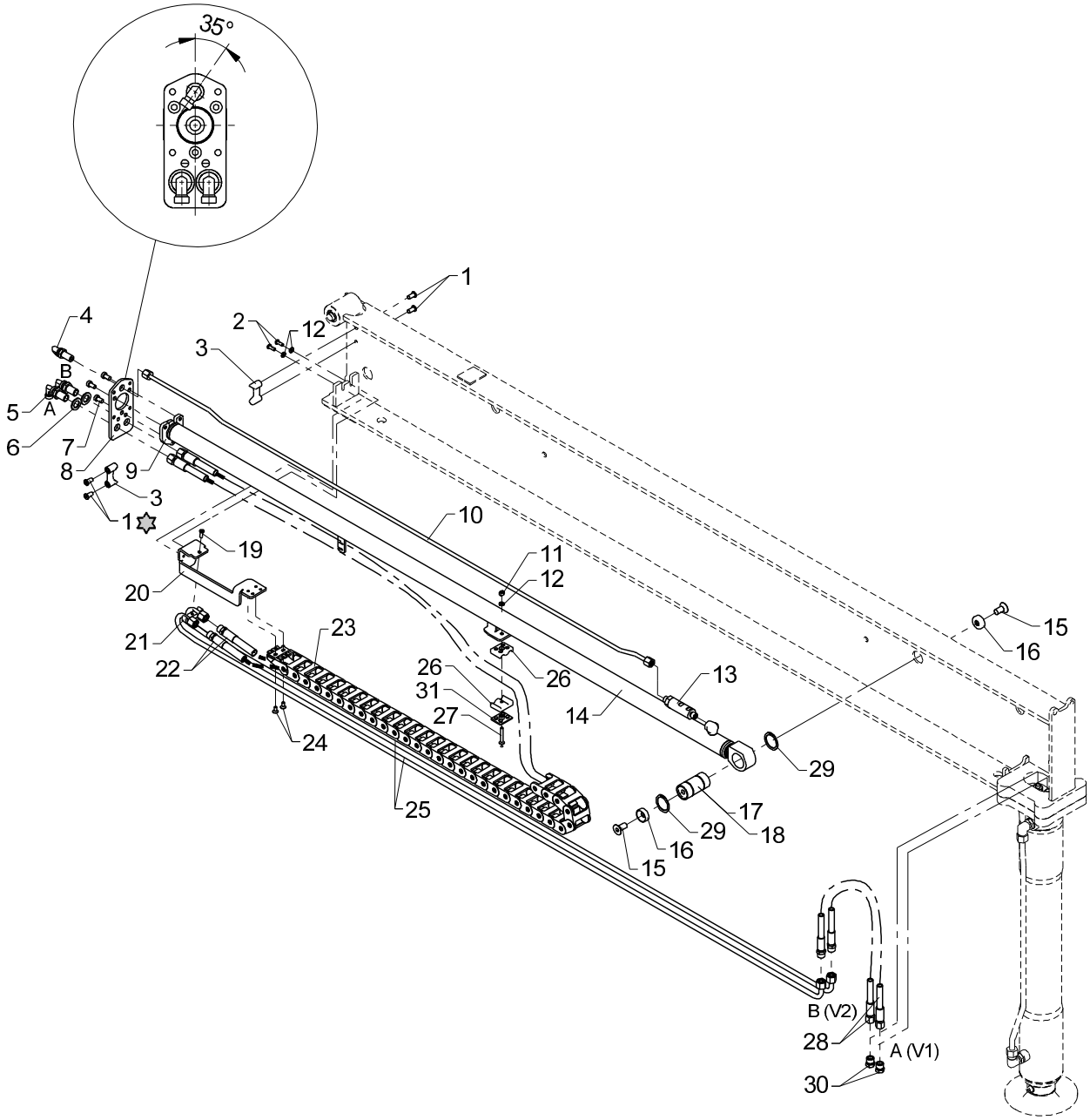

Loctite 243

Hydraulic system, SV (+ SR-20° -Obsolete) 5570, hydr. extension 2530L

Pos	Qty.	Part no.	Description	Remarks
		6340880	Hydraulic system, SV-SR - 5570	
		6344530	Hydraulic system, SV-SR - 5570	
1	4	32481	Screw	MCL8 x 16
2	2	32222	Button head screw	M6 x 16
3	2	63556	Guide	
4	1	26864	Elbow connection	WSS 8L
5	2	26894	Elbow connection	10mm - 90 gr.
6	2	31791	Washer M16, stainless	16 mm
7	3	32478	Screw	M8 x 16
8	1	6344097	End plate	
9	1	6344098	Bracket	
10	1	6344219	Pipe	
11	1	30884	Lock nut, stainless	M6
12	3	32302	Face washer, stainless	6 mm
13	1	55228	Sequence valve	
14	1	6344210	Beam cylinder	
15	2	30586	Countersunk screw	MK12 x 25
16	2	6306241	Mounting plate	
17	1	6340118	Pin	Serie 1300/1500
18	1	6344118	Pin	Serie 1800/2200
19	1	32490	Screw	MCL6 x 16
20	1	6344096	Clamp	
21	1	6306097	Clamp	
22	2	56364	Hose	5/16" x 2300 mm L/S - 10
23	1	28886	Nylon drag chain	
24	2	30542	Counter-sunk screw	MK6 x 12
25	2	6344218	Pipe	
26	2	64408	Clamp	
27	1	32352	Countersunk screw	MK6 x 40
28	2	56460	Hose	1/4" x 550 mm L/S - 10
29	2	33117	Circlip	35U
30	2	25635	Screw	VSK 10L
31	1	6344106	Welding plate	

2530L

63 43 740
63 43 610
63 46 530
Internal ref. 63 42 540

An Oshkosh Corportation Company

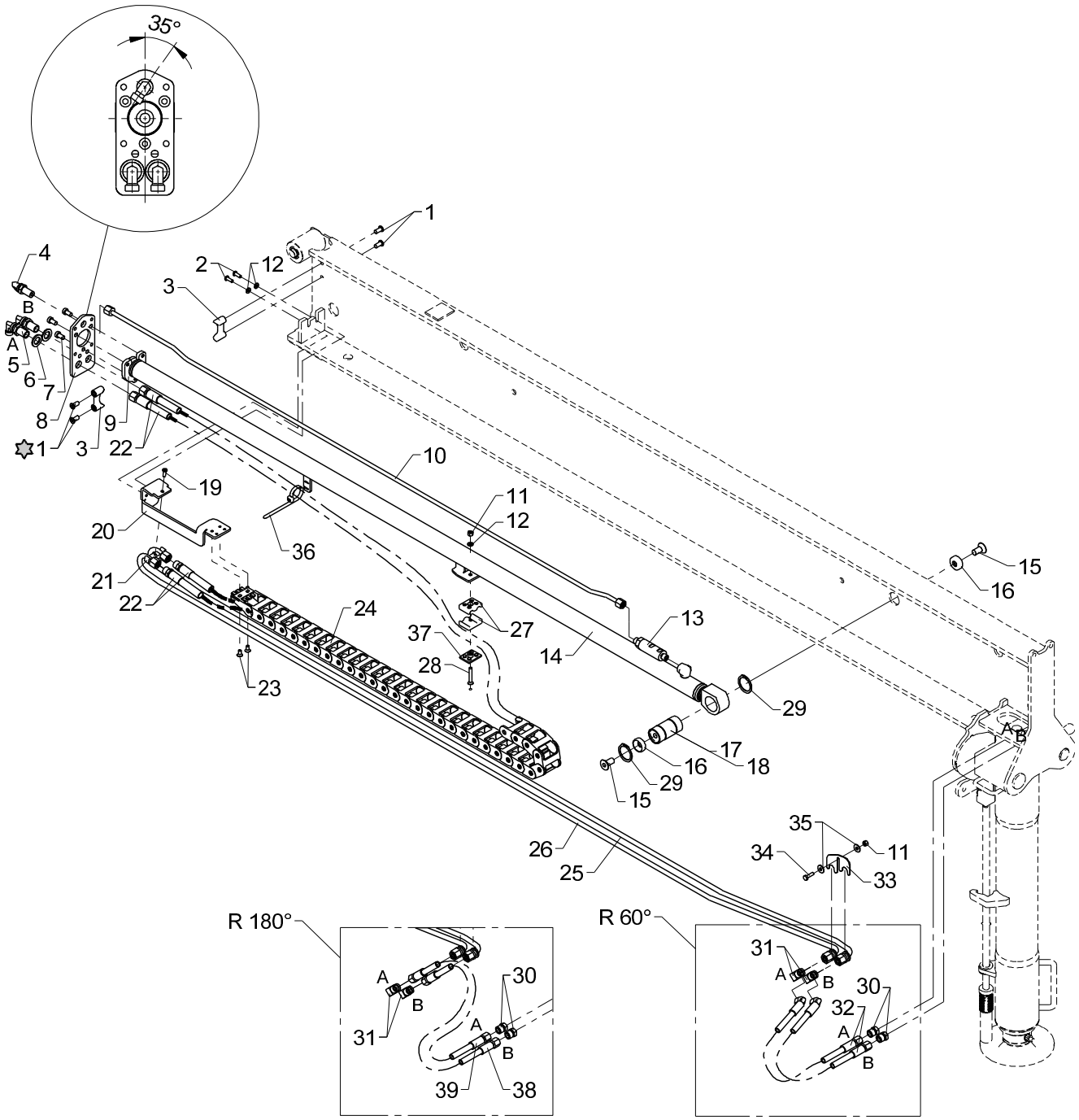

✡ Loctite 243

Hydraulic system, SH + SR-60°/180° - 5570, hydr. extension 2530L

Pos	Qty.	Part no.	Description	Remarks
		6342540	Hydraulic system, SH - 5570	1300/1500
		6346530	Hydraulic system, SH - 5570	1800/2200/2310S
		6343610	Hydr.system,SR180°, 5570 hydr	1300/1500
		6343740	Hydr.system,SR180°, 5570 hydr	1800/2200/2310S
1	4	32481	Screw	MCL8 x 16
2	2	32222	Button head screw	M6 x 16
3	2	63556	Guide	
4	1	26864	Elbow connection	WSS 8L
5	2	26894	Elbow connection	10mm - 90 gr.
6	2	31791	Washer M16, stainless	16 mm
7	3	32478	Screw	M8 x 16
8	1	6344097	End plate	
9	1	6344098	Bracket	
10	1	6344219	Pipe	
11	2	30884	Lock nut, stainless	M6
12	3	32302	Face washer, stainless	6 mm
13	1	55228	Sequence valve	
14	1	6344210	Beam cylinder	
15	2	30586	Countersunk screw	MK12 x 25
16	2	6306241	Mounting plate	
17	1	6340118	Pin	Serie 1300/1500
18	1	6344118	Pin	Serie 1800/2200
19	1	32490	Screw	MCL6 x 16
20	1	6344096	Clamp	
21	1	6306097	Clamp	
22	2	56364	Hose	5/16" x 2300 mm L/S - 10
23	2	30542	Counter-sunk screw	MK6 x 12
24	1	28886	Nylon drag chain	
25	1	6344234	Pipe	
26	1	6344233	Pipe	
27	2	64408	Clamp	
28	1	32352	Countersunk screw	MK6 x 40
29	2	33117	Circlip	35U
30	2	25635	Screw	VSK 10L
31	2	25125	Elbow connection	WV 10 L
32	2	56363	Hose	L=8mm / V=10 mm
33	1	6306164	Bracket	
34	1	30113	Set screw, stainless	M6 x 20
35	2	31134	Washer, stainless	6 mm
36	1	27275	Cable tie, black, 7.6x385mm	
37	1	6344106	Welding plate	

2530L

63 43 740
63 43 610
63 46 530
Internal ref. 63 42 540

An Oshkosh Corportation Company

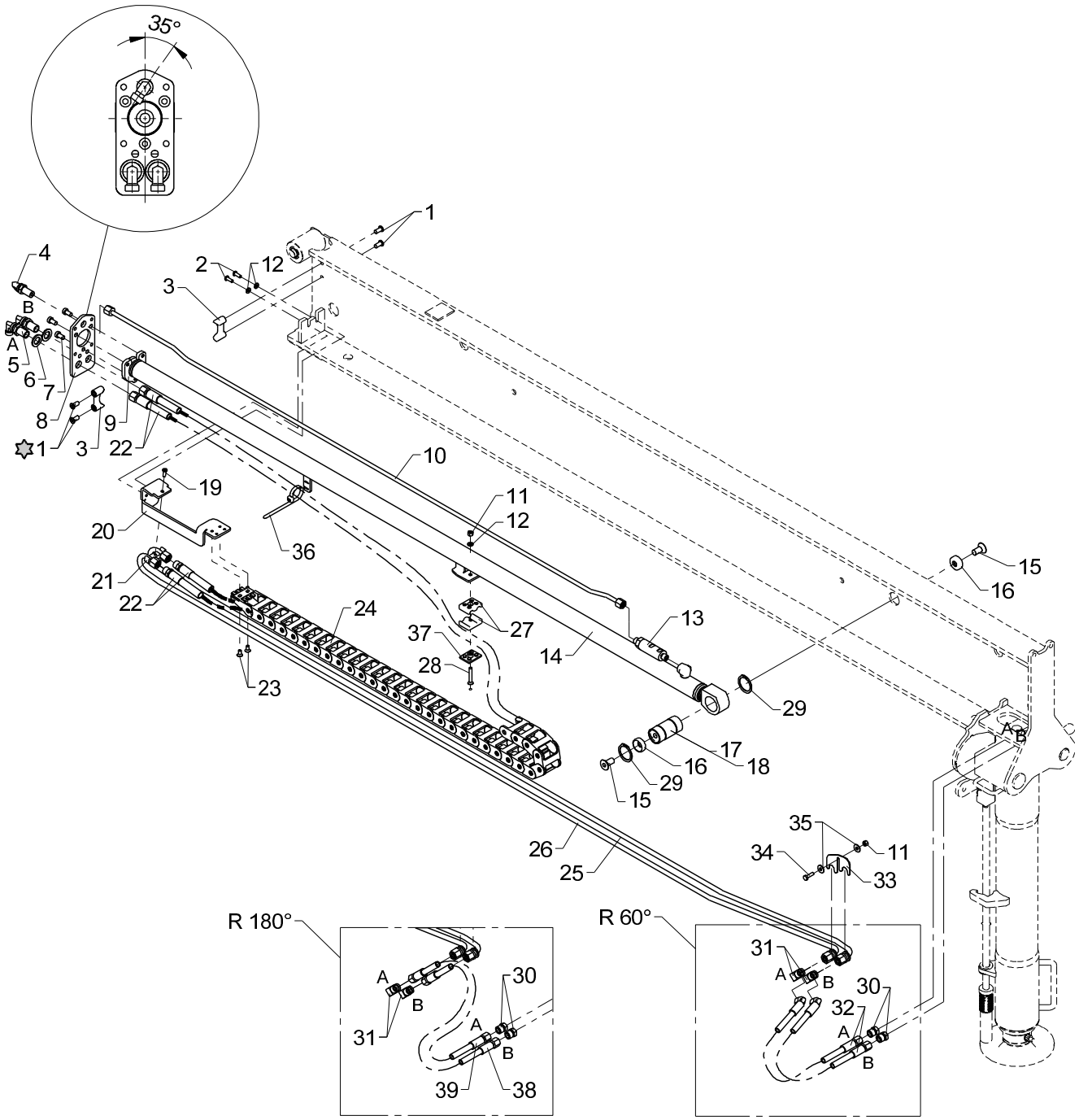

Loctite 243

Hydraulic system, SH + SR-60°/180° - 5570, hydr. extension

2530L

Pos	Qty.	Part no.	Description	Remarks
38	1	56905	Hose 1/4 X 550 mm	L=8mm/L=10mm
39	1	56904	Hose 1/4 X 500 mm	L=8mm/L=10mm

2530L

Internal ref. 63 44 550

An Oshkosh Corportation Company

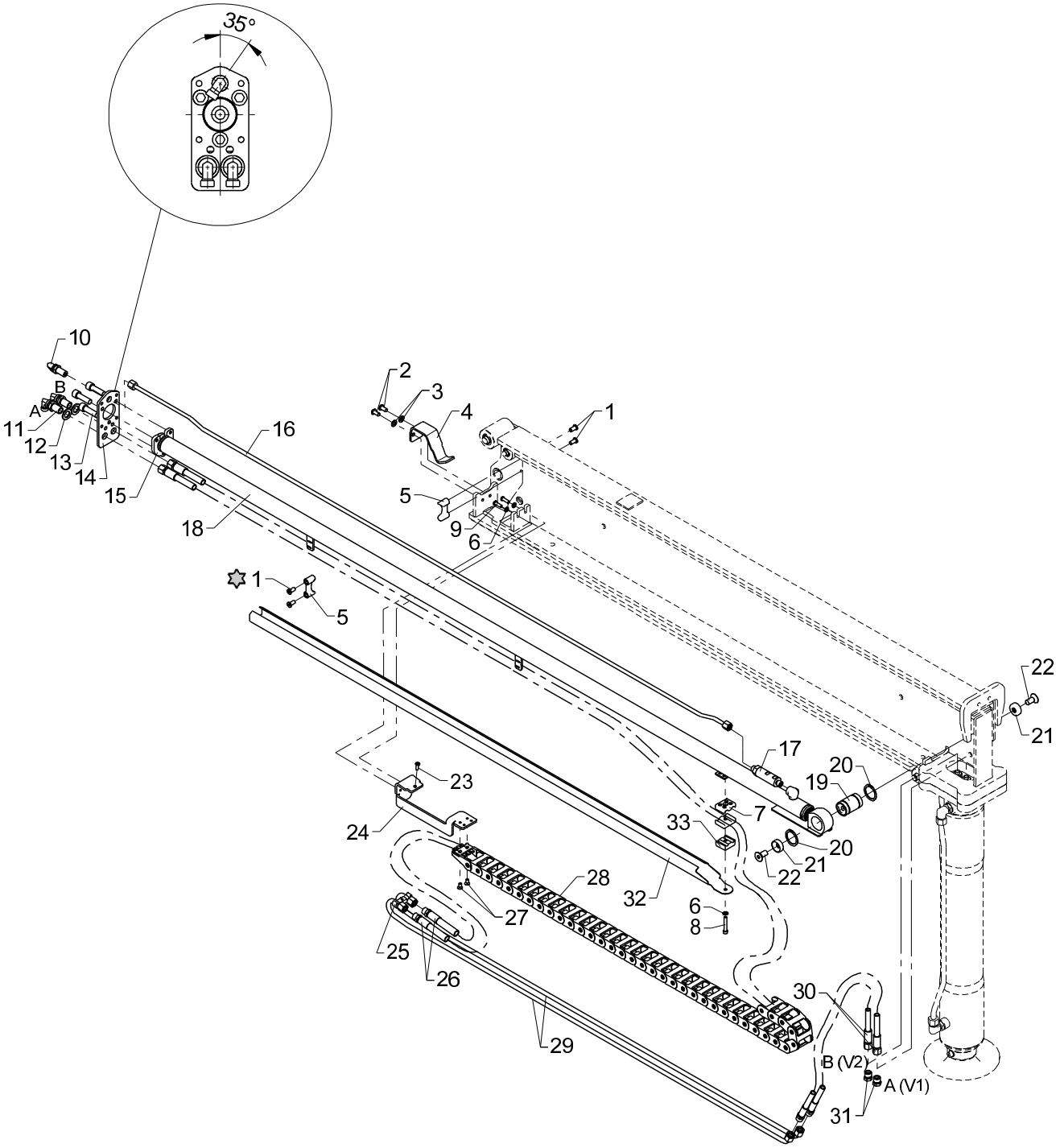

Loctite 243

Hydraulic system, DV (+ DR-20° -Obsolete) 6450, 2530L hydr. extension

Pos	Qty.	Part no.	Description	Remarks
1	4	32481	Screw	MCL8 x 16
2	2	30925	Round-head screw	M8 x 16
3	2	31147	Face washer, 8 mm	
4	1	6306099	Spring holder	
5	2	63556	Guide	
6	3	32302	Face washer, stainless	6 mm
7	2	64408	Clamp	
8	1	32410	Screw	MC6 x 40
9	2	32491	Round-head screw	M6 x 20
10	1	26864	Elbow connection	WSS 8L
11	2	26894	Elbow connection	10mm - 90 gr.
12	2	31791	Washer M16, stainless	16 mm
13	3	30475	Screw	MC12 x 40
14	1	6344097	End plate	
15	1	6344098	Bracket	
16	1	6344229	Pipe	
17	1	55228	Sequence valve	
18	1	6344220	Beam cylinder	
19	1	6340119	Pin	
20	2	33117	Circlip	35U
21	2	6306241	Mounting plate	
22	2	30586	Countersunk screw	MK12 x 25
23	1	32490	Screw	MC6 x 16
24	1	6344096	Clamp	
25	1	6306097	Clamp	
26	2	56365	Hose	5/16" x 3340 mm L/S - 10
27	2	30542	Counter-sunk screw	MK6 x 12
28	1	28887	Nylon drag chain	
29	2	6344228	Pipe	
30	2	56366	Hose	1/4" x 260 mm L/S - 10
31	2	25635	Screw	VSK 10L
32	1	6342561	Guide rail	
33	1	31417	Clamp	

2530L

63 43 630
Internal ref. 63 42 560

An Oshkosh Corportation Company

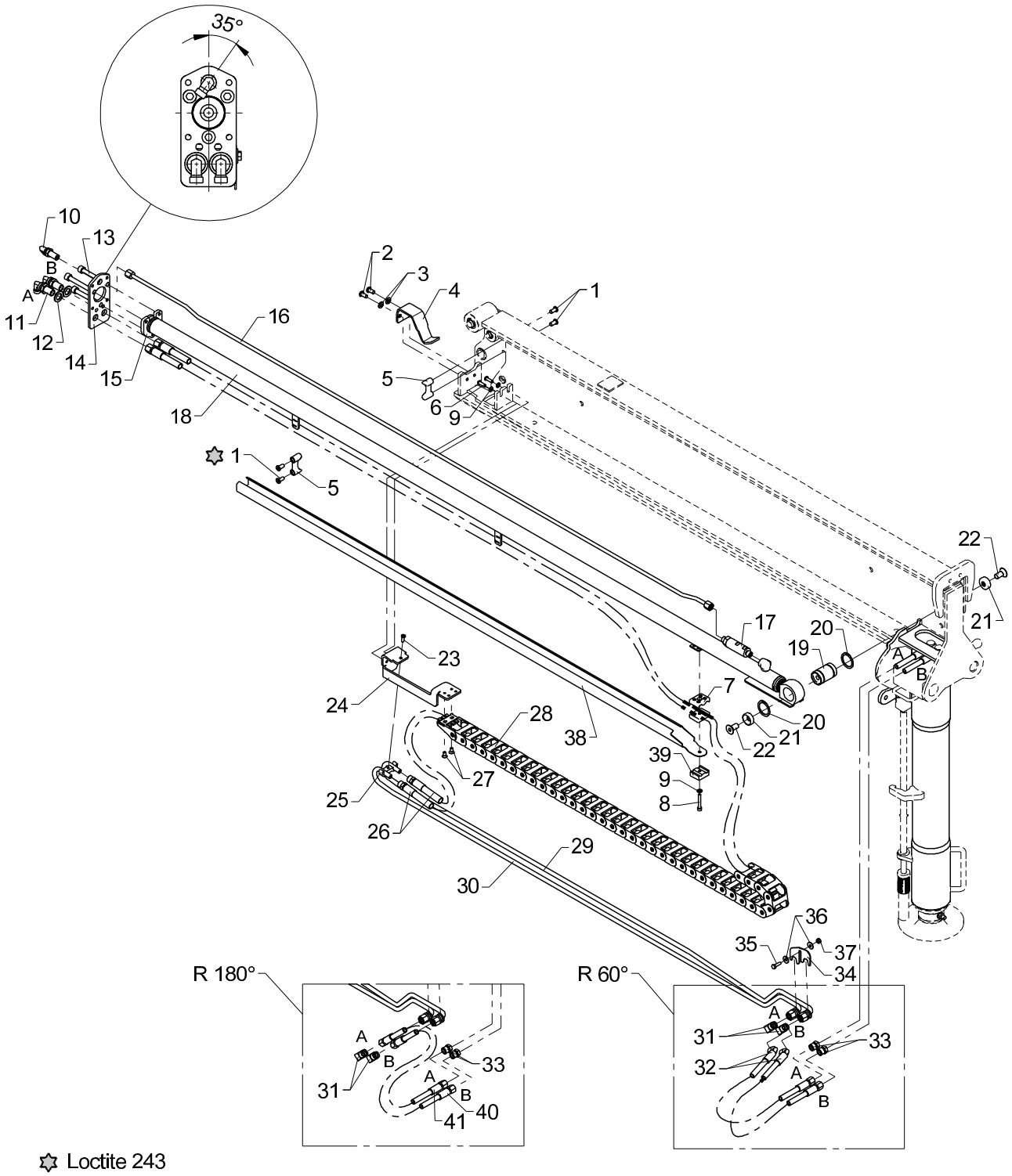

Loctite 243

Hydraulic system, DH + DR-60°/180° - 6450, hydr. extension 2530L

Pos	Qty.	Part no.	Description	Remarks
		6342560	Hydraulic system, DH - 6450	
		6343630	Hydr.system, DR180°, 6450 hydr	
1	4	32481	Screw	MCL8 x 16
2	2	30925	Round-head screw	M8 x 16
3	2	31147	Face washer, 8 mm	
4	1	6306099	Spring holder	
5	2	63556	Guide	
6	2	32491	Round-head screw	M6 x 20
7	2	64408	Clamp	
8	1	32410	Screw	MC6 x 40
9	3	32302	Face washer, stainless	6 mm
10	1	26864	Elbow connection	WSS 8L
11	2	26894	Elbow connection	10mm - 90 gr.
12	2	31791	Washer M16, stainless	16 mm
13	3	32459	Screw	MC10 x 85
14	1	6344097	End plate	
15	1	6344098	Bracket	
16	1	6344229	Pipe	
17	1	55228	Sequence valve	
18	1	6344220	Beam cylinder	
19	1	6340119	Pin	
20	2	33117	Circlip	35U
21	2	6306241	Mounting plate	
22	2	30586	Countersunk screw	MK12 x 25
23	1	32490	Screw	MC6 x 16
24	1	6344096	Clamp	
25	1	6306097	Clamp	
26	2	56365	Hose	5/16" x 3340 mm L/S - 10
27	2	30542	Counter-sunk screw	MK6 x 12
28	1	28887	Nylon drag chain	
29	1	6344236	Pipe	
30	1	6344235	Pipe, stabilizers	
31	2	25125	Elbow connection	WV 10 L
32	2	56363	Hose	L=8mm / V=10 mm
33	2	25635	Screw	VSK 10L
34	1	6306164	Bracket	
35	1	30113	Set screw, stainless	M6 x 20
36	2	31134	Washer, stainless	
37	1	30884	Lock nut, stainless	M6
38	1	6342561	Guide rail	
39	1	31417	Clamp	

2530L

63 43 630
Internal ref. 63 42 560

An Oshkosh Corportation Company

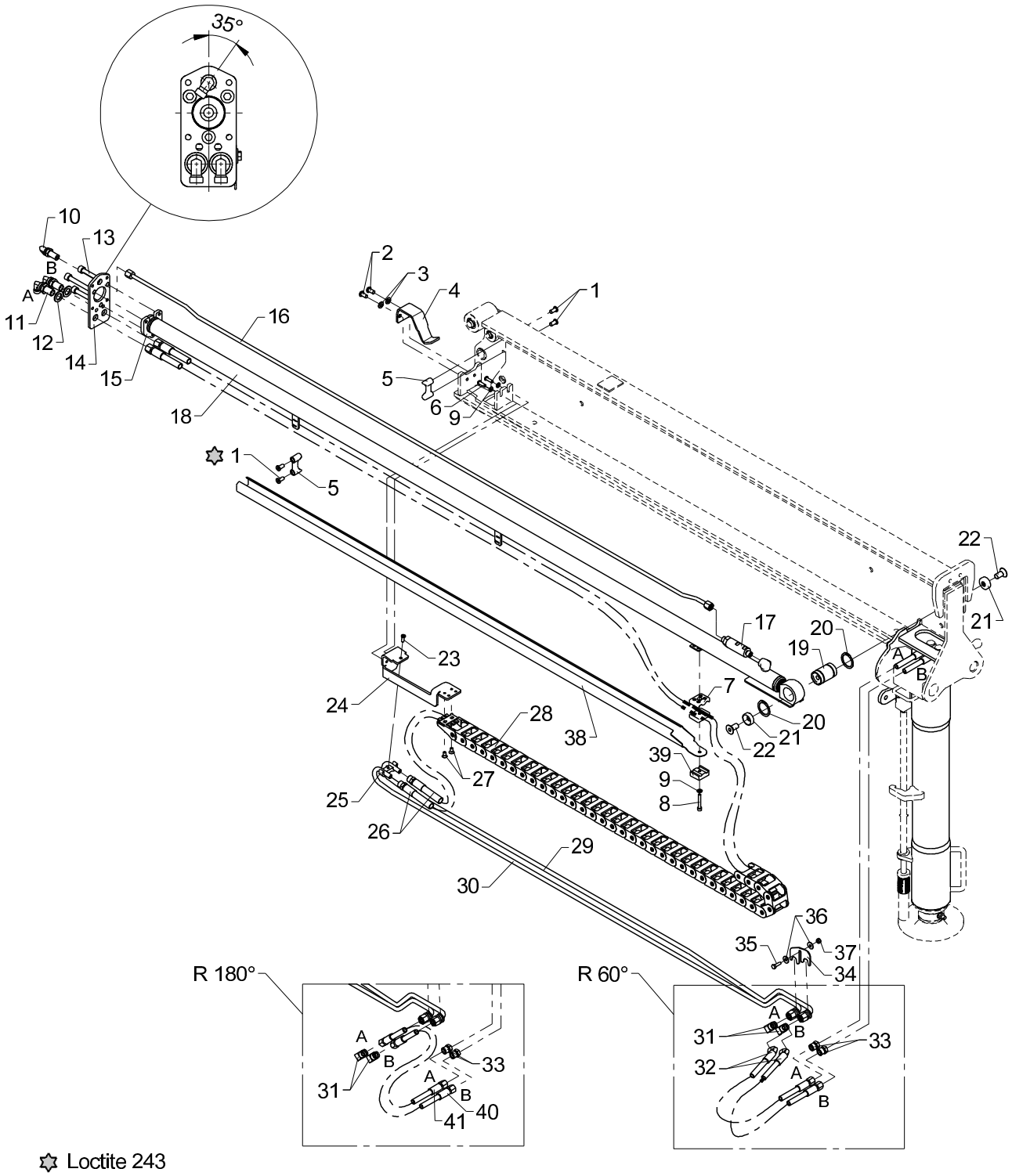

Loctite 243

Hydraulic system, DH + DR-60°/180° - 6450, hydr. extension

2530L

Pos	Qty.	Part no.	Description	Remarks
40	1	56905	Hose 1/4 X 550 mm	L=8mm/L=10mm
41	1	56904	Hose 1/4 X 500 mm	L=8mm/L=10mm

2530L

Internal ref. 63 55 810

An Oshkosh Corportation Company

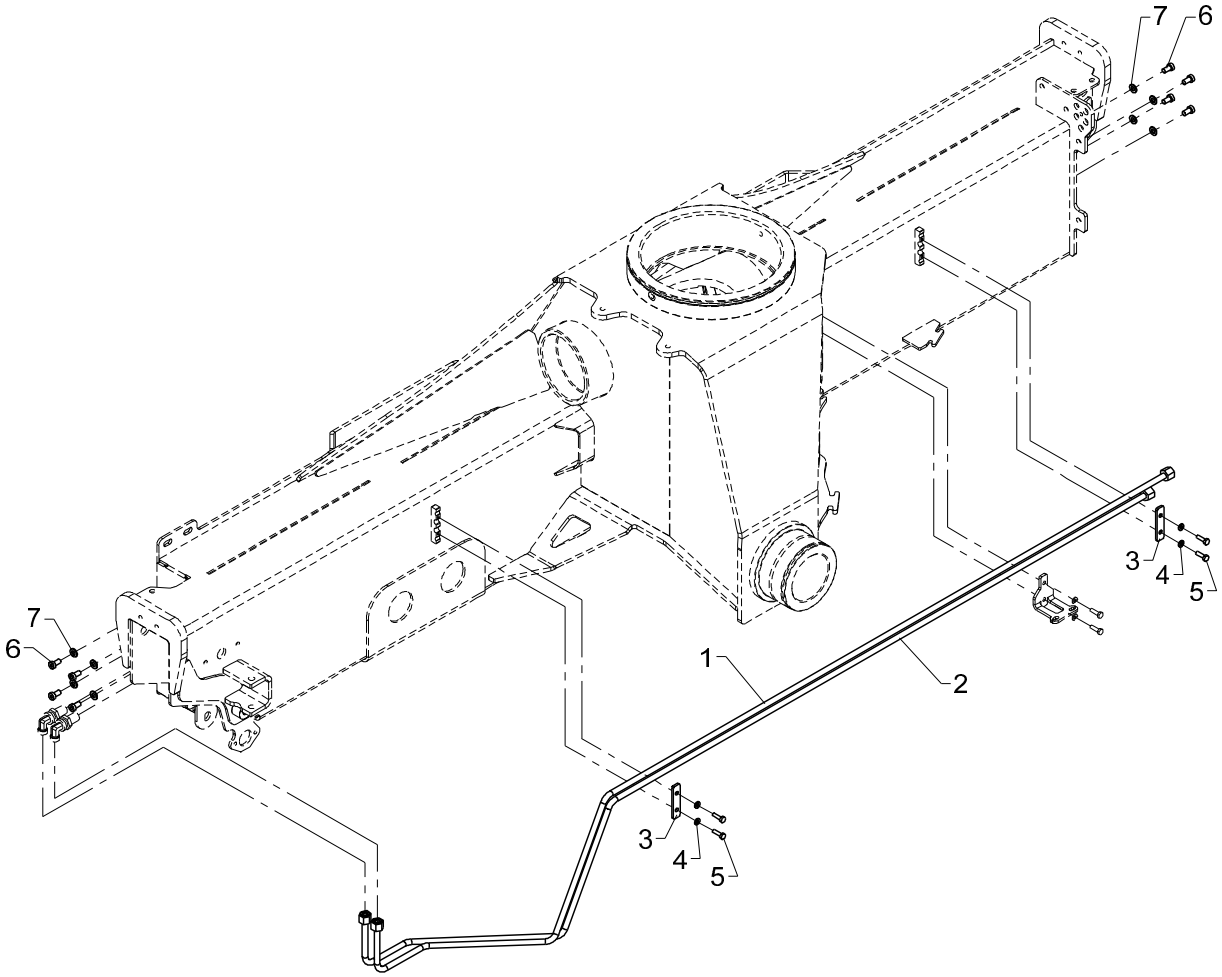

Hydraulic system, stabilizers, 2 fcts.

2530L

Pos	Qty.	Part no.	Description	Remarks
1	1	6344265	Pipe, stabilizers	
2	1	6344266	Pipe, stabilizers	
3	2	6340236	Plate	
4	4	32302	Face washer, stainless	6 mm
5	4	30113	Set screw, stainless	M6 x 20
6	8	32478	Screw	M8 x 16
7	8	31147	Face washer, 8 mm	

2530L

Internal ref. 63 55 820

An Oshkosh Corportation Company

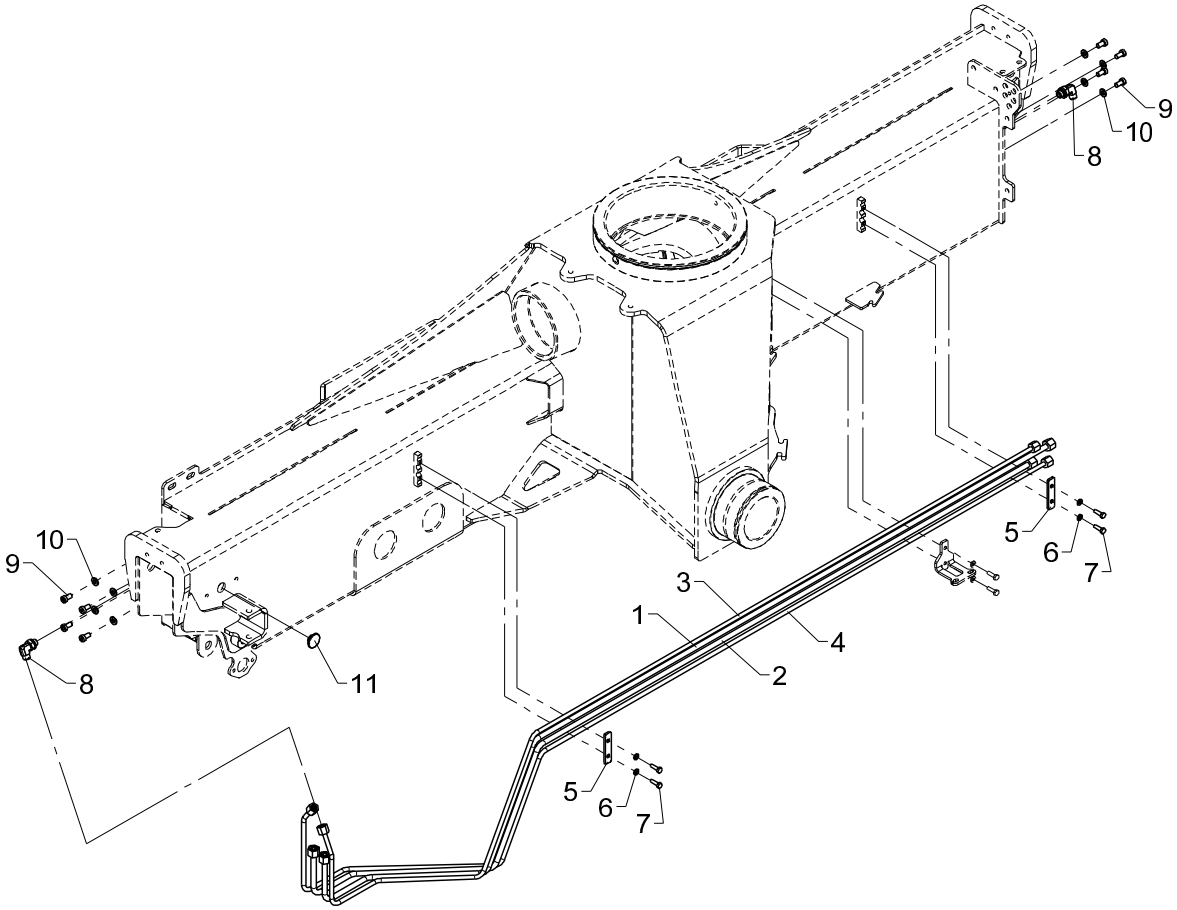

Hydraulic system, stabilizers, 4 fcts.
2530L

Pos	Qty.	Part no.	Description	Remarks
1	1	6344265	Pipe, stabilizers	
2	1	6344266	Pipe, stabilizers	
3	1	6344267	Pipe, stabilizers	
4	1	6344268	Pipe, stabilizers	
5	2	6340236	Plate	
6	4	32302	Face washer, stainless	6 mm
7	4	30113	Set screw, stainless	M6 x 20
8	2	26898	Elbow connection	8 mm - 1/4"
9	8	32478	Screw	M8 x 16
10	8	31147	Face washer, 8 mm	
11	2	63430	Guide	ø30 x 2 mm

2530L

63 55 440
Internal ref. 63 55 430

An Oshkosh Corportation Company

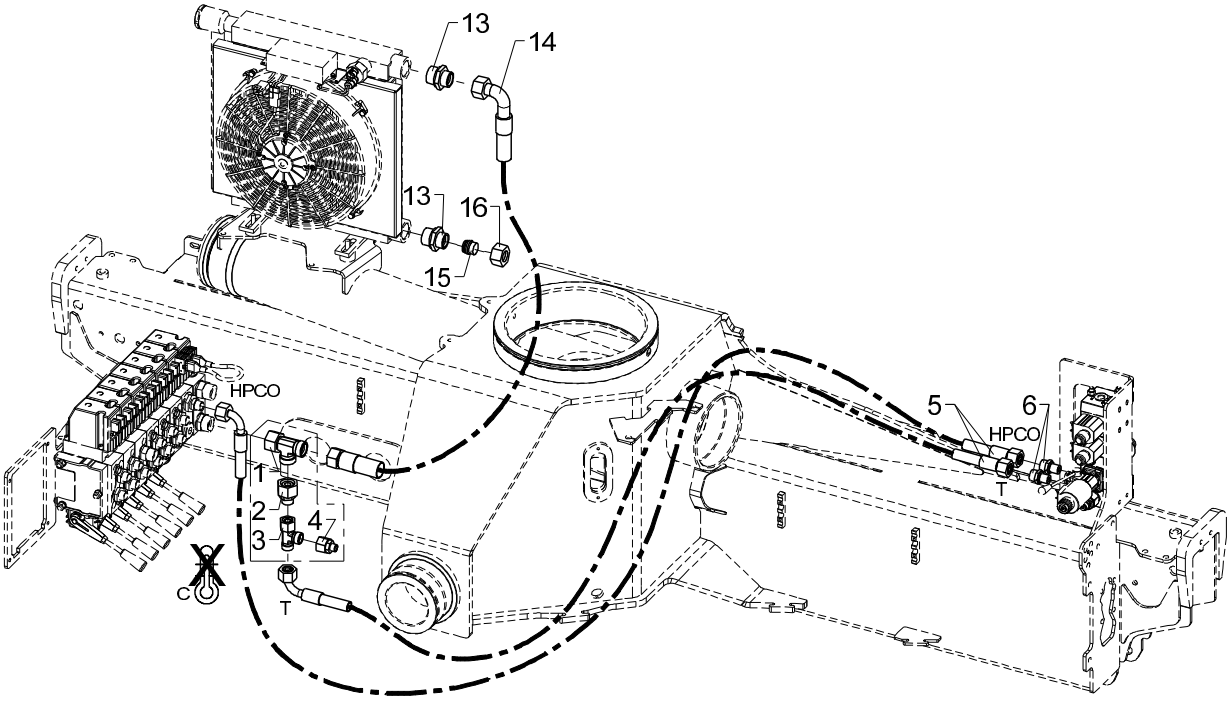

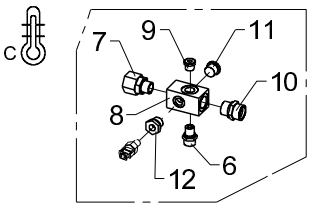

Hydr. syst. pump + return hoses

2530L

Pos	Qty.	Part no.	Description	Remarks
		6355430	Pump/return no temp. sensor	
		6355440	Pump/return with temp. sensor	
1	1	26149	Connection	ELSD 22 L
2	1	25298	Connection	REDSDN 22/15 L
3	1	26142	Connection	ELSD 15 L
4	1	25285	Connection	REDSDN 15/8 L
5	2	0016020	Hose	L/90
6	3	25273	Connection	GES 15 LR 3-8 A3L
7	1	25279	Connection	EGESD 22 LR-WD
8	1	59355	Return block	
9	1	25277	Plug	VS-R-3/8 WD
10	1	25169	Connection	P-GEV 22 LR-WD
11	1	25103	Plug	VS-R-1/2 WD
12	1	25180	Reducing connection	RED-R 1/2-WD/R 1/4
13	2	26122	Connection	P-GEV 22 LR 1-WD
14	1	56395	Hose	Til køler
15	1	26301	Blanking plug	VSD 22 L
16	1	25186	Coupling nut	M 22 L

2530L

63 55 150
Internal ref. 63 42 420

An Oshkosh Corportation Company

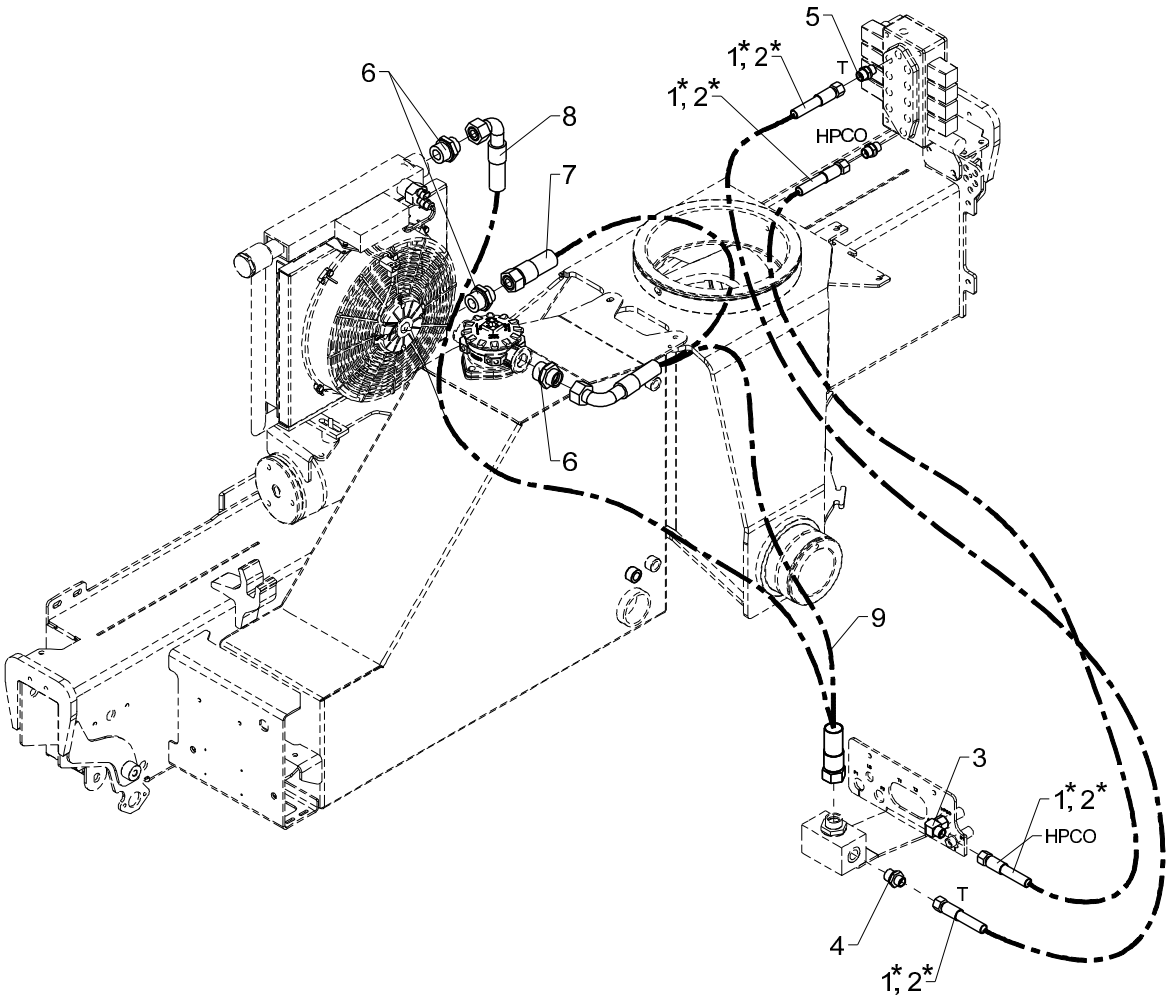

* 1300K-2630K: pos.1
1210L-2530L: pos.2

From loader 1270001
To loader

Hydr. syst. pump + return hoses (TS)
2530L

Created 24-11-2008
Modified 01-09-2014

Pos	Qty.	Part no.	Description	Remarks
		6342420	Hydr.syst.pump+return hoses TS	1300K - 2630K
		6355150	Hydr.syst.pump+return pipingTS	1210L - 2530L
1	2	0015500	Hose	1300K - 2630K
2	2	0017650	Hose	1210L - 2530L
3	1	25242	Elbow connection	EWSD 12 L
4	1	25108	Connection	GES 12 LR 1/2-WD
5	2	25127	Connection	P-GEV 12 LR-WD
6	3	26122	Connection	P-GEV 22 LR 1-WD
7	1	56501	Hose	Til køler/tank
8	1	56502	Hose	Til køler
9	1	56395	Hose	Til tank

2530L

63 54 640
Internal ref. 63 54 630

An Oshkosh Corportation Company

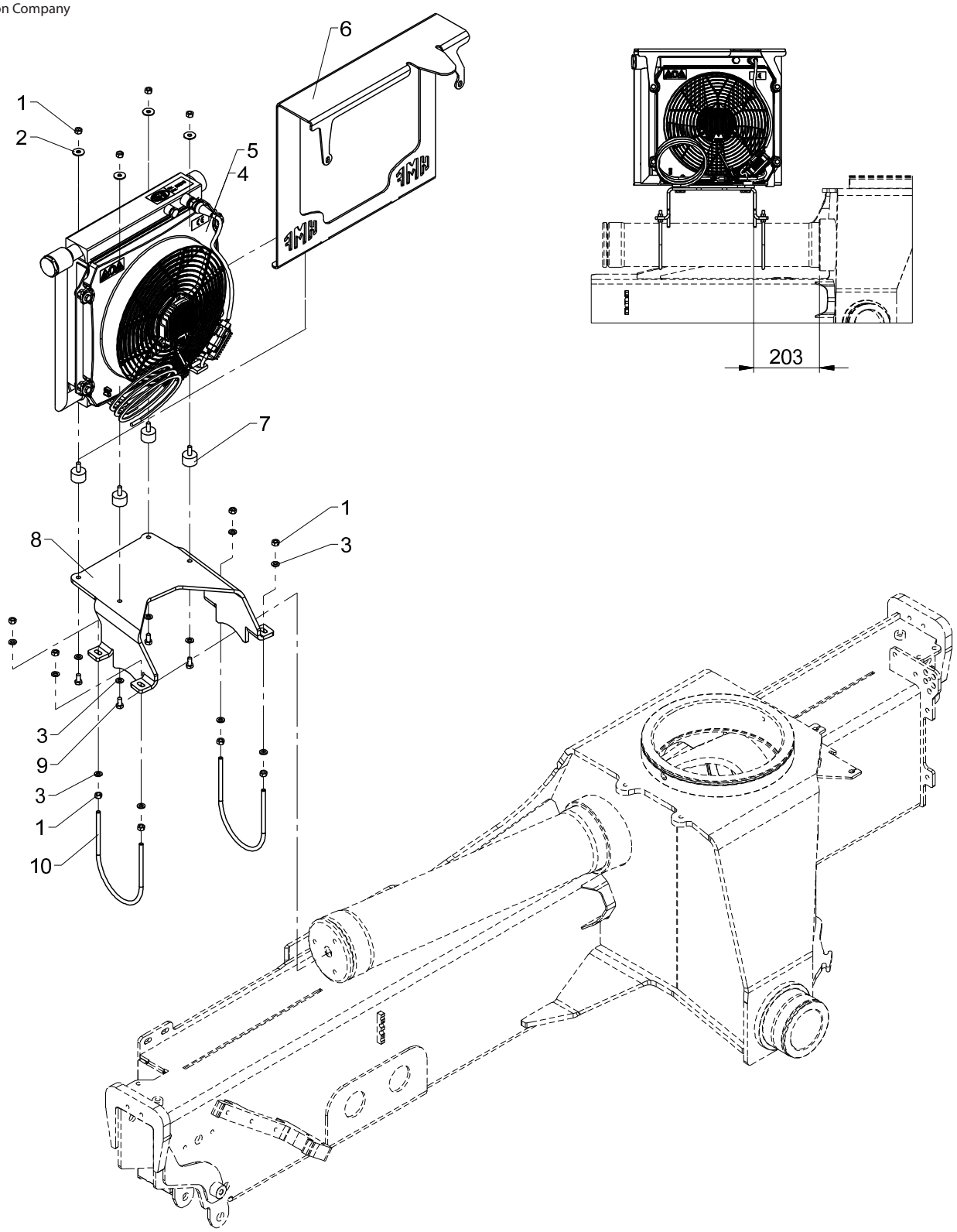

Oil cooler

2530L

Pos	Qty.	Part no.	Description	Remarks
		6354630	Oil cooler, complete	
		6354640	Oil cooler, complete 12V	
1	12	30856	Nut, stainless	M8
2	4	31136	Washer, stainless	8 mm
3	12	31147	Face washer, 8 mm	
4	1	50272	Oil cooler, 24 V + Smartdrive	24 V
5	1	50273	Oil cooler 12 V + Smartdrive	12 V
6	1	6340928		
7	4	44263	Torsion balancer Type 2	
8	1	6354047	Cooler bracket	
9	4	30131	Set screw, stainless	M8 x 16
10	2	6344458	Clamp	

2530L

Internal ref. 63 40 550

An Oshkosh Corportation Company

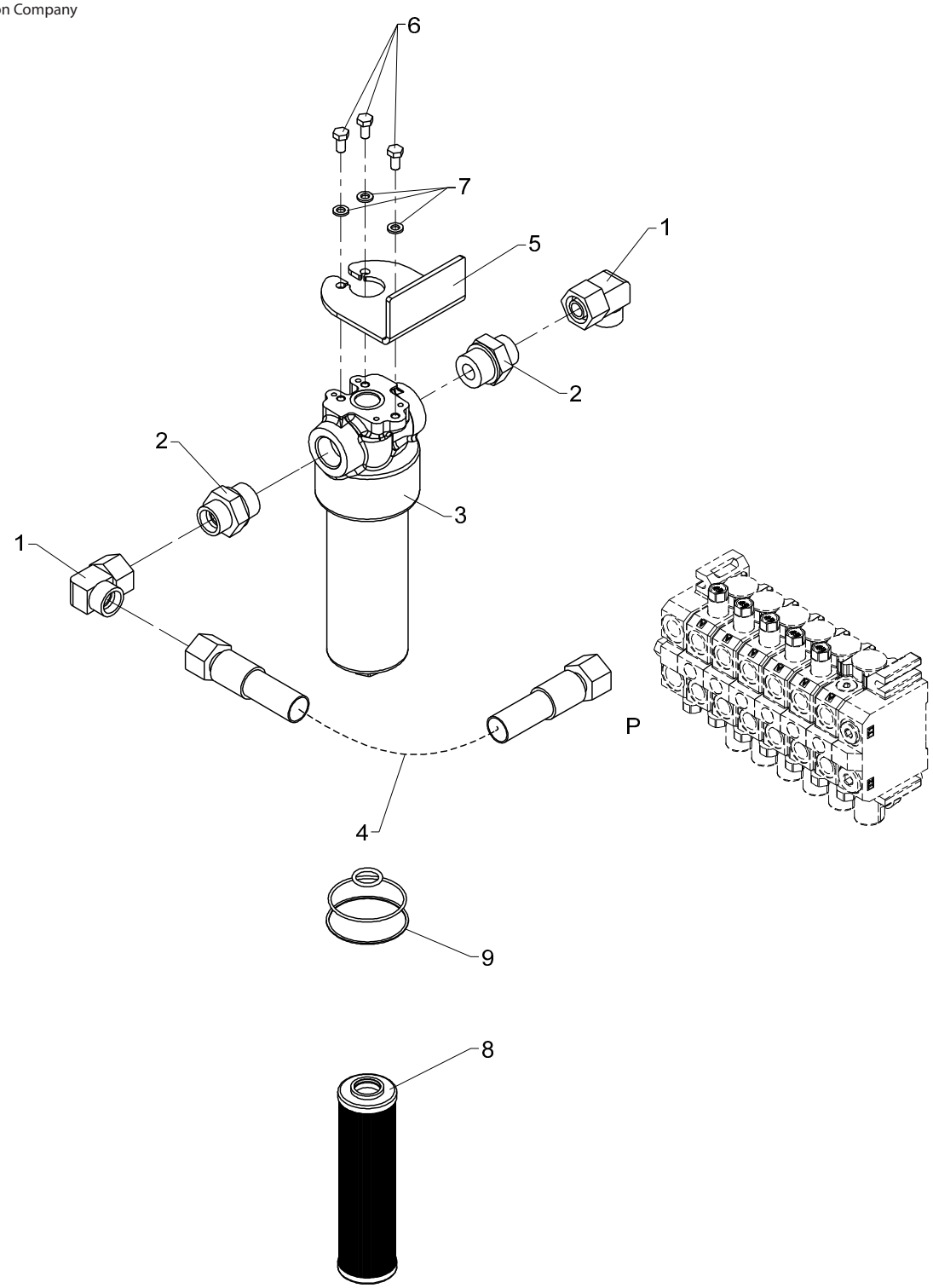

High-pressure filter

2530L

Pos	Qty.	Part no.	Description	Remarks
1	2	26198	Elbow connection	EWVD 20 S-SV
2	2	26851	Connection	GES 20 SR 1-WD
3	1	49401	High pressure filter	
4	1	62626	Hose	
5	1	6882974	Bracket, high pressure filter	
6	3	30131	Set screw, stainless	M8 x 16
7	3	31155	Spring washer	8 mm
8	1	49402	Filter	
9	1	49417	Seal kit	

2530L

66 52 430
Internal ref. 66 52 420

An Oshkosh Corportation Company

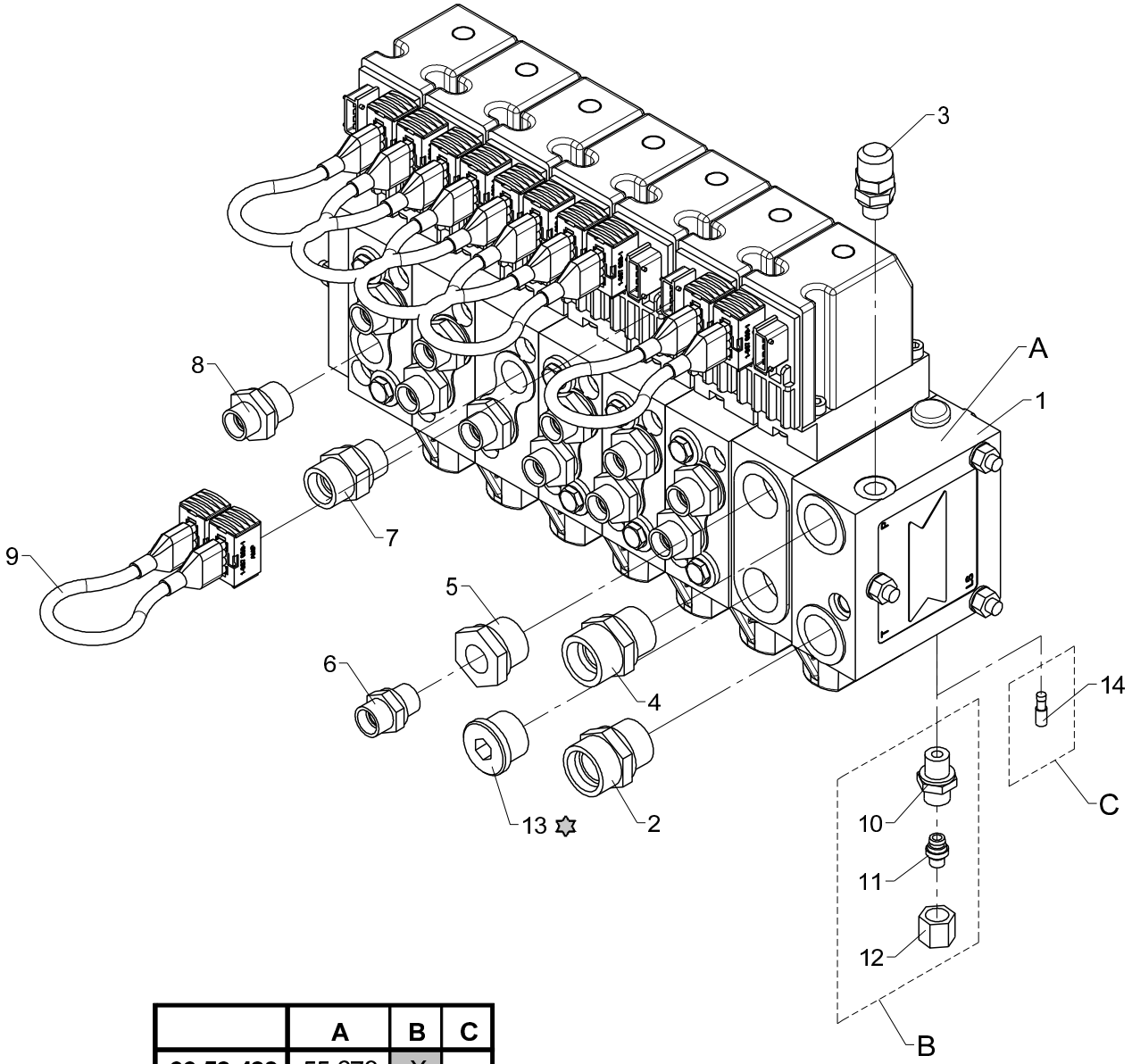

	A	B	C
66 52 420	55 673	X	
66 52 430	55 673		X

Loctite 542

Control valves, Danfoss, 6 sections, fixed/variable

2530L

Pos	Qty.	Part no.	Description	Remarks
		6652420	Valve block, 6 sect.	
		6652430	Valve block, 6 sect.	
1	1	55673	Valve block	
2	1	25169	Connection	P-GEV 22 LR-WD
3	1	26103	Pressure-gauge connect.	
4	1	26197	Connection	P-GEV 20 SR-WD
5	1	26319	Reducing connection	RED-R 3/4-WD/R 3/8
6	1	25127	Connection	P-GEV 12 LR-WD
7	1	26334	Connection	P-GEV 16 SR-WD
8	11	25108	Connection	GES 12 LR 1/2-WD
9	6	62296	Cable	
10	1	25109	Connection	GES 8 LR-WD
11	1	26166	Blanking plug	VSD 8 L
12	1	25181	Coupling nut	M 8 L
13	1	26355	Plug	VS-R-3/4 WD
14	1	62065	Closed center kit	

2530L

Internal ref. 66 52 370

An Oshkosh Corportation Company

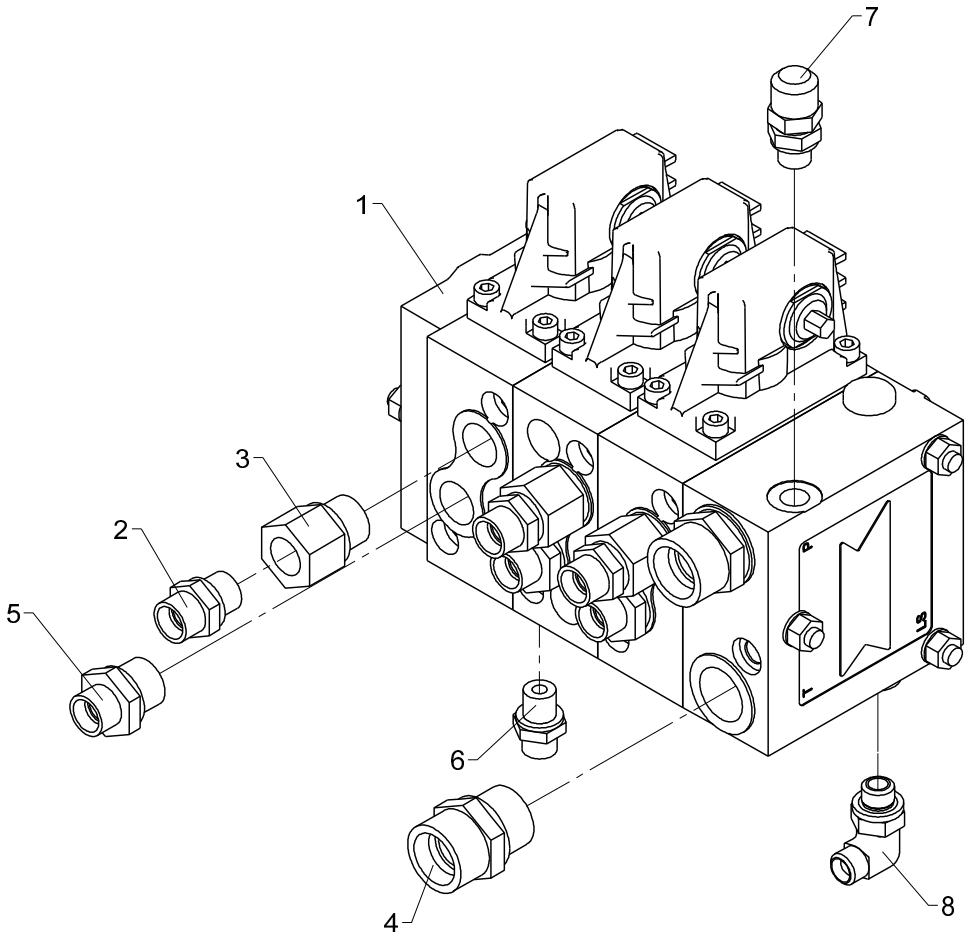

From loader 1270001
To loader

Control valve, Danfoss, 3 sections, 1 circuit, variable flow, left

2530L

Created 26-03-2014
Modified 05-05-2014

Pos	Qty.	Part no.	Description	Remarks
1	1	55668	Valve block	Manuel + V
2	3	25127	Connection	P-GEV 12 LR-WD
3	3	25243	Reducing connection	RED-R 1/2-WD/R 3/8
4	2	26197	Connection	P-GEV 20 SR-WD
5	3	25108	Connection	GES 12 LR 1/2-WD
6	1	25109	Connection	GES 8 LR-WD
7	1	26103	Pressure-gauge connect.	
8	1	26898	Elbow connection	8 mm - 1/4"

2530L

Internal ref. 66 52 380

An Oshkosh Corportation Company

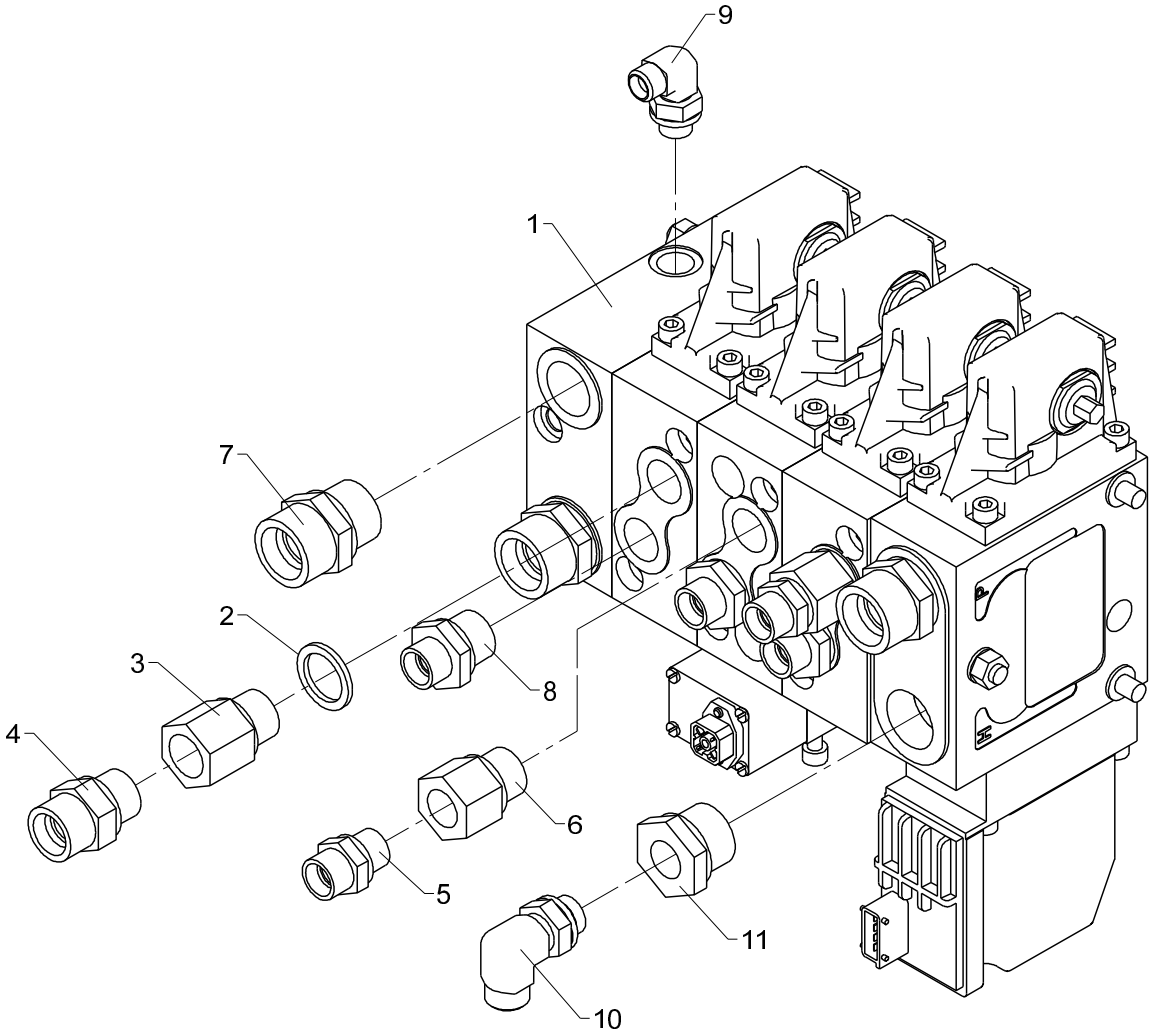

Control valve, Danfoss, 3 sections, 1 circuit, variable flow, right

2530L

Pos	Qty.	Part no.	Description	Remarks
1	1	55669	Valve block	Manuel + V
2	1	21106	Seal washer	ø21,5 x 28,7 x 2,5
3	1	26922	Reducing nipple	
4	1	26334	Connection	P-GEV 16 SR-WD
5	2	25127	Connection	P-GEV 12 LR-WD
6	2	25243	Reducing connection	RED-R 1/2-WD/R 3/8
7	3	26197	Connection	P-GEV 20 SR-WD
8	3	25108	Connection	GES 12 LR 1/2-WD
9	1	26898	Elbow connection	8 mm - 1/4"
10	1	26897	Elbow connection	12 mm - 3/8"
11	1	26319	Reducing connection	RED-R 3/4-WD/R 3/8

2530L

Internal ref. 66 52 390

An Oshkosh Corportation Company

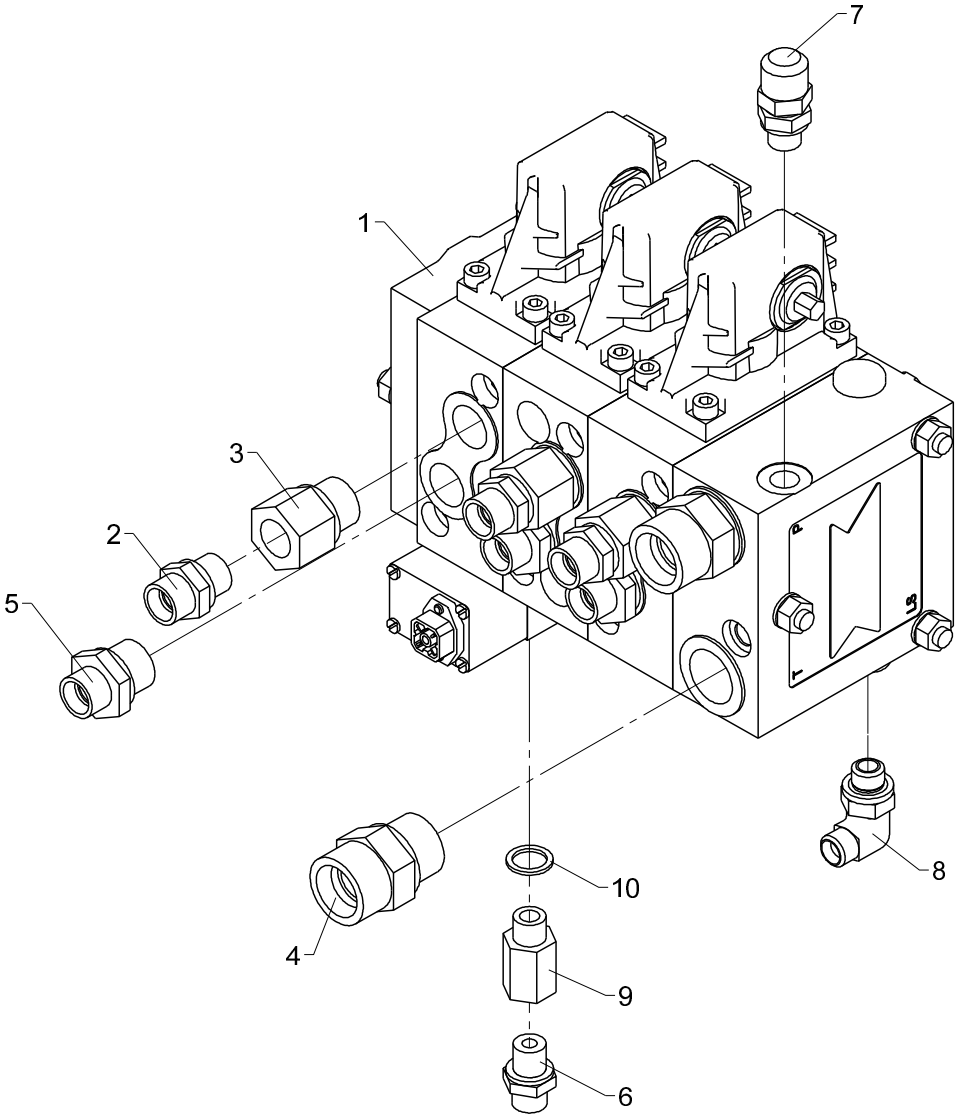

From loader 1270001
To loader

Control valve, Danfoss, 3 sections, 1 circuit, variable flow, left

2530L

Created 26-03-2014
Modified 15-09-2014

Pos	Qty.	Part no.	Description	Remarks
1	1	55672	Valve block	Manuel + V
2	3	25127	Connection	P-GEV 12 LR-WD
3	3	25243	Reducing connection	RED-R 1/2-WD/R 3/8
4	2	26197	Connection	P-GEV 20 SR-WD
5	3	25108	Connection	GES 12 LR 1/2-WD
6	1	25109	Connection	GES 8 LR-WD
7	1	26103	Pressure-gauge connect.	
8	1	26898	Elbow connection	8 mm - 1/4"
9	1	59077	Reducing nipple	1/4 BSP x 1/4 BSP
10	1	21102	Seal washer	ø14 x 18,7 x 1,5

2530L

Internal ref. 66 52 400

An Oshkosh Corportation Company

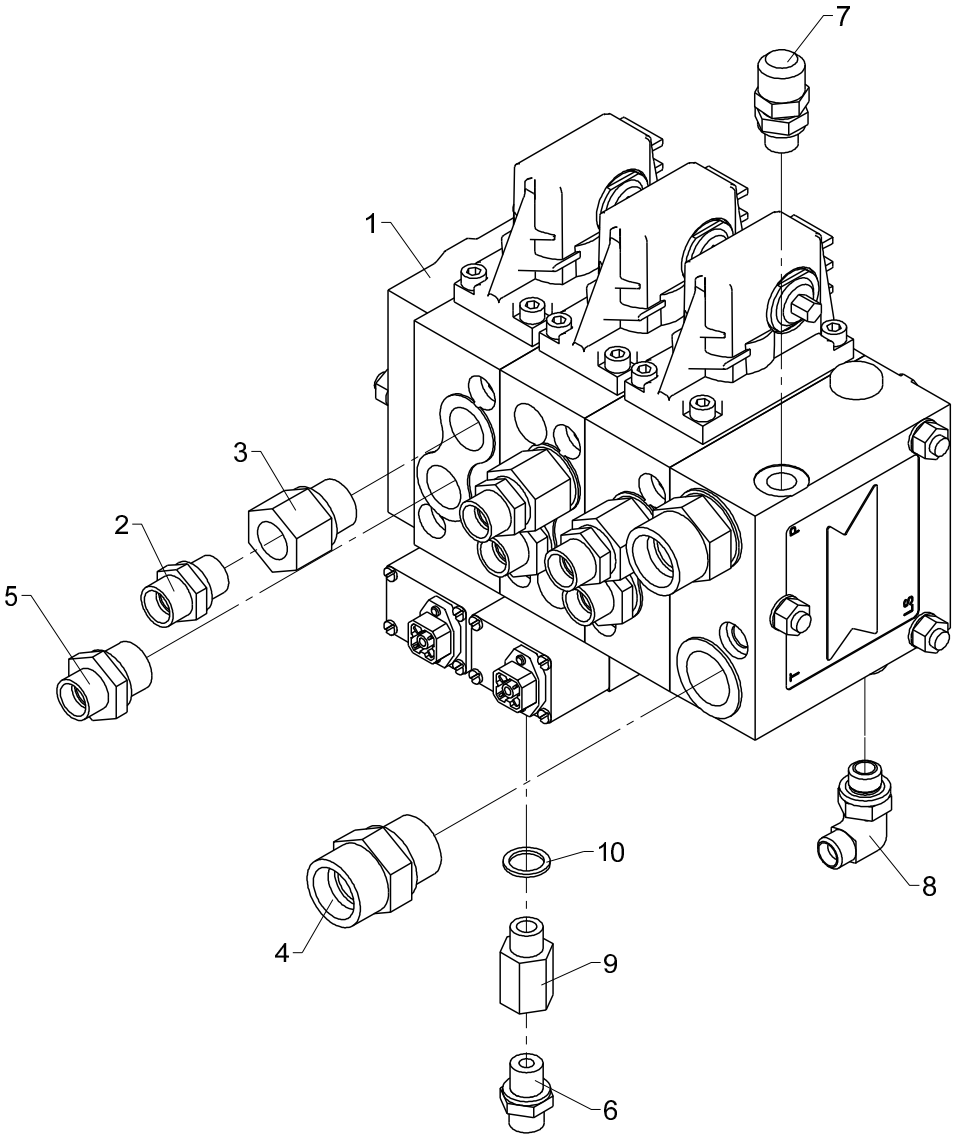

From loader 1270001
To loader

Control valve, Danfoss, 3 sections, 1 circuit, variable flow, left

2530L

Created 27-03-2014
Modified 15-09-2014

Pos	Qty.	Part no.	Description	Remarks
1	1	55670	Valve block	Manuel + V
2	3	25127	Connection	P-GEV 12 LR-WD
3	3	25243	Reducing connection	RED-R 1/2-WD/R 3/8
4	2	26197	Connection	P-GEV 20 SR-WD
5	3	25108	Connection	GES 12 LR 1/2-WD
6	1	25109	Connection	GES 8 LR-WD
7	1	26103	Pressure-gauge connect.	
8	1	26898	Elbow connection	8 mm - 1/4"
9	1	59077	Reducing nipple	1/4 BSP x 1/4 BSP
10	1	21102	Seal washer	ø14 x 18,7 x 1,5

2530L

Internal ref. 66 52 410

An Oshkosh Corportation Company

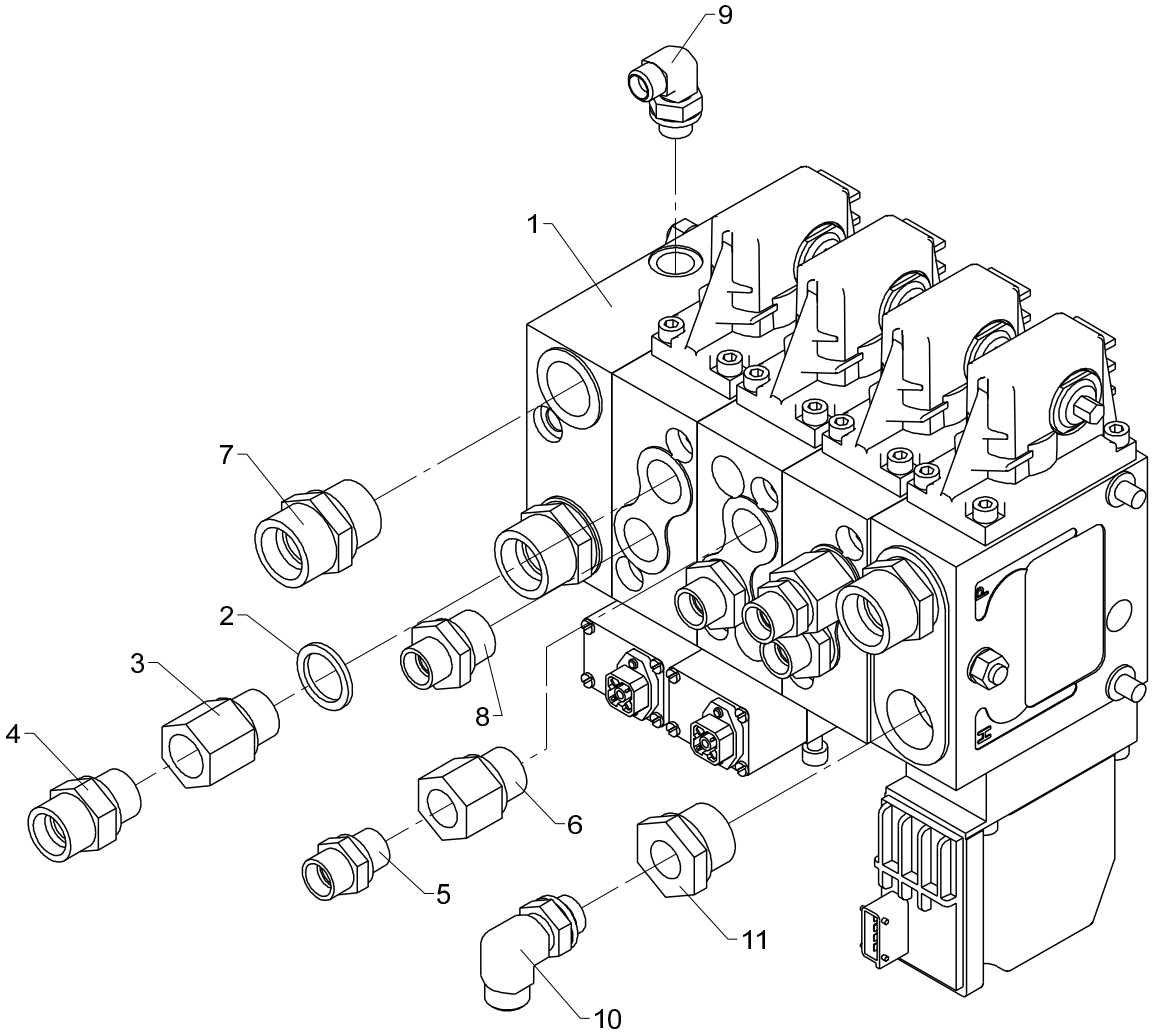

From loader 1270001
To loader

Control valve, Danfoss, 3 sections, 1 circuit, variable flow, right

2530L

Created 27-03-2014
Modified 06-05-2014

Pos	Qty.	Part no.	Description	Remarks
1	1	55671	Valve block	Manuel + V
2	1	21106	Seal washer	ø21,5 x 28,7 x 2,5
3	1	26922	Reducing nipple	
4	1	26334	Connection	P-GEV 16 SR-WD
5	2	25127	Connection	P-GEV 12 LR-WD
6	2	25243	Reducing connection	RED-R 1/2-WD/R 3/8
7	3	26197	Connection	P-GEV 20 SR-WD
8	3	25108	Connection	GES 12 LR 1/2-WD
9	1	26898	Elbow connection	8 mm - 1/4"
10	1	26897	Elbow connection	12 mm - 3/8"
11	1	26319	Reducing connection	RED-R 3/4-WD/R 3/8

1510L, 1730L
2530L

Internal ref. 63 40 990

An Oshkosh Corportation Company

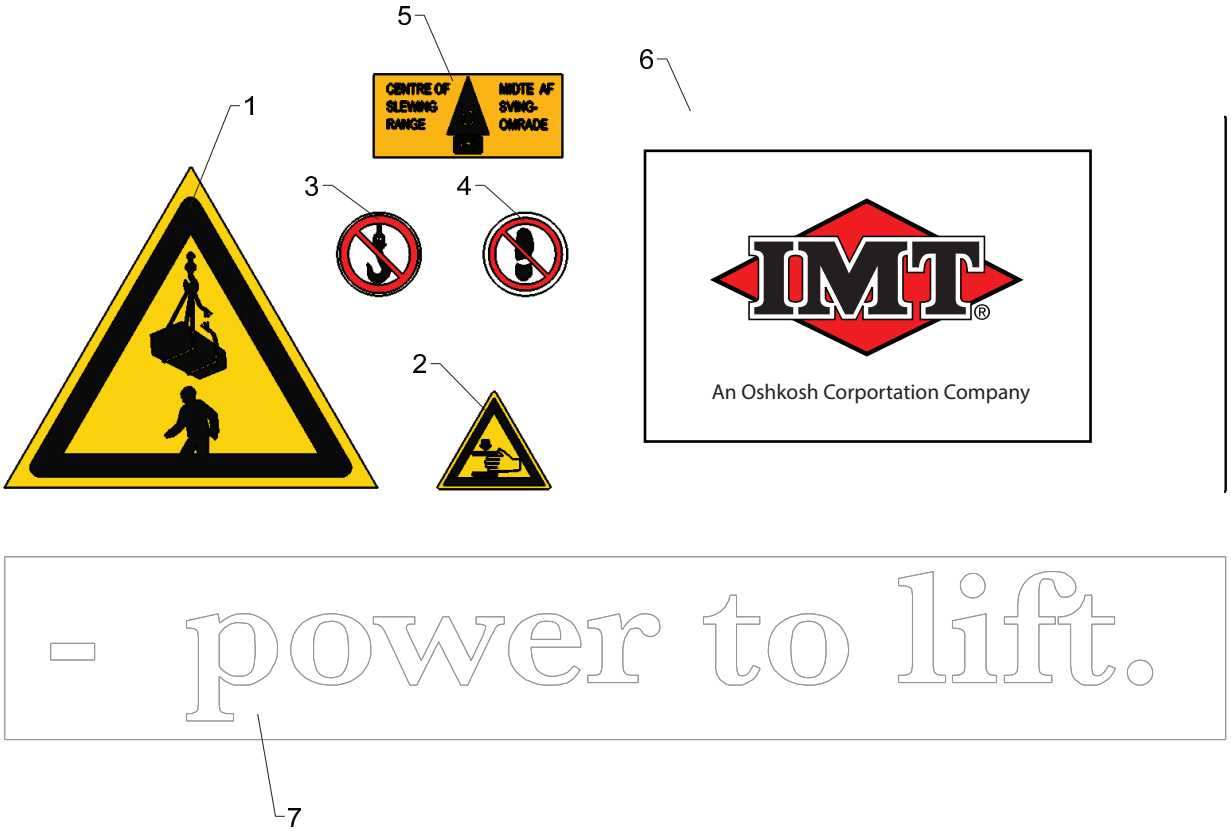

Standard labels

2530L

Pos	Qty.	Part no.	Description	Remarks
1	2	66462	"NEVER WALK UNDER LOAD"	
2	2	66469	Label - "Danger - squeezing"	
3	1	66466	Label, "HOOK FORBIDDEN"	
4	1	66464	Label "NO STEP"	
5	1	64702	Label for slewing	
6	2	64604	IMT label 180X300	
7	2	64664	Label, 'Power to lift.', white	

2530L

Internal ref. 99 99 170

An Oshkosh Corportation Company

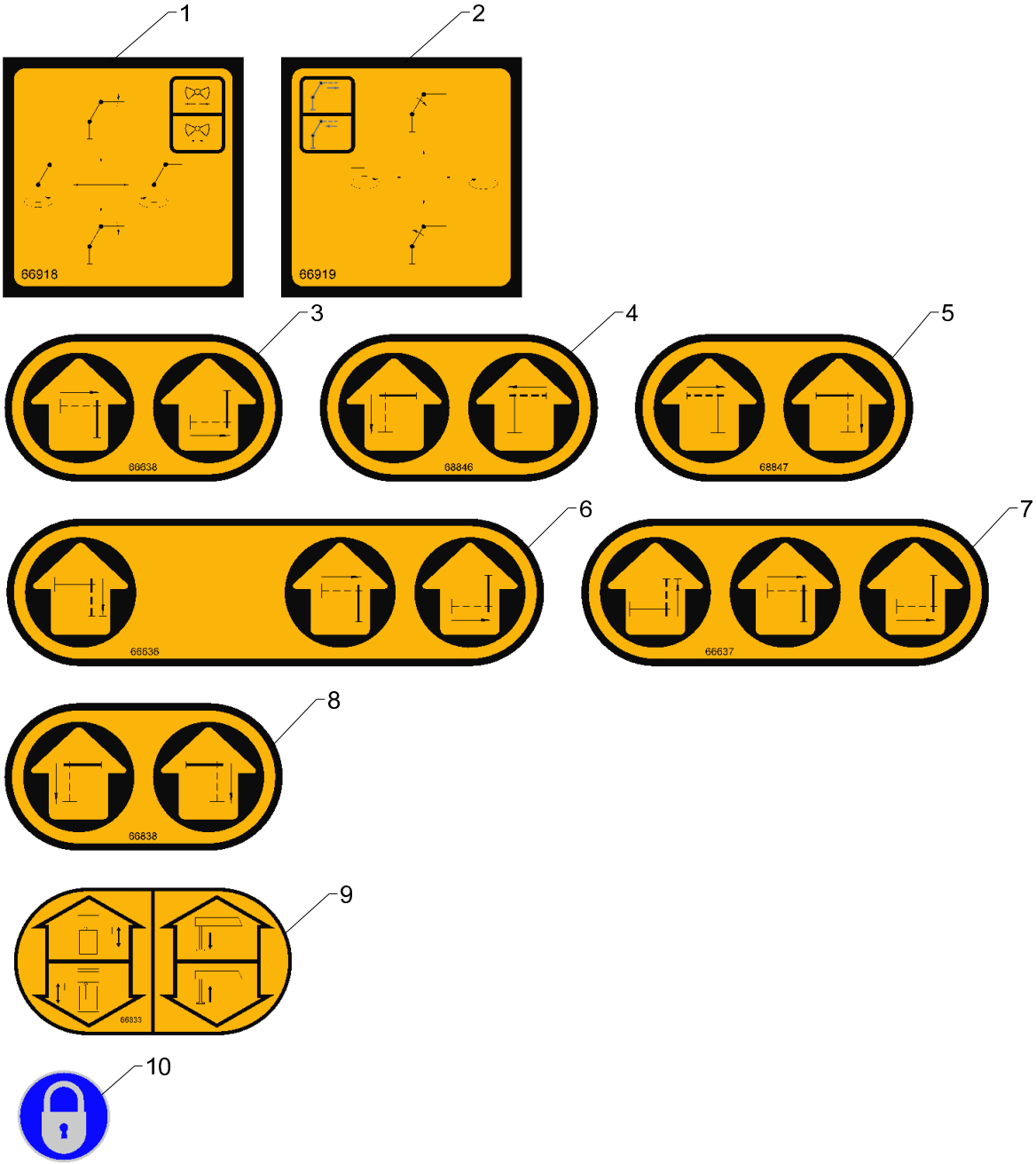

Operating labels

2530L

Pos	Qty.	Part no.	Description	Remarks
1	1	66918	Operating label Left	
2	1	66919	Operating label Right	
3	1	66638	Stab. operation, (HC-M50-2fcts	
4	1	68846	Label - stabilizer operation	
5	1	68847	Label - stabilizer operation	
6	1	66636	Stab. operation, valve bl.side	
7	1	66637	Stab. operation,dual ctrl side	
8	1	66838	Operating label	
9	1	66833	Operating label	
10	1	66459	Label "LOCKING DEVICE CLOSED"	

2530L

Internal ref. 99 99 010

An Oshkosh Corportation Company

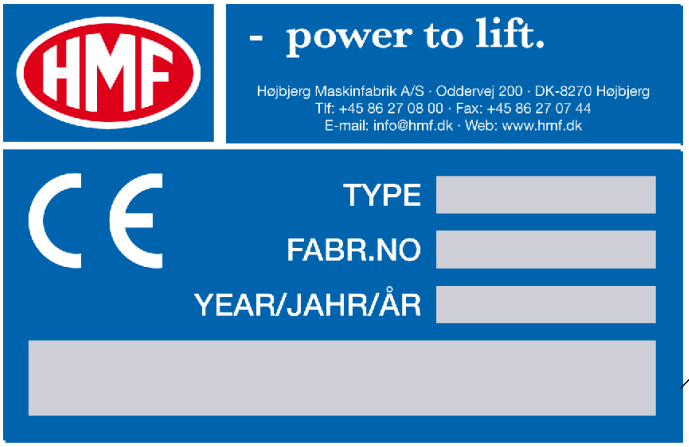

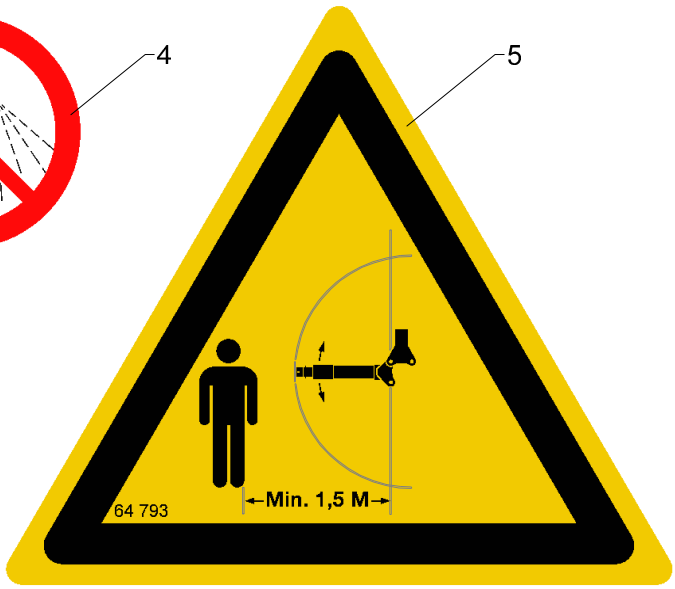

Type plates, marking tape, warning signs

2530L

Pos	Qty.	Part no.	Description	Remarks
1	1	64796	Type plate, excl. CE	
2	1	64797	Type plate, incl. CE	CE
3	1	66598	Marking tape - dark-yellow	
4	1	65770	Label-NO high pressure rinsing	
5	1	64793	Label, swing-up stabilizer leg	

2530L

Internal ref. 99 99 180

An Oshkosh Corportation Company

1 - 4

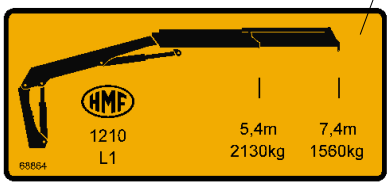

5 - 8

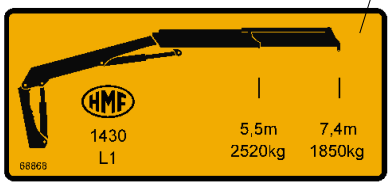

9 - 12

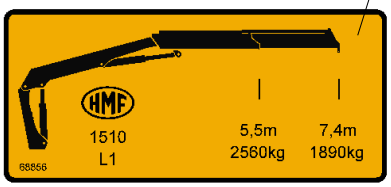

13 - 16

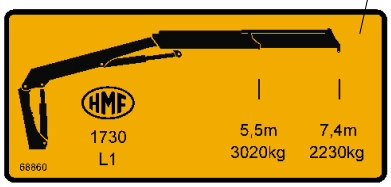

17 - 20

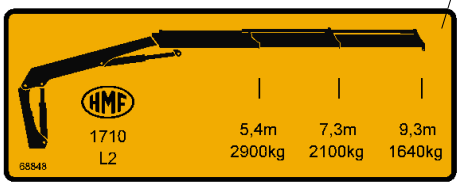

21 - 24

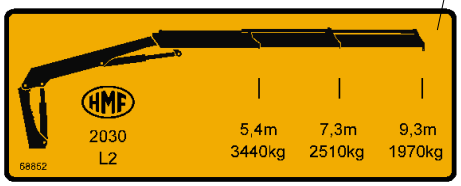

25 - 28

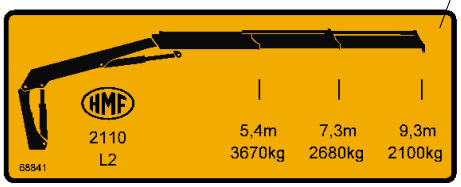

29 - 32

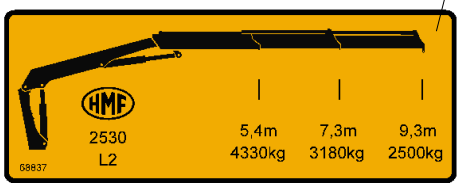

Lifting capacity diagrams

2530L

Pos	Qty.	Part no.	Description	Remarks
1	1	68864	Lifting capacity diagram1210L1	
2	1	68865	Lifting capacity diagram1210L2	
3	1	68866	Lifting capacity diagram1210L3	
4	1	68867	Lifting capacity diagram1210L4	
5	1	68868	Lifting capacity diagram1430L1	
6	1	68869	Lifting capacity diagram1430L2	
7	1	68870	Lifting capacity diagram1430L3	
8	1	68871	Lifting capacity diagram1430L4	
9	1	68856	Lifting capacity diagram1510L1	
10	1	68857	Lifting capacity diagram1510L2	
11	1	68858	Lifting capacity diagram1510L3	
12	1	68859	Lifting capacity diagram1510L4	
13	1	68860	Lifting capacity diagram1730L1	
14	1	68861	Lifting capacity diagram1730L2	
15	1	68862	Lifting capacity diagram1730L3	
16	1	68863	Lifting capacity diagram1730L4	
17	1	68848	Lifting capacity diagram1710L2	
18	1	68849	Lifting capacity diagram1710L3	
19	1	68850	Lifting capacity diagram1710L4	
20	1	68851	Lifting capacity diagram1710L5	
21	1	68852	Lifting capacity diagram2030L2	
22	1	68853	Lifting capacity diagram2030L3	
23	1	68854	Lifting capacity diagram2030L4	
24	1	68855	Lifting capacity diagram2030L5	
25	1	68841	Lifting capacity diagram2110L2	
26	1	68842	Lifting capacity diagram2110L3	
27	1	68843	Lifting capacity diagram2110L4	
28	1	68844	Lifting capacity diagram2110L5	
29	1	68837	Lifting capacity diagram2530L2	
30	1	68838	Lifting capacity diagram2530L3	
31	1	68839	Lifting capacity diagram2530L4	
32	1	68840	Lifting capacity diagram2530L5	

2530L

68 88 190
Internal ref. 68 88 060

An Oshkosh Corportation Company

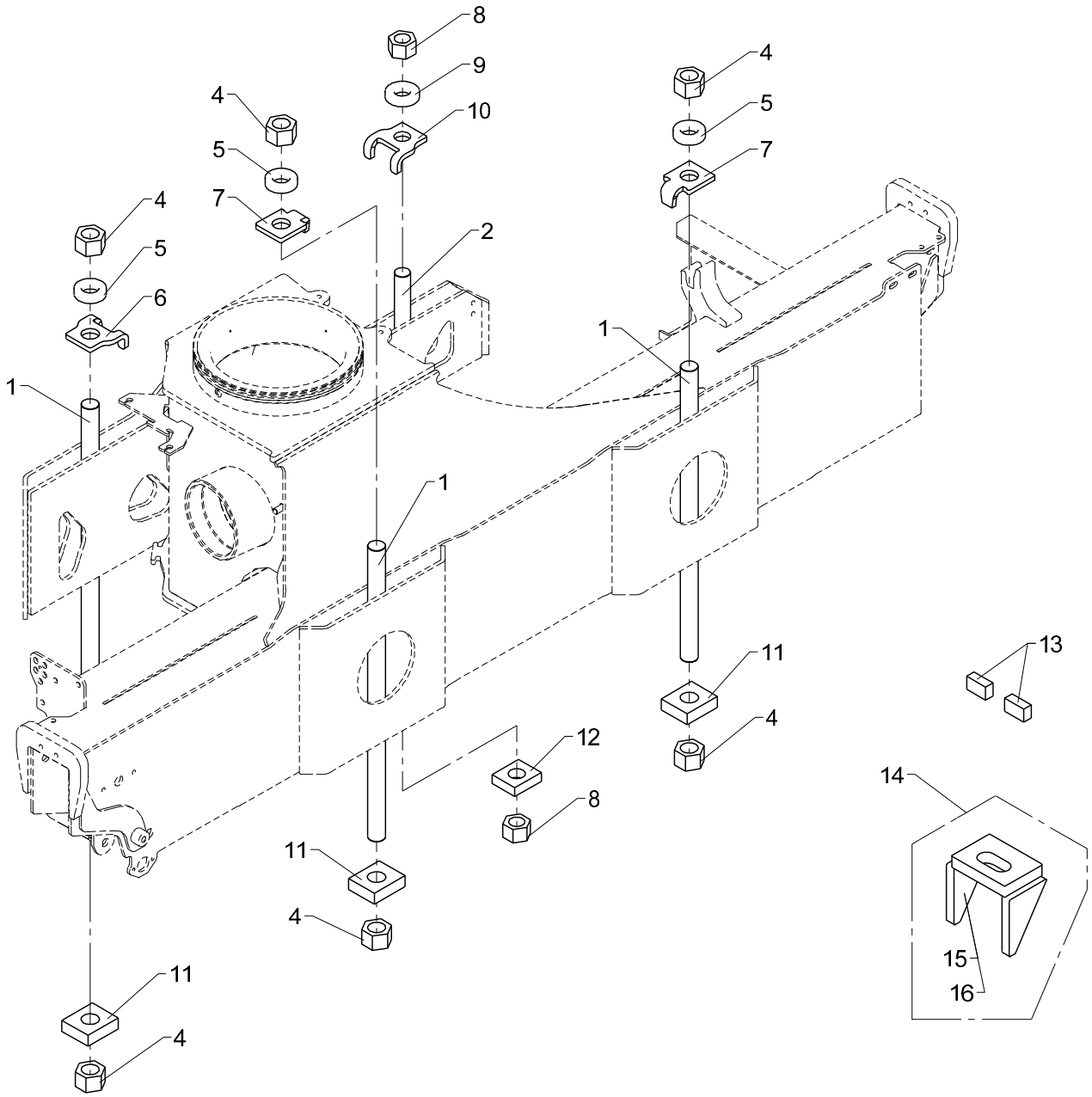

Mounting kit (3 M33 x 2 + 1 M30 x 2) - 50 mm.

2530L

Pos	Qty.	Part no.	Description	Remarks
		6888060	Kit of stay bolts, 4 pcs.,50mm	Pos. 1, 2, 3
		6888190	Fittings	Pos. 14
1	3	6888033	Mounting bolt, M33 x 2 x 665	
2	1	6888022	Monting bolt, M30 x 2 x 450	
3	1	6888140	Nut/washer/stop - kit	Pos. 4, 5, 6, 7, 8, 9, 10, 11, 12, 13
4	6	31087	Lock nut M33 x 2 hexagonal	M33 x 2
5	3	6394709	Mounting plate 33 mm	
6	1	6394707	Mounting plate 33 mm	
7	2	6394705	Mounting plate 33 mm	
8	2	31086	Lock nut	M30 x 2
9	1	6394701	Mounting plate 30 mm	
10	1	6394706	Mouting plate 30 mm	
11	3	6887374	Washer	
12	1	6658094	Washer	
13	6	6644084	Stop block	
14	1	6888190	Fittings	Pos. 15, 16
15	1	6668244	Bracket	
16	3	6668501	Bracket	

An Oshkosh Corportation Company

2530L

68 88 200
Internal ref. 68 88 070

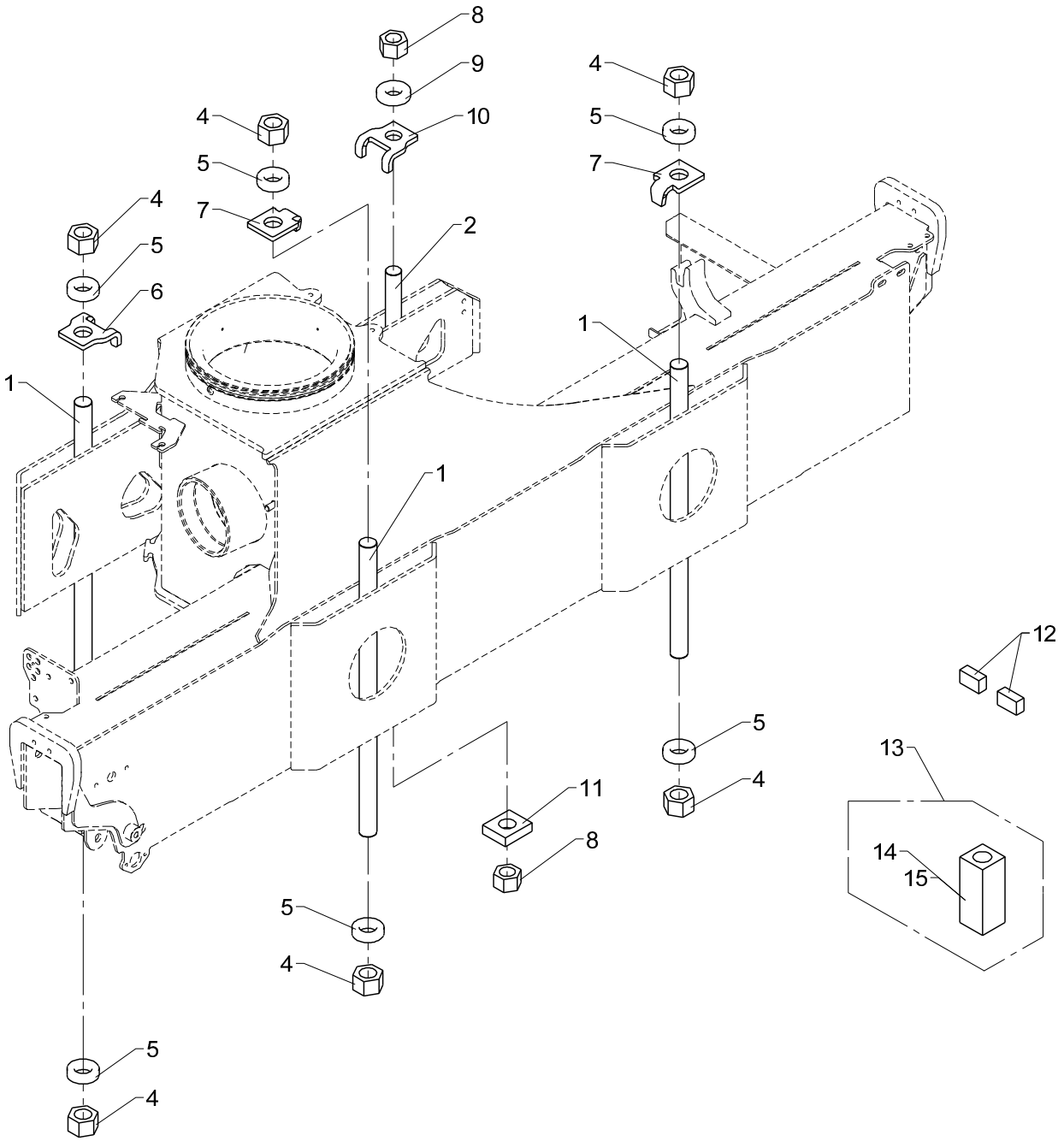

Mounting kit (3 M33 x 2 + 1 M30 x 2) - 150 mm.

2530L

Pos	Qty.	Part no.	Description	Remarks
		6888070	Kit of stay bolts,4 pcs.,150mm	Pos. 1, 2, 3
		6888200	Fittings	Pos. 13
1	3	6888033	Mounting bolt, M33 x 2 x 665	
2	1	6888023	Mounting bolt, M30 x 2 x 600	
3	1	6888150	Nut/washer/stop - kit	Pos. 4, 5, 6, 7, 8, 9, 10, 11, 12
4	6	31087	Lock nut M33 x 2 hexagonal	M33 x 2
5	6	6394709	Mounting plate 33 mm	
6	1	6394707	Mounting plate 33 mm	
7	2	6394705	Mounting plate 33 mm	
8	2	31086	Lock nut	M30 x 2
9	1	6394701	Mounting plate 30 mm	
10	1	6394706	Mouting plate 30 mm	
11	1	6658094	Washer	
12	6	6644084	Stop block	
13	1	6888200	Fittings	Pos. 14, 15
14	1	6887599	Mounting block	
15	3	6887601	Mounting block (M33 pin)	

An Oshkosh Corportation Company

2530L

66 68 980
Internal ref. 68 88 080

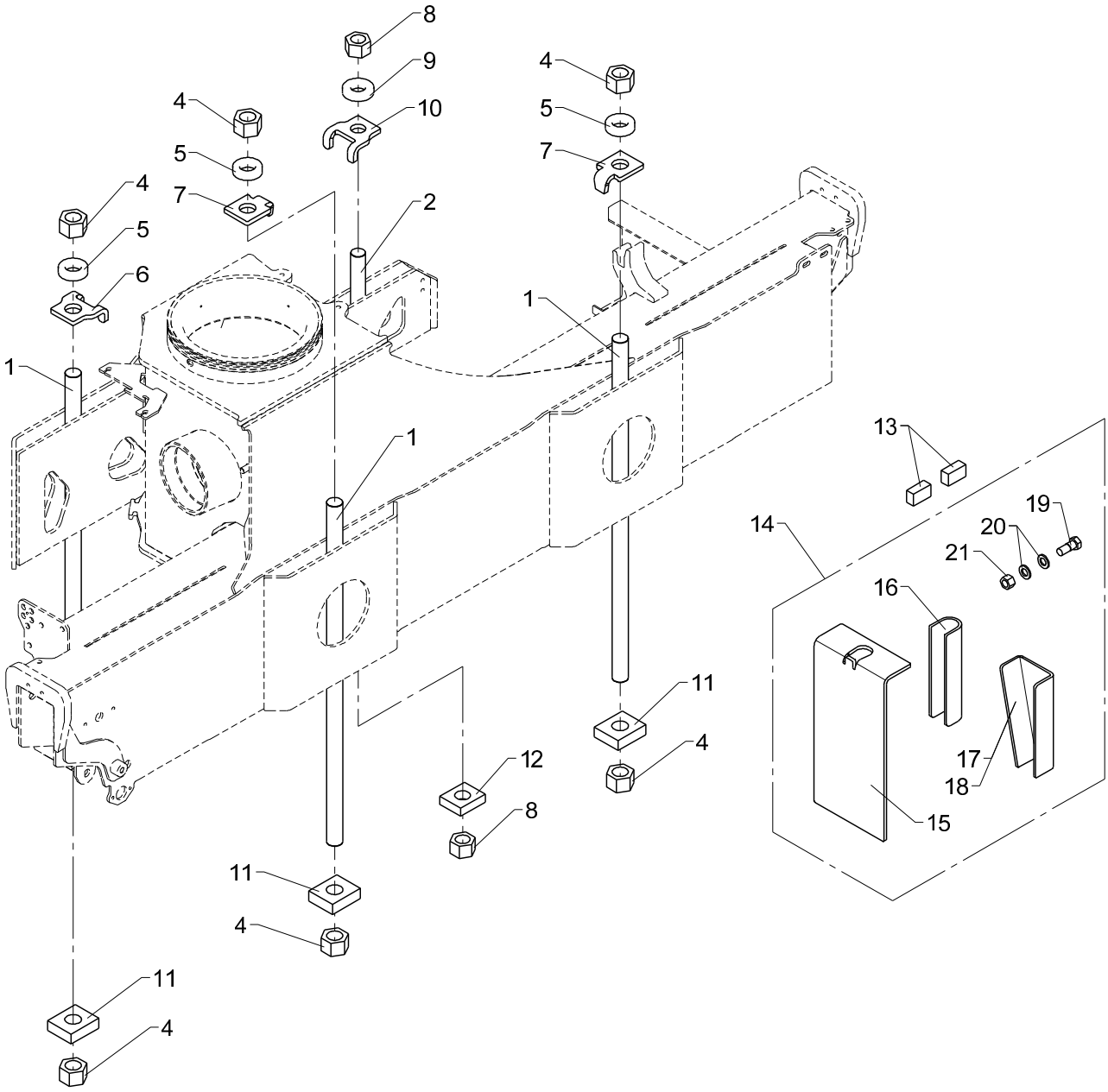

Mounting kit (3 M33 x 2 + 1 M30 x 2) - 250 mm.

2530L

Pos	Qty.	Part no.	Description	Remarks
		6888080	Kit of stay bolts,4 pcs.,250mm	Pos. 1, 2, 3
		6668980	Mouting brackets	Pos. 14
1	3	6888034	Mounting bolt, M33 x 2 x 850	
2	1	6888023	Mounting bolt, M30 x 2 x 600	
3	1	6888140	Nut/washer/stop - kit	Pos. 4, 5, 6, 7, 8, 9, 10, 11, 12, 13
4	6	31087	Lock nut M33 x 2 hexagonal	M33 x 2
5	3	6394709	Mounting plate 33 mm	
6	1	6394707	Mounting plate 33 mm	
7	2	6394705	Mounting plate 33 mm	
8	2	31086	Lock nut	M30 x 2
9	1	6394701	Mounting plate 30 mm	
10	1	6394706	Mouting plate 30 mm	
11	3	6887374	Washer	
12	1	6658094	Washer	
13	6	6644084	Stop block	
14	1	6668980	Mouting brackets	Pos. 15, 16, 17, 18, 19, 20, 21
15	4	6881704	Mounting plate	
16	2	6887354	U-profile	
17	1	6881684	Plate, left	
18	1	6881694	Plate, right	
19	24	31496	Tight-fitting bolt	M16 x 40
20	48	31103	Washer, 16 mm	16 mm
21	24	30892	Lock nut	M16

2530L

66 68 960
Internal ref. 68 88 030

An Oshkosh Corportation Company

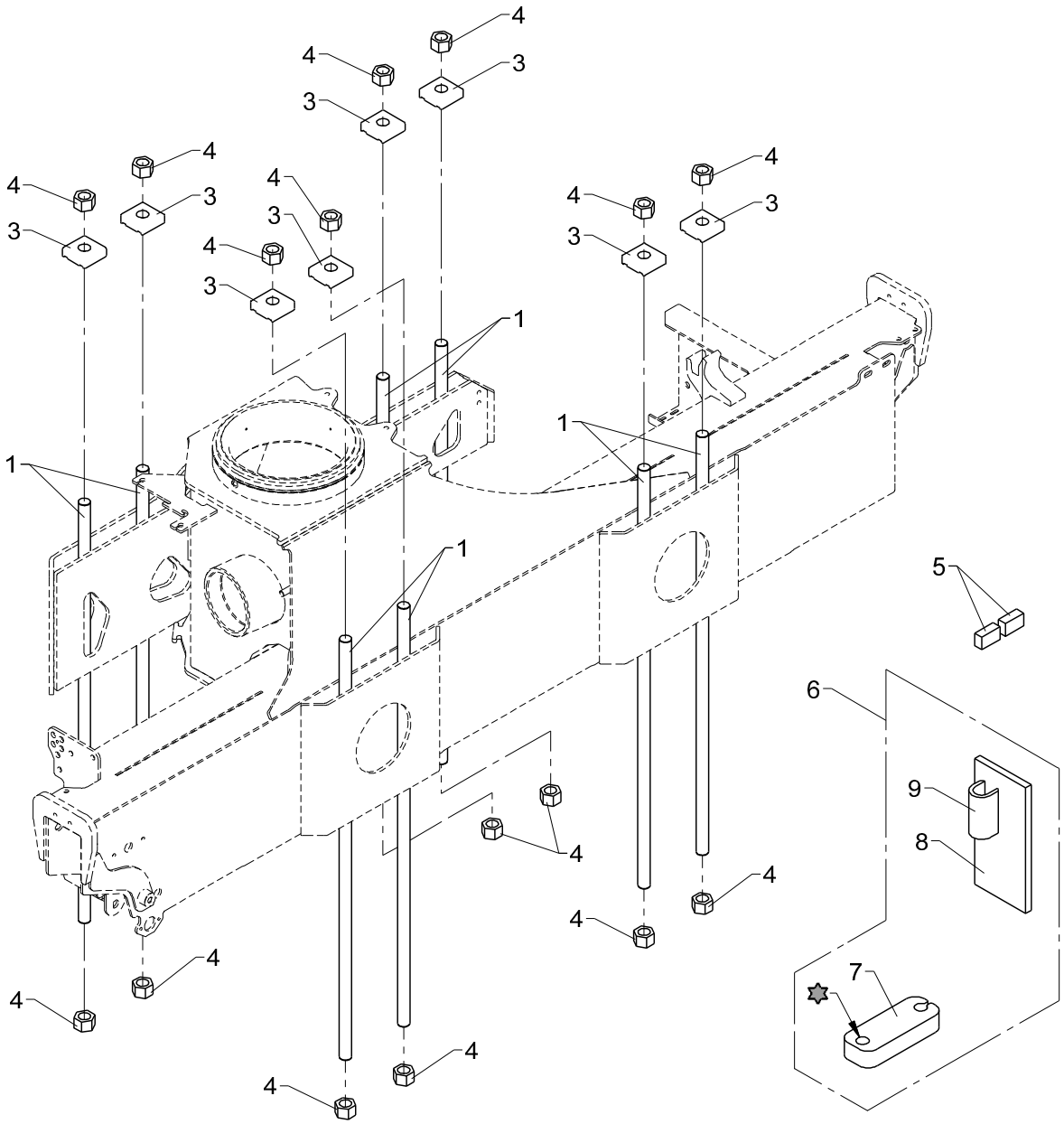

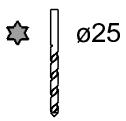

Mounting kit (8 M24 x 2 pins)

2530L

Pos	Qty.	Part no.	Description	Remarks
		6888030	Kit of stay bolts,8pcs.chassis	Pos. 1, 2
		6668960	Mounting bracket	Pos. 6
1	8	6888011	Mouting bolt, M24 x 2 x 1000	
2	1	6888130	Nut/washer/stop - kit	Pos. 3, 4, 5
3	8	6340496	Mounting plate	
4	16	31051	Lock nut	M24 x 2
5	6	6644084	Stop block	
6	1	6668960	Mounting bracket	Pos. 7, 8, 9
7	4	6887384	Clamp	
8	4	6659924	Spacer	
9	4	6659914	U-section	

63 55 780
63 63 830
63 65 830
63 45 730
Internal ref. 63 40 730

2530L

An Oshkosh Corportation Company

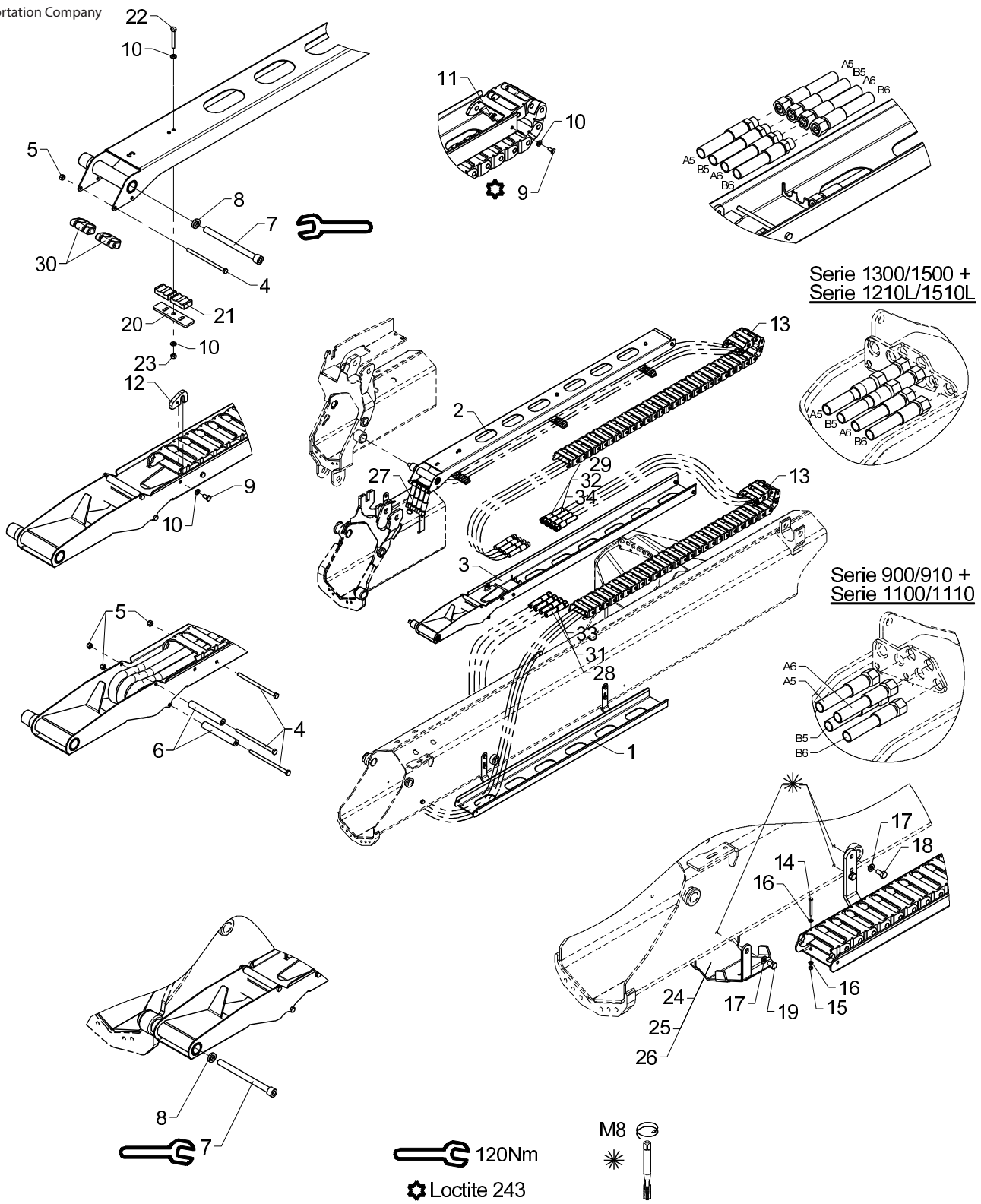

Hose guides, K2-2 EXV.

2530L

Pos	Qty.	Part no.	Description	Remarks
		6340730	Hose guide, K2-1 EXV	S.1300K/1500K
		6345730	Hose guide, K2-2 EXV	S.1800K/2200K
		6365830	Hose guide, K2-2 EXV.	S.1100K/1110K
		6363830	Hose guide, K2-2 EXV.	S.900K/910K
		6355780		S.1210L/1510L
1	1	6340721	Guide (jib)	
2	1	6340748	Guide (extension K3)	
3	1	6341731	Hose guide (Extension I)	
4	4	30167	Steel bolt	M6 x 60
5	4	30884	Lock nut, stainless	M6
6	2	56513	Hose	
7	2	32488	Screw	MC12 x 150
8	2	6340717	Washer	
9	5	30111	Set screw, stainless	
10	11	32302	Face washer, stainless	6 mm
11	4	6340719	Nut	
12	1	6340718	Bracket	
13	2	28712	Nylon drag chain, 30 links	
14	2	30128	Set screw	M4 x 40
15	2	30857	Lock nut	M4
16	4	31188	Washer, stainless	4 mm
17	6	31147	Face washer, 8 mm	
18	4	30131	Set screw, stainless	M8 x 16
19	2	30130	Set screw, stainless	M8 x 12
20	3	6340769	Adaptor	
21	6	63561	Clamp	
22	3	30118	Steel pin, stainless	M6 x 45
23	3	30854	Nut, stainless	M6
24	1	6340299	Protective guard	S. 1300/1500/1210L/1510L
25	1	6344299	Protective guard	S. 1800/2200
26	1	6365299	Hose shield	S. 1100/1110
27	4	56568	Hose	
28	2	56563	Hose	S. 1300-2200/1100/1110
29	2	56569	Hose	S. 1300-2200/1100/1110
30	2	68028	Clamp	
31	2	56462	Hose 3/8 x 3850 mm	S. 900/910
32	2	56458	Hose 3/8 x 3750 mm L/L	S. 900/910
33	2	56916	Hose	S. 1210L/1510L
34	2	56993	Hose	S. 1210L/1510L

63 63 840
63 65 840
63 45 530
63 55 860 63 45 740
Internal ref. 63 40 740

2530L

An Oshkosh Corportation Company

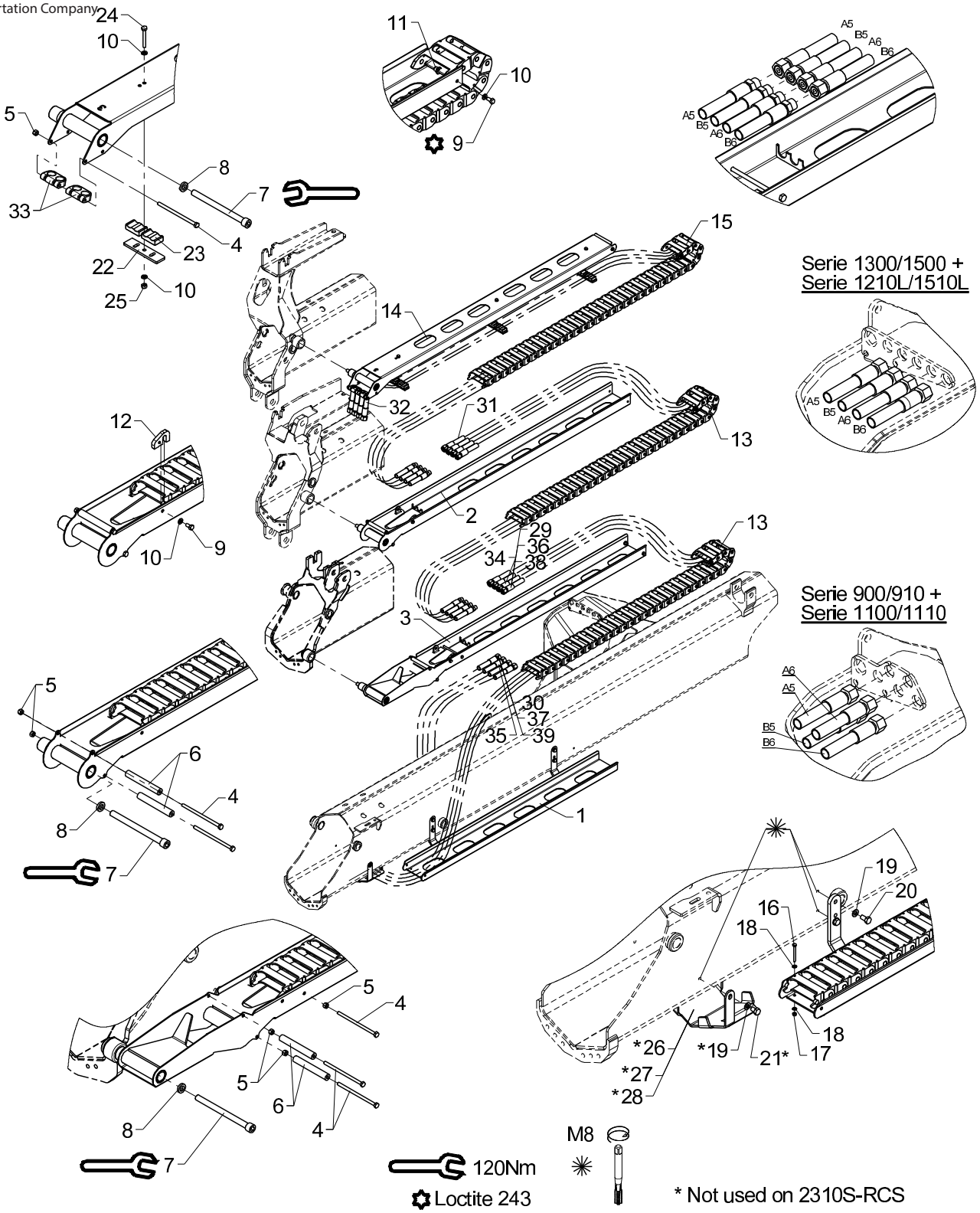

Hose guides, K3-2 EXV.

2530L

Pos	Qty.	Part no.	Description	Remarks
		6340740	Hose guide, K3-2 EXV	S.1300/1500
		6345740	Hose guides, K3-2 EXV	S.1100/1110
		6345530	Hose guide, K3-2 EXV.	S.2310S-RCS
		6365840	Hose guide, K3-2 EXV.	S.1100/1110
		6363840	Hose guide, K3-2 EXV.	S.900/910
		6355860		S.1210L/1510L
1	1	6340721	Guide (jib)	
2	1	6340741	Guide (Extension II)	
3	1	6341731	Hose guide (Extension I)	
4	6	30167	Steel bolt	M6 x 60
5	6	30884	Lock nut, stainless	M6
6	4	56513	Hose	
7	3	32488	Screw	MC12 x 150
8	3	6340717	Washer	
9	8	30111	Set screw, stainless	
10	14	32302	Face washer, stainless	6 mm
11	6	6340719	Nut	
12	2	6340718	Bracket	
13	2	28712	Nylon drag chain, 30 links	
14	1	6340748	Guide (extension K3)	
15	1	28713	Nylon drag chain, 33 links	
16	2	30128	Set screw	M4 x 40
17	2	30857	Lock nut	M4
18	4	31188	Washer, stainless	4 mm
19	6	31147	Face washer, 8 mm	
20	4	30131	Set screw, stainless	M8 x 16
21	2	30130	Set screw, stainless	M8 x 12
22	3	6340769	Adaptor	
23	6	63561	Clamp	
24	3	30118	Steel pin, stainless	M6 x 45
25	3	30854	Nut, stainless	M6
26	1	6340299	Protective guard	S. 1300/1500/1210L/1510L
27	1	6344299	Protective guard	S. 1800/2200
28	1	6365299	Hose shield	S. 1100/1110
29	2	56569	Hose	S. 1300-2200/1100/1110
30	2	56563	Hose	S. 1300-2200/1100/1110
31	4	56564	Hose	
32	4	56565	Hose	
33	2	68028	Clamp	
34	2	56458	Hose 3/8 x 3750 mm L/L	S. 900/910
35	2	56462	Hose 3/8 x 3850 mm	S.900/910

2530L

63 63 840
63 65 840
63 45 530
63 55 860 63 45 740
Internal ref. 63 40 740

An Oshkosh Corportation Company

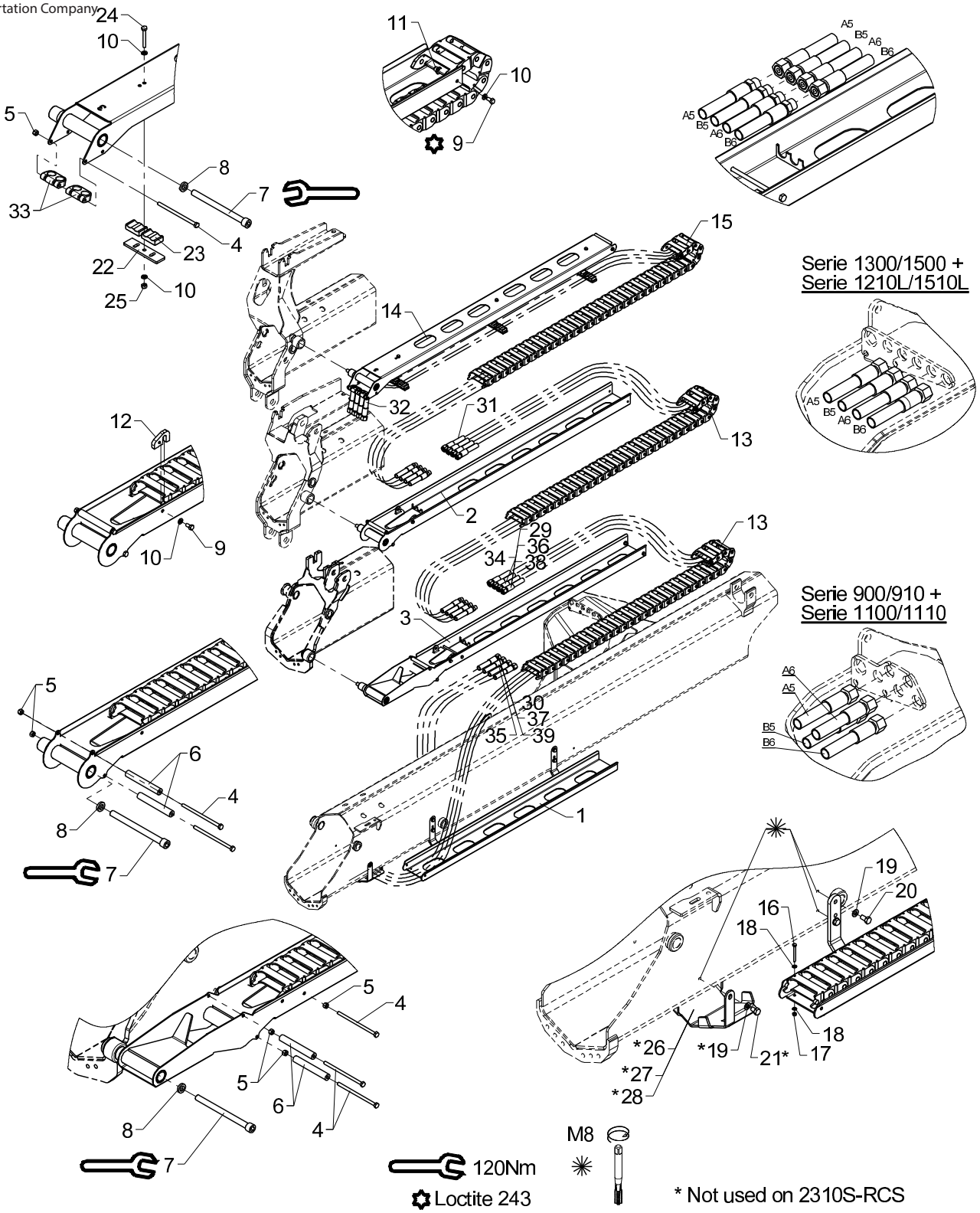

Hose guides, K3-2 EXV.

2530L

Pos	Qty.	Part no.	Description	Remarks
36	2	56986	Hose 3/8" x 3200 mm L/L	Serie 2310S-RCS
37	2	56987	Hose 3/8" x 3300 mm L/L	Serie 2310S-RCS
38	2	56993	Hose	S. 1210L/1510L
39	2	56916	Hose	S. 1210L/1510L

63 63 850
63 65 850
63 45 550
63 55 870 63 45 750
Internal ref. 63 40 750

2530L

An Oshkosh Corportation Company

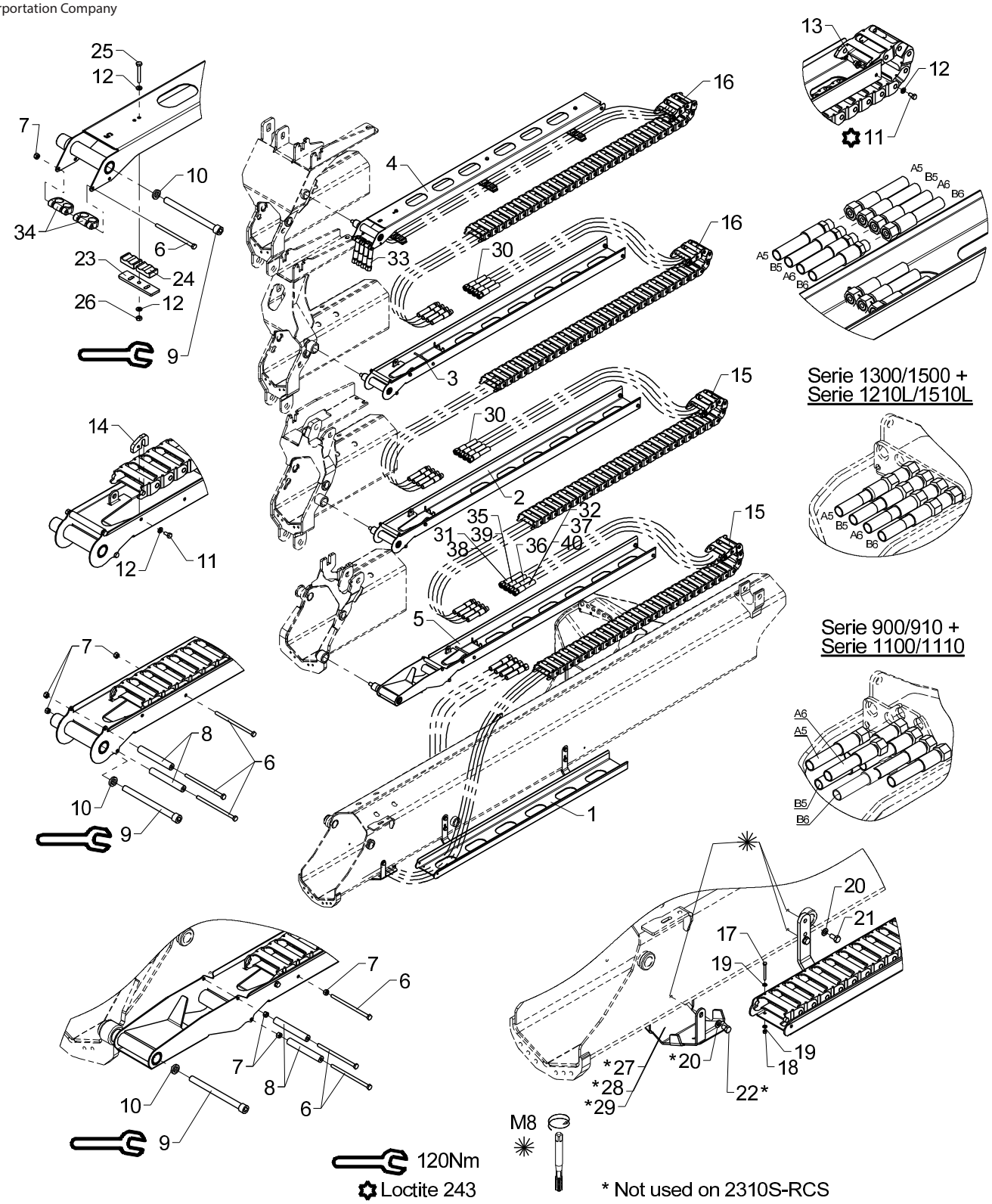

Hose guides, K4-2 EXV.

2530L

Pos	Qty.	Part no.	Description	Remarks
		6340750	Hose guides, K4-2 EXV	S. 1300/1500
		6345750	Hose guides, K4-2 EXV	S. 1800/2200
		6345550	Hose guide, K4-2 EXV.	S. 2310S-RCS
		6365850	Hose guide, K4-2 EXV.	S. 1100/1110
		6363850	Hose guide, K4-2 EXV.	S. 900/910
		6355870		S. 1210L/1510L
1	1	6340721	Guide (jib)	
2	1	6340741	Guide (Extension II)	
3	1	6340751	Guide (Extension III)	
4	1	6340758	Guide (extension K5)	
5	1	6341731	Hose guide (Extension I)	
6	9	30167	Steel bolt	M6 x 60
7	9	30884	Lock nut, stainless	M6
8	6	56513	Hose	
9	4	32488	Screw	MC12 x 150
10	4	6340717	Washer	
11	11	30111	Set screw, stainless	
12	17	32302	Face washer, stainless	6 mm
13	8	6340719	Nut	
14	3	6340718	Bracket	
15	2	28712	Nylon drag chain, 30 links	
16	2	28713	Nylon drag chain, 33 links	
17	2	30128	Set screw	M4 x 40
18	2	30857	Lock nut	M4
19	4	31188	Washer, stainless	4 mm
20	6	31147	Face washer, 8 mm	
21	4	30131	Set screw, stainless	M8 x 16
22	2	30130	Set screw, stainless	M8 x 12
23	3	6340769	Adaptor	
24	6	63561	Clamp	
25	3	30118	Steel pin, stainless	M6 x 45
26	3	30854	Nut, stainless	M6
27	1	6340299	Protective guard	S. 1300/1500/1210L/1510L
28	1	6344299	Protective guard	S. 1800/2200
29	1	6365299	Hose shield	S. 1100/1110
30	8	56564	Hose	
31	2	56563	Hose	S. 1300-2200/1100/1110
32	2	56569	Hose	S. 1300-2200/1100/1110
33	4	56565	Hose	
34	2	68028	Clamp	
35	2	56462	Hose 3/8 x 3850 mm	S. 900/910

63 63 850
63 65 850
63 45 550
63 55 870 63 45 750
Internal ref. 63 40 750

2530L

An Oshkosh Corportation Company

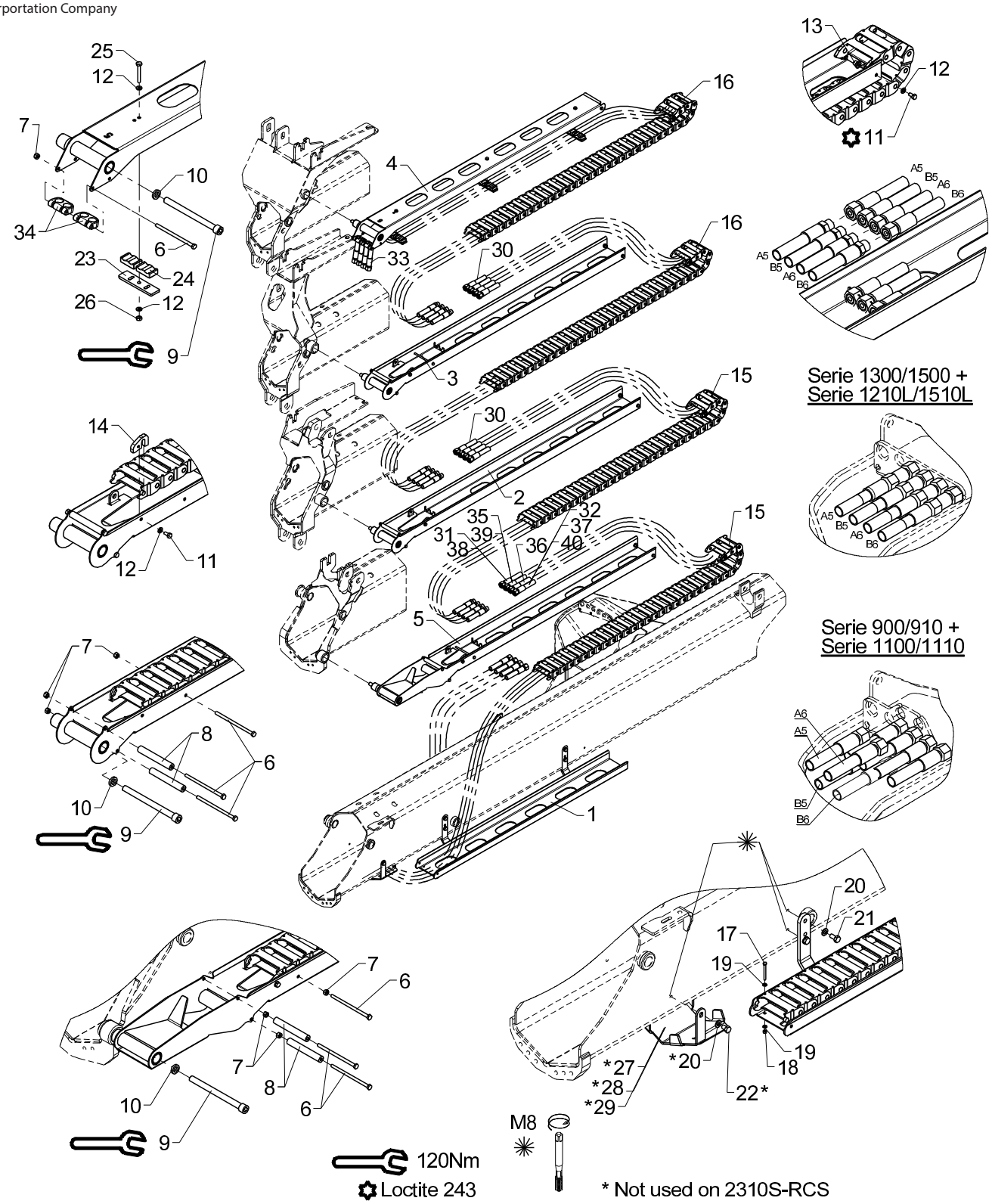

Hose guides, K4-2 EXV.

2530L

Pos	Qty.	Part no.	Description	Remarks
36	2	56458	Hose 3/8 x 3750 mm L/L	S. 900/910
37	2	56986	Hose 3/8" x 3200 mm L/L	S. 2310S-RCS
38	2	56987	Hose 3/8" x 3300 mm L/L	S. 2310S-RCS
39	2	56916	Hose	S. 1210L/1510L
40	2	56993	Hose	S. 1210L/1510L

2530L

Internal ref. 63 55 760

An Oshkosh Corportation Company

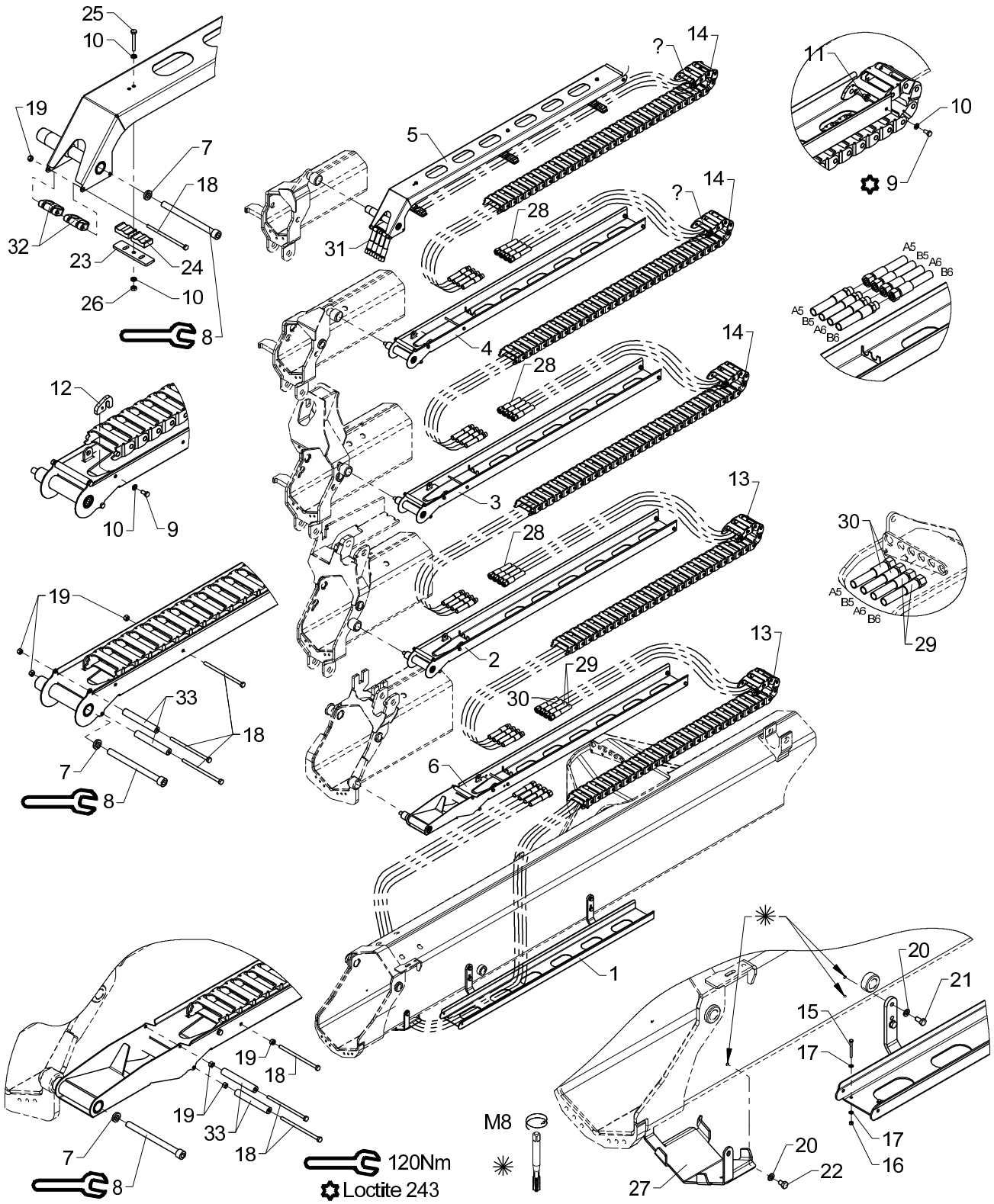

Hose guides, L5-2 EXV

2530L

Pos	Qty.	Part no.	Description	Remarks
1	1	6340721	Guide (jib)	
2	1	6340741	Guide (Extension II)	
3	1	6340751	Guide (Extension III)	
4	1	6340755	Guide (Extension IV)	
5	1	6340765	Guide (Extension VI)	
6	1	6341731	Hose guide (Extension I)	
7	5	6340717	Washer	
8	5	32488	Screw	MC12 x 150
9	14	30111	Set screw, stainless	
10	20	32302	Face washer, stainless	6 mm
11	10	6340719	Nut	
12	4	6340718	Bracket	
13	2	28712	Nylon drag chain, 30 links	
14	3	28713	Nylon drag chain, 33 links	
15	2	30128	Set screw	M4 x 40
16	2	30857	Lock nut	M4
17	4	31188	Washer, stainless	4 mm
18	12	30167	Steel bolt	M6 x 60
19	12	30884	Lock nut, stainless	M6
20	6	31147	Face washer, 8 mm	
21	4	30131	Set screw, stainless	M8 x 16
22	2	30130	Set screw, stainless	M8 x 12
23	3	6340769	Adaptor	
24	6	63561	Clamp	
25	3	30118	Steel pin, stainless	M6 x 45
26	3	30854	Nut, stainless	M6
27	1	6344299	Protective guard	Serie 1800/2200
28	12	56564	Hose	
29	2	56569	Hose	
30	2	56563	Hose	
31	4	56565	Hose	
32	2	68028	Clamp	
33	8	56513	Hose	

2530L

Internal ref. 63 40 900

Obsolete

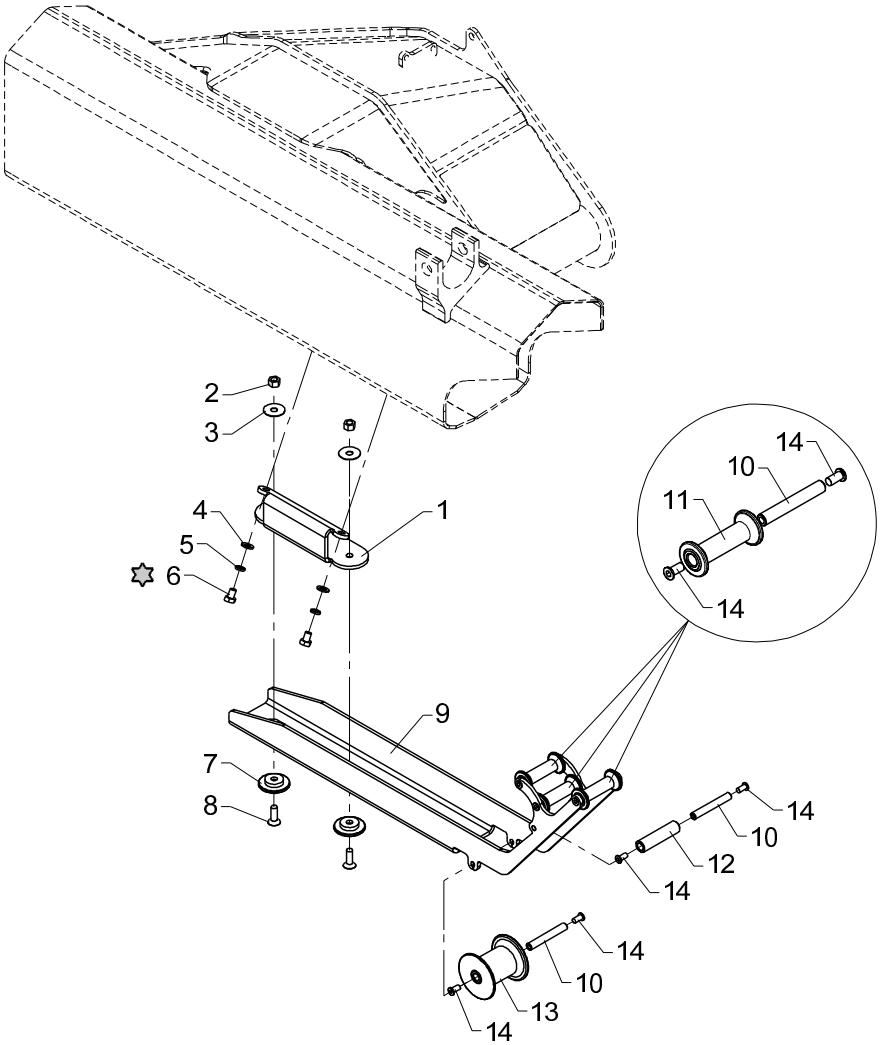

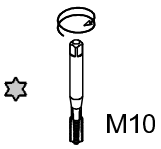

Obsolete

553 09 280

From loader 1270001
To loader 1270029

Created 24-04-2007
Modified 02-05-2014

Bracket for hose reel, cpl. (jib)

2530L

Pos	Qty.	Part no.	Description	Remarks
1	1	6340623	Bracket	
2	2	30888	Lock nut	M10
3	2	31141	Washer	10 mm
4	2	31565	Washer, stainless	10 mm
5	2	31156	Spring washer	10 mm
6	2	30152	Set screw	M10 x 14
7	2	6340624	Guide shoe	
8	2	30581	Counter-sunk screw	MK10 x 30
9	1	6340625	Bracket for guide roller	
10	5	6301042	Pin	
11	3	63579	Guide roller	
12	1	63578	Guide roller	
13	1	63547	Guide roller	
14	10	32481	Screw	MCL8 x 16

An Oshkosh Corportation Company

2530L

Internal ref. 63 40 900

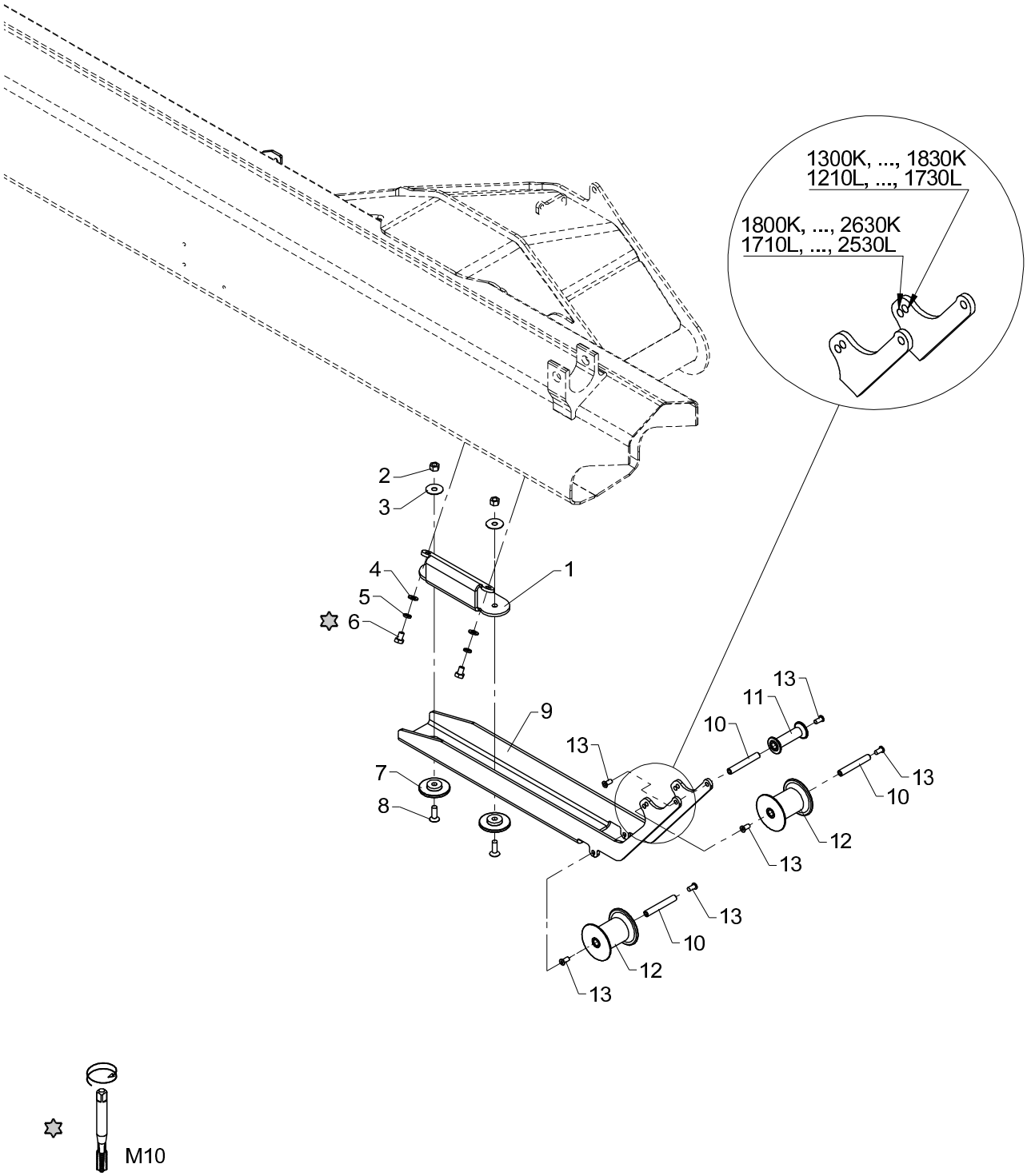

Bracket for hose reel, cpl. (jib)

2530L

Pos	Qty.	Part no.	Description	Remarks
1	1	6340623	Bracket	
2	2	30888	Lock nut	M10
3	2	31141	Washer	10 mm
4	2	31565	Washer, stainless	10 mm
5	2	31156	Spring washer	10 mm
6	2	30152	Set screw	M10 x 14
7	2	6340624	Guide shoe	
8	2	30581	Counter-sunk screw	MK10 x 30
9	1	6340847	Bracket for guide roller	
10	3	6301042	Pin	
11	1	63579	Guide roller	
12	2	63547	Guide roller	
13	6	32481	Screw	MCL8 x 16

2530L

Internal ref. 63 45 910

Obsolete

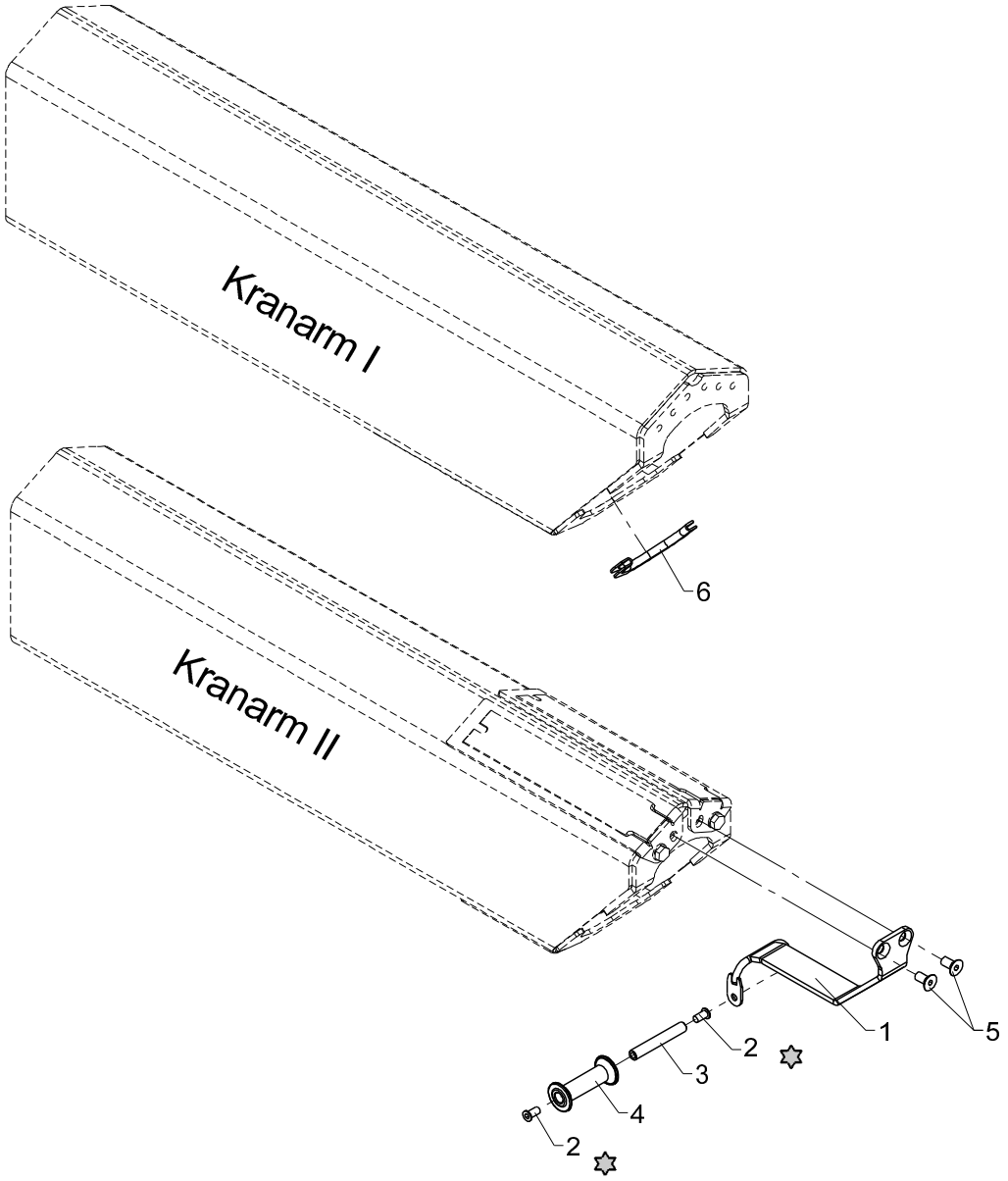

✡ Loctite 243

Obsolete

553 09 290

From loader 1270001
To loader 1270029

Created 12-01-2010
Modified 02-05-2014

Attachment for hose reel, cpl. (extension 2)
2530L

Pos	Qty.	Part no.	Description	Remarks
1	1	6344635	Roller bracket (ext. 2)	
2	2	32481	Screw	MCL8 x 16
3	1	6301042	Pin	
4	1	63579	Guide roller	
5	2	30545	Countersunk screw	MK10 x 20
6	1	46596	Rubber protection	190 mm

2530L

Internal ref. 63 45 910

An Oshkosh Corportation Company

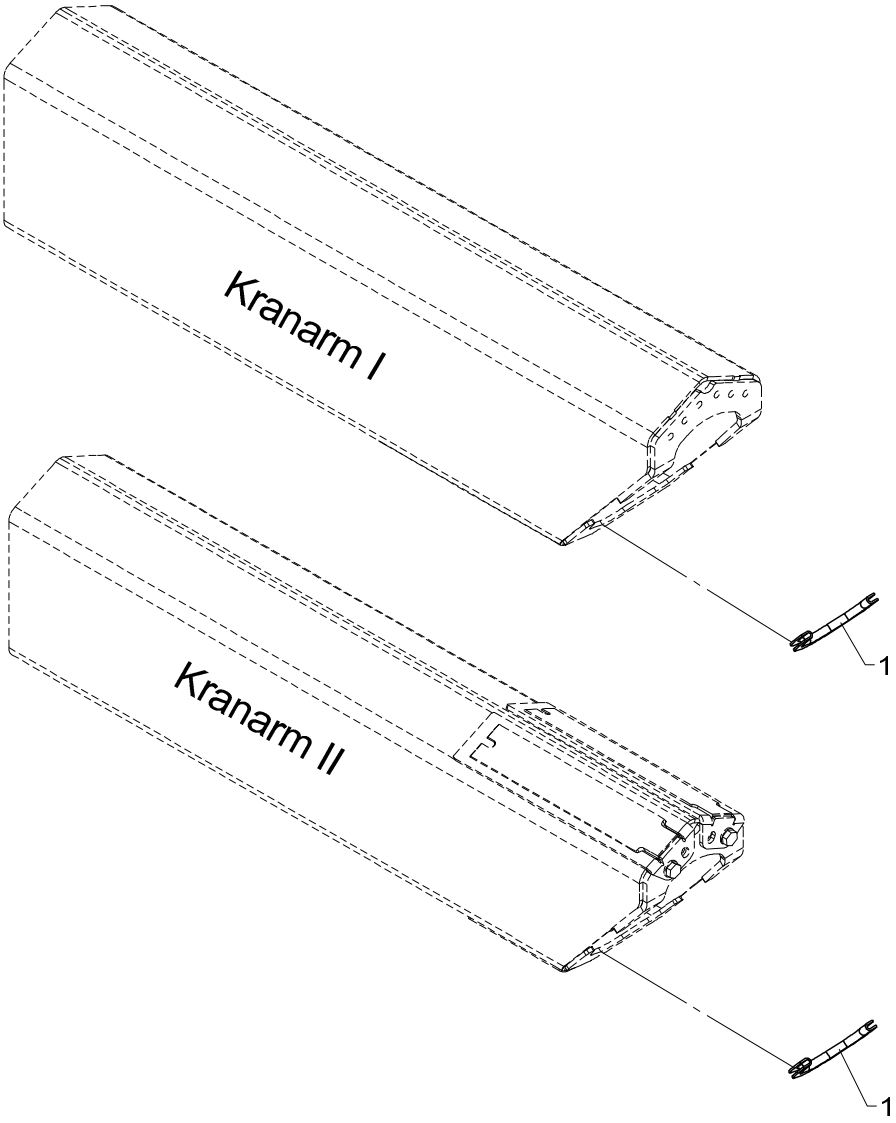

Attachment for hose reel, cpl. (extension 2)
2530L

Pos	Qty.	Part no.	Description	Remarks
1	2	46596	Rubber protection	190 mm

An Oshkosh Corportation Company

2530L

Internal ref. 63 40 910

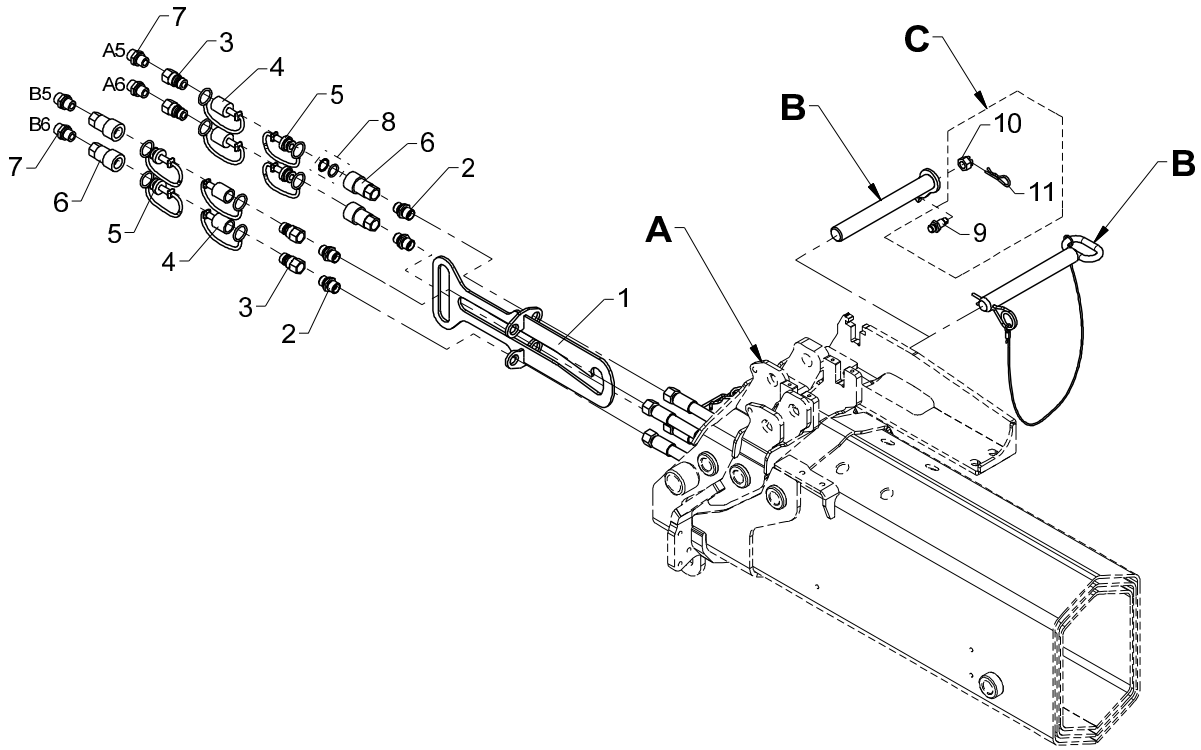

1300K/1310K/1420K/1430K/ 1500K/1510K/1720K/1730K

A	B	C
K1	63 40 657	X
K2	63 40 677	X
K3	60 92 454	
K4	63 40 397	
K5	63 40 397	
K6	63 01 166	

1800K/1810K/2020K/2030K/ 2200K/2210K/2420K/2430K

A	B	C
K2	63 40 657	X
K3	63 40 657	X
K4	60 92 454	
K5	63 40 397	
K6	63 40 397	

Kit, quick-release coupling for internal hose routing, 2 EXV.

2530L

Pos	Qty.	Part no.	Description	Remarks
		6340910	Quick-release coupl. int, 2EXV	
1	1	6340631	Bracket	
2	4	6661444	Socket	
3	4	60620	Quick-release coupling,M	3/8"
4	4	60622	Dust cap, F	3/8"
5	4	60621	Dust cap, M	3/8"
6	4	60619	Quick-release coupling,F	3/8"
7	4	25127	Connection	P-GEV 12 LR-WD
8	1	60635	Seal kit	
9	1	6340359	Lock pin	
10	1	32127	Nut	M12
11	1	33379	Spring	
12	1	6340657	Pin	
13	1	6340677	Pin	
14	1	6092454	Lock pin with chain	
15	1	6301166	Lock pin with split pin	
16	1	6340397	Lock pin with lock spring	

2530L

Internal ref. 63 42 960

An Oshkosh Corportation Company

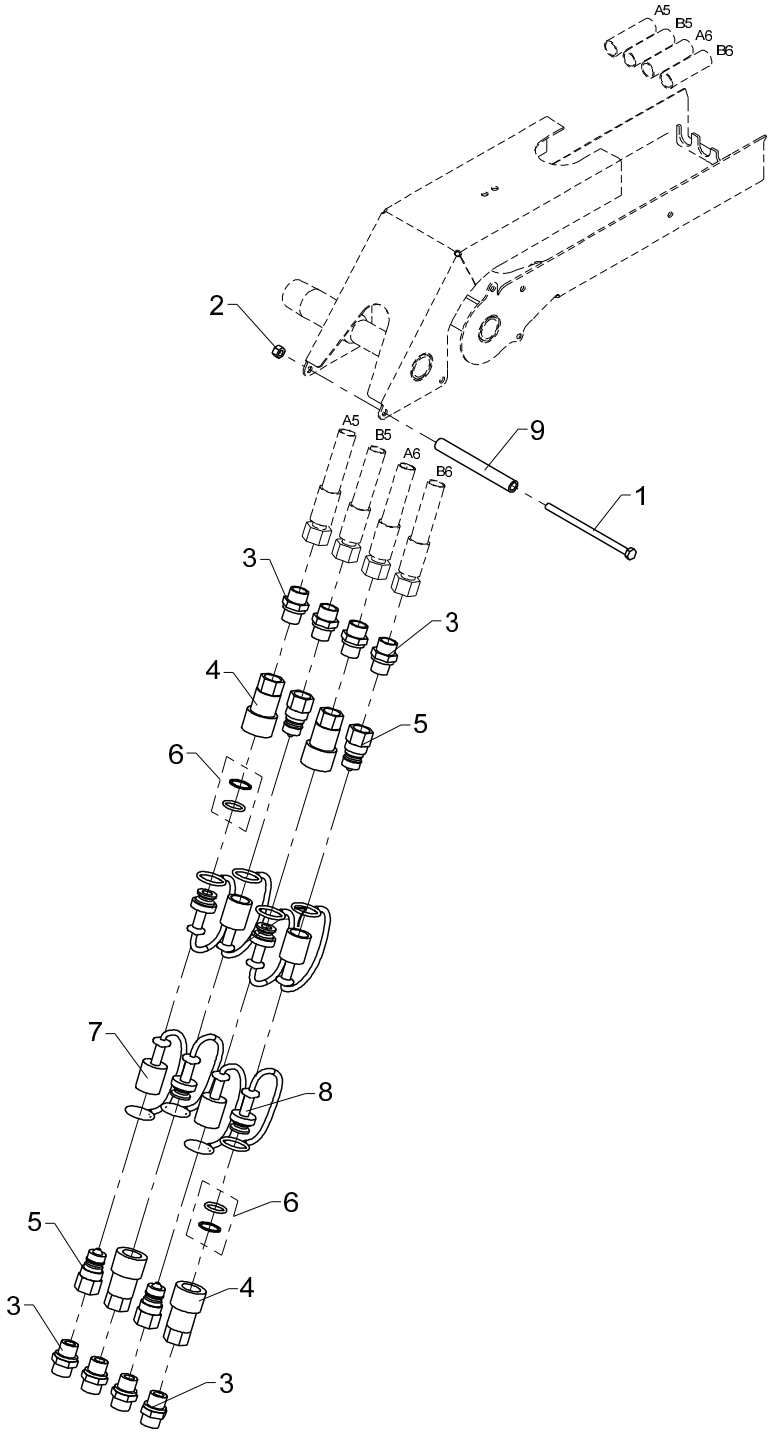

Quick-release coupling for 2 extra valves
2530L

Pos	Qty.	Part no.	Description	Remarks
1	1	30167	Steel bolt	M6 x 60
2	1	30884	Lock nut, stainless	M6
3	8	25127	Connection	P-GEV 12 LR-WD
4	4	60619	Quick-release coupling,F	3/8"
5	4	60620	Quick-release coupling,M	3/8"
6	2	60635	Seal kit	
7	4	60622	Dust cap, F	3/8"
8	4	60621	Dust cap, M	3/8"
9	1	62511	Plastic hose	100 mm

2530L

63 55 670
63 55 680
Internal ref. 63 55 650

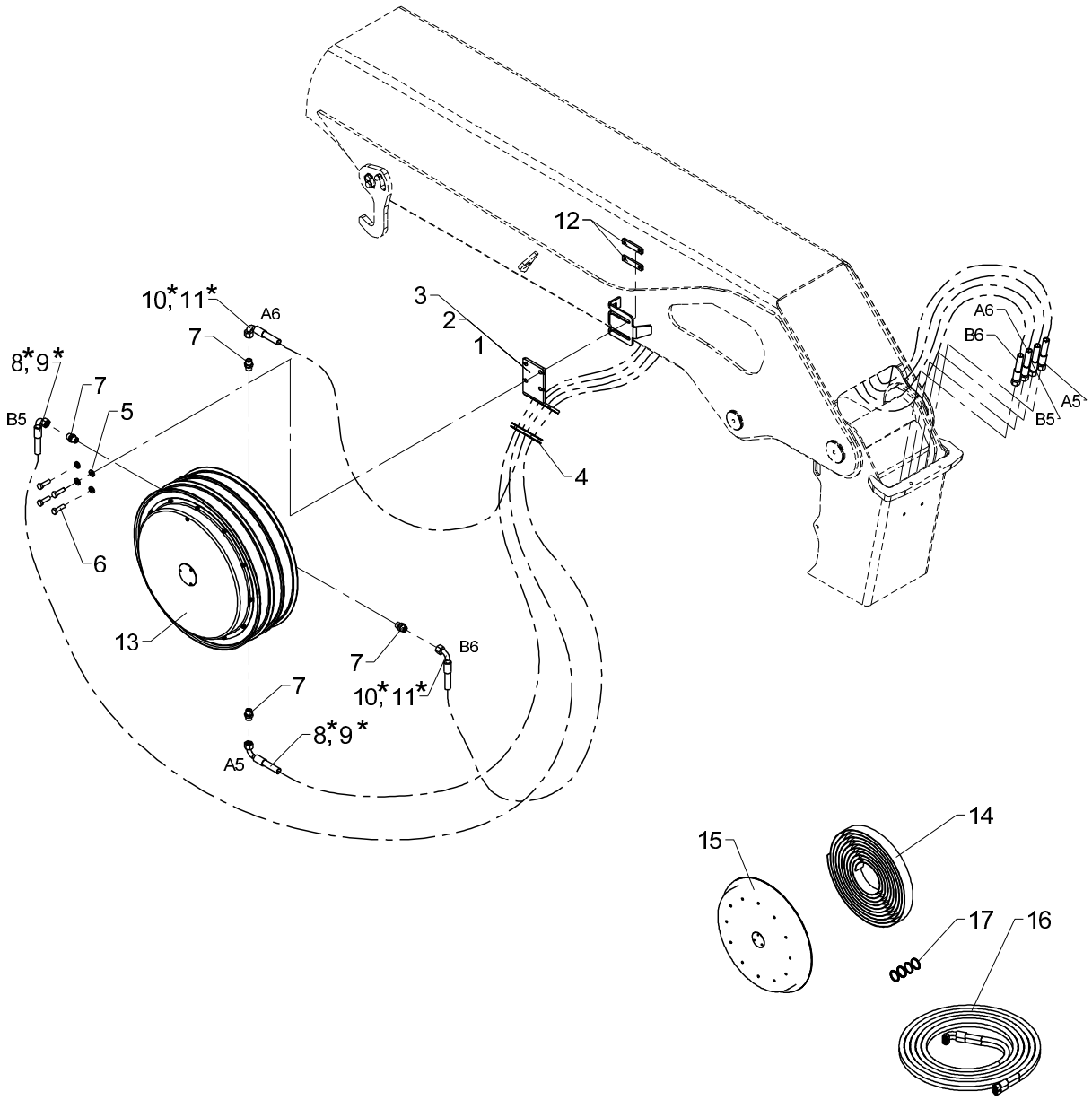

* 1710L-2530L: pos.8 + pos.10
1210L-1730L: pos.9 + pos.11

Hose reels, 2 EXV.

2530L

Pos	Qty.	Part no.	Description	Remarks
		6355650	Hose reel, 2 EXV	1710L-2530L
		6355680	Hose reel, 2 EXV	1510L-1730L
		6355670	Hose reel, 2 EXV	1210L-1430L
1	1	6355741	Hose clamp	1710L-2530L
2	1	6355742	Hose clamp	1510L-1730L
3	1	6355743	Hose clamp	1210L-1430L
4	1	64300	PVC protection	360 mm
5	4	31565	Washer, stainless	10 mm
6	4	30157	Set screw	M10 x 35
7	4	25127	Connection	P-GEV 12 LR-WD
8	2	0015020	Hose	
9	2	0015480	Hose	
10	2	0017530	Hose	
11	2	0017310	Hose	3/8" x 1400 mm L/90°
12	2	6304397	Spacer	
13	1	56294	Hose reel, double	3/8" x 12400 mm
14	1	56350	Spring	
15	1	56334	Cover	
16	1	56308	Hose	
17	1	56482	Seal kit	

2530L

63 41 640
Internal ref. 63 41 280

An Oshkosh Corportation Company

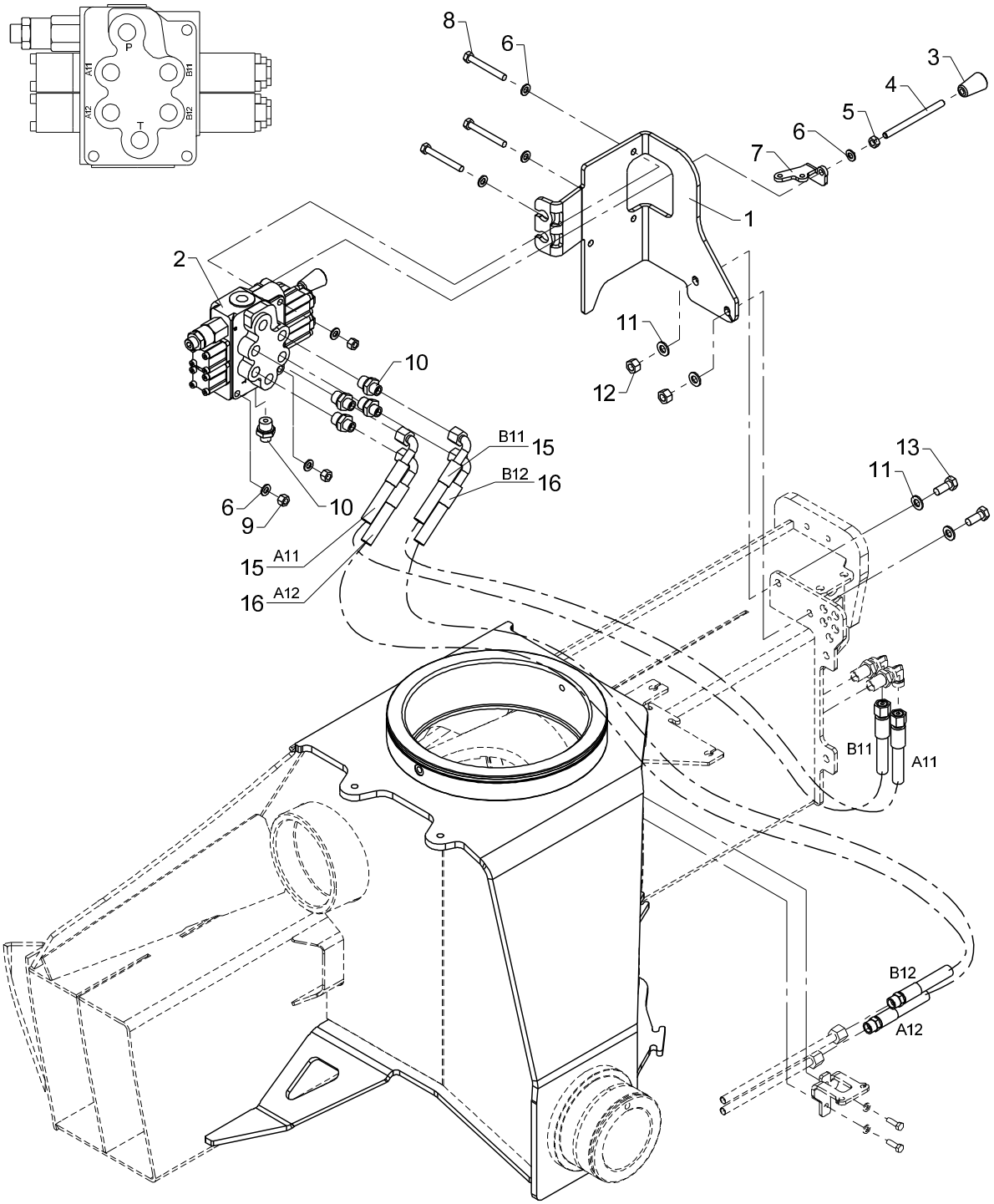

From loader 1270001
To loader

Valve bracket, cpl., direct valve control - 2 fcts.

2530L

Created 08-01-2009
Modified 05-05-2014

Pos	Qty.	Part no.	Description	Remarks
		6341280	Valve bracket, cpl. 2 fcts.HS	
		6341640	Hose kit, 2 functions, HS	
1	1	6340227	Valve bracket (TS - 2 fcts.)	
2	1	55225	Stabilizer valve	
3	2	59224	Knob for lever	
4	2	1330187	Control lever, long, straight	
5	2	30856	Nut, stainless	M8
6	8	31147	Face washer, 8 mm	8 mm
7	2	6340229	Adapter	
8	3	30259	Steel bolt, stainless	M8 x 65
9	3	30886	Lock nut, stainless	M8
10	5	25244	Connection	GES 8 LR 3/8-WD
11	4	31565	Washer, stainless	10 mm
12	2	31564	Lock nut, stainless	M10
13	2	31513	Set screw, stainless	M10 x 25
14	1	6341640	Hose kit, 2 functions, HS	
15	2	56515	Hose	5/16 X 1250 mm 90/L 10Let
16	2	56516	Hose	5/16 X 600 mm 90/S

2530L

63 41 630
Internal ref. 63 41 300

An Oshkosh Corportation Company

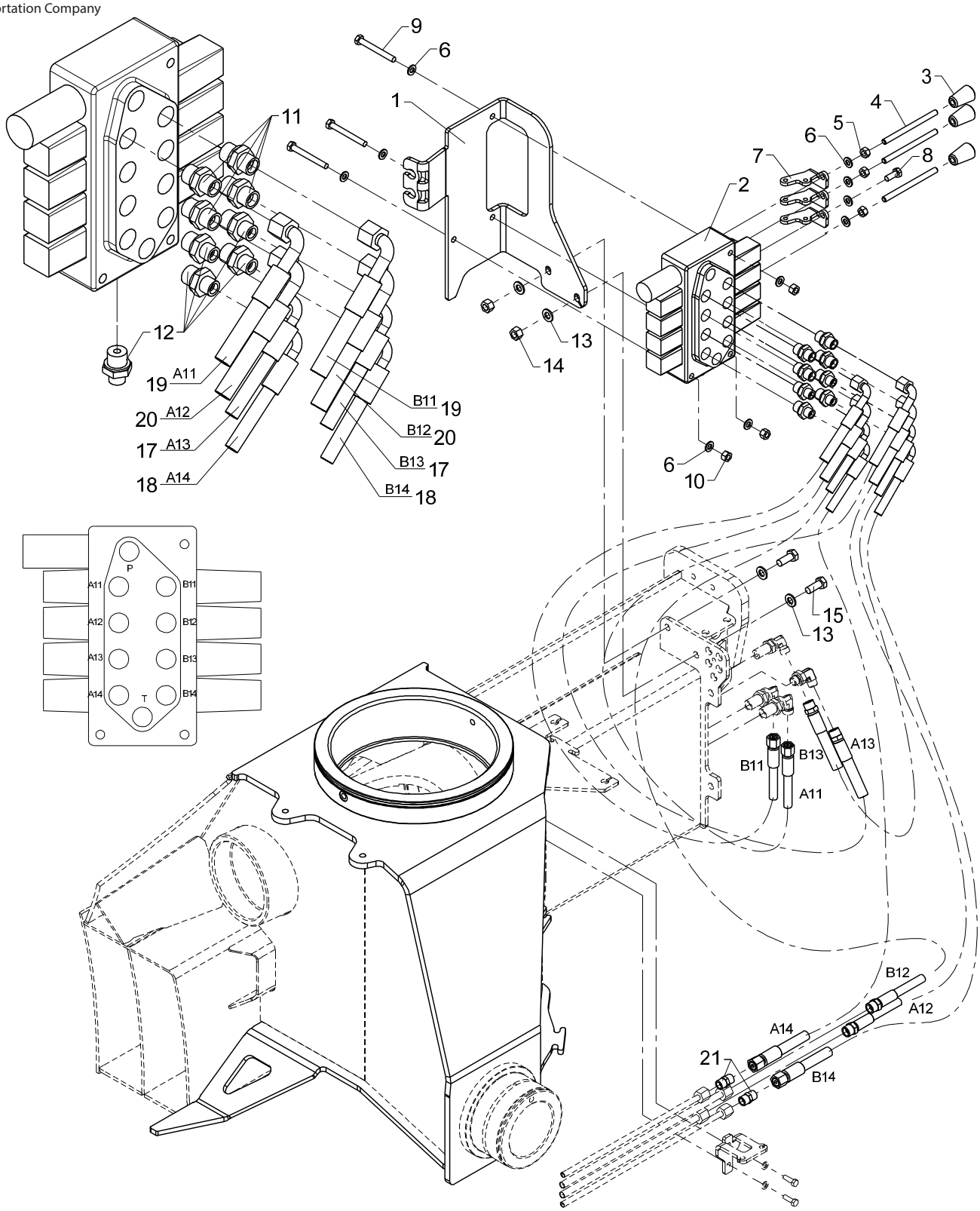

Valve bracket, cpl., direct valve control - 4 fcts.

2530L

Pos	Qty.	Part no.	Description	Remarks
		6341300	Valve bracket, cpl. 4 fcts.HS	
		6341630	Hose kit, 4 functions, HS	
1	1	6340228	Valve bracket (TS - 4 fcts.)	
2	1	55281	Stabilizer valve	
3	3	59224	Knob for lever	
4	3	1330187	Control lever, long, straight	
5	3	30856	Nut, stainless	M8
6	10	31147	Face washer, 8 mm	8 mm
7	3	6340229	Adapter	
8	1	30132	Set screw, stainless	M8 x 20
9	3	30142	Steel bolt, stainless	M8 x 70
10	3	30886	Lock nut, stainless	M8
11	4	25253	Connection	P-GEV 10 LR 3/8-WD
12	5	25244	Connection	GES 8 LR 3/8-WD
13	4	31565	Washer, stainless	10 mm
14	2	31564	Lock nut, stainless	M10
15	2	31513	Set screw, stainless	M10 x 25
16	1	6341630	Hose kit, 4 functions, HS	
17	2	62620	Hose	1/4 X 1100 M14X1.5 L/90
18	2	62525	Hose	1/4 X 400 M14 X 1.5 L/90
19	2	56515	Hose	5/16 X 1250 mm 90/L 10Let
20	2	56516	Hose	5/16 X 600 mm 90/S
21	2	25246	Double connection	P-GV 8 L

2530L

63 41 670
Internal ref. 63 41 320

An Oshkosh Corportation Company

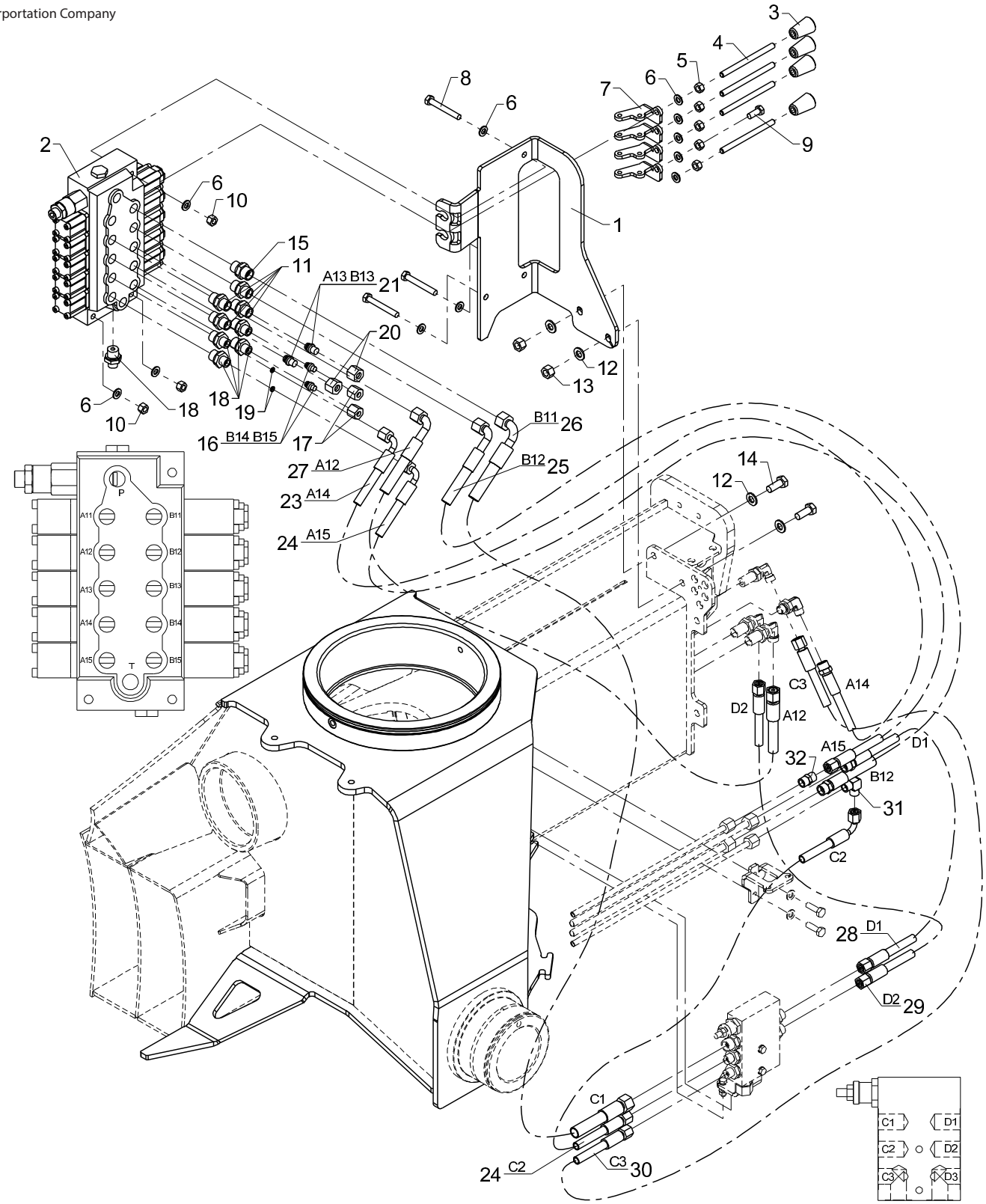

From loader 1270001
To loader
Created
Modified 05-05-2014

Valve bracket, cpl., direct valve control - 4 fcts. + 4 available fcts.

2530L

Pos	Qty.	Part no.	Description	Remarks
		6341320	Valve br., cpl.4fcts.+4 avail.	
		6341670	Hose kit, 4 fcts + 4 avail.,HS	
1	1	6340226	Valve bracket (TS - 4 fcts.)	
2	1	55277	Valve block, complete	
3	4	59224	Knob for lever	
4	4	1330187	Control lever, long, straight	
5	5	30856	Nut, stainless	M8
6	11	31147	Face washer, 8 mm	8 mm
7	4	6340229	Adapter	
8	3	30141	Set screw, stainless	M8 x 60
9	1	30132	Set screw, stainless	M8 x 20
10	3	30886	Lock nut, stainless	M8
11	4	25253	Connection	P-GEV 10 LR 3/8-WD
12	4	31565	Washer, stainless	10 mm
13	2	31564	Lock nut, stainless	M10
14	2	31513	Set screw, stainless	M10 x 25
15	1	25127	Connection	P-GEV 12 LR-WD
16	2	26166	Blanking plug	VSD 8 L
17	2	25181	Coupling nut	M 8 L
18	5	25244	Connection	GES 8 LR 3/8-WD
19	2	60963	Washer	
20	2	25182	Coupling nut	M 10 L
21	2	25202	Blanking plug	VSD 10 L
22	1	6341670	Hose kit, 4 fcts + 4 avail.,HS	
23	1	62620	Hose	1/4 X 1100 M14X1.5 L/90
24	2	62525	Hose	1/4 X 400 M14 X 1.5 L/90
25	1	56516	Hose	5/16 X 600 mm 90/S
26	1	0017300	Hose	
27	1	56515	Hose	5/16 X 1250 mm 90/L 10Let
28	1	56460	Hose	1/4" x 550mm L/S-10mm
29	1	56510	Hose	1/4 X 600 mm L/L 10Let
30	1	62569	Hose	1/4 X 800 M14 X 1.5 L/L
31	1	25247	Elbow connection	WV 8 L
32	1	25246	Double connection	P-GV 8 L

2530L

63 44 990
63 44 760
63 41 990
Internal ref. 63 41 980

An Oshkosh Corportation Company

Obsolete

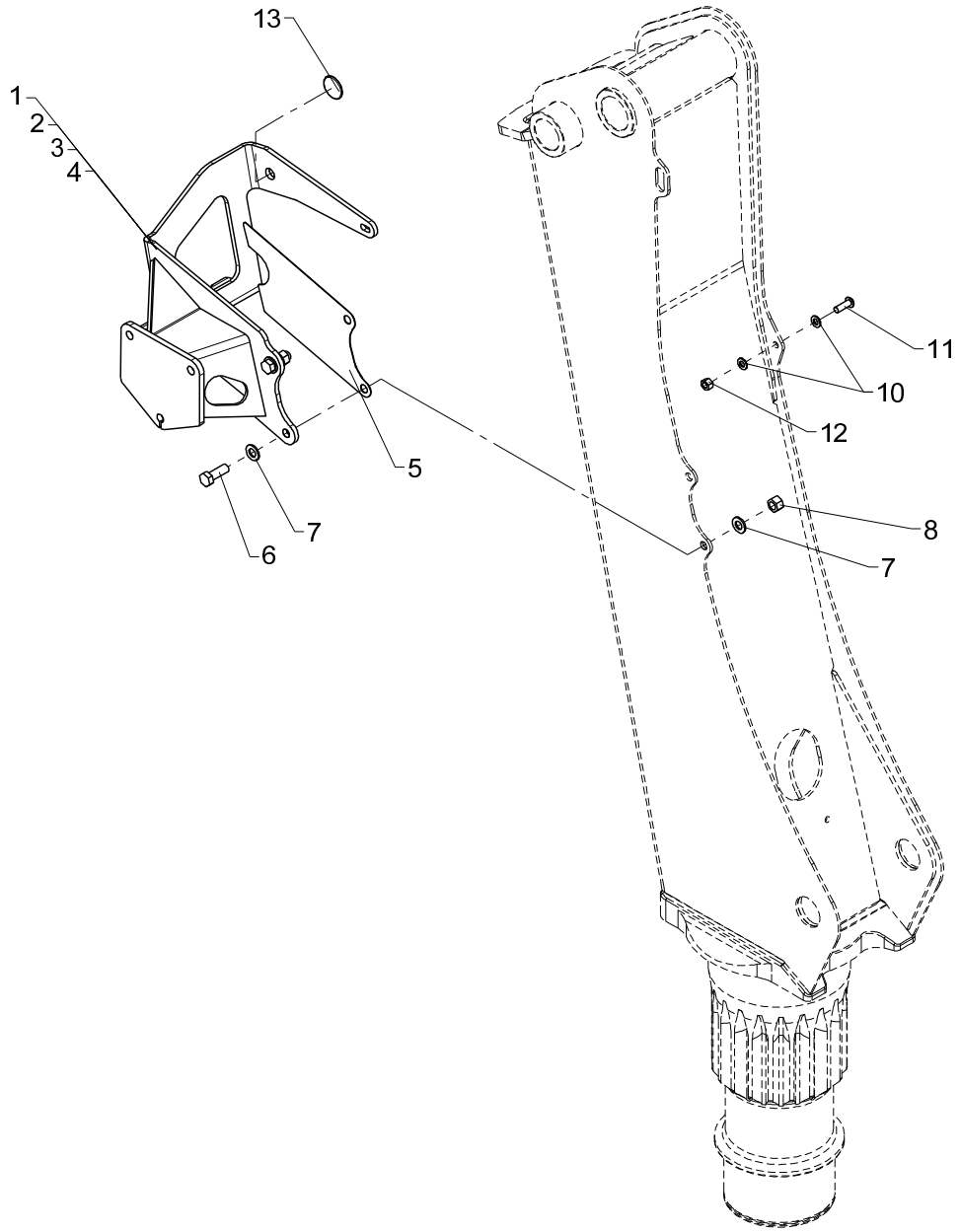

Obsolete

553 11 010

From loader 1270001
To loader

Mounting fittings, TS

2530L

Created 24-02-2009
Modified 17-06-2010

Pos	Qty.	Part no.	Description	Remarks
		6341980	Fittings, TS 1300/1500	
		6341990	Fittings, TS 1310/1510	
		6344760	Fittings, TS, 1800/2200	
		6344990	Fittings, TS, 1810/2210	
1	1	6340081	Bracket	1300/1500
2	1	6340085	Bracket	1310/1510
3	1	6344081	Bracket	1800/2200
4	1	6344085	Bracket	1810/2210/1710L/2030L/2110L/253
5	1	6340087	Division plate	
6	2	30207	Set screw	M14 x 40
7	4	31178	Washer	14 mm
8	2	30891	Lock nut	M14
10	2	31177	Washer	10 mm
11	1	30649	Screw	M10 x 30
12	1	30888	Lock nut	M10
13	1	6381484	Guide	

2530L

63 44 990
63 44 760
63 41 990
Internal ref. 63 41 980

An Oshkosh Corportation Company

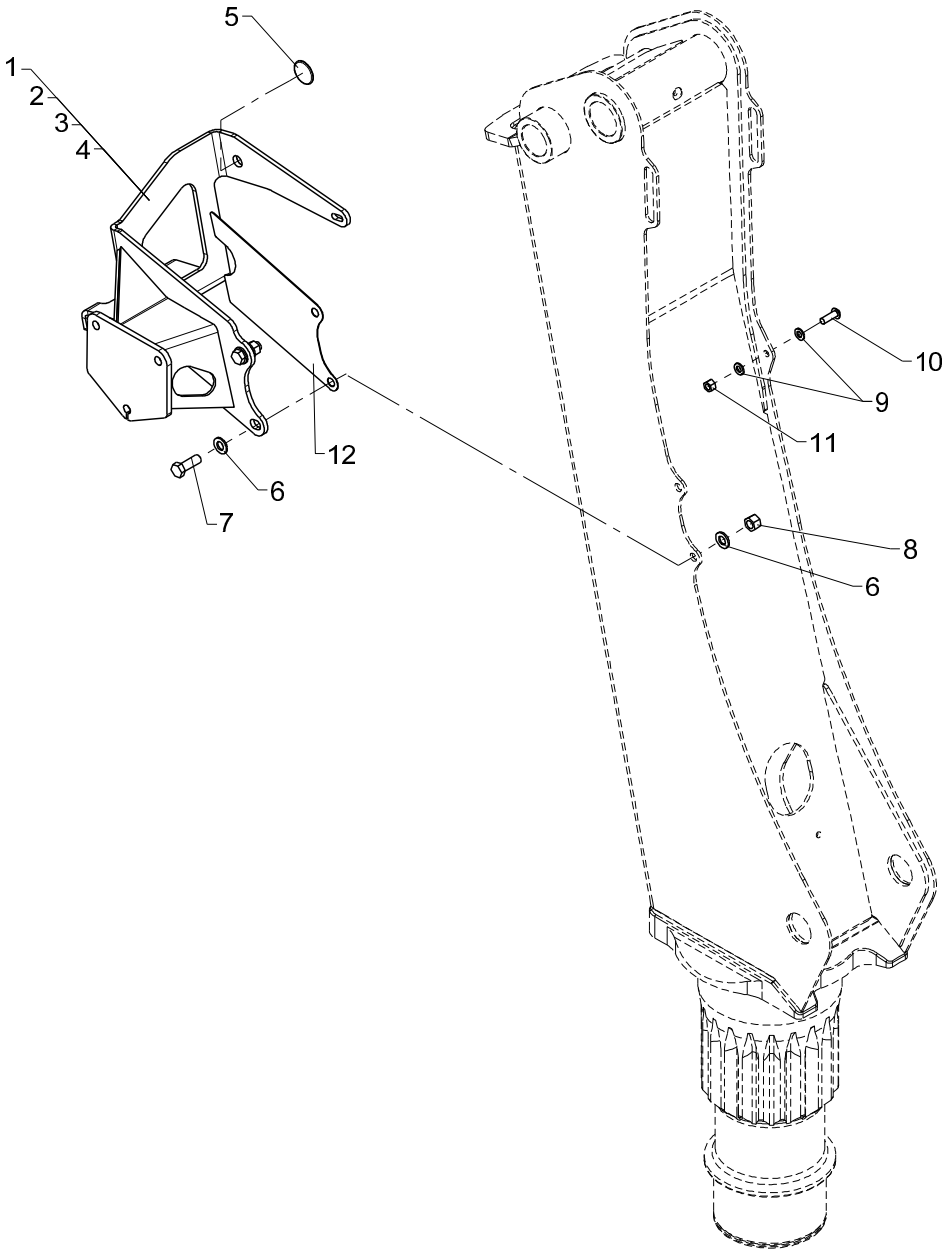

Mounting fittings, TS

2530L

Pos	Qty.	Part no.	Description	Remarks
		6341980	Fittings, TS 1300/1500	
		6341990	Fittings, TS 1310/1510	
		6344760	Fittings, TS, 1800/2200	
		6344990	Fittings, TS, 1810/2210	
1	1	6340685	Top seat bracket (TS)	1300/1500
2	1	6340687	TS bracket	1310/1510
3	1	6344685	TS bracket	1800/2200
4	1	6344687	TS bracket	1810/2210/1710L/2030L/2110L/253
5	1	6381484	Guide	
6	4	31178	Washer	14 mm
7	2	30207	Set screw	M14 x 40
8	2	30891	Lock nut	M14
9	2	31177	Washer	10 mm
10	1	30649	Screw	M10 x 30
11	1	30888	Lock nut	M10
12	1	6340087	Division plate	

2530L

Internal ref. 63 41 950

An Oshkosh Corportation Company

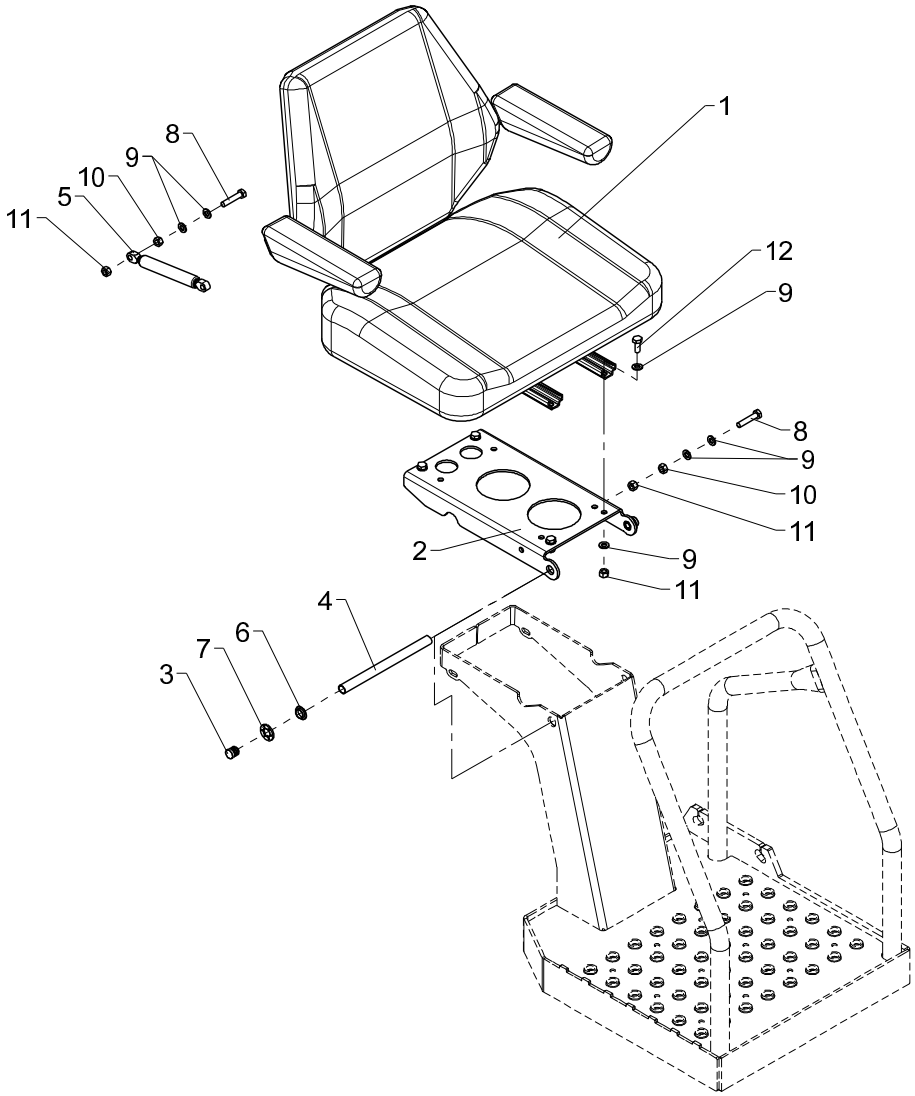

Seat, cpl.

2530L

Pos	Qty.	Part no.	Description	Remarks
1	1	24134	Seat	
2	1	6306638	Plate, seat	
3	2	64520	Stopper	
4	1	6306649	Pin	
5	1	48460	Gas spring	
6	2	23416	Composite bearing	BB 1504,5
7	2	32279	Clamping ring sleeve	15 mm
8	2	30137	Set screw, stainless	M8 x 40
9	12	31147	Face washer, 8 mm	8 mm
10	2	30856	Nut, stainless	M8
11	6	30886	Lock nut, stainless	M8
12	4	30132	Set screw, stainless	M8 x 20

2530L

Internal ref. 63 55 880

An Oshkosh Corportation Company

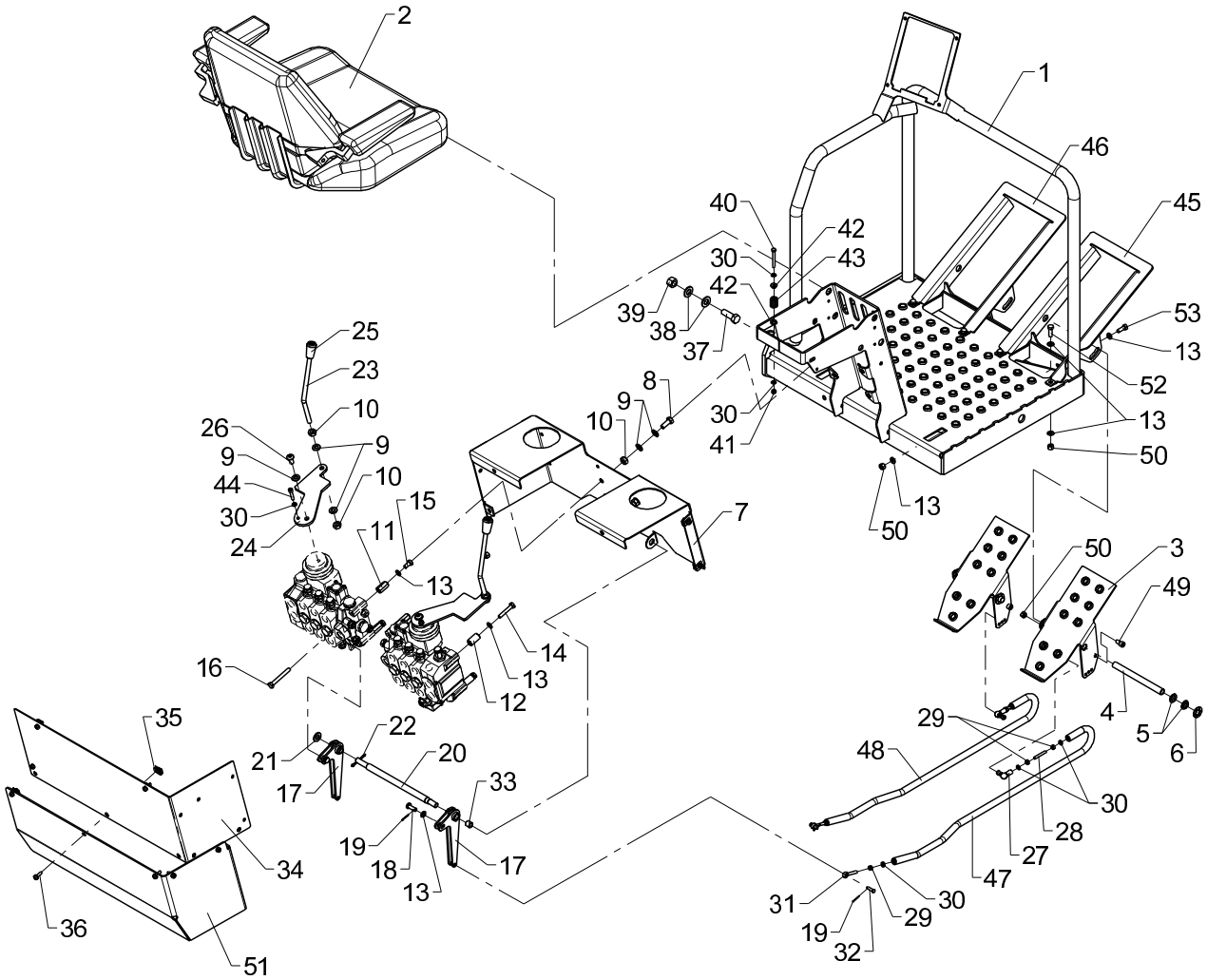

Top seat (HC X), cpl.

2530L

Pos	Qty.	Part no.	Description	Remarks
1	1	6306921	Platform TS	
2	1	6341950	Seat, complete	
3	2	6306898	Footplate	
4	2	6306633	Pin	
5	8	23416	Composite bearing	BB 1504,5
6	4	32279	Clamping ring sleeve	15 mm
7	1	6341031	Valve bracket	
8	4	31513	Set screw, stainless	M10 x 25
9	14	31565	Washer, stainless	10 mm
10	8	31551	Nut, stainless	M10
11	4	6341034	Spacer	
12	4	6341035	Spacer	
13	24	31147	Face washer, 8 mm	
14	4	31511	Set screw, stainless	M8 x 45
15	2	30131	Set screw, stainless	M8 x 16
16	2	32250	Set screw	M8 x 65
17	2	6341036	Bracket	
18	2	31276	Cotter bolt	ø8 x 23
19	4	31601	Split pin, stainless	
20	1	6341033	Pin	
21	1	32338	Washer	12 mm
22	1	31638	Split pin	ø4 x 40
23	2	6341039	Control lever	
24	2	6341041	Guide plate	
25	2	64411	Knob for lever	
26	2	30926	Steel bolt	M10 x 20
27	2	24105	Toggle joint	
28	2	31007	Pointed screw	MSP6 x 40
29	6	30854	Nut, stainless	M6
30	10	32302	Face washer, stainless	6 mm
31	2	32114	Pin	M6 x 40
32	2	31271	Cotter bolt	
33	4	23456	Composite bearing	ø12/14 x 12
34	1	6341032	Protection	
35	10	31068	Clip	M6 0,5 - 4,0 mm.
36	10	32480	Screw	M6 x 18
37	3	32248	Set screw	M14 x 40
38	6	31178	Washer	14 mm
39	3	32317	Lock nut	M14
40	1	30119	Steel pin, stainless	M6 x 50
41	1	30884	Lock nut, stainless	M6

2530L

Internal ref. 63 55 880

An Oshkosh Corportation Company

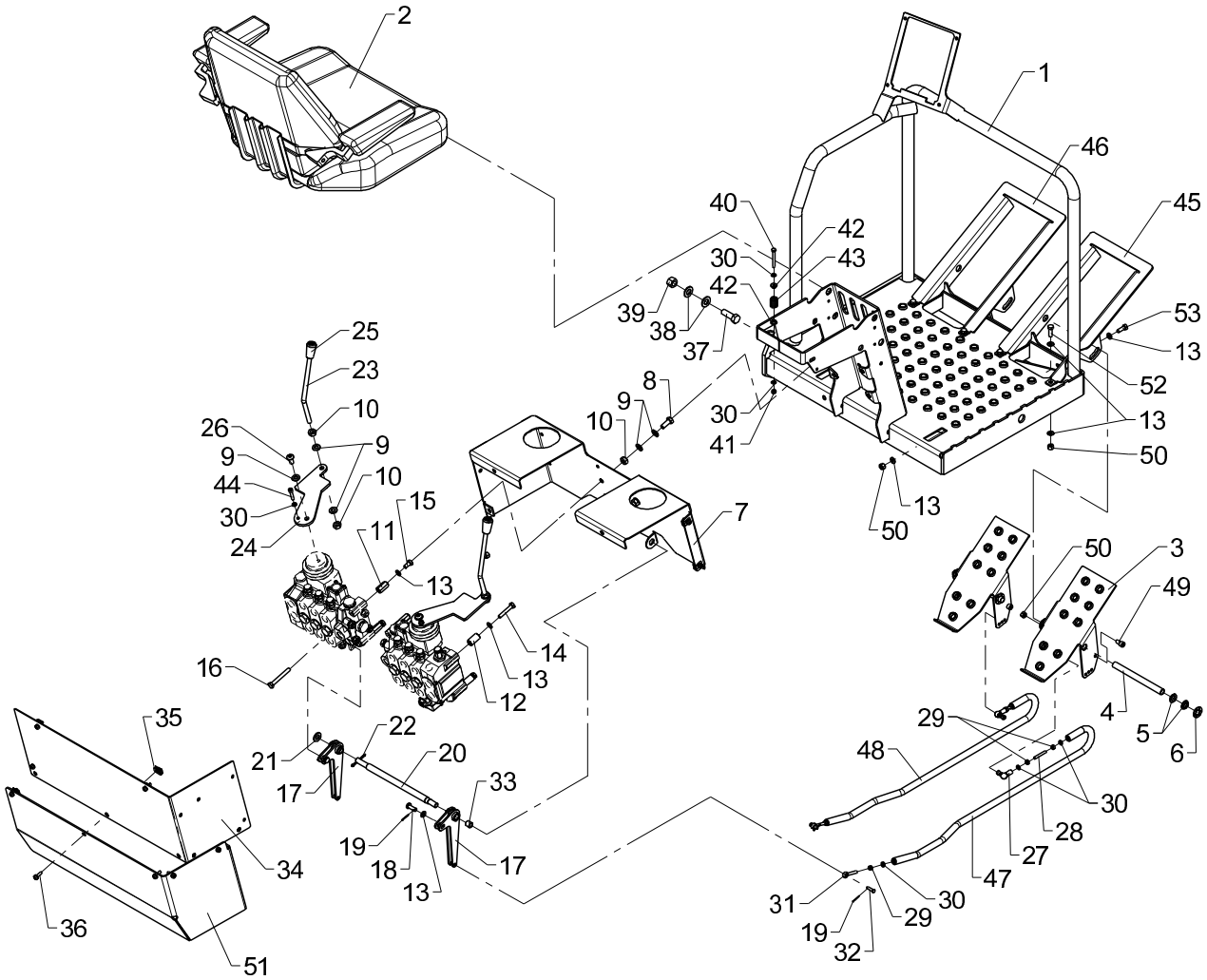

Top seat (HC X), cpl.

2530L

Pos	Qty.	Part no.	Description	Remarks
42	2	64382	Nylon bushing	
43	1	33367	Spring	6884924
44	2	30961	Screw	MC6 x 30
45	1	6306893	Welded bracket, right	
46	1	6306894	Welded bracket, left	
47	1	6341046	Connecting rod, right	
48	1	6341047	Connecting rod, left	
49	2	32415	Sockethead screw	MC8 x 14
50	10	30886	Lock nut, stainless	M8
51	1	6341049	Shielding. HC joysticks	
52	4	30134	Set screw, stainless	M8 x 25
53	4	30133	Set screw, stainless	

2530L

Internal ref. 63 41 890

Obsolete

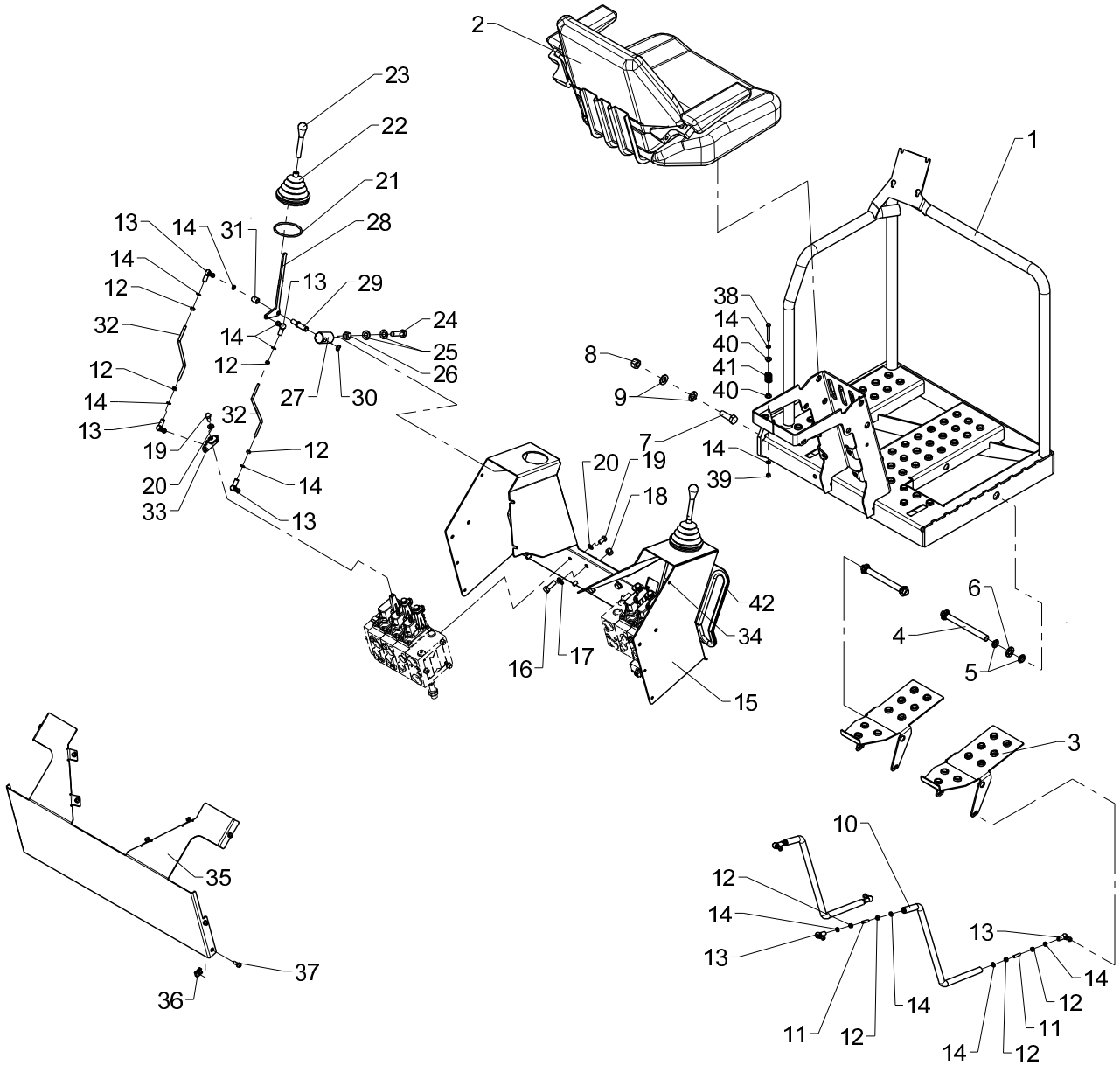

Obsolete

553 11 070

From loader 1270001
To loader
Created 12-01-2010
Modified

Top seat (Danfoss X), cpl.

2530L

Pos	Qty.	Part no.	Description	Remarks
1	1	6306621	Platform (TS)	
2	1	6341950	Seat, complete	
3	2	6306632	Foot lever	
4	2	6306633	Pin	
5	8	23416	Composite bearing	BB 1504,5
6	4	32279	Clamping ring sleeve	15 mm
7	3	32248	Set screw	M14 x 40
8	3	32317	Lock nut	M14
9	6	31178	Washer	14 mm
10	2	6306645	Connecting rod	
11	4	30560	Pointed screw	MSP6 x 25
12	16	30854	Nut, stainless	M6
13	12	24105	Toggle joint	
14	23	32302	Face washer, stainless	6 mm
15	1	6341051	Valve bracket	
16	4	30156	Set screw, stainless	M10 x 30
17	8	31565	Washer, stainless	10 mm
18	4	31564	Lock nut, stainless	M10
19	14	30131	Set screw, stainless	M8 x 16
20	14	31147	Face washer, 8 mm	8 mm
21	2	20268	O-ring	OR 70 x 4
22	2	64390	Bellows	
23	2	48406	Knob	
24	2	31533	Set screw, stainless	M12 x 40
25	4	32338	Washer	12 mm
26	2	30890	Lock nut	M12
27	2	64064	Universal joint	
28	2	6306648	Control lever	
29	2	6306647	Pin	
30	2	33102	Circlip	12U
31	2	6302048	Spacer	
32	2	6306652	Threaded pin	
33	6	6306646	Adapter, Danfoss	
34	2	6306653	Threaded pin	
35	1	6341054	Protection	
36	10	31068	Clip	M6 0,5 - 4,0 mm.
37	10	32480	Screw	M6 x 18
38	1	30119	Steel pin, stainless	M6 x 50
39	1	30884	Lock nut, stainless	M6
40	2	64382	Nylon bushing	
41	1	33367	Spring	6884924

2530L

Internal ref. 63 41 890

Obsolete

An Oshkosh Corportation Company

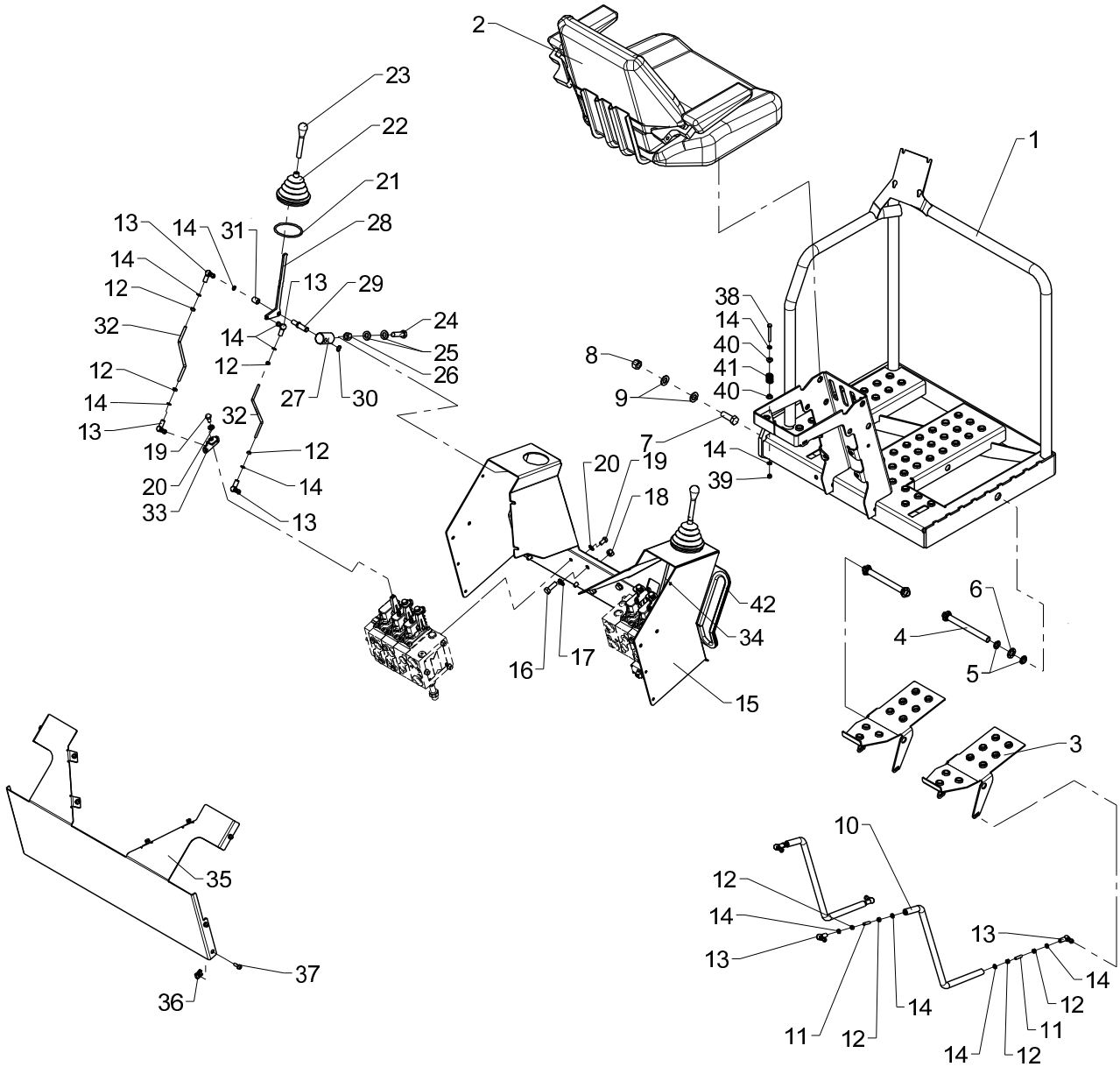

Obsolete

553 11 070

From loader 1270001
To loader
Created 12-01-2010
Modified

Top seat (Danfoss X), cpl.

2530L

Pos	Qty.	Part no.	Description	Remarks
42	2	46596	Rubber protection	L = 510

2530L

Internal ref. 63 55 890

An Oshkosh Corportation Company

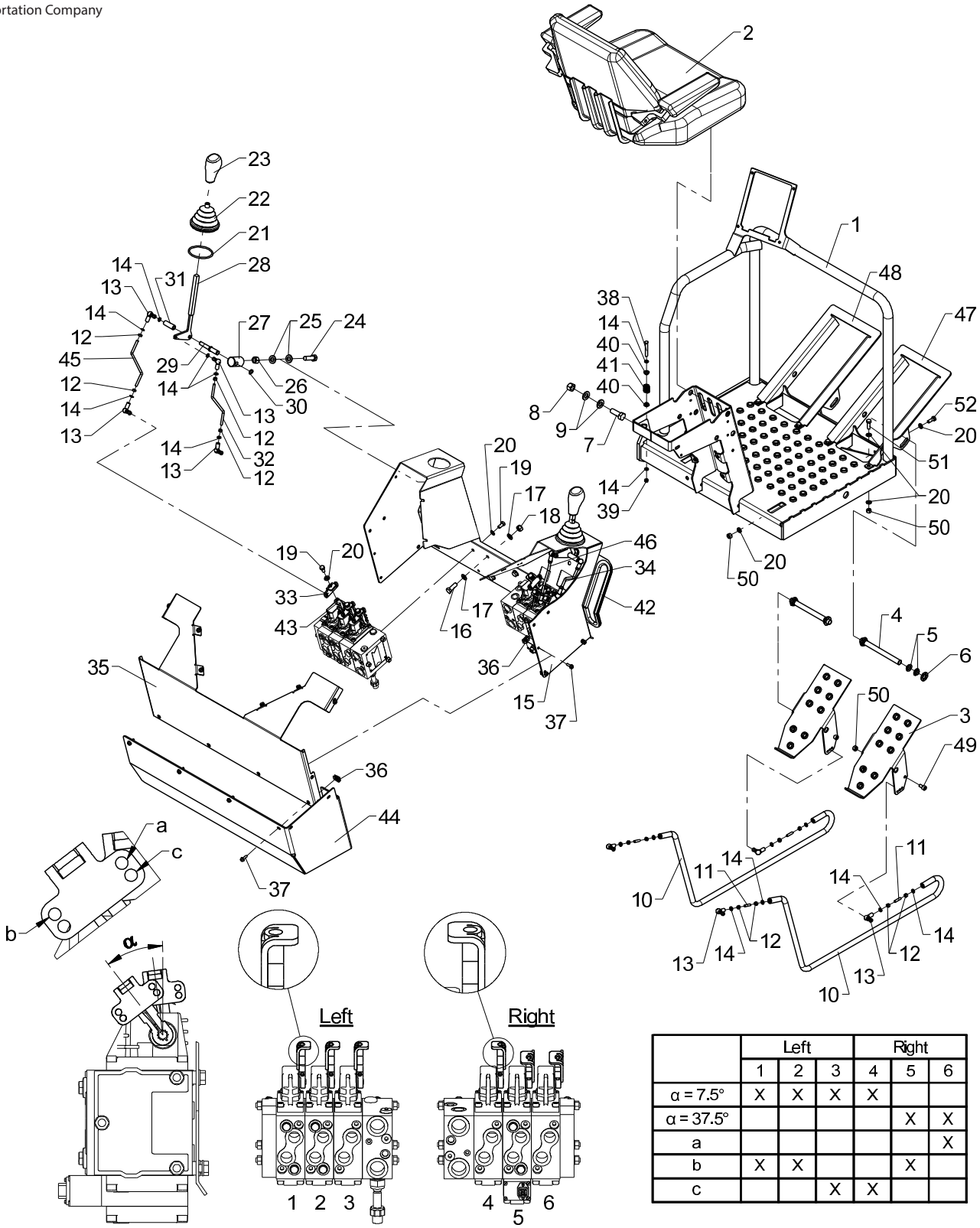

	Left			Right		
	1	2	3	4	5	6
α = 7.5°	X	X	X	X		
α = 37.5°					X	X
a						X
b	X	X			X	
c			X	X		

Top seat (Danfoss X), cpl.

2530L

Pos	Qty.	Part no.	Description	Remarks
1	1	6306921	Platform TS	
2	1	6341950	Seat, complete	
3	2	6306898	Footplate	
4	2	6306633	Pin	
5	8	23416	Composite bearing	BB 1504,5
6	4	32279	Clamping ring sleeve	15 mm
7	3	32248	Set screw	M14 x 40
8	3	32317	Lock nut	M14
9	6	31178	Washer	14 mm
10	2	6306899	Pipe for foot levers	
11	4	30560	Pointed screw	MSP6 x 25
12	16	30854	Nut, stainless	M6
13	12	24105	Toggle joint	
14	22	32302	Face washer, stainless	6 mm
15	1	6341051	Valve bracket	
16	4	30156	Set screw, stainless	M10 x 30
17	8	31565	Washer, stainless	10 mm
18	4	31564	Lock nut, stainless	M10
19	14	30131	Set screw, stainless	M8 x 16
20	30	31147	Face washer, 8 mm	
21	2	20268	O-ring	OR 70 x 4
22	2	64390	Bellows	
23	2	50236	Lever	
24	2	31533	Set screw, stainless	M12 x 40
25	4	32338	Washer	12 mm
26	2	30890	Lock nut	M12
27	2	64064	Universal joint	
28	2	6306849	Welded lever for joystick	
29	2	6306845	Pin	
30	2	33102	Circlip	12U
31	2	6306846	Distance pipe	
32	1	6306861	Threaded pin	
33	6	6306646	Adapter, Danfoss	
34	1	6306843	Threaded pin	
35	1	6341054	Protection	
36	15	31068	Clip	M6 0,5 - 4,0 mm.
37	15	32480	Screw	M6 x 18
38	1	30119	Steel pin, stainless	M6 x 50
39	1	30884	Lock nut, stainless	M6
40	2	64382	Nylon bushing	
41	1	33367	Spring	6884924

2530L

Internal ref. 63 55 890

An Oshkosh Corportation Company

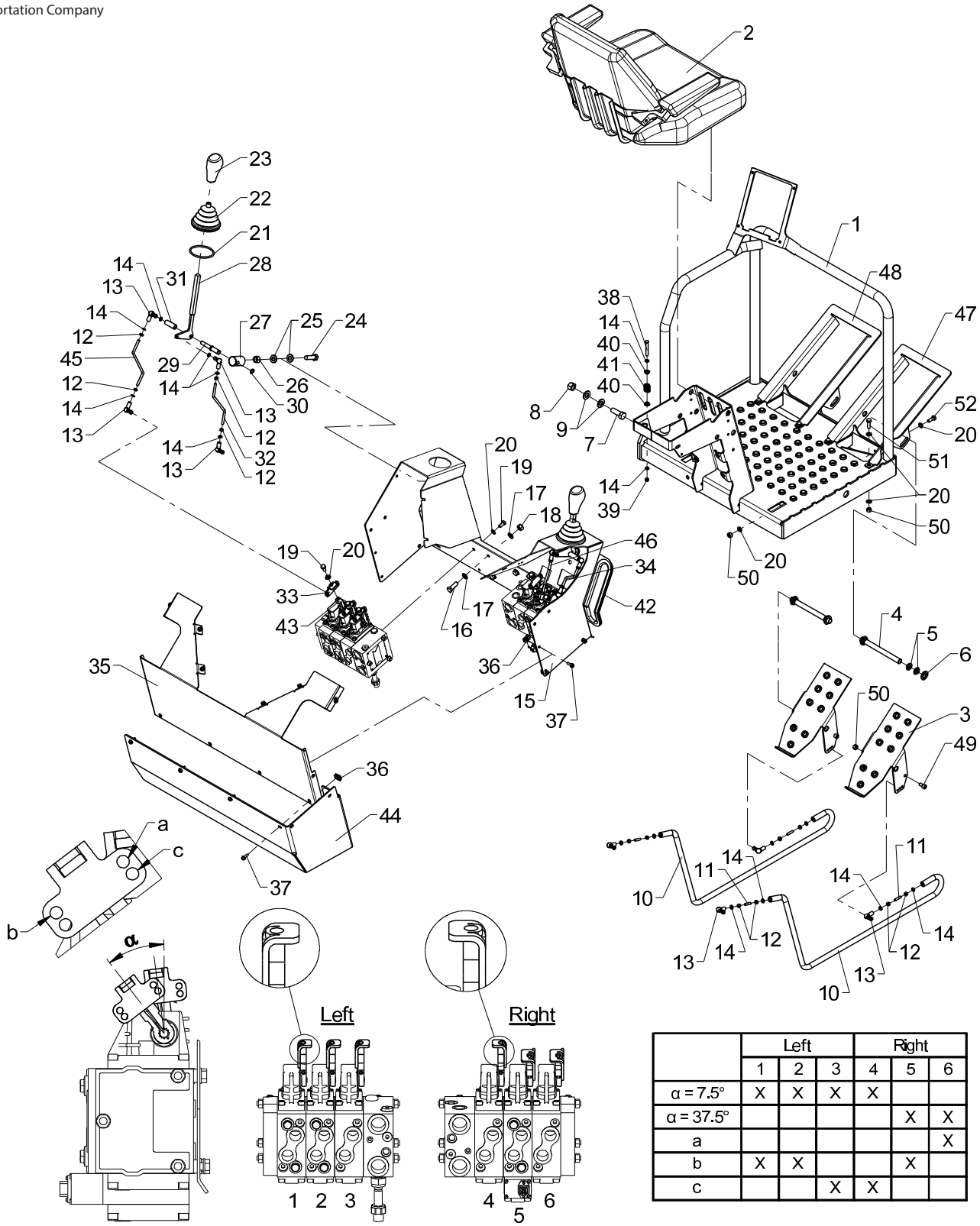

	Left			Right		
	1	2	3	4	5	6
α = 7.5°	X	X	X	X		
α = 37.5°					X	X
a						X
b	X	X			X	
c			X	X		

Top seat (Danfoss X), cpl.

2530L

Pos	Qty.	Part no.	Description	Remarks
42	2	46596	Rubber protection	L = 510
43	6	6344475	Foot for lever	
44	1	6341044	Shielding	
45	1	6306844	Threaded pin	
46	1	6306841	Threaded pin	
47	1	6306893	Welded bracket, right	
48	1	6306894	Welded bracket, left	
49	2	32415	Sockethead screw	MC8 x 14
50	10	30886	Lock nut, stainless	M8
51	4	30134	Set screw, stainless	M8 x 25
52	4	30133	Set screw, stainless	

2530L

Internal ref. 63 41 890

An Oshkosh Corportation Company

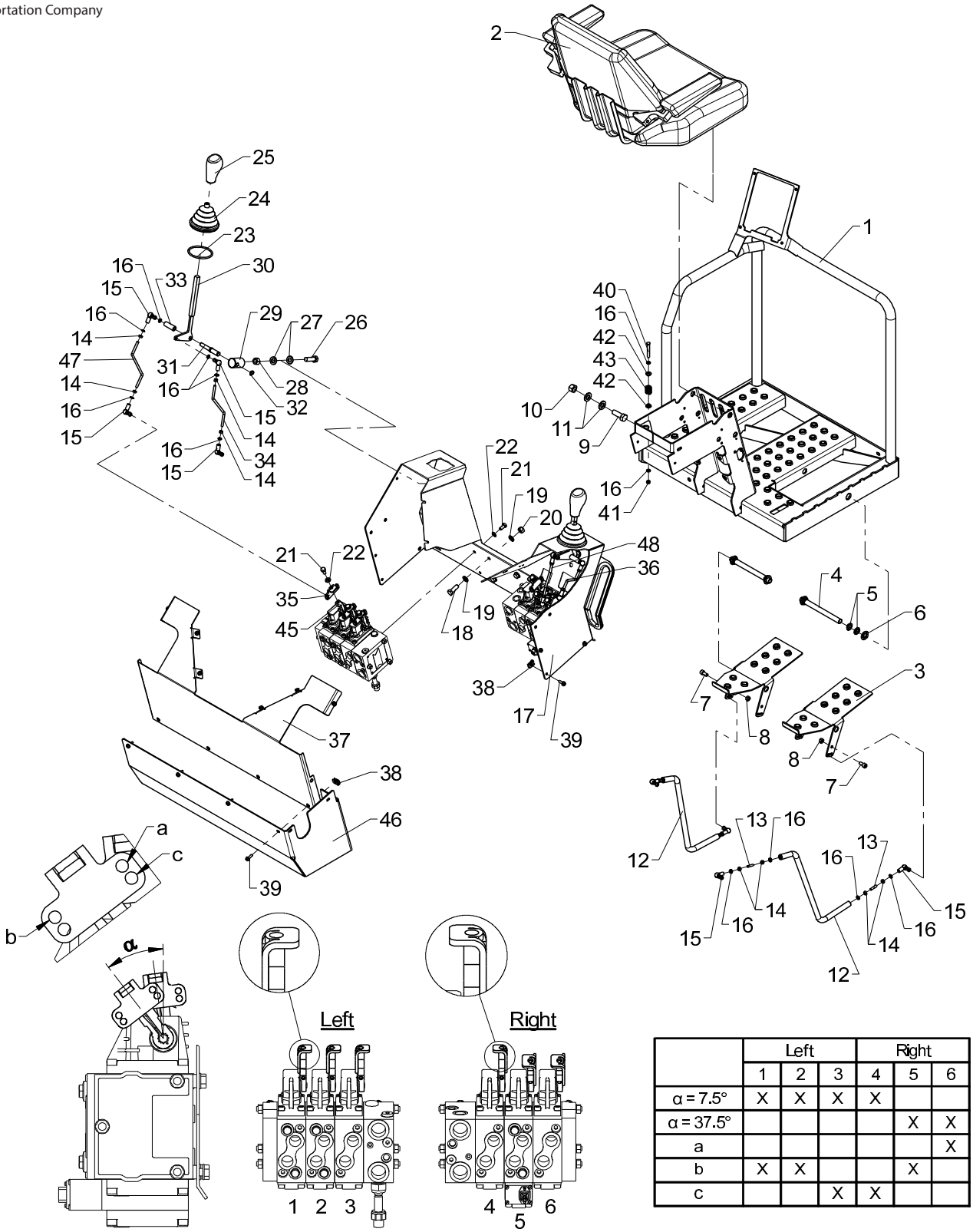

	Left			Right		
	1	2	3	4	5	6
α = 7.5°	X	X	X	X		
α = 37.5°					X	X
a						X
b	X	X			X	
c			X	X		

Top seat (Danfoss X), cpl.

2530L

Pos	Qty.	Part no.	Description	Remarks
1	1	6306621	Platform (TS)	
2	1	6341950	Seat, complete	
3	2	6306632	Foot lever	
4	2	6306633	Pin	
5	8	23416	Composite bearing	BB 1504,5
6	4	32279	Clamping ring sleeve	15 mm
7	2	32228	Cylinder screw	MC8 x 16
8	2	30856	Nut, stainless	M8
9	3	32248	Set screw	M14 x 40
10	3	32317	Lock nut	M14
11	6	31178	Washer	14 mm
12	2	6306645	Connecting rod	
13	4	30560	Pointed screw	MSP6 x 25
14	16	30854	Nut, stainless	M6
15	12	24105	Toggle joint	
16	22	32302	Face washer, stainless	6 mm
17	1	6341051	Valve bracket	
18	4	30156	Set screw, stainless	M10 x 30
19	8	31565	Washer, stainless	10 mm
20	4	31564	Lock nut, stainless	M10
21	14	30131	Set screw, stainless	M8 x 16
22	14	31147	Face washer, 8 mm	
23	2	20268	O-ring	OR 70 x 4
24	2	64390	Bellows	
25	2	50236	Lever	
26	2	31533	Set screw, stainless	M12 x 40
27	4	32338	Washer	12 mm
28	2	30890	Lock nut	M12
29	2	64064	Universal joint	
30	2	6306849	Welded lever for joystick	
31	2	6306845	Pin	
32	2	33102	Circlip	12U
33	2	6306846	Distance pipe	
34	1	6306861	Threaded pin	
35	6	6306646	Adapter, Danfoss	
36	1	6306843	Threaded pin	
37	1	6341054	Protection	
38	15	31068	Clip	M6 0,5 - 4,0 mm.
39	15	32480	Screw	M6 x 18
40	1	30119	Steel pin, stainless	M6 x 50
41	1	30884	Lock nut, stainless	M6

2530L

Internal ref. 63 41 890

An Oshkosh Corportation Company

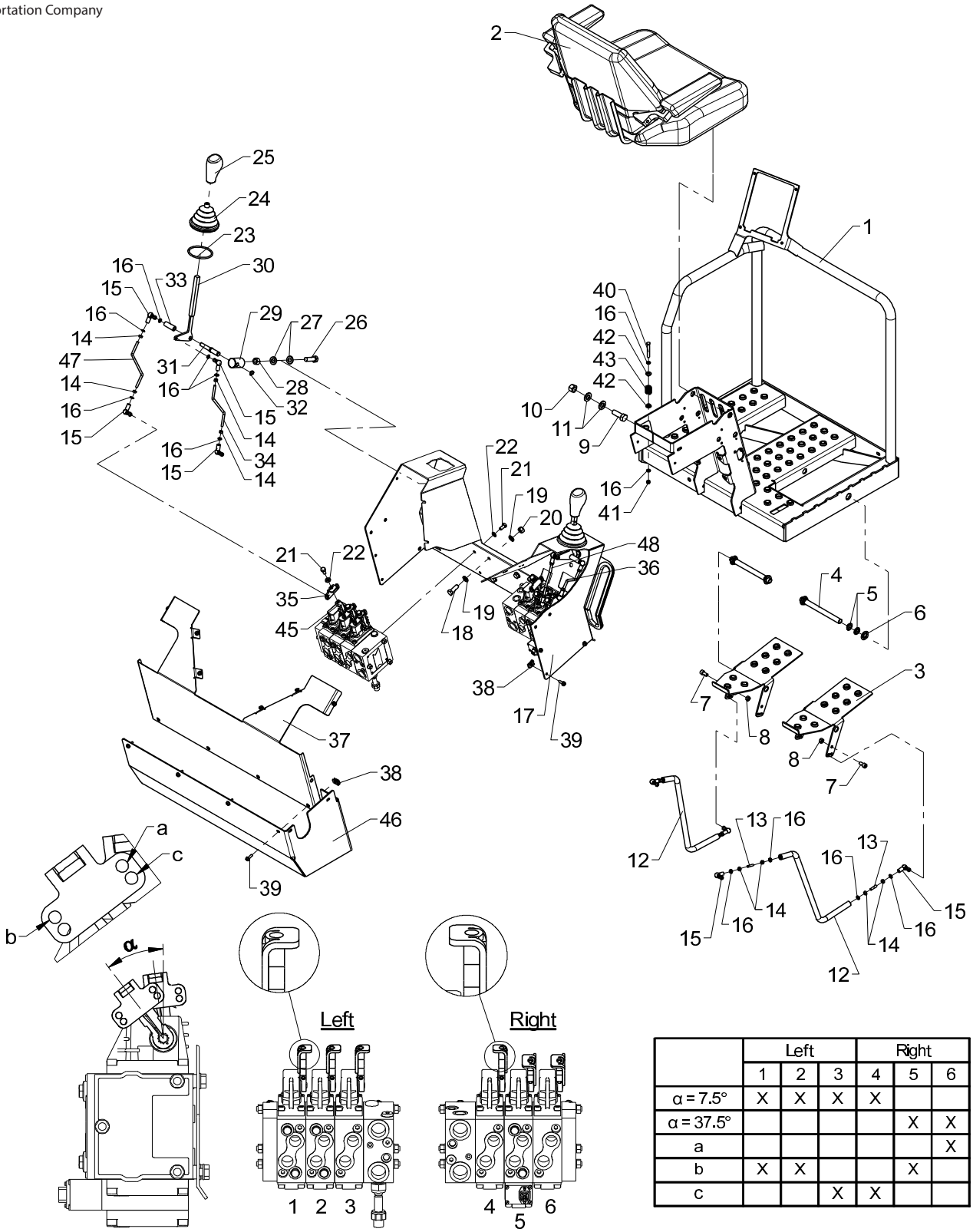

	Left			Right		
	1	2	3	4	5	6
α = 7.5°	X	X	X	X		
α = 37.5°					X	X
a						X
b	X	X			X	
c			X	X		

553 11 075

From loader 1270001
To loader

Top seat (Danfoss X), cpl.

2530L

Created 07-02-2014
Modified 18-02-2016

Pos	Qty.	Part no.	Description	Remarks
42	2	64382	Nylon bushing	
43	1	33367	Spring	6884924
44	2	46596	Rubber protection	L = 510
45	6	6344475	Foot for lever	
46	1	6341044	Shielding	
47	1	6306844	Threaded pin	
48	1	6306841	Threaded pin	

2530L

Internal ref. 63 55 910

Obsolete

An Oshkosh Corportation Company

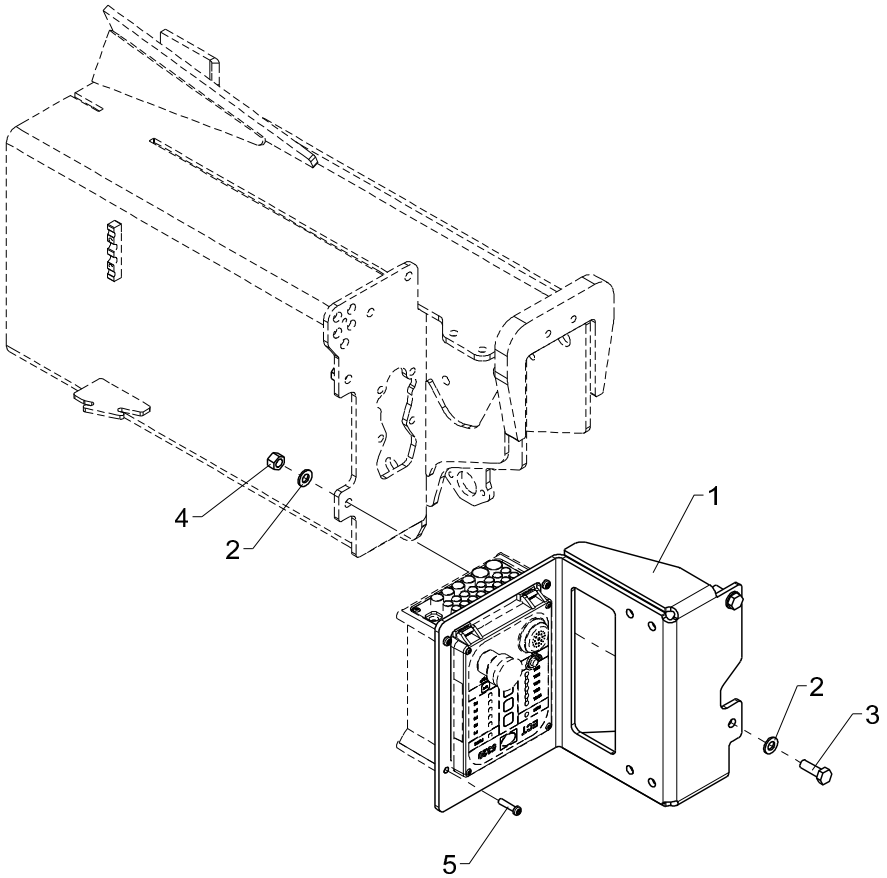

Obsolete

553 11 080

From loader 1270001
To loader 1270011

Created 10-12-2013
Modified 19-06-2015

Bracket, complete (ECT 5320 - TS)

2530L

Pos	Qty.	Part no.	Description	Remarks
1	1	6355909	Bracket (ECT 5320-TS)	
2	4	31177	Washer	10 mm
3	2	30156	Set screw, stainless	M10 x 30
4	2	31564	Lock nut, stainless	M10
5	4	30340	Screw, stainless	6,0 x 25

2530L

Internal ref. 63 41 870

An Oshkosh Corportation Company

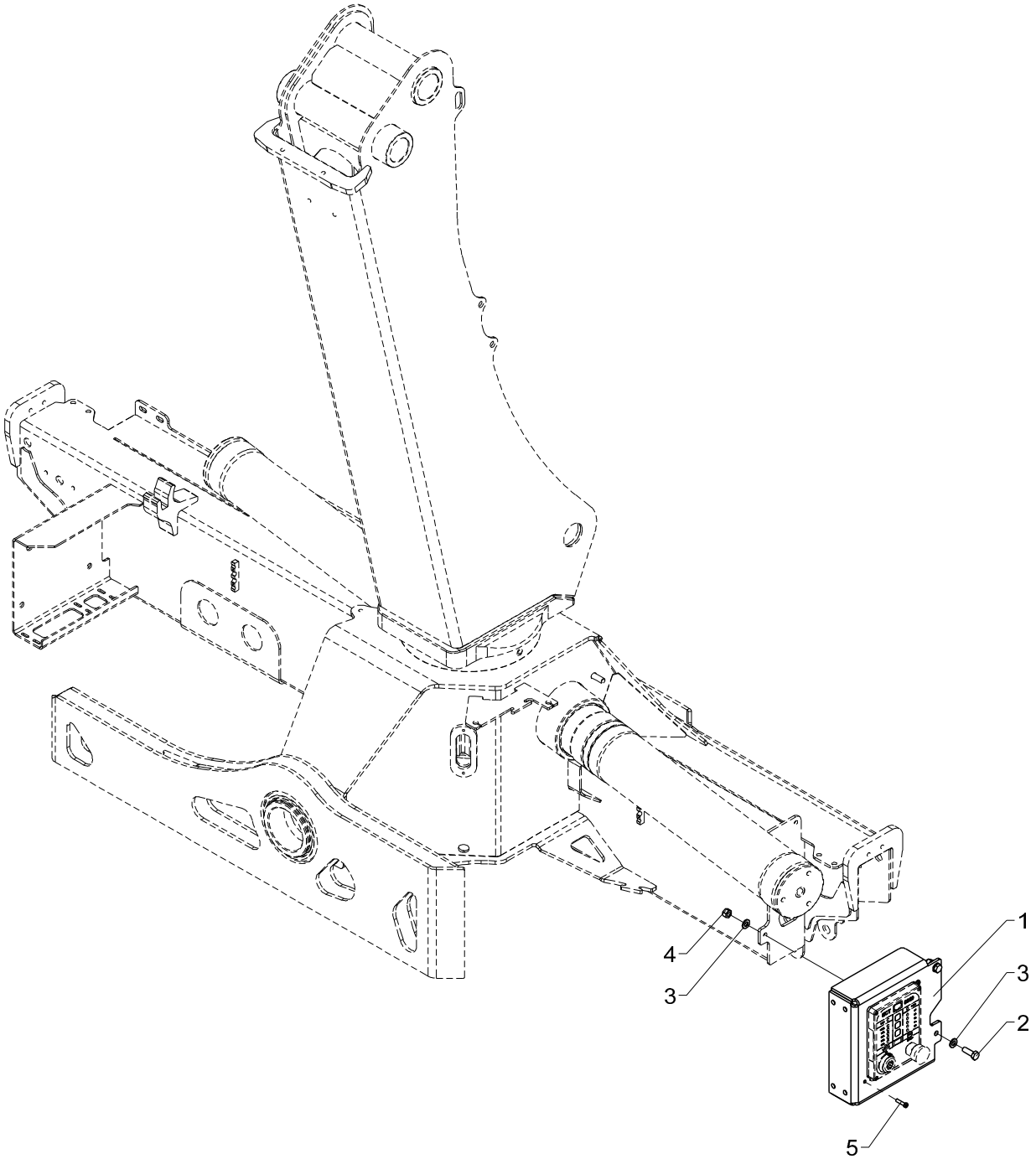

Bracket, complete (ECT 5320 - TS)
2530L

Pos	Qty.	Part no.	Description	Remarks
1	1	6340909	Bracket, (ECT5320 - TS)	
2	2	30156	Set screw, stainless	M10 x 30
3	4	31177	Washer	10 mm
4	2	31564	Lock nut, stainless	M10
5	3	30340	Screw, stainless	6,0 x 25

2530L

63 55 530
Internal ref. 63 55 520

Obsolete

An Oshkosh Corportation Company

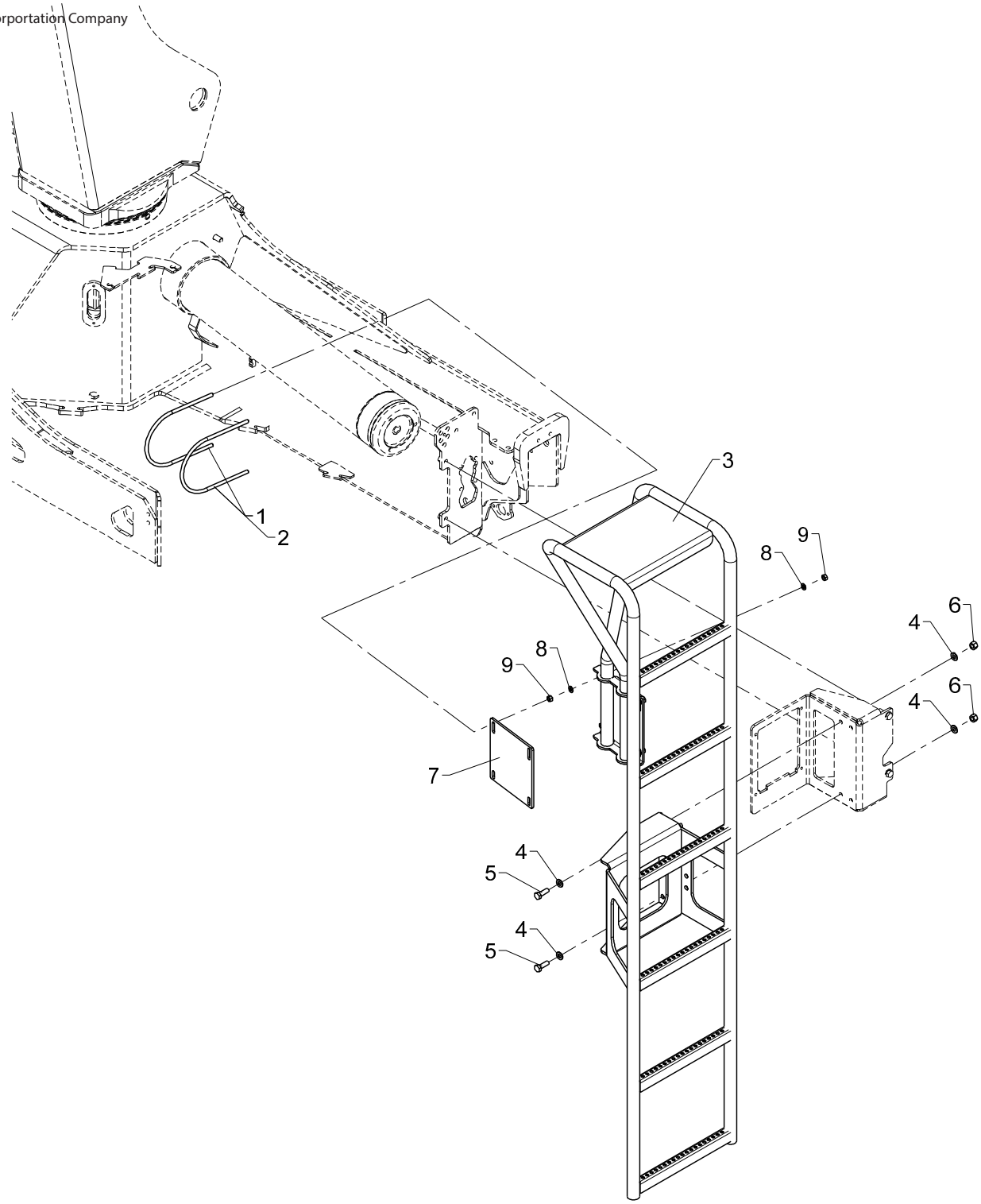

Obsolete

553 11 095

From loader 1270001
To loader 1270011

Ladder for TS, cpl.

2530L

Created 16-07-2014
Modified 19-06-2015

Pos	Qty.	Part no.	Description	Remarks
		6355520	Ladder for TS, cpl.	
		6355530	Ladder for TS, cpl.	
1	2	6355457	Clamp	(1210L/1730L)
2	2	6355458	Clamp	(1710L/2530L)
3	1	6340931	Ladder (TS)	
4	8	31565	Washer, stainless	10 mm
5	4	30156	Set screw, stainless	M10 x 30
6	4	31564	Lock nut, stainless	M10
7	1	6355035	Hole plate	
8	8	31147	Face washer, 8 mm	
9	8	30856	Nut, stainless	M8

2530L

63 55 530
Internal ref. 63 55 520

An Oshkosh Corportation Company

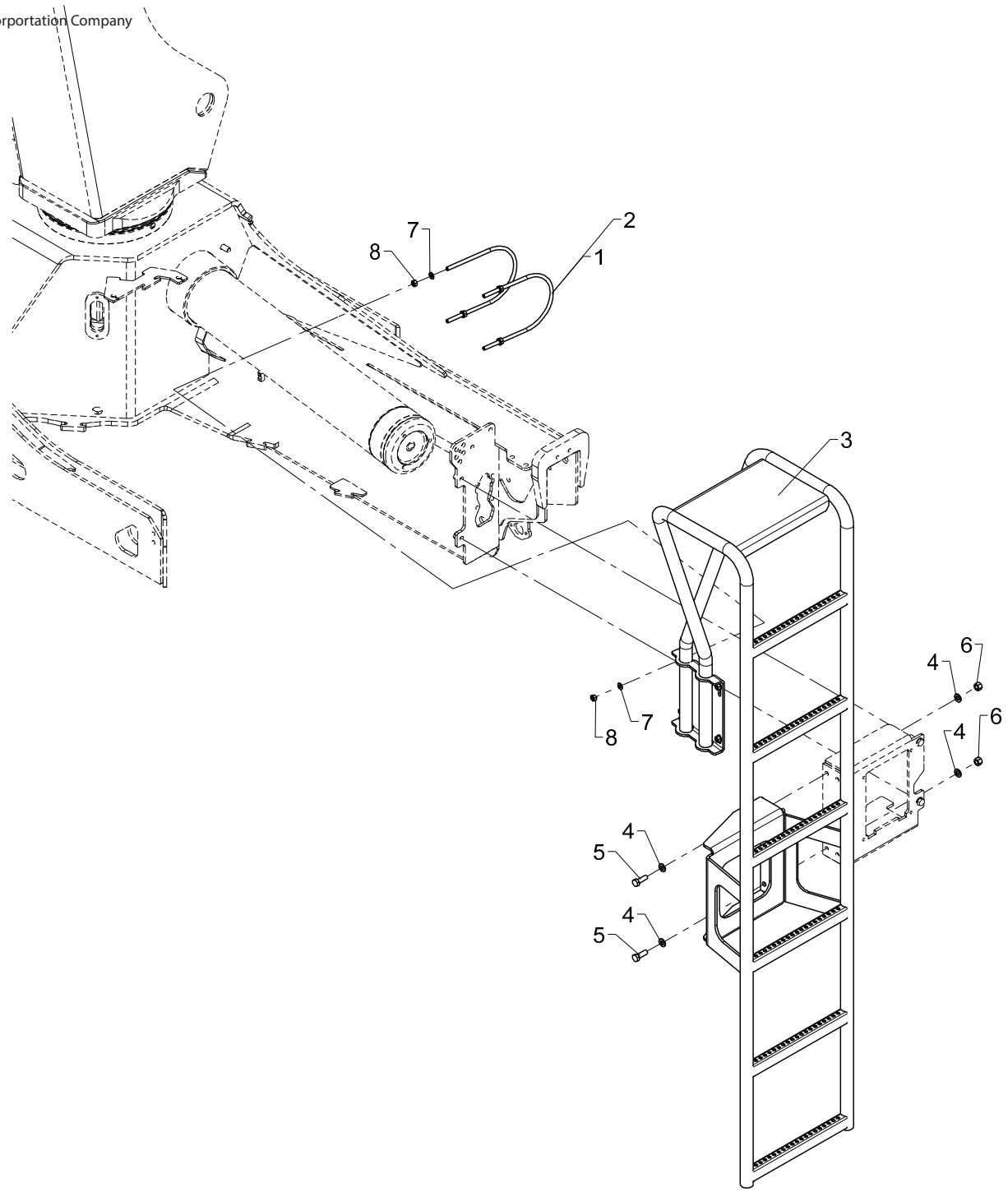

Ladder for TS, cpl.

2530L

Pos	Qty.	Part no.	Description	Remarks
		6355520	Ladder for TS, cpl.	
		6355530	Ladder for TS, cpl.	
1	2	6355458	Clamp	(1710L/2530L)
2	2	6355457	Clamp	(1210L/1730L)
3	1	6355131	Ladder (TS)	
4	8	31565	Washer, stainless	10 mm
5	4	30156	Set screw, stainless	M10 x 30
6	4	31564	Lock nut, stainless	M10
7	8	31147	Face washer, 8 mm	
8	8	30856	Nut, stainless	M8

2530L

Internal ref. 63 42 600

An Oshkosh Corportation Company

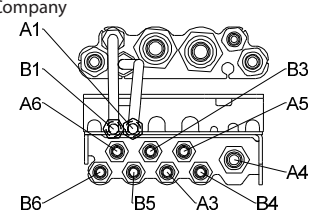

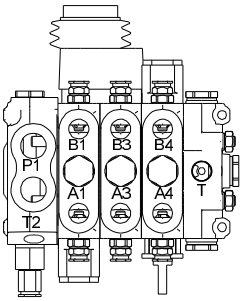

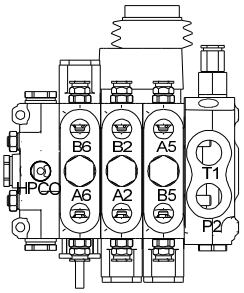

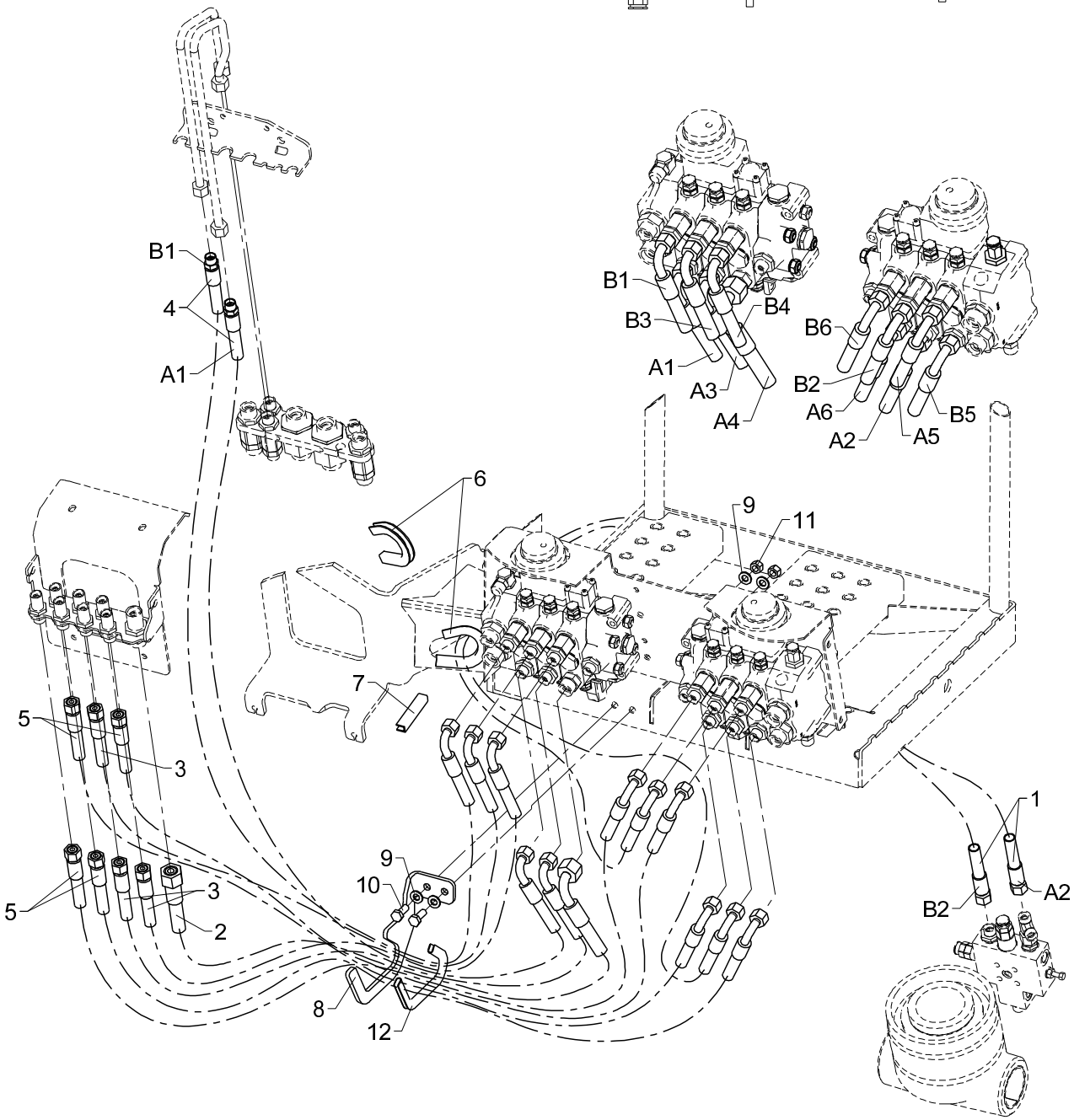

From loader 1270001
To loader

Created 12-01-2010
Modified 03-01-2011

Hose kit, loader functions (TS HC joystick)

2530L

Pos	Qty.	Part no.	Description	Remarks
1	2	0017540	Hose	
2	1	62686	Hose	1/2 X 1100 M24X1.5 L/90
3	3	0017120	Hose	
4	2	0017010	Hose	
5	4	0015030	Hose	
6	2	46587	Rubber protection	75 mm
7	1	46587	Rubber protection	130 mm
8	1	6341043	Hose clamp	
9	4	31565	Washer, stainless	10 mm
10	2	30155	Set screw	M10 x 25
11	2	31564	Lock nut, stainless	M10
12	1	46596	Rubber protection	250 mm

2530L

Internal ref. 63 42 430

An Oshkosh Corportation Company

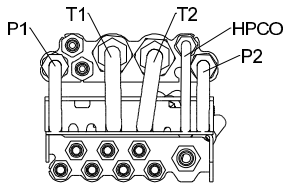

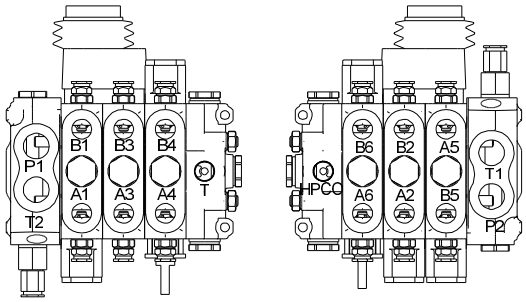

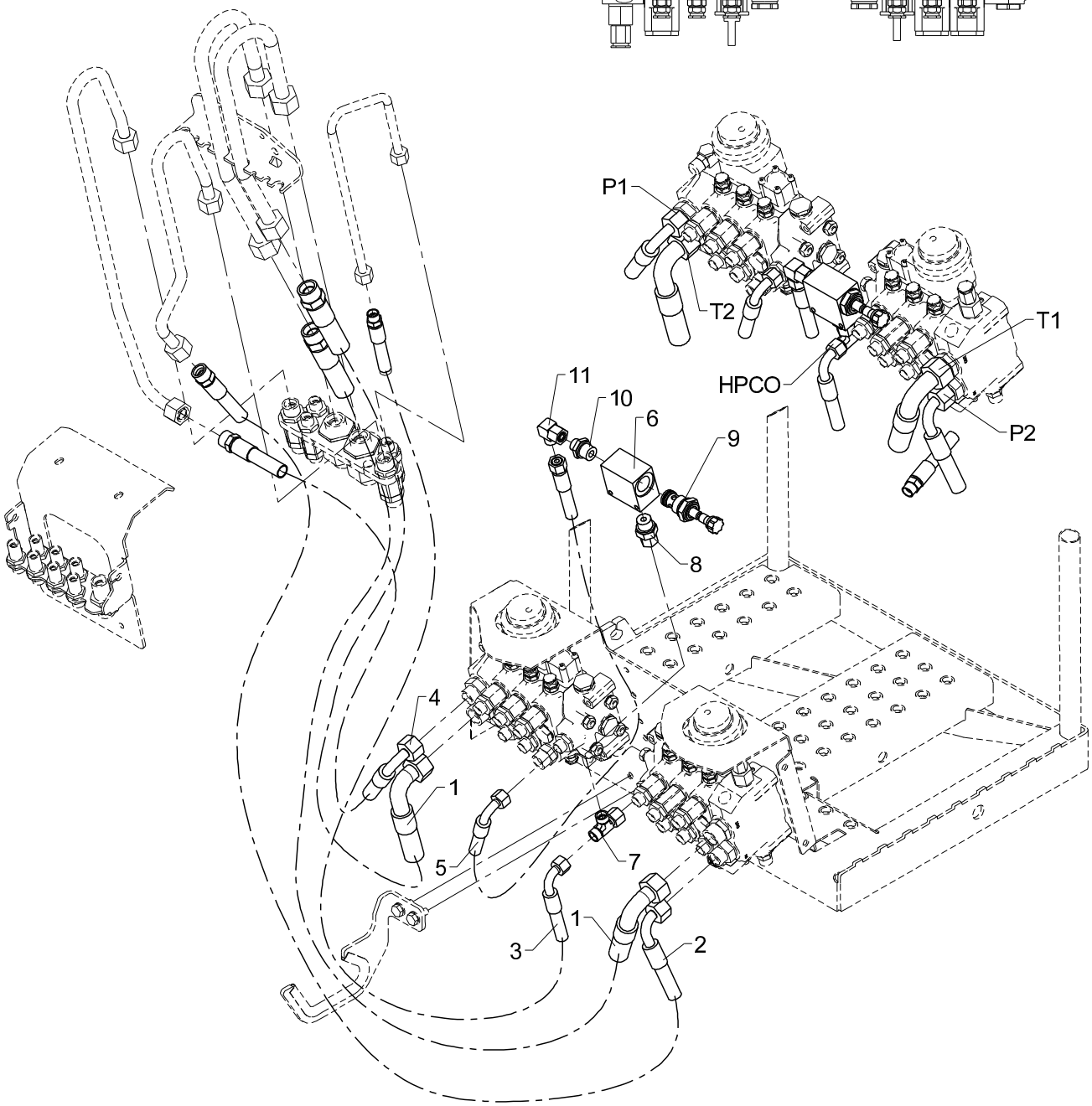

Hose kit for pump and tank, (TS HC joystick)
2530L

Pos	Qty.	Part no.	Description	Remarks
1	2	56527	Hose	3/4 X 1200 mm M30x2 S/90 20S
2	1	56526	Hose	1/2 X 1100 mm S/90 16S
3	1	0017010	Hose	
4	1	56525	Hose	1/2 X 750 mm M24x1,5 S/90 16S
5	1	0017710	Hose	
6	1	59939	Valve housing	
7	1	25270	Connection	ELSD 12 L
8	1	26388	Connection	EGESD 12 LR 1/2-WD
9	1	59617	Cartridge	
10	1	25108	Connection	GES 12 LR 1/2-WD
11	1	25242	Elbow connection	EWSD 12 L

2530L

Internal ref. 63 55 610

An Oshkosh Corportation Company

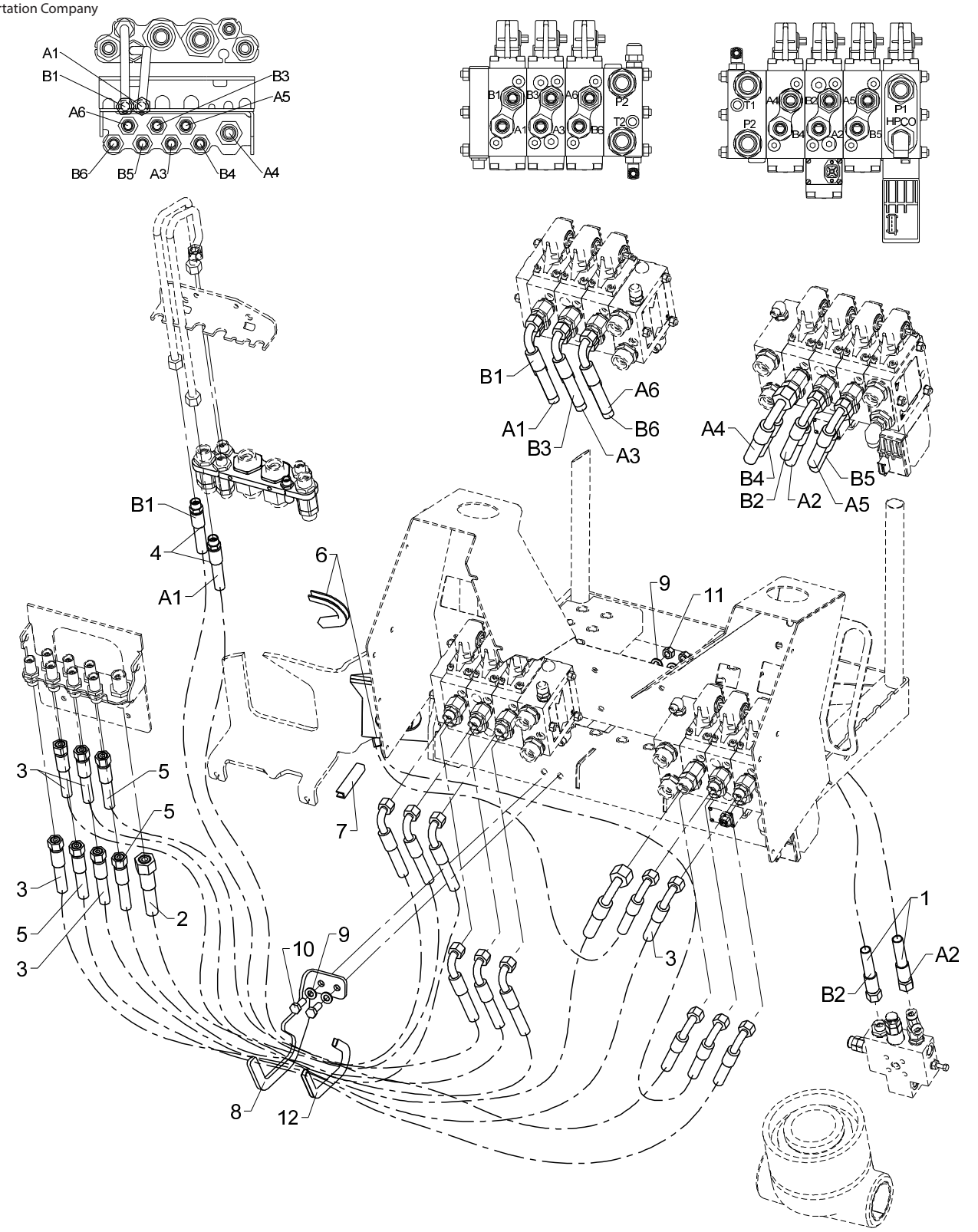

Hose kit, loader functions (TS Danfoss 1 circuit, fixed and variable flow) 2530L

Pos	Qty.	Part no.	Description	Remarks
1	2	0017540	Hose	
2	1	62683	Hose	1/2 X 1450 M24X1.5 L/90
3	4	0017120	Hose	
4	2	0017010	Hose	
5	3	0015030	Hose	
6	2	46587	Rubber protection	75 mm
7	1	46587	Rubber protection	130 mm
8	1	6341043	Hose clamp	
9	4	31565	Washer, stainless	10 mm
10	2	30155	Set screw	M10 x 25
11	2	31564	Lock nut, stainless	M10
12	1	46596	Rubber protection	250 mm

2530L

Internal ref. 63 42 670

An Oshkosh Corportation Company

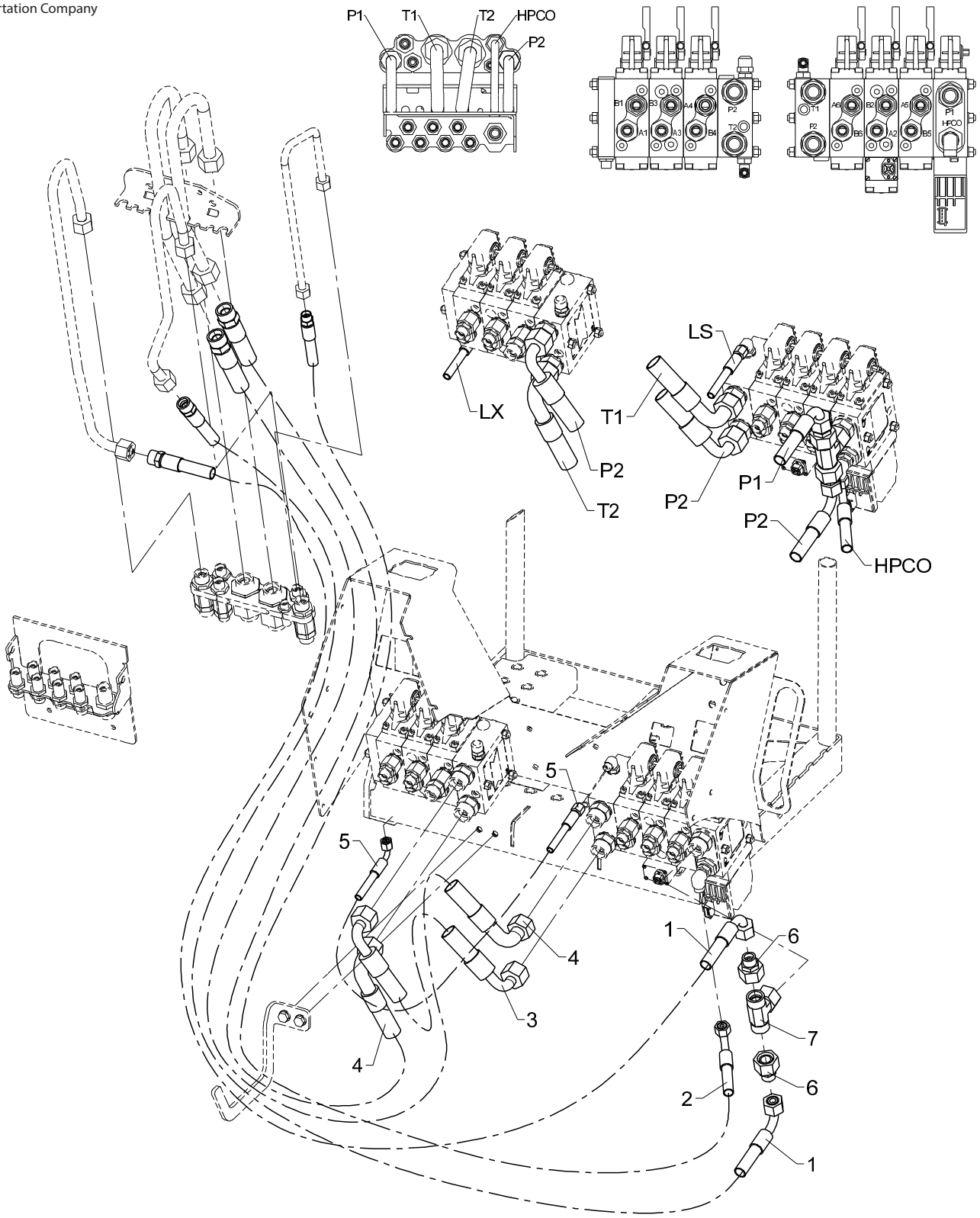

Hose kit for pump and tank (TS, Danfoss 1 circuit, fixed flow)

2530L

Pos	Qty.	Part no.	Description	Remarks
1	2	56526	Hose	1/2 X 1100 mm S/90 16S
2	1	0017370	Hose	
3	1	56953	Hose	5/8 X 300 M30X2 90/90 SS
4	2	56527	Hose	3/4 X 1200 mm M30x2 S/90 20S
5	1	56520	Hose	1/4 x 900mm L/90
6	2	26306	Reducing connection	REDSDN 20/16 S
7	1	26360	Connection	ETVD 20 S

2530L

Internal ref. 63 42 660

An Oshkosh Corportation Company

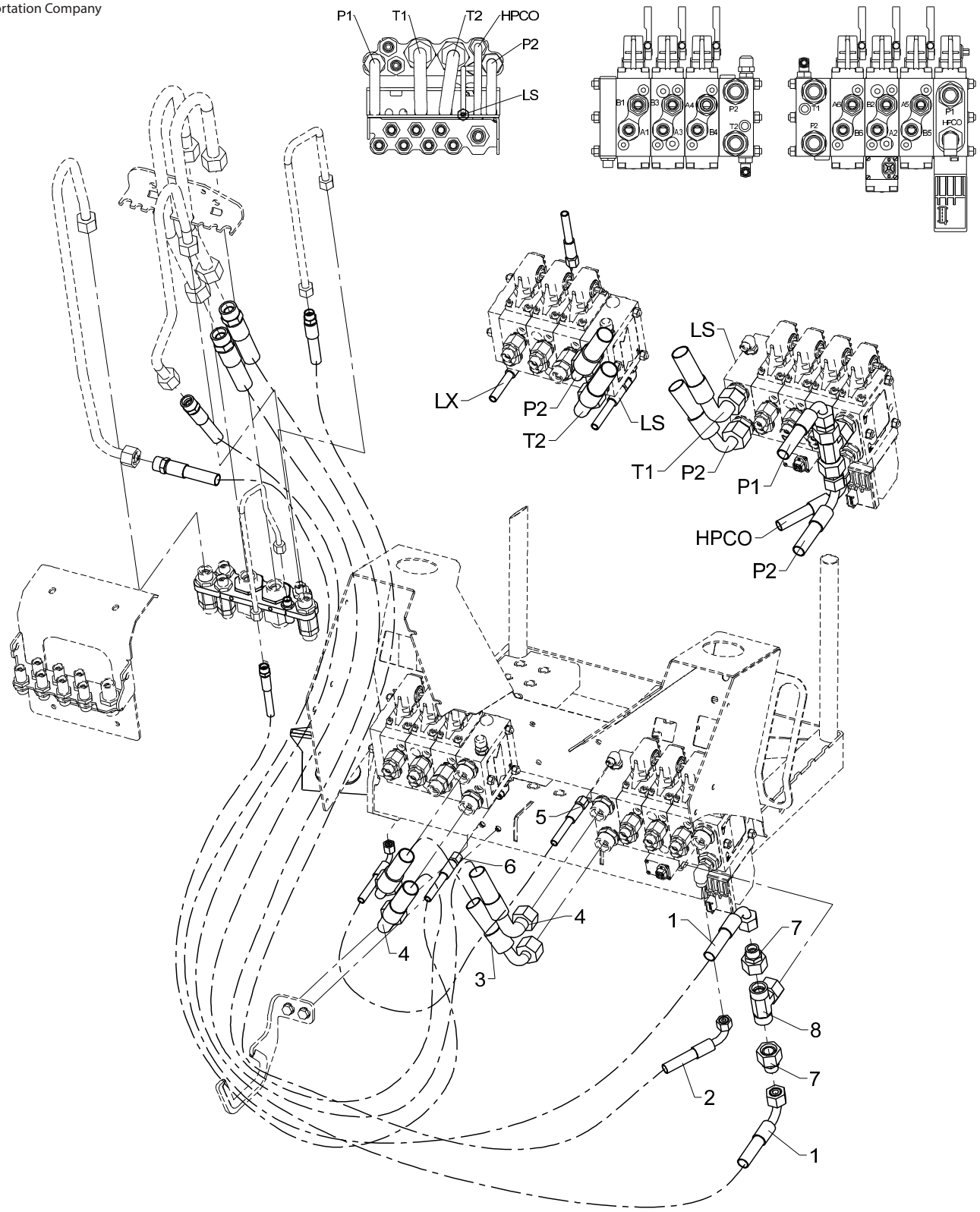

Hose kit for pump and tank (TS, Danfoss 1 circuit, variable flow) 2530L

Pos	Qty.	Part no.	Description	Remarks
1	2	56526	Hose	1/2 X 1100 mm S/90 16S
2	1	0017370	Hose	
3	1	56953	Hose	5/8 X 300 M30X2 90/90 SS
4	2	56527	Hose	3/4 X 1200 mm M30x2 S/90 20S
5	1	56954	Hose	1/4 X 500 M14X1.5 L/90 (350 bar)
6	1	56528	Hose	1/4 X 1000 mm S/L 8Let
7	2	26306	Reducing connection	REDSDN 20/16 S
8	1	26360	Connection	ETVD 20 S

2530L

Internal ref. 63 43 440

An Oshkosh Corportation Company

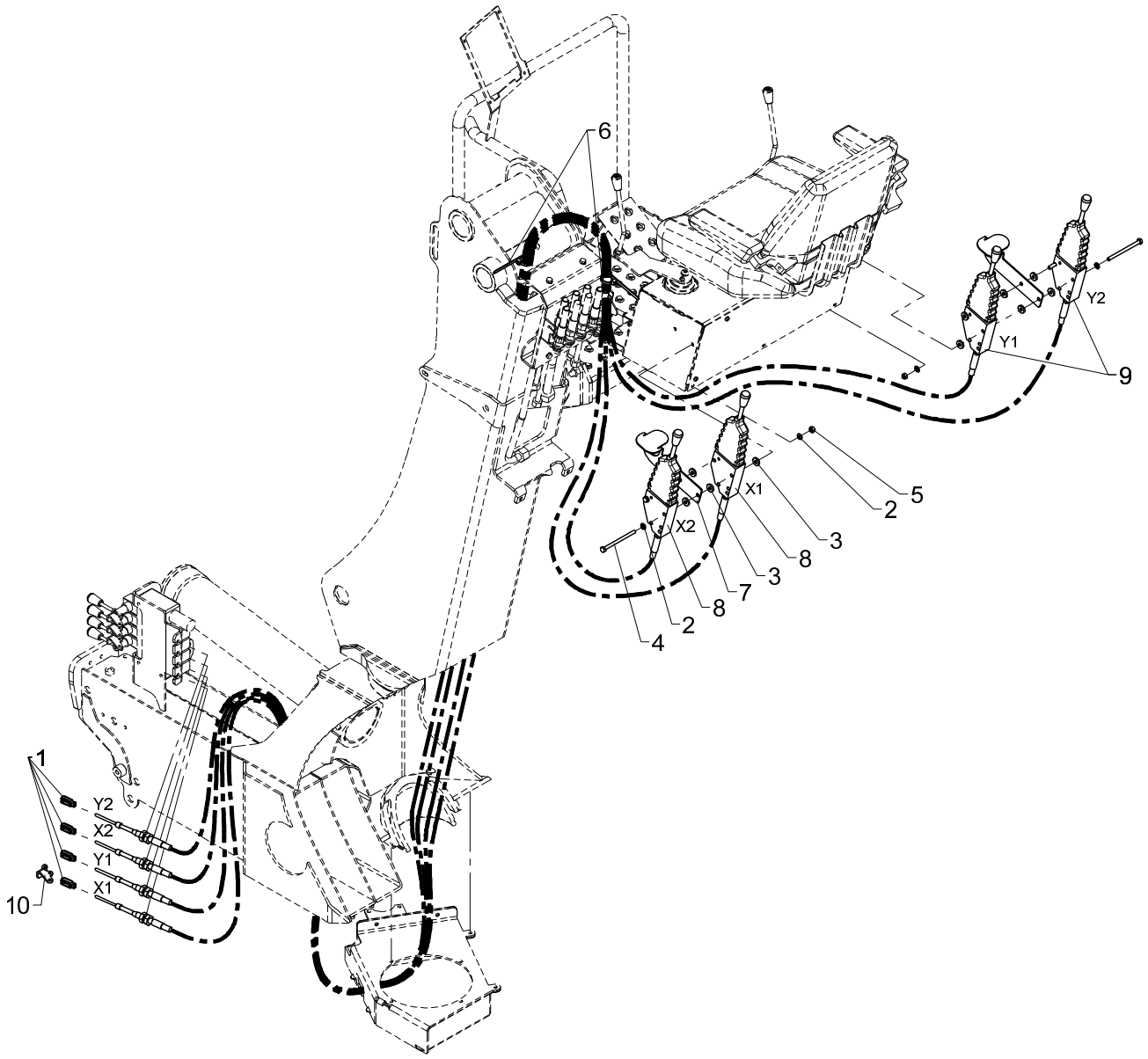

From loader 1270001
To loader

Stabilizer operation (TS joystick) 4 functions
2530L

Created 21-03-2014
Modified 09-03-2016

Pos	Qty.	Part no.	Description	Remarks
1	4	48414	Clevis	
2	8	31147	Face washer, 8 mm	
3	12	31755	Washer	
4	4	30146	Steel bolt, stainless	
5	4	30856	Nut, stainless	M8
6	2	27275	Cable tie, black, 7.6x385mm	
7	2	6341045	Bracket for labelling	
8	2	48482	Push-pull cable incl. lever	
9	2	47854	Push pull cable incl. lever	
10	1	6340229	Adapter	

2530L

Internal ref. 63 42 510

An Oshkosh Corportation Company

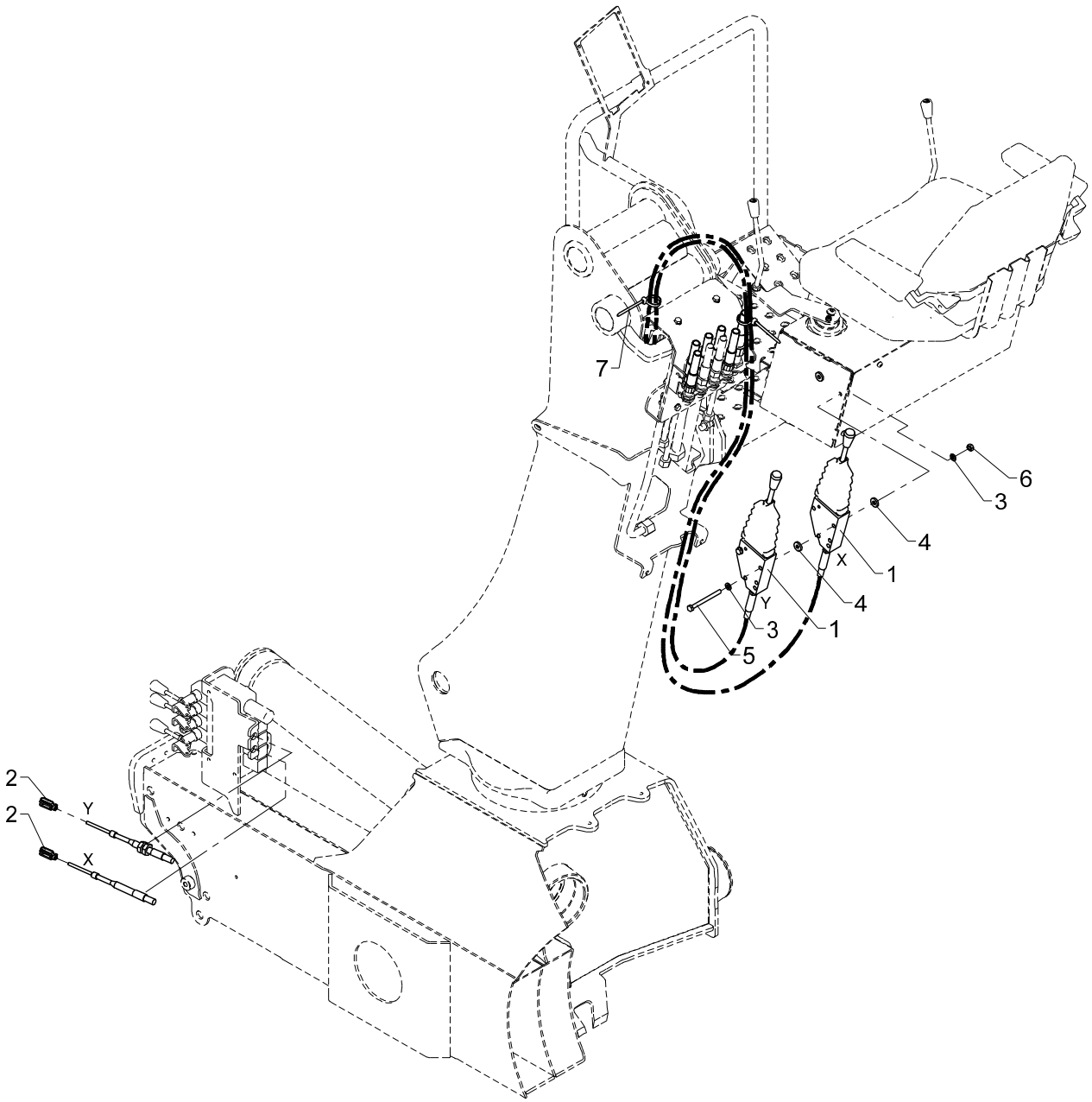

Stabilizer operation (TS joystick)

2530L

Pos	Qty.	Part no.	Description	Remarks
1	2	48482	Push-pull cable incl. lever	
2	2	48414	Clevis	
3	4	31147	Face washer, 8 mm	8 mm
4	4	31755	Washer	
5	2	30144	Steel bolt, stainless	M8 x 90
6	2	30856	Nut, stainless	M8
7	2	27275	Cable tie, black, 7.6x385mm	

2530L

63 45 080
63 41 080
Internal ref. 63 41 070

Obsolete

An Oshkosh Corportation Company

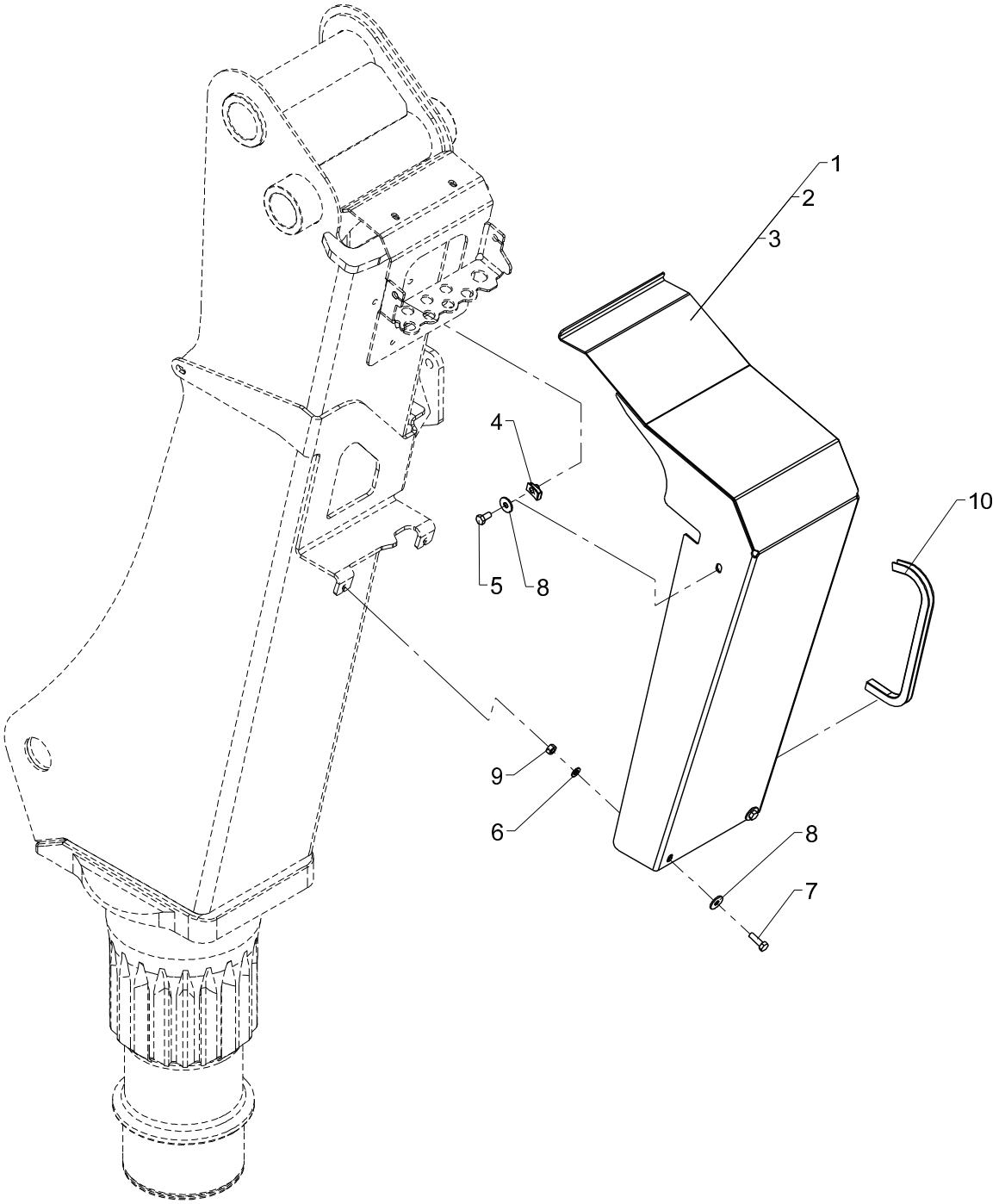

Obsolete

553 11 200

From loader 1270001
To loader

Hose shield (TS), cpl.

2530L

Created 24-02-2009
Modified

Pos	Qty.	Part no.	Description	Remarks
		6341070	Hose shield (TS), cpl.	
		6341080	Hose shield (TS), cpl.	
		6345080	Hose shield (TS), cpl.	
1	1	6340078	Hose shield (TS)	1310/1510/1810/2210
2	1	6340088	Hose shield (TS)	1300/1500
3	1	6344088	Hose shield (TS)	1800/2200
4	2	31069	Clip	M8 1,5 - 5,5 mm.
5	2	30131	Set screw, stainless	M8 x 16
6	2	31147	Face washer, 8 mm	8 mm
7	2	30134	Set screw, stainless	M8 x 25
8	4	31136	Washer, stainless	
9	2	30856	Nut, stainless	M8
10	1	22122	PVC protection	360 mm

2530L

63 45 080
63 41 080
Internal ref. 63 41 070

An Oshkosh Corportation Company

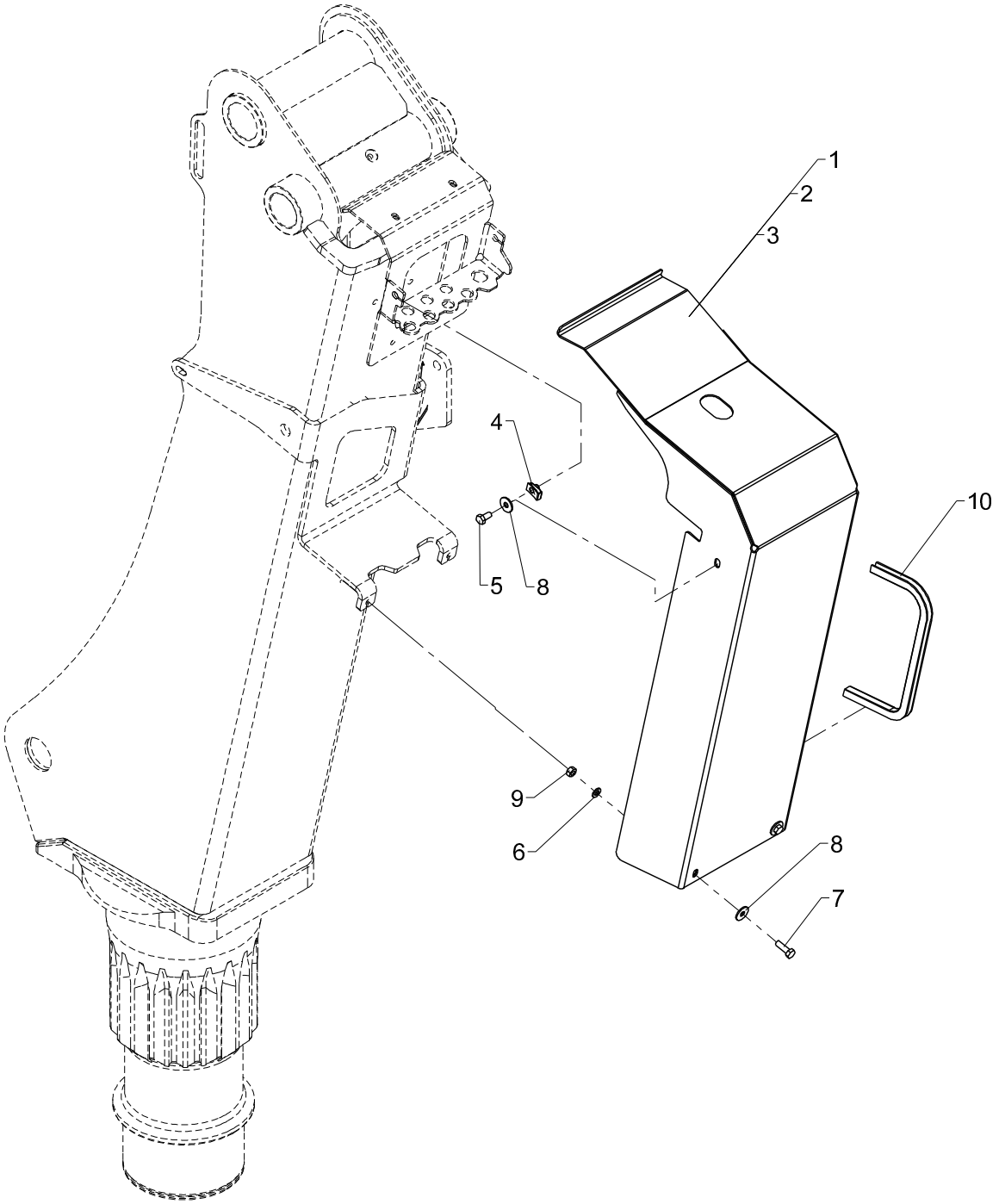

Hose shield (TS), cpl.

2530L

Pos	Qty.	Part no.	Description	Remarks
		6341070	Hose shield (TS), cpl.	
		6341080	Hose shield (TS), cpl.	
		6345080	Hose shield (TS), cpl.	
1	1	6340696	Hose shield (TS)	1310/1510/1810/2210
2	1	6340697	Hose shield (TS)	1300/1500
3	1	6344696	Hose shield (TS)	1800/2200
4	2	31069	Clip	M8 1,5 - 5,5 mm.
5	2	30131	Set screw, stainless	M8 x 16
6	2	31147	Face washer, 8 mm	8 mm
7	2	30134	Set screw, stainless	M8 x 25
8	4	31136	Washer, stainless	
9	2	30856	Nut, stainless	M8
10	1	22122	PVC protection	449 mm

2530L

Internal ref. 63 40 780

Obsolete

An Oshkosh Corportation Company

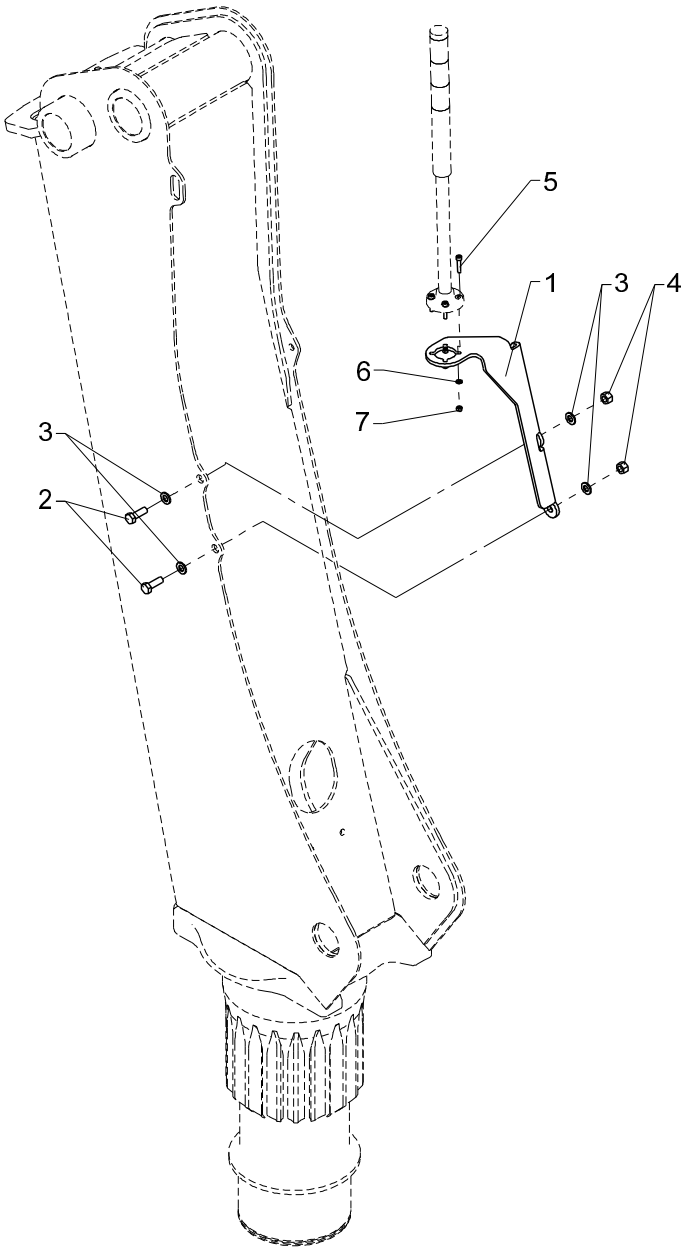

Obsolete

553 16 060

From loader 1270001
To loader

Mounting fittings, light tower

2530L

Created 04-01-2010
Modified 13-01-2014

Pos	Qty.	Part no.	Description	Remarks
1	1	6340069	Bracket (light tower)	
2	2	30156	Set screw, stainless	M10 x 30
3	4	31565	Washer, stainless	10 mm
4	2	31564	Lock nut, stainless	M10
5	4	30481	Screw	
6	4	32308	Washer	5 mm
7	4	30859	Lock nut, stainless	M5

63 45 070
63 45 060
63 45 050
63 45 040
Internal ref. 63 45 030

2530L

An Oshkosh Corportation Company

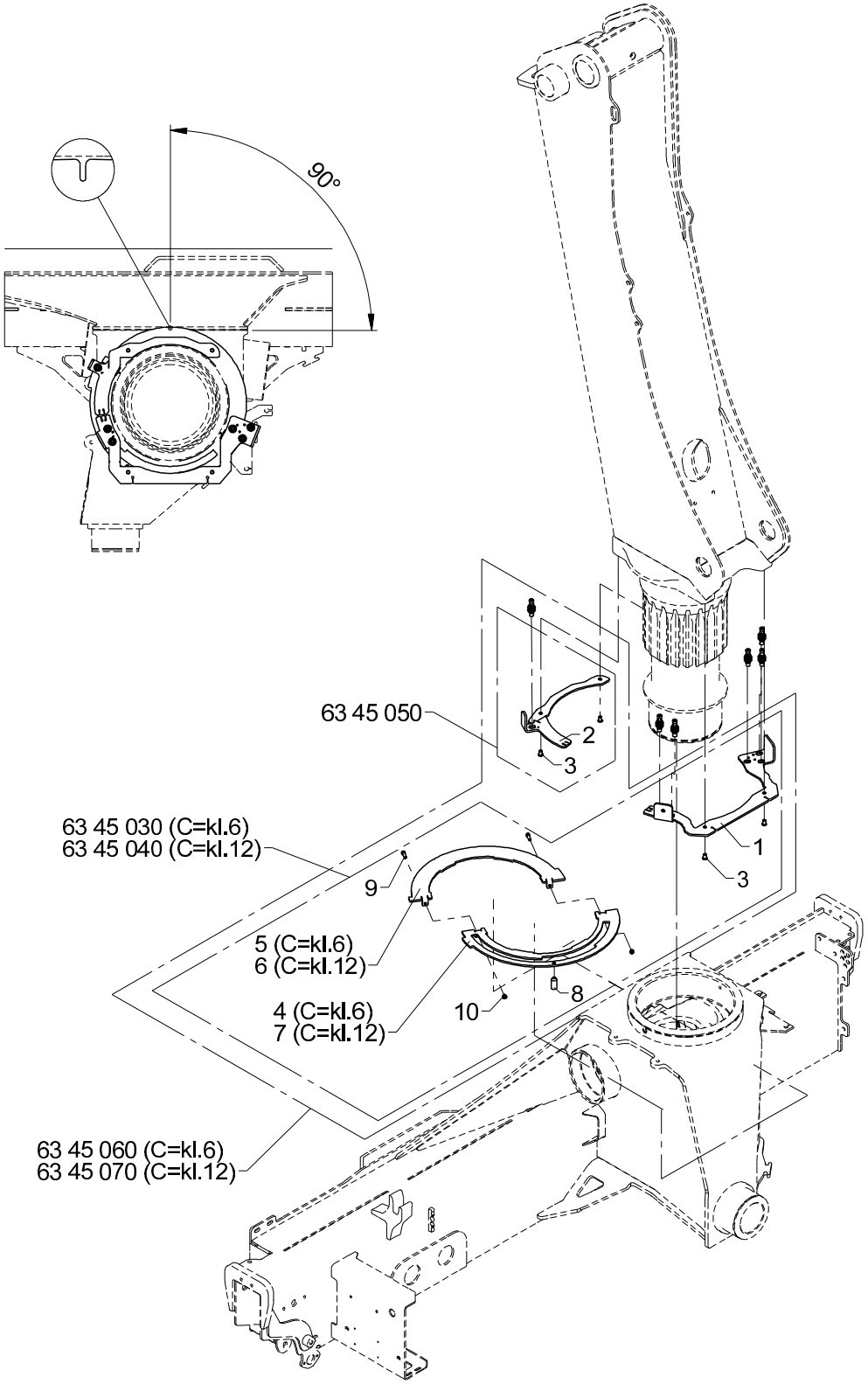

Cam disc kit

2530L

Pos	Qty.	Part no.	Description	Remarks
		6345030	Cam disc kit	(2LMB,HS,QOPS,CBS)
		6345040	Cam disc kit	(2LMB,HS,QOPS,CBS, C=12)
		6345050	Cam disc kit	(+2CYBEL)
		6345060	Cam disc kit	(2CYBEL)
		6345070	Cam disc kit	(2CYBEL, C=12)
1	1	6345081	Sensor bracket	
2	1	6345082	Sensor bracket	
3	4	32507	Cylinder screw 8 x 12	MC8 x 12
4	1	6345076	Cam disc, part 1/2	
5	1	6345077	Cam disc, part 2/2	
6	1	6345078	Cam disc, part 1/2 C=12o'clock	
7	1	6345079	Cam disc, part 2/2 C=12o'clock	
8	1	68058	Spacer	
9	2	31538	Screw, stainless	MC6 x 20
10	2	30884	Lock nut, stainless	M6

2530L

63 46 890
Internal ref. 63 44 890

An Oshkosh Corportation Company

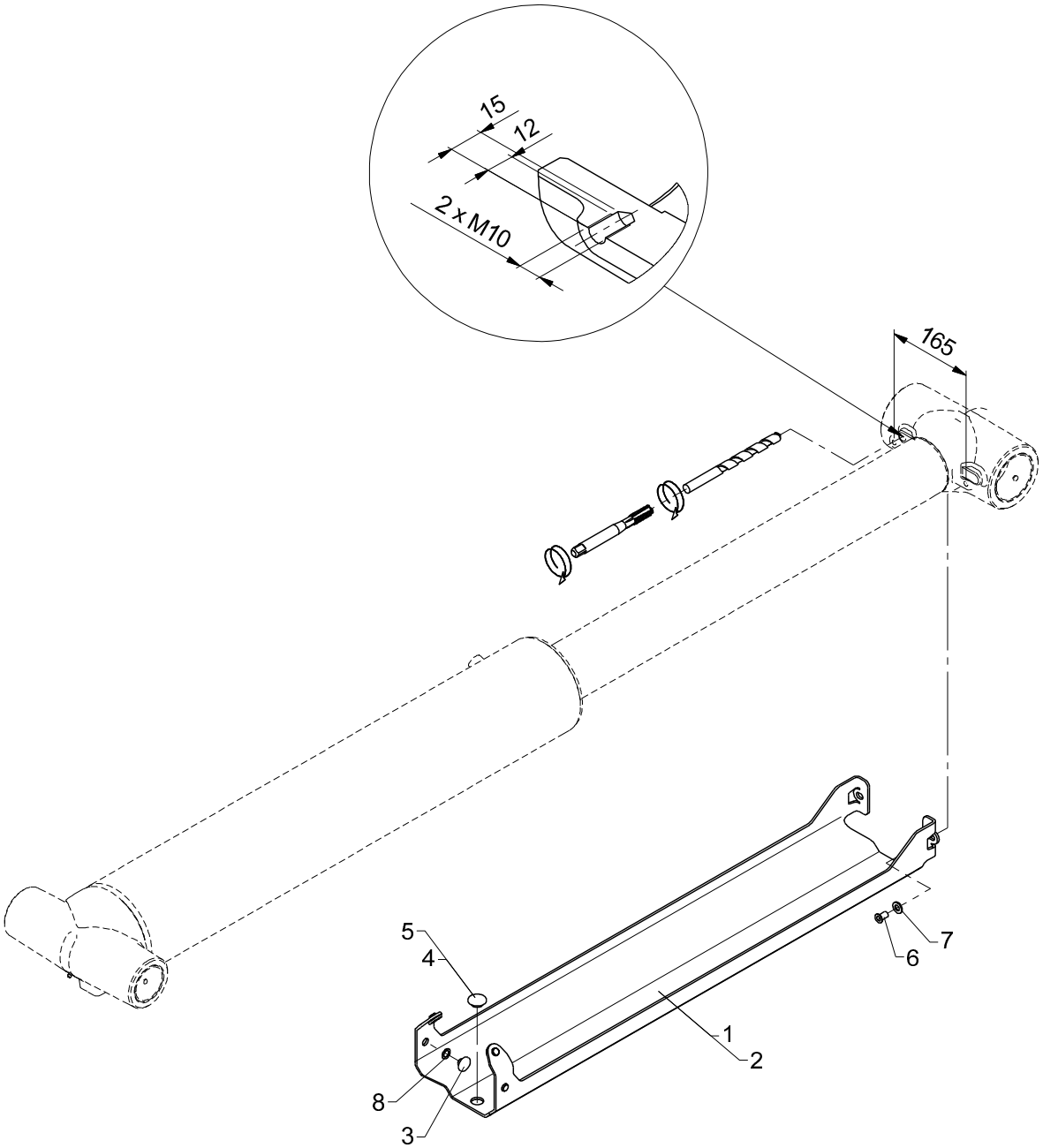

Protective guard, jib cylinder, cpl.

2530L

Pos	Qty.	Part no.	Description	Remarks
		6344890	Protective guard, jib cylinder	
		6346890	Protective guard, jib cylinder	
1	1	6344159	Protective guard	Serie 1800
2	1	6346159	Protective guard	Serie 2200
3	4	63569	Guide shoe	3 mm
4	1	63429	Guide	ø30 x 3 mm
5	1	63460	Spacer	5 mm
6	2	32423	Sockethead screw	MC10 x 16
7	2	31565	Washer, stainless	10 mm
8	4	33219	Back ring	PS 12 x 18 x 1,0

2530L

Internal ref. 63 41 050

An Oshkosh Corportation Company

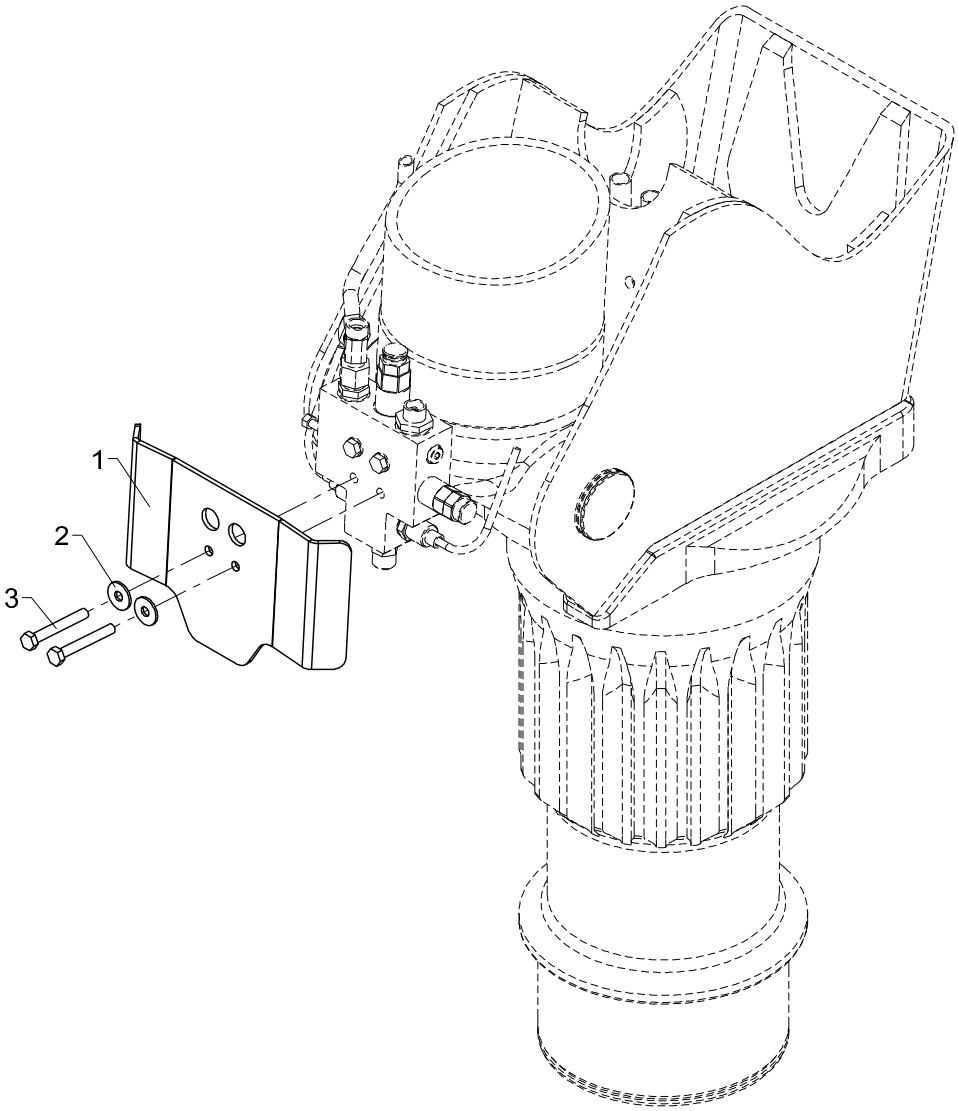

Protective guard (LHV boom), cpl.

2530L

Pos	Qty.	Part no.	Description	Remarks
1	1	6340949	Protective guard (LHV boom)	
2	2	31136	Washer, stainless	8 mm
3	2	30141	Set screw, stainless	M8 x 60

2530L

Internal ref. 70 08 250

An Oshkosh Corportation Company

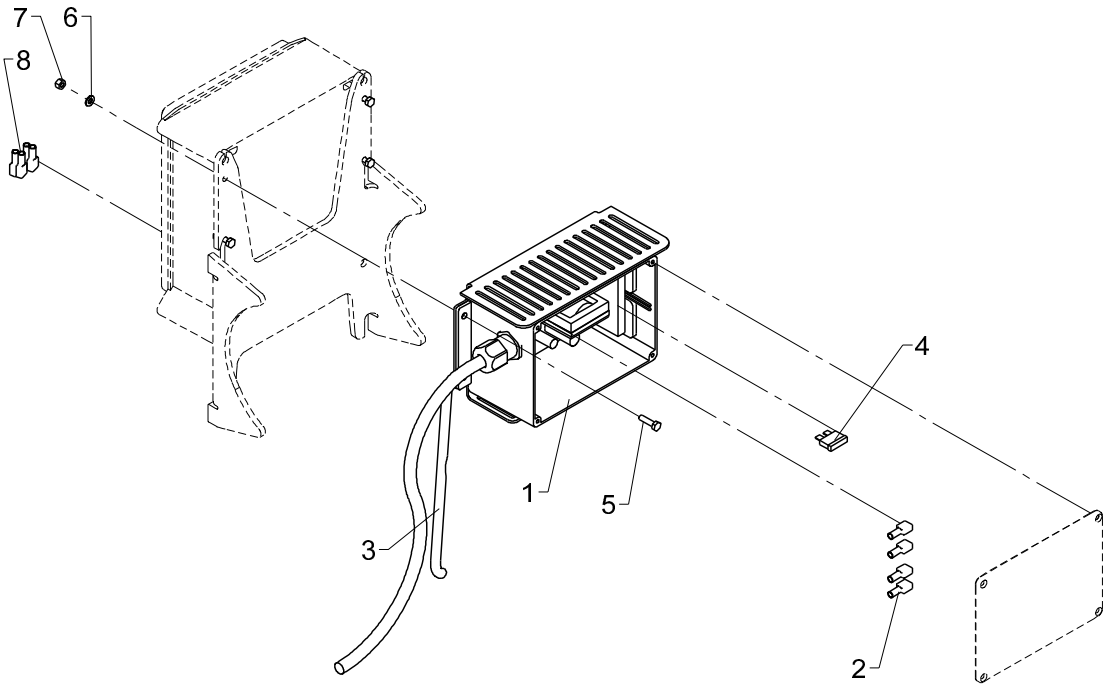

12 V converter

2530L

Pos	Qty.	Part no.	Description	Remarks
1	1	29478	Converter, 12-24 V, complete	
2	4	27428	Clip	
3	1	28278	Cable 4 x 2.5	
4	1	27378	Fuse 25 Amp	
5	4	30125	Set screw	M4 x 16
6	4	31188	Washer, stainless	4 mm
7	4	30857	Lock nut	M4
8	4	27428	Clip	

2530L

Internal ref. 70 06 310

An Oshkosh Corportation Company

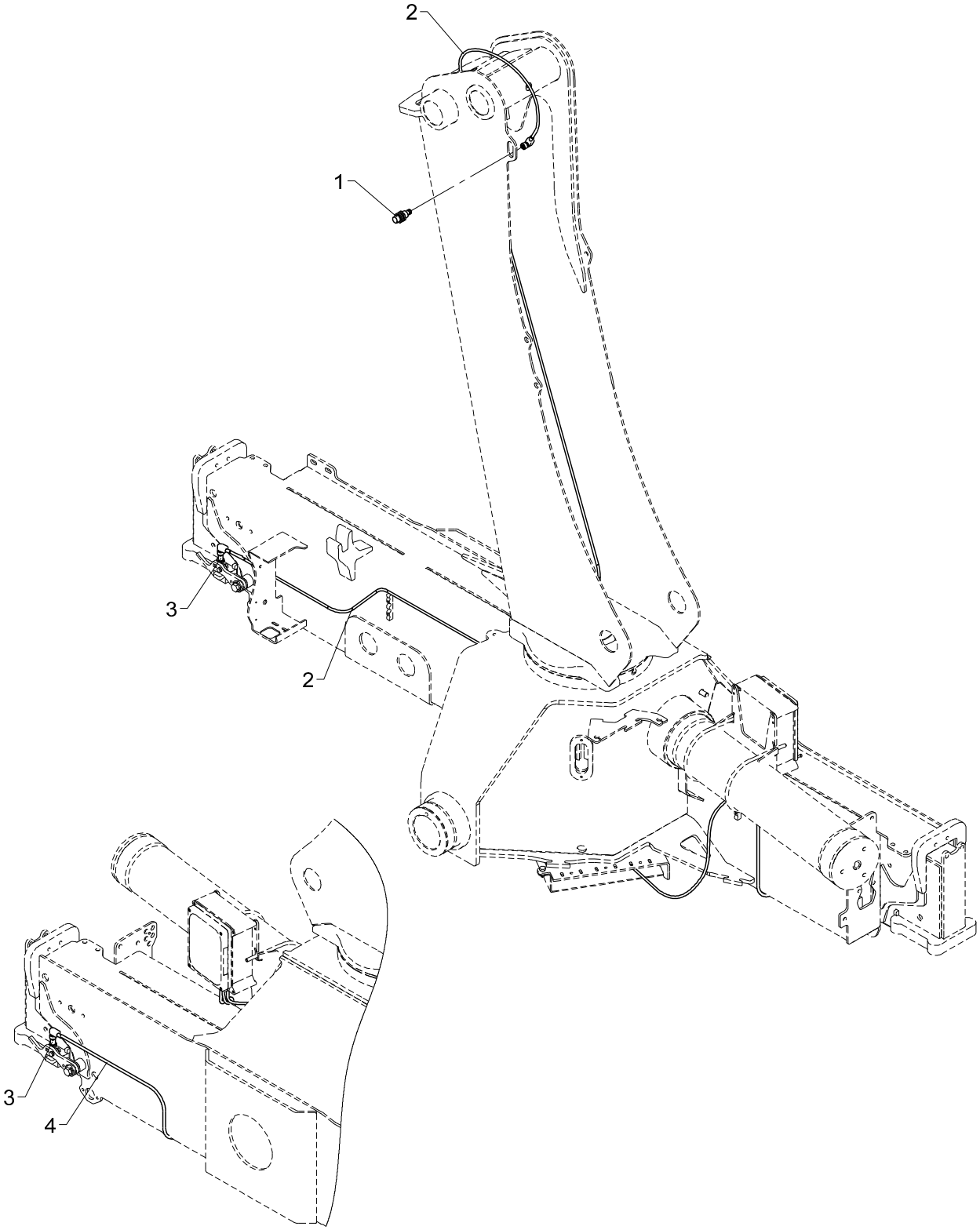

BEHEW

2530L

Pos	Qty.	Part no.	Description	Remarks
1	1	28980	Proximity switch	
2	2	28077	Cable with plug	
3	2	29257	Proximity switch M12x44, 4mm	
4	1	28117	Cable with plug	

2530L

Internal ref. 70 09 870

An Oshkosh Corportation Company

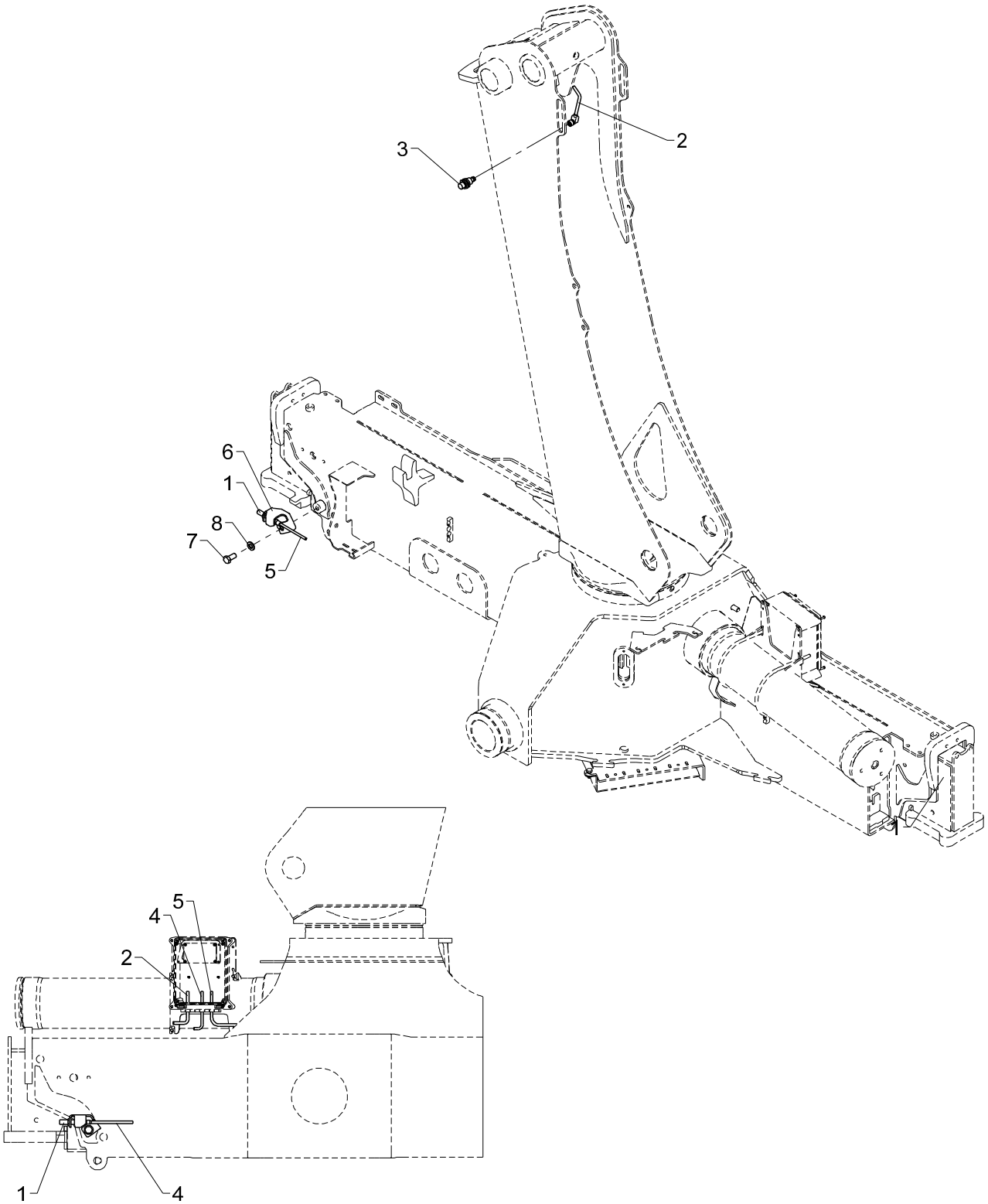

BEHEW

2530L

Pos	Qty.	Part no.	Description	Remarks
1	2	29257	Proximity switch M12x44, 4mm	
2	1	28077	Cable with plug	
3	1	28980	Proximity switch	
4	1	29223	Cable with socket, 2 m	
5	1	29224	Cable with socket, 5 m	
6	2	6354755		
7	2	30176	Set screw	M12 x 25
8	2	32338	Washer	12 mm

2530L

Internal ref. 70 06 330

An Oshkosh Corportation Company

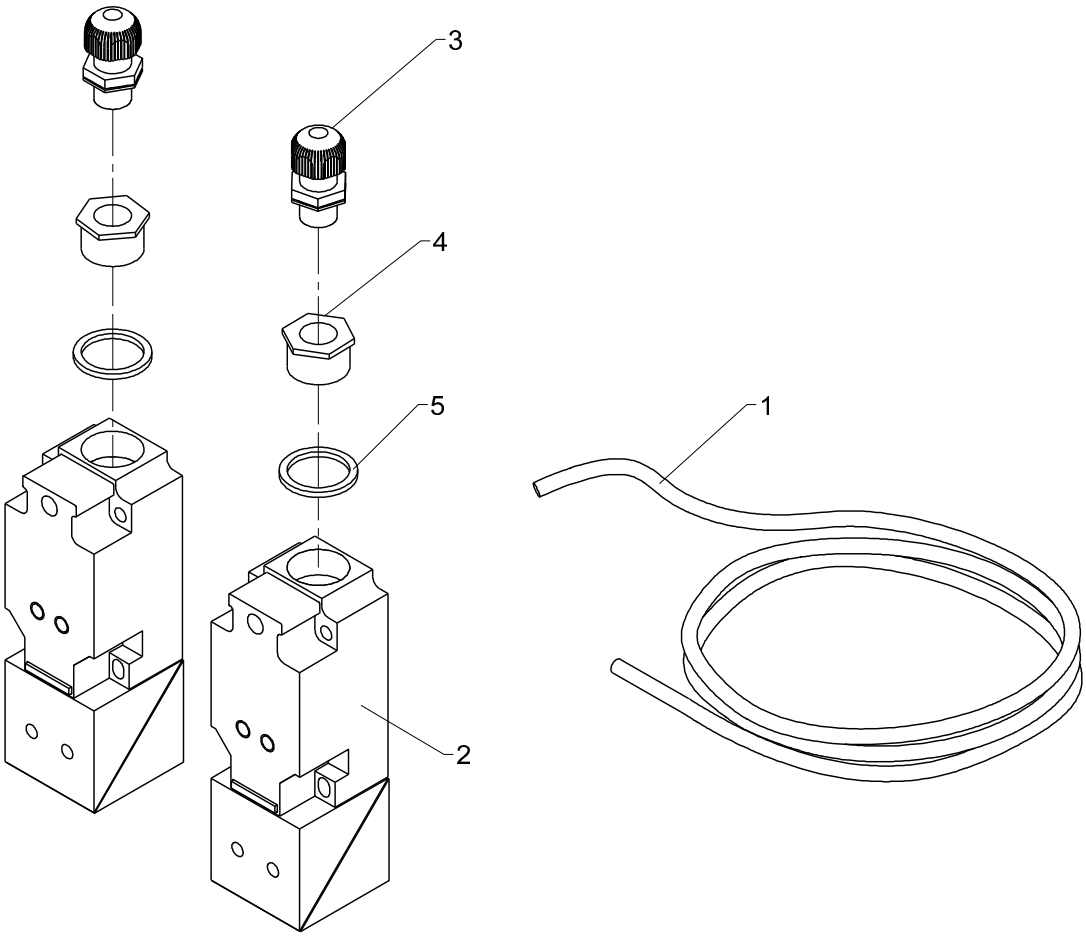

Pos	Qty.	Part no.	Description	Remarks
1	1	28262	Cable 4 x 0.75	8 m
2	2	27598	Proximity switch	
3	2	28459	Connection	
4	2	29200	Socket M12/M20	
5	2	28402	Sealing ring	

2530L

Internal ref. 70 06 190

Obsolete

An Oshkosh Corportation Company

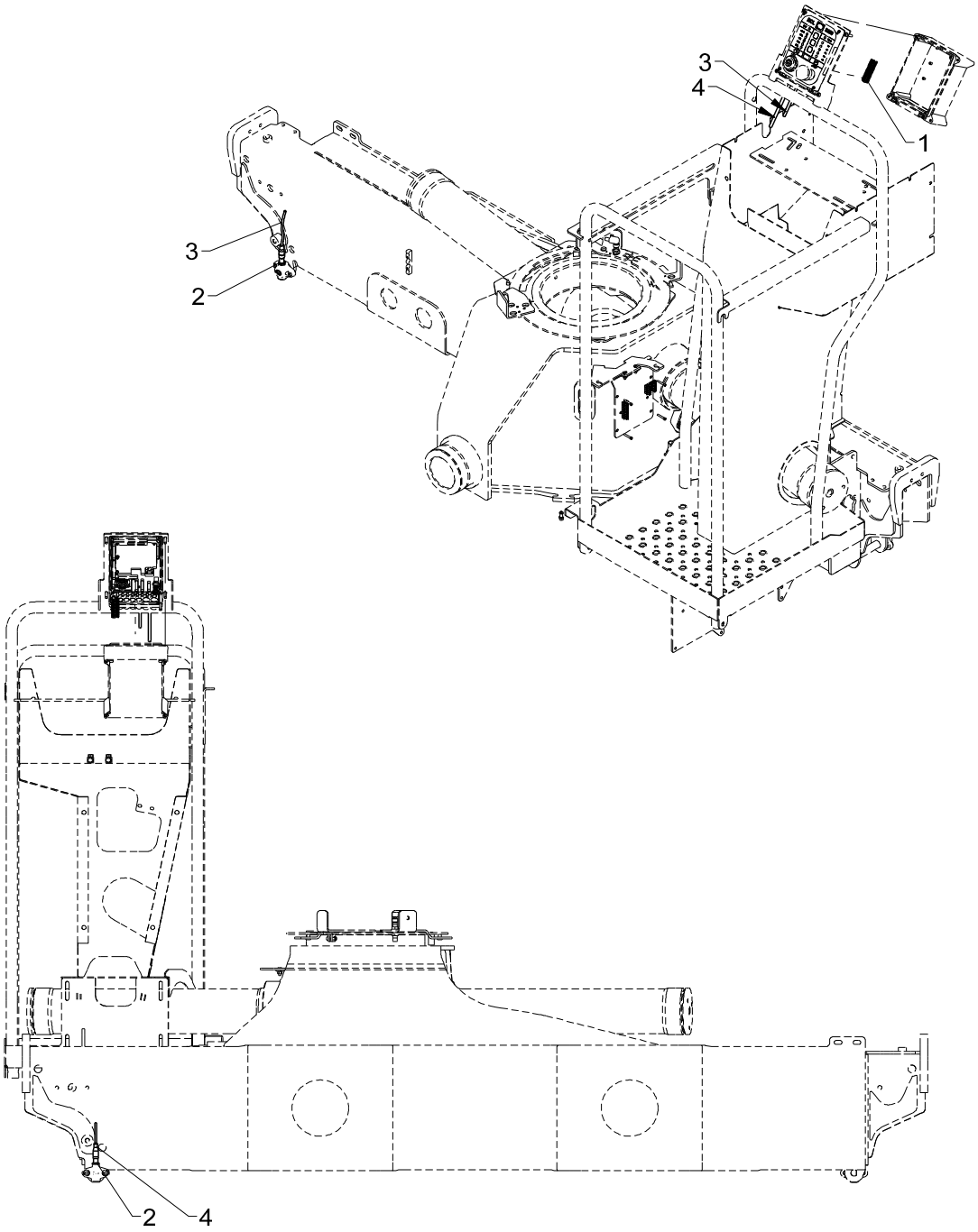

Obsolete

553 20 085

From loader 1270001
To loader

CYL

2530L

Created 09-01-2014
Modified

Pos	Qty.	Part no.	Description	Remarks
1	1	29322	Plug, 12-polar for RCL 53XX	
2	2	29257	Proximity switch M12x44, 4mm	
3	1	29224	Cable with socket, 5 m	
4	1	29223	Cable with socket, 2 m	

2530L

Internal ref. 70 06 190

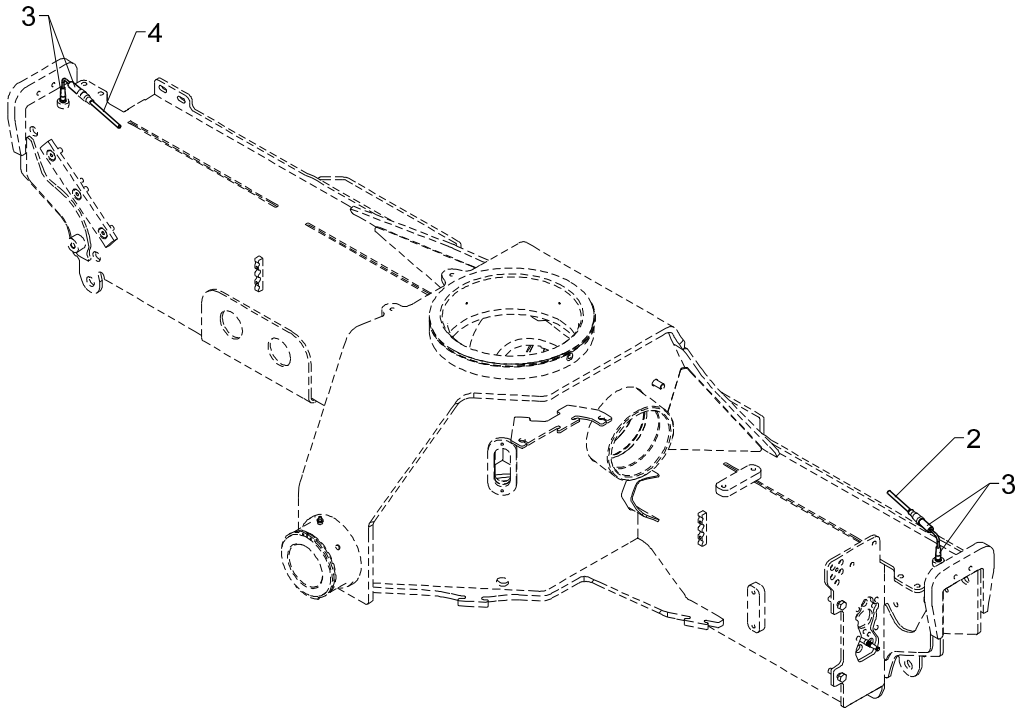

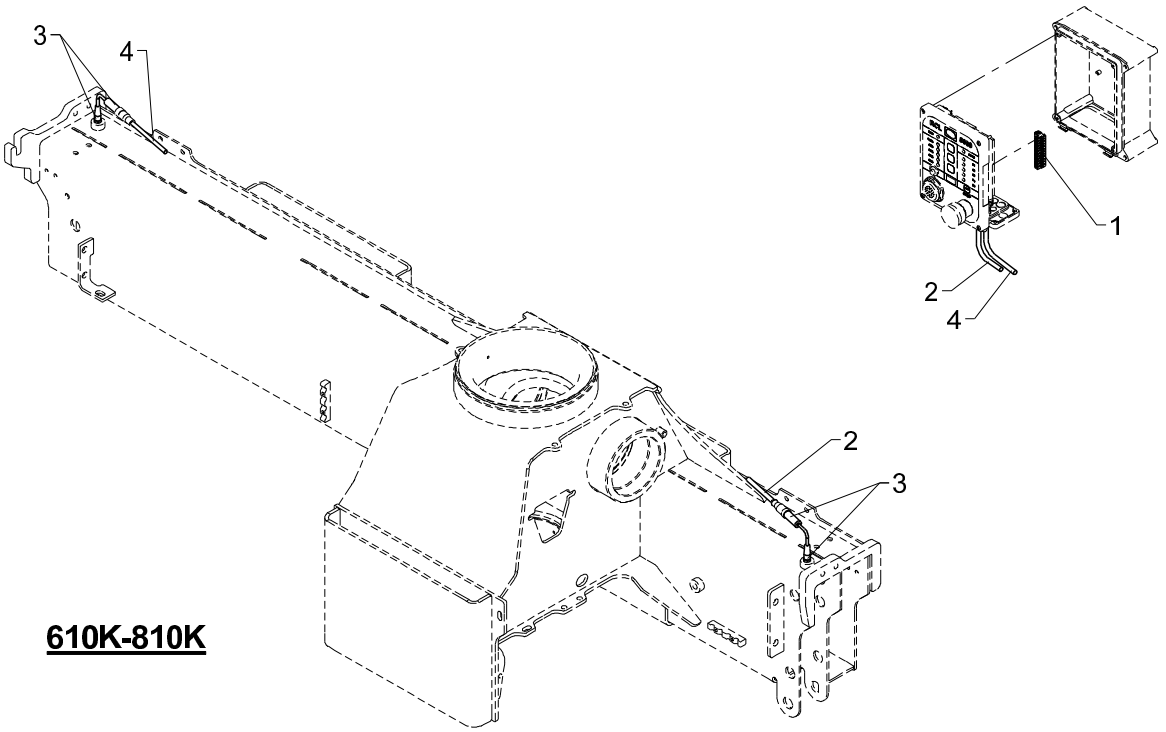

610K-810K

Pos	Qty.	Part no.	Description	Remarks
1	1	29322	Plug, 12-polar for RCL 53XX	
2	1	29223	Cable with socket, 2 m	
3	2	29282	Proximity switch M12-4mm NO	
4	1	29224	Cable with socket, 5 m	

2530L

Internal ref. 70 06 370

Obsolete

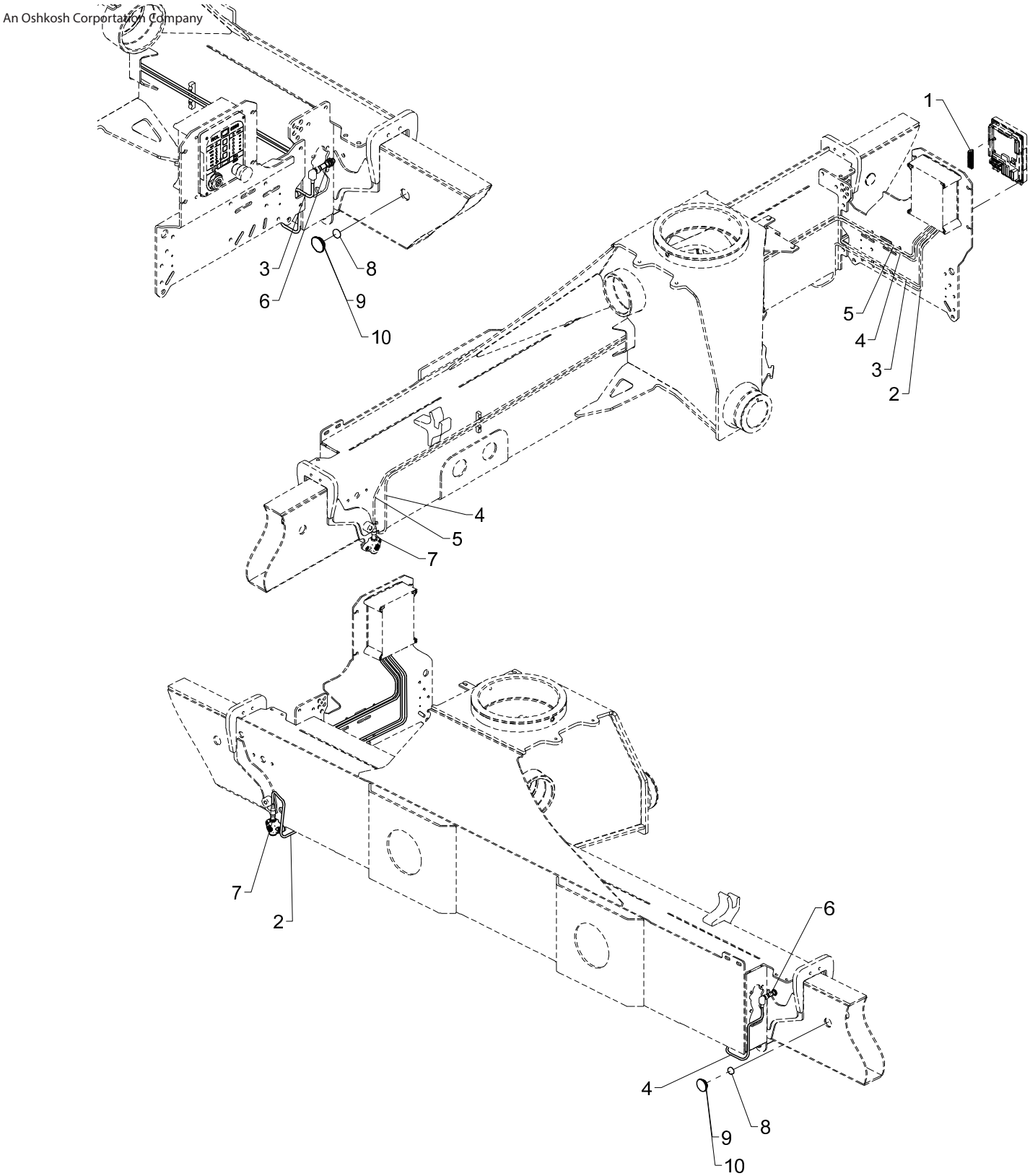

Obsolete

553 20 090

From loader 1270001
To loader

Created 21-02-2013
Modified

CYBEL, single extension

2530L

Pos	Qty.	Part no.	Description	Remarks
1	1	29322	Plug, 12-polar for RCL 53XX	
2	1	29223	Cable with socket, 2 m	1,4
3	1	28117	Cable with plug	
4	1	28077	Cable with plug	3,3
5	1	29224	Cable with socket, 5 m	2,7
6	2	29259	Magnet proximity switch M12	
7	2	29257	Proximity switch M12x44, 4mm	
8	2	29262	Solenoid Ø22x5	
9	2	64424	Slide block	2 mm
10	2	63681	Slide block	3 mm

2530L

Internal ref. 70 06 370

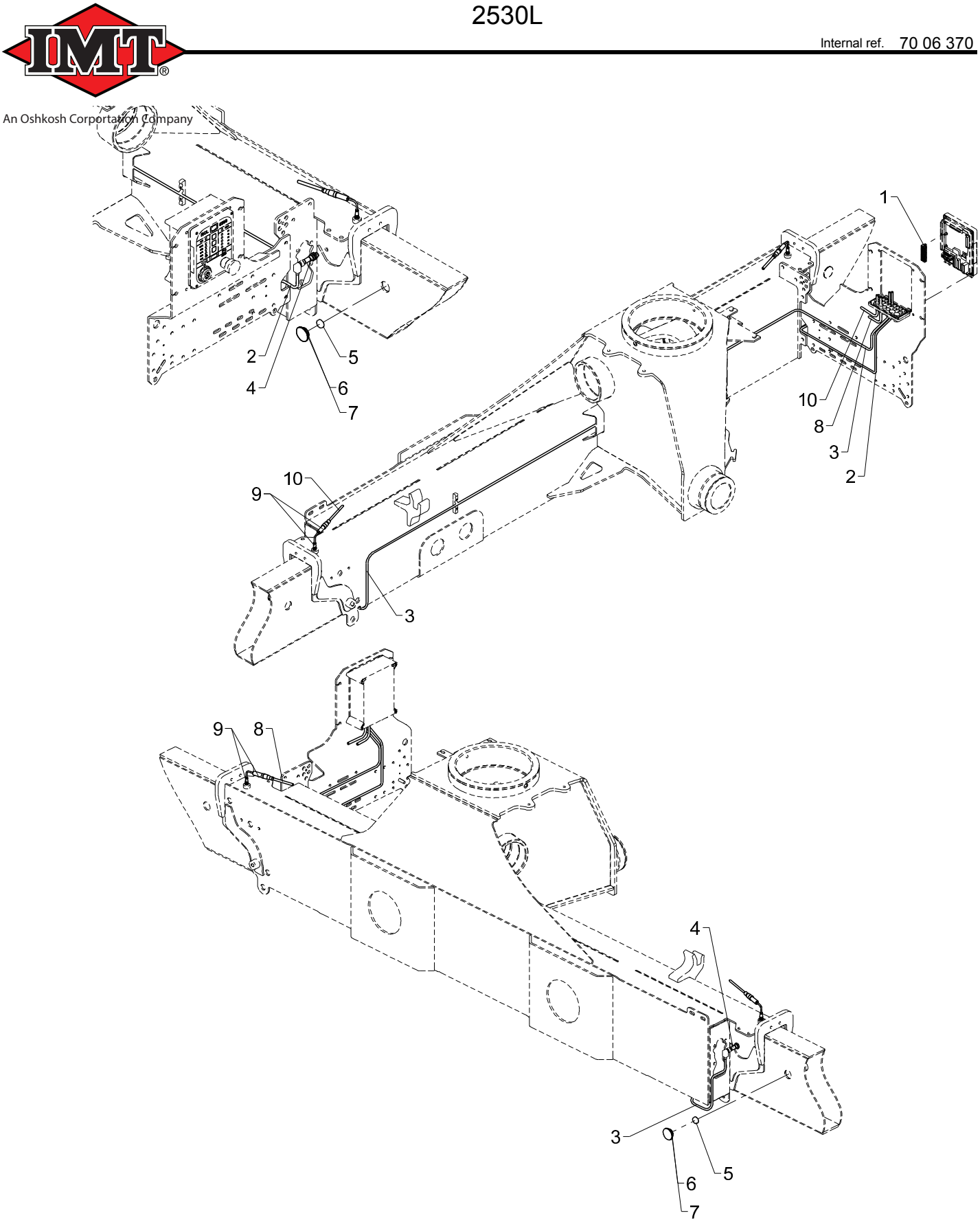

CYBEL, single extension

2530L

Pos	Qty.	Part no.	Description	Remarks
1	1	29322	Plug, 12-polar for RCL 53XX	
2	1	28117	Cable with plug	
3	1	28077	Cable with plug	3,3
4	2	29259	Magnet proximity switch M12	
5	2	29262	Solenoid Ø22x5	
6	2	64424	Slide block	2 mm
7	2	63681	Slide block	3 mm
8	1	29223	Cable with socket, 2 m	
9	2	29282	Proximity switch M12-4mm NO	
10	1	29224	Cable with socket, 5 m	

2530L

Internal ref. 70 06 450

Obsolete

An Oshkosh Corportation Company

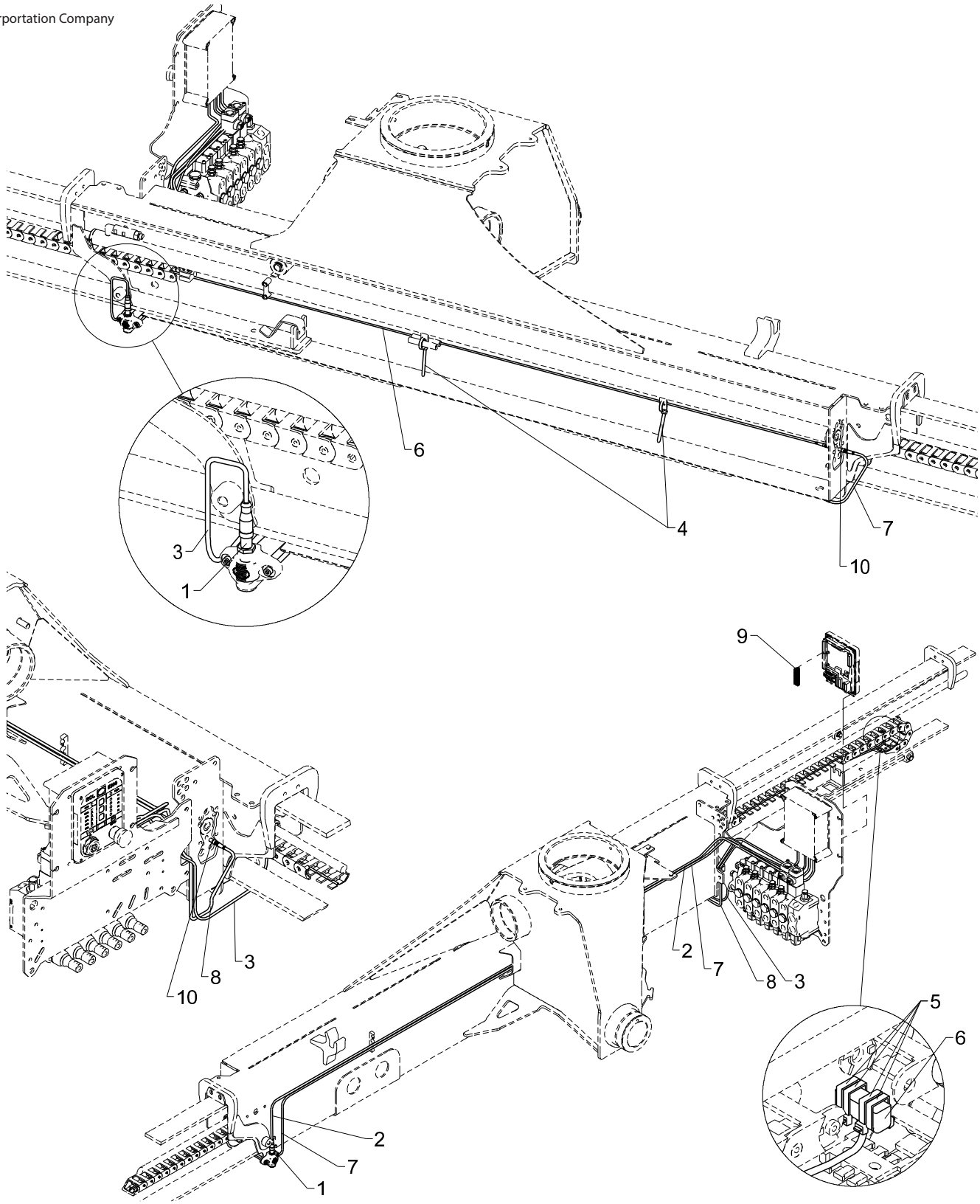

Obsolete

553 20 100

From loader 1270001
To loader

CYBEL double extension

2530L

Created 12-06-2012
Modified 21-02-2013

Pos	Qty.	Part no.	Description	Remarks
1	2	29257	Proximity switch M12x44, 4mm	
2	1	29224	Cable with socket, 5 m	
3	1	29223	Cable with socket, 2 m	
4	4	27275	Cable tie, black, 7.6x385mm	
5	8	27274	Clip	
6	2	29253	Tilt sensor, nylon drag chain	
7	1	29264	Cable 5 m, M8 socket	
8	1	29265	Cable 2 m, M8 socket	
9	1	29322	Plug, 12-polar for RCL 53XX	
10	2	29443	Panel lead-in M8 - 3-polar	

2530L

Internal ref. 70 06 450

An Oshkosh Corportation Company

Position of 29253		
	CYBEL	CYBEL-I
A=4600	- - - - -	15
A=5570	- - - - -	22
A=6450	6	28

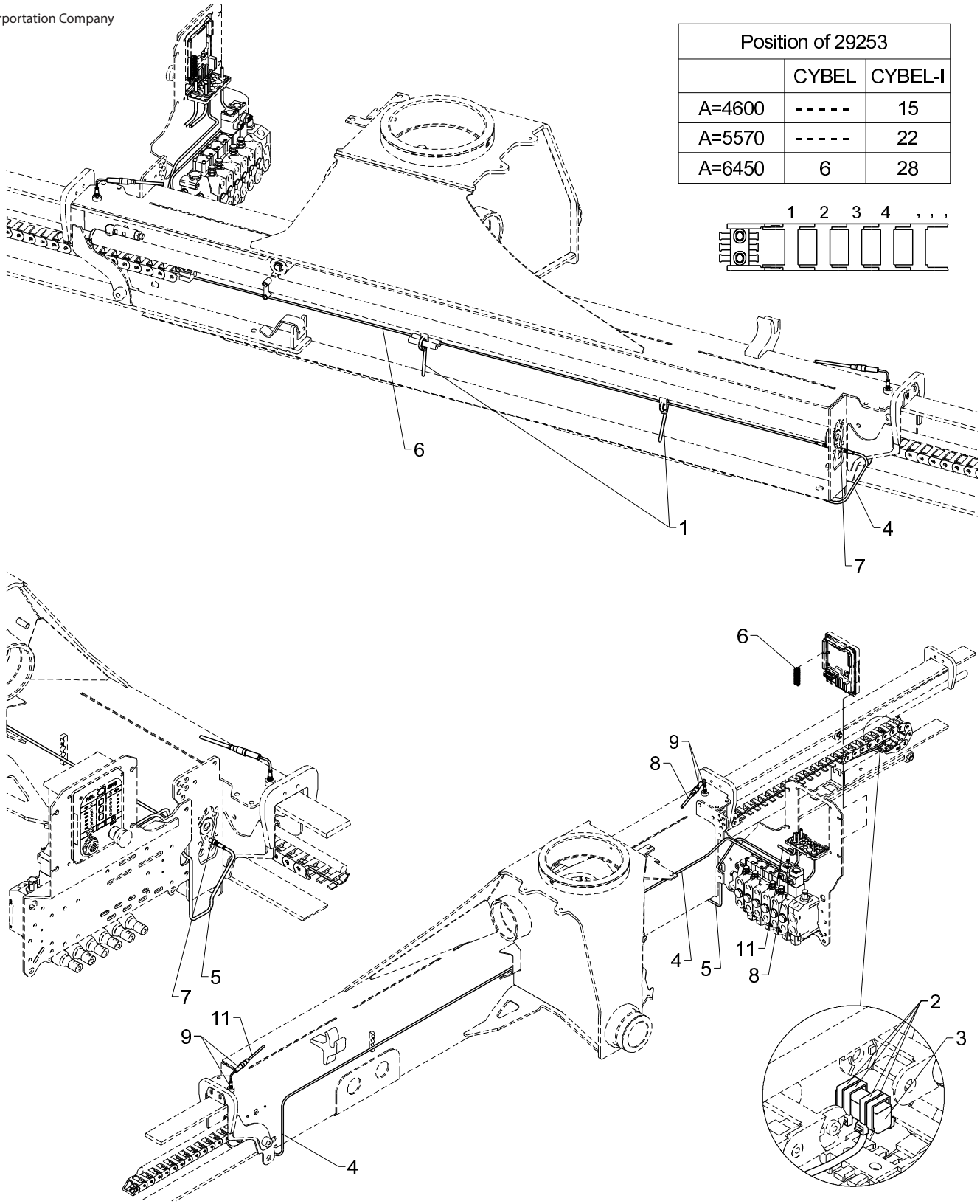

CYBEL double extension

2530L

Pos	Qty.	Part no.	Description	Remarks
1	4	27275	Cable tie, black, 7.6x385mm	
2	8	27274	Clip	
3	2	29253	Tilt sensor, nylon drag chain	
4	1	29264	Cable 5 m, M8 socket	
5	1	29265	Cable 2 m, M8 socket	
6	1	29322	Plug, 12-polar for RCL 53XX	
7	2	29443	Panel lead-in M8 - 3-polar	
8	1	29223	Cable with socket, 2 m	
9	2	29282	Proximity switch M12-4mm NO	
10	1	29223	Cable with socket, 2 m	
11	1	29224	Cable with socket, 5 m	

2530L

Internal ref. 70 08 680

An Oshkosh Corportation Company

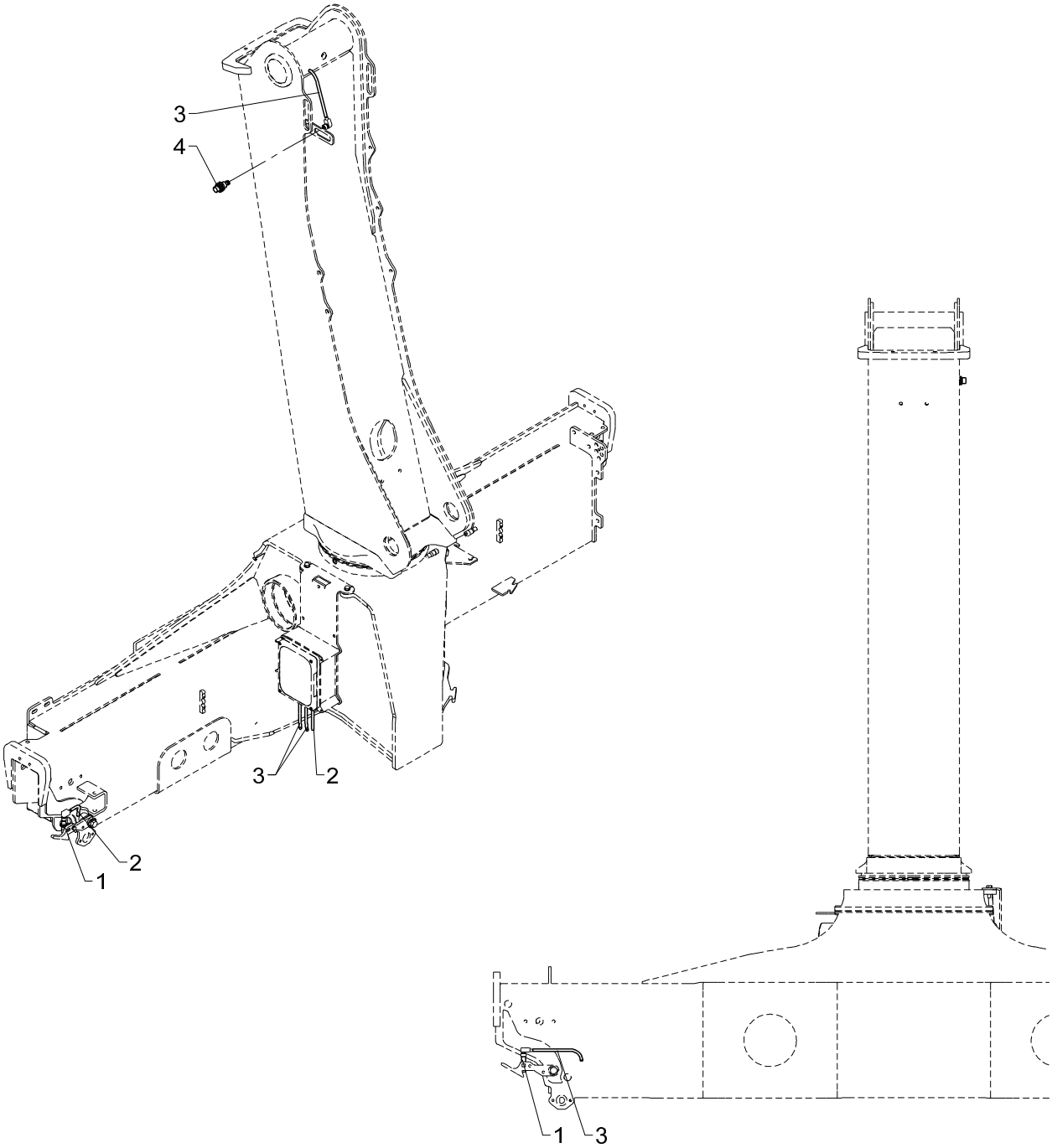

BEHEW

2530L

Pos	Qty.	Part no.	Description	Remarks
1	2	29257	Proximity switch M12x44, 4mm	
2	1	28117	Cable with plug	
3	2	28077	Cable with plug	
4	1	28980	Proximity switch	

2530L

Internal ref. 70 06 260

An Oshkosh Corportation Company

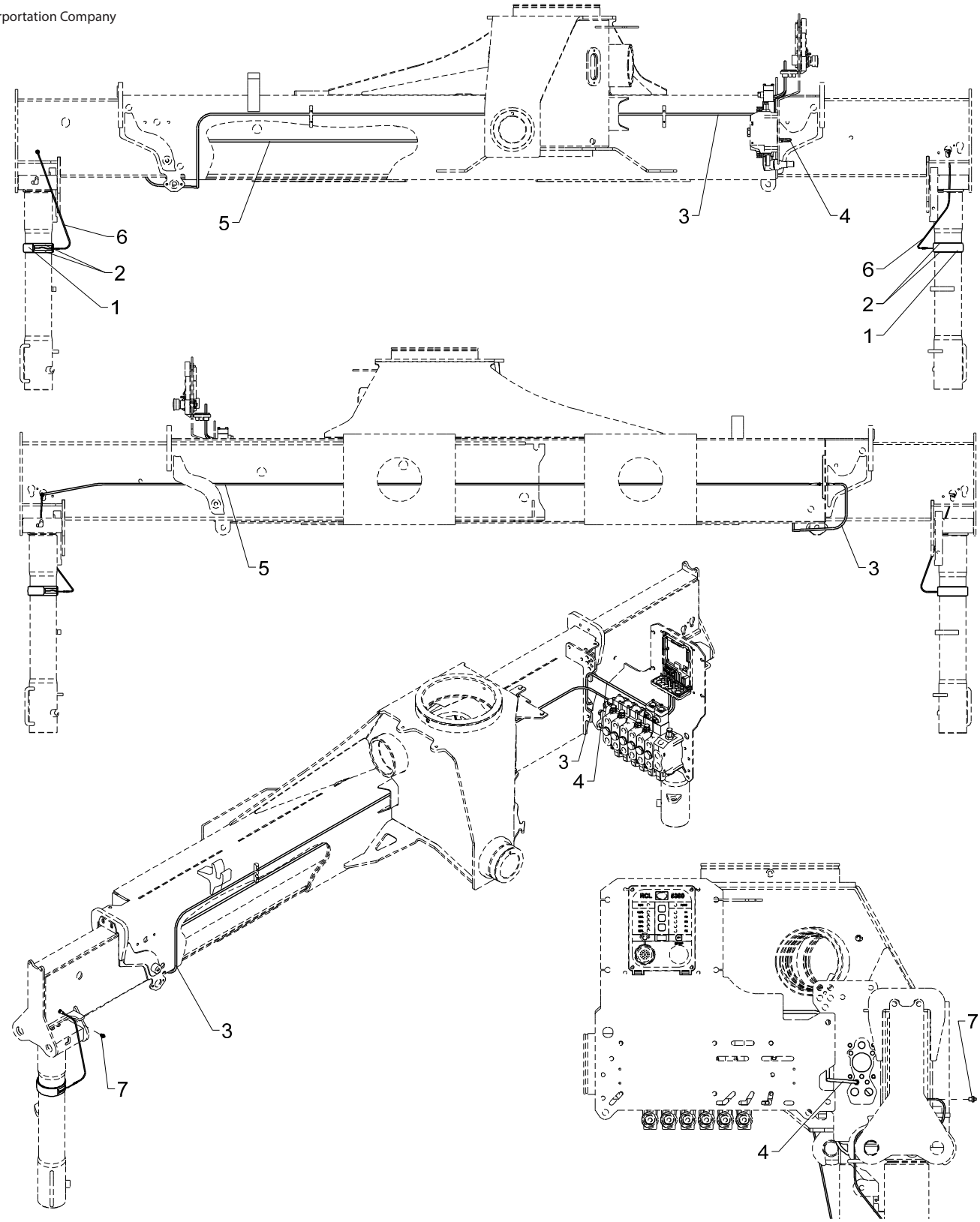

Alarm flash on stabilizer legs

2530L

Pos	Qty.	Part no.	Description	Remarks
1	2	29432	Alarm flash, yellow 24V, 24 cm	
2	4	27275	Cable tie, black, 7.6x385mm	
3	1	29483	Cable M8, 5 m, female, 3 polar	
4	1	29482	Cable M8, 2 m, female, 3 polar	
5	2	29436	Cable M8, socket and plug 6.3m	
6	2	29444	Cable M8 - 3-polar	
7	2	29437	Safety plug M8x1, socket	

2530L

Internal ref. 70 06 590

An Oshkosh Corportation Company

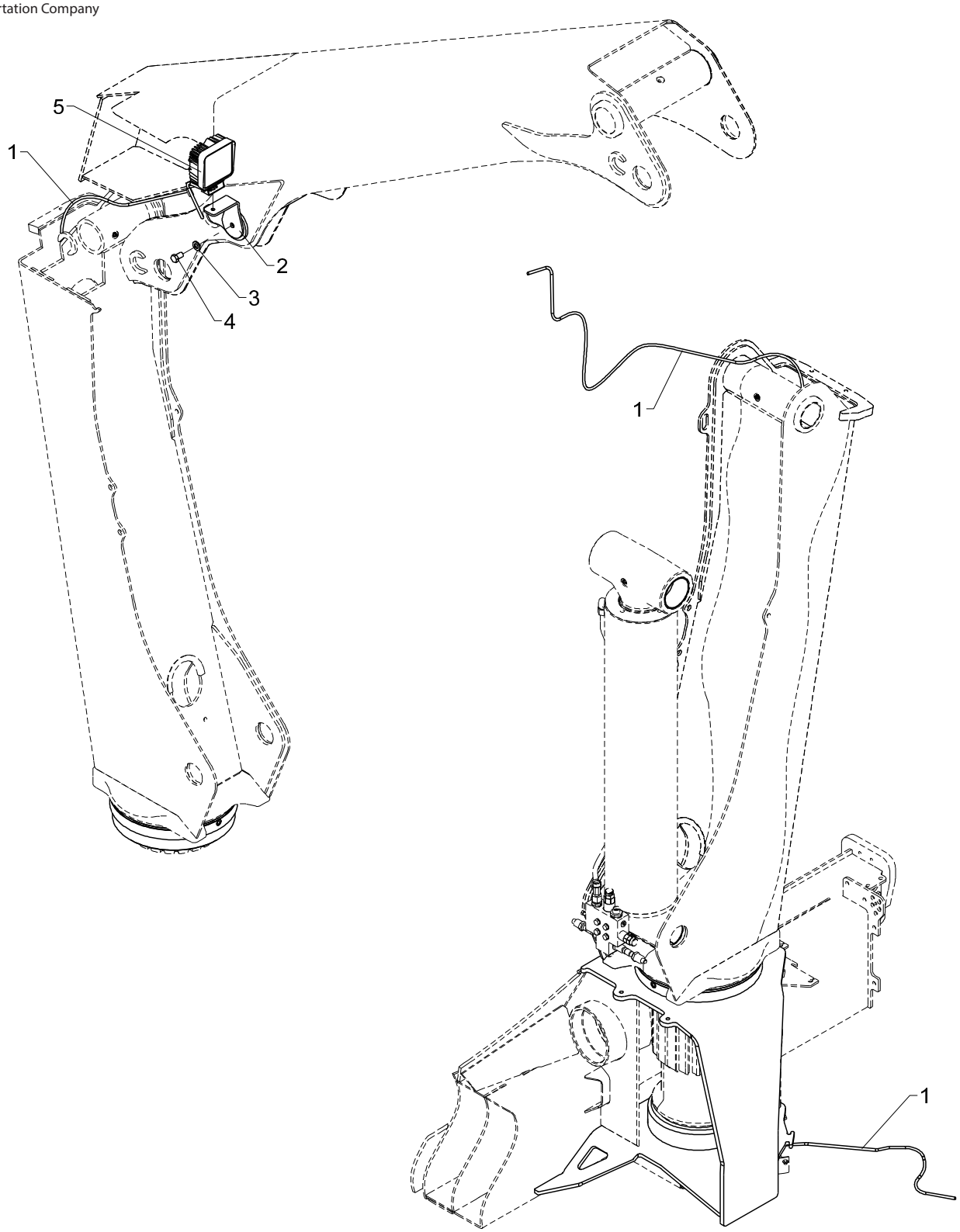

Spotlight, boom

2530L

Pos	Qty.	Part no.	Description	Remarks
1	1	29462	Cable, LED spotlight, 9.0m	
2	1	6340219	Fittings	
3	1	32338	Washer	12 mm
4	1	30175	Set screw	M12 x 20
5	1	29400	Spotlight LED 27 W	

2530L

Internal ref. 70 06 580

An Oshkosh Corportation Company

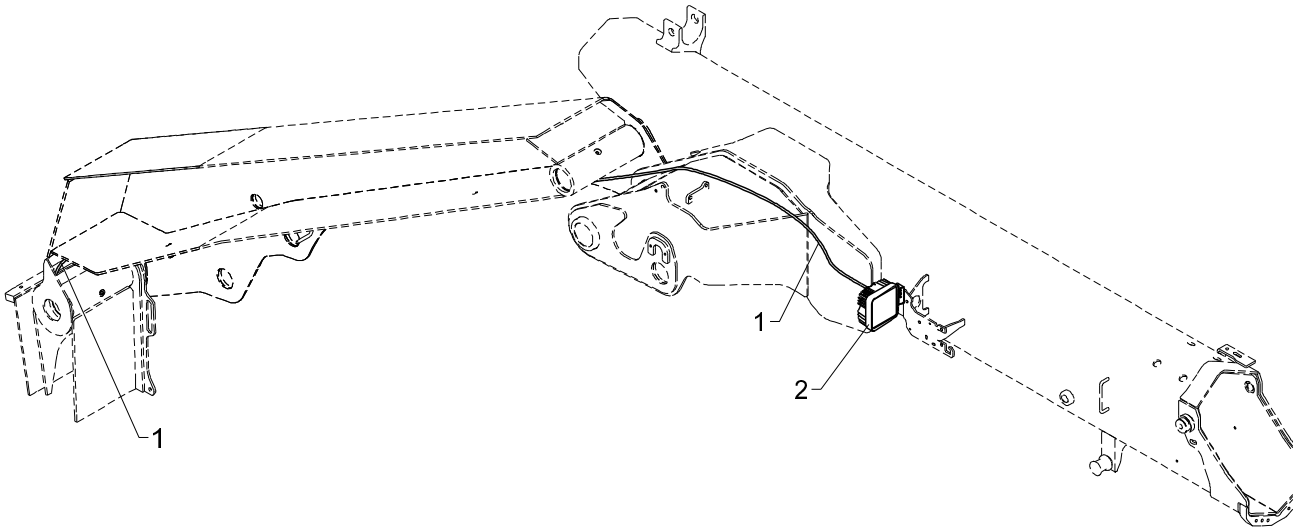

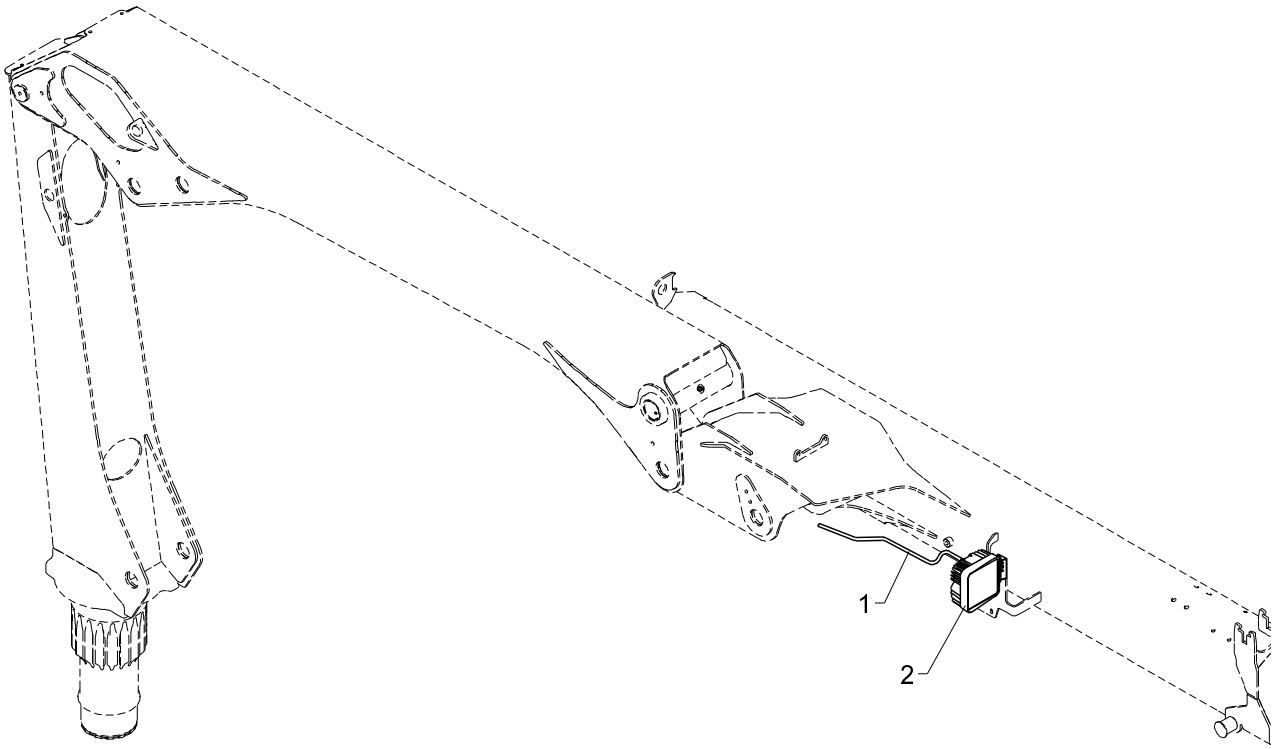

610K, 810K

Spotlight, jib

2530L

Pos	Qty.	Part no.	Description	Remarks
1	1	29462	Cable, LED spotlight, 9.0m	
2	1	29400	Spotlight LED 27 W	

2530L

Internal ref. 70 03 300

An Oshkosh Corportation Company

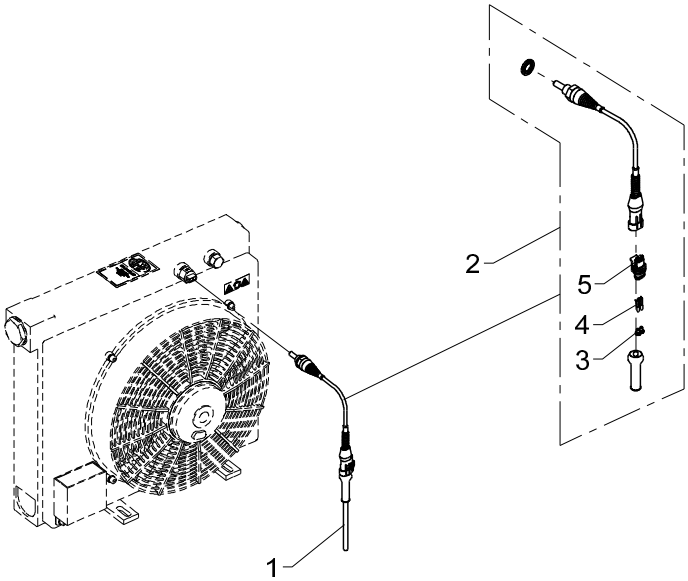

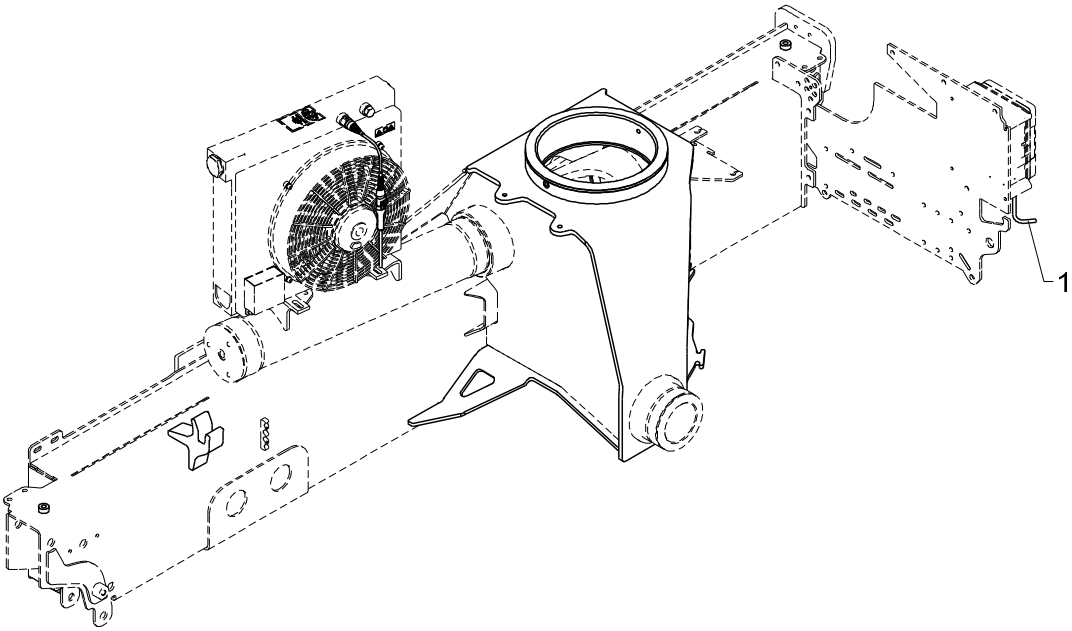

Temperature monitoring for oil cooler
2530L

Pos	Qty.	Part no.	Description	Remarks
1	1	28249	Cable 2 x 0.75	3 m
2	1	49652	Thermostat for RCL5300	
3	2	29159	Cable lead-in, AMP	
4	2	28844	Socket, AMP	
5	1	28843	Bipolar socket, AMP	

2110L, 2530L

2530L

Internal ref. 70 07 330

An Oshkosh Corportation Company

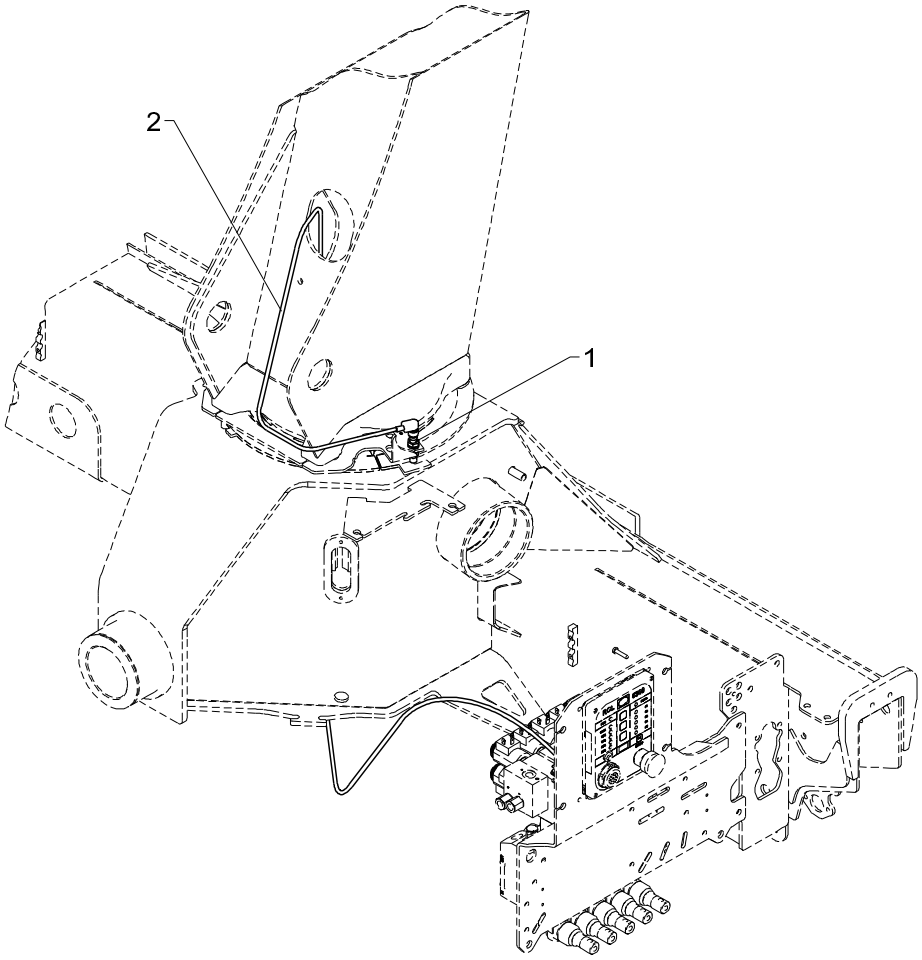

CBS - Calibrate Bypass Sensor

2530L

Pos	Qty.	Part no.	Description	Remarks
1	1	29447	Proximity switchM12 8mm PNP-NO	
2	1	28077	Cable with plug	2,7 m

2530L

63 53 200
Internal ref. 63 53 210

An Oshkosh Corportation Company

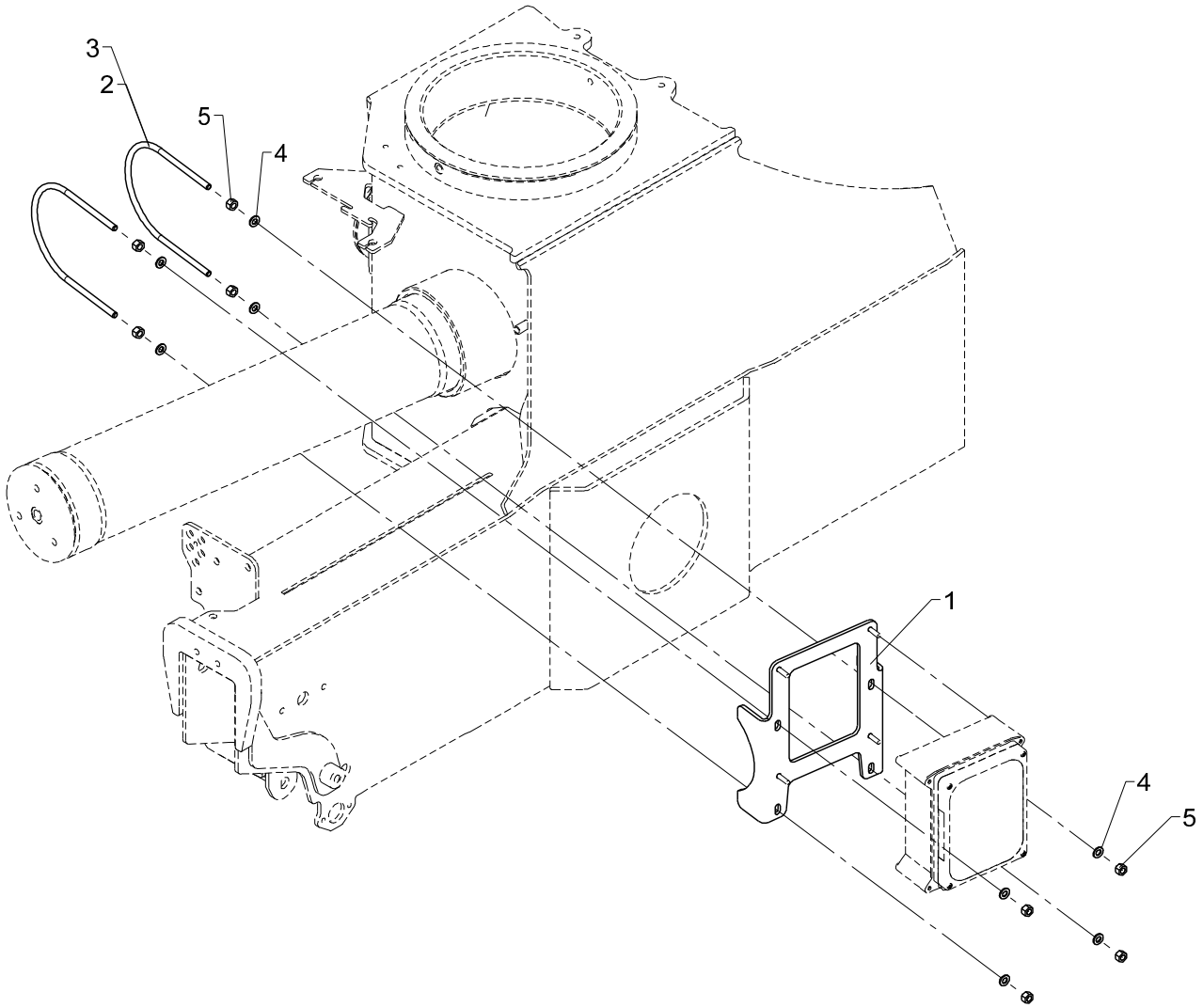

Mounting fittings for junction box

2530L

Pos	Qty.	Part no.	Description	Remarks
1	1	6353267	Bracket for connection box	
2	2	6344458	Clamp	1800K,2200K,1710L,2110L,1910T,
3	2	6340458	Clamp	1300K,2200K,1210L,1510L,1410T
4	8	31147	Face washer, 8 mm	
5	8	30886	Lock nut, stainless	M8

2530L

Internal ref. 70 04 210

An Oshkosh Corportation Company

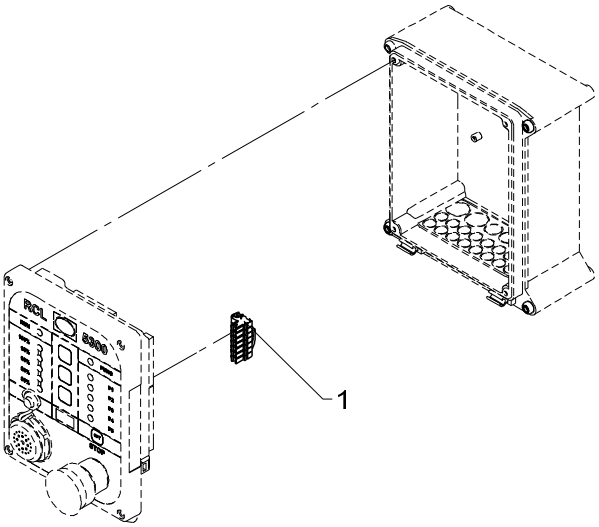

553 20 340

From loader 1270001
To loader

CAN termination, RCL53xx

2530L

Created 15-01-2013
Modified

Pos	Qty.	Part no.	Description	Remarks
1	1	29340	CAN termination/RCL53xx	

2530L

Internal ref. 70 07 990

An Oshkosh Corportation Company

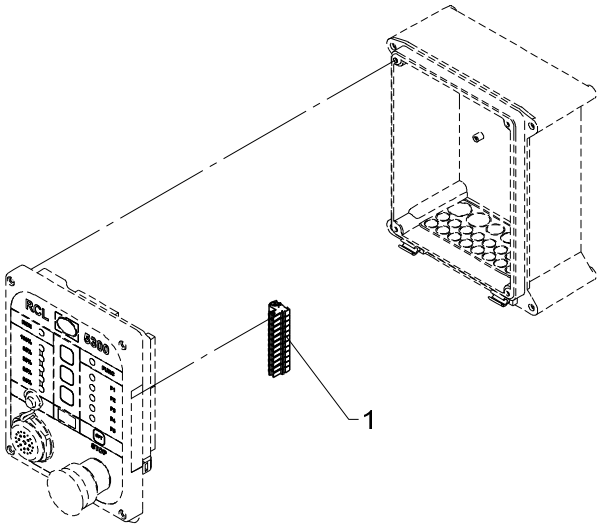

PAS

2530L

Pos	Qty.	Part no.	Description	Remarks
1	1	29322	Plug, 12-polar for RCL 53XX	

2530L

Internal ref. 70 03 060

An Oshkosh Corportation Company

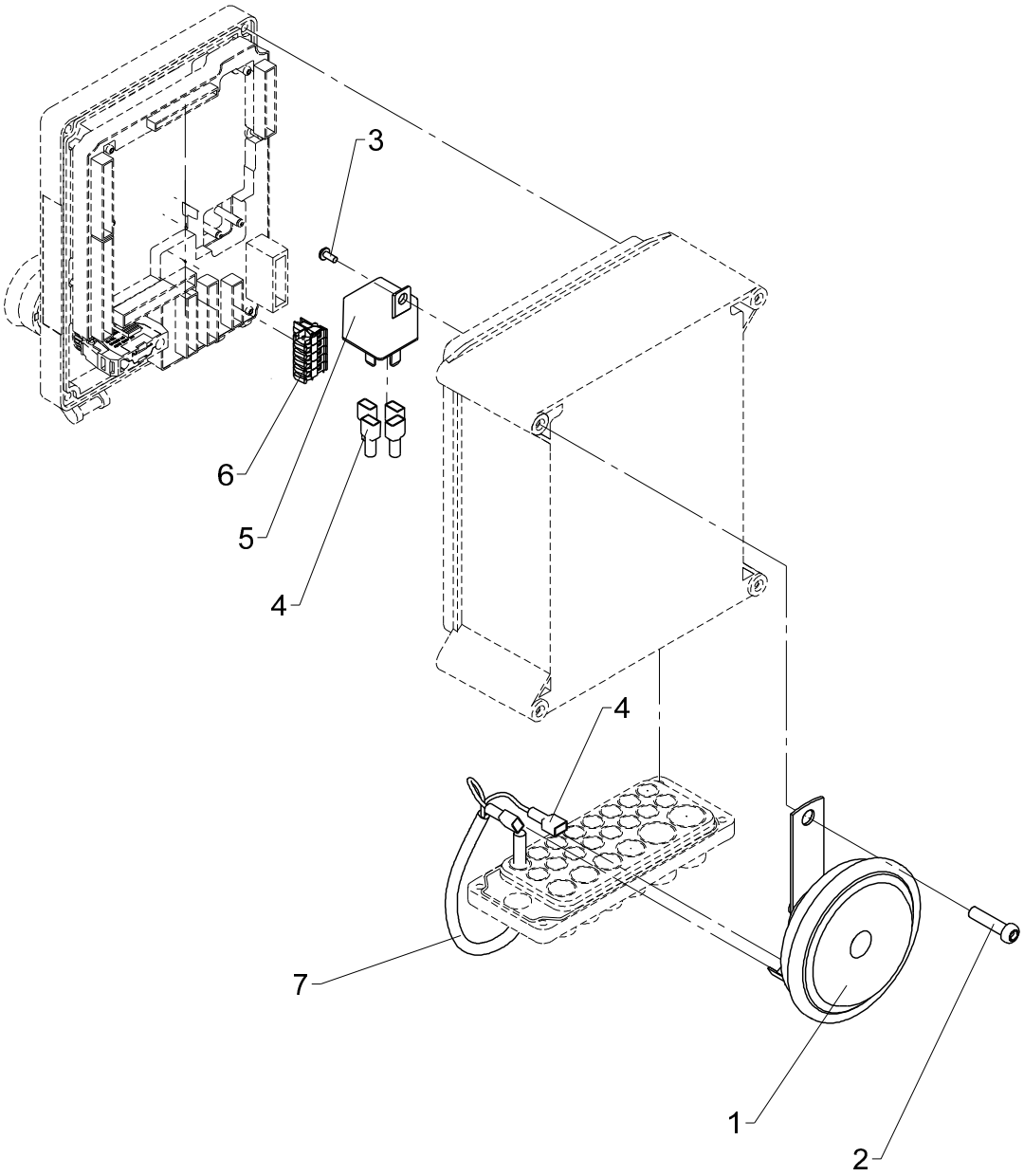

Horn, no RC

2530L

Pos	Qty.	Part no.	Description	Remarks
1	1	28971	Horn, 24 V, 2.5 Amp.	
2	1	30340	Screw, stainless	6,0 x 25
3	1	30361	Screw, stainless	3,0 x 8
4	6	27429	Clamp	
5	1	27342	Relay, 24V	
6	1	29317	Plug, 5-polar for RCL 53XX	
7	1	28249	Cable 2 x 0.75	0,8 m

2530L

70 07 930
70 07 940
Internal ref. 70 08 420

An Oshkosh Corportation Company

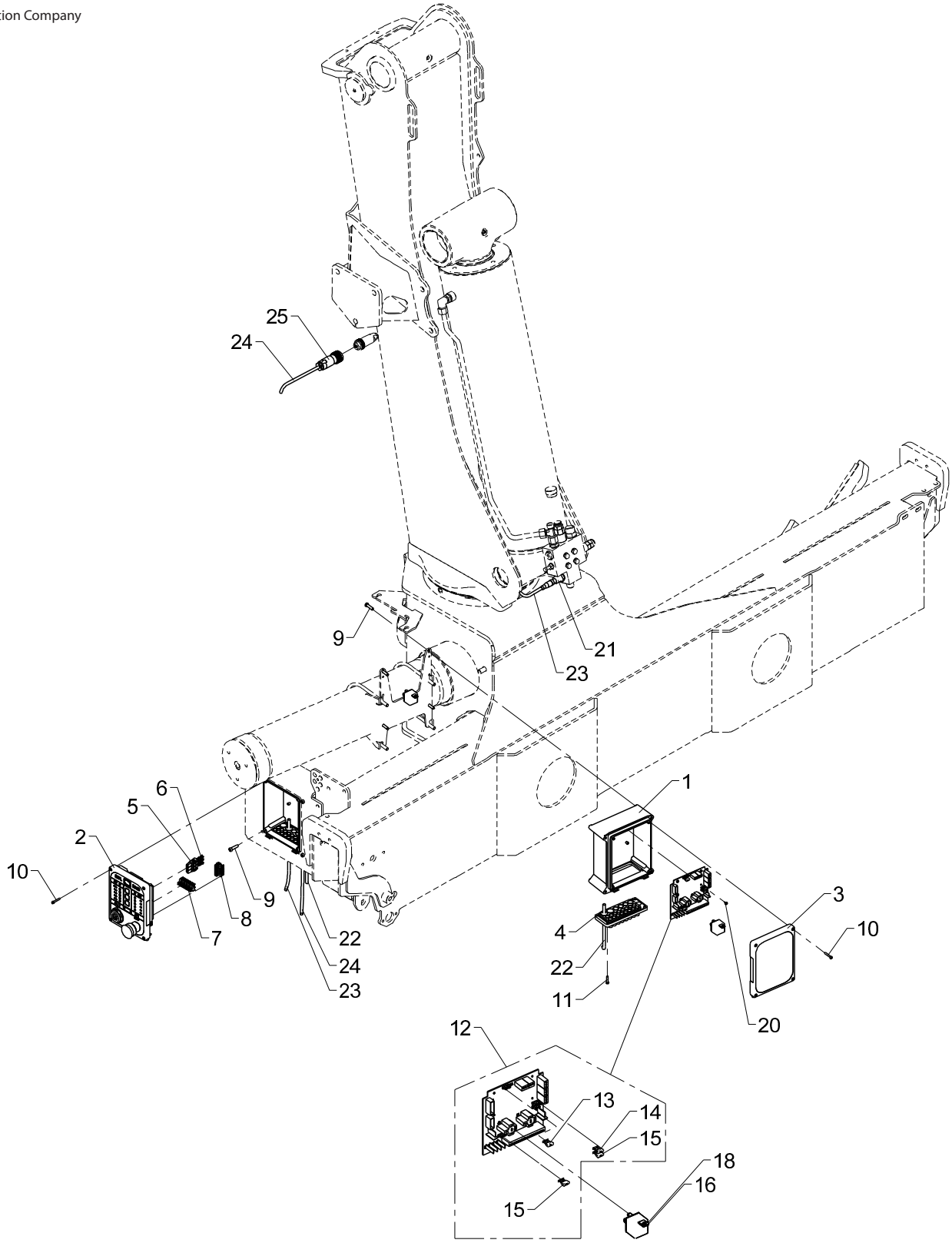

Electronic parts, TS, base

2530L

Pos	Qty.	Part no.	Description	Remarks
		7008420	Basic electronic parts,TS base	
		7007940	Relay, 24 V	
		7007930	Relay, 12 V	
1	2	29304	Bottom f. RCL-box incl. hinge	
2	1	29301	Front complete, RCL 5300	
3	1	29347	RCL 5300 indicator panel	
4	2	29307	Cable lead-in	
5	1	29315	Plug, 3-polar for RCL 53XX	
6	3	29316	Pin	
7	1	29321	Plug, 10-polar for RCL 53XX	
8	1	29318	Plug, 7-polar for RCL 53XX	
9	8	30340	Screw, stainless	6,0 x 25
10	8	30347	Screw, stainless	4,0 x 25
11	8	30346	Screw, stainless	4,0 x 20
12	1	29473	EJB5380	
13	1	29369	Fuse 2A MINI	
14	1	29370	Fuse 15A MINI	
15	2	27822	Fuse 10A MINI	
16	1	7007940	Relay, 24 V	
17	1	27342	Relay, 24V	
18	1	7007930	Relay, 12 V	
19	1	27340	Relay, 12 V	
20	6	30361	Screw, stainless	3,0 x 8
21	1	28850	Pressure transducer	
22	1	28278	Cable 4 x 2.5	2 m
23	1	29224	Cable with socket, 5 m	
24	1	28263	CAN BUS cable	5 m
25	1	29275	Cable socket 7-polar 10 A	

2530L

Internal ref. 70 08 430

An Oshkosh Corportation Company

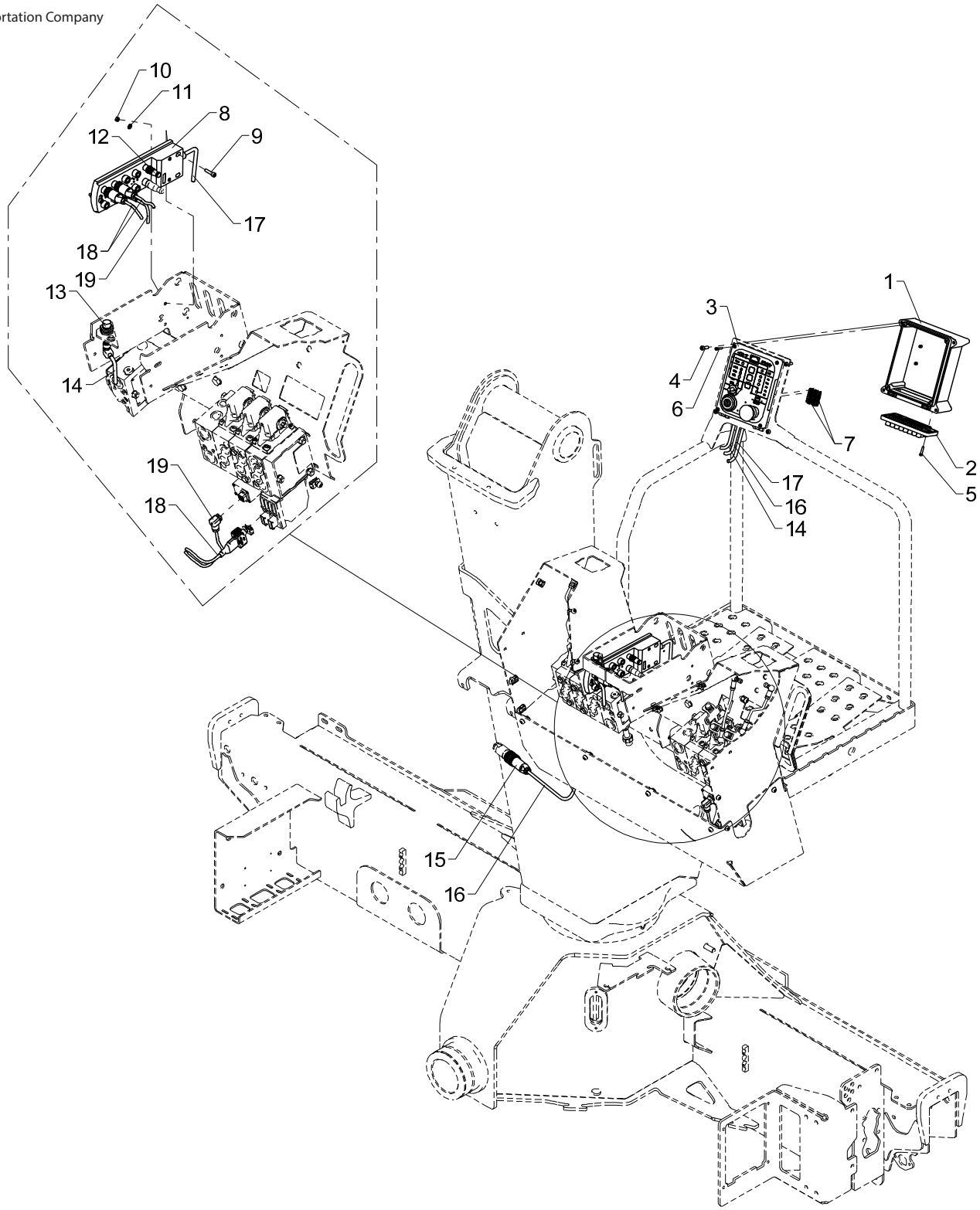

Electronic parts, TS, Danfoss

2530L

Pos	Qty.	Part no.	Description	Remarks
1	1	29304	Bottom f. RCL-box incl. hinge	
2	1	29307	Cable lead-in	
3	1	29303	Front complete, ECT5320	
4	4	30340	Screw, stainless	6,0 x 25
5	4	30346	Screw, stainless	4,0 x 20
6	4	30347	Screw, stainless	4,0 x 25
7	2	29318	Plug, 7-polar for RCL 53XX	
8	1	29470	IO module CR2033	
9	3	30425	Screw	MC5 x 30
10	3	30853	Nut, stainless	M5
11	3	32308	Washer	5 mm
12	1	29486	Plug M12, termination	
13	1	28980	Proximity switch	
14	1	28077	Cable with plug	
15	1	29285	Cable plug, 7-polar, 10 A	
16	1	28263	CAN BUS cable	3 m
17	1	28263	CAN BUS cable	2,5 m
18	1	29388	Cable PVED - 2 x M12	
19	1	29386	Cable M12 spool sensor 0,7m	

2530L

70 08 490
Internal ref. 70 08 510

Obsolete

An Oshkosh Corportation Company

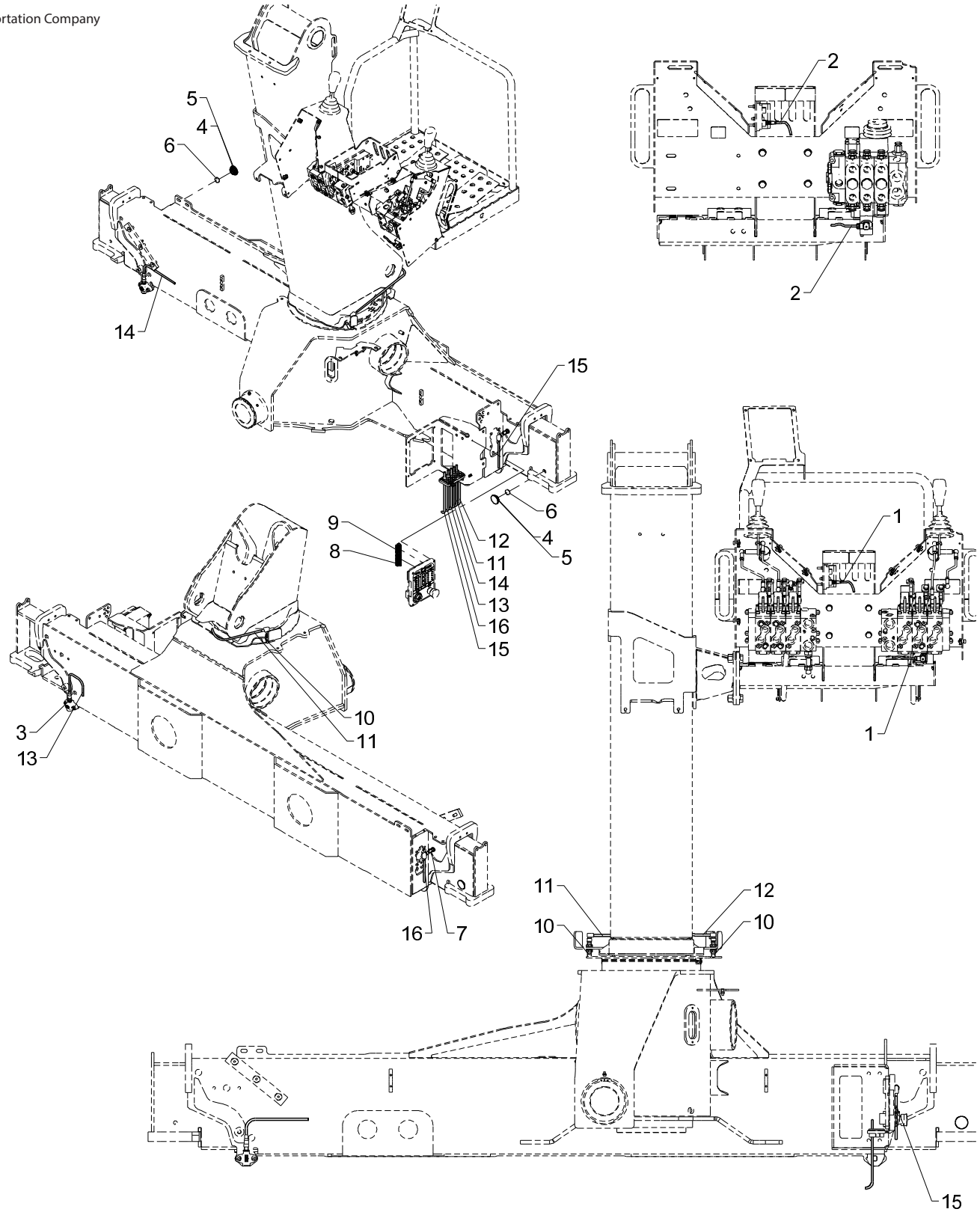

Obsolete

553 21 770

From loader 1270001
To loader

2CYBEL, single extension, TS

2530L

Created 19-02-2014
Modified 26-01-2016

Pos	Qty.	Part no.	Description	Remarks
		7008510	2CYBEL, beam, single ext., TS	
		7008490	2CYBEL, beam, single ext., TS	
1	1	29386	Cable M12 spool sensor 0,7m	70 08 490 (Danfoss)
2	1	29568	Cable M12, spool sensor 0.7 m	70 08 500 (hydroconntrol)
3	2	29257	Proximity switch M12x44, 4mm	
4	2	64424	Slide block	2 mm
5	2	63681	Slide block	3 mm
6	2	29262	Solenoid Ø22x5	
7	2	29259	Magnet proximity switch M12	
8	1	29322	Plug, 12-polar for RCL 53XX	
9	1	29320	Plug, 9-polar for RCL 53XX	
10	2	29447	Proximity switchM12 8mm PNP-NO	
11	1	28077	Cable with plug	
12	1	28077	Cable with plug	
13	1	29223	Cable with socket, 2 m	
14	1	29224	Cable with socket, 5 m	
15	1	28117	Cable with plug	
16	1	28077	Cable with plug	

2530L

70 08 490
70 08 500
Internal ref. 70 08 510

An Oshkosh Corportation Company

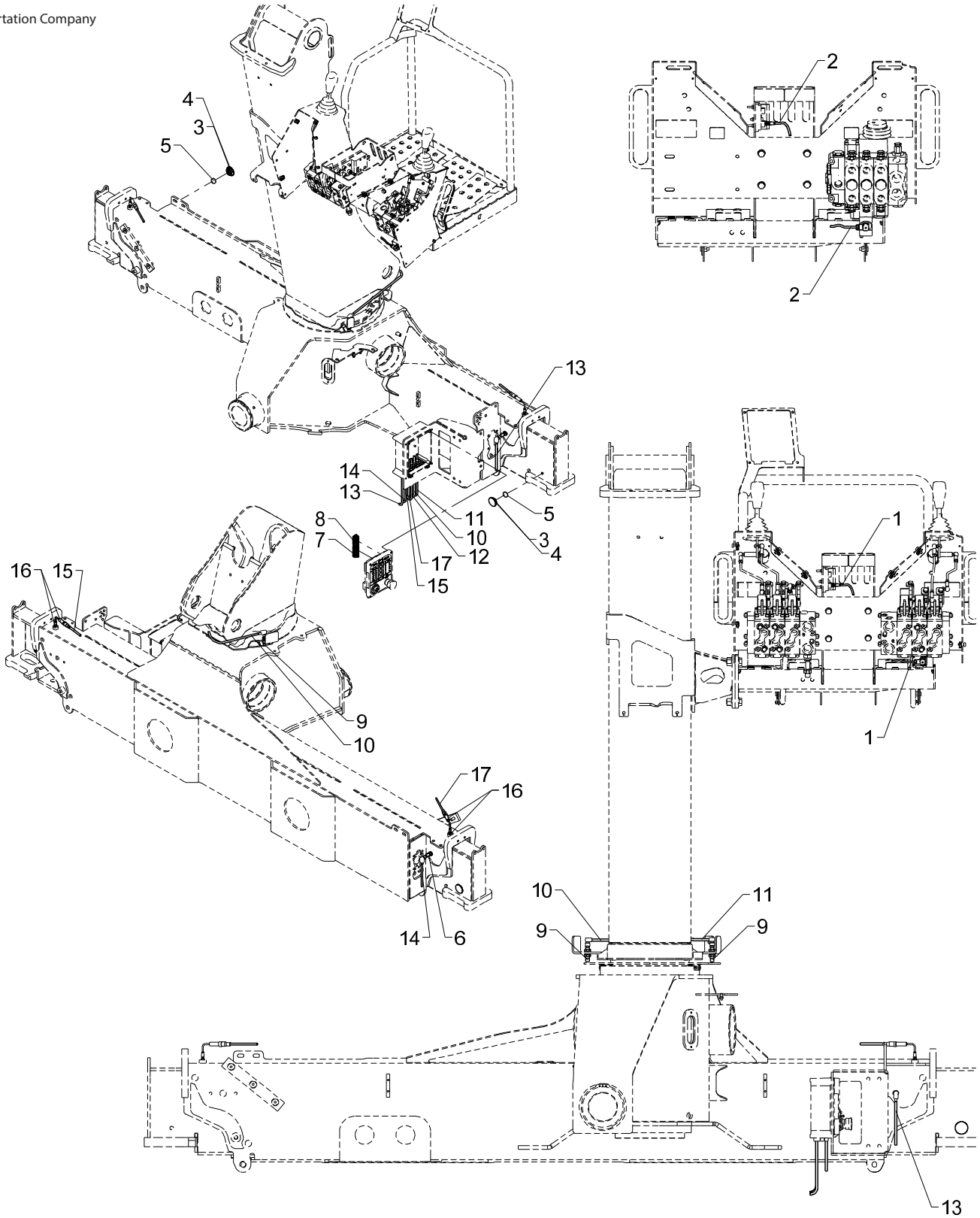

2CYBEL, single extension, TS

2530L

Pos	Qty.	Part no.	Description	Remarks
		7008510	2CYBEL, beam, single ext., TS	
		7008500		
		7008490	2CYBEL, beam, single ext., TS	
1	1	29386	Cable M12 spool sensor 0,7m	70 08 490 (Danfoss)
2	1	29568	Cable M12, spool sensor 0.7 m	70 08 500 (hydroconntrol)
3	2	64424	Slide block	2 mm
4	2	63681	Slide block	3 mm
5	2	29262	Solenoid Ø22x5	
6	2	29259	Magnet proximity switch M12	
7	1	29322	Plug, 12-polar for RCL 53XX	
8	1	29320	Plug, 9-polar for RCL 53XX	
9	2	29447	Proximity switchM12 8mm PNP-NO	
10	1	28077	Cable with plug	
11	1	28077	Cable with plug	
12	1	29224	Cable with socket, 5 m	
13	1	28117	Cable with plug	
14	1	28077	Cable with plug	
15	1	29223	Cable with socket, 2 m	
16	2	29282	Proximity switch M12-4mm NO	
17	1	29224	Cable with socket, 5 m	

2530L

70 08 520
Internal ref. 70 08 540

Obsolete

An Oshkosh Corportation Company

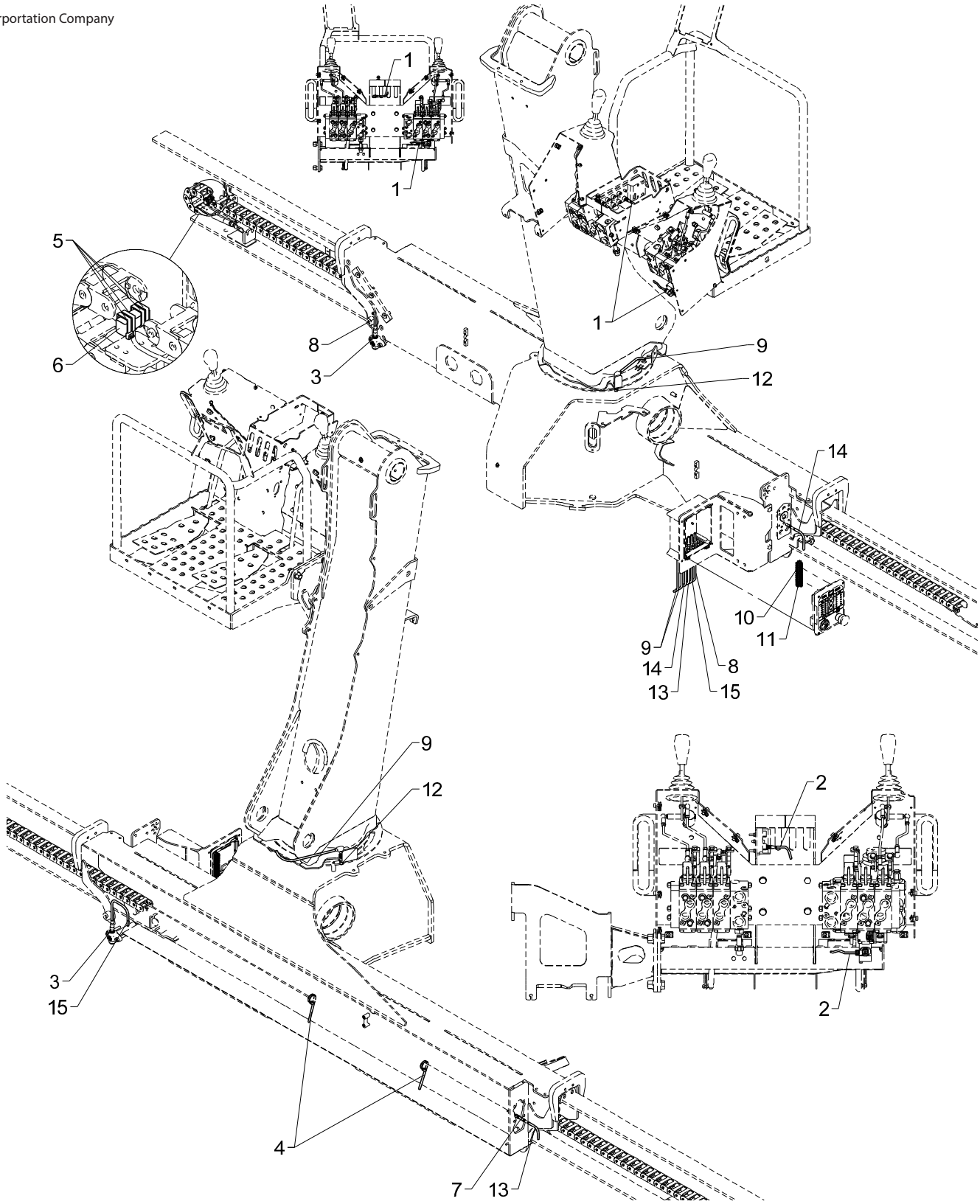

Obsolete

553 21 780

From loader 1270001
To loader

2CYBEL, double extension, TS

2530L

Created 19-02-2014
Modified 26-01-2016

Pos	Qty.	Part no.	Description	Remarks
		7008540	2CYBEL, beam, double ext., TS	
		7008520	2CYBEL, beam, double ext., TS	
1	1	29386	Cable M12 spool sensor 0,7m	70 08 520 (Danfoss)
2	1	29568	Cable M12, spool sensor 0.7 m	70 08 530 (hydroconntrol)
3	2	29257	Proximity switch M12x44, 4mm	
4	4	27275	Cable tie, black, 7.6x385mm	
5	8	27274	Clip	
6	2	29253	Tilt sensor, nylon drag chain	
7	2	29443	Panel lead-in M8 - 3-polar	
8	1	29224	Cable with socket, 5 m	
9	2	28077	Cable with plug	
10	1	29320	Plug, 9-polar for RCL 53XX	
11	1	29322	Plug, 12-polar for RCL 53XX	
12	2	29447	Proximity switchM12 8mm PNP-NO	
13	1	29264	Cable 5 m, M8 socket	
14	1	29265	Cable 2 m, M8 socket	
15	1	29223	Cable with socket, 2 m	

2530L

70 08 530
70 08 520
Internal ref. 70 08 540

An Oshkosh Corportation Company

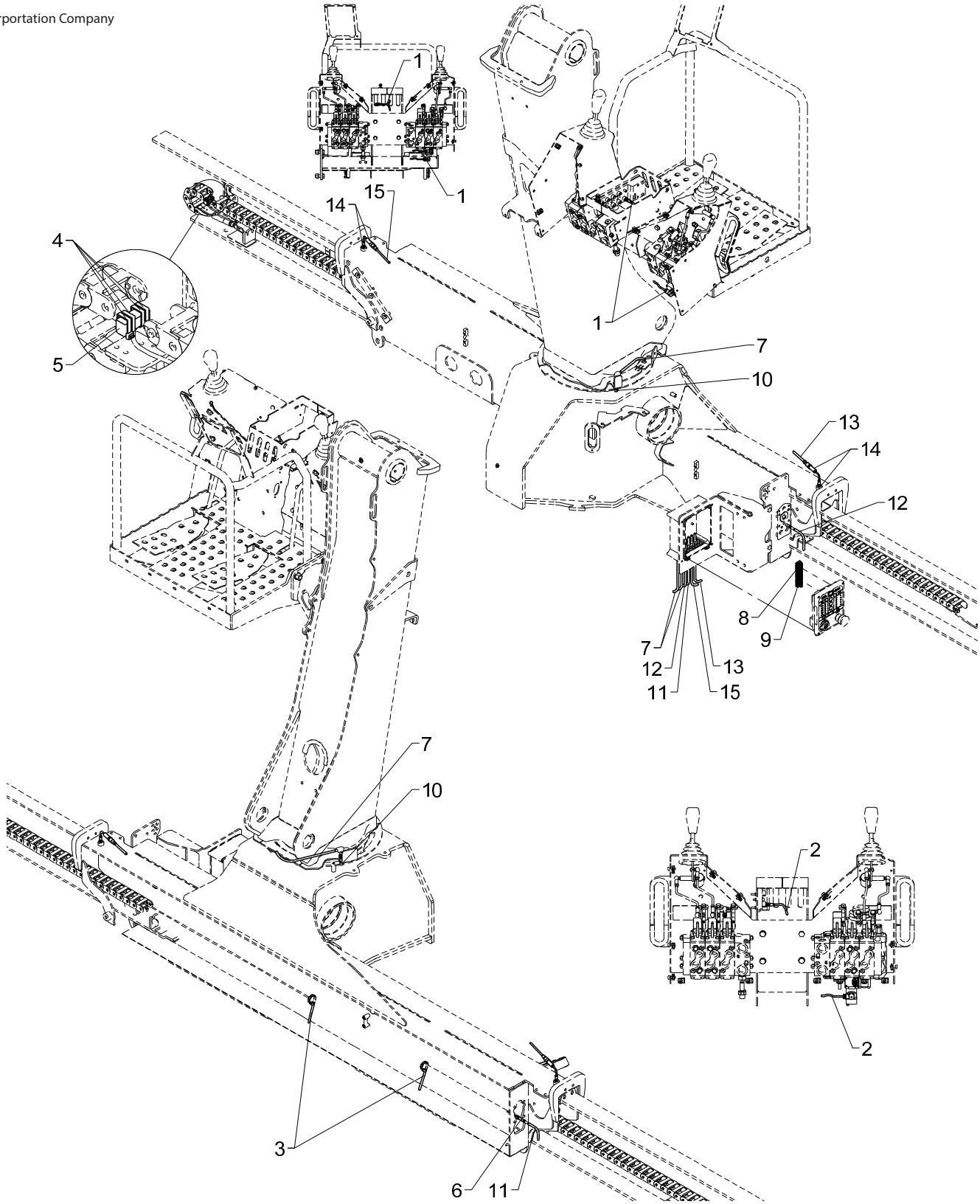

2CYBEL, double extension, TS

2530L

Pos	Qty.	Part no.	Description	Remarks
		7008540	2CYBEL, beam, double ext., TS	
		7008520	2CYBEL, beam, double ext., TS	
		7008530		
1	1	29386	Cable M12 spool sensor 0,7m	70 08 520 (Danfoss)
2	1	29568	Cable M12, spool sensor 0.7 m	70 08 530 (hydrocontrol)
3	4	27275	Cable tie, black, 7.6x385mm	
4	8	27274	Clip	
5	2	29253	Tilt sensor, nylon drag chain	
6	2	29443	Panel lead-in M8 - 3-polar	
7	2	28077	Cable with plug	
8	1	29320	Plug, 9-polar for RCL 53XX	
9	1	29322	Plug, 12-polar for RCL 53XX	
10	2	29447	Proximity switchM12 8mm PNP-NO	
11	1	29264	Cable 5 m, M8 socket	
12	1	29265	Cable 2 m, M8 socket	
13	1	29223	Cable with socket, 2 m	
14	2	29282	Proximity switch M12-4mm NO	
15	1	29224	Cable with socket, 5 m	

2530L

Internal ref. 70 08 450

An Oshkosh Corportation Company

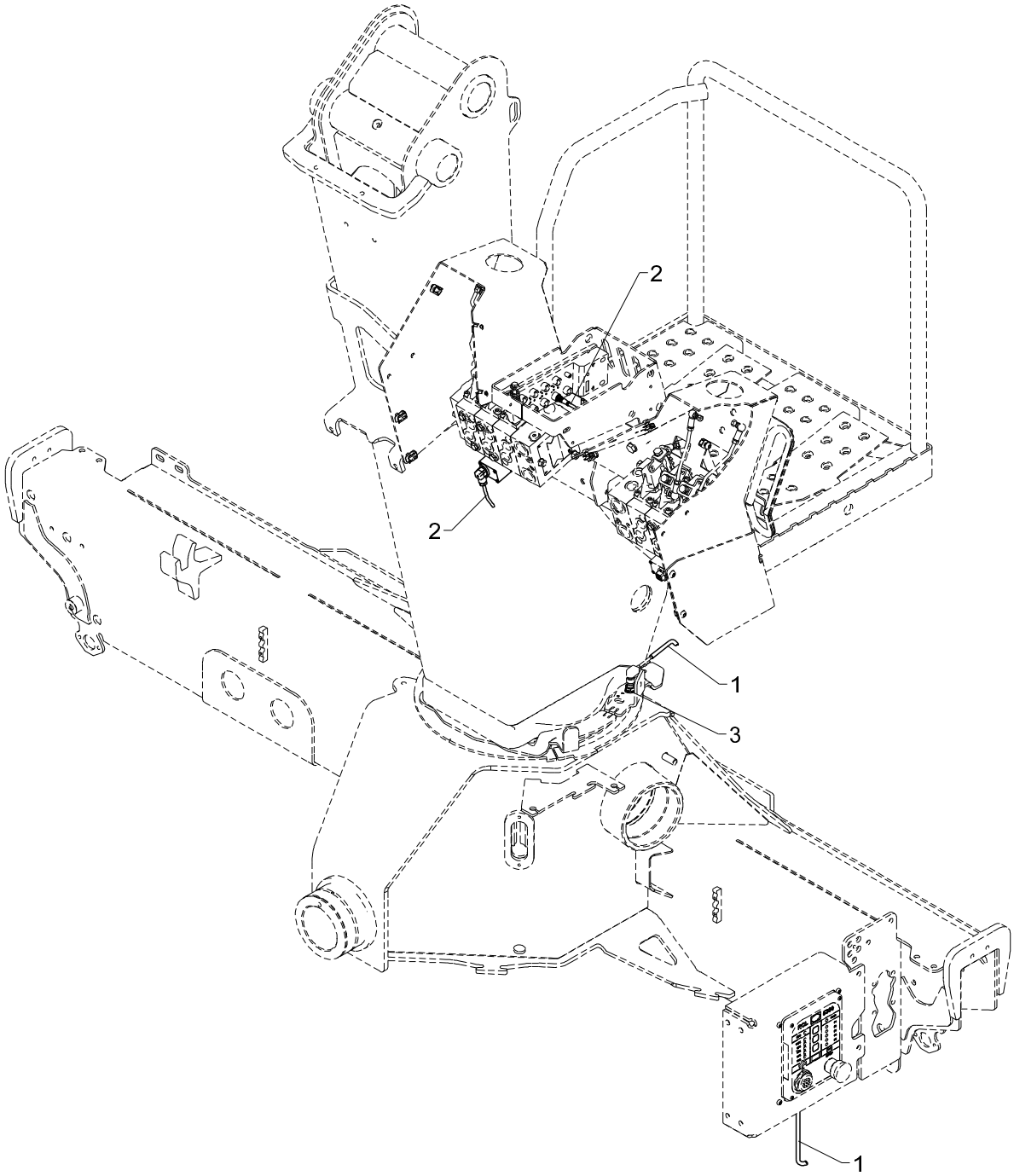

2-stage LMB, TS, Danfoss

2530L

Pos	Qty.	Part no.	Description	Remarks
1	1	28077	Cable with plug	
2	1	29386	Cable M12 spool sensor 0,7m	
3	1	29447	Proximity switchM12 8mm PNP-NO	

2530L

Internal ref. 70 08 470

An Oshkosh Corportation Company

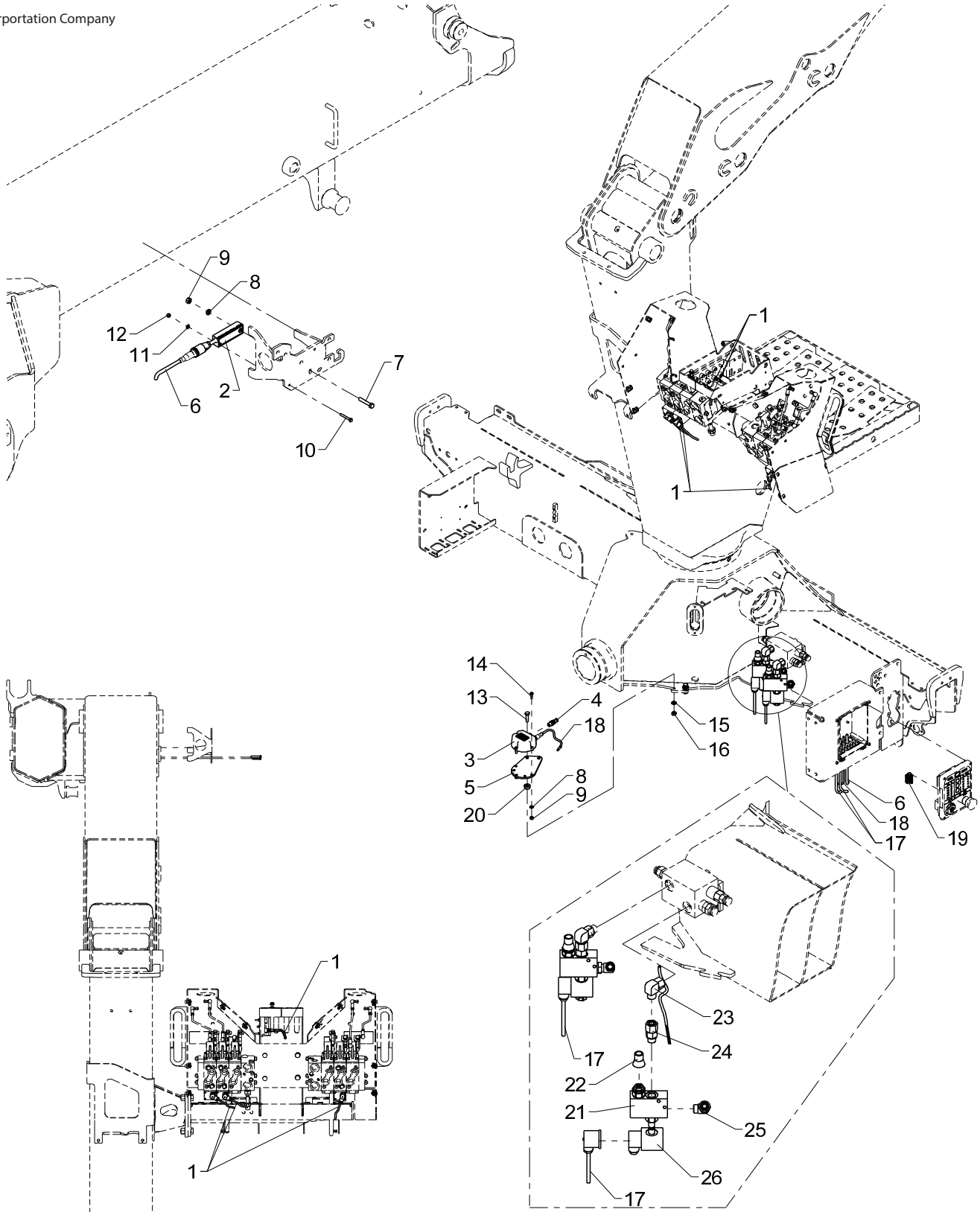

EVS-H, TS, Danfoss

2530L

Pos	Qty.	Part no.	Description	Remarks
1	3	29386	Cable M12 spool sensor 0,7m	
2	1	29295	Tilt sensor + 0.25 m cable	
3	1	29426	Electronic inclinometer,single	
4	1	29486	Plug M12, termination	
5	1	6340274	Mounting fittings (AIC 5062)	
6	1	28730	Cable + socket, 10 m	
7	1	30116	Steel pin, stainless	M6 x 35
8	4	32302	Face washer, stainless	6 mm
9	4	30884	Lock nut, stainless	M6
10	1	31790	Set screw M4 x 30	M4 x 30
11	1	31188	Washer, stainless	4 mm
12	1	30857	Lock nut	M4
13	2	30135	Set screw, stainless	M8 x 30
14	3	32491	Round-head screw	M6 x 20
15	2	31147	Face washer, 8 mm	
16	2	30856	Nut, stainless	M8
17	2	28265	Cable, dump valve, 1.35 m	
18	1	29456	CAN cable, M12, 2 m, female	
19	1	29318	Plug, 7-polar for RCL 53XX	
20	2	6871754	Spacer	
21	2	50517	Valve	
22	2	50518	Cover for sealing	
23	2	25242	Elbow connection	EWSD 12 L
24	2	25240	Connection	EGESD 12 LR-WD
25	2	26897	Elbow connection	12 mm - 3/8"
26	2	61778	Solenoid	

2530L

Internal ref. 70 08 550

An Oshkosh Corportation Company

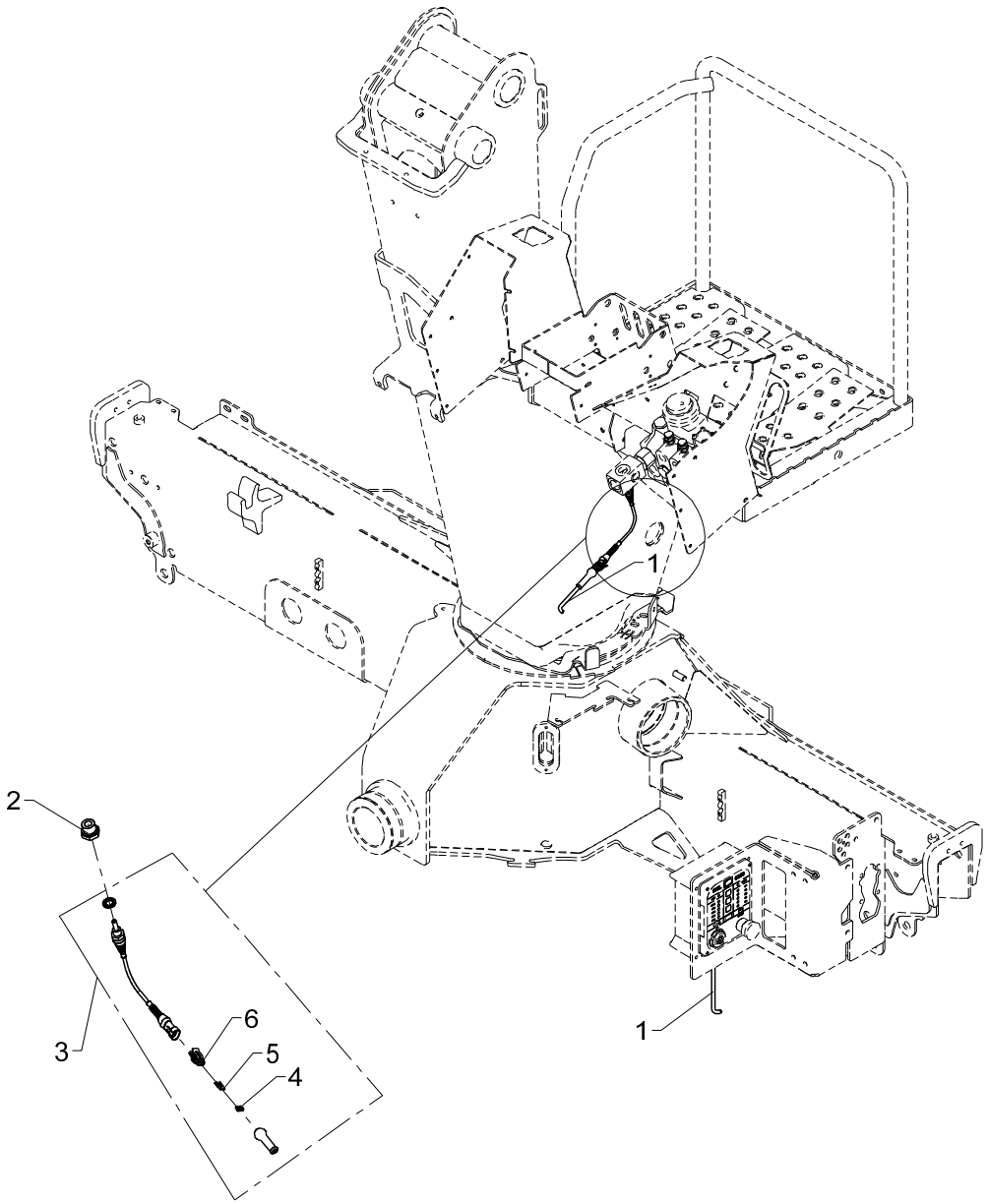

Temperature monitoring

2530L

Pos	Qty.	Part no.	Description	Remarks
1	1	28249	Cable 2 x 0.75	2,5 m
2	1	25180	Reducing connection	RED-R 1/2-WD/R 1/4
3	1	49652	Thermostat for RCL5300	
4	2	29159	Cable lead-in, AMP	
5	2	28844	Socket, AMP	
6	1	28843	Bipolar socket, AMP	

2530L

70 07 940
70 07 930
Internal ref. 70 06 300

Obsolete

An Oshkosh Corportation Company

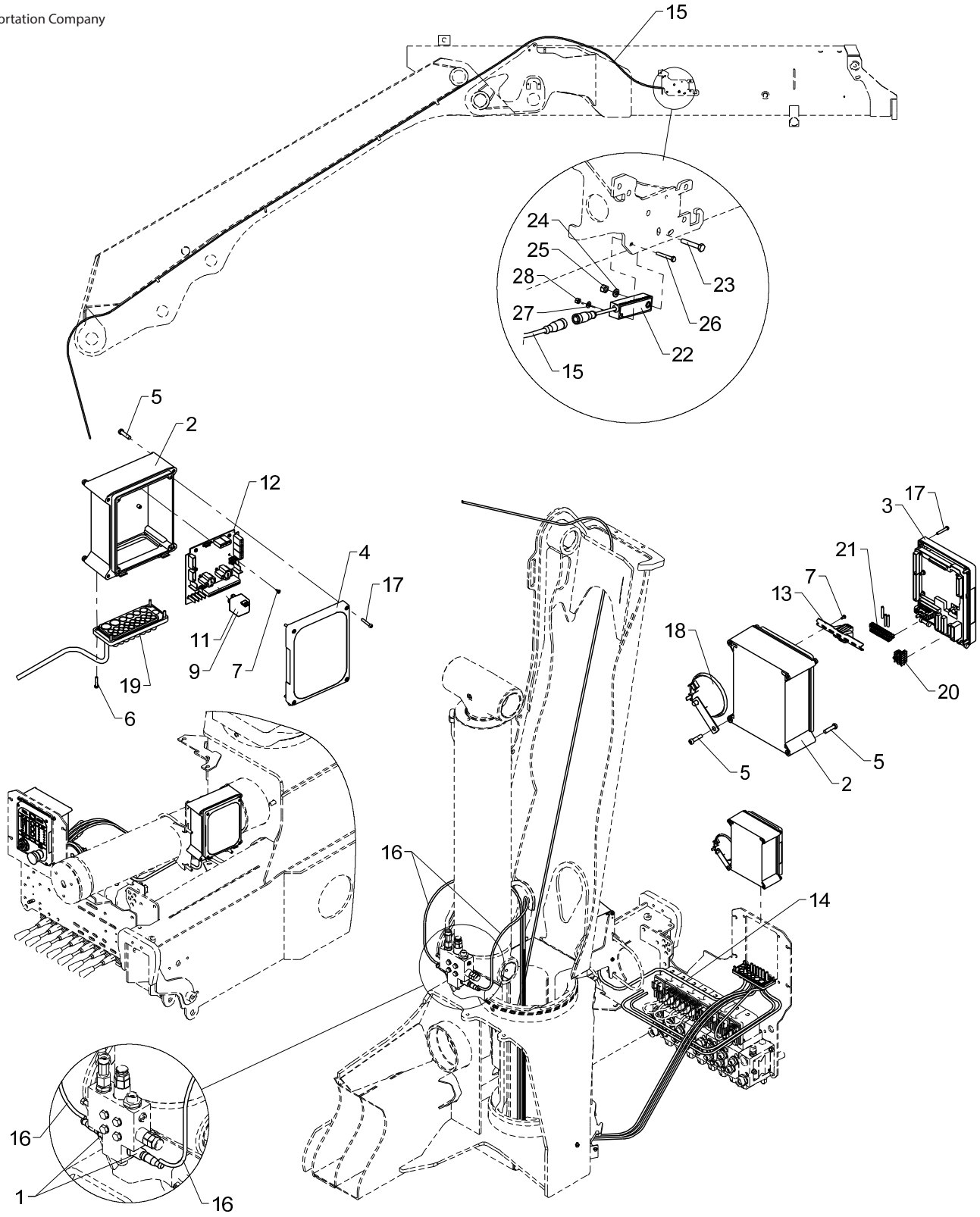

Obsolete

553 22 010

From loader 1270001
To loader

Created 25-05-2013
Modified 06-05-2014

Basic electronic parts, crane with RC
2530L

Pos	Qty.	Part no.	Description	Remarks
		7006300	Basic parts, crane + RC	
		7007930	Relay, 12 V	
		7007940	Relay, 24 V	
1	2	28850	Pressure transducer	
2	2	29304	Bottom f. RCL-box incl. hinge	
3	1	29301	Front complete, RCL 5300	
4	1	29347	RCL 5300 indicator panel	
5	9	30340	Screw, stainless	6,0 x 25
6	8	30346	Screw, stainless	4,0 x 20
7	8	30361	Screw, stainless	3,0 x 8
8	1	7007940	Relay, 24 V	
9	1	27342	Relay, 24V	
10	1	7007930	Relay, 12 V	
11	1	27340	Relay, 12 V	
12	1	29473	EJB5380	
13	1	7006306	Terminal block for RCL + RC	
14	1	28722	Wiring, RC base	
15	1	28730	Cable + socket, 10 m	9,0 m
16	2	29224	Cable with socket, 5 m	6,0 m
17	8	30347	Screw, stainless	4,0 x 25
18	1	28971	Horn, 24 V, 2.5 Amp.	
19	1	29307	Cable lead-in	
20	1	29341	CAN termination FJC	
21	1	29321	Plug, 10-polar for RCL 53XX	
22	1	29295	Tilt sensor + 0.25 m cable	
23	1	30116	Steel pin, stainless	M6 x 35
24	1	32302	Face washer, stainless	6 mm
25	1	30884	Lock nut, stainless	M6
26	1	31790	Set screw M4 x 30	M4 x 30
27	1	31188	Washer, stainless	4 mm
28	1	30857	Lock nut	M4

2530L

70 07 940
70 07 930
Internal ref. 70 06 300

An Oshkosh Corportation Company

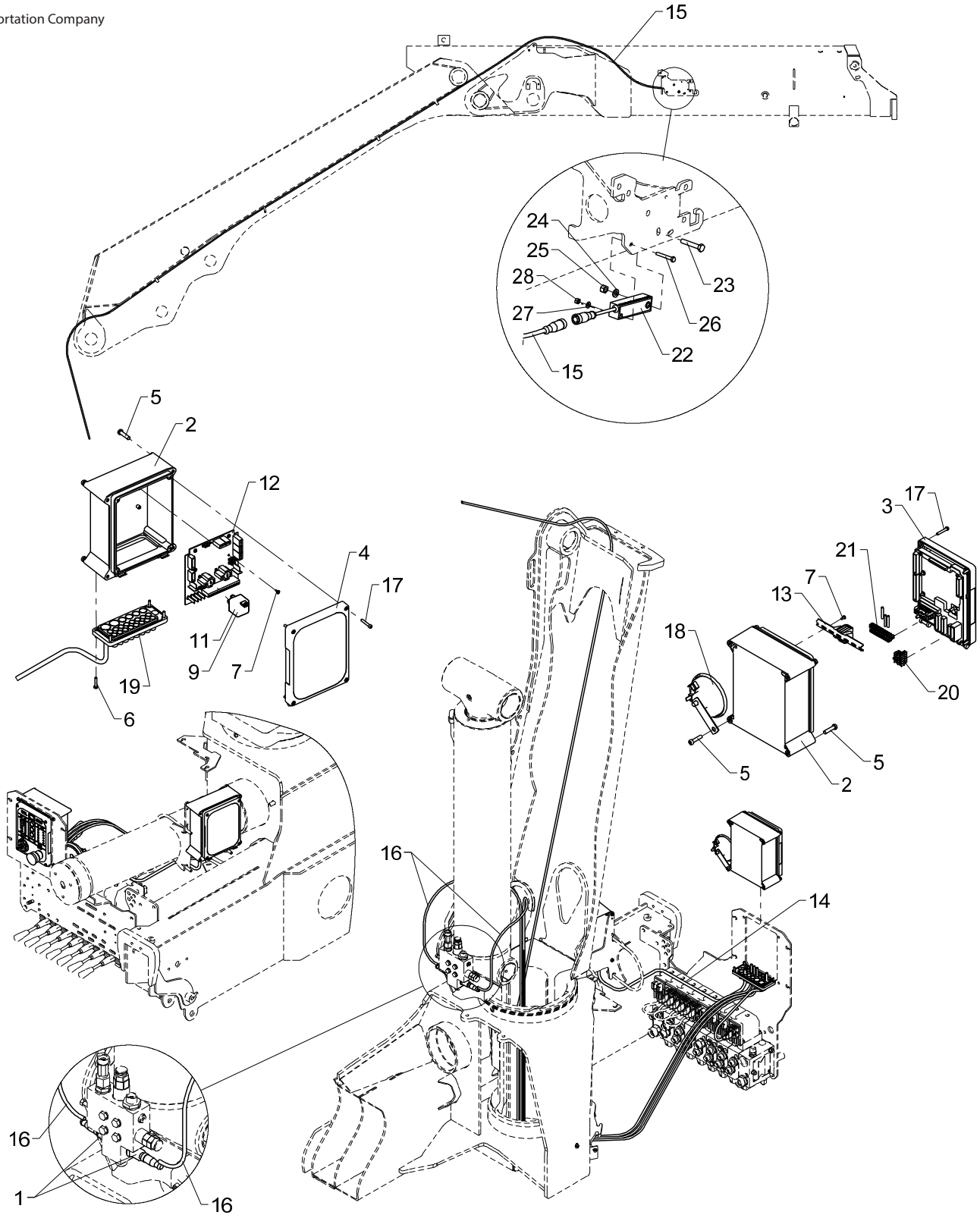

Basic electronic parts, crane with RC
2530L

Pos	Qty.	Part no.	Description	Remarks
		7006300	Basic parts, crane + RC	
		7007930	Relay, 12 V	
		7007940	Relay, 24 V	
1	2	28850	Pressure transducer	
2	2	29304	Bottom f. RCL-box incl. hinge	
3	1	29301	Front complete, RCL 5300	
4	1	29347	RCL 5300 indicator panel	
5	9	30340	Screw, stainless	6,0 x 25
6	8	30346	Screw, stainless	4,0 x 20
7	8	30361	Screw, stainless	3,0 x 8
8	1	7007940	Relay, 24 V	
9	1	27342	Relay, 24V	
10	1	7007930	Relay, 12 V	
11	1	27340	Relay, 12 V	
12	1	29473	EJB5380	
13	1	7006306	Terminal block for RCL + RC	
14	1	28751	Wiring, PVSK-M	
15	1	28730	Cable + socket, 10 m	9,0 m
16	2	29224	Cable with socket, 5 m	6,0 m
17	8	30347	Screw, stainless	4,0 x 25
18	1	28971	Horn, 24 V, 2.5 Amp.	
19	1	29307	Cable lead-in	
20	1	29341	CAN termination FJC	
21	1	29321	Plug, 10-polar for RCL 53XX	
22	1	29295	Tilt sensor + 0.25 m cable	
23	1	30116	Steel pin, stainless	M6 x 35
24	1	32302	Face washer, stainless	6 mm
25	1	30884	Lock nut, stainless	M6
26	1	31790	Set screw M4 x 30	M4 x 30
27	1	31188	Washer, stainless	4 mm
28	1	30857	Lock nut	M4

2530L

Internal ref. 70 08 840

An Oshkosh Corportation Company

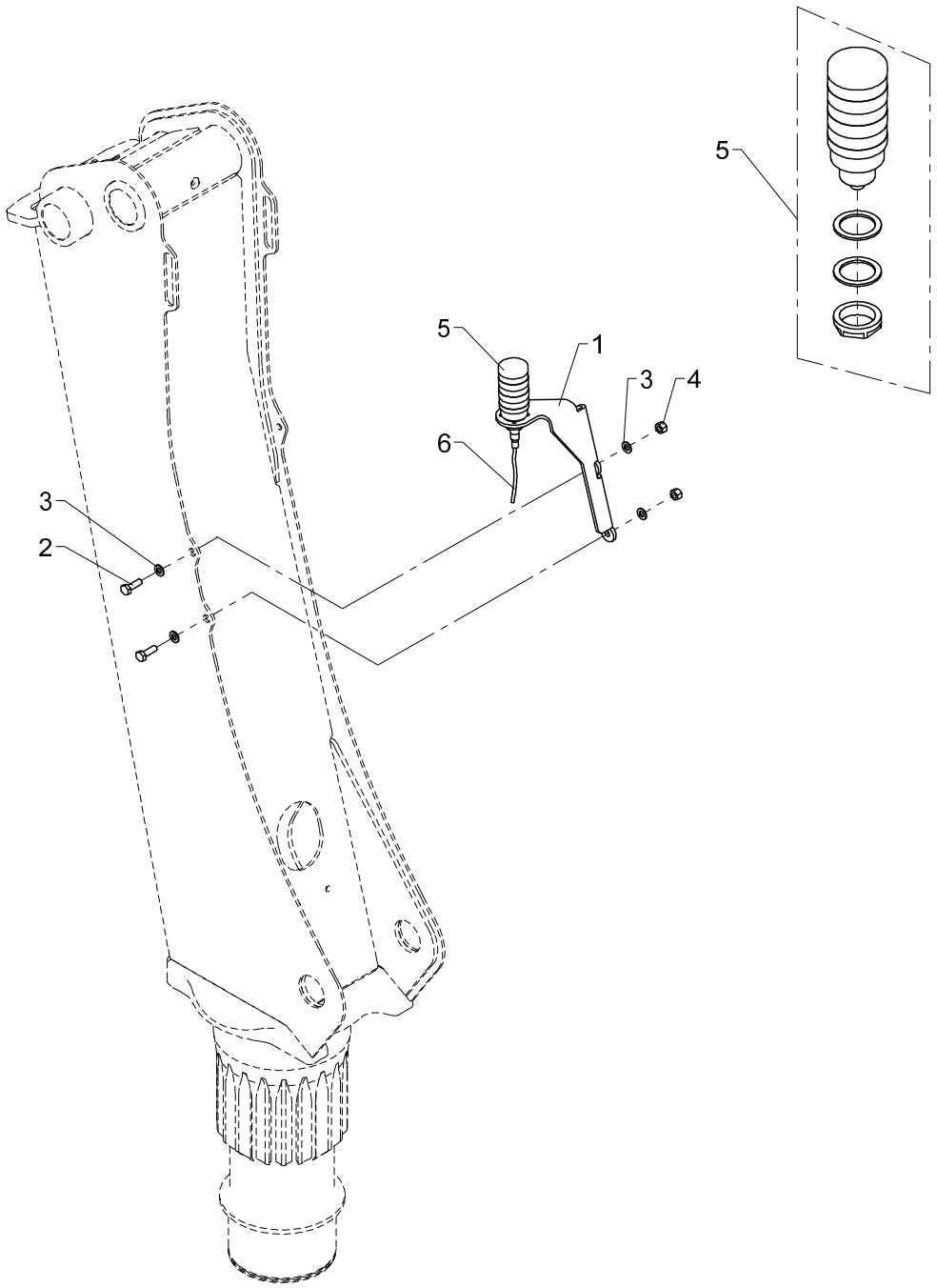

Light tower

2530L

Pos	Qty.	Part no.	Description	Remarks
1	1	6340069	Bracket (light tower)	
2	2	30156	Set screw, stainless	M10 x 30
3	4	31565	Washer, stainless	10 mm
4	2	31564	Lock nut, stainless	M10
5	1	29542	Light tower	
6	1	29224	Cable with socket, 5 m	

2530L

70 07 930
70 07 940
Internal ref. 70 08 570

An Oshkosh Corportation Company

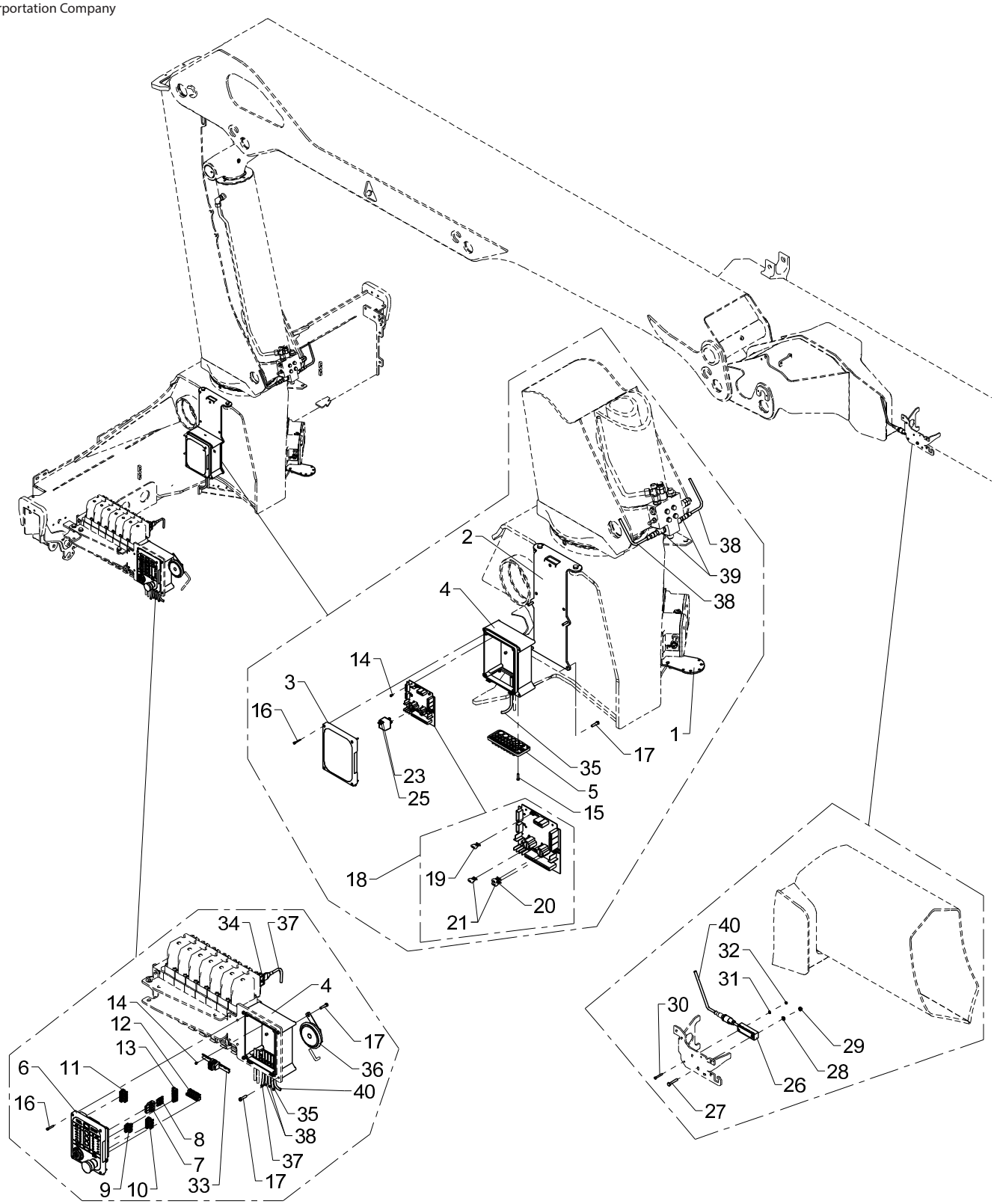

Basic electronic parts, L-RC

2530L

Pos	Qty.	Part no.	Description	Remarks
		7008570	Basic electronic parts, L-RC	
		7007940	Relay, 24 V	
		7007930	Relay, 12 V	
1	1	6355933	Mounting bracket	
2	1	6355934	Bracket	
3	1	29347	RCL 5300 indicator panel	
4	2	29304	Bottom f. RCL-box incl. hinge	
5	2	29307	Cable lead-in	
6	1	29301	Front complete, RCL 5300	
7	1	29315	Plug, 3-polar for RCL 53XX	
8	3	29316	Pin	
9	1	29341	CAN termination FJC	
10	1	29318	Plug, 7-polar for RCL 53XX	
11	1	29319	Plug, 8-polar for RCL 53XX	
12	1	29321	Plug, 10-polar for RCL 53XX	
13	1	29320	Plug, 9-polar for RCL 53XX	
14	8	30361	Screw, stainless	3,0 x 8
15	8	30346	Screw, stainless	4,0 x 20
16	8	30347	Screw, stainless	4,0 x 25
17	9	30340	Screw, stainless	6,0 x 25
18	1	29473	EJB5380	
19	1	29369	Fuse 2A MINI	
20	1	29370	Fuse 15A MINI	
21	2	27822	Fuse 10A MINI	
22	1	7007940	Relay, 24 V	
23	1	27342	Relay, 24V	
24	1	7007930	Relay, 12 V	
25	1	27340	Relay, 12 V	
26	1	29295	Tilt sensor + 0.25 m cable	
27	1	30116	Steel pin, stainless	M6 x 35
28	1	32302	Face washer, stainless	6 mm
29	1	30884	Lock nut, stainless	M6
30	1	31790	Set screw M4 x 30	M4 x 30
31	1	31188	Washer, stainless	4 mm
32	1	30857	Lock nut	M4
33	1	7006306	Terminal block for RCL + RC	
34	1	62297	Termination	
35	1	28278	Cable 4 x 2.5	2,0 m
36	1	28971	Horn, 24 V, 2.5 Amp.	
37	1	58978	Cable, CAN-bus 2,5 m, AMP grey	
38	2	29224	Cable with socket, 5 m	

2530L

70 07 930
70 07 940
Internal ref. 70 08 570

An Oshkosh Corportation Company

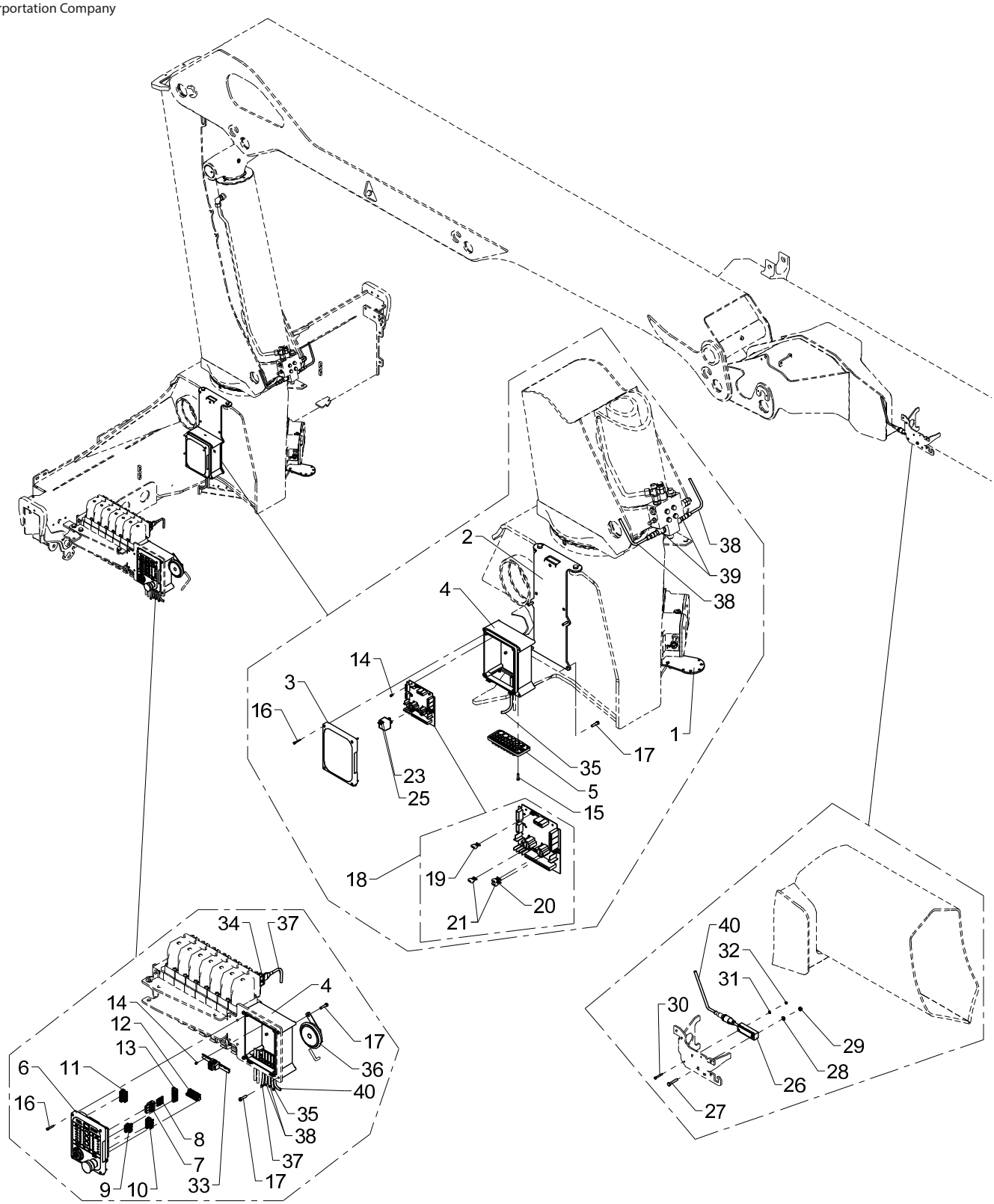

Basic electronic parts, L-RC

2530L

Pos	Qty.	Part no.	Description	Remarks
39	2	28850	Pressure transducer	
40	1	28730	Cable + socket, 10 m	

2530L

Internal ref. 70 08 590

An Oshkosh Corportation Company

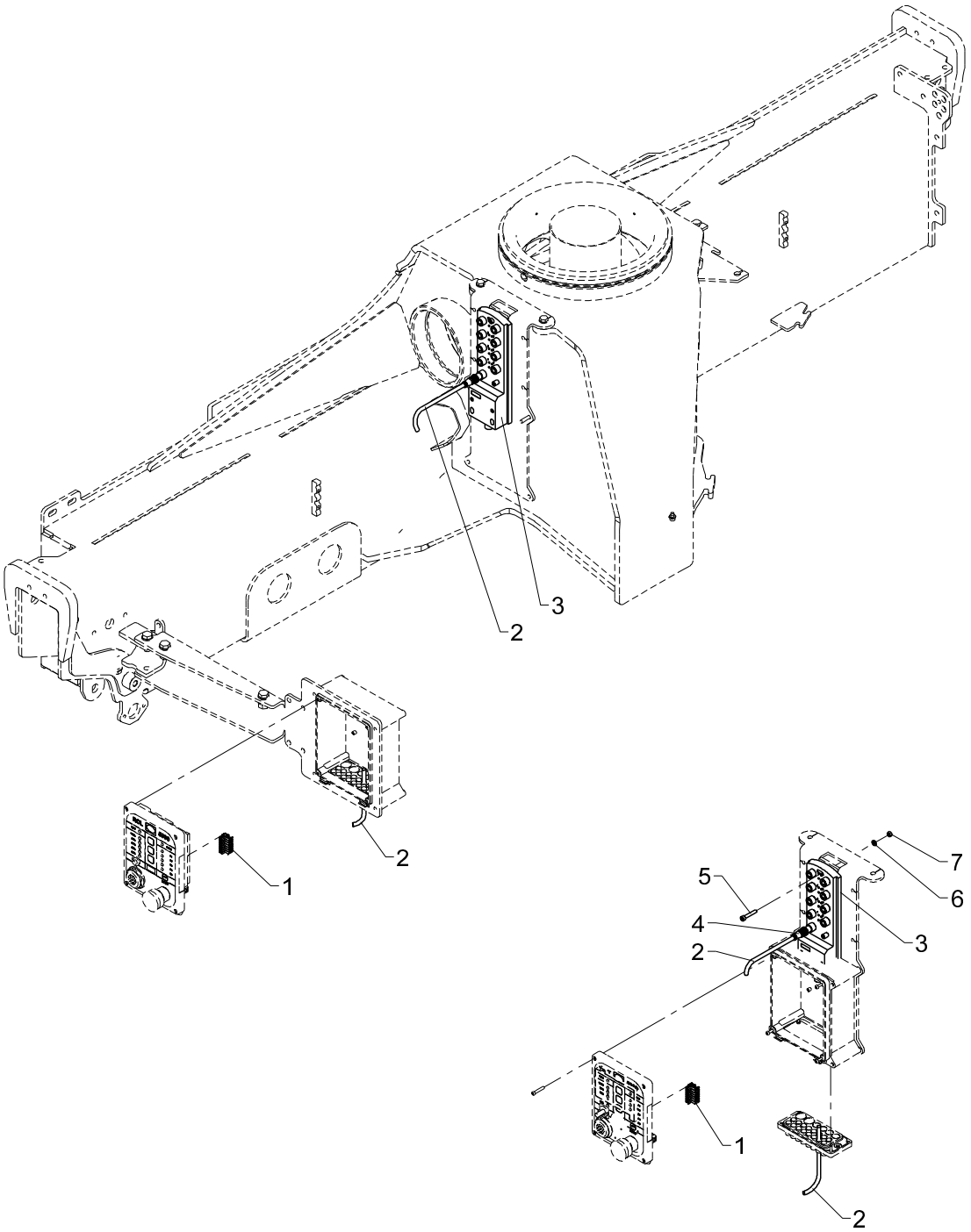

CR2033

2530L

Pos	Qty.	Part no.	Description	Remarks
1	1	29318	Plug, 7-polar for RCL 53XX	
2	1	29456	CAN cable, M12, 2 m, female	
3	1	29470	IO module CR2033	
4	1	29486	Plug M12, termination	
5	3	30425	Screw	MC5 x 30
6	3	32308	Washer	5 mm
7	3	30853	Nut, stainless	M5

2530L

Internal ref. 70 08 600

An Oshkosh Corportation Company

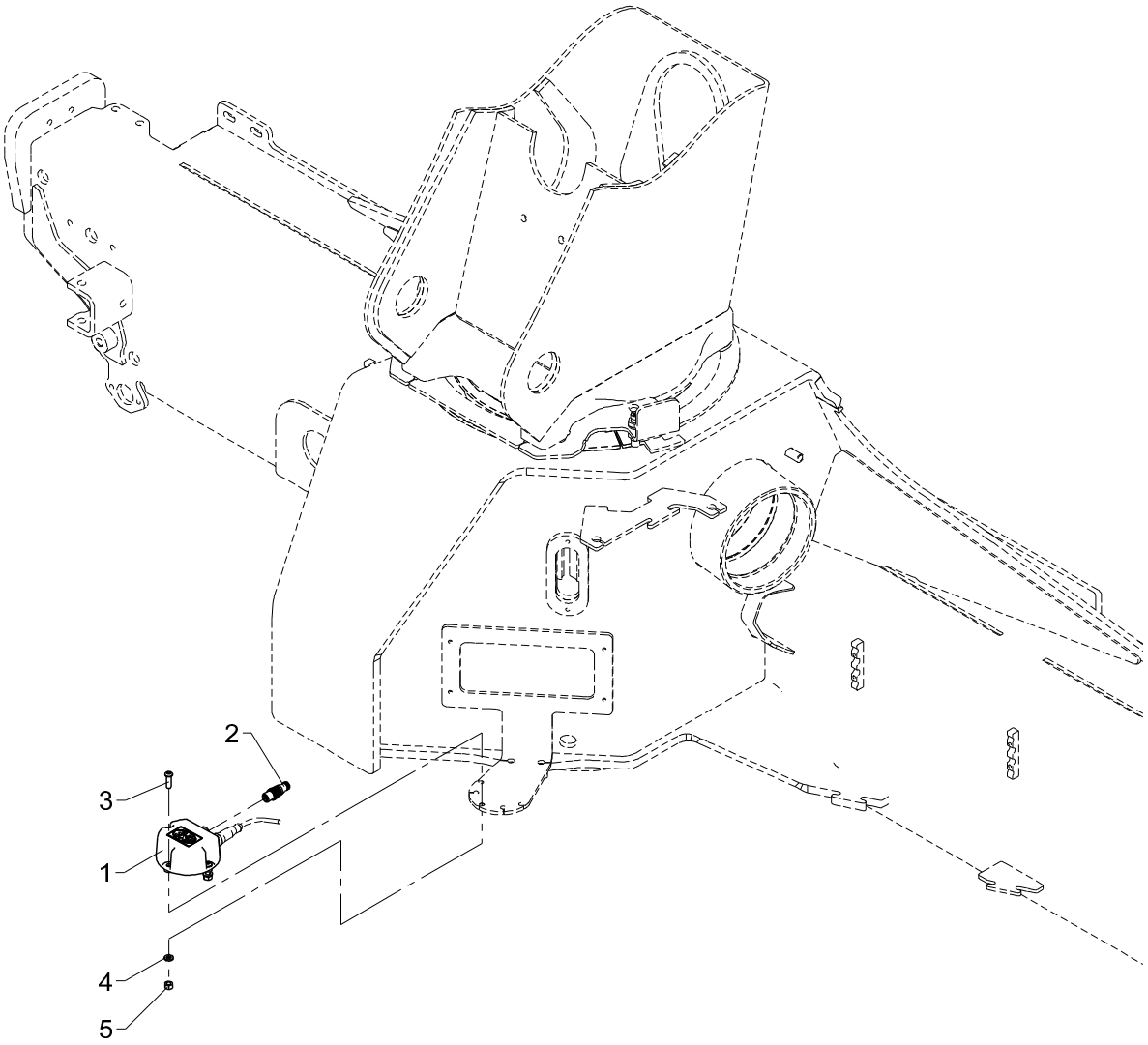

EVS

2530L

Pos	Qty.	Part no.	Description	Remarks
1	1	29426	Electronic inclinometer,single	
2	1	29486	Plug M12, termination	
3	3	32491	Round-head screw	M6 x 20
4	3	32302	Face washer, stainless	6 mm
5	3	30884	Lock nut, stainless	M6

2530L

Internal ref. 70 08 690

An Oshkosh Corportation Company

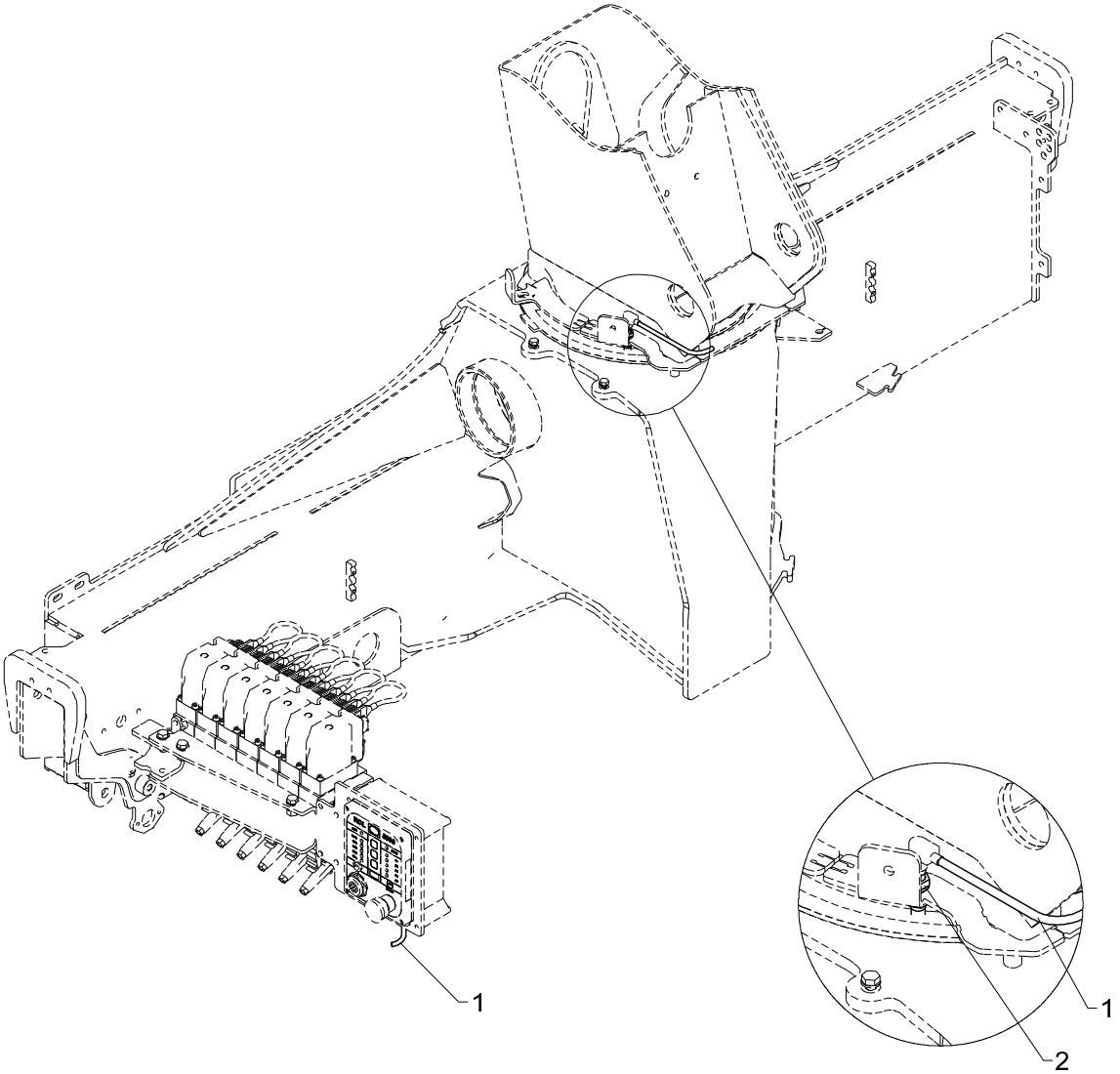

2-stage LMB

2530L

Pos	Qty.	Part no.	Description	Remarks
1	1	28077	Cable with plug	
2	1	29447	Proximity switchM12 8mm PNP-NO	

2530L

Internal ref. 70 08 700

An Oshkosh Corportation Company

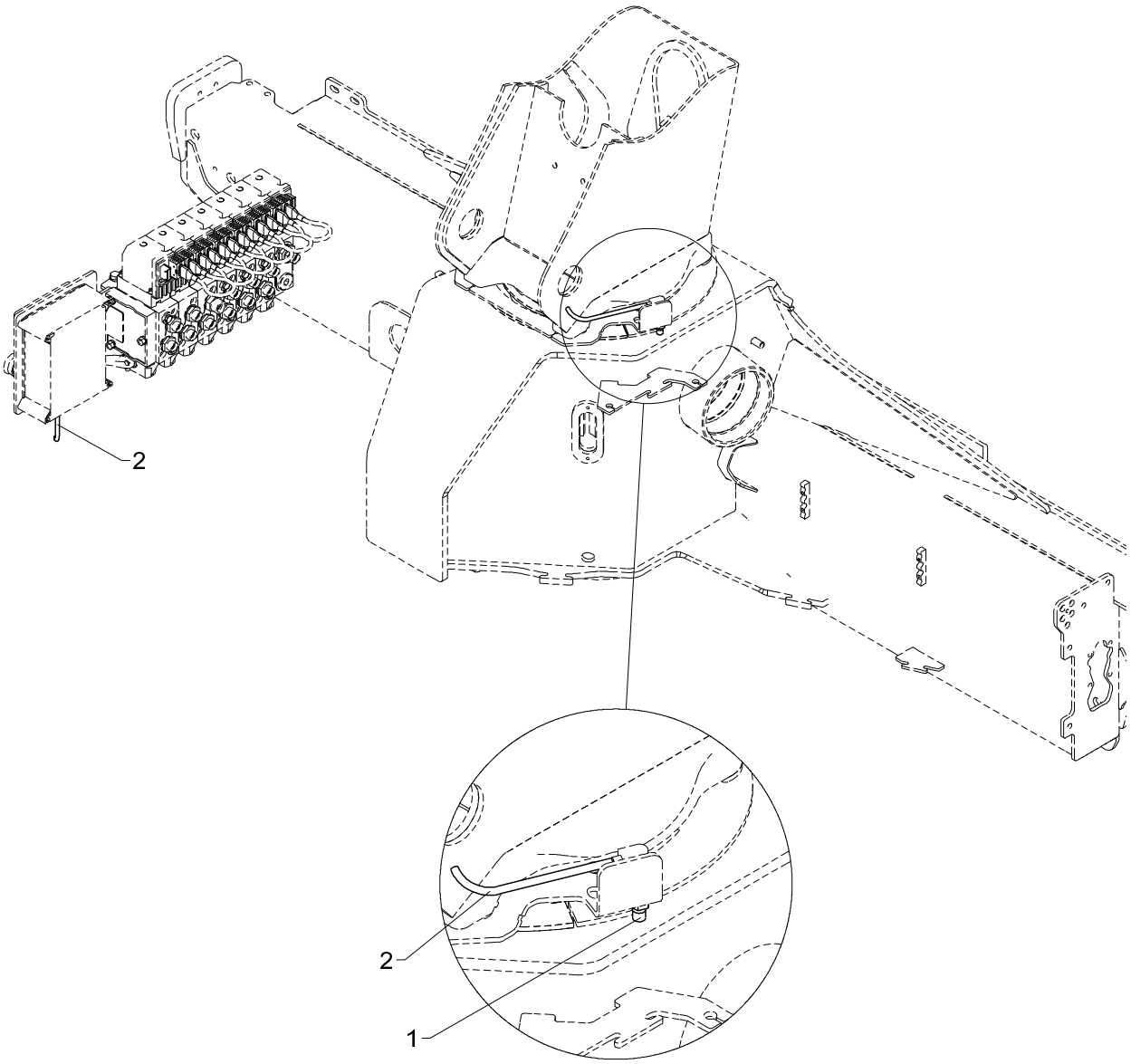

CBS

2530L

Pos	Qty.	Part no.	Description	Remarks
1	1	29447	Proximity switchM12 8mm PNP-NO	
2	1	28077	Cable with plug	

2530L

Internal ref. 70 08 610

Obsolete

An Oshkosh Corportation Company

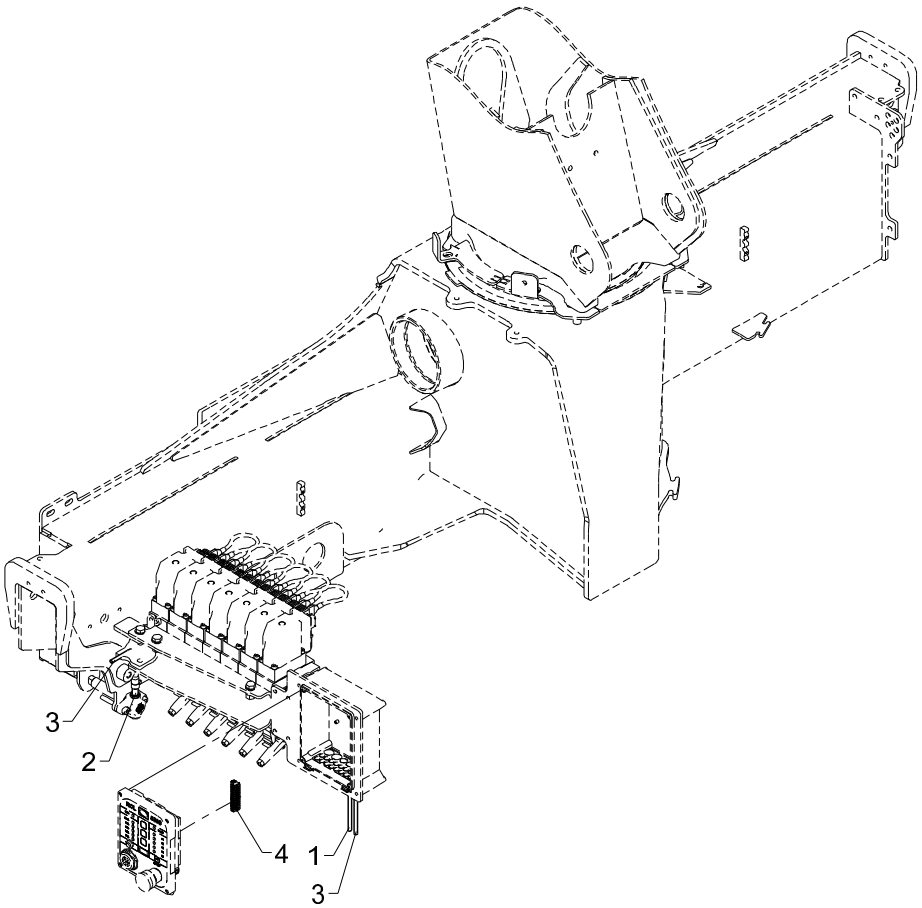

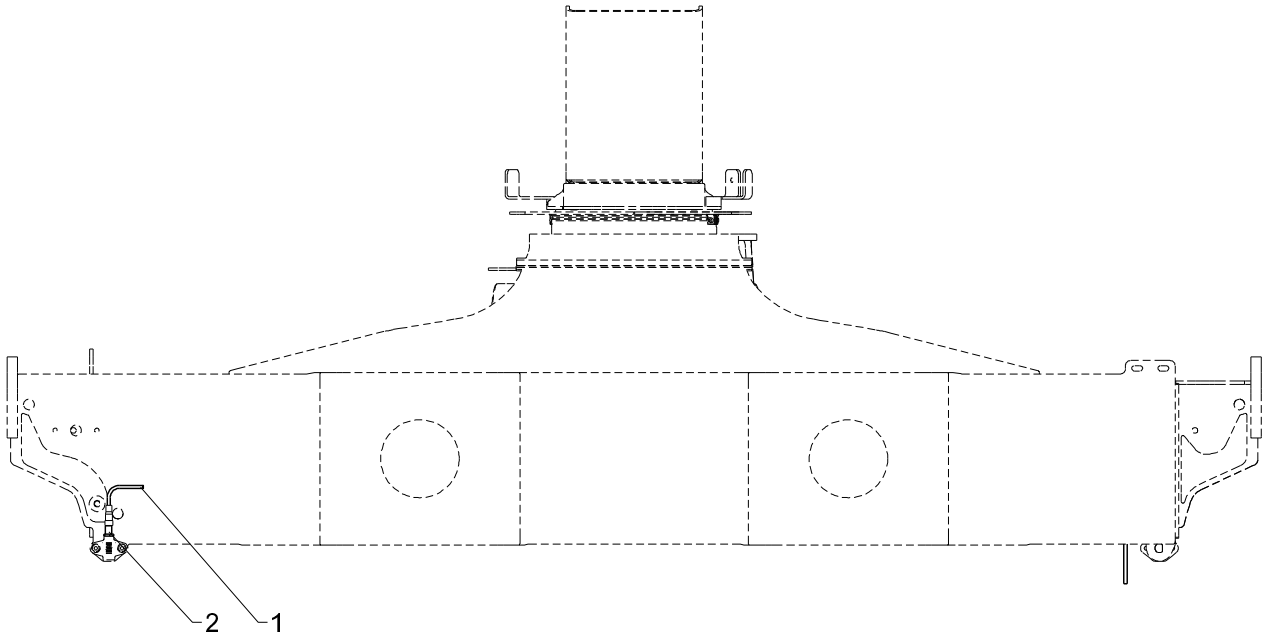

Obsolete

553 22 490

From loader 1270001
To loader

CYL

2530L

Created 17-03-2016
Modified

Pos	Qty.	Part no.	Description	Remarks
1	1	29224	Cable with socket, 5 m	
2	2	29257	Proximity switch M12x44, 4mm	
3	1	29223	Cable with socket, 2 m	
4	1	29322	Plug, 12-polar for RCL 53XX	

2530L

Internal ref. 70 08 610

An Oshkosh Corportation Company

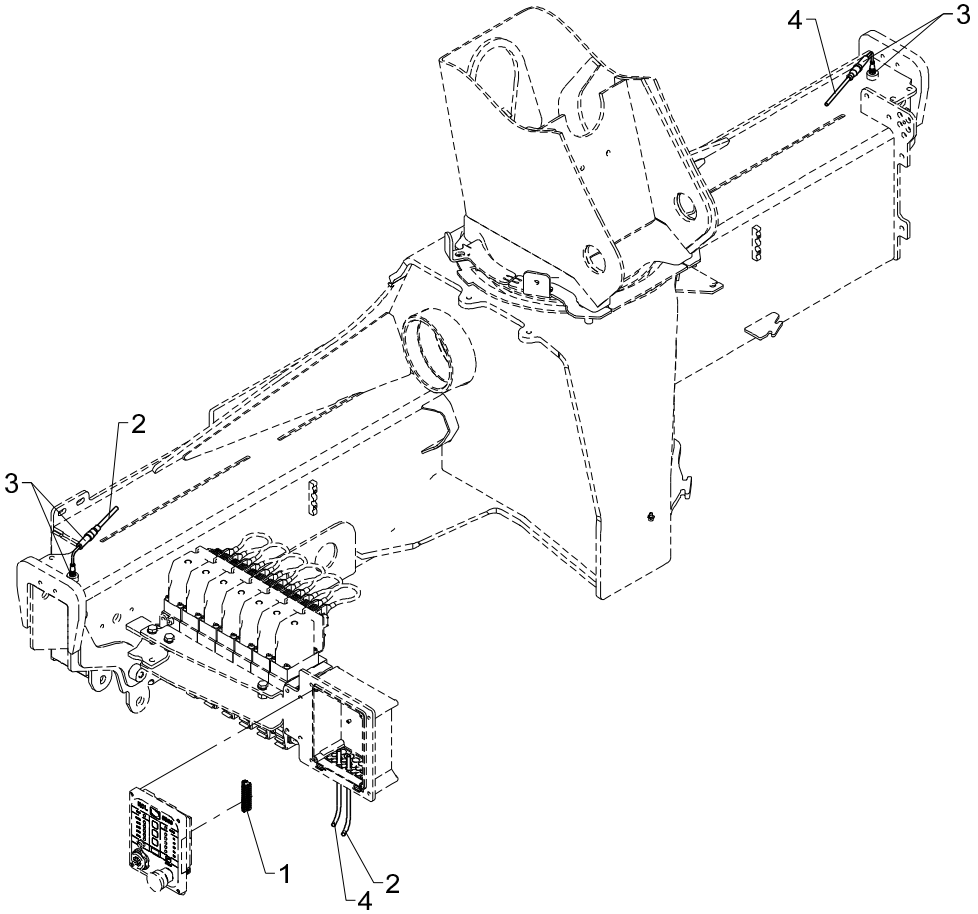

CYL

2530L

Pos	Qty.	Part no.	Description	Remarks
1	1	29322	Plug, 12-polar for RCL 53XX	
2	1	29223	Cable with socket, 2 m	
3	2	29282	Proximity switch M12-4mm NO	
4	1	29224	Cable with socket, 5 m	

2530L

Internal ref. 70 08 620

Obsolete

An Oshkosh Corportation Company

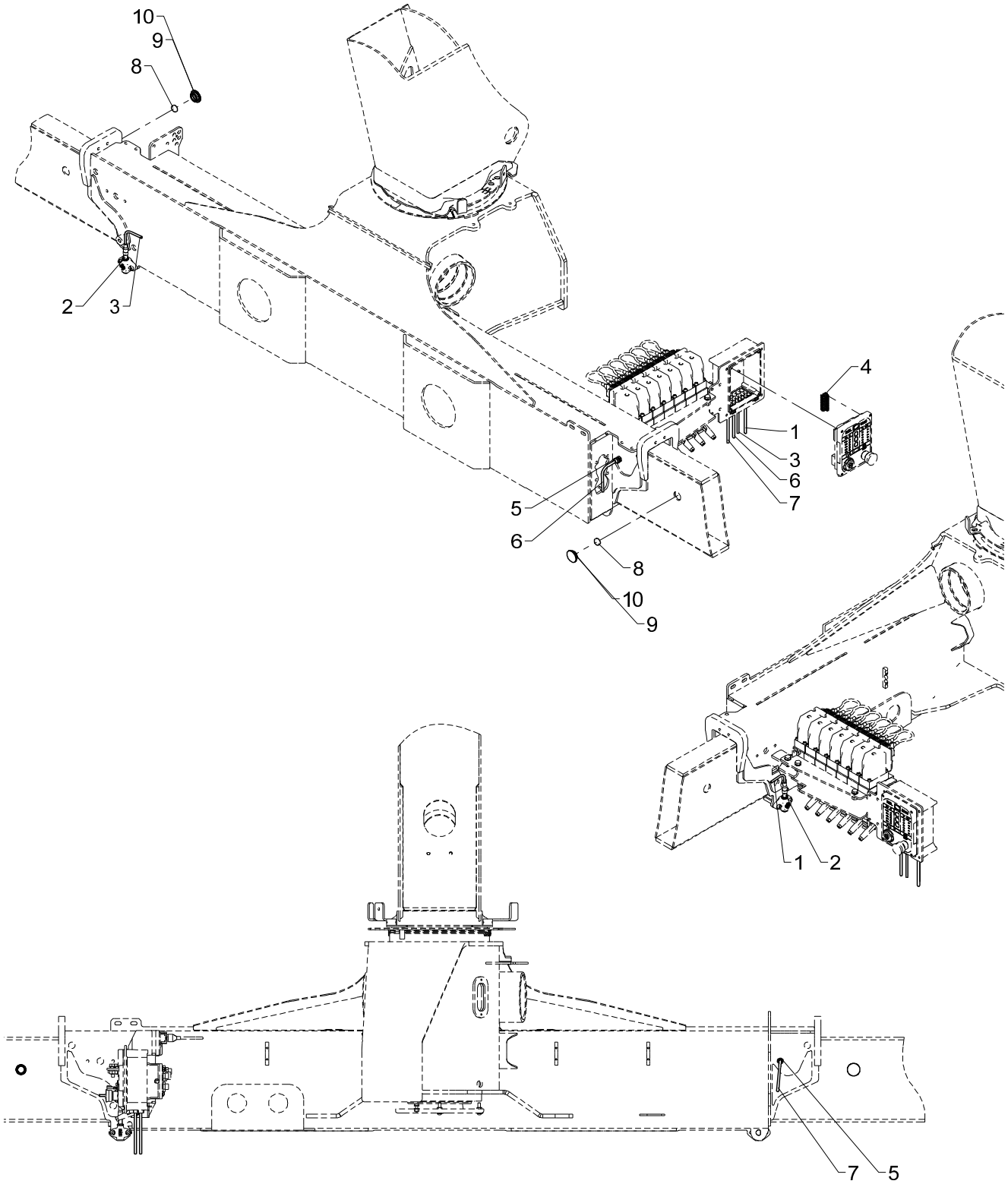

Obsolete

553 22 500

From loader 1270001
To loader

CYBEL, single extension

2530L

Created 17-03-2016
Modified

Pos	Qty.	Part no.	Description	Remarks
1	1	29224	Cable with socket, 5 m	
2	2	29257	Proximity switch M12x44, 4mm	
3	1	29223	Cable with socket, 2 m	
4	1	29322	Plug, 12-polar for RCL 53XX	
5	2	29259	Magnet proximity switch M12	
6	1	28077	Cable with plug	
7	1	28117	Cable with plug	
8	2	29262	Solenoid Ø22x5	
9	2	63681	Slide block	3 mm
10	2	64424	Slide block	2 mm

2530L

Internal ref. 70 08 620

An Oshkosh Corportation Company

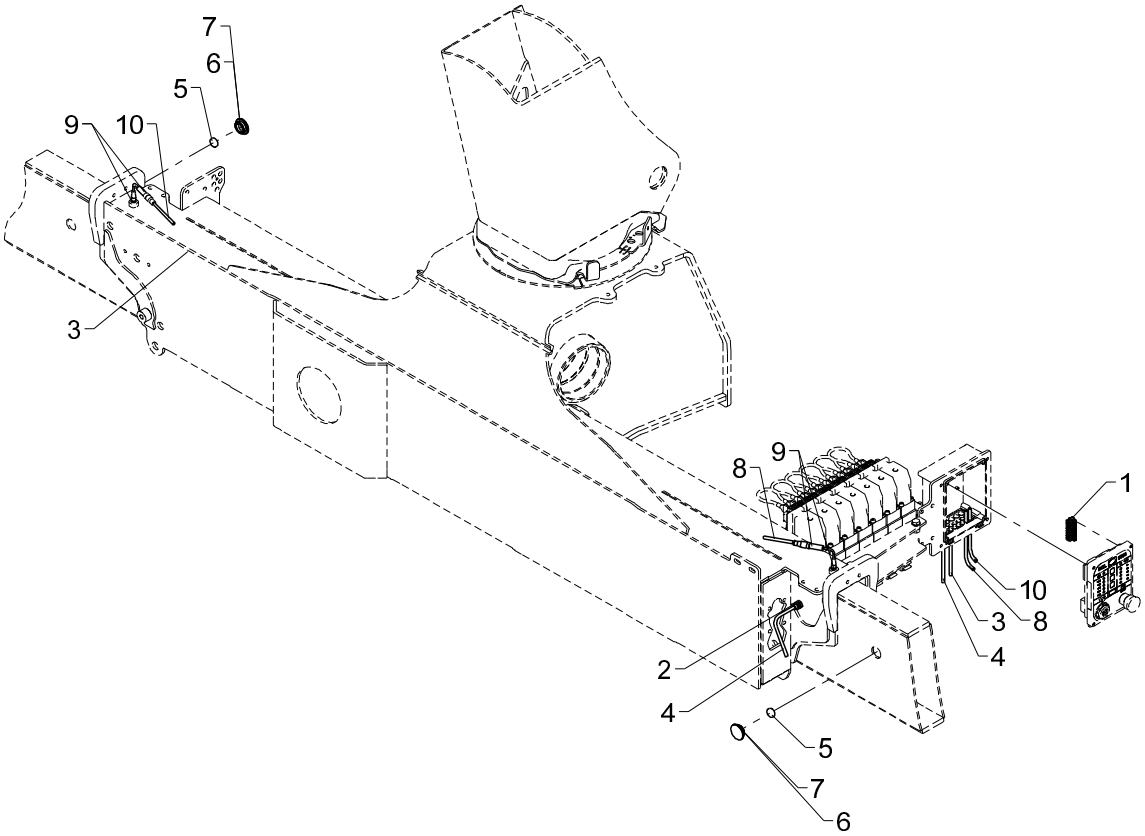

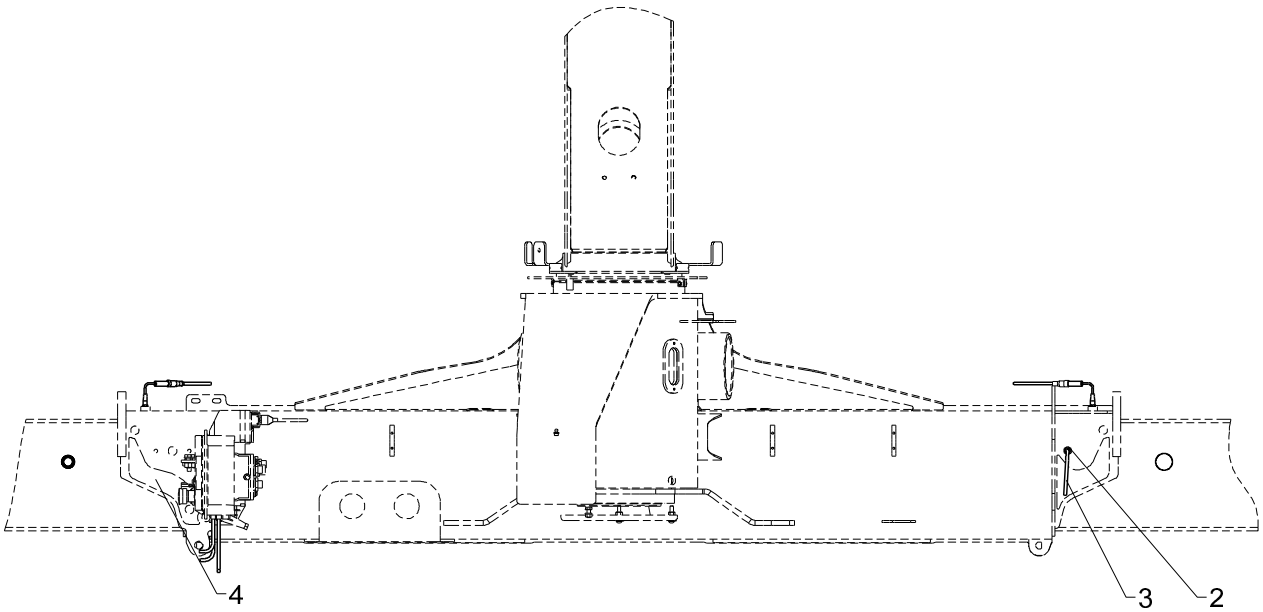

CYBEL, single extension

2530L

Pos	Qty.	Part no.	Description	Remarks
1	1	29322	Plug, 12-polar for RCL 53XX	
2	2	29259	Magnet proximity switch M12	
3	1	28077	Cable with plug	
4	1	28117	Cable with plug	
5	2	29262	Solenoid Ø22x5	
6	2	63681	Slide block	3 mm
7	2	64424	Slide block	2 mm
8	1	29223	Cable with socket, 2 m	
9	2	29282	Proximity switch M12-4mm NO	
10	1	29224	Cable with socket, 5 m	

2530L

Internal ref. 70 08 630

Obsolete

An Oshkosh Corportation Company

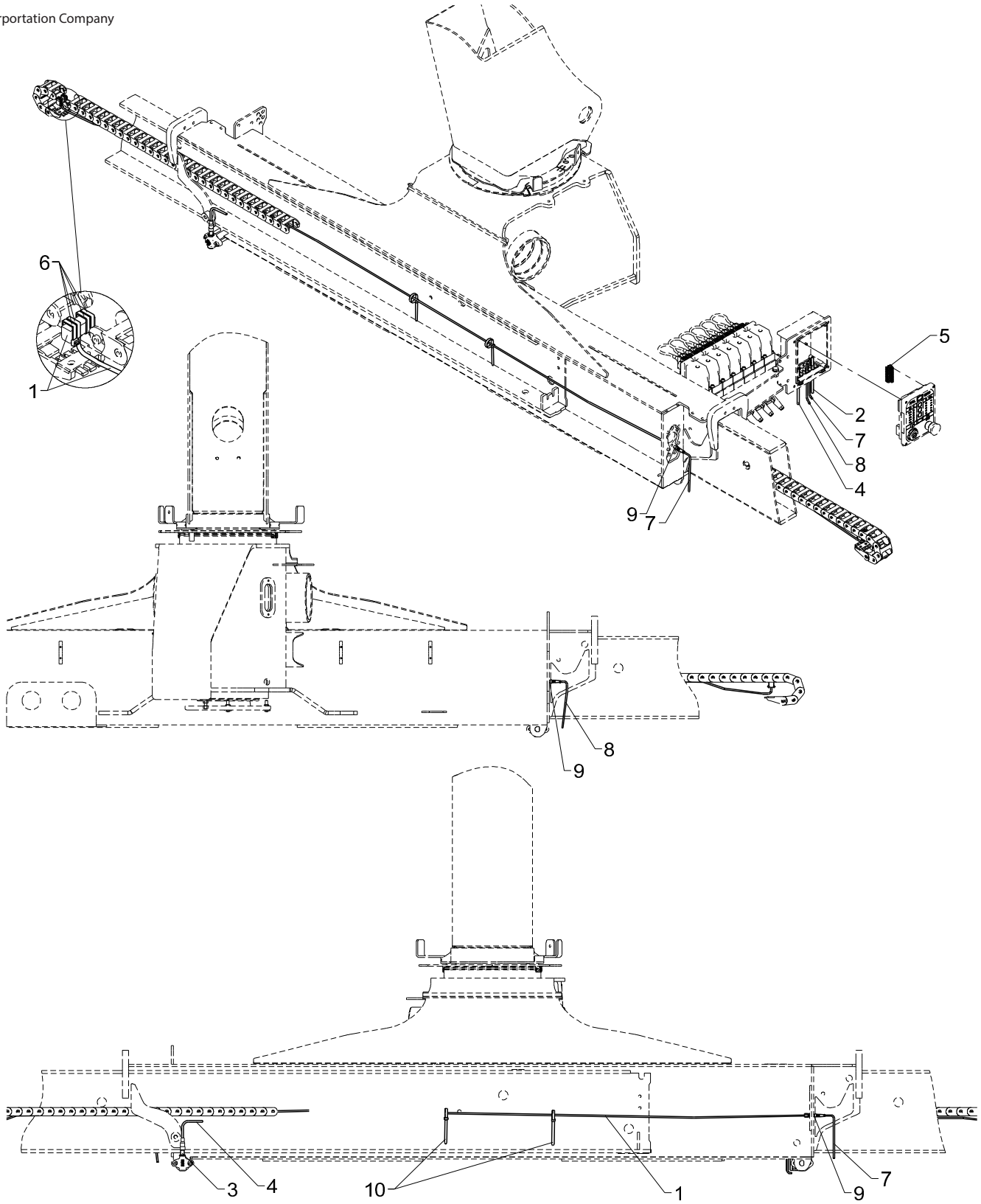

Obsolete

553 22 510

From loader 1270001
To loader

CYBEL double extension

2530L

Created 18-03-2016
Modified

Pos	Qty.	Part no.	Description	Remarks
1	2	29253	Tilt sensor, nylon drag chain	
2	1	29224	Cable with socket, 5 m	
3	2	29257	Proximity switch M12x44, 4mm	
4	1	29223	Cable with socket, 2 m	
5	1	29322	Plug, 12-polar for RCL 53XX	
6	8	27274	Clip	
7	1	29264	Cable 5 m, M8 socket	
8	1	29265	Cable 2 m, M8 socket	
9	2	29443	Panel lead-in M8 - 3-polar	
10	4	27275	Cable tie, black, 7.6x385mm	

2530L

Internal ref. 70 08 630

An Oshkosh Corportation Company

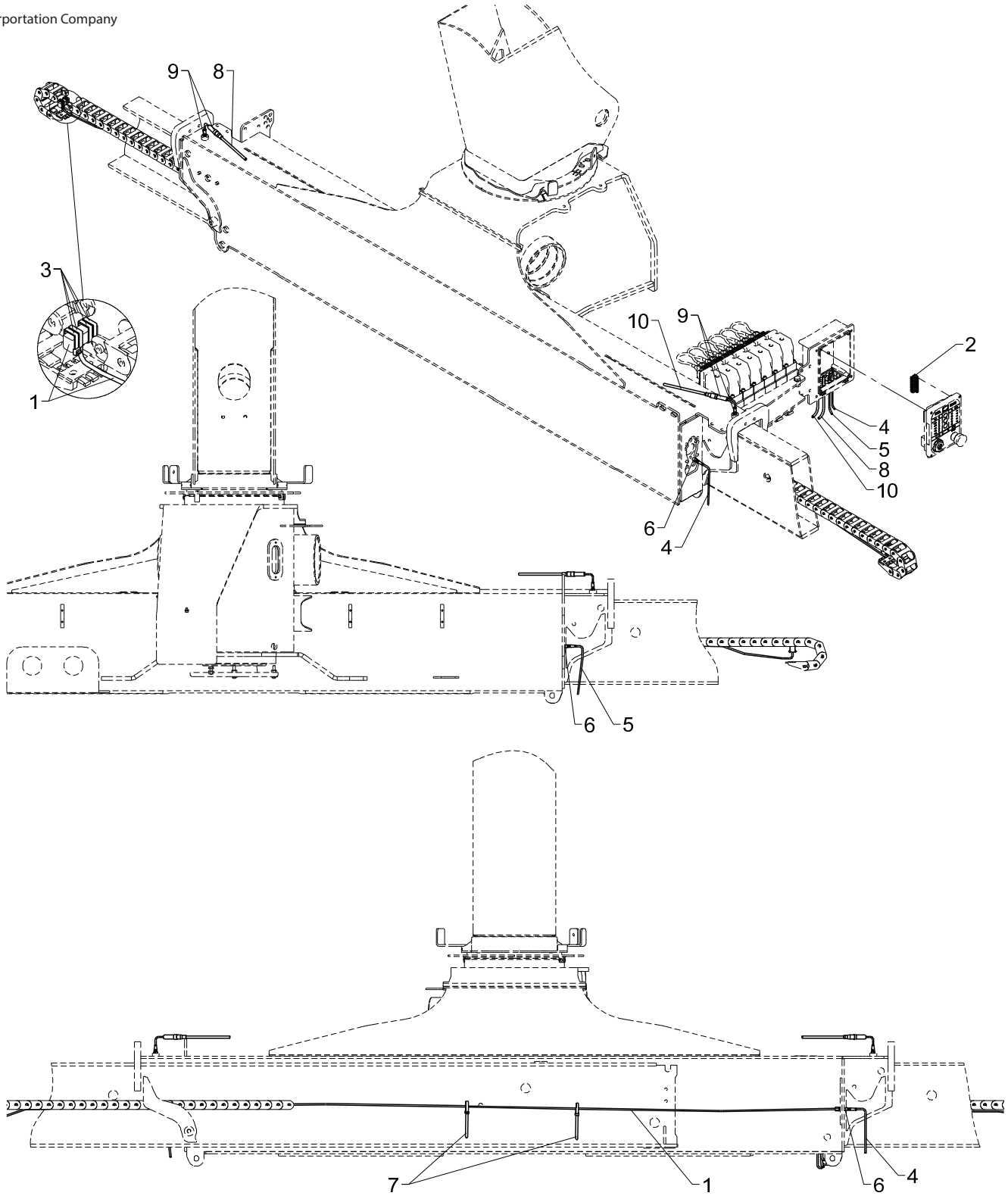

CYBEL double extension

2530L

Pos	Qty.	Part no.	Description	Remarks
1	2	29253	Tilt sensor, nylon drag chain	
2	1	29322	Plug, 12-polar for RCL 53XX	
3	8	27274	Clip	
4	1	29264	Cable 5 m, M8 socket	
5	1	29265	Cable 2 m, M8 socket	
6	2	29443	Panel lead-in M8 - 3-polar	
7	4	27275	Cable tie, black, 7.6x385mm	
8	1	29224	Cable with socket, 5 m	
9	2	29282	Proximity switch M12-4mm NO	
10	1	29223	Cable with socket, 2 m	

2530L

Internal ref. 70 08 640

Obsolete

An Oshkosh Corportation Company

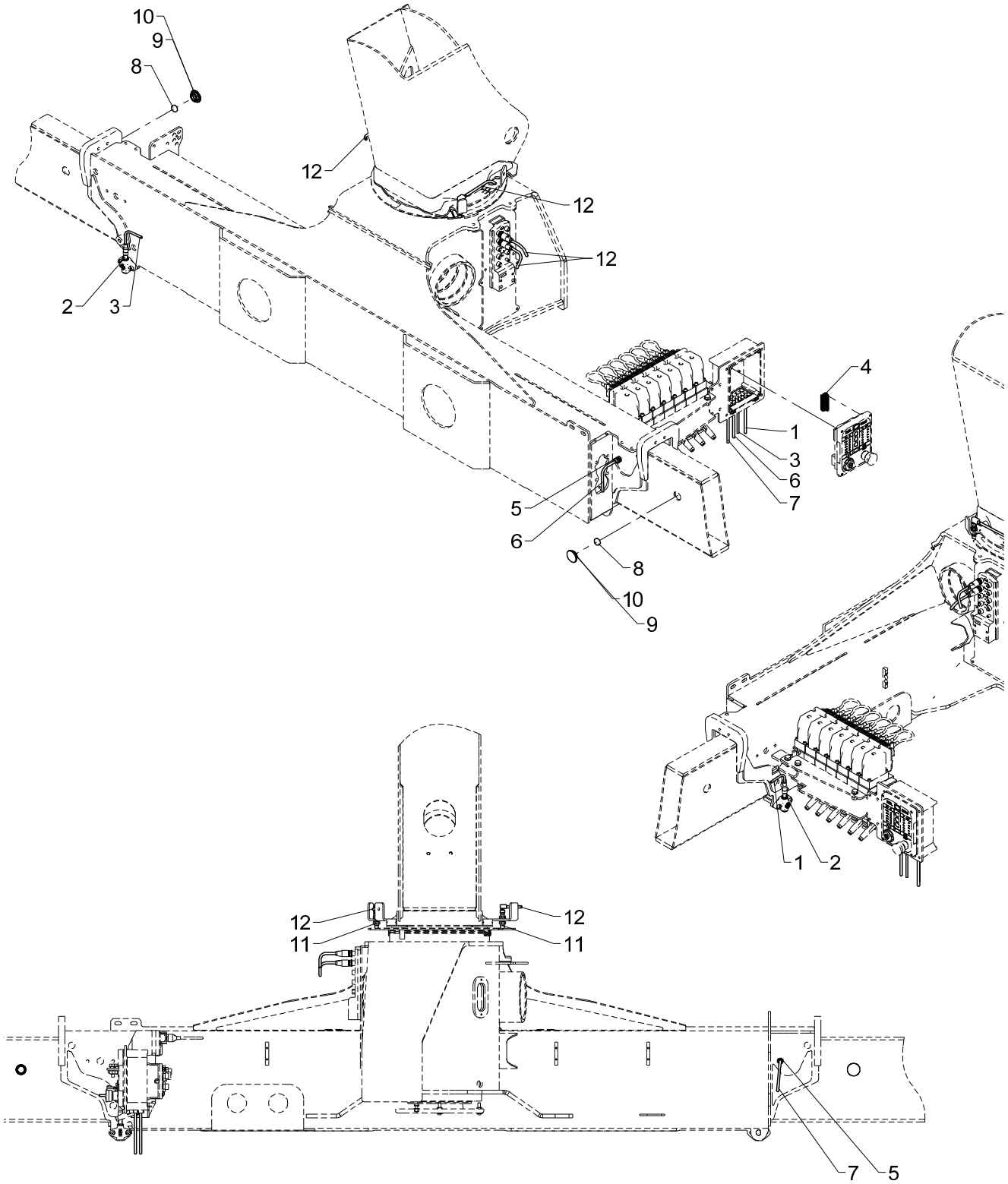

Obsolete

553 22 520

From loader 1270001
To loader

2CYBEL, single extension

2530L

Created 18-03-2016
Modified

Pos	Qty.	Part no.	Description	Remarks
1	1	29224	Cable with socket, 5 m	
2	2	29257	Proximity switch M12x44, 4mm	
3	1	29223	Cable with socket, 2 m	
4	1	29322	Plug, 12-polar for RCL 53XX	
5	2	29259	Magnet proximity switch M12	
6	1	28077	Cable with plug	
7	1	28117	Cable with plug	
8	2	29262	Solenoid Ø22x5	
9	2	63681	Slide block	3 mm
10	2	64424	Slide block	2 mm
11	2	29447	Proximity switchM12 8mm PNP-NO	
12	2	29509	Cable M12, 3,0m	

2530L

Internal ref. 70 08 640

An Oshkosh Corportation Company

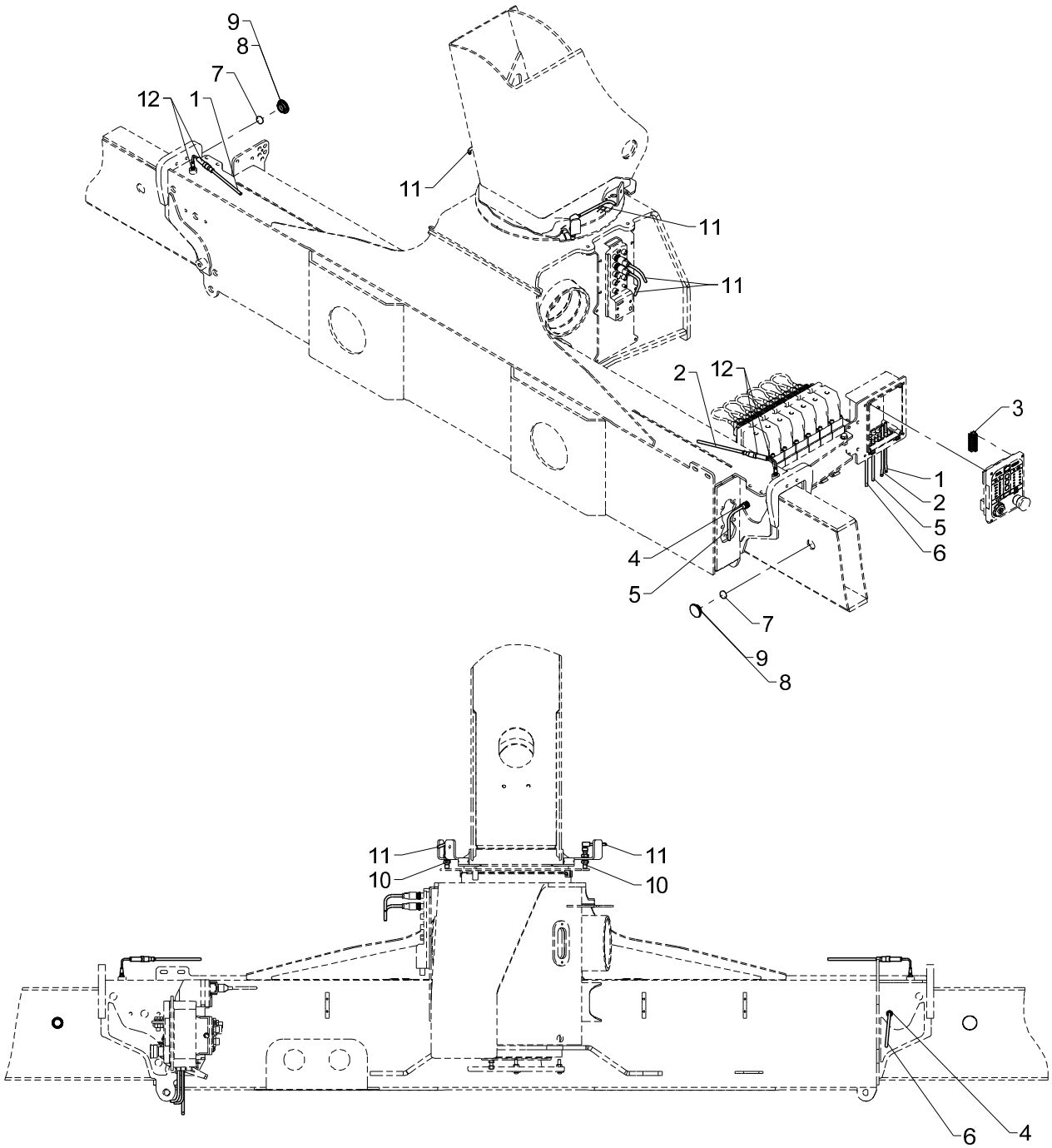

2CYBEL, single extension

2530L

Pos	Qty.	Part no.	Description	Remarks
1	1	29224	Cable with socket, 5 m	
2	1	29223	Cable with socket, 2 m	
3	1	29322	Plug, 12-polar for RCL 53XX	
4	2	29259	Magnet proximity switch M12	
5	1	28077	Cable with plug	
6	1	28117	Cable with plug	
7	2	29262	Solenoid Ø22x5	
8	2	63681	Slide block	3 mm
9	2	64424	Slide block	2 mm
10	2	29447	Proximity switchM12 8mm PNP-NO	
11	2	29509	Cable M12, 3,0m	
12	2	29282	Proximity switch M12-4mm NO	

2530L

Internal ref. 70 08 650

Obsolete

An Oshkosh Corportation Company

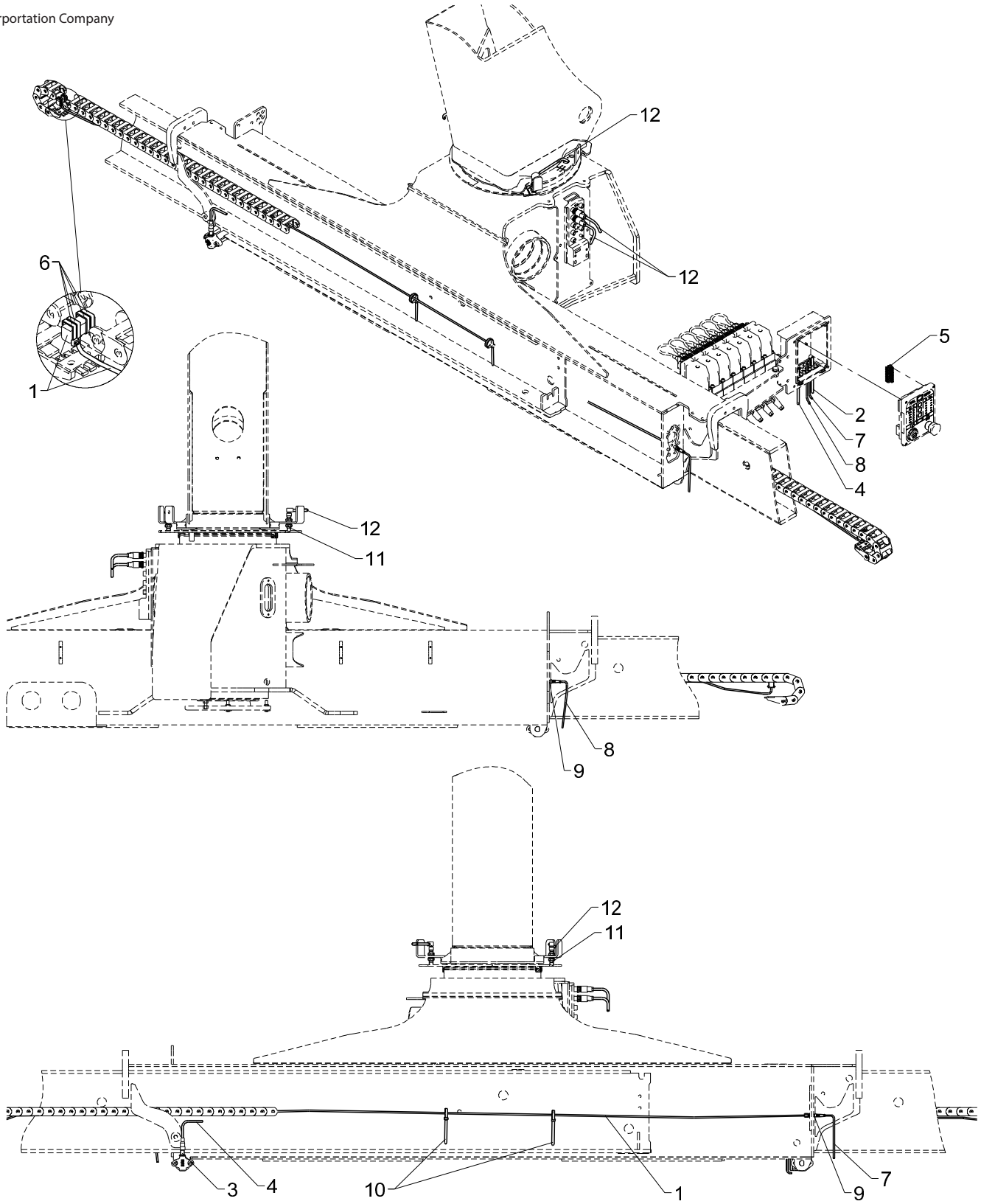

Obsolete

553 22 530

From loader 1270001
To loader

2CYBEL, double extension

2530L

Created 21-03-2016
Modified

Pos	Qty.	Part no.	Description	Remarks
1	2	29253	Tilt sensor, nylon drag chain	
2	1	29224	Cable with socket, 5 m	
3	2	29257	Proximity switch M12x44, 4mm	
4	1	29223	Cable with socket, 2 m	
5	1	29322	Plug, 12-polar for RCL 53XX	
6	8	27274	Clip	
7	1	29264	Cable 5 m, M8 socket	
8	1	29265	Cable 2 m, M8 socket	
9	2	29443	Panel lead-in M8 - 3-polar	
10	4	27275	Cable tie, black, 7.6x385mm	
11	2	29447	Proximity switchM12 8mm PNP-NO	
12	2	29509	Cable M12, 3,0m	

2530L

Internal ref. 70 08 650

An Oshkosh Corportation Company

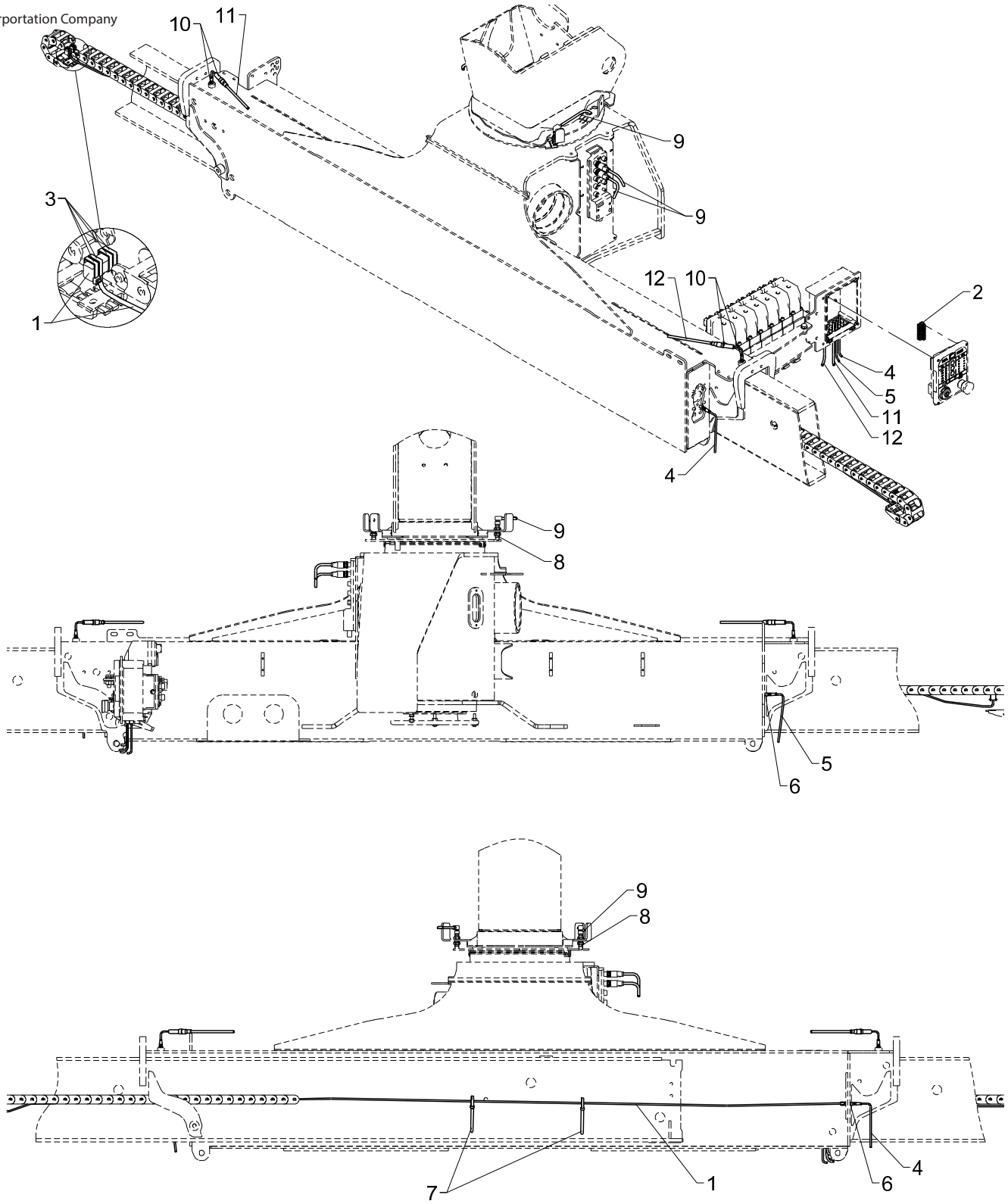

2CYBEL, double extension

2530L

Pos	Qty.	Part no.	Description	Remarks
1	2	29253	Tilt sensor, nylon drag chain	
2	1	29322	Plug, 12-polar for RCL 53XX	
3	8	27274	Clip	
4	1	29264	Cable 5 m, M8 socket	
5	1	29265	Cable 2 m, M8 socket	
6	2	29443	Panel lead-in M8 - 3-polar	
7	4	27275	Cable tie, black, 7.6x385mm	
8	2	29447	Proximity switchM12 8mm PNP-NO	
9	2	29509	Cable M12, 3,0m	
10	2	29282	Proximity switch M12-4mm NO	
11	1	29224	Cable with socket, 5 m	
12	1	29223	Cable with socket, 2 m	

2530L

70 09 180
Internal ref. 70 08 660

An Oshkosh Corportation Company

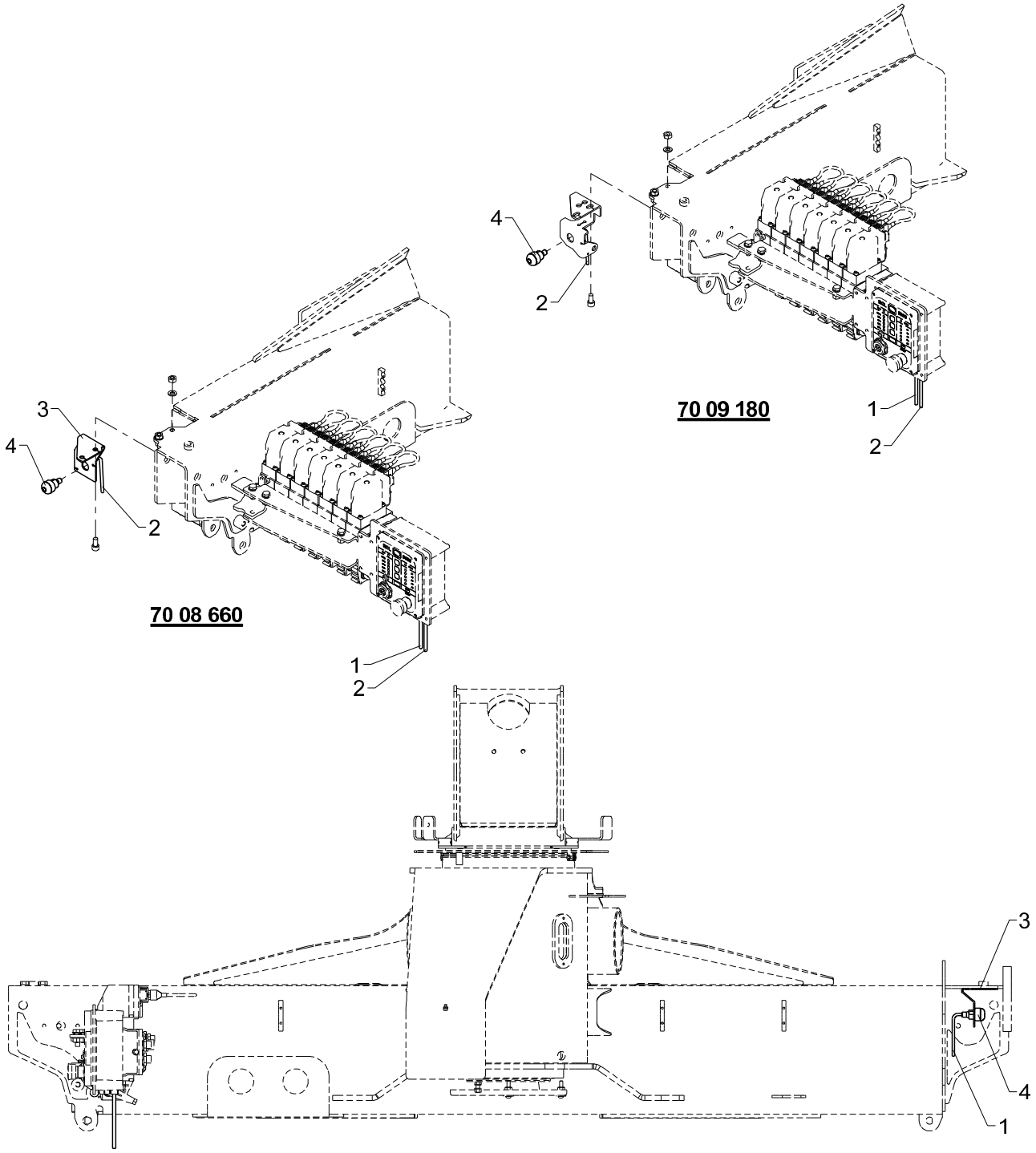

Stabilizer operation via RC

2530L

Pos	Qty.	Part no.	Description	Remarks
		7008660	Stabilizer operation via RC	
		7009180		1430L-UK
1	1	29224	Cable with socket, 5 m	
2	1	29223	Cable with socket, 2 m	
3	2	6355935	Mounting bracket	
4	2	29498	Touch button with light	

2530L

Internal ref. 70 08 670

An Oshkosh Corportation Company

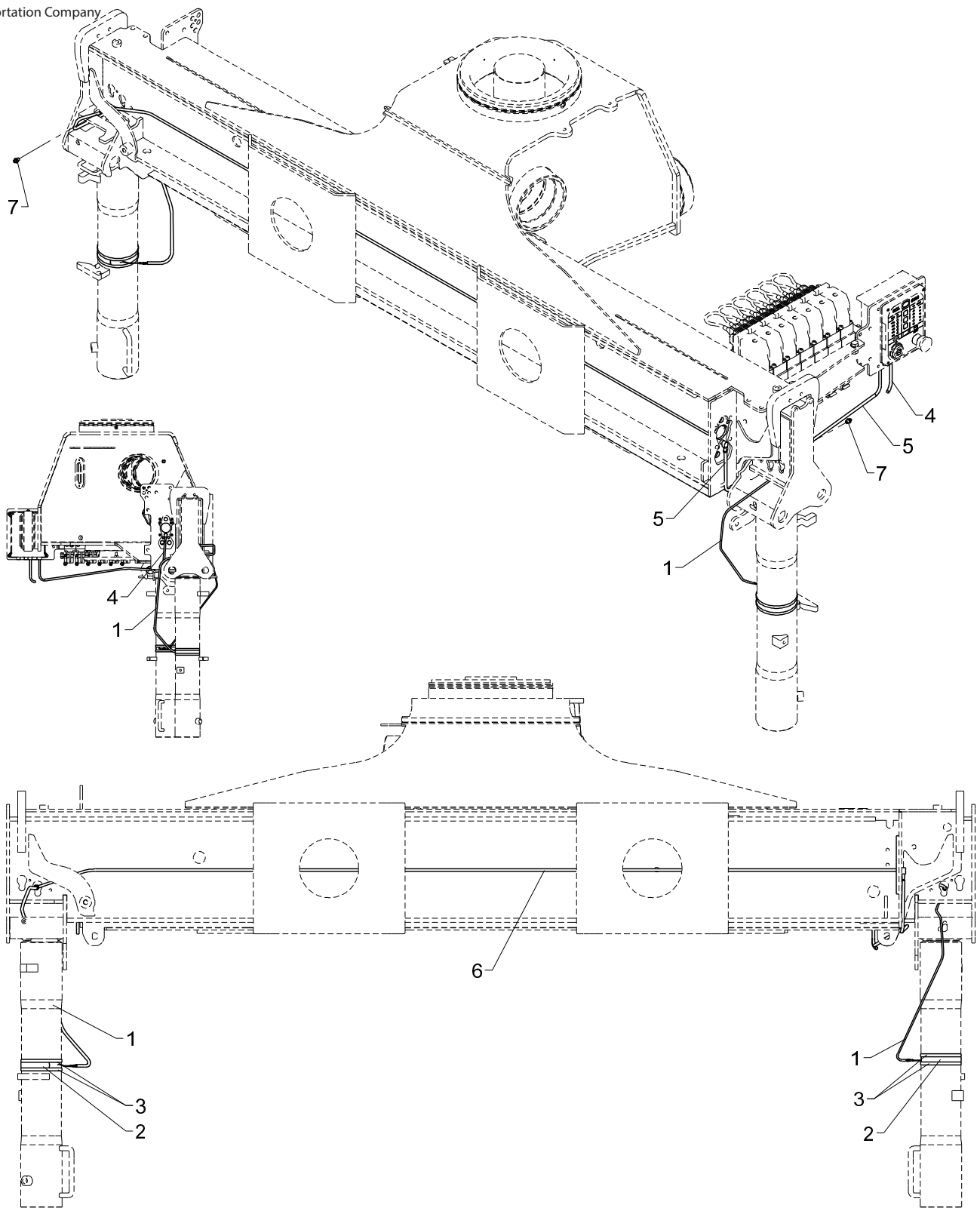

Alarm flash on stabilizer legs

2530L

Pos	Qty.	Part no.	Description	Remarks
1	2	29444	Cable M8 - 3-polar	
2	2	29432	Alarm flash, yellow 24V, 24 cm	
3	4	27275	Cable tie, black, 7.6x385mm	
4	1	29483	Cable M8, 5 m, female, 3 polar	
5	1	29482	Cable M8, 2 m, female, 3 polar	
6	2	29436	Cable M8, socket and plug 6.3m	
7	2	29437	Safety plug M8x1, socket	

2530L

Internal ref. 70 08 740

An Oshkosh Corportation Company

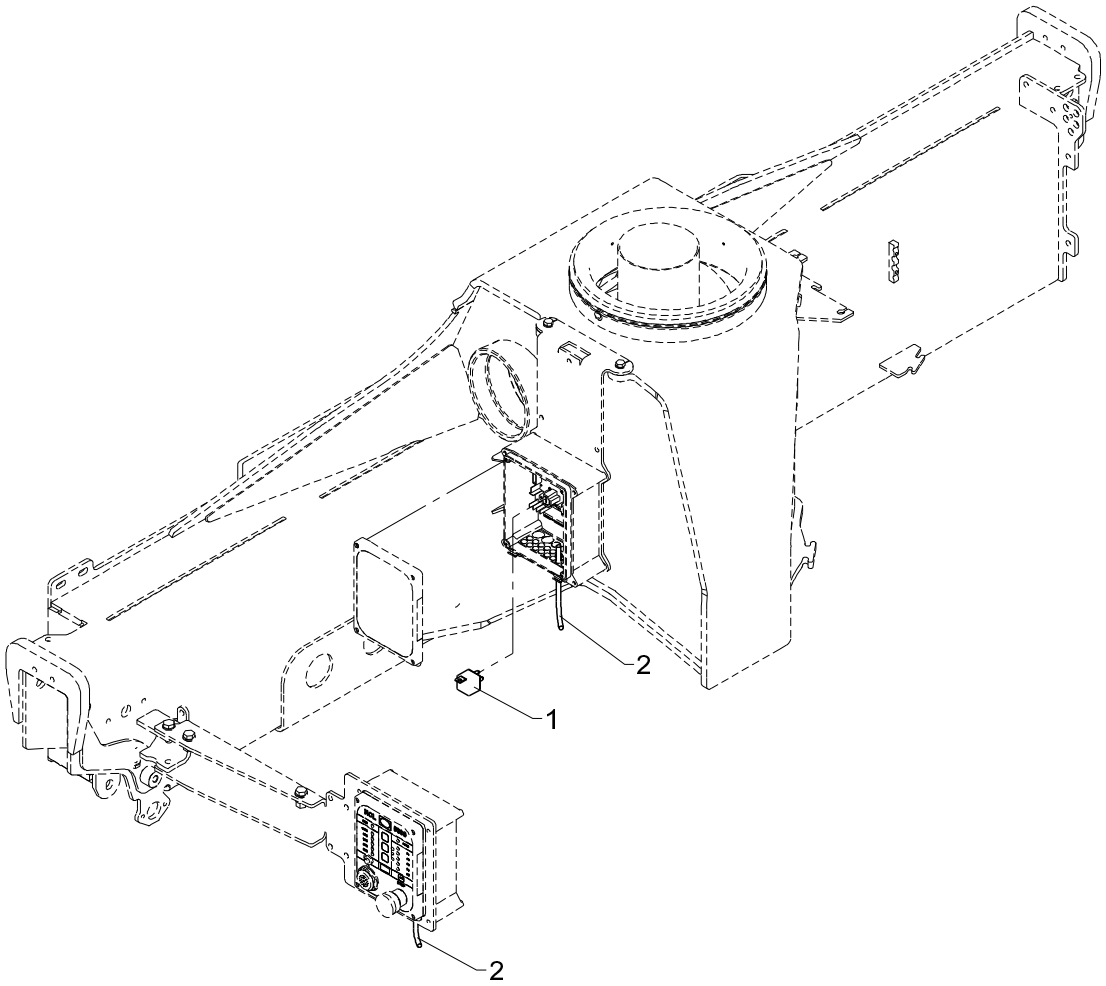

Spotlight, radio remote controlled.

2530L

Pos	Qty.	Part no.	Description	Remarks
1	1	27342	Relay, 24V	
2	1	28262	Cable 4 x 0.75	2,0 m

2530L

70 08 710
Internal ref. 70 08 720

An Oshkosh Corportation Company

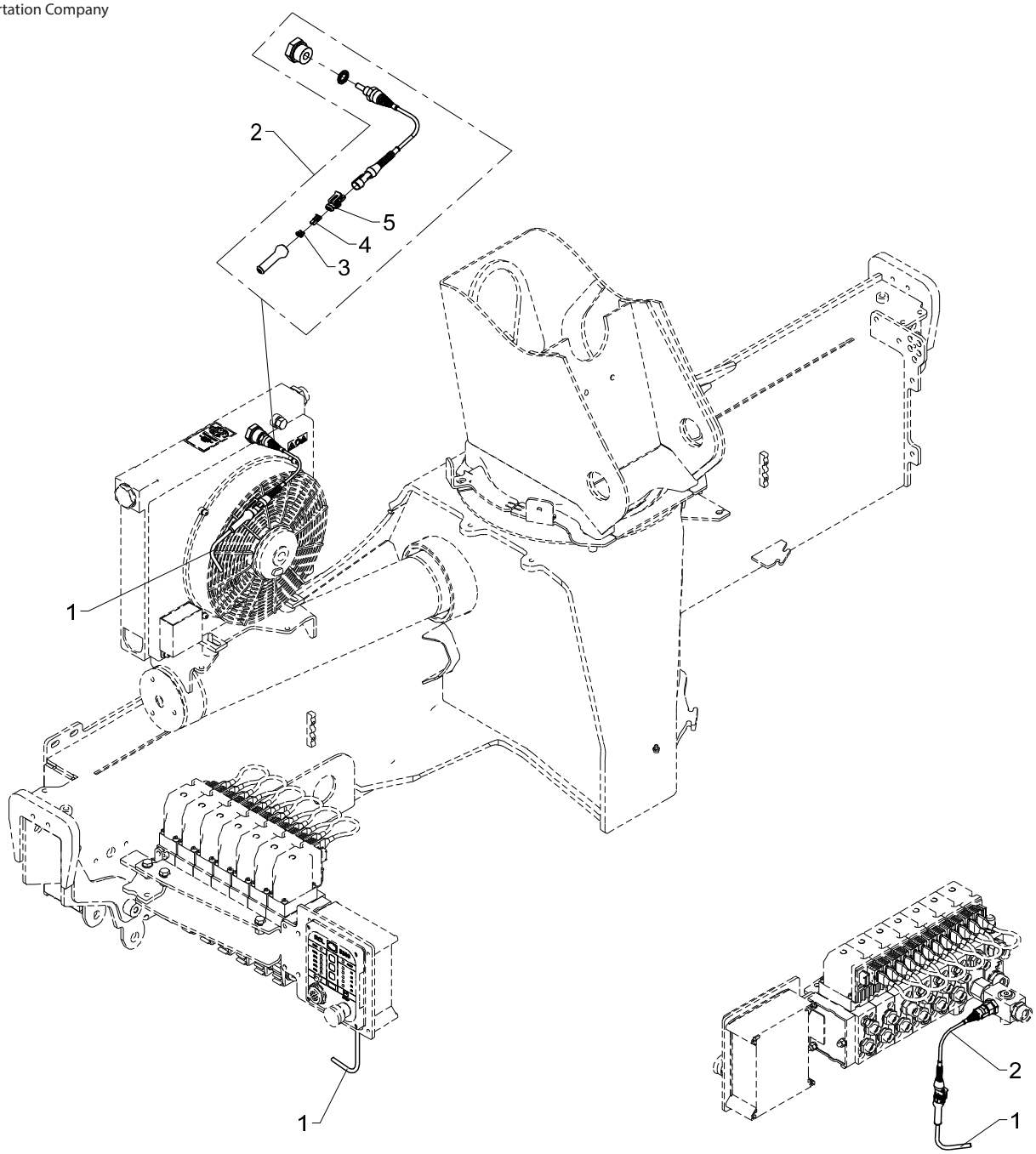

70 08 710

Temperature monitoring

2530L

Pos	Qty.	Part no.	Description	Remarks
		7008720	Temperature monitoring, cooler	
		7008710		
1	1	28249	Cable 2 x 0.75	3.5 m
2	1	49652	Thermostat for RCL5300	
3	2	29159	Cable lead-in, AMP	
4	2	28844	Socket, AMP	
5	1	28843	Bipolar socket, AMP	

2530L

Internal ref. 70 07 500

An Oshkosh Corportation Company

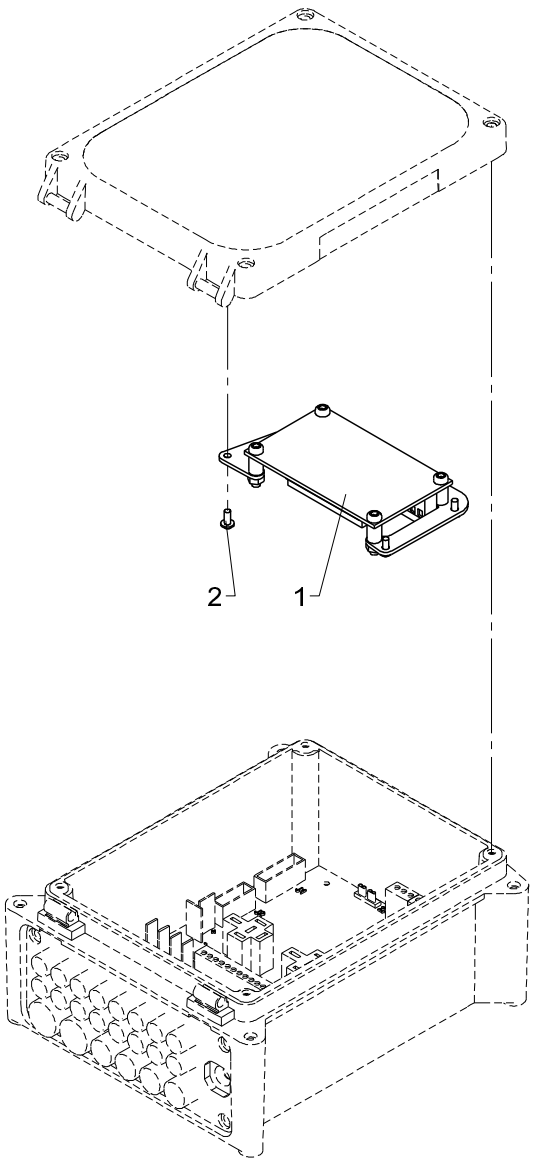

EJB5385, installation

2530L

Pos	Qty.	Part no.	Description	Remarks
1	1	29474	EJB5385	
2	4	30361	Screw, stainless	3,0 x 8

2530L

Internal ref. 70 06 390

An Oshkosh Corportation Company

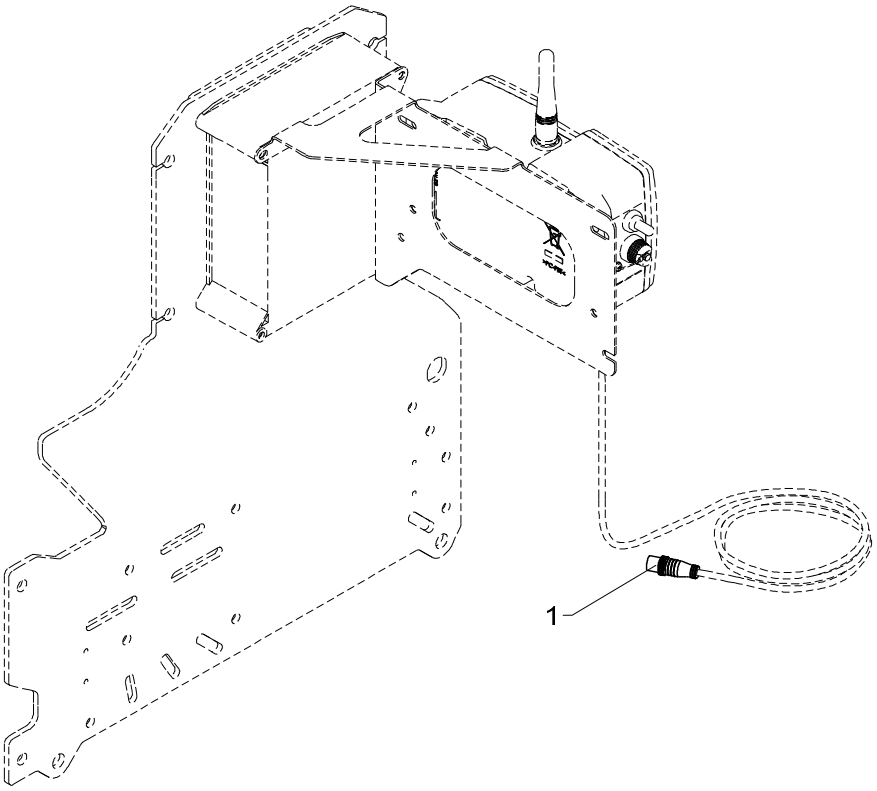

553 22 580

From loader 1270001
To loader

Termination, G2

2530L

Created 03-09-2012
Modified

Pos	Qty.	Part no.	Description	Remarks
1	1	29486	Plug M12, termination	

2530L

Internal ref. 82 00 050

An Oshkosh Corportation Company

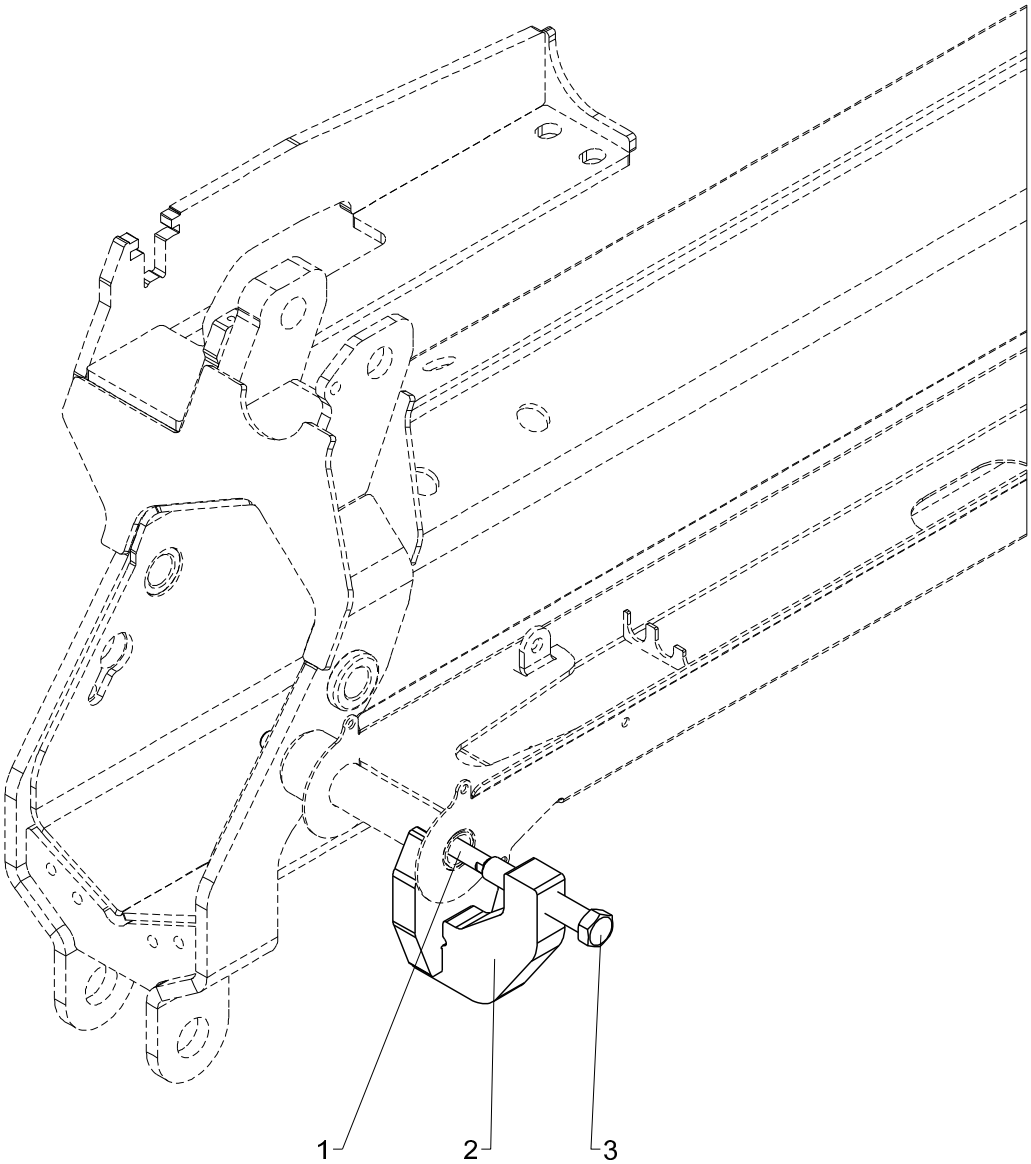

Dismounting tools, cpl.(EXV)

2530L

Pos	Qty.	Part no.	Description	Remarks
1	1	8200054	Rod	
2	1	8200051	Dismounting tool	
3	1	8200055	Pin	

2530L

Internal ref. 82 00 030

An Oshkosh Corportation Company

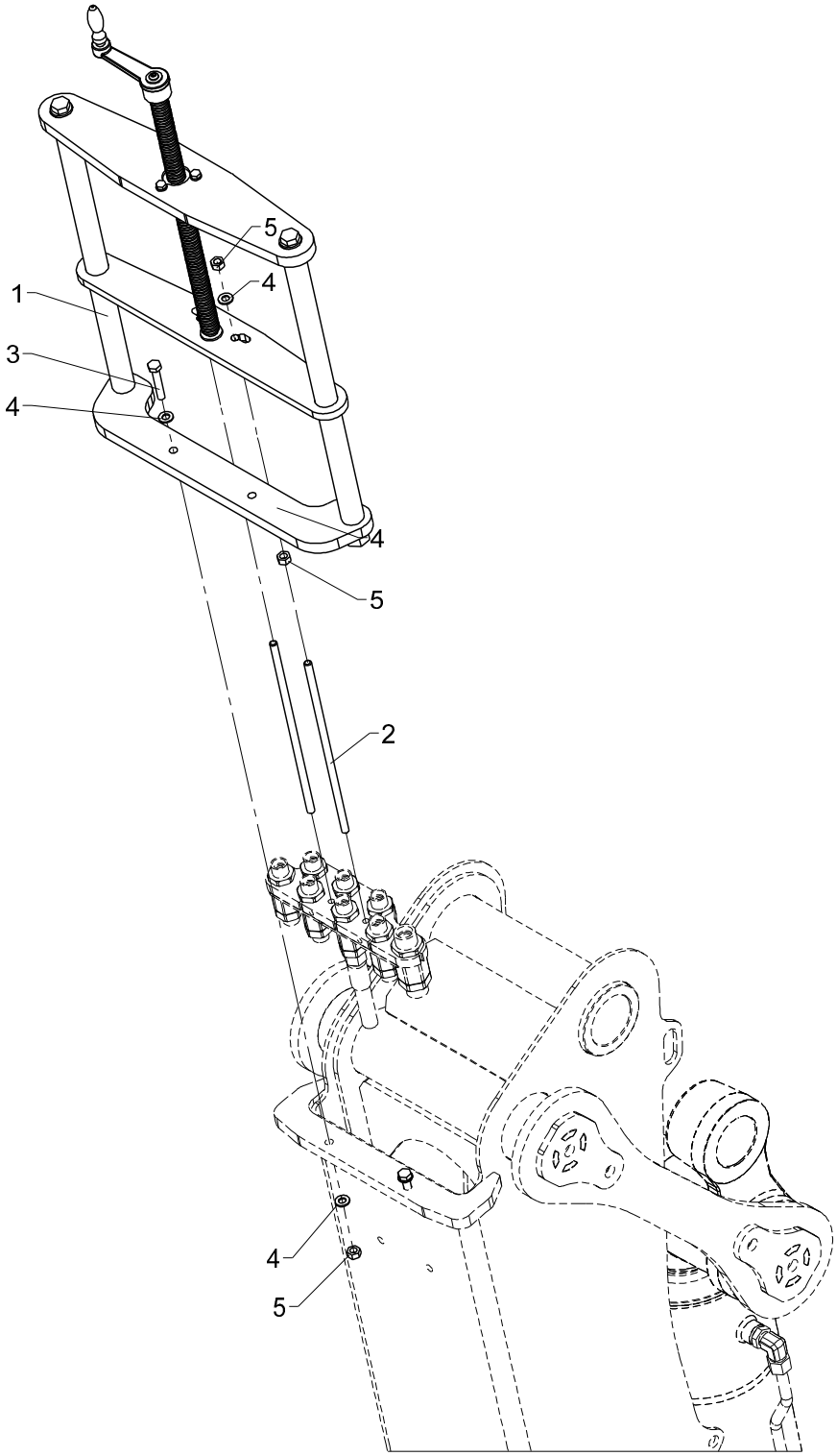

Lifting tools cpl. (Change of hoses inside the column)

2530L

Pos	Qty.	Part no.	Description	Remarks
1	1	8200020	Lifting tool (change of hoses	
2	2	8200035	Threaded pin	
3	2	30138	Steel bolt, stainless	M8 x 45
4	8	31147	Face washer, 8 mm	8 mm
5	6	30856	Nut, stainless	M8

2530L

Internal ref. 82 00 090

An Oshkosh Corportation Company

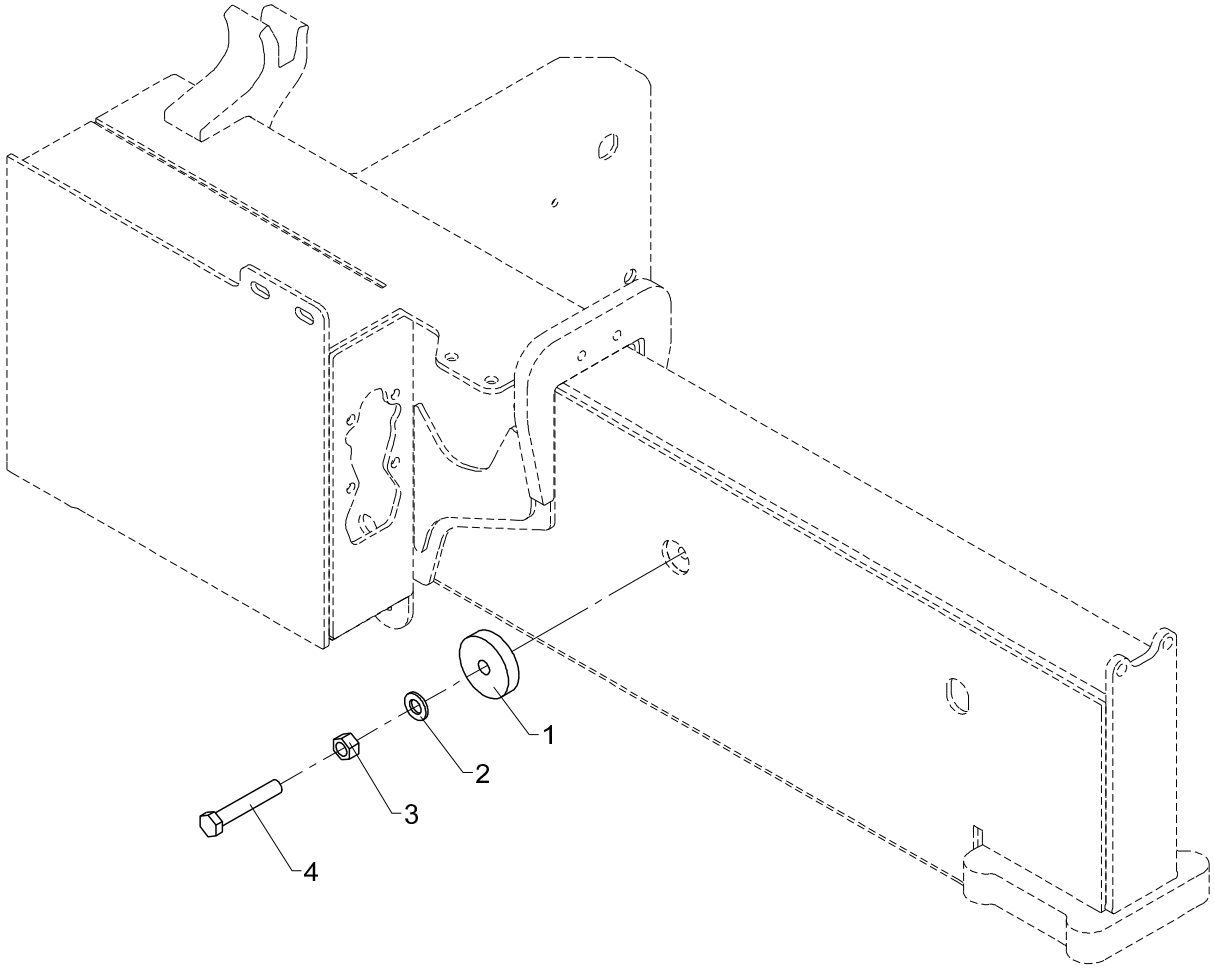

Holding kit (pin in hydr. extension)

2530L

Pos	Qty.	Part no.	Description	Remarks
1	1	6340617	Shim	
2	1	31131	Washer	12 mm
3	1	30860	Nut, stainless	M12
4	1	30190	Set screw	M12 x 70

2530L

Internal ref. 82 00 100

An Oshkosh Corportation Company

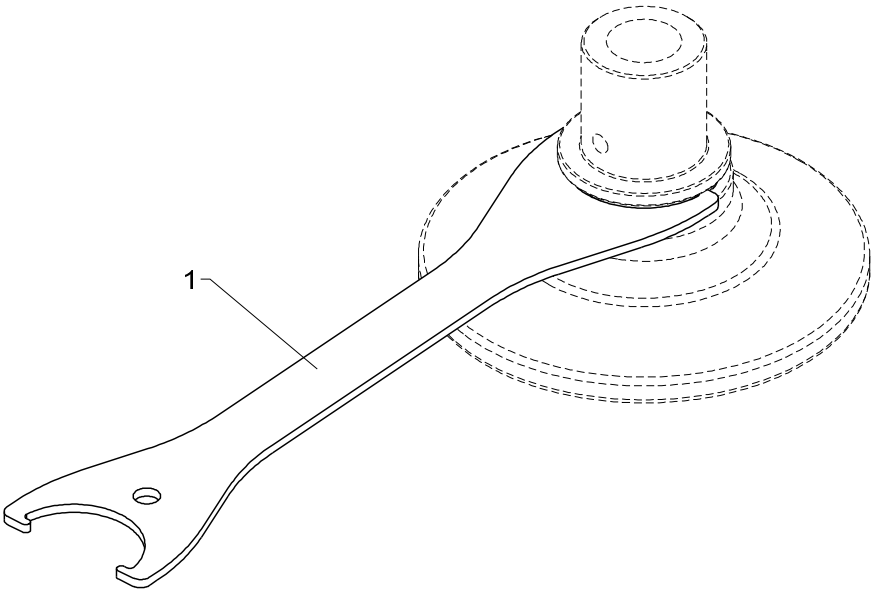

553 25 060

From loader 1270001
To loader
Created 09-05-2014
Modified

Spanner wrench, footplate + ball joint

2530L

Pos	Qty.	Part no.	Description	Remarks
1	1	8200058	Spanner wrench (DC 50 - Ø4)	