IMT

MATERIAL HANDLING SYSTEMS

Repair Parts

Model 72/516 Crane

IOWA MOLD TOOLING CO., INC.
BOX 189, GARNER, IA 50438-0189
641-923-3711

MANUAL PART NO: 99903537

Iowa Mold Tooling Co., Inc. is an Oshkosh Corporation company.

In addition to the information presented in this manual, read and understand the IMT Crane Operator's Safety Manual before operating or performing any maintenance on your crane.

REVISIONS LIST

DATE	LOCATION	DESCRIPTION OF CHANGE
20040726	THROUGHOUT	NEW RELEASE WITH CAN, TOP SEAT, ADDITIONAL CONTROLS
20041202	THROUGHOUT	ADDITION OF FITTINGS AND SUSPENSION FOR EXTENSION OK6, EXTENSION CYLINDERS, EXTERNAL HYD TANKS.
20050509	P. 84	BOOM CYL. WITH LHV - 28821 WAS 28366
20051024	P. 250	ECN 9956 - ADDED 70396639 MANUAL CONTROL DECAL TO DECAL KIT.
20060719	THROUGHOUT	UPDATED PER NEW DRAWINGS WITH A OR B IN PART NUMBER
20070228		ADDED DRAWINGS 52307251 - 72307255
20070228	COVER	UPDATED OWNERSHIP STATEMENT
20120305	DECALS	ECN 11628 - UPDATED STABILIZER WORDING

Description	Page	As from	To loader nr.
Base, Column, Planetary Gear			
Base with turntable	52301010	97 00 00	
Lubricating brush for planetary gear	52301050	97 00 00	
Stowing bracket	52301070	97 00 00	97 00 38
	52301070A	97 00 39	
Column, complete	52301100	97 00 00	
Planetary gear	52301150	97 00 00	
Pins and link arm system N	52301210	97 00 00	97 00 11
	52301210A	97 00 12	
Boom System			
Main boom, complete	52302010	97 00 00	
Pins and link arm system K	52302020	97 00 00	97 00 11
	52302020A	97 00 12	
Jib, complete	52302100	97 00 00	
Fittings for extension I	52302101	97 00 00	
Fittings for extension II	52302102	97 00 00	
Fittings for extension III	52302103	97 00 00	
Fittings for extension K4	52202104	97 00 00	97 00 xx
	52302104A	97 00 xx	
Fittings for extension V	52302105	97 00 00	97 00 xx
	52302105A	97 00 xx	
Fittings for extension VI - OK6	52302106	97 00 00	
Fittings for extension VI - K6	52302107	97 00 00	
Fittings for extension VII	52302108	97 00 00	
Fittings for extension VIII	52302109	97 00 00	
Separate hook suspension, OK2	52302500	97 00 00	
Separate hook suspension, OK3	52302501	97 00 00	
Separate hook suspension, OK4	52302502	97 00 00	
Separate hook suspension, OK5	52302503	97 00 00	

Description	Page	As from	To loader nr.
Separate hook suspension, OK6	52302504	97 00 00	
Separate hook suspension, K6	52302505	97 00 00	
Separate hook suspension, K7	52302506	97 00 00	
Separate hook suspension, K8	52302507	97 00 00	
Hook suspension	52302520	97 00 00	
Stowing hook, complete	52302550	97 00 00	
Manual extensions OK 4	52302630	97 00 08	
Manual extensions OK 5	52302640	96 00 08	
Manual extensions K6	52302650	97 00 00	
Manual extensions K7	52302660	97 00 00	
Manual extensions K8	52302670	97 00 00	
Hook suspension, F9, F10, F11	52302680	97 00 00	
Cylinders			
Boom cylinder, C250/180 x 837	52303010	97 00 00	
Boom cylinder with LHV	52303020	97 00 00	
Jib cylinder, C250/180 x 1122	52303050	97 00 00	
Jib cylinder with LHV	52303060	97 00 00	
Extension cyl. I, C110/80h x 1850, optimised boom system OK2-OK6	52303100	97 00 00	
Extension cyl. II, C110/80h x 1900, optimised boom system OK2-OK6	52303101	97 00 00	
Extension cyl. III, C100/70h x 2000, optimised boom system OK3-OK6	52303102	97 00 00	
Extension cyl. IV, C100/70h x 2100, optimised boom system OK4-OK6	52303103	97 00 00	
Extension cyl. V-OK5, C90/60s x 2250, optimised boom system OK5	52303104	97 00 00	97 00 xx
Extension cyl. V-OK5, C90/60s x 2175, optimised boom system OK5	52303104A	97 00 xx	
Extension cyl. V-OK6, C90/60h x 2175, optimised boom system OK6	52303105	97 00 00	
Extension cyl. VI, C90/60s x 2250, optimised boom system OK6	52303106	97 00 00	
Extension cylinder I, C110/80h x 1650, boom system K6-K8	52303110	97 00 00	
Extension cylinder II, C110/80h x 1700, boom system K6-K8	52303111	97 00 00	
Extension cylinder III, C100/70h x 1800, boom system K6-K8	52303112	97 00 00	
Extension cylinder IV, C100/70h x 1900, boom system K6-K8	52303113	97 00 00	

Description	Page	As from	To loader nr.
Extension cylinder V, C90/60h x 2050, boom system K6-K8	52303114	97 00 00	
Extension cylinder VI, C90/60h x 2150, boom system K6-K8	52303115	97 00 00	
Extension cylinder VII/VIII, C80/50h x 2300, boom system K6-K8	52303116	97 00 00	97 00 xx
Extension cylinder VII/VIII, C80/50h x 2225, boom system K6-K8	52303116A	97 00 xx	
Stabilizer cylinder C125-600, type R incl. ball joint	52303320	97 00 00	
Stabilizer cylinder C125-600, type R incl. fixed footplate	52303325	97 00 00	
Stabilizer cylinder with check valve, type R	52303330	97 00 00	
Swing-up stabilizer cylinder C125-600, type HR incl. ball joint	52303340	97 00 00	
Swing-up stabilizer cylinder C125-600, type HR incl. fixed footplate	52303345	97 00 00	
Parts for swing-up stabilizer cylinder	52303347	97 00 00	
Stabilizer cylinder with check valve, type HR	52303350	97 00 00	
Beam cylinder C45-1465, type DR - 8420	52303430	97 00 00	
Beam cylinder C40-1600, type DR - 8420	52303440	97 00 00	
Stabilizer Beam			
Stabilizer beam, type DR - 8420	52304040	97 00 00	
Stabilizer beam - swing-up legs, type DHR - 8420	52304080	97 00 00	
Safety lock DR, DHR	52304200	97 00 00	
Hydraulic Systems, Valve blocks			
Valve block, 1 section (extra RC function)	52305005	97 00 00	
Valve block, 2 sections P1	52305010	97 00 00	
Valve block, 2 sections P2	52305015	97 00 00	
Valve block, 3 sections P1	52305020	97 00 00	
Valve block, 3 sections P2	52305025	97 00 00	
Valve block, 4 sections P2	52305030	97 00 00	
Stabilizer valve block, 8 functions	52305100	97 00 00	
Stabilizer valve block, 5 available func.	52305110	97 00 00	
Stabilizer valve block, 6 available func.	52305120	97 00 00	
Stabilizer valve block, 7 available func.	52305130	97 00 00	
Stabilizer valve block, 8 available func.	52305140	97 00 00	

Description	Page	As from	To loader nr.
Extra RC function on base	52305145	97 00 00	
Hydraulic Systems, Pump and Return Hoses			
Brackets and protection plates	52305150	97 00 00	97 00 22
	52305150A	97 00 23	97 00 26
	52305150B	97 00 27	
Hydr. system, pump and return hoses, 1 circuit + fixed pump	52305260	97 00 00	97 00 22
	52305260A	97 00 23	97 00 26
	52305260B	97 00 27	
Hydr. system, pump and return hoses, 2 circuits + fixed pump	52305270	97 00 00	97 00 22
	52305270A	97 00 23	97 00 26
	52305270B	97 00 27	
Hydr. system, pump and return hoses, 1 circuit + variable pump	52305280	97 00 00	97 00 22
	52305280A	97 00 23	97 00 26
	52305280B	97 00 27	
Hydr. system, pump and return hoses, 2 circuits + variable pump	52305290	97 00 00	97 00 22
	52305290A	97 00 23	97 00 26
	52305290B	97 00 27	
Hydraulic Systems, Slewing, Boom, Jib and Extensions			
Tank, complete	52305320	97 00 00	
Fittings for tank	52305330	97 00 00	
Hose kit for tank	52305340	97 00 00	
Hydraulic system, planetary gear	52305400	97 00 00	
Hose clamp	52305450	97 00 00	
Hydraulic system, boom, jib and ext.	52305490	97 00 00	
Hydraulic Systems, Extension Cylinders			
Hydraulic system, regeneration	52305500	97 00 00	
Hydraulic system, extension cylinder, I	52305501	97 00 00	
Hydraulic system, extension cylinder, II	52305502	97 00 00	
Hydraulic system, extension cylinder, III	52305503	97 00 00	

Description	Page	As from	To loader nr.
Hydraulic system, extension cylinder, IV	52305504	97 00 00	
Hydraulic system, extension cylinder, V	52305505	97 00 00	
Hydraulic system, extension cylinder, VI - optimised boom system OK6	52305506	97 00 00	
Hydraulic system, extension cylinder, VI - boom system K6-K8	52305507	97 00 00	
Hydraulic system, extension cylinder, VII	52305508	97 00 00	
Hydraulic system, extension cylinder, VIII	52305509	97 00 00	
Hydraulic Systems, Stabilizer Beams			
Hydraulic system, stabilizer beam, type DR - 8420	52305630	97 00 00	
Hydraulic system, stabilizer valve block, type DR+DHR	52305660	97 00 00	
Labels and Mounting Kits			
Labels	52306010	97 00 00	97 00 xx
	52306010A	97 00 xx	
Mounting kit, standard. Chassis height: 220 - 490 mm.	52306100	97 00 00	
Mounting kit, HMF-subframe	52306110	97 00 00	
Mounting kit, long. Chassis height: 350 - 620 mm.	52306120	97 00 00	
Accessories, Extra Valves (Hose reels)			
Hydraulic system, extra valves, without FJ and winch	52307150	97 00 00	97 00 52
	52307150A	97 00 53	
Hydraulic system, extra valves, without FJ, with winch	52307151	97 00 00	97 00 52
	52307151A	97 00 53	
Hydraulic system, extra valves, K6 with FJ	52307152	97 00 00	97 00 52
	52307152A	97 00 53	
Hydraulic system, extra valves, K8 with FJ	52307153	97 00 00	97 00 52
	52307153A	97 00 53	
Extra valves, K6-2, Hose reels and quick-release couplings	52307165	97 00 00	
Extra valves, K8-2, Hose reels and quick-release couplings	52307167	97 00 00	
Extra valves, K6-2, Hose reels and multi-coupling	52307175	97 00 00	
Extra valves, K8-2, Hose reels and multi-coupling	52307177	97 00 00	

Description	Page	As from	To loader nr.
Accessories, Extra Valves (Hose guides)			
Extra valves, K2-2, Hose guides	52307251		
Extra valves, K3-2, Hose guides	52307252		
Extra valves, K4-2, Hose guides	52307253		
Extra valves, K5-2, Hose guides	52307254		
Extra valves, K6-2, Hose guides	52307255		
Accessories, Miscellaneous			
External hydraulic tank, 320 L	52307320	97 00 00	
External hydraulic tank, 420 L	52307330	97 00 00	
Height Indicator	52307650	97 00 00	
Shield at the end of the jib	52307700	97 00 00	97 00 xx
	52307700A	97 00 xx	
Accessories, Winch			
Hydraulic system, winch with FJ	52313007	97 00 00	
Stowing bracket	52313010	97 00 00	97 00 42
	52313010A	97 00 43	
Guide Roller	52313030	97 00 00	
Winch, Brevini 2500	52313050	97 00 00	
Safety system	52313100	97 00 00	97 00 42
	52313100A	97 00 43	
Cable stop	52313120	97 00 00	
Wire roller guide, on extension K3 for K5, K6 versions	52313150	97 00 00	
Wire roller guide, on extension K4 for K7, K8 versions	52313160	97 00 00	
Wire sheave	52313200	97 00 00	97 00 41
	52313200A	97 00 42	
Wire pulley	52313220	97 00 00	
Snatch block	52313250	97 00 00	97 00 41
	52313250A	97 00 42	
Swivel hook, 3,2 tonnes	52313300	97 00 00	

Description	Page	As from	To loader nr.
Swing-up stowing bracket	52313400	97 00 00	97 00 42
	52313400A	97 00 43	
Slewing cylinder, C50-102	52313430	97 00 00	
Sliding wire pulley	52313450	97 00 00	97 00 08
	52313450A	97 00 09	
Wire sheave, WS12, complete	52313500	97 00 00	
Wire roller guide, FJ	52313550	97 00 00	

72-516

Intern ref.: 6302010

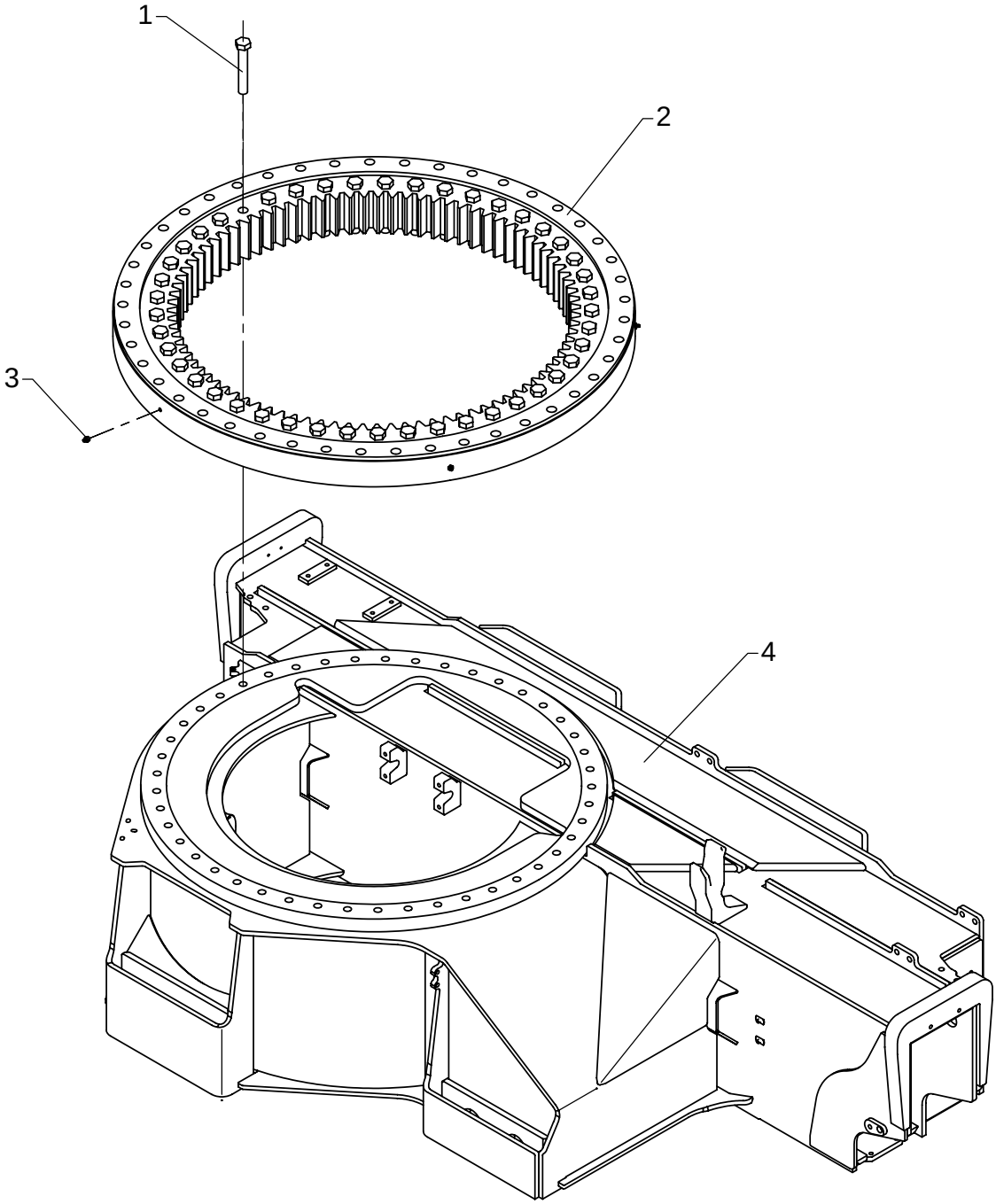

Base with turntable

As from / To loader no.: 97 00 00 /
Created: 17.11.2003
Modified:

Item no.	Qty.	Part no.	Description	Remarks
1	45	32330	Steel bolt	M20 x 125
2	1	24122	Pinion	
3	5	31337	Lubricator	M10 x 1
4	1	6302001	Base	
		32461	Kit of bolts	*

* Incl. bolts for the external ring
Please note! See the installation procedure for the turntable

72-516

Intern ref.: 6300050

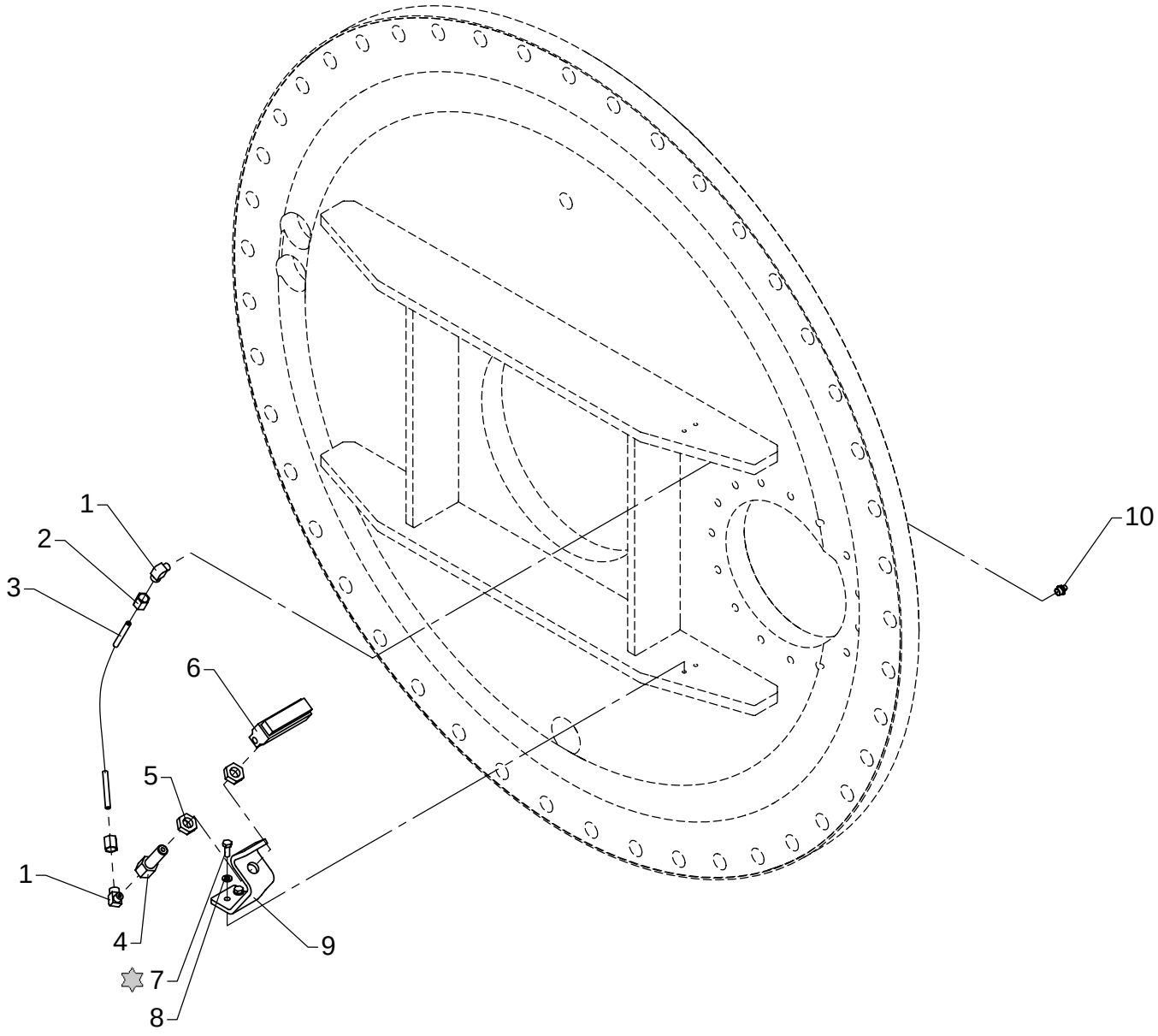

Loctite 243

Lubricating brush for planetary gear

As from / To loader no.: 97 00 00 /
Created: 17.11.2003
Modified:

Item no.	Qty.	Part no.	Description	Remarks
1	2	26186	Elbow connection	WEV 6 LRK
2	2	26164	Coupling nut	M6 L
3	1	62821	Nylon pipe	6 x 1,5 x 300 mm
4	1	6294614	Nipple	
5	2	25354	Counter nut	1/4"
6	1	31395	Brush	
7	2	30112	Set screw, stainless	M6 x 16
8	2	31154	Spring washer, stainless	6 mm
9	1	6300079	Bracket for lubricating brush	
10	1	31318	Lubricator	1/8" RG

72-516

Intern ref.: 6302070

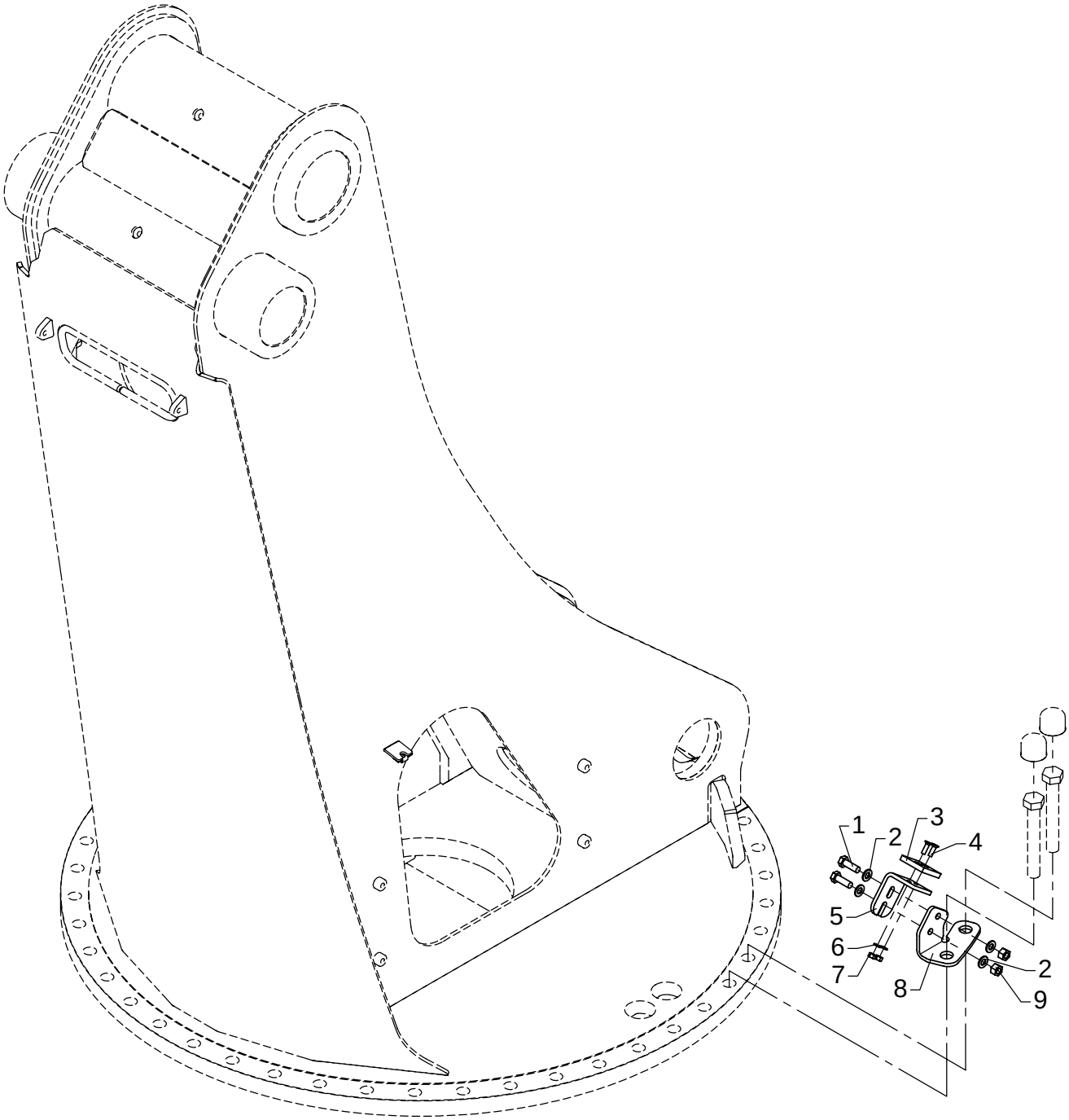

Stowing bracket - OK5, K6, K7, K8

As from / To loader no.: 97 00 00/97 00 38
Created: 17.11.2003
Modified:

Item no.	Qty.	Part no.	Description	Remarks
1	2	31515	Set screw, stainless	M10 x 30
2	4	31565	Washer, stainless	10 mm
3	1	6109454	Slide block	61 09 454
4	2	30579	Countersunk screw	MK6 x 20
5	1	6302083	Stowing bracket	
6	2	32302	Face washer, stainless	6 mm
7	2	30884	Lock nut, stainless	M6
8	1	6302082	Stowing bracket	
9	2	31564	Lock nut, stainless	M10

72-516

Intern ref .: 6302070

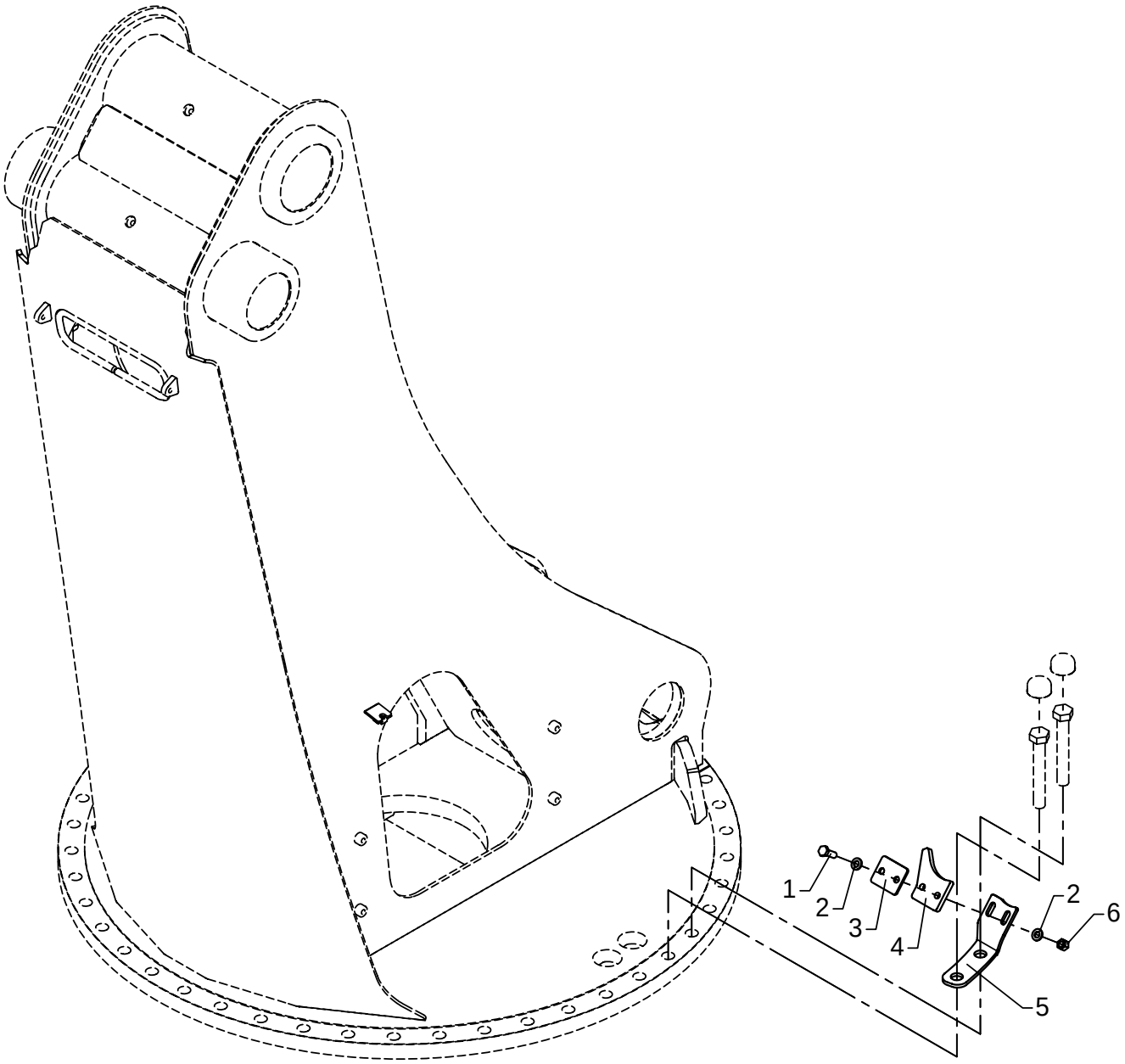

Stowing bracket - OK5, K6, K7, K8

As from / To loader no.: 97 00 39 /
Created: 16.08.2004
Modified:

Item no.	Qty.	Part no.	Description	Remarks
1	2	31515	Set screw, stainless	M10 x 30
2	4	31565	Washer, stainless	10 mm
3	1	6302089	Sheet	
4	1	63417	Cylinder support	
5	1	6302088	Stowing bracket	
6	2	31564	Lock nut, stainless	M10

72-516

Intern ref.: 6302060

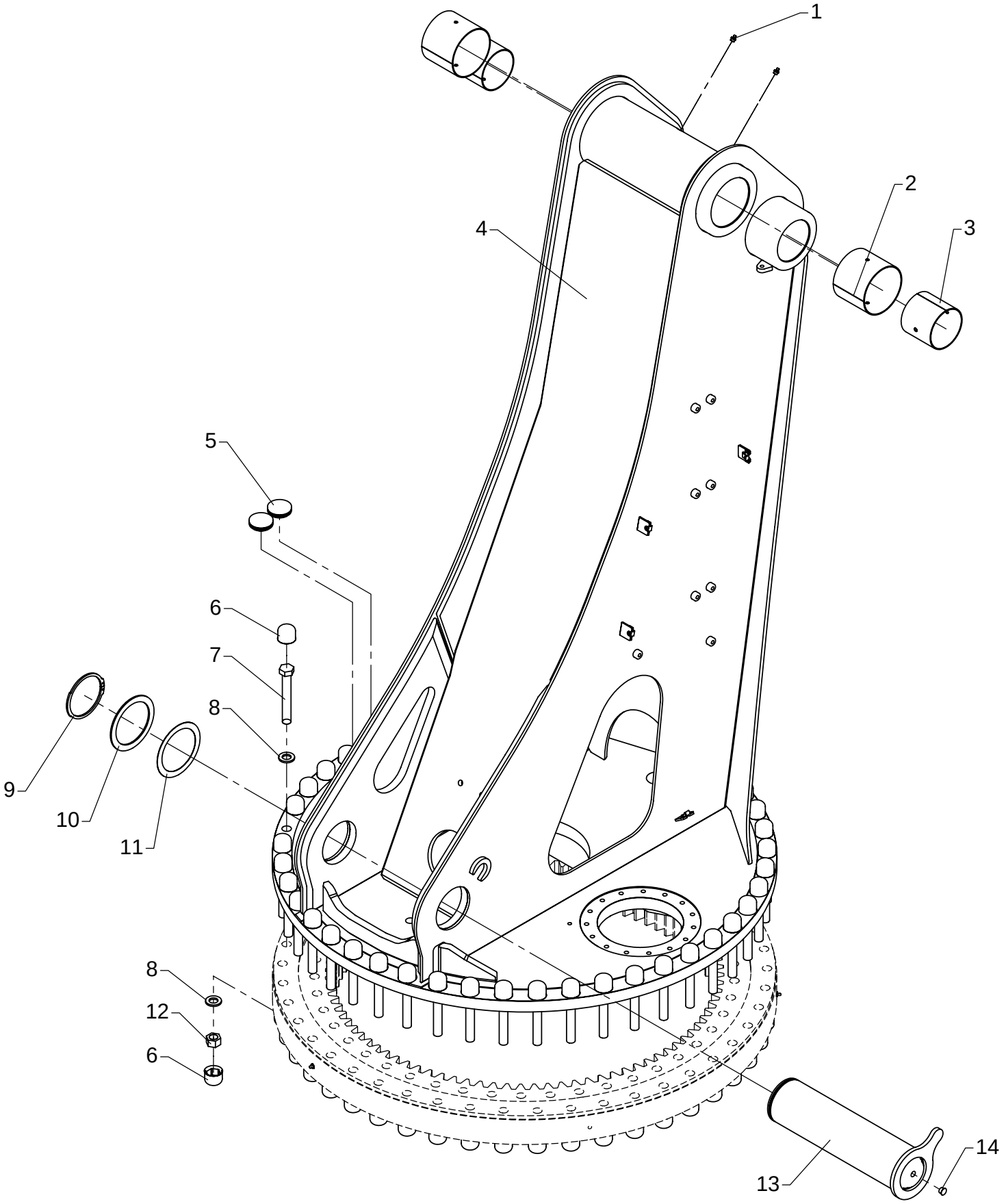

Column, complete

As from / To loader no.: 97 00 00 /
Created: 17.11.2003
Modified:

Item no.	Qty.	Part no.	Description	Remarks
1	2	31318	Lubricator	1/8" RG
2	2	23924	Bushing	PM 120100 DX
3	2	23927	Bushing	PM 10095 DX
4	1	6302051	Column	
5	2	64344	Plastic plug	
6	90	64358	Cover for nut	
7	45	32331	Steel bolt	M20 x 140
8	90	31761	Washer	37 x 21 x 4
9	1	33158	Circlip	110U
10	1	33260	Back ring	SS 110 x 140 x 3,5
11	1	33262	Washer Dacromet	PS 110 x 140 x 1,0
12	45	32333	Nut	M20
13	1	6302226	Bolt	
14	1	64360	Plug	
		6302040	Column with bushings	
		32461	Kit of bolts	*

* Incl. pos. 6, 7, 8, 12 and bolts for the internal ring
Please note! See the installation procedure for the turntable

72-516

Intern ref.: 6300030

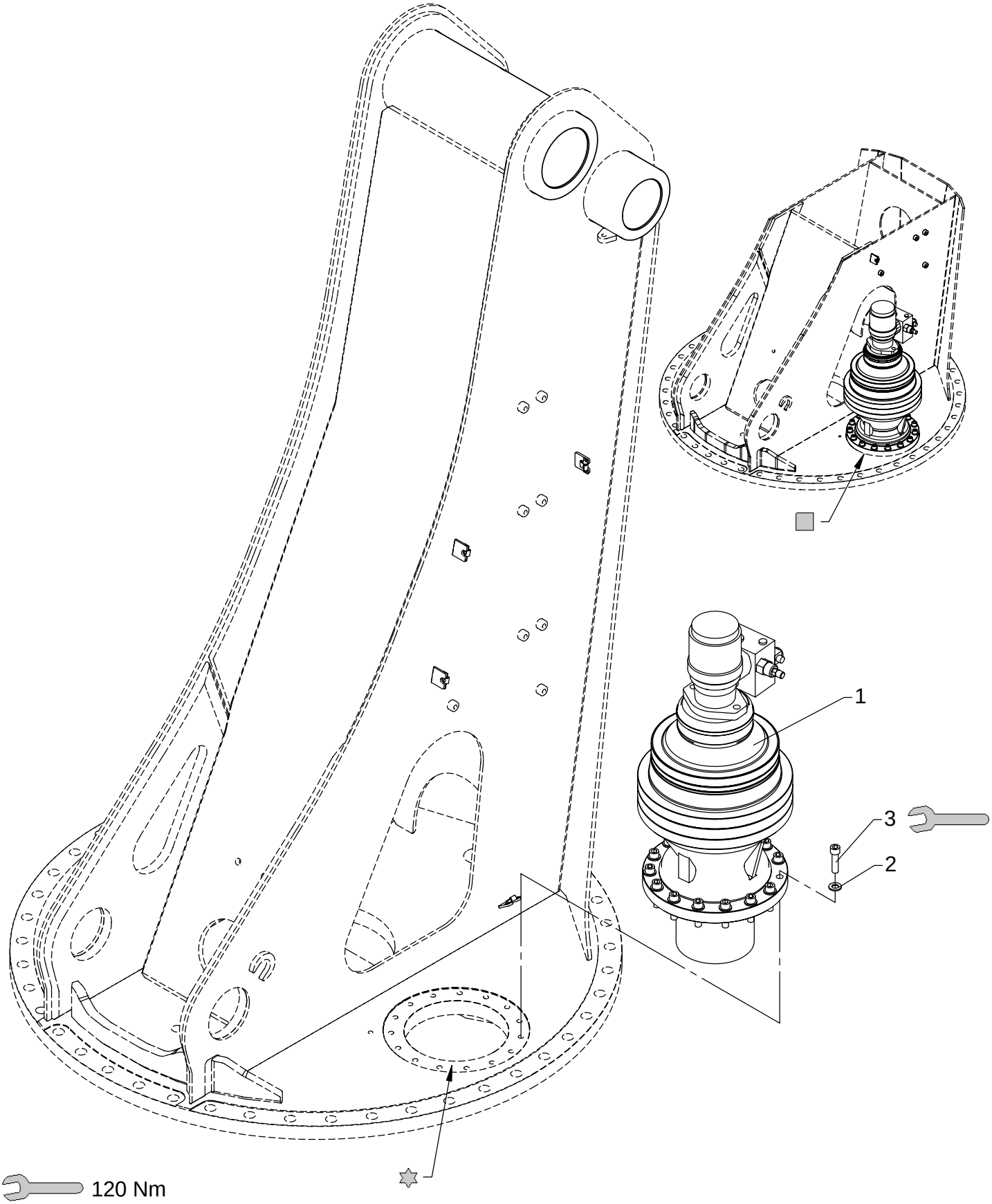

120 Nm
Loctite 275
Loctite 5220

Planetary gear

As from / To loader no.: 97 00 00 /
Created: 17.11.2003
Modified:

Item no.	Qty.	Part no.	Description	Remarks
1	1	58721	Planetary gear	
2	15	31131	Washer	12 mm
3	15	30428	Sockethead screw	MC12 x 45

72-516

Intern ref.: 6302220

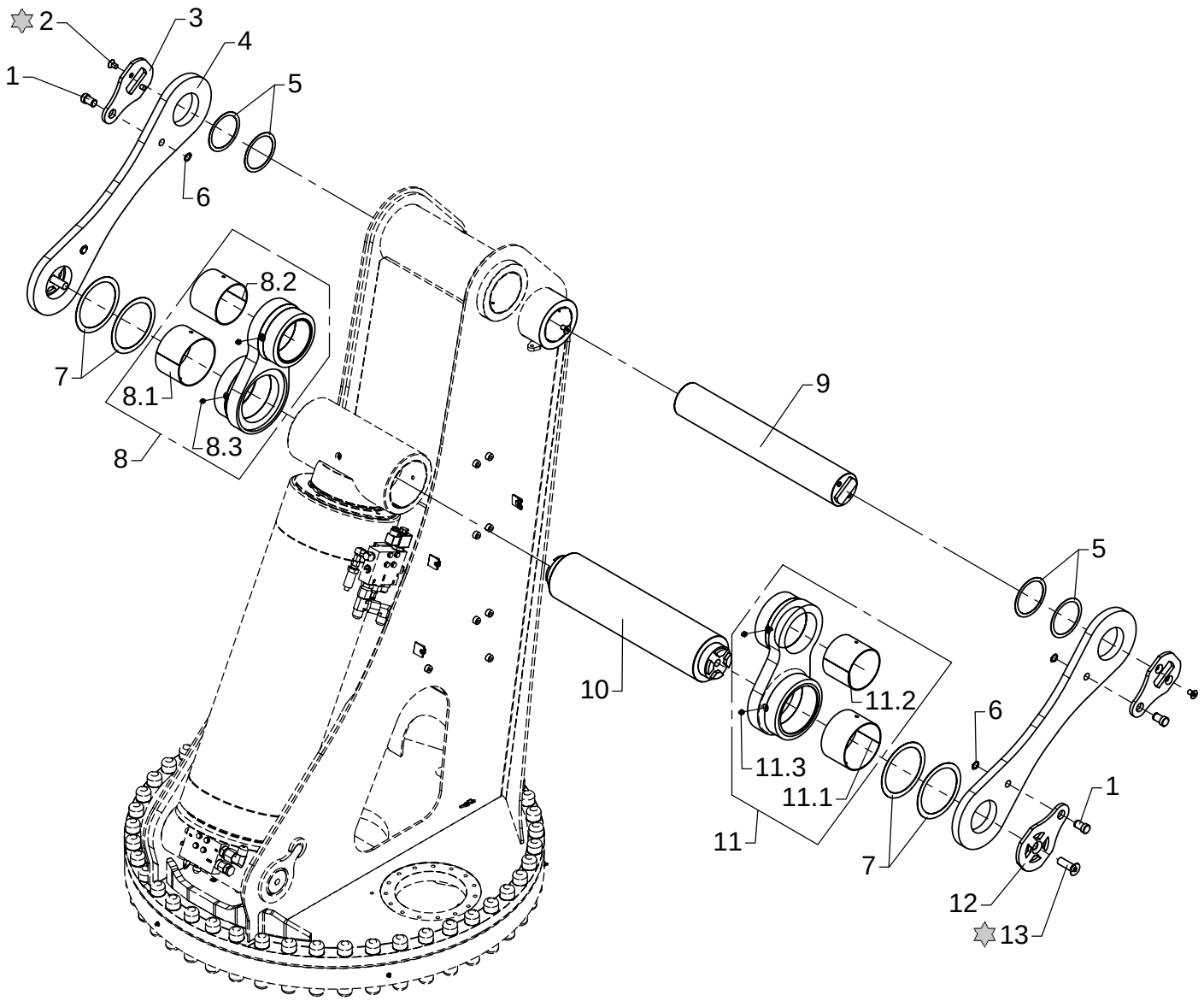

Loctite 243

Pins and link arm system N

As from / To loader no.: 97 00 00 / 97 00 11
Created: 17.11.2003
Modified:

Item no.	Qty.	Part no.	Description	Remarks
1	4	6302237	Pin	
2	4	30591	Countersunk screw	MK12 x 20
3	2	6300232	Lock plate	
4	2	6302234	Link arm, N	
5	4	33250	Washer DIN988	PS 100 x 120 x 1,0
6	4	33108	Circlip	20U
7	4	33269	Washer	PS 140 x 170 x 1,0
8	1	6302247	Push rod	
	1	23926	Bushing	PM 14090 DX
	1	23924	Bushing	PM 120100 DX
	2	31318	Lubricator	1/8" RG
9	1	6302228	Pin	
10	1	6302764	Pin	
11	1	6302246	Push rod	
	1	23926	Bushing	PM 14090 DX
	1	23924	Bushing	PM 120100 DX
	2	31318	Lubricator	1/8" RG
12	2	6300762	Lock plate	
13	2	32465	Countersunk screw	MK20 x 60

72-516

Intern ref.: 6302220

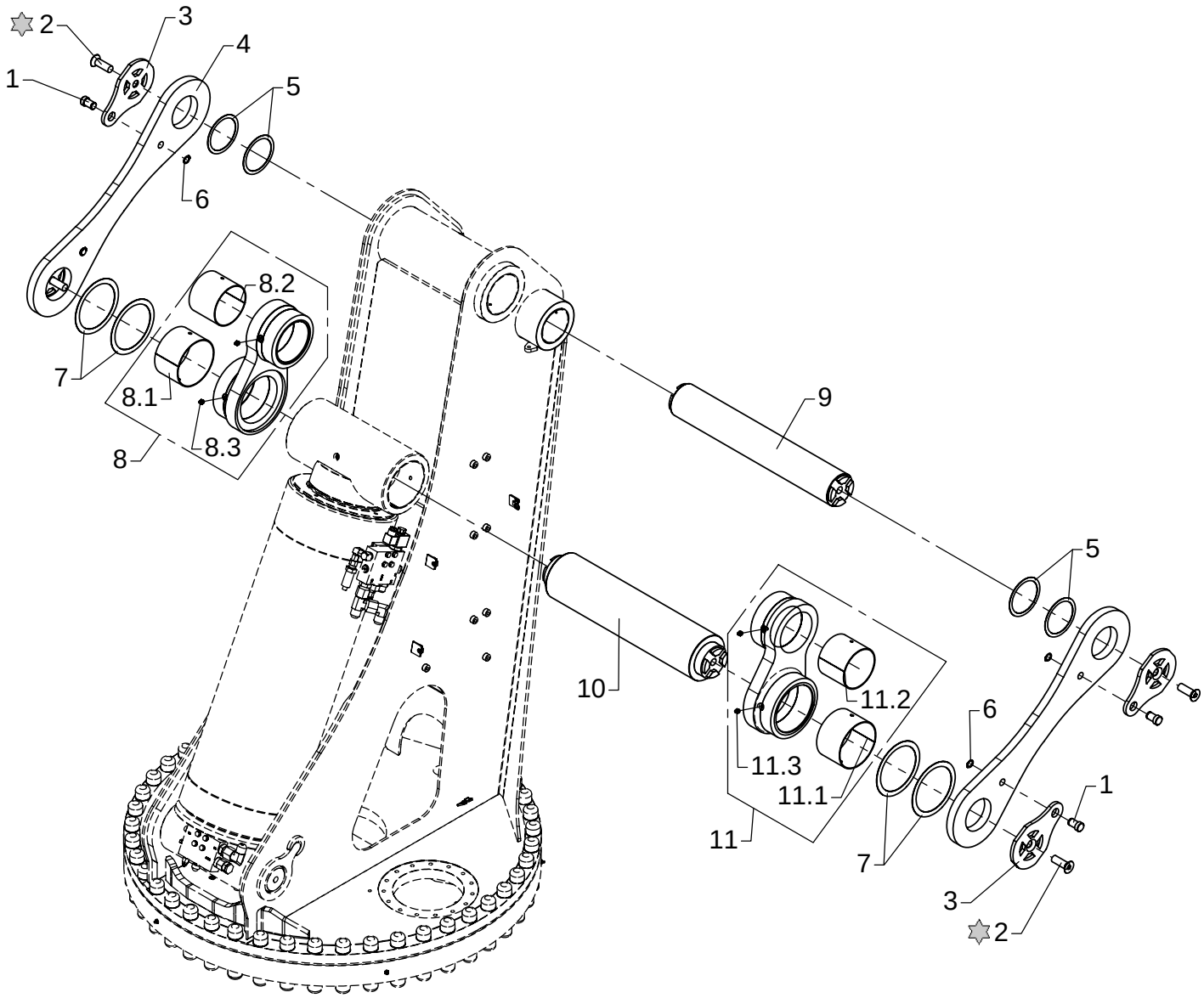

Loctite 243

Pins and link arm system N

As from / To loader no.: 97 00 12 /
Created: 17.11.2003
Modified:

Item no.	Qty.	Part no.	Description	Remarks
1	4	6302237	Pin	
2	4	32465	Countersunk screw	MK20 x 60
3	4	6300762	Lock plate	
4	2	6302234	Link arm, N	
5	4	33250	Washer DIN988	PS 100 x 120 x 1,0
6	4	33108	Circlip	20U
7	4	33269	Washer	PS 140 x 170 x 1,0
8	1	6302247	Push rod	
	1	23926	Bushing	PM 14090 DX
	1	23924	Bushing	PM 120100 DX
	2	31318	Lubricator	1/8" RG
9	1	6302763	Pin	
10	1	6302764	Pin	
11	1	6302246	Push rod	
	1	23926	Bushing	PM 14090 DX
	1	23924	Bushing	PM 120100 DX
	2	31318	Lubricator	1/8" RG

72-516

Intern ref.: 6302180

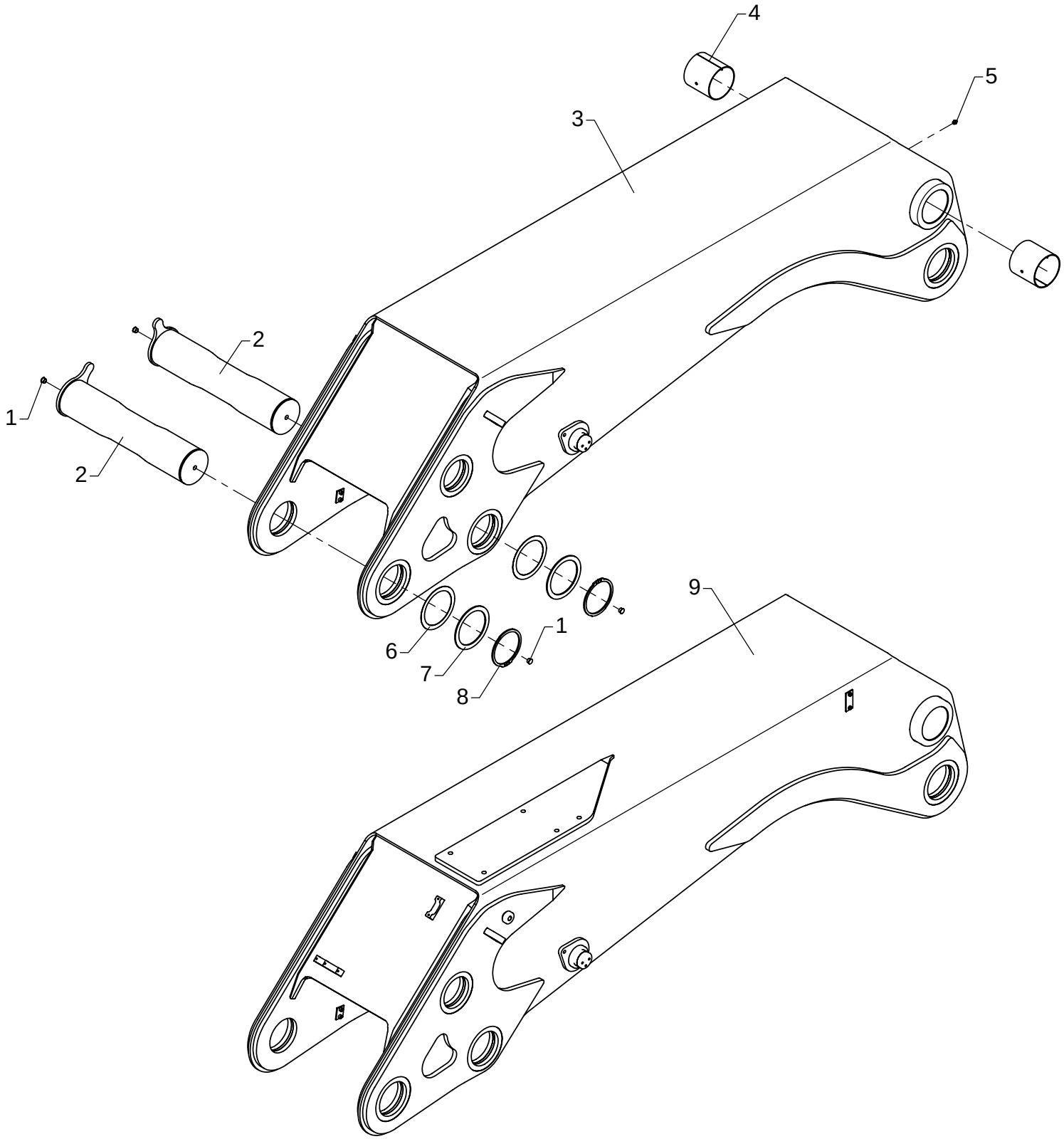

Main boom, complete

As from / To loader no.: 97 00 00 /
Created: 17.11.2003
Modified:

Item no.	Qty.	Part no.	Description	Remarks
1		64360	Plug	
2	2	6302221	Bolt	
3	1	6302181	Main boom	
4	2	23923	Bushing	PM 110110 DX
5	1	31318	Lubricator	1/8" RG
6	2	33263	Washer Dacromet	PS 120 x 150 x 1,0
7	2	33261	Back ring	SS 120 x 150 x 3,5
8	2	33242	Circlip	120U
9	1	6302941	Main boom + plate for winch	
		6302190	Main boom with bushings	
		6302940	Main boom+stow.bracket+bushing	

72-516

Intern ref.: 6302230

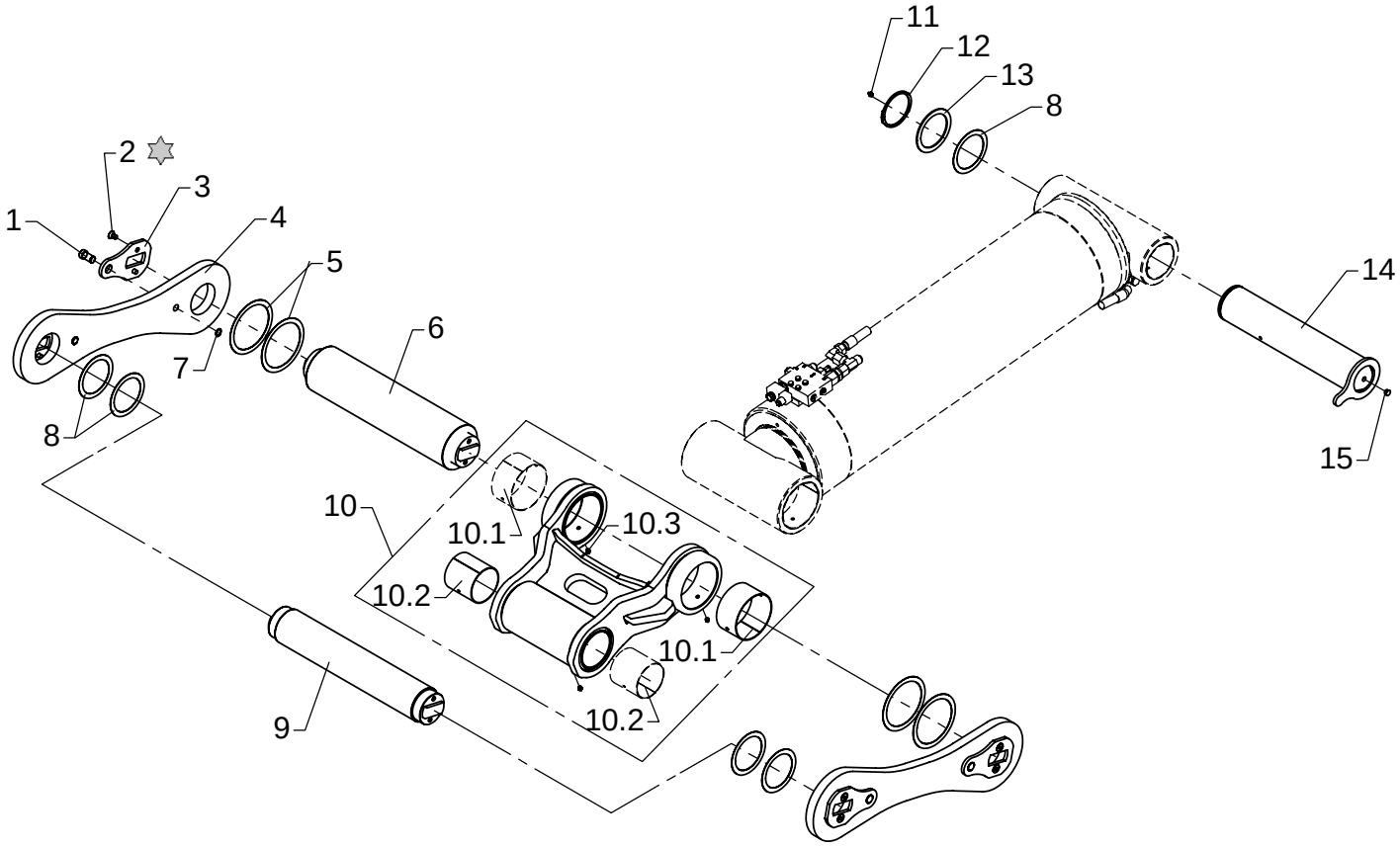

Loctite 243

Pins and link arm system K

As from / To loader no.: 97 00 00 / 97 00 11
Created: 17.11.2003
Modified:

Item no.	Qty.	Part no.	Description	Remarks
1	4	6302238	Pin	
2	8	30591	Countersunk screw	MK12 x 20
3	4	6300232	Lock plate	
4	2	6302235	Link arm, K	
5	4	6302239	Washer	PS 145 x 175 x 1,0
6	1	6302231	Pin	
7	4	33108	Circlip	20U
8	5	33262	Washer Dacromet	PS 110 x 140 x 1,0
9	1	6302229	Pin	
10	1	6302171	Push rod	
	2	23925	Bushing	PM 14580 DX
	2	23923	Bushing	PM 110110 DX
	3	31318	Lubricator	1/8" RG
11	1	31318	Lubricator	1/8" RG
12	1	33158	Circlip	110U
13	1	33260	Back ring	SS 110 x 140 x 3,5
14	1	6302224	Bolt	
15	1	64360	Plug	

72-516

Intern ref.: 6302230

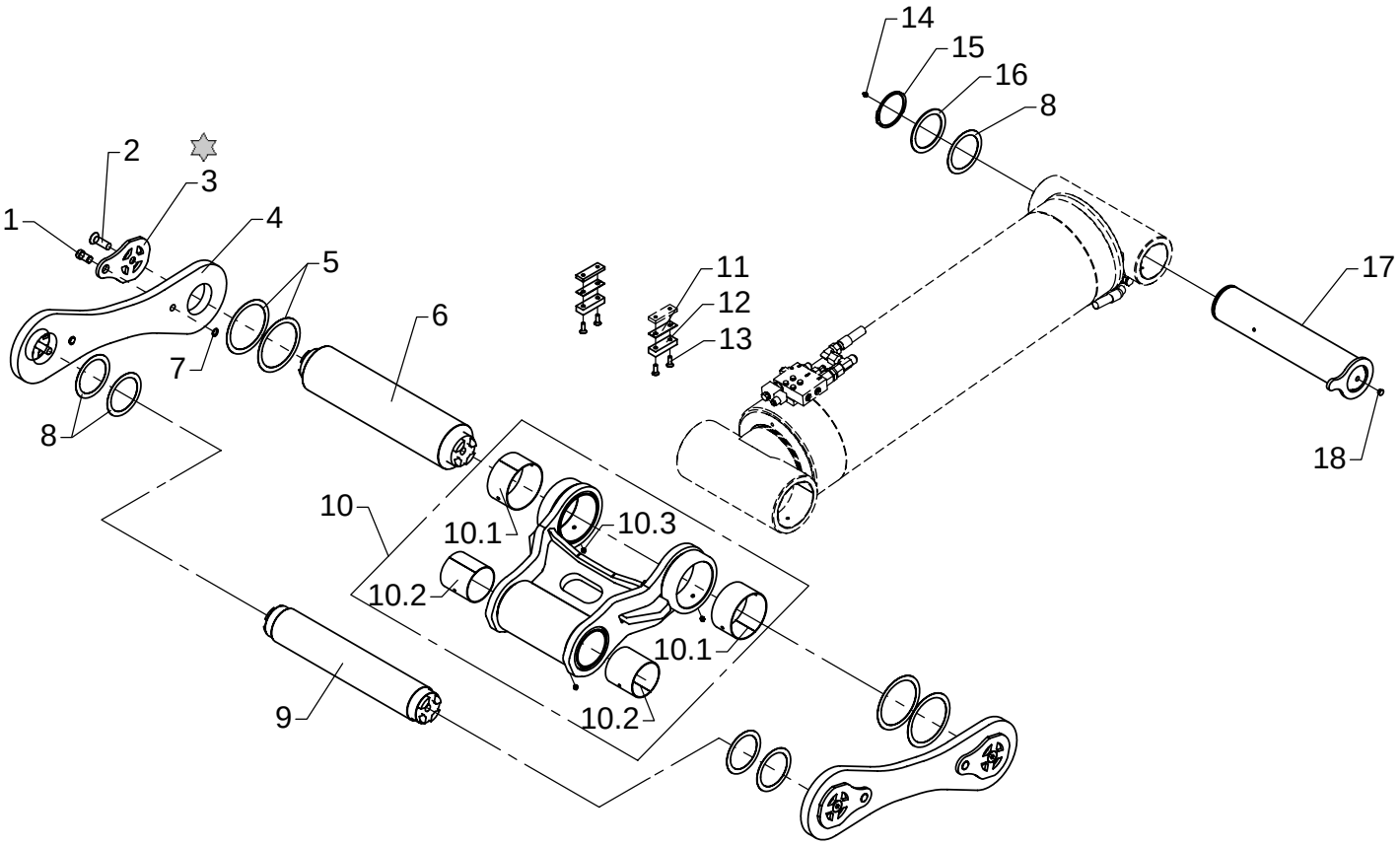

Loctite 243

Pins and link arm system K

As from / To loader no.: 97 00 12 /
Created: 17.11.2003
Modified:

Item no.	Qty.	Part no.	Description	Remarks
1	4	6302238	Pin	
2	4	32465	Countersunk screw	MK20 x 60
3	4	6300762	Lock plate	
4	2	6302235	Link arm, K	
5	4	6302239	Washer	PS 145 x 175 x 1,0
6	1	6302766	Pin	
7	4	33108	Circlip	20U
8	5	33262	Washer Dacromet	PS 110 x 140 x 1,0
9	1	6302765	Pin	
10	1	6302171	Push rod	
	2	23925	Bushing	PM 14580 DX
	2	23923	Bushing	PM 110110 DX
	3	31318	Lubricator	1/8" RG
11	2	6302201	Division plate	
12	2	63530	Stop block	
13	4	30581	Counter-sunk screw	MK10 x 30
14	1	31318	Lubricator	1/8" RG
15	1	33158	Circlip	110U
16	1	33260	Back ring	SS 110 x 140 x 3,5
17	1	6302224	Bolt	
18	1	64360	Plug	

72-516

Intern ref.: 6302280 / 6302490

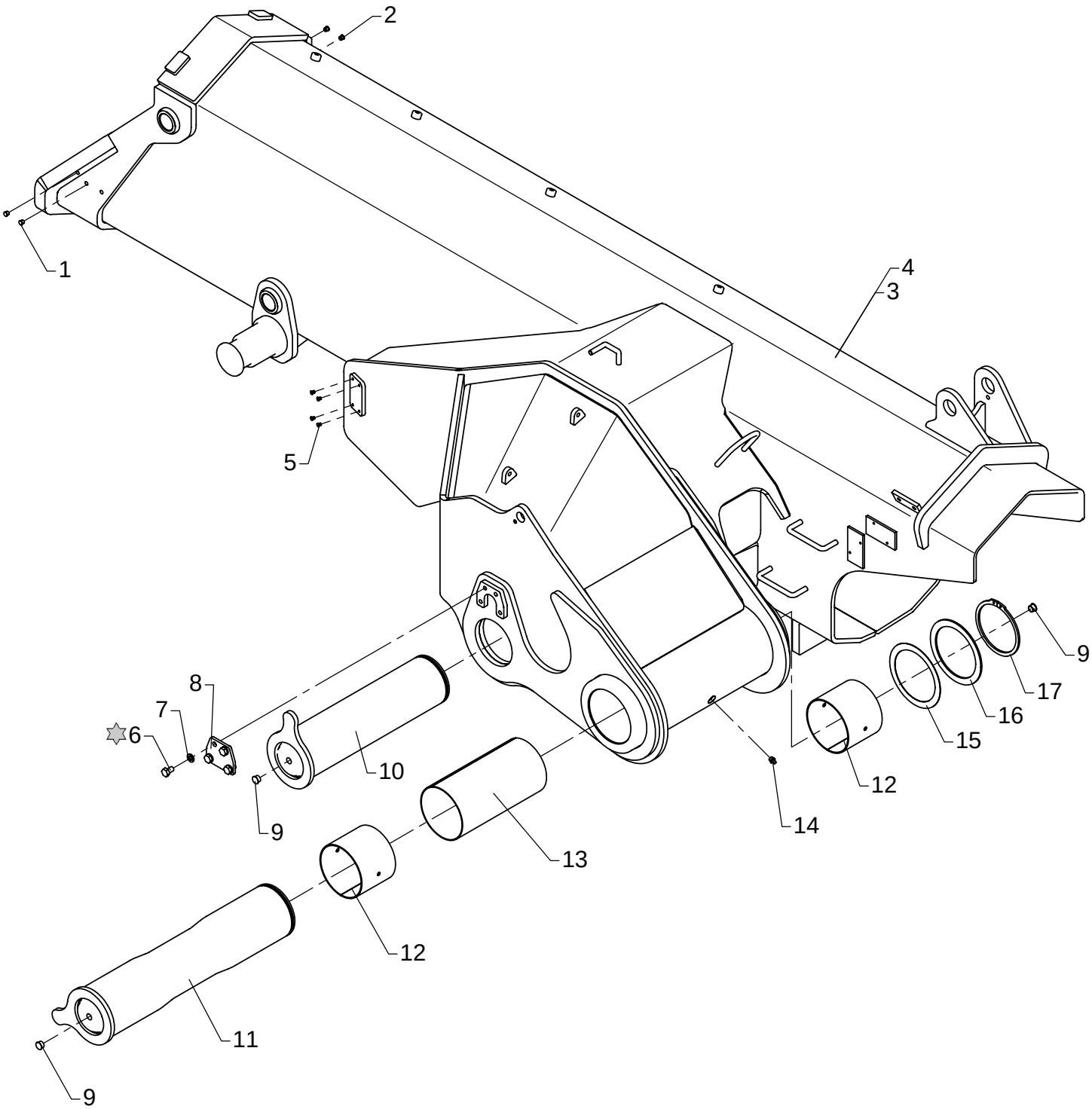

Loctite 243

Jib, complete

As from / To loader no.: 97 00 00 /
Created: 17.11.2003
Modified:

Item no.	Qty.	Part no.	Description	Remarks
1	2	64366	Plug	
2	2	64366	Plug	**
3	1	6302281	Jib	*
4	1	6302501	Jib	
5	4	64365	Plug	***
6	4	31510	Set screw, stainless	M10 x 16
7	4	31571	Spring washer, stainless	10 mm
8	1	6097684	Lock plate	
9	3	64360	Plug	
10	1	6302226	Bolt	
11	1	6302221	Bolt	
12	2	23924	Bushing	PM 120100 DX
13	1	63549	Plate	
14	1	31318	Lubricator	1/8" RG
15	1	33263	Washer Dacromet	PS 120 x 150 x 1,0
16	1	33261	Back ring	SS 120 x 150 x 3,5
17	1	33242	Circlip	120U
		6302290	Optimised jib + bushings	*
		6302500	Jib with bushings	

* Optimised boom system
** No extra valves
*** Excl. spotlight

72-516

Intern ref.: 6300310

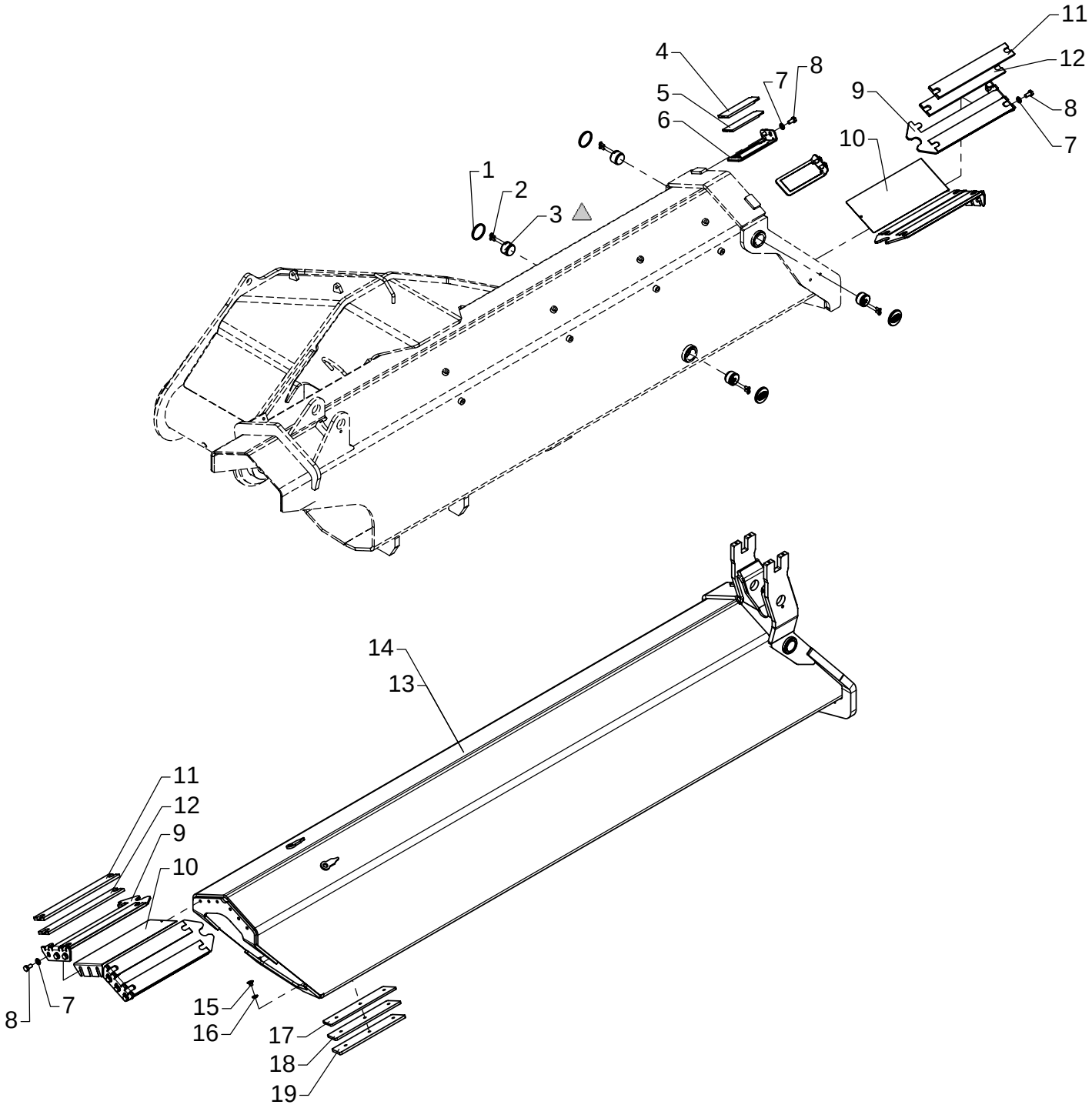

△ PBC 492

Fittings for extension I

As from / To loader no.: 97 00 00 /
Created: 17.11.2003
Modified:

Item no.	Qty.	Part no.	Description	Remarks
1	4	64362	Plastic plug	
2	8	30540	Countersunk screw	MK6 x 16
3	4	6300334	Guide	
4	2	63668	Slide block	6381524, 7 mm
5	2	63698	Slide block	6 mm
6	2	6300336	Bracket	
7	16	31177	Washer	10 mm
8	16	30154	Set screw	M10 x 20
9	4	6300335	Bracket	
10	4	6300531	Shim	
11	8	63685	Slide block	9 mm
12	8	63697	Slide block	8 mm
13	1	6302311	Jib extension I	*
14	1	6302505	Jib extension I	
15	6	31863	Countersunk screw	MK10 x 12
16	6	31171	Washer	10 mm
17	2	6300321	Spacer	6 mm
18	2	6300322	Spacer	7 mm
19	2	6300341	Spacer	8 mm

* Optimised boom system
Please note: All screws – Loctite 243

72-516

Intern ref.: 6300330

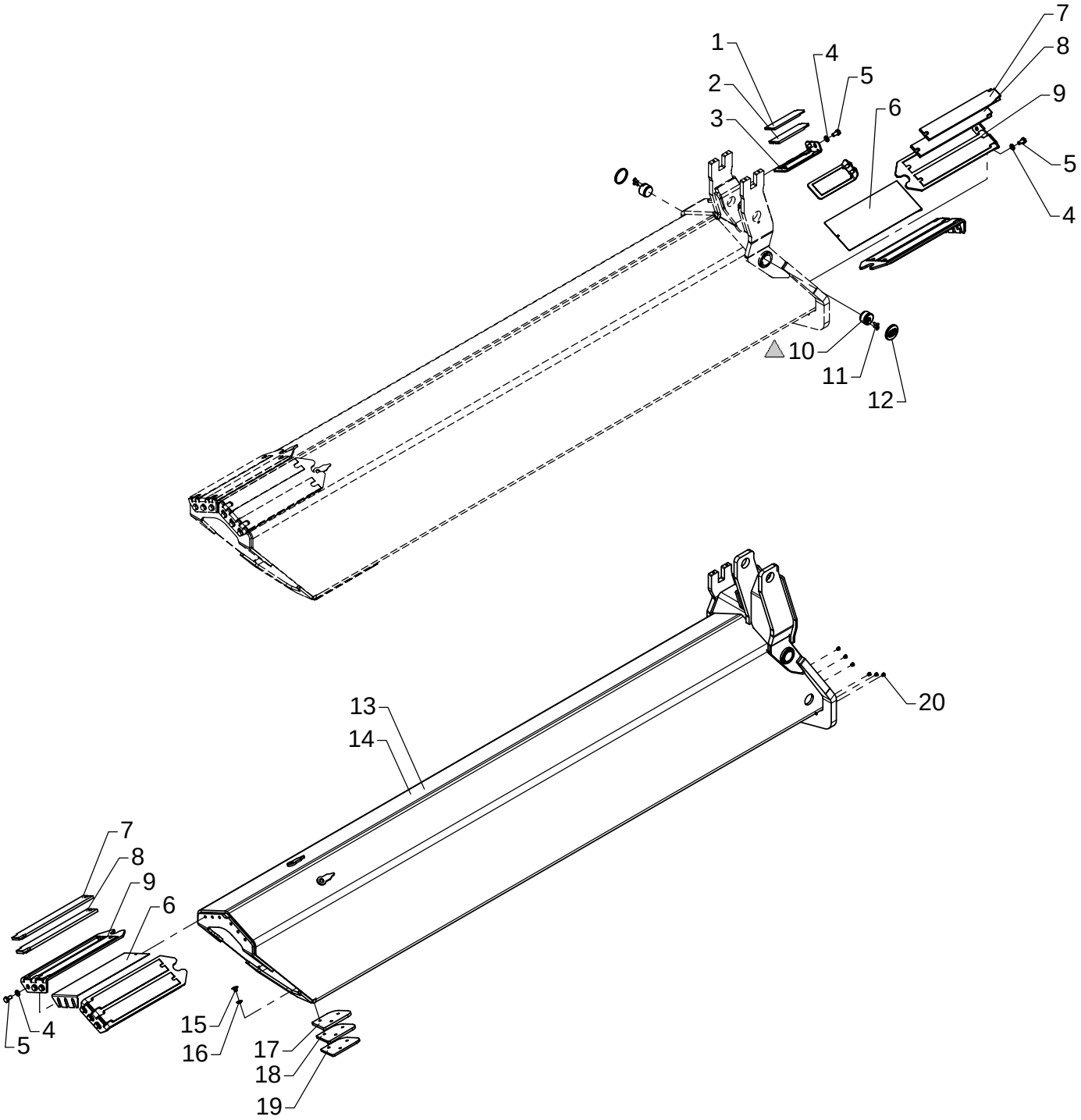

△ PBC 492

Fittings for extension II

As from / To loader no.: 97 00 00 /
Created: 17.11.2003
Modified:

Item no.	Qty.	Part no.	Description	Remarks
1	2	63698	Slide block	6 mm
2	2	63668	Slide block	6381524, 7 mm
3	2	6300336	Bracket	
4	16	31177	Washer	10 mm
5	16	30154	Set screw	M10 x 20
6	4	6300535	Shim	
7	8	63526	Slide block	8 mm
8	8	63525	Slide block	9 mm
9	4	6300375	Bracket for slide block	
10	2	6300334	Guide	
11	4	30540	Countersunk screw	MK6 x 16
12	2	64362	Plastic plug	
13	1	6302331	Jib extension II	*
14	1	6302511	Jib extension II	
15	6	31863	Countersunk screw	MK10 x 12
16	6	31171	Washer	10 mm
17	2	6300342	Spacer	8 mm
18	2	6300324	Spacer	7 mm
19	2	6300323	Spacer	6 mm
20	6	64366	Plug	

* Optimised boom system
Please note: All screws – Loctite 243

72-516

Intern ref.: 6300350

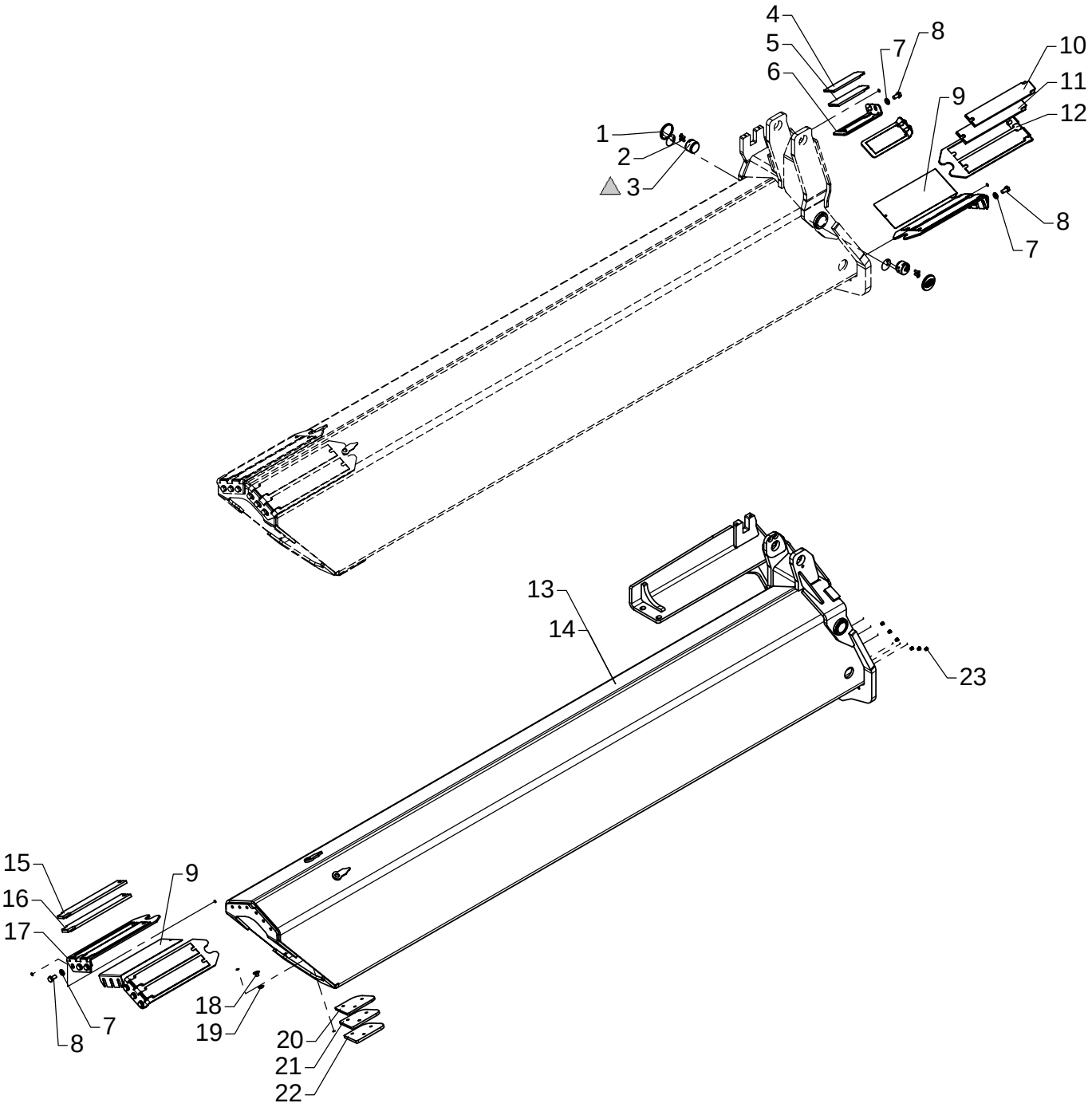

△ PBC 492

Fittings for extension III

As from / To loader no.: 97 00 00 /
Created: 17.11.2003
Modified:

Item no.	Qty.	Part no.	Description	Remarks
1	2	64362	Plastic plug	
2	4	30540	Countersunk screw	MK6 x 16
3	2	6300334	Guide	
4	2	63698	Slide block	6 mm
5	2	63668	Slide block	6381524, 7 mm
6	2	6300336	Bracket	
7	16	31177	Washer	10 mm
8	16	30154	Set screw	M10 x 20
9	4	6300532	Shim	
10	4	63520	Slide block	8 mm
11	4	63669	Slide block	6381474, 9 mm
12	2	6300379	Bracket for slide block	
13	1	6302351	Jib extension III	*
14	1	6302515	Jib extension III	
15	4	63528	Slide block	8 mm
16	4	63527	Slide block	9 mm
17	2	6300394	Bracket for slide block	
18	6	31863	Countersunk screw	MK10 x 12
19	6	31171	Washer	10 mm
20	2	6300323	Spacer	6 mm
21	2	6300324	Spacer	7 mm
22	2	6300342	Spacer	8 mm
23	6	64366	Plug	

* Optimised boom system
Please note: All screws – Loctite 243

72-516

Intern ref.: 6300370

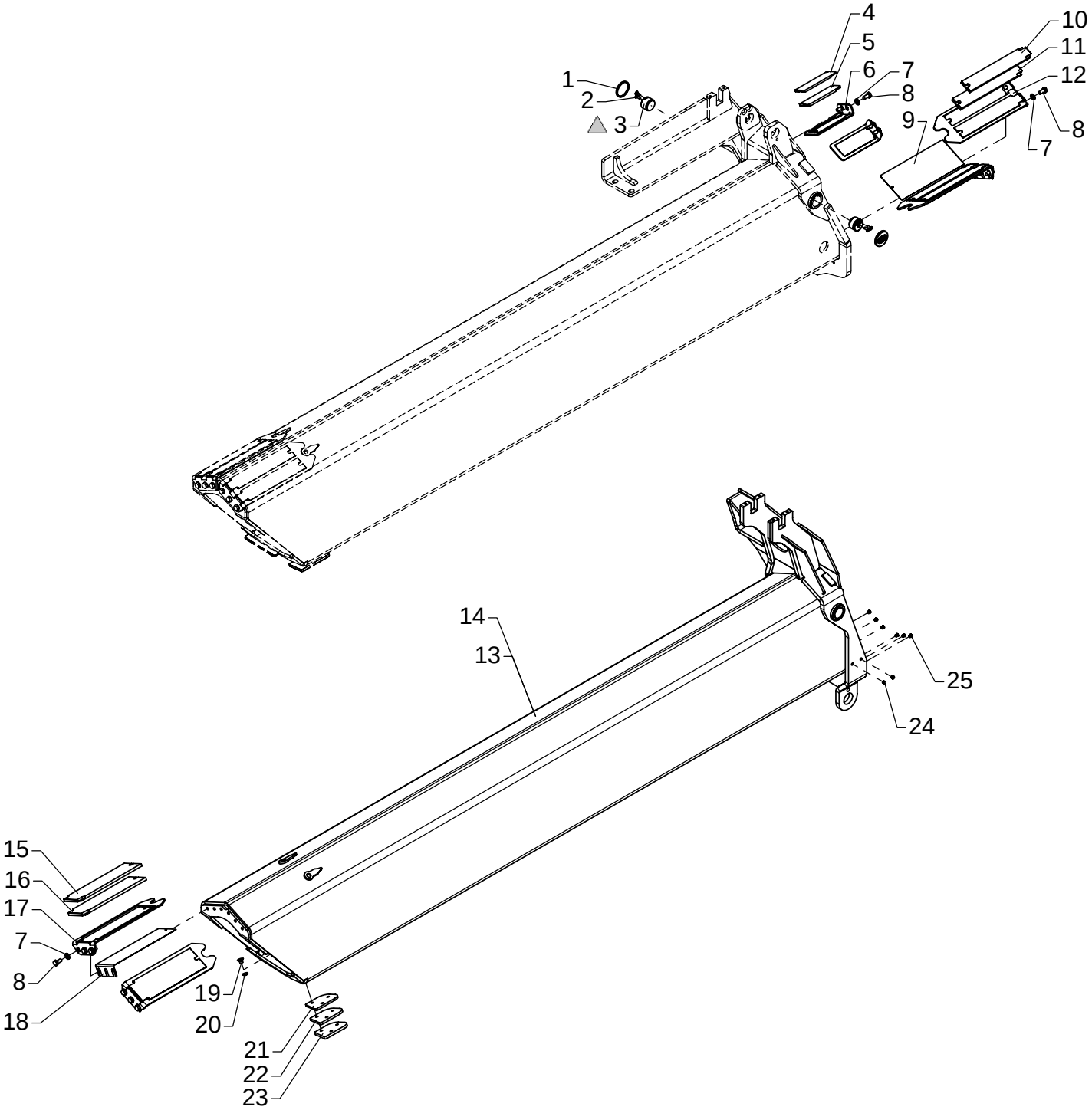

△ PBC 492

Fittings for extension K4

As from / To loader no.: 97 00 00 / 97 00 xx
Created: 17.11.2003
Modified:

Item no.	Qty.	Part no.	Description	Remarks
1	2	64362	Plastic plug	
2	4	30540	Countersunk screw	MK6 x 16
3	2	6300334	Guide	
4	2	63698	Slide block	6 mm
5	2	63668	Slide block	6381524, 7 mm
6	2	6300336	Bracket	
7	16	31177	Washer	10 mm
8	16	30154	Set screw	M10 x 20
9	2	6300532	Shim	
10	4	63528	Slide block	8 mm
11	4	63527	Slide block	9 mm
12	2	6300394	Bracket for slide block	
13	1	6302371	Jib extension K4	*
14	1	6302521	Jib extension K4	
15	2	63521	Slide block	8 mm
16	2	63696	Slide block	9 mm
17	2	6300369	Bracket for slide block	
18	2	6300533	Shim	
19	6	31863	Countersunk screw	MK10 x 12
20	6	31171	Washer	10 mm
21	2	6300325	Spacer	6 mm
22	2	6300326	Spacer	7 mm
23	2	6300343	Spacer	8 mm
24	2	64366	Plug	**
25	6	64366	Plug	

* Optimised boom system
** No extra valves
Please note: All screws – Loctite 243

72-516

Intern ref.: 6300370

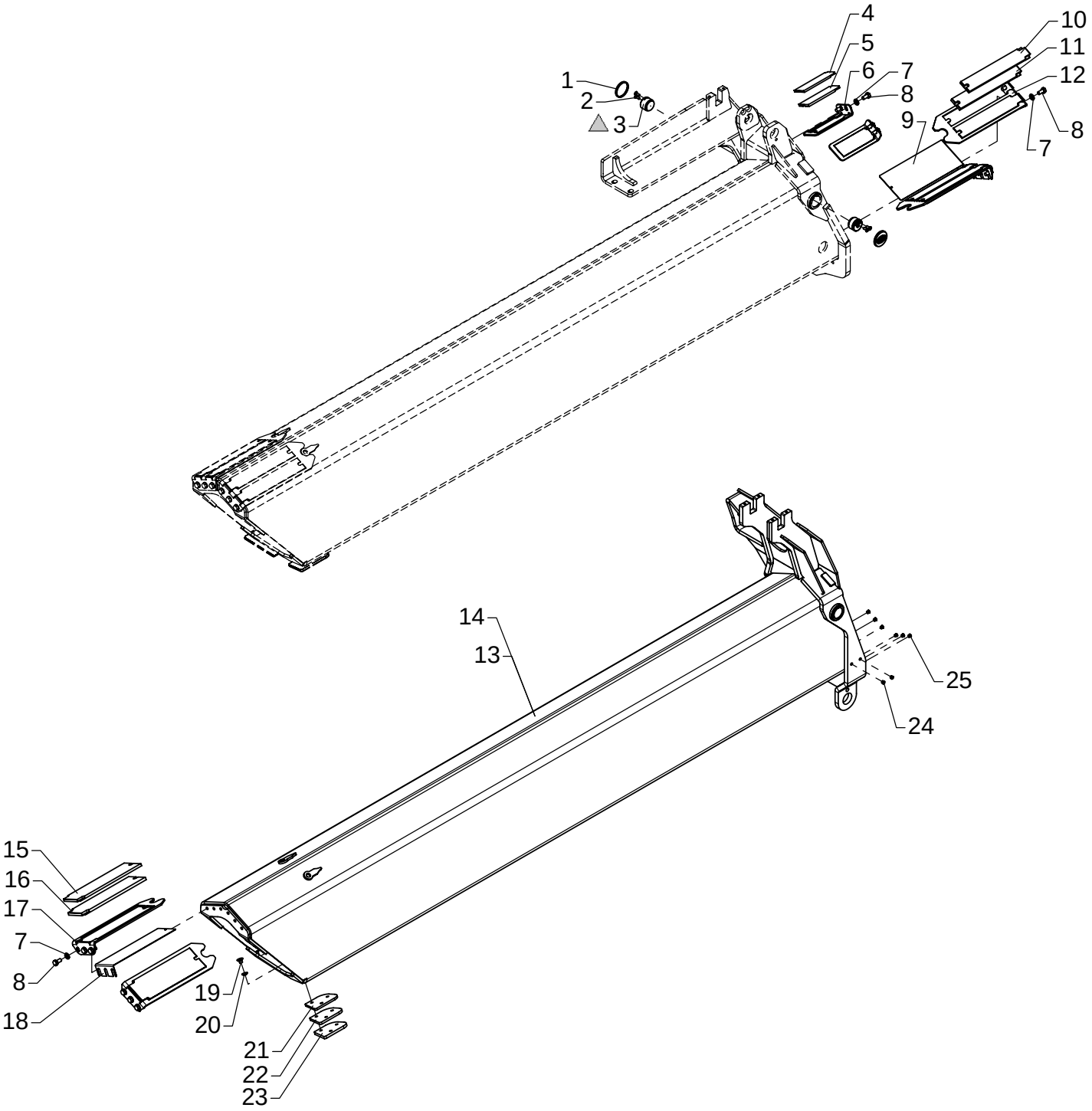

△ PBC 492

Fittings for extension K4

As from / To loader no.: 97 00 xx /
Created: 17.11.2003
Modified:

Item no.	Qty.	Part no.	Description	Remarks
1	2	64362	Plastic plug	
2	4	30540	Countersunk screw	MK6 x 16
3	2	6300334	Guide	
4	2	63698	Slide block	6 mm
5	2	63668	Slide block	6381524, 7 mm
6	2	6300336	Bracket	
7	16	31177	Washer	10 mm
8	16	30154	Set screw	M10 x 20
9	2	6300532	Shim	
10	4	63528	Slide block	8 mm
11	4	63527	Slide block	9 mm
12	2	6300394	Bracket for slide block	
13	1	6302685	Jib extension IV	*
14	1	6302521	Jib extension K4	
15	2	63521	Slide block	8 mm
16	2	63696	Slide block	9 mm
17	2	6300369	Bracket for slide block	
18	2	6300533	Shim	
19	6	31863	Countersunk screw	MK10 x 12
20	6	31171	Washer	10 mm
21	2	6300325	Spacer	6 mm
22	2	6300326	Spacer	7 mm
23	2	6300343	Spacer	8 mm
24	2	64366	Plug	**
25	6	64366	Plug	

* Optimised boom system
** No extra valves
Please note: All screws – Loctite 243

72-516

Intern ref.: 6300390

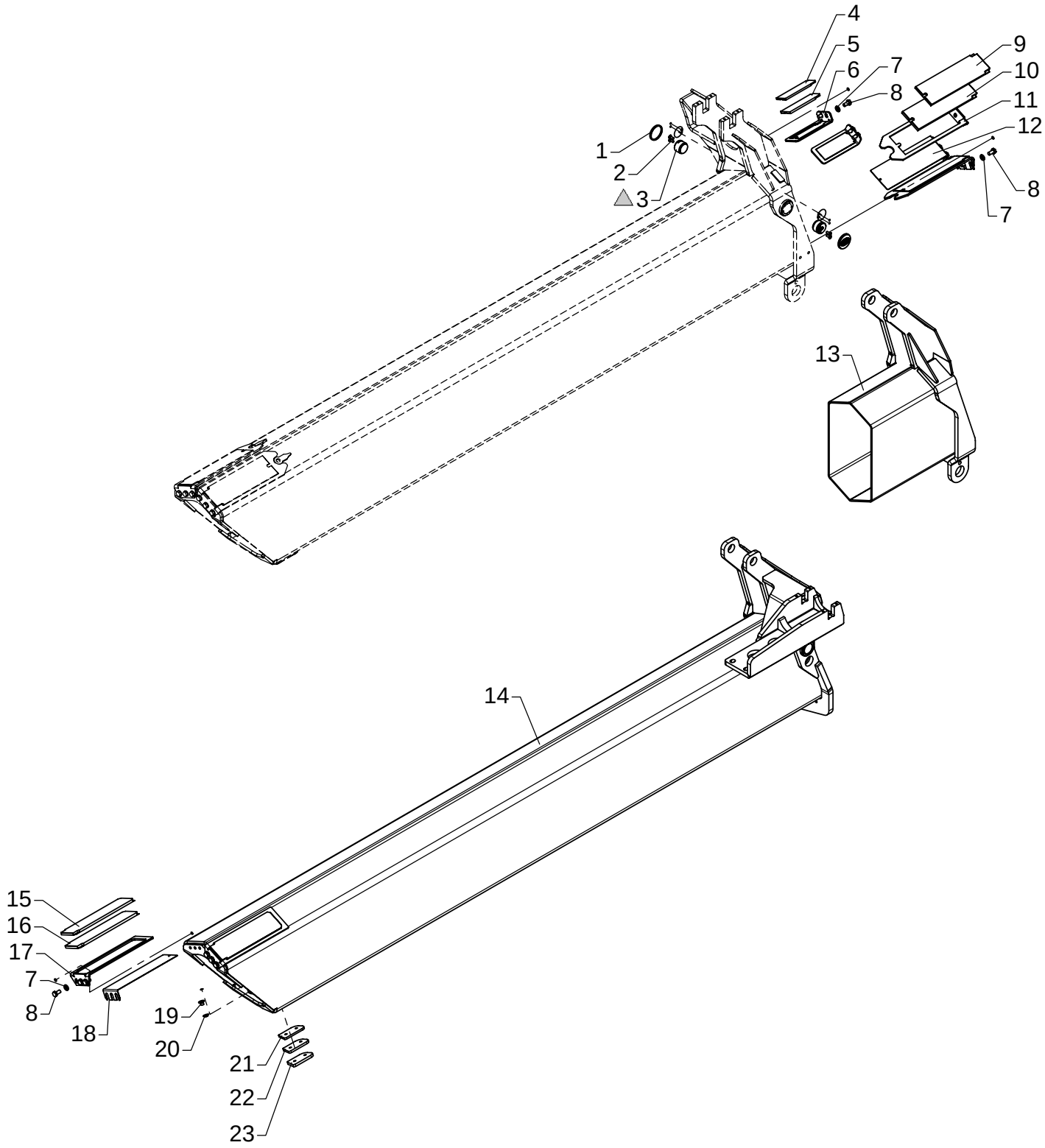

▲ PBC 492

Fittings for extension V

As from / To loader no.: 97 00 00 / 97 00 xx
Created: 17.11.2003
Modified:

Item no.	Qty.	Part no.	Description	Remarks
1	2	64362	Plastic plug	
2	4	30540	Countersunk screw	MK6 x 16
3	2	6300334	Guide	
4	2	63698	Slide block	6 mm
5	2	63668	Slide block	6381524, 7 mm
6	2	6300336	Bracket	
7	16	31177	Washer	10 mm
8	16	30154	Set screw	M10 x 20
9	2	63521	Slide block	8 mm
10	2	63696	Slide block	9 mm
11	2	6300369	Bracket for slide block	
12	2	6300533	Shim	
13	1	6302391	Jib extension K5	*
14	1	6302525	Jib extension V	
15	2	63522	Slide block	8 mm
16	2	63760	Slide block	6299054, 9 mm
17	2	6300366	Bracket for slide block	
18	2	6300534	Shim	
19	4	31863	Countersunk screw	MK10 x 12
20	4	31171	Washer	10 mm
21	2	6300396	Spacer	6 mm
22	2	6300397	Spacer	7 mm
23	2	6300398	Spacer	8 mm

* Optimised boom system
Please note: All screws – Loctite 243

72-516

Intern ref.: 6300390

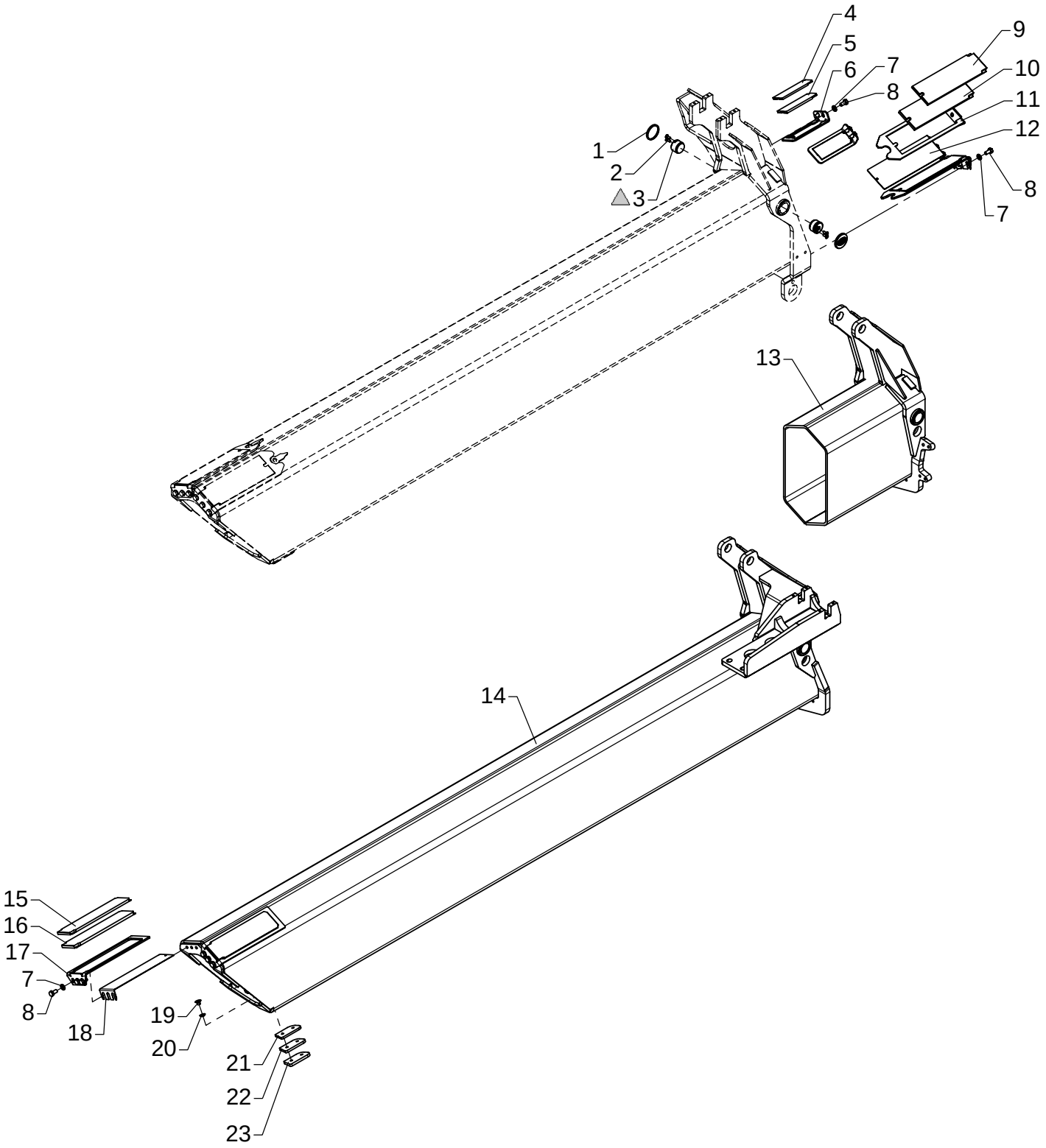

△ PBC 492

Fittings for extension V

As from / To loader no.: 97 00 xx /
Created: 17.11.2003
Modified:

Item no.	Qty.	Part no.	Description	Remarks
1	2	64362	Plastic plug	
2	4	30540	Countersunk screw	MK6 x 16
3	2	6300334	Guide	
4	2	63698	Slide block	6 mm
5	2	63668	Slide block	6381524, 7 mm
6	2	6300336	Bracket	
7	16	31177	Washer	10 mm
8	16	30154	Set screw	M10 x 20
9	2	63521	Slide block	8 mm
10	2	63696	Slide block	9 mm
11	2	6300369	Bracket for slide block	
12	2	6300533	Shim	
13	1	6302691	Jib extension V	*
14	1	6302525	Jib extension V	
15	2	63522	Slide block	8 mm
16	2	63760	Slide block	6299054, 9 mm
17	2	6300366	Bracket for slide block	
18	2	6300534	Shim	
19	4	31863	Countersunk screw	MK10 x 12
20	4	31171	Washer	10 mm
21	2	6300396	Spacer	6 mm
22	2	6300397	Spacer	7 mm
23	2	6300398	Spacer	8 mm

* Optimised boom system
Please note: All screws – Loctite 243

72-516

Intern ref.: 6300550

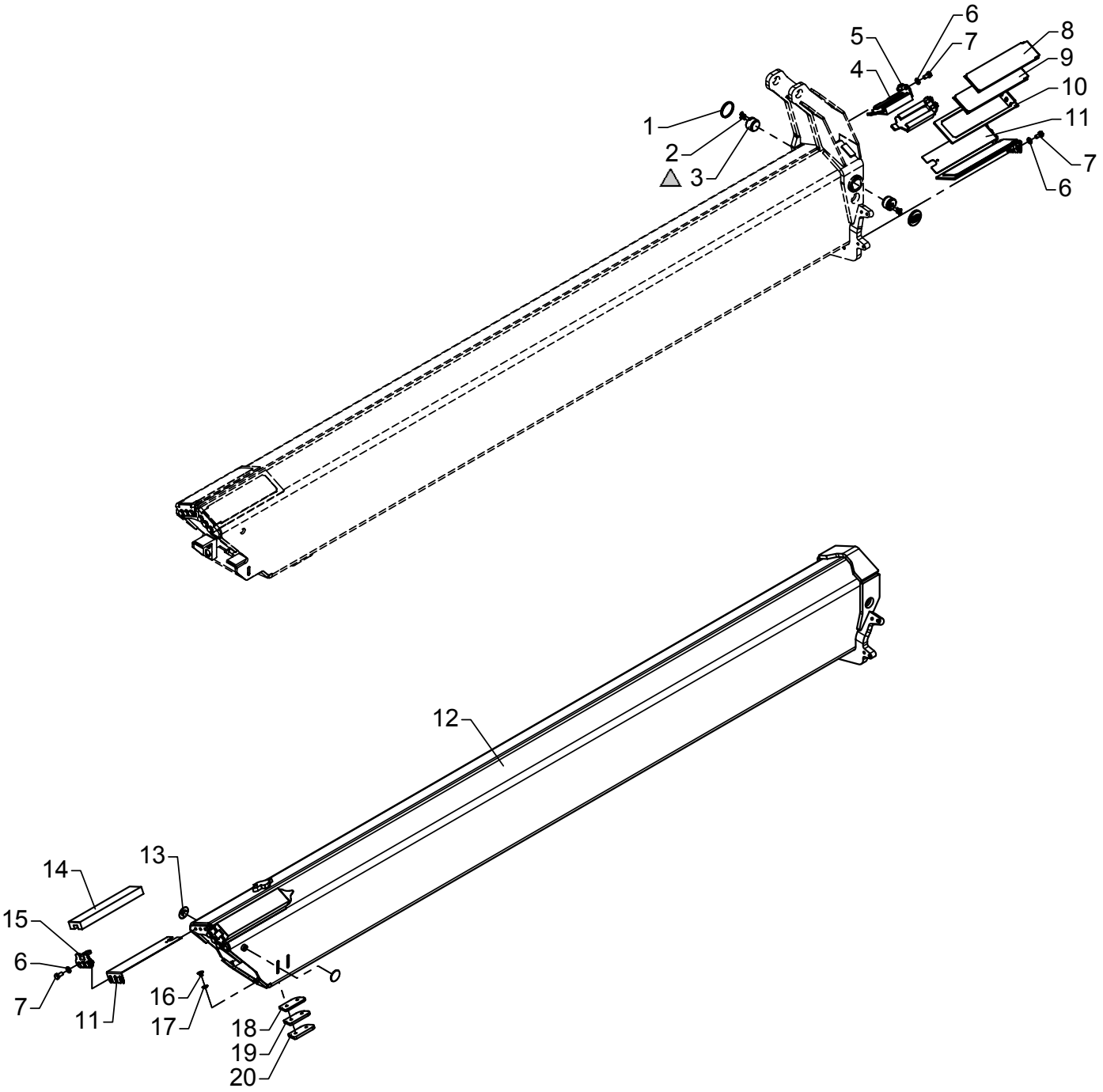

△ PBC 492

Fittings for extension VI - OK6

As from / To loader no.: 97 00 00 /
Created: 14.05.2004
Modified:

Item no.	Qty.	Part no.	Description	Remarks
1	2	64362	Plastic plug	
2	4	30540	Countersunk screw	MK6 x 16
3	2	6300334	Guide	
4	2	63401	Slide block	6299064, 9 mm
5	2	6302636	Bracket for slide block	
6	16	31177	Washer	10 mm
7	16	30154	Set screw	M10 x 20
8	2	63522	Slide block	8 mm
9	2	63760	Slide block	6299054, 9 mm
10	2	6300366	Bracket for slide block	
11	4	6300534	Shim	
12	1	6302911	Jib extension VI	
13	2	6381484	Guide	
14	2	63402	Slide block	6299064, 9 mm
15	2	6302635	Bracket for slide block	
16	4	31863	Countersunk screw	MK10 x 12
17	4	31171	Washer	10 mm
18	2	6300396	Spacer	6 mm
19	2	6300397	Spacer	7 mm
20	2	6300398	Spacer	8 mm

Please note: All screws – Loctite 243

72-516

Intern ref.: 6300550

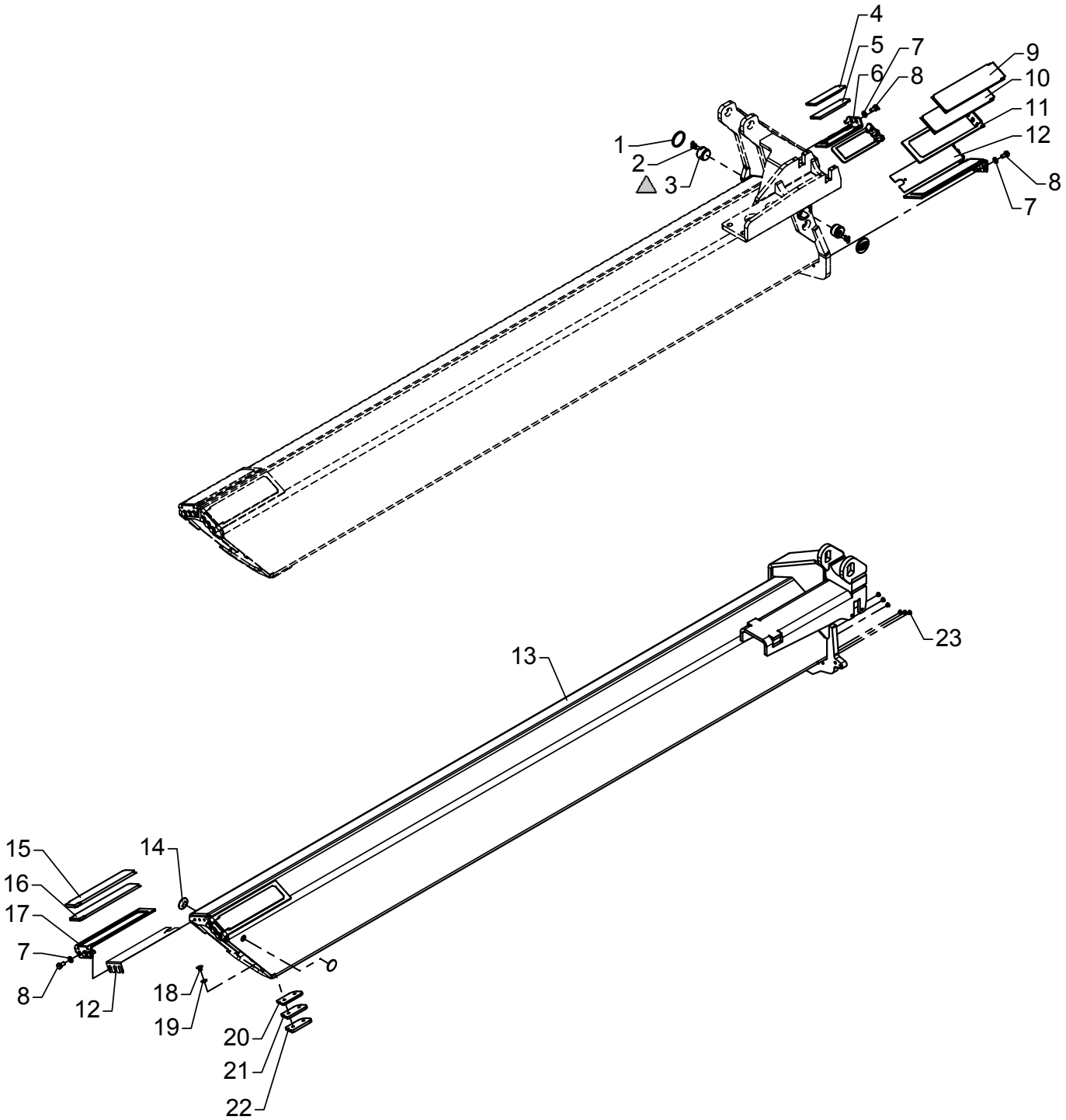

△ PBC 492

Fittings for extension VI - K6

As from / To loader no.: 97 00 00 /
Created: 17.11.2003
Modified: 14.05.2004

Item no.	Qty.	Part no.	Description	Remarks
1	2	64362	Plastic plug	
2	4	30540	Countersunk screw	MK6 x 16
3	2	6300334	Guide	
4	2	63698	Slide block	6 mm
5	2	63668	Slide block	6381524, 7 mm
6	2	6300336	Bracket	
7	16	31177	Washer	10 mm
8	16	30154	Set screw	M10 x 20
9	2	63522	Slide block	8 mm
10	2	63760	Slide block	6299054, 9 mm
11	2	6300366	Bracket for slide block	
12	4	6300534	Shim	
13	1	6302541	Jib extension VI	
14	2	6381484	Guide	
15	2	63761	Slide block	6299064, 9 mm
16	2	63529	Slide block	8 mm
17	2	6300399	Bracket for slide block	
18	4	31863	Countersunk screw	MK10 x 12
19	4	31171	Washer	10 mm
20	2	6300396	Spacer	6 mm
21	2	6300397	Spacer	7 mm
22	2	6300398	Spacer	8 mm
23	6	64366	Plug	

Please note: All screws – Loctite 243

72-516

Intern ref.: 6300570

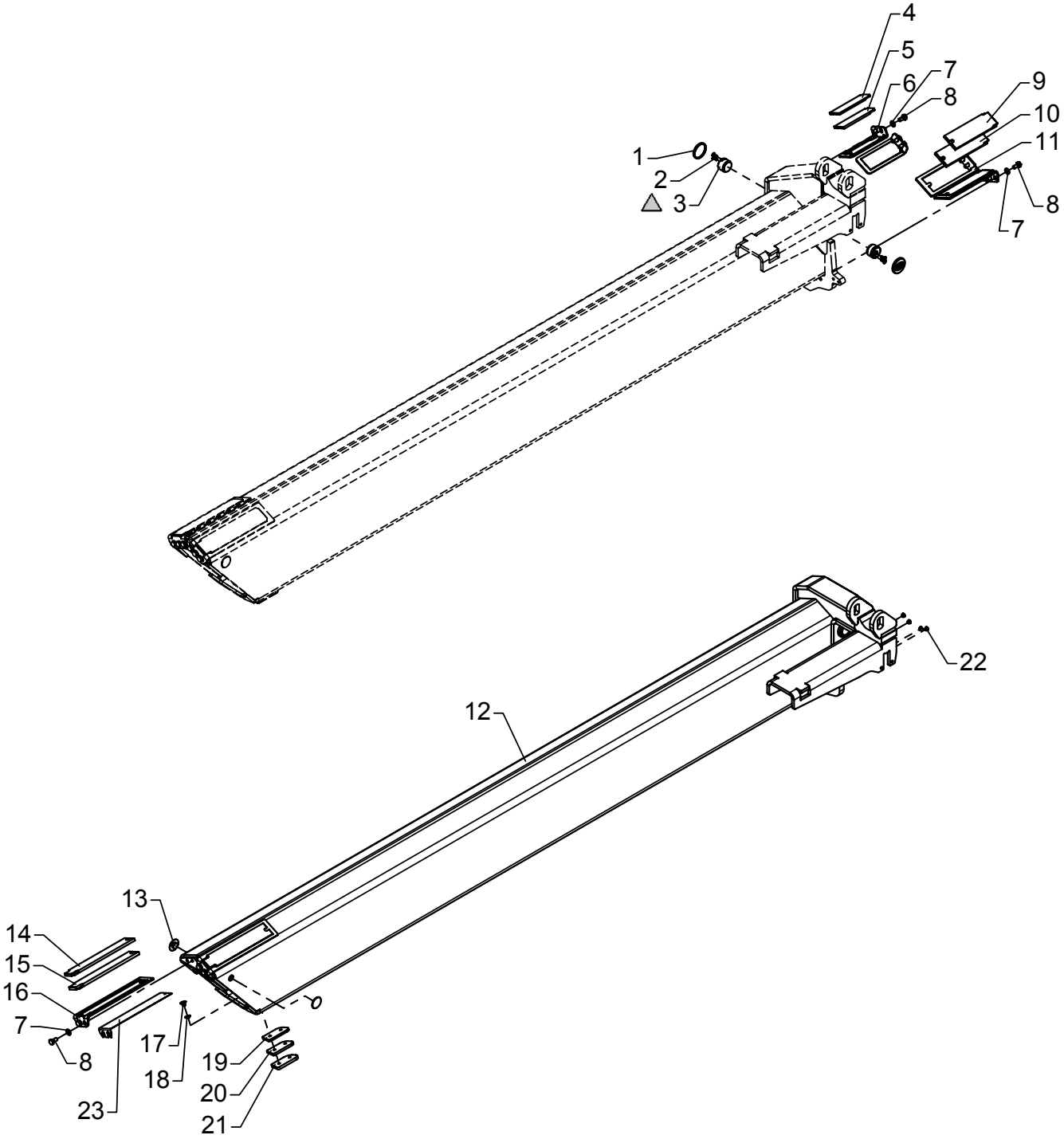

△ PBC 492

Fittings for extension VII

As from / To loader no.: 97 00 00 /
Created: 17.11.2003
Modified: 14.05.2004

Item no.	Qty.	Part no.	Description	Remarks
1	2	64362	Plastic plug	
2	4	30540	Countersunk screw	MK6 x 16
3	2	6300334	Guide	
4	2	63698	Slide block	6 mm
5	2	63668	Slide block	6381524, 7 mm
6	2	6300336	Bracket	
7	14	31177	Washer	10 mm
8	14	30154	Set screw	M10 x 20
9	2	63523	Slide block	8 mm
10	2	63695	Slide block	9 mm
11	2	6300367	Bracket for slide block	
12	1	6302561	Jib extension VII	
13	2	6381484	Guide	
14	2	63520	Slide block	8 mm
15	2	63669	Slide block	6381474, 9 mm
16	2	6300368	Bracket for slide block	
17	4	31863	Countersunk screw	MK10 x 12
18	4	31171	Washer	10 mm
19	2	6300396	Spacer	6 mm
20	2	6300397	Spacer	7 mm
21	2	6300398	Spacer	8 mm
22	4	64366	Plug	
23	2	6300568	Shim	

Please note: All screws – Loctite 243

72-516

Intern ref.: 6300590

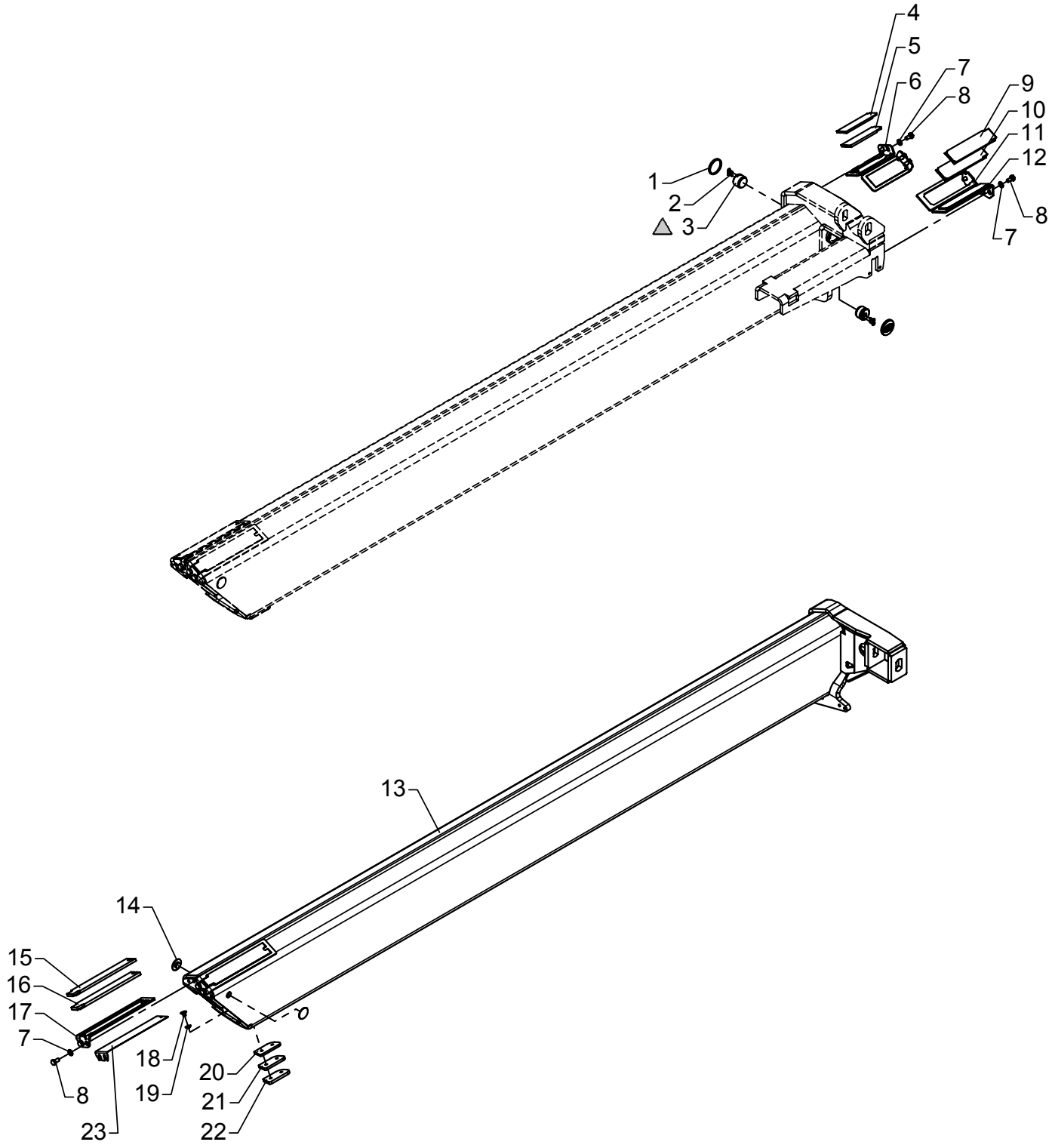

△ PBC 492

Fittings for extension VIII

As from / To loader no.: 97 00 00 /
Created: 17.11.2003
Modified: 14.05.2004

Item no.	Qty.	Part no.	Description	Remarks
1	2	64362	Plastic plug	
2	4	30540	Countersunk screw	MK6 x 16
3	2	6300334	Guide	
4	2	63698	Slide block	6 mm
5	2	63668	Slide block	6381524, 7 mm
6	2	6300336	Bracket	
7	12	31177	Washer	10 mm
8	12	30154	Set screw	M10 x 20
9	2	63516	Slide block	8 mm
10	2	63764	Slide block	6239674, 9 mm
11	1	6239573	Bracket	
12	1	6239563	Bracket	
13	1	6302581	Jib extension VIII	
14	2	6381484	Guide	
15	2	63528	Slide block	8 mm
16	2	63527	Slide block	9 mm
17	2	6300443	Bracket for slide block	
18	4	31863	Countersunk screw	MK10 x 12
19	4	31171	Washer	10 mm
20	2	6300396	Spacer	6 mm
21	2	6300397	Spacer	7 mm
22	2	6300398	Spacer	8 mm
23	2	6300568	Shim	

Please note: All screws – Loctite 243

72-516

Intern ref.: 6300520

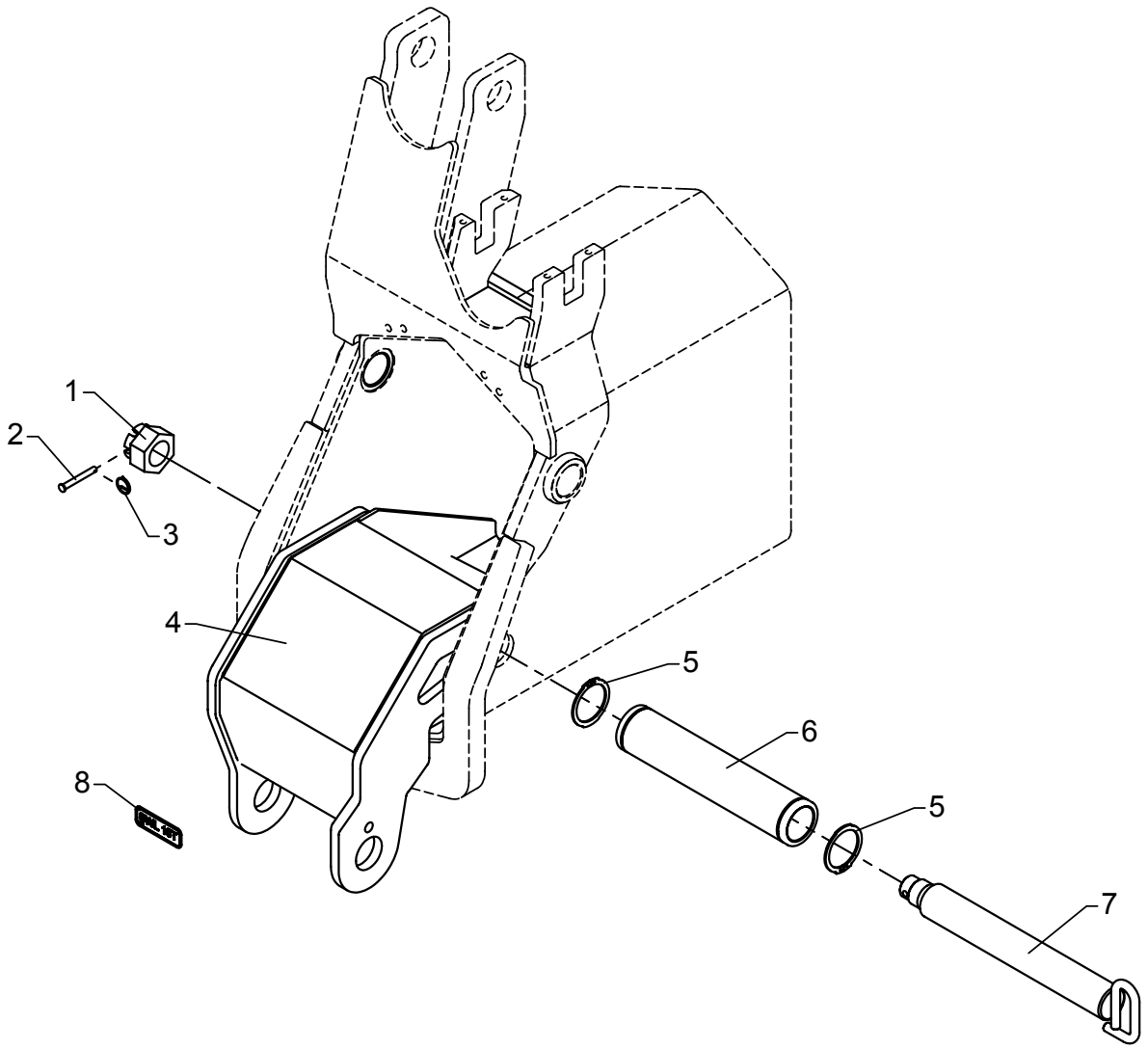

Separate hook suspension, OK2

As from / To loader no.: 97 00 00 /
Created: 17.11.2003
Modified: 13.04.2004

Item no.	Qty.	Part no.	Description	Remarks
1	1	30839	Nut	M30
2	1	31279	Cotter bolt	ø6 x 50
3	1	33458	Lock ring	
4	1	6300381	Hook suspension	
5	2	33129	Circlip	50U
6	1	6300376	Hub	
7	1	6300467	Pin for suspension	
8	1	66541	Plate SWL 16 t	

72-516

Intern ref.: 6300520

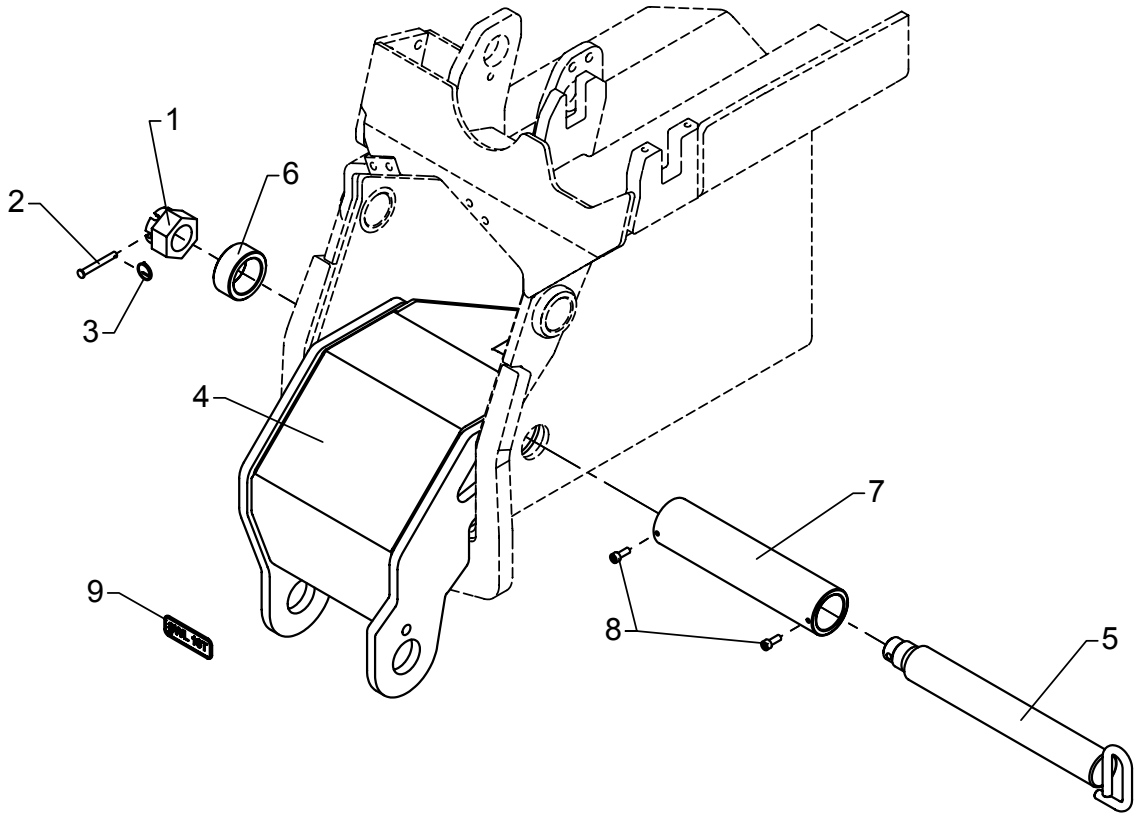

Separate hook suspension, OK3

As from / To loader no.: 97 00 00 /
Created: 17.11.2003
Modified: 13.04.2004

Item no.	Qty.	Part no.	Description	Remarks
1	1	30839	Nut	M30
2	1	31279	Cotter bolt	ø6 x 50
3	1	33458	Lock ring	
4	1	6300381	Hook suspension	
5	1	6300467	Pin for suspension	
6	1	6300469	Spacer	
7	1	6300479	Hub	
8	2	31539	Screw, stainless	MC6 x 16
9	1	66541	Plate SWL 16 t	

72-516

Intern ref.: 6301250

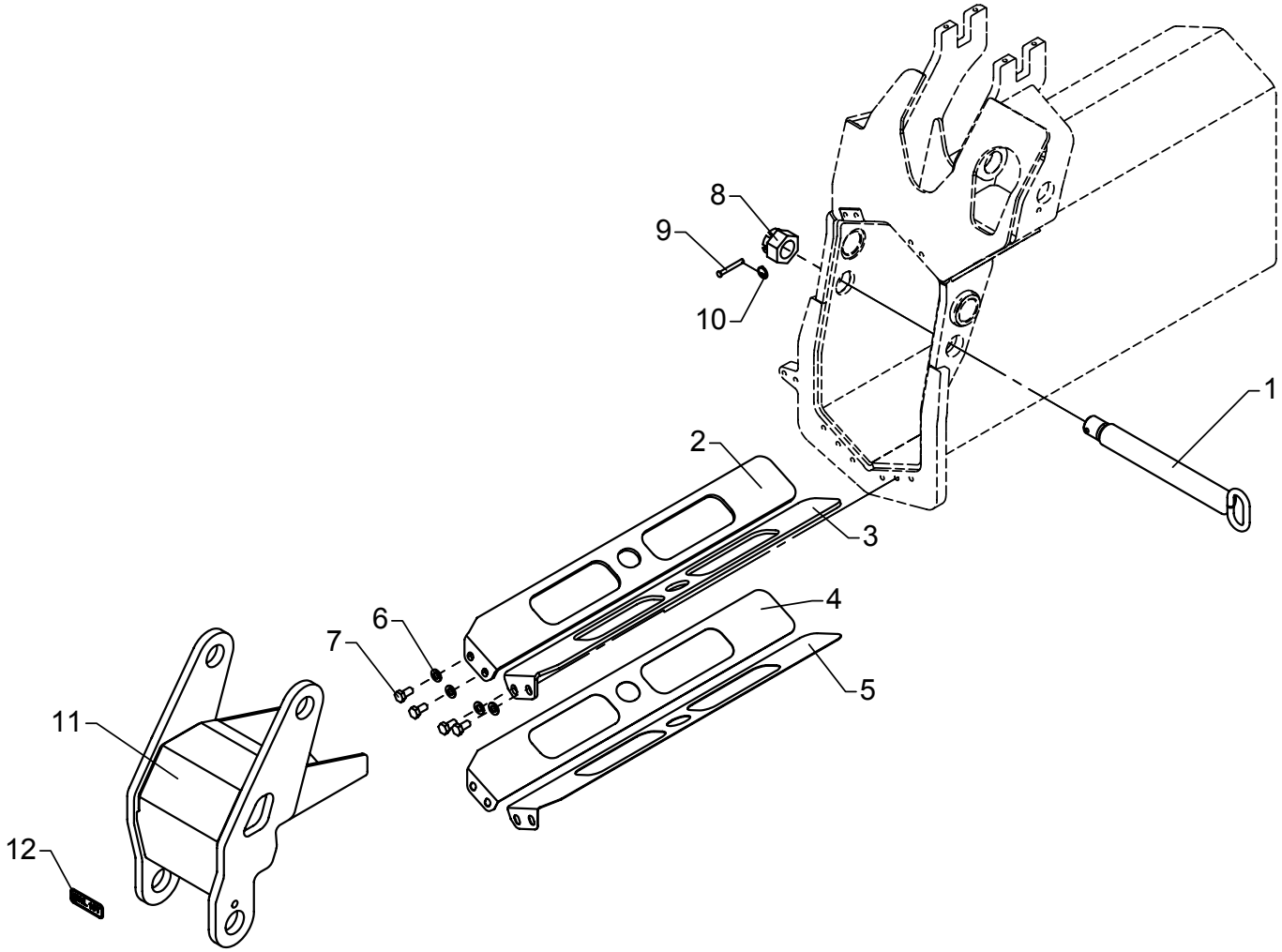

Separate hook suspension, OK4

As from / To loader no.: 97 00 00 /
Created: 17.11.2003
Modified: 13.04.2004

Item no.	Qty.	Part no.	Description	Remarks
1	1	6302718	Pin for hook suspension	
2	1	6300705	Spacer, right	
3	1	6300706	Spacer, right	
4	1	6300707	Shim, right	
5	1	6300708	Shim, right	
6	4	31177	Washer	10 mm
7	4	31517	Set screw, stainless	M10 x 20
8	1	30839	Nut	M30
9	1	31279	Cotter bolt	ø6 x 50
10	1	33458	Lock ring	
11	1	6302715	Hook suspension OK4	
12	1	66541	Plate SWL 16 t	

72-516

Intern ref.: 6301260

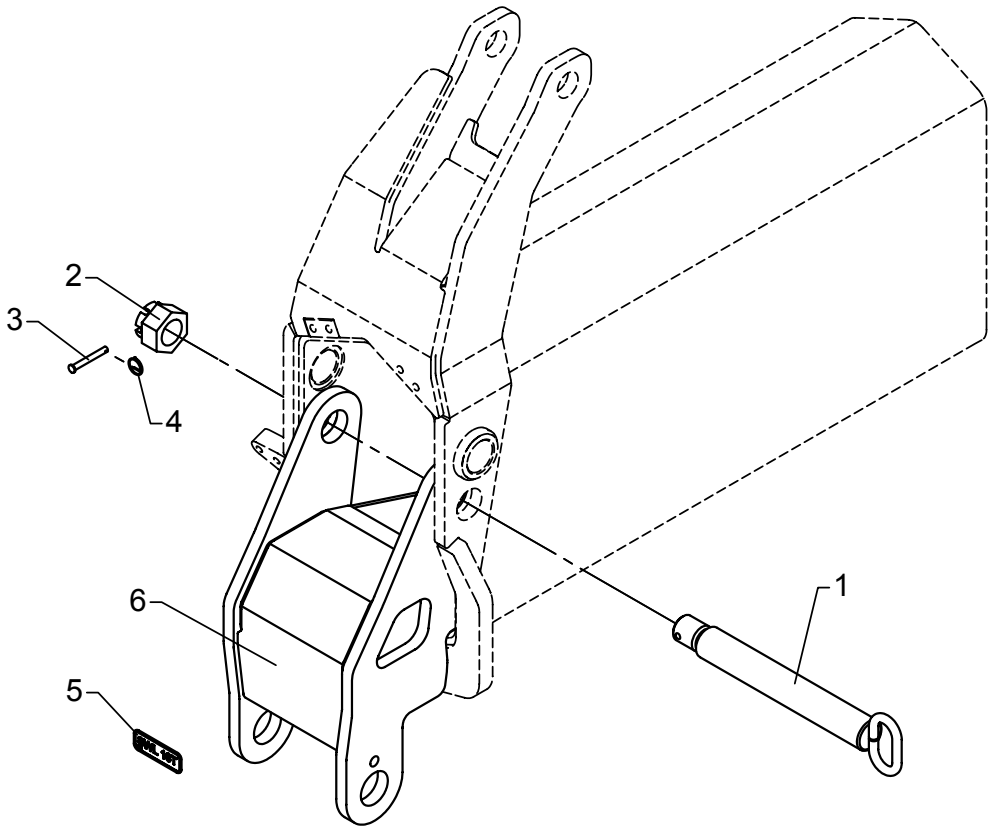

Separate hook suspension, OK5

As from / To loader no.: 97 00 00 /
Created: 17.11.2003
Modified: 13.04.2004

Item no.	Qty.	Part no.	Description	Remarks
1	1	6302728	Pin for suspension	
2	1	30839	Nut	M30
3	1	31279	Cotter bolt	ø6 x 50
4	1	33458	Lock ring	
5	1	66541	Plate SWL 16 t	
6	1	6302725	Hook suspension OK5	

72-516

Intern ref.: 6303270

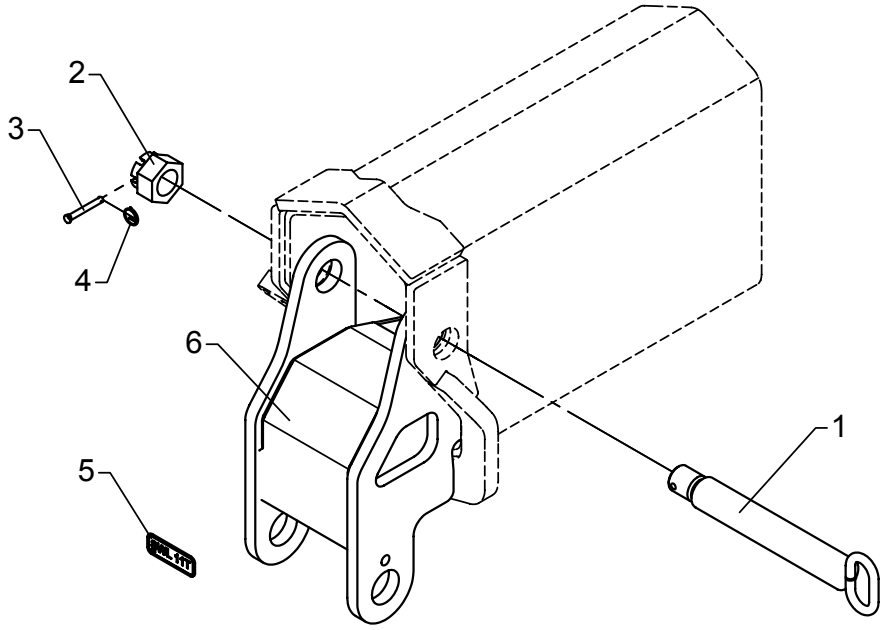

Separate hook suspension, OK 6

As from / To loader no.: 97 00 00 /
Created: 12.05.2004
Modified:

Item no.	Qty.	Part no.	Description	Remarks
1	1	6302748	Pin for hook suspension	
2	1	30839	Nut	M30
3	1	31279	Cotter bolt	ø6 x 50
4	1	33458	Lock ring	
5	1	66542	Plate SWL 11 t	
6	1	6302735	Hook suspension OK6	

72-516

Intern ref.: 6303280

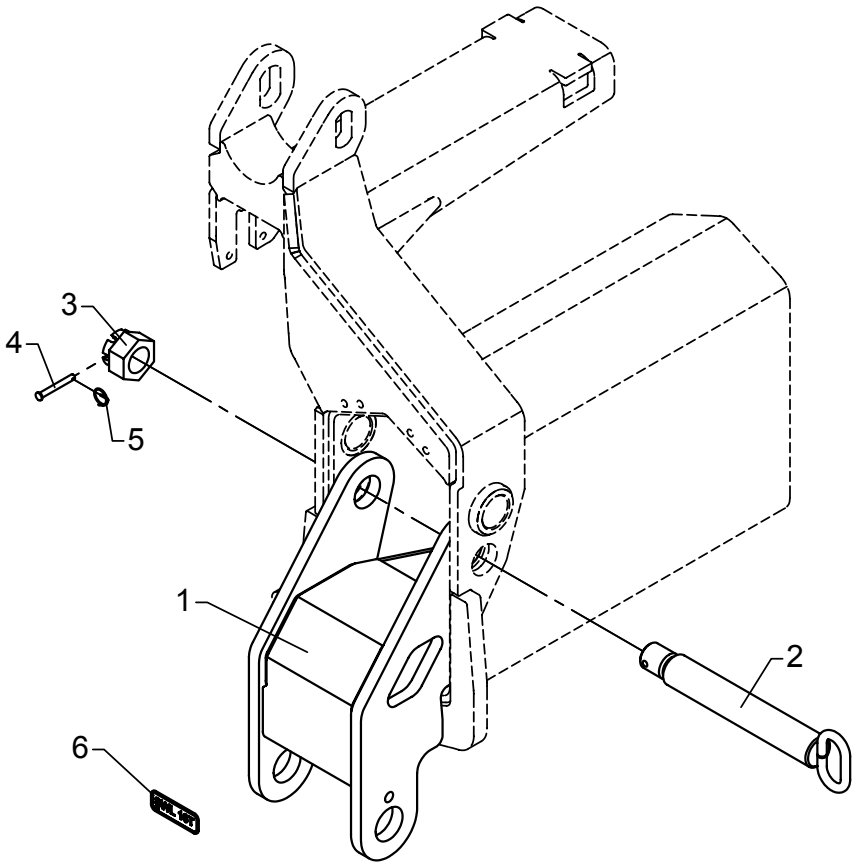

Separate hook suspension, K6

As from / To loader no.: 97 00 00 /
Created: 17.11.2003
Modified: 12.05.2004

Item no.	Qty.	Part no.	Description	Remarks
1	1	6302738	Hook suspension K6	
2	1	6302748	Pin for hook suspension	
3	1	30839	Nut	M30
4	1	31279	Cotter bolt	ø6 x 50
5	1	33458	Lock ring	
6	1	66541	Plate SWL 16 t	

72-516

Intern ref.: 6300530

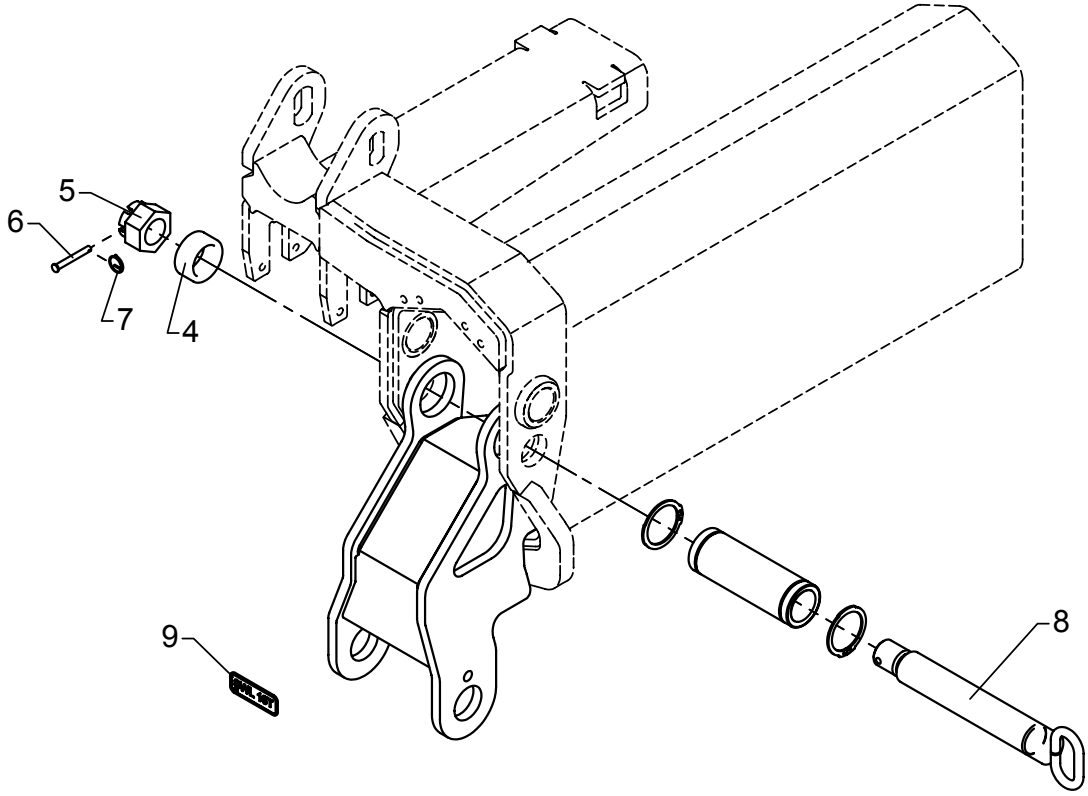

Separate hook suspension, K7

As from / To loader no.: 97 00 00 /
Created: 17.11.2003
Modified: 12.05.2004

Item no.	Qty.	Part no.	Description	Remarks
1	1	6302841	Hook suspension K7 - K8	
2	2	33129	Circlip	50U
3	1	6300847	Hub	
4	1	6301036	Hub	
5	1	30839	Nut	M30
6	1	31279	Cotter bolt	ø6 x 50
7	1	33458	Lock ring	
8	1	6302748	Pin for hook suspension	
9	1	66541	Plate SWL 16 t	

72-516

Intern ref.: 6300530

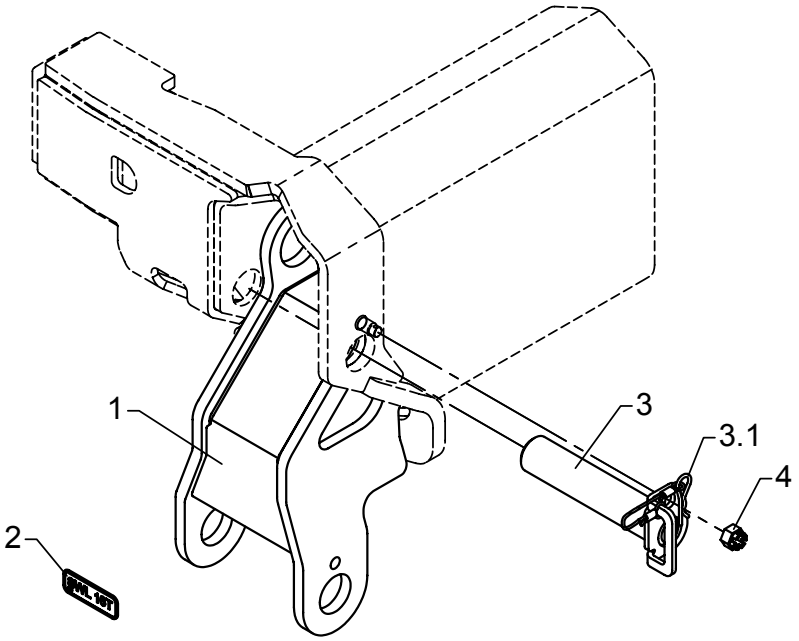

Separate hook suspension, K8

As from / To loader no.: 97 00 00 /
Created: 17.11.2003
Modified: 12.05.2004

Item no.	Qty.	Part no.	Description	Remarks
1	1	6302841	Hook suspension K7 - K8	
2	1	66541	Plate SWL 16 t	
3	1	6300593	Lock pin with lock spring	
4	1	32127	Nut	M12

72-516

Intern ref.: 6300270

OK2-OK5

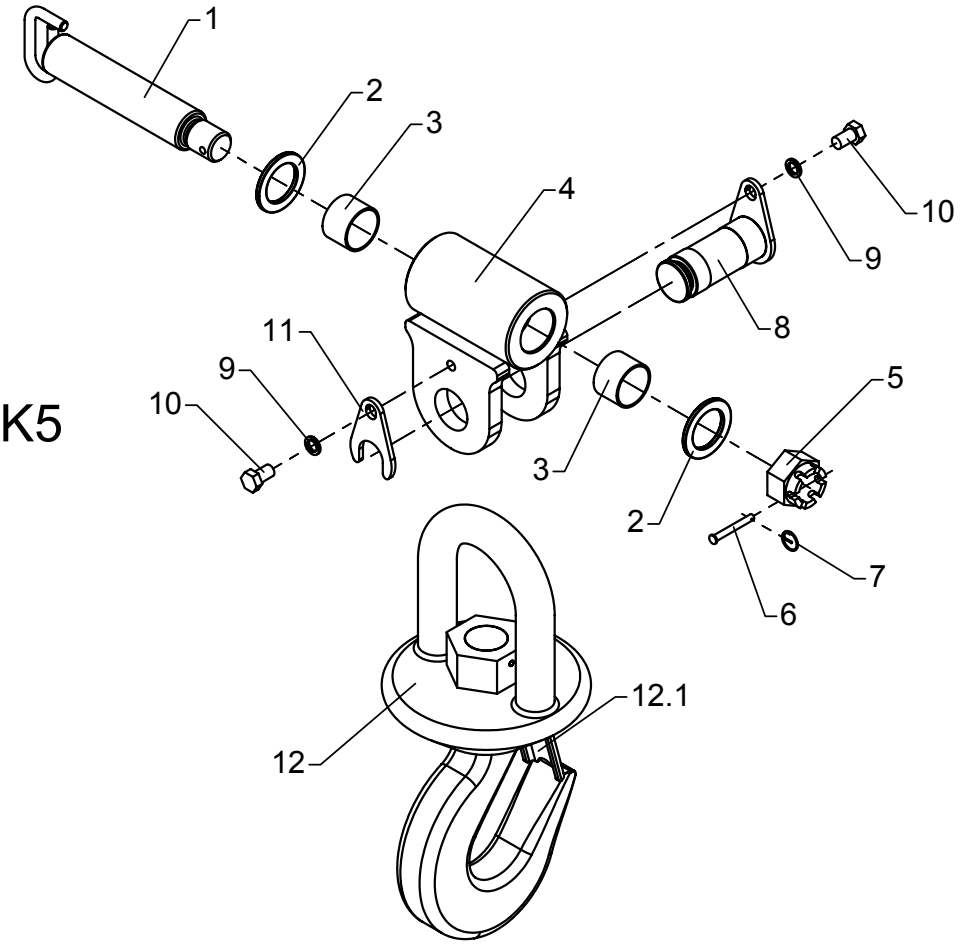

OK6
K6-K8

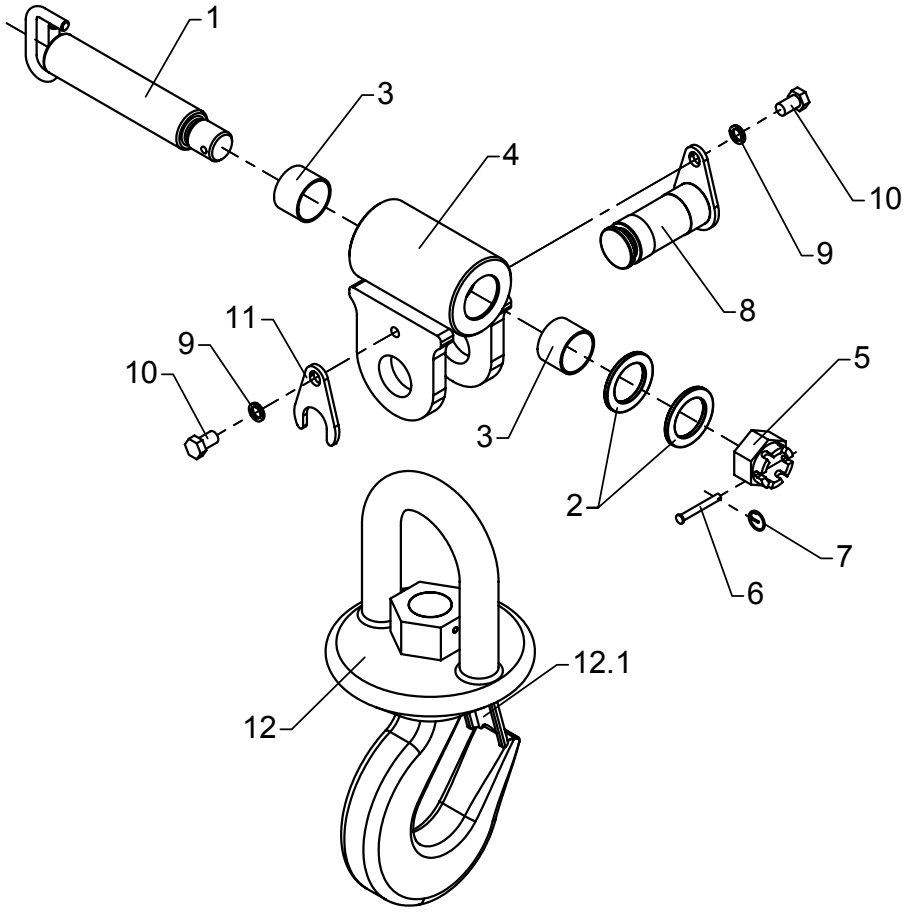

Hook suspension

As from / To loader no.: 97 00 00 /
Created: 13.04.2004
Modified: 12.05.2004

Item no.	Qty.	Part no.	Description	Remarks
1	1	6300387	Pin for suspension	
2	2	6193554	Distance ring	
3	2	23947	Composite bearing	ø40/44 x 30
4	1	6193483	Suspension	
5	1	30839	Nut	M30
6	1	31279	Cotter bolt	ø6 x 50
7	1	33458	Lock ring	
8	1	6193524	Pin	
9	2	31158	Spring washer	12 mm
10	2	30175	Set screw	M12 x 20
11	1	6193544	Lock plate	
12	1	62196	Hook with ball bearing	
		62197	Safety catch	

72-516

Intern ref.: 6300080

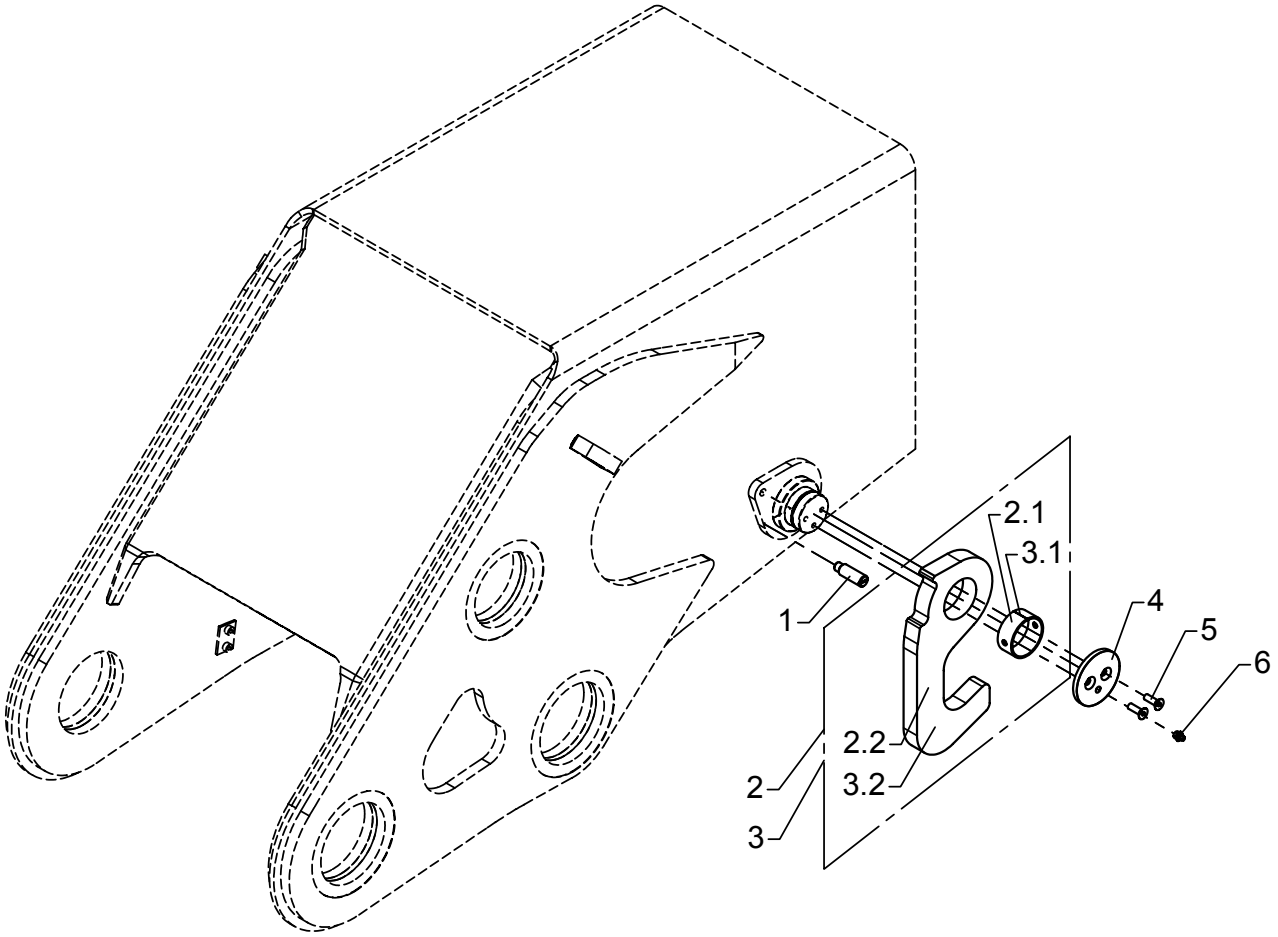

Stowing hook , complete

As from / To loader no.: 97 00 00 /
Created: 17.11.2003
Modified: 11.06.2004

Item no.	Qty.	Part no.	Description	Remarks
1	1	6302085	Locking pin	
2	1	6300020	Stowing hook incl. bushing	THOR
	1	23929	Bushing	PM 5520 DX
	1	6300084	Stowing hook	
3	1	6302020	Stowing hook incl. bushing	THOR-O
	1	23929	Bushing	PM 5520 DX
	1	6302084	Stowing hook	
4	1	6302309	End plate	
5	2	31964	Counter sunk screw, stainless	MK8 x 25
6	1	31318	Lubricator	1/8" RG

52302630

72-516

6303100
6303110
Intern ref.: 6303120

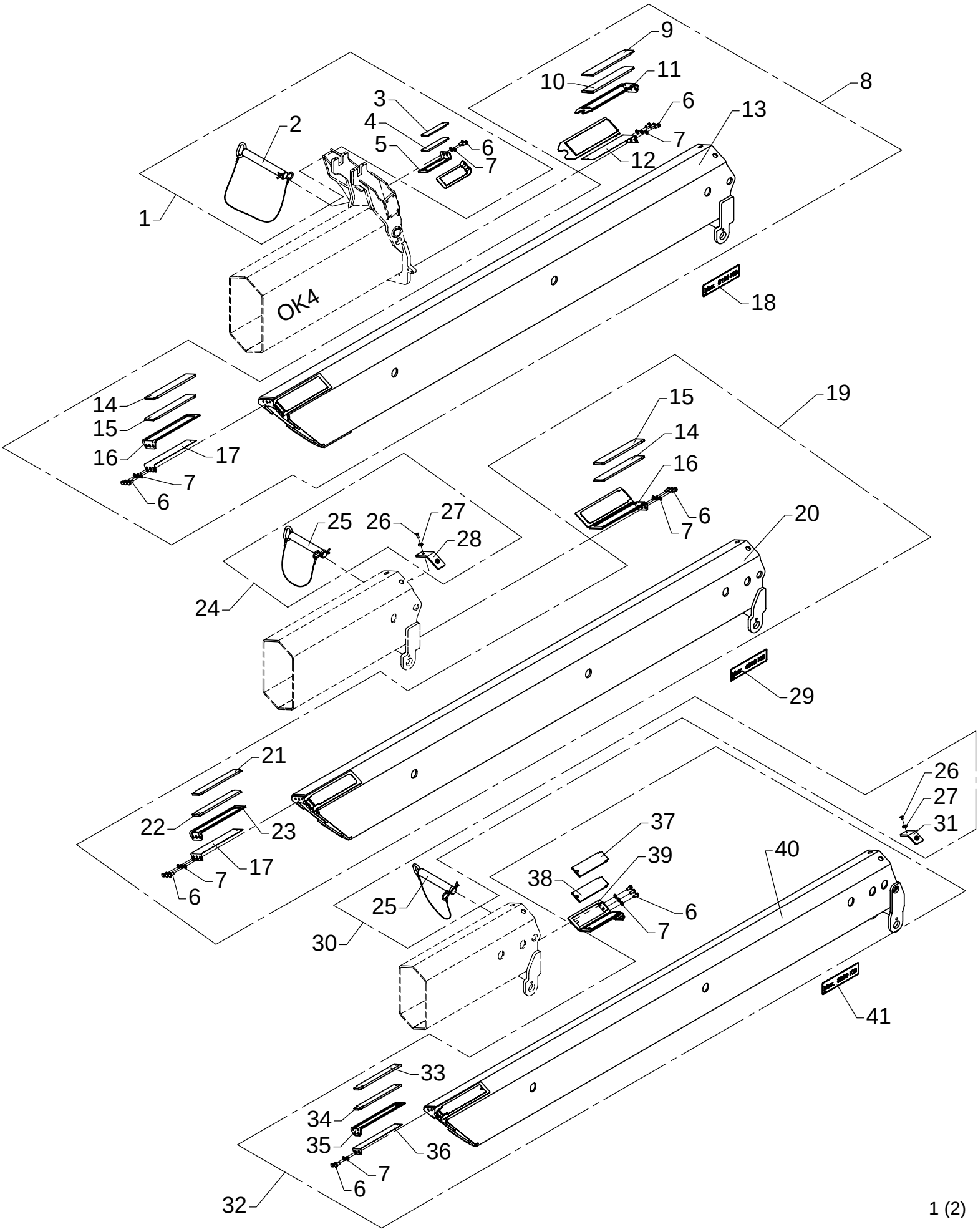

Manual extensions OK 4

As from / To loader no.: 97 00 08/
Created: 17.11.2003
Modified:

Item no.	Qty.	Part no.	Description	Remarks
1	1	6301330	Fittings, man. ext. OF5/OF6	
2		6300517	Lock pin with split pin	
3		63698	Slide block	6 mm
4		63668	Slide block	7 mm
5		6300336	Bracket	
6		30154	Set screw	M10 x 20
7		31177	Washer	10 mm
8	1	6303100	Manual extension, OF5	
9		63521	Slide block	8 mm
10		63696	Slide block	9 mm
11		6300369	Bracket for slide block	
12		6300533	Shim	
13		6303101	Manual extension, OF5	
14		63760	Slide block	9 mm
15		63522	Slide block	8 mm
16		6300366	Bracket for slide block	
17		6300534	Shim	
18	2	66540	Label, max. 5100 kg	
19	1	6303110	Manual extension, OF6	
20		6303111	Manual extension, OF6	
21		63529	Slide block	8 mm
22		63761	Slide block	9 mm
23		6300399	Bracket for slide block	
24	1	6301340	Fittings, man. ext.OF6/OF7 K6-F8	
25		6300537	Lock pin with lock spring	
26		30597	Counter-sunk screw	MK8 x 12
27		6232974	Lock washer	
28		6301109	Division plate, 7 mm	7 mm
29	2	66539	Label, max. 4000 kg	
30	1	6301350	Fittings, man. ext. F7/F8, OF7/OF8	
31		6301119	Division plate, 7 mm	7 mm
32	1	6303120	Manual extension, OF7	
33		63669	Slide block	9 mm
34		63520	Slide block	8 mm
35		6300368	Bracket for slide block	
36		6300568	Shim	
37		63695	Slide block	9 mm
38		63523	Slide block	8 mm
39		6300367	Bracket for slide block	
40		6303121	Manual extension, OF7	
41	2	66536	Label, max. 3200 kg	

72-516

6303110
6303120
Intern ref.: 6303130

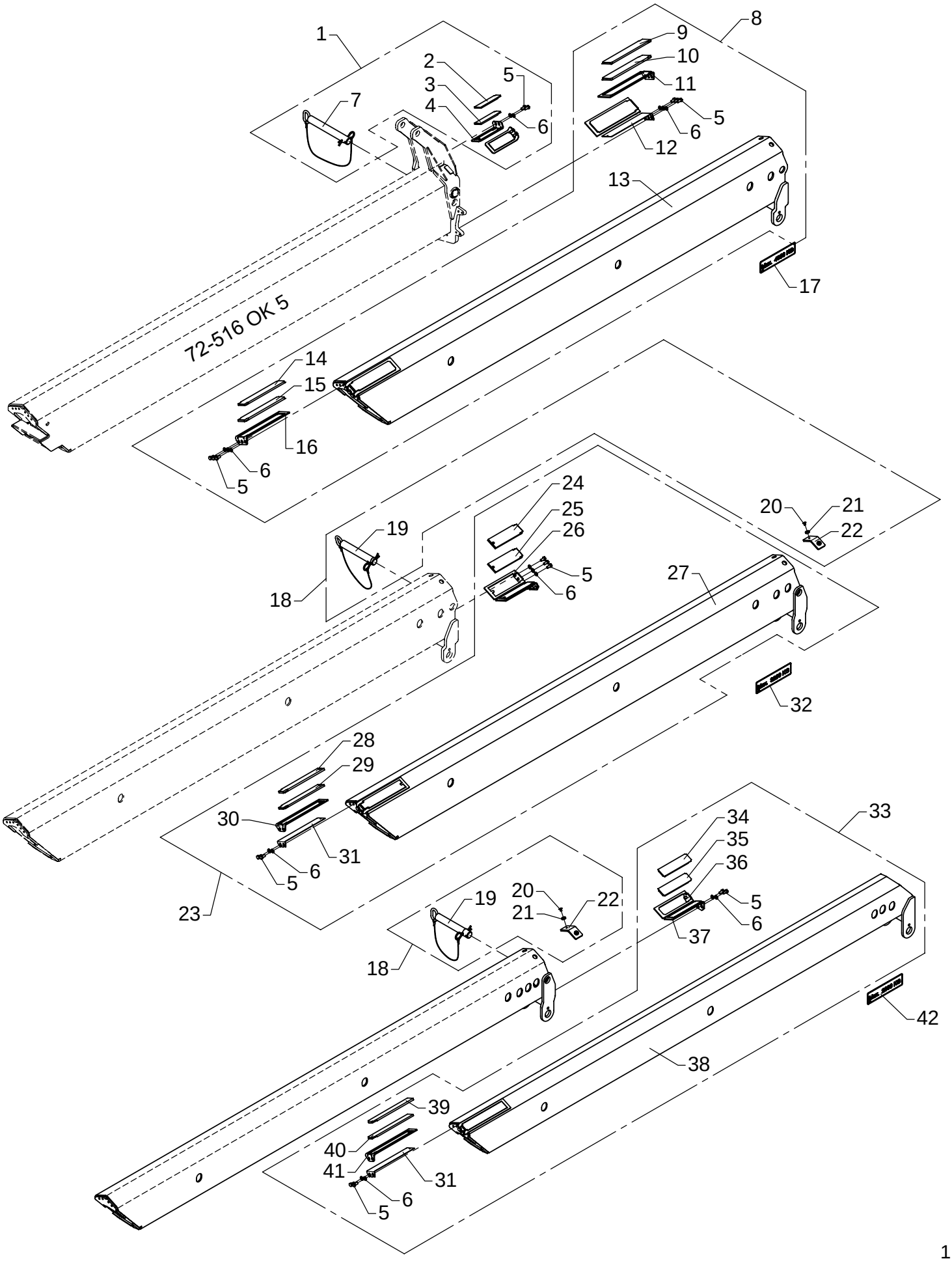

Manual extensions OK5

As from / To loader no.: 97 00 08/
Created: 17.11.2003
Modified:

Item no.	Qty.	Part no.	Description	Remarks
1	1	6301330	Fittings, man. ext. OF5/OF6	
2		63698	Slide block	6 mm
3		63668	Slide block	7 mm
4		6300336	Bracket	
5		30154	Set screw	M10 x 20
6		31177	Washer	10 mm
7		6300517	Lock pin with split pin	
8	1	6303110	Manual extension, OF6	
9		63522	Slide block	8 mm
10		63760	Slide block	9 mm
11		6300366	Bracket for slide block	
12		6300534	Shim	
13		6303111	Manual extension, OF6	
14		63529	Slide block	8 mm
15		63761	Slide block	9 mm
16		6300399	Bracket for slide block	
17	2	66539	Label, max. 4000 kg	
18	2	6301350	Fittings, man. ext. F7/F8, OF7/OF8	
19		6300537	Lock pin with lock spring	
20		30597	Counter-sunk screw	MK8 x 12
21		6232974	Lock washer	
22		6301119	Division plate, 7 mm	
23	1	6303120	Manual extension, OF7	
24		63695	Slide block	9 mm
25		63523	Slide block	8 mm
26		6300367	Bracket for slide block	
27		6303121	Manual extension, OF7	
28		63669	Slide block	9 mm
29		63520	Slide block	8 mm
30		6300368	Shim	
31		6300568	Shim	
32	2	66536	Label, max. 3200 kg	
33	1	6301130	Manual extension, OF8	
34		63516	Slide block	8 mm
35		63764	Slide block	9 mm
36		6239573	Bracket	
37		6239563	Bracket	
38		6303131	Manual extension, OF8	
39		63527	Slide block	9 mm
40		63528	Slide block	8 mm
41		6300443	Bracket for slide block	
42	2	66533	Label, max. 2600 kg	

72-516

6303140
6303150
Intern ref.: 6303160

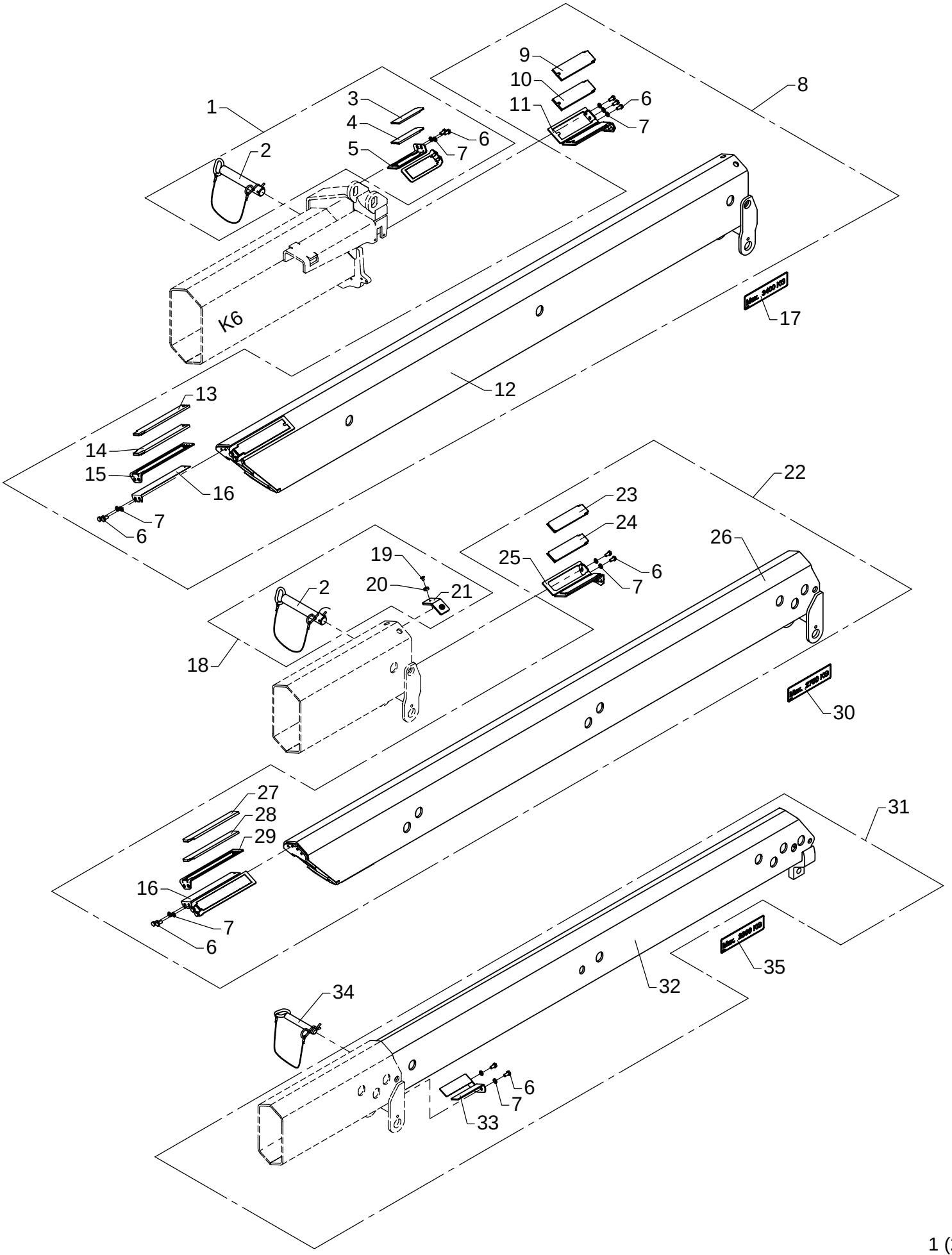

Manual extensions K6

As from / To loader no.: 97 00 00/
Created: 17.11.2003
Modified:

Item no.	Qty.	Part no.	Description	Remarks
1	1	6301360	Fittings, man. ext. F7/8(K6/7)	
2		6300537	Lock pin with lock spring	
3		63698	Slide block	6 mm
4		63668	Slide block	7 mm
5		6300336	Bracket	
6		30154	Set screw	M10 x 20
7		31177	Washer	10 mm
8	1	6303140	Manual extension, F7	
9		63523	Slide block	8 mm
10		63695	Slide block	9 mm
11		6300367	Bracket for slide block	
12		6303141	Manual extension, F7	
13		63520	Slide block	8 mm
14		63669	Slide block	9 mm
15		6300368	Bracket for slide block	
16		6300568	Shim	
17	2	66537	Label, max. 3400 kg	
18	1	6301150	Fittings, man. ext. F7/8-OF7/8	
19		30597	Counter-sunk screw	MK8 x 12
20		6232974	Lock washer	
21		6301119	Division plate, 7 mm	7 mm
22	1	6303150	Manual extension, F8	
23		63516	Slide block	8 mm
24		63764	Slide block	9 mm
25		6239563	Bracket	
26		6303151	Manual extension, F8	
27		63527	Slide block	9 mm
28		63528	Slide block	8 mm
29		6300443	Bracket for slide block	
30	2	66535	Label, max. 2750 kg	
31	1	6303160	Manual extension, F9	
32		6303161	Manual extension, F9	
33		6301167	Compression block	
34	1	6657424	Lock pin with chain	
35	2	66532	Label, max. 2300 kg	

72-516

Intern ref.: 6303150
6303160
6303170

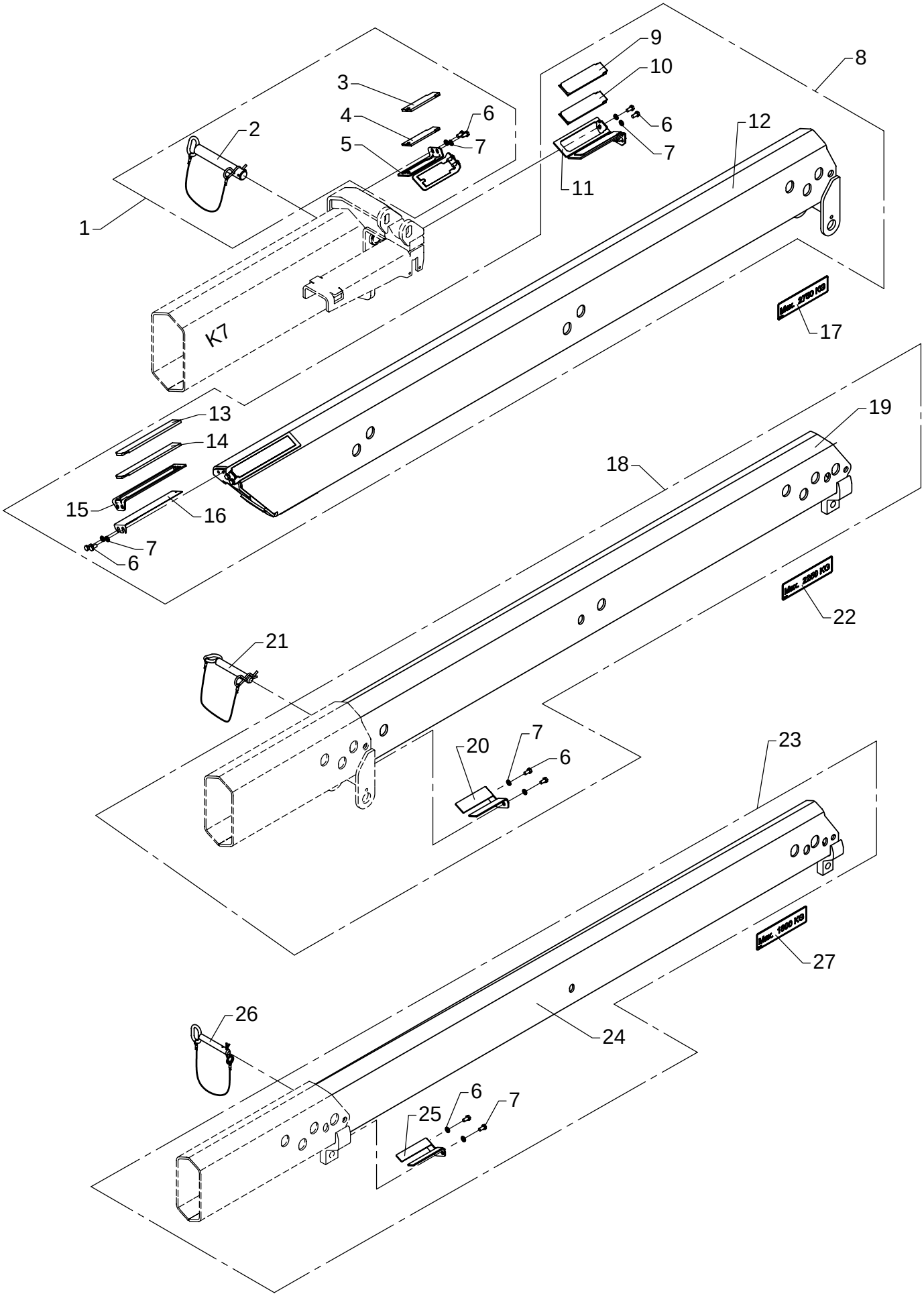

Manual extensions K7

As from / To loader no.: 97 00 00/
Created: 17.11.2003
Modified:

Item no.	Qty.	Part no.	Description	Remarks
1	1	6301360	Fittings, man. ext. F7/8(K6/7)	
2		6300537	Lock pin with lock spring	
3		63668	Slide block	6 mm
4		63698	Slide block	7 mm
5		6300336	Bracket	
6		30154	Set screw	M10 x 20
7		31177	Washer	10 mm
8	1	6303150	Manual extension, F8	
9		63764	Slide block	9 mm
10		63516	Slide block	8 mm
11		6239563	Bracket	
12		6303151	Manual extension, F8	
13		63527	Slide block	9 mm
14		63528	Slide block	8 mm
15		6300443	Bracket for slide block	
16		6300568	Shim	
17	2	66353	Label, max. 2750 kg	
18	1	6303160	Manual extension, F9	
19		6303161	Manual extension, F9	
20		6301167	Compression block	
21	1	6657424	Lock pin with chain	
22	2	66531	Label. max. 2250 kg	
23	1	6303170	Manual extension, F10	
24		6303171	Manual extension, F10	
25		6301177	Compression block	
26	1	6301166	Lock pin with split pin	
27	2	65122	Label. max. 1800 kg	

52302670

72-516

6303160
6303170
Intern ref.: 6303180

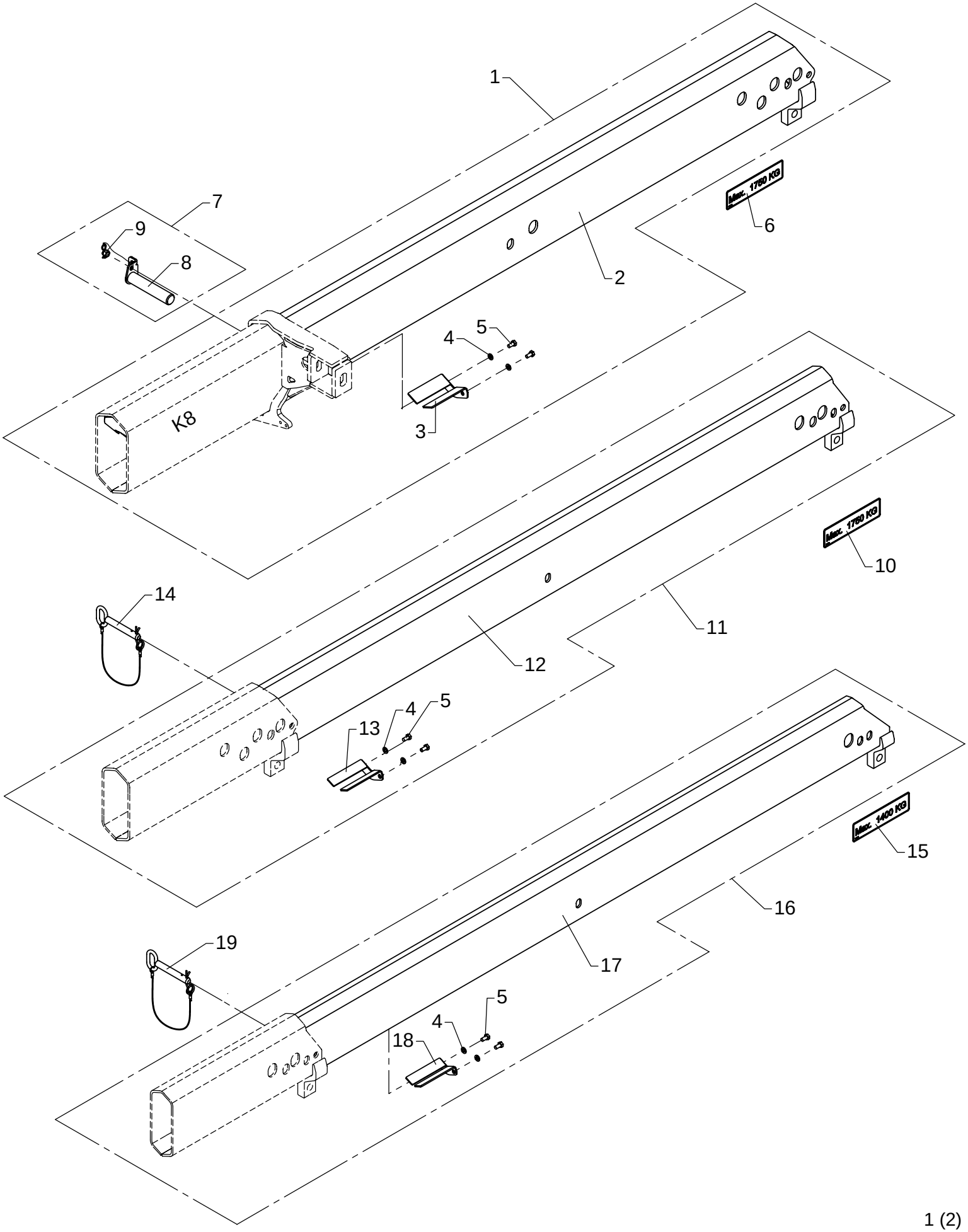

Manual extensions K8

As from / To loader no.: 97 00 00/
Created: 17.11.2003
Modified:

Item no.	Qty.	Part no.	Description	Remarks
1	1	6303160	Manual extension, F9	
2		6303161	Manual extension, F9	
3		6301167	Compression block	
4		31177	Washer	10 mm
5		30154	Set screw	M10 x 20
6		66530	Label, max. 2150 kg	
7	1	6301370	Fittings, man. extension, F9	
8		6300593	Lock pin with lock spring	
9		32127	Nut	M12
10	2	65561	Max. label 1750 kg	
11	1	6303170	Manual extension, F10	
12		6303171	Manual extension, F10	
13		6301177	Compression block	
14	1	6301166	Lock pin with split pin	
15	2	65578	Label. max. 1400 kg	
16	1	6303180	Manual extension, F11	
17		6303181	Manual extension, F11	
18		6301187	Compression block	
19	1	6301166	Lock pin with split pin	

72-516

Intern ref.: 62101+62114

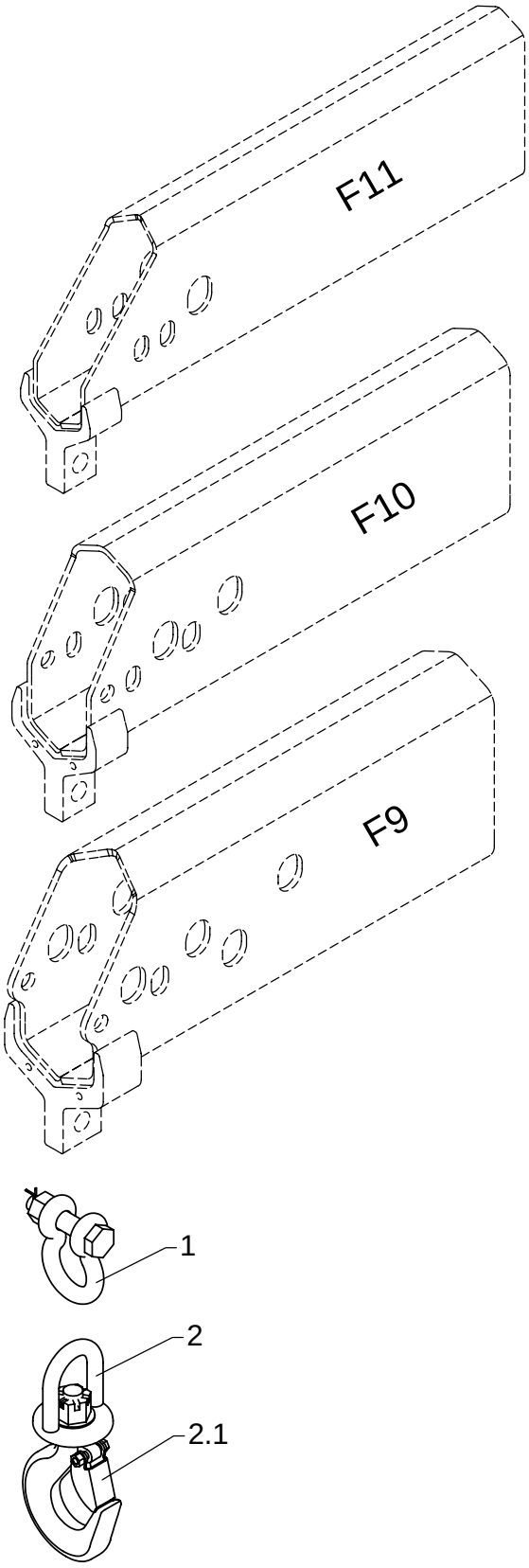

Hook suspension, F9, F10, F11

As from / To loader no.: 97 00 00 /
Created: 17.11.2003
Modified:

Item no.	Qty.	Part no.	Description	Remarks
1	1	62114	Shackle with nut	
2	1	62101	Hook	
		62143	Safety catch	

72-516

Intern ref.: 6302140

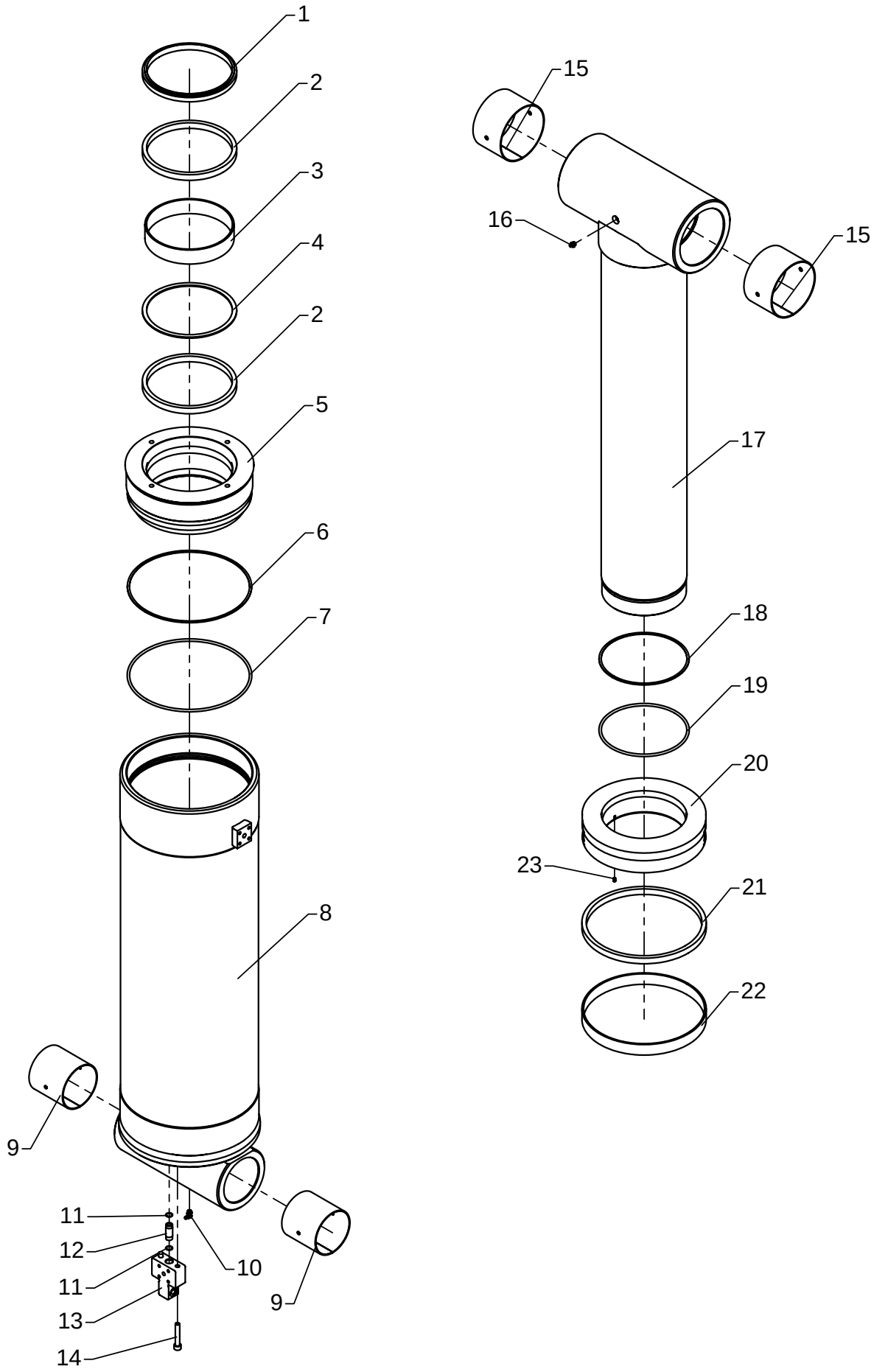

Boom cylinder, C290/200 x 816

As from / To loader no.: 97 00 00 /
Created: 17.11.2003
Modified:

Item no.	Qty.	Part no.	Description	Remarks
	1	6893660	Seal kit	Pos. 1,2,3,4,6,7,18,19,21,22
1	1	20958	Scraper	GA 200 x 220 x 12/16
2	2	20960	Seal	SI/L 200/220 x 16
3	1	20955	Guide ring	RWR 200/208 x 40 - PF
4	1	20962	Back ring	
5	1	6302144	Guide	
6	1	20876	Back ring	STR 280 x 290 x 1,7
7	1	20352	O-ring	OR 279,3 x 5,7
8	1	6302151	Cylinder pipe	
9	2	23923	Bushing	PM 110110 DX
10	1	31322	Lubricator	1/8 RG - 90
11	2	20136	O-ring	OR 13,1 x 1,6
12	1	6292834	Pipe	
13	1	6300165	Block	
14	2	32452	Screw	MC10 x 60
15	2	23926	Bushing	PM 14090 DX
16	1	31318	Lubricator	1/8" RG
17	1	6302137	Piston rod	
18	1	20874	Back ring	STR 200 x 210 x 1,7
19	1	20348	O-ring	OR 199,3 x 5,7
20	1	6302146	Piston	
21	1	20952	Piston seal	GHT 290/270 x 16 - 292/N/A
22	1	20956	Guide ring	PWR 290/282 x 30 - PF
23	1	30903	Screw	MSP6 x 8

72-516

Intern ref.: 6302130

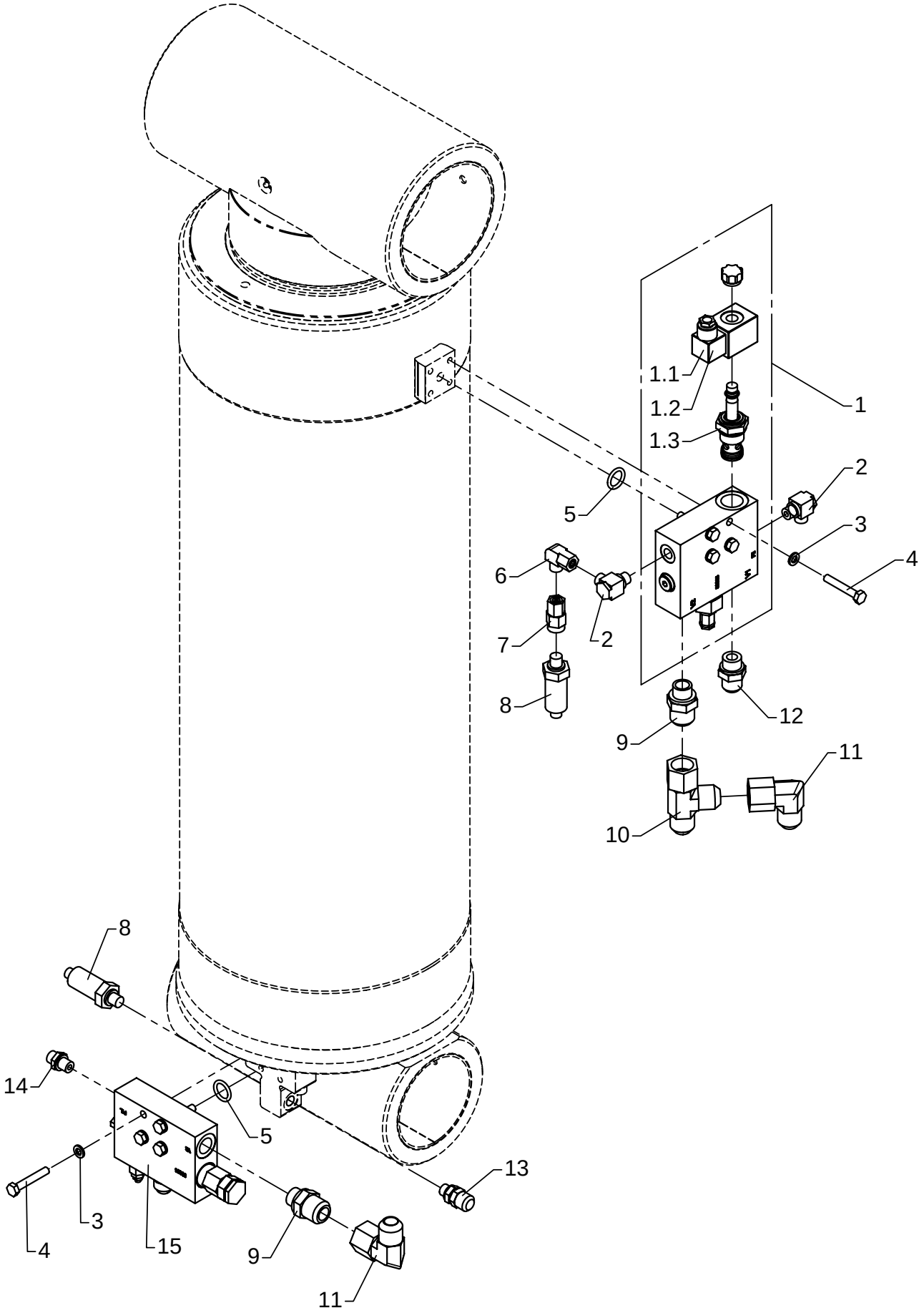

Boom cylinder with LHV

As from / To loader no.: 97 00 00 /
Created: 17.11.2003
Modified:

Item no.	Qty.	Part no.	Description	Remarks
1	1	59055	Electric regeneration valve	
		61777	Solenoid	12V
		61778	Solenoid	26V
		59074	Magnet coil	
2	2	25113	Banjo connection	RSWV 8 LR
3	8	31155	Spring washer	8 mm
4	8	30139	Steel bolt, stainless	M8 x 50
5		20221	O-ring	OR 18,64 x 3,53
6	1	26170	Elbow connection	EWSD 8 L
7	1	26370	Pressure gauge connection	EMASD 8 LR
8	2	28821	Pressure transducer	
9	2	25861	Connection	F40XS 18/20-1/2 JIC
10	1	25828	Connection	R6XS 20 JIC
11	2	25827	Elbow connection	C6XS 20 JIC
12	1	25833	Straight connection	F40XS 14/16-1/2 JIC
13	1	26103	Pressure-gauge connect.	
14	1	25109	Connection	GES 8 LR-WD
15	1	59054	Load-holding valve	
16	1	6302176	Pipe	
17	1	6302177	Pipe	

72-516

Intern ref.: 6302150

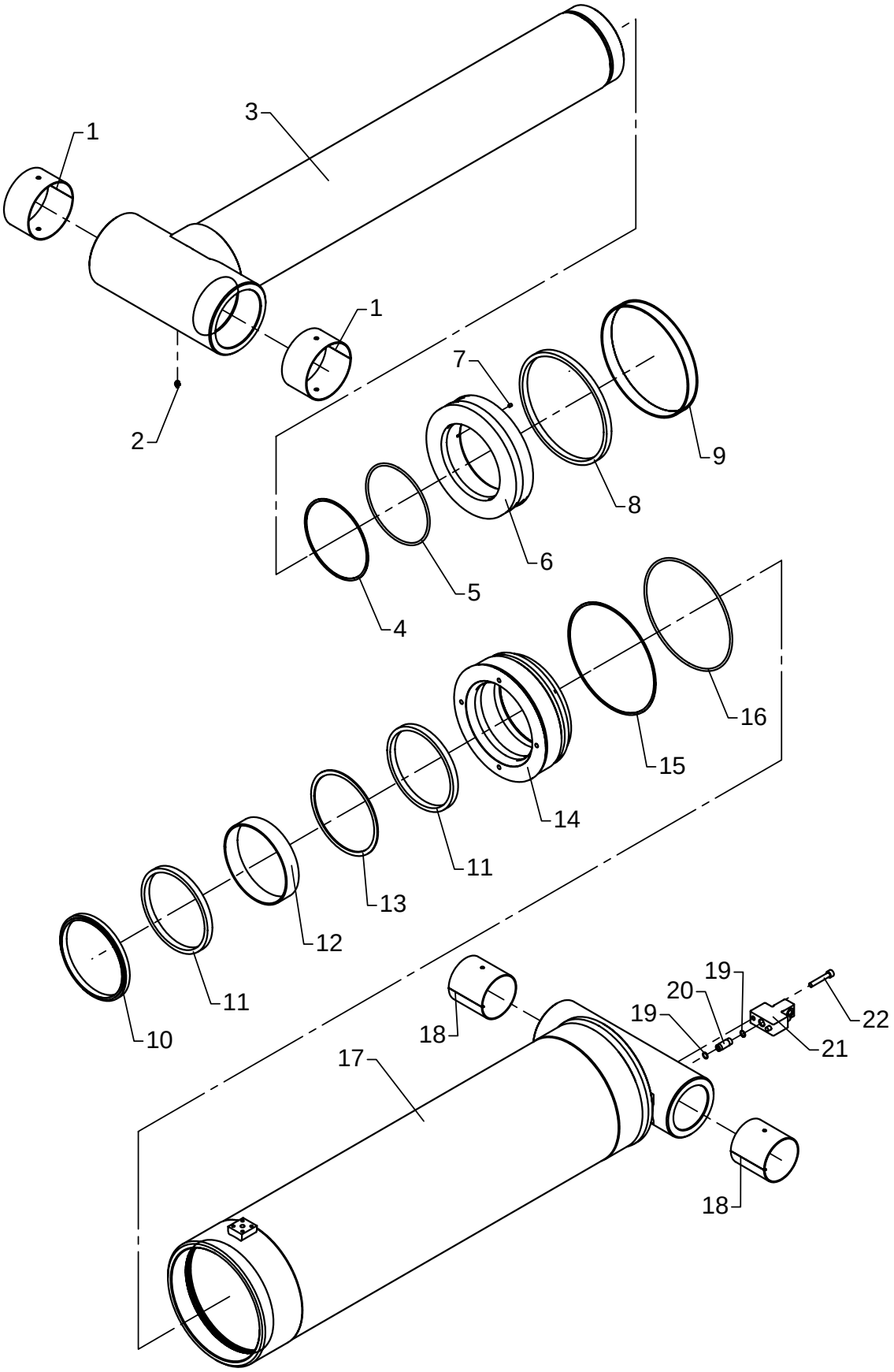

Jib cylinder, C290/200 x 1094

As from / To loader no.: 97 00 00 /
Created: 17.11.2003
Modified:

Item no.	Qty.	Part no.	Description	Remarks
	1	6893660	Seal kit	Pos. 4,5,8,9,10,11,12,13,15,16
1	2	23925	Bushing	PM 14580 DX
2	1	31318	Lubricator	1/8" RG
3	1	6302138	Piston rod	
4	1	20874	Back ring	STR 200 x 210 x 1,7
5	1	20348	O-ring	OR 199,3 x 5,7
6	1	6302146	Piston	
7	1	30903	Screw	MSP6 x 8
8	1	20952	Piston seal	GHT 290/270 x 16 - 292/N/A
9	1	20956	Guide ring	PWR 290/282 x 30 - PF
10	1	20958	Scraper	GA 200 x 220 x 12/16
11	2	20960	Seal	SI/L 200/220 x 16
12	1	20955	Guide ring	RWR 200/208 x 40 - PF
13	1	20962	Back ring	
14	1	6302144	Guide	
15	1	20876	Back ring	STR 280 x 290 x 1,7
16	1	20352	O-ring	OR 279,3 x 5,7
17	1	6302157	Cylinder pipe	
18	2	23923	Bushing	PM 110110 DX
19	2	20136	O-ring	OR 13,1 x 1,6
20	1	6292834	Pipe	
21	1	6300165	Block	
22	2	32452	Screw	MC10 x 60

72-516

Intern ref.: 6302160

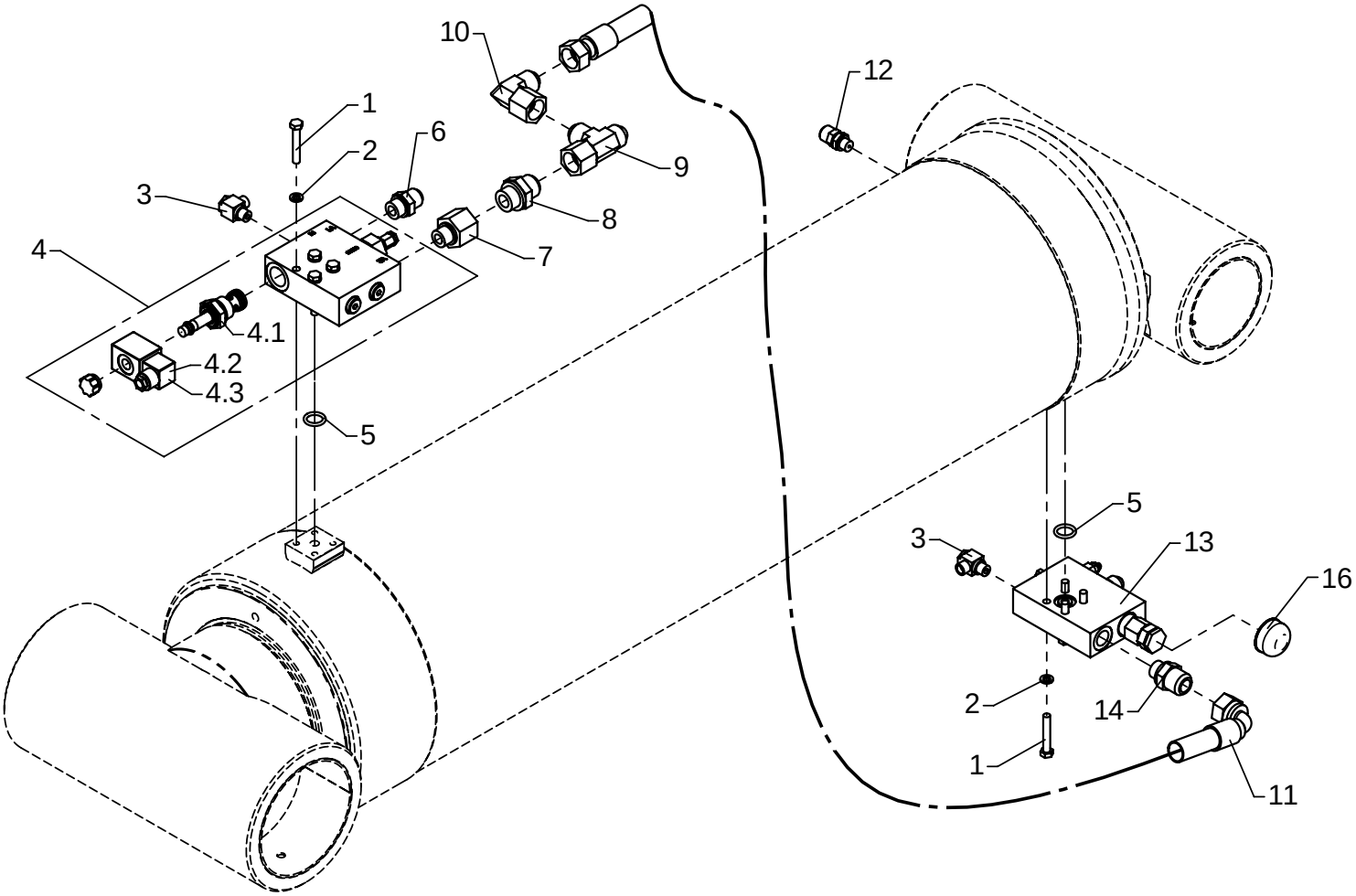

Jib cylinder with LHV

As from / To loader no.: 97 00 00 /
Created: 17.11.2003
Modified: 18.01.2005

Item no.	Qty.	Part no.	Description	Remarks
1	8	30139	Steel bolt, stainless	M8 x 50
2	8	31155	Spring washer	8 mm
3	2	25113	Banjo connection	RSWV 8 LR
4	1	59055	Electric regeneration valve	
		59074	Magnet coil	
		61777	Solenoid	12V
		61778	Solenoid	26V
5		20221	O-ring	OR 18,64 x 3,53
6	1	25833	Straight connection	F40XS 14/16-1/2 JIC
7	1	26111	Reducing connection	RED-R 1/2-WD/R 3/4
8	1	25834	Straight connection	F40XS 18/20-3/4 JIC
9	1	25828	Connection	R6XS 20 JIC
10	1	25827	Elbow connection	C6XS 20 JIC
11	1	56025	Hose	5/8" x 1150 mm v/o JIC
12	1	26103	Pressure-gauge connect.	
13	1	59054	Load-holding valve	
14	1	25861	Connection	F40XS 18/20-1/2 JIC
15	1	6302178	Pipe	
16	1	63413	Cover for nut	

72-516

Intern ref.: 6300400

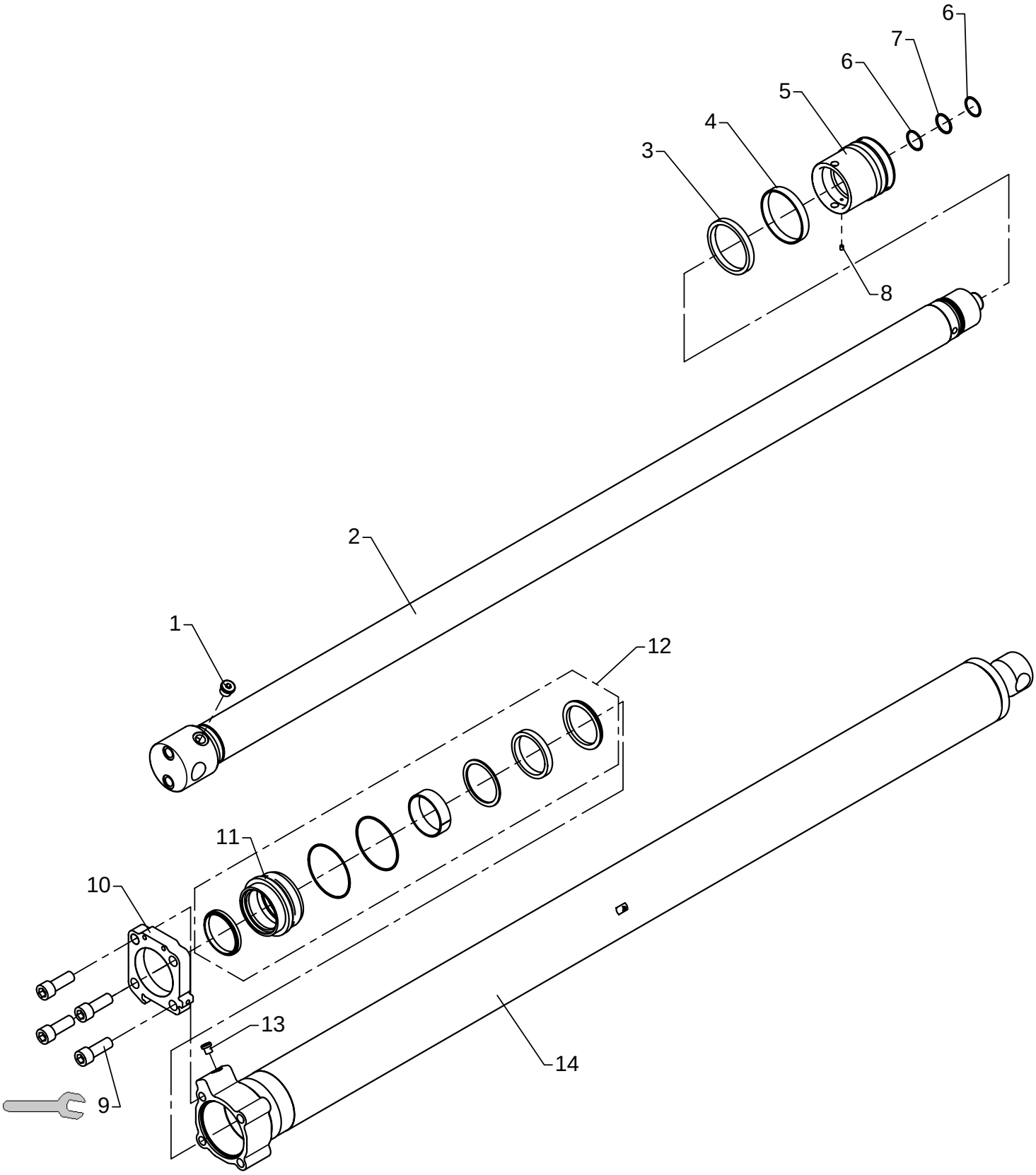

649 Nm

Extension cylinder I, C110/80h x 1850
Optimised boom system OK2-OK6

As from / To loader no.: 97 00 00 /
Created: 17.11.2003
Modified: 17.05.2004

Item no.	Qty.	Part no.	Description	Remarks
	1	6893600	Seal kit, C110/80h	Pos. 3, 4, 6, 7
1	1	25103	Plug	VS-R-1/2 WD
2	1	6300401	Piston rod	
3	1	22131	Seal	GHT 110/95 x 12,5 - PU/N/A
4	1	22130	Guide ring	PWR 110/104 x 16 - PF
5	1	6300406	Piston	
6	2	20705	Back ring	STR 35 x 40 x 1,3
7	1	20177	O-ring	OR 34,2 x 3
8	1	30903	Screw	MSP6 x 8
9	4	32449	Sockethead screw	MC20 x 55
10	1	6300405	Flange	
11	1	6300407	Guide	
12	1	22139	Seal kit	
13	1	25197	Plug	VS-R-1/4 WD
14	1	6300408	Cylinder pipe	

72-516

Intern ref.: 6300410

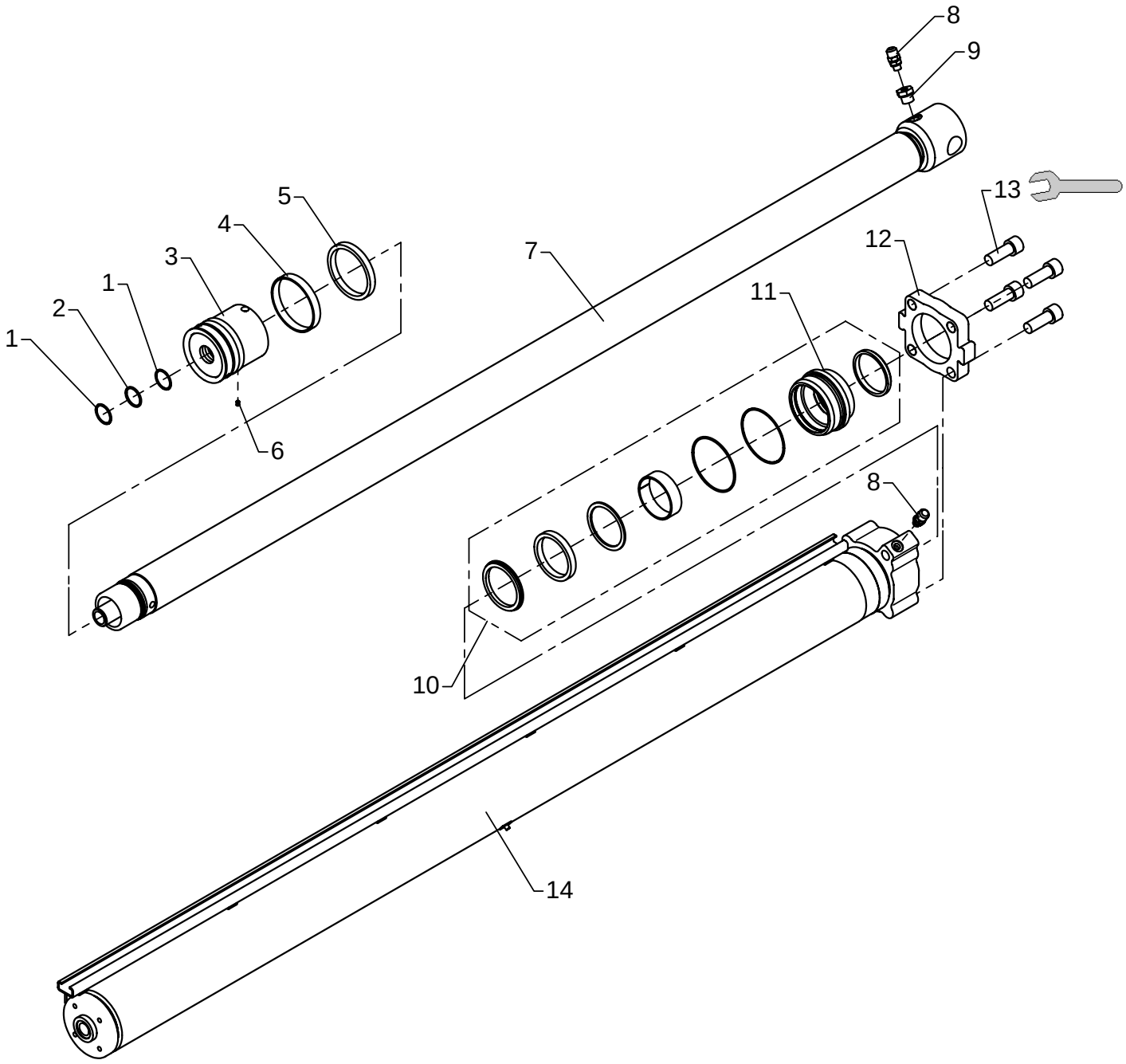

649 Nm

Extension cylinder II, C110/80h x 1900
Optimised boom system OK2-OK6

As from / To loader no.: 97 00 00 /
Created: 17.11.2003
Modified: 17.05.2004

Item no.	Qty.	Part no.	Description	Remarks
	1	6893600	Seal kit, C110/80h	Pos. 1, 2, 4, 5
1	2	20705	Back ring	STR 35 x 40 x 1,3
2	1	20177	O-ring	OR 34,2 x 3
3	1	6300406	Piston	
4	1	22130	Guide ring	PWR 110/104 x 16 - PF
5	1	22131	Seal	GHT 110/95 x 12,5 - PU/N/A
6	1	30903	Screw	MSP6 x 8
7	1	6300412	Piston rod	
8	2	26103	Pressure-gauge connect.	
9	1	25180	Connection	RED-R 1/2-WD/R 1/4
10	1	22139	Seal kit	
11	1	6300407	Guide	
12	1	6300419	Flange	
13	4	32449	Sockethead screw	MC20 x 55
14	1	6300415	Cylinder	

72-516

Intern ref.: 6300420

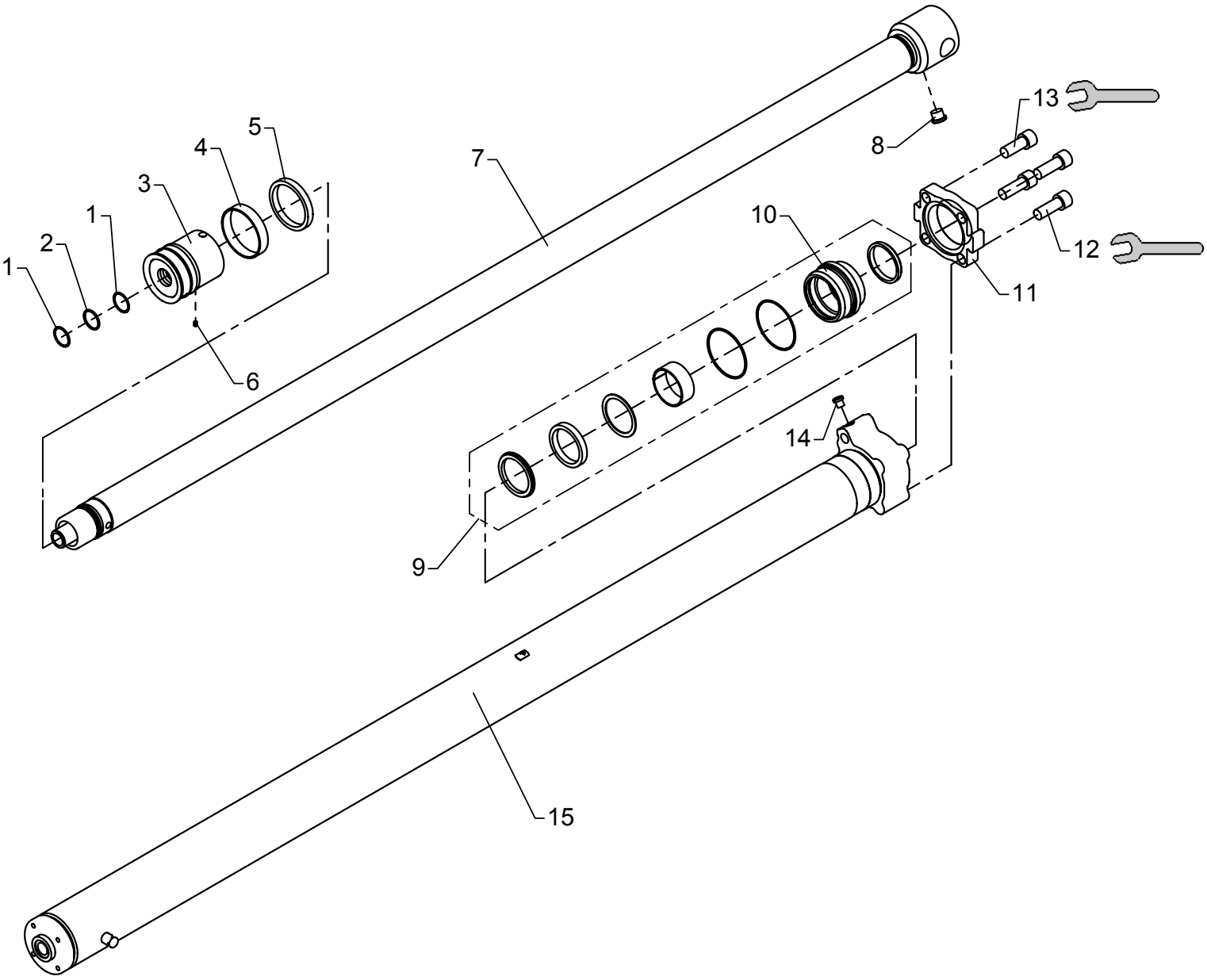

649 Nm

Extension cylinder III, C100/70h x 2000
Optimised boom system OK3-OK6

As from / To loader no.: 97 00 00 /
Created: 17.11.2003
Modified: 17.05.2004

Item no.	Qty.	Part no.	Description	Remarks
	1	6893610	Seal kit, C100/70h	Pos. 1, 2, 4, 5
1	2	20705	Back ring	STR 35 x 40 x 1,3
2	1	20177	O-ring	OR 34,2 x 3
3	1	6300424	Piston	
4	1	22142	Guide ring	PWR 100/94 x 20 - PF
5	1	22141	Seal	GHT 100/85 x 12,5
6	1	30903	Screw	MSP6 x 8
7	1	6300673	Piston rod	
8	1	25103	Plug	VS-R-1/2 WD
9	1	22140	Seal kit	
10	1	6300425	Guide	
11	1	6300426	Flange	
12	3	32449	Sockethead screw	MC20 x 55
13	1	30496	Sockethead screw	MC20 x 50
14	1	25197	Plug	VS-R-1/4 WD
15	1	6300427	Cylinder	

72-516

Intern ref.: 6302420

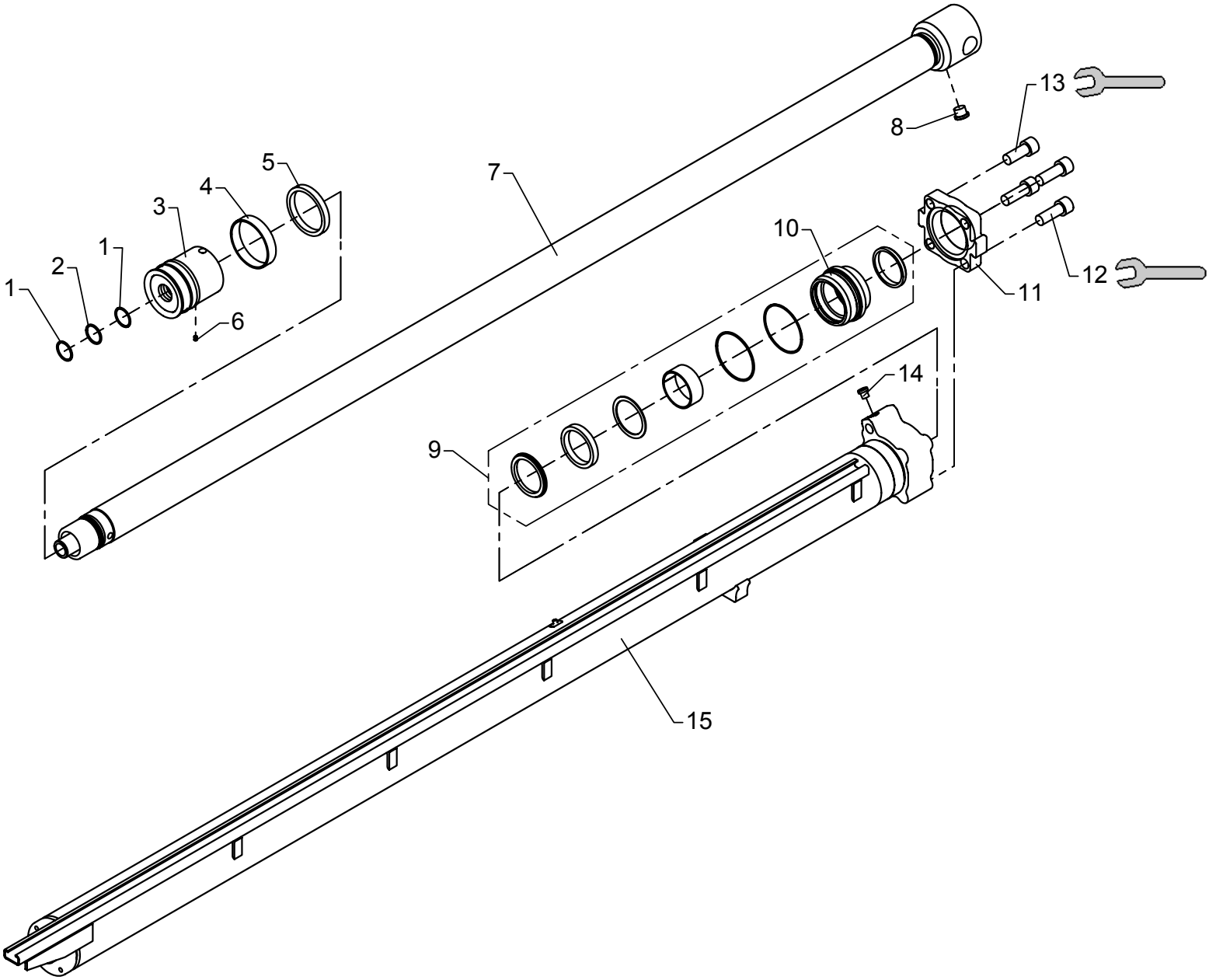

649 Nm

Extension cylinder IV, C100/70h x 2100
Optimised boom system OK -OK6

As from / To loader no.: 97 00 00 /
Created: 17.11.2003
Modified: 17.05.2004

Item no.	Qty.	Part no.	Description	Remarks
	1	6893610	Seal kit, C100/70h	Pos. 1, 2, 4, 5
1	2	20705	Back ring	STR 35 x 40 x 1,3
2	1	20177	O-ring	OR 34,2 x 3
3	1	6300424	Piston	
4	1	22142	Guide ring	PWR 100/94 x 20 - PF
5	1	22141	Seal	GHT 100/85 x 12,5
6	1	30903	Screw	MSP6 x 8
7	1	6300421	Piston rod	
8	1	25103	Plug	VS-R-1/2 WD
9	1	22140	Seal kit	
10	1	6300425	Guide	
11	1	6300426	Flange	
12	3	32449	Sockethead screw	MC20 x 55
13	1	30496	Sockethead screw	MC20 x 50
14	1	25197	Plug	VS-R-1/4 WD
15	1	6302427	Cylinder tube	

72-516

Intern ref.: 6300430

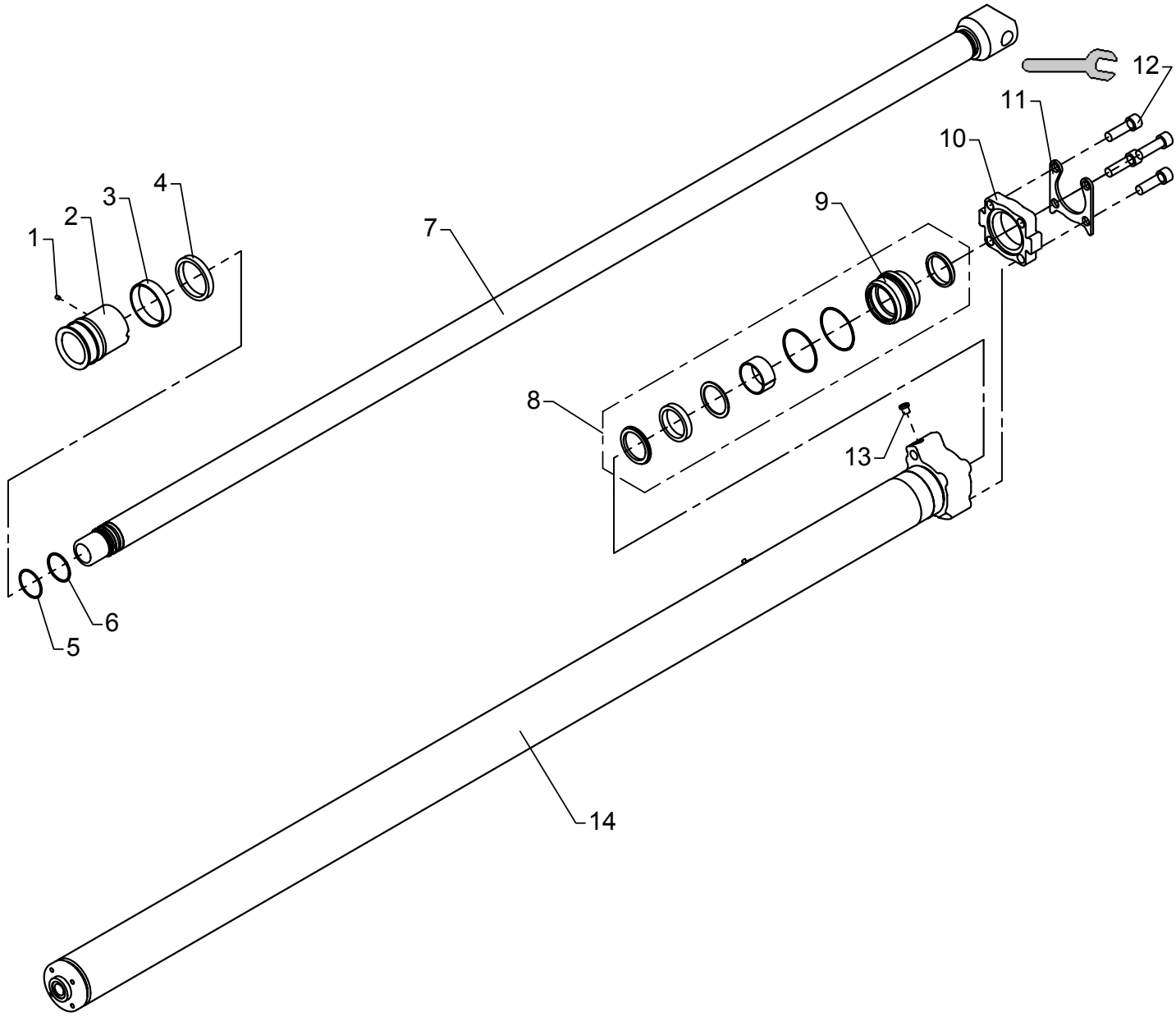

463 Nm

Extension cylinder V-OK5, C90/60s x 2250
Optimised boom system OK5

As from / To loader no.: 97 00 00 / 97 00 xx
Created: 17.11.2003
Modified: 17.05.2004

Item no.	Qty.	Part no.	Description	Remarks
	1	6893620	Seal kit, C90/60s	Pos. 3, 4
1	1	30903	Screw	MSP6 x 8
2	1	6300435	Piston	
3	1	22145	Guide ring	PWR 90/84 x 20 - PF
4	1	22144	Seal	GHT 90/75 x 12,5
5	1	20882	Back ring	54,5 x 3
6	1	20183	O-ring	OR 54,5 x 3
7	1	6300432	Piston rod	
8	1	22143	Seal kit	
9	1	6300441	Guide	
10	1	6300442	Flange	
11	1	6300536	Safety device	
12	4	32456	Screw	MC18 x 60
13	1	25197	Plug	VS-R-1/4 WD
14	1	6300436	Cylinder	

72-516

Intern ref: 6302400

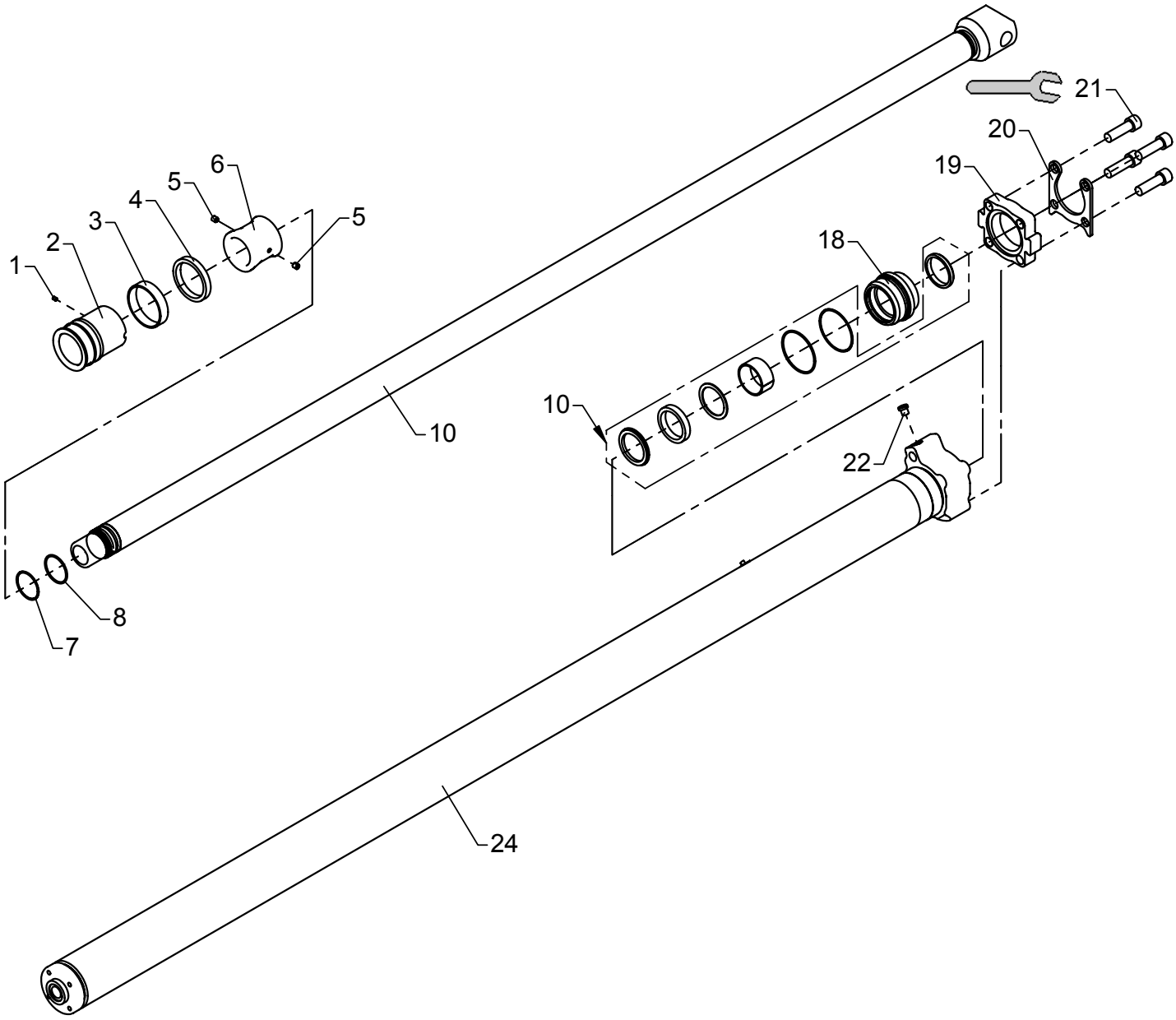

463 Nm

Extension cylinder V-OK5, C90/60s x 2175
Optimised boom system OK5

As from / To loader no.: 97 00 xx /
Created: 17.11.2003
Modified: 17.05.2004

Item no.	Qty.	Part no.	Description	Remarks
	1	6893620	Seal kit, C90/60s	Pos. 3, 4
1	1	30903	Screw	MSP6 x 8
2	1	6300435	Piston	
3	1	22145	Guide ring	PWR 90/84 x 20 - PF
4	1	22144	Seal	GHT 90/75 x 12,5
5	2	30555	Pointed screw, stainless	MSP10 x 10
6	1	6302453	Spacer	
7	1	20882	Back ring	54,5 x 3
8	1	20183	O-ring	OR 54,5 x 3
9	1	6300432	Piston rod	
10	1	22143	Seal kit	
11	1	6300441	Guide	
12	1	6300442	Flange	
13	1	6300536	Safety device	
14	4	32456	Screw	MC18 x 60
15	1	25197	Plug	VS-R-1/4 WD
16	1	6300436	Cylinder	

72-516

Intern ref.: 6302350

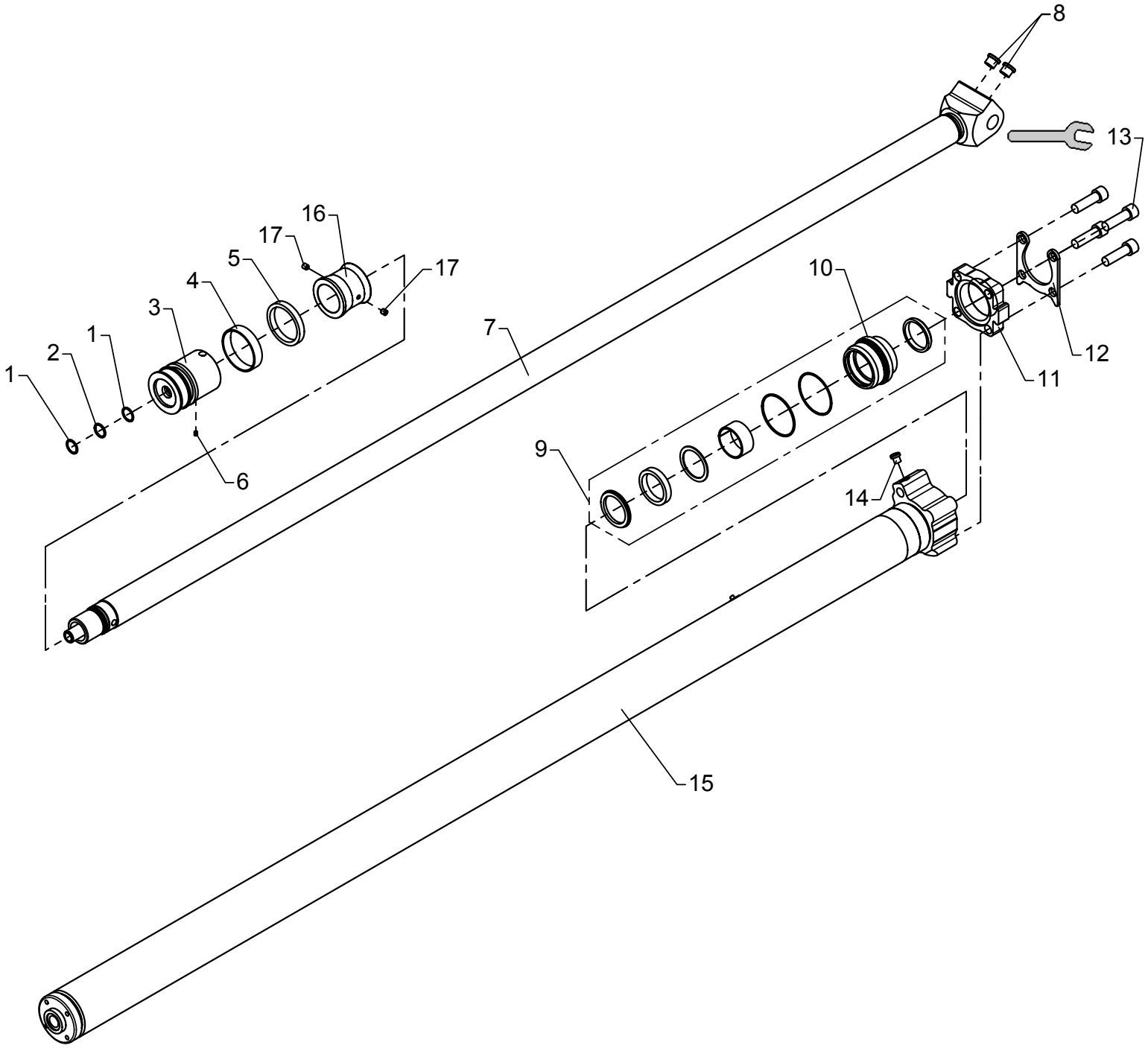

463 Nm

Extension cylinder V-OK6, C90/60h x 2175
Optimised boom system OK6

As from / To loader no.: 97 00 00 /
Created: 17.05.2004
Modified:

Item no.	Qty.	Part no.	Description	Remarks
	1	6893630	Seal kit, C90/60h	Pos. 1, 2, 4, 5
1	2	20706	Back ring	STR 25 x 30 x 1,3
2	1	20174	O-ring	OR 24,2 x 3
3	1	6300477	Piston	
4	1	22145	Guide ring	PWR 90/84 x 20 - PF
5	1	22144	Seal	GHT 90/75 x 12,5
6	1	30903	Screw	MSP6 x 8
7	1	6302641	Piston rod	
8	2	25103	Plug	VS-R-1/2 WD
9	1	22143	Seal kit	
10	1	6300441	Guide	
11	1	6300442	Flange	
12	1	6300536	Safety device	
13	4	32456	Screw	MC18 x 60
14	1	25197	Plug	VS-R-1/4 WD
15	1	6300436	Cylinder	
16	1	6302453	Spacer	
17	2	30555	Pointed screw, stainless	MSP10 x 10

72-516

Intern ref.: 6302450

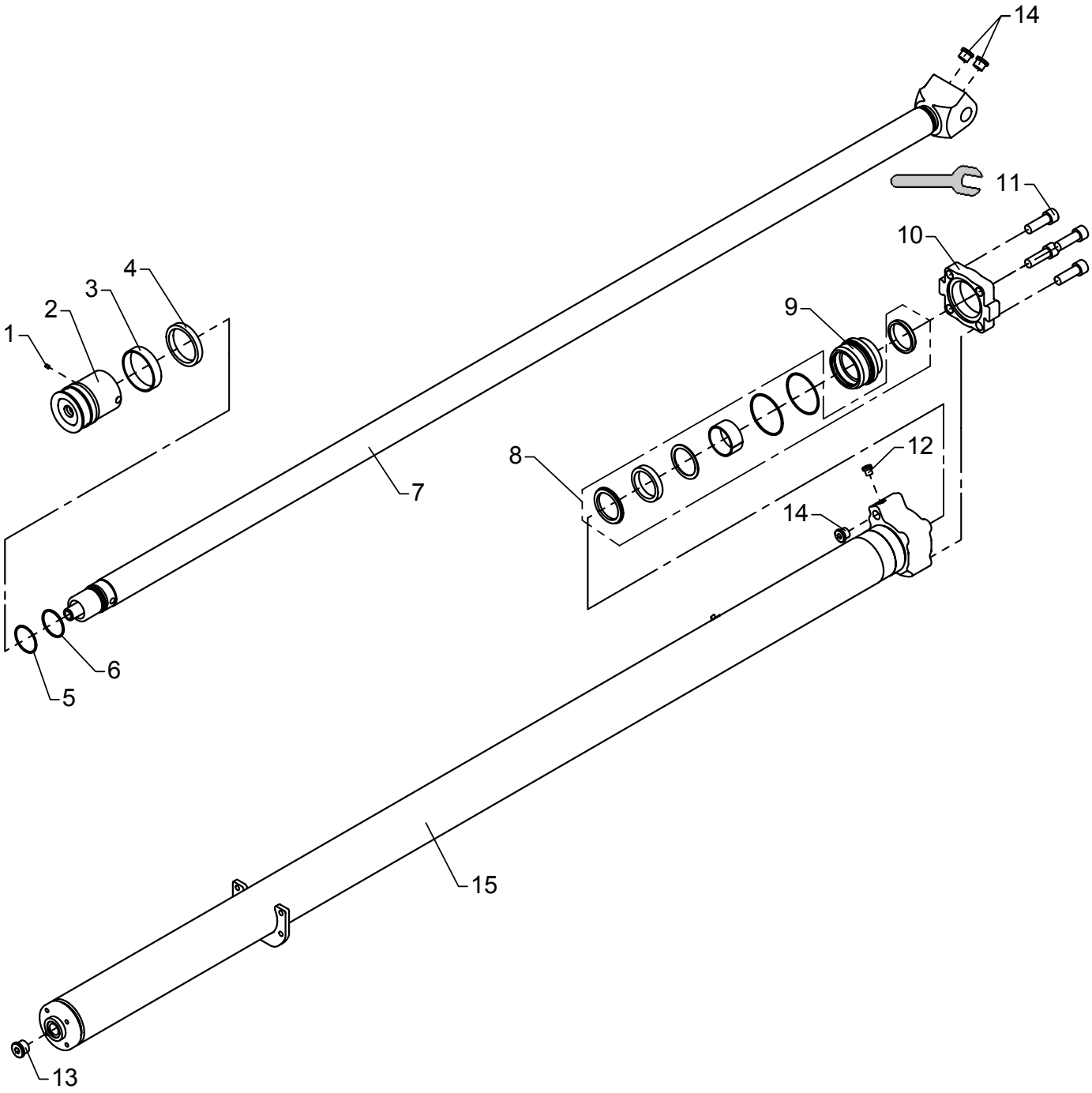

463 Nm

Extension cylinder VI, C90/60s x 2250
Optimised boom system OK6

As from / To loader no.: 97 00 00 /
Created: 17.05.2004
Modified:

Item no.	Qty.	Part no.	Description	Remarks
	1	6893620	Seal kit, C90/60s	Pos. 3, 4
1	1	30903	Screw	MSP6 x 8
2	1	6300477	Piston	
3	1	22145	Guide ring	PWR 90/84 x 20 - PF
4	1	22144	Seal	GHT 90/75 x 12,5
5	1	20882	Back ring	54,5 x 3
6	1	20183	O-ring	OR 54,5 x 3
7	1	6302641	Piston rod	
8	1	22143	Seal kit	
9	1	6300441	Guide	
10	1	6300442	Flange	
11	4	32450	Screw	MC18 x 55
12	1	25197	Plug	VS-R-1/4 WD
13	1	26355	Plug	VS-R-3/4 WD
14	3	25103	Plug	VS-R-1/2 WD
15	1	6302451	Cylinder	

72-516

Intern ref.: 6300440

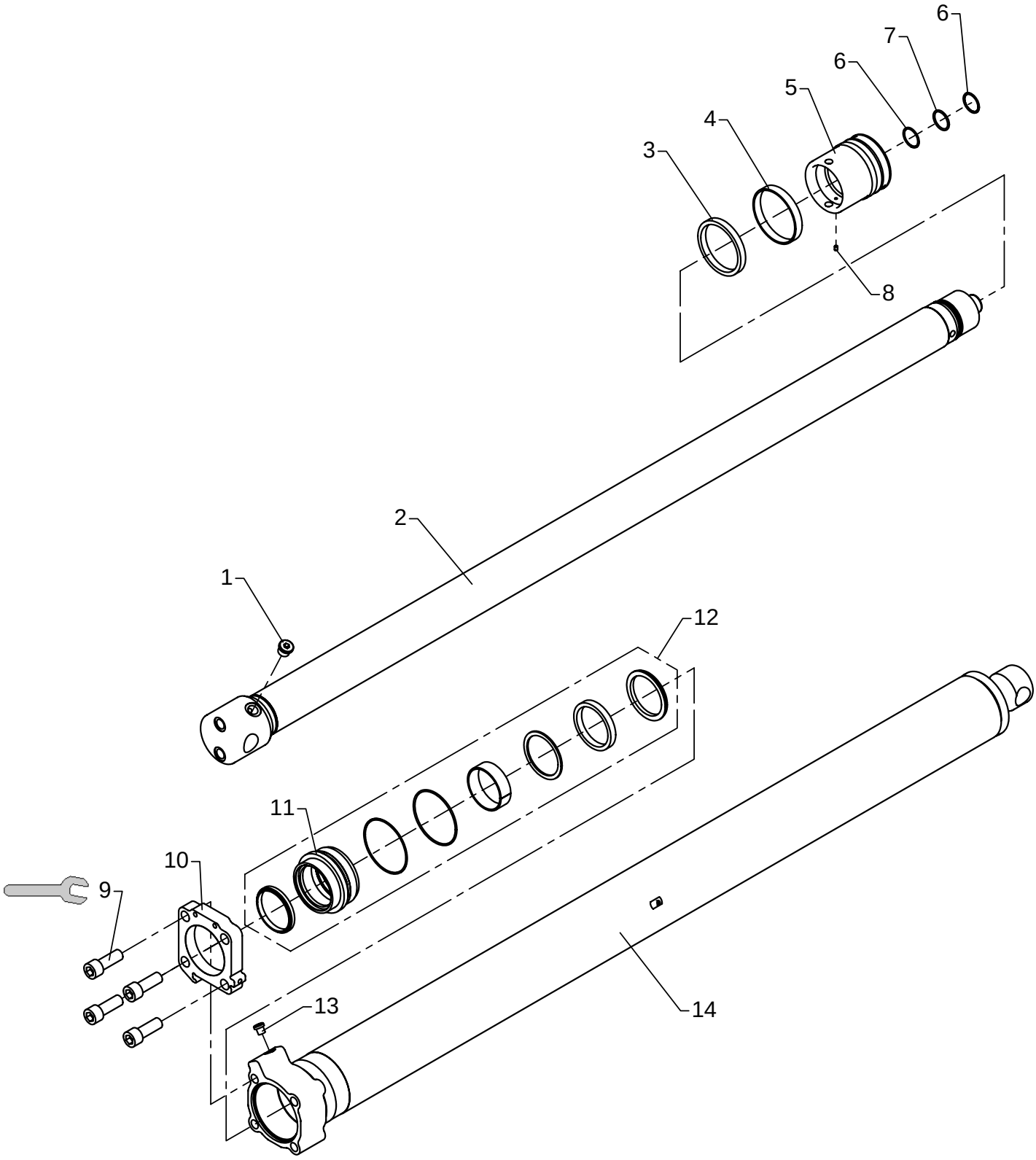

649 Nm

Extension cylinder I, C110/80h x 1650
Boom system K6-K8

As from / To loader no.: 97 00 00 /
Created: 17.11.2003
Modified:

Item no.	Qty.	Part no.	Description	Remarks
	1	6893600	Seal kit, C110/80h	Pos. 3, 4, 6, 7
1	1	25103	Plug	VS-R-1/2 WD
2	1	6300445	Piston rod	
3	1	22131	Seal	GHT 110/95 x 12,5 - PU/N/A
4	1	22130	Guide ring	PWR 110/104 x 16 - PF
5	1	6300406	Piston	
6	2	20705	Back ring	STR 35 x 40 x 1,3
7	1	20177	O-ring	OR 34,2 x 3
8	1	30903	Screw	MSP6 x 8
9	4	32449	Sockethead screw	MC20 x 55
10	1	6300405	Flange	
11	1	6300407	Guide	
12	1	22139	Seal kit	
13	1	25197	Plug	VS-R-1/4 WD
14	1	6300448	Cylinder	

72-516

Intern ref.: 6300450

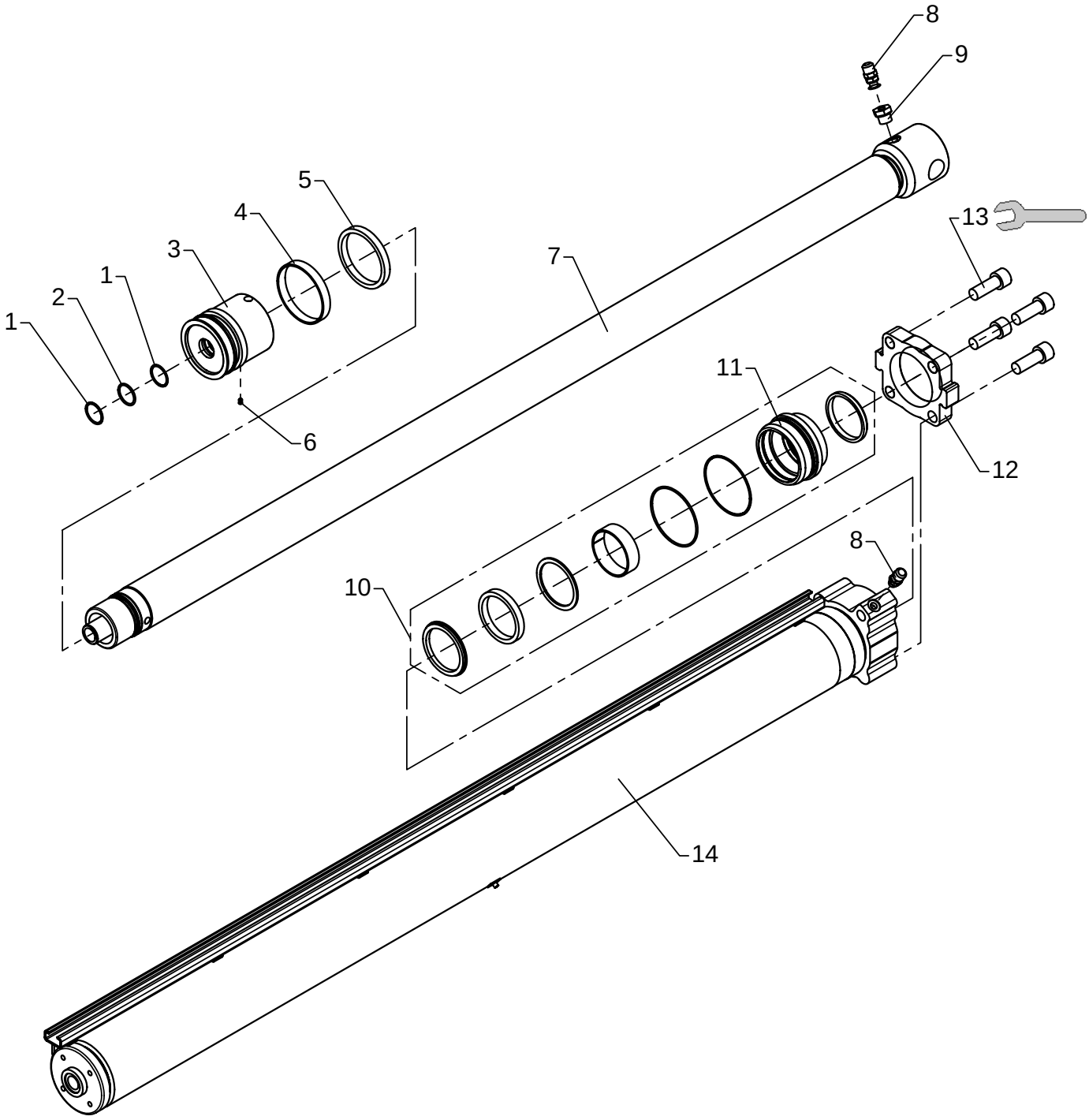

649 Nm

Extension cylinder II, C110/80h x 1700
Boom system K6-K8

As from / To loader no.: 97 00 00 /
Created: 17.11.2003
Modified:

Item no.	Qty.	Part no.	Description	Remarks
	1	6893600	Seal kit, C110/80h	Pos. 1, 2, 4, 5
1	2	20705	Back ring	STR 35 x 40 x 1,3
2	1	20177	O-ring	OR 34,2 x 3
3	1	6300406	Piston	
4	1	22130	Guide ring	PWR 110/104 x 16 - PF
5	1	22131	Seal	GHT 110/95 x 12,5 - PU/N/A
6	1	30903	Screw	MSP6 x 8
7	1	6300451	Piston rod	
8	2	26103	Pressure-gauge connect.	
9	1	25180	Connection	RED-R 1/2-WD/R 1/4
10	1	22139	Seal kit	
11	1	6300407	Guide	
12	1	6300419	Flange	
13	4	32449	Sockethead screw	MC20 x 55
14	1	6300454	Cylinder	

72-516

Intern ref.: 6300460

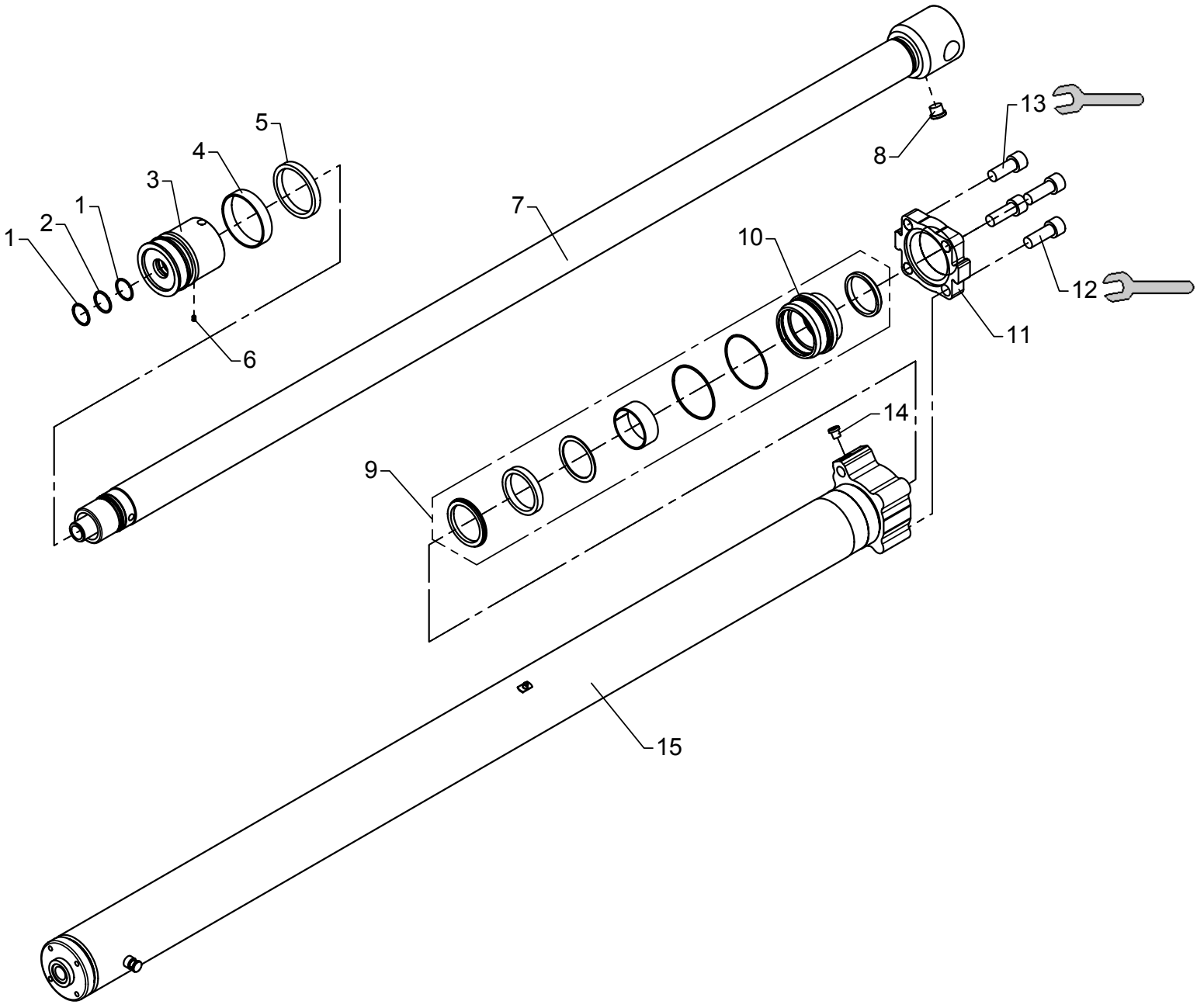

649 Nm

Extension cylinder III, C100/70h x 1800
Boom system K6-K8

As from / To loader no.: 97 00 00 /
Created: 17.11.2003
Modified: 02.02.2004

Item no.	Qty.	Part no.	Description	Remarks
	1	6893610	Seal kit, C100/70h	Pos. 1, 2, 4, 5
1	2	20705	Back ring	STR 35 x 40 x 1,3
2	1	20177	O-ring	OR 34,2 x 3
3	1	6300424	Piston	
4	1	22142	Guide ring	PWR 100/94 x 20 - PF
5	1	22141	Seal	GHT 100/85 x 12,5
6	1	30903	Screw	MSP6 x 8
7	1	6300676	Piston rod	
8	1	25103	Plug	VS-R-1/2 WD
9	1	22140	Seal kit	
10	1	6300425	Guide	
11	1	6300426	Flange	
12	3	32449	Sockethead screw	MC20 x 55
13	1	30496	Sockethead screw	MC20 x 50
14	1	25197	Plug	VS-R-1/4 WD
15	1	6300464	Cylinder	

72-516

Intern ref.: 6302460

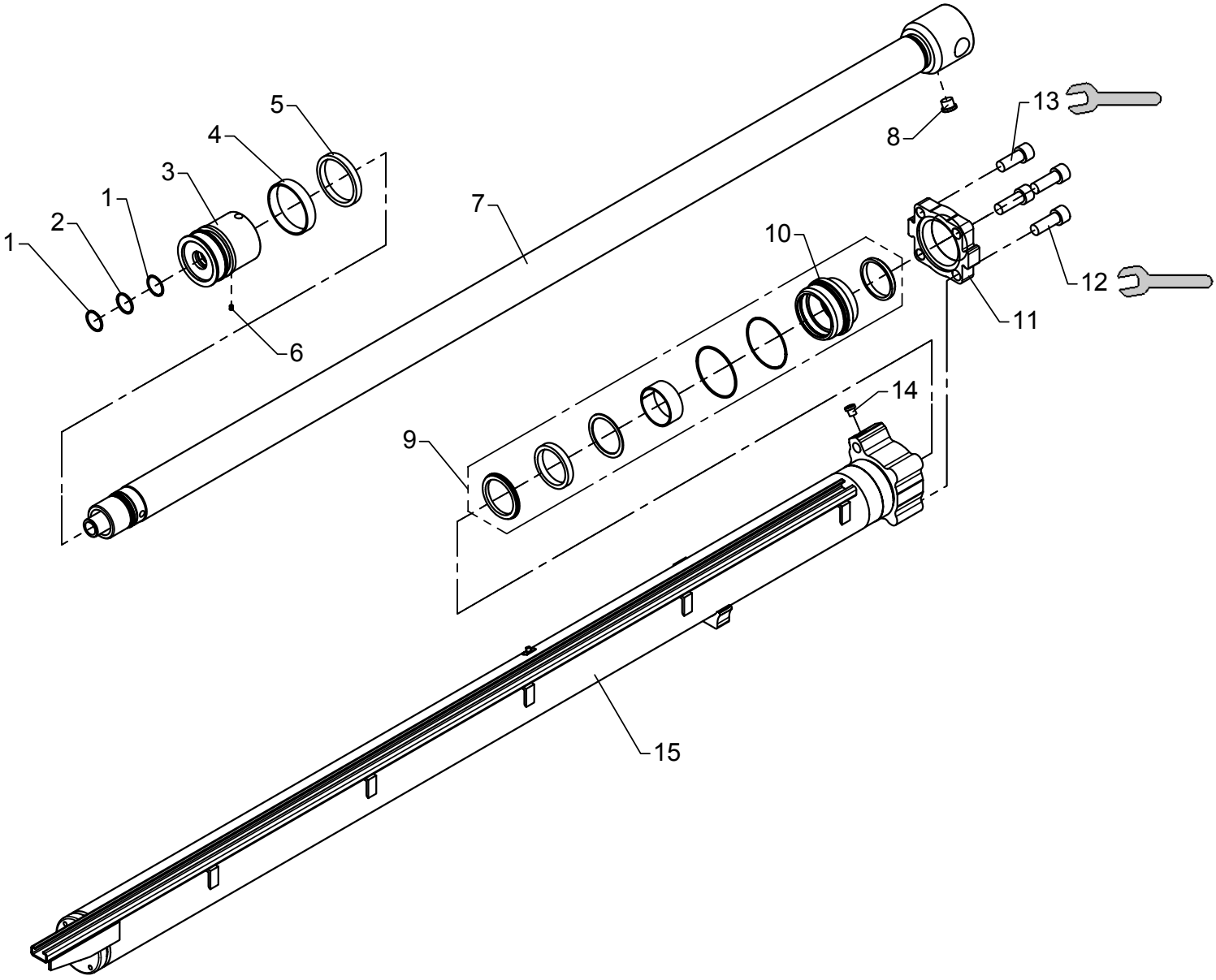

649 Nm

Extension cylinder IV, C100/70h x 1900
Boom system K6-K8

As from / To loader no.: 97 00 00 /
Created: 17.11.2003
Modified: 02.02.2004

Item no.	Qty.	Part no.	Description	Remarks
	1	6893610	Seal kit, C100/70h	Pos. 1, 2, 4, 5
1	2	20705	Back ring	STR 35 x 40 x 1,3
2	1	20177	O-ring	OR 34,2 x 3
3	1	6300424	Piston	
4	1	22142	Guide ring	PWR 100/94 x 20 - PF
5	1	22141	Seal	GHT 100/85 x 12,5
6	1	30903	Screw	MSP6 x 8
7	1	6300461	Piston rod	
8	1	25103	Plug	VS-R-1/2 WD
9	1	22140	Seal kit	
10	1	6300425	Guide	
11	1	6300426	Flange	
12	3	32449	Sockethead screw	MC20 x 55
13	1	30496	Sockethead screw	MC20 x 50
14	1	25197	Plug	VS-R-1/4 WD
15	1	6302464	Cylinder tube	

72-516

Intern ref.: 6300470

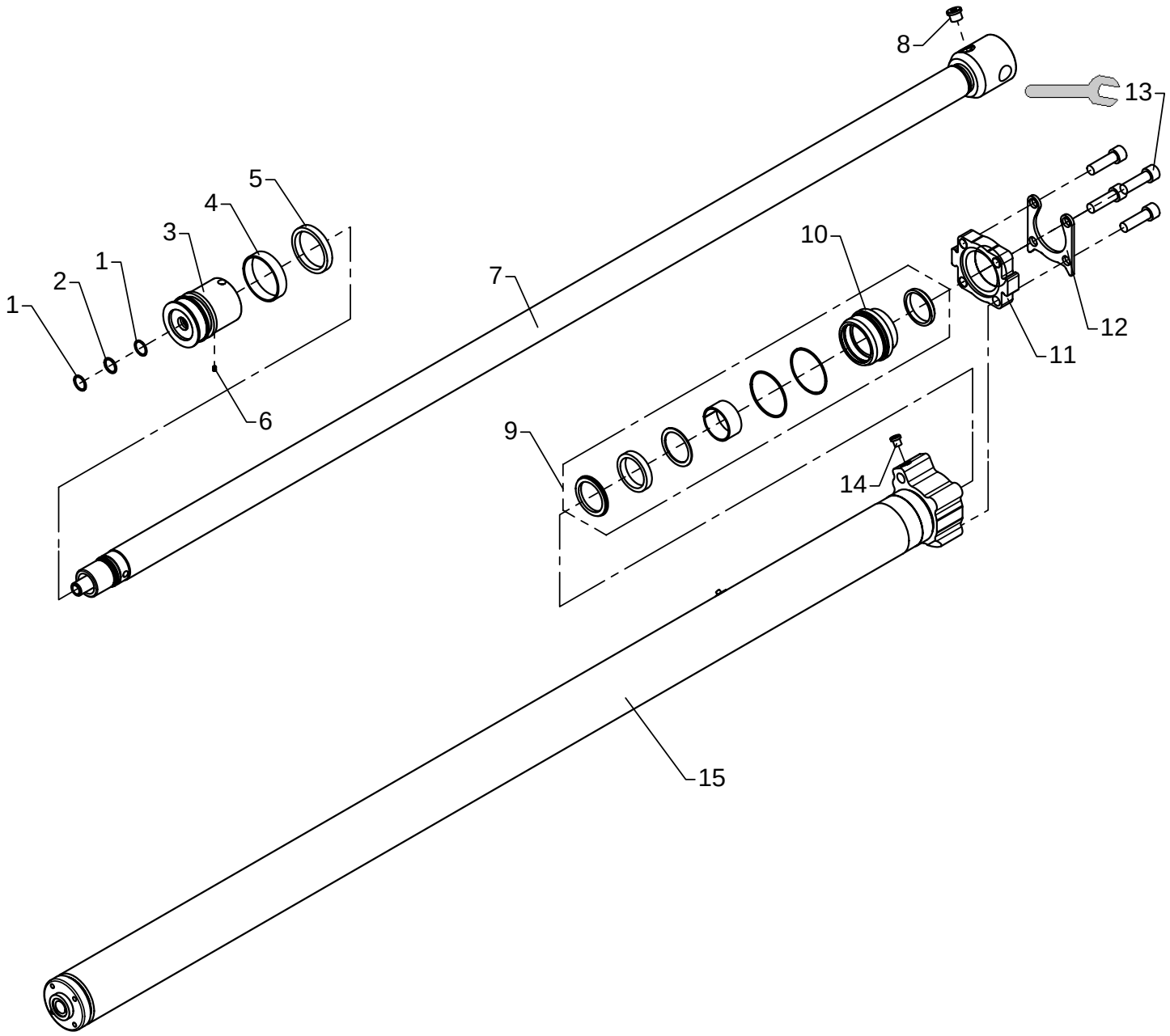

463 Nm

Extension cylinder V, C90/60h x 2050
Boom system K6-K8

As from / To loader no.: 97 00 00 /
Created: 17.11.2003
Modified:

Item no.	Qty.	Part no.	Description	Remarks
	1	6893630	Seal kit, C90/60h	Pos. 1, 2, 4, 5
1	2	20706	Back ring	STR 25 x 30 x 1,3
2	1	20174	O-ring	OR 24,2 x 3
3	1	6300477	Piston	
4	1	22145	Guide ring	PWR 90/84 x 20 - PF
5	1	22144	Seal	GHT 90/75 x 12,5
6	1	30903	Screw	MSP6 x 8
7	1	6300471	Piston rod	
8	1	25103	Plug	VS-R-1/2 WD
9	1	22143	Seal kit	
10	1	6300441	Guide	
11	1	6300442	Flange	
12	1	6300536	Safety device	
13	4	32456	Screw	MC18 x 60
14	1	25197	Plug	VS-R-1/4 WD
15	1	6300475	Cylinder	

72-516

Intern ref.: 6302470

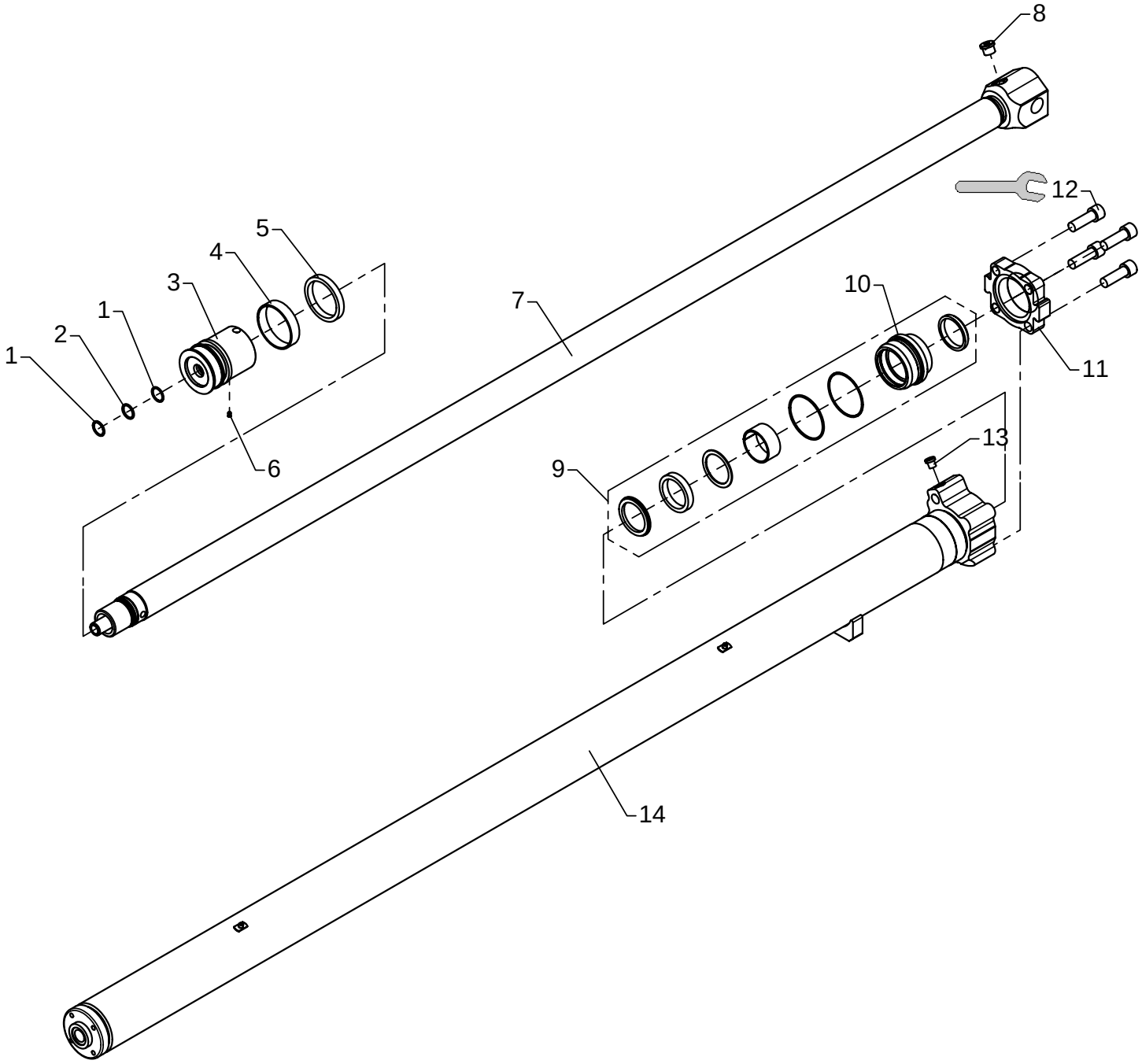

463 Nm

Extension cylinder VI, C90/60h x 2150
Boom system K6-K8

As from / To loader no.: 97 00 00 /
Created: 17.11.2003
Modified:

Item no.	Qty.	Part no.	Description	Remarks
	1	6893630	Seal kit, C90/60h	Pos. 1, 2, 4, 5
1	2	20706	Back ring	STR 25 x 30 x 1,3
2	1	20174	O-ring	OR 24,2 x 3
3	1	6300477	Piston	
4	1	22145	Guide ring	PWR 90/84 x 20 - PF
5	1	22144	Seal	GHT 90/75 x 12,5
6	1	30903	Screw	MSP6 x 8
7	1	6302471	Piston rod	
8	1	25103	Plug	VS-R-1/2 WD
9	1	22143	Seal kit	
10	1	6300441	Guide	
11	1	6300442	Flange	
12	4	32450	Screw	MC18 x 55
13	1	25197	Plug	VS-R-1/4 WD
14	1	6302475	Cylinder tube	

72-516

Intern ref.: 6300480

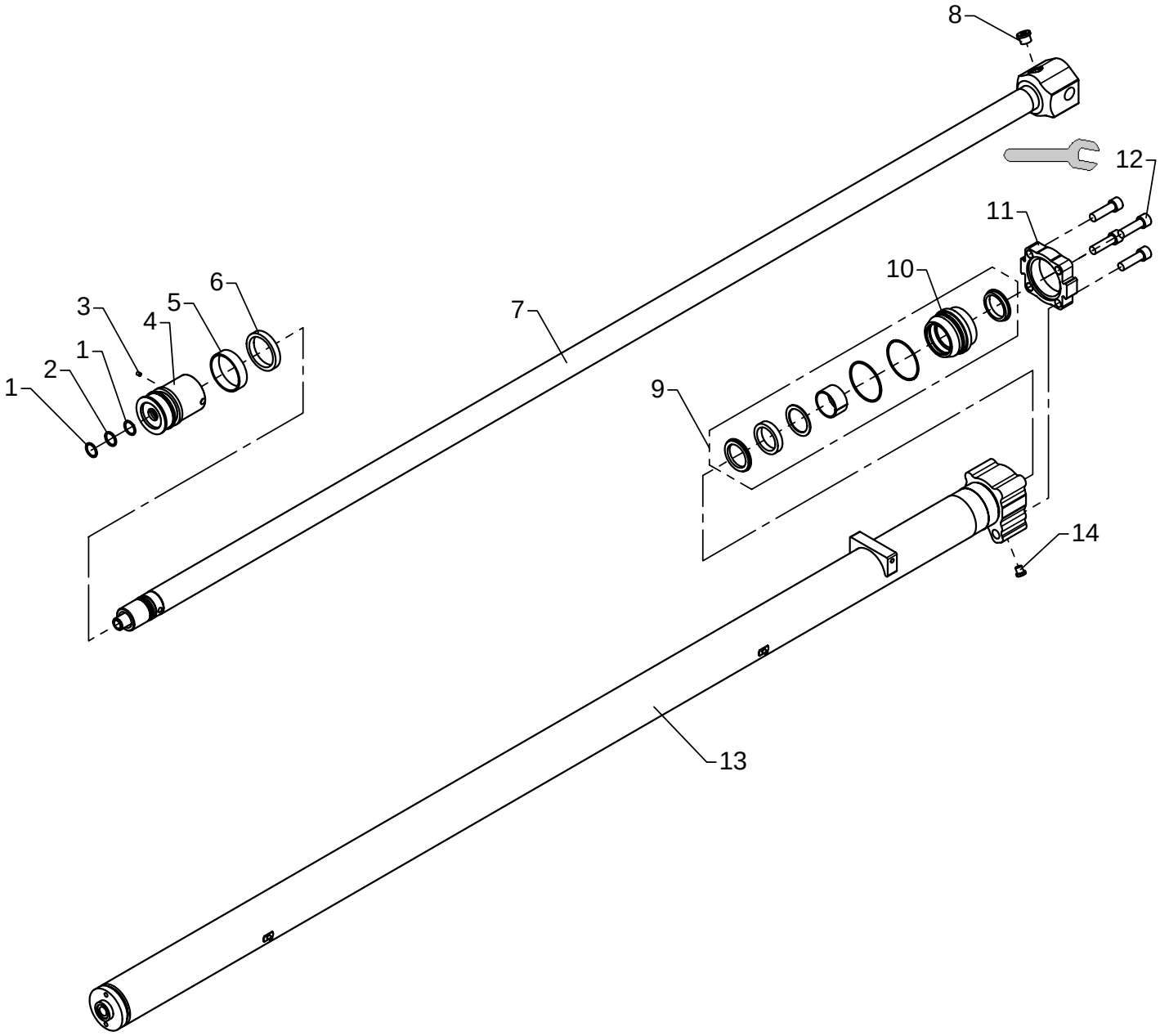

333 Nm

Extension cylinder VII/VIII, C80/50h x 2300
Boom system K6-K8

As from / To loader no.: 97 00 00 / 97 00 xx
Created: 17.11.2003
Modified:

Item no.	Qty.	Part no.	Description	Remarks
	1	6893640	Seal kit C80/50h	Pos. 1, 2, 5, 6
1	2	20706	Back ring	STR 25 x 30 x 1,3
2	1	20174	O-ring	OR 24,2 x 3
3	1	30903	Screw	MSP6 x 8
4	1	6300489	Piston	
5	1	22149	Guide ring	PWR 80/74 x 20 - PF
6	1	22148	Seal	GHT 80/65 x 12,5 - PU/N/A
7	1	6300483	Piston rod	
8	1	25103	Plug	VS-R-1/2 WD
9	1	22150	Seal kit	
10	1	6300491	Guide	
11	1	6292733	Flange	
12	4	32420	Sockethead screw	MC16 x 55
13	1	6300487	Cylinder	
14	1	25197	Plug	VS-R-1/4 WD

72-516

Intern ref.: 6302480

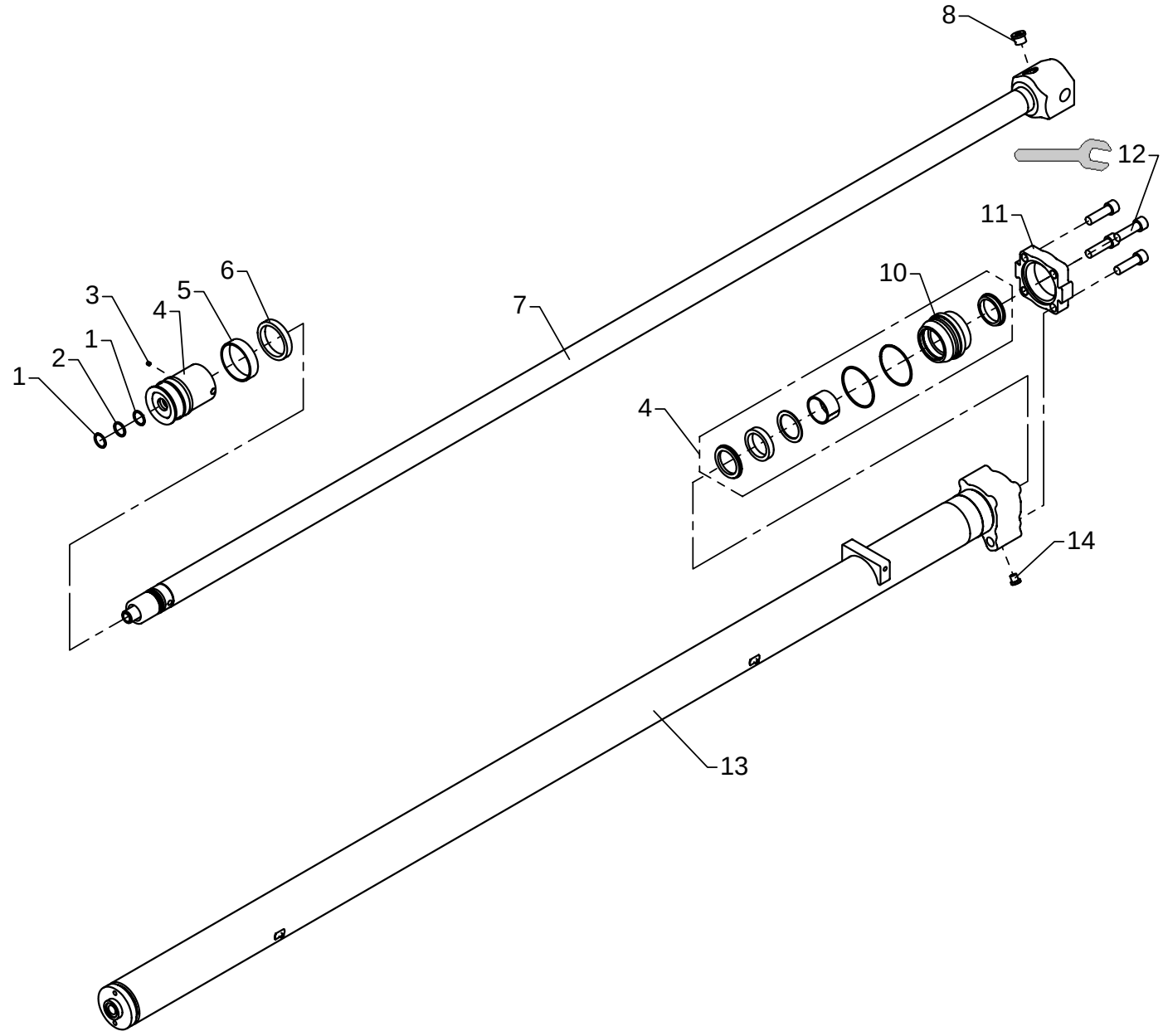

333 Nm

Extension cylinder VII/VIII, C80/50h x 2225
Boom system K6-K8

As from / To loader no.: 97 00 xx /
Created: 17.11.2003
Modified:

Item no.	Qty.	Part no.	Description	Remarks
	1	6893640	Seal kit C80/50h	Pos. 1, 2, 5, 6
1	2	20706	Back ring	STR 25 x 30 x 1,3
2	1	20174	O-ring	OR 24,2 x 3
3	1	30551	Pointed screw	MSP6 x 6
4	1	6300489	Piston	
5	1	22149	Guide ring	PWR 80/74 x 20 - PF
6	1	22148	Seal	GHT 80/65 x 12,5 - PU/N/A
7	1	6302483	Piston rod	
8	1	25103	Plug	VS-R-1/2 WD
9	1	22150	Seal kit	
10	1	6300491	Guide	
11	1	6292733	Flange	
12	4	32420	Sockethead screw	MC16 x 55
13	1	6302487	Cylinder pipe	
14	1	25197	Plug	VS-R-1/4 WD

72-516

Intern ref.: 6300250

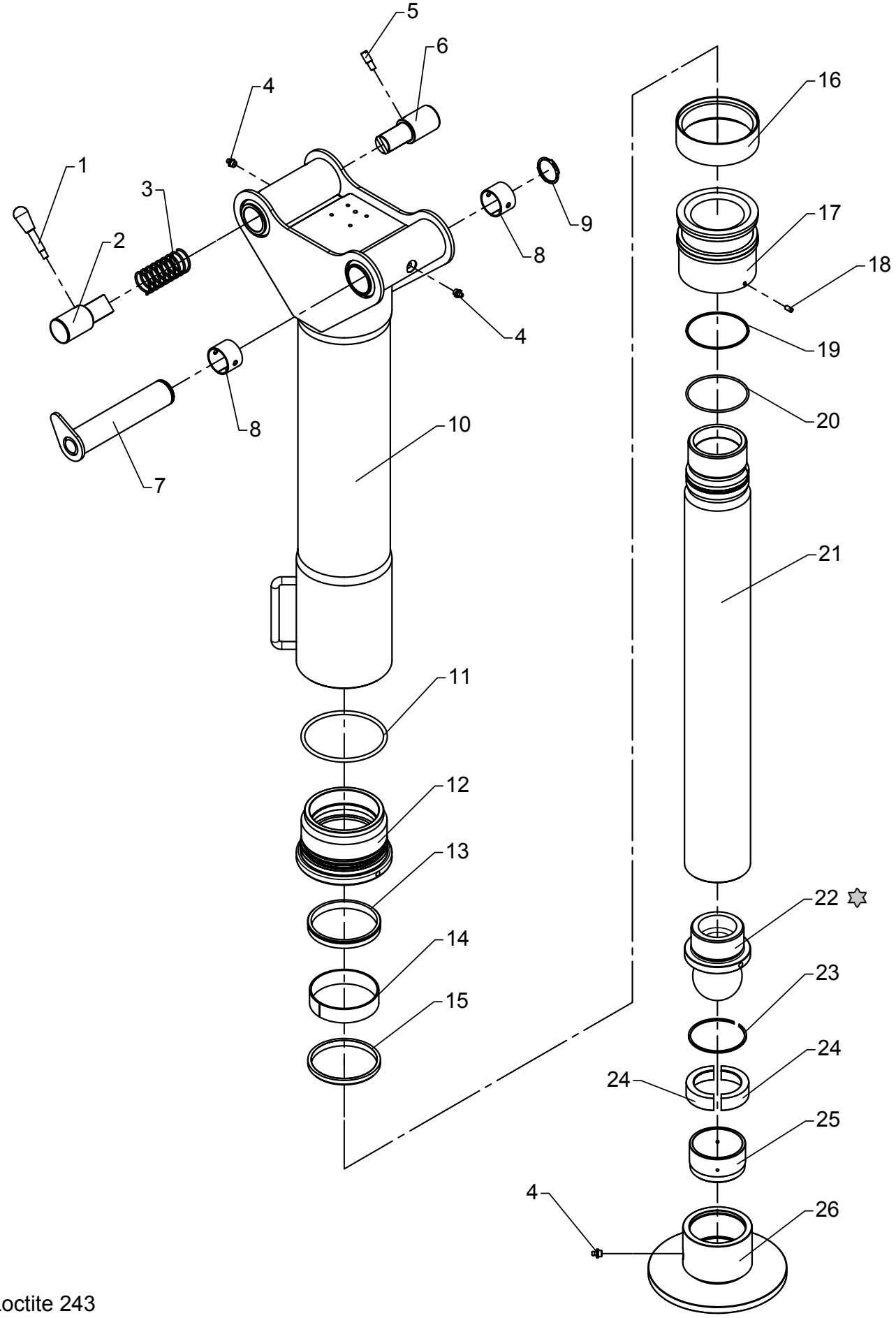

Loctite 243

Stabilizer cylinder C125-600, type R incl. ball joint

As from / To loader no.: 97 00 00 /
Created: 17.11.2003
Modified: 31.03.2004

Item no.	Qty.	Part no.	Description	Remarks
	1	6893590	Seal kit, C125/100	Pos. 12, 14, 15, 16, 17, 20, 21
1	1	64352	Lever with knob	
2	1	6300236	Drift	
3	1	33479	Compression spring	
4	3	31318	Lubricator	1/8" RG
5	1	6300268	Spacer	
6	1	6300237	Drift	
7	1	6300238	Stabilizer bolt	
8	2	23333	Bushing	PM 4030 DX
9	1	33121	Circlip	40U
10	1	6300251	Cylinder, swing-up leg	
11	1	20327	O-ring	OR 119,3 x 5,7
12	1	6300274	Guide	
13	1	20929	Seal	SI/L 100/110 x 12,5
14	1	21997	Bearing	HH506 100 x 105 x 25
15	1	20531	Scraper	GA 100 x 110 x 7/10
16	1	20791	Seal	MDM 125 x 108 x 26
17	1	6300273	Piston	
18	1	32256	Pointed screw	MSP6 x 12
19	1	20891	Back ring	89,5 x 3
20	1	20191	O-ring	OR 89,5 x 3
21	1	6300271	Piston rod	
22	1	6300272	Ball joint	
23	1	33271	Spring ring	SB85
24	2	6300266	Ball seat catch	
25	1	6300265	Ball seat	
26	1	6300262	Foot plate	

72-516

Intern ref.: 6300810

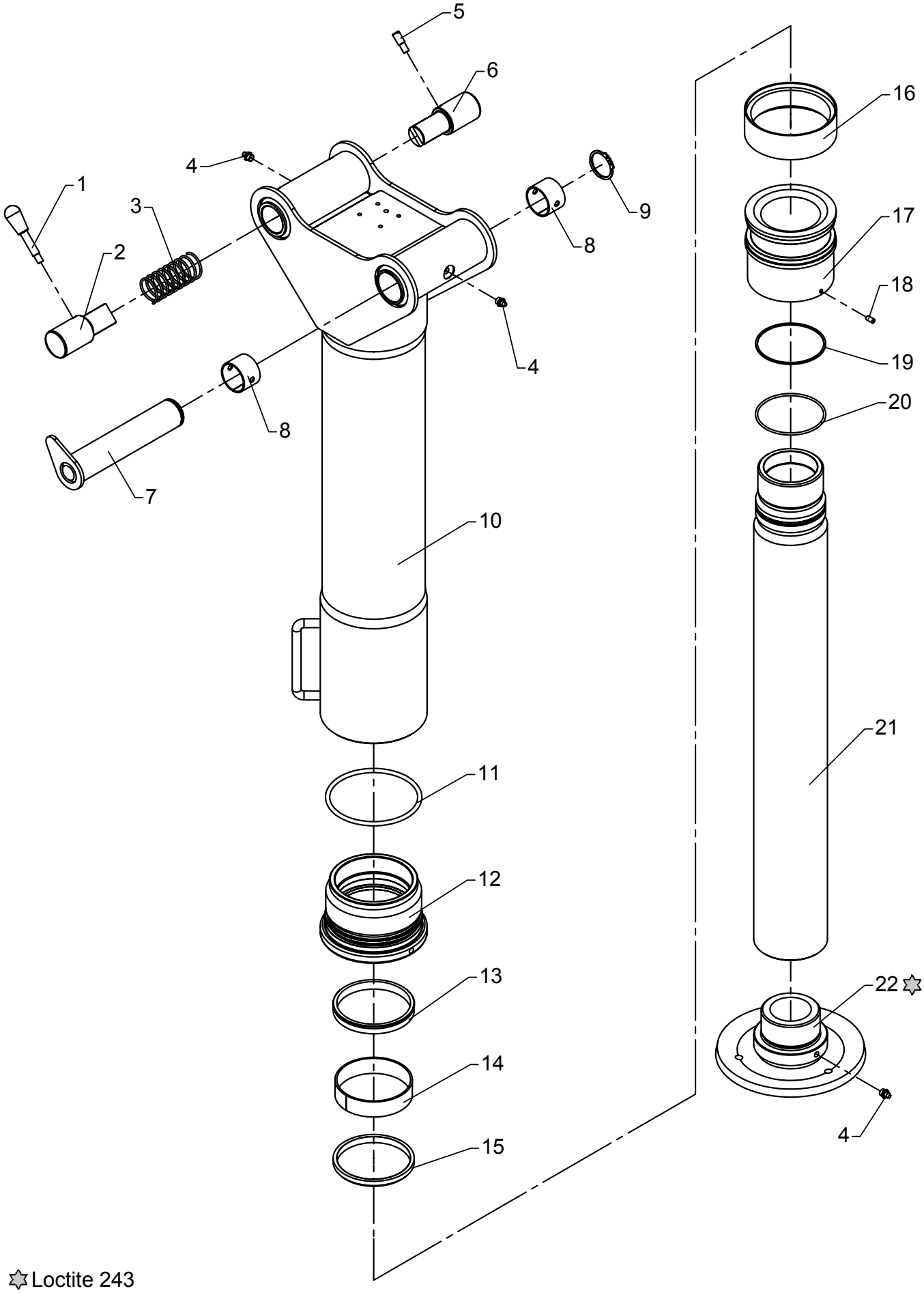

Loctite 243

Stabilizer cylinder C125-600, type R incl. fixed footplate

As from / To loader no.: 97 00 00 /
Created: 17.11.2003
Modified: 31.03.2004

Item no.	Qty.	Part no.	Description	Remarks
	1	6893590	Seal kit, C125/100	Pos. 12, 14, 15, 16, 17, 20, 21
1	1	64352	Lever with knob	
2	1	6300236	Drift	
3	1	33479	Compression spring	
4	3	31318	Lubricator	1/8" RG
5	1	6300268	Spacer	
6	1	6300237	Drift	
7	1	6300238	Stabilizer bolt	
8	2	23333	Bushing	PM 4030 DX
9	1	33121	Circlip	40U
10	1	6300251	Cylinder, swing-up leg	
11	1	20327	O-ring	OR 119,3 x 5,7
12	1	6300274	Guide	
13	1	20929	Seal	SI/L 100/110 x 12,5
14	1	21997	Bearing	HH506 100 x 105 x 25
15	1	20531	Scraper	GA 100 x 110 x 7/10
16	1	20791	Seal	MDM 125 x 108 x 26
17	1	6300273	Piston	
18	1	32256	Pointed screw	MSP6 x 12
19	1	20891	Back ring	89,5 x 3
20	1	20191	O-ring	OR 89,5 x 3
21	1	6300271	Piston rod	
22	1	6302262	Footplate, fixed	

72-516

Intern ref.: 6300240 / 6300800

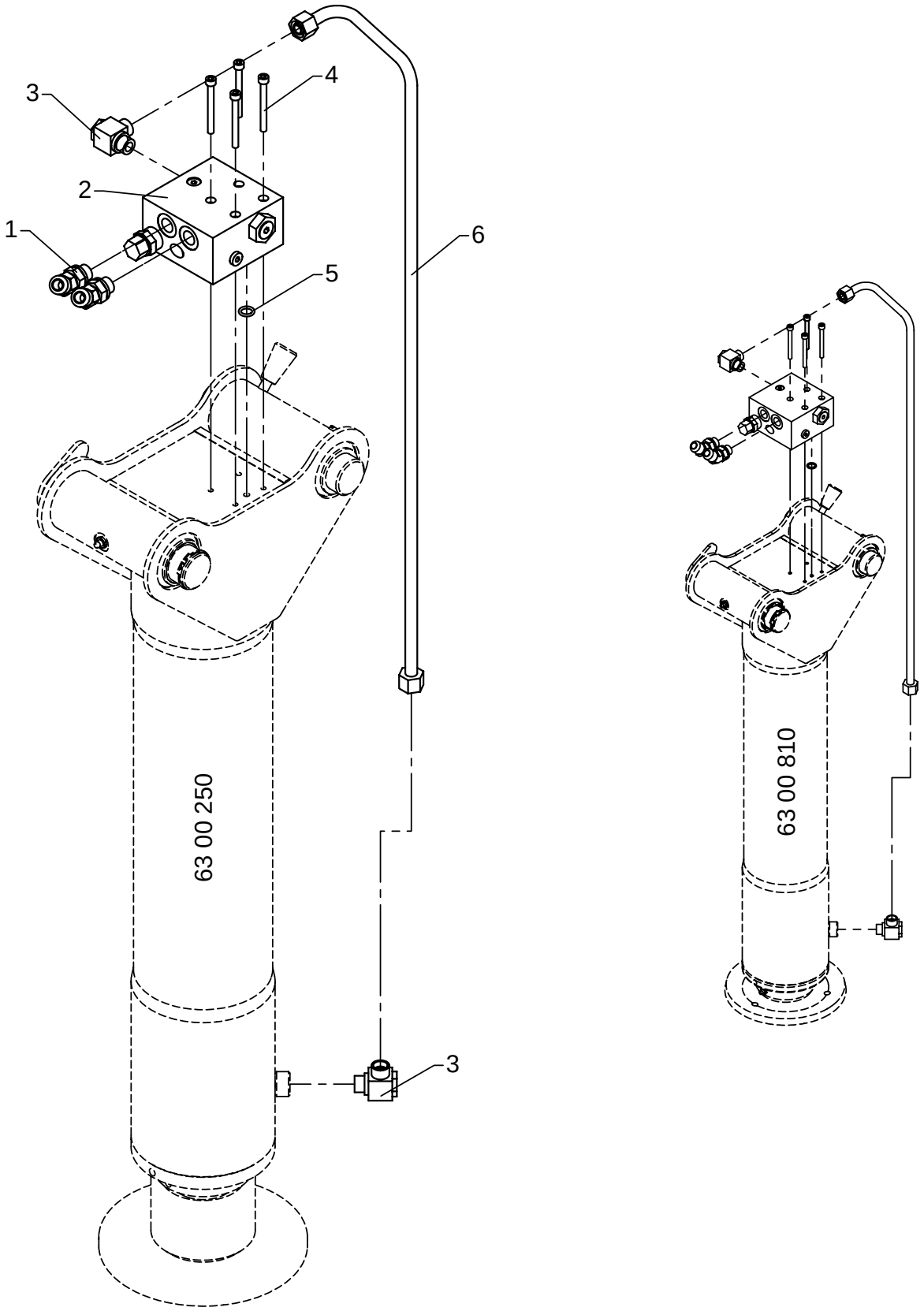

Stabilizer cylinder with check valve, type R

As from / To loader no.: 97 00 00 /
Created: 17.11.2003
Modified:

Item no.	Qty.	Part no.	Description	Remarks
1	2	26695	Elbow connection 45°	V40XS12 - 3/8
2	1	59058	Piloted check-valve	
3	2	25130	Banjo connection	RSWV 12 LR
4	4	30441	Screw	MC6 x 60
5	1	20126	O-ring	OR 11,3 x 2,4
6	1	6300275	Pipe	

72-516

Intern ref.: 6302430

Patentanmeldt.
Patent pending.
Patentangemeldet.
La demande de brêvet a été déposée.
Solicitud de patente.

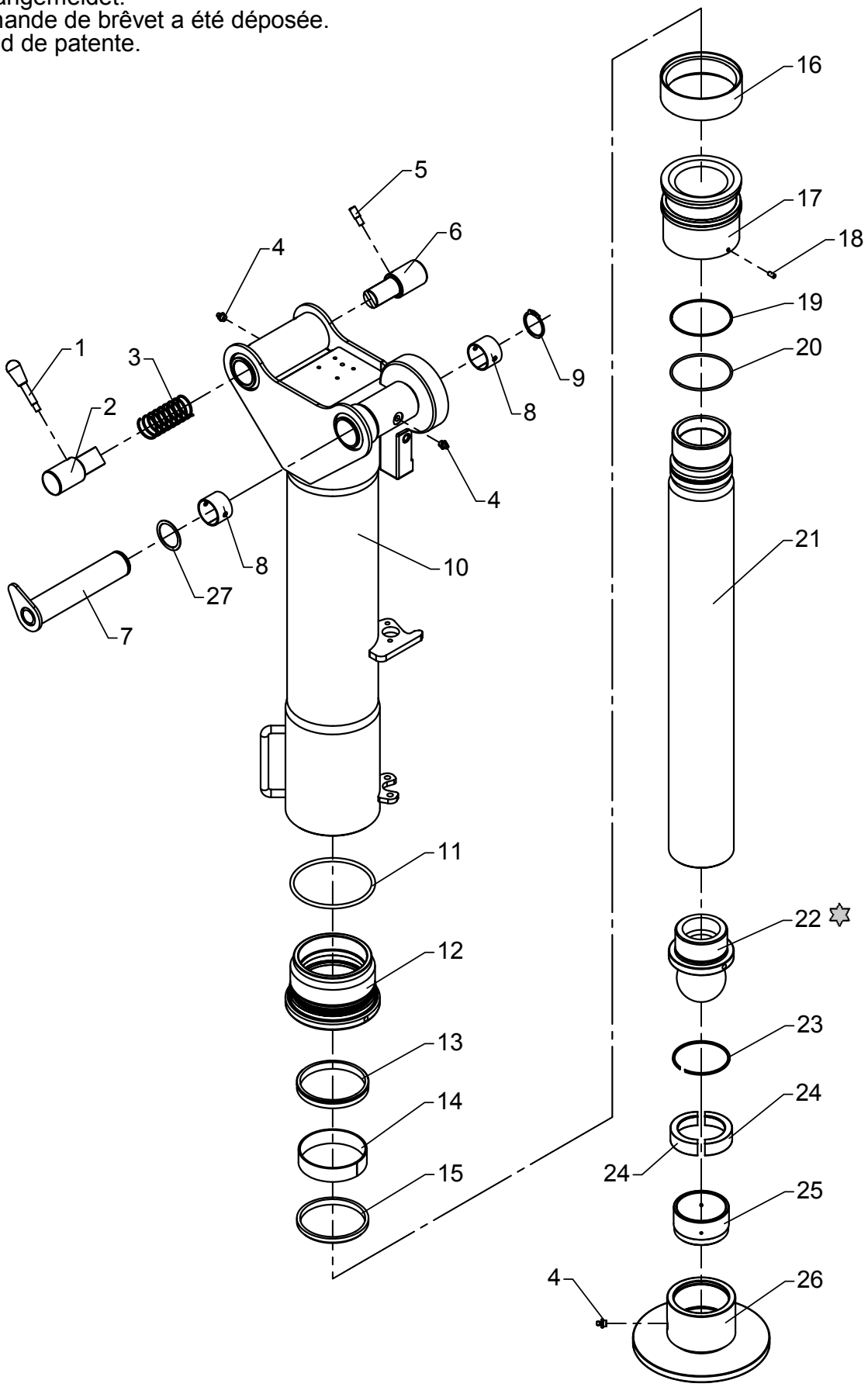

Loctite 243

Swing-up stabilizer cylinder C125-600, type HR incl. ball joint

As from / To loader no.: 97 00 00 /
Created: 17.11.2003
Modified: 31.03.2004

Item no.	Qty.	Part no.	Description	Remarks
	1	6893590	Seal kit, C125/100	Pos. 12, 14, 15, 16, 17, 20, 21
1	1	64352	Lever with knob	
2	1	6300236	Drift	
3	1	33479	Compression spring	
4	3	31318	Lubricator	1/8" RG
5	1	6300268	Spacer	
6	1	6300237	Drift	
7	1	6300238	Stabilizer bolt	
8	2	23333	Bushing	PM 4030 DX
9	1	33121	Circlip	40U
10	1	6302421	Cylinder tube	
11	1	20327	O-ring	OR 119,3 x 5,7
12	1	6300274	Guide	
13	1	20929	Seal	SI/L 100/110 x 12,5
14	1	21997	Bearing	HH506 100 x 105 x 25
15	1	20531	Scraper	GA 100 x 110 x 7/10
16	1	20791	Seal	MDM 125 x 108 x 26
17	1	6300273	Piston	
18	1	32256	Pointed screw	MSP6 x 12
19	1	20891	Back ring	89,5 x 3
20	1	20191	O-ring	OR 89,5 x 3
21	1	6300271	Piston rod	
22	1	6300272	Ball joint	
23	1	33271	Spring ring	SB85
24	2	6300266	Ball seat catch	
25	1	6300265	Ball seat	
26	1	6300262	Foot plate	
27	1	31102	Washer	PS 40 x 50 x 1,0

72-516

Intern ref.: 6302520

Patentanmeldt.
Patent pending.
Patentangemeldet.
La demande de brêvet a été déposée.
Solicitud de patente.

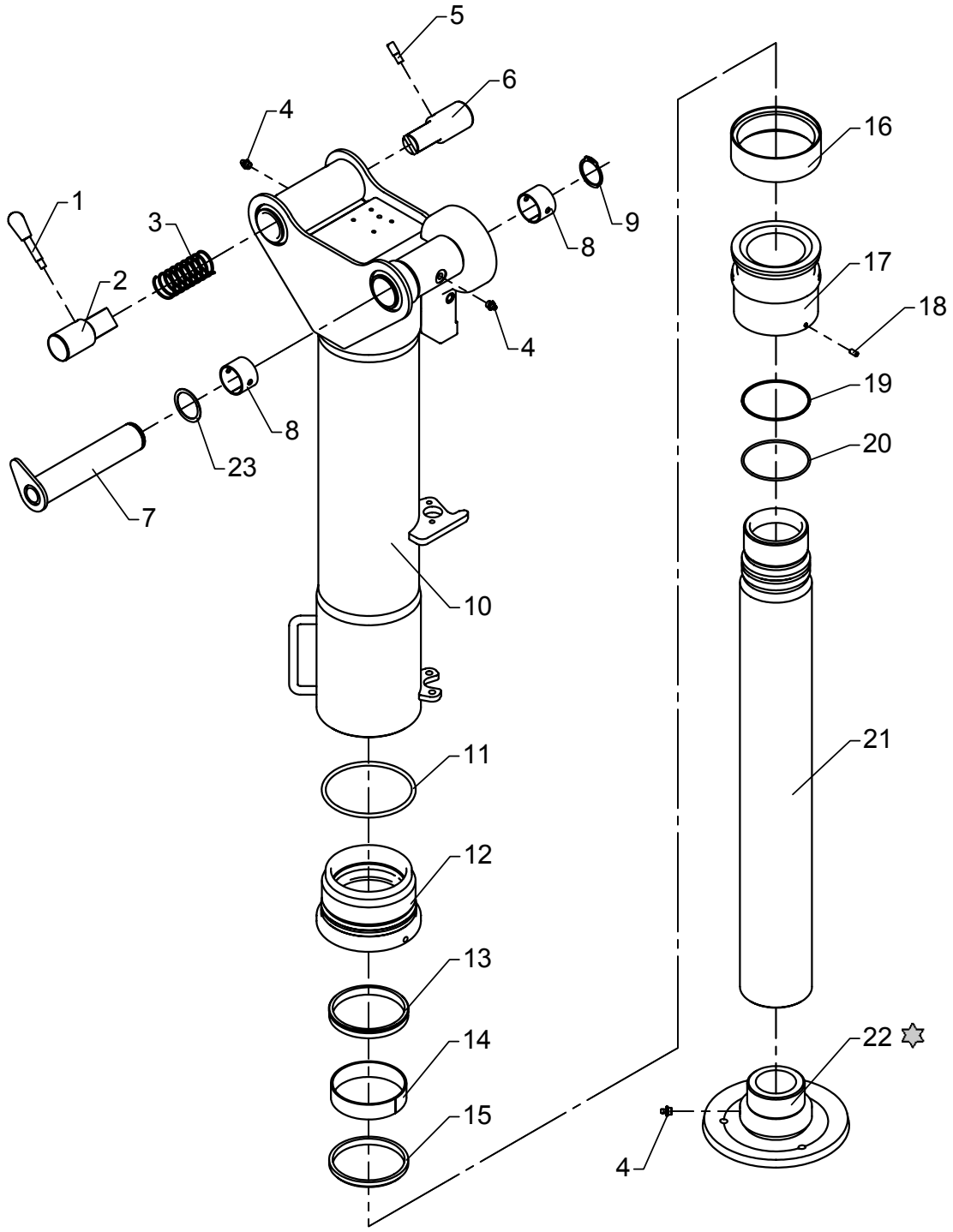

Loctite 243

Swing-up stabilizer cylinder C125-600, type HR incl. fixed footplate

As from / To loader no.: 97 00 00 /
Created: 17.11.2003
Modified: 31.03.2004

Item no.	Qty.	Part no.	Description	Remarks
	1	6893590	Seal kit, C125/100	Pos. 12, 14, 15, 16, 17, 20, 21
1	1	64352	Lever with knob	
2	1	6300236	Drift	
3	1	33479	Compression spring	
4	3	31318	Lubricator	1/8" RG
5	1	6300268	Spacer	
6	1	6300237	Drift	
7	1	6300238	Stabilizer bolt	
8	2	23333	Bushing	PM 4030 DX
9	1	33121	Circlip	40U
10	1	6302421	Cylinder tube	
11	1	20327	O-ring	OR 119,3 x 5,7
12	1	6300274	Guide	
13	1	20929	Seal	SI/L 100/110 x 12,5
14	1	21997	Bearing	HH506 100 x 105 x 25
15	1	20531	Scraper	GA 100 x 110 x 7/10
16	1	20791	Seal	MDM 125 x 108 x 26
17	1	6300273	Piston	
18	1	32256	Pointed screw	MSP6 x 12
19	1	20891	Back ring	89,5 x 3
20	1	20191	O-ring	OR 89,5 x 3
21	1	6300271	Piston rod	
22	1	6302262	Footplate, fixed	
23	1	31102	Washer	PS 40 x 50 x 1,0

72-516

Intern ref.: 6302410

Patentanmeldt.
Patent pending.
Patentangemeldet.
La demande de brêvet a été déposée.
Solicitud de patente.

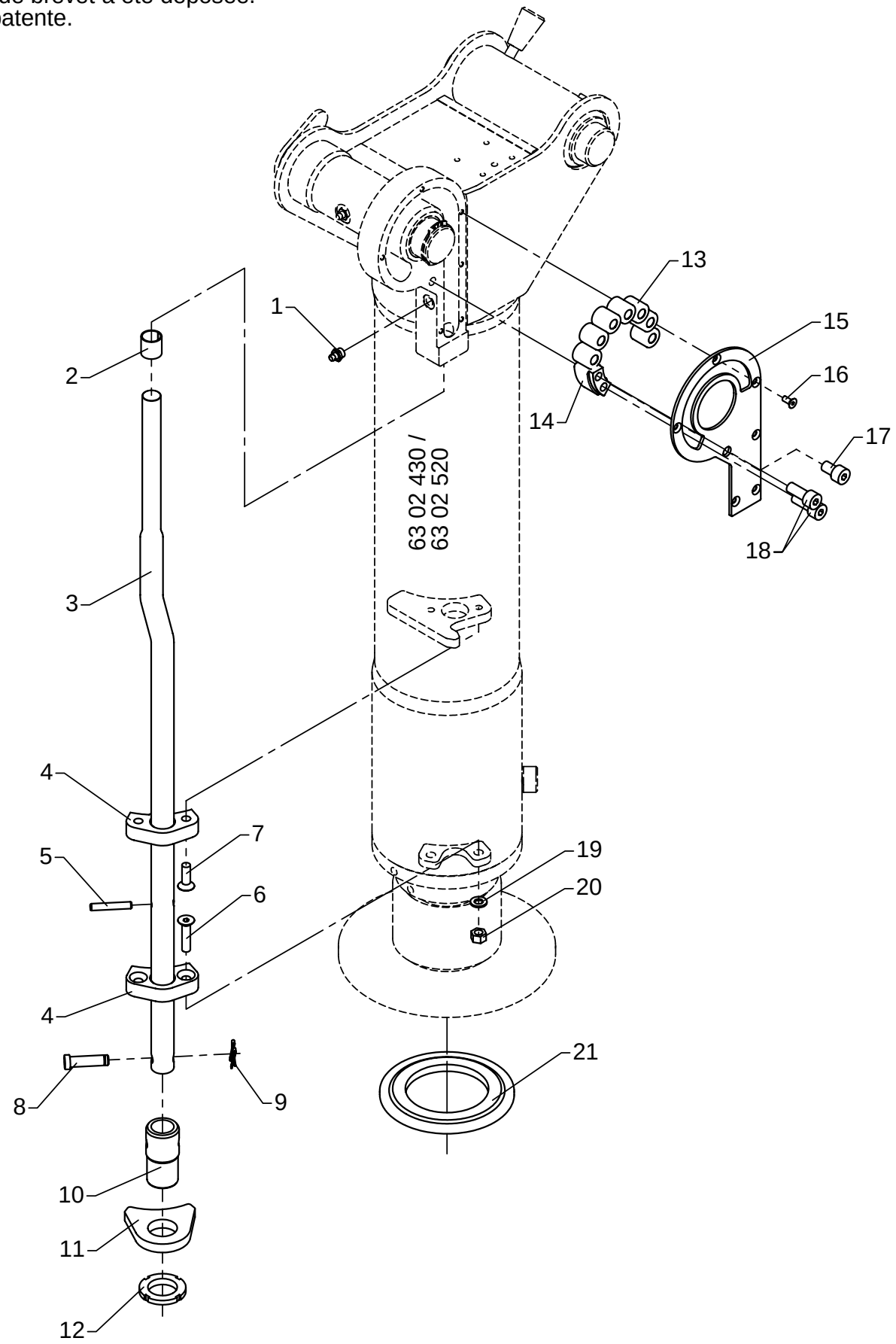

Parts for swing-up stabilizer cylinder

As from / To loader no.: 97 00 00 /
Created: 17.11.2003
Modified:

Item no.	Qty.	Part no.	Description	Remarks
1	1	31318	Lubricator	1/8" RG
2	1	23939	Bushing	MB 1820 DU-B
3	1	6302434	Compression rod	
4	2	63524	Guide	
5	1	31228	Retaining pin, stainless	ø6 x 40
6	2	30584	Countersunk screw	MK8 x 35
7	2	31964	Counter sunk screw, stainless	MK8 x 25
8	1	6302437	Lock pin	
9	1	31905	Clip	
10	1	6302436	Adjusting piece	
11	1	6302435	Compression block	
12	1	23147	Nut	M30 x 1,5
13	7	23146	Cylindrical roller	RC 20 x 20 CD
14	1	6302433	Stop	
15	1	6302432	Cover	
16	6	32405	Sockethead screw	MK5 x 12
17	1	30964	Screw	MC10 x 16
18	2	30453	Screw	MC10 x 25
19	2	31147	Washer, stainless	8 mm
20	2	30886	Lock nut, stainless	M8
21	1	6302439	Carrier plate	

72-516

Intern ref.: 6302440 / 6302530

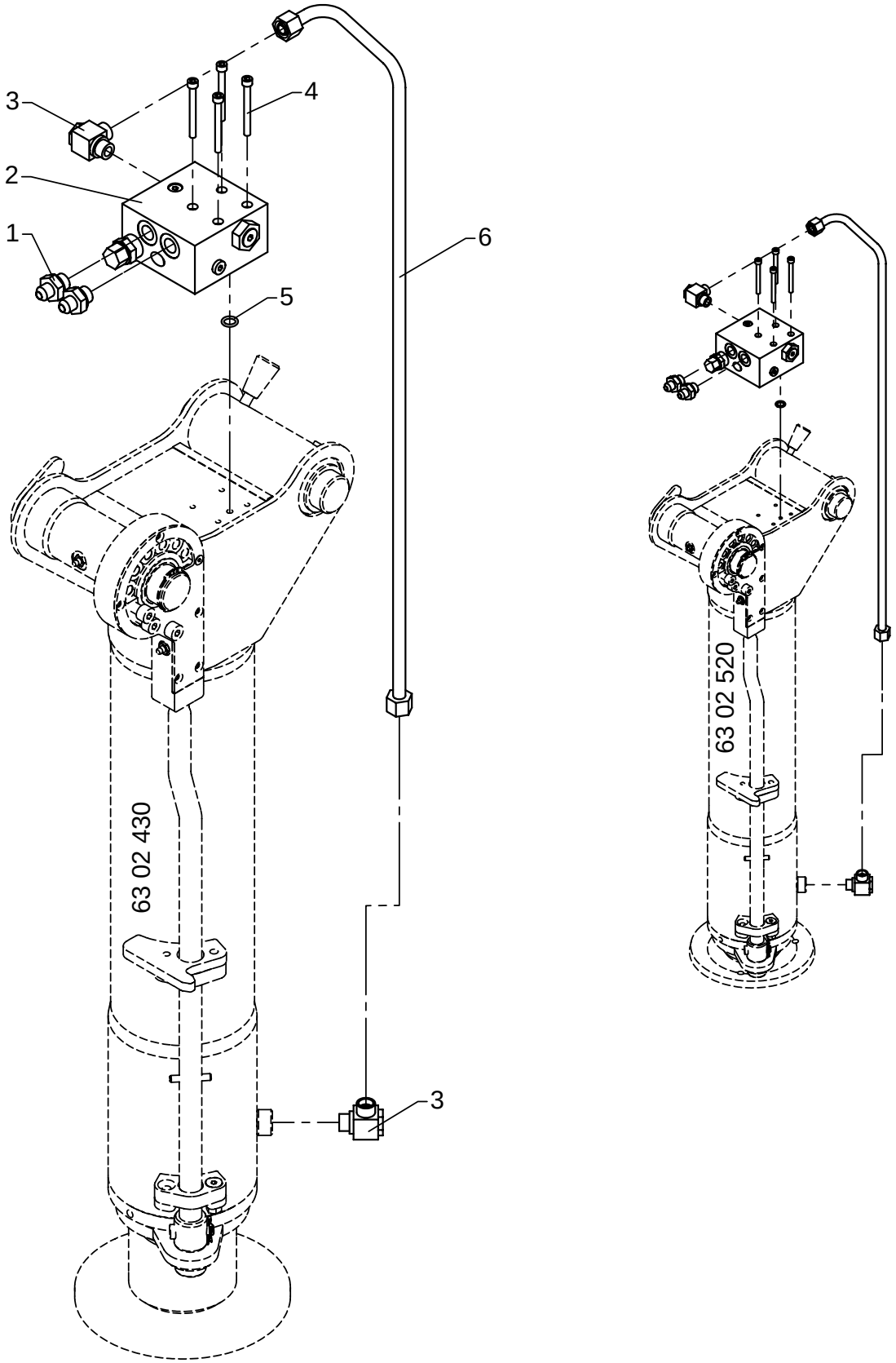

Stabilizer cylinder with check valve, type HR

As from / To loader no.: 97 00 00 /
Created: 17.11.2003
Modified:

Item no.	Qty.	Part no.	Description	Remarks
1	2	25743	Straight connection	F40XS 10-3/8 JIC
2	1	59058	Piloted check-valve	
3	2	25130	Banjo connection	RSWV 12 LR
4	4	30441	Screw	MC6 x 60
5	1	20126	O-ring	OR 11,3 x 2,4
6	1	6300275	Pipe	

72-516

Intern ref.: 6300200

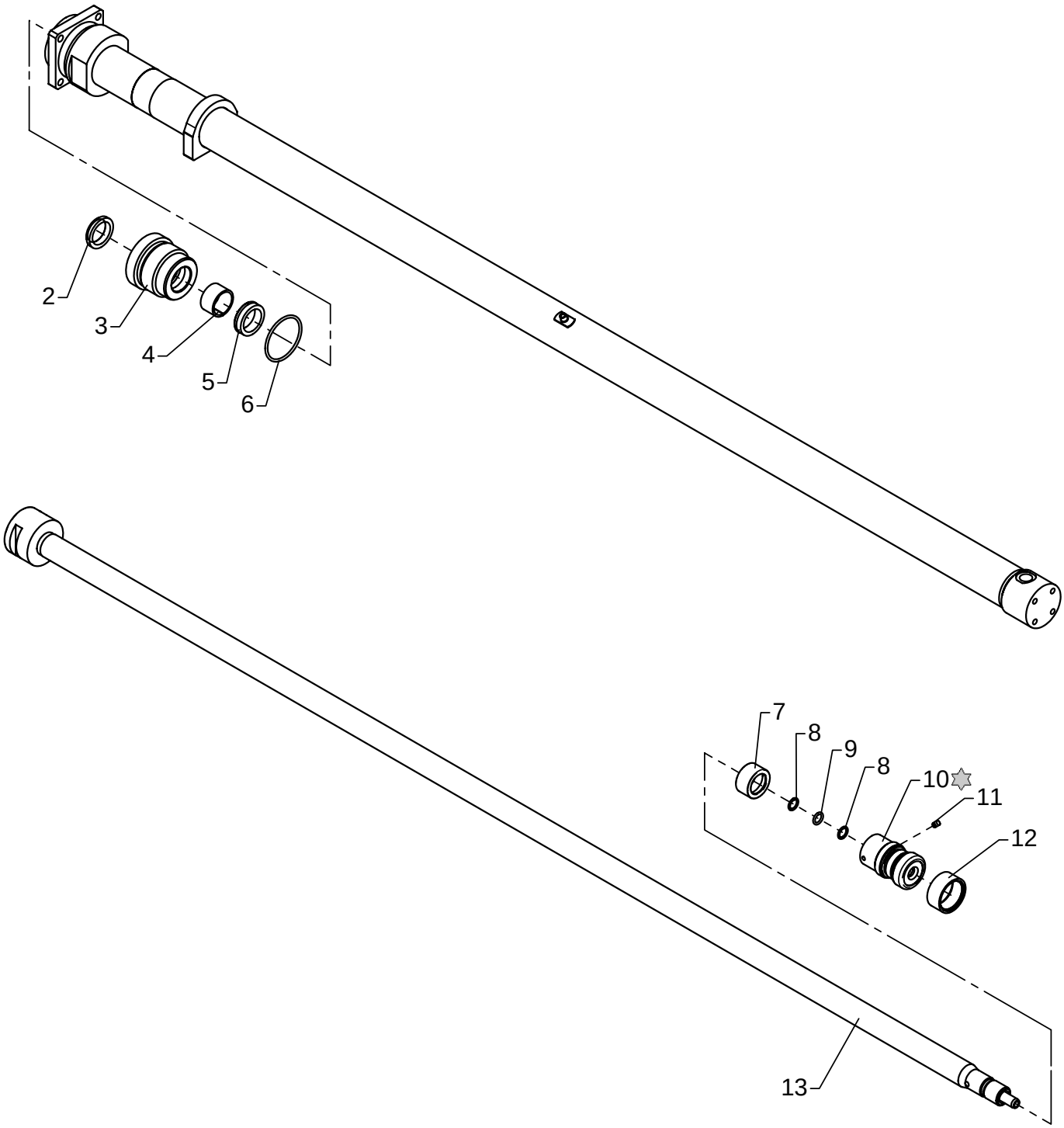

Loctite 243

Beam cylinder C45-1465, type DR - 8420

As from / To loader no.: 97 00 00 /
Created: 17.11.2003
Modified:

Item no.	Qty.	Part no.	Description	Remarks
		6893320	Seal kit C45	Pos. 2, 4, 5, 6, 8, 9, 12
1	1	6300201	Cylinder	
2	1	20507	Scraper	AUAS 30 x 40 x 5/8
3	1	1291323	Guide	
4	1	21912	Bearing	HH506 30 x 35 x 20
5	1	20683	Seal	HH605 30 x 40 x 11
6	1	20183	O-ring	OR 54,5 x 3
7	1	6300204	Spacer	
8	2	20879	Back ring	11,3 x 2,4
9	1	20126	O-ring	OR 11,3 x 2,4
10	1	1310733	Piston	
11	1	30903	Screw	MSP6 x 8
12	1	20794	Seal	45 x 37 x 15,5
13	1	6300205	Piston rod	

Please note: Drill a ø5 x 2-3 mm hole before the screw is fitted.

72-516

Intern ref.: 6300210

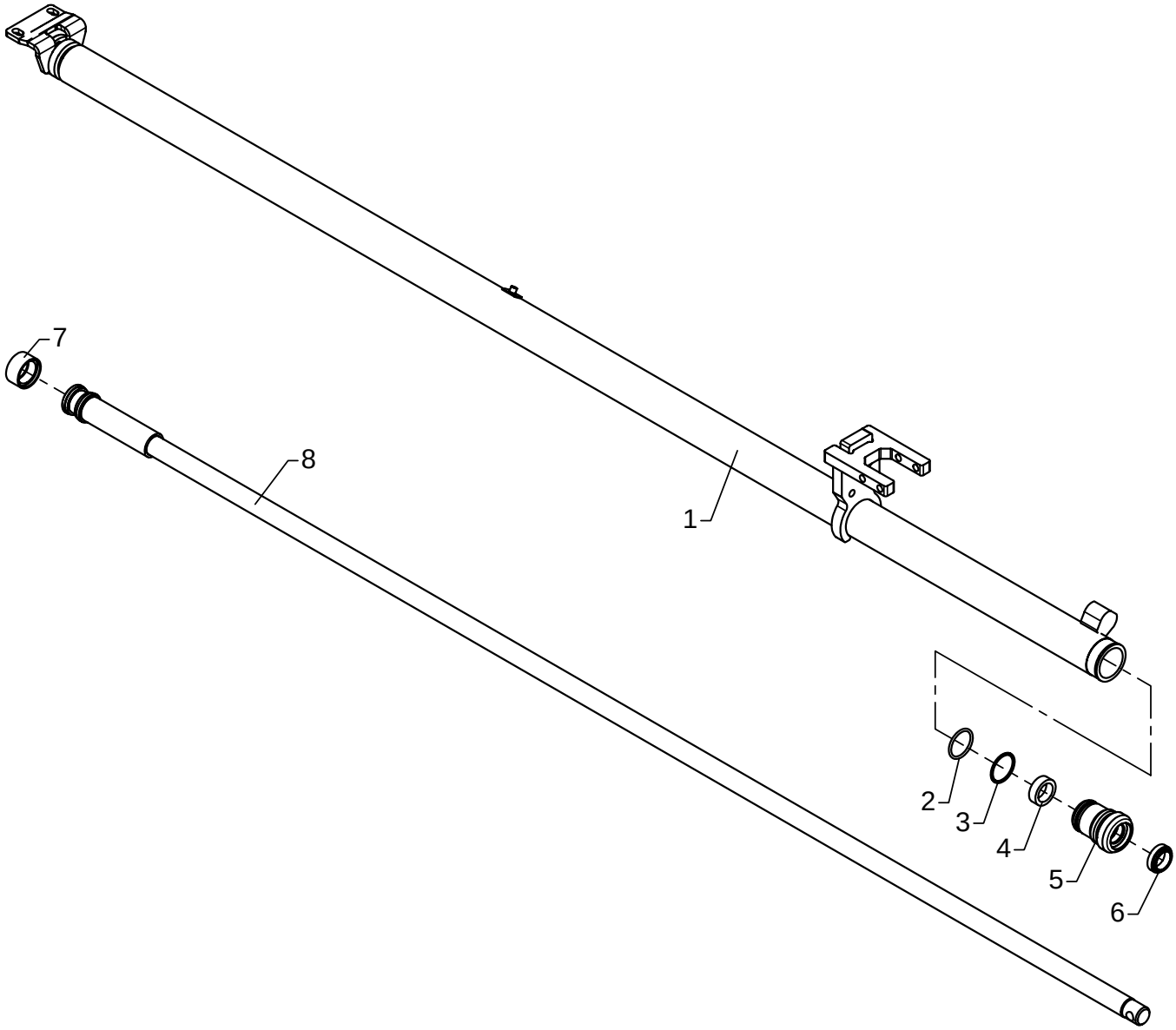

Beam cylinder C40-1600, type DR - 8420

As from / To loader no.: 97 00 00 /
Created: 17.11.2003
Modified:

Item no.	Qty.	Part no.	Description	Remarks
		6892670	Seal kit C40	Pos. 2, 3, 4, 6, 7
1	1	6300211	Cylinder	
2	1	20177	O-ring	OR 34,2 x 3
3	1	20705	Back ring	STR 35 x 40 x 1,3
4	1	20651	Seal	HH605 25 x 35 x 11
5	1	6194183	Guide	
6	1	20505	Scraper	GA 25 x 35 x 7/10
7	1	20779	Double acting seal	MDM 40 x 30 x 12,3
8	1	6300216	Piston rod	

72-516

Intern ref.: 6300090

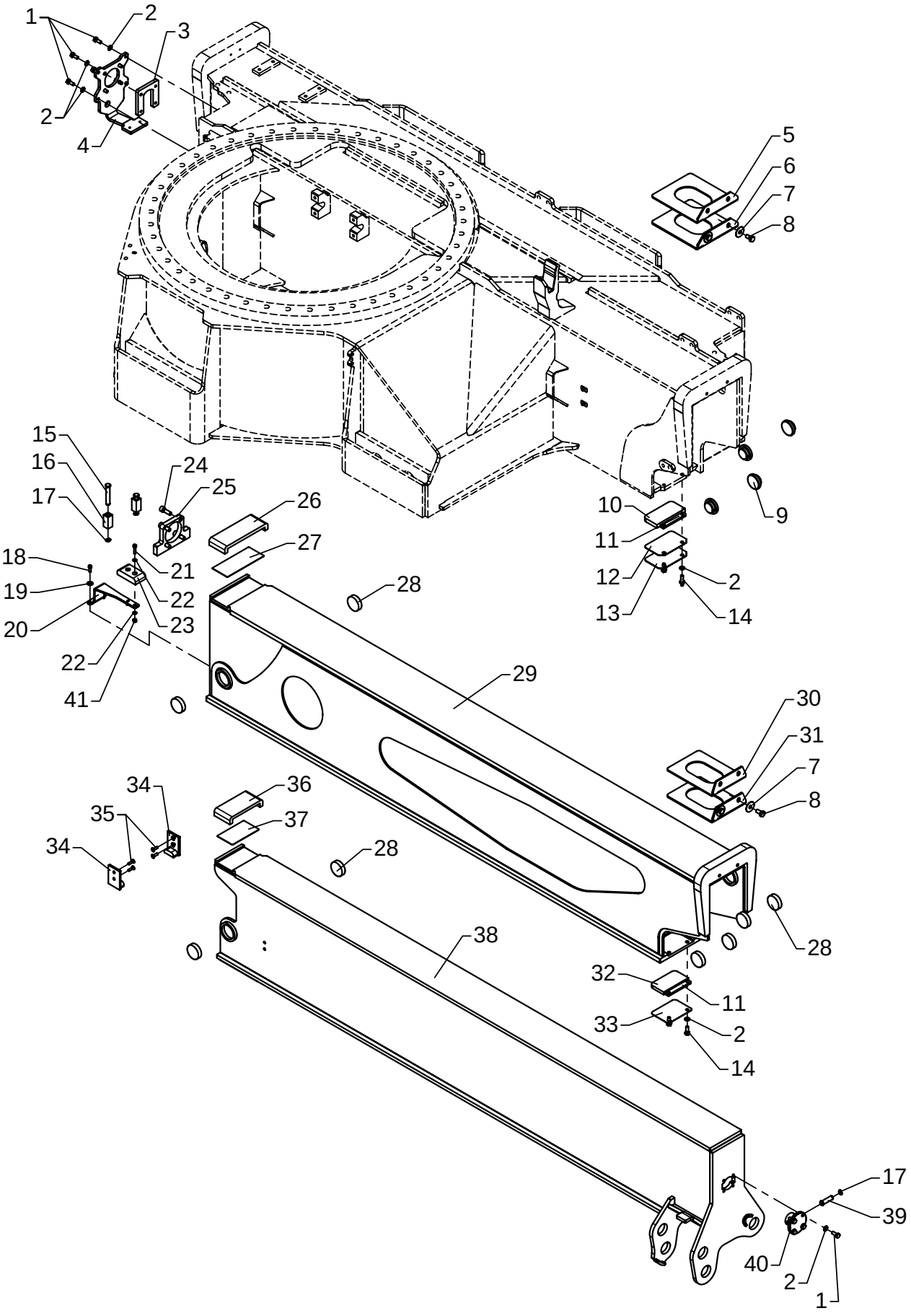

Stabilizer beam, type DR - 8420

As from / To loader no.: 97 00 00 /
Created: 17.11.2003
Modified:

Item no.	Qty.	Part no.	Description	Remarks
1	12	30132	Set screw, stainless	M8 x 20
2	16	31147	Washer, stainless	8 mm
3	1	6300086	Bracket	
4	1	6300085	End plate	
5	1	6300045	Spacer	
6	1	6300046	Spacer	
7	4	31141	Washer	35 x 10,5 x 1,5
8	4	31517	Set screw, stainless	M10 x 20
9	4	63739	Guide shoe	
10	1	63741	Slide block	
11	2	6300087	Spacer	
12	1	6302041	Division plate	
13	1	6302042	Division plate	
14	4	30133	Set screw, stainless	M8 x 22
15	2	6300088	Pin	
16	2	6300089	Block	
17	4	33102	Circlip	12U
18	2	31539	Screw, stainless	MC6 x 16
19	2	31134	Washer, stainless	6 mm
20	1	6300081	Bracket for slide block	
21	2	30962	Sockethead screw	MC6 x 25
22	4	32302	Face washer, stainless	6 mm
23	1	63744	Supporting block	
24	4	31568	Screw, stainless	MC10 x 30
25	1	6300207	Lock plate	
26	1	63745	Slide block	
27	1	6302045	Division plate	
28	8	63740	Slide block	
29	1	6302091	Stabilizer beam I	
30	1	6300048	Spacer	
31	1	6300049	Spacer	
32	1	63742	Slide block	
33	1	6302043	Division plate	
34	2	63743	Guide	
35	4	30579	Countersunk screw	MK6 x 20
36	1	63746	Slide block	
37	1	6302044	Division plate	
38	1	6302111	Stabilizer beam, swing-up leg	
39	1	6194264	Pin	
40	1	6194244	Bracket	
41	2	30884	Lock nut, stainless	M6

Please note: All screws – Loctite 243aa

72-516

Intern ref.: 6300090

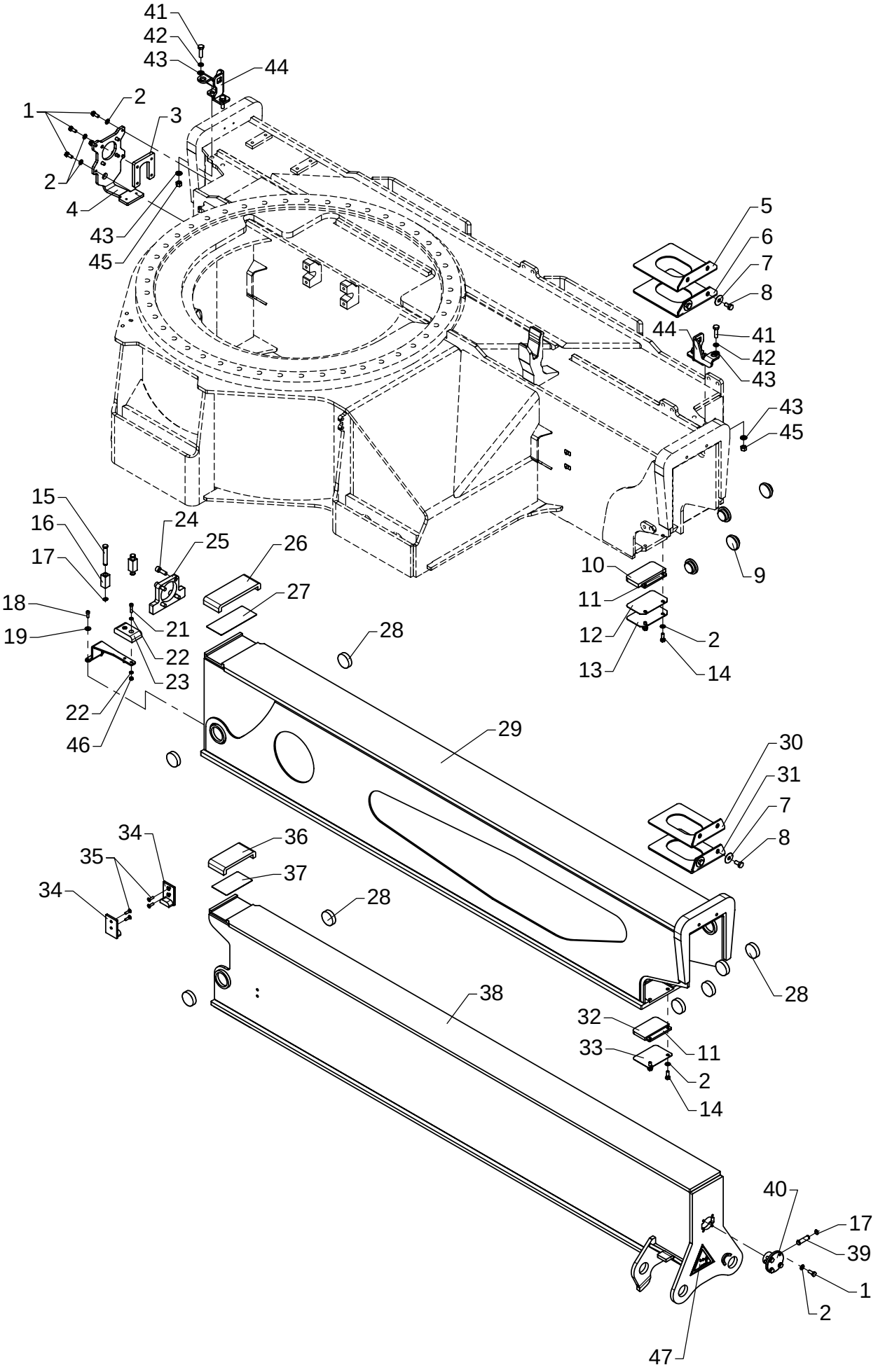

Stabilizer beam - swing-up legs, type DHR – 8420

As from / To loader no.: 97 00 00 /
Created: 17.11.2003
Modified:

Item no.	Qty.	Part no.	Description	Remarks
1	12	30132	Set screw, stainless	M8 x 20
2	16	31147	Washer, stainless	8 mm
3	1	6300086	Bracket	
4	1	6300085	End plate	
5	1	6300045	Spacer	
6	1	6300046	Spacer	
7	4	31141	Washer	35 x 10,5 x 1,5
8	4	31517	Set screw, stainless	M10 x 20
9	4	63739	Guide shoe	
10	1	63741	Slide block	
11	2	6300087	Spacer	
12	1	6302041	Division plate	
13	1	6302042	Division plate	
14	4	30133	Set screw, stainless	M8 x 22
15	2	6300088	Pin	
16	2	6300089	Block	
17	4	33102	Circlip	12U
18	2	31539	Screw, stainless	MC6 x 16
19	2	31134	Washer, stainless	6 mm
20	1	6300081	Bracket for slide block	
21	2	30962	Sockethead screw	MC6 x 25
22	4	32302	Face washer, stainless	6 mm
23	1	63744	Supporting block	
24	4	31568	Screw, stainless	MC10 x 30
25	1	6300207	Lock plate	
26	1	63745	Slide block	
27	1	6302045	Division plate	
28	8	63740	Slide block	
29	1	6302091	Stabilizer beam I	
30	1	6300048	Spacer	
31	1	6300049	Spacer	
32	1	63742	Slide block	
33	1	6302043	Division plate	
34	2	63743	Guide	
35	4	30579	Countersunk screw	MK6 x 20
36	1	63746	Slide block	
37	1	6302044	Division plate	
38	1	6302105	Stabilizer beam II, swing-up	
39	1	6194264	Pin	

Please note: All screws – Loctite 243

72-516

Intern ref.: 6300090

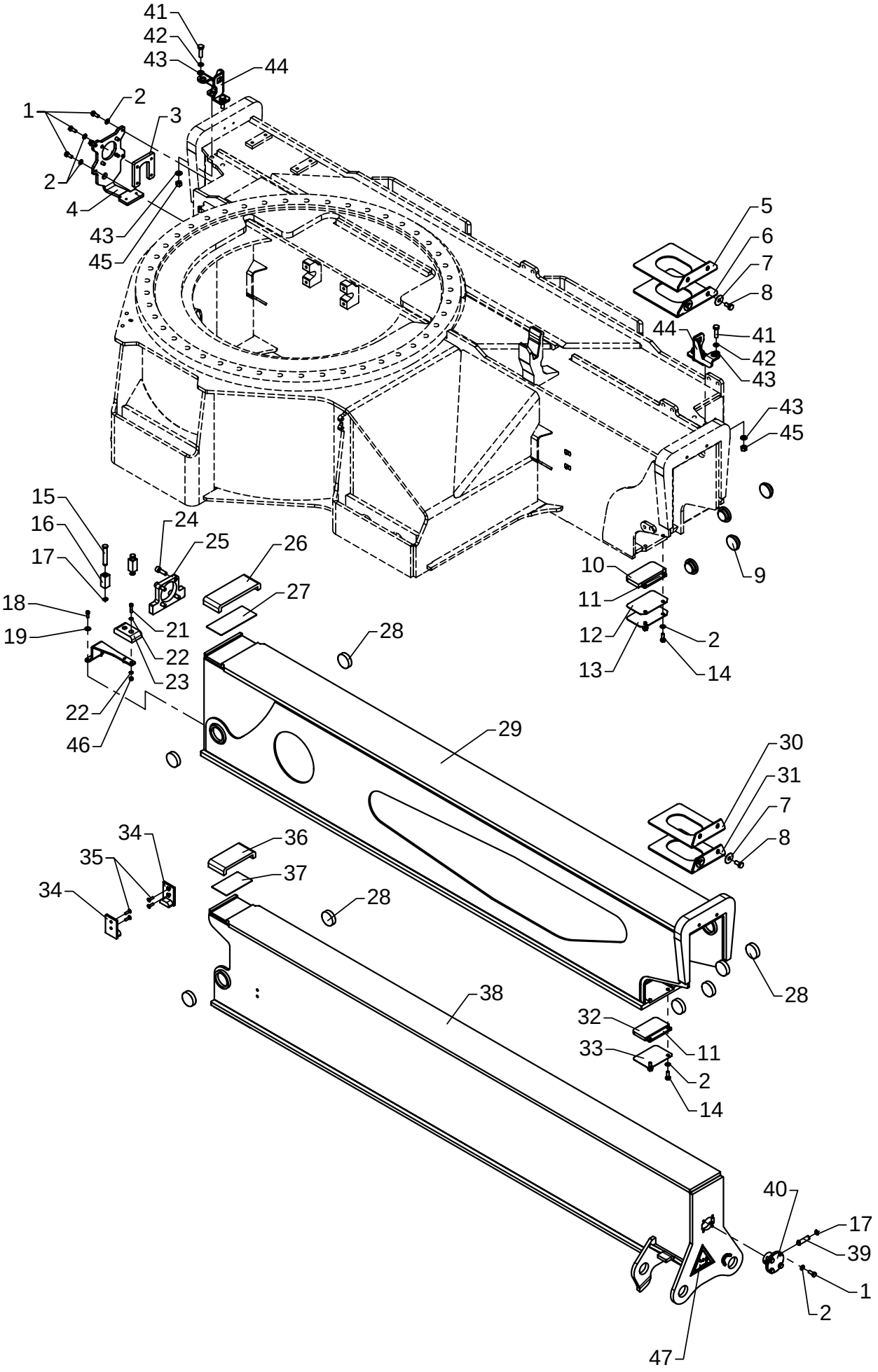

Stabilizer beam - swing-up legs, type DHR – 8420

As from / To loader no.: 97 00 00 /
Created: 17.11.2003
Modified:

Item no.	Qty.	Part no.	Description	Remarks
40	1	6194244	Bracket	
41	4	30157	Set screw	M10 x 35
42	4	31156	Spring washer	10 mm
43	8	31177	Washer	10 mm
44	2	6302104	Bracket	
45	4	30888	Lock nut	M10
46	2	30884	Lock nut, stainless	M6
47	1	66463	Label"SWING-UP STABILIZER LEG"	

Please note: All screws – Loctite 243

72-516

Intern ref.: 6300110

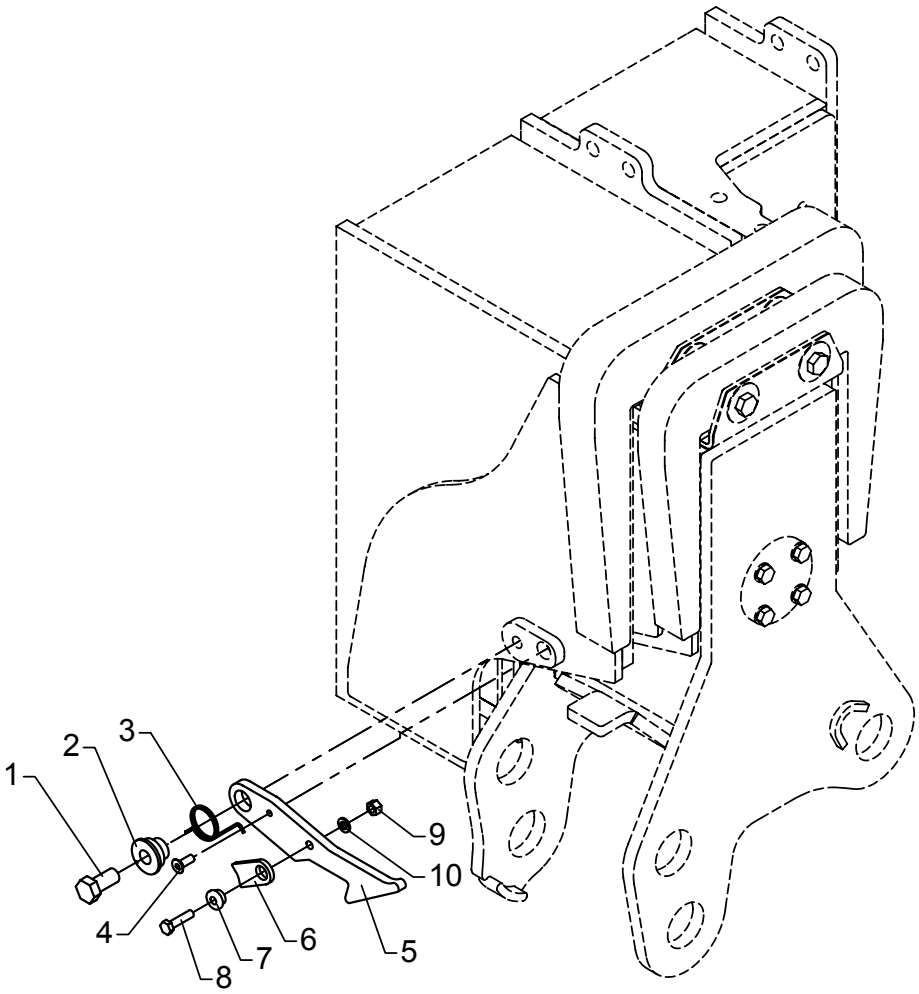

Safety lock, DR, DHR.

As from / To loader no.: 97 00 00 /
Created: 17.11.2003
Modified: 30.06.2004

Item no.	Qty.	Part no.	Description	Remarks
1	1	31504	Set screw, stainless	M12 x 25
2	1	6245264	Bushing	
3	1	33473	Spring	6179044
4	1	32201	Countersunk screw	MK6 x 16
5	1	6300078	Lock pawl	
6	1	6236054	Click	
7	1	63440	Washer	
8	1	30114	Set screw, stainless	M6 x 25
9	1	30884	Lock nut, stainless	M6
10	1	32302	Face washer, stainless	6 mm

72-516

Intern ref.: 6649790

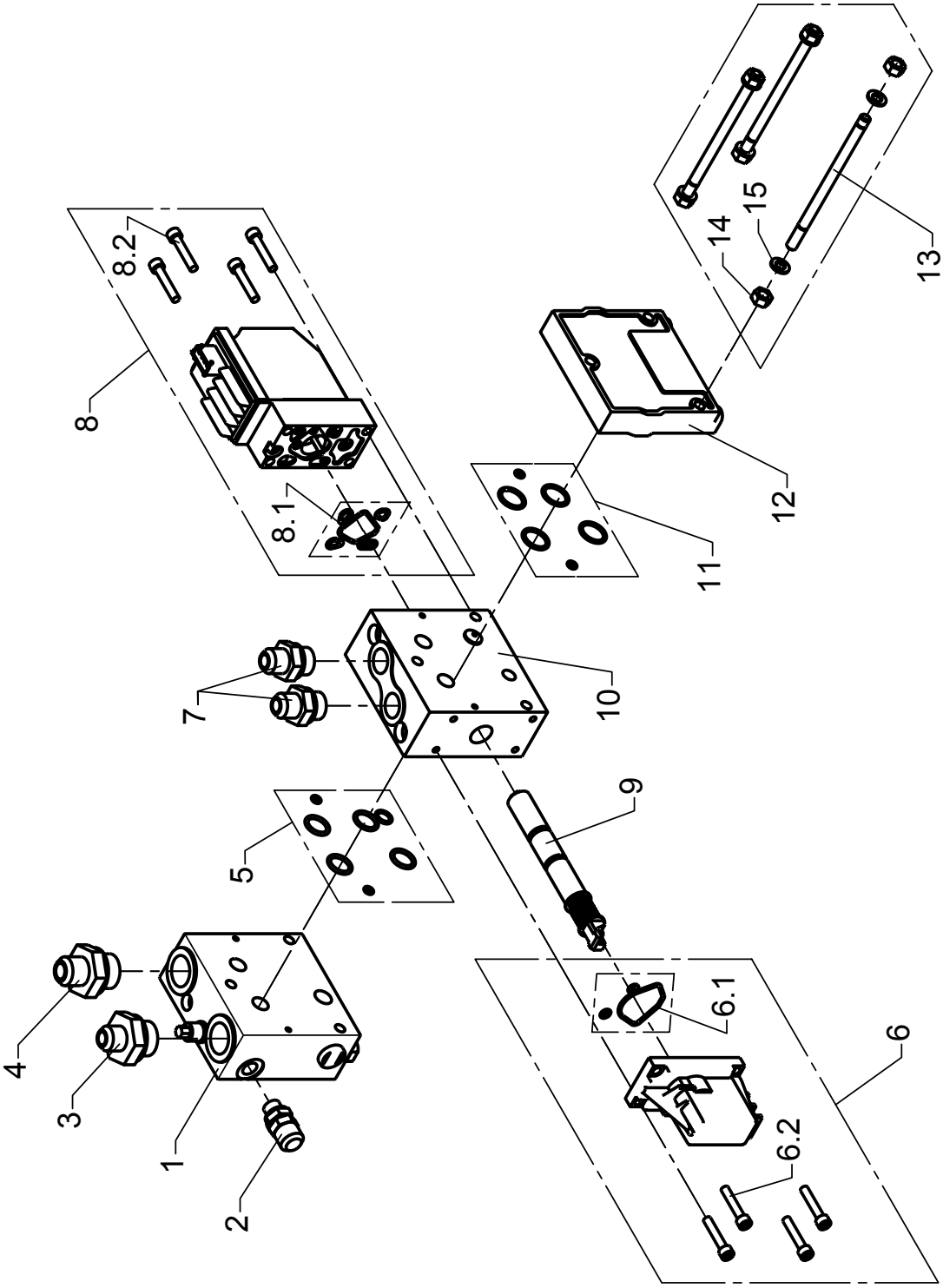

Valve block, 1 section (extra RC function)

As from / To loader no.: 97 00 00/
Created: 01.06.2004
Modified:

Item no.	Qty.	Part no.	Description	Remarks
	1	63039	Valve block	
1	1	62037	Inlet section	
2	1	26103	Pressure-gauge connect.	
3	1	26283	Connection	F40XS12-3/4 JIC
4	1	25866	Connection	F40XS14-3/4 JIC
5	1	62237	Seal kit	
6	1	58907	Lever module	
6,1	1	62239	Seal kit	
6,2	4	62241	Screw	M6 x 33
7	2	25832	Straight connection	F40XS12-1/2 JIC
8	1	58915	Electric module	
8,1	1	62240	Seal kit	
8,2	4	62241	Screw	M6 x 33
9	1	62055	Spool	
10	1	62225	Control valve	
11	1	58925	Seal kit	
12	1	58921	End plate	
13	1	61990	Connecting kit - 1 module	Incl. Item no. 5, 11, 14, 15
14	4	30856	Nut, stainless	M8
15	4	62044	Washer	

72-516

Intern ref.: 6649690

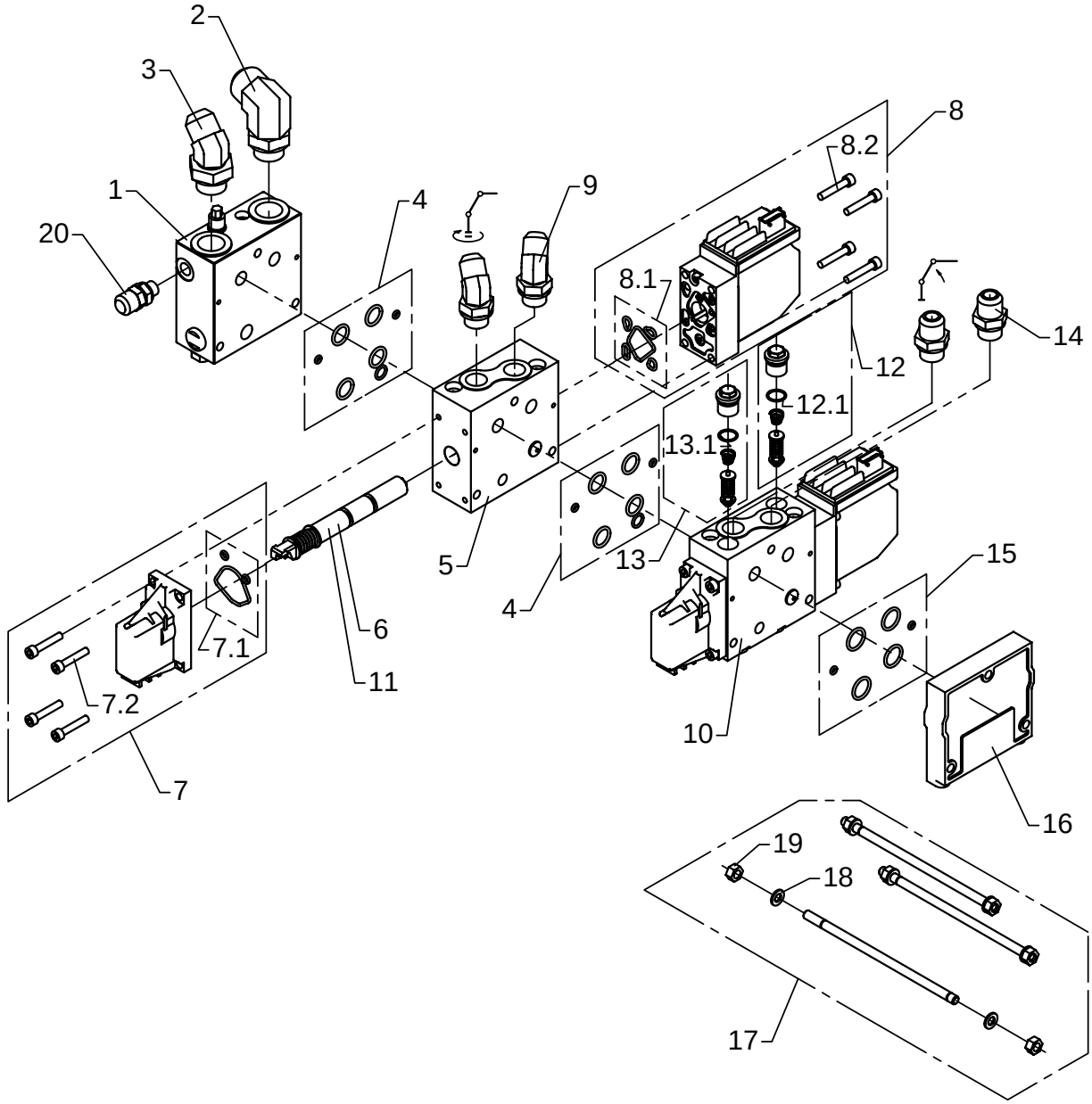

Valve block, 2 sections P1

As from / To loader no.: 97 00 00 /
Created: 17.11.2003
Modified:

Item no.	Qty.	Part no.	Description	Remarks
	1	62024	Valve block	
1	1	62037	Inlet section	
2	1	25840	Elbow connection	C40XS 25-3/4 JIC
3	1	26273	Elbow connection 45°	V40XS18/20 - 3/4
4	2	62237	Seal kit	
5	1	62225	Control valve	
6	1	62055	Spool	
7	2	58907	Lever module	
	1	62239	Seal kit	
	4	62241	Screw	
8	2	58935	Electric module	
	1	62240	Seal kit	
	4	62241	Screw	
9	2	25723	Elbow connection 45°	V40XS14/16 - 1/2
10	1	62227	Control valve	
11	1	62029	Spool	
12	1	62271	Port-relief valve	
	1	62052	O-ring	
13	1	58931	Port-relief valve	
	1	62052	O-ring	
14	2	25833	Straight connection	F40XS 14/16-1/2 JIC
15	1	58925	Seal kit	
16	1	62235	End plate	
17	3	58913	Connecting kit - 2 modules	
18	6	62044	Washer	
19	6	30856	Nut, stainless	
20	1	26103	Pressure-gauge connect.	

72-516

Intern ref.: 6649720

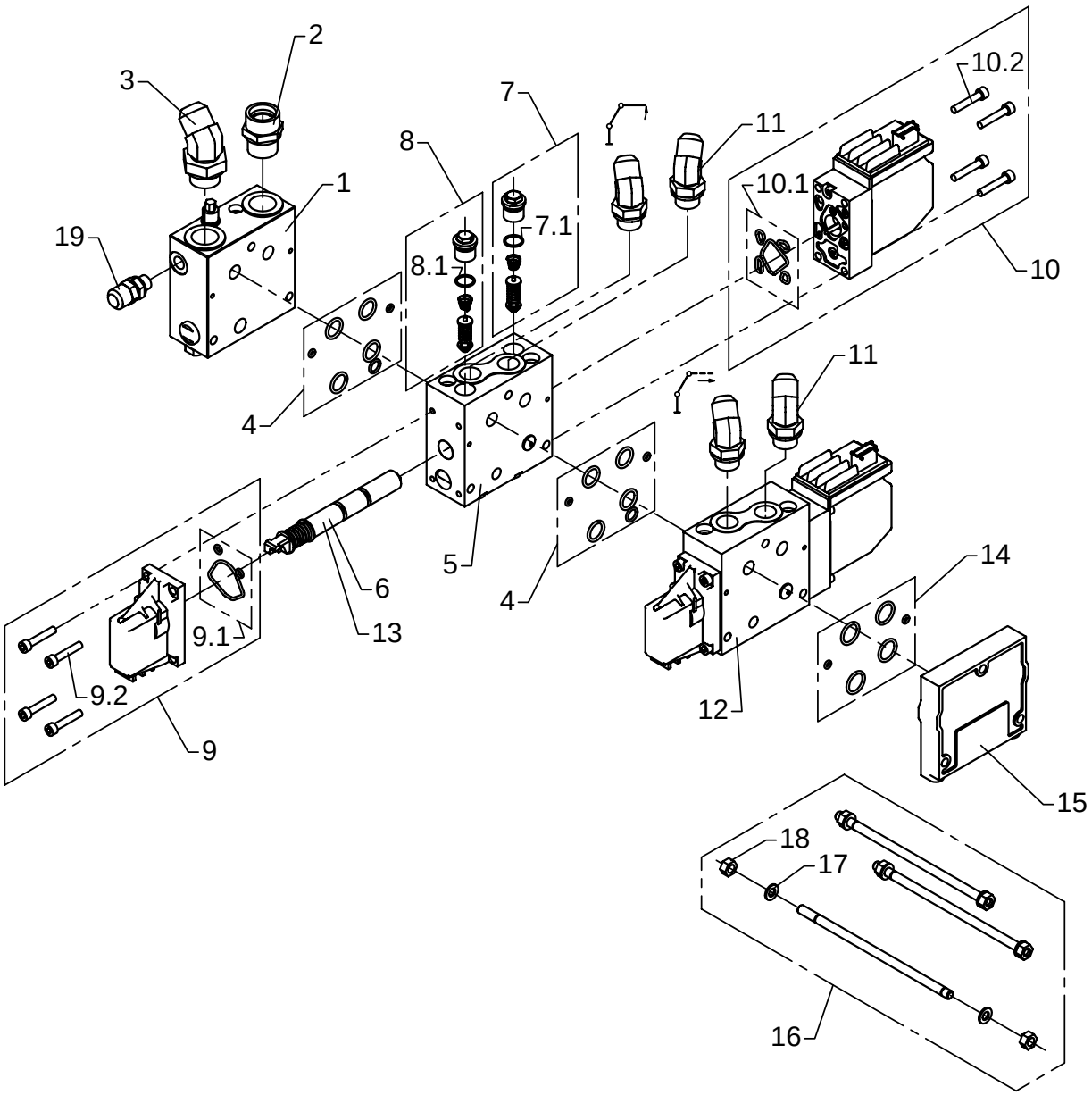

Valve block, 2 sections P2

As from / To loader no.: 97 00 00 /
Created: 17.11.2003
Modified:

Item no.	Qty.	Part no.	Description	Remarks
	1	63025	Valve block	
1	1	62037	Inlet section	
2	1	25169	Connection	GEV 22 LR-WD
3	1	26273	Elbow connection 45°	V40XS18/20 - 3/4
4	2	62237	Seal kit	
5	1	62227	Control valve	
6	1	62029	Spool	
7	1	62271	Port-relief valve	
	1	62052	O-ring	
8	1	62283	Port-relief valve	
	1	62052	O-ring	
9	2	58907	Lever module	
	1	62239	Seal kit	
	4	62241	Screw	
10	2	58935	Electric module	
	1	62240	Seal kit	
	4	62241	Screw	
11	4	25723	Elbow connection 45°	V40XS14/16 - 1/2
12	1	62225	Control valve	
13	1	62055	Spool	
14	1	58925	Seal kit	
15	1	58921	End cover	
16	3	58913	Connecting kit - 2 modules	
17	6	62044	Washer	
18	6	30856	Nut, stainless	
19	1	26103	Pressure-gauge connect.	

72-516

Intern ref.: 6649700

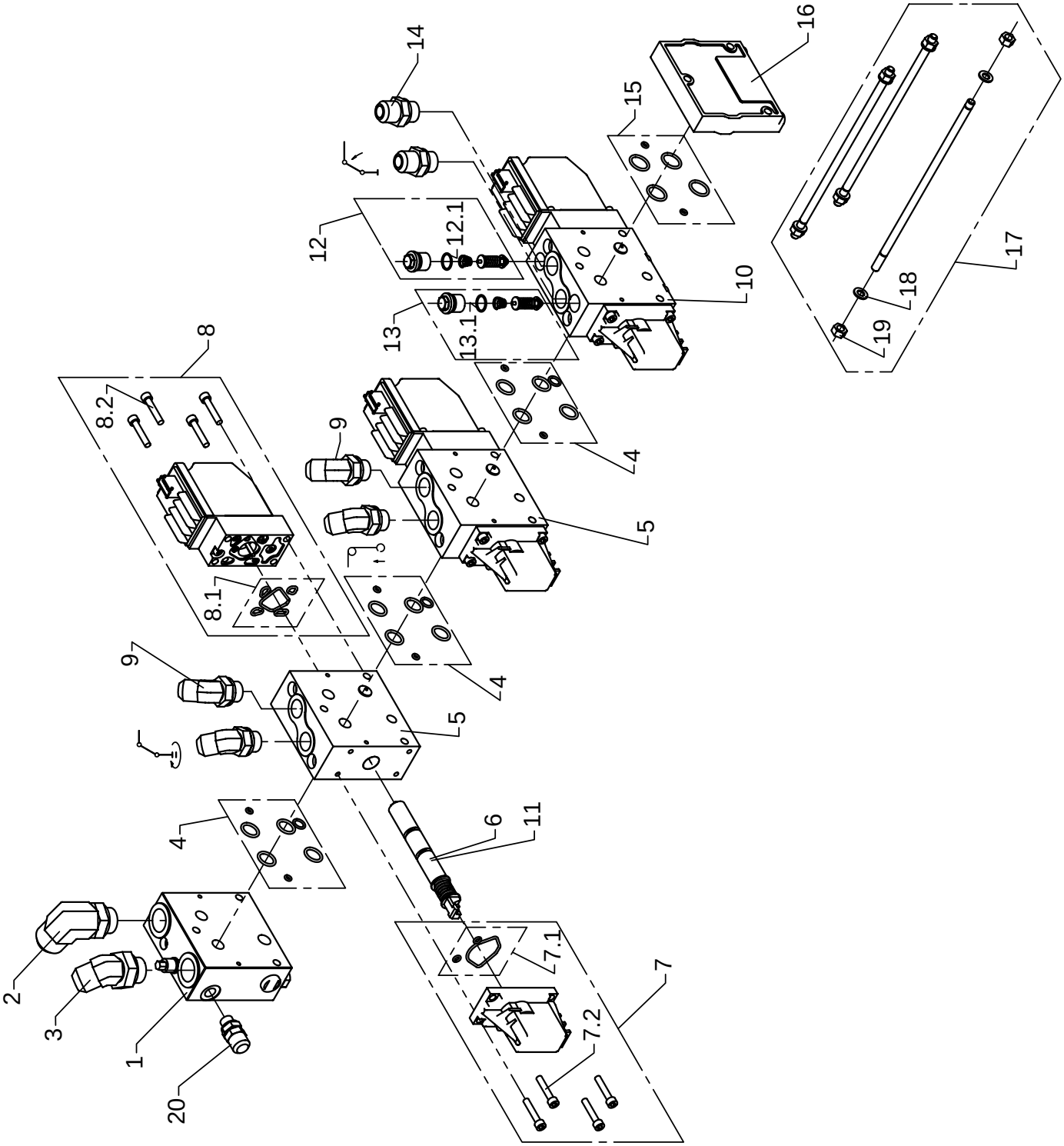

Valve block, 3 sections P1

As from / To loader no.: 97 00 00 /
Created: 17.11.2003
Modified:

Item no.	Qty.	Part no.	Description	Remarks
	1	63026	Valve block	
1	1	62037	Inlet section	
2	1	25840	Elbow connection	C40XS 25-3/4 JIC
3	1	26273	Elbow connection 45°	V40XS18/20 - 3/4
4	3	62237	Seal kit	
5	2	62225	Control valve	
6	2	62055	Spool	
7	3	58907	Lever module	
	1	62239	Seal kit	
	4	62241	Screw	
8	3	58935	Electric module	
	1	62240	Seal kit	
	4	62241	Screw	
9	4	25723	Elbow connection 45°	V40XS14/16 - 1/2
10	1	62227	Control valve	
11	1	62029	Spool	
12	1	62271	Port-relief valve	
	1	62052	O-ring	
13	1	58931	Port-relief valve	
	1	62052	O-ring	
14	2	25833	Straight connection	F40XS 14/16-1/2 JIC
15	1	58925	Seal kit	
16	1	62235	End plate	
17	3	62018	Connecting kit - 3 modules	
18	6	62044	Washer	
19	6	30856	Nut, stainless	
20	1	26103	Pressure-gauge connect.	

72-516

Intern ref.: 6649780

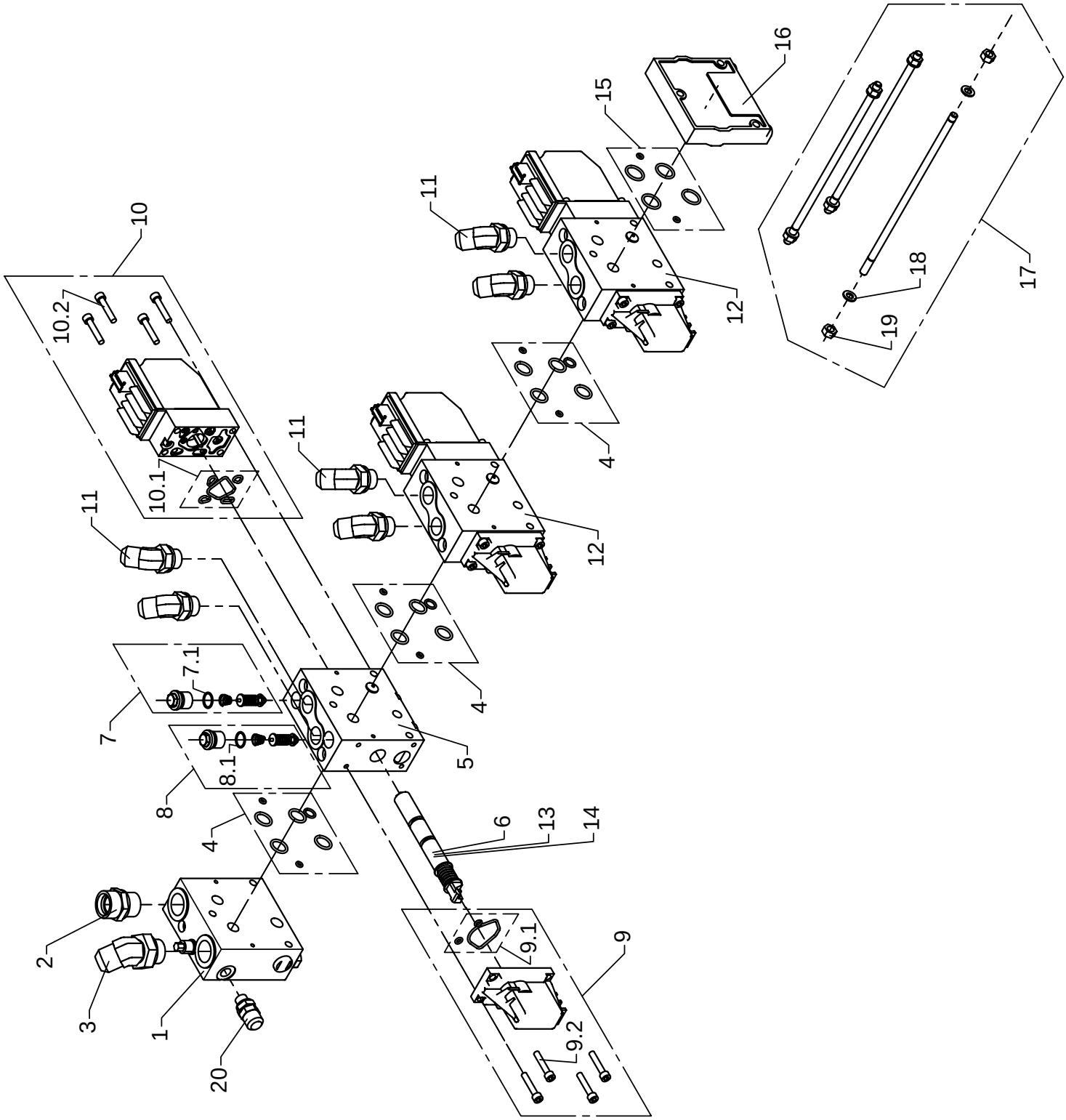

Valve block, 3 sections P2

As from / To loader no.: 97 00 00 /
Created: 26.02.2004
Modified:

Item no.	Qty.	Part no.	Description	Remarks
	1	63041	Valve block	
1	1	62037	Inlet section	
2	1	25169	Connection	GEV 22 LR-WD
3	1	26273	Elbow connection 45°	V40XS18/20 - 3/4
4	3	62237	Seal kit	
5	1	62227	Control valve	
6	1	62029	Spool	
7	1	62271	Port-relief valve	
8	1	62283	Port-relief valve	
9	3	58907	Lever module	
10	3	58935	Electric module	
11	6	25723	Elbow connection 45°	V40XS14/16 - 1/2
12	2	62225	Control valve	
13	1	62055	Spool	
14	1	62034	Spool	
15	1	58925	Seal kit	
16	1	58921	End cover	
17	3	62018	Connecting kit - 3 modules	
18	6	62044	Washer	
19	6	30856	Nut, stainless	
20	1	26103	Pressure-gauge connect.	

72-516

Intern ref.: 6649710

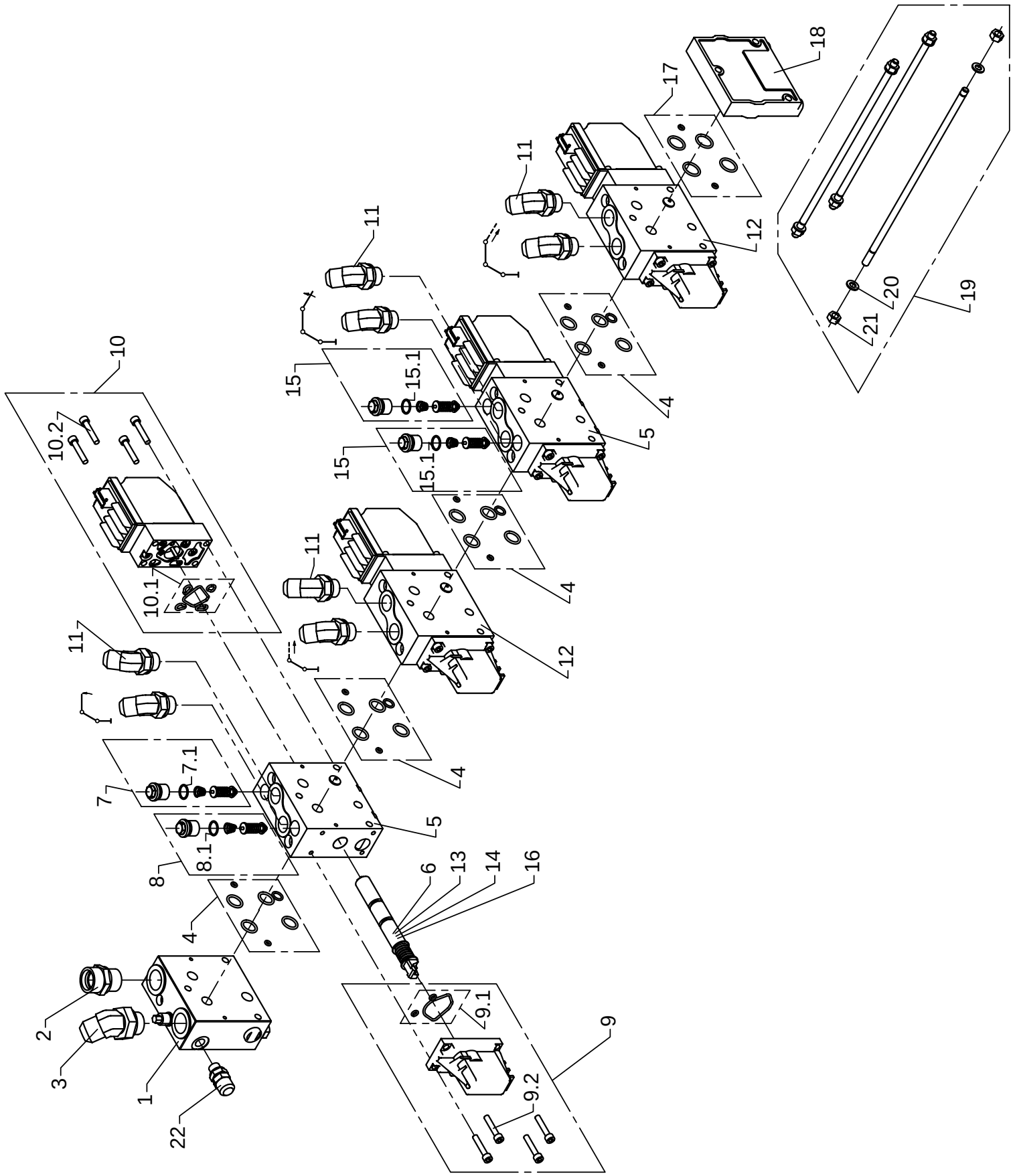

Valve block, 4 sections P2

As from / To loader no.: 97 00 00 /
Created: 17.11.2003
Modified:

Item no.	Qty.	Part no.	Description	Remarks
	1	63027	Valve block	
1	1	62037	Inlet section	
2	1	25169	Connection	GEV 22 LR-WD
3	1	26273	Elbow connection 45°	V40XS18/20 - 3/4
4	4	62237	Seal kit	
5	2	62227	Control valve	
6	1	62029	Spool	
7	1	62271	Port-relief valve	
	1	62052	O-ring	
8	1	62283	Port-relief valve	
	1	62052	O-ring	
9	4	58907	Lever module	
	1	62239	Seal kit	
	4	62241	Screw	
10	4	58935	Electric module	
	1	62240	Seal kit	
	4	62241	Screw	
11	8	25723	Elbow connection 45°	V40XS14/16 - 1/2
12	2	62225	Control valve	
13	1	62055	Spool	
14	1	62070	Spool	
15	2	62282	Port-relief valve	
	1	62052	O-ring	
16	1	62034	Spool	
17	1	58925	Seal kit	
18	1	58921	End cover	
19	3	62032	Connecting kit - 4 modules	
20	6	62044	Washer	
21	6	30856	Nut, stainless	
22	1	26103	Pressure-gauge connect.	

72-516

Intern ref.: 6649730

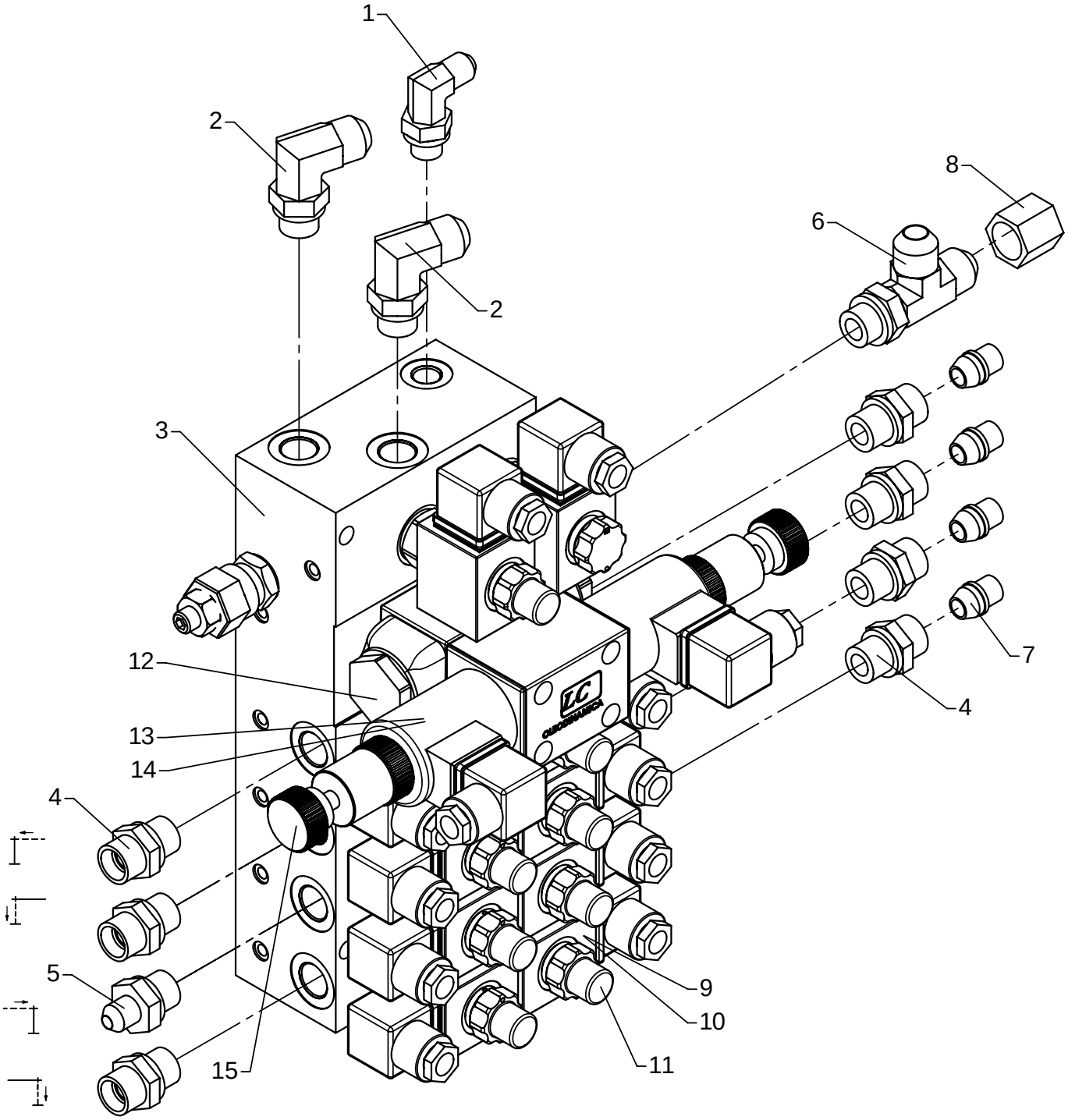

Stabilizer valve block, 8 functions

As from / To loader no.: 97 00 00 /
Created: 17.11.2003
Modified: 04.07.2005

Item no.	Qty.	Part no.	Description	Remarks
1	1	25858	Elbow connection	C40XS 12-3/8 JIC
2	2	25838	Elbow connection	C40XS 12-3/8 JIC
3	1	59049	Valve block	
4	7	25127	Connection	GES 12 LR-WD
5	1	25830	Straight connection	F40XS 8-3/8 JIC
6	1	25813	T-connection	R40XS 12-3/8 JIC
7	4	26180	Blanking plug	VSD 12L/S-O
8	1	25876	Screw cap	FNTXS 12 JIC
9		61778	Solenoid	
10		61777	Solenoid	
11		59057	Solenoid valve	
12		59079	Valve	
13		59073	Solenoid 12V	
14		59082	Solenoid 24 V	
15		59095	Emergency screw	

72-516

Intern ref.: 6301200

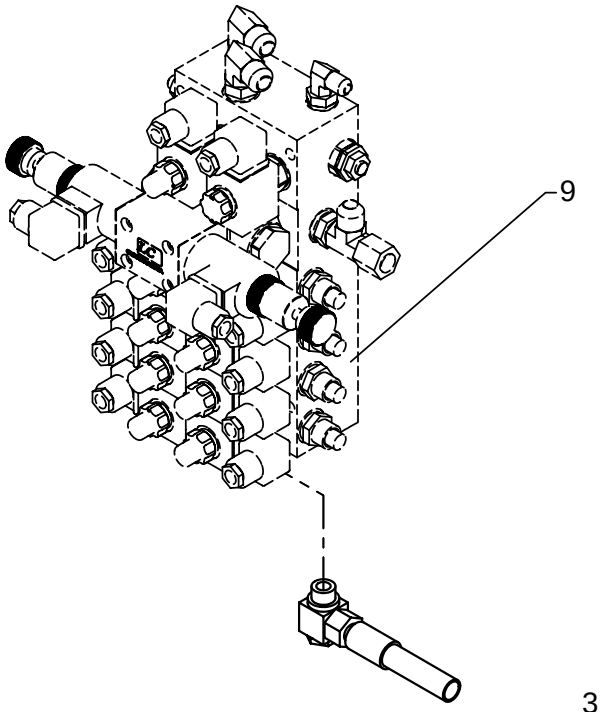

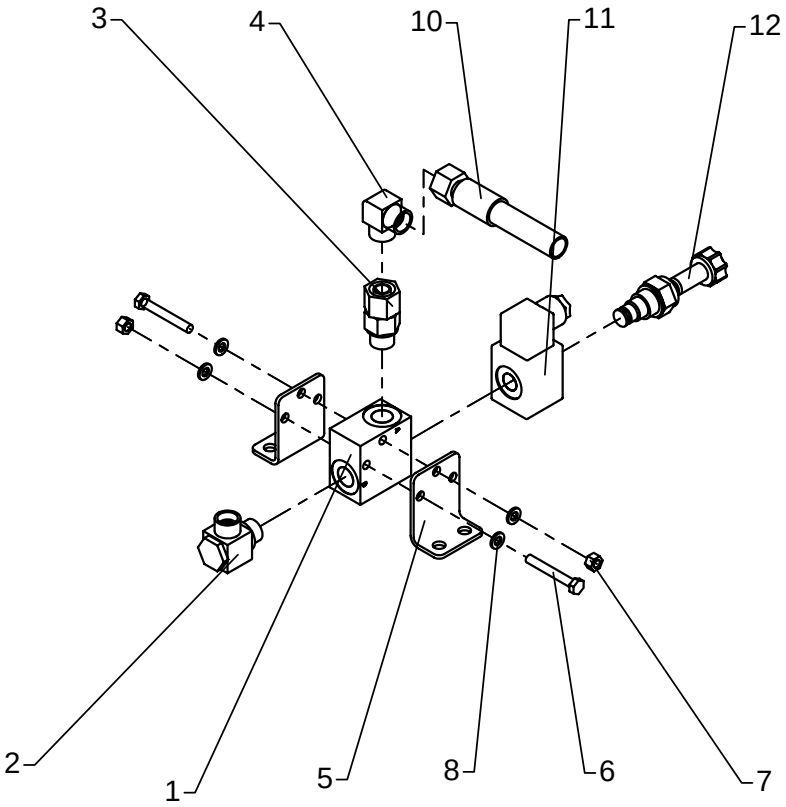

Stabilizer valve block, 5 available func.

As from / To loader no.:
Created: 26.01.2004
Modified:

Item no.	Qty.	Part no.	Description	Remarks
1	1	59771	Valve housing	
2	1	25130	Banjo connection	RSWV 12 LR
3	1	25240	Connection	EGESD 12 LR-WD
4	1	25129	Elbow connection	WV 12 L
5	2	6301202	Bracket	
6	2	30118	Steel bolt, stainless	M6 x 45
7	2	30884	Lock nut, stainless	M6
8	4	32302	Face washer, stainless	6 mm
9	1	6649730	Stabilizer valve blcok, 8funct	
10	1	0017130	Hose	
11	1	61778	Solenoid	
12	1	59057	Solenoid valve	

72-516

Intern ref.: 6301210

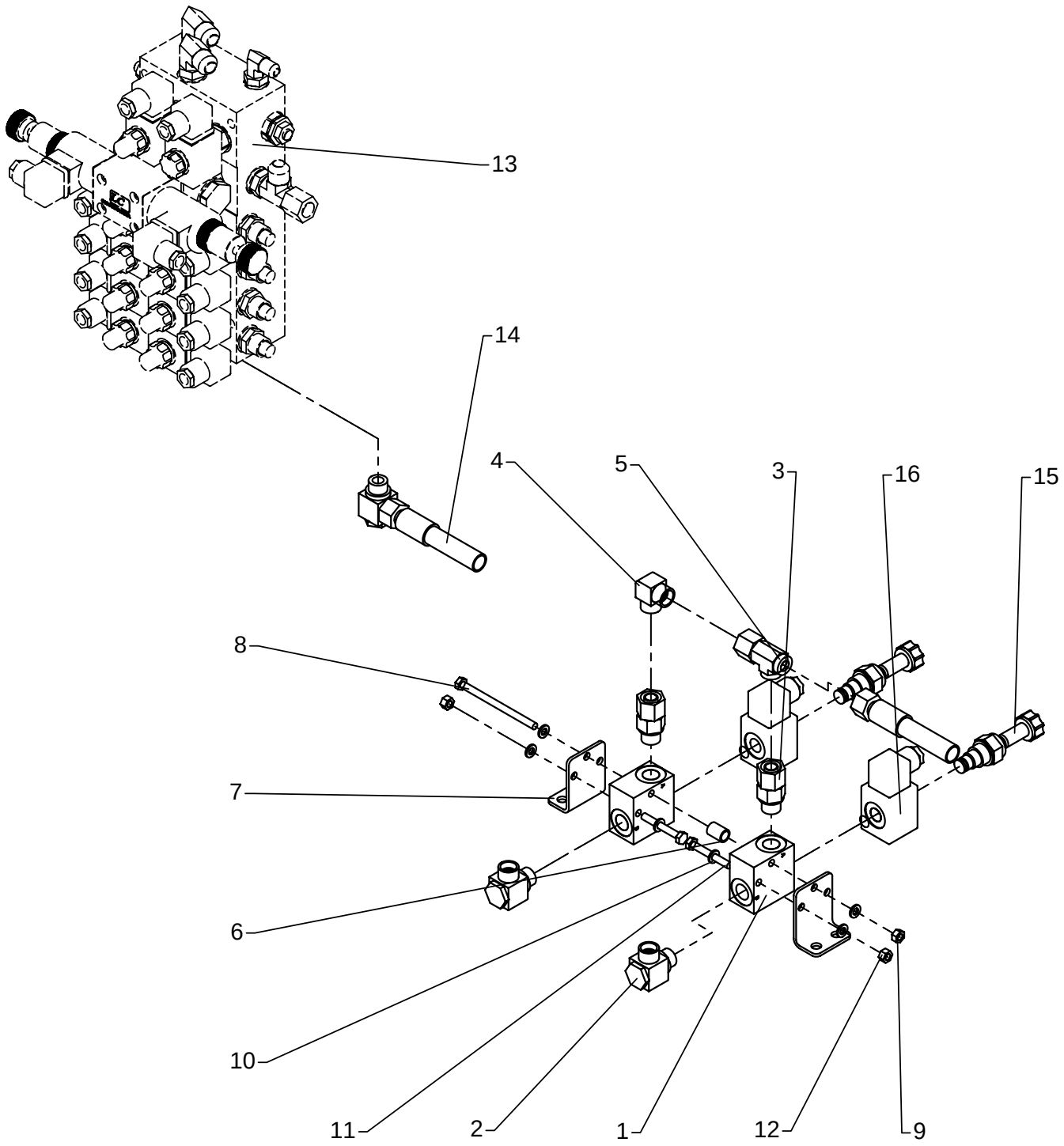

Stabilizer valve block, 6 available func.

As from / To loader no.:
Created: 26.01.2004
Modified:

Item no.	Qty.	Part no.	Description	Remarks
1	2	59771	Valve housing	
2	2	25130	Banjo connection	RSWV 12 LR
3	2	25240	Connection	EGESD 12 LR-WD
4	1	25129	Elbow connection	WV 12 L
5	1	25270	Connection	ELSD 12 L
6	1	6301203	Pipe	
7	2	6301202	Bracket	
8	1	30124	Steel bolt, stainless	M6 x 90
9	1	30854	Nut, stainless	
10	6	32302	Face washer, stainless	6 mm
11	2	30118	Steel bolt, stainless	M6 x 45
12	2	30884	Lock nut, stainless	M6
13	1	6649730	Stabilizer valve blcok, 8funct	
14	1	0017130	Hose	
15	2	59057	Solenoid valve	
16	2	61778	Solenoid	

72-516

Intern ref.: 6301220

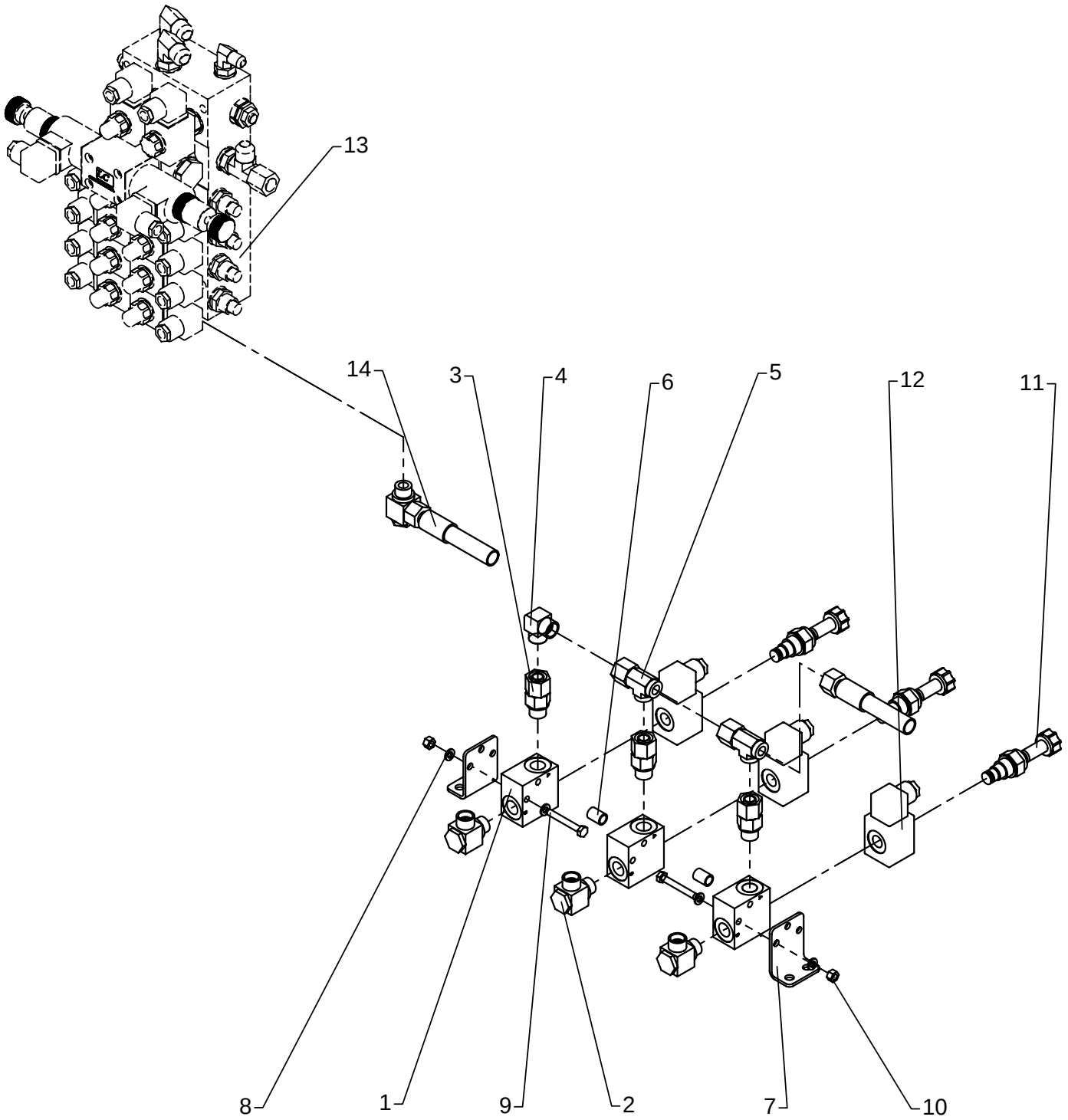

Stabilizer valve Block, 7 available func.

As from / To loader no.:
Created: 27.01.2004
Modified:

Item no.	Qty.	Part no.	Description	Remarks
1	3	59771	Valve housing	
2	3	25130	Banjo connection	RSWV 12 LR
3	3	25240	Connection	EGESD 12 LR-WD
4	1	25129	Elbow connection	WV 12 L
5	2	25270	Connection	ELSD 12 L
6	2	6301203	Pipe	
7	2	6301202	Bracket	
8	4	32302	Face washer, stainless	6 mm
9	2	30118	Steel bolt, stainless	M6 x 45
10	2	30884	Lock nut, stainless	M6
11	3	59057	Solenoid valve	
12	3	61778	Solenoid	
13	1	6649730	Stabilizer valve blcok, 8funct	
14	1	0017130	Hose	

72-516

Intern ref.: 6301230

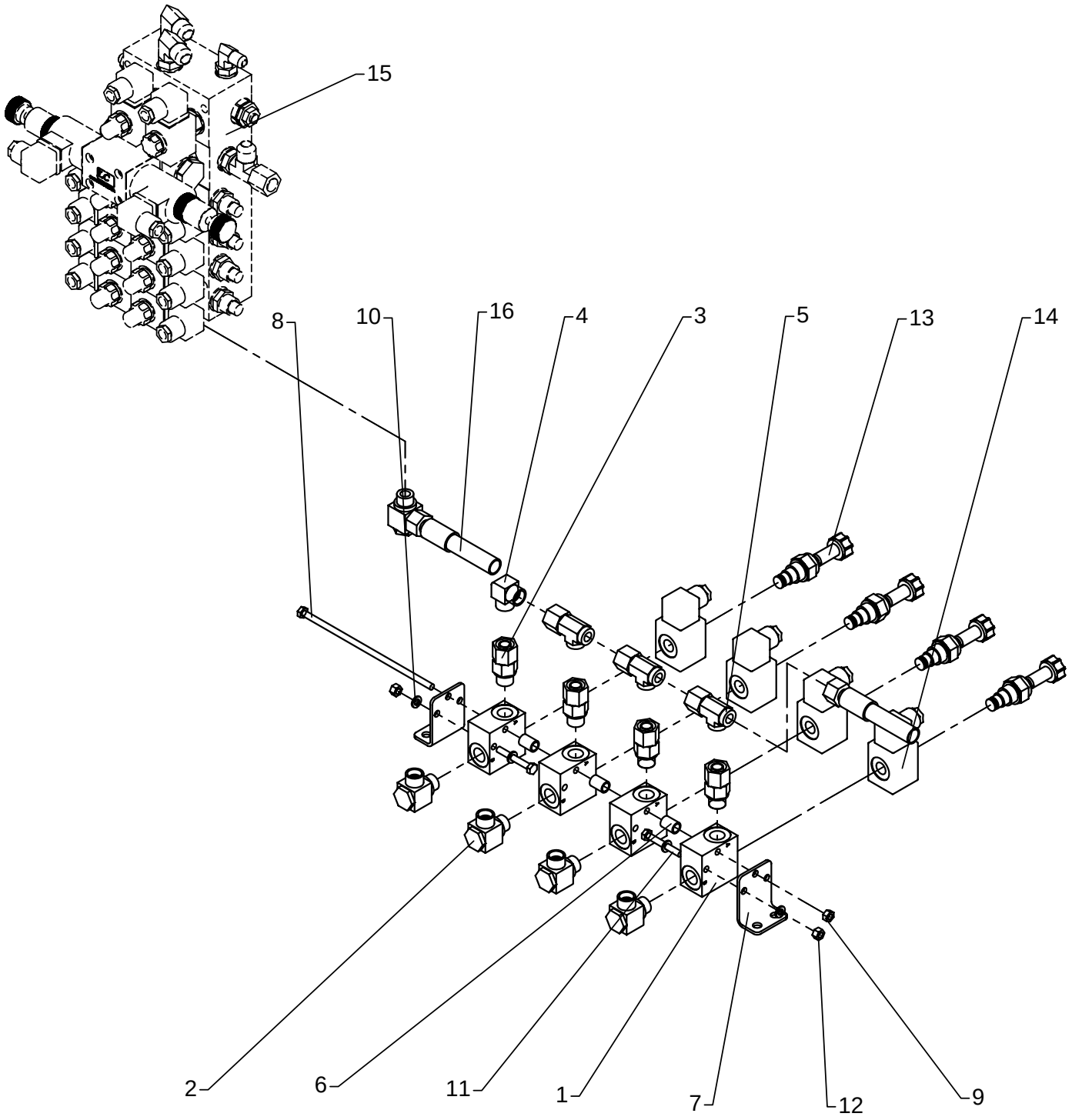

Stabilizer valve Block, 8 available func.

As from / To loader no.:
Created: 26.01.2004
Modified:

Item no.	Qty.	Part no.	Description	Remarks
1	4	59771	Valve housing	
2	4	25130	Banjo connection	RSWV 12 LR
3	4	25240	Connection	EGESD 12 LR-WD
4	1	25129	Elbow connection	WV 12 L
5	3	25270	Connection	ELSD 12 L
6	3	6301203	Pipe	
7	2	6301202	Bracket	
8	1	32257	Steel bolt	M6 x 180
9	1	30854	Nut, stainless	
10	4	32302	Face washer, stainless	6 mm
11	2	30118	Steel bolt, stainless	M6 x 45
12	2	30884	Lock nut, stainless	M6
13	4	59057	Solenoid valve	
14	4	61778	Solenoid	
15	1	6649730	Stabilizer valve blcok, 8funct	
16	1	0017130	Hose	

72-516

Intern ref.: 6302760

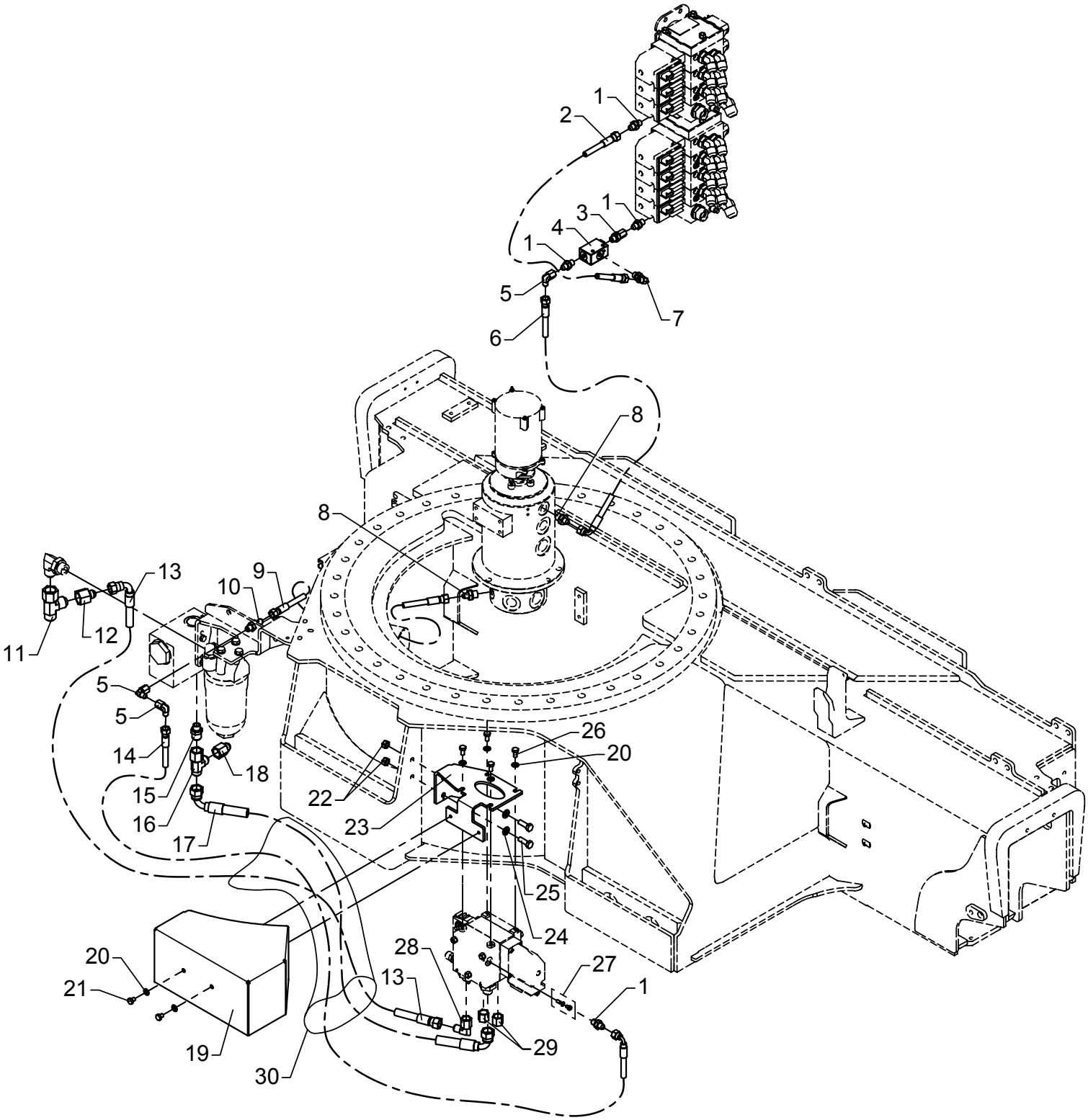

Extra RC function on base

As from / To loader no.: 97 00 00/
Created: 07.07.2004
Modified:

Item no.	Qty.	Part no.	Description	Remarks
1	4	25829	Straight connection	F40XS 8-1/4 JIC
2	1	62870	Hose	
3	1	26272	Straight connection	F64XS 14/16 - 3/8" JIC
4	1	60338	Shuttle valve	
5	3	25826	Elbow connection	C6XS 8 JIC
6	1	62901	Hose	
7	1	25858	Elbow connection	C40XS 12-3/8 JIC
8	2	25830	Straight connection	F40XS8 - 3/8 JIC
9	1	56130	Hose	
10	1	25823	Bulkhead connection	WTX-WLNS 8 JIC
11	1	25828	Connection	R6XS 20 JIC
12	1	25865	Reducing connection	TRTXS 8/20-12 JIC
13	1	62903	Hose	
14	1	62934	Hose	
15	1	25787	Connection	F40XS 14/16-3/8 JIC
16	1	25756	Connection	R6XS 12 JIC
17	1	62918	Hose JIC	
18	1	25872	Reduction	TRTXS 14/16-12 JIC
19	1	6302979	Valve protection	
20	6	31147	Washer, stainless	8 mm
21	2	30105	Set screw, stainless	M8 x 10
22	2	30858	Nut	
23	1	6302978	Valve bracket	
24	2	31565	Washer, stainless	10 mm
25	2	31515	Set screw, stainless	M10 x 30
26	4	30131	Set screw, stainless	M8 x 16
27	1	62065	Closed center kit	
28	1	25877	Elbow connection	C6XS 12 JIC
29	2	25876	Screw cap	FNTXS 12 JIC
30	1	62587	Protective cover	95 x 800 mm

72-516

Intern ref.: 6300260

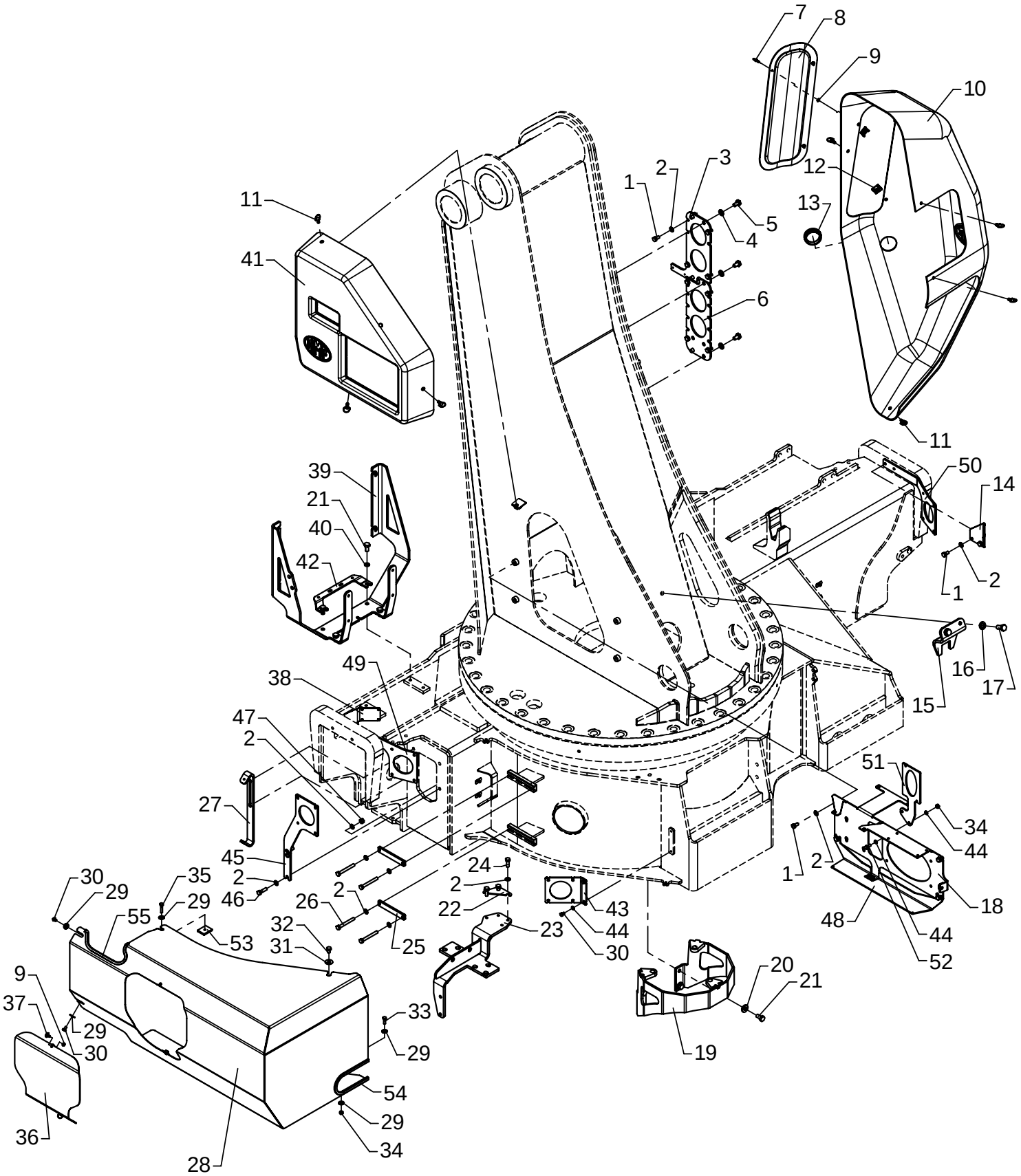

Brackets and protection plates

As from / To loader no.: 97 00 00 / 97 00 22
Created: 17.11.2003
Modified: 10.01.2005

Item no.	Qty.	Part no.	Description	Remarks
1	16	30131	Set screw, stainless	M8 x 16
2	27	31147	Washer, stainless	8 mm
3	1	6300603	Valve bracket, 2/3 distr.	
4	6	31177	Washer	10 mm
5	6	30153	Set screw	M10 x 16
6	1	6300604	Valve bracket, 2/4 distr.	
7	3	45129	Lock pin + ring	ø4 x 12 mm
8	1	64403	Cover	
9	5	45132	Washer	4 mm
10	1	64401	Protection plate	
11	7	45126	Lock pin + ring	ø6 x 14 mm
12	3	45131	Fastener	4 mm
13	1	64344	Plastic plug	
14	1	6302047	Fitting	STDRC
15	1	6302328	Carrier	
16	2	31131	Washer	12 mm
17	2	30176	Set screw	M12 x 25
18	1	6300883	Mounting bracket, Scanreco	
19	1	6300316	Adapter for swivel coupling	
20	4	31756	Washer	10 mm
21	8	30154	Set screw	M10 x 20
22	1	6300788	Division plate	
23	1	6300781	Bracket for filter	
24	3	31009	Set screw	M8 x 25
25	2	6300786	Threaded plate	
26	4	30142	Steel bolt, stainless	M8 x 70
27	1	6302876	Bracket	
28	1	6302871	Protection plate	
29	5	31134	Washer, stainless	6 mm
30	4	30110	Set screw, stainless	M6 x 10
31	1	31136	Washer, stainless	24 x 8,4 x 2
32	1	30130	Set screw, stainless	M8 x 12
33	1	30113	Set screw, stainless	M6 x 20
34	3	30884	Lock nut, stainless	M6
35	1	30115	Steel bolt, stainless	M6 x 30
36	1	6302875	Door	
37	2	45128	Lock pin + ring	ø4 x 10 mm
38	1	6302046	Fitting	STDRC
39	1	6300787	Cooler bracket	
40	4	31156	Spring washer	10 mm

72-516

Intern ref.: 6300260

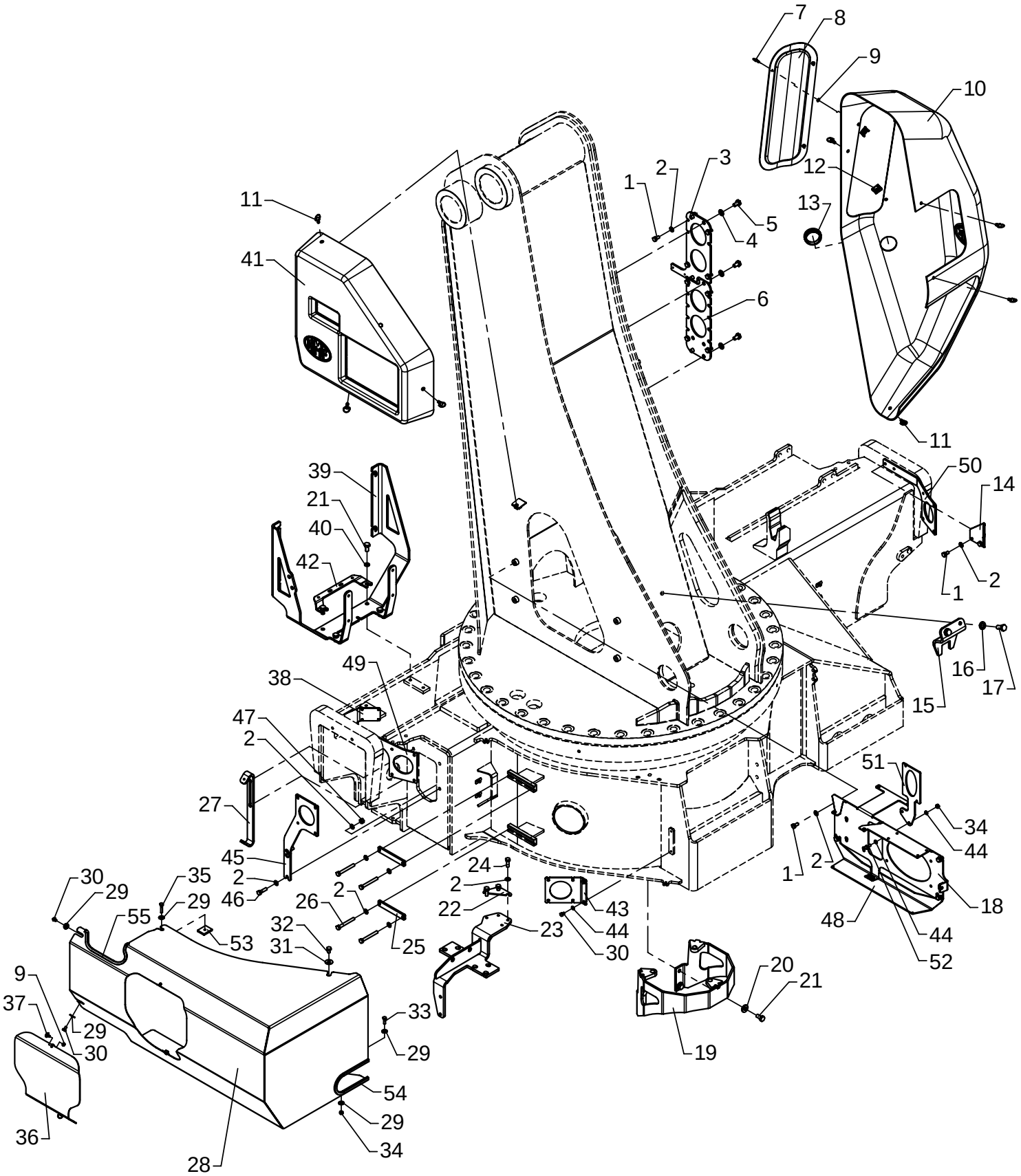

Brackets and protection plates

As from / To loader no.: 97 00 00 / 97 00 22
Created: 17.11.2003
Modified: 10.01.2005

Item no.	Qty.	Part no.	Description	Remarks
41	1	64402	Protection plate	
42	1	6300734	Bracket	EVS
43	1	6300877	Mounting plate	
44	6	32302	Face washer, stainless	6 mm
45	1	6300979	Bracket for ECT 5075	
46	2	30135	Set screw, stainless	M8 x 30
47	2	30886	Lock nut, stainless	M8
48	1	6300946	Guide rails for cables	
49	1	6300968	Bracket, left	TSPR
50	1	6300967	Bracket, right	TSPR
51	1	6300969	Bracket	
52	2	30112	Set screw, stainless	M6 x 16
53	1	31418	Clamp, double	Only use bottom plate
54	1	46586	Rubber protection	330 mm
55	1	46586	Rubber protection	255 mm

72-516

Intern ref.: 6300260

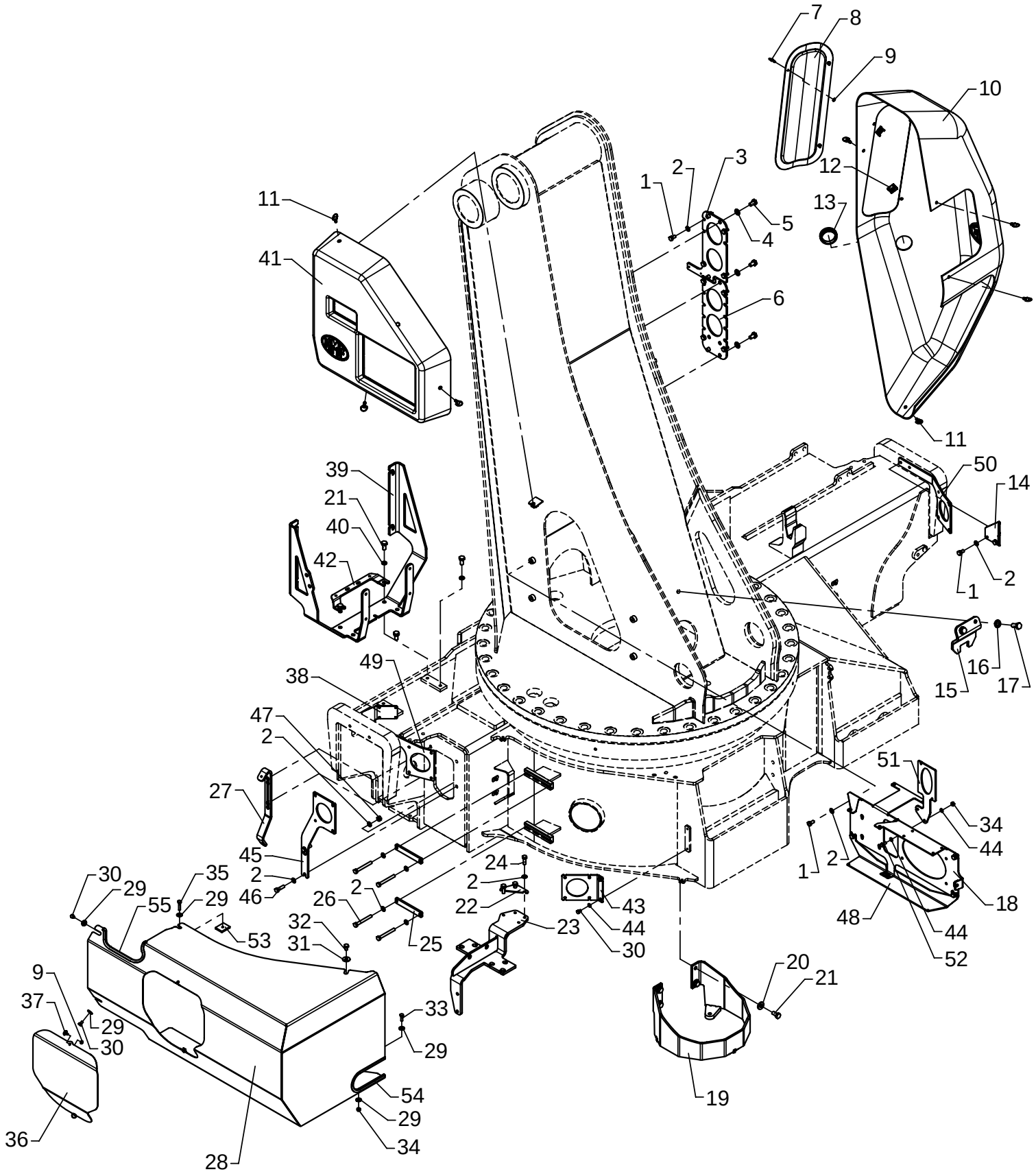

Brackets and protection plates

As from / To loader no.: 97 00 23 / 97 00 26
Created: 10.01.2005
Modified:

Item no.	Qty.	Part no.	Description	Remarks
1	16	30131	Set screw, stainless	M8 x 16
2	27	31147	Washer, stainless	8 mm
3	1	6300603	Valve bracket, 2/3 distr.	
4	6	31177	Washer	10 mm
5	6	30153	Set screw	M10 x 16
6	1	6300604	Valve bracket, 2/4 distr.	
7	3	45129	Lock pin + ring	ø4 x 12 mm
8	1	64403	Cover	
9	5	45132	Washer	4 mm
10	1	64401	Protection plate	
11	7	45126	Lock pin + ring	ø6 x 14 mm
12	3	45131	Fastener	4 mm
13	1	64344	Plastic plug	
14	1	6302047	Fitting	STDRC
15	1	6302648	Carrier	
16	2	31131	Washer	12 mm
17	2	30176	Set screw	M12 x 25
18	1	6300883	Mounting bracket, Scanreco	
19	1	6300756	Adapter for swivel coupling	
20	4	31756	Washer	10 mm
21	8	30154	Set screw	M10 x 20
22	1	6300788	Division plate	
23	1	6300781	Bracket for filter	
24	3	31009	Set screw	M8 x 25
25	2	6300786	Threaded plate	
26	4	30142	Steel bolt, stainless	M8 x 70
27	1	6302876	Bracket	
28	1	6302871	Protection plate	
29	5	31134	Washer, stainless	6 mm
30	4	30110	Set screw, stainless	M6 x 10
31	1	31136	Washer, stainless	24 x 8,4 x 2
32	1	30130	Set screw, stainless	M8 x 12
33	1	30113	Set screw, stainless	M6 x 20
34	3	30884	Lock nut, stainless	M6
35	1	30115	Steel bolt, stainless	M6 x 30
36	1	6302875	Door	
37	2	45128	Lock pin + ring	ø4 x 10 mm
38	1	6302046	Fitting	STDRC
39	1	6300787	Cooler bracket	
40	4	31156	Spring washer	10 mm

72-516

Intern ref.: 6300260

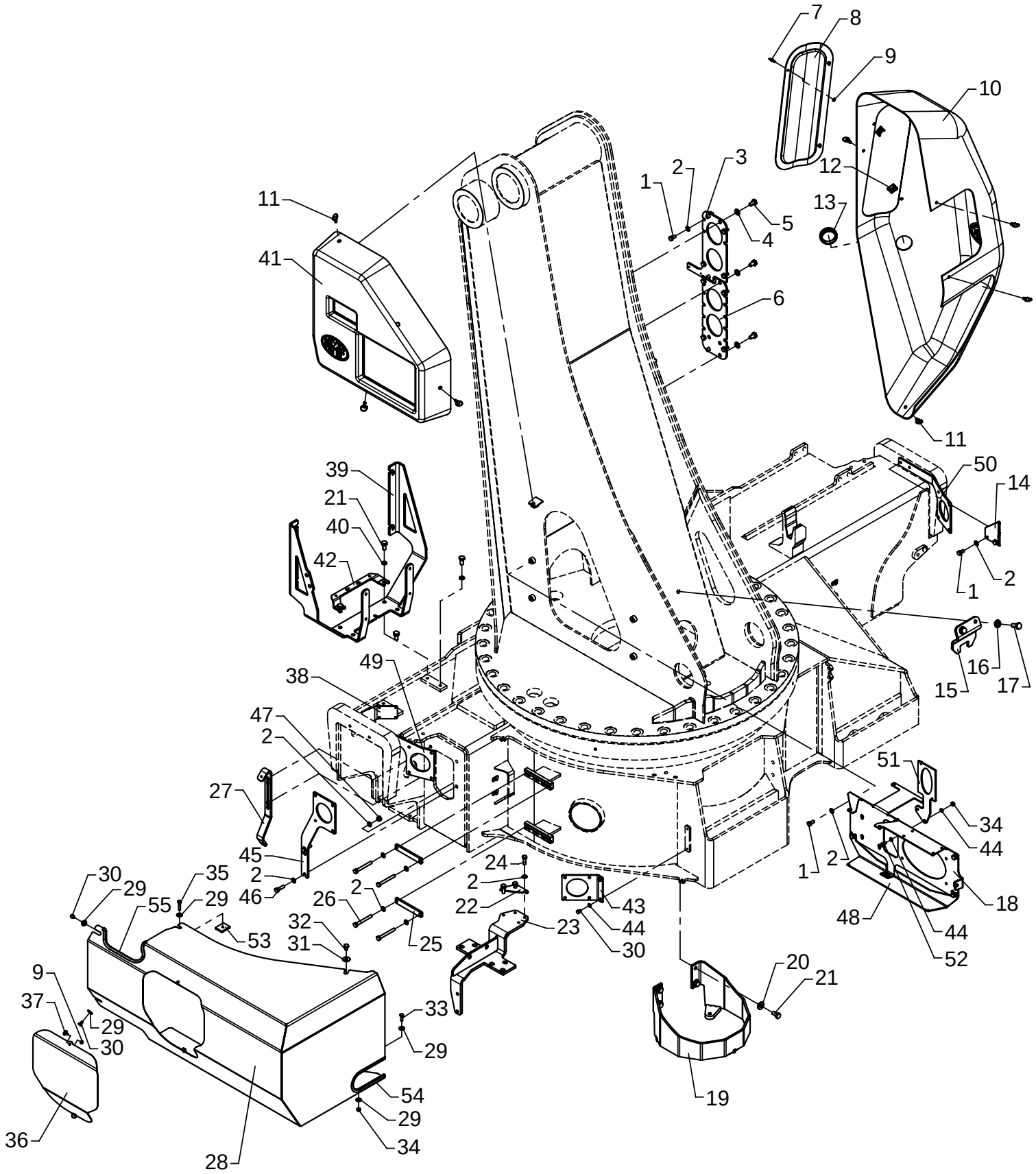

Brackets and protection plates

As from / To loader no.: 97 00 23 / 97 00 26
Created: 10.01.2005
Modified:

Item no.	Qty.	Part no.	Description	Remarks
41	1	64402	Protection plate	
42	1	6300734	Bracket	EVS
43	1	6300877	Mounting plate	
44	6	32302	Face washer, stainless	6 mm
45	1	6300979	Bracket for ECT 5075	
46	2	30135	Set screw, stainless	M8 x 30
47	2	30886	Lock nut, stainless	M8
48	1	6300946	Guide rails for cables	
49	1	6300968	Bracket, left	TSPR
50	1	6300967	Bracket, right	TSPR
51	1	6300969	Bracket	
52	2	30112	Set screw, stainless	M6 x 16
53	1	31418	Clamp, double	Only use bottom plate
54	1	46586	Rubber protection	330 mm
55	1	46586	Rubber protection	255 mm

72-516

Intern ref.: 6300260

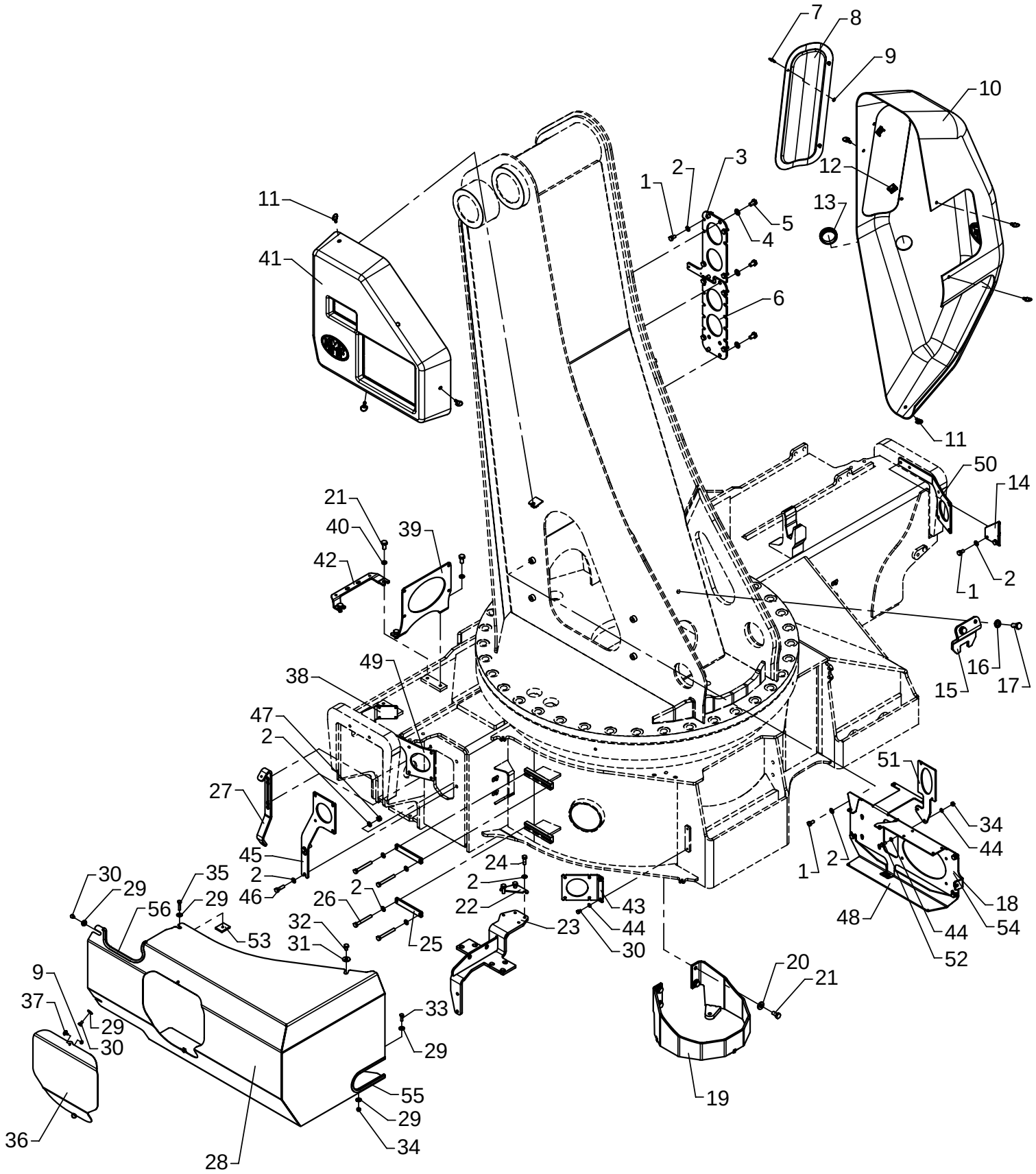

Brackets and protection plates

As from / To loader no.: 97 00 27 /
Created: 10.01.2005
Modified:

Item no.	Qty.	Part no.	Description	Remarks
1	16	30131	Set screw, stainless	M8 x 16
2	27	31147	Washer, stainless	8 mm
3	1	6300603	Valve bracket, 2/3 distr.	
4	6	31177	Washer	10 mm
5	6	30153	Set screw	M10 x 16
6	1	6300604	Valve bracket, 2/4 distr.	
7	3	45129	Lock pin + ring	ø4 x 12 mm
8	1	64403	Cover	
9	5	45132	Washer	4 mm
10	1	64401	Protection plate	
11	7	45126	Lock pin + ring	ø6 x 14 mm
12	3	45131	Fastener	4 mm
13	1	64344	Plastic plug	
14	1	6302047	Fitting	STDRC
15	1	6302648	Carrier	
16	2	31131	Washer	12 mm
17	2	30176	Set screw	M12 x 25
18	1	6300883	Mounting bracket, Scanreco	
19	1	6300756	Adapter for swivel coupling	
20	4	31756	Washer	10 mm
21	8	30154	Set screw	M10 x 20
22	1	6300788	Division plate	
23	1	6300781	Bracket for filter	
24	3	31009	Set screw	M8 x 25
25	2	6300786	Threaded plate	
26	4	30142	Steel bolt, stainless	M8 x 70
27	1	6302876	Bracket	
28	1	6302871	Protection plate	
29	5	31134	Washer, stainless	6 mm
30	4	30110	Set screw, stainless	M6 x 10
31	1	31136	Washer, stainless	24 x 8,4 x 2
32	1	30130	Set screw, stainless	M8 x 12
33	1	30113	Set screw, stainless	M6 x 20
34	3	30884	Lock nut, stainless	M6
35	1	30115	Steel bolt, stainless	M6 x 30
36	1	6302875	Door	
37	2	45128	Lock pin + ring	ø4 x 10 mm
38	1	6302046	Fitting	STDRC
39	1	6300881	Bracket, electric box	
40	4	31156	Spring washer	10 mm

72-516

Intern ref.: 6300260

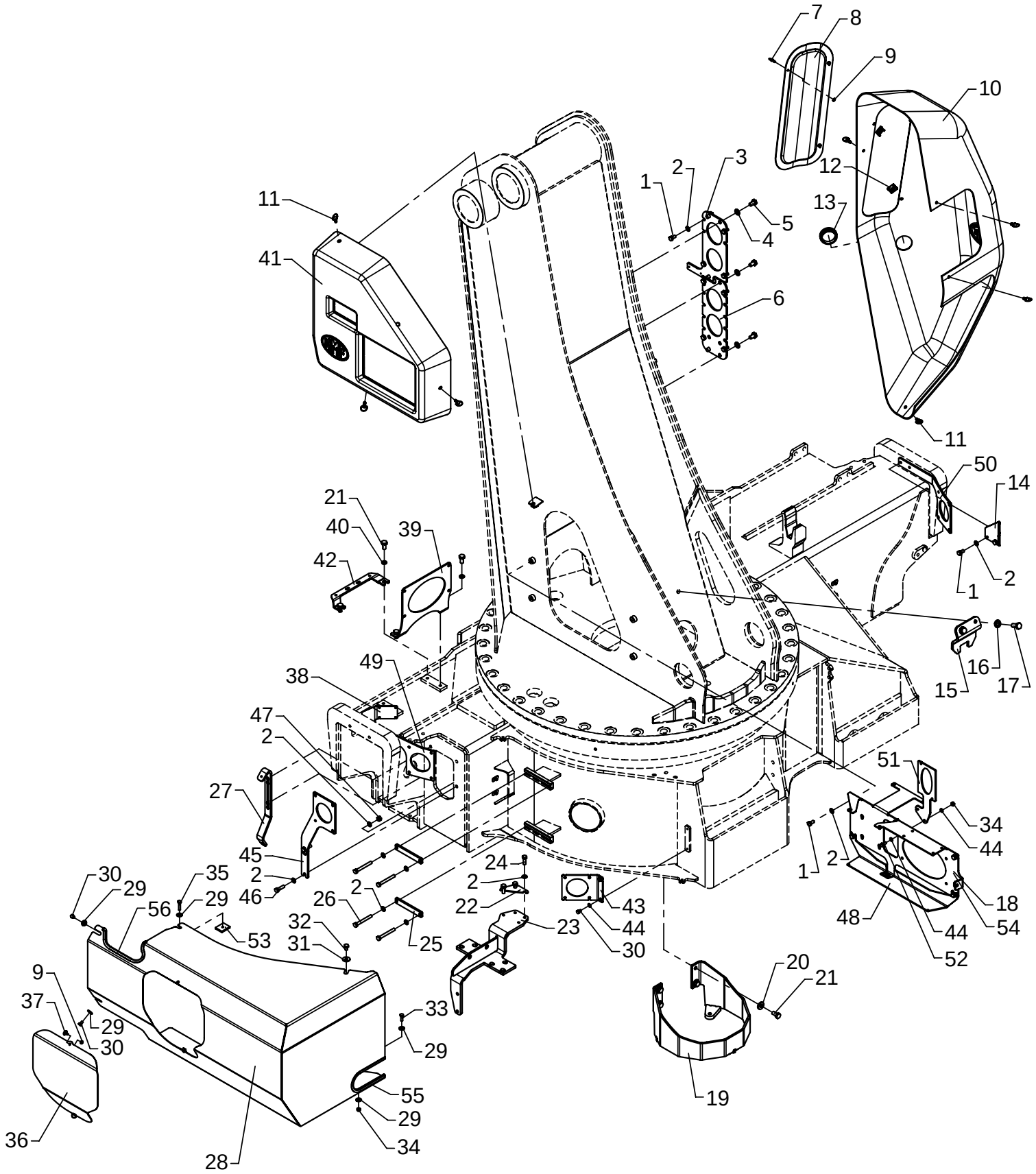

Brackets and protection plates

As from / To loader no.: 97 00 27 /
Created: 10.01.2005
Modified:

Item no.	Qty.	Part no.	Description	Remarks
41	1	64402	Protection plate	
42	1	6300734	Bracket	EVS
43	1	6300877	Mounting plate	
44	6	32302	Face washer, stainless	6 mm
45	1	6300979	Bracket for ECT 5075	
46	2	30135	Set screw, stainless	M8 x 30
47	2	30886	Lock nut, stainless	M8
48	1	6300946	Guide rails for cables	
49	1	6300968	Bracket, left	TSPR
50	1	6300967	Bracket, right	TSPR
51	1	6300969	Bracket	
52	2	30112	Set screw, stainless	M6 x 16
53	1	31418	Clamp, double	Only use bottom plate
54	1	6300754	Mounting bracket, Hetronic	
55	1	46586	Rubber protection	330 mm
56	1	46586	Rubber protection	255 mm

72-516

Intern ref.: 6300900

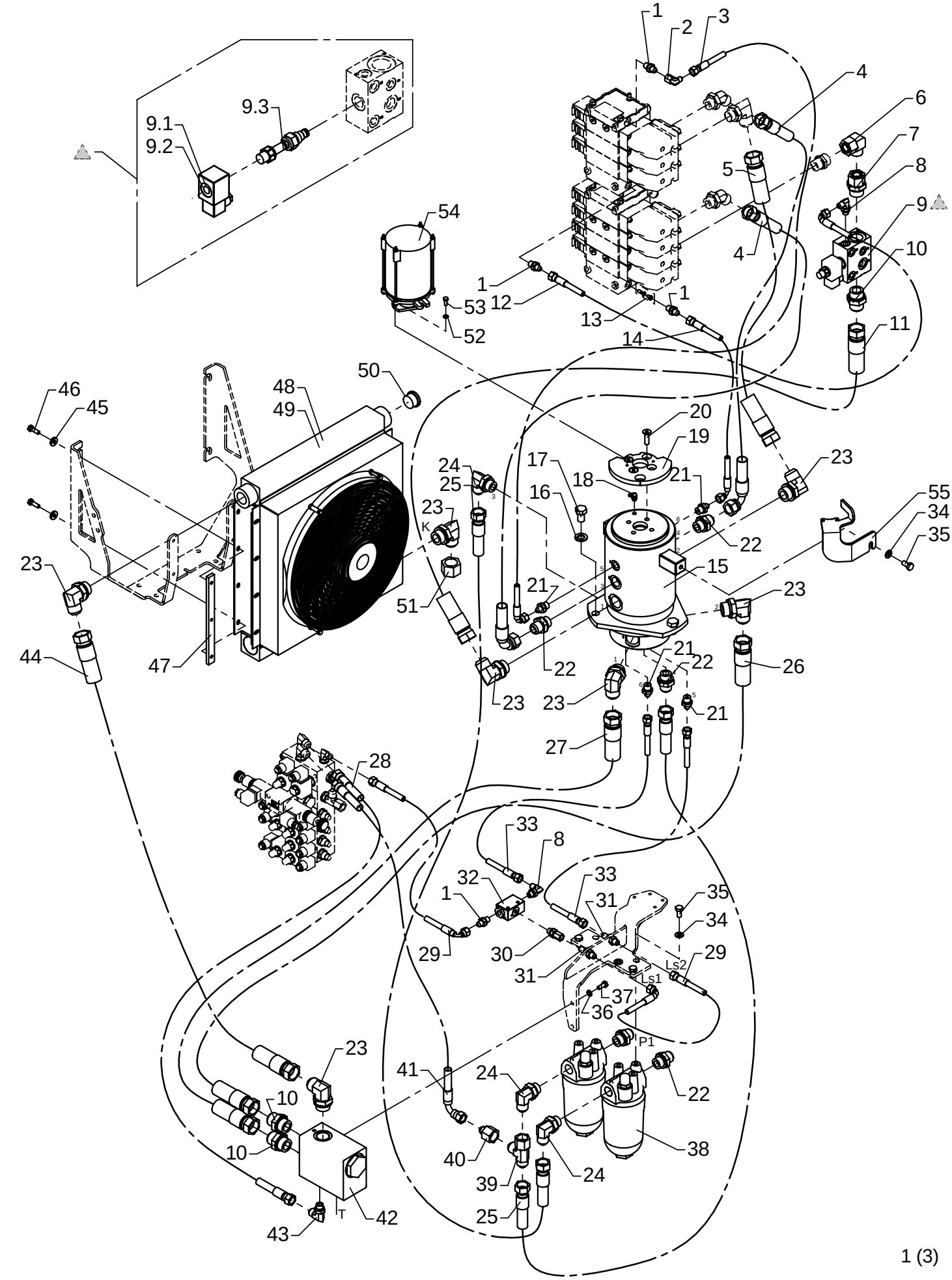

Hydraulic system, pump and return hoses, 1 circuit + fixed pump

As from / To loader no.: 97 00 00 / 97 00 22
Created: 17.11.2003
Modified: 17.06.2005

Item no.	Qty.	Part no.	Description	Remarks
1	4	25829	Straight connection	F40XS 8-1/4 JIC
2	1	25826	Elbow connection	C6XS 8 JIC
3	1	62934	Hose	1/4" x 1330 mm V/O JIC
4	2	62977	Hose	5/8" x 1100 mm V/O JIC
5	1	56046	Hose	1" x 1000 mm O/O JIC
6	1	25209	Elbow connection	EWSD 22 L
7	1	26391	Straight connection	EGESD 22 LR 1-WD
8	2	25858	Elbow connection	C40XS 12-3/8 JIC
9	1	59061	Dump valve	
		61777	Solenoid	12V
		61778	Solenoid	26V
		59642	Magnet coil	
10	3	25863	Straight connection	F40XS 25-1 JIC
11	1	56048	Hose	1" x 900 mm O/O JIC
12	1	62887	Hose	1/4" x 550 mm V/O JIC
13	1	62065	Closed center kit	
14	1	62901	Hose	1/4" x 900 mm V/O JIC
15	1	58727	Swivel coupling, hydraulic	
16	3	31135	Washer	16 mm
17	3	30266	Set screw	M16 x 25
18	1	31322	Lubricator	1/8 RG - 90
19	1	6301196	Cam disc, 2-stage LMB	
20	4	30955	Countersunk screw	MK10 x 35
21	4	25830	Straight connection	F40XS 8-3/8 JIC
22	5	25834	Straight connection	F40XS 18/20-3/4 JIC
23	7	26267	Elbow connection	C40XS 25-1 JIC
24	3	26693	Elbow connection	C40XS 18/20-3/4 JIC
25	2	56045	Hose	5/8" x 1450 mm O/O JIC
26	1	56050	Hose	1" x 1300 mm O/O JIC
27	1	56049	Hose	1" x 1050 mm O/O JIC
28	1	62957	Hose JIC	3/8" x 600 mm O/O JIC
29	2	62974	Hose	1/4" x 350 mm V/O JIC
30	1	26272	Straight connection	F64XS 14/16 - 3/8" JIC
31	2	25823	Bulkhead connection	WTX-WLNS 8 JIC
32	1	60338	Shuttle valve	
33	2	56130	Hose	1/4" x 1150 mm O/O JIC
34	7	31177	Washer	10 mm
35	7	30154	Set screw	M10 x 20
36	2	31155	Spring washer	8 mm
37	2	30132	Set screw, stainless	M8 x 20

72-516

Intern ref.: 6300900

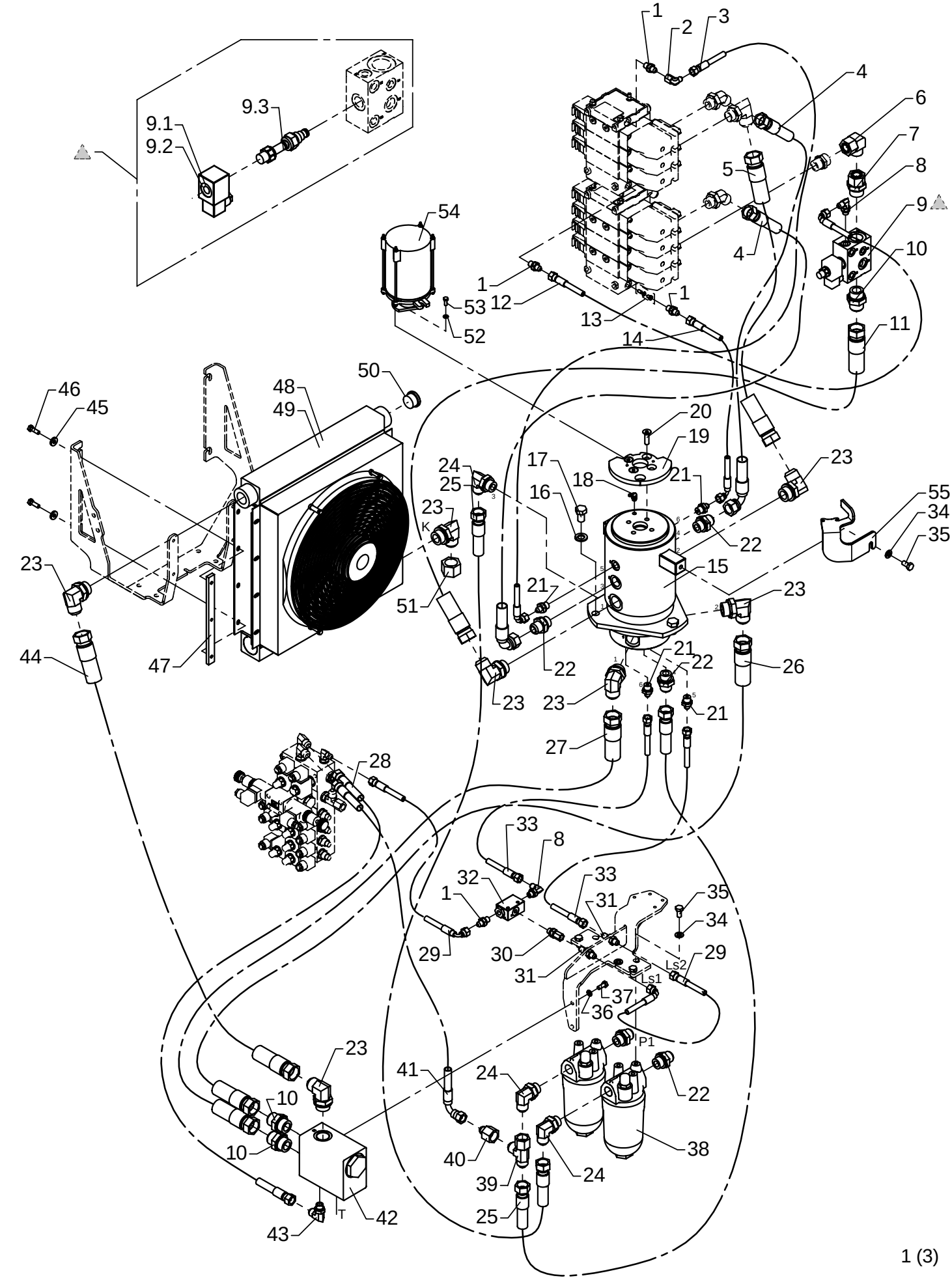

Hydraulic system, pump and return hoses, 1 circuit + fixed pump

As from / To loader no.: 97 00 00 / 97 00 22
Created: 17.11.2003
Modified: 17.06.2005

Item no.	Qty.	Part no.	Description	Remarks
38	2	60201	High pressure filter	
39	1	25828	Connection	R6XS 20 JIC
40	1	25865	Reducing connection	TRTXS 8/20-12 JIC
41	1	62956	Hose	3/8" x 550 mm V/O JIC
42	1	59056	Cooler valve	
43	1	25838	Elbow connection	C40XS 12-3/8 JIC
44	1	56058	Hose	3/4" x 1550 mm O/O JIC
45	4	31755	Washer	8 mm
46	4	30134	Set screw, stainless	M8 x 25
47	2	6381974	Threaded disc	
48	1	59310	Oil cooler 24 V	
49	1	59312	Oil cooler 12 V	
50	1	26321	Plug	VS-R 1" WD
51	1	25848	Screw cap JIC	FNTXS 25 JIC
52	2	31154	Spring washer, stainless	6 mm
53	2	30112	Set screw, stainless	M6 x 16
54	1	28549	Swivel coupling, electric	
55	1	6301197	Carrier	

72-516

Intern ref.: 6300900

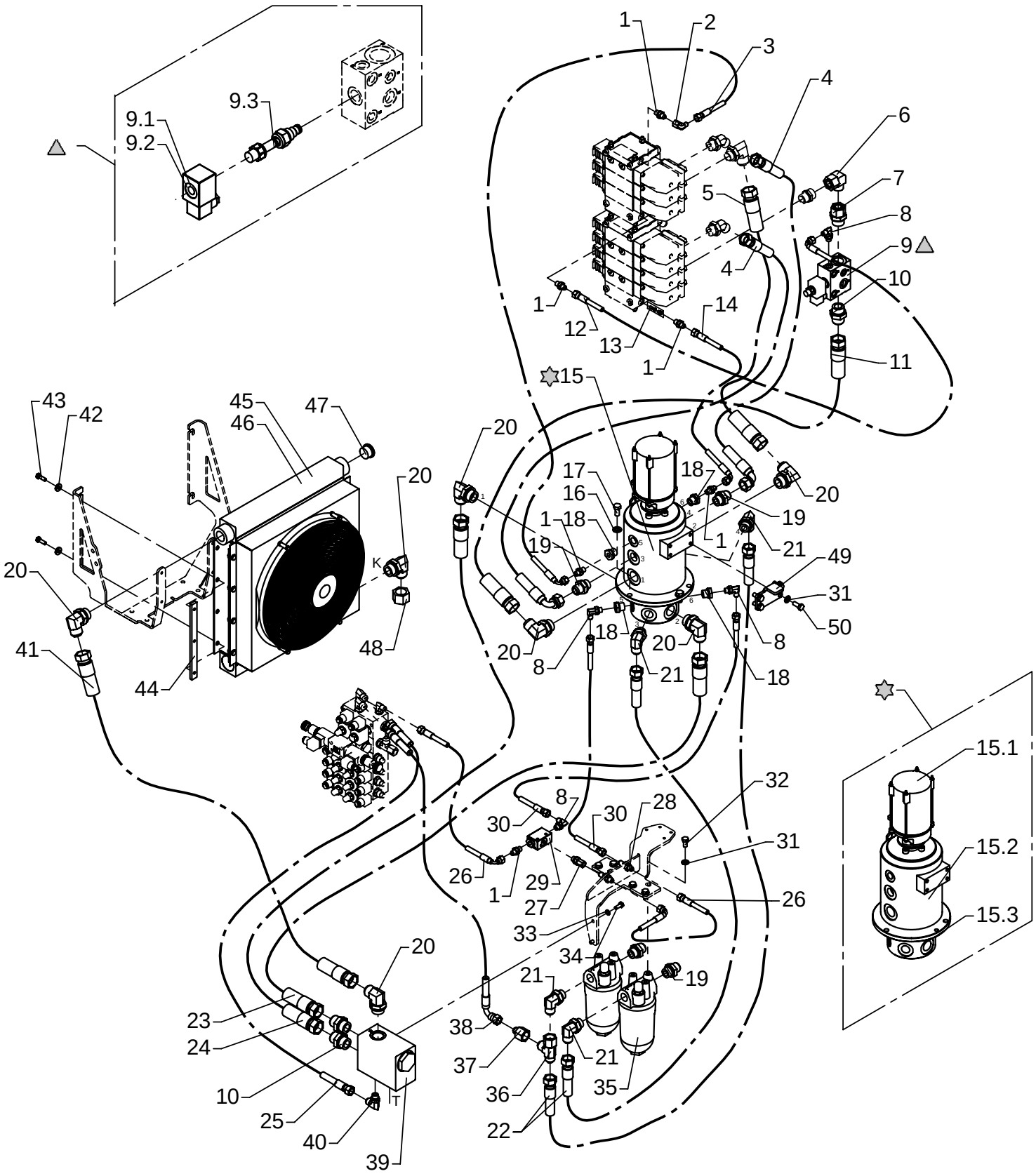

Hydraulic system, pump and return hoses, 1 circuit + fixed pump

As from / To loader no.: 97 00 23 / 97 00 26
Created: 17.06.2005
Modified:

Item no.	Qty.	Part no.	Description	Remarks
1	6	25829	Straight connection	F40XS 8-1/4 JIC
2	1	25826	Elbow connection	C6XS 8 JIC
3	1	62934	Hose	1/4" x 1330 mm V/O JIC
4	2	62977	Hose	5/8" x 1100 mm V/O JIC
5	1	56046	Hose	1" x 1000 mm O/O JIC
6	1	25209	Elbow connection	EWSD 22 L
7	1	26391	Straight connection	EGESD 22 LR 1-WD
8	4	25858	Elbow connection	C40XS 12-3/8 JIC
9	1	59061	Dump valve	
		61777	Solenoid	12V
		61778	Solenoid	26V
		59642	Magnet coil	
10	3	25863	Straight connection	F40XS 25-1 JIC
11	1	56048	Hose	1" x 900 mm O/O JIC
12	1	62887	Hose	1/4" x 550 mm V/O JIC
13	1	62065	Closed center kit	
14	1	62901	Hose	1/4" x 900 mm V/O JIC
15	1	49105	Unit hydraulic/electric	
		28549	Swivel coupling, electric	
		49106	Unit hydraulic	
		49115	Seal kit	
16	3	31131	Washer	12 mm
17	3	30176	Set screw	M12 x 25
18	4	25180	Connection	RED-R 1/2-WD/R 1/4
19	4	25834	Straight connection	F40XS 18/20-3/4 JIC
20	7	26267	Elbow connection	C40XS 25-1 JIC
21	4	26693	Elbow connection	C40XS 18/20-3/4 JIC
22	2	56045	Hose	5/8" x 1450 mm O/O JIC
23	1	56050	Hose	1" x 1300 mm O/O JIC
24	1	56049	Hose	1" x 1050 mm O/O JIC
25	1	62957	Hose JIC	3/8" x 600 mm O/O JIC
26	2	62974	Hose	1/4" x 350 mm V/O JIC
27	1	26272	Straight connection	F64XS 14/16 - 3/8" JIC
28	2	25823	Bulkhead connection	WTX-WLNS 8 JIC
29	1	60338	Shuttle valve	
30	2	56130	Hose	1/4" x 1150 mm O/O JIC
31	10	31177	Washer	10 mm
32	6	30154	Set screw	M10 x 20
33	2	31155	Spring washer	8 mm
34	2	30132	Set screw, stainless	M8 x 20

72-516

Intern ref.: 6300900

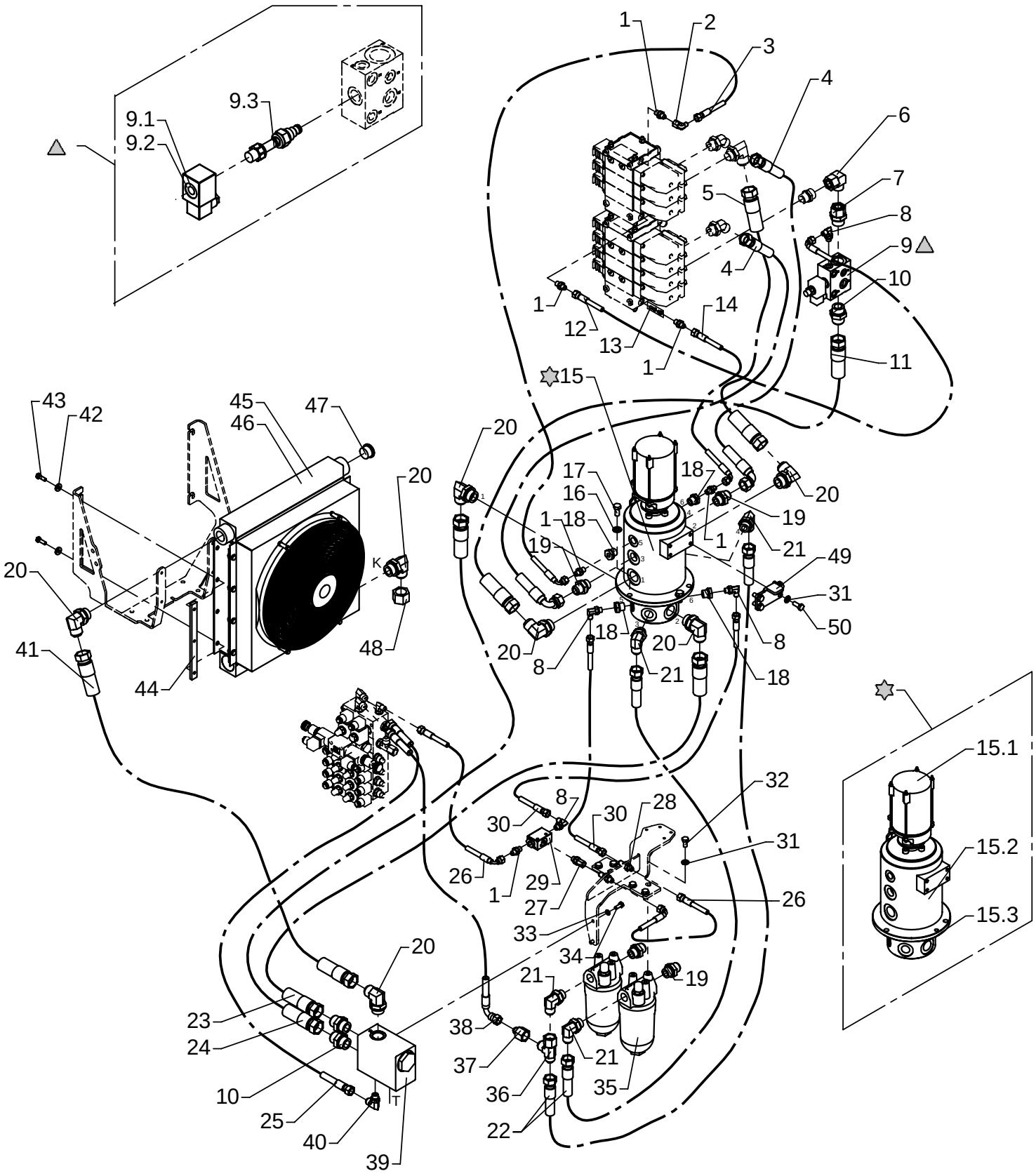

Hydraulic system, pump and return hoses, 1 circuit + fixed pump

As from / To loader no.: 97 00 23 / 97 00 26
Created: 17.06.2005
Modified:

Item no.	Qty.	Part no.	Description	Remarks
35	2	60201	High pressure filter	
36	1	25828	Connection	R6XS 20 JIC
37	1	25865	Reducing connection	TRTXS 8/20-12 JIC
38	1	62956	Hose	3/8" x 550 mm V/O JIC
39	1	59056	Cooler valve	
40	1	25838	Elbow connection	C40XS 12-3/8 JIC
41	1	56058	Hose	3/4" x 1550 mm O/O JIC
42	4	31755	Washer	8 mm
43	4	30134	Set screw, stainless	M8 x 25
44	2	6381974	Threaded disc	
45	1	59310	Oil cooler 24 V	
46	1	59312	Oil cooler 12 V	
47	1	26321	Plug	VS-R 1" WD
48	1	25848	Screw cap JIC	FNTXS 25 JIC
49	1	6302621	Carrier fitting	
50	4	30155	Set screw	M10 x 25

72-516

Intern ref.: 6300900

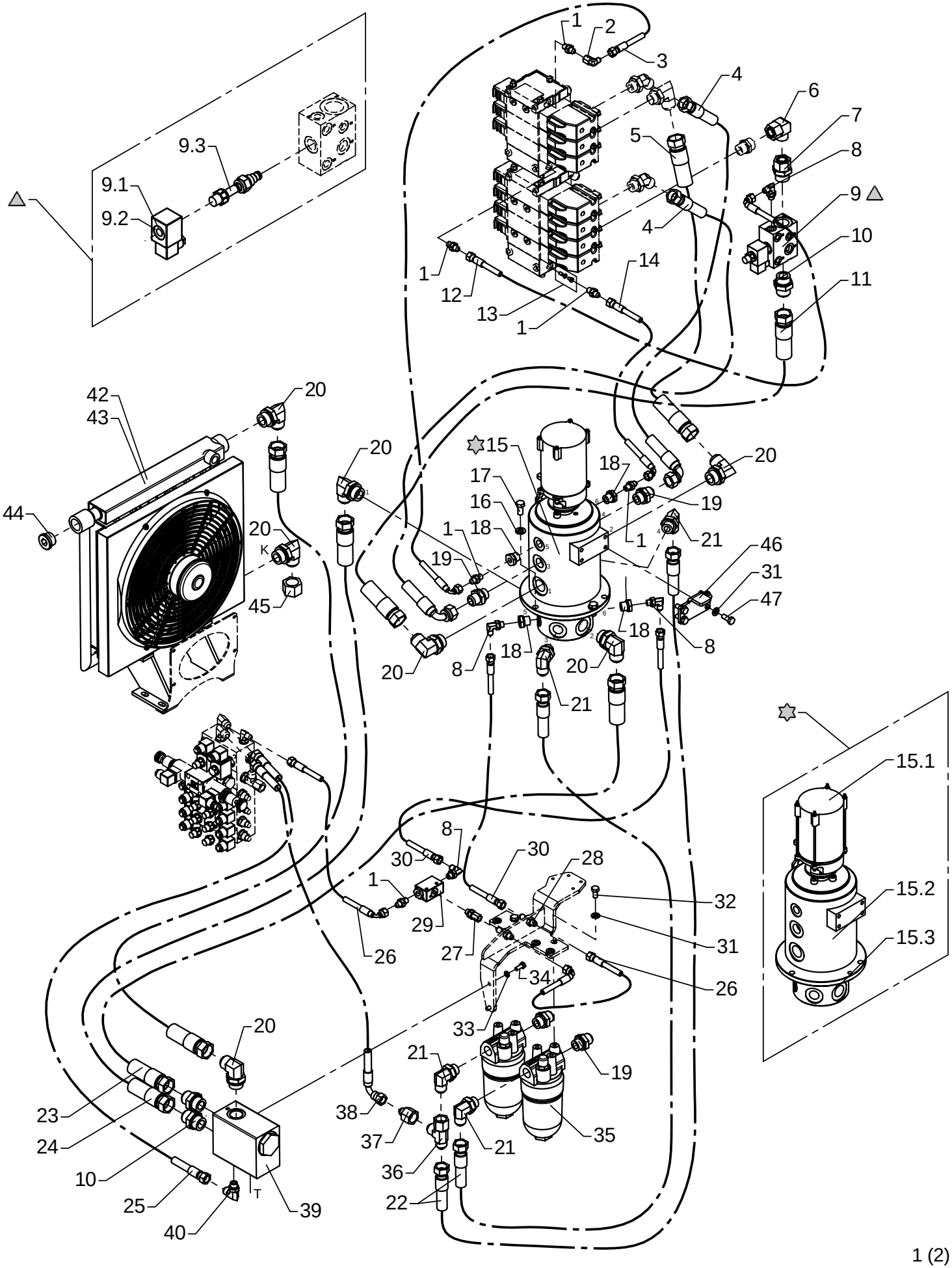

Hydraulic system, pump and return hoses, 1 circuit + fixed pump

As from / To loader no.: 97 00 27 /
Created: 17.06.2005
Modified:

Item no.	Qty.	Part no.	Description	Remarks
1	6	25829	Straight connection	F40XS 8-1/4 JIC
2	1	25826	Elbow connection	C6XS 8 JIC
3	1	62934	Hose	1/4" x 1330 mm V/O JIC
4	2	62977	Hose	5/8" x 1100 mm V/O JIC
5	1	56046	Hose	1" x 1000 mm O/O JIC
6	1	25209	Elbow connection	EWSD 22 L
7	1	26391	Straight connection	EGESD 22 LR 1-WD
8	4	25858	Elbow connection	C40XS 12-3/8 JIC
9	1	59061	Dump valve	
		61777	Solenoid	12V
		61778	Solenoid	26V
		59642	Magnet coil	
10	3	25863	Straight connection	F40XS 25-1 JIC
11	1	56048	Hose	1" x 900 mm O/O JIC
12	1	62887	Hose	1/4" x 550 mm V/O JIC
13	1	62065	Closed center kit	
14	1	62901	Hose	1/4" x 900 mm V/O JIC
15	1	49105	Swivel coupling	
		28549	Swivel coupling, electric	
		49106	Unit hydraulic	
		49115	Seal kit	
16	3	31131	Washer	12 mm
17	3	30176	Set screw	M12 x 25
18	4	25180	Connection	RED-R 1/2-WD/R 1/4
19	4	25834	Straight connection	F40XS 18/20-3/4 JIC
20	7	26267	Elbow connection	C40XS 25-1 JIC
21	4	26693	Elbow connection	C40XS 18/20-3/4 JIC
22	2	56045	Hose	5/8" x 1450 mm O/O JIC
23	1	56050	Hose	1" x 1300 mm O/O JIC
24	1	56049	Hose	1" x 1050 mm O/O JIC
25	1	62957	Hose JIC	3/8" x 600 mm O/O JIC
26	2	62974	Hose	1/4" x 350 mm V/O JIC
27	1	26272	Straight connection	F64XS 14/16 - 3/8" JIC
28	2	25823	Bulkhead connection	WTX-WLNS 8 JIC
29	1	60338	Shuttle valve	
30	2	56130	Hose	1/4" x 1150 mm O/O JIC
31	10	31177	Washer	10 mm
32	6	30154	Set screw	M10 x 20
33	2	31155	Spring washer	8 mm
34	2	30132	Set screw, stainless	M8 x 20

72-516

Intern ref.: 6300900

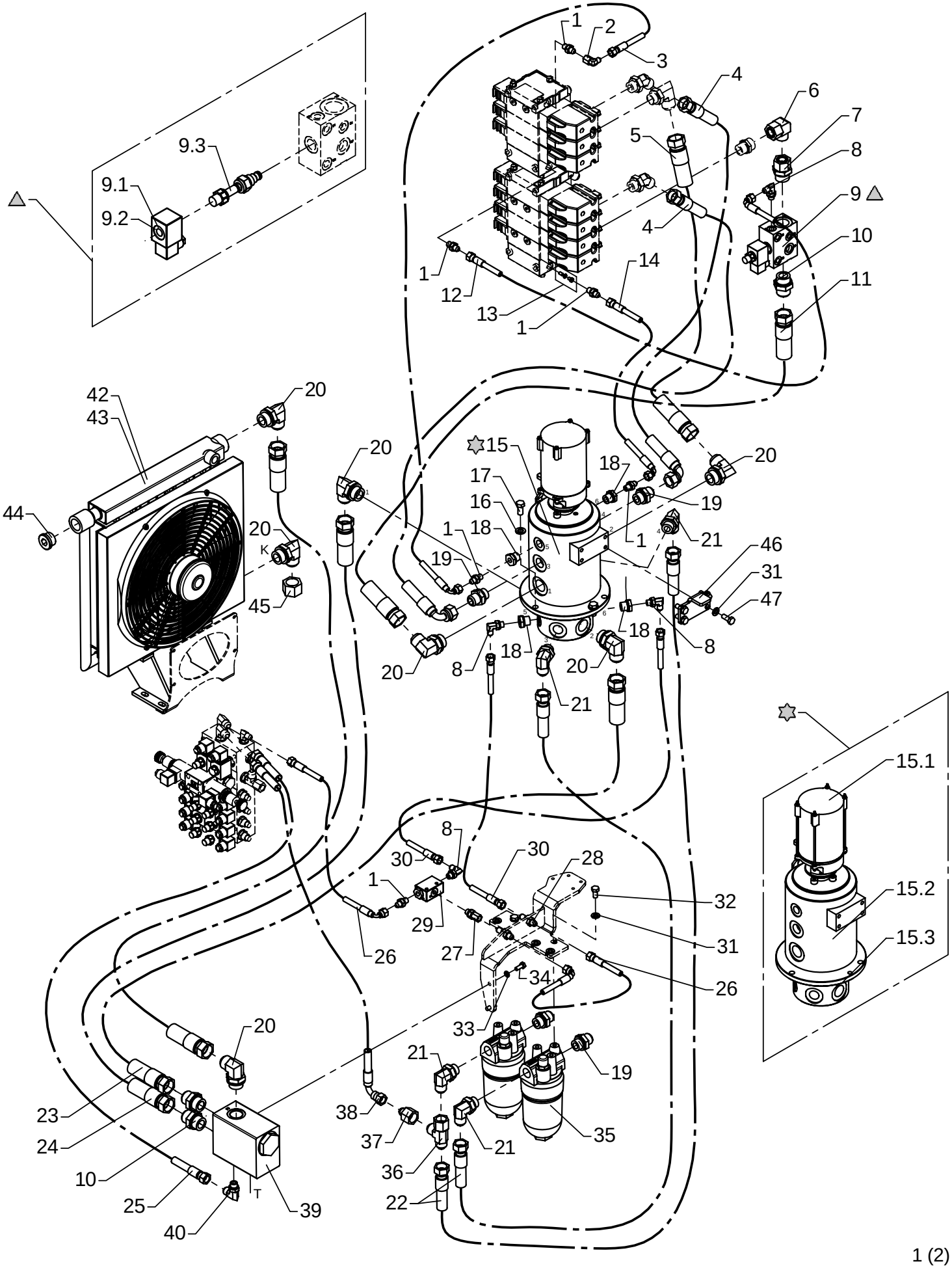

Hydraulic system, pump and return hoses, 1 circuit + fixed pump

As from / To loader no.: 97 00 27 /
Created: 17.06.2005
Modified:

Item no.	Qty.	Part no.	Description	Remarks
35	2	60201	High pressure filter	
36	1	25828	Connection	R6XS 20 JIC
37	1	25865	Reducing connection	TRTXS 8/20-12 JIC
38	1	62956	Hose	3/8" x 550 mm V/O JIC
39	1	59056	Cooler valve	
40	1	25838	Elbow connection	C40XS 12-3/8 JIC
41	1	56262	Hose	3/4" x 2000 mm O/O JIC
42	1	59310	Oil cooler 24 V	
43	1	59312	Oil cooler 12 V	
44	1	26321	Plug	VS-R 1" WD
45	1	25848	Screw cap JIC	FNTXS 25 JIC
46	1	6302621	Carrier fitting	
47	4	30155	Set screw	M10 x 25

72-516

Intern ref.: 6300920

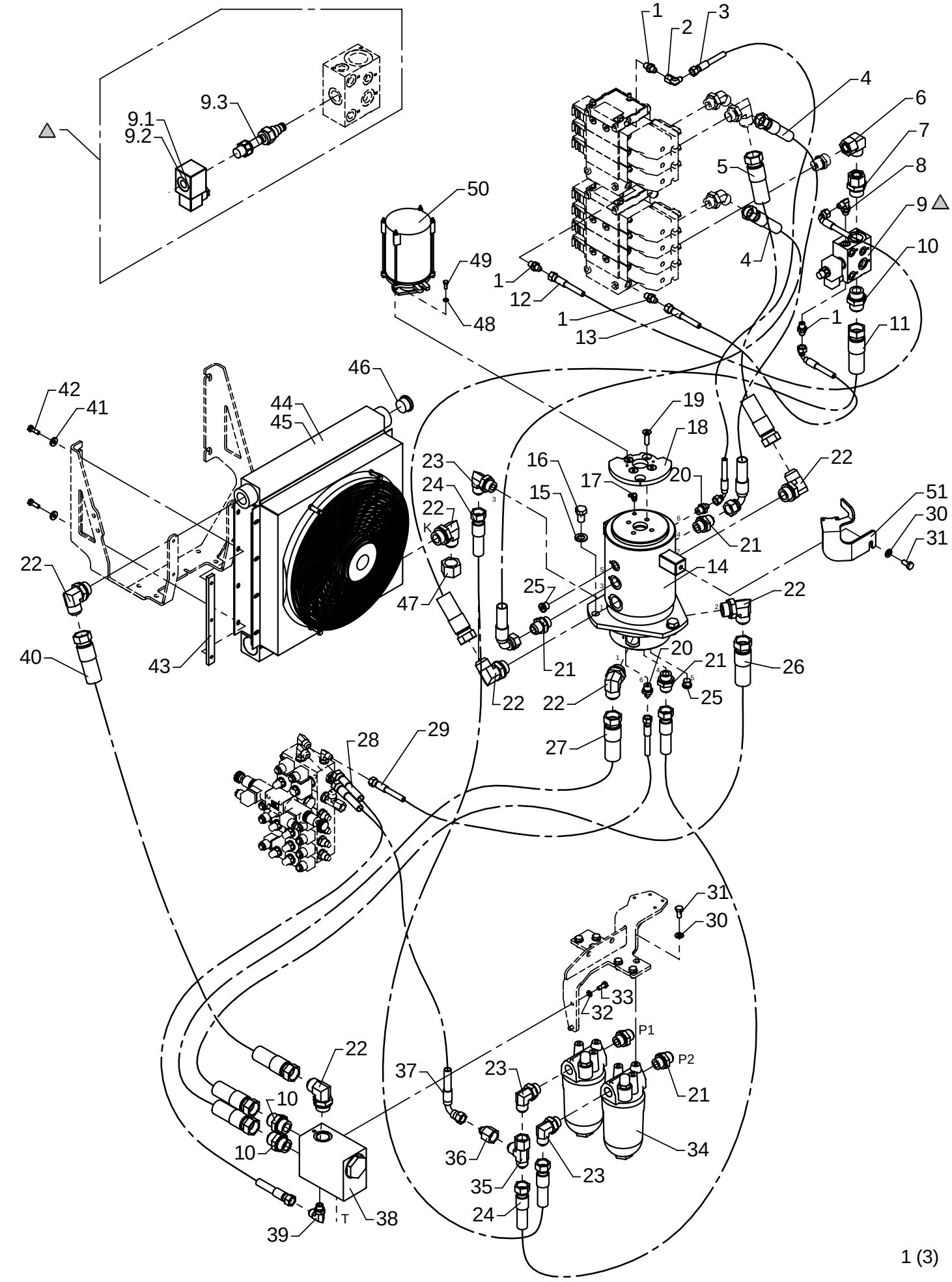

Hydraulic system, pump and return hoses, 2 circuits + fixed pump

As from / To loader no.: 97 00 00 / 97 00 22
Created: 17.11.2003
Modified: 17.06.2005

Item no.	Qty.	Part no.	Description	Remarks
1	4	25829	Straight connection	F40XS 8-1/4 JIC
2	1	25826	Elbow connection	C6XS 8 JIC
3	1	62934	Hose	1/4" x 1330 mm V/O JIC
4	2	62977	Hose	5/8" x 1100 mm V/O JIC
5	1	56046	Hose	1" x 1000 mm O/O JIC
6	1	25209	Elbow connection	EWSD 22 L
7	1	26391	Straight connection	EGESD 22 LR 1-WD
8	1	25858	Elbow connection	C40XS 12-3/8 JIC
9	1	59061	Dump valve	
		61777	Solenoid	12V
		61778	Solenoid	26V
		59642	Magnet coil	
10	3	25863	Straight connection	F40XS 25-1 JIC
11	1	56048	Hose	1" x 900 mm O/O JIC
12	1	62887	Hose	1/4" x 550 mm V/O JIC
13	1	62974	Hose	1/4" x 350 mm V/O JIC
14	1	58727	Swivel coupling, hydraulic	
15	3	31135	Washer	16 mm
16	3	30266	Set screw	M16 x 25
17	1	31322	Lubricator	1/8 RG - 90
18	1	6301196	Cam disc, 2-stage LMB	
19	4	30955	Countersunk screw	MK10 x 35
20	2	25830	Straight connection	F40XS8 - 3/8 JIC
21	5	25834	Straight connection	F40XS 18/20-3/4 JIC
22	7	26267	Elbow connection	C40XS 25-1 JIC
23	3	26693	Elbow connection	C40XS 18/20-3/4 JIC
24	2	56045	Hose	5/8" x 1450 mm O/O JIC
25	2	25277	Plug	VS-R-3/8 WD
26	1	56050	Hose	1" x 1300 mm O/O JIC
27	1	56049	Hose	1" x 1050 mm O/O JIC
28	1	62957	Hose	3/8" x 600 mm O/O JIC
29	1	56130	Hose	1/4" x 1150 mm O/O JIC
30	7	31177	Washer	10 mm
31	7	30154	Set screw	M10 x 20
32	2	31155	Spring washer	8 mm
33	2	30132	Set screw, stainless	M8 x 20
34	2	60201	High pressure filter	
35	1	25828	Connection	R6XS 20 JIC
36	1	25865	Reducing connection	TRTXS 8/20-12 JIC
37	1	62956	Hose	3/8" x 550 mm V/O JIC

72-516

Intern ref.: 6300920

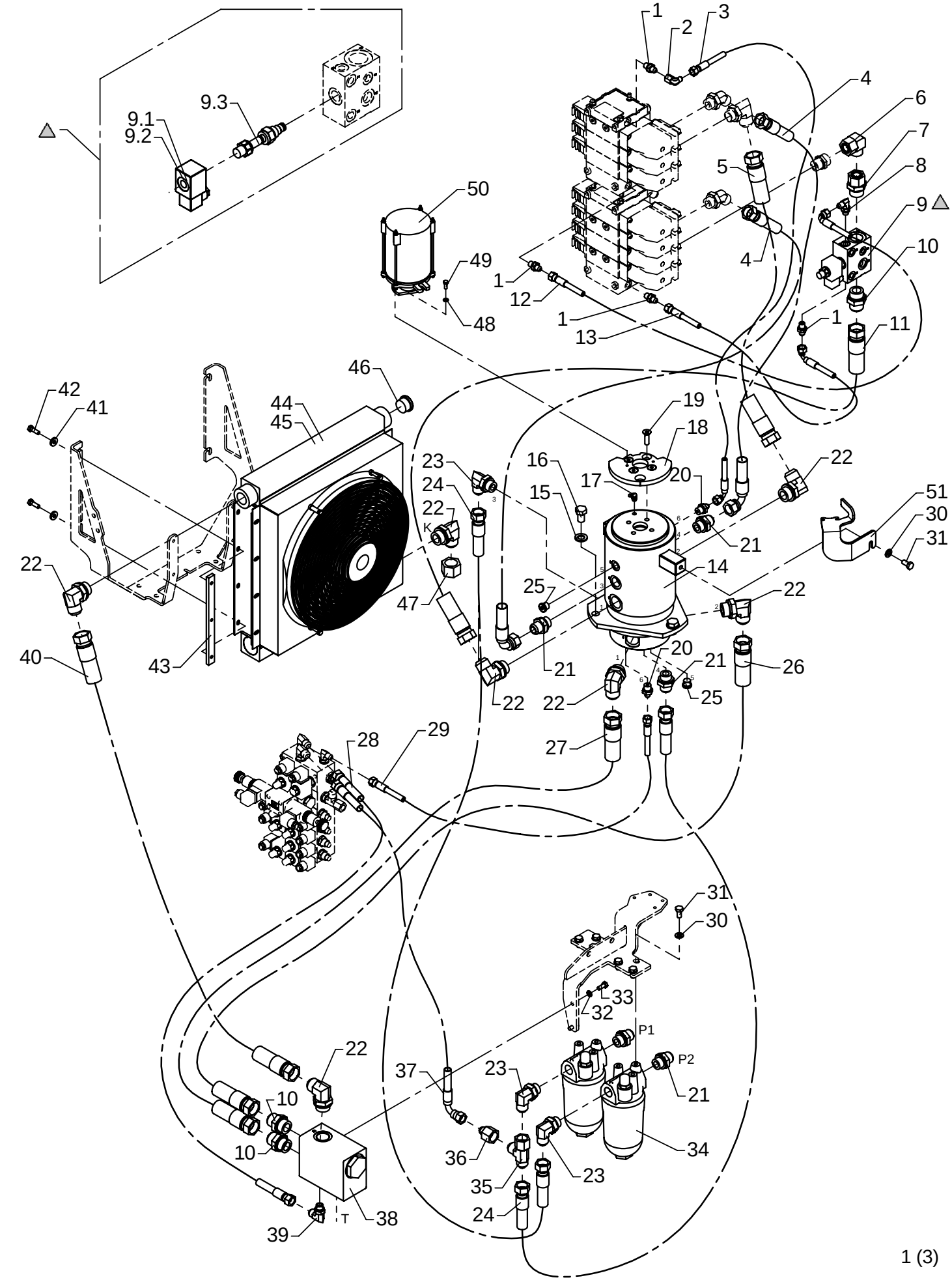

Hydraulic system, pump and return hoses, 2 circuits + fixed pump

As from / To loader no.: 97 00 00 / 97 00 22
Created: 17.11.2003
Modified: 17.06.2005

Item no.	Qty.	Part no.	Description	Remarks
38	1	59056	Cooler valve	
39	1	25838	Elbow connection	C40XS 12-3/8 JIC
40	1	56058	Hose	3/4" x 1550 mm O/O JIC
41	4	31755	Washer	8 mm
42	4	30134	Set screw, stainless	M8 x 25
43	2	6381974	Threaded disc	
44	1	59310	Oil cooler 24 V	
45	1	59312	Oil cooler 12 V	
46	1	26321	Plug	VS-R 1" WD
47	1	25848	Screw cap JIC	FNTXS 25 JIC
48	2	31154	Spring washer, stainless	6 mm
49	2	30112	Set screw, stainless	M6 x 16
50	1	28549	Swivel coupling, electric	
51	1	6301197	Carrier	

72-516

Intern ref.: 6300920

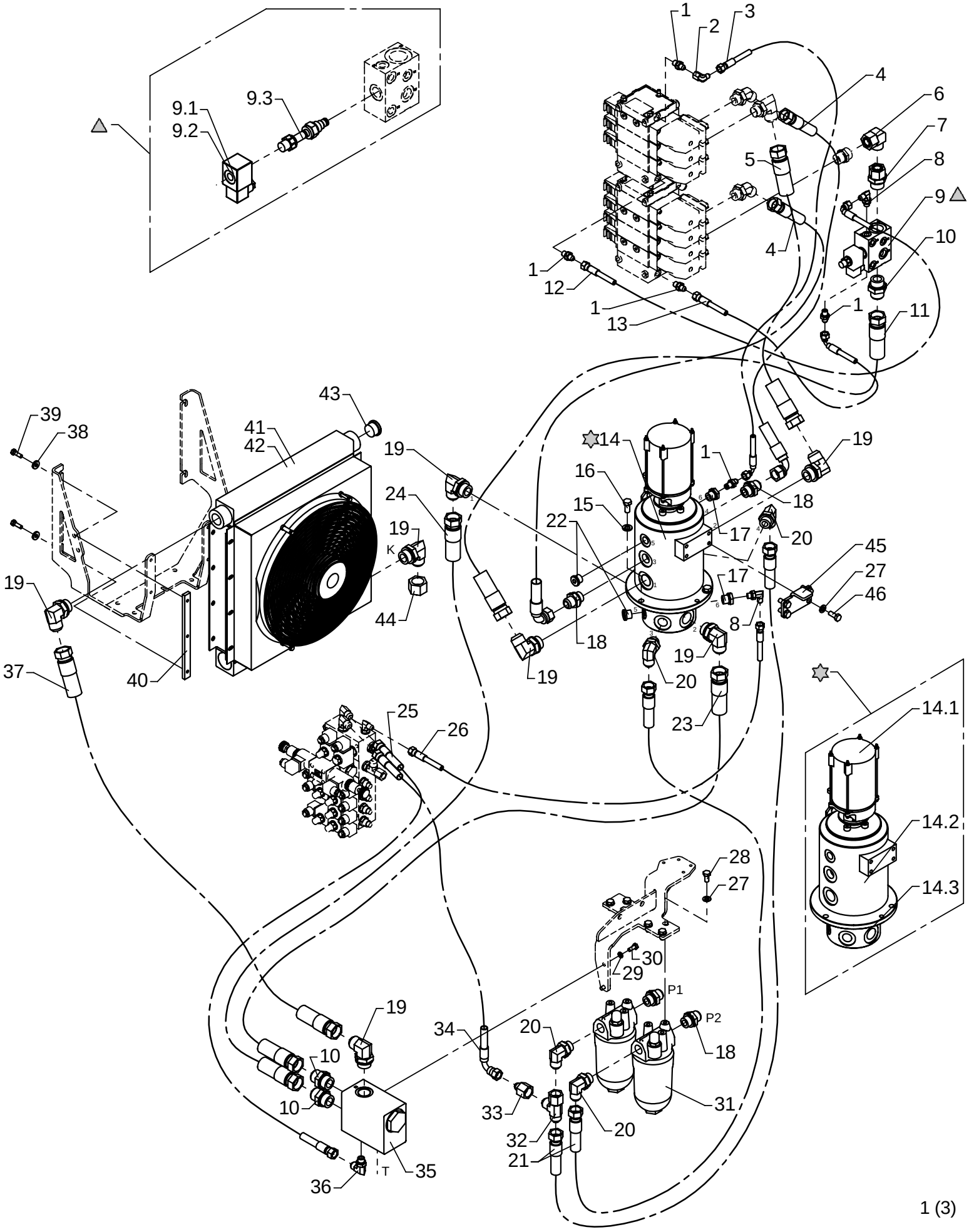

Hydraulic system, pump and return hoses, 2 circuits + fixed pump

As from / To loader no.: 97 00 23 / 97 00 26
Created: 17.06.2005
Modified:

Item no.	Qty.	Part no.	Description	Remarks
1	5	25829	Straight connection	F40XS 8-1/4 JIC
2	1	25826	Elbow connection	C6XS 8 JIC
3	1	62934	Hose	1/4" x 1330 mm V/O JIC
4	2	62977	Hose	5/8" x 1100 mm V/O JIC
5	1	56046	Hose	1" x 1000 mm O/O JIC
6	1	25209	Elbow connection	EWSD 22 L
7	1	26391	Straight connection	EGESD 22 LR 1-WD
8	2	25858	Elbow connection	C40XS 12-3/8 JIC
9	1	59061	Dump valve	
		61777	Solenoid	12V
		61778	Solenoid	26V
		59642	Magnet coil	
10	3	25863	Straight connection	F40XS 25-1 JIC
11	1	56048	Hose	1" x 900 mm O/O JIC
12	1	62887	Hose	1/4" x 550 mm V/O JIC
13	1	62974	Hose	1/4" x 350 mm V/O JIC
14	1	49105	Swivel coupling	
		28549	Swivel coupling, electric	
		49106	Swivel coupling	
		49115	Seal kit	
15	3	31131	Washer	12 mm
16	3	30176	Set screw	M12 x 25
17	2	25180	Connection	RED-R 1/2-WD/R 1/4
18	4	25834	Straight connection	F40XS 18/20-3/4 JIC
19	7	26267	Elbow connection	C40XS 25-1 JIC
20	4	26693	Elbow connection	C40XS 18/20-3/4 JIC
21	2	56045	Hose	5/8" x 1450 mm O/O JIC
22	2	25103	Plug	VS-R-1/2 WD
23	1	56050	Hose	1" x 1300 mm O/O JIC
24	1	56049	Hose	1" x 1050 mm O/O JIC
25	1	62957	Hose	3/8" x 600 mm O/O JIC
26	1	56130	Hose	1/4" x 1150 mm O/O JIC
27	10	31177	Washer	10 mm
28	6	30154	Set screw	M10 x 20
29	2	31155	Spring washer	8 mm
30	2	30132	Set screw, stainless	M8 x 20
31	2	60201	High pressure filter	
32	1	25828	Connection	R6XS 20 JIC
33	1	25865	Reducing connection	TRTXS 8/20-12 JIC
34	1	62956	Hose	3/8" x 550 mm V/O JIC

72-516

Intern ref.: 6300920

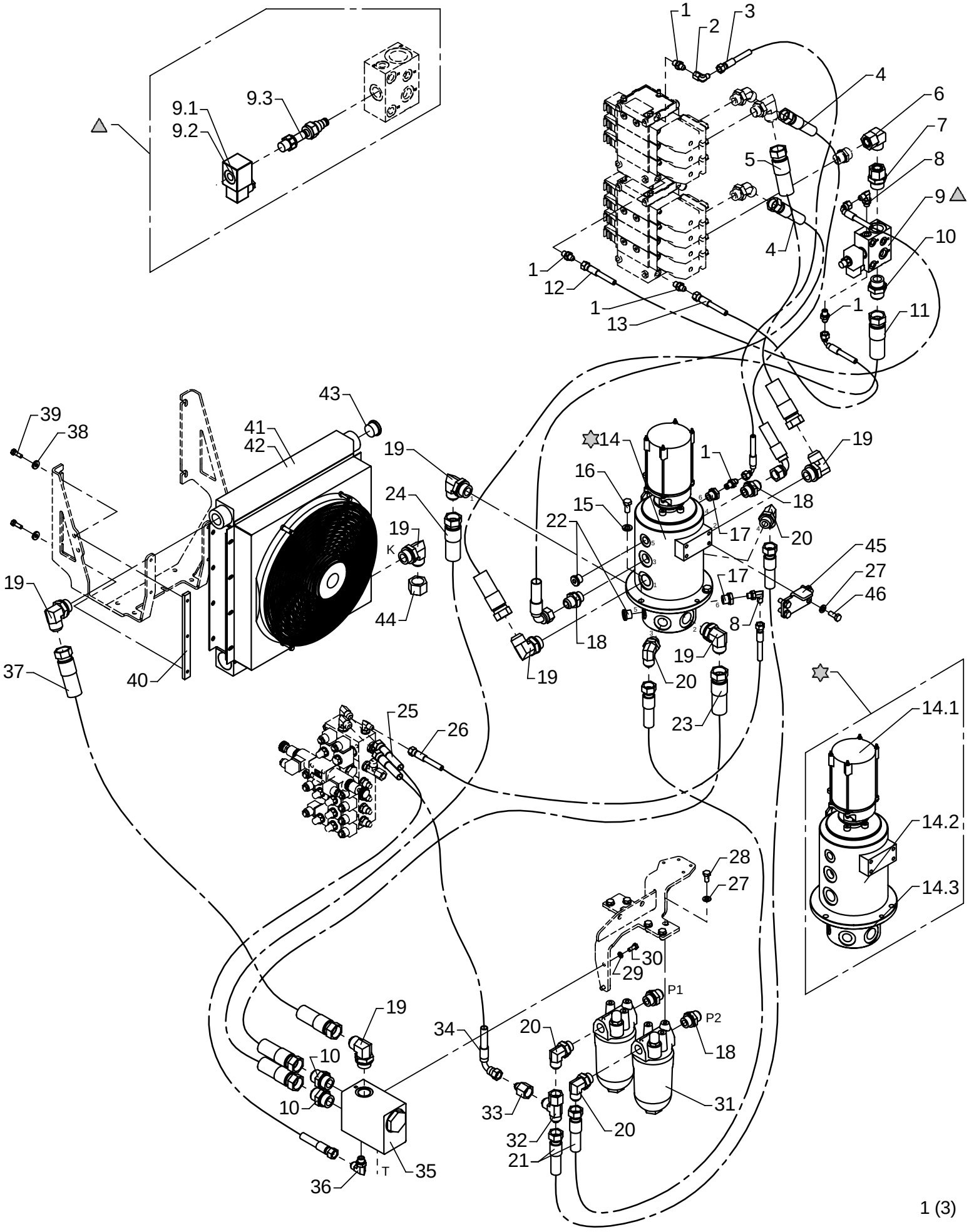

Hydraulic system, pump and return hoses, 2 circuits + fixed pump

As from / To loader no.: 97 00 23 / 97 00 26
Created: 17.06.2005
Modified:

Item no.	Qty.	Part no.	Description	Remarks
35	1	59056	Cooler valve	
36	1	25838	Elbow connection	C40XS 12-3/8 JIC
37	1	56058	Hose	3/4" x 1550 mm O/O JIC
38	4	31755	Washer	8 mm
39	4	30134	Set screw, stainless	M8 x 25
40	2	6381974	Threaded disc	
41	1	59310	Oil cooler 24 V	
42	1	59312	Oil cooler 12 V	
43	1	26321	Plug	VS-R 1" WD
44	1	25848	Screw cap JIC	FNTXS 25 JIC
45	1	6302621	Carrier fitting	
46	4	30155	Set screw	M10 x 25

72-516

Intern ref.: 6300920

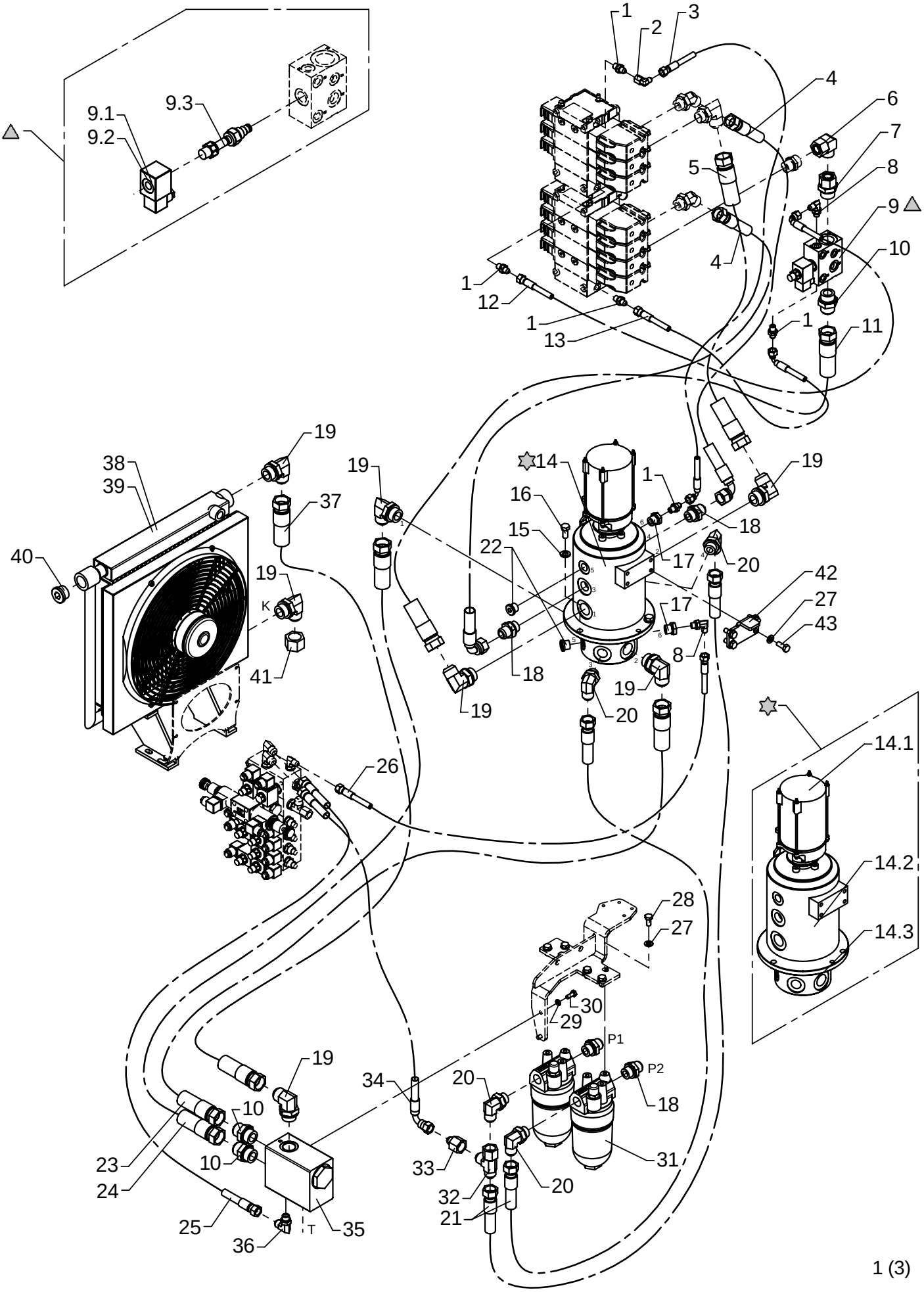

Hydraulic system, pump and return hoses, 2 circuits + fixed pump

As from / To loader no.: 97 00 27 /
Created: 17.06.2005
Modified:

Item no.	Qty.	Part no.	Description	Remarks
1	5	25829	Straight connection	F40XS 8-1/4 JIC
2	1	25826	Elbow connection	C6XS 8 JIC
3	1	62934	Hose	1/4" x 1330 mm V/O JIC
4	2	62977	Hose	5/8" x 1100 mm V/O JIC
5	1	56046	Hose	1" x 1000 mm O/O JIC
6	1	25209	Elbow connection	EWSD 22 L
7	1	26391	Straight connection	EGESD 22 LR 1-WD
8	2	25858	Elbow connection	C40XS 12-3/8 JIC
9	1	59061	Dump valve	
		61777	Solenoid	12V
		61778	Solenoid	26V
		59642	Magnet coil	
10	3	25863	Straight connection	F40XS 25-1 JIC
11	1	56048	Hose	1" x 900 mm O/O JIC
12	1	62887	Hose	1/4" x 550 mm V/O JIC
13	1	62974	Hose	1/4" x 350 mm V/O JIC
14	1	49105	Swivel coupling	
		28549	Swivel coupling, electric	
		49106	Swivel coupling	
		49115	Seal kit	
15	3	31131	Washer	12 mm
16	3	30176	Set screw	M12 x 25
17	2	25180	Connection	RED-R 1/2-WD/R 1/4
18	4	25834	Straight connection	F40XS 18/20-3/4 JIC
19	7	26267	Elbow connection	C40XS 25-1 JIC
20	4	26693	Elbow connection	C40XS 18/20-3/4 JIC
21	2	56045	Hose	5/8" x 1450 mm O/O JIC
22	2	25103	Plug	VS-R-1/2 WD
23	1	56050	Hose	1" x 1300 mm O/O JIC
24	1	56049	Hose	1" x 1050 mm O/O JIC
25	1	62957	Hose	3/8" x 600 mm O/O JIC
26	1	56130	Hose	1/4" x 1150 mm O/O JIC
27	10	31177	Washer	10 mm
28	6	30154	Set screw	M10 x 20
29	2	31155	Spring washer	8 mm
30	2	30132	Set screw, stainless	M8 x 20
31	2	60201	High pressure filter	
32	1	25828	Connection	R6XS 20 JIC
33	1	25865	Reducing connection	TRTXS 8/20-12 JIC
34	1	62956	Hose	3/8" x 550 mm V/O JIC

72-516

Intern ref.: 6300920

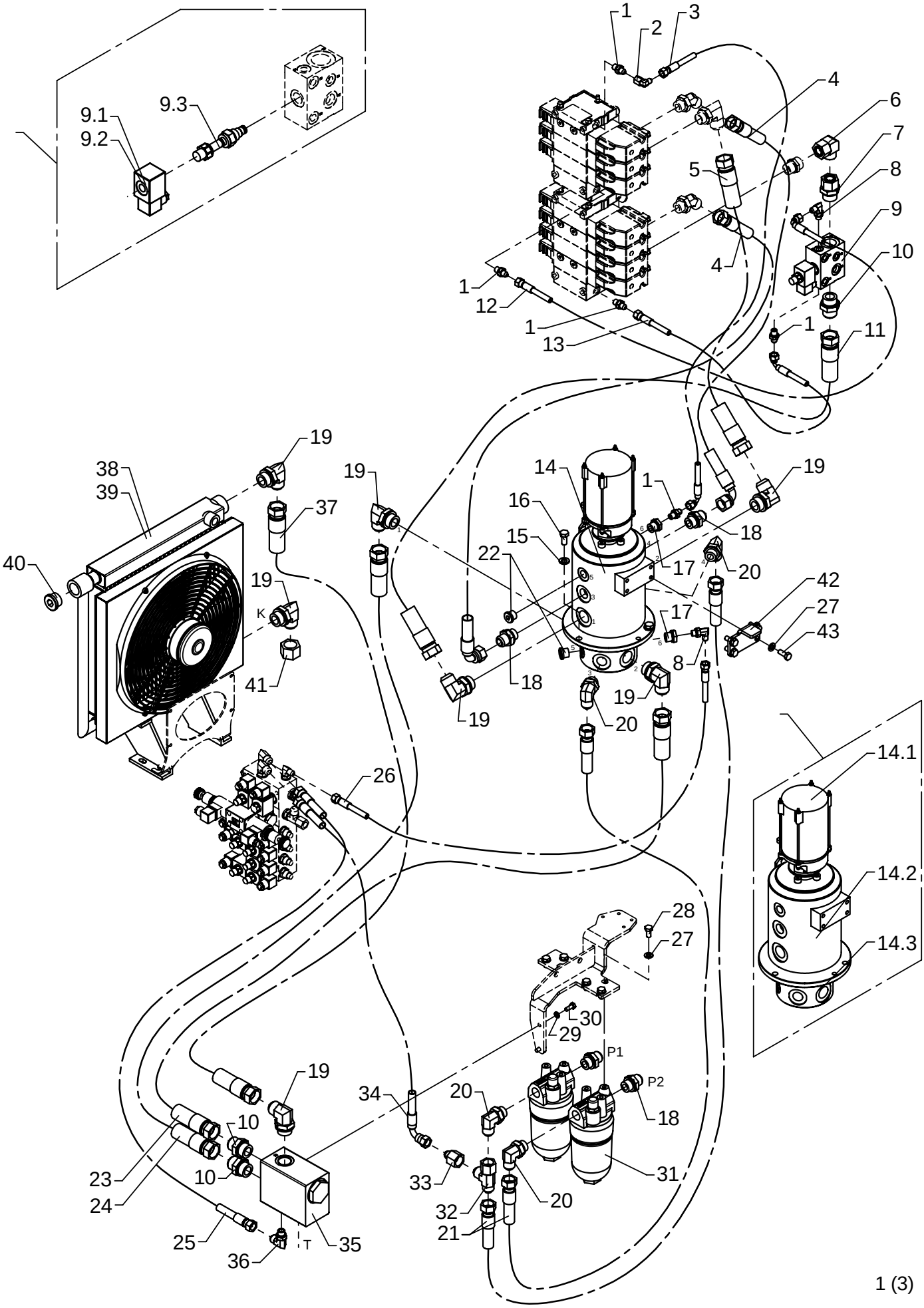

Hydraulic system, pump and return hoses, 2 circuits + fixed pump

As from / To loader no.: 97 00 27 /
Created: 17.06.2005
Modified:

Item no.	Qty.	Part no.	Description	Remarks
35	1	59056	Cooler valve	
36	1	25838	Elbow connection	C40XS 12-3/8 JIC
37	1	56262	Hose	3/4" x 2000 mm O/O JIC
38	1	59310	Oil cooler 24 V	
39	1	59312	Oil cooler 12 V	
40	1	26321	Plug	VS-R 1" WD
41	1	25848	Screw cap JIC	FNTXS 25 JIC
42	1	6302621	Carrier fitting	
43	4	30155	Set screw	M10 x 25

72-516

Intern ref.: 6300910

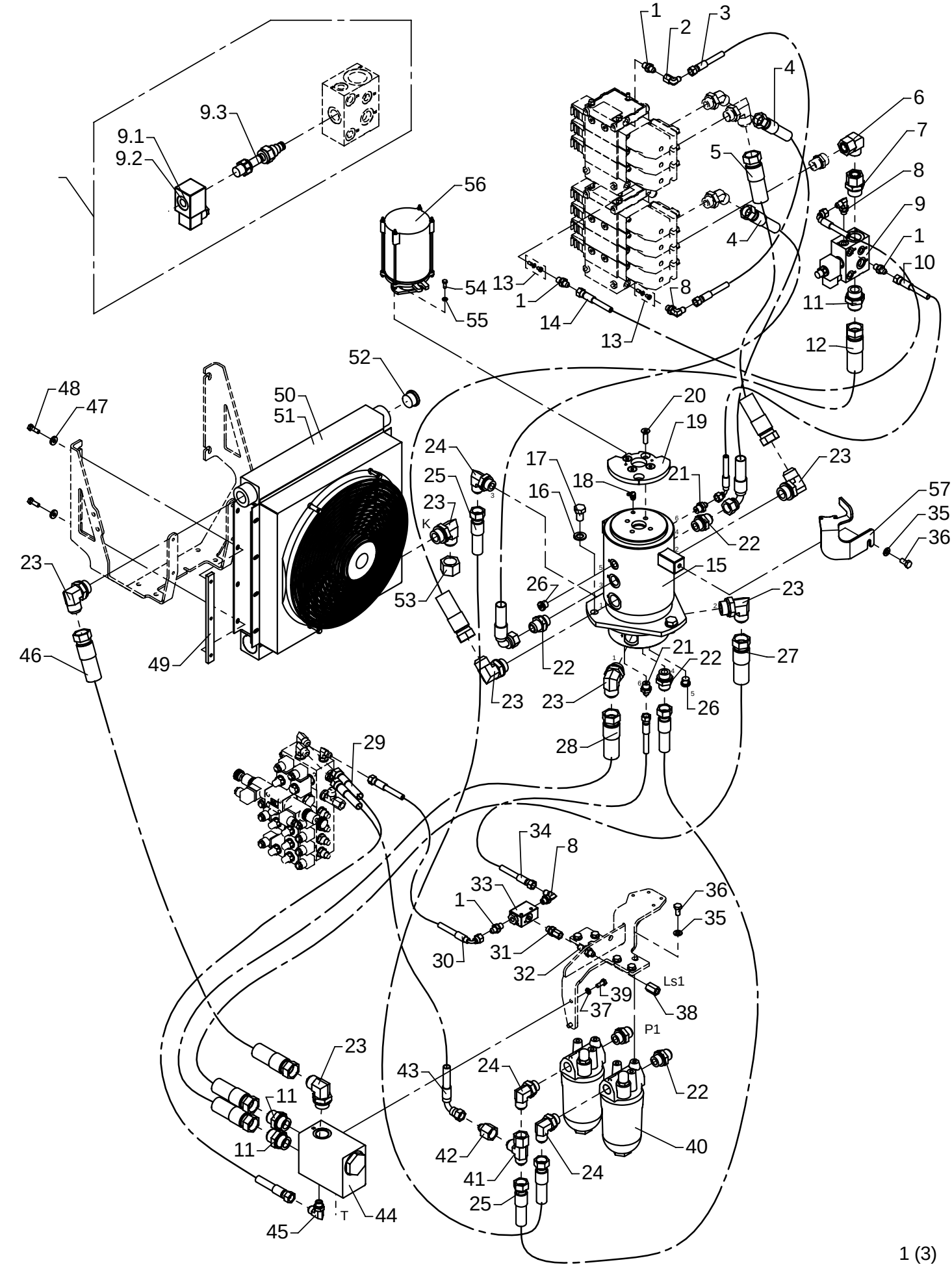

Hydraulic system, pump and return hoses, 1 circuit + variable pump

As from / To loader no.: 97 00 00 / 97 00 22
Created: 17.11.2003
Modified: 17.06.2005

Item no.	Qty.	Part no.	Description	Remarks
1	4	25829	Straight connection	F40XS 8-1/4 JIC
2	1	25826	Elbow connection	C6XS 8 JIC
3	1	62870	Hose	1/4" x 650 mm O/O JIC
4	2	62977	Hose	5/8" x 1100 mm V/O JIC
5	1	56046	Hose	1" x 1000 mm O/O JIC
6	1	25209	Elbow connection	EWSD 22 L
7	1	26391	Straight connection	EGESD 22 LR 1-WD
8	3	25858	Elbow connection	C40XS 12-3/8 JIC
9	1	59061	Dump valve	
		61777	Solenoid	12V
		61778	Solenoid	24V
		59642	Magnet coil	
10	1	62901	Hose	1/4" x 900 mm V/O JIC
11	3	25863	Straight connection	F40XS 25-1 JIC
12	1	56048	Hose	1" x 900 mm O/O JIC
13	2	62065	Closed center kit	
14	1	62887	Hose	1/4" x 550 mm V/O JIC
15	1	58727	Swivel coupling, hydraulic	
16	3	31135	Washer	16 mm
17	3	30266	Set screw	M16 x 25
18	1	31322	Lubricator	1/8 RG - 90
19	1	6301196	Cam disc, 2-stage LMB	
20	4	30955	Countersunk screw	MK10 x 35
21	2	25830	Straight connection	F40XS 8-3/8 JIC
22	5	25834	Straight connection	F40XS 18/20-3/4 JIC
23	7	26267	Elbow connection	C40XS 25-1 JIC
24	3	26693	Elbow connection	C40XS 18/20-3/4 JIC
25	2	56045	Hose	5/8" x 1450 mm O/O JIC
26	2	25277	Plug	VS-R-3/8 WD
27	1	56050	Hose	1" x 1300 mm O/O JIC
28	1	56049	Hose	1" x 1050 mm O/O JIC
29	1	62957	Hose JIC	3/8" x 600 mm O/O JIC
30	1	62974	Hose	1/4" x 350 mm V/O JIC
31	1	26272	Straight connection	F64XS 14/16 - 3/8" JIC
32	1	25823	Bulkhead connection	WTX-WLNS 8 JIC
33	1	60338	Shuttle valve	
34	1	56130	Hose	1/4" x 1150 mm O/O JIC
35	7	31177	Washer	10 mm
36	7	30154	Set screw	M10 x 20
37	2	31155	Spring washer	8 mm

72-516

Intern ref.: 6300910

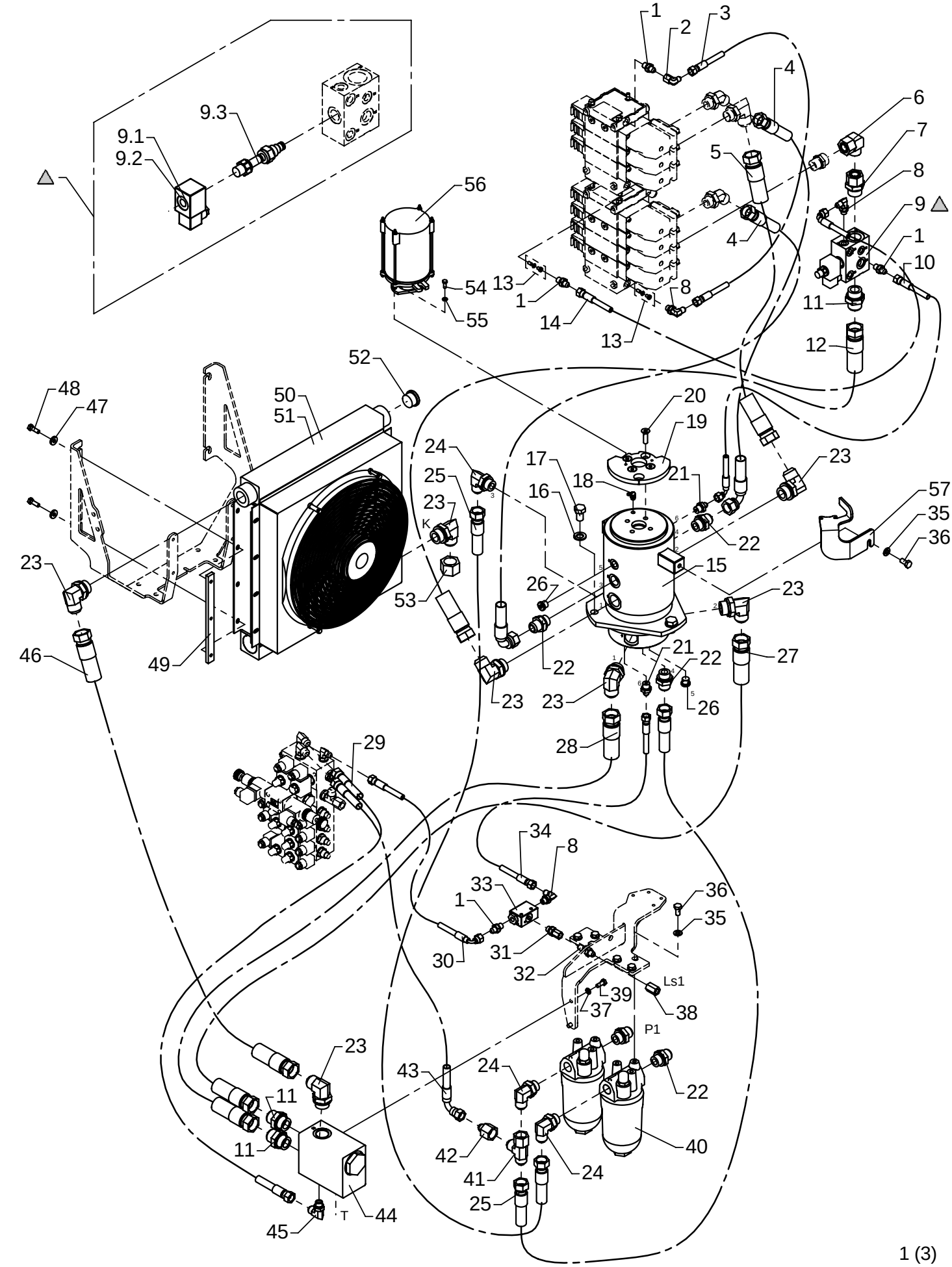

Hydraulic system, pump and return hoses, 1 circuit + variable pump

As from / To loader no.: 97 00 00 / 97 00 22
Created: 17.11.2003
Modified: 17.06.2005

Item no.	Qty.	Part no.	Description	Remarks
38	1	26270	Fitting	TTX4S 8-1/4 JIC
39	2	30132	Set screw, stainless	M8 x 20
40	2	60201	High pressure filter	
41	1	25828	Connection	R6XS 20 JIC
42	1	25865	Reducing connection	TRTXS 8/20-12 JIC
43	1	62956	Hose	3/8" x 550 mm V/O JIC
44	1	59056	Cooler valve	
45	1	25838	Elbow connection	C40XS 12-3/8 JIC
46	1	56058	Hose	3/4" x 1550 mm O/O JIC
47	4	31755	Washer	8 mm
48	4	30134	Set screw, stainless	M8 x 25
49	2	6381974	Threaded disc	
50	1	59310	Oil cooler 24 V	
51	1	59312	Oil cooler 12 V	
52	1	26321	Plug	VS-R 1" WD
53	1	25848	Screw cap JIC	FNTXS 25 JIC
54	2	30112	Set screw, stainless	M6 x 16
55	2	31154	Spring washer, stainless	6 mm
56	1	28549	Swivel coupling, electric	
57	1	6301197	Carrier	

72-516

Intern ref.: 6300910

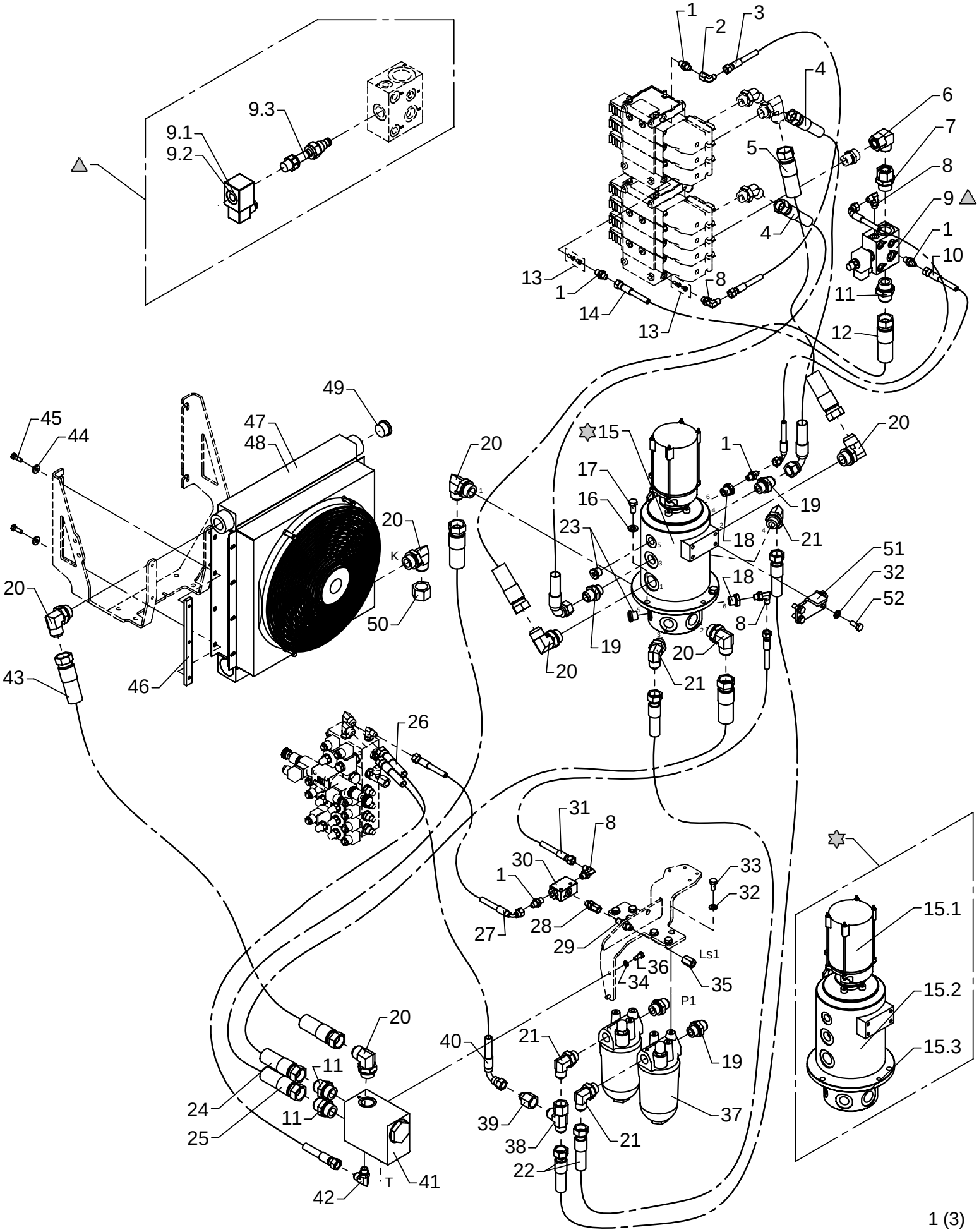

Hydraulic system, pump and return hoses, 1 circuit + variable pump

As from / To loader no.: 97 00 23 / 97 00 26
Created: 17.06.2005
Modified:

Pos.	Antal	Vare nr.	Beskrivelse	Bemærkning
1	5	25829	Lige forskruning	F40XS 8-1/4 JIC
2	1	25826	Vinkelforskruning	C6XS 8 JIC
3	1	62870	Slange	1/4" x 650 mm O/O JIC
4	2	62977	Slange	5/8" x 1100 mm V/O JIC
5	1	56046	Slange	1" x 1000 mm O/O JIC
6	1	25209	Vinkelforskruning	EWSD 22 L
7	1	26391	Lige Forskruning	EGESD 22 LR 1-WD
8	4	25858	Vinkelforskruning	C40XS 12-3/8 JIC
9	1	59061	Dumpventil	
		61777	Solenoid	12V
		61778	Solenoid	26V
		59642	Magnet coil	
10	1	62901	Slange	1/4" x 900 mm V/O JIC
11	3	25863	Lige forskruning	F40XS 25-1 JIC
12	1	56048	Slange	1" x 900 mm O/O JIC
13	2	62065	Lukket Center Kit	
14	1	62887	Slange	1/4" x 550 mm V/O JIC
15	1	49105	Slæbering/rotorled	
		28549	Swivel coupling, electric	
		49106	Swivel coupling	
		49115	Seal kit	
16	3	31131	Facetskive, galv.	12 mm
17	3	30176	Sætskrue galv.	M12 x 25
18	2	25180	Reduktionsnippel	RED-R 1/2-WD/R 1/4
19	4	25834	Lige forskruning	F40XS 18/20-3/4 JIC
20	7	26267	Vinkel indskruning	C40XS 25-1 JIC
21	4	26693	Vinkelforskruning	C40XS 18/20-3/4 JIC
22	2	56045	Slange	5/8" x 1450 mm O/O JIC
23	2	25103	Prop	VS-R-1/2 WD
24	1	56050	Slange	1" x 1300 mm O/O JIC
25	1	56049	Slange	1" x 1050 mm O/O JIC
26	1	62957	Slange	3/8" x 600 mm O/O JIC
27	1	62974	Slange	1/4" x 350 mm V/O JIC
28	1	26272	Lige indskruning	F64XS 14/16 - 3/8" JIC
29	1	25823	Skotforskruning	WTX-WLNS 8 JIC
30	1	60338	Vekselventil	
31	1	56130	Slange	1/4" x 1150 mm O/O JIC
32	10	31177	Facetskive galv.	10 mm
33	6	30154	Sætskrue, galv.	M10 x 20
34	2	31155	Fjederskive Rustfri	8 mm

72-516

Intern ref.: 6300910

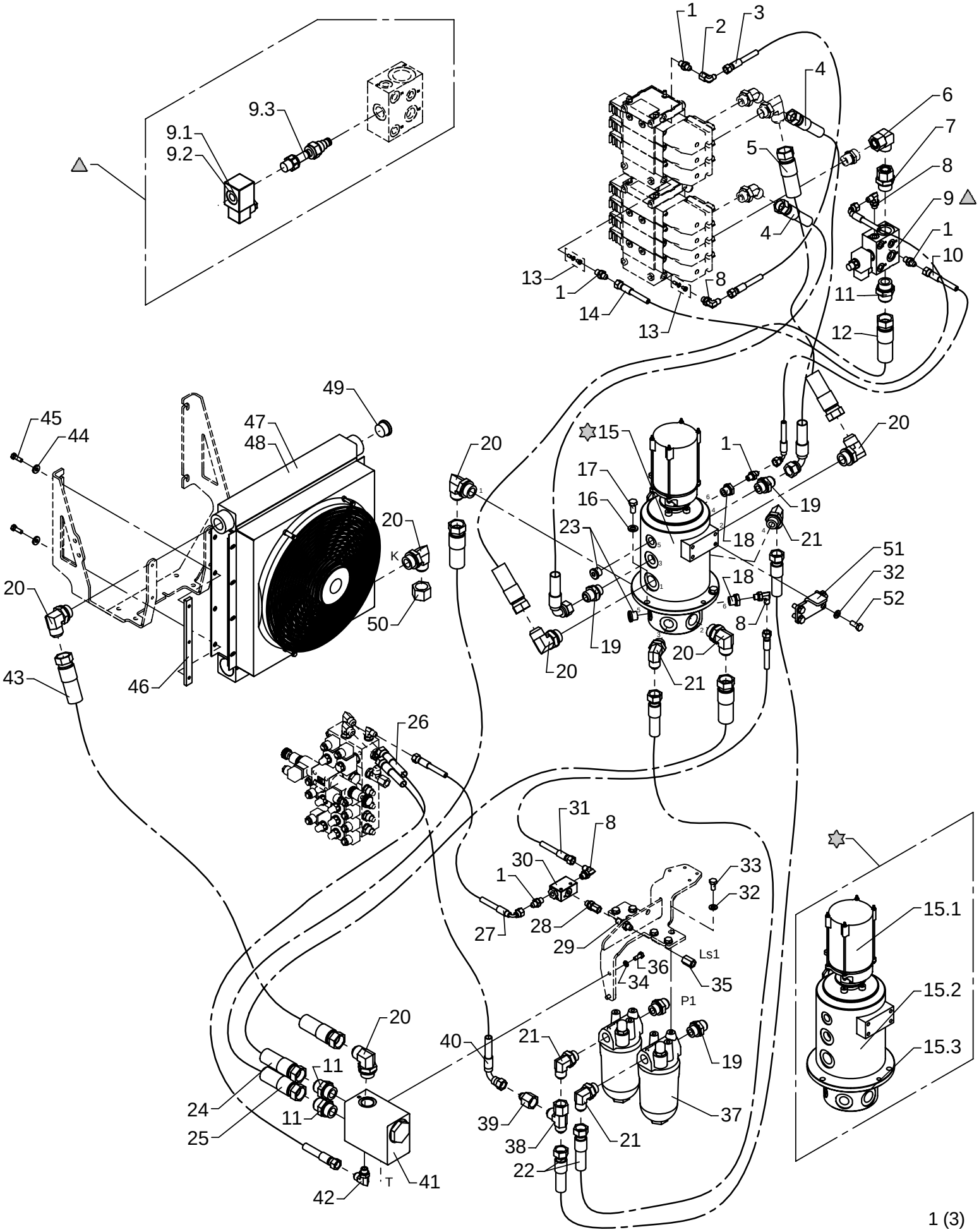

Hydraulic system, pump and return hoses, 1 circuit + variable pump

As from / To loader no.: 97 00 23 / 97 00 26
Created: 17.06.2005
Modified:

Item no.	Qty.	Part no.	Description	Remarks
35	1	26270	Fitting	TTX4S 8-1/4 JIC
36	2	30132	Set screw, stainless	M8 x 20
37	2	60201	High pressure filter	
38	1	25828	Connection	R6XS 20 JIC
39	1	25865	Reducing connection	TRTXS 8/20-12 JIC
40	1	62956	Hose	3/8" x 550 mm V/O JIC
41	1	59056	Cooler valve	
42	1	25838	Elbow connection	C40XS 12-3/8 JIC
43	1	56058	Hose	3/4" x 1550 mm O/O JIC
44	4	31755	Washer	8 mm
45	4	30134	Set screw, stainless	M8 x 25
46	2	6381974	Threaded disc	
47	1	59310	Oil cooler 24 V	
48	1	59312	Oil cooler 12 V	
49	1	26321	Plug	VS-R 1" WD
50	1	25848	Screw cap JIC	FNTXS 25 JIC
51	1	6302621	Carrier fitting	
52	4	30155	Set screw	M10 x 25

72-516

Intern ref.: 6300910

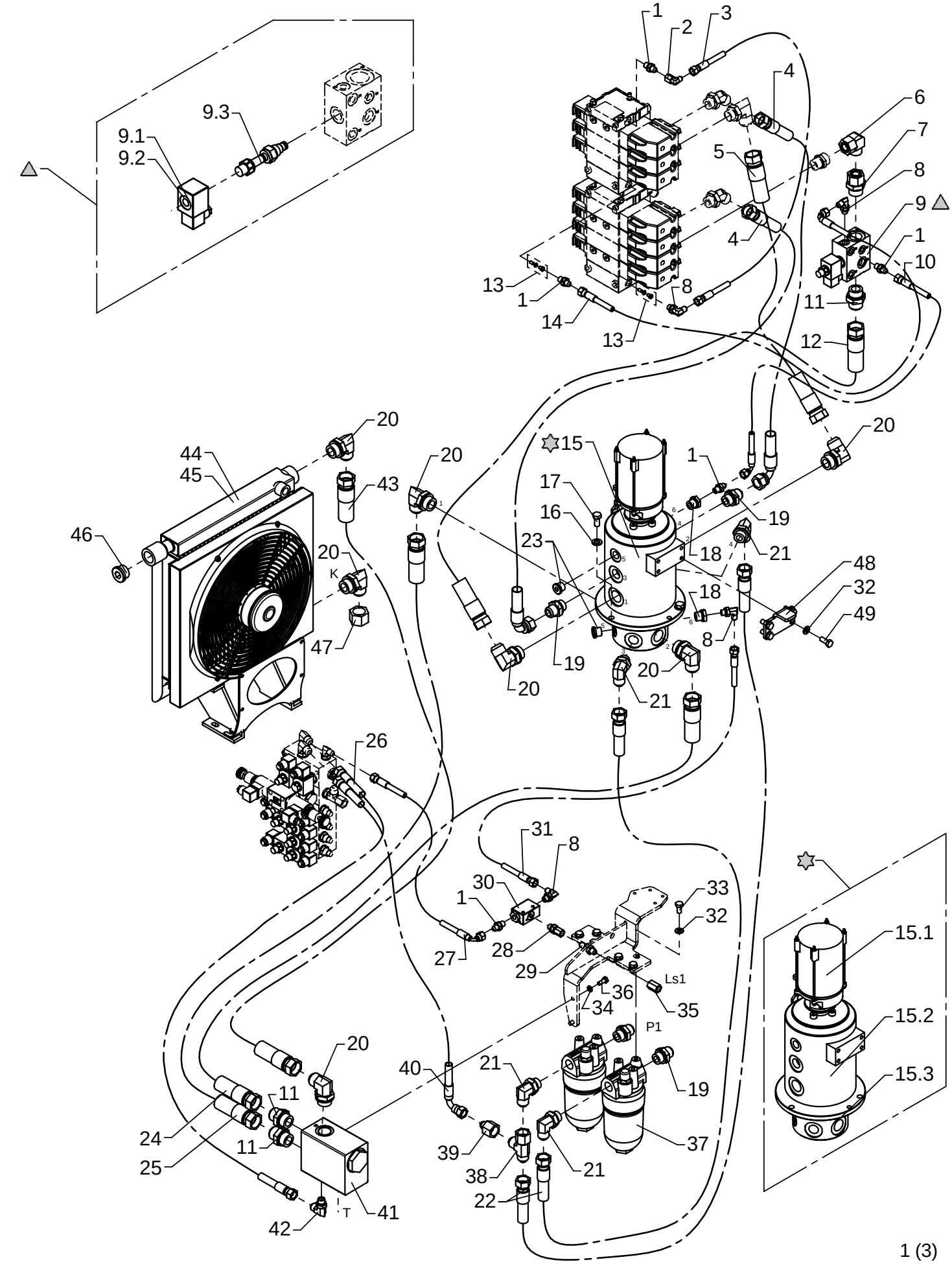

Hydraulic system, pump and return hoses, 1 circuit + variable pump

As from / To loader no.: 97 00 27 /
Created: 17.06.2005
Modified:

Pos.	Antal	Vare nr.	Beskrivelse	Bemærkning
1	5	25829	Lige forskruning	F40XS 8-1/4 JIC
2	1	25826	Vinkelforskruning	C6XS 8 JIC
3	1	62870	Slange	1/4" x 650 mm O/O JIC
4	2	62977	Slange	5/8" x 1100 mm V/O JIC
5	1	56046	Slange	1" x 1000 mm O/O JIC
6	1	25209	Vinkelforskruning	EWSD 22 L
7	1	26391	Lige Forskruning	EGESD 22 LR 1-WD
8	4	25858	Vinkelforskruning	C40XS 12-3/8 JIC
9	1	59061	Dumpventil	
		61777	Solenoid	12V
		61778	Solenoid	26V
		59642	Magnet coil	
10	1	62901	Slange	1/4" x 900 mm V/O JIC
11	3	25863	Lige forskruning	F40XS 25-1 JIC
12	1	56048	Slange	1" x 900 mm O/O JIC
13	2	62065	Lukket Center Kit	
14	1	62887	Slange	1/4" x 550 mm V/O JIC
15	1	49105	Slæbering/rotorled	
		28549	Swivel coupling, electric	
		49106	Swivel coupling	
		49115	Seal kit	
16	3	31131	Facetskive, galv.	12 mm
17	3	30176	Sætskrue galv.	M12 x 25
18	2	25180	Reduktionsnippel	RED-R 1/2-WD/R 1/4
19	4	25834	Lige forskruning	F40XS 18/20-3/4 JIC
20	7	26267	Vinkel indskruning	C40XS 25-1 JIC
21	4	26693	Vinkelforskruning	C40XS 18/20-3/4 JIC
22	2	56045	Slange	5/8" x 1450 mm O/O JIC
23	2	25103	Prop	VS-R-1/2 WD
24	1	56050	Slange	1" x 1300 mm O/O JIC
25	1	56049	Slange	1" x 1050 mm O/O JIC
26	1	62957	Slange	3/8" x 600 mm O/O JIC
27	1	62974	Slange	1/4" x 350 mm V/O JIC
28	1	26272	Lige indskruning	F64XS 14/16 - 3/8" JIC
29	1	25823	Skotforskruning	WTX-WLNS 8 JIC
30	1	60338	Vekselventil	
31	1	56130	Slange	1/4" x 1150 mm O/O JIC
32	10	31177	Facetskive galv.	10 mm
33	6	30154	Sætskrue, galv.	M10 x 20
34	2	31155	Fjederskive Rustfri	8 mm

72-516

Intern ref.: 6300910

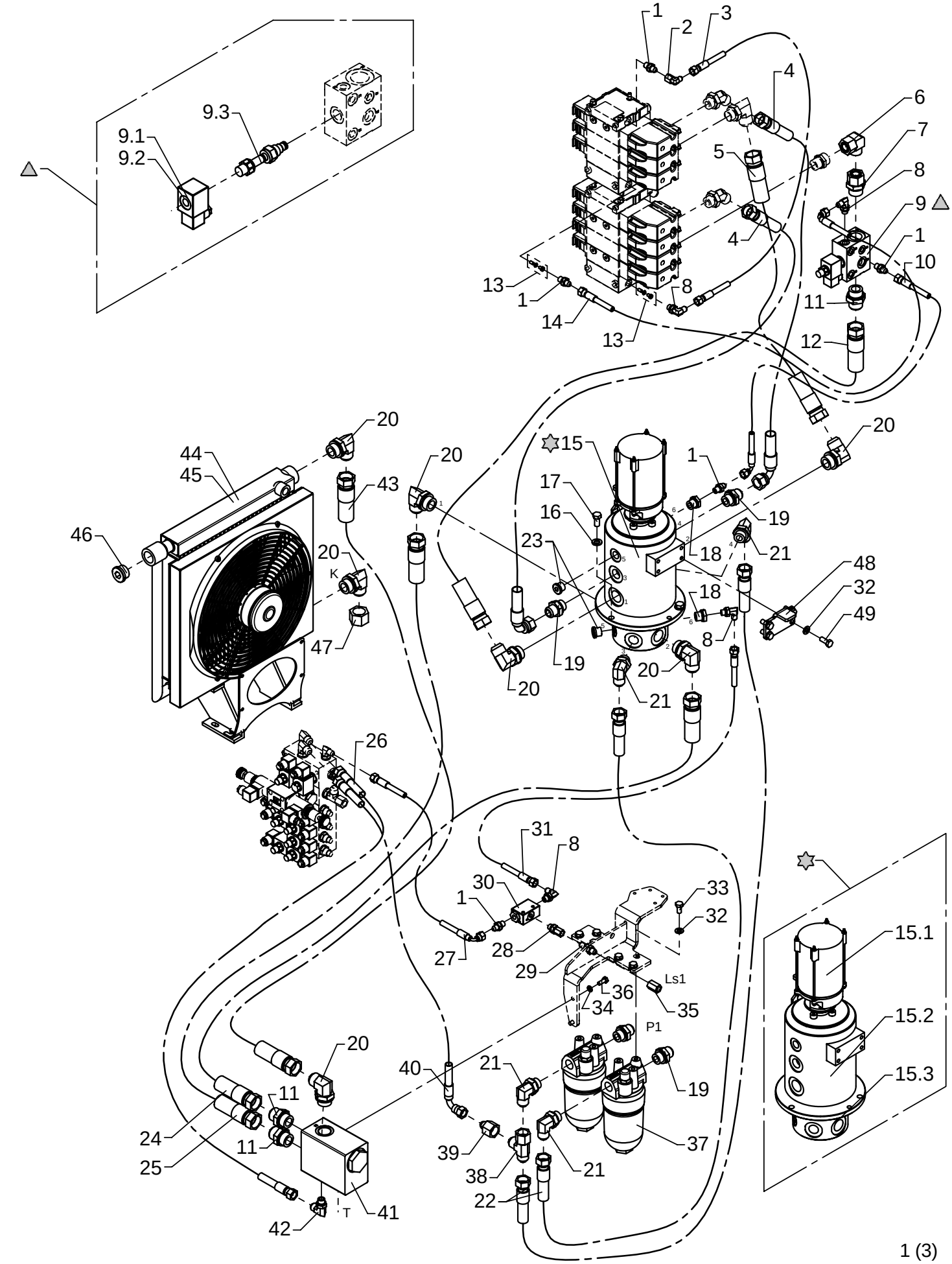

Hydraulic system, pump and return hoses, 1 circuit + variable pump

As from / To loader no.: 97 00 27 /
Created: 17.06.2005
Modified:

Item no.	Qty.	Part no.	Description	Remarks
35	1	26270	Fitting	TTX4S 8-1/4 JIC
36	2	30132	Set screw, stainless	M8 x 20
37	2	60201	High pressure filter	
38	1	25828	Connection	R6XS 20 JIC
39	1	25865	Reducing connection	TRTXS 8/20-12 JIC
40	1	62956	Hose	3/8" x 550 mm V/O JIC
41	1	59056	Cooler valve	
42	1	25838	Elbow connection	C40XS 12-3/8 JIC
43	1	56262	Hose	3/4" x 2000 mm O/O JIC
44	1	59310	Oil cooler 24 V	
45	1	59312	Oil cooler 12 V	
46	1	26321	Plug	VS-R 1" WD
47	1	25848	Screw cap JIC	FNTXS 25 JIC
48	1	6302621	Carrier fitting	
49	4	30155	Set screw	M10 x 25

72-516

Intern ref.: 6300930

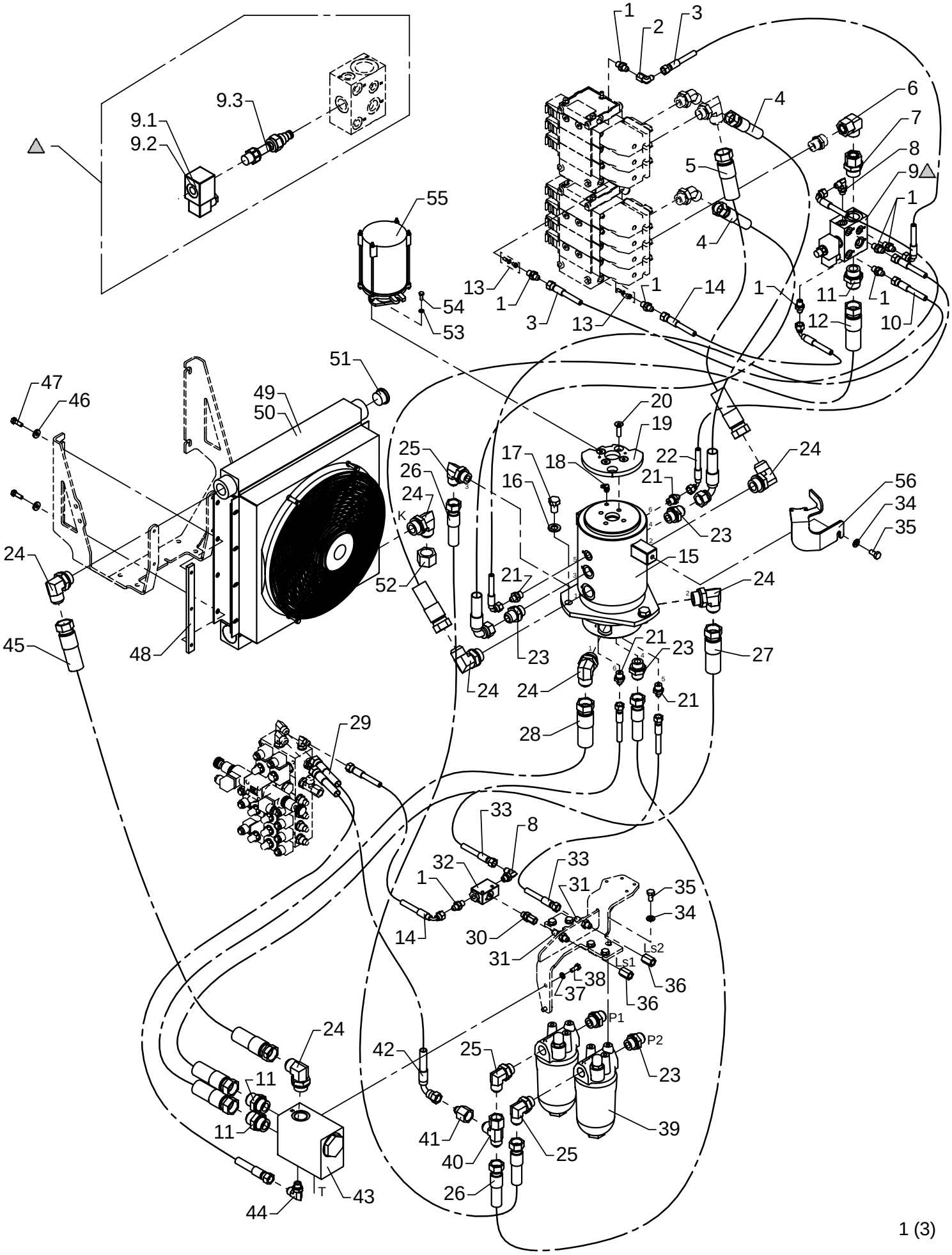

Hydraulic system, pump and return hoses, 2 circuits + variable pump

As from / To loader no.: 97 00 00 / 97 00 22
Created: 17.11.2003
Modified: 17.06.2005

Item no.	Qty.	Part no.	Description	Remarks
		61778	Solenoid	26V
		61777	Solenoid	12V
		59642	Magnet coil	
1	8	25829	Straight connection	F40XS 8-1/4 JIC
2	1	25826	Elbow connection	C6XS 8 JIC
3	2	62887	Hose	1/4" x 550 mm V/O JIC
4	2	62977	Hose	5/8" x 1100 mm V/O JIC
5	1	56046	Hose	1" x 1000 mm O/O JIC
6	1	25209	Elbow connection	EWSD 22 L
7	1	26391	Straight connection	EGESD 22 LR 1-WD
8	2	25858	Elbow connection	C40XS 12-3/8 JIC
9	1	59061	Dump valve	
10	1	62934	Hose	1/4" x 1330 mm V/O JIC
11	3	25863	Straight connection	F40XS 25-1 JIC
12	1	56048	Hose	1" x 900 mm O/O JIC
13	2	62065	Closed center kit	
14	2	62974	Hose	1/4" x 350 mm V/O JIC
15	1	58727	Swivel coupling, hydraulic	
16	3	31135	Washer	16 mm
17	3	30266	Set screw	M16 x 25
18	1	31322	Lubricator	1/8 RG - 90
19	1	6301196	Cam disc, 2-stage LMB	
20	4	30955	Countersunk screw	MK10 x 35
21	4	25830	Straight connection	F40XS8 - 3/8 JIC
22	1	62901	Hose	1/4" x 900 mm V/O JIC
23	5	25834	Straight connection	F40XS 18/20-3/4 JIC
24	7	26267	Elbow connection	C40XS 25-1 JIC
25	3	26693	Elbow connection	C40XS 18/20-3/4 JIC
26	2	56045	Hose	5/8" x 1450 mm O/O JIC
27	1	56050	Hose	1" x 1300 mm O/O JIC
28	1	56049	Hose	1" x 1050 mm O/O JIC
29	1	62957	Hose	3/8" x 600 mm O/O JIC
30	1	26272	Straight connection	F64XS 14/16 - 3/8" JIC
31	2	25823	Bulkhead connection	WTX-WLNS 8 JIC
32	1	60338	Shuttle valve	
33	2	56130	Hose	1/4" x 1150 mm O/O JIC
34	7	31177	Washer	10 mm
35	7	30154	Set screw	M10 x 20
36	2	26270	Fitting	TTX4S 8-1/4 JIC
37	2	31155	Spring washer	8 mm

72-516

Intern ref.: 6300930

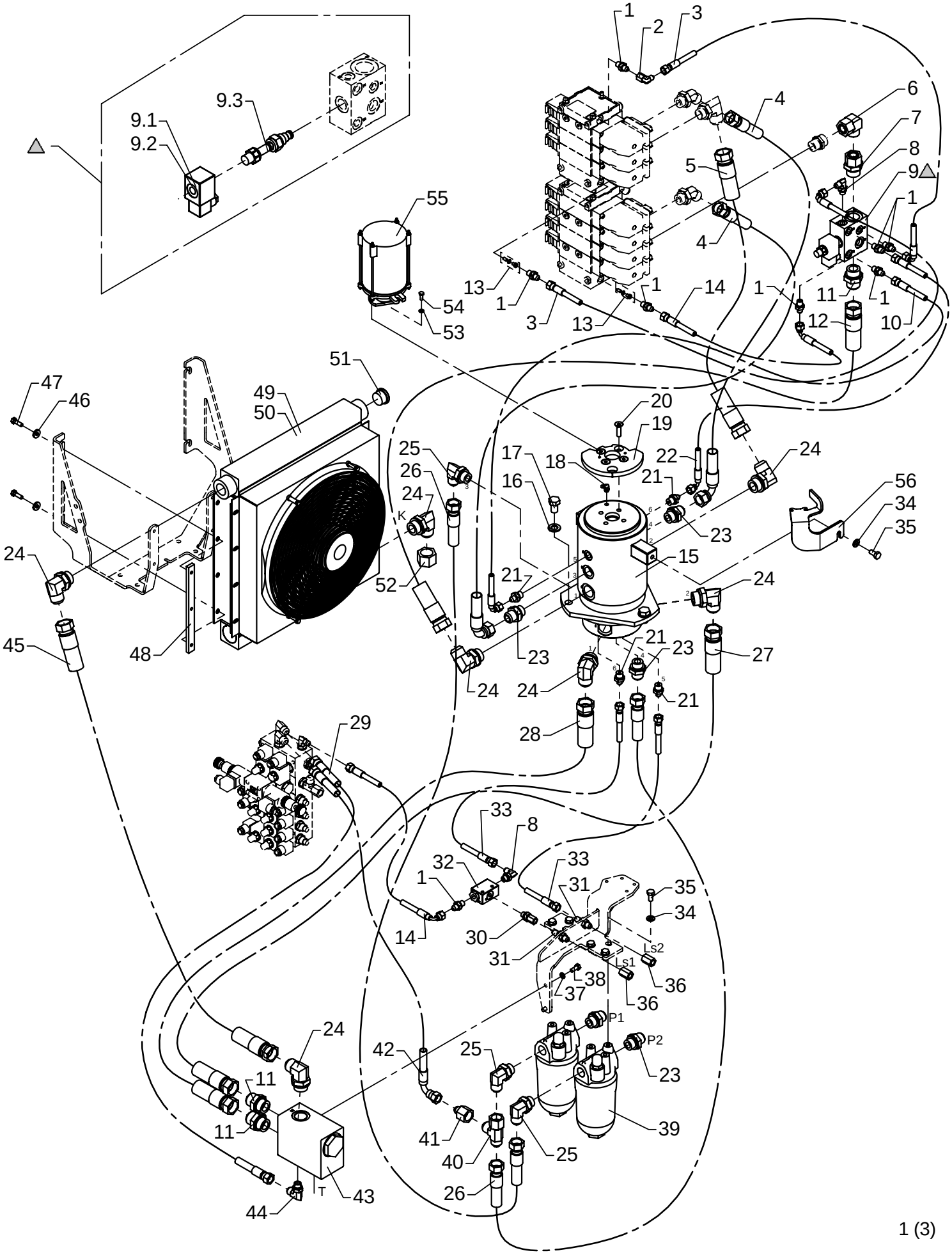

Hydraulic system, pump and return hoses, 2 circuits + variable pump

As from / To loader no.: 97 00 00 / 97 00 22
Created: 17.11.2003
Modified: 17.06.2005

Item no.	Qty.	Part no.	Description	Remarks
38	2	30132	Set screw, stainless	M8 x 20
39	2	60201	High pressure filter	
40	1	25828	Connection	R6XS 20 JIC
41	1	25865	Reducing connection	TRTXS 8/20-12 JIC
42	1	62956	Hose	3/8" x 550 mm V/O JIC
43	1	59056	Cooler valve	
44	1	25838	Elbow connection	C40XS 12-3/8 JIC
45	1	56058	Hose	3/4" x 1550 mm O/O JIC
46	4	31755	Washer	8 mm
47	4	30134	Set screw, stainless	M8 x 25
48	2	6381974	Threaded disc	
49	1	59310	Oil cooler 24 V	
50	1	59312	Oil cooler 12 V	
51	1	26321	Plug	VS-R 1" WD
52	1	25848	Screw cap JIC	FNTXS 25 JIC
53	2	31154	Spring washer, stainless	6 mm
54	2	30112	Set screw, stainless	M6 x 16
55	1	28549	Swivel coupling, electric	
56	1	6301197	Carrier	

72-516

Intern ref.: 6300930

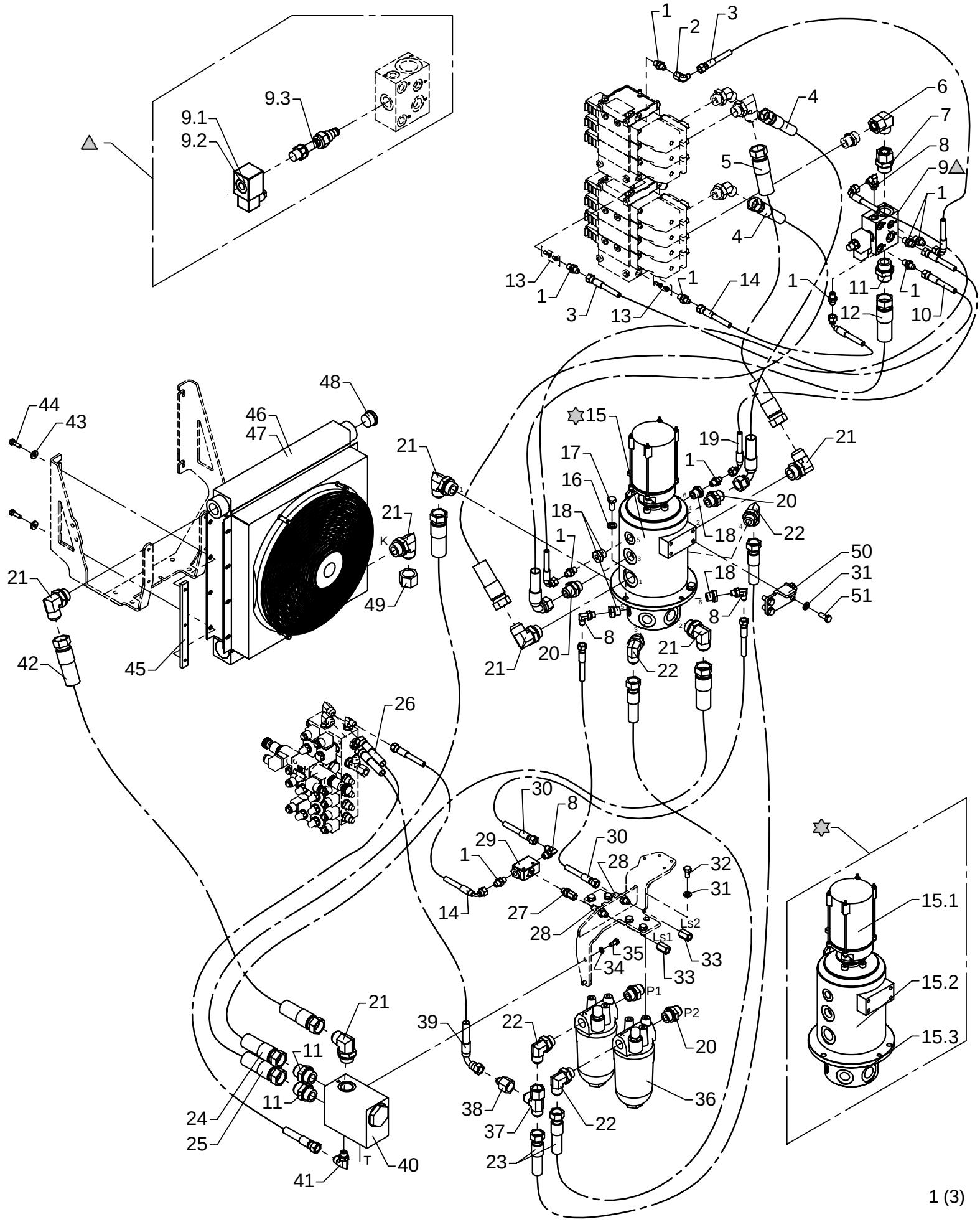

Hydraulic system, pump and return hoses, 2 circuits + variable pump

As from / To loader no.: 97 00 23 / 97 00 26
Created: 17.06.2005
Modified:

Item no.	Qty.	Part no.	Description	Remarks
1	10	25829	Straight connection	F40XS 8-1/4 JIC
2	1	25826	Elbow connection	C6XS 8 JIC
3	2	62887	Hose	1/4" x 550 mm V/O JIC
4	2	62977	Hose	5/8" x 1100 mm V/O JIC
5	1	56046	Hose	1" x 1000 mm O/O JIC
6	1	25209	Elbow connection	EWSD 22 L
7	1	26391	Straight connection	EGESD 22 LR 1-WD
8	4	25858	Elbow connection	C40XS 12-3/8 JIC
9	1	59061	Dump valve	
		61777	Solenoid	12V
		61778	Solenoid	26V
		59642	Magnet coil	
10	1	62934	Hose	1/4" x 1330 mm V/O JIC
11	3	25863	Straight connection	F40XS 25-1 JIC
12	1	56048	Hose	1" x 900 mm O/O JIC
13	2	62065	Closed center kit	
14	2	62974	Hose	1/4" x 350 mm V/O JIC
15	1	49105	Swivel coupling	
		28549	Swivel coupling, electric	
		49106	Swivel coupling	
		49115	Seal kit	
16	3	31131	Washer	12 mm
17	3	30176	Set screw	M12 x 25
18	4	25180	Connection	RED-R 1/2-WD/R 1/4
19	1	62901	Hose	1/4" x 900 mm V/O JIC
20	4	25834	Straight connection	F40XS 18/20-3/4 JIC
21	7	26267	Elbow connection	C40XS 25-1 JIC
22	4	26693	Elbow connection	C40XS 18/20-3/4 JIC
23	2	56045	Hose	5/8" x 1450 mm O/O JIC
24	1	56050	Hose	1" x 1300 mm O/O JIC
25	1	56049	Hose	1" x 1050 mm O/O JIC
26	1	62957	Hose	3/8" x 600 mm O/O JIC
27	1	26272	Straight connection	F64XS 14/16 - 3/8" JIC
28	2	25823	Bulkhead connection	WTX-WLNS 8 JIC
29	1	60338	Shuttle valve	
30	2	56130	Hose	1/4" x 1150 mm O/O JIC
31	10	31177	Washer	10 mm
32	6	30154	Set screw	M10 x 20
33	2	26270	Fitting	TTX4S 8-1/4 JIC
34	2	31155	Spring washer	8 mm

72-516

Intern ref.: 6300930

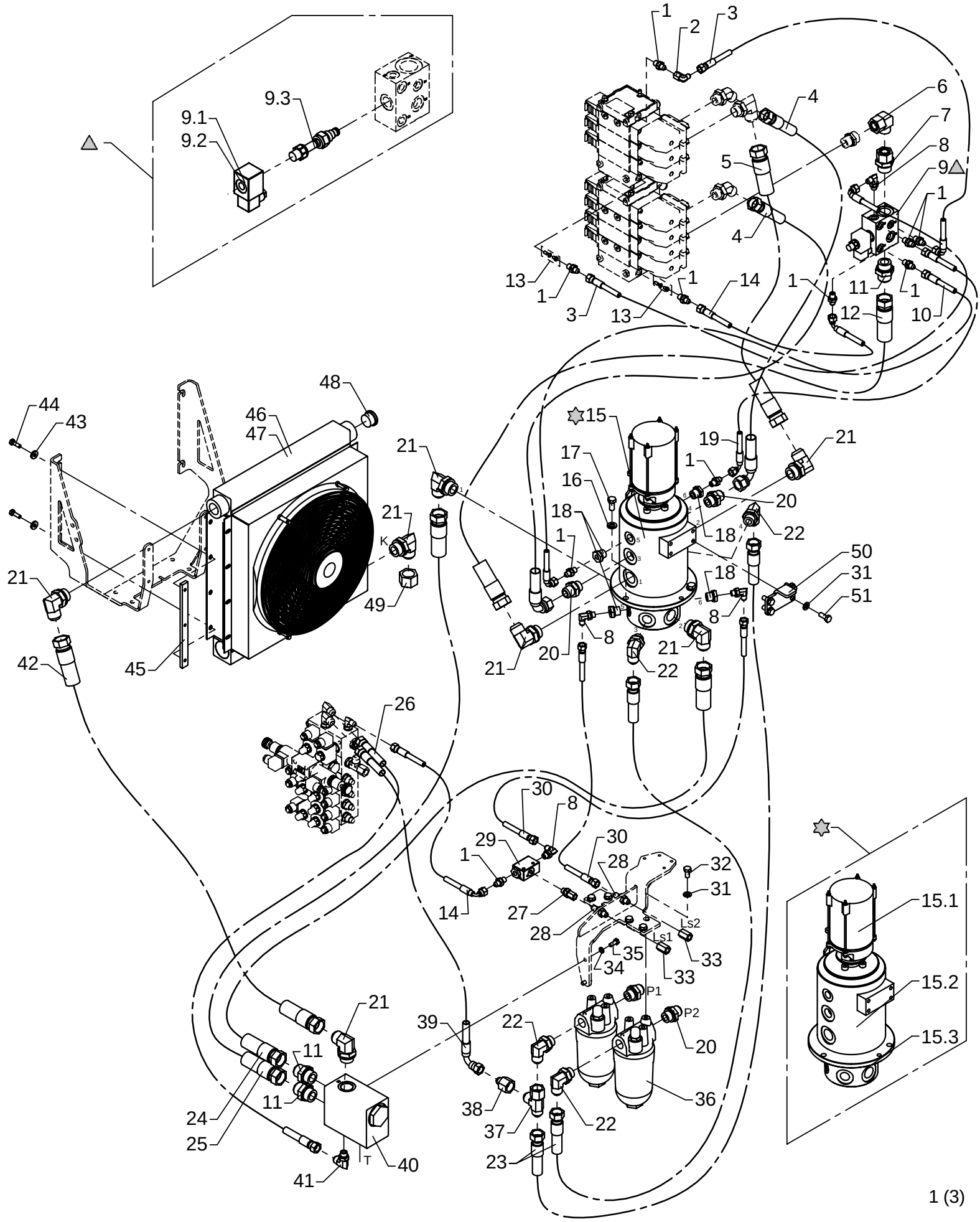

Hydraulic system, pump and return hoses, 2 circuits + variable pump

As from / To loader no.: 97 00 23 / 97 00 26
Created: 17.06.2005
Modified:

Item no.	Qty.	Part no.	Description	Remarks
35	2	30132	Set screw, stainless	M8 x 20
36	2	60201	High pressure filter	
37	1	25828	Connection	R6XS 20 JIC
38	1	25865	Reducing connection	TRTXS 8/20-12 JIC
39	1	62956	Hose	3/8" x 550 mm V/O JIC
40	1	59056	Cooler valve	
41	1	25838	Elbow connection	C40XS 12-3/8 JIC
42	1	56058	Hose	3/4" x 1550 mm O/O JIC
43	4	31755	Washer	8 mm
44	4	30134	Set screw, stainless	M8 x 25
45	2	6381974	Threaded disc	
46	1	59310	Oil cooler 24 V	
47	1	59312	Oil cooler 12 V	
48	1	26321	Plug	VS-R 1" WD
49	1	25848	Screw cap JIC	FNTXS 25 JIC
50	1	6302621	Carrier fitting	
51	4	30155	Set screw	M10 x 25

72-516

Intern ref.: 6300930

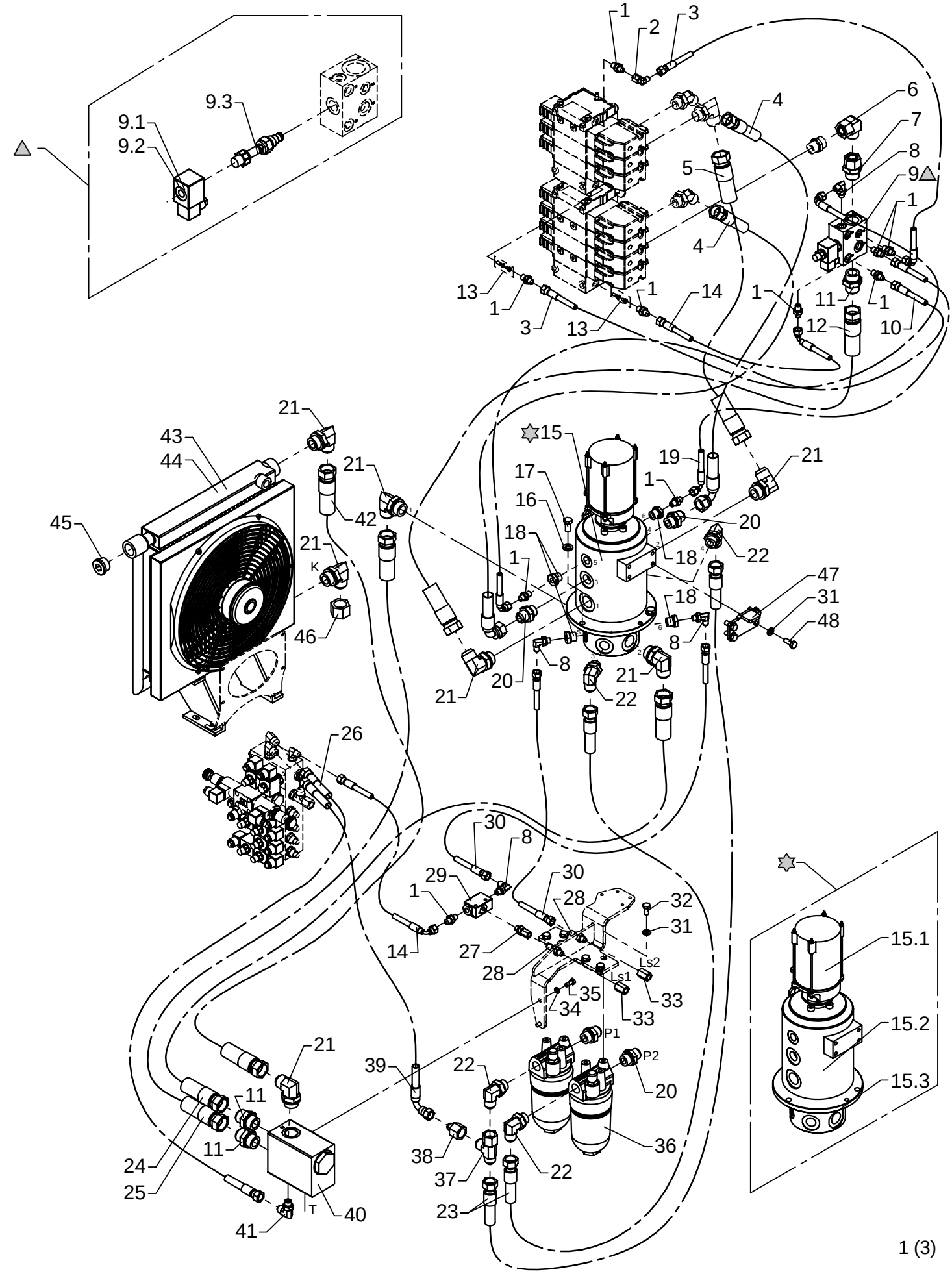

Hydraulic system, pump and return hoses, 2 circuits + variable pump

As from / To loader no.: 97 00 27 /
Created: 17.06.2005
Modified:

Item no.	Qty.	Part no.	Description	Remarks
1	10	25829	Straight connection	F40XS 8-1/4 JIC
2	1	25826	Elbow connection	C6XS 8 JIC
3	2	62887	Hose	1/4" x 550 mm V/O JIC
4	2	62977	Hose	5/8" x 1100 mm V/O JIC
5	1	56046	Hose	1" x 1000 mm O/O JIC
6	1	25209	Elbow connection	EWSD 22 L
7	1	26391	Straight connection	EGESD 22 LR 1-WD
8	4	25858	Elbow connection	C40XS 12-3/8 JIC
9	1	59061	Dump valve	
		61777	Solenoid	12V
		61778	Solenoid	26V
		59642	Magnet coil	
10	1	62934	Hose	1/4" x 1330 mm V/O JIC
11	3	25863	Straight connection	F40XS 25-1 JIC
12	1	56048	Hose	1" x 900 mm O/O JIC
13	2	62065	Closed center kit	
14	2	62974	Hose	1/4" x 350 mm V/O JIC
15	1	49105	Swivel coupling	
		28549	Swivel coupling, electric	
		49106	Swivel coupling	
		49115	Seal kit	
16	3	31131	Washer	12 mm
17	3	30176	Set screw	M12 x 25
18	4	25180	Connection	RED-R 1/2-WD/R 1/4
19	1	62901	Hose	1/4" x 900 mm V/O JIC
20	4	25834	Straight connection	F40XS 18/20-3/4 JIC
21	7	26267	Elbow connection	C40XS 25-1 JIC
22	4	26693	Elbow connection	C40XS 18/20-3/4 JIC
23	2	56045	Hose	5/8" x 1450 mm O/O JIC
24	1	56050	Hose	1" x 1300 mm O/O JIC
25	1	56049	Hose	1" x 1050 mm O/O JIC
26	1	62957	Hose	3/8" x 600 mm O/O JIC
27	1	26272	Straight connection	F64XS 14/16 - 3/8" JIC
28	2	25823	Bulkhead connection	WTX-WLNS 8 JIC
29	1	60338	Shuttle valve	
30	2	56130	Hose	1/4" x 1150 mm O/O JIC
31	10	31177	Washer	10 mm
32	6	30154	Set screw	M10 x 20
33	2	26270	Fitting	TTX4S 8-1/4 JIC
34	2	31155	Spring washer	8 mm

72-516

Intern ref.: 6300930

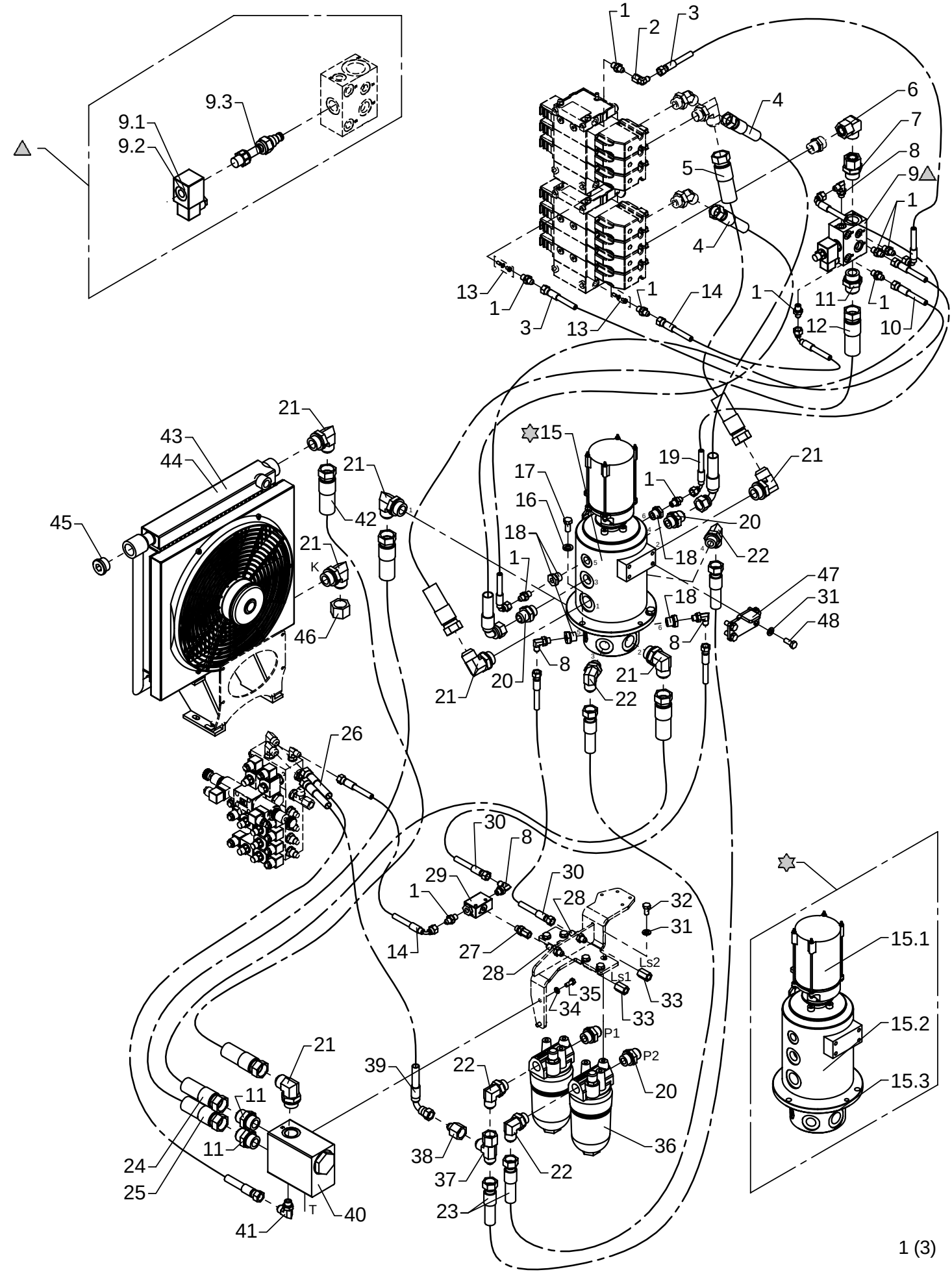

Hydraulic system, pump and return hoses, 2 circuits + variable pump

As from / To loader no.: 97 00 27 /
Created: 17.06.2005
Modified:

Item no.	Qty.	Part no.	Description	Remarks
35	2	30132	Set screw, stainless	M8 x 20
36	2	60201	High pressure filter	
37	1	25828	Connection	R6XS 20 JIC
38	1	25865	Reducing connection	TRTXS 8/20-12 JIC
39	1	62956	Hose	3/8" x 550 mm V/O JIC
40	1	59056	Cooler valve	
41	1	25838	Elbow connection	C40XS 12-3/8 JIC
42	1	56262	Hose	3/4" x 2000 mm O/O JIC
43	1	59310	Oil cooler 24 V	
44	1	59312	Oil cooler 12 V	
45	1	26321	Plug	VS-R 1" WD
46	1	25848	Screw cap JIC	FNTXS 25 JIC
47	1	6302621	Carrier fitting	
48	4	30155	Set screw	M10 x 25

72-516

Intern ref.: 6301090
6301490
6303090
6303490

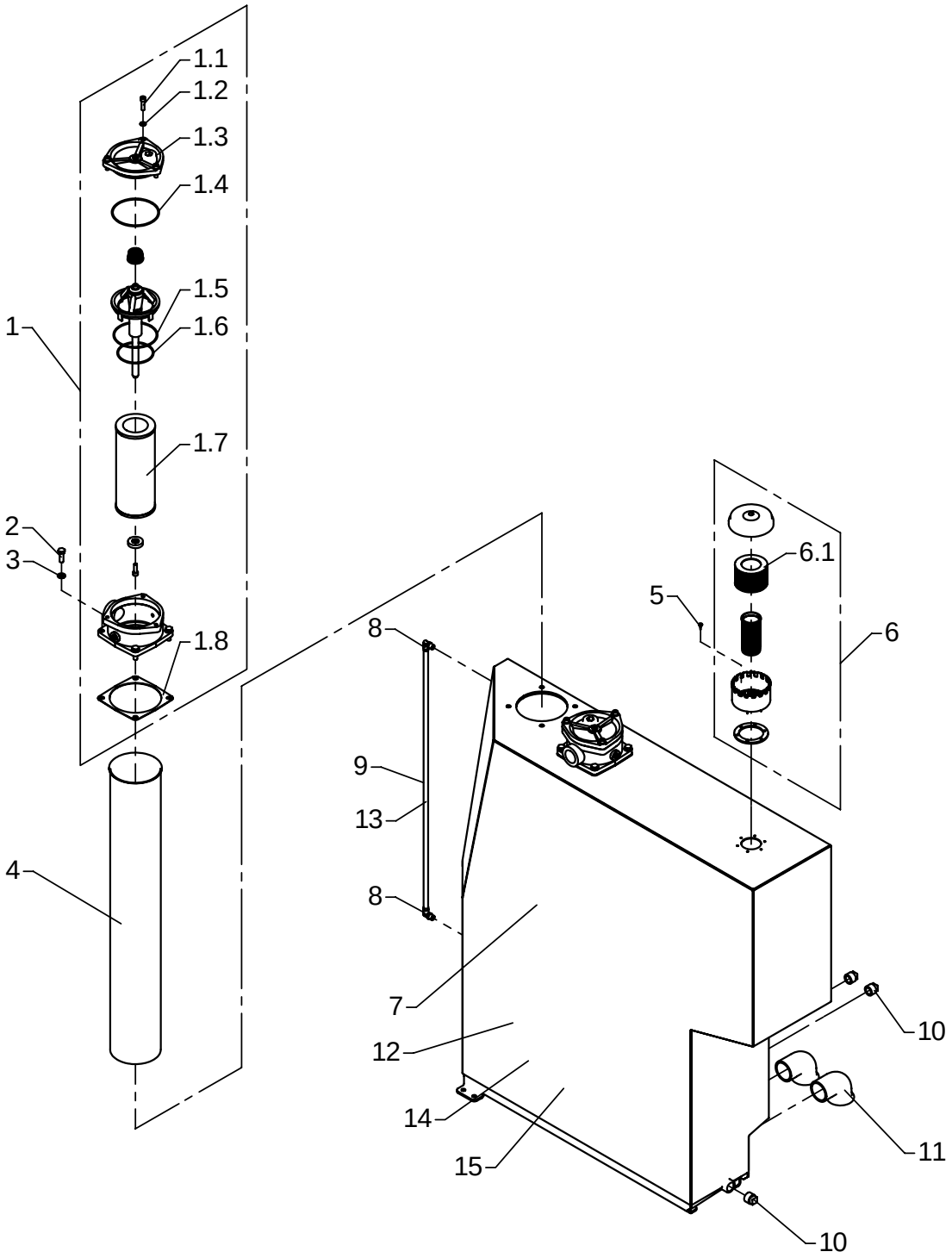

Tank, complete

As from / To loader no.: 96 00 00 /
Created: 15.09.2003
Modified: 29.06.2005

Item no.	Qty.	Part no.	Description	Remarks
1	2	60249	Return filter	
1.1	3	30442	Screw	MC8 x 30
1.2	3	31155	Spring washer	8 mm
1.3	1	60282	Cover	
1.4	1	20197	O-ring	OR 118 x 3
1.5	1	20196	O-ring	OR 109,5 x 3
1.6	1	20191	O-ring	OR 89,5 x 3
1.7	1	60250	Filter cartridge	
1.8	1	60283	Seal	
2	8	30156	Set screw, stainless	M10 x 30
3	8	31565	Washer, stainless	10 mm
4	2	58409	Pipe	
5	6	30737	Sheet metal screw	UH4,8 x 16
6	1	60275	Air filter	
6.1	1	60276	Filter	
7	1	49152	Oil tank, 320 l, black	
8	2	25535	Elbow connection	
9	1	62472	Nylon pipe	850 mm
10	3	26914	Plug 3/4"	
11	2	25430	Elbow	
12	1	49151	Oil tank 390 l, black	
13	1	62472	Nylon pipe	1040 mm
14	1	49154	Oil tank 390 l	
15	1	49155	Oil tank 320 l	

72-516

Intern ref.: 6301390

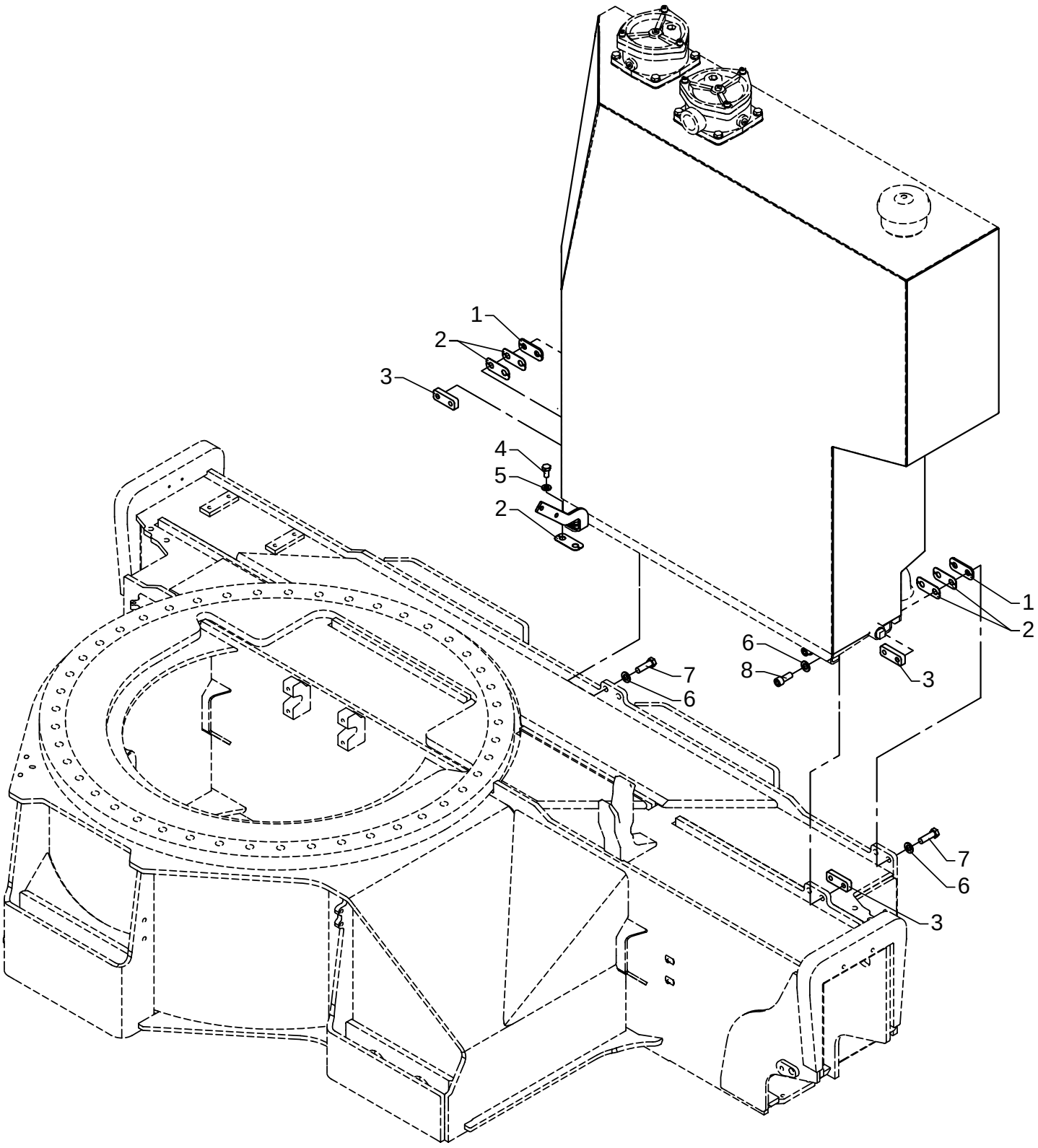

Fittings for tank

As from / To loader no.: 97 00 00 /
Created: 15.09.2003
Modified: 22.11.2003

Item no.	Qty.	Part no.	Description	Remarks
1	2	6301085	Division plate	
2	5	6301084	Division plate	
3	3	6301081	Spacer	
4	2	31517	Set screw, stainless	M10 x 20
5	2	31177	Washer	10 mm
6	6	31131	Washer	12 mm
7	4	31533	Set screw, stainless	M12 x 40
8	2	31542	Sockethead screw, stainless	MC12 x 30
9	1	6301069	Fitting	

72-516

Intern ref.: 6301420

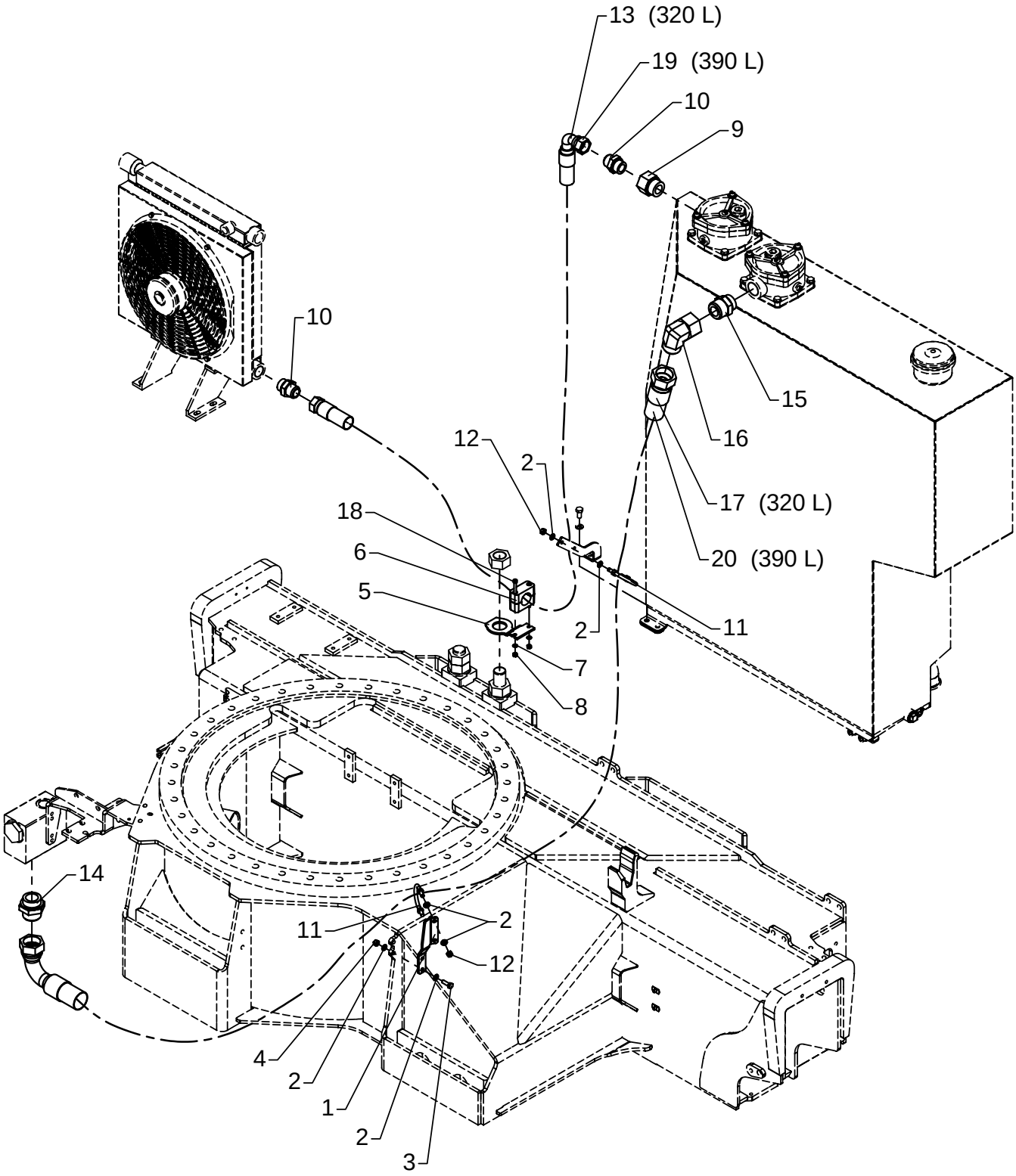

Hose kit for tank

As from / To loader no.: 97 00 00 /
Created: 26.11.2003
Modified:

zz	Qty.	Part no.	Description	Remarks
1	1	6301068	Fitting	
2	12	31147	Washer, stainless	8 mm
3	2	31009	Set screw	M8 x 25
4	2	30886	Lock nut, stainless	M8
5	1	6303067	Fitting	
6	1	31468	Clamp	
7	2	32302	Face washer, stainless	6 mm
8	2	30884	Lock nut, stainless	M6
9	1	26818	Reducing connection	RED-R 1 1/4-WD/R 1
10	2	25863	Straight connection	F40XS 25-1 JIC
11	2	31828	Bracket	
12	4	30856	Nut, stainless	
13	1	56135	Hose	1" x 1650 mm V/O JIC
14	1	26742	Straight connection	F40XS 38-1 1/2 JIC
15	1	26735	Straight connection	F40XS 38-1 1/4 JIC
16	1	26741	Elbow	C6XS 38 JIC
17	1	56136	Hose	1.1/2" x 3200 mm V/O JIC
18	2	30966	Screw	MC6 x 65
19	1	56140	Hose	1" x 1840 mm V/O JIC
20	1	56141	Hose	1.1/2" x 3390 mm JIC

72-516

Intern ref.: 6300640

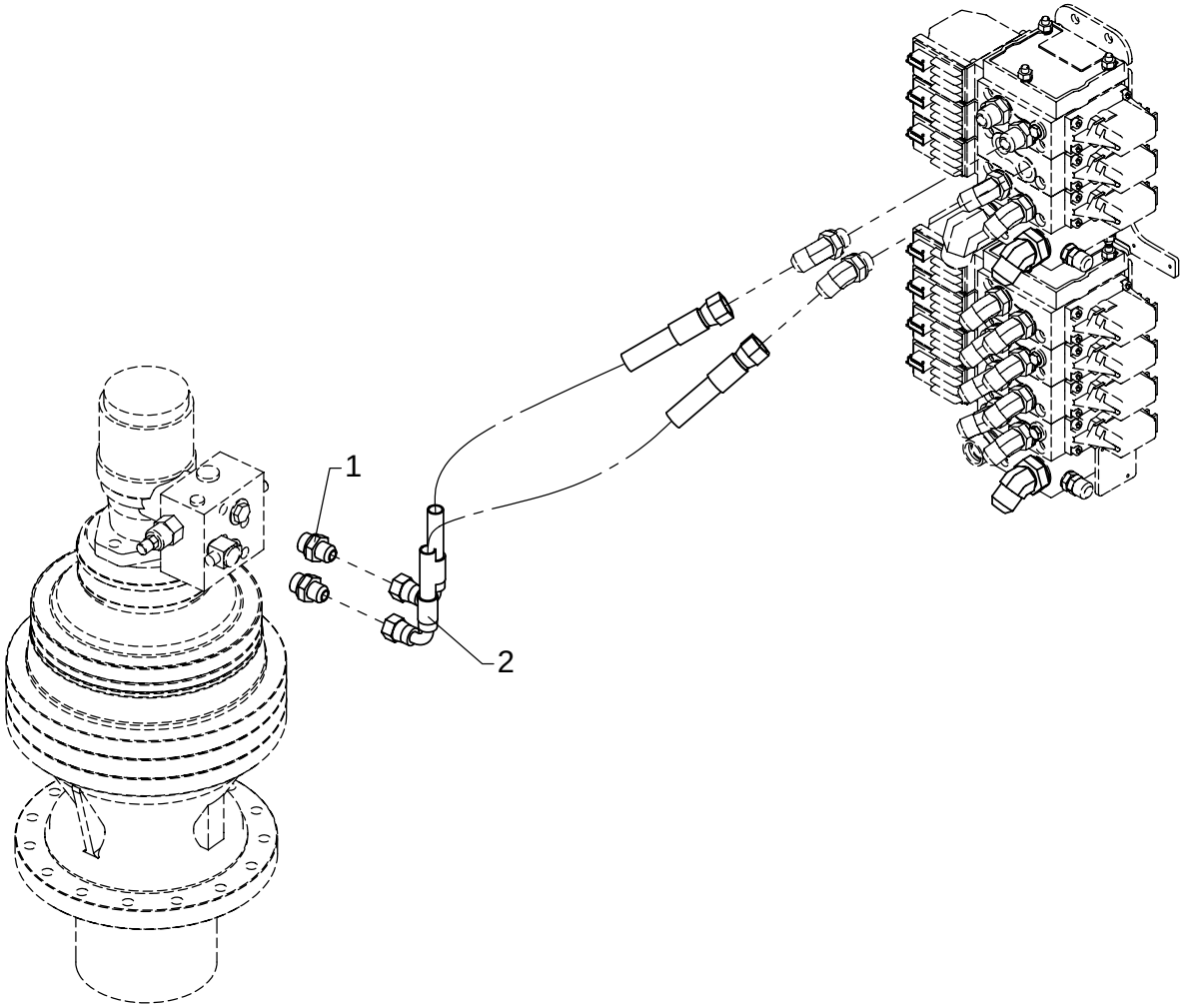

Hydraulic system, planetary gear

As from / To loader no.: 97 00 00/
Created: 17.11.2003
Modified:

Item no.	Qty.	Part no.	Description	Remarks
1	2	25832	Straight connection	F40XS 12-1/2 JIC
2	2	56057	Hose	3/8" x 675 mm V/O JIC

72-516

Intern ref.: 6300120

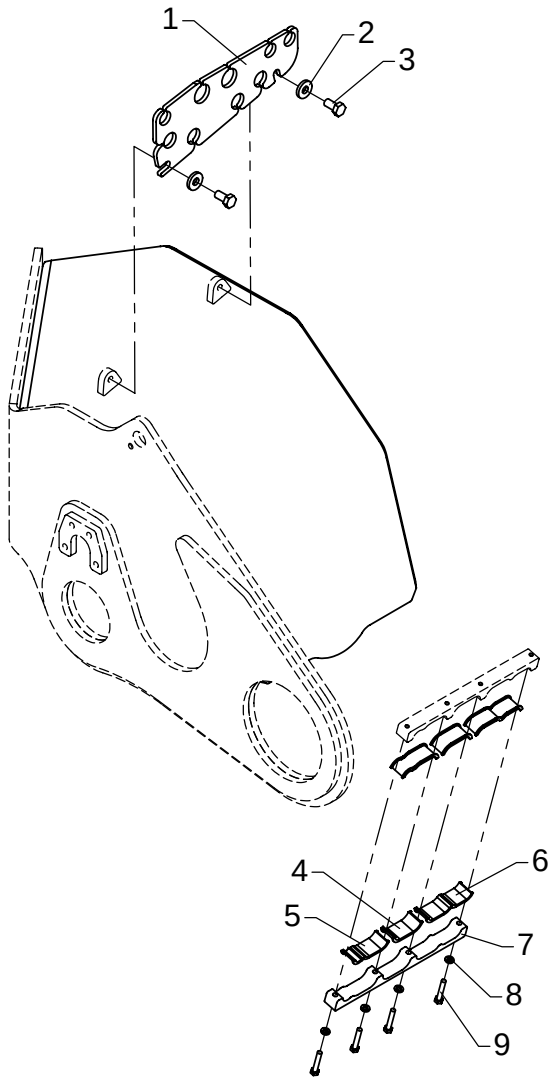

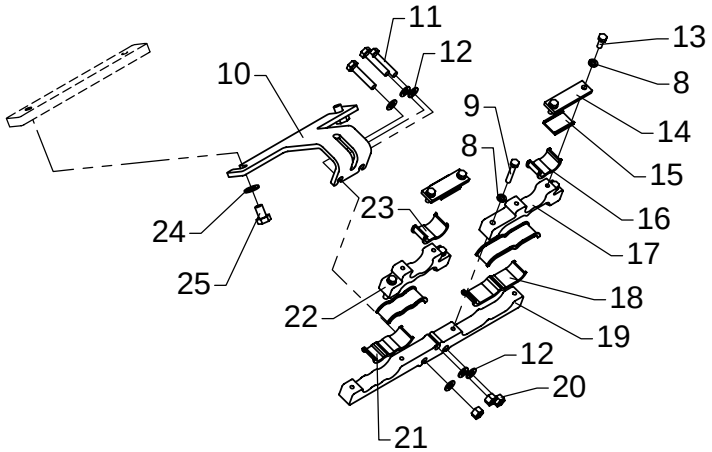

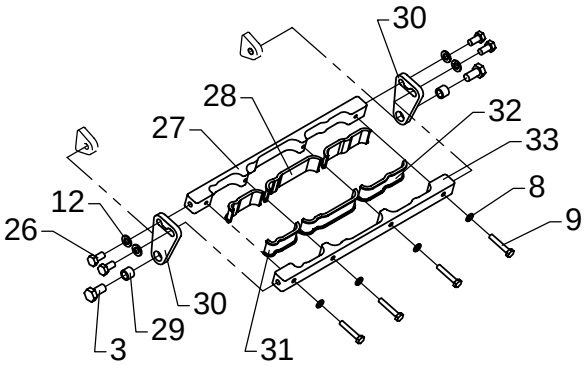

Hose clamp

As from / To loader no.: 97 00 00/
Created: 17.11.2003
Modified:

Item no.	Qty.	Part no.	Description	Remarks
1	1	6300667	Bracket, bulkhead connection K	
2	2	31756	Washer	10 mm
3	4	30154	Set screw	M10 x 20
4	2	64310	Rubber section	63 mm
5	2	64310	Rubber section	73 mm
6	2	64310	Rubber section	95 mm
7	1	6300665	Clamp - K	
8	16	31154	Spring washer, stainless	6 mm
9	12	30116	Steel bolt, stainless	M6 x 35
10	1	6300664	Bracket for clamp - N	
11	3	30137	Set screw, stainless	M8 x 40
12	10	31147	Washer, stainless	8 mm
13	4	30112	Set screw, stainless	M6 x 16
14	2	6300668	Fitting	
15	2	64310	Rubber section	35 mm
16	1	64310	Rubber section	62 mm
17	1	6300663	Clamp N - H	
18	2	64310	Rubber section	108 mm
19	1	6300661	Clamp N - 1	
20	3	30886	Lock nut, stainless	M8
21	2	64310	Rubber section	83 mm
22	1	6300662	Clamp N - V	
23	1	64310	Rubber section	67 mm
24	2	31177	Washer	10 mm
25	2	30153	Set screw	M10 x 16
26	4	30131	Set screw, stainless	M8 x 16
27	1	6300652	Hose bracket	
28	2	64310	Rubber section	109 mm
29	2	6302369	Spacer	
30	2	6300653	Clamp	
31	2	64310	Rubber section	68 mm
32	2	64310	Rubber section	90 mm
33	1	6300651	Hose bracket	

72-516

Intern ref.: 6300880

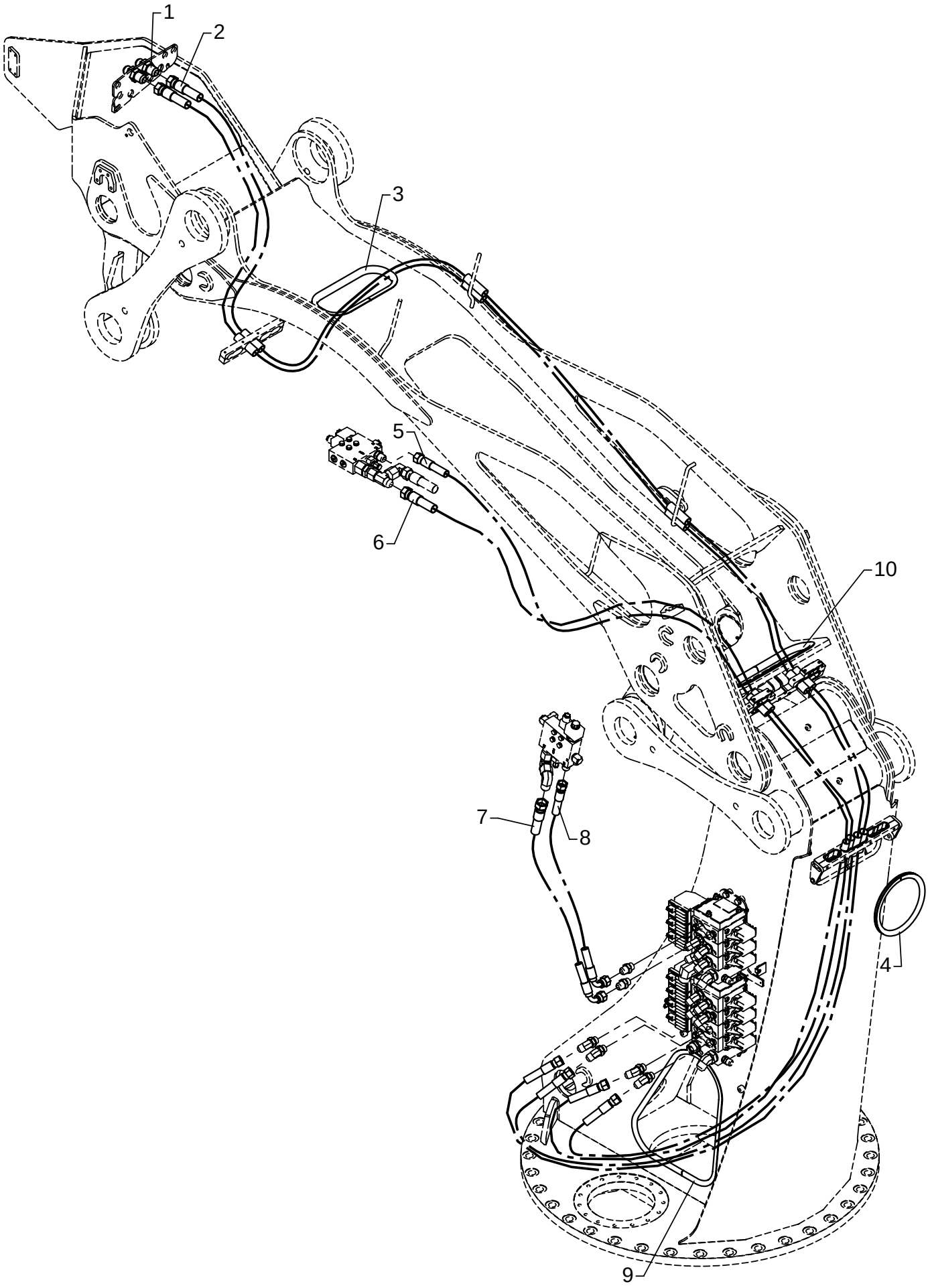

Hydraulic system, boom, jib and ext.

As from / To loader no.: 97 00 00 /
Created: 17.11.2003
Modified: 05.01.2005

Item no.	Qty.	Part no.	Description	Remarks
1	2	25862	Bulkhead connection	WTX-WLNS 20 JIC
2	2	56053	Hose	5/8" x 5900 mm O/O JIC
3	1	64300	PVC protection	684 mm
4	1	46587	Rubber protection	565 mm
5	1	62868	Hose, JIC	1/2" x 3900 mm O/O JIC
6	1	56054	Hose	5/8" x 3800 mm O/O JIC
7	1	56051	Hose	5/8" x 875 mm V/O JIC
8	1	56052	Hose	1/2" x 850 mm V/O JIC
9	1	46587	Rubber protection	1321 mm
10	1	64300	PVC protection	820 mm

72-516

Intern ref.: 6300680

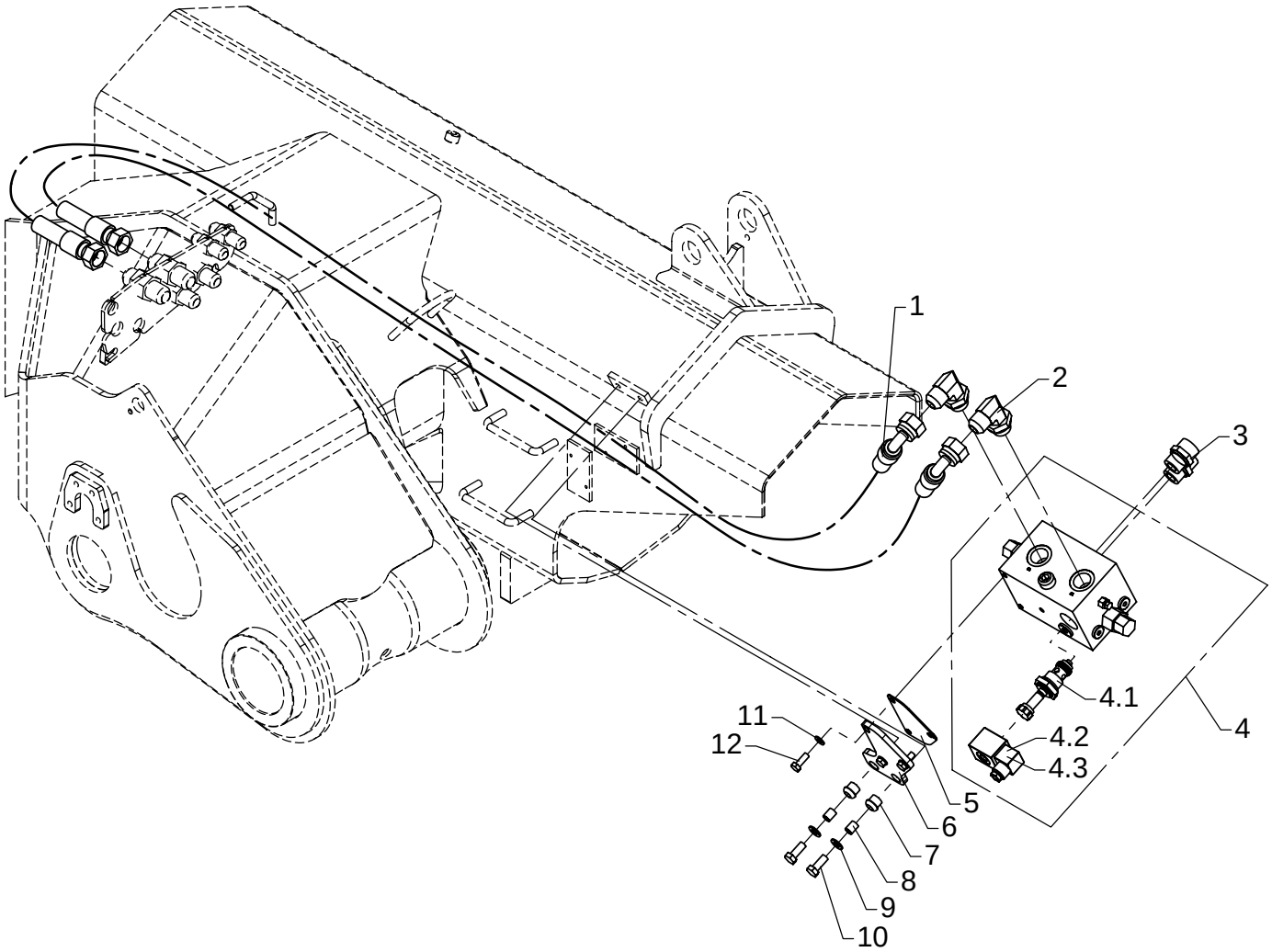

Hydraulic system, regeneration

As from / To loader no.: 97 00 00/
Created: 17.11.2003
Modified:

Item no.	Qty.	Part no.	Description	Remarks
1	2	56077	Hose	5/8" x 1500 mm V/O JIC
2	2	26693	Elbow connection	C40XS 18/20-3/4 JIC
3	2	26197	Connection	GEV 20 SR-WD
		59071	Magnet coil	
		61777	Solenoid	12V
		61778	Solenoid	26V
4	1	59065	Regeneration valve	
5	1	6300608	Division plate	
6	1	6300605	Bracket	
7	2	27088	Rubber bushing	
8	2	6300607	Spacer	
9	2	31177	Washer	10 mm
10	2	30155	Set screw	M10 x 25
11	3	31147	Washer, stainless	8 mm
12	3	30133	Set screw, stainless	M8 x 22

72-516

Intern ref.: 6300700

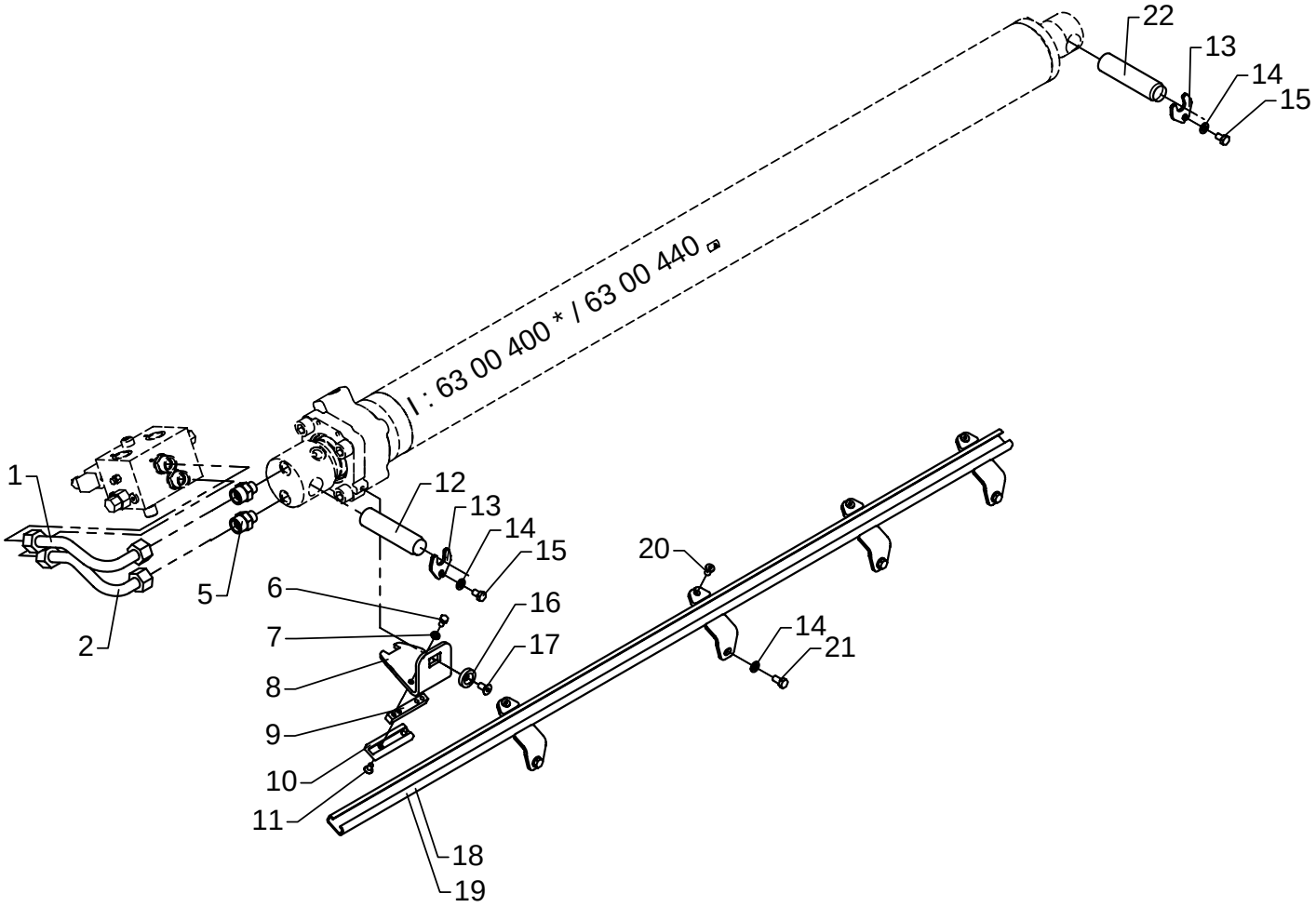

Hydraulic system, extension cylinder, I

As from / To loader no.: 97 00 00/
Created: 17.11.2003
Modified: 13.09.2004

Item no.	Qty.	Part no.	Description	Remarks
1	1	6300701	Pipe	
2	1	6300702	Pipe	
3	1	6301701	Pipe	#
4	1	6301702	Pipe	#
5	2	26221	Connection	GEV 20 S/R 1/2-WD
6	2	30131	Set screw, stainless	M8 x 16
7	2	31147	Washer, stainless	8 mm
8	1	6300337	Bracket, C-I	
9	1	6300338	Spacer	
10	1	63686	Guide shoe	
11	2	30543	Countersunk screw	MK8 x 16
12	1	6302276	Pin	
13	2	6302277	Lock plate	
14	6	31177	Washer	10 mm
15	2	31510	Set screw, stainless	M10 x 16
16	1	6300339	Disc	
17	1	30545	Countersunk screw	MK10 x 20
18	1	6300354	Guide rail, I-K5	*
19	1	6300355	Guide rail, I-K8	
20	4	32423	Sockethead screw	MC10 x 16
21	4	30154	Set screw	M10 x 20
22	1	6302274	Pin	

* Optimised boom system

Personnel basket

72-516

Intern ref.: 6300710

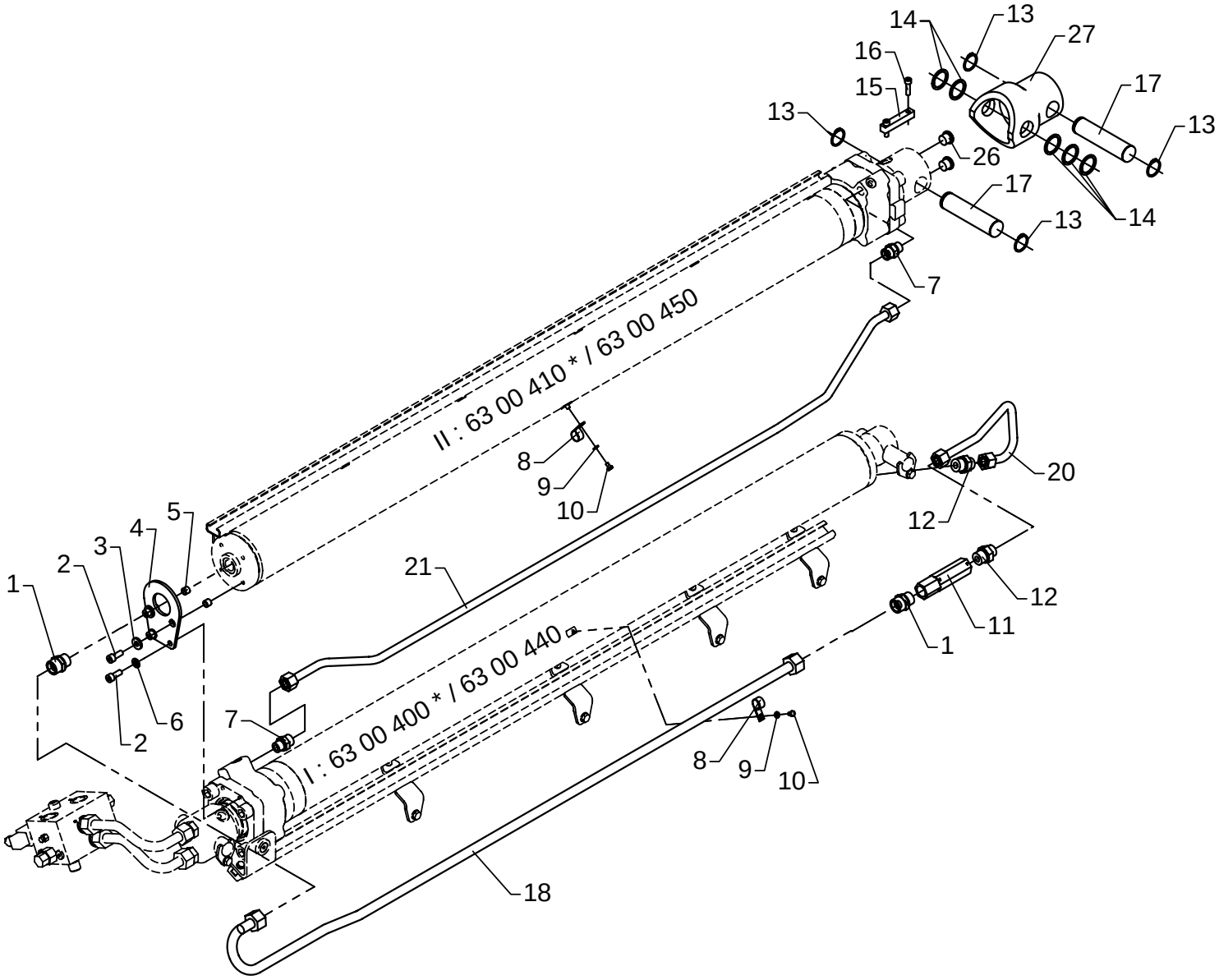

Hydraulic system, extension cylinder, II

As from / To loader no.: 97 00 00/
Created: 17.11.2003
Modified: 13.09.2004

Item no.	Qty.	Part no.	Description	Remarks
1	2	26197	Connection	GEV 20 SR-WD
2	4	30453	Screw	MC10 x 25
3	2	31756	Washer	10 mm
4	1	6300348	Bracket, C-II	
5	2	6302369	Spacer	
6	2	31177	Washer	10 mm
7	2	26334	Connection	GEV 16 SR-WD
8	2	31449	Clamp	
9	2	32302	Face washer, stainless	6 mm
10	2	30110	Set screw, stainless	M6 x 10
11	1	59076	Counter-balance valve	
12	2	26390	Connection	GEV 16 S/R 3/4-WD
13	4	33119	Circlip	36U
14	5	33257	Supporting washer	SS 36 x 45 x 2,5
15	2	6302279	Lock plate	
16	4	30442	Screw	MC8 x 30
17	2	6193254	Pin	
18	1	6300711	Pipe	*
19	1	6302711	Pipe	
20	1	6300712	Pipe	
21	1	6300713	Pipe	*
22	1	6302713	Pipe	
23	1	6301711	Pipe	#
24	1	6301712	Pipe	#
25	1	6303711	Pipe	#
26	2	25103	Plug	VS-R-1/2 WD
27	1	6300377	Adapter	K2 + K3

* Optimised boom system

Personnel basket

72-516

Intern ref.: 6300720

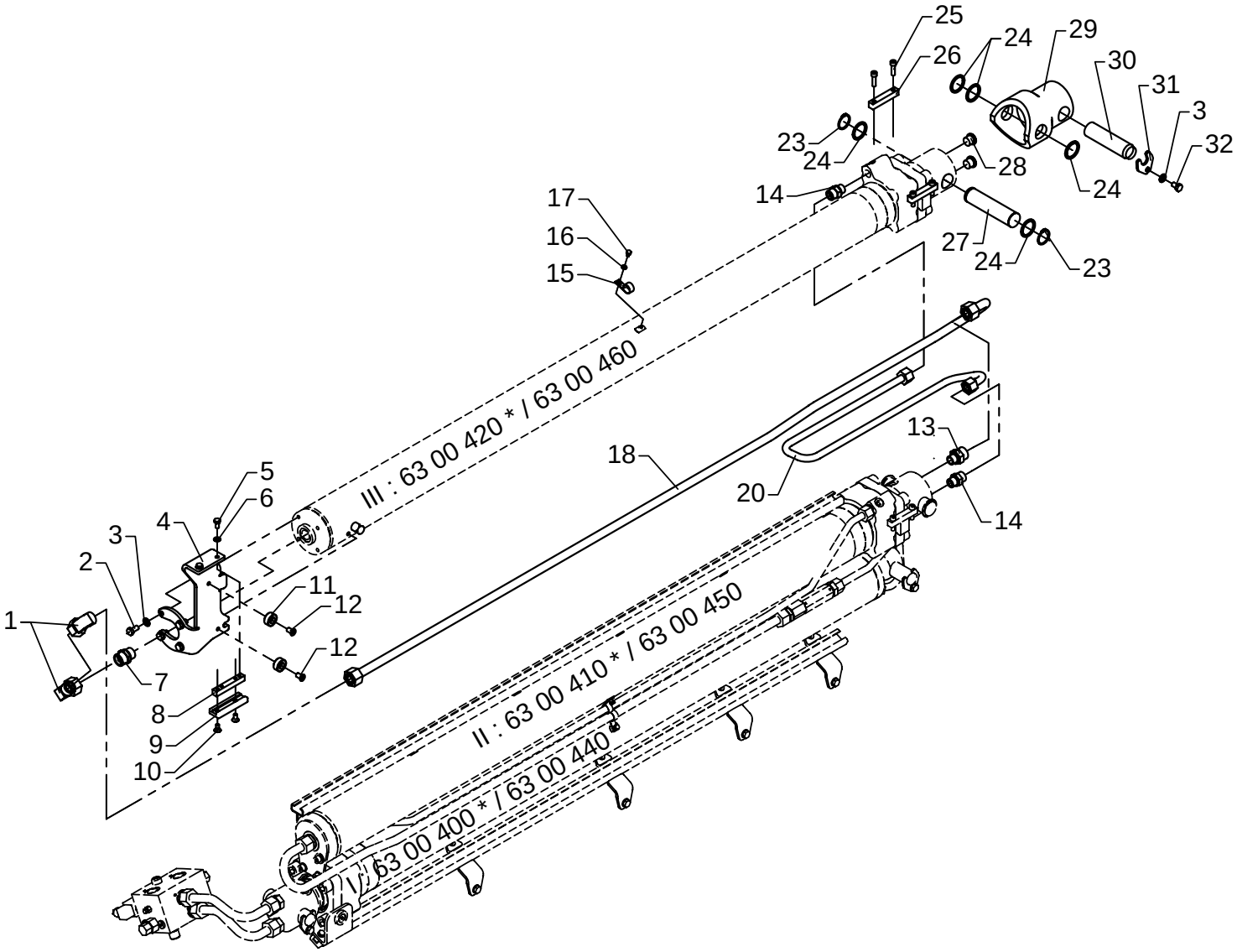

Hydraulic system, extension cylinder, III

As from / To loader no.: 97 00 00/
Created: 17.11.2003
Modified: 13.09.2004

Item no.	Qty.	Part no.	Description	Remarks
1	2	26198	Elbow connection	EWVD 20 S-SV
2	4	30154	Set screw	M10 x 20
3	5	31177	Washer	10 mm
4	1	6300349	Bracket for guide shoe, C-III	
5	2	30131	Set screw, stainless	M8 x 16
6	2	31147	Washer, stainless	8 mm
7	1	26197	Connection	GEV 20 SR-WD
8	1	6300338	Spacer	
9	1	63686	Guide shoe	
10	2	30543	Countersunk screw	MK8 x 16
11	2	63503	Bushing	
12	2	32423	Sockethead screw	MC10 x 16
13	1	26221	Connection	GEV 20 S/R 1/2-WD
14	2	26334	Connection	GEV 16 SR-WD
15	1	31449	Clamp	
16	1	32302	Face washer, stainless	6 mm
17	1	30110	Set screw, stainless	M6 x 10
18	1	6300721	Pipe	*
19	1	6302721	Pipe	
20	1	6300722	Pipe	
21	1	6301721	Pipe	#
22	1	6303721	Pipe	#
23	2	33119	Circlip	36U
24	5	33257	Supporting washer	SS 36 x 45 x 2,5
25	4	30442	Screw	MC8 x 30
26	2	6302279	Lock plate	
27	1	6193254	Pin	
28	2	25103	Plug	VS-R-1/2 WD
29	1	6300377	Adapter	K2 + K3
30	1	6302276	Pin	
31	1	6302277	Lock plate	
32	1	31510	Set screw, stainless	M10 x 16

* Optimised boom system

Personnel basket

72-516

Intern ref.: 6300730

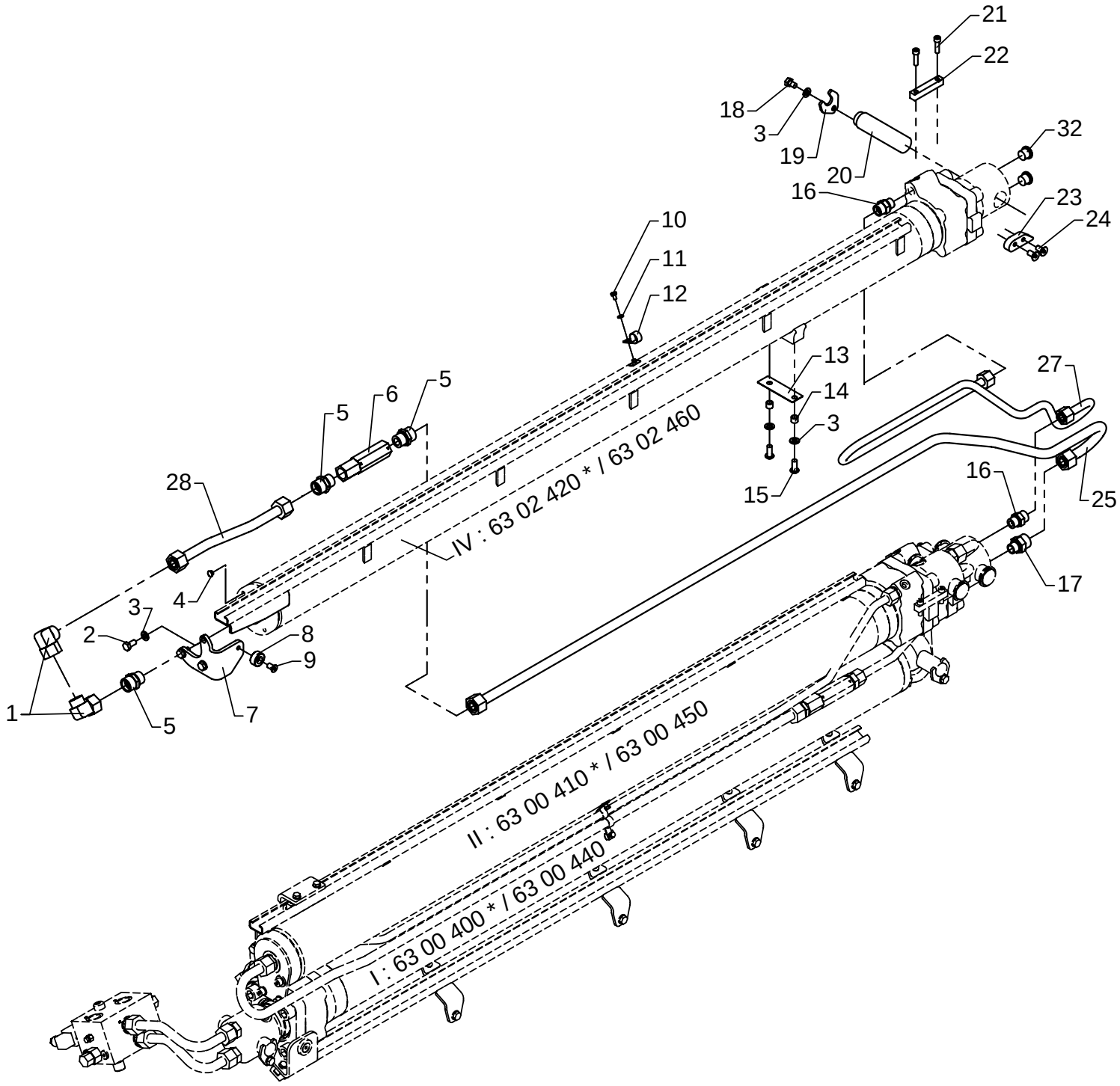

Hydraulic system, extension cylinder, IV

As from / To loader no.: 97 00 00/
Created: 17.11.2003
Modified: 13.09.2004

Item no.	Qty.	Part no.	Description	Remarks
1	2	26198	Elbow connection	EWVD 20 S-SV
2	3	30154	Set screw	M10 x 20
3	6	31177	Washer	10 mm
4	1	64366	Plug	
5	3	26197	Connection	GEV 20 SR-WD
6	1	59076	Counter-balance valve	
7	1	6300457	Guide	
8	1	63503	Bushing	
9	1	32423	Sockethead screw	MC10 x 16
10	1	30110	Set screw, stainless	M6 x 10
11	1	32302	Face washer, stainless	6 mm
12	1	31449	Clamp	
13	1	6302389	Shim	
14	2	6302369	Spacer	
15	2	30652	Screw	M10 x 25
16	2	26334	Connection	GEV 16 SR-WD
17	1	26221	Connection	GEV 20 S/R 1/2-WD
18	1	31510	Set screw, stainless	M10 x 16
19	1	6302277	Lock plate	
20	1	6302276	Pin	
21	2	30442	Screw	MC8 x 30
22	1	6302279	Lock plate	
23	1	6302275	Lock plate	
24	2	30545	Countersunk screw	MK10 x 20
25	1	6300731	Pipe	*
26	1	6302731	Pipe	
27	1	6300732	Pipe	
28	1	6300733	Pipe	
29	1	6301731	Pipe	#
30	1	6301733	Pipe	#
31	1	6303731	Pipe	#
32	2	25103	Plug	VS-R-1/2 WD

* Optimised boom system

Personnel basket

72-516

Intern ref.: 6300740

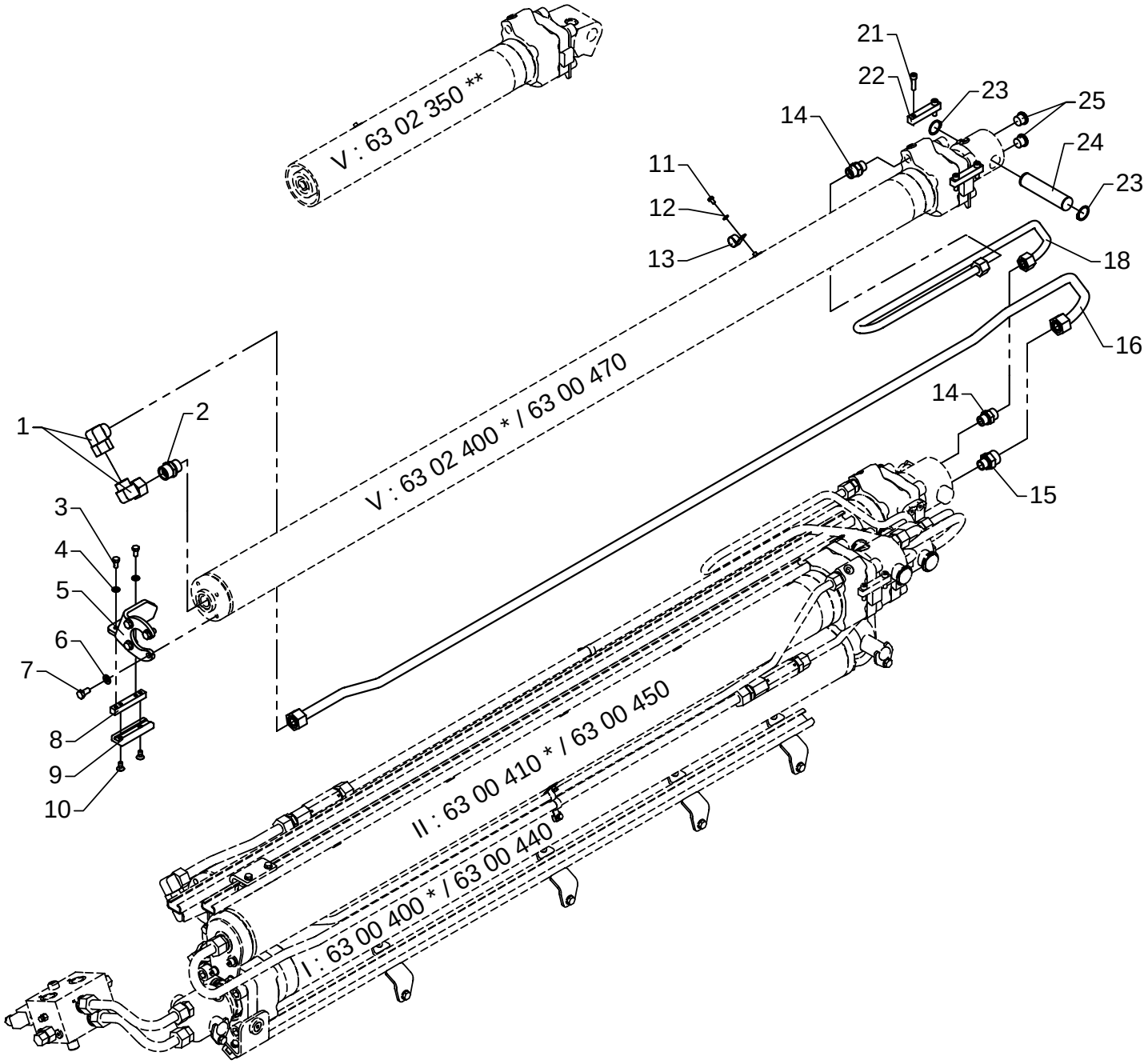

Hydraulic system, extension cylinder, V

As from / To loader no.: 97 00 00/
Created: 17.11.2003
Modified: 13.09.2004

Item no.	Qty.	Part no.	Description	Remarks
1	2	26198	Elbow connection	EWVD 20 S-SV
2	1	26197	Connection	GEV 20 SR-WD
3	2	30131	Set screw, stainless	M8 x 16
4	2	31147	Washer, stainless	8 mm
5	1	6300456	Bracket for guide shoe, C-V	
6	4	31177	Washer	10 mm
7	4	30154	Set screw	M10 x 20
8	1	6300338	Spacer	
9	1	63686	Guide shoe	
10	2	30543	Countersunk screw	MK8 x 16
11	1	30110	Set screw, stainless	M6 x 10
12	1	32302	Face washer, stainless	6 mm
13	1	31449	Clamp	
14	2	26334	Connection	GEV 16 SR-WD
15	1	26221	Connection	GEV 20 S/R 1/2-WD
16	1	6300745	Pipe	*
17	1	6302745	Pipe	
18	1	6302746	Pipe	
19	1	6301745	Pipe	#
20	1	6303745	Pipe	#
21	4	30442	Screw	MC8 x 30
22	2	6302279	Lock plate	
23	2	33115	Circlip	24U
24	1	6302278	Pin	
25	2	25103	Plug	VS-R-1/2 WD

* Optimised boom system OK5
** Optimised boom system OK6

Personnel basket

72-516

Intern ref .: 6301530

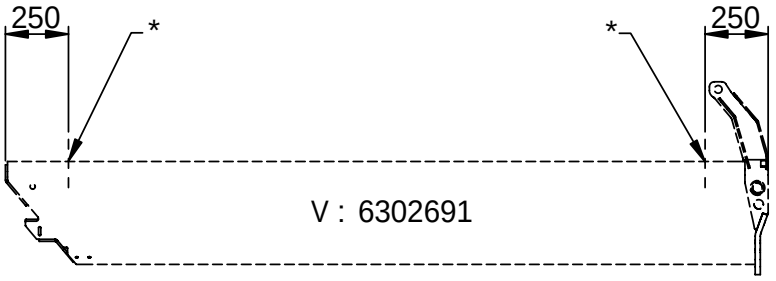

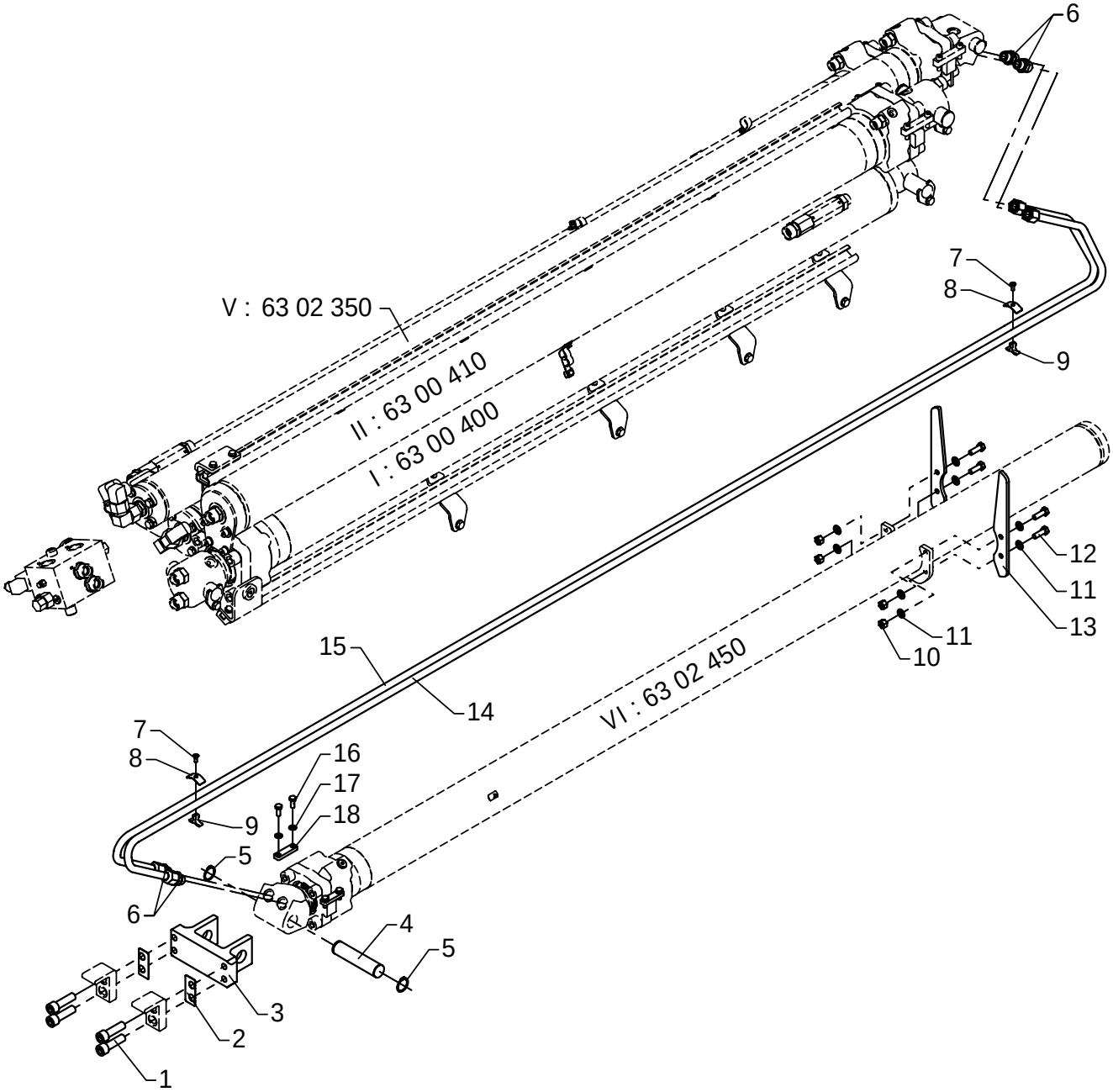

Hydraulic system, extension cylinder, VI
Optimised boom system OK6

As from / To loader no.: 97 00 00 /
Created: 27.05.2004
Modified: 23.08.2004

Item no.	Qty.	Part no.	Description	Remarks
1	4	32420	Sockethead screw	MC16 x 55
2	2	6302638	Base plate	
3	1	6302637	Adapter	
4	1	6302278	Pin	
5	2	33115	Circlip	24U
6	4	26334	Connection	GEV 16 SR-WD
7	2	32201	Countersunk screw	MK6 x 16
8	2	6302639	Base plate	
9	2	6300928	Clamp	
10	4	30888	Lock nut	M10
11	8	31177	Washer	10 mm
12	4	30156	Set screw, stainless	M10 x 30
13	2	6302459	Support plate	
14	1	6302754	Pipe	
15	1	6302755	Pipe	
16	4	30132	Set screw, stainless	M8 x 20
17	4	31147	Washer, stainless	8 mm
18	2	6232964	Stowing pin	

* Drill a ø6 mm countersunk hole before fitting.

72-516

Intern ref.: 6300750

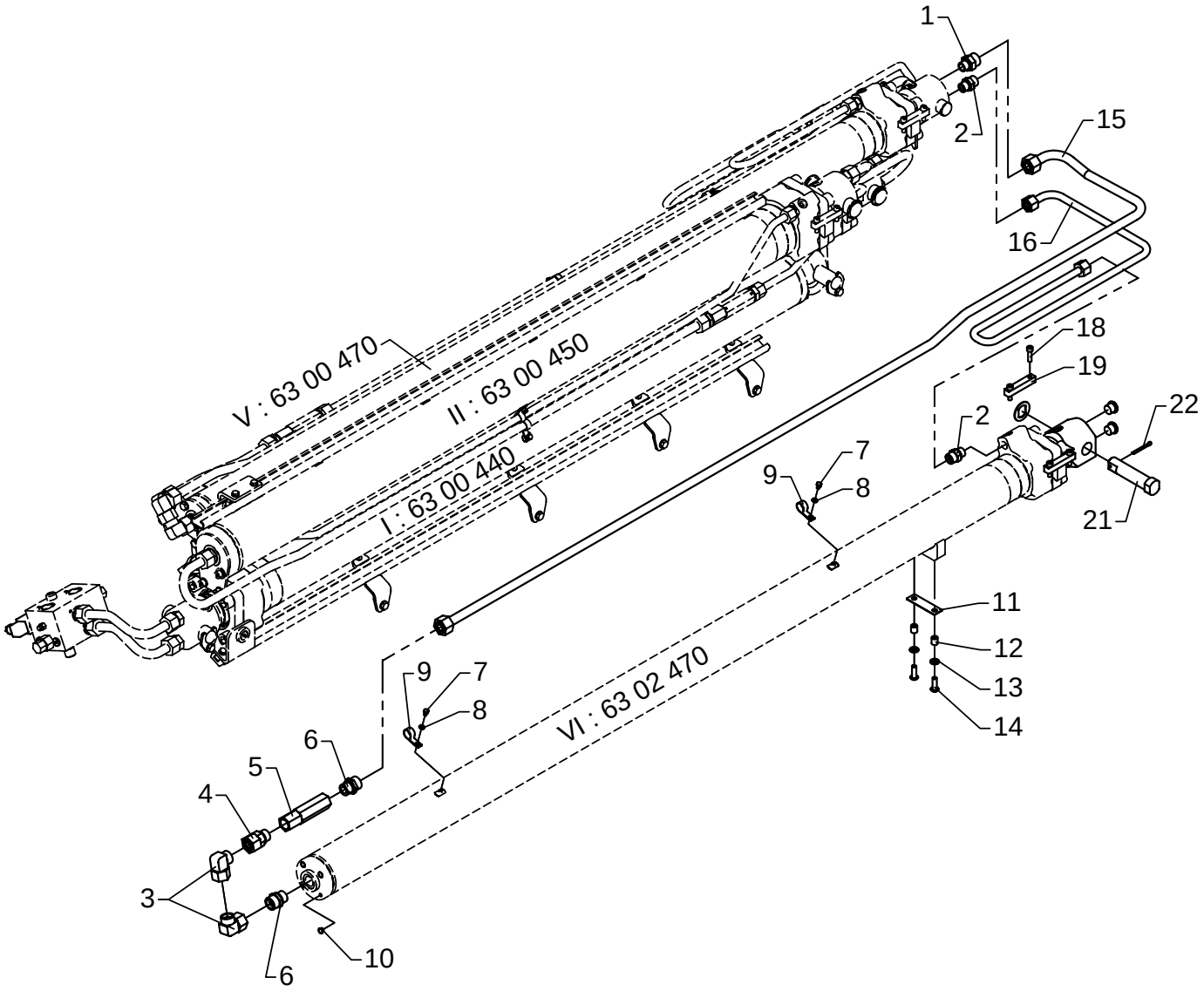

Hydraulic system, extension cylinder, VI Boom system K6-K8

As from / To loader no.: 97 00 00/
Created: 17.11.2003
Modified: 13.09.2004

Item no.	Qty.	Part no.	Description	Remarks
1	1	26221	Connection	GEV 20 S/R 1/2-WD
2	2	26334	Connection	GEV 16 SR-WD
3	2	26198	Elbow connection	EWVD 20 S-SV
4	1	26358	Connection	EGESD 20 SR-WD
5	1	59076	Counter-balance valve	
6	2	26197	Connection	GEV 20 SR-WD
7	2	30110	Set screw, stainless	M6 x 10
8	2	32302	Face washer, stainless	6 mm
9	2	31449	Clamp	
10	4	64366	Plug	
11	1	6302478	Shim	
12	2	6302048	Spacer	
13	2	31177	Washer	10 mm
14	2	30649	Screw	M10 x 30
15	1	6302751	Pipe	
16	1	6302752	Pipe	
17	1	6303751	Pipe	#
18	4	30442	Screw	MC8 x 30
19	2	6302279	Lock plate	
20	1	6300493	Washer	
21	1	6300481	Pin	
22	1	31635	Split pin	ø5 x 50
23	2	25103	Plug	VS-R-1/2 WD

Personnel basket

72-516

Intern ref.: 6300760

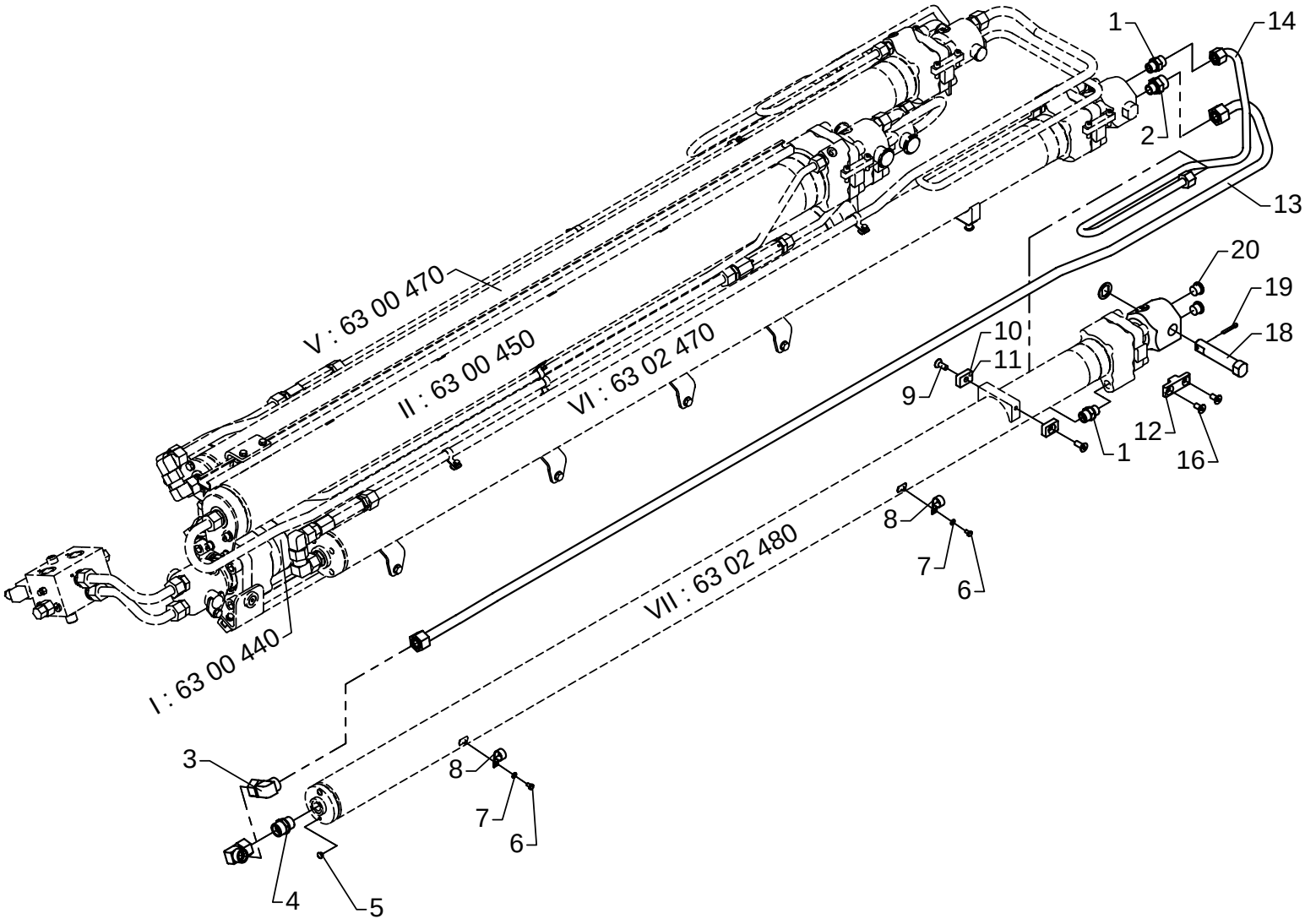

Hydraulic system, extension cylinder, VII

As from / To loader no.: 97 00 00/
Created: 17.11.2003
Modified: 13.09.2004

Item no.	Qty.	Part no.	Description	Remarks
1	2	26334	Connection	GEV 16 SR-WD
2	1	26221	Connection	GEV 20 S/R 1/2-WD
3	2	26198	Elbow connection	EWVD 20 S-SV
4	1	26197	Connection	GEV 20 SR-WD
5	2	64366	Plug	
6	2	30110	Set screw, stainless	M6 x 10
7	2	32302	Face washer, stainless	6 mm
8	2	31449	Clamp	
9	2	30546	Countersunk screw	MK10 x 25
10	2	6302267	Washer	
11	2	6302268	Washer	
12	2	6302273	Lock plate	
13	1	6302761	Pipe	
14	1	6302762	Pipe	
15	1	6303761	Pipe	#
16	4	30545	Countersunk screw	MK10 x 20
17	1	6300494	Washer	
18	1	6300482	Pin	
19	1	31617	Split pin	ø5 x 35
20	2	25103	Plug	VS-R-1/2 WD

Personnel basket

72-516

Intern ref.: 6300770

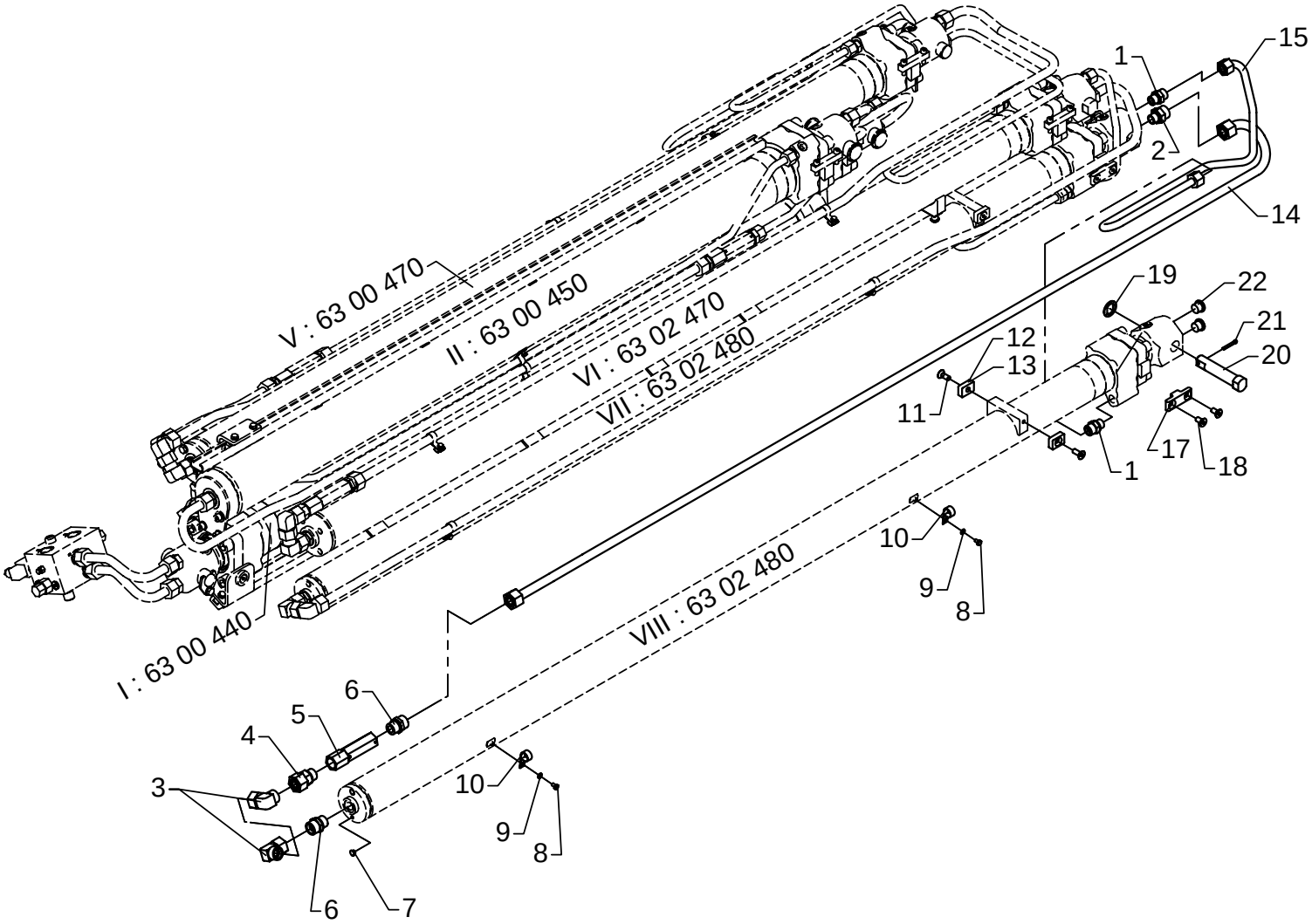

Hydraulic system, extension cylinder, VIII

As from / To loader no.: 97 00 00/
Created: 17.11.2003
Modified: 13.09.2004

Item no.	Qty.	Part no.	Description	Remarks
1	2	26334	Connection	GEV 16 SR-WD
2	1	26221	Connection	GEV 20 S/R 1/2-WD
3	2	26198	Elbow connection	EWVD 20 S-SV
4	1	26358	Connection	EGESD 20 SR-WD
5	1	59076	Counter-balance valve	
6	2	26197	Connection	GEV 20 SR-WD
7	2	64366	Plug	
8	2	30110	Set screw, stainless	M6 x 10
9	2	32302	Face washer, stainless	6 mm
10	2	31449	Clamp	
11	2	30546	Countersunk screw	MK10 x 25
12	2	6302267	Washer	
13	2	6302268	Washer	
14	1	6302771	Pipe	
15	1	6302772	Pipe	
16	1	6303771	Pipe	#
17	2	6302273	Lock plate	
18	4	30545	Countersunk screw	MK10 x 20
19	1	6300494	Washer	
20	1	6300482	Pin	
21	1	31617	Split pin	ø5 x 35
22	2	25103	Plug	VS-R-1/2 WD

Personnel basket

72-516

Intern ref.: 6300100

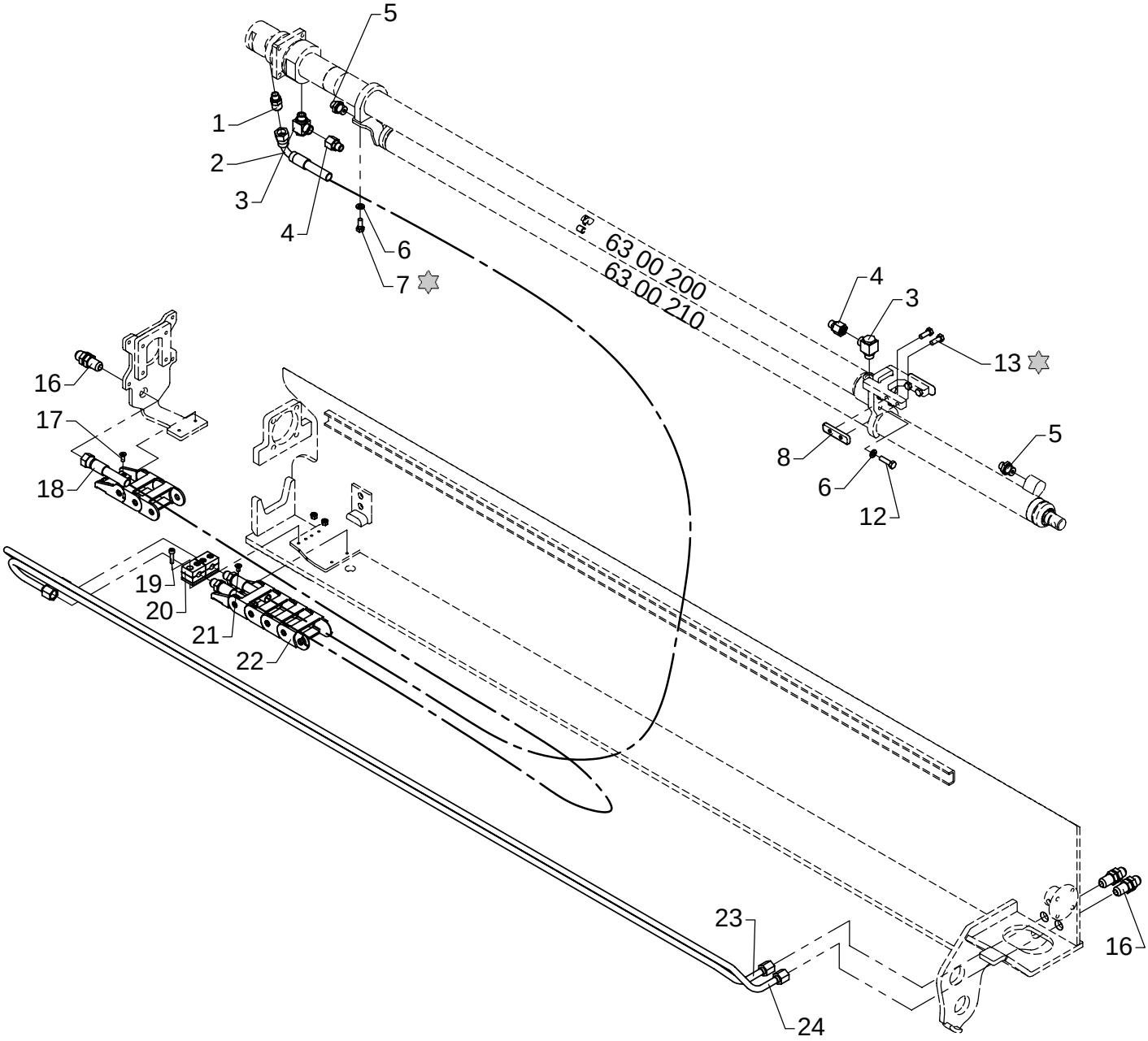

Loctite 243

Hydraulic system, stabilizer beam, type DR - 8420

As from / To loader no.: 97 00 00/
Created: 17.11.2003
Modified:

Item no.	Qty.	Part no.	Description	Remarks
1	1	25867	Straight connection	F40XS 12-1/4 JIC
2	1	56026	Hose	3/8" x 3850 mm v/s JIC
3	2	25130	Banjo connection	RSWV 12 LR
4	2	26101	Reducing connection	REDVD 12/8 L
5	2	25244	Connection	GES 8 L/R 3/8-WD
6	6	31147	Washer, stainless	8 mm
7	2	30132	Set screw, stainless	M8 x 20
8	2	30110	Set screw, stainless	M6 x 10
9	2	32302	Face washer, stainless	6 mm
10	2	31445	Suspension	6-8 mm
11	2	6302208	Slide block	
12	4	30135	Set screw, stainless	M8 x 30
13	4	30133	Set screw, stainless	M8 x 22
14	1	6300218	Pipe	
15	1	6300219	Pipe	
16	3	25824	Bulkhead connection	WTX-WLNS 12 JIC
17	2	32201	Countersunk screw	MK6 x 16
18	1	56027	Hose	3/8" x 3850 mm o/s JIC
19	4	30962	Sockethead screw	MC6 x 25
20	2	31425	Clamp	
21	2	30542	Counter-sunk screw	MK6 x 12
22	1	27887	Nylon drag chain	
23	1	6300249	Pipe	
24	1	6300248	Pipe	

72-516

Intern ref.: 6300600

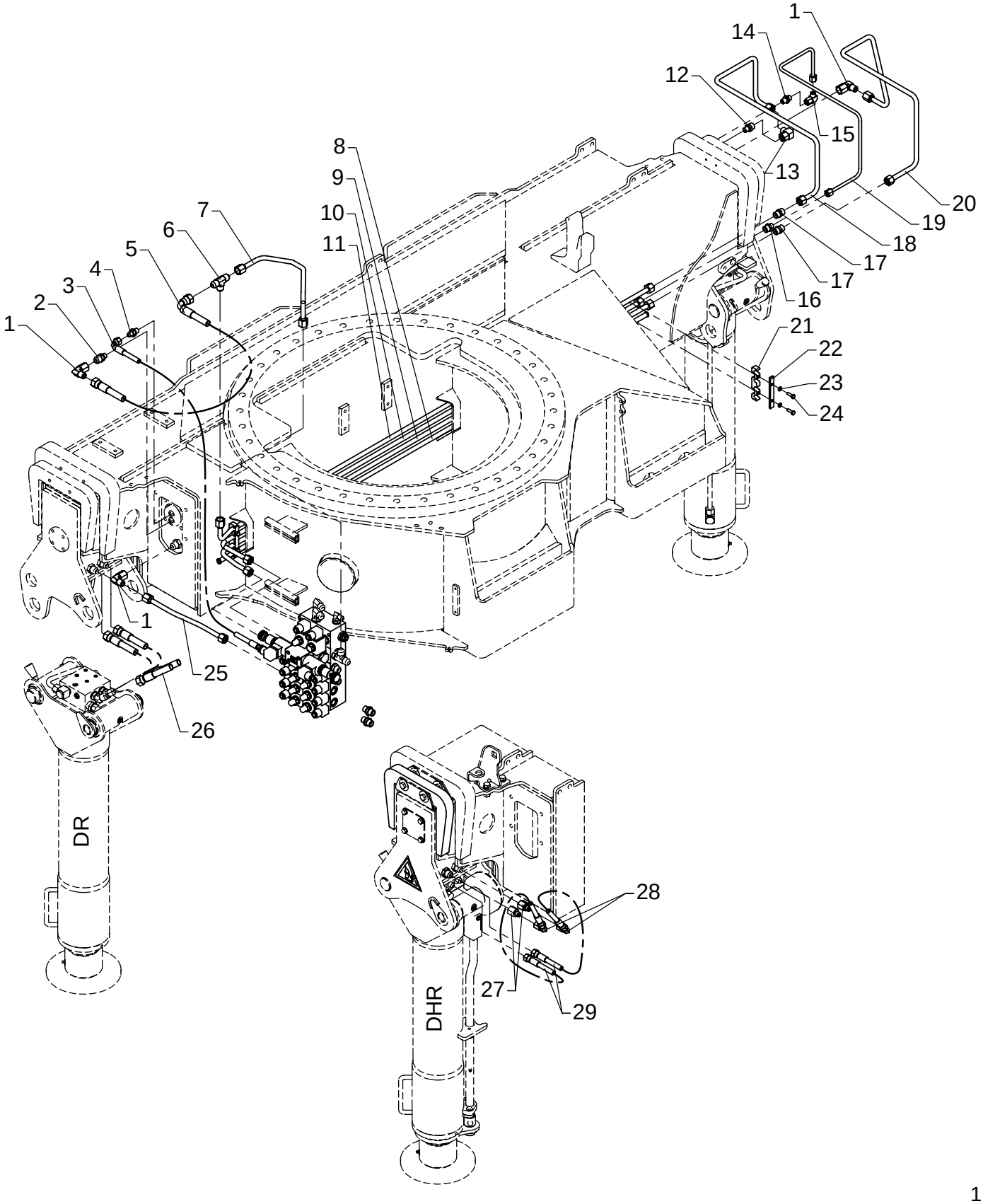

Hydraulic system, stabilizer valve block, type DR + DHR

As from / To loader no.: 97 00 00/
Created: 17.11.2003
Modified:

Item no.	Qty.	Part no.	Description	Remarks
1	3	25877	Elbow connection	C6XS 12 JIC
2	1	25867	Straight connection	F40XS 12-1/4 JIC
3	1	62974	Hose	1/4" x 350 mm V/O JIC
4	1	25829	Straight connection	F40XS 8-1/4 JIC
5	1	56091	Hose	3/8" x 350 mm V/O JIC
6	1	26269	T-connection	R40XS 12-3/8 JIC
7	1	6302901	Pipe	
8	1	6300909	Pipe	
9	1	6302907	Pipe	
10	1	6302905	Pipe	
11	1	6302903	Pipe	
12	1	25195	Connection	GEV 12 L/R 1/4-WD
13	1	25242	Elbow connection	EWSD 12 L
14	1	25109	Connection	GES 8 LR-WD
15	1	26170	Elbow connection	EWSD 8 L
16	1	25931	Connection	GV 12 L
17	2	25204	Double connection	GV 12 L
18	1	6302904	Pipe	
19	1	6302906	Pipe	
20	1	6302908	Pipe	
21	2	6300044	Clamp	
22	2	6300047	Plate	
23	4	32302	Face washer, stainless	6 mm
24	4	30113	Set screw, stainless	M6 x 20
25	1	6302902	Pipe	
26	4	62883	Hose	3/8" x 400 mm O/O JIC
27	2	25846	Reducing connection	TRTXS 12-10 JIC
28	2	25737	Elbow connection	C6XS 10 JIC
29	2	56108	Hose	1/4 X 470 L/L JIC

Decal Kit – 72/516 (95718371)

ITEM	QTY	DESCRIPTION	QTY	LOCATION
1.	70029251	DECAL-DIAMOND IMT 6.75X13.50	2	ON CRANE
2.	70391583	DECAL-SET UP/STOW-INSTRUCTIONS	1	AT OPERATOR STATION
3.	70391612	DECAL-GREASE WEEKLY (LEFT)	10	AT GREASE ZERKS
4.	70391613	DECAL-GREASE WEEKLY (RIGHT)	15	AT GREASE ZERKS
5.	70392813	DECAL-DANGER ELECTROCUTION	3	AT OPERATOR STATION, BY STABILIZER CONTROLS
6.	70392814	DECAL-DANGER OPERATOR TRAINING	2	BY STABILIZER CONTROLS
7.	70392815	DECAL-DANGER OPERATION	2	BY STABILIZER CONTROLS
8.	70392863	DECAL-DANGER HOISTING PERSONNL	3	AT OPERATOR STATION, BY STABILIZER CONTROLS
9.	70392866	DECAL-DANGER OPER CONDITIONS	2	BY STABILIZER CONTROLS
10.	70392888	DECAL-DANGER OPER CONDITIONS	2	BY STABILIZER CONTROLS
11.	70392890	DECAL-DANGER STOWING/UNFOLDING	3	AT OPERATOR STATION, BY STABILIZER CONTROLS
12.	70394670	DECAL-IMT MATL HANDLING SYSTEM	2	ON CRANE
13.	70396335	DECAL-ID SERIES	2	ON CRANE
14.	70396396	DECAL-CP 72/516 K2	3REF	AT OPERATOR STATION, BY STABILIZER CONTROLS
	70396336	DECAL-CP 72/516 K3	3REF	“
	70396397	DECAL-CP 72/516 K4	3REF	“
	70396398	DECAL-CP 72/516 K5	3REF	“
	70396399	DECAL-CP 72/516 K6	3REF	“
	70396400	DECAL-CP 72/516 K7	3REF	“
	70396401	DECAL-CP 72/516 K8	3REF	“
	70396446	DECAL-CP 72/516 K8 W FJ1200 K4	3REF	"
	70396469	DECAL-CP 72/516 K8 MAN. EXTENSION	3REF	"
15.	70029119	SERIAL NUMBER TAG	1	ON SIDE OF CRANE BASE
16.		DECAL-GREASE GEAR	1	ON GEAR ASSEMBLY
17.		DECAL-NO HOOK	1	ON MAST

Decals Installed when Crane is Mounted:(Shipped loose with crane)

18.	70392862	DECAL-DANGER RC ELECTROCTN SM	1	ON REMOTE (IF APPLICBLE)
19.	70392889	DECAL-DANGER RC ELECTROCTN LG	1	NEAR REMOTE STORAGE POINT
20.	70392865	DECAL-DANGER ELEC HAZARD(LARGE	4	ALL FOUR SIDES OF CARRIER VEHICLE
21.	70392891	DECAL-DANGER DRIVELINE	2	AT OR NEAR DRIVELINE
22.	70392868	DECAL-DANGER CR LOADLINE (TRK)	4	ALL FOUR SIDES OF CARRIER VEHICLE
23.	70394189	DECAL-MOBILOIL RESERVOIR	1	ON RESERVOIR
24.	70392864	DECAL-DANGER STAB STAND CLEAR	2	ON OUTRIGGER LEG
26.	70392108	DECAL-SUCTION LINE	1	ON RESERVOIR SUCTION LINE
27.	70392109	DECAL-RETURN LINE	1	ON RESERVOIR RETURN LINE

NEW 20031217

95718371 Photos

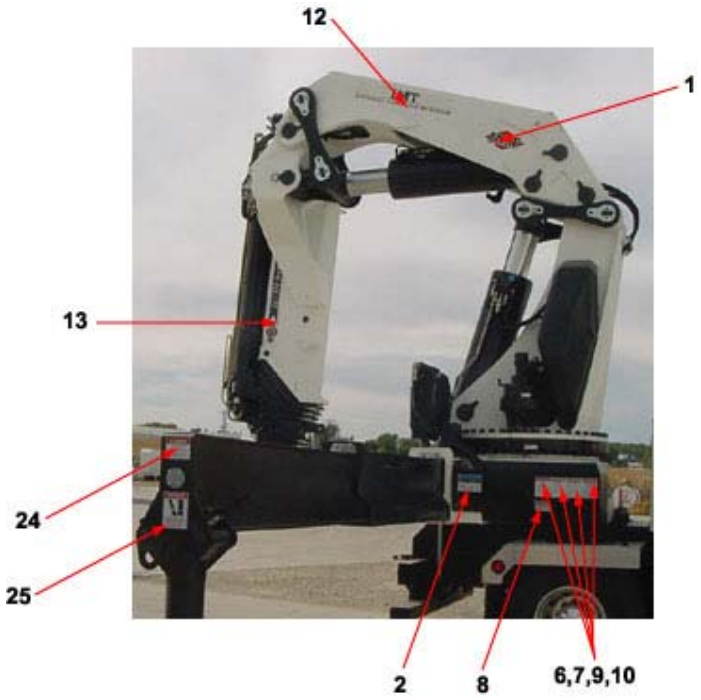

View A – Crane Curb Side Decals

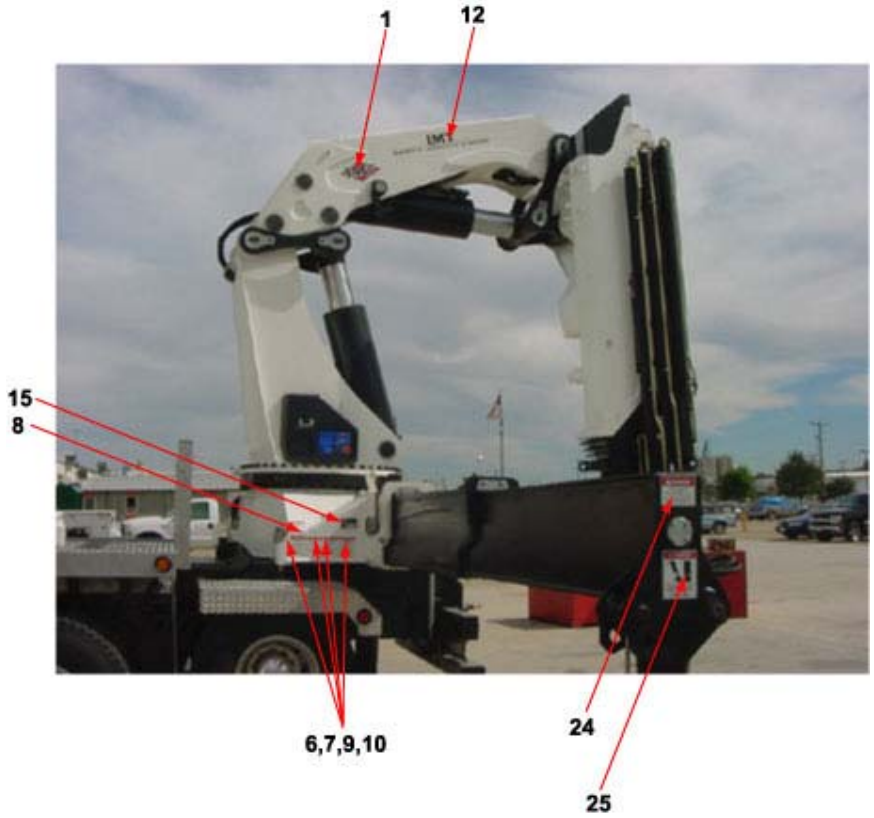

View B – Crane Street Side Decals

95718371 Photos

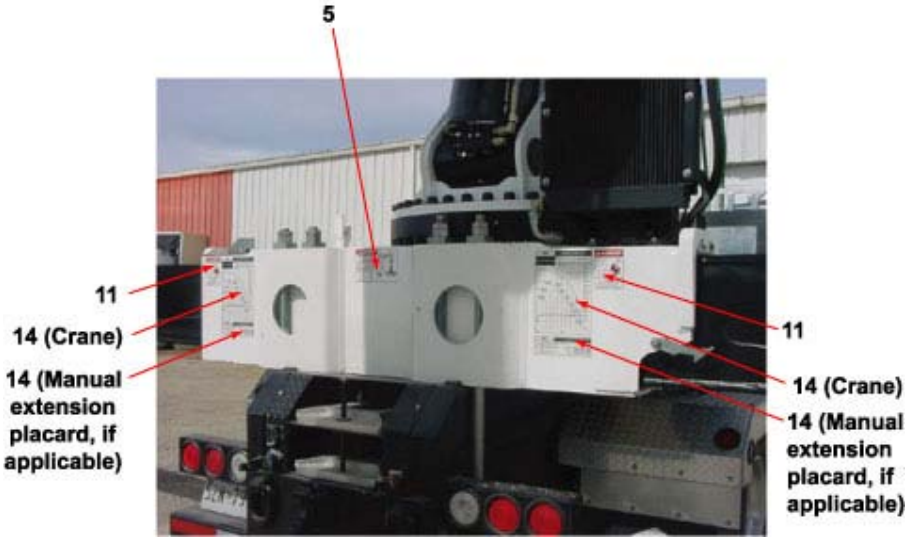

View C – Crane Base Rear Decals

72-516

Intern ref.: 6668320

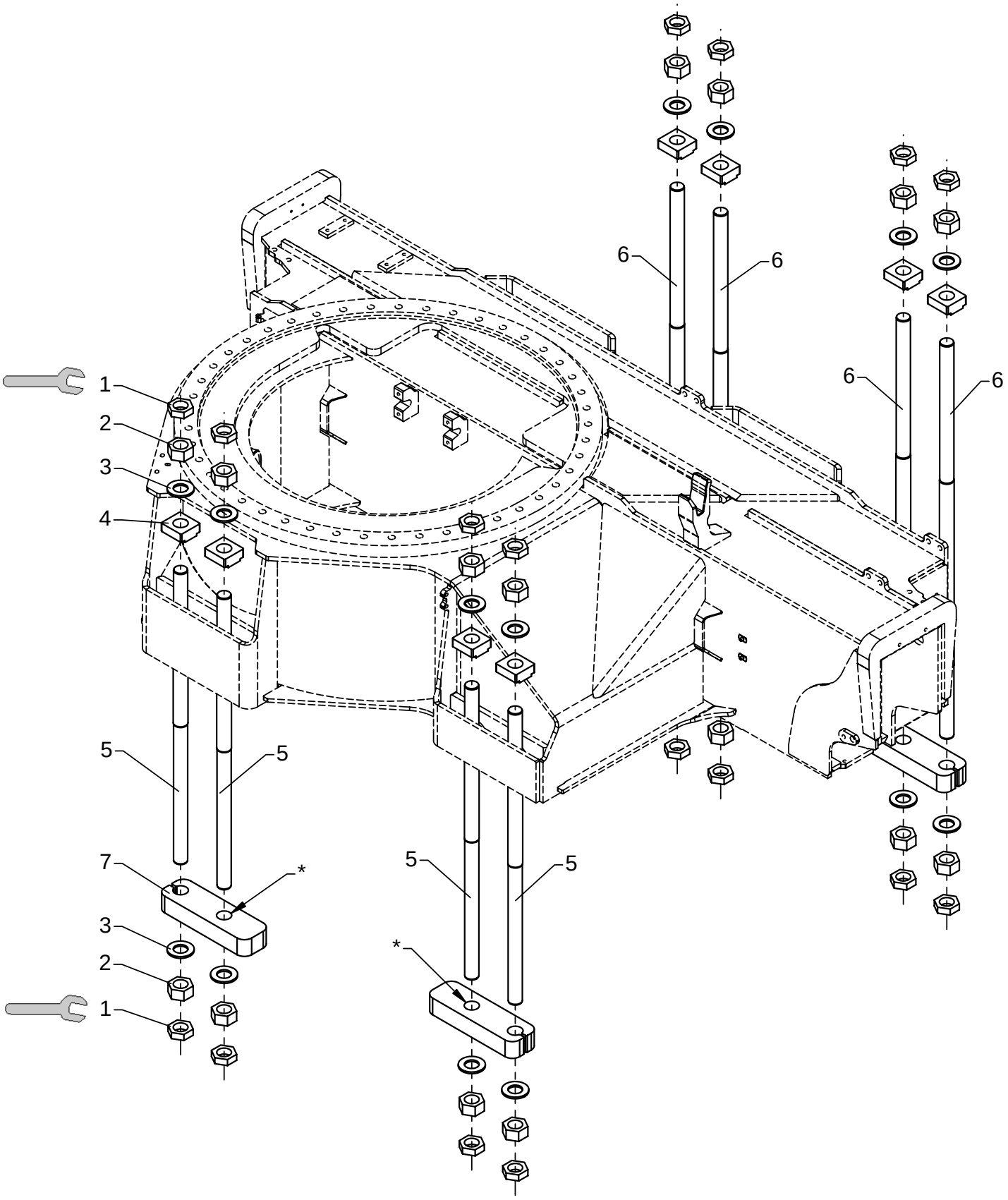

600 Nm

Mounting kit, standard
Chassis height: 220 - 490 mm.

As from / To loader no.: 97 00 00 /
Created: 17.11.2003
Modified:

Item no.	Qty.	Part no.	Description	Remarks
1	16	31057	Counter nut	M36 x 2
2	16	32343	Nut	M36 x 2
3	16	31059	Washer	36 mm
4	8	6302496	Mounting plate	
5	4	32908	Mounting bolt	870 mm
6	4	32907	Mounting bolt	1175 mm
7	4	6302999	Clamp	

* Drill a ø37 mm hole before fitting.

72-516

Intern ref.: 6668330

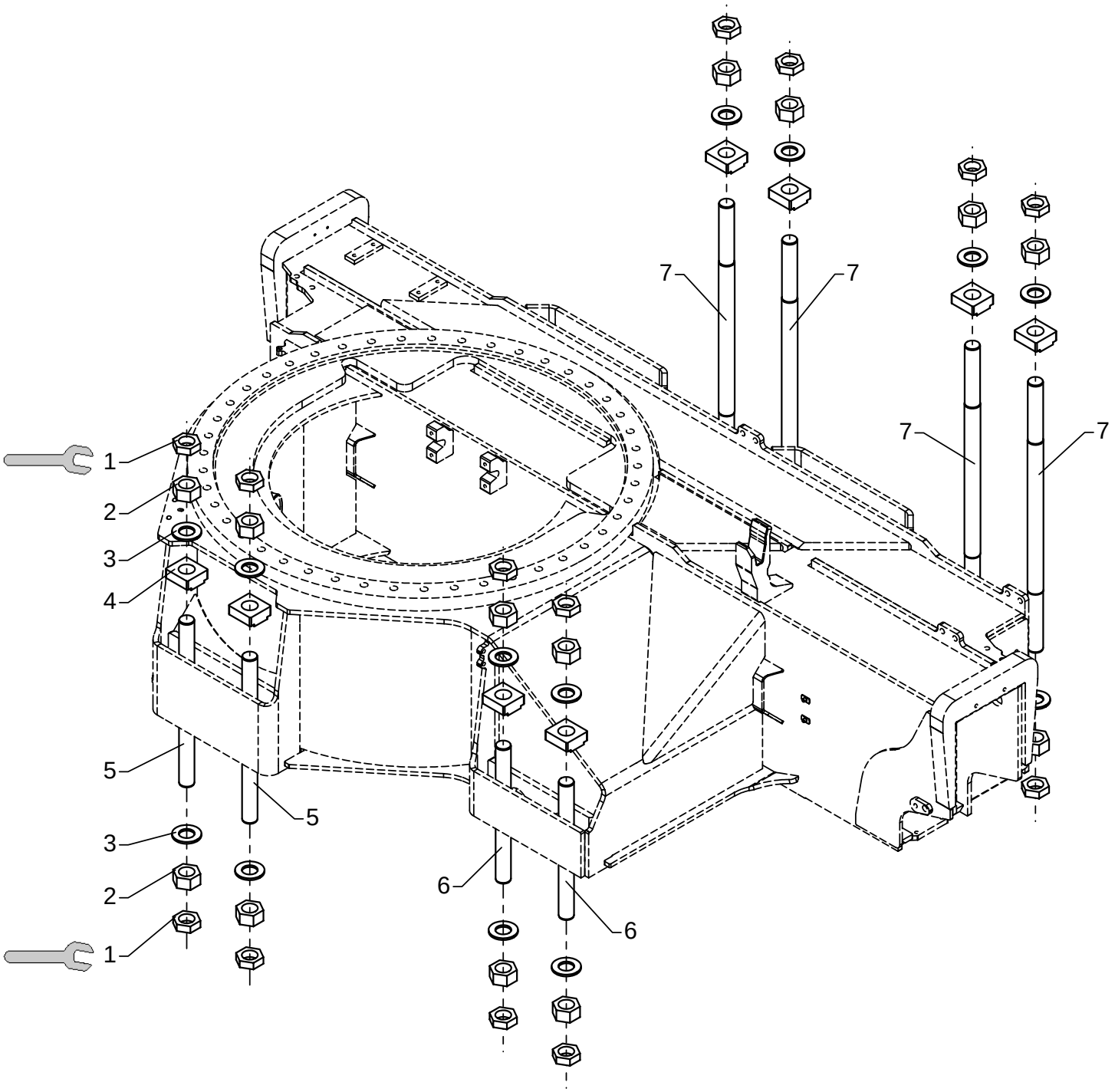

600 Nm

Mounting kit, subframe

As from / To loader no.: 97 00 00 /
Created: 17.11.2003
Modified:

Item no.	Qty.	Part no.	Description	Remarks
1	16	31057	Counter nut	M36 x 2
2	16	32343	Nut	M36 x 2
3	16	31059	Washer	36 mm
4	8	6302496	Mounting plate	
5	2	32910	Mounting bolt	450 mm
6	2	32911	Mounting bolt	370 mm
7	4	32909	Mounting bolt	735 mm

72-516

Intern ref.: 6668360

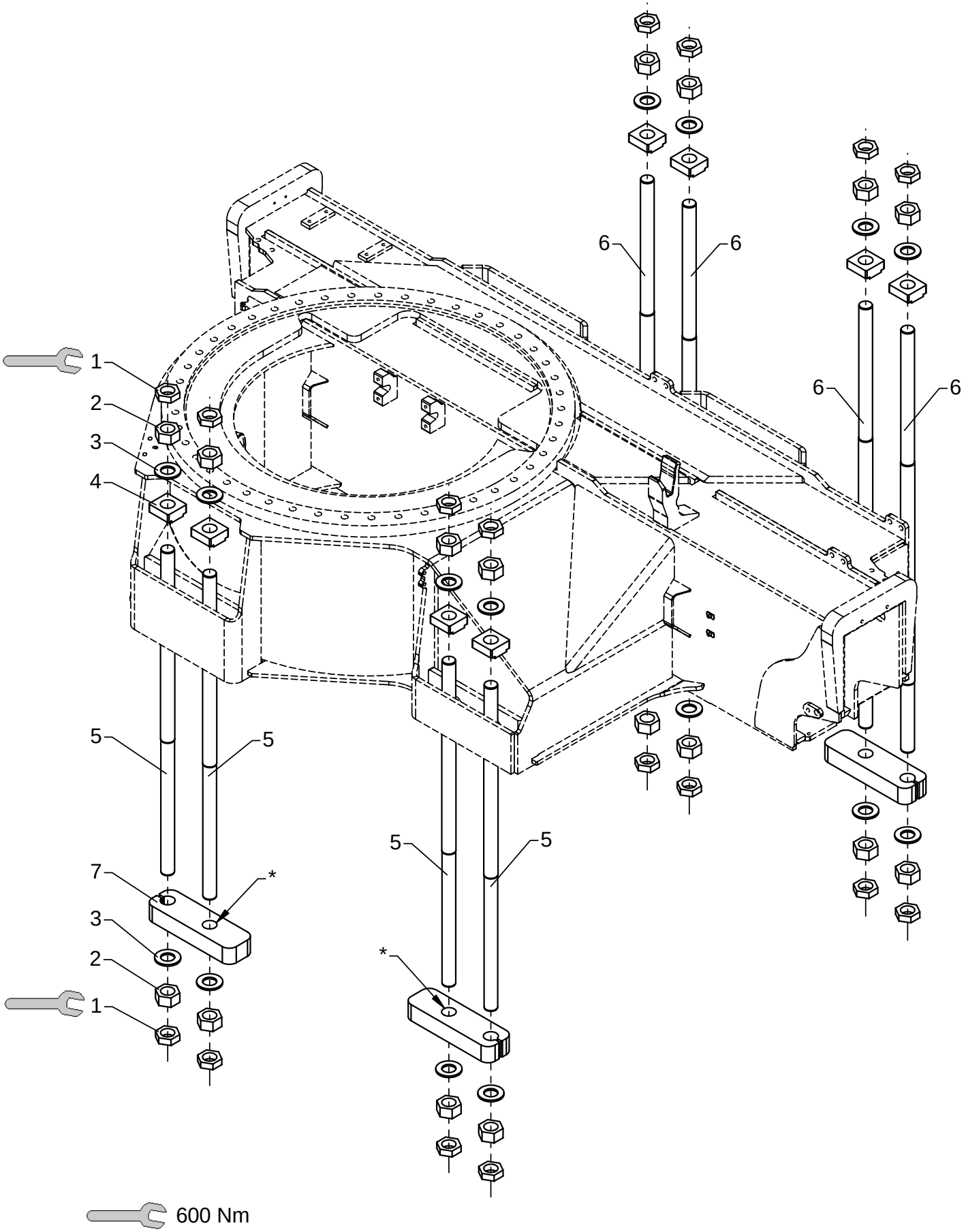

Mounting kit, long
Chassis height: 350 - 620 mm.

As from / To loader no.: 97 00 00 /
Created: 17.11.2003
Modified:

Item no.	Qty.	Part no.	Description	Remarks
1	16	31057	Counter nut	M36 x 2
2	16	32343	Nut	M36 x 2
3	16	31059	Washer	36 mm
4	8	6302496	Mounting plate	
5	4	32914	Mounting bolt	1000 mm
6	4	32915	Mounting bolt	1300 mm
7	4	6302999	Clamp	

* Drill a ø37 mm hole before fitting.

72-516

Intern ref.: 6302890

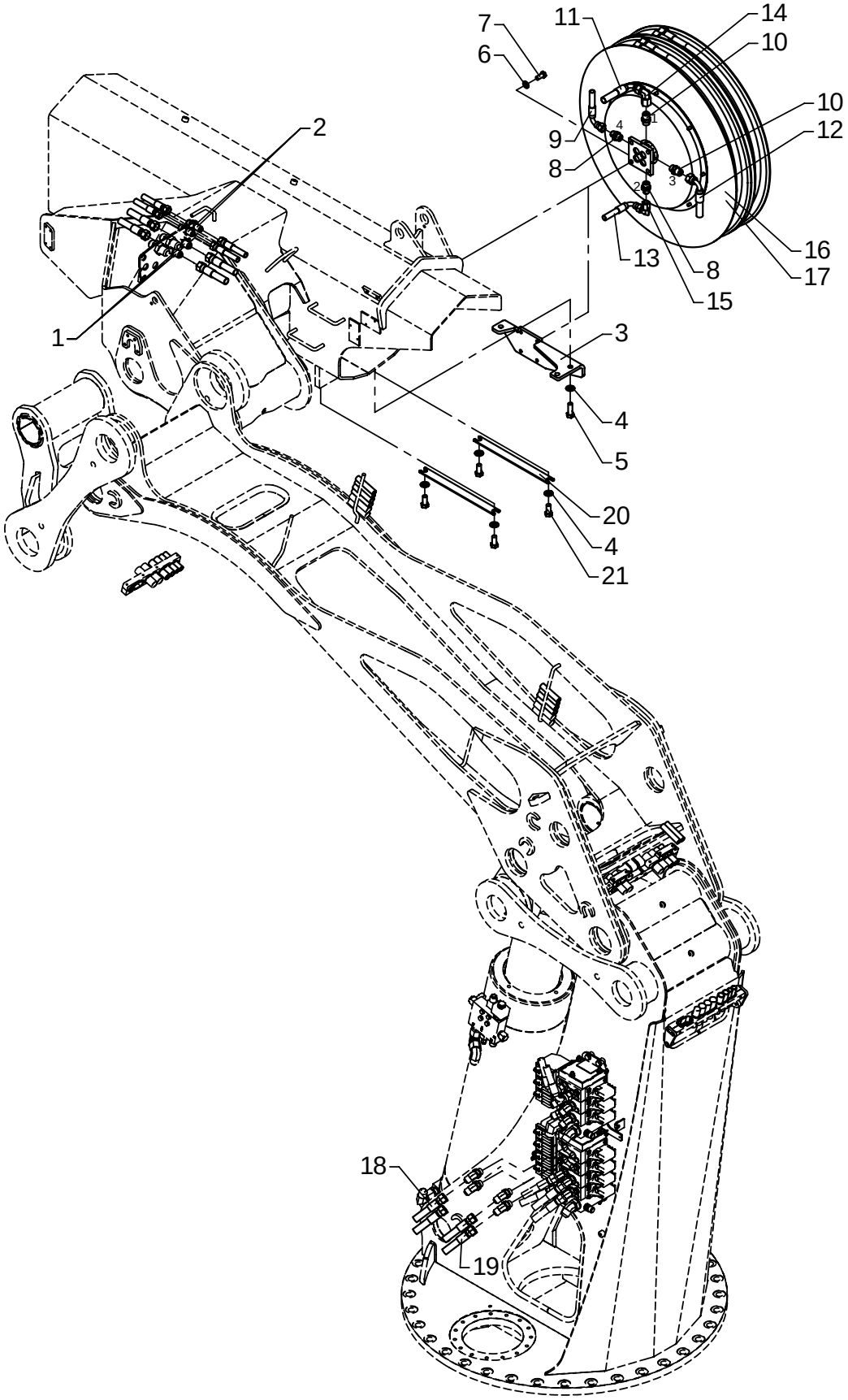

Hydraulic system, extra valves, without FJ and winch

As from / To loader no.: 97 00 00 / 97 00 52
Created: 17.11.2003
Modified: 30.06.2005

Item no.	Qty.	Part no.	Description	Remarks
1	2	25825	Bulkhead connection	WTX-WLNS 14/16 JIC
2	2	25824	Bulkhead connection	WTX-WLNS 12 JIC
3	1	6302889	Bracket for hose reel	K7+K8
4	7	31178	Washer	14 mm
5	3	30207	Set screw	M14 x 40
6	4	31131	Washer	12 mm
7	4	30176	Set screw	M12 x 25
8	2	25832	Straight connection	F40XS 12-1/2 JIC
9	1	56060	Hose	3/8" x 1950 mm V/O JIC (KN)
10	2	25833	Straight connection	F40XS 14/16-1/2 JIC
11	1	56059	Hose	1/2" x 1950 mm V/O JIC (UU)
12	1	56059	Hose	1/2" x 1950 mm V/O JIC (KO)
13	1	56060	Hose	3/8" x 1950 mm V/O JIC (UI)
14	1	25741	Elbow connection	C6XS 14/16 JIC
15	1	25877	Elbow connection	C6XS 12 JIC
16	1	56016	Hose reel, double	K7+K8
17	1	56017	Hose reel, double	K6
18	2	56055	Hose	3/8" x 5900 mm O/O JIC
19	2	56056	Hose	1/2" x 5900 mm O/O JIC
20	2	6300444	Hose bracket	K6
21	4	30206	Set screw	M14 x 30

72-516

Intern ref.: 6302890

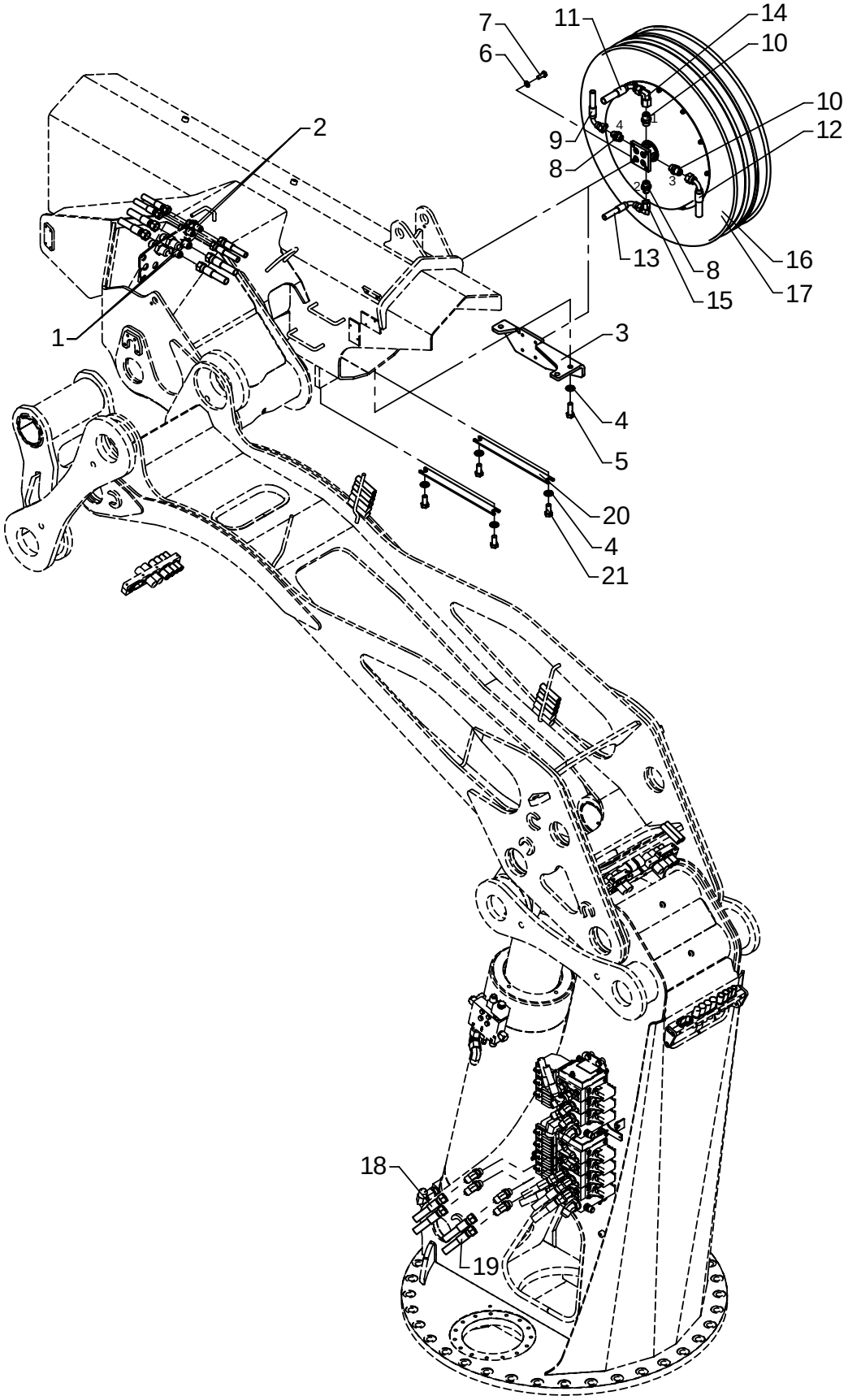

Hydraulic system, extra valves, without FJ and winch

As from / To loader no.: 97 00 53 /
Created: 30.06.2005
Modified:

Item no.	Qty.	Part no.	Description	Remarks
1	2	25825	Bulkhead connection	WTX-WLNS 14/16 JIC
2	2	25824	Bulkhead connection	WTX-WLNS 12 JIC
3	1	6302345	Bracket for hose reel	K7+K8
4	7	31178	Washer	14 mm
5	3	30207	Set screw	M14 x 40
6	4	31177	Washer	10 mm
7	4	31513	Set screw, stainless	M10 x 25
8	2	25832	Straight connection	F40XS 12-1/2 JIC
9	1	56060	Hose	3/8" x 1950 mm V/O JIC (KN)
10	2	25833	Straight connection	F40XS 14/16-1/2 JIC
11	1	56059	Hose	1/2" x 1950 mm V/O JIC (UU)
12	1	56059	Hose	1/2" x 1950 mm V/O JIC (KO)
13	1	56060	Hose	3/8" x 1950 mm V/O JIC (UI)
14	1	25741	Elbow connection	C6XS 14/16 JIC
15	1	25877	Elbow connection	C6XS 12 JIC
16	1	56317	Hose reel 4-port	
17	1	56315	Hose reel 4-port	
18	2	56055	Hose	3/8" x 5900 mm O/O JIC
19	2	56056	Hose	1/2" x 5900 mm O/O JIC
20	2	6300444	Hose bracket	K6
21	4	30206	Set screw	M14 x 30

72-516

Intern ref.: 6302890

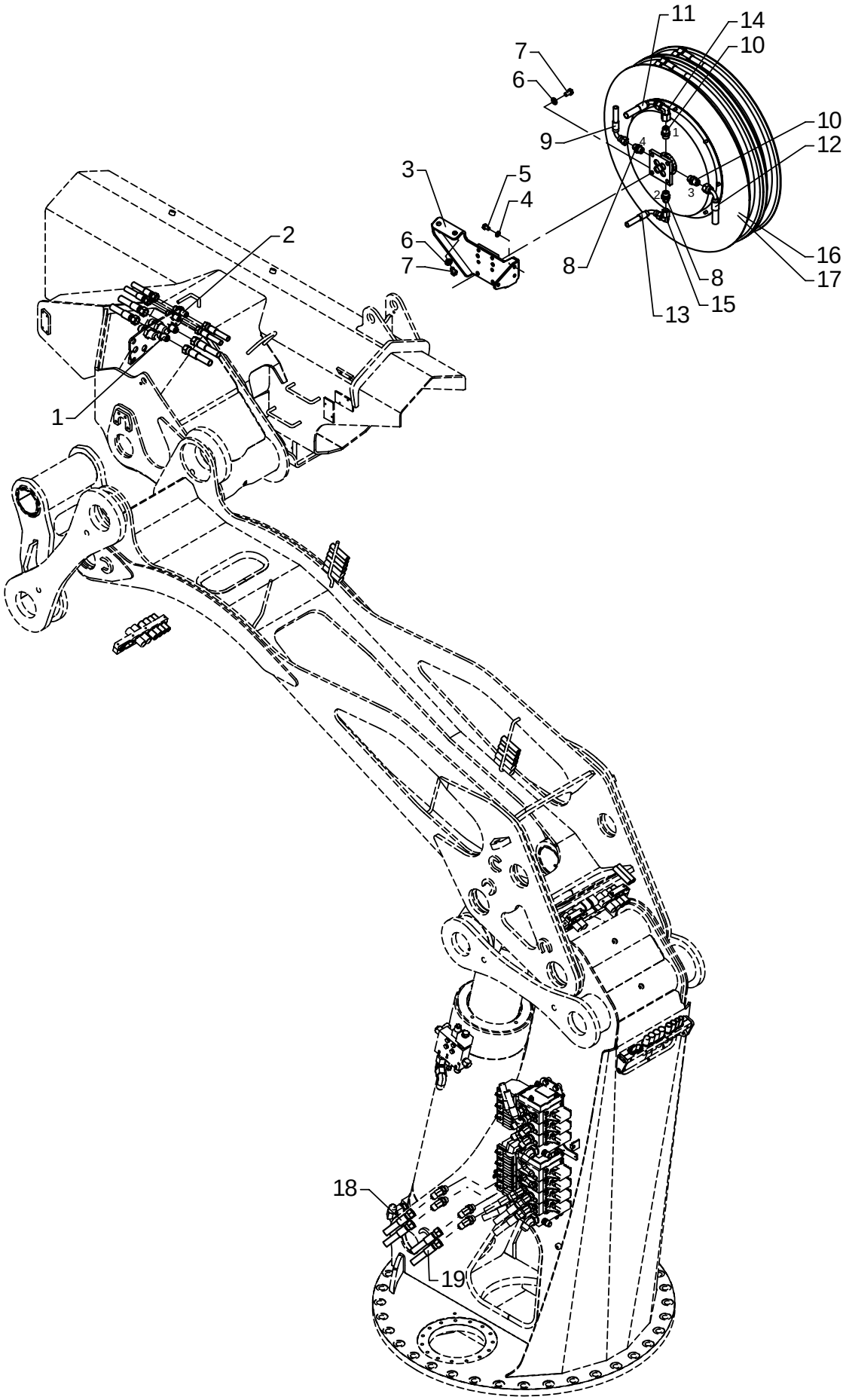

Hydraulic system, extra valves, without FJ, with winch

As from / To loader no.: 97 00 00 / 97 00 52
Created: 17.11.2003
Modified: 30.06.2005

Item no.	Qty.	Part no.	Description	Remarks
1	2	25825	Bulkhead connection	WTX-WLNS 14/16 JIC
2	2	25824	Bulkhead connection	WTX-WLNS 12 JIC
3	1	6302684	Bracket for hose reel	
4	3	31177	Washer	10 mm
5	3	31510	Set screw, stainless	M10 x 16
6	6	31131	Washer	12 mm
7	6	30175	Set screw	M12 x 20
8	2	25832	Straight connection	F40XS 12-1/2 JIC
9	1	62944	Hose, JIC	3/8" x 2200 mm V/O JIC (KN)
10	2	25833	Straight connection	F40XS 14/16-1/2 JIC
11	1	56074	Hose	1/2" x 2250 mm V/O JIC (UU)
12	1	56074	Hose	1/2" x 2250 mm V/O JIC (KO)
13	1	62907	Hose	3/8" x 2000 mm V/O JIC (UI)
14	1	25741	Elbow connection	C6XS 14/16 JIC
15	1	25877	Elbow connection	C6XS 12 JIC
16	1	56016	Hose reel, double	K7+K8
17	1	56017	Hose reel, double	K6
18	2	56055	Hose	3/8" x 5900 mm O/O JIC
19	2	56056	Hose	1/2" x 5900 mm O/O JIC

72-516

Intern ref.: 6302890

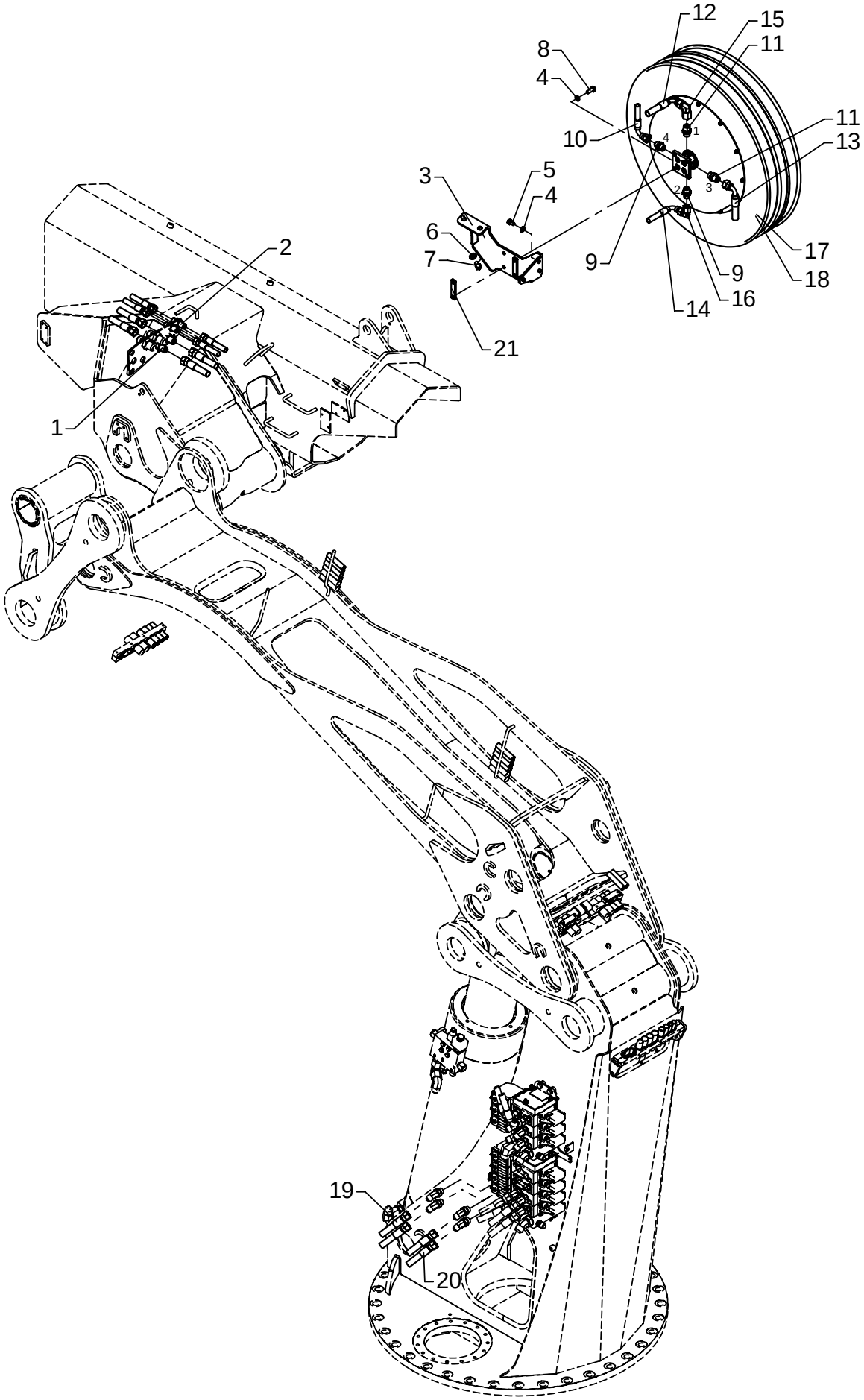

Hydraulic system, extra valves, without FJ, with winch

As from / To loader no.: 97 00 53 /
Created: 30.06.2005
Modified:

Item no.	Qty.	Part no.	Description	Remarks
1	2	25825	Bulkhead connection	WTX-WLNS 14/16 JIC
2	2	25824	Bulkhead connection	WTX-WLNS 12 JIC
3	1	6302767	Bracket for hose reel	
4	7	31177	Washer	10 mm
5	3	31510	Set screw, stainless	M10 x 16
6	2	31131	Washer	12 mm
7	2	30175	Set screw	M12 x 20
8	4	31513	Set screw, stainless	M10 x 25
9	2	25832	Straight connection	F40XS 12-1/2 JIC
10	1	62944	Hose, JIC	3/8" x 2200 mm V/O JIC (KN)
11	2	25833	Straight connection	F40XS 14/16-1/2 JIC
12	1	56074	Hose	1/2" x 2250 mm V/O JIC (UU)
13	1	56074	Hose	1/2" x 2250 mm V/O JIC (KO)
14	1	62907	Hose	3/8" x 2000 mm V/O JIC (UI)
15	1	25741	Elbow connection	C6XS 14/16 JIC
16	1	25877	Elbow connection	C6XS 12 JIC
17	1	56317	Hose reel 4-port	
18	1	56315	Hose reel 4-port	
19	2	56055	Hose	3/8" x 5900 mm O/O JIC
20	2	56056	Hose	1/2" x 5900 mm O/O JIC
21	2	6304397	Spacer	

72-516

Intern ref.: 6302890

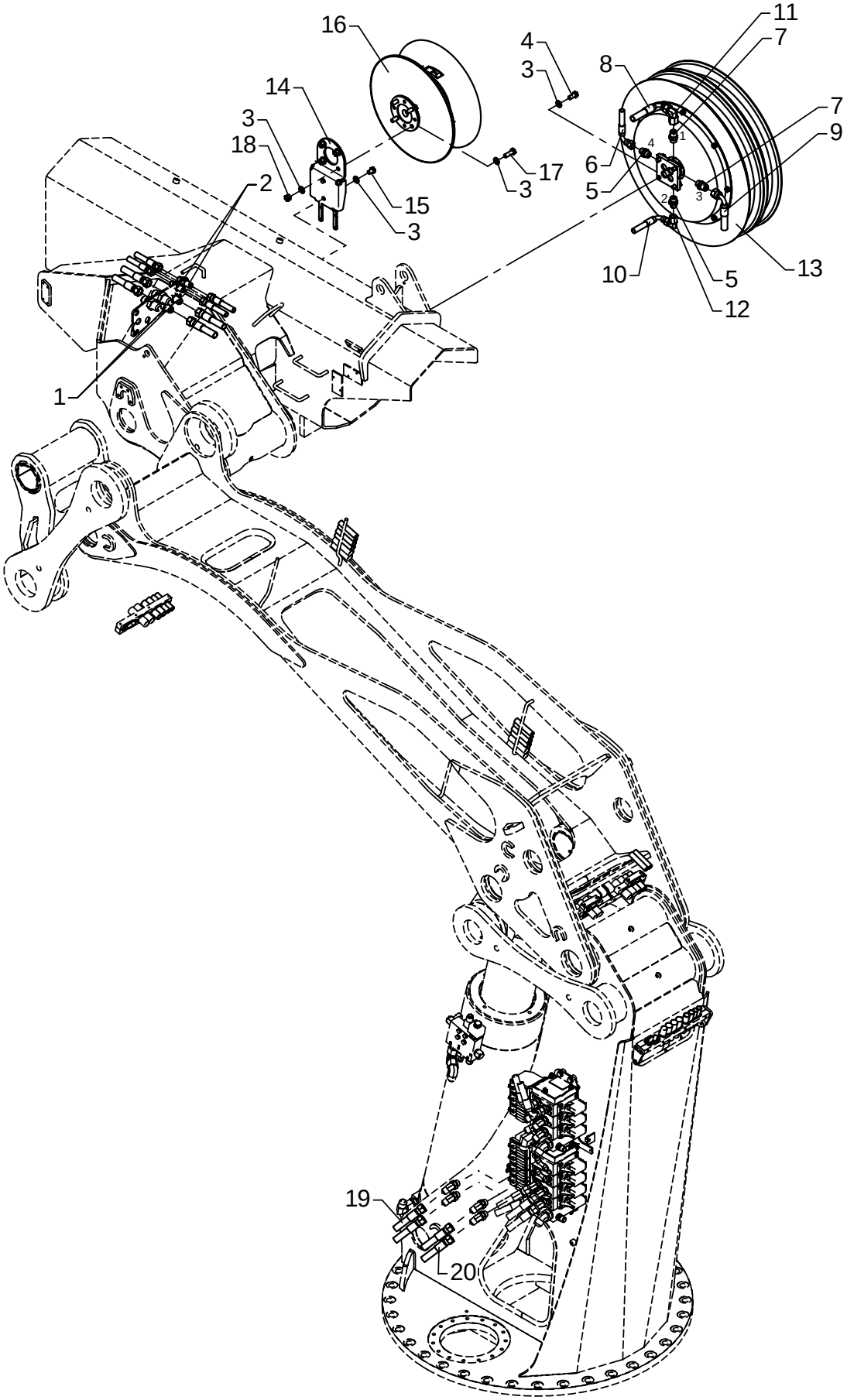

Hydraulic system, extra valves, K6 with FJ

As from / To loader no.: 97 00 00 / 97 00 52
Created: 17.11.2003
Modified: 30.06.2005

Item no.	Qty.	Part no.	Description	Remarks
1	2	25825	Bulkhead connection	WTX-WLNS 14/16 JIC
2	2	25824	Bulkhead connection	WTX-WLNS 12 JIC
3	14	31131	Washer	12 mm
4	4	30176	Set screw	M12 x 25
5	2	25832	Straight connection	F40XS 12-1/2 JIC
6	1	56060	Hose	3/8" x 1950 mm V/O JIC (KN)
7	2	25833	Straight connection	F40XS 14/16-1/2 JIC
8	1	56059	Hose	1/2" x 1950 mm V/O JIC (UU)
9	1	56059	Hose	1/2" x 1950 mm V/O JIC (KO)
10	1	56060	Hose	3/8" x 1950 mm V/O JIC (UI)
11	1	25741	Elbow connection	C6XS 14/16 JIC
12	1	25877	Elbow connection	C6XS 12 JIC
13	1	56017	Hose reel, double	K6
14	1	6302879	Bracket for cable drum	K6
15	2	31960	Set screw	M12 x 16
16	1	28547	Cable drum	K6
17	4	30178	Set screw	M12 x 35
18	4	30890	Lock nut	M12
19	2	56055	Hose	3/8" x 5900 mm O/O JIC
20	2	56056	Hose	1/2" x 5900 mm O/O JIC

72-516

Intern ref.: 6302890

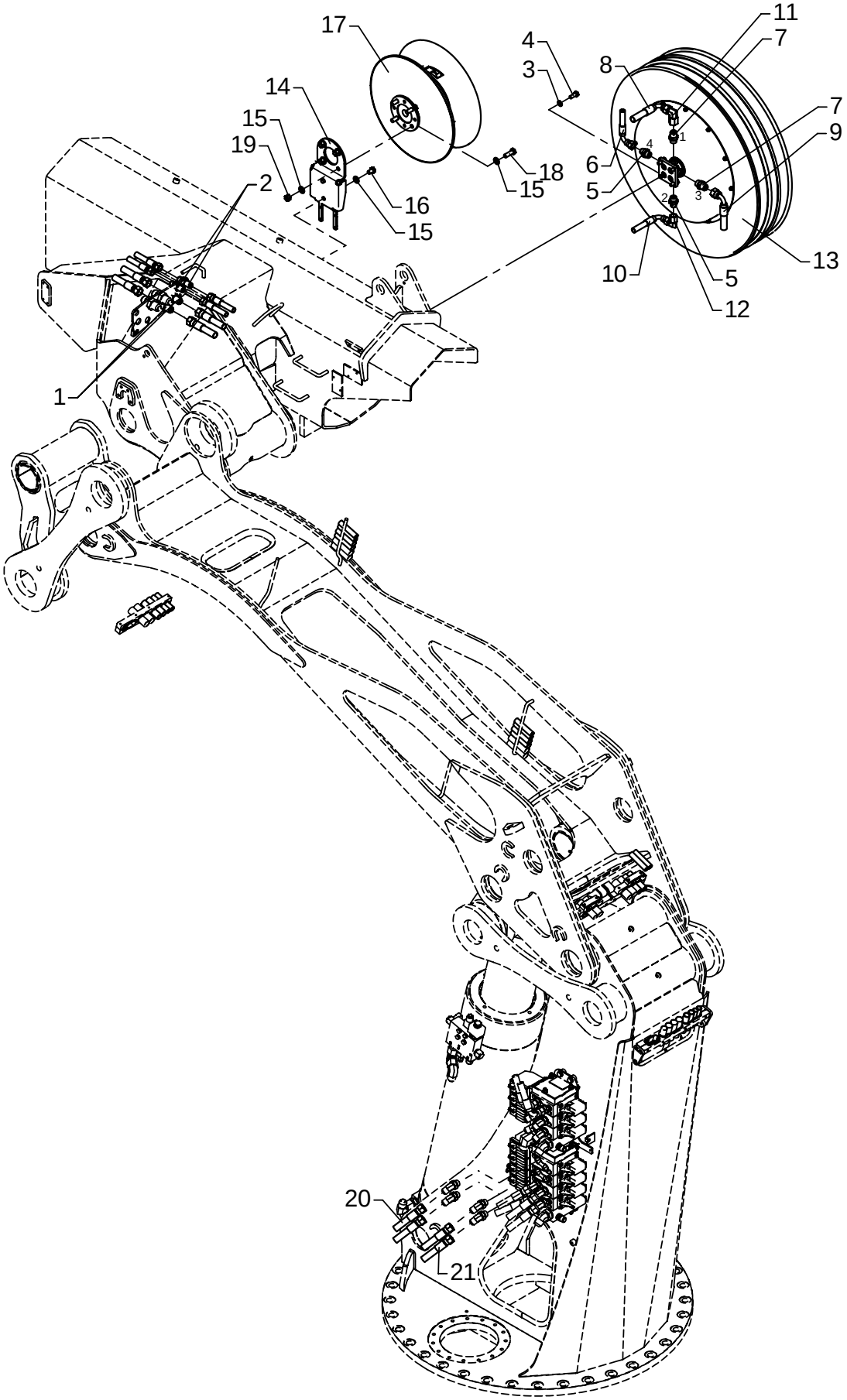

Hydraulic system, extra valves, K6 with FJ

As from / To loader no.: 97 00 53 /
Created: 30.06.2005
Modified:

Item no.	Qty.	Part no.	Description	Remarks
1	2	25825	Bulkhead connection	WTX-WLNS 14/16 JIC
2	2	25824	Bulkhead connection	WTX-WLNS 12 JIC
3	4	31177	Washer	10 mm
4	4	31513	Set screw, stainless	M10 x 25
5	2	25832	Straight connection	F40XS 12-1/2 JIC
6	1	56060	Hose	3/8" x 1950 mm V/O JIC (KN)
7	2	25833	Straight connection	F40XS 14/16-1/2 JIC
8	1	56059	Hose	1/2" x 1950 mm V/O JIC (UU)
9	1	56059	Hose	1/2" x 1950 mm V/O JIC (KO)
10	1	56060	Hose	3/8" x 1950 mm V/O JIC (UI)
11	1	25741	Elbow connection	C6XS 14/16 JIC
12	1	25877	Elbow connection	C6XS 12 JIC
13	1	56315	Hose reel 4-port	
14	1	6302879	Bracket for cable drum	K6
15	10	31131	Washer	12 mm
16	2	31960	Set screw	M12 x 16
17	1	28547	Cable drum	K6
18	4	30178	Set screw	M12 x 35
19	4	30890	Lock nut	M12
20	2	56055	Hose	3/8" x 5900 mm O/O JIC
21	2	56056	Hose	1/2" x 5900 mm O/O JIC

72-516

Intern ref.: 6302890

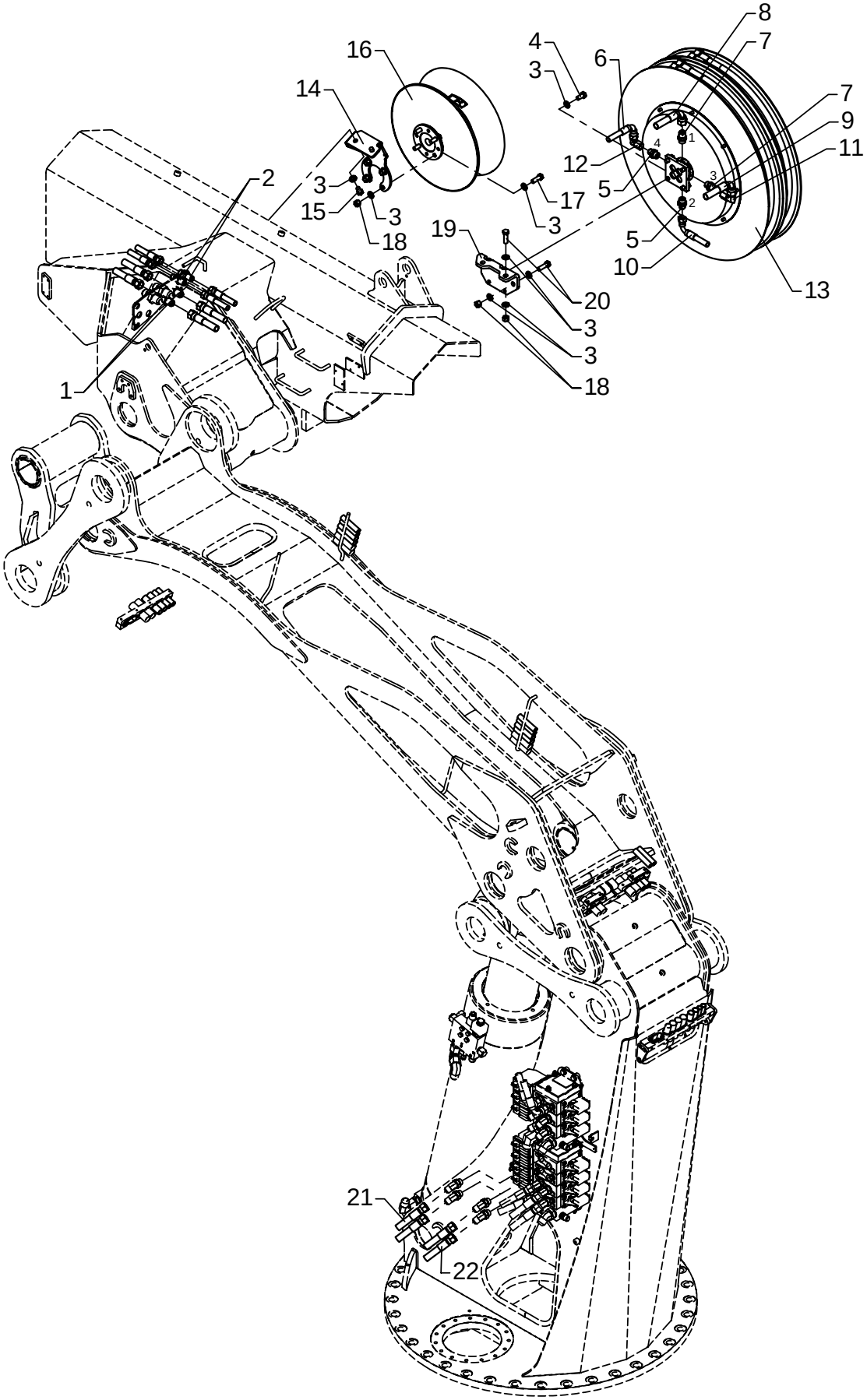

Hydraulic system, extra valves, K8 with FJ

As from / To loader no.: 97 00 00 / 97 00 52
Created: 17.11.2003
Modified: 30.06.2005

Item no.	Qty.	Part no.	Description	Remarks
1	2	25825	Bulkhead connection	WTX-WLNS 14/16 JIC
2	2	25824	Bulkhead connection	WTX-WLNS 12 JIC
3	18	31131	Washer	12 mm
4	4	30176	Set screw	M12 x 25
5	2	25832	Straight connection	F40XS 12-1/2 JIC
6	1	56060	Hose	3/8" x 1950 mm V/O JIC (KN)
7	2	25833	Straight connection	F40XS 14/16-1/2 JIC
8	1	56059	Hose	1/2" x 1950 mm V/O JIC (UU)
9	1	56059	Hose	1/2" x 1950 mm V/O JIC (KO)
10	1	56060	Hose	3/8" x 1950 mm V/O JIC (UI)
11	1	25741	Elbow connection	C6XS 14/16 JIC
12	1	25877	Elbow connection	C6XS 12 JIC
13	1	56016	Hose reel, double	K7+K8
14	1	6302895	Bracket for cable drum	K8
15	2	30175	Set screw	M12 x 20
16	1	28546	Cable drum	K8
17	4	30178	Set screw	M12 x 35
18	6	30890	Lock nut	M12
19	1	6300897	Bracket for hose reel	K8
20	2	31533	Set screw, stainless	M12 x 40
21	2	56055	Hose	3/8" x 5900 mm O/O JIC
22	2	56056	Hose	1/2" x 5900 mm O/O JIC

72-516

Intern ref.: 6302890

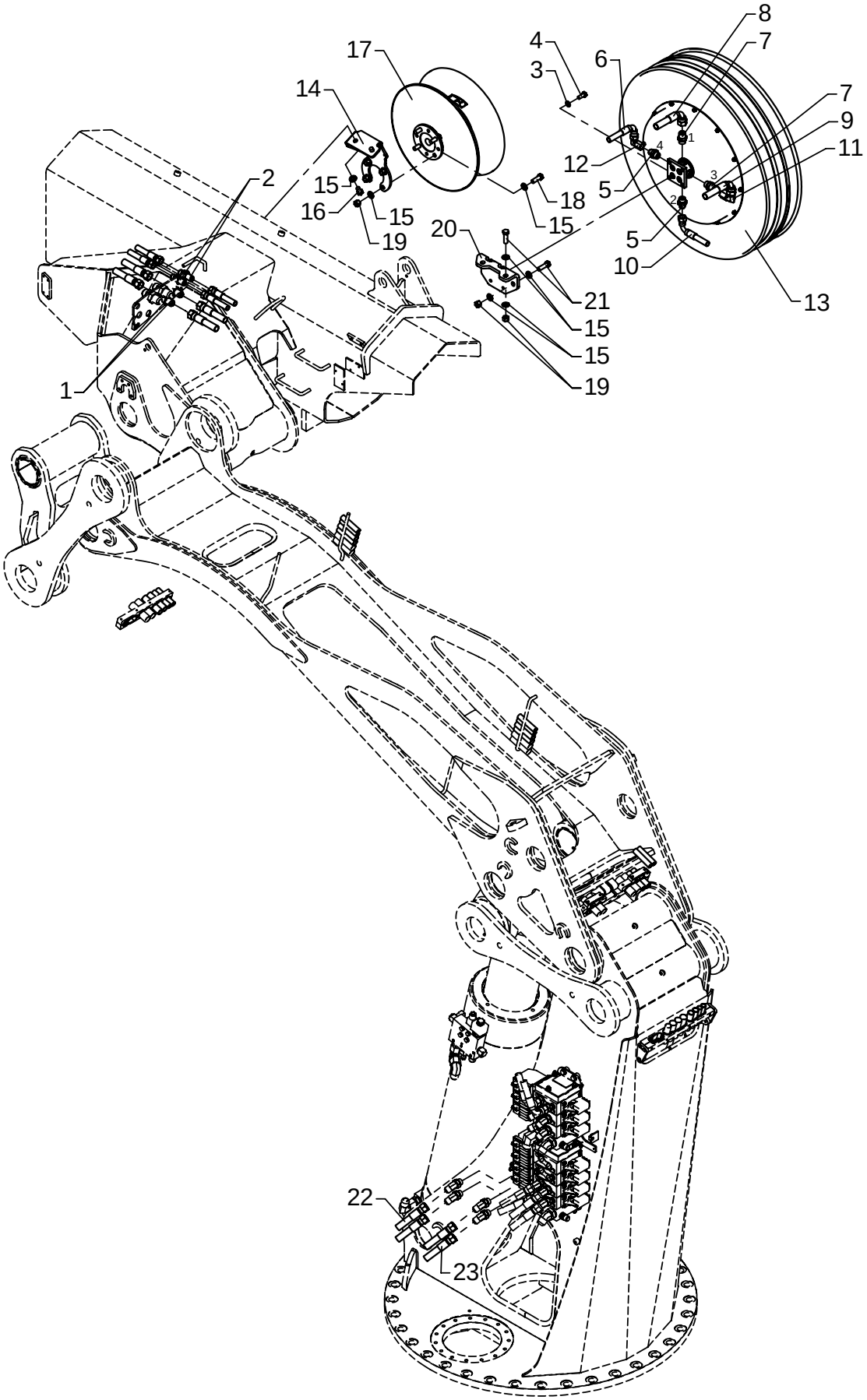

Hydraulic system, extra valves, K8 with FJ

As from / To loader no.: 97 00 53 /
Created: 30.06.2005
Modified:

Item no.	Qty.	Part no.	Description	Remarks
1	2	25825	Bulkhead connection	WTX-WLNS 14/16 JIC
2	2	25824	Bulkhead connection	WTX-WLNS 12 JIC
3	4	31177	Washer	10 mm
4	4	31513	Set screw, stainless	M10 x 25
5	2	25832	Straight connection	F40XS 12-1/2 JIC
6	1	56060	Hose	3/8" x 1950 mm V/O JIC (KN)
7	2	25833	Straight connection	F40XS 14/16-1/2 JIC
8	1	56059	Hose	1/2" x 1950 mm V/O JIC (UU)
9	1	56059	Hose	1/2" x 1950 mm V/O JIC (KO)
10	1	56060	Hose	3/8" x 1950 mm V/O JIC (UI)
11	1	25741	Elbow connection	C6XS 14/16 JIC
12	1	25877	Elbow connection	C6XS 12 JIC
13	1	56317	Hose reel 4-port	
14	1	6302895	Bracket for cable drum	K8
15	14	31131	Washer	12 mm
16	2	30175	Set screw	M12 x 20
17	1	28546	Cable drum	K8
18	4	30178	Set screw	M12 x 35
19	6	30890	Lock nut	M12
20	1	6302346	Bracket for hose reel	K8
21	2	31533	Set screw, stainless	M12 x 40
22	2	56055	Hose	3/8" x 5900 mm O/O JIC
23	2	56056	Hose	1/2" x 5900 mm O/O JIC

72-516

Intern ref.: 6302860

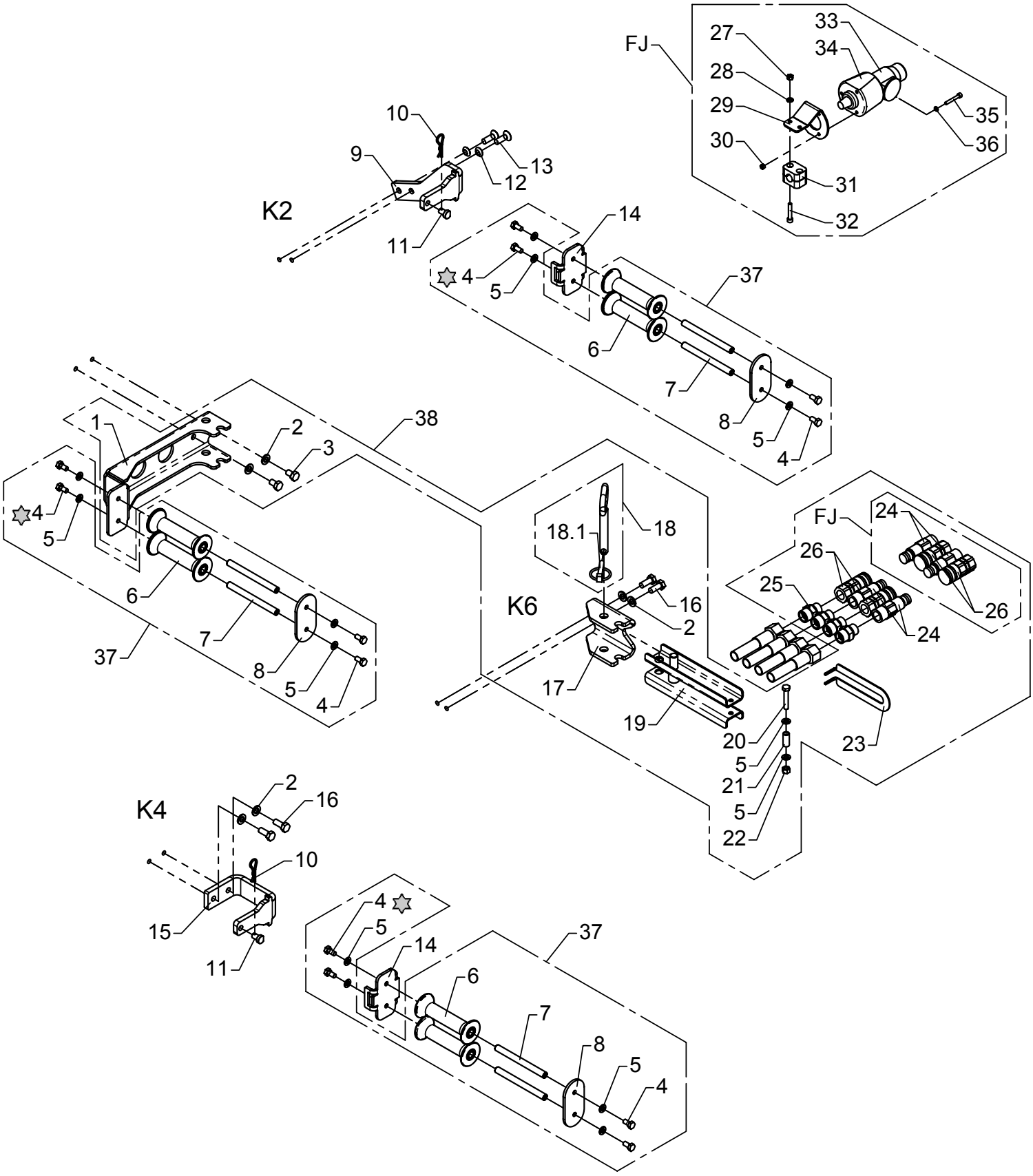

Loctite 243

Extra Valves, K6-2
Hose reels and qui ck-release couplings

As from / To loader no.: 97 00 00 /
Created: 17.11.2003
Modified: 13.08.2004

Item no.	Qty.	Part no.	Description	Remarks
1	1	6302899	Attachment, jib	
2	6	31177	Washer	10 mm
3	2	30153	Set screw	M10 x 16
4	12	30131	Set screw, stainless	M8 x 16
5	14	31147	Washer, stainless	8 mm
6	6	63510	Guide roller	
7	6	6302883	Pin	
8	3	6302882	End plate	
9	1	6302884	Attachment - 2nd extension	
10	2	33379	Spring	
11	2	6302896	Lock pin	
12	2	31171	Washer	10 mm
13	2	30581	Counter-sunk screw	MK10 x 30
14	2	6302881	Plate	
15	1	6302885	Attachement - 4th extension	
16	4	30155	Set screw	M10 x 25
17	1	6302599	Adapter - 6th extension	
18	1	1261144	Lock pin with chain	
	1	33387	Ring split	ø8
19	1	6302897	Clamp	
20	1	30138	Steel bolt, stainless	M8 x 45
21	1	6302888	Pipe	
22	1	30886	Lock nut, stainless	M8
23	1	6302878	Bracket	
24	4	58447	Coupling	1/2"
25	4	26334	Connection	GEV 16 SR-WD
26	4	58448	Coupling	1/2"
27	2	30884	Lock nut, stainless	M6
28	2	32302	Face washer, stainless	6 mm
29	1	6301049	Bracket for 13 poles plug box	
30	3	30859	Lock nut, stainless	M5
31	1	31434	Clamp	
32	2	30959	Screw	MC6 x 35
33	1	27109	Plug	
34	1	27108	Plug box	
35	3	30422	Screw, stainless	MC5 x 35
36	3	31153	Spring washer, stainless	5 mm
37	3	6302900	Guide rollers and pins	
38	1	6302910	Quick-release couplings	

72-516

Intern ref.: 6302860 / 6302880

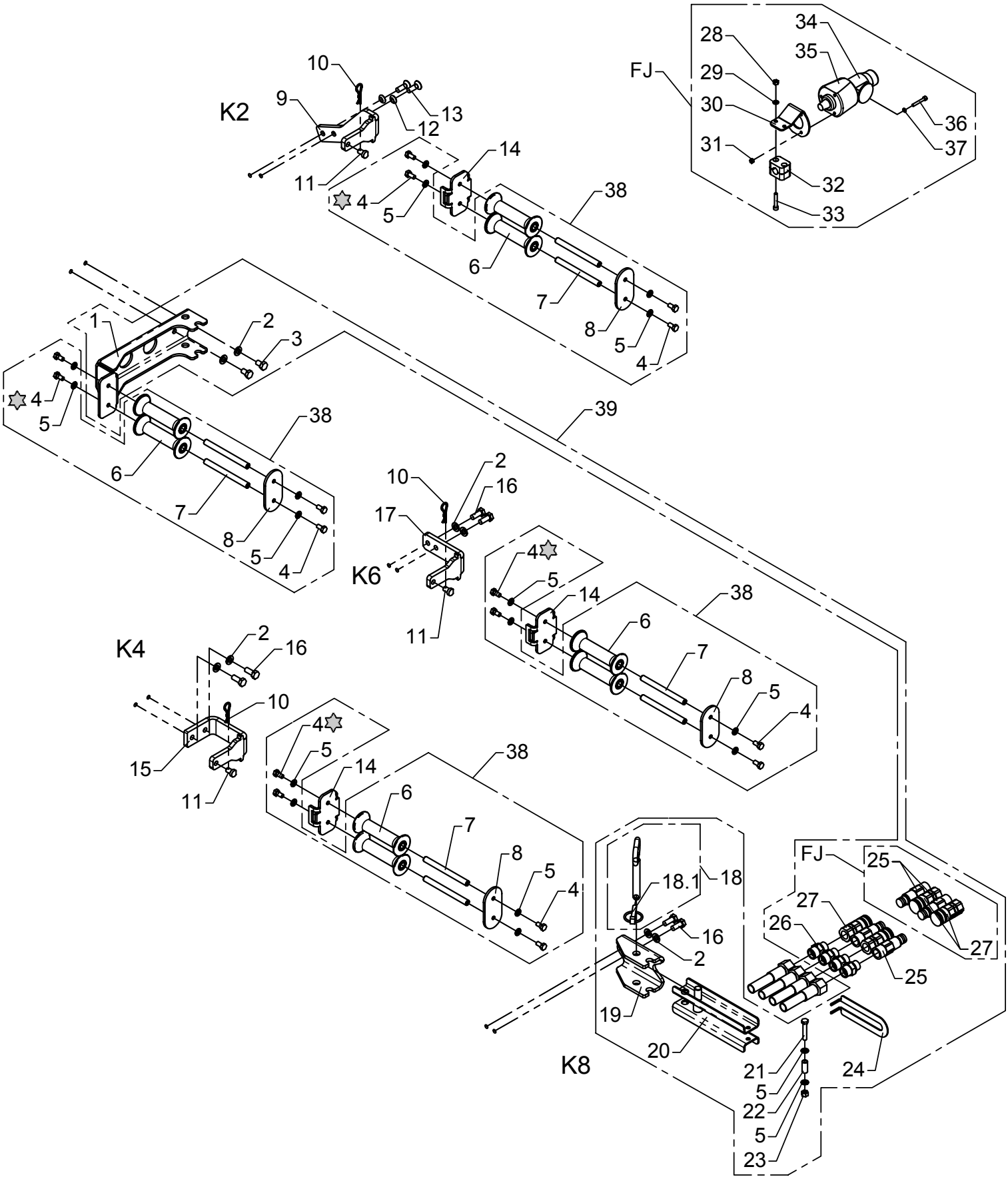

Loctite 243

Extra valves, K8-2
Hose reels and quick-release couplings

As from / To loader no.: 97 00 00 /
Created: 17.11.2003
Modified: 13.08.2004

Item no.	Qty.	Part no.	Description	Remarks
1	1	6302899	Attachment, jib	
2	8	31177	Washer	10 mm
3	2	30153	Set screw	M10 x 16
4	16	30131	Set screw, stainless	M8 x 16
5	18	31147	Washer, stainless	8 mm
6	8	63510	Guide roller	
7	8	6302883	Pin	
8	4	6302882	End plate	
9	1	6302884	Attachment - 2nd extension	
10	3	33379	Spring	
11	3	6302896	Lock pin	
12	2	31171	Washer	10 mm
13	2	30581	Counter-sunk screw	MK10 x 30
14	3	6302881	Plate	
15	1	6302885	Attachement - 4th extension	
16	6	30155	Set screw	M10 x 25
17	1	6302598	Attachment	
18	1	1261144	Lock pin with chain	
	1	33387	Ring split	ø8
19	1	6302891	Adapter - 8th extension	
20	1	6302897	Clamp	
21	1	30138	Steel bolt, stainless	M8 x 45
22	1	6302888	Pipe	
23	1	30886	Lock nut, stainless	M8
24	1	6302878	Bracket	
25	4	58447	Coupling	1/2"
26	4	26334	Connection	GEV 16 SR-WD
27	4	58448	Coupling	1/2"
28	2	30884	Lock nut, stainless	M6
29	2	32302	Face washer, stainless	6 mm
30	1	6301049	Bracket for 13 poles plug box	
31	3	30859	Lock nut, stainless	M5
32	1	31434	Clamp	
33	2	30959	Screw	MC6 x 35
34	1	27109	Plug	
35	1	27108	Plug box	
36	3	30422	Screw, stainless	MC5 x 35
37	3	31153	Spring washer, stainless	5 mm
38	4	6302900	Guide rollers and pins	
39	1	6302910	Quick-release couplings	

72-516

Intern ref.: 6302860

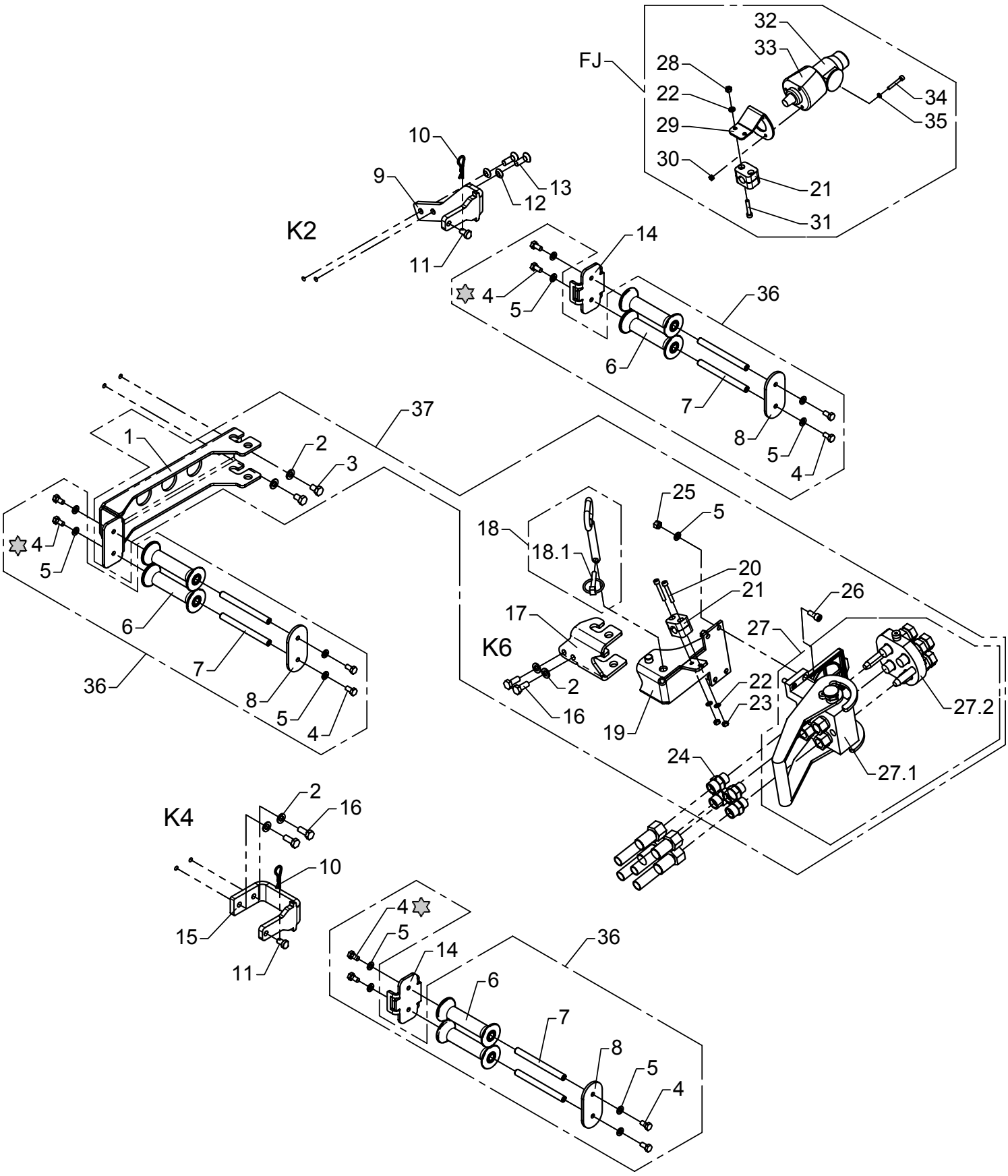

Loctite 243

Extra valves, K6-2
Hose reels and multicoupling

As from / To loader no.: 97 00 00 /
Created: 17.11.2003
Modified: 13.08.2004

Item no.	Qty.	Part no.	Description	Remarks
1	1	6302877	Attachment - jib	
2	6	31177	Washer	10 mm
3	2	30153	Set screw	M10 x 16
4	12	30131	Set screw, stainless	M8 x 16
5	16	31147	Washer, stainless	8 mm
6	6	63510	Guide roller	
7	6	6302883	Pin	
8	3	6302882	End plate	
9	1	6302884	Attachment - 2nd extension	
10	2	33379	Spring	
11	2	6302896	Lock pin	
12	2	31171	Washer	10 mm
13	2	30581	Counter-sunk screw	MK10 x 30
14	2	6302881	Plate	
15	1	6302885	Attachement - 4th extension	
16	4	30155	Set screw	M10 x 25
17	1	6302925	Adapter - 6th extension	
18	1	1261144	Lock pin with chain	
	1	33387	Ring split	ø8
19	1	6302927	Bracket	
20	2	32410	Screw	MC6 x 40
21	2	31434	Clamp	
22	4	32302	Face washer, stainless	6 mm
23	2	30854	Nut, stainless	M6
24	4	26334	Connection	GEV 16 SR-WD
25	4	30886	Lock nut, stainless	M8
26	4	30438	Screw	MC8 x 20
27	1	58430	Multifaster coupling	1/2"
27.1	1	58432	Multifaster coupling	
27.2	1	58431	Multifaster coupling	
28	2	30884	Lock nut, stainless	M6
29	1	6301049	Bracket for 13 poles plug box	
30	3	30859	Lock nut, stainless	M5
31	2	30959	Screw	MC6 x 35
32	1	27109	Plug	
33	1	27108	Plug box	
34	3	30422	Screw, stainless	MC5 x 35
35	3	31153	Spring washer, stainless	5 mm
36	3	6302900	Guide rollers and pins	
37	1	6302920	Multifaster K6 - K8	

72-516

Intern ref.: 6302860 / 6302880

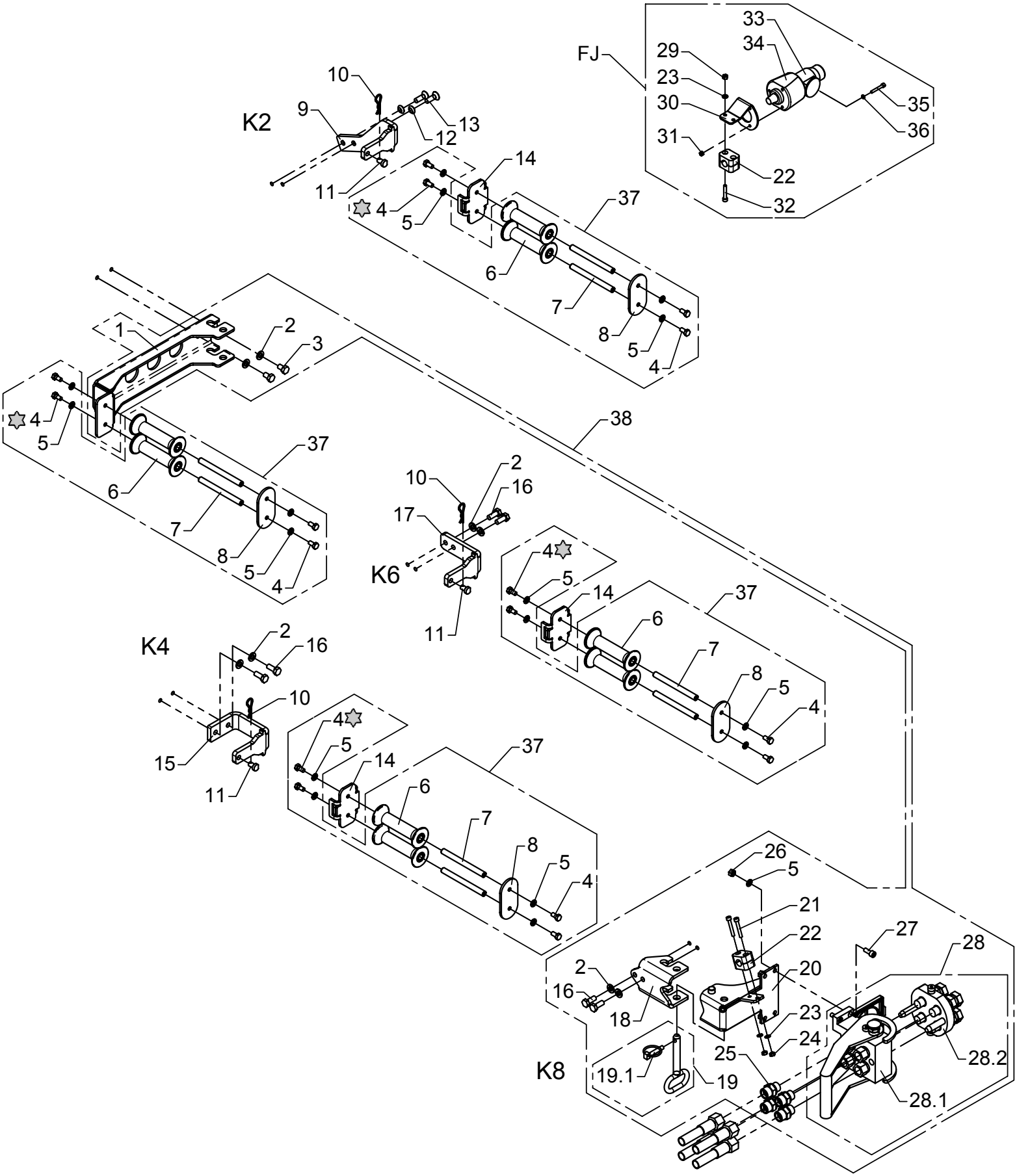

Loctite 243

Exta valves, K8-2
Hose reels and multicoupling

As from / To loader no.: 97 00 00 /
Created: 17.11.2003
Modified: 13.08.2004

Item no.	Qty.	Part no.	Description	Remarks
1	1	6302877	Attachment - jib	
2	8	31177	Washer	10 mm
3	2	30153	Set screw	M10 x 16
4	16	30131	Set screw, stainless	M8 x 16
5	20	31147	Washer, stainless	8 mm
6	8	63510	Guide roller	
7	8	6302883	Pin	
8	4	6302882	End plate	
9	1	6302884	Attachment - 2nd extension	
10	3	33379	Spring	
11	3	6302896	Lock pin	
12	2	31171	Washer	10 mm
13	2	30581	Counter-sunk screw	MK10 x 30
14	3	6302881	Plate	
15	1	6302885	Attachement - 4th extension	
16	6	30155	Set screw	M10 x 25
17	1	6302598	Attachment	
18	1	6302926	Adapter - 8th extension	
19	1	1261144	Lock pin with chain	
	1	33387	Ring split	ø8
20	1	6302927	Bracket	
21	2	32410	Screw	MC6 x 40
22	2	31434	Clamp	
23	4	32302	Face washer, stainless	6 mm
24	2	30854	Nut, stainless	M6
25	4	26334	Connection	GEV 16 SR-WD
26	4	30886	Lock nut, stainless	M8
27	4	30438	Screw	MC8 x 20
28	1	58430	Multifaster coupling	1/2"
28.1	1	58432	Multifaster coupling	
28.2	1	58431	Multifaster coupling	
29	2	30884	Lock nut, stainless	M6
30	1	6301049	Bracket for 13 poles plug box	
31	3	30859	Lock nut, stainless	M5
32	2	30959	Screw	MC6 x 35
33	1	27109	Plug	
34	1	27108	Plug box	
35	3	30422	Screw, stainless	MC5 x 35
36	3	31153	Spring washer, stainless	5 mm
37	4	6302900	Guide rollers and pins	
38	1	6302920	Multifaster K6 - K8	

72-516

Intern ref.: 6301430

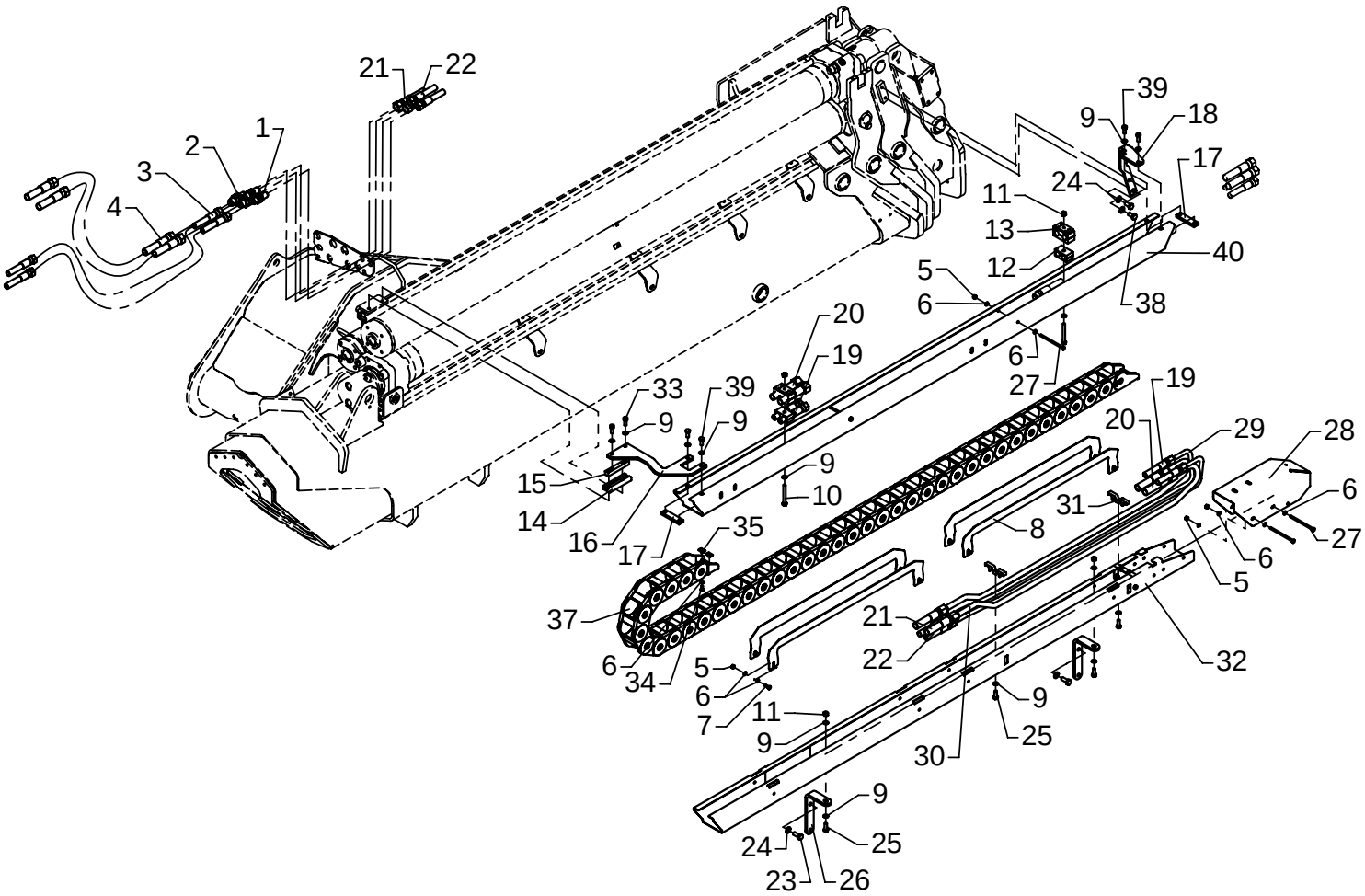

EXV-hose guides K2-2, O&T

As from / To loader no.:
Created: 08.10.2004
Modified:

Item no.	Qty.	Part no.	Description	Remarks
1	2	25824	Bulkhead connection	WTX-WLNS 12 JIC
2	2	25825	Bulkhead connection	WTX-WLNS 14/16 JIC
3	2	56055	Hose	3/8 x 5900mm L/L 16-12 JIC
4	2	56056	Hose	1/2 x 5900mm L/L 16-16 JIC
5	14	30884	Lock nut, stainless	M6
6	32	32302	Face washer, stainless	6 mm
7	10	30112	Set screw, stainless	M6 x 16
8	4	6301253	Guide plate	
9	14	31147	Washer, stainless	8 mm
10	2	30142	Steel bolt, stainless	M8 x 70
11	4	30886	Lock nut, stainless	M8
12	2	31833	Clamp	2 x 18 mm
13	2	31845	Clamp, rubber	
14	1	63686	Guide shoe	
15	1	6300338	Spacer	
16	1	6301258	Susp. K2-hose guide, rear	
17	2	6301239	Threaded disc 20x 8x80, 2xM8	
18	1	6301222	Susp. K2-hose guide, front	
19	2	56113	Hose	3/8 x 3750 S/O JIC
20	2	56112	Hose	1/2 x 3760 S/O JIC
21	2	56267	Hose	1/2 x 2700 S/O JIC
22	2	56116	Hose	3/8 x 2500 S/O JIC
23	2	30155	Set screw	M10 x 25
24	4	31177	Washer	10 mm
25	4	30133	Set screw, stainless	M8 x 22
26	2	6301243	Susp. K0-hose guide, K2-K4	
27	4	32112	Steel bolt stainless	M6 x 100
28	1	6301219	End protection plate	
29	2	6301242	Pipe JIC ø12 short exv.	
30	2	6301241	Pipe JIC ø16 short exv.	
31	2	6301218	Clamp	
32	1	6301213	Hose guide, K0	
33	2	30438	Screw	MC8 x 20
34	4	30111	Set screw, stainless	M6 x 12
35	4	32122	Nut, stainless	
36	1	6301217	Chain fittings	
37	1	27893	Nylon drag chain	
38	2	31517	Set screw, stainless	M10 x 20
39	4	30132	Set screw, stainless	M8 x 20
40	1	6301214	Hose guide, K2	

72-516

Intern ref.: 6301440

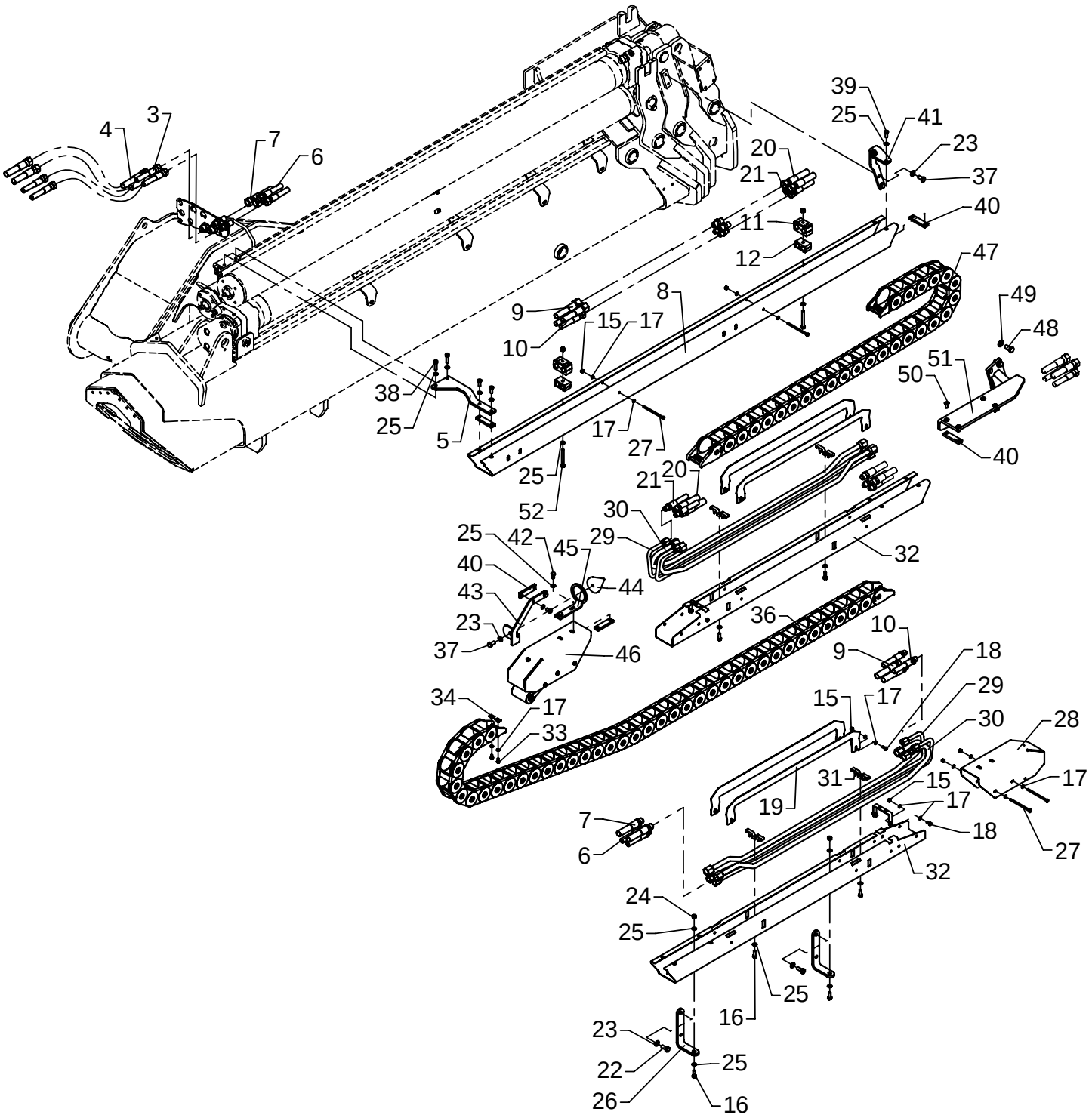

EXV-hose guides K3-2, O&T

As from / To loader no.:
Created: 11.10.2004
Modified:

Item no.	Qty.	Part no.	Description	Remarks
1	2	25824	Bulkhead connection	WTX-WLNS 12 JIC
2	2	25825	Bulkhead connection	WTX-WLNS 14/16 JIC
3	2	56055	Hose	3/8 x 5900mm L/L 16-12 JIC
4	2	56056	Hose	1/2 x 5900mm L/L 16-16 JIC
5	1	6301223	Suspension K2 hose guide, rear	
6	2	56116	Hose	3/8 x 2500mm S/O JIC
7	2	56267	Hose	1/2 x 2700mm S/O JIC
8	1	6301214	Hose guide, K2	
9	2	56112	Hose	1/2 x 3760 S/O JIC
10	2	56113	Hose	3/8 x 3750 S/O JIC
11	2	31845	Clamp, rubber	
12	2	31833	Clamp	2 x 18 mm
13	2	26281	Union nut	
14	2	25843	Double connection	
15	14	30884	Lock nut, stainless	M6
16	6	30133	Set screw, stainless	M8 x 22
17	32	32302	Face washer, stainless	6 mm
18	10	30112	Set screw, stainless	M6 x 16
19	4	6301253	Guide plate	
20	2	56106	Hose	1/2 x 2900 S/O JIC
21	2	56107	Hose	3/8 x 2890 S/O JIC
22	2	30155	Set screw	M10 x 25
23	5	31177	Washer	10 mm
24	4	30886	Lock nut, stainless	M8
25	20	31147	Washer, stainless	8 mm
26	2	6301243	Susp. K0-hose guide, K2-K4	
27	4	32112	Steel bolt stainless	M6 x 100
28	1	6301219	End protection plate	
29	4	6301242	Pipe JIC ø12 short exv.	
30	4	6301241	Pipe JIC ø16 short exv.	
31	4	6301218	Clamp	
32	2	6301215	Hose guide, K3+K5	
33	4	30111	Set screw, stainless	M6 x 12
34	4	32122	Nut, stainless	
35	2	6301217	Chain fittings	
36	1	27893	Nylon drag chain	
37	3	31517	Set screw, stainless	M10 x 20
38	2	30442	Screw	MC8 x 30
39	4	30132	Set screw, stainless	M8 x 20
40	6	6301239	Threaded disc 20x 8x80, 2xM8	

72-516

Intern ref.: 6301440

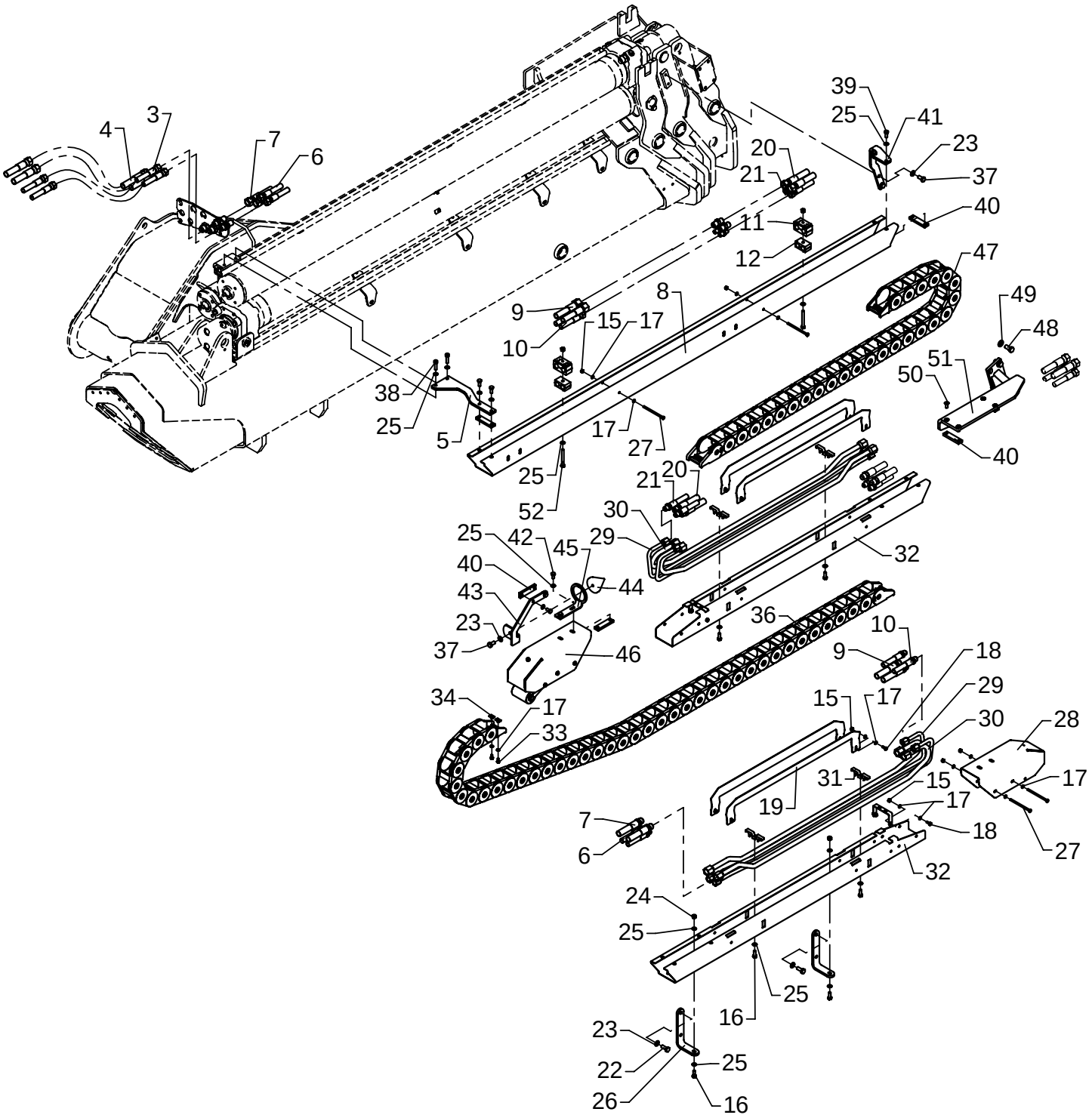

EXV-hose guides K3-2, O&T

As from / To loader no.:
Created: 11.10.2004
Modified:

Item no.	Qty.	Part no.	Description	Remarks
41	1	6301222	Susp. K2-hose guide, front	
42	4	30131	Set screw, stainless	M8 x 16
43	1	6301251	Guide, upper part	
44	1	63540	Cone	
45	1	6301252	Guide, lower part	
46	1	6301240	Quick-release kit, O&T	
47	1	27892	Nylon drag chain	
48	4	30176	Set screw	M12 x 25
49	4	31131	Washer	12 mm
50	4	30957	Countersunk screw	MK8 x 20
51	1	6301238	Bracket K4, sl	
52	2	30142	Steel bolt, stainless	M8 x 70

72-516

Intern ref.: 6301450

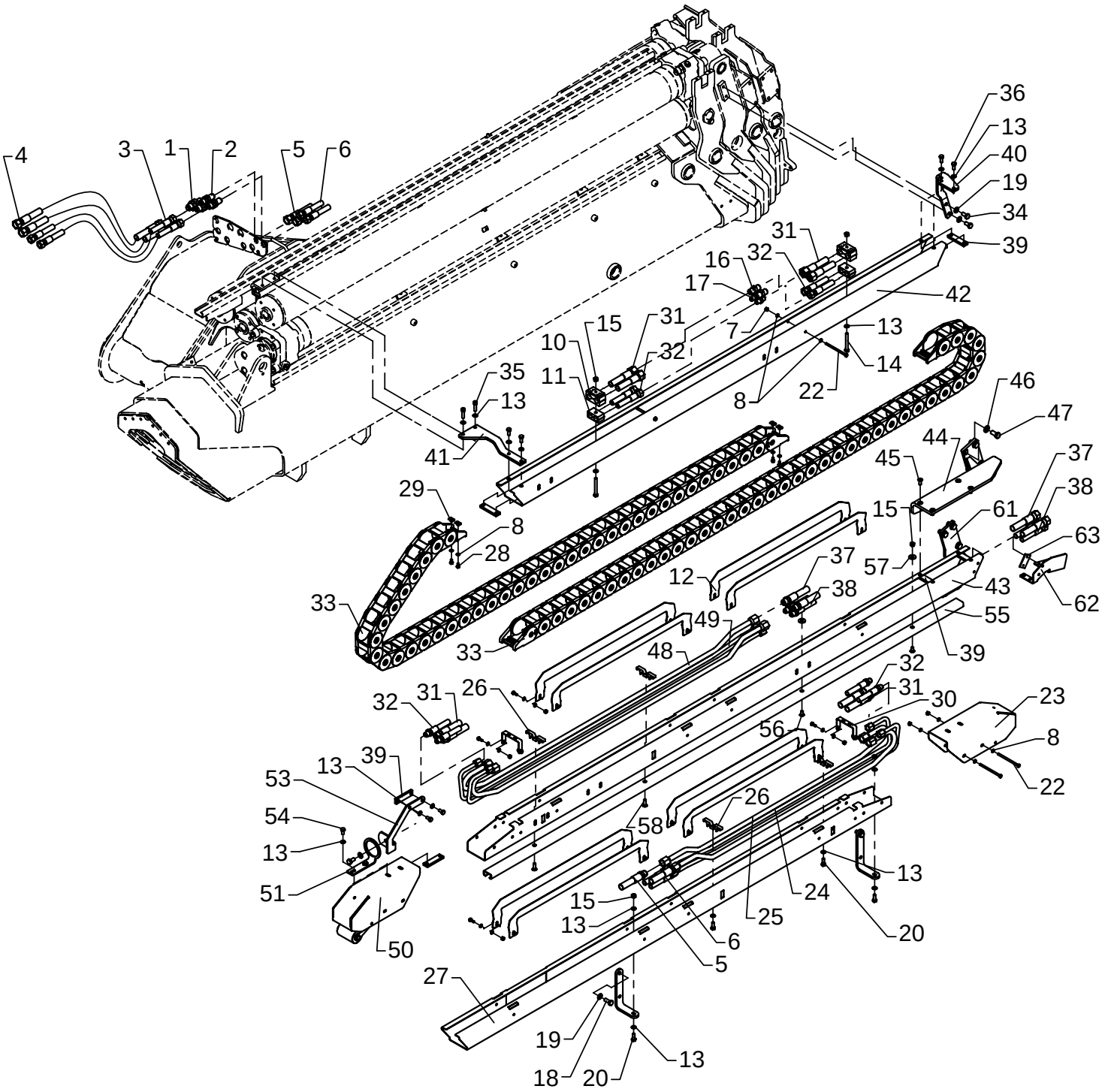

EXV-hose guides K4-2, O&T

As from / To loader no.:
Created: 12.10.2004
Modified:

Item no.	Qty.	Part no.	Description	Remarks
1	2	25825	Bulkhead connection	WTX-WLNS 14/16 JIC
2	2	25824	Bulkhead connection	WTX-WLNS 12 JIC
3	2	56055	Hose	3/8 x 5900mm L/L 16-12 JIC
4	2	56056	Hose	1/2 x 5900mm L/L 16-16 JIC
5	2	56267	Hose	1/2 x 2700 S/O JIC
6	2	56116	Hose	3/8 x 2500 S/O JIC
7	20	30884	Lock nut, stainless	M6
8	44	32302	Face washer, stainless	6 mm
9	16	30112	Set screw, stainless	M6 x 16
10	2	31845	Clamp, rubber	
11	2	31833	Clamp	2 x 18 mm
12	8	6301253	Guide plate	
13	20	31147	Washer, stainless	8 mm
14	2	30142	Steel bolt, stainless	M8 x 70
15	6	30886	Lock nut, stainless	M8
16	2	26281	Union nut	
17	2	25843	Double connection	
18	2	30155	Set screw	M10 x 25
19	5	31177	Washer	10 mm
20	4	30133	Set screw, stainless	M8 x 22
21	2	6301243	Susp. K0-hose guide, K2-K4	
22	4	32112	Steel bolt stainless	M6 x 100
23	1	6301219	End protection plate	
24	2	6301242	Pipe JIC ø12 short exv.	
25	2	6301241	Pipe JIC ø16 short exv.	
26	4	6301218	Clamp	
27	1	6301213	Hose guide, K0	
28	4	30111	Set screw, stainless	M6 x 12
29	4	32122	Nut, stainless	
30	2	6301217	Chain fittings	
31	4	56112	Hose	1/2 x 3760 S/O JIC
32	4	56113	Hose	3/8 x 3750 S/O JIC
33	2	27893	Nylon drag chain	
34	3	31517	Set screw, stainless	M10 x 20
35	2	30442	Screw	MC8 x 30
36	6	30132	Set screw, stainless	M8 x 20
37	2	56123	Hose	1/2 x 1150 S/O JIC
38	2	56124	Hose	3/8 x 1150 S/O JIC
39	6	6301239	Threaded disc 20x 8x80, 2xM8	
40	1	6301222	Susp. K2-hose guide, front	

72-516

Intern ref.: 6301450

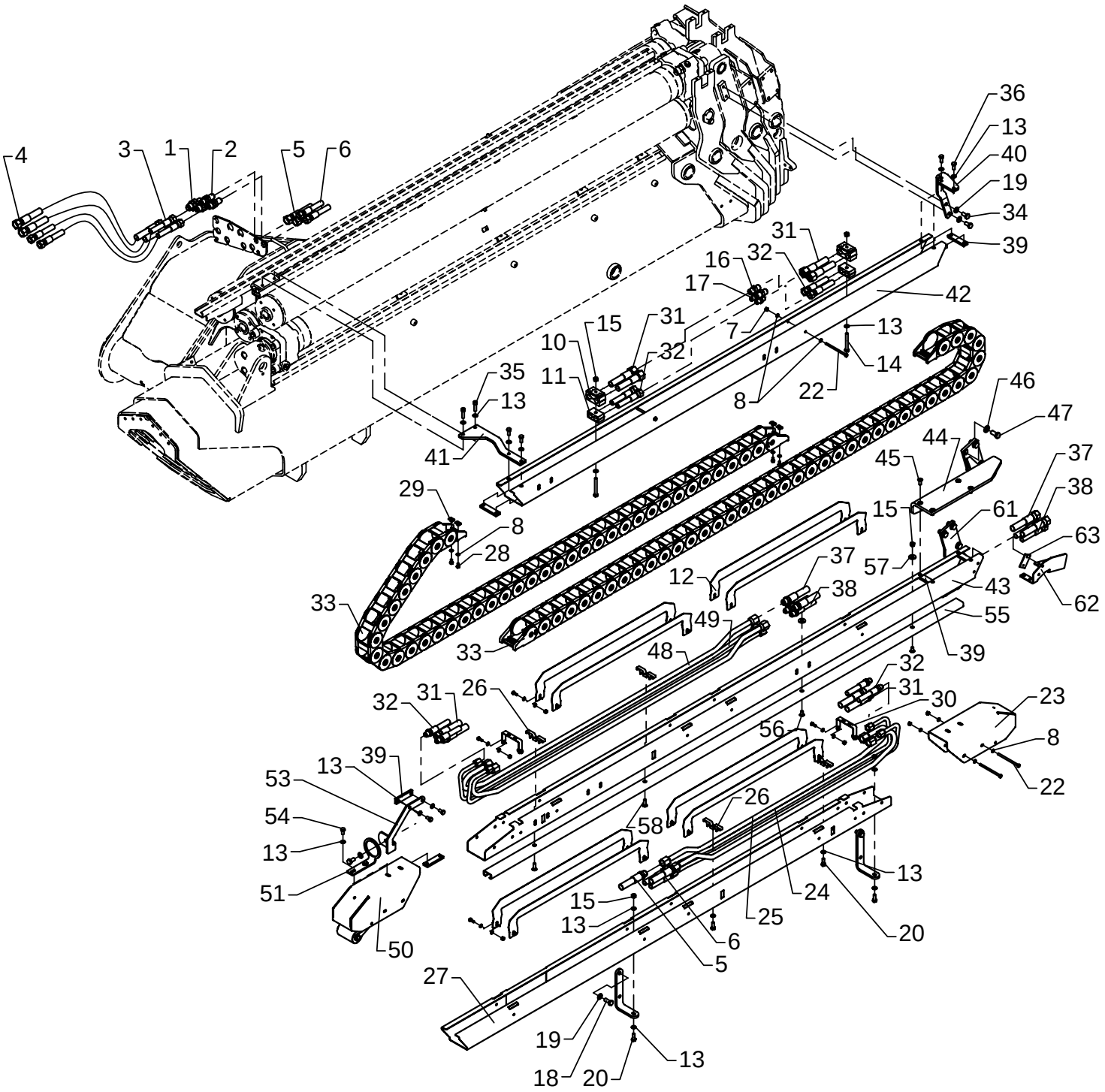

EXV-hose guides K4-2, O&T

As from / To loader no.:
Created: 12.10.2004
Modified:

Item no.	Qty.	Part no.	Description	Remarks
41	1	6301223	Suspension K2 hose guide, rear	
42	1	6301214	Hose guide, K2	
43	1	6301216	Hose guide, K4+K6	
44	1	6301238	Bracket K4, sl	
45	4	30957	Countersunk screw	MK8 x 20
46	7	31131	Washer	12 mm
47	7	30176	Set screw	M12 x 25
48	2	6301211	Pipe JIC ø16 long exv.	
49	2	6301212	Pipe JIC ø12 long exv	
50	1	6301240	Quick-release kit, O&T	
51	1	6301252	Guide, lower part	
52	1	63540	Cone	
53	1	6301251	Guide, upper part	
54	4	30131	Set screw, stainless	M8 x 16
55	1	6301224	C-profile 20x40, L=2350	
56	4	30543	Countersunk screw	MK8 x 16
57	2	31136	Washer, stainless	24 x 8,4 x 2
58	2	31964	Counter sunk screw, stainless	MK8 x 25
59	1	63686	Guide shoe	
60	1	6300338	Spacer	
61	1	6301233	Bracket for slide block - K3	
62	1	6301259	Fittings for elect. plug	
63	1	31429	Clamp	

72-516

Intern ref.: 6301460

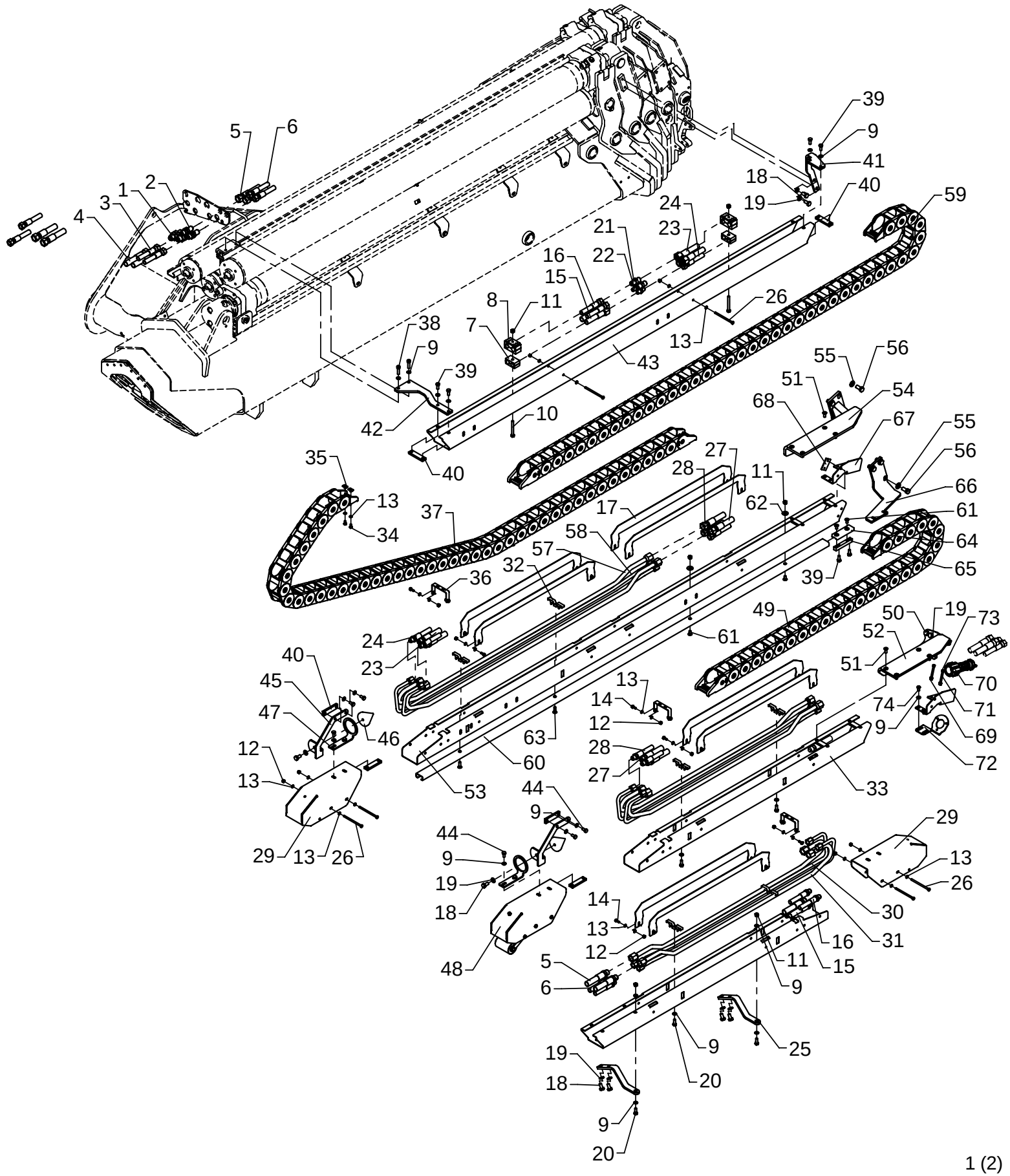

EXV-hose guides K5-2, O&T

As from / To loader no.:
Created: 18.10.2004
Modified:

Item no.	Qty.	Part no.	Description	Remarks
1	2	25825	Bulkhead connection	WTX-WLNS 14/16 JIC
2	2	25824	Bulkhead connection	WTX-WLNS 12 JIC
3	2	56055	Hose	3/8 x 5900 mm L/L 16-12 JIC
4	2	56056	Hose	1/2 x 5900 mm L/L 16-16 JIC
5	2	56127	Hose	1/2 x 2500 S/L JIC
6	2	62985	Hose JIC	3/8 x 2350 S/L JIC
7	2	31833	Clamp	2 x 18 mm
8	2	31845	Clamp, rubber	
9	30	31147	Washer, stainless	8 mm
10	2	30142	Steel bolt, stainless	M8 x 70
11	8	30886	Lock nut, stainless	M8
12	24	30884	Lock nut, stainless	M6
13	50	32302	Face washer, stainless	6 mm
14	16	30112	Set screw, stainless	M6 x 16
15	2	56114	Hose	1/2 x 4095 S/O JIC
16	2	56115	Hose	3/8 x 4085 S/O JIC
17	8	6301253	Guide plate	
18	8	31517	Set screw, stainless	M10 x 20
19	12	31177	Washer	10 mm
20	6	30133	Set screw, stainless	M8 x 22
21	2	26281	Union nut	
22	2	25843	Double connection	
23	2	56112	Hose	1/2 x 3760 S/O JIC
24	2	56113	Hose	3/8 x 3750 S/O JIC
25	2	6301244	Susp. K0 hose guide, ODIN K5-6	
26	6	32112	Steel bolt stainless	M6 x 100
27	2	56106	Hose	1/2 x 2900 S/O JIC
28	2	56107	Hose	3/8 x 2890 S/O JIC
29	2	6301219	End protection plate	
30	4	6301242	Pipe JIC ø12 short exv.	
31	4	6301241	Pipe JIC ø16 short exv.	
32	6	6301218	Clamp	
33	2	6301215	Hose guide, K3+K5	
34	4	30111	Set screw, stainless	M6 x 12
35	4	32122	Nut, stainless	
36	3	6301217	Chain fittings	
37	1	28587	Nylon drag chain (43 elts)	
38	2	30442	Screw	MC8 x 30
39	6	30132	Set screw, stainless	M8 x 20
40	10	6301239	Threaded disc 20x 8x80, 2xM8	

72-516

Intern ref.: 6301460

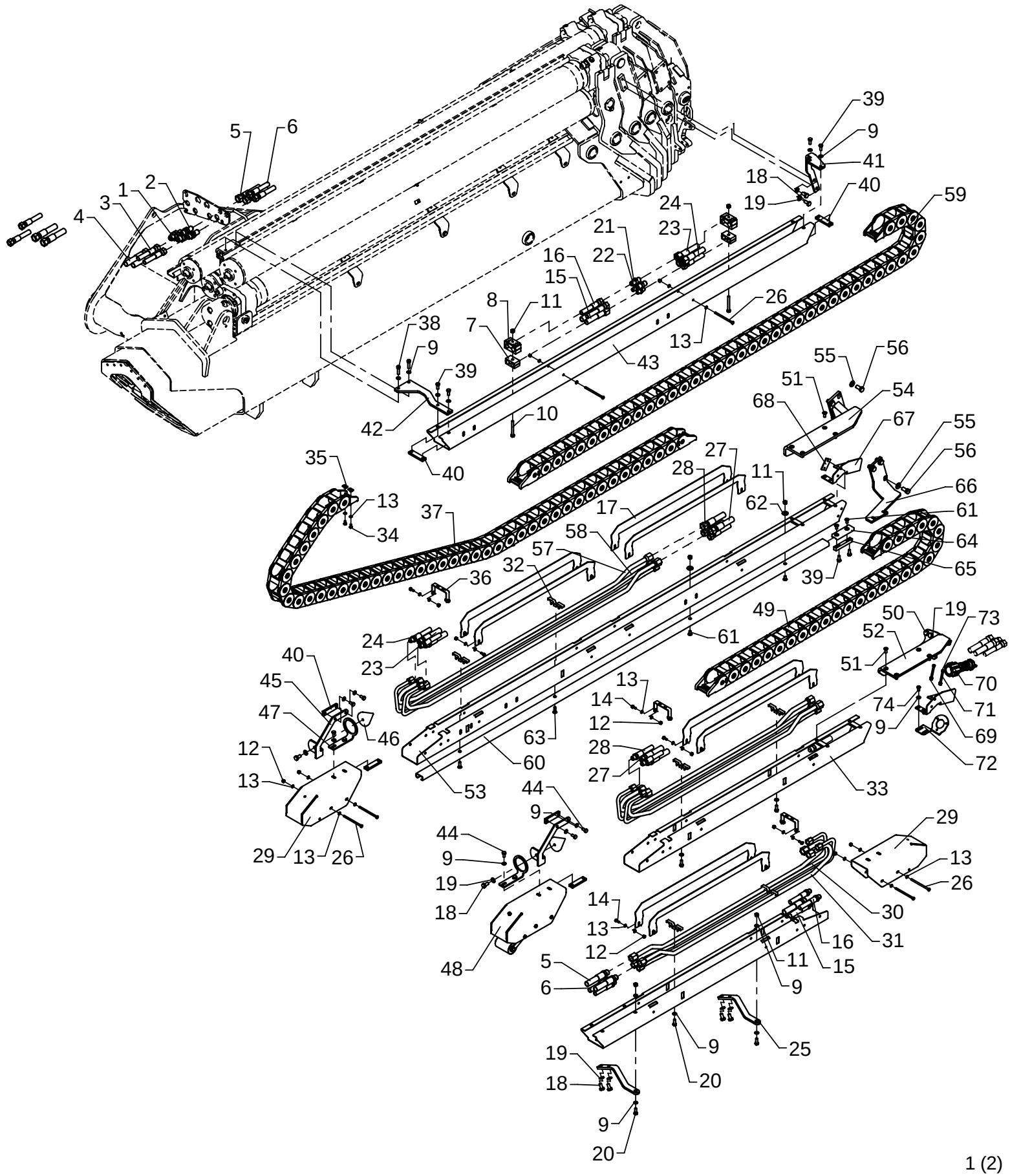

EXV-hose guides K5-2, O&T

As from / To loader no.:
Created: 18.10.2004
Modified:

Item no.	Qty.	Part no.	Description	Remarks
43	1	6301214	Hose guide, K2	
44	8	30131	Set screw, stainless	M8 x 16
45	2	6301251	Guide, upper part	
46	2	63540	Cone	
47	2	6301252	Guide, lower part	
48	1	6301240	Quick-release kit, O&T	
49	1	27892	Nylon drag chain	
50	4	30155	Set screw	M10 x 25
51	8	30957	Countersunk screw	MK8 x 20
52	1	6301245	Bracket K5	
53	1	6301216	Hose guide, K4+K6	
54	1	6301238	Bracket K4, sl	
55	7	31131	Washer	12 mm
56	7	30176	Set screw	M12 x 25
57	2	6301211	Pipe JIC ø16 long exv.	
58	2	6301212	Pipe JIC ø12 long exv	
59	1	27893	Nylon drag chain	
60	1	6301224	C-profile 20x40, L=2350	
61	4	30543	Countersunk screw	MK8 x 16
62	2	31136	Washer, stainless	24 x 8,4 x 2
63	2	31964	Counter sunk screw, stainless	MK8 x 25
64	1	63686	Guide shoe	
65	1	6300338	Spacer	
66	1	6301233	Bracket for slide block - K3	
67	2	6301259	Fittings for elect. plug	
68	1	31429	Clamp	
69	1	27700	Plug	
70	1	7000873	Dummy plug for fly-jib	
71	1	31468	Clamp	
72	1	6301048	Bracket for 13 poles plug box	
73	2	30441	Screw	MC6 x 60
74	2	30925	Round-head screw	M8 x 16

72-516

Intern ref.: 6301470

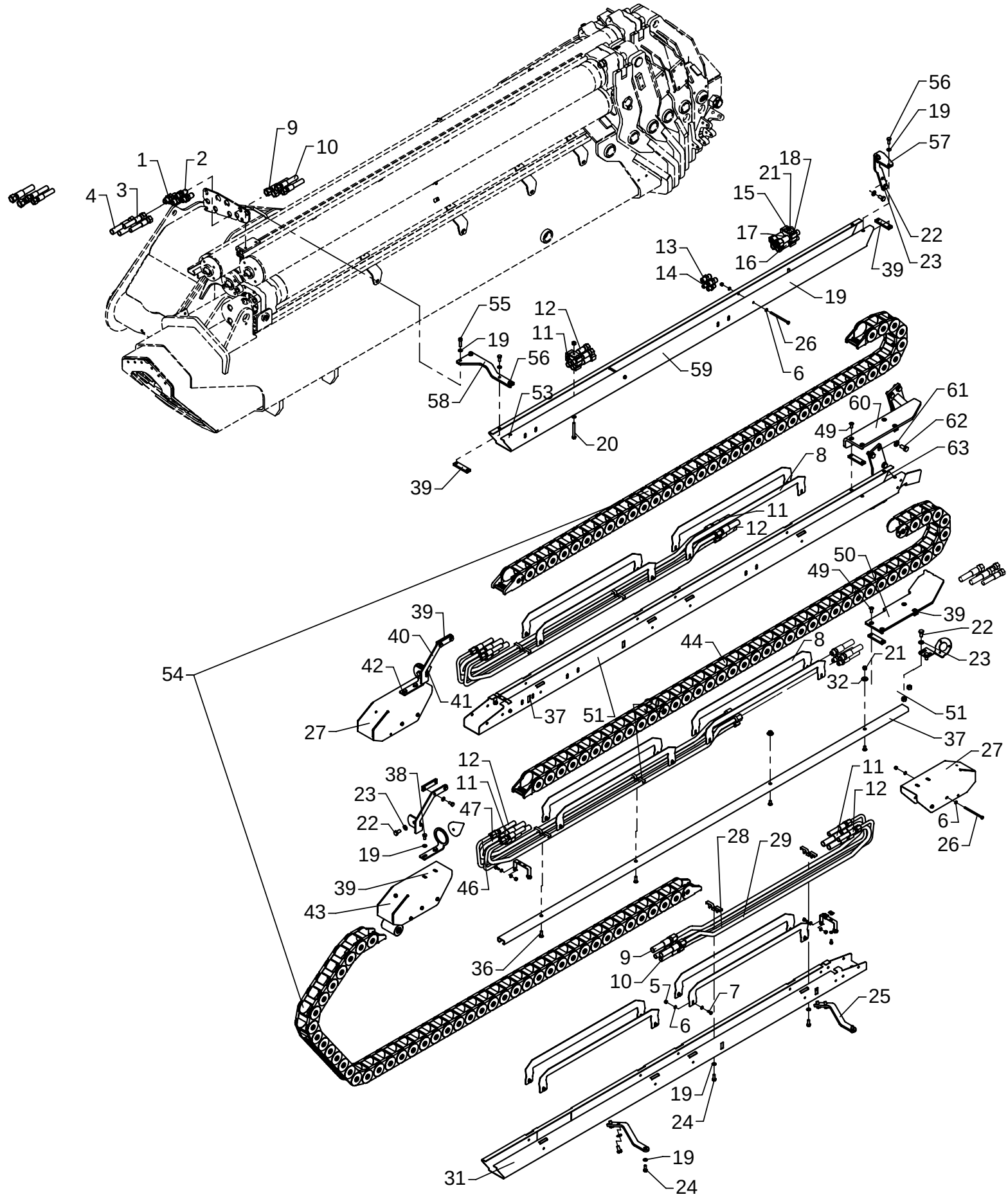

EXV-hose guides K6-2, O&T

As from / To loader no.:
Created: 20.10.2004
Modified:

Item no.	Qty.	Part no.	Description	Remarks
1	2	25825	Bulkhead connection	WTX-WLNS 14/16 JIC
2	2	25824	Bulkhead connection	WTX-WLNS 12 JIC
3	2	56055	Hose	
4	2	56056	Hose	
5	28	30884	Lock nut, stainless	M6
6	60	32302	Face washer, stainless	6 mm
7	22	30112	Set screw, stainless	M6 x 16
8	12	6301253	Guide plate	
9	2	56127	Hose	
10	2	62985	Hose JIC	
11	4	56114	Hose	
12	4	56115	Hose	
13	2	26281	Union nut	
14	2	25843	Double connection	
15	2	56112	Hose	
16	2	56113	Hose	
17	2	31833	Clamp	2 x 18 mm
18	2	31845	Clamp, rubber	
19	24	31147	Washer, stainless	8 mm
20	2	30142	Steel bolt, stainless	M8 x 70
21	8	30886	Lock nut, stainless	M8
22	10	31517	Set screw, stainless	M10 x 20
23	12	31177	Washer	10 mm
24	4	30133	Set screw, stainless	M8 x 22
25	2	6301244	Susp. K0 hose guide, ODIN K5-6	
26	6	32112	Steel bolt stainless	M6 x 100
27	2	6301219	End protection plate	
28	2	6301242	Pipe JIC ø12 short exv.	
29	2	6301241	Pipe JIC ø16 short exv.	
30	6	6301218	Clamp	
31	1	6301213	Hose guide, K0	
32	4	31136	Washer, stainless	24 x 8,4 x 2
33	8	30543	Countersunk screw	MK8 x 16
34	2	6300338	Spacer	
35	2	63686	Guide shoe	
36	4	31964	Counter sunk screw, stainless	MK8 x 25
37	2	6301224	C-profile 20x40, L=2350	
38	8	30131	Set screw, stainless	M8 x 16
39	10	6301239	Threaded disc 20x 8x80, 2xM8	
40	2	6301251	Guide, upper part	

72-516

Intern ref.: 6301470

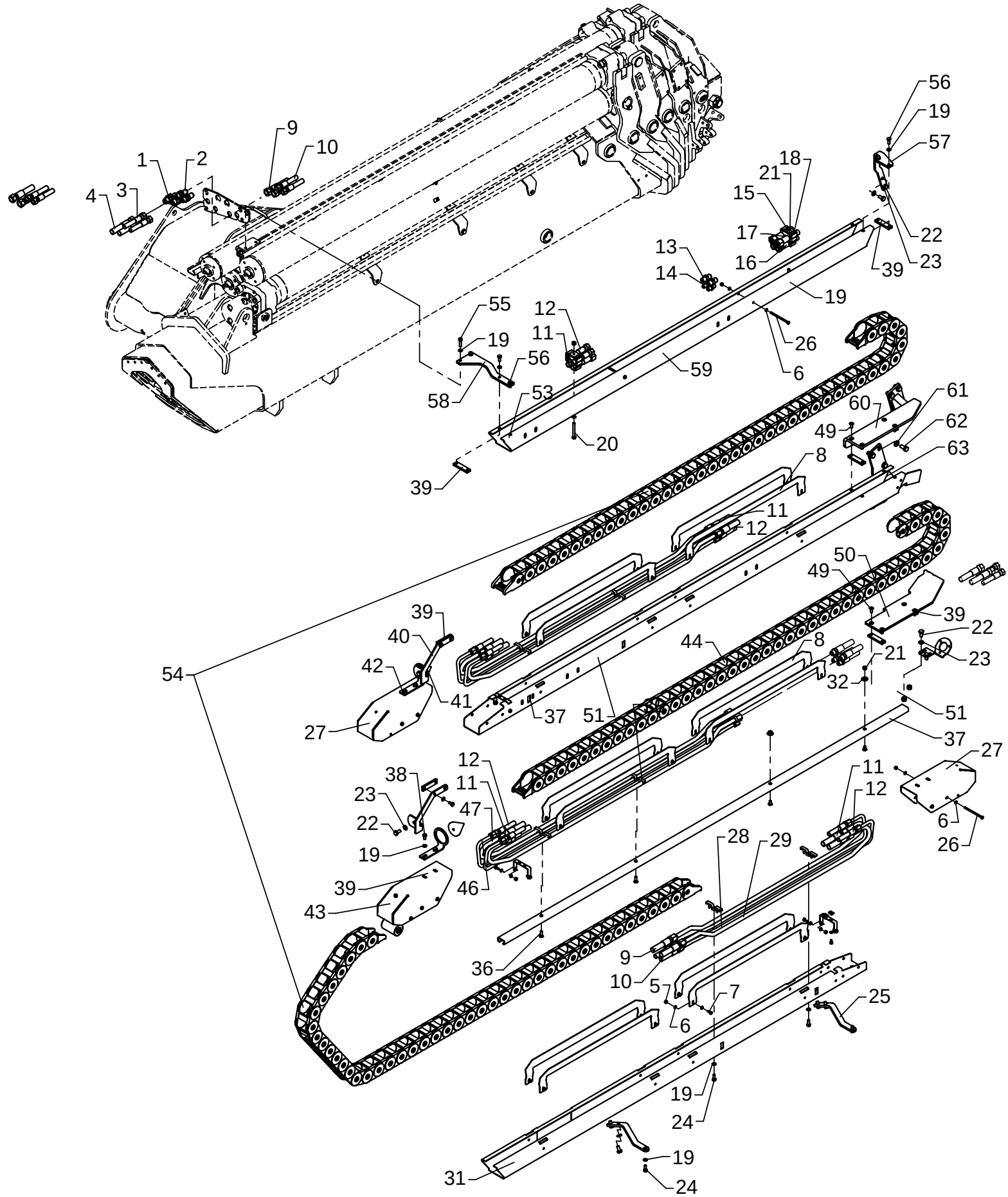

EXV-hose guides K6-2, O&T

As from / To loader no.:
Created: 20.10.2004
Modified:

Item no.	Qty.	Part no.	Description	Remarks
41	2	63540	Cone	
42	2	6301252	Guide, lower part	
43	1	6301240	Quick-release kit, O&T	
44	1	28587	Nylon drag chain (43 elts)	
45	3	6301217	Chain fittings	
46	4	6301212	Pipe JIC ø12 long exv	
47	4	6301211	Pipe JIC ø16 long exv.	
48	2	30155	Set screw	M10 x 25
49	8	30957	Countersunk screw	MK8 x 20
50	1	6301275	Bracket, sl	
51	2	6301216	Hose guide, K4+K6	
52	4	30111	Set screw, stainless	M6 x 12
53	4	32122	Nut, stainless	
54	2	27893	Nylon drag chain	
55	2	30442	Screw	MC8 x 30
56	6	30132	Set screw, stainless	M8 x 20
57	1	6301222	Susp. K2-hose guide, front	
58	1	6301223	Suspension K2 hose guide, rear	
59	1	6301214	Hose guide, K2	
60	1	6301238	Bracket K4, sl	
61	7	31131	Washer	12 mm
62	7	30176	Set screw	M12 x 25
63	1	6301233	Bracket for slide block - K3	

72-516

Intern ref.: 1014330

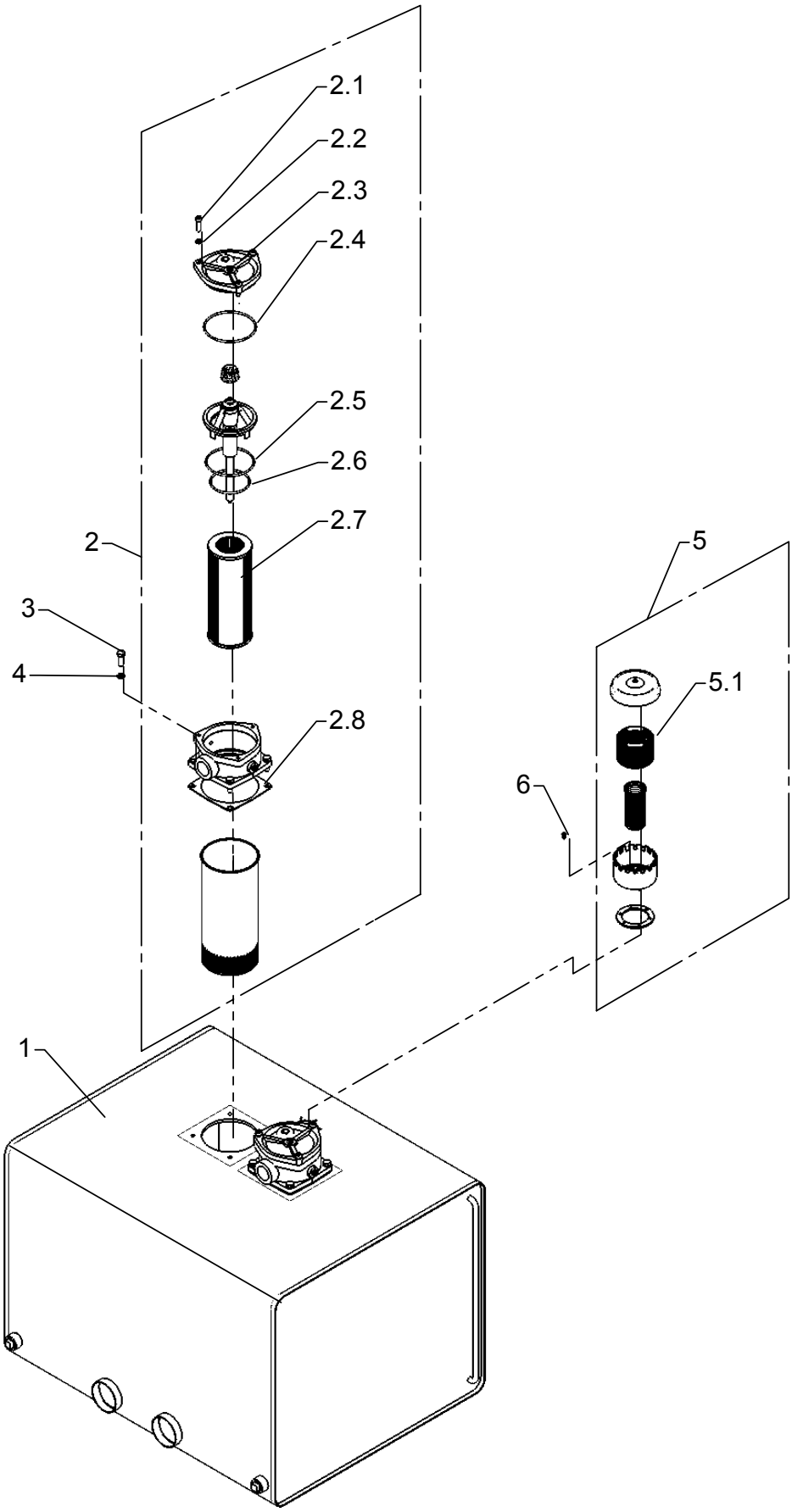

External hydraulic tank, 320 l

As from / To loader no.: 97 00 00
Created: 05.01.2004
Modified:

Item no.	Qty.	Part no.	Description	Remarks
1	1	58708	Oil tank 320 l	
2	2	60249	Return filter	
2,1	3	30442	Screw	MC8 x 30
2,2	3	31155	Spring washer, stainless	8 mm
2,3	1	60282	Cover	
2,4	1	20197	O-Ring	OR 118 x 3
2,5	1	20196	O-Ring	OR 109,5 x 3
2,6	1	20191	O-Ring	OR 89,5 x 3
2,7	1	60250	Filter cartridge	
2,8	1	60283	Seal	
3	8	31515	Set screw, stainless	M10 x 30
4	8	31571	Spring washer, stainless	10 mm
5	1	60275	Air filter	
5,1	1	60276	Filter	
6	3	25348	Plug	

72-516

Intern ref.: 1014340

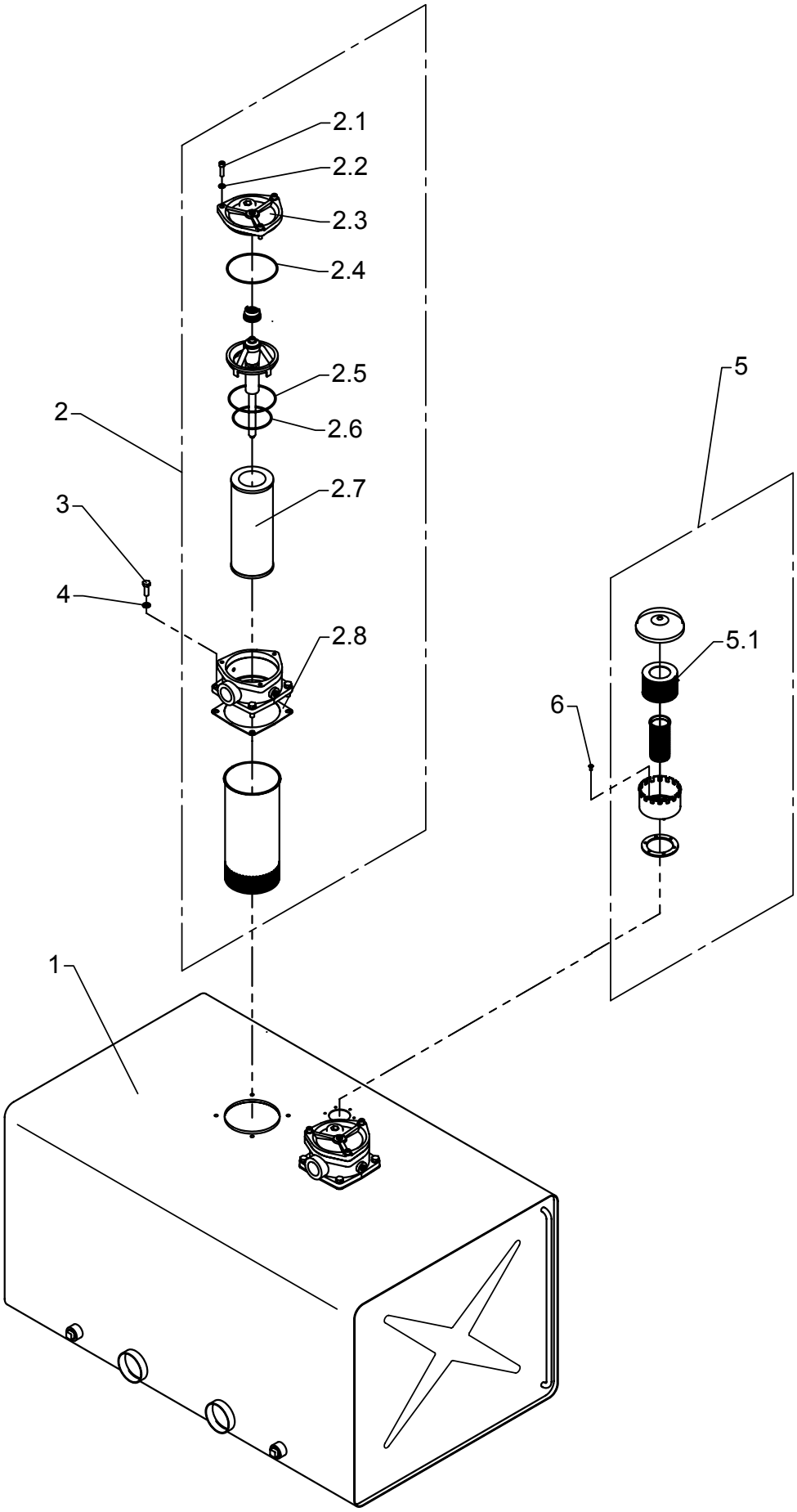

External hydraulic tank, 420 l

As from / To loader no.: 97 00 00
Created: 05.01.2004
Modified:

Item no.	Qty.	Part no.	Description	Remarks
1	1	58709	Oil tank, 420 l	
2	2	60249	Return filter	
2,1	3	30442	Screw	MC8 x 30
2,2	3	31155	Spring washer, stainless	8 mm
2,3	1	60282	Cover	
2,4	1	20197	O-Ring	OR 118 x 3
2,5	1	20196	O-Ring	OR 109,5 x 3
2,6	1	20191	O-Ring	OR 89,5 x 3
2,7	1	60250	Filter cartridge	
2,8	1	60283	Seal	
3	8	31515	Set screw, stainless	M10 x 30
4	8	31571	Spring washer, stainless	10 mm
5	1	60275	Air filter	
5,1	1	60276	Filter	
6	3	25348	Plug	

72-516

Intern ref.: 6301190

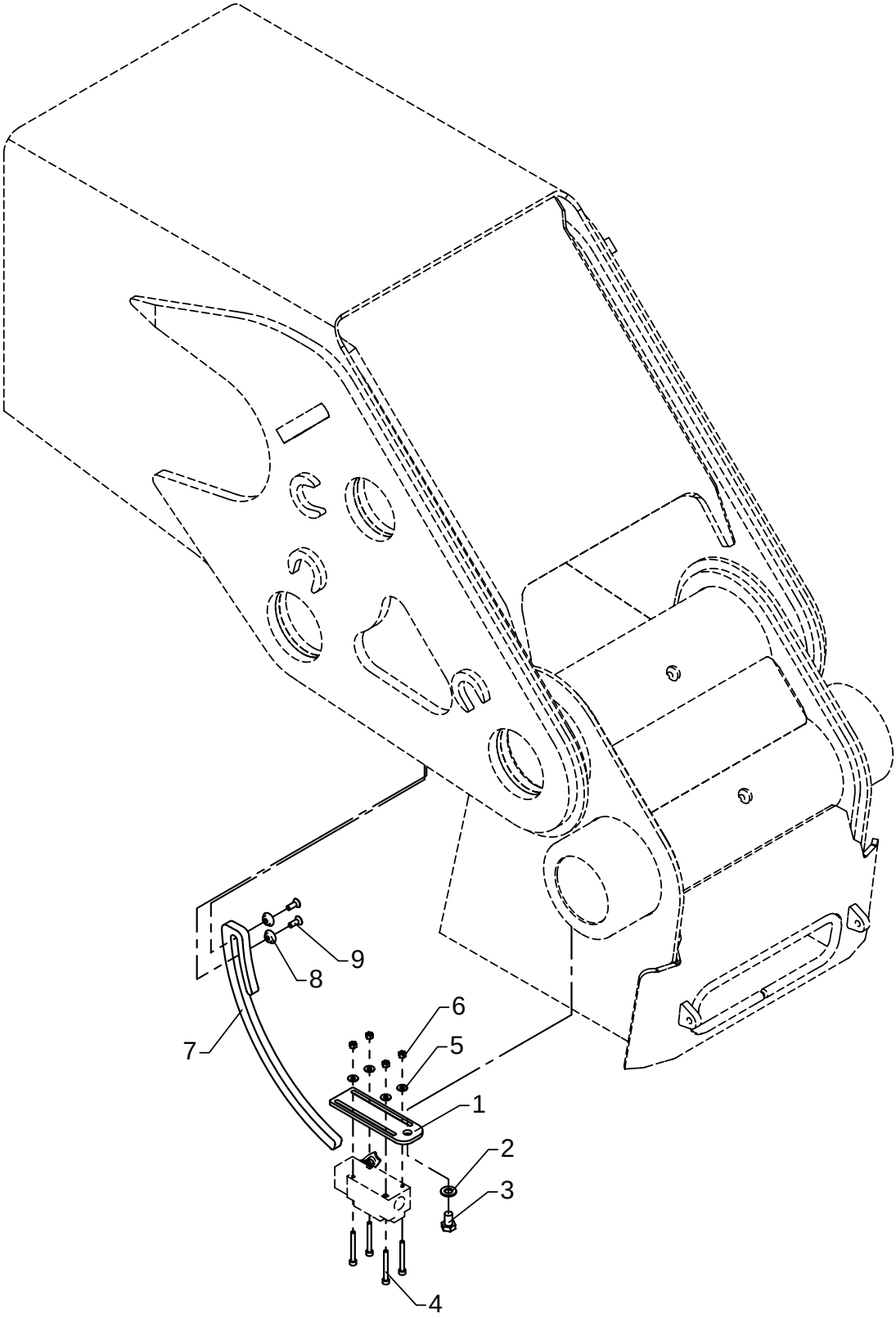

Height Indicator

As from / To loader no.: 97 00 00/
Created: 16.02.2004
Modified:

Item no.	Qty.	Part no.	Description	Remarks
1	1	6301191	Clamp	
2	1	31565	Washer, stainless	10 mm
3	1	30153	Set screw	M10 x 16
4	4	30400	Screw, stainless	MC5 x 45
5	4	31189	Washer	5 mm
6	4	30859	Lock nut, stainless	M5
7	1	6301192	Cam disc	
8	2	6301193	Washer	
9	2	32201	Countersunk screw	MK6 x 16

72-516

Intern ref.: 6302510

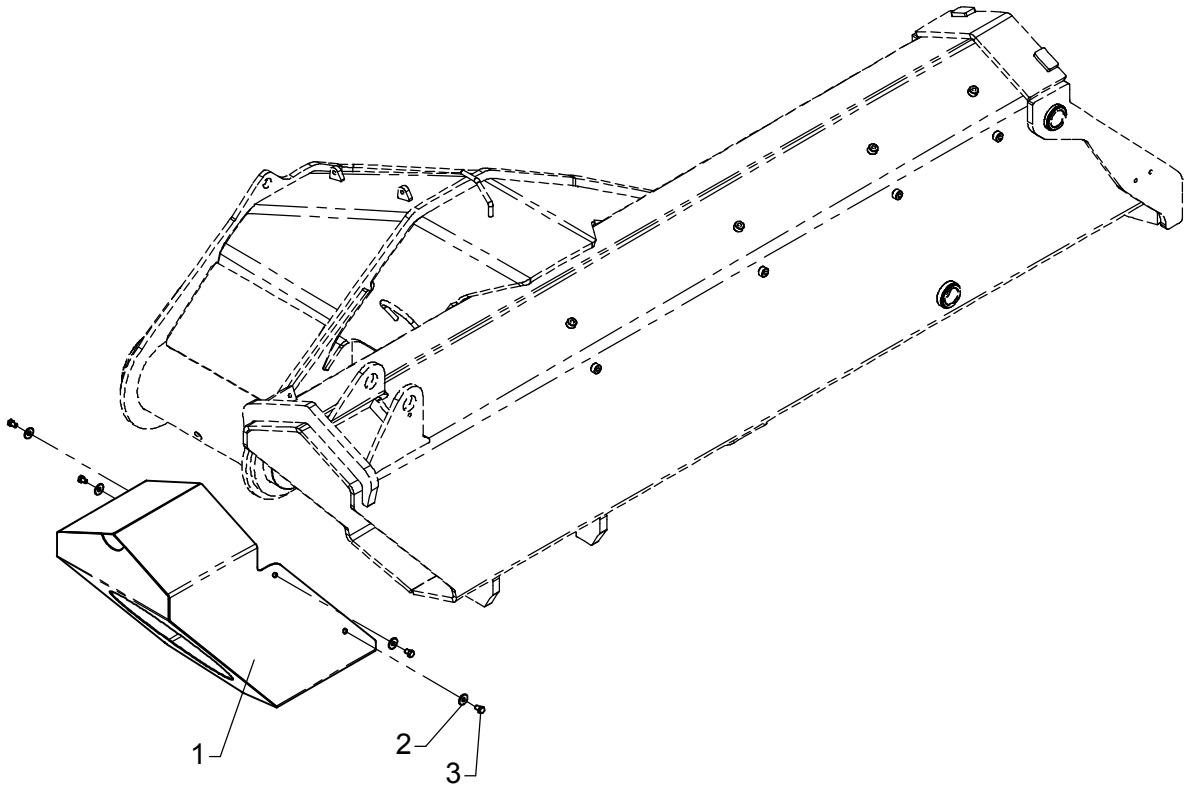

Shield at the end of the jib

As from / To loader no.: 97 00 00 / 97 00 xx
Created: 17.11.2003
Modified:

Item no.	Qty.	Part no.	Description	Remarks
1	1	6302507	Protection plate, jib	
2	4	31136	Washer, stainless	24 x 8,4 x 2
3	4	30130	Set screw, stainless	M8 x 12

72-516

Intern ref.: 6302510

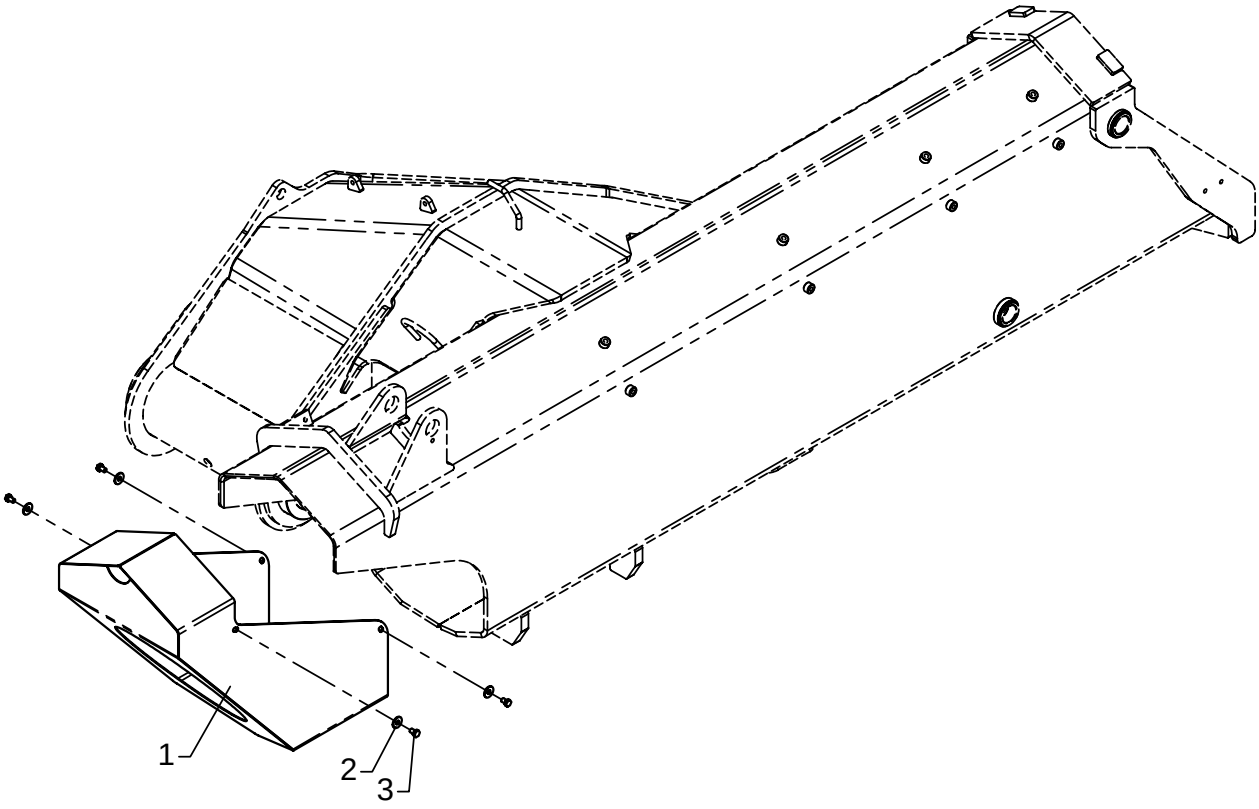

Shield at the end of the jib

As from / To loader no.: 97 00 xx /
Created: 17.11.2003
Modified:

Item no.	Qty.	Part no.	Description	Remarks
1	1	6303107	Protection plate, jib	
2	4	31136	Washer, stainless	24 x 8,4 x 2
3	4	30130	Set screw, stainless	M8 x 12

72-516

Intern ref.: 6301380

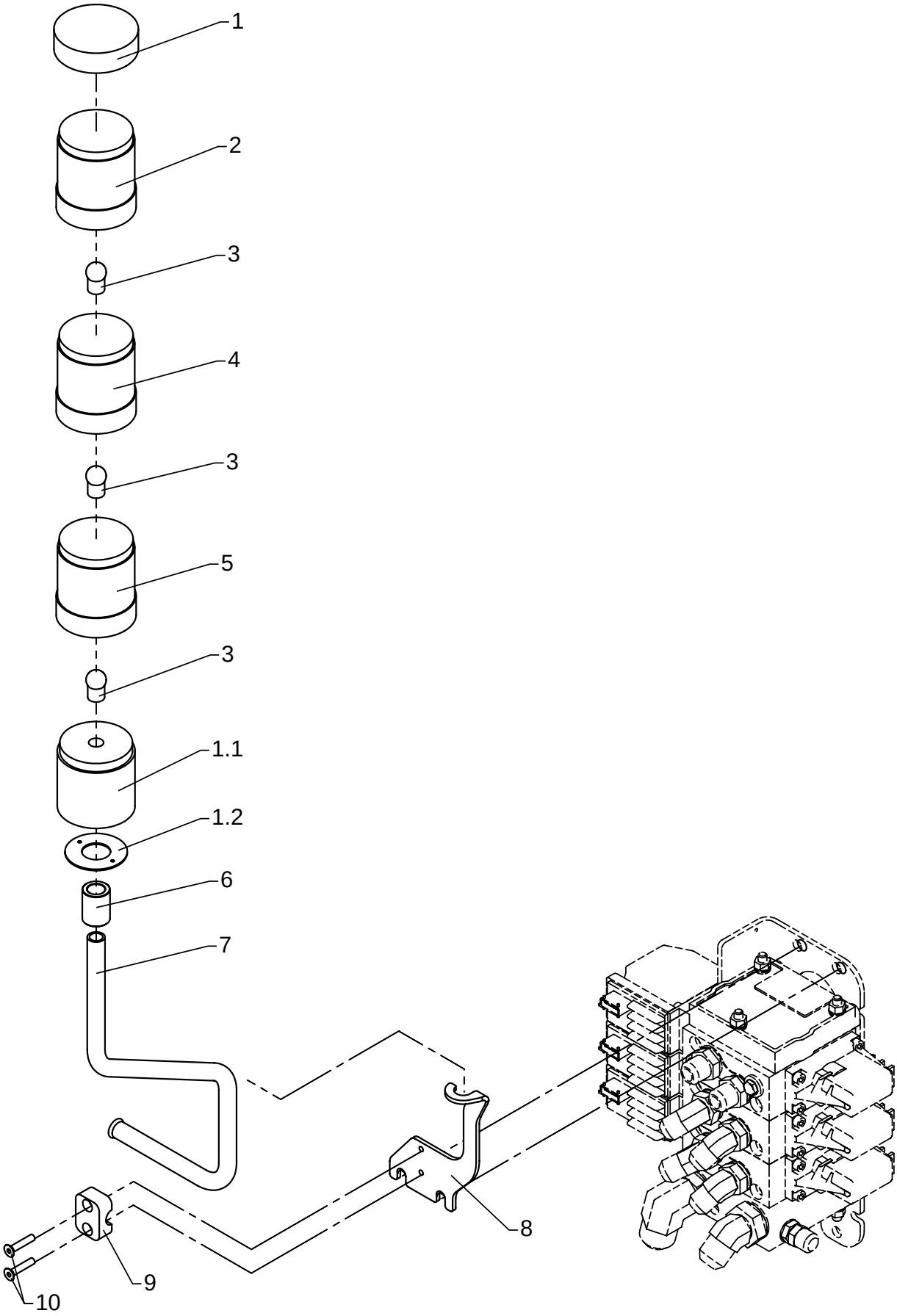

Light tower

As from / To loader no.: 96 00 00 /
Created: 26.11.2003
Modified:

Item no.	Qty.	Part no.	Description	Remarks
1	1	27773	Bottom + cover	
2	1	27771	Diode, red	
3	3	27835	Bulb 24V, 5W	
4	1	27772	Diode, yellow	
5	1	27770	Diode, green	
6	1	63545	Adapter for light tower	
7	1	6301015	Pipe	
8	1	6301009	Bracket for light tower	
9	1	31841	Clamp	
10	2	30585	Countersunk screw	MK6 x 30

72-516

Intern ref.: 6301080

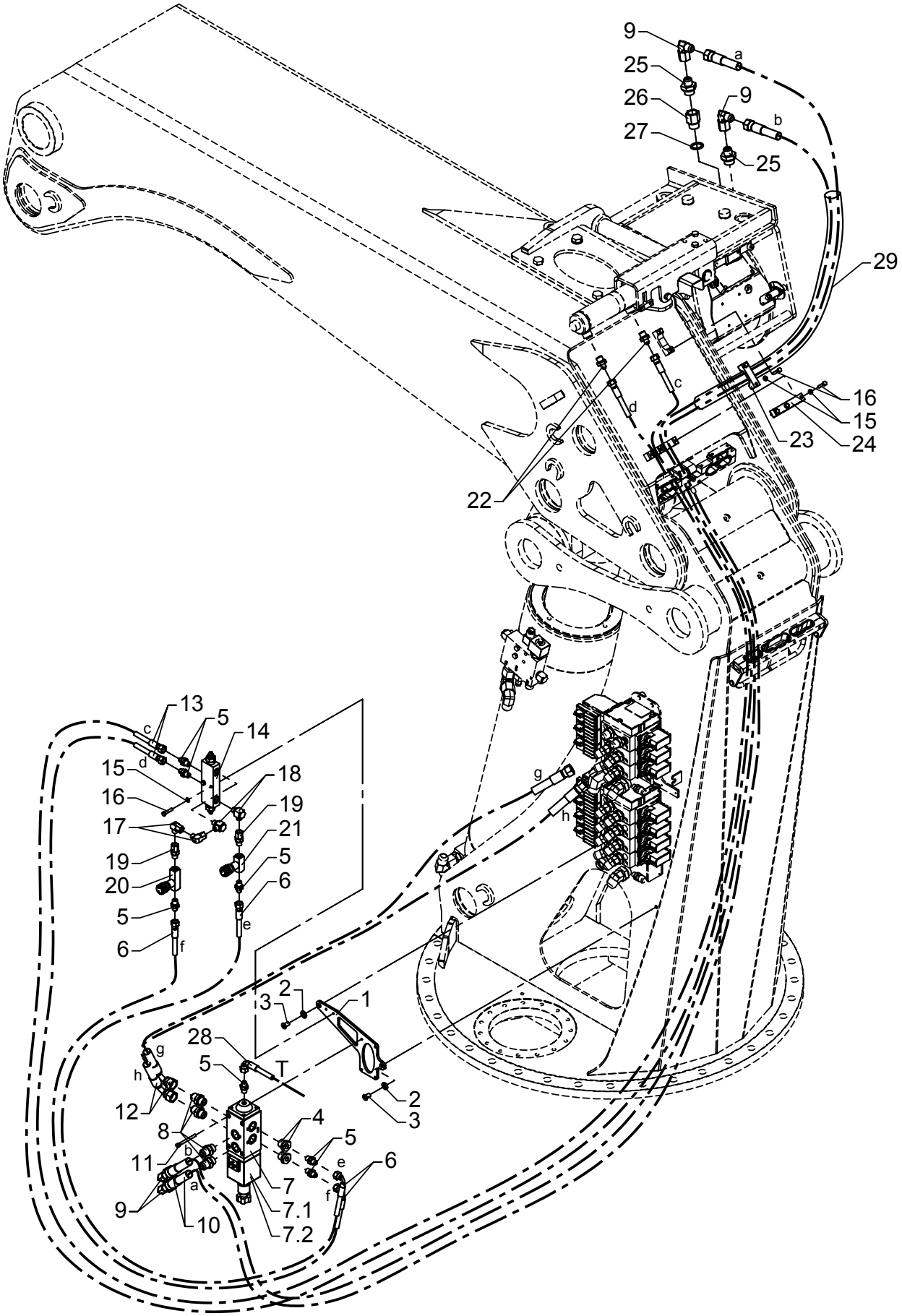

Hydraulic system, winch with FJ

As from / To loader no.: 97 00 00 /
Created: 04.05.2004
Modified:

Item no.	Qty.	Part no.	Description	Remarks
1	1	6300606	Bracket	
2	2	31177	Washer	10 mm
3	2	32423	Sockethead screw	MC10 x 16
4	2	25180	Connection	RED-R 1/2-WD/R 1/4
5	7	25829	Straight connection	F40XS 8-1/4 JIC
6	2	62887	Hose	1/4" x 550 mm V/O JIC
7	1	59064	Change-over valve	
		59067	Solenoid 24 V	
		59066	Solenoid 12 V	
8	4	25833	Straight connection	F40XS 14/16-1/2 JIC
9	4	25741	Elbow connection	C6XS 14/16 JIC
10	2	62868	Hose	1/2 X 3900 L/L JIC
11	4	30966	Screw	MC6 x 65
12	2	56105	Hose	1/2 X 750 V/O JIC
13	2	62874	Hose	1/4 X 3700 V/O JIC
14	1	59059	Load-holding valve	
15	7	32302	Face washer, stainless	6 mm
16	7	30115	Steel bolt, stainless	M6 x 30
17	2	26170	Elbow connection	EWSD 8 L
18	2	25113	Banjo connection	RSWV 8 LR
19	2	26104	Connection	EGESD 8 LR-WD
20	1	60286	One way restrictor valve	
21	1	60354	Restrictor valve	
22	2	25830	Straight connection	F40XS8 - 3/8 JIC
23	1	6300945	Clamp	
24	1	6300943	Clamp	
25	2	25866	Connection	F40XS 14-3/4 JIC
26	1	25949	Reducing nipple	3/4 BSP x 3/8 BSP
27	1	21108	Seal washer	ø27,05 x 34,93 x 2,34
28	1	62974	Hose	1/4 x 350 90/L JIC
29	1	62587	Protective cover	95 x 800 mm

72-516

Intern ref.: 6301050

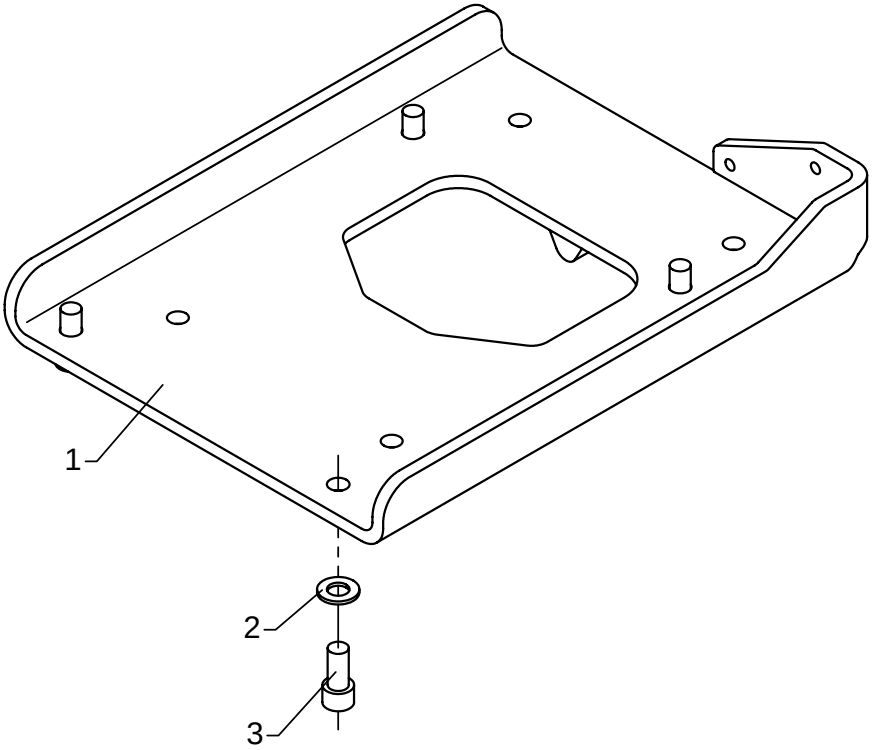

Stowing bracket

As from / To loader no.: 97 00 00 / 97 00 42
Created: 17.11.2003
Modified: 08.04.2005

Item no.	Qty.	Part no.	Description	Remarks
1	1	6300891	Winch bracket	
2	4	31178	Washer	14 mm
3	4	30480	Screw	MC14 x 30

72-516

Intern ref.: 6301050

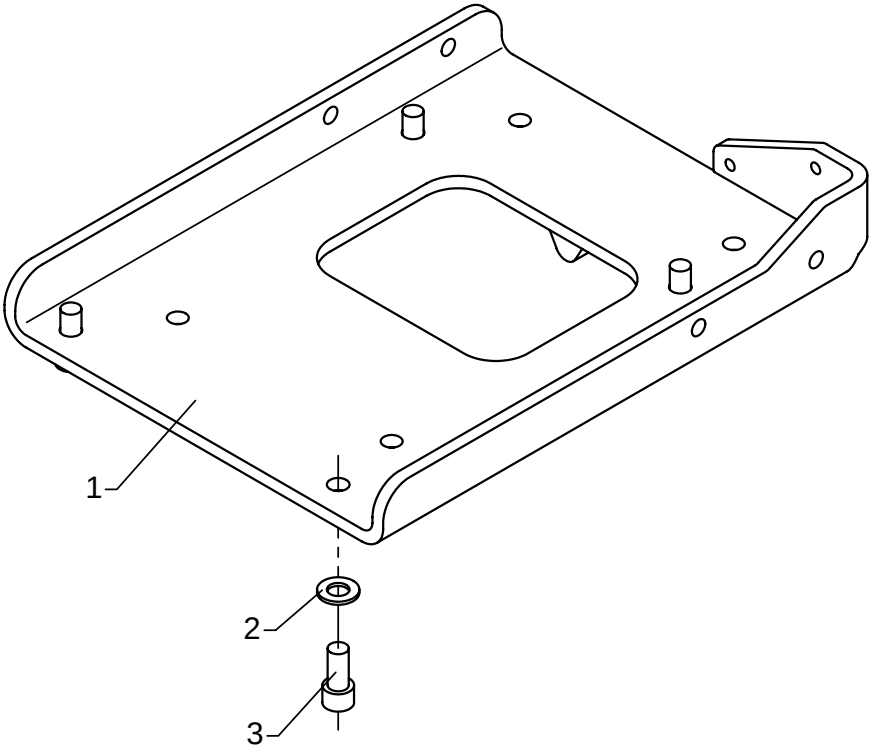

Stowing bracket

As from / To loader no.: 97 00 43 /
Created: 08.04.2005
Modified:

Item no.	Qty.	Part no.	Description	Remarks
1	1	6301205	Winch bracket	
2	4	31178	Washer	14 mm
3	4	30480	Screw	MC14 x 30

72-516

Intern ref.: 6301540

*

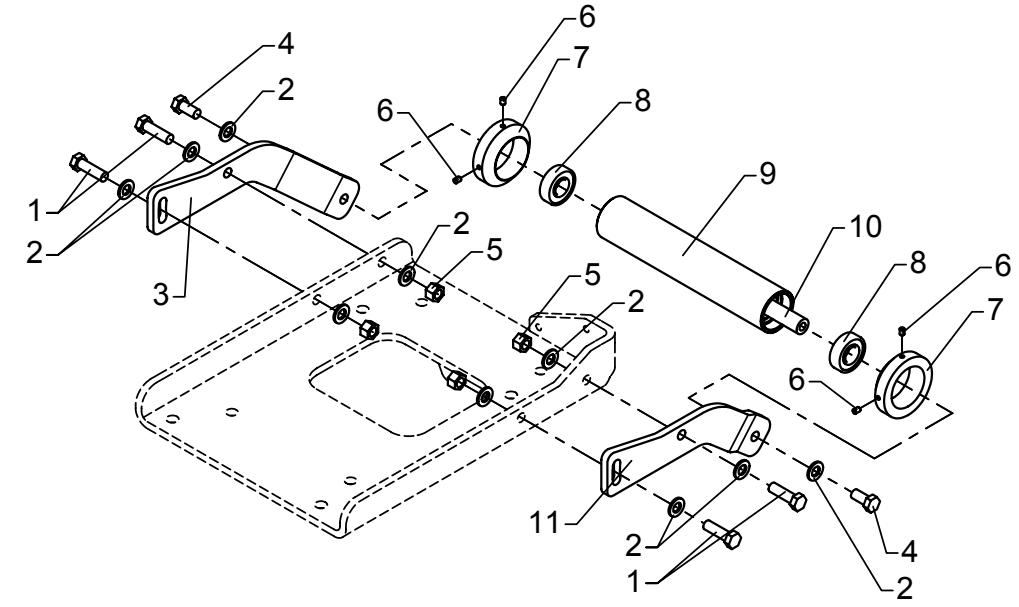

**

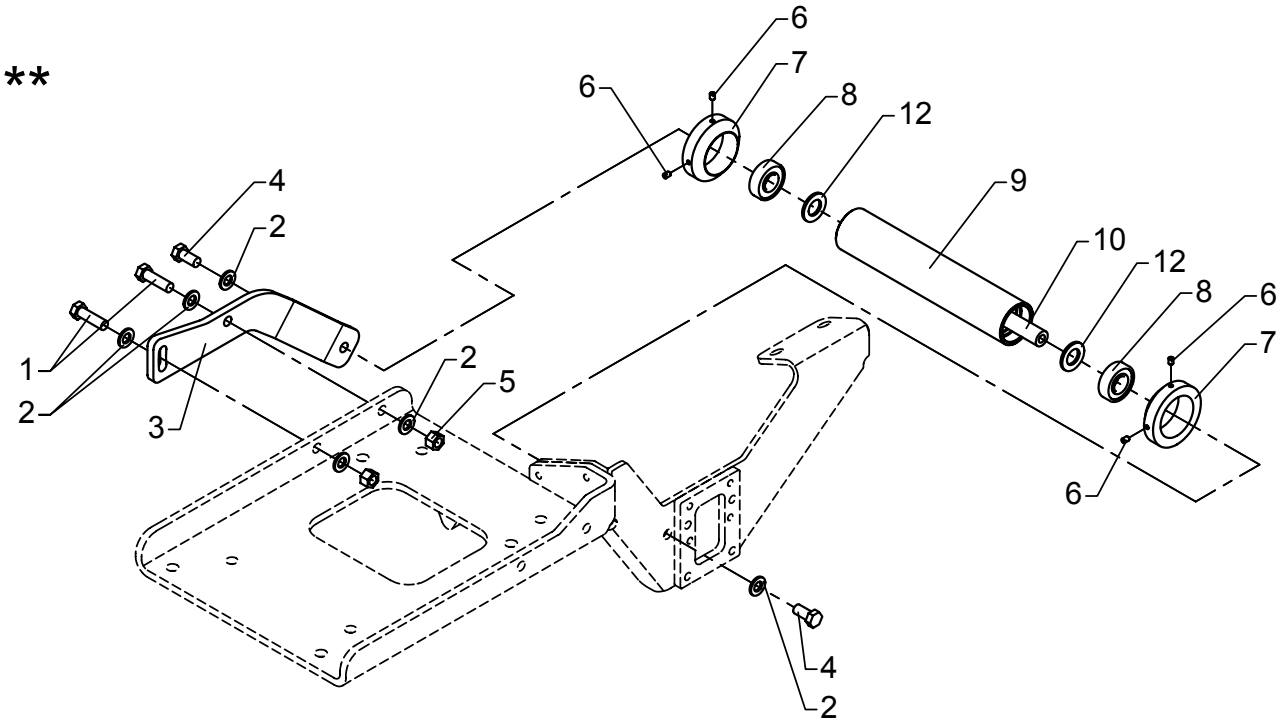

Guide Roller

As from / To loader no.: 97 00 00 /
Created: 10.08.2004
Modified: 01.10.2004

Item no.	Qty.	Part no.	Description	Remarks
1		31533	Set screw, stainless	M12 x 40
2		31131	Washer	12 mm
3	1	6300566	Side plate for guide roller, R	
4	2	31504	Set screw, stainless	M12 x 25
5		32216	Lock nut, stainless	M12
6	4	31577	Pointed screw, stainless	MSP6 x 8
7	2	6886764	Guide roller	
8	2	23178	Ball bearing	
9	1	6300571	Roller	
10	1	6300649	Pin	
11		6300567	Side plate for guide roller, L	
12		31179	Washer	20 mm

* Without hose reels
** With hose reels

72-516

Intern ref.: 6301070

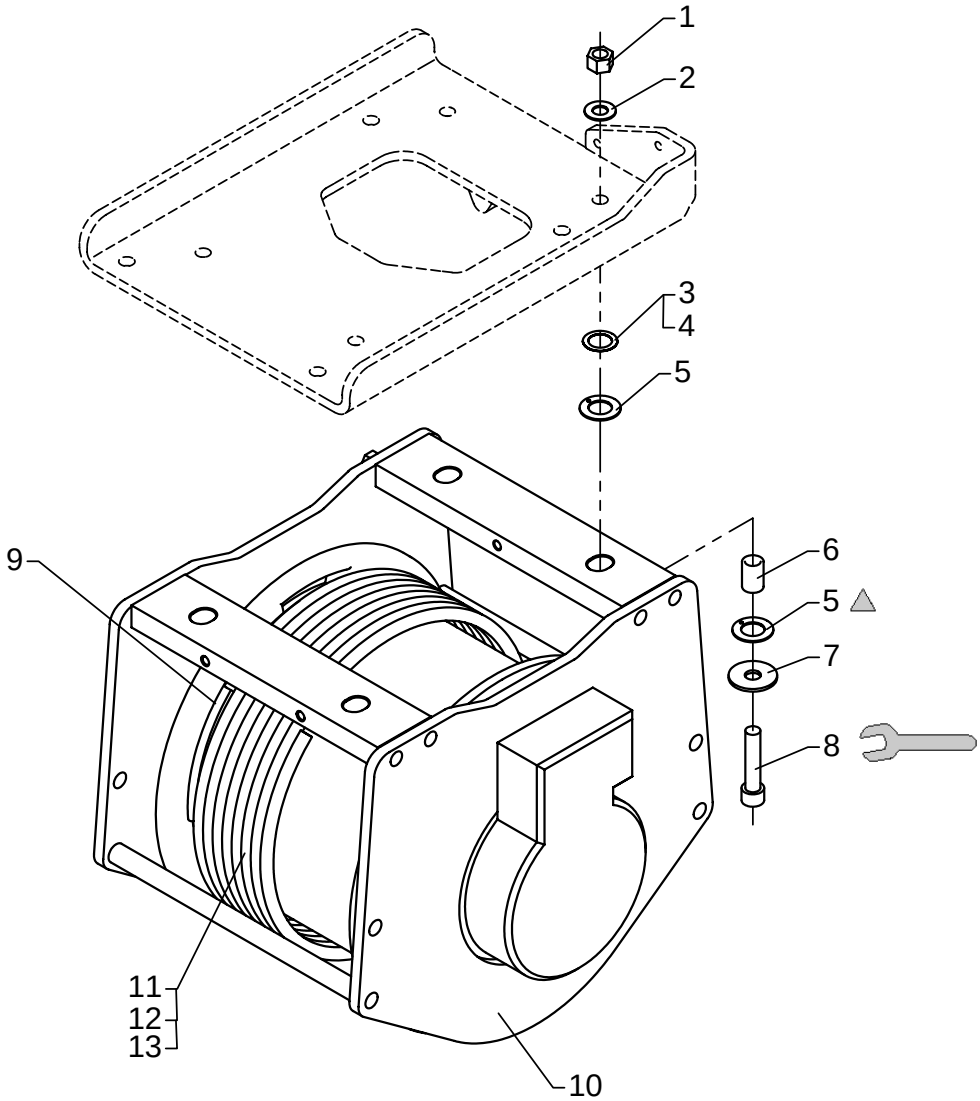

80 Nm

PBC 492

Winch, Brevini 2500

As from / To loader no.: 97 00 00 /
Created: 17.11.2003
Modified:

Item no.	Qty.	Part no.	Description	Remarks
1	4	30891	Lock nut	M14
2	4	31195	Washer	14 mm
3	4	31770	Washer	PS 22 x 32 x 0,5
4	4	31769	Washer	PS 22 x 32 x 0,3
5	8	23900	Washer	WC 20 DU
6	4	6300894	Bushing	
7	4	31763	Washer	45 x 15 x 3
8	4	31903	Cylinder screw	MC14 x 65
9	1	6300524	Guide	
10	1	58245	Winch, left	
11		63203	Wire rope	K2-K8 without FJ
12		63202	Wire rope	K2-K7 with FJ
13		63205	Wire rope	K8 with FJ

72-516

Intern ref.: 6301020

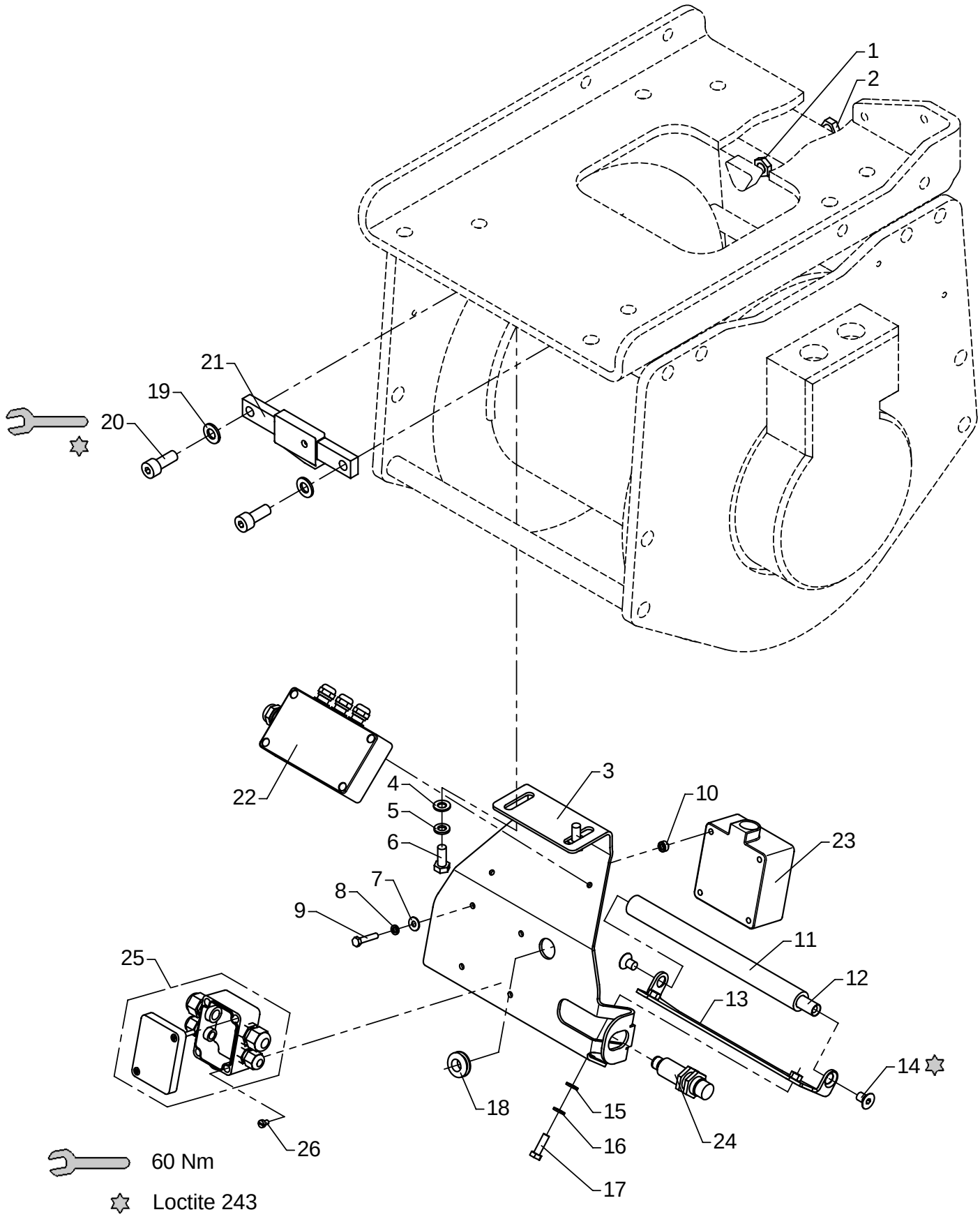

Safety system

As from / To loader no.: 97 00 00 / 97 00 42
Created: 17.11.2003
Modified: 08.04.2005

Item no.	Qty.	Part no.	Description	Remarks
1	1	32111	Counter nut	M10
2	1	30164	Steel bolt	M10 x 90
3	1	6300777	Protection plate	
4	2	31147	Washer, stainless	8 mm
5	2	31155	Spring washer	8 mm
6	2	30132	Set screw, stainless	M8 x 20
7	4	31189	Washer	5 mm
8	4	31153	Spring washer, stainless	5 mm
9	4	30102	Steel bolt, stainless	M5 x 25
10	4	42921	Bushing	
11	1	63519	Guard roller	
12	1	6300774	Pin for guide roller	
13	1	6300772	Bracket	
14	2	30597	Counter-sunk screw	MK8 x 12
15	2	32302	Face washer, stainless	6 mm
16	2	31154	Spring washer, stainless	6 mm
17	2	30113	Set screw, stainless	M6 x 20
18	1	27956	Cable lead-in	
19	2	31177	Washer	10 mm
20	2	30453	Screw	MC10 x 25
21	1	58251	Load cell	
22	1	28381	Weighing cell amplifier	
23	1	28320	Proximity switch	
24	1	28210	Proximity switch	
25	1	28371	Connecting box	
26	2	30734	Screw	M4 x 10

72-516

Intern ref.: 6301020

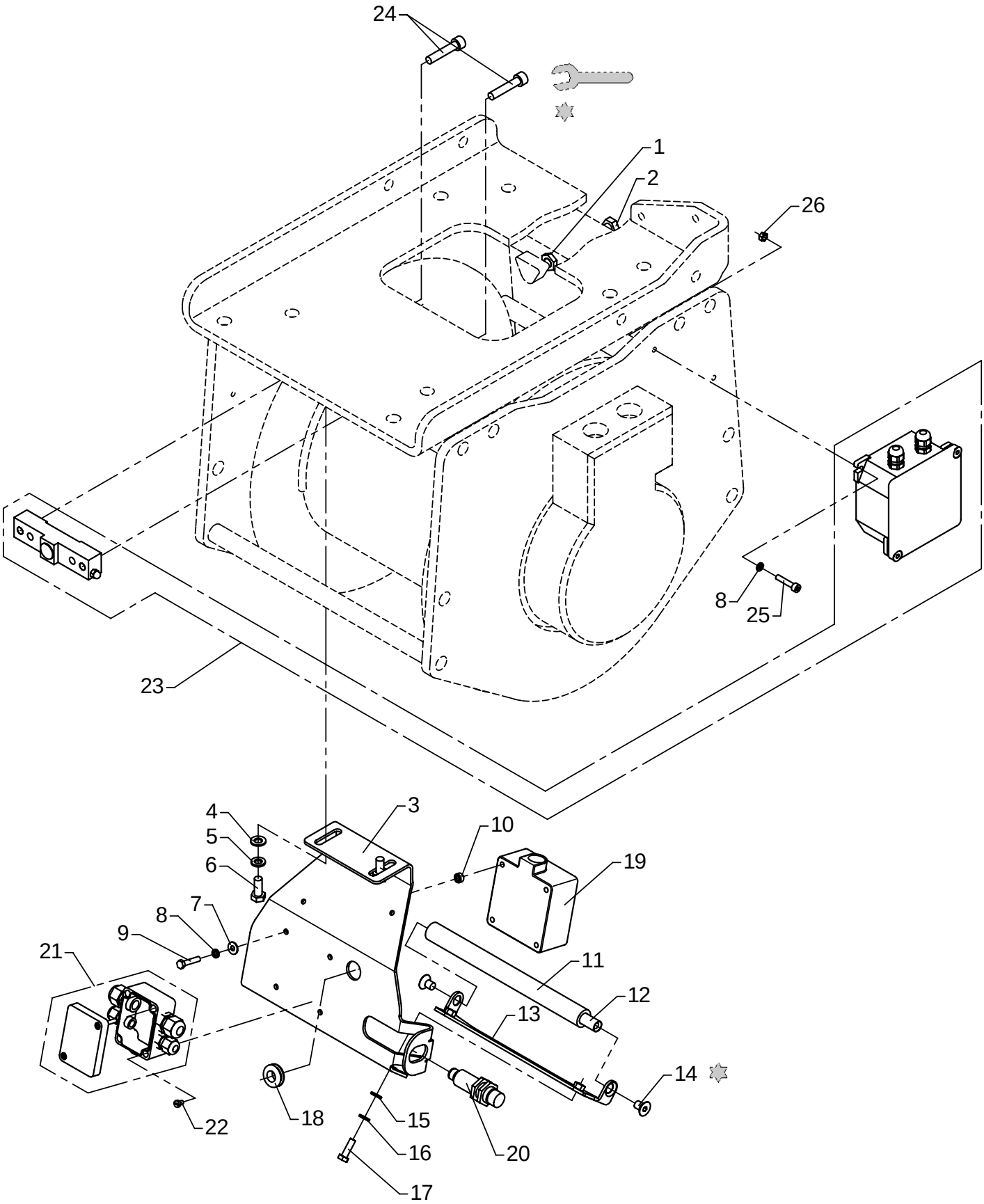

60 Nm

Loctite 243

Safety system

As from / To loader no.: 97 00 43 /
Created: 08.04.2005
Modified:

Item no.	Qty.	Part no.	Description	Remarks
1	1	32111	Counter nut	M10
2	1	30164	Steel bolt	M10 x 90
3	1	6300777	Protection plate	
4	2	31147	Washer, stainless	8 mm
5	2	31155	Spring washer	8 mm
6	2	30132	Set screw, stainless	M8 x 20
7	4	31189	Washer	5 mm
8	6	31153	Spring washer, stainless	5 mm
9	4	30102	Steel bolt, stainless	M5 x 25
10	4	42921	Bushing	
11	1	63519	Guard roller	
12	1	6300774	Pin for guide roller	
13	1	6300772	Bracket	
14	2	30597	Counter-sunk screw	MK8 x 12
15	2	32302	Face washer, stainless	6 mm
16	2	31154	Spring washer, stainless	6 mm
17	2	30113	Set screw, stainless	M6 x 20
18	1	27956	Cable lead-in	
19	1	28320	Proximity switch	
20	1	28210	Proximity switch	
21	1	28371	Connecting box	
22	2	30734	Screw	M4 x 10
23	1	58265	Load cell, 5000 kg capacity	
24	2	30445	Sockethead screw	MC8 x 40
25	2	30481	Screw	MC5 x 25
26	2	30853	Nut, stainless	M5

72-516

Intern ref.: 6886500

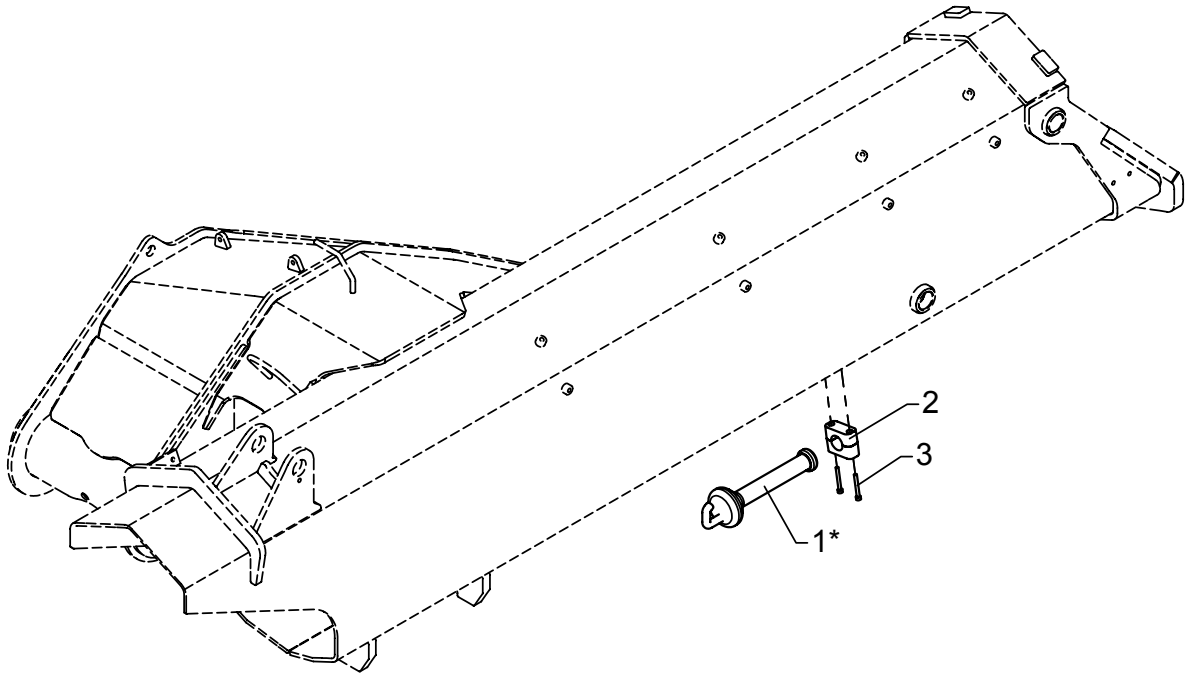

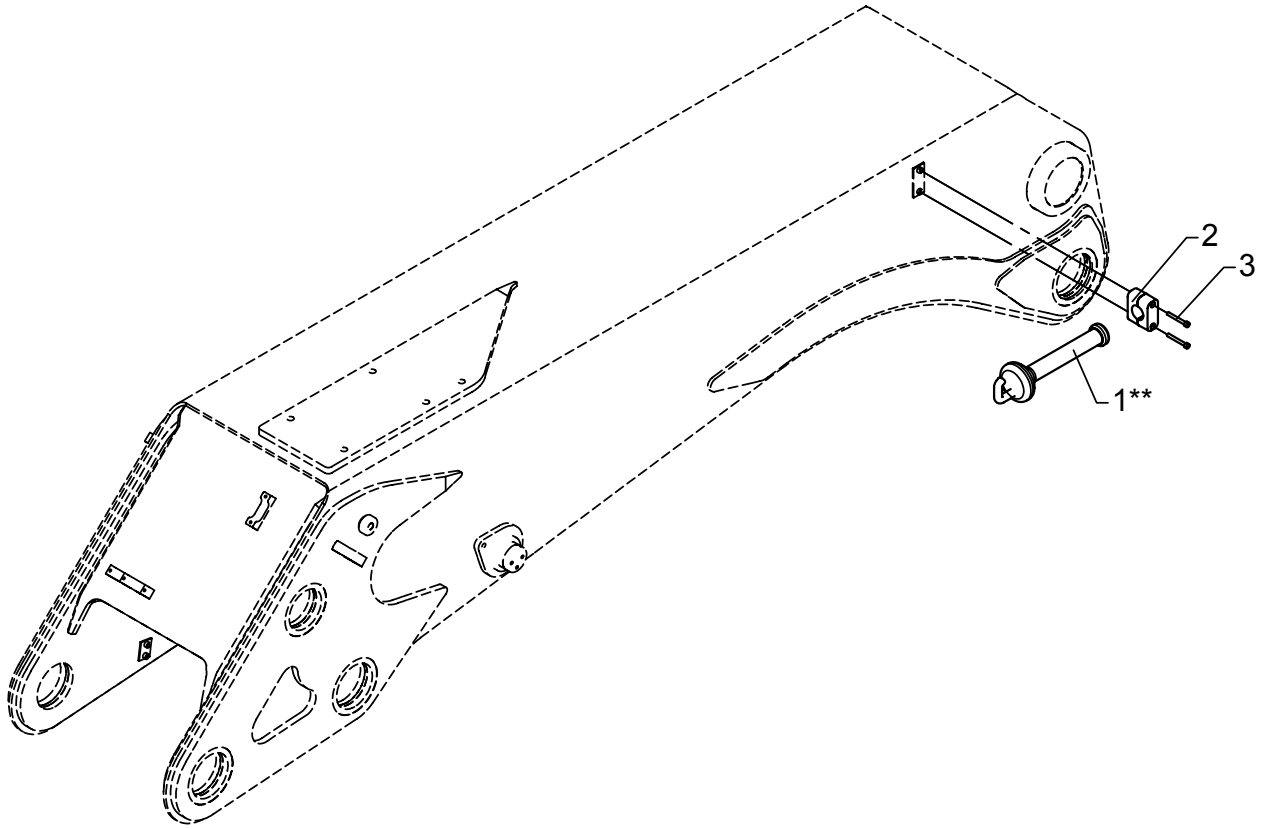

Cable stop

As from / To loader no.: 97 00 00 /
Created: 03.05.2004
Modified: 09.08.2004

Item no.	Qty.	Part no.	Description	Remarks
1	1	64404	Wire bracket with hook, cpl.	
2	1	31800	Clamp	32 mm
3	2	30457	Screw	MC6 x 50

* Without FJ
** With FJ

72-516

Intern ref.: 6300830

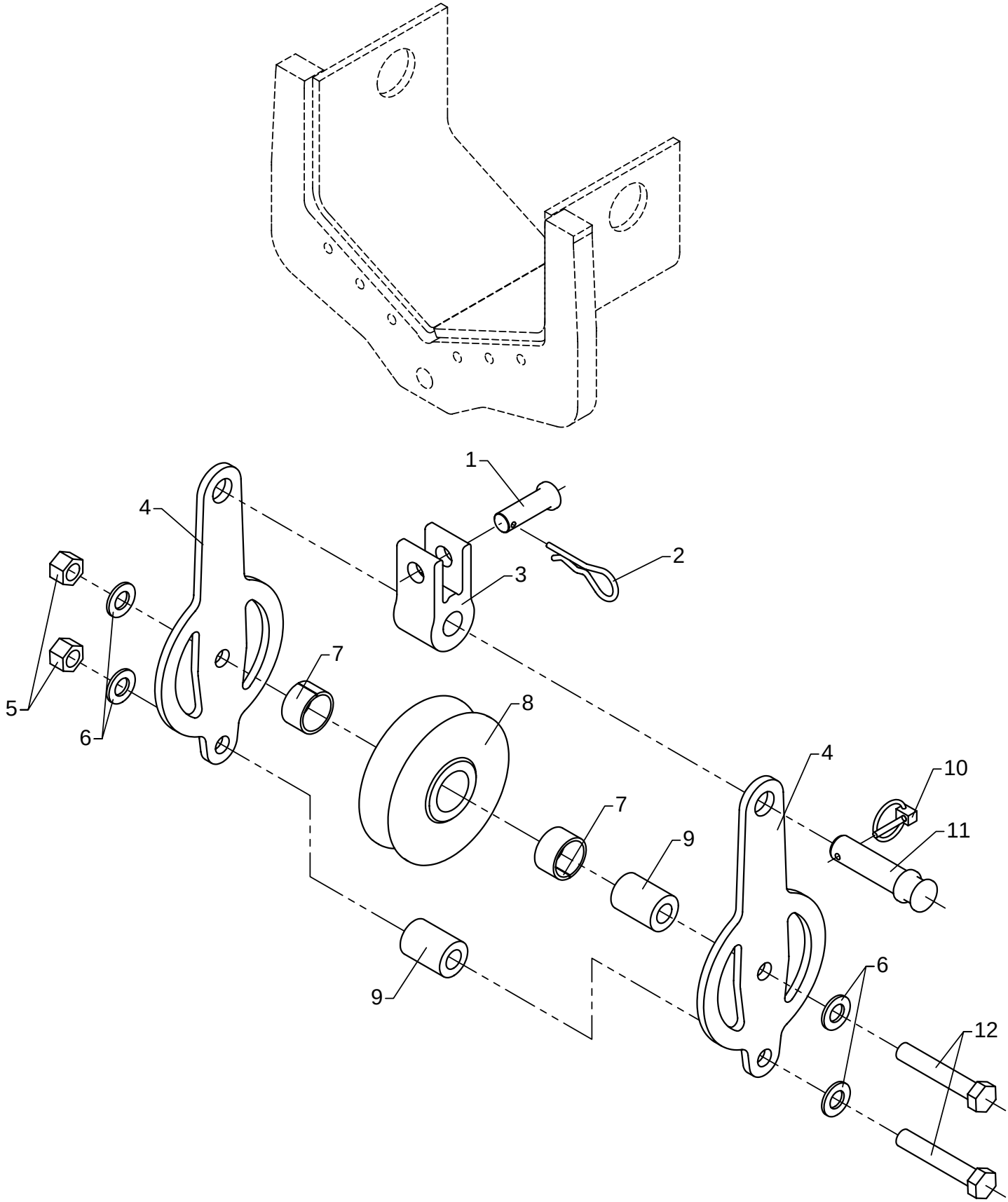

Wire roller guide, on extension K3 for K5, K6 versions

As from / To loader no.: 97 00 00 /
Created: 17.11.2003
Modified:

Item no.	Qty.	Part no.	Description	Remarks
1	1	6300858	Pin	
2	1	33399	Lock spring	
3	1	6300828	Suspension for roller guide	
4	2	6300829	Side plate for roller guide	
5	2	30891	Lock nut	M14
6	4	31178	Washer	14 mm
7	2	23302	Bushing	MB 3020 DU
8	1	63513	Wire roller guide	
9	2	6885504	Distance pipe	
10	1	33385	Ring split	ø4,5 x 27
11	1	6300859	Pin	
12	2	30214	Steel bolt	M14 x 80

72-516

Intern ref.: 6300840

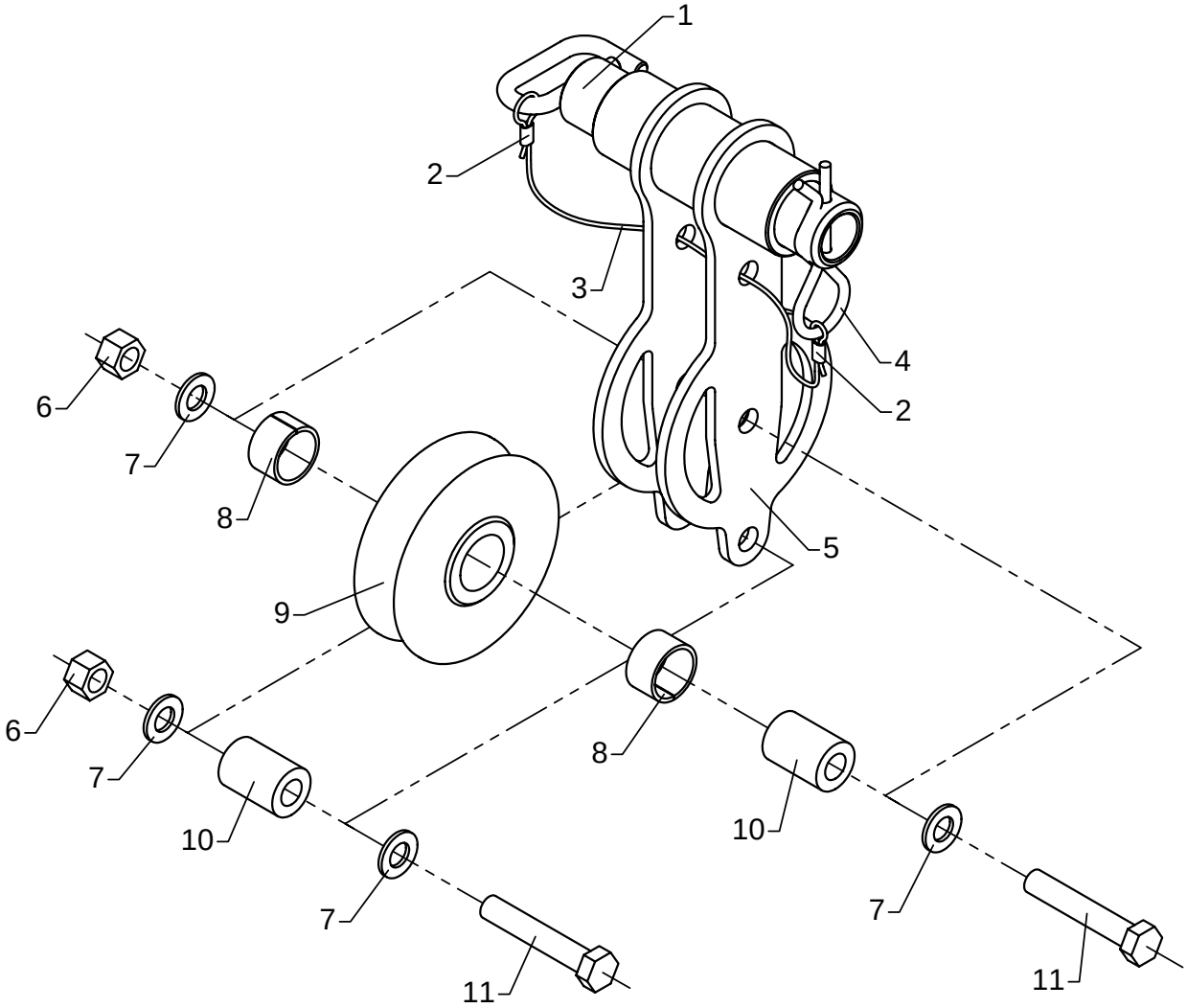

Wire roller guide, on extension K4 for K7, K8 versions

As from / To loader no.: 97 00 00 /
Created: 17.11.2003
Modified:

Item no.	Qty.	Part no.	Description	Remarks
1	1	6300555	Lock pin	
2	2	62161	Wire lock	
3	1	62160	Wire rope, nylon	0,3 m
4	1	33383	Lock spring	
5	1	6300848	Suspension for roller guide	
6	2	30891	Lock nut	M14
7	4	31178	Washer	14 mm
8	2	23302	Bushing	MB 3020 DU
9	1	63513	Wire roller guide	
10	2	6885504	Distance pipe	
11	2	30214	Steel bolt	M14 x 80

72-516

Intern ref.: 6301008

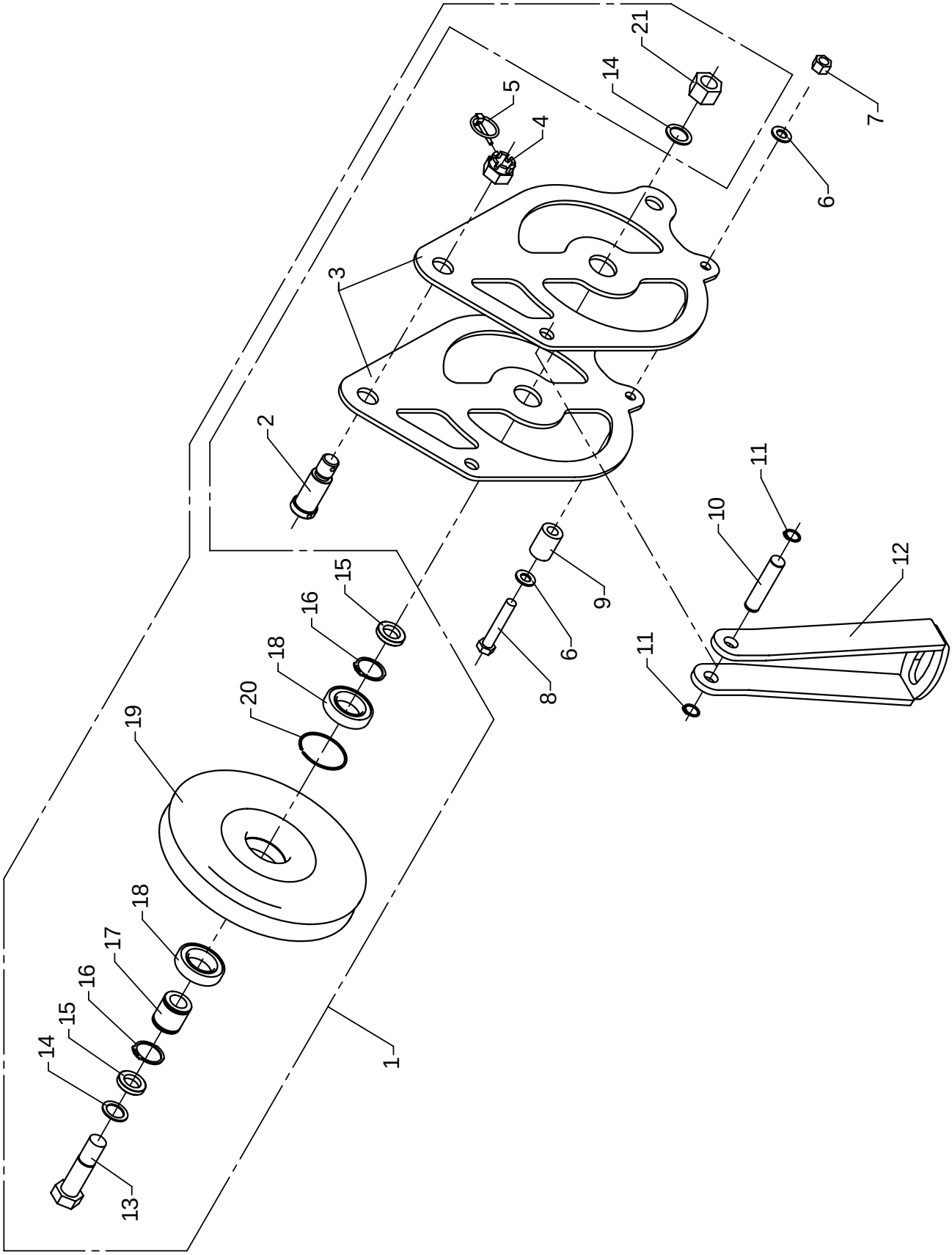

Wire sheave

As from / To loader no.: 97 00 00 / 97 00 41
Created: 17.11.2003
Modified: 08.11.2004

Item no.	Qty.	Part no.	Description	Remarks
1	1	6873490	Wire sheave incl. bearing	
2	1	6256324	Pin	
3	2	6300559	Side plate	
4	1	30837	Nut	M24
5	1	31967	Ring split	ø4,5 x 40
6	2	31178	Washer	14 mm
7	1	30891	Lock nut	M14
8	1	30214	Steel bolt	M14 x 80
9	1	6885504	Distance pipe	
10	1	6300543	Pin	
11	2	33108	Circlip	20U
12	1	6300548	Stop	
13		32476	Steel bolt	M24 x 95
14		33254	Back ring	SS 26 x 37 x 2
15		6887334	Distance ring	
16		33121	Circlip	40U
17		6887304	Hub	
18		23150	Ball bearing	6008-2RS1
19		64136	Wire sheave	6873433
20		23904	Spring ring	BR 68
21		30897	Lock nut	M24

72-516

Intern ref.: 6301037

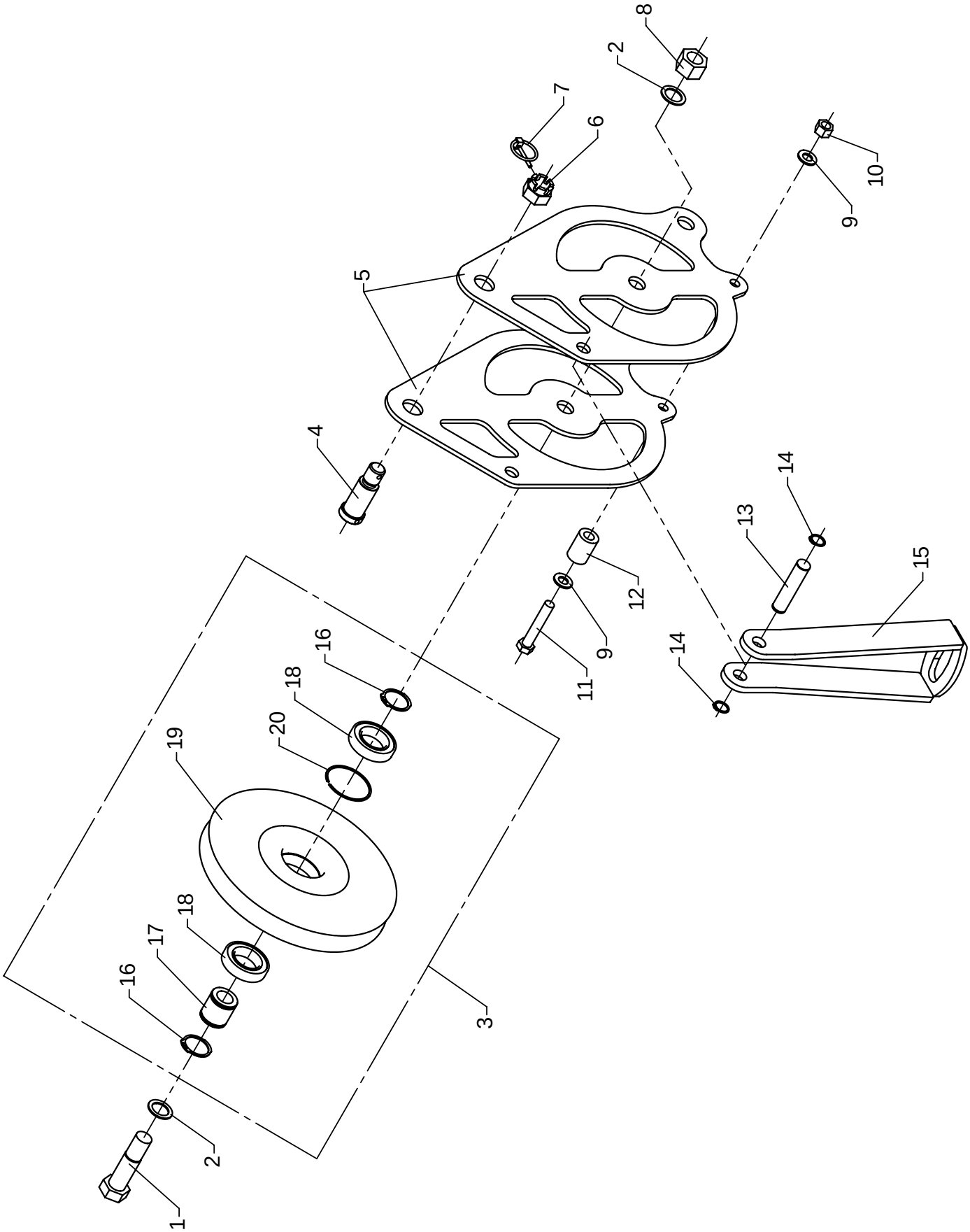

Wire sheave

As from / To loader no.: 97 00 42 /
Created: 20.10.2004
Modified: 08.11.2004

Item no.	Qty.	Part no.	Description	Remarks
1	1	32476	Steel bolt	M24 x 95
2	2	33254	Back ring	SS 26 x 37 x 2
3	1	6887290	Wire sheave incl. bearing	
4	1	6256324	Pin	
5	2	6301038	Side plate	
6	1	30837	Nut	M24
7	1	31967	Ring split	ø4,5 x 40
8	1	30897	Lock nut	M24
9	2	31178	Washer	14 mm
10	1	30891	Lock nut	M14
11	1	30214	Steel bolt	M14 x 80
12	1	6885504	Distance pipe	
13	1	6300543	Pin	
14	2	33108	Circlip	20U
15	1	6300548	Stop	
16		33121	Circlip	40U
17		6887304	Hub	
18		23150	Ball bearing	6008-2RS1
19		64136	Wire sheave	6873433
20		23904	Spring ring	BR 68

72-516

Intern ref.:

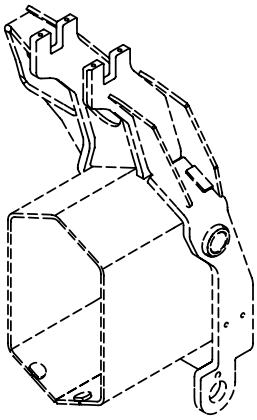

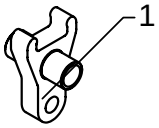

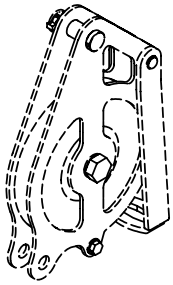

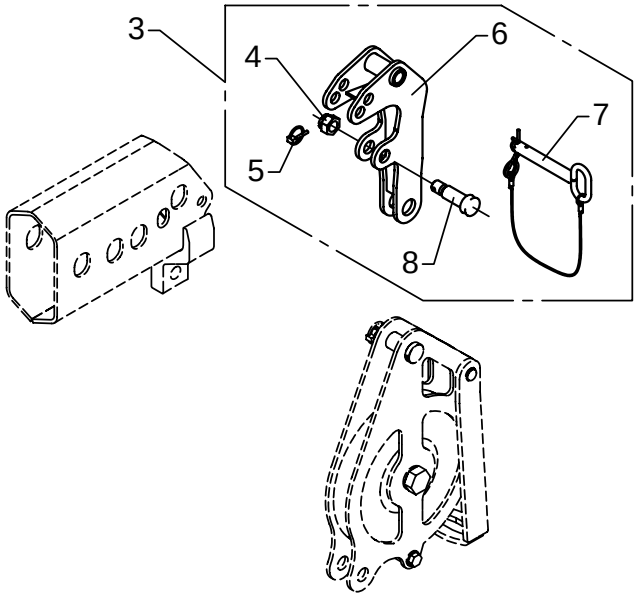

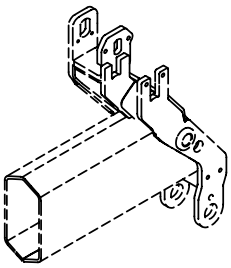

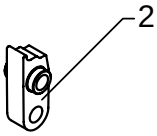

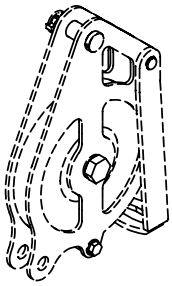

Wire pulley

As from / To loader no.: 97 00 00 /
Created: 17.11.2003
Modified:

Item no.	Qty.	Part no.	Description	Remarks
1	1	6302615	Wire pulley	
2	1	6304414	Wire pulley	FJ1200/FJ1800
3	1	6301280	Wire pulley	Manual extension
4		30878	Nut	M20
5		33385	Ring split	ø4,5 x 27
6		6301061	Wire pulley	
7		6301166	Lock pin with split pin	
8		6301014	Pin	

72-516

Intern ref.: 6873580

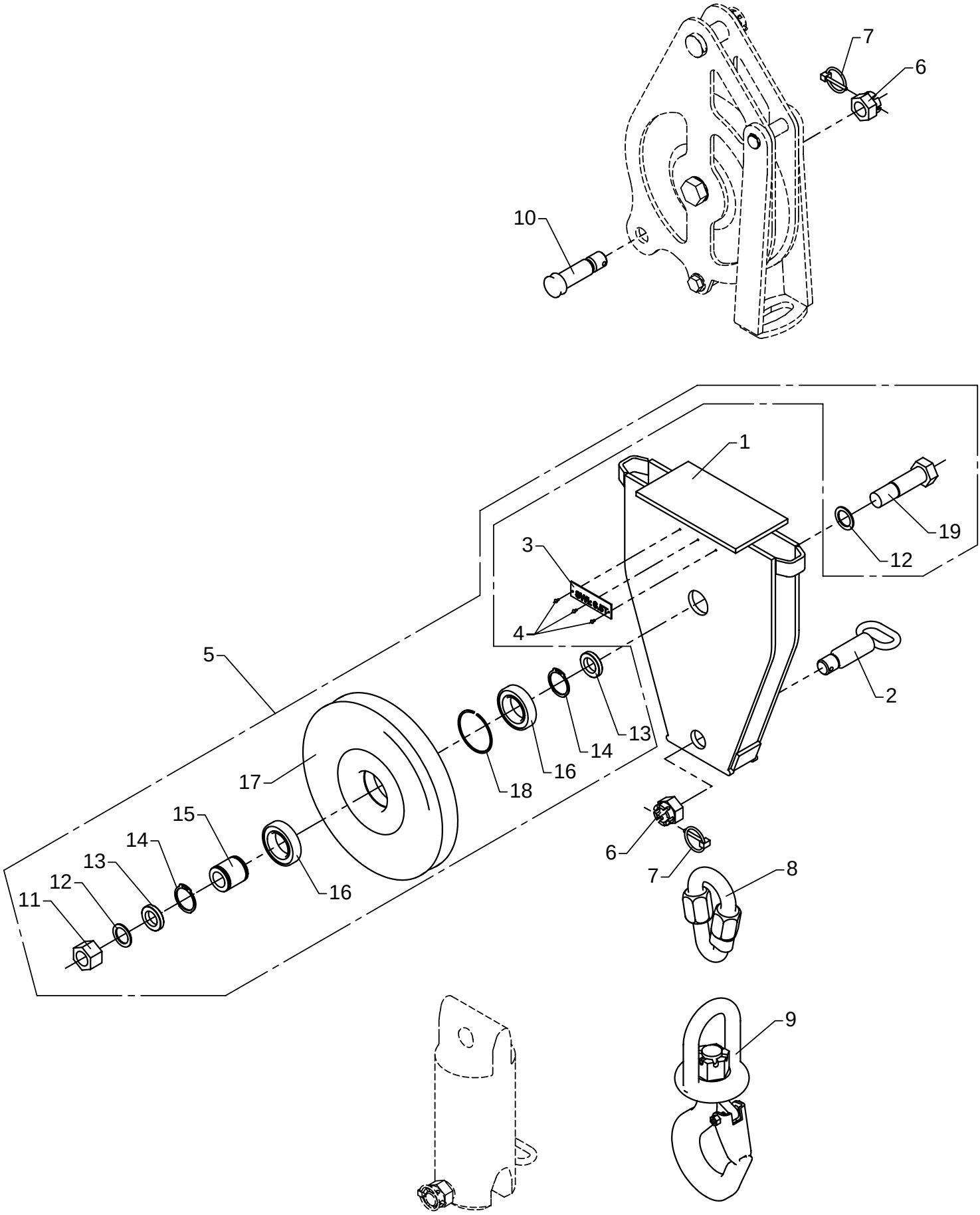

Snatch block

As from / To loader no.: 97 00 00 / 97 00 41
Created: 17.11.2003
Modified: 03.11.2004

Item no.	Qty.	Part no.	Description	Remarks
1	1	6873563	Snatch block	
2	1	6301004	Lock pin	
3	1	65699	Brass label	
4	3	31340	Rivet	
5	1	6873490	Wire sheave incl. bearing	
6	2	30837	Nut	M24
7	2	31967	Ring split	ø4,5 x 40
8	1	62111	Handy link	
9	1	62102	Hook	
10	1	6300558	Pin	
11		30897	Lock nut	M24
12		33254	Back ring	SS 26 x 37 x 2
13		6887334	Distance ring	
14		33121	Circlip	40U
15		6887304	Hub	
16		23150	Ball bearing	6008-2RS1
17		64136	Wire sheave	6873433
18		23904	Spring ring	BR 68
19		32476	Steel bolt	M24 x 95

72-516

Intern ref.: 6887280

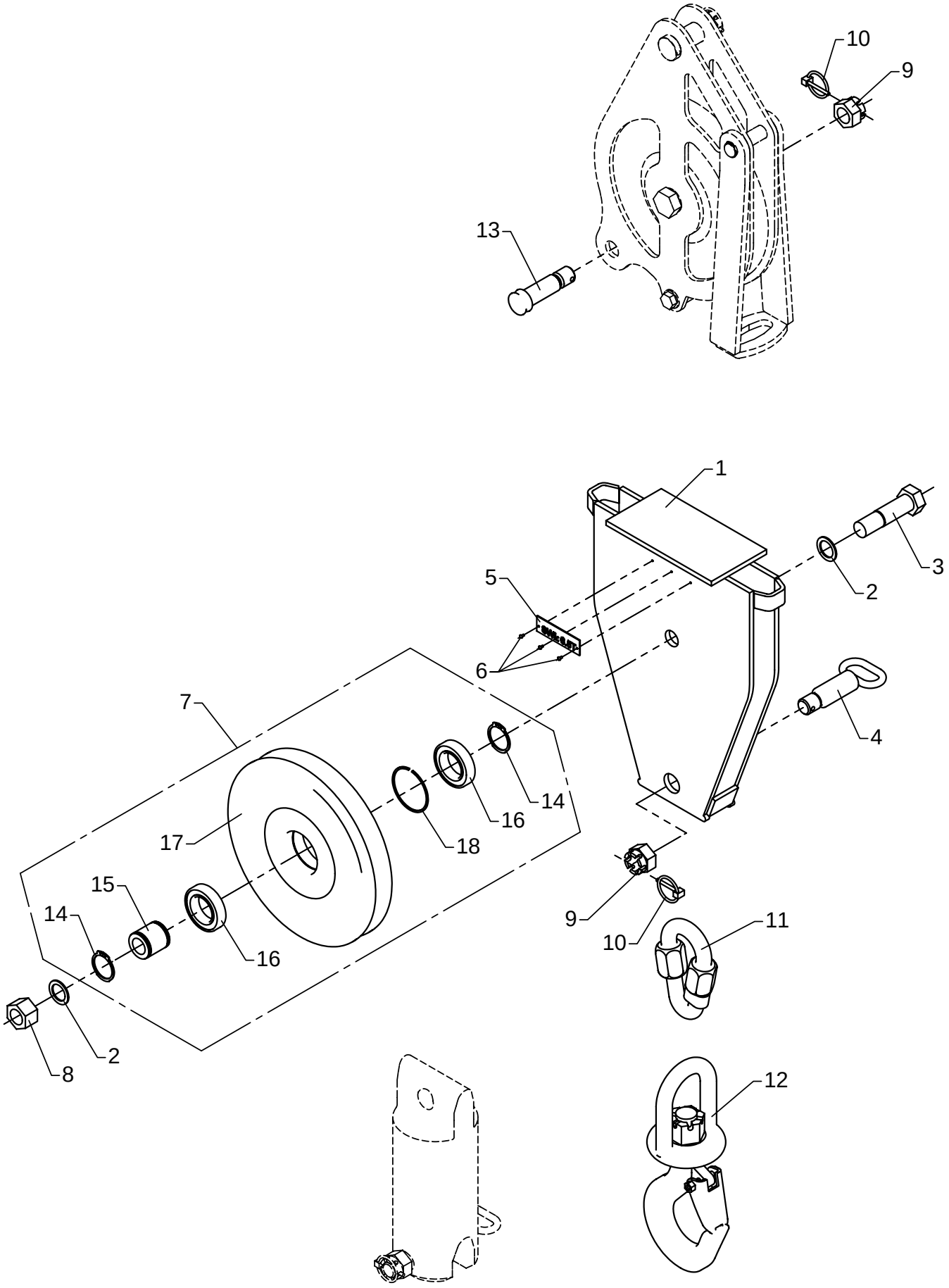

Snatch block

As from / To loader no.: 97 00 42 /
Created: 20.10.2004
Modified: 03.11.2004

Item no.	Qty.	Part no.	Description	Remarks
1	1	6887313	Snatch block	
2	2	33254	Back ring	SS 26 x 37 x 2
3	1	32476	Steel bolt	M24 x 95
4	1	6301004	Lock pin	
5	1	65699	Brass label	
6	3	31340	Rivet	
7	1	6887290	Wire sheave incl. bearing	
8	1	30897	Lock nut	M24
9	2	30837	Nut	M24
10	2	31967	Ring split	ø4,5 x 40
11	1	62111	Handy link	
12	1	62102	Hook	
13	1	6300558	Pin	
14		33121	Circlip	40U
15		6887304	Hub	
16		23150	Ball bearing	6008-2RS1
17		64136	Wire sheave	6873433
18		23904	Spring ring	BR 68

72-516

Intern ref.: 6256440+6301060

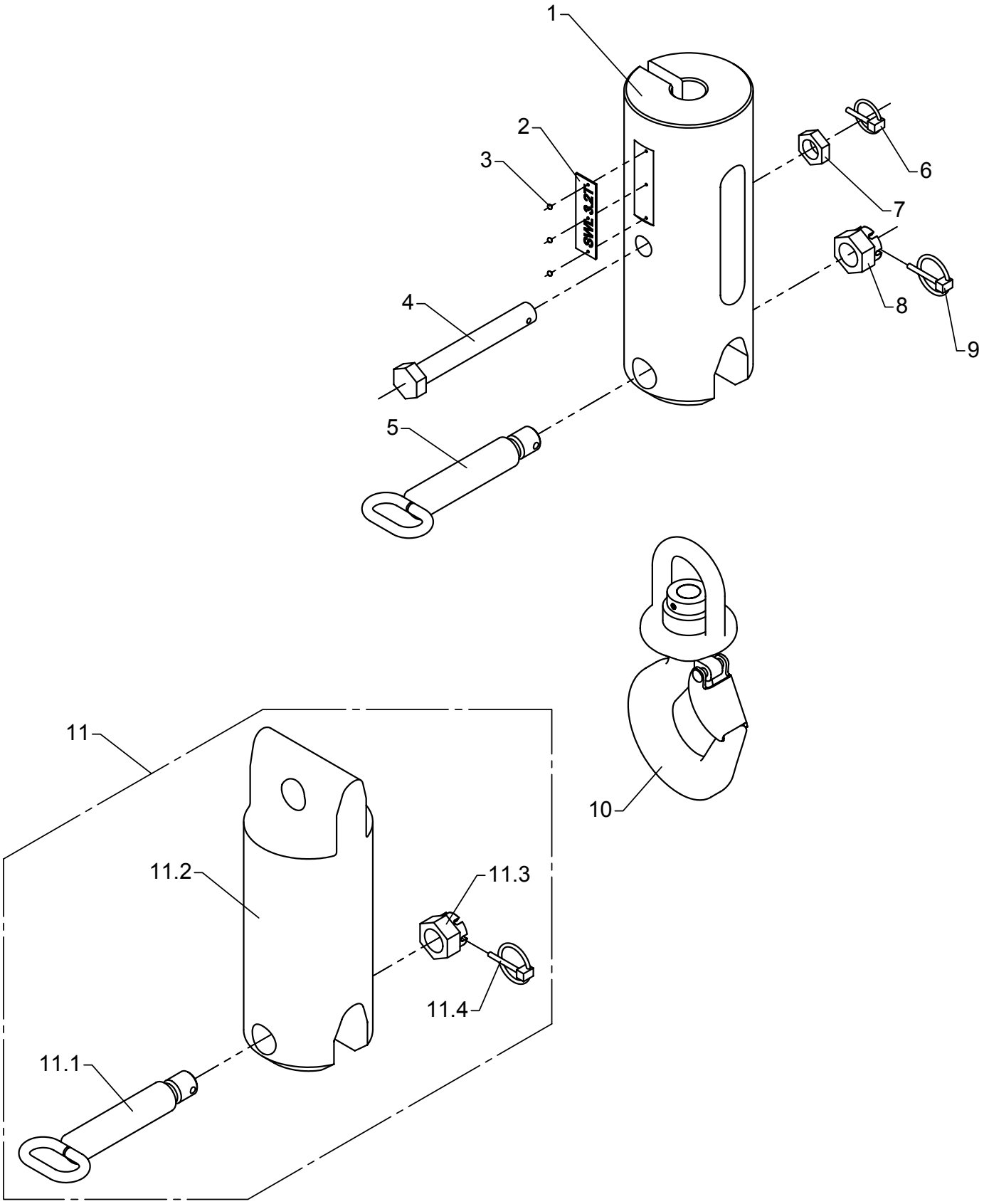

Swivel hook, 3,2 tons

As from / To loader no.: 97 00 00 /
Created: 17.11.2003
Modified: 03.05.2004

Item no.	Qty.	Part no.	Description	Remarks
1	1	6256452	Swivel hook	
2	1	64807	Brass label	
3	3	31340	Rivet	
4	1	6256464	Pin	
5	1	6301005	Lock pin	
6	1	33385	Ring split	ø4,5 x 27
7	1	30810	Counter nut	M20
8	1	30837	Nut	M24
9	1	31967	Ring split	ø4,5 x 40
10	1	62169	Hook with ball bearing	
11	1	6301060	Counter weight	
11.1		6301005	Lock pin	
11.2		6300839	Counter weight	
11.3		30837	Nut	M24
11.4		31967	Ring split	ø4,5 x 40

72-516

Intern ref.: 6301000

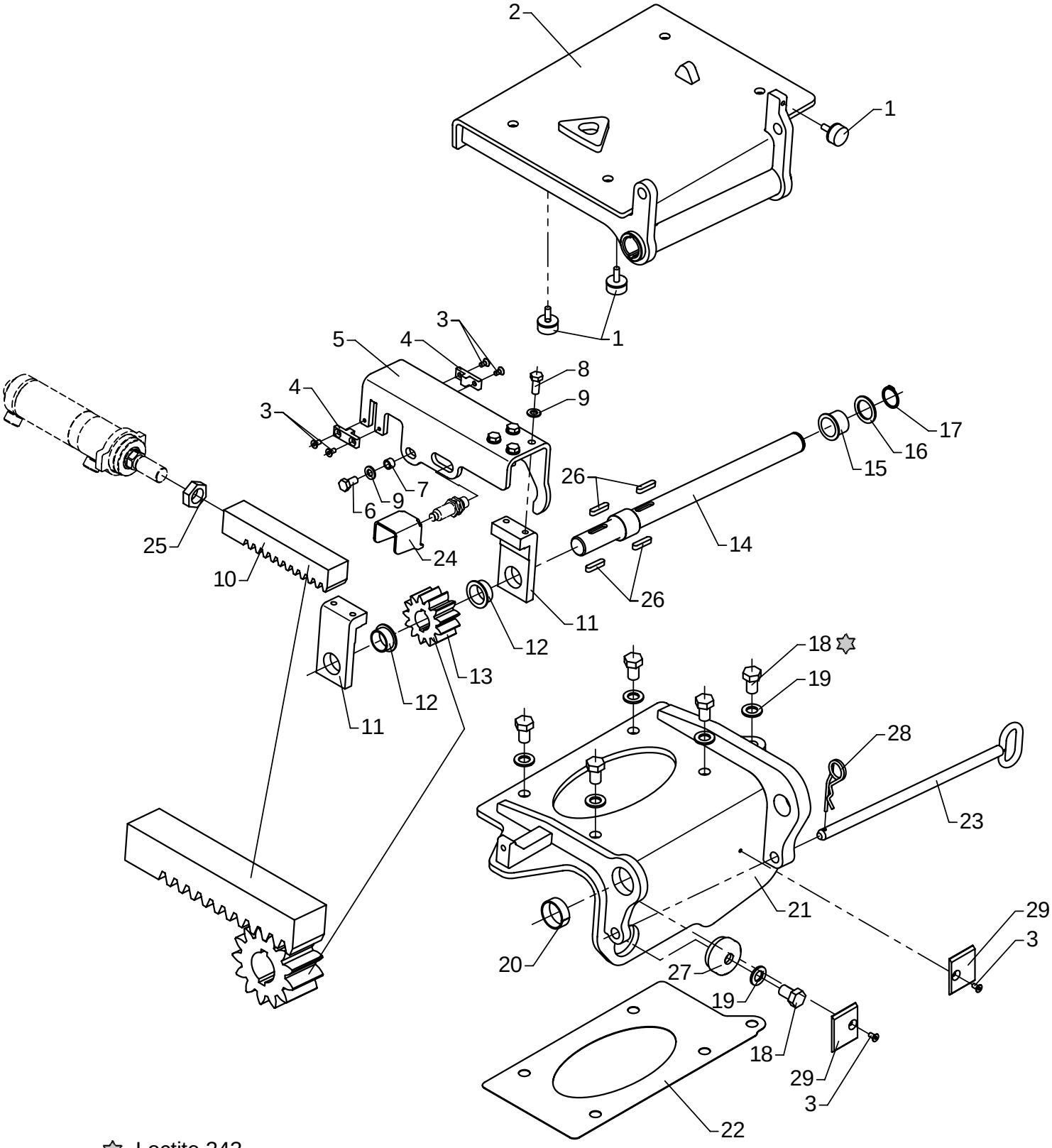

Loctite 243

Swing-up stowing bracket

As from / To loader no.: 97 00 00 / 97 00 42
Created: 17.11.2003
Modified: 08.04.2005

Item no.	Qty.	Part no.	Description	Remarks
1	3	61910	Rubber buffer	
2	1	6300811	Stowing bracket	
3	6	30542	Counter-sunk screw	MK6 x 12
4	2	6300789	Lock plate	
5	1	6300798	Cylinder bracket	
6	1	31517	Set screw, stainless	M10 x 20
7	1	6300799	Spacer	
8	4	30155	Set screw	M10 x 25
9	5	31177	Washer	10 mm
10	1	6300794	Rack	
11	2	6300797	Rack guide	
12	2	23931	Bushing	BB 3016 DU-B
13	1	6300795	Pinion	
14	1	6300796	Pin	
15	1	23938	Bushing	BB 3026 DU-B
16	1	33220	Back ring	SS 30 x 42 x 2,5
17	1	33115	Circlip	24U
18	6	30266	Set screw	M16 x 25
19	6	31135	Washer	16 mm
20	1	23937	Bushing	MB 4015 DU-B
21	1	6302801	Mounting bracket	THOR
22	1	6302809	Adjusting plate	THOR
23	1	6300821	Pin	
24	1	6300819	Protective guard	
25	1	31053	Counter nut	M24 x 1,5
26	4	31054	Spring	
27	1	6300823	Washer	
28	1	33382	Lock spring	
29	2	63724	Slide block	1210624

72-516

Intern ref.: 6301000

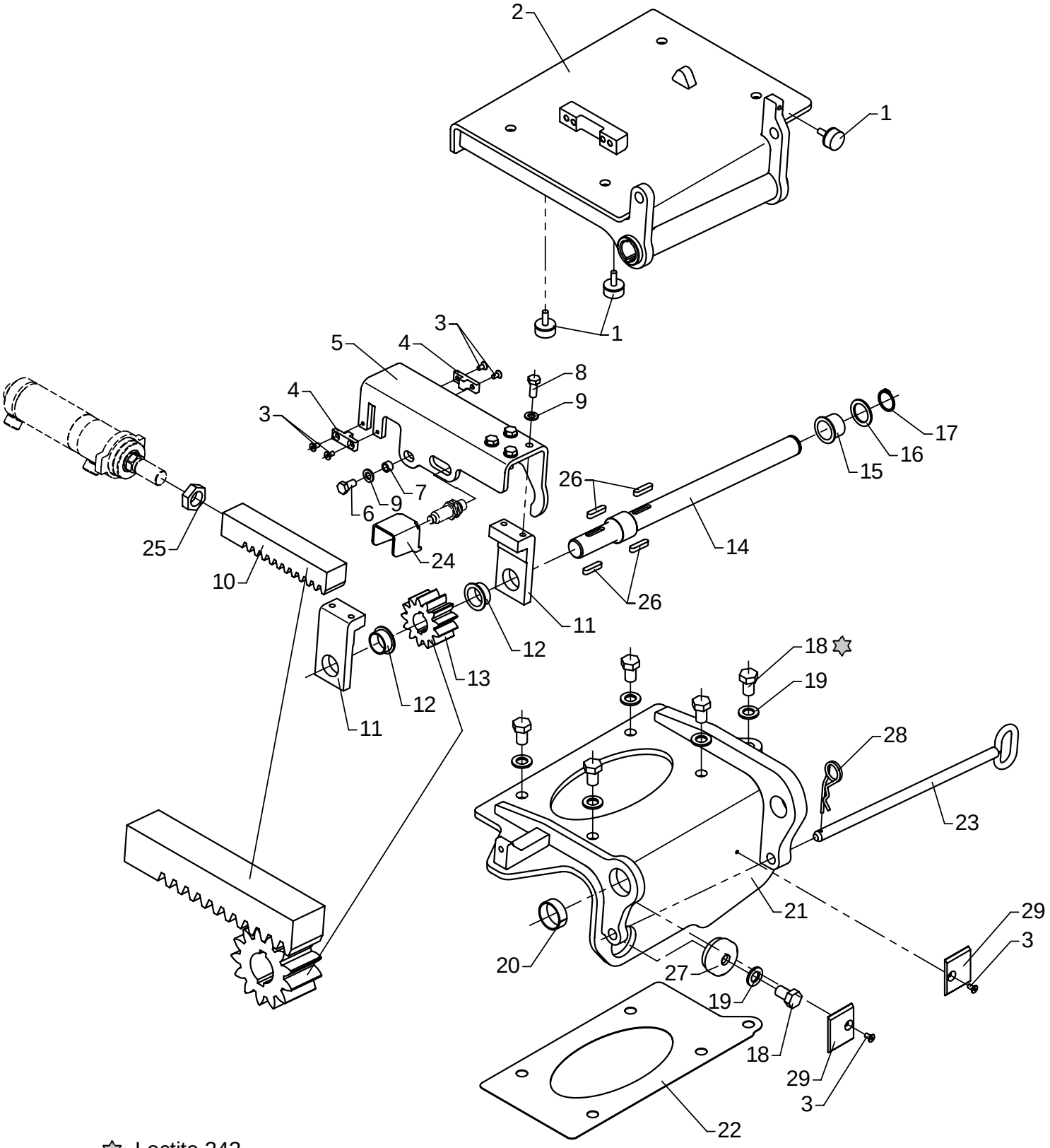

Loctite 243

Swing-up stowing bracket

As from / To loader no.: 97 00 43 /
Created: 08.04.2005
Modified:

Item no.	Qty.	Part no.	Description	Remarks
1	3	61910	Rubber buffer	
2	1	6301206	Stowing bracket	
3	6	30542	Counter-sunk screw	MK6 x 12
4	2	6300789	Lock plate	
5	1	6300798	Cylinder bracket	
6	1	31517	Set screw, stainless	M10 x 20
7	1	6300799	Spacer	
8	4	30155	Set screw	M10 x 25
9	5	31177	Washer	10 mm
10	1	6300794	Rack	
11	2	6300797	Rack guide	
12	2	23931	Bushing	BB 3016 DU-B
13	1	6300795	Pinion	
14	1	6300796	Pin	
15	1	23938	Bushing	BB 3026 DU-B
16	1	33220	Back ring	SS 30 x 42 x 2,5
17	1	33115	Circlip	24U
18	6	30266	Set screw	M16 x 25
19	6	31135	Washer	16 mm
20	1	23937	Bushing	MB 4015 DU-B
21	1	6302801	Mounting bracket	THOR
22	1	6302809	Adjusting plate	THOR
23	1	6300821	Pin	
24	1	6300819	Protective guard	
25	1	31053	Counter nut	M24 x 1,5
26	4	31054	Spring	
27	1	6300823	Washer	
28	1	33382	Lock spring	
29	2	63724	Slide block	1210624

72-516

Intern ref.: 6300790

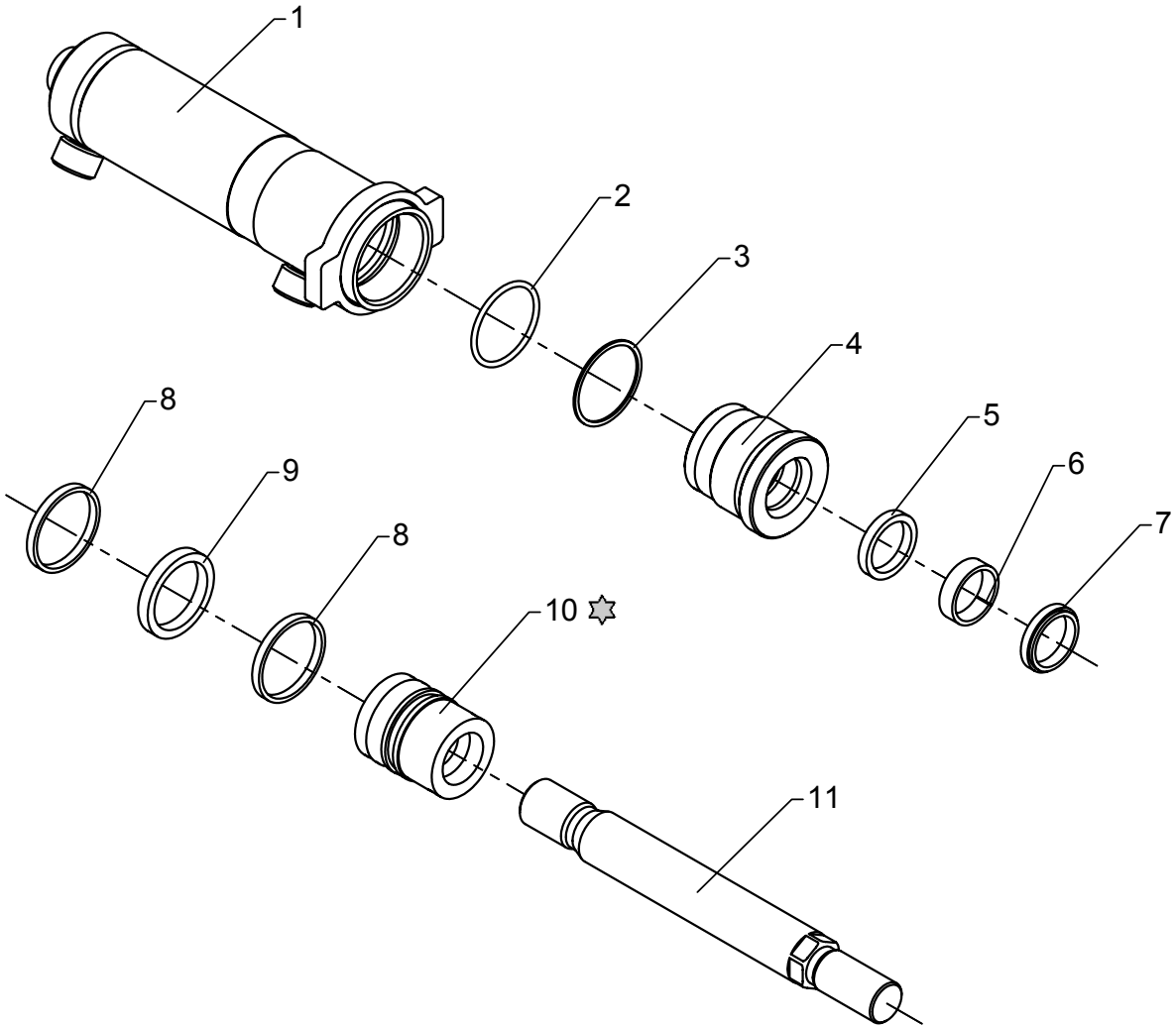

Loctite 243

Slewing cylinder, C50-102

As from / To loader no.: 97 00 00 /
Created: 17.11.2003
Modified: 18.03.2004

Item no.	Qty.	Part no.	Description	Remarks
1	1	6300791	Cylinder pipe	
2	1	20181	O-ring	OR 44,2 x 3
3	1	20709	Back ring	44,2 x 3
4	1	6321413	Guide	
5	1	20944	Seal	HH610 30 x 38 x 6/7
6	1	20933	Bearing	HH506 30 x 35 x 9,7
7	1	20925	Scraper	HH38 30 x 38 x 5
8	2	20928	Guide ring	PWR 50/45 x 5,6 - PF
9	1	20927	Piston seal	GHT 50/40 x 8 - PU/N/A
10	1	6324303	Piston	
11	1	6300793	Piston rod	

72-516

Intern ref.: 6301030

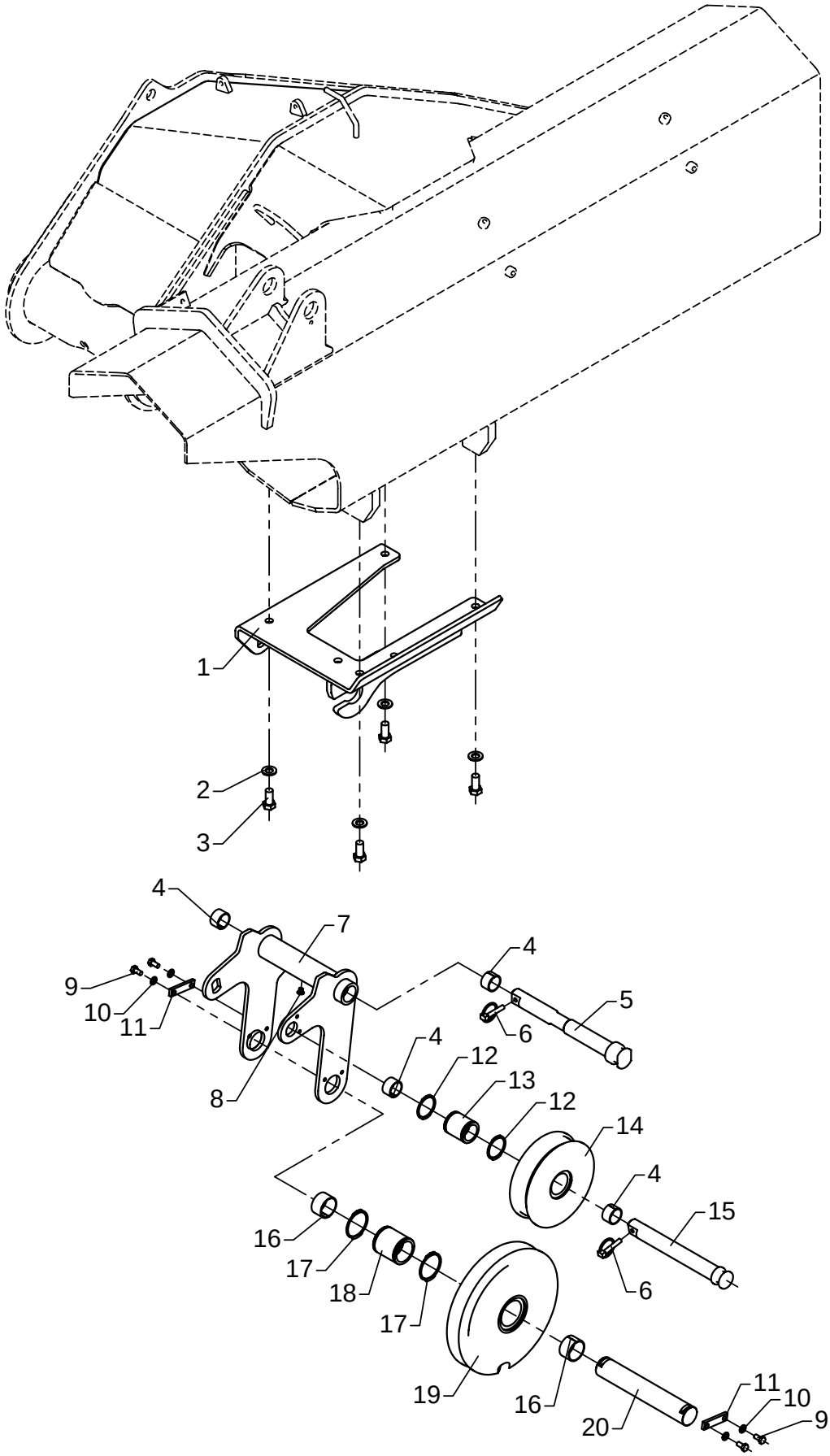

Movable wire guide

As from / To loader no.: 97 00 00 / 97 00 08
Created: 17.11.2003
Modified:

Item no.	Qty.	Part no.	Description	Remarks
1	1	6300835	Bracket for wire guide	
2	4	31178	Washer	14 mm
3	4	30206	Set screw	M14 x 30
4	4	23933	Bushing	MB 3020 DU-B
5	1	6300825	Mounting bolt for wire guide	
6	2	33387	Ring split	ø8 x 45
7	1	6300831	Wire guide	
8	1	32433	Sockethead screw	MC8 x 8
9	4	30131	Set screw, stainless	M8 x 16
10	4	31147	Washer, stainless	8 mm
11	2	6182444	Lock plate	
12	2	33125	Circlip	45U
13	1	6300278	Bushing for wire roller	
14	1	63507	Wire roller	
15	1	6300827	Pin for wire roller	
16	2	23932	Bushing	MB 4025 DU-B
17	2	33132	Circlip Din 471	55U
18	1	6300277	Bushing for wire sheave	
19	1	63508	Sheave	
20	1	6300826	Pin for wire sheave	

72-516

Intern ref.: 6301010+6304490

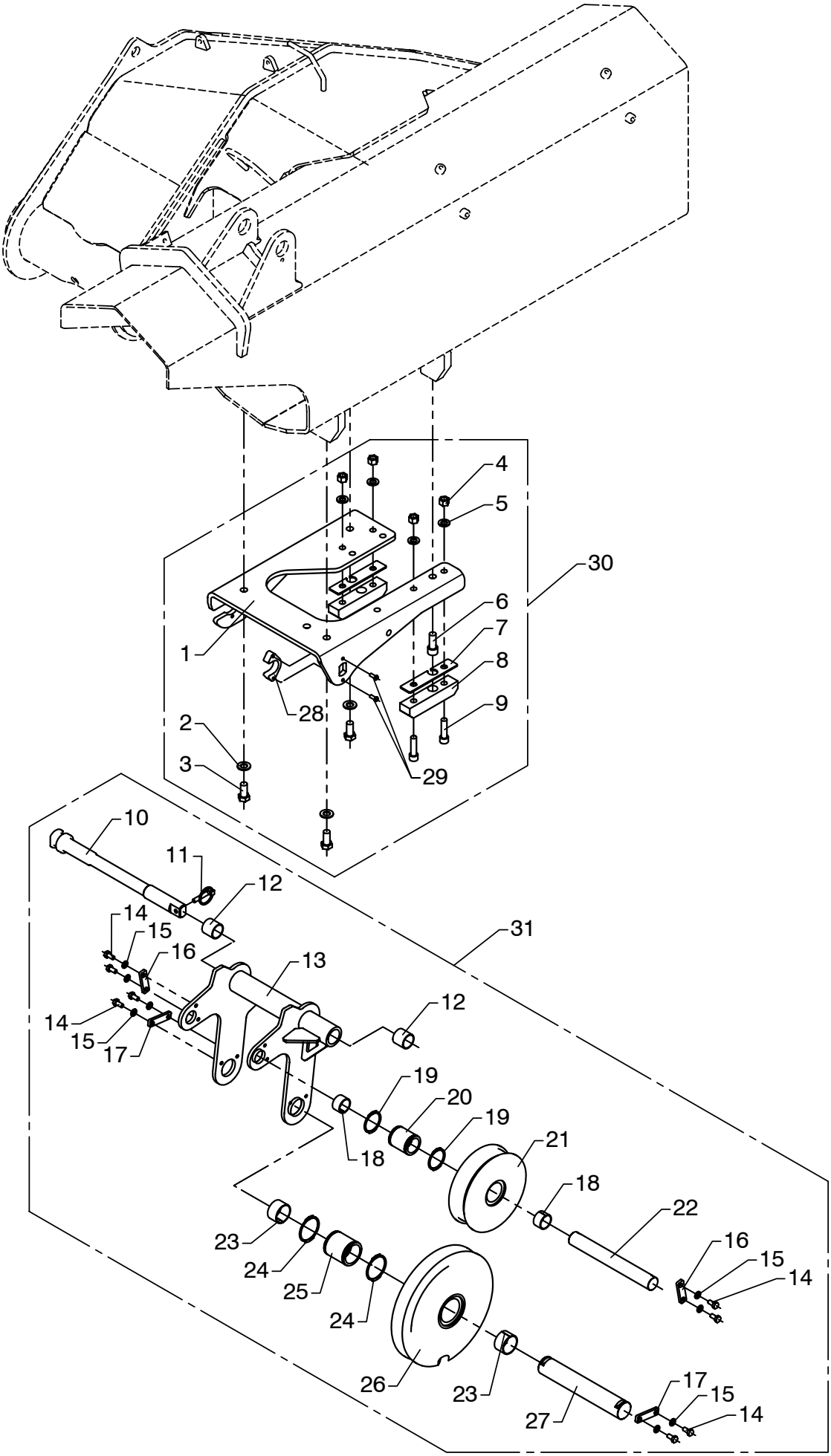

Movable wire guide

As from / To loader no. 97 00 09 /
Created: 17.11.2003
Modified: 06.07.2004

Item no.	Qty.	Part no.	Description	Remarks
1	1	6300931	Bracket for wire pulley	
2	3	31178	Washer	14 mm
3	3	30206	Set screw	M14 x 30
4	4	30890	Lock nut	M12
5	4	31131	Washer	12 mm
6	1	30482	Screw	MC14 x 35
7	2	6300898	Spacer	
8	2	63538	Stop block	
9	4	30428	Sockethead screw	MC12 x 45
10	1	6300938	Mounting bolt for wire pulley	
11	1	33387	Ring split	ø8 x 45
12	2	23946	Composite bearing	ø30/34 x 30
13	1	6300932	Wire pulley	
14	8	30131	Set screw, stainless	M8 x 16
15	8	31147	Washer, stainless	8 mm
16	2	6300934	Lock plate	
17	2	6182444	Lock plate	
18	2	23933	Bushing	MB 3020 DU-B
19	2	33125	Circlip	45U
20	1	6300278	Bushing for wire roller	
21	1	63507	Wire roller	
22	1	6300937	Pin for wire sheave	
23	2	23932	Bushing	MB 4025 DU-B
24	2	33132	Circlip Din 471	55U
25	1	6300277	Bushing for wire sheave	
26	1	63508	Sheave	
27	1	6300826	Pin for wire sheave	
28	1	6300939	Spacer	
29	2	32222	Button head screw	M6 x 16
30	1	6304490	Stowing bracket for FJ	
31	1	6301010	Movable wire pulley	

72-516

Intern ref.: 6302600 / 6305600

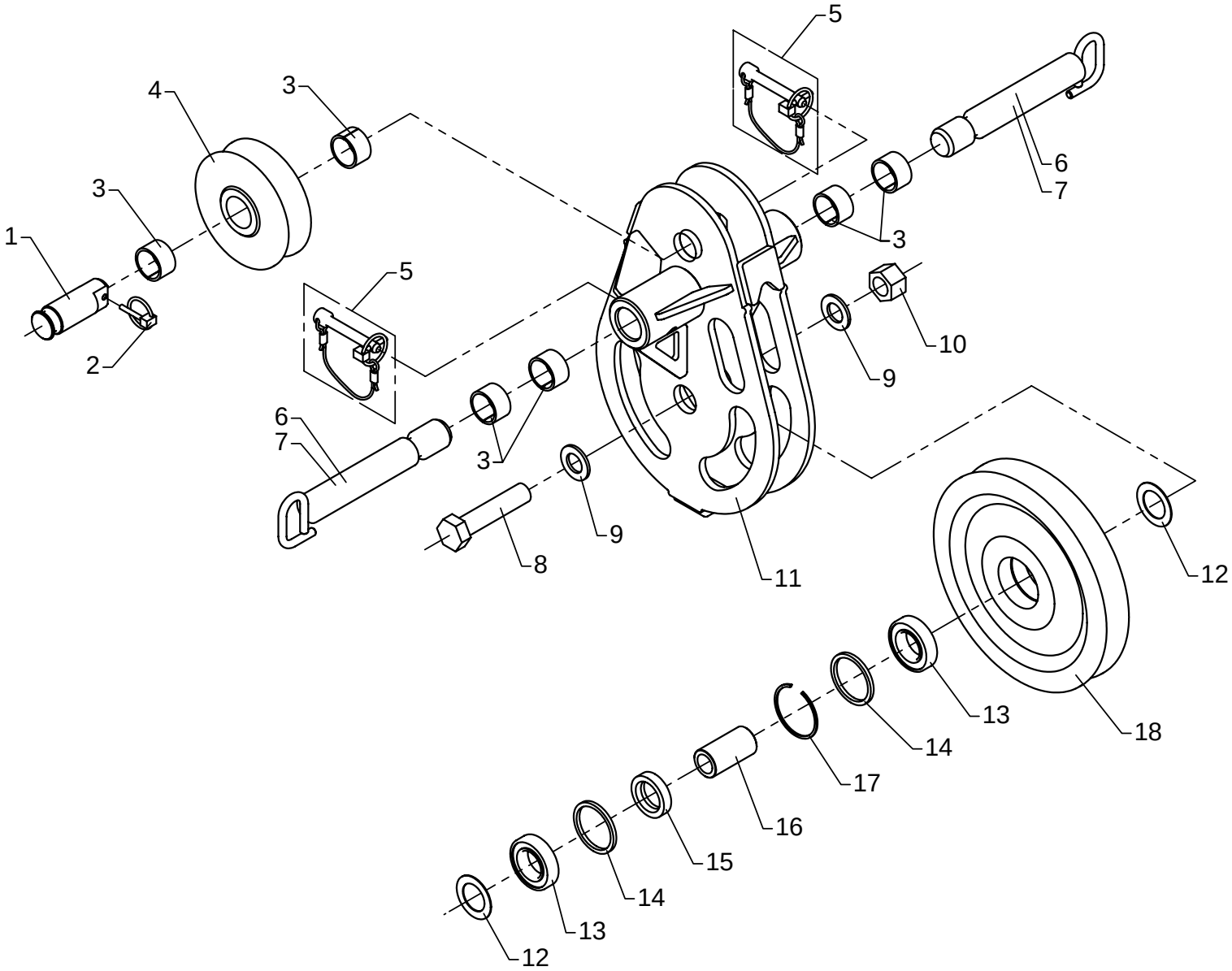

Wire sheave, WS12, complete

As from / To loader no.: 97 00 00 /
Created: 17.11.2003
Modified:

Item no.	Qty.	Part no.	Description	Remarks
1	1	6302607	Pin	
2	1	33385	Ring split	ø4,5 x 27
3	6	23302	Bushing	MB 3020 DU
4	1	63513	Wire roller guide	
5	2	6302613	Cotter bolt incl. ring split	
6	2	6302605	Lock bolt	FJ-1200
7	2	6305241	Lock bolt	FJ-1800
8	1	30250	Steel bolt	M20 x 90
9	2	31179	Washer	20 mm
10	1	30894	Lock nut	M20
11	1	6302601	Wire pulley	
12	2	23188	Spacer	
13	2	23187	Ball bearing	
14	2	6886024	Ring	
15	1	6886034	Distance ring	
16	1	6302618	Bushing	
17	1	23902	Spring ring	BR 55
18	1	63511	Wire sheave	

72-516

Intern ref.: 6304410

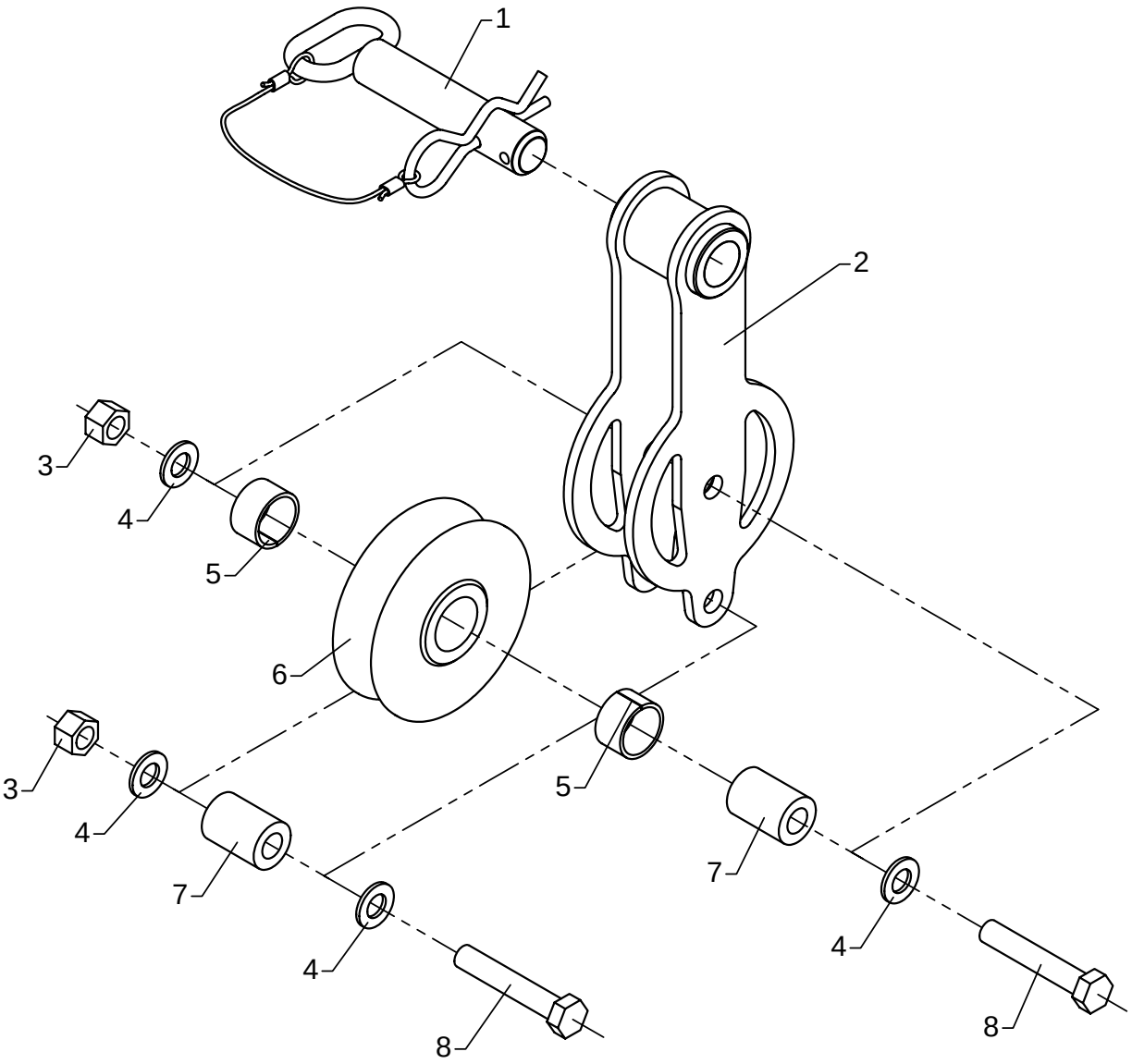

Wire roller guide, FJ

As from / To loader no.: 97 00 00 /
Created: 17.11.2003
Modified:

Item no.	Qty.	Part no.	Description	Remarks
1	1	6304266	Lock pin with split pin	
2	1	6304411	Suspension for roller guide	
3	2	30891	Lock nut	M14
4	4	31178	Washer	14 mm
5	2	23302	Bushing	MB 3020 DU
6	1	63513	Wire roller guide	
7	2	6885504	Distance pipe	
8	2	30214	Steel bolt	M14 x 80