IMT

MATERIAL HANDLING SYSTEMS

Repair Parts

Model 52/380 Crane

IOWA MOLD TOOLING CO., INC.
BOX 189, GARNER, IA 50438-0189
641-923-3711

MANUAL PART NO: 99903539

Iowa Mold Tooling Co., Inc. is an Oshkosh Corporation Company.

In addition to the information presented in this manual, read and understand the IMT Crane Operator's Safety Manual before operating or performing any maintenance on your crane.

REVISIONS LIST

DATE	LOCATION	DESCRIPTION OF CHANGE
20040726	THROUGHOUT	NEW RELEASE WITH CAN, TOP SEAT, ADDITIONAL CONTROLS
20041202	THROUGHOUT	ADDITION OF FITTINGS AND SUSPENSION FOR EXTENSION OK6, EXTENSION CYLINDERS, EXTERNAL HYD TANKS.
20050509	P. 84	BOOM CYL. WITH LHV - 28821 WAS 28366
20051024	P. 250	ECN 9956 - ADDED 70396639 MANUAL CONTROL DECAL TO DECAL KIT.
20060802	THROUGHOUT	UPDATED PER NEW DRAWINGS
20070228	COVER	UPDATED OWNERSHIP STATEMENT
20090526	THROUGHOUT	ADDED NEW FEATURES WITH 2009 DESIGN UPDATE

Description	Page	As from	To loader nr.
Base, Column, Planetary Gear			
Base with turntable	52201010	96 00 00	
Lubricating brush for planetary gear	52201050	96 00 00	
Column, complete	52201100	96 00 00	
Planetary gear	52201150	96 00 00	
Pins and link arm system N	52201210	96 00 00	96 00 28
	52201210A	96 00 29	
Boom System			
Main boom, complete	52202010	96 00 00	
Pins and link arm system K	52202020	96 00 00	96 00 28
	52202020A	96 00 29	
Jib, complete	52202100	96 00 00	
Fittings for extension I	52202101	96 00 00	
Fittings for extension II	52202102	96 00 00	
Fittings for extension III	52202103	96 00 00	
Fittings for extension K4	52202104	96 00 00	96 00 xx
	52202104A	96 00 xx	
Fittings for extension V	52202105	96 00 00	96 00 xx
	52202105A	96 00 xx	
Fittings for extension OK6	52202106	96 00 00	
Fittings for extension K6	52202107	96 00 00	
Fittings for extension VII	52202108	96 00 00	
Fittings for extension VIII	52202109	96 00 00	
Separate hook suspension, OK2	52202500	96 00 00	
Separate hook suspension, OK3	52202501	96 00 00	
Separate hook suspension, OK4	52202502	96 00 00	
Separate hook suspension, OK5	52202503	96 00 00	
Separate hook suspension, OK6	52202504	96 00 00	
Separate hook suspension, K7	52202506	96 00 00	

Description	Page	As from	To loader nr.
separate hook suspension, K8	52202507	96 00 00	
Hook suspension	52202520	96 00 00	
Stowing hook, complete	52202550	96 00 00	
Manual extensions OK 4	52202630	96 00 15	
Manual extensions OK 5	52202640	96 00 21	
Manual extensions K6	52202650	96 00 00	
Manual extensions K7	52202660	96 00 00	
Manual extensions K8	52202670	96 00 00	
Hook suspension, F5-F11	52202680	96 00 00	
Cylinders			
Boom cylinder, C250/180 x 837	52203010	96 00 00	
Boom cylinder with LHV	52203020	96 00 00	96 02 07
	52203020A	96 02 08	
Jib cylinder, C250/180 x 1122	52203050	96 00 00	
Jib cylinder with LHV	52203060	96 00 00	
Extension cyl. I, C110/80h x 1850, optimised boom system OK2-OK6	52203100	96 00 00	
Extension cyl. II, C110/80h x 1900, optimised boom system OK2-OK6	52203101	96 00 00	
Extension cyl. III, C100/70h x 2000, optimised boom system OK3-OK6	52203102	96 00 00	
Extension cyl. IV, C100/70h x 2100, optimised boom system OK4-OK6	52203103	96 00 00	
Extension cyl. V-OK5, C90/60s x 2250, optimised boom system OK5	52203104	96 00 00	96 00 xx
Extension cyl. V-OK5, C90/60s x 2175, optimised boom system OK5	52203104A	96 00 xx	
Extension cyl. V-OK6, C90/60h x 2175, optimised boom system OK6	52203105	96 00 00	
Extension cyl. VI, C90/60s x 2250, optimised boom system OK6	52203106	96 00 00	
Extension cylinder I, C110/80h x 1650, boom system K6-K8	52203110	96 00 00	
Extension cylinder II, C110/80h x 1700, boom system K6-K8	52203111	96 00 00	
Extension cylinder III, C100/70h x 1800, boom system K6-K8	52203112	96 00 00	
Extension cylinder IV, C100/70h x 1900, boom system K6-K8	52203113	96 00 00	
Extension cylinder V, C90/60h x 2050, boom system K6-K8	52203114	96 00 00	
Extension cylinder VI, C90/60h x 2150, boom system K6-K8	52203115	96 00 00	

Description	Page	As from	To loader nr.
Extension cylinder VII/VIII, C80/50h x 2300, boom system K6-K8	52203116	96 00 00	
Stabilizer cylinder C110-536, type V incl. ball joint	52203300	96 00 00	
Stabilizer cylinder C110-536, type V incl. fixed footplate	52203305	96 00 00	
Stabilizer cylinder with check valve, type V	52203310	96 00 00	
Stabilizer cylinder C125-600, type R incl. ball joint	52203320	96 00 00	
Stabilizer cylinder C125-600, type R incl. fixed footplate	52203325	96 00 00	
Stabilizer cylinder with check valve, type R	52203330	96 00 00	
Swing-up stabilizer cylinder C125-xxx, type HR incl. ball joint	52203340	96 00 00	
Swing-up stabilizer cylinder C125-xxx, type HR incl. fixed footplate	52203345	96 00 00	
Parts for swing-up stabilizer cylinder	52203347	96 00 00	
Stabilizer cylinder with check valve, type HR	52203350	96 00 00	
Beam cylinder C45-2015, type DV+DR+DHR - 6325	52203400	96 00 00	
Beam cylinder C45-1140, type DV+DR+DHR - 6725	52203410	96 00 00	
Beam cylinder C40-1275, type DV+DR+DHR - 6725	52203420	96 00 00	
Beam cylinder C45-1465, type DV+DR+DHR - 8420	52203430	96 00 00	
Beam cylinder C40-1600, type DV+DR+DHR - 8420	52203440	96 00 00	
Stabilizer Beam			
Stabilizer beam, type DV - 6325	52204010	96 00 00	
Stabilizer beam, type DV - 6725	52204030	96 00 00	
Stabilizer beam, type DV - 8420	52204035	96 00 00	
Stabilizer beam, type DR - 6325	52204037	96 00 00	
Stabilizer beam, type DR - 6725	52204038	96 00 00	
Stabilizer beam, type DR - 8420	52204040	96 00 00	
Stabilizer beam - swing-up legs, type DHR - 6325	52204060	96 00 00	
Stabilizer beam - swing-up legs, type DHR - 6725	52204070	96 00 00	
Stabilizer beam - swing-up legs, type DHR - 8420	52204080	96 00 00	
Safety lock DV, DR, DHR	52204200	96 00 00	

Description	Page	As from	To loader nr.
Hydraulic Systems, Valve blocks			
Valve block, 1 section (extra RC function)	52205005	96 00 00	96 02 07
	52205005A	96 02 08	
Valve block, 2 sections P1	52205010	96 00 00	
Valve block, 2 sections P2	52205015	96 00 00	
Valve block, 3 sections P1	52205020	96 00 00	
Valve block, 3 sections P2	52205025	96 00 00	
Valve block, 4 sections P2	52205030	96 00 00	
Valve block, 2-7 sections	52205050	96 02 08	
Stabilizer valve block, 8 functions	52205100	96 00 00	
Stabilizer valve block, 5 available func.	52205110	96 00 00	96 02 07
	52205110A	96 02 08	
Stabilizer valve block, 6 available func.	52205120	96 00 00	96 02 07
	52205120A	96 02 08	
Stabilizer valve block, 7 available func.	52205130	96 00 00	96 02 07
	52205130A	96 02 08	
Stabilizer valve block, 8 available func.	52205140	96 00 00	96 02 07
	52205140A	96 02 08	
Extra RC function on base	52205145	96 00 00	96 00 64
	52205145A	96 00 65	96 02 07
	52205145B	96 02 08	
Hydraulic Systems, Pump and Return Hoses			
Brackets and protection plates	52205150	96 00 00	96 00 49
	52205150A	96 00 50	96 00 53
	52205150B	96 00 54	96 02 07
	52205150C	96 02 08	
Hydr. system, pump and return hoses, 1 circuit + fixed pump	52205260	96 00 00	96 00 49
	52205260A	96 00 50	96 00 53
	52205260B	96 00 54	96 01 49

Description	Page	As from	To loader nr.
	52205260C	96 01 50	96 02 07
	52205260D	96 02 08	
Hydr. system, pump and return hoses, 2 circuits + fixed pump	52205270	96 00 00	96 00 49
	52205270A	96 00 50	96 00 53
	52205270B	96 00 54	96 01 50
	52205270C	96 01 50	96 02 07
	52205270D	96 02 08	
Hydr. system, pump and return hoses, 1 circuit + variable pump	52205280	96 00 00	96 00 49
	52205280A	96 00 50	96 00 53
	52205280B	96 00 54	96 01 49
	52205280C	96 01 50	96 02 07
	52205280D	96 02 08	
Hydr. system, pump and return hoses, 2 circuits + variable pump	52205290	96 00 00	96 00 49
	52205290A	96 00 50	96 00 53
	52205290B	96 00 54	96 01 49
	52205290C	96 01 50	96 02 07
	52205290D	96 02 08	
Hydraulic Systems, Slewing, Boom, Jib and Extensions			
Tank, complete	52205320	96 00 00	
Fittings for tank	52205330	96 00 00	
Hose kit for tank	52205340	96 00 00	
Hydraulic system, planetary gear	52205400	96 00 00	
Hose clamp	52205450	96 00 00	96 01 57
	52205450A	96 01 58	
Hydraulic system, boom, jib and ext.	52205490	96 00 00	
Hydraulic Systems, Extension Cylinders			
Hydraulic system, regeneration	52205500	96 00 00	
Hydraulic system, extension cylinder, I	52205501	96 00 00	
Hydraulic system, extension cylinder, II	52205502	96 00 00	

Description	Page	As from	To loader nr.
Hydraulic system, extension cylinder, III	52205503	96 00 00	
Hydraulic system, extension cylinder, IV	52205504	96 00 00	
Hydraulic system, extension cylinder, V	52205505	96 00 00	
Hydraulic system, extension cylinder, VI - optimised boom system OK6	52205506	96 00 00	
Hydraulic system, extension cylinder, VI - boom system K6-K8	52205507	96 00 00	
Hydraulic system, extension cylinder, VII	52205508	96 00 00	
Hydraulic system, extension cylinder, VIII	52205509	96 00 00	
Hydraulic Systems, Stabilizer Beams			
Hydraulic system, stabilizer beam, type DV+DR+DHR - 6325	52205600	96 00 00	
Hydraulic system, stabilizer beam, type DV+DR+DHR - 6725	52205620	96 00 00	
Hydraulic system, stabilizer beam, type DV+DR+DHR - 8420	52205630	96 00 00	
Hydraulic system, stabilizers, type DV+DR+DHR	52205660	96 00 00	96 02 07
	52205660A	96 02 08	
Manual stabilizer operation	52205700	96 02 08	
Labels and Mounting Kits			
Labels	52206010	96 00 00	96 00 xx
	52206010A	96 00 xx	96 02 07
	52206010B	96 02 08	
Mounting kit, standard. Chassis height: 230 - 490 mm.	52206100	96 00 00	
Mounting kit, HMF-subframe	52206110	96 00 00	
Mounting kit, long. Chassis height: 390 - 590 mm.	52206120	96 00 00	
Accessories, Extra Valves (Hose reels)			
Hydraulic system, extra valves, without FJ and winch	52207150	96 00 00	96 00 86
	52207150A	96 00 87	
Hydraulic system, extra valves, without FJ, with winch	52207151	96 00 00	96 00 86
	52207151A	96 00 87	96 01 94
	52207151B	96 01 95	
Hydraulic system, extra valves, with FJ	52207152	96 00 00	96 00 86
	52207152A	96 00 87	

Description	Page	As from	To loader nr.
Extra valves, OK5-2, Hose reels and quick-release couplings	52207163	96 00 00	
Extra valves, OK6-2, Hose reels and quick-release couplings	52207164	96 00 00	
Extra valves, K6-2, Hose reels and quick-release couplings	52207165	96 00 00	
Extra valves, K8-2, Hose reels and quick-release couplings	52207167	96 00 00	
Extra valves, OK5/OK6-2, Hose reels and multi-coupling	52207173	96 00 00	
Extra valves, K6-2, Hose reels and multi-coupling	52207175	96 00 00	
Extra valves, K8-2, Hose reels and multi-coupling	52207177	96 00 00	
Accessories, Extra valves (hose reel and internal hose routing)			
Hydraulic system, internal hose routing - 1 EXV	52207180	96 00 00	
Hydraulic system, internal hose routing - 2 EXV	52207181	96 00 00	
Extra valves, OK2, Internal hose routing	52207191	96 00 00	
Extra valves, OK3, Internal hose routing	52207192	96 00 00	
Extra valves, OK4, Internal hose routing	52207193	96 00 00	
Extra valves, OK5, Internal hose routing	52207194	96 00 00	
Extra valves, K6, Internal hose routing	52207195	96 00 00	
Accessories, Extra Valves (Hose guides)			
Extra valves, OK2-2, Hose guides	52207251	96 00 00	
Extra valves, OK3-2, Hose guides	52207252	96 00 00	
Extra valves, OK4-2, Hose guides	52207253	96 00 00	
Extra valves, OK5-2, Hose guides	52207254	96 00 00	
Extra valves, OK6-2, Hose guides	52207255	96 00 00	
Multi-coupling OK4, hose guides	52207273	96 00 00	
Multi-coupling OK5, hose guides	52207274	96 00 00	
Multi-coupling OK6, hose guides	52207275	96 00 00	
Accessories, Miscellaneous			
External hydraulic tank, 320 L	52207320	96 00 00	
External hydraulic tank, 420 L	52207330	96 00 00	
2-stage LMB	52207500	96 00 50	
Calibrate Bypass Sensor System	52207510	96 00 50	

Description	Page	As from	To loader nr.
Height Indicator	52207650	96 00 00	96 02 13
	52207650A	96 02 14	
Shield at the end of the jib	52207700	96 00 00	96 00 xx
	52207700A	96 00 xx	
Light tower	52207800	96 00 00	96 02 07
	52207800A	96 02 08	
Top seat, TS			
Parts for top seat	52211010	96 00 00	
Joystick brackets, complete	52211020	96 00 00	
1st valve block, dual circuit, TS	52211110	96 00 00	
2nd valve block, dual circuit, TS	52211111	96 00 00	
Hydraulic System, TS, Pump and Tank	52211200	96 00 00	
Accessories, Winch			
Hydraulic system, winch	52213005A	96 01 95	
Hydraulic system, winch with FJ	52213007	96 00 00	96 01 94
	52213007A	96 01 95	
Stowing bracket	52213010	96 00 00	96 00 74
	52213010A	96 00 75	96 01 94
Guide Roller	52213030	96 00 00	96 01 94
Winch, Brevini 2500	52213050	96 00 00	96 01 94
Winch, cpl.	52213050A	96 01 95	
Safety system	52213100	96 00 00	96 00 74
	52213100A	96 00 75	
Weighing cell	52213110	96 01 95	
Cable stop	52213120	96 00 00	
Wire roller guide, on extension K3 for K5, K6 versions	52213150	96 00 00	
Wire roller guide, on extension K4 for K7, K8 versions	52213160	96 00 00	
Wire sheave	52213200	96 00 00	96 00 71
	52213200A	96 00 72	

Description	Page	As from	To loader nr.
Wire pulley	52213220	96 00 00	
Snatch block	52213250	96 00 00	96 00 71
	52213250A	96 00 72	
Swivel hook, 3,2 tonnes	52213300	96 00 00	
Swing-up winch, cpl.	52213400	96 00 00	96 00 74
	52213400A	96 00 75	96 01 94
	52213400B	96 01 95	
Slewing cylinder, C50-102	52213430	96 00 00	96 01 94
	52213430A	96 01 95	
Sliding wire pulley	52213450	96 00 00	96 00 25
	52213450A	96 00 26	
Wire sheave, WS12, complete	52213500	96 00 00	
Wire roller guide, FJ	52213550	96 00 00	

Intern ref.: 6300010

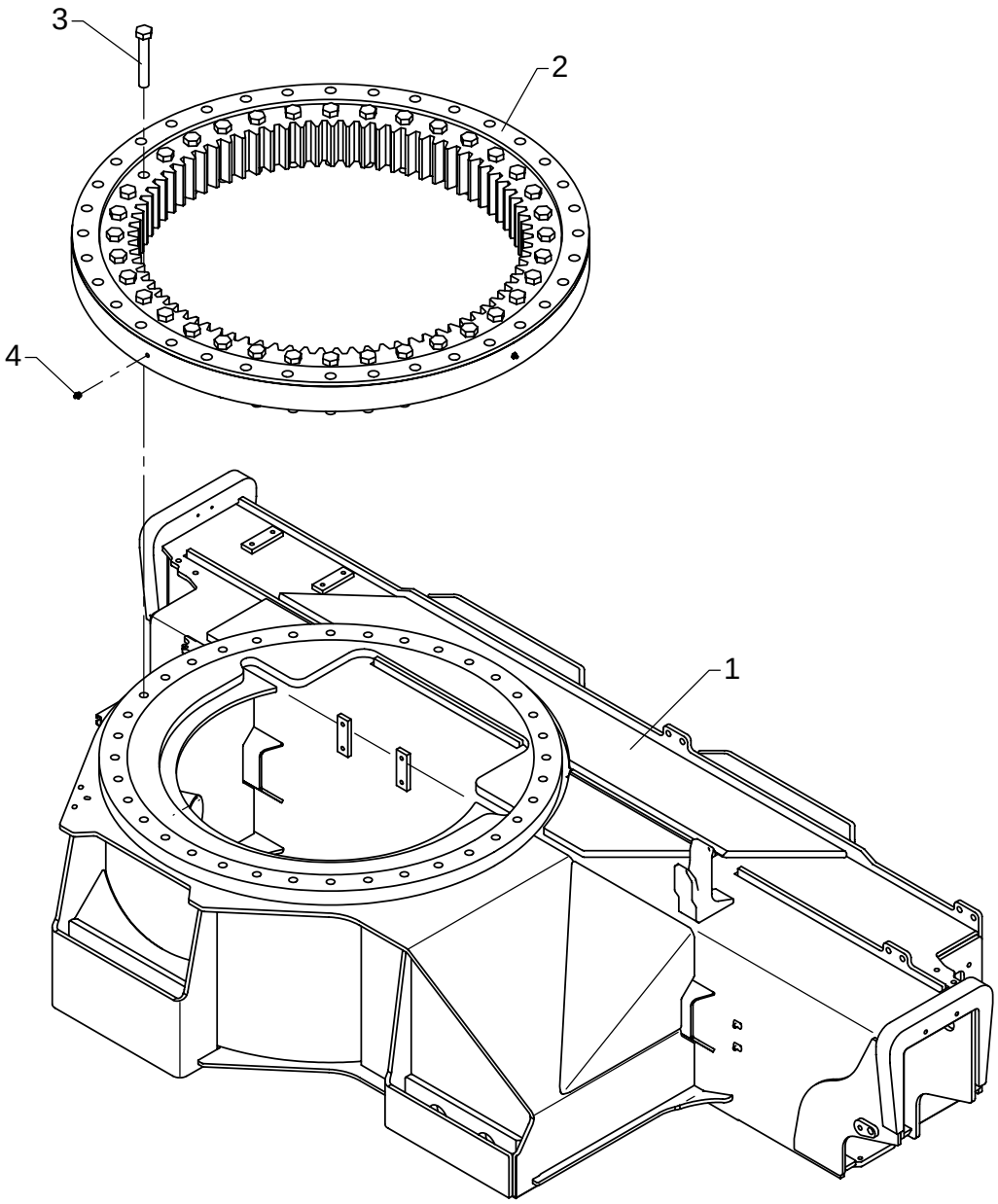

Base with turntable

As from / To loader no.: 96 00 00 /
Created: 03.10.2003
Modified:

Item no.	Qty.	Part no.	Description	Remarks
1	1	6300001	Base	
2	1	24121	Turntable	
3	36	32330	Steel bolt	M20 x 125
4	4	31337	Lubricator	M10 x 1
		32460	Kit of bolts	*

*: Incl. bolts for the external ring
Please note! See the installation procedure for the turntable

Intern ref.: 6300050

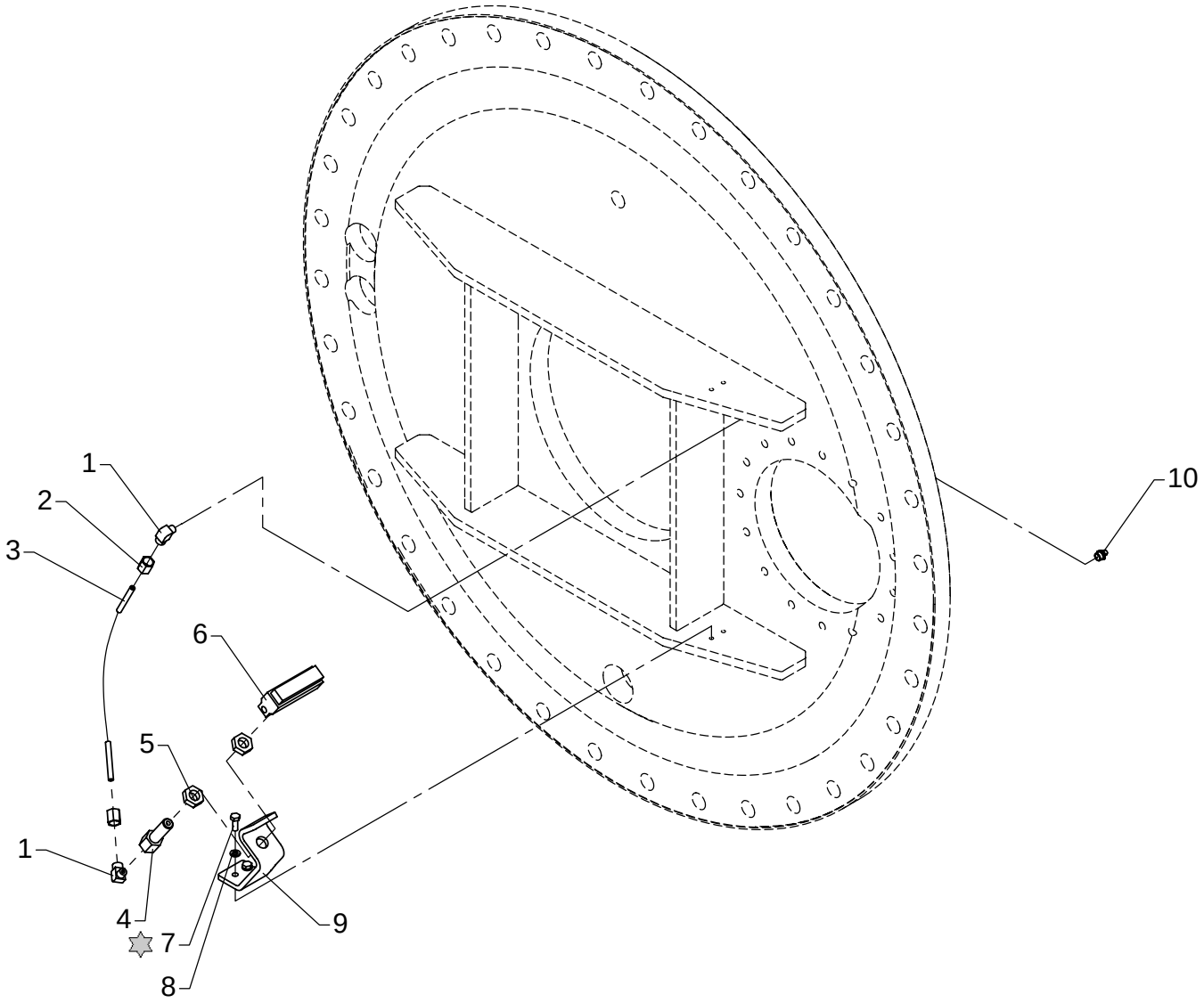

Loctite 243

Lubricating brush for planetary gear

As from / To loader no.: 96 00 00 /
Created: 03.10.2003
Modified:

Item no.	Qty.	Part no.	Description	Remarks
1	2	26186	Elbow connection	WEV 6 LRK
2	2	26164	Coupling nut	M6 L
3	1	62821	Nylon pipe	6 x 1,5 x 300 mm
4	1	6294614	Nipple	
5	2	25354	Counter nut	1/4"
6	1	31395	Brush	
7	2	30112	Set screw, stainless	M6 x 16
8	2	31154	Spring washer, stainless	6 mm
9	1	6300079	Bracket for lubricating brush	
10	1	31318	Lubricator	1/8" RG

Intern ref.: 6300060

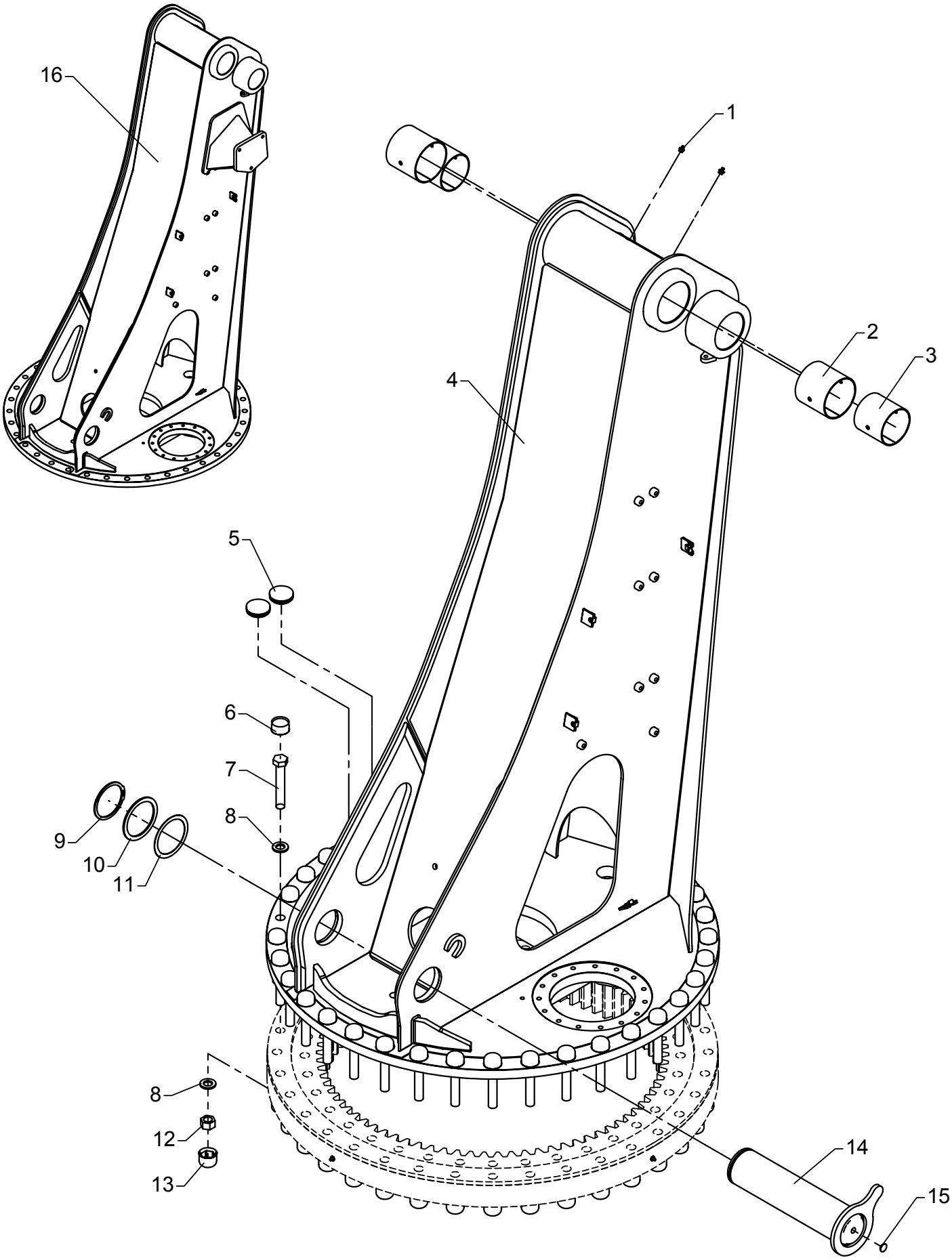

Column, complete

As from / To loader no.: 96 00 00 /
Created: 03.10.2003
Modified: 07.07.2005

Item no.	Qty.	Part no.	Description	Remarks
1	2	31318	Lubricator	1/8" RG
2	2	23927	Bushing	PM 10095 DX
3	2	23922	Bushing	PM 9090 DX
4	1	6300051	Column	
5	2	64344	Plastic plug	
6	36	63413	Cover for nut	
7	36	32330	Steel bolt	M20 x 125
8	72	31761		37 x 21 x 4
9	1	33241	Circlip	90U
10	1	33232	Back ring	SS 90 x 110 x 3,5
11	1	33245	Washer	PS 90 x 110 x 1,0
12	36	32333	Nut	M20
13	36	64358	Cover for nut	
14	1	6300226	Bolt	
15	1	63425	Plug	
16	1	8512853	Column incl. TS-bracket	
		6300040	Column with bushings	
		32460	Kit of bolts	*

*: Incl. pos. 6, 7, 8, 12, 13 and bolts for the internal ring
Please note! See the installation procedure for the turntable

Intern ref.: 6300030

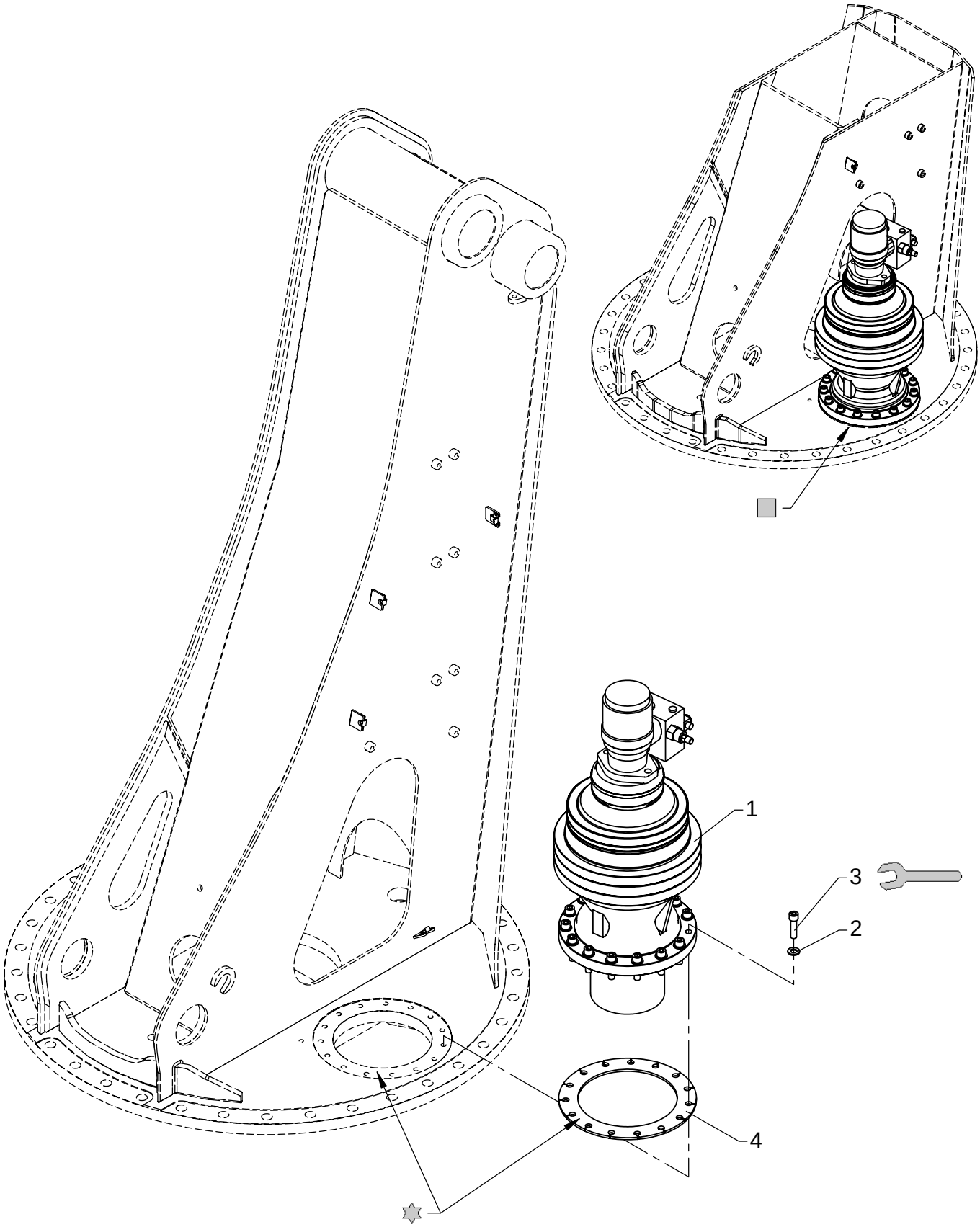

120 Nm

Loctite 275

Loctite 5220

Planetary gear

As from / To loader no.: 96 00 00 /
Created: 03.10.2003
Modified: 25.04.2007

Item no.	Qty.	Part no.	Description	Remarks
1	1	58721	Planetary gear	
		49205	Piping for planetary gear	
		49222	Motor for planetary gear	
		58937	Seal kit, gear	
		58938	Seal kit, braking unit	
		58939	Seal kit, motor unit	
2	15	31131	Washer	12 mm
3	15	30428	Sockethead screw	MC12 x 45
4	1	6300776	Division plate, planetary gear	

Intern ref.: 6300220

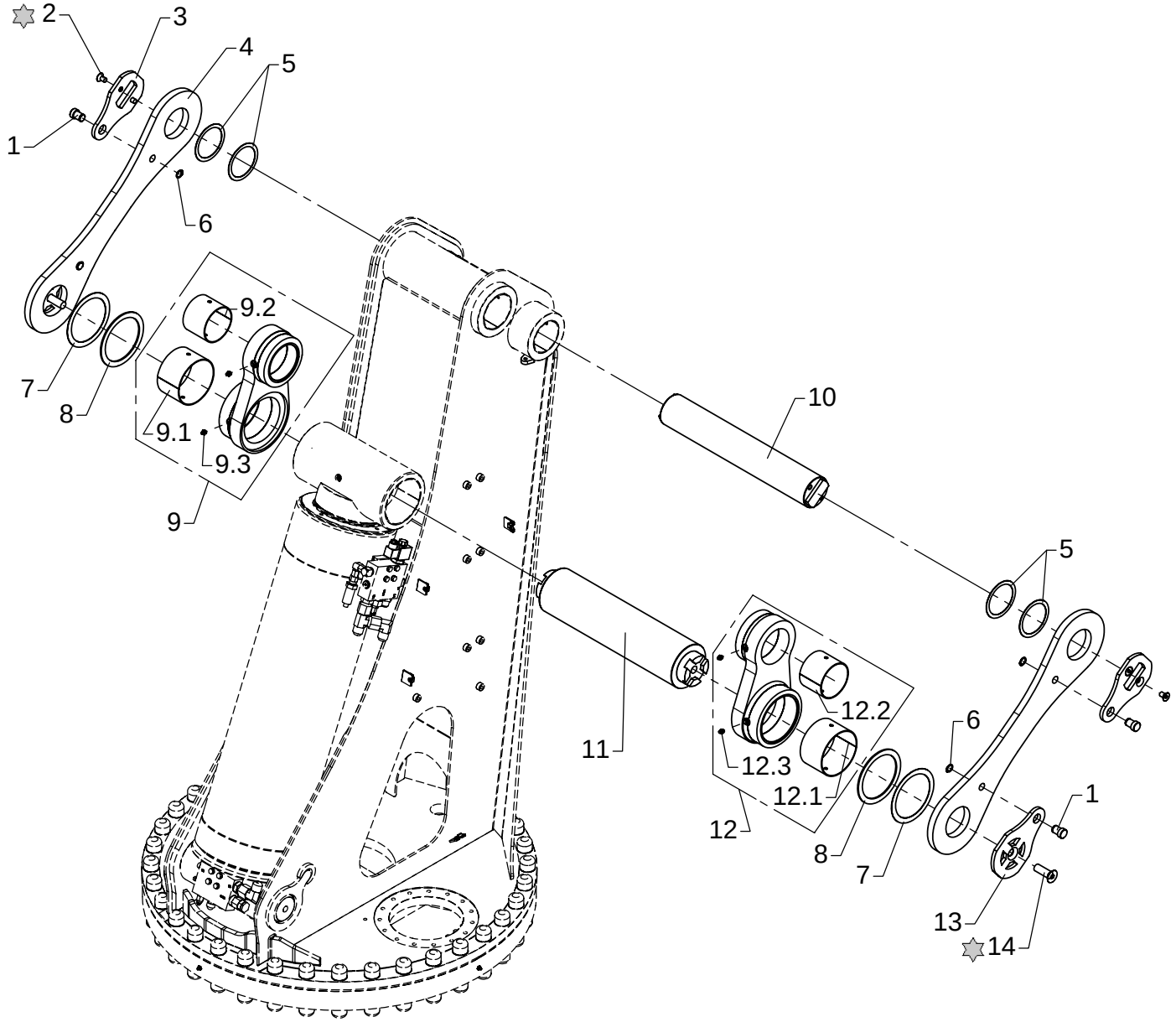

Loctite 243

Pins and link arm system N

As from / To loader no.: 96 00 00 / 96 00 28
Created: 03.10.2003
Modified:

Item no.	Qty.	Part no.	Description	Remarks
1	4	6302236	Pin	
2	4	30591	Countersunk screw	MK12 x 20
3	2	6300232	Lock plate	
4	2	6300234	Link arm, N	
5	4	33245	Washer	PS 90 x 110 x 1,0
6	4	33107	Circlip	19U
7	2	33268	Washer	PS 130 x 160 x 1,0
8	2	33267	Back ring	SS 130 x 160 x 3,5
	1	23360	Bushing	PM 13080 DX
	1	23350	Bushing	PM 10080 DX
	2	31318	Lubricator	1/8" RG
9	1	6300247	Push rod	
10	1	6300228	Pin	
11	1	6300764	Pin	
	1	23360	Bushing	PM 13080 DX
	1	23350	Bushing	PM 10080 DX
	2	31318	Lubricator	1/8" RG
12	1	6300246	Push rod	
13	2	6300762	Lock plate	
14	2	32465	Countersunk screw	MK20 x 60

Intern ref.: 6300220

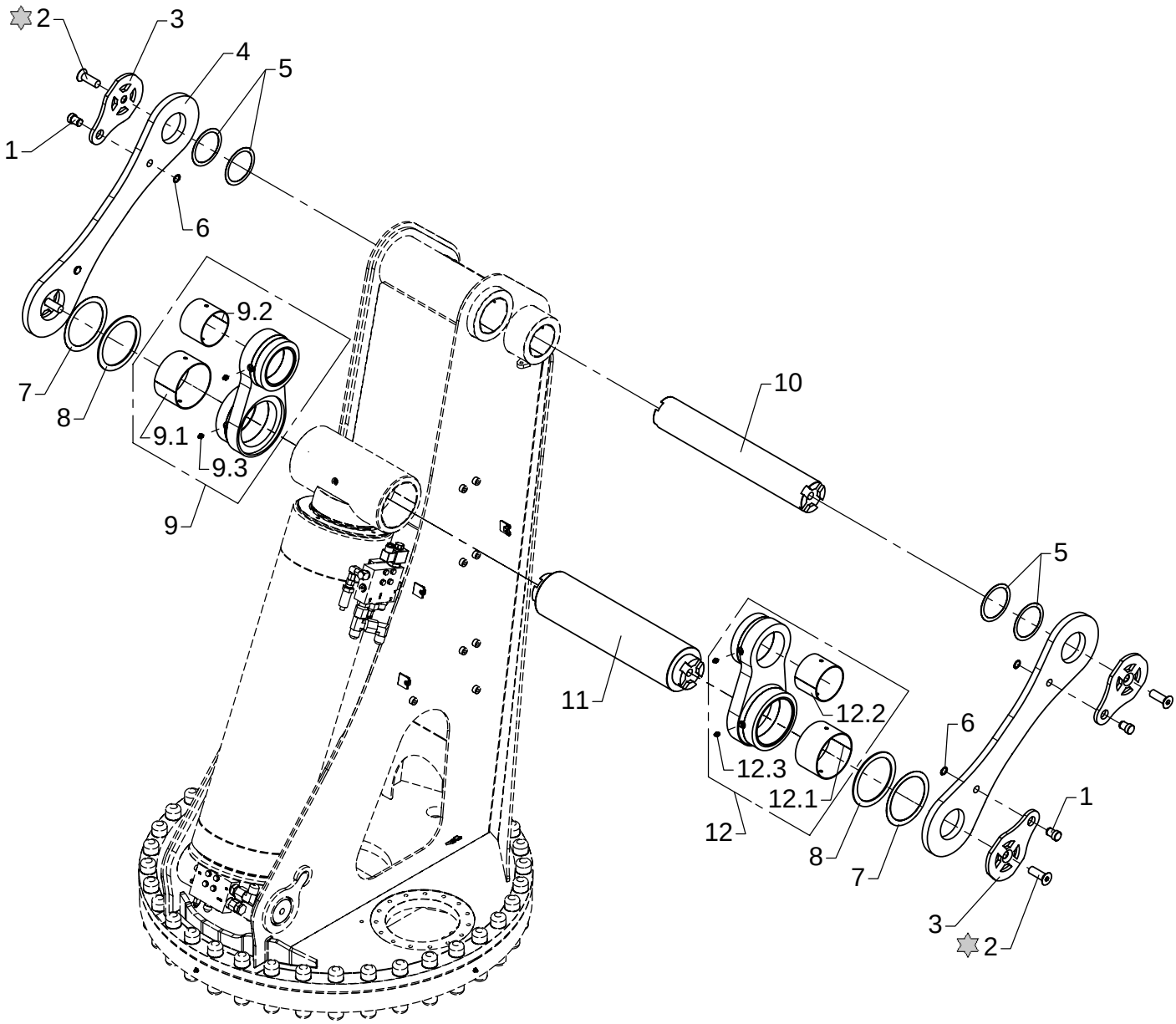

Loctite 243

Pins and link arm system N

As from / To loader no.: 96 00 29 /
Created: 03.10.2003
Modified:

Item no.	Qty.	Part no.	Description	Remarks
1	4	6302236	Pin	
2	4	32465	Countersunk screw	MK20 x 60
3	4	6300762	Lock plate	
4	2	6300234	Link arm, N	
5	4	33245	Washer	PS 90 x 110 x 1,0
6	4	33107	Circlip	19U
7	2	33268	Washer	PS 130 x 160 x 1,0
8	2	33267	Back ring	SS 130 x 160 x 3,5
	1	23360	Bushing	PM 13080 DX
	1	23350	Bushing	PM 10080 DX
	2	31318	Lubricator	1/8" RG
9	1	6300247	Push rod	
10	1	6300763	Pin	
11	1	6300764	Pin	
	1	23360	Bushing	PM 13080 DX
	1	23350	Bushing	PM 10080 DX
	2	31318	Lubricator	1/8" RG
12	1	6300246	Push rod	

Intern ref.: 6300180

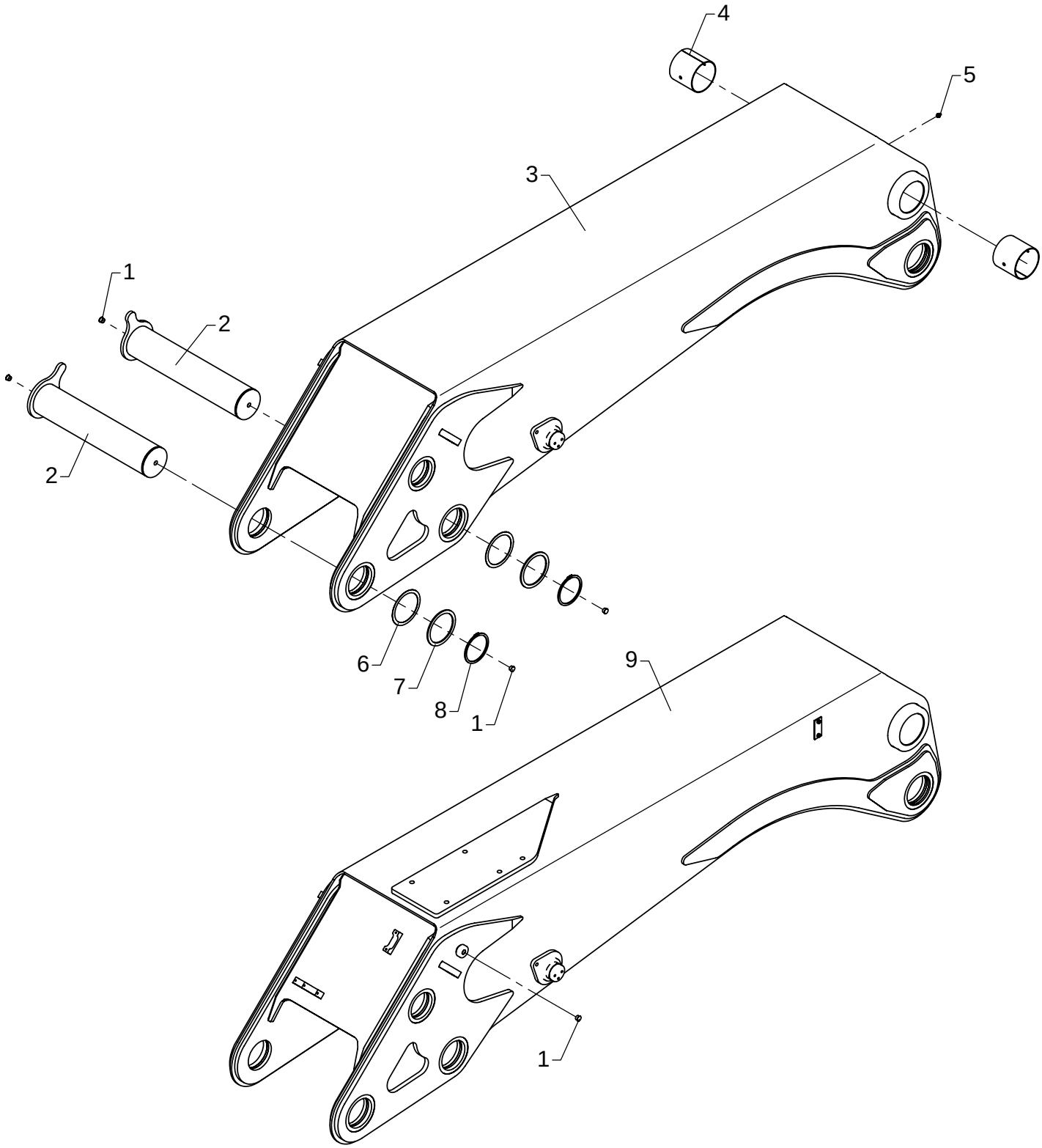

Main boom, complete

As from / To loader no.: 96 00 00 /
Created: 03.10.2003
Modified: 07.07.2005

Item no.	Qty.	Part no.	Description	Remarks
1		64360	Plug	
2	2	6300221	Bolt	
3	1	6300181	Main boom	
4	2	23927	Bushing	PM 10095 DX
5	1	31318	Lubricator	1/8" RG
6	2	33250	Washer DIN988	PS 100 x 120 x 1,0
7	2	33226	Back ring	SS 100 x 120 x 3,5
8	2	33148	Circlip	100U
9	1	6300941	Main boom + plate for winch	
10	2	63425	Plug	
		6300190	Main boom with bushings	
		6300940	Main boom+stow.bracket+bushing	

Intern ref.: 6300230

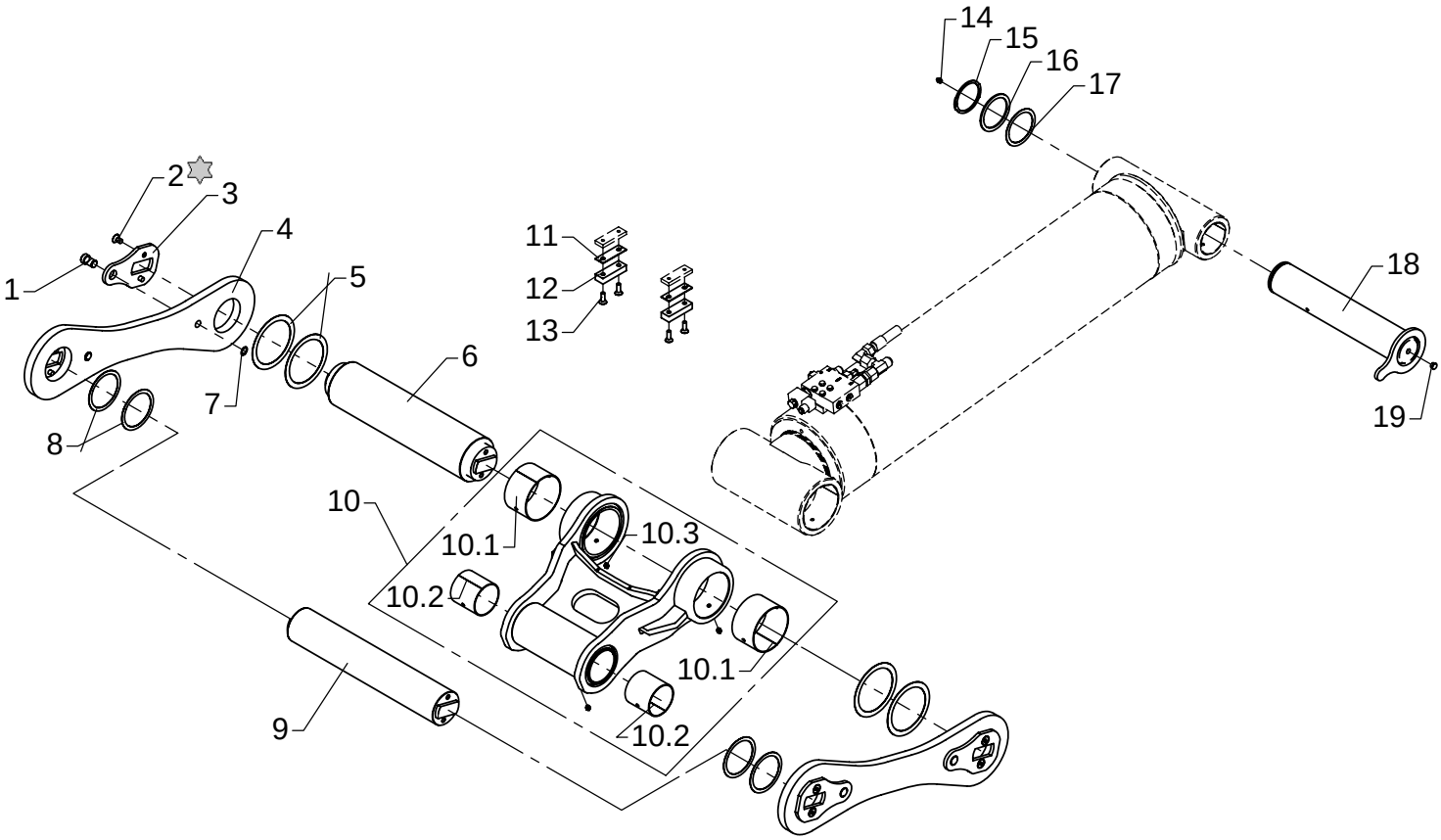

Loctite 243

Pins and link arm system K

As from / To loader no.: 96 00 00 / 96 00 28
Created: 03.10.2003
Modified: 07.07.2005

Item no.	Qty.	Part no.	Description	Remarks
1	4	6302237	Pin	
2	8	30591	Countersunk screw	MK12 x 20
3	4	6300232	Lock plate	
4	2	6300235	Link arm, K	
5	4	33268	Washer	PS 130 x 160 x 1,0
6	1	6300231	Pin	
7	4	33107	Circlip	19U
8	4	33250	Washer DIN988	PS 100 x 120 x 1,0
9	1	6300229	Pin	
10	1	6300171	Push rod	
	2	23360	Bushing	PM 13080 DX
	2	23922	Bushing	PM 9090 DX
	3	31318	Lubricator	1/8" RG
11	2	6302201	Division plate	
12	2	63530	Stop block	
13	4	30581	Counter-sunk screw	MK10 x 30
14	1	31318	Lubricator	1/8" RG
15	1	33241	Circlip	90U
16	1	33232	Back ring	SS 90 x 110 x 3,5
17	1	33245	Washer	PS 90 x 110 x 1,0
18	1	6300224	Bolt	
19	1	63425	Plug	

Intern ref.: 6300230

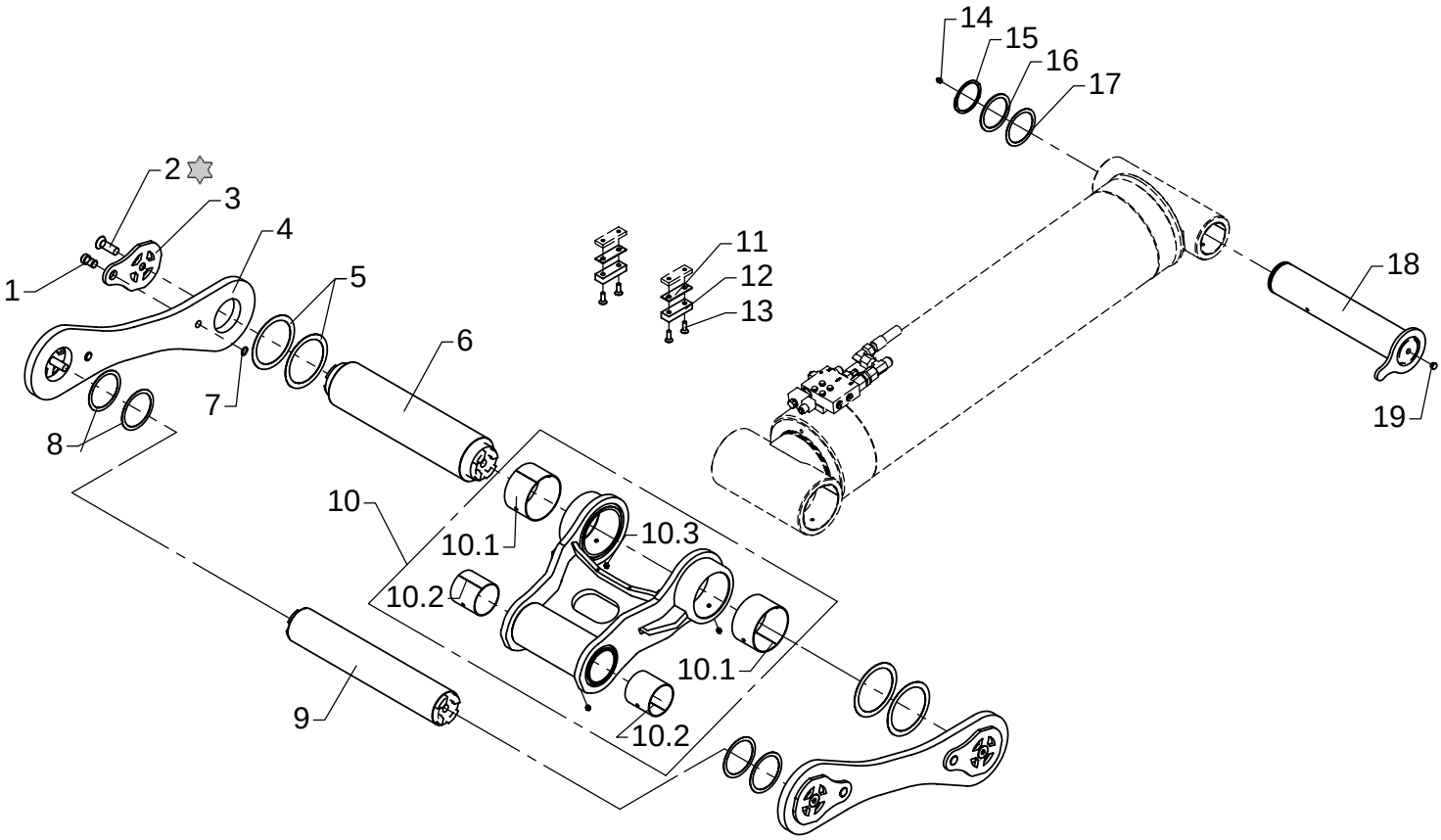

Loctite 243

Pins and link arm system K

As from / To loader no.: 96 00 29 /
Created: 03.10.2003
Modified: 07.07.2005

Item no.	Qty.	Part no.	Description	Remarks
1	4	6302237	Pin	
2	4	32465	Countersunk screw	MK20 x 60
3	4	6300762	Lock plate	
4	2	6300235	Link arm, K	
5	4	33268	Washer	PS 130 x 160 x 1,0
6	1	6300766	Pin	
7	4	33107	Circlip	19U
8	4	33250	Washer DIN988	PS 100 x 120 x 1,0
9	1	6300765	Pin	
10	1	6300171	Push rod	
	2	23360	Bushing	PM 13080 DX
	2	23922	Bushing	PM 9090 DX
	3	31318	Lubricator	1/8" RG
11	2	6302201	Division plate	
12	2	63530	Stop block	
13	4	30581	Counter-sunk screw	MK10 x 30
14	1	31318	Lubricator	1/8" RG
15	1	33241	Circlip	90U
16	1	33232	Back ring	SS 90 x 110 x 3,5
17	1	33245	Washer	PS 90 x 110 x 1,0
18	1	6300224	Bolt	
19	1	63425	Plug	

Intern ref.: 6300280 / 6300490

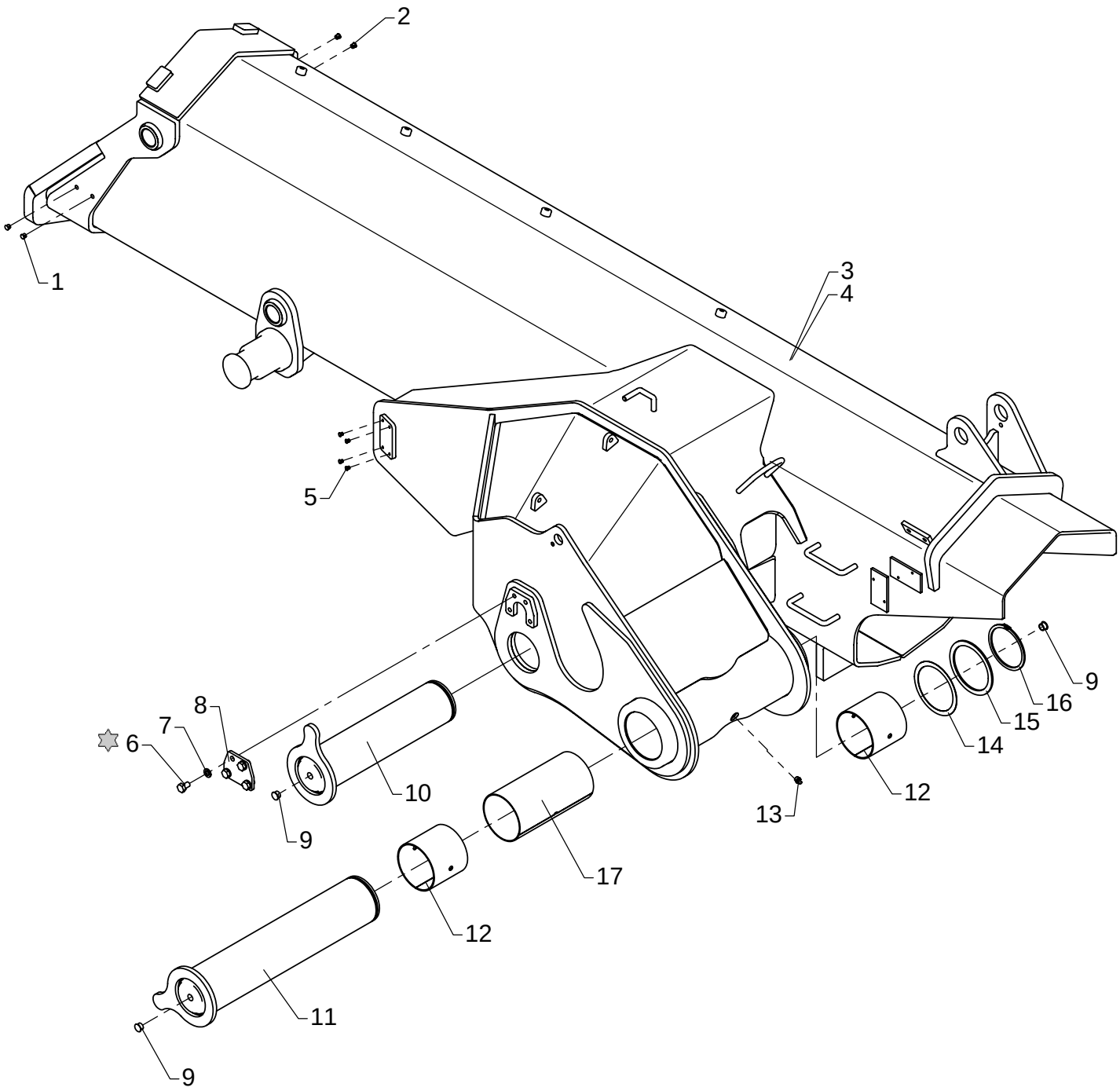

Loctite 243

Jib, complete

As from / To loader no.: 96 00 00 /
Created: 03.10.2003
Modified: 07.07.2005

Item no.	Qty.	Part no.	Description	Remarks
1	2	64366	Plug	
2	2	64366	Plug	**
3	1	6300281	Jib	*
4	1	6300501	Jib	
5	4	64365	Plug	***
6	4	31510	Set screw, stainless	M10 x 16
7	4	31571	Spring washer, stainless	10 mm
8	1	6097684	Lock plate	
9	2	63425	Plug	
10	1	6300226	Bolt	
11	1	6300221	Bolt	
12	2	23927	Bushing	PM 10095 DX
13	1	31318	Lubricator	1/8" RG
14	1	33250	Washer DIN988	PS 100 x 120 x 1,0
15	1	33226	Back ring	SS 100 x 120 x 3,5
16	1	33148	Circlip	100U
17	1	64360	Plug	
18	1	63548	Plate	
19	5	64372	Plug	****
		6300290	Optimised jib + bushings	*
		6300500	Jib with bushings	

* Optimised boom system
** No extra valves
*** Excl. spotlight
**** Excl. winch

Intern ref.: 6300310

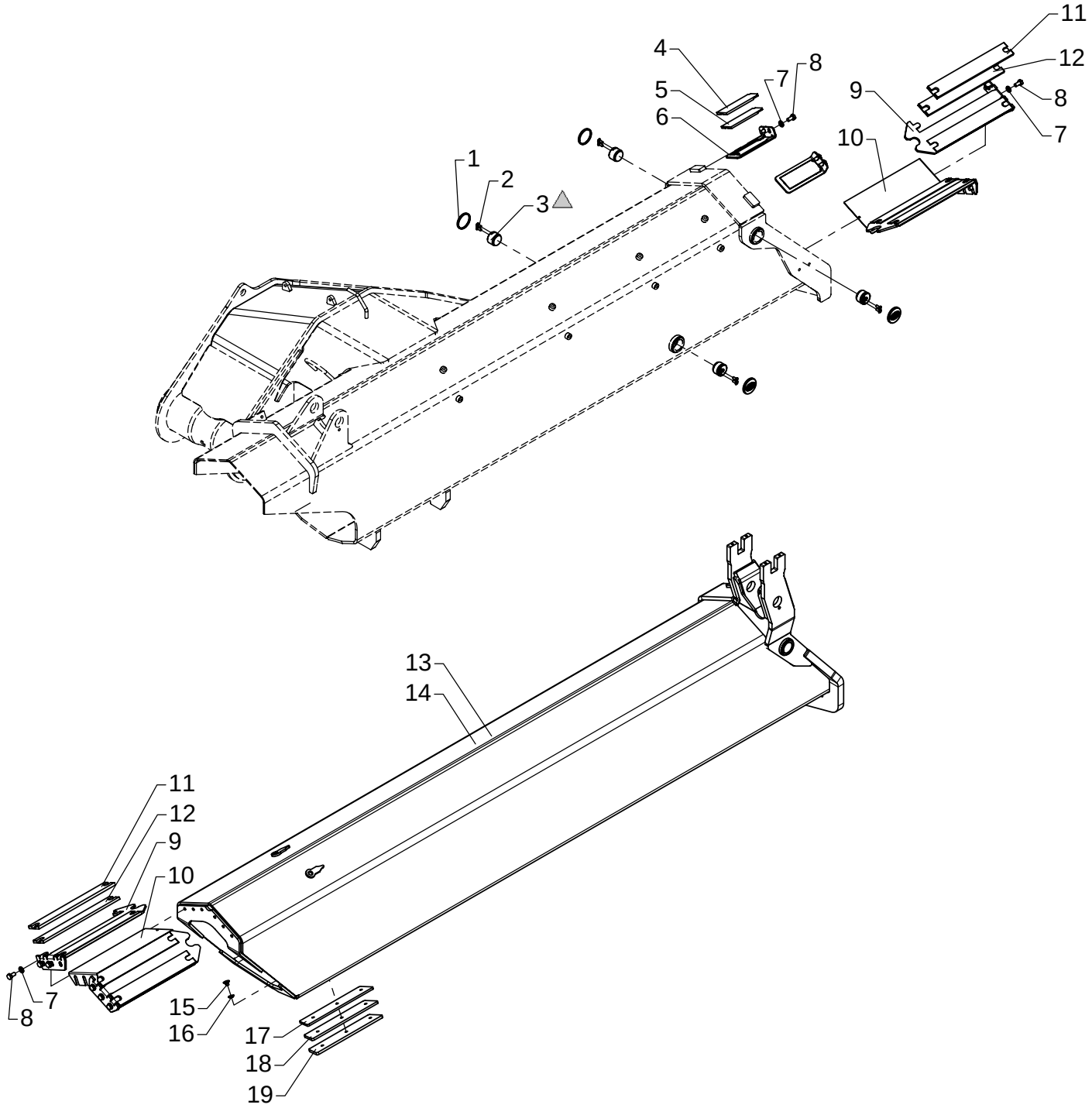

PBC 492

Fittings for extension I

As from / To loader no.: 96 00 00 /
Created: 03.10.2003
Modified:

Item no.	Qty.	Part no.	Description	Remarks
1	4	64362	Plastic plug	
2	8	30540	Countersunk screw	MK6 x 16
3	4	6300334	Guide	
4	2	63668	Slide block	6381524, 7 mm
5	2	63698	Slide block	6 mm
6	2	6300336	Bracket	
7	16	31177	Washer	10 mm
8	16	30154	Set screw	M10 x 20
9	4	6300335	Bracket	
10	4	6300531	Shim	
11	8	63685	Slide block	9 mm
12	8	63697	Slide block	8 mm
13	1	6300311	Jib extension I	*
14	1	6300505	Jib extension I	
15	6	31863	Countersunk screw	MK10 x 12
16	6	31171	Washer	10 mm
17	2	6300321	Spacer	6 mm
18	2	6300322	Spacer	7 mm
19	2	6300341	Spacer	8 mm

* Optimised boom system
Please note: All screws – Loctite 243

Intern ref.: 6300330

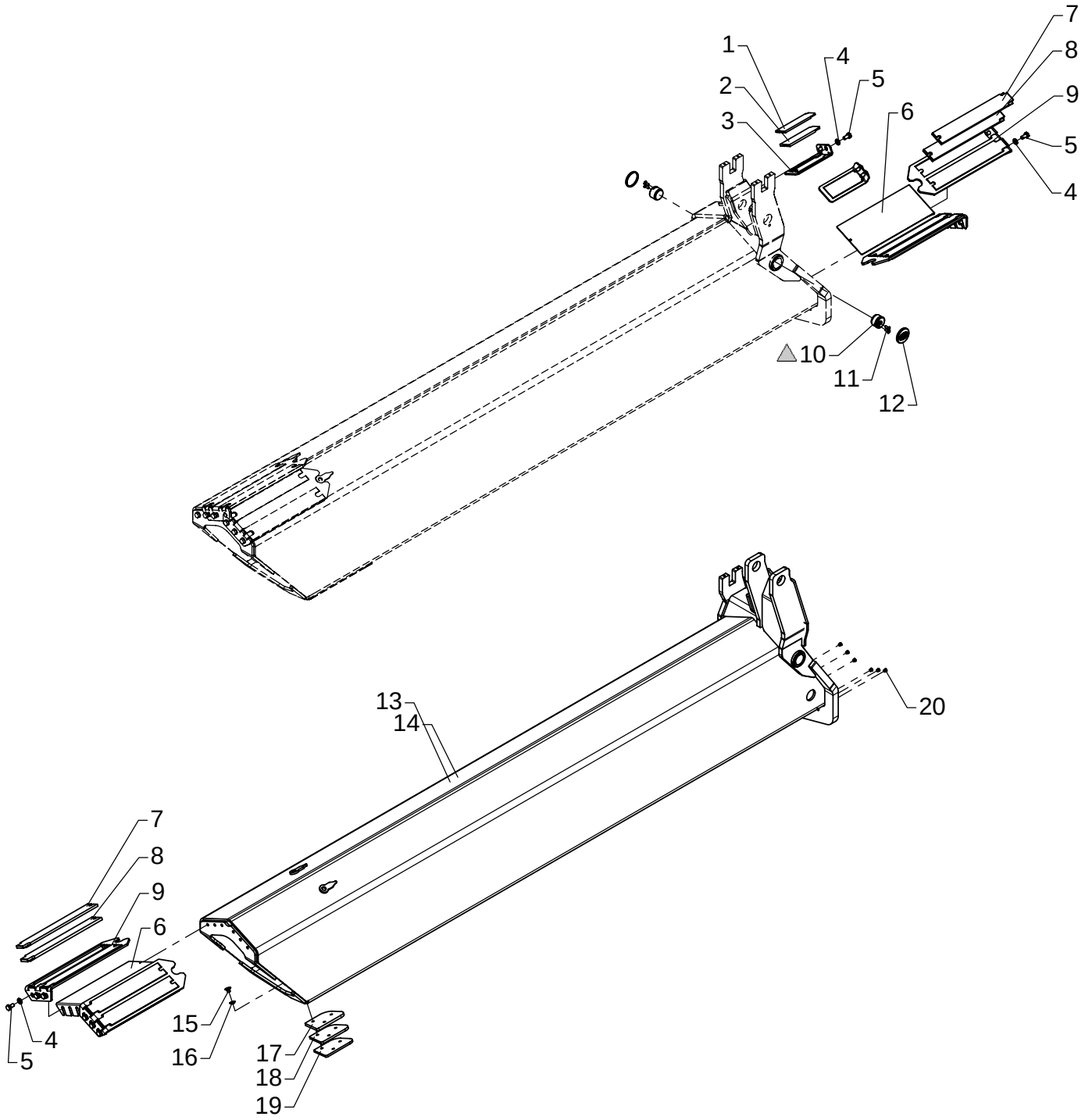

Fittings for extension II

As from / To loader no.: 96 00 00 /
Created: 03.10.2003
Modified:

Item no.	Qty.	Part no.	Description	Remarks
1	2	63698	Slide block	6 mm
2	2	63668	Slide block	6381524, 7 mm
3	2	6300336	Bracket	
4	16	31177	Washer	10 mm
5	16	30154	Set screw	M10 x 20
6	4	6300535	Shim	
7	8	63526	Slide block	8 mm
8	8	63525	Slide block	9 mm
9	4	6300375	Bracket for slide block	
10	2	6300334	Guide	
11	4	30540	Countersunk screw	MK6 x 16
12	2	64362	Plastic plug	
13	1	6300331	Jib extension II	*
14	1	6300511	Jib extension II	
15	6	31863	Countersunk screw	MK10 x 12
16	6	31171	Washer	10 mm
17	2	6300342	Spacer	8 mm
18	2	6300324	Spacer	7 mm
19	2	6300323	Spacer	6 mm
20	6	64366	Plug	

* Optimised boom system
Please note: All screws – Loctite 243

Intern ref.: 6300350

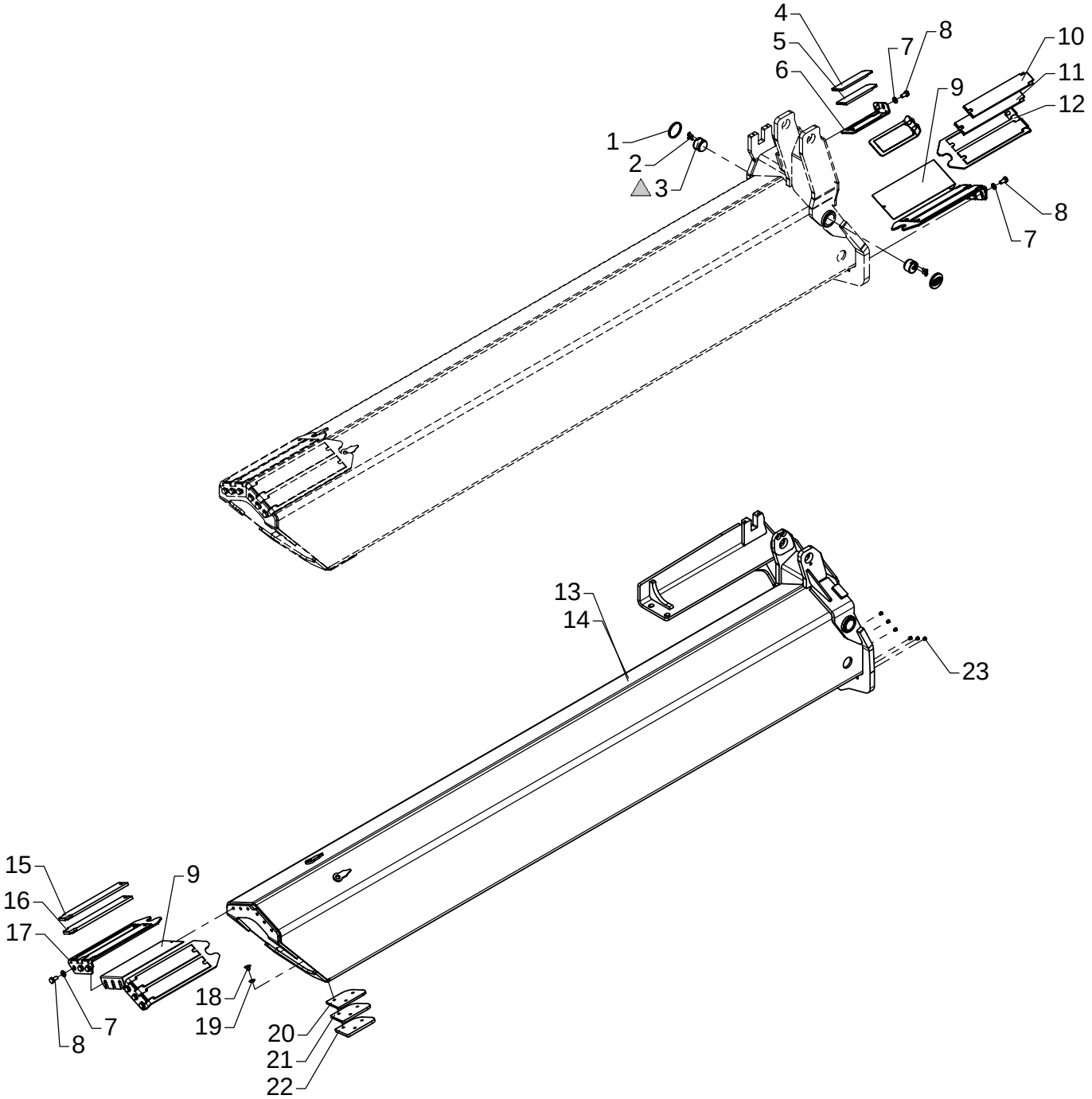

△ PBC 492

Fittings for extension III

As from / To loader no.: 96 00 00 /
Created: 03.10.2003
Modified:

Item no.	Qty.	Part no.	Description	Remarks
1	2	64362	Plastic plug	
2	4	30540	Countersunk screw	MK6 x 16
3	2	6300334	Guide	
4	2	63698	Slide block	6 mm
5	2	63668	Slide block	6381524, 7 mm
6	2	6300336	Bracket	
7	16	31177	Washer	10 mm
8	16	30154	Set screw	M10 x 20
9	4	6300532	Shim	
10	4	63520	Slide block	8 mm
11	4	63669	Slide block	6381474, 9 mm
12	2	6300379	Bracket for slide block	
13	1	6300351	Jib extension III	*
14	1	6300515	Jib extension III	
15	4	63528	Slide block	8 mm
16	4	63527	Slide block	9 mm
17	2	6300394	Bracket for slide block	
18	6	31863	Countersunk screw	MK10 x 12
19	6	31171	Washer	10 mm
20	2	6300323	Spacer	6 mm
21	2	6300324	Spacer	7 mm
22	2	6300342	Spacer	8 mm
23	6	64366	Plug	

* Optimised boom system
Please note: All screws – Loctite 243

Intern ref.: 6300370

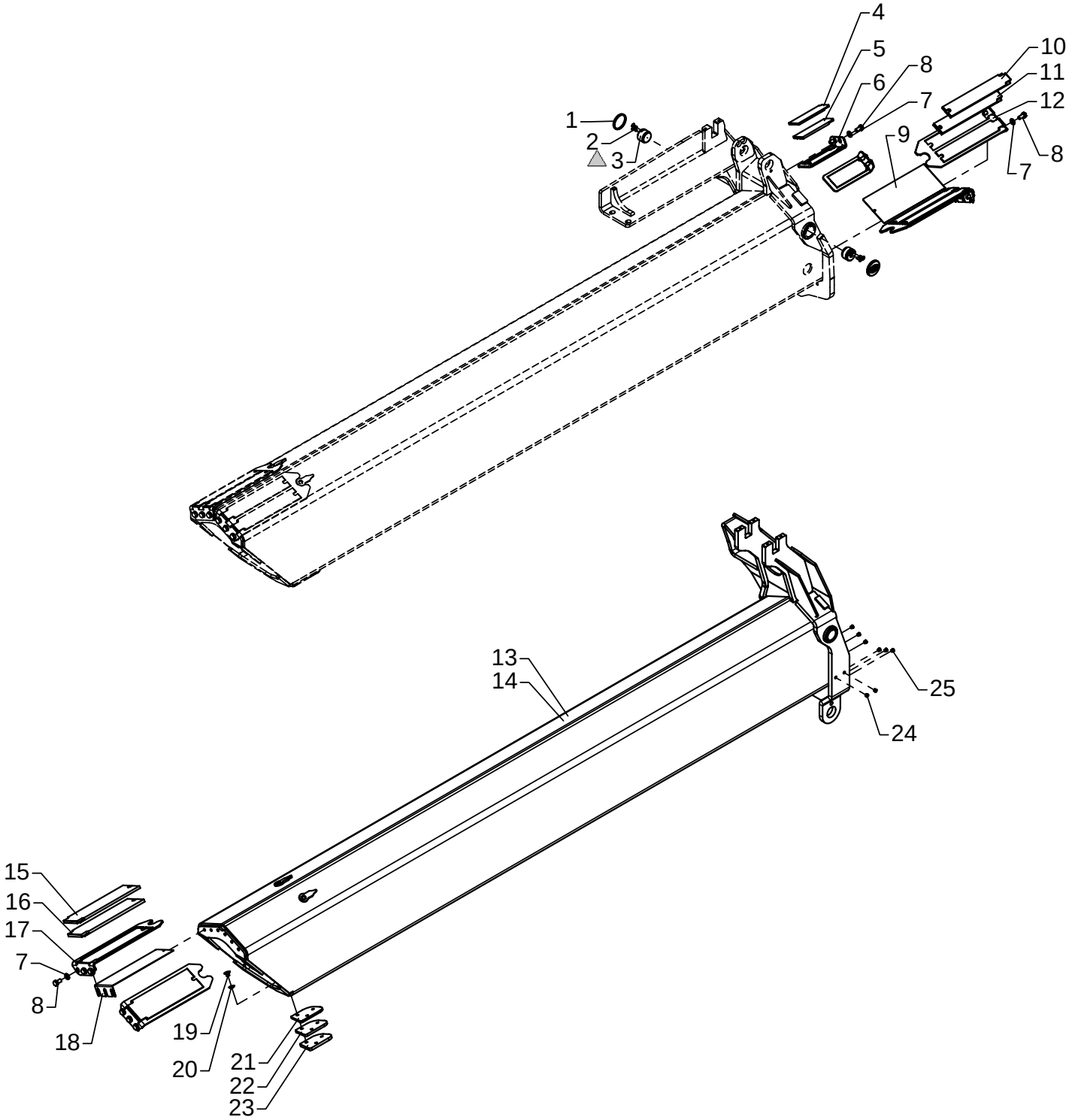

△ PBC 492

Fittings for extension K4

As from / To loader no.: 96 00 00 / 96 00 xx
Created: 03.10.2003
Modified:

Item no.	Qty.	Part no.	Description	Remarks
1	2	64362	Plastic plug	
2	4	30540	Countersunk screw	MK6 x 16
3	2	6300334	Guide	
4	2	63698	Slide block	6 mm
5	2	63668	Slide block	6381524, 7 mm
6	2	6300336	Bracket	
7	16	31177	Washer	10 mm
8	16	30154	Set screw	M10 x 20
9	2	6300532	Shim	
10	4	63528	Slide block	8 mm
11	4	63527	Slide block	9 mm
12	2	6300394	Bracket for slide block	
13	1	6300371	Jib extension K4	*
14	1	6300521	Jib extension K4	
15	2	63521	Slide block	8 mm
16	2	63696	Slide block	9 mm
17	2	6300369	Bracket for slide block	
18	2	6300533	Shim	
19	6	31863	Countersunk screw	MK10 x 12
20	6	31171	Washer	10 mm
21	2	6300325	Spacer	6 mm
22	2	6300326	Spacer	7 mm
23	2	6300343	Spacer	8 mm
24	2	64366	Plug	**
25	6	64366	Plug	

* Optimised boom system
** No extra valves
Please note: All screws – Loctite 243

Intern ref.: 6300370

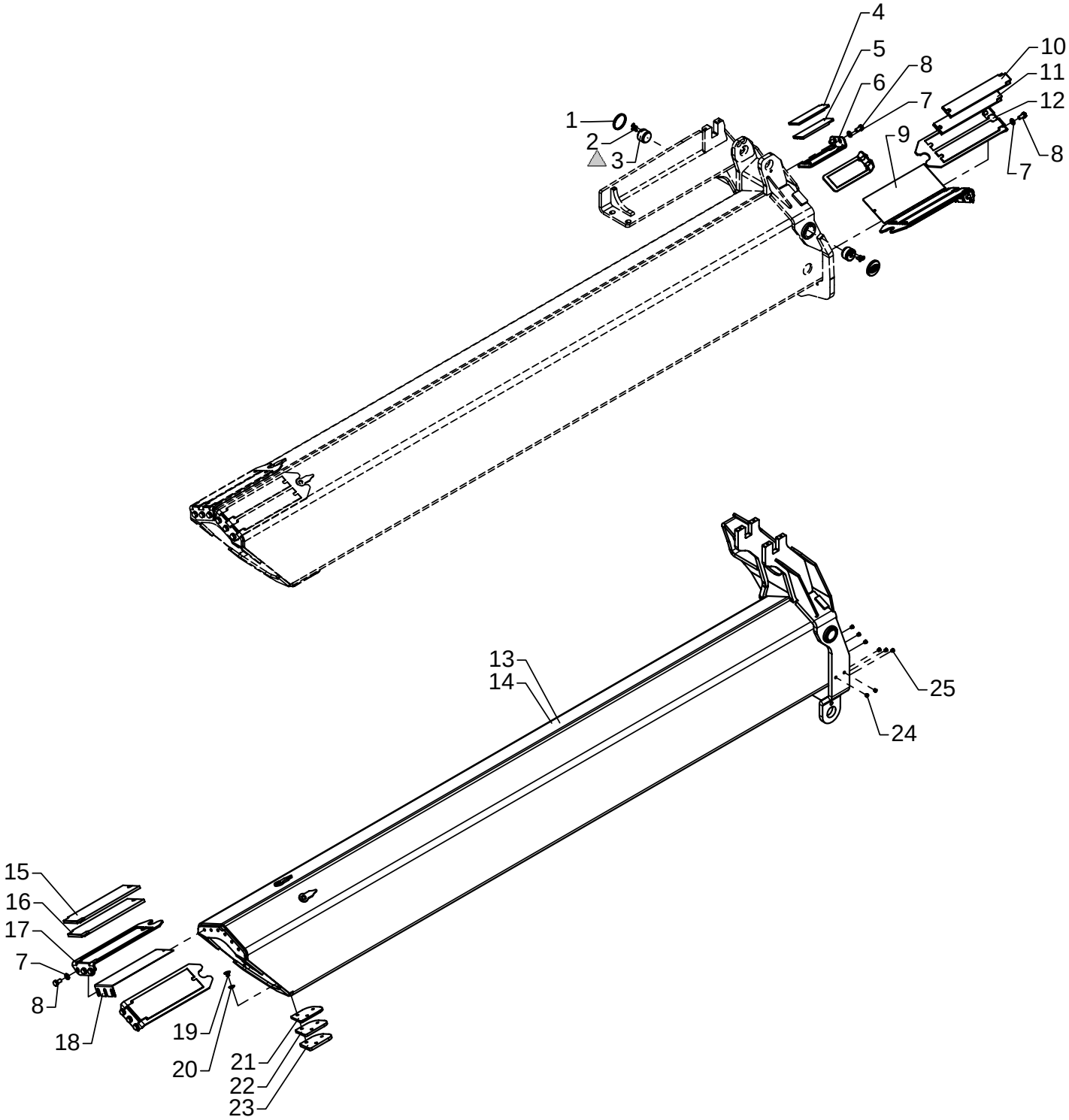

△ PBC 492

Fittings for extension K4

As from / To loader no.: 96 00 xx /
Created: 03.10.2003
Modified:

Item no.	Qty.	Part no.	Description	Remarks
1	2	64362	Plastic plug	
2	4	30540	Countersunk screw	MK6 x 16
3	2	6300334	Guide	
4	2	63698	Slide block	6 mm
5	2	63668	Slide block	6381524, 7 mm
6	2	6300336	Bracket	
7	16	31177	Washer	10 mm
8	16	30154	Set screw	M10 x 20
9	2	6300532	Shim	
10	4	63528	Slide block	8 mm
11	4	63527	Slide block	9 mm
12	2	6300394	Bracket for slide block	
13	1	6300685	Jib extension IV	*
14	1	6300521	Jib extension K4	
15	2	63521	Slide block	8 mm
16	2	63696	Slide block	9 mm
17	2	6300369	Bracket for slide block	
18	2	6300533	Shim	
19	6	31863	Countersunk screw	MK10 x 12
20	6	31171	Washer	10 mm
21	2	6300325	Spacer	6 mm
22	2	6300326	Spacer	7 mm
23	2	6300343	Spacer	8 mm
24	2	64366	Plug	**
25	6	64366	Plug	

* Optimised boom system
** No extra valves
Please note: All screws – Loctite 243

Intern ref.: 6300390

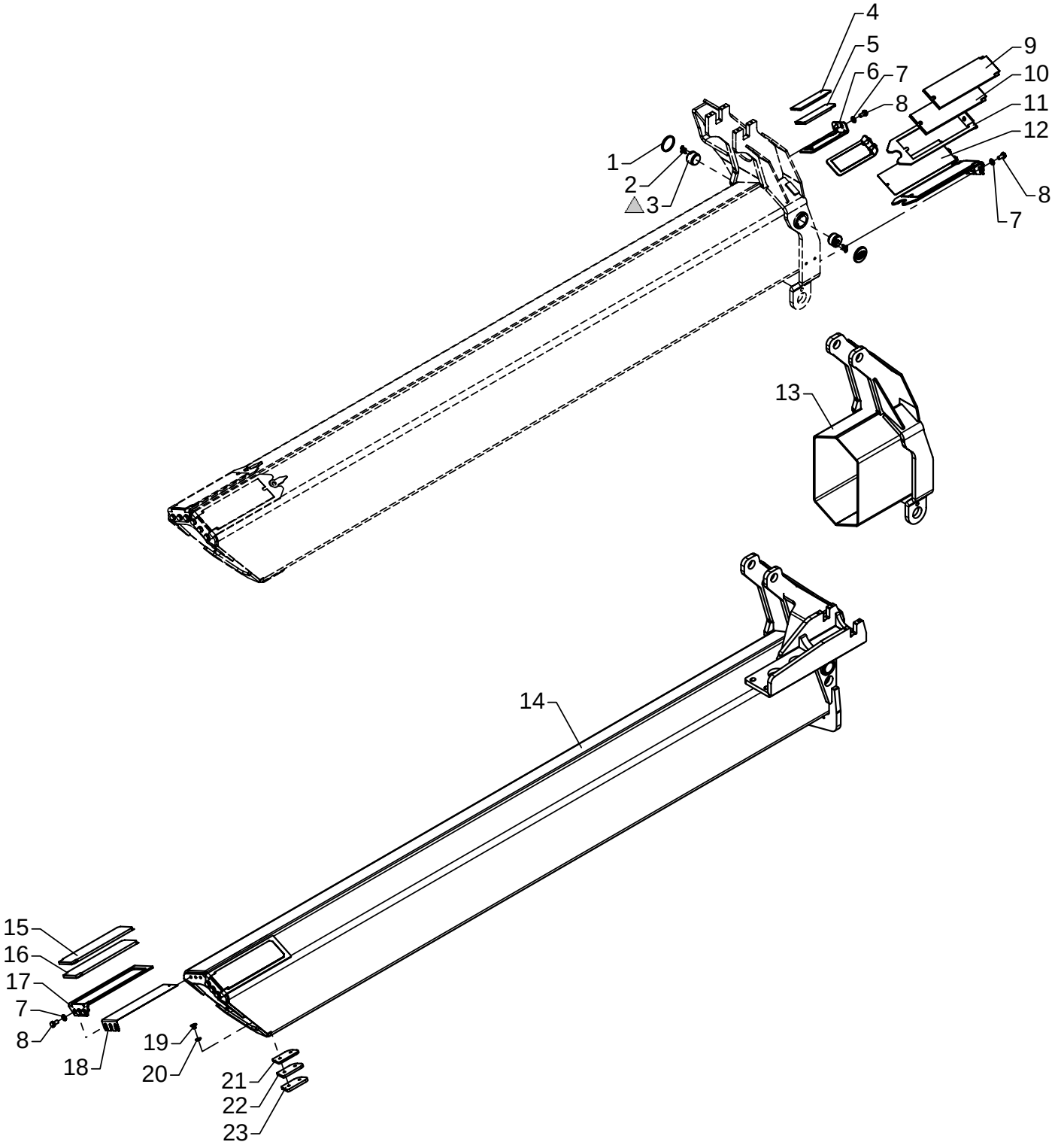

△ PBC 492

Fittings for extension V

As from / To loader no.: 96 00 00 / 96 00 xx
Created: 03.10.2003
Modified:

Item no.	Qty.	Part no.	Description	Remarks
1	2	64362	Plastic plug	
2	4	30540	Countersunk screw	MK6 x 16
3	2	6300334	Guide	
4	2	63698	Slide block	6 mm
5	2	63668	Slide block	6381524, 7 mm
6	2	6300336	Bracket	
7	16	31177	Washer	10 mm
8	16	30154	Set screw	M10 x 20
9	2	63521	Slide block	8 mm
10	2	63696	Slide block	9 mm
11	2	6300369	Bracket for slide block	
12	2	6300533	Shim	
13	1	6300391	Jib extension K5	*
14	1	6300525	Jib extension V	
15	2	63522	Slide block	8 mm
16	2	63760	Slide block	6299054, 9 mm
17	2	6300366	Bracket for slide block	
18	2	6300534	Shim	
19	4	31863	Countersunk screw	MK10 x 12
20	4	31171	Washer	10 mm
21	2	6300396	Spacer	6 mm
22	2	6300397	Spacer	7 mm
23	2	6300398	Spacer	8 mm

* Optimised boom system
Please note: All screws – Loctite 243

Intern ref.: 6300390

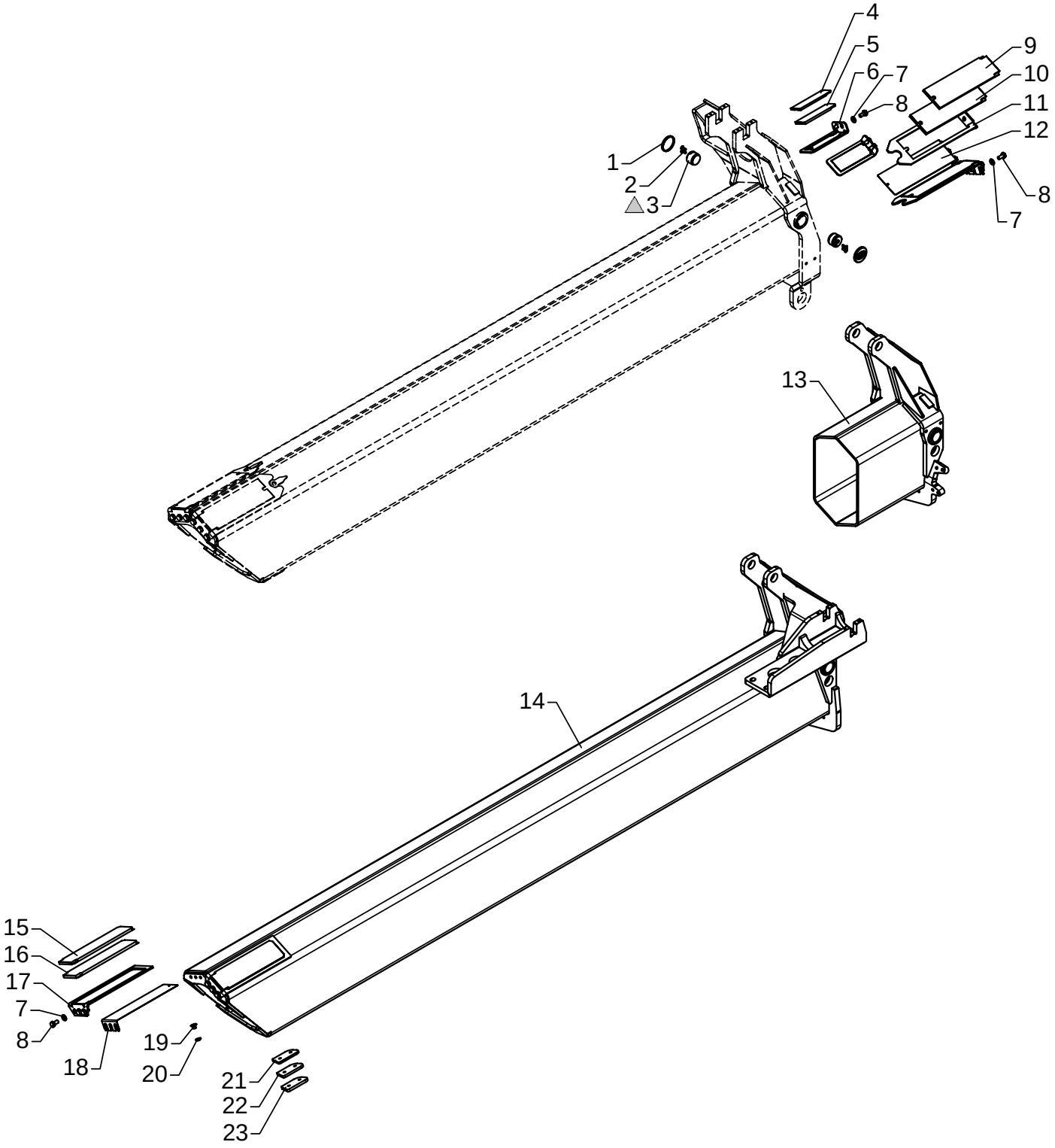

△ PBC 492

Fittings for extension V

As from / To loader no.: 96 00 xx /
Created: 03.10.2003
Modified:

Item no.	Qty.	Part no.	Description	Remarks
1	2	64362	Plastic plug	
2	4	30540	Countersunk screw	MK6 x 16
3	2	6300334	Guide	
4	2	63698	Slide block	6 mm
5	2	63668	Slide block	6381524, 7 mm
6	2	6300336	Bracket	
7	16	31177	Washer	10 mm
8	16	30154	Set screw	M10 x 20
9	2	63521	Slide block	8 mm
10	2	63696	Slide block	9 mm
11	2	6300369	Bracket for slide block	
12	2	6300533	Shim	
13	1	6300691	Jib extension V	*
14	1	6300525	Jib extension V	
15	2	63522	Slide block	8 mm
16	2	63760	Slide block	6299054, 9 mm
17	2	6300366	Bracket for slide block	
18	2	6300534	Shim	
19	4	31863	Countersunk screw	MK10 x 12
20	4	31171	Washer	10 mm
21	2	6300396	Spacer	6 mm
22	2	6300397	Spacer	7 mm
23	2	6300398	Spacer	8 mm

* Optimised boom system
Please note: All screws – Loctite 243

Intern ref.: 6300550

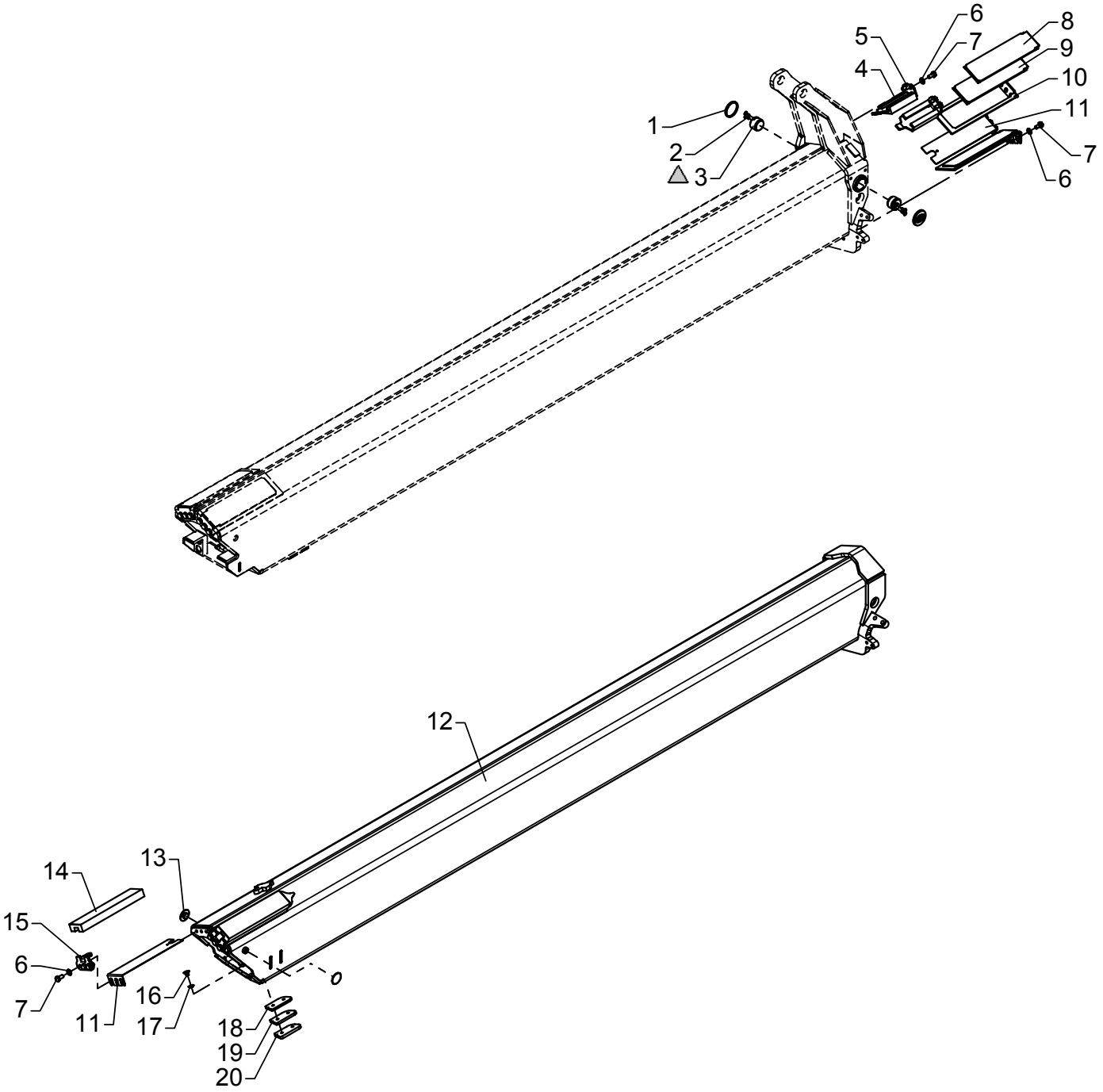

△ PBC 492

Fittings for extension OK6

As from / To loader no.: 96 00 00 /
Created: 13.05.2004
Modified:

Item no.	Qty.	Part no.	Description	Remarks
1	2	64362	Plastic plug	
2	4	30540	Countersunk screw	MK6 x 16
3	2	6300334	Guide	
4	2	63401	Slide block	6299064, 9 mm
5	2	6302636	Bracket for slide block	
6	16	31177	Washer	10 mm
7	16	30154	Set screw	M10 x 20
8	2	63522	Slide block	8 mm
9	2	63760	Slide block	6299054, 9 mm
10	2	6300366	Bracket for slide block	
11	4	6300534	Shim	
12	1	6300911	Jib extension VI	
13	2	6381484	Guide	
14	2	63402	Slide block	6299064, 9 mm
15	2	6302635	Bracket for slide block	
16	4	31863	Countersunk screw	MK10 x 12
17	4	31171	Washer	10 mm
18	2	6300396	Spacer	6 mm
19	2	6300397	Spacer	7 mm
20	2	6300398	Spacer	8 mm

Please note: All screws – Loctite 243

Intern ref.: 6300550

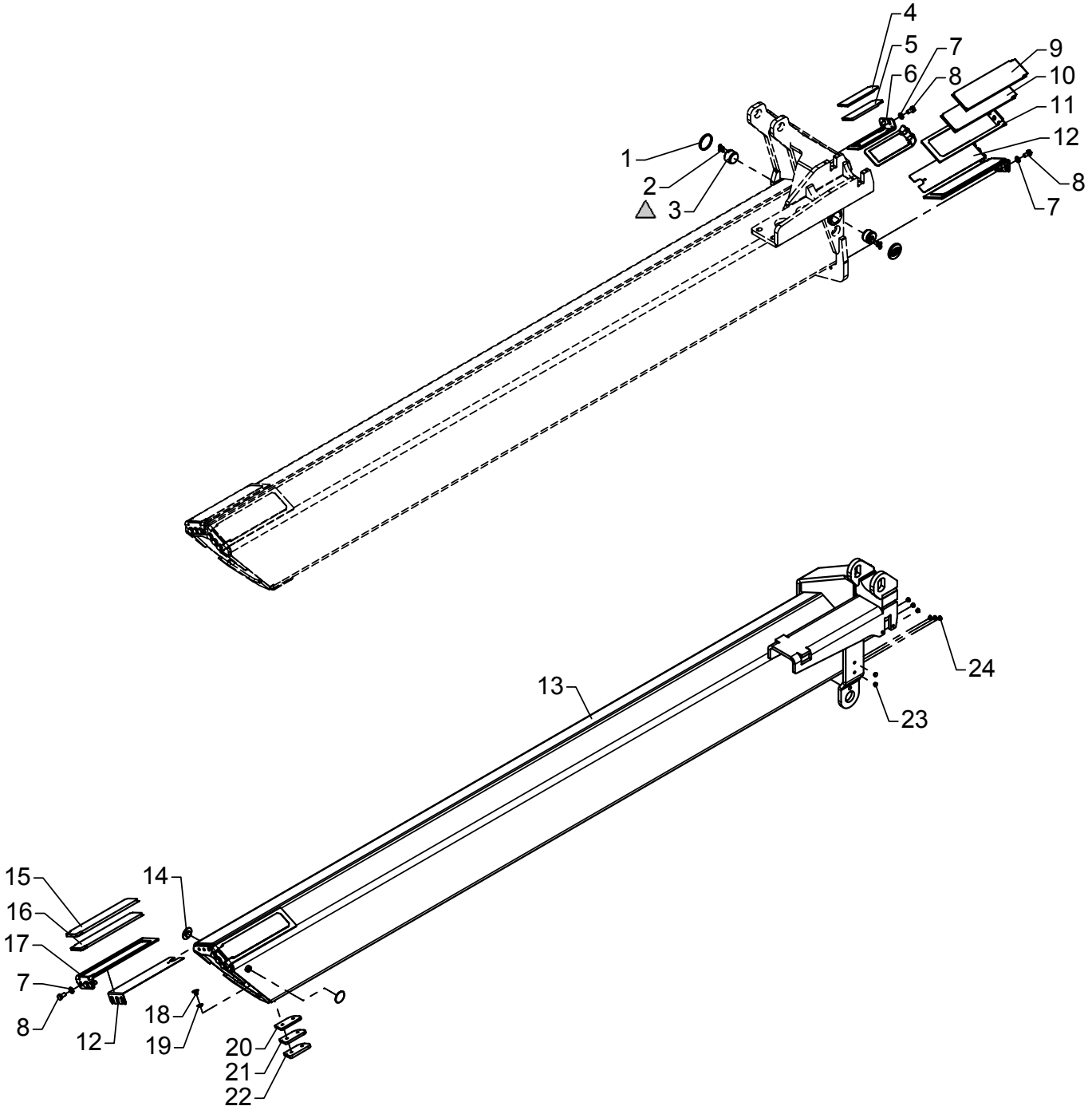

△ PBC 492

Fittings for extension K6

As from / To loader no.: 96 00 00 /
Created: 03.10.2003
Modified: 13.05.2004

Item no.	Qty.	Part no.	Description	Remarks
1	2	64362	Plastic plug	
2	4	30540	Countersunk screw	MK6 x 16
3	2	6300334	Guide	
4	2	63698	Slide block	6 mm
5	2	63668	Slide block	6381524, 7 mm
6	2	6300336	Bracket	
7	16	31177	Washer	10 mm
8	16	30154	Set screw	M10 x 20
9	2	63522	Slide block	8 mm
10	2	63760	Slide block	6299054, 9 mm
11	2	6300366	Bracket for slide block	
12	4	6300534	Shim	
13	1	6300541	Jib extension K6	
14	2	6381484	Guide	
15	2	63761	Slide block	6299064, 9 mm
16	2	63529	Slide block	8 mm
17	2	6300399	Bracket for slide block	
18	4	31863	Countersunk screw	MK10 x 12
19	4	31171	Washer	10 mm
20	2	6300396	Spacer	6 mm
21	2	6300397	Spacer	7 mm
22	2	6300398	Spacer	8 mm
23	2	64366	Plug	**
24	6	64366	Plug	

** No extra valves
Please note: All screws – Loctite 243

Intern ref.: 6300570

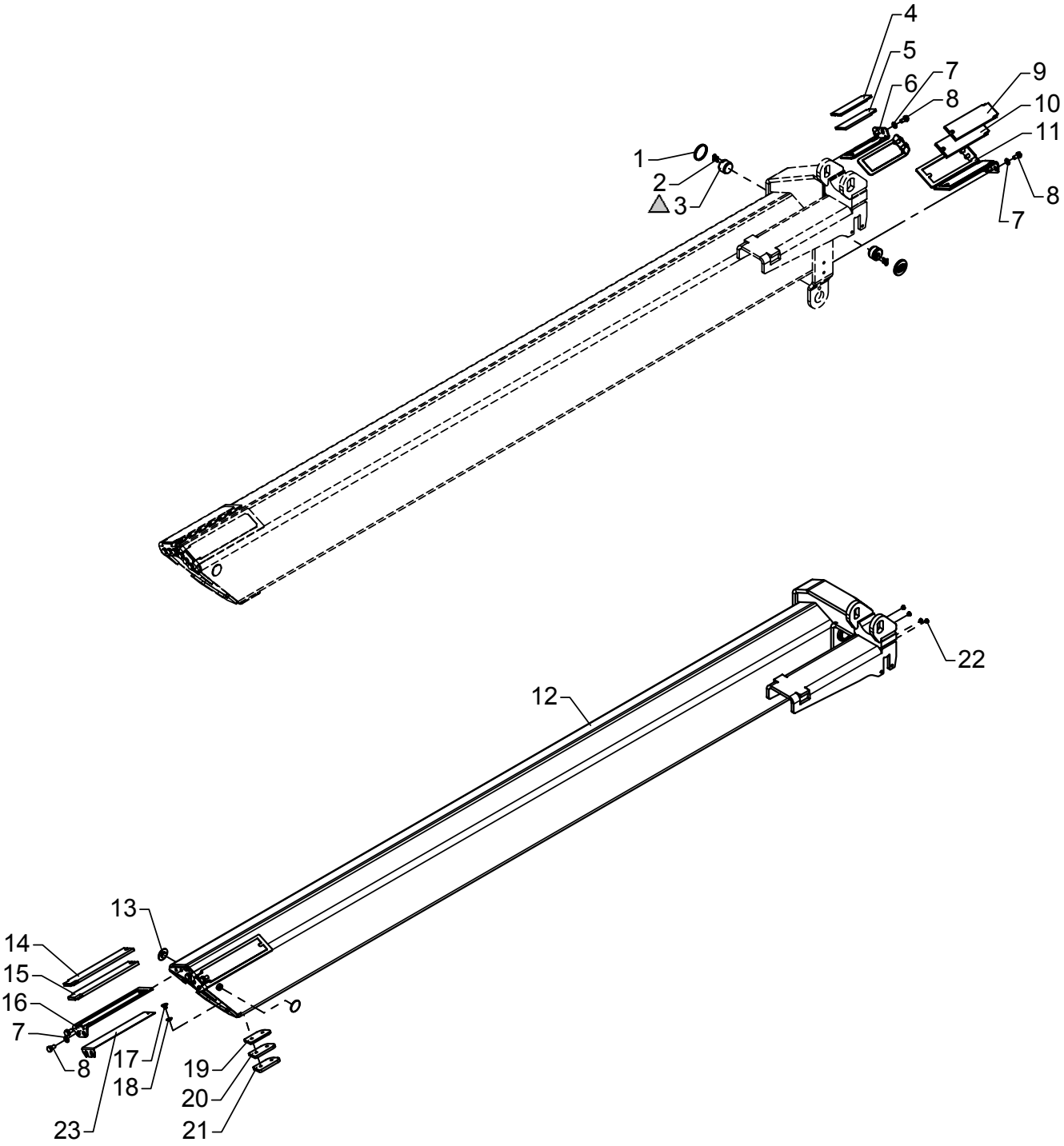

△ PBC 492

Fittings for extension VII

As from / To loader no.: 96 00 00 /
Created: 03.10.2003
Modified: 13.05.2004

Item no.	Qty.	Part no.	Description	Remarks
1	2	64362	Plastic plug	
2	4	30540	Countersunk screw	MK6 x 16
3	2	6300334	Guide	
4	2	63698	Slide block	6 mm
5	2	63668	Slide block	6381524, 7 mm
6	2	6300336	Bracket	
7	14	31177	Washer	10 mm
8	14	30154	Set screw	M10 x 20
9	2	63523	Slide block	8 mm
10	2	63695	Slide block	9 mm
11	2	6300367	Bracket for slide block	
12	1	6300561	Jib extension VII	
13	2	6381484	Guide	
14	2	63520	Slide block	8 mm
15	2	63669	Slide block	6381474, 9 mm
16	2	6300368	Bracket for slide block	
17	4	31863	Countersunk screw	MK10 x 12
18	4	31171	Washer	10 mm
19	2	6300396	Spacer	6 mm
20	2	6300397	Spacer	7 mm
21	2	6300398	Spacer	8 mm
22	4	64366	Plug	
23	2	6300568	Shim	

Please note: All screws – Loctite 243

Intern ref.: 6300590

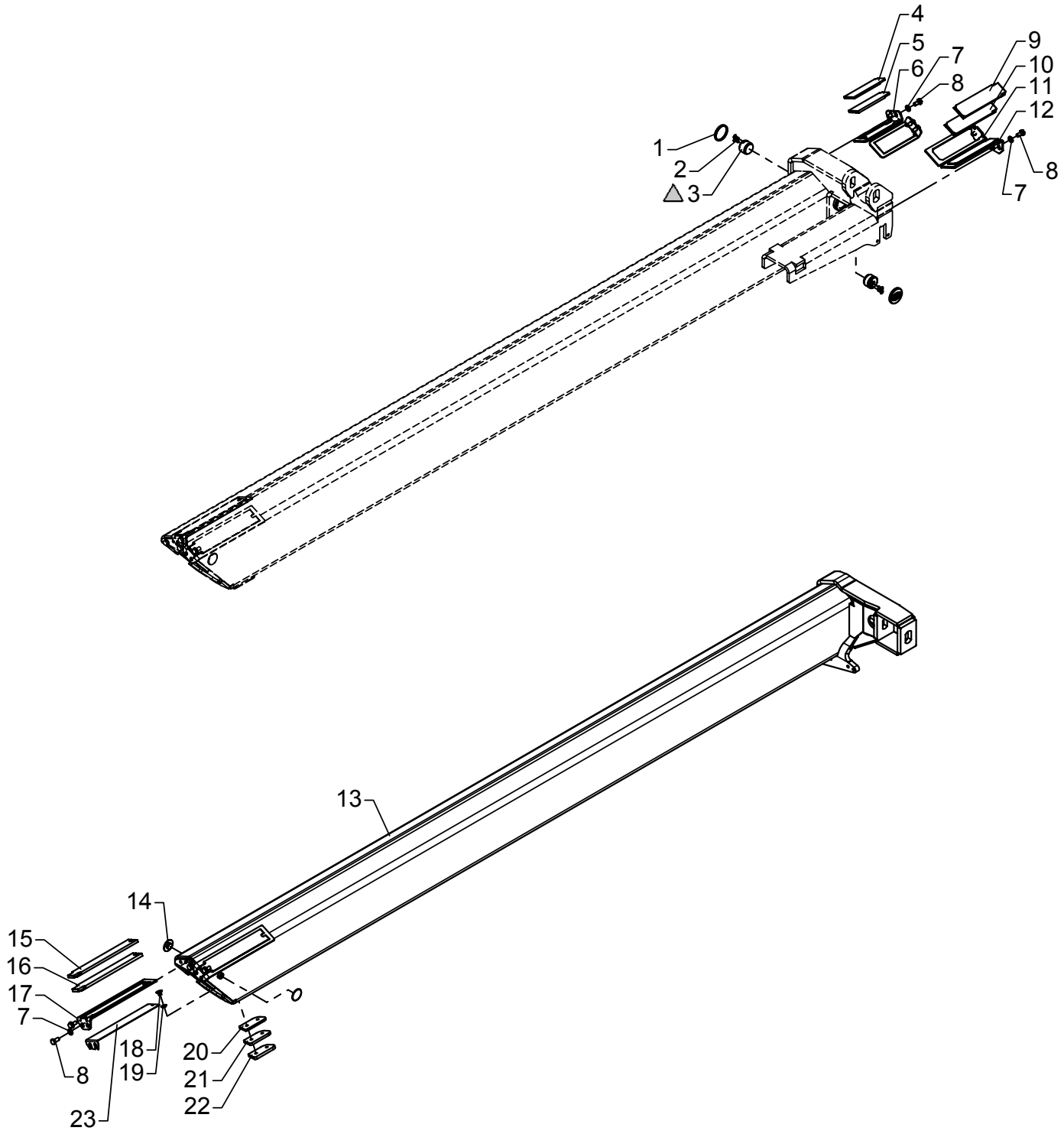

△ PBC 492

Fittings for extension VIII

As from / To loader no.: 96 00 00 /
Created: 03.10.2003
Modified: 13.05.2004

Item no.	Qty.	Part no.	Description	Remarks
1	2	64362	Plastic plug	
2	4	30540	Countersunk screw	MK6 x 16
3	2	6300334	Guide	
4	2	63698	Slide block	6 mm
5	2	63668	Slide block	6381524, 7 mm
6	2	6300336	Bracket	
7	12	31177	Washer	10 mm
8	12	30154	Set screw	M10 x 20
9	2	63516	Slide block	8 mm
10	2	63764	Slide block	6239674, 9 mm
11	1	6239573	Bracket	
12	1	6239563	Bracket	
13	1	6300581	Jib extension VIII	
14	2	6381484	Guide	
15	2	63528	Slide block	8 mm
16	2	63527	Slide block	9 mm
17	2	6300443	Bracket for slide block	
18	4	31863	Countersunk screw	MK10 x 12
19	4	31171	Washer	10 mm
20	2	6300396	Spacer	6 mm
21	2	6300397	Spacer	7 mm
22	2	6300398	Spacer	8 mm
23	2	6300568	Shim	

Please note: All screws – Loctite 243

Intern ref.: 6300520

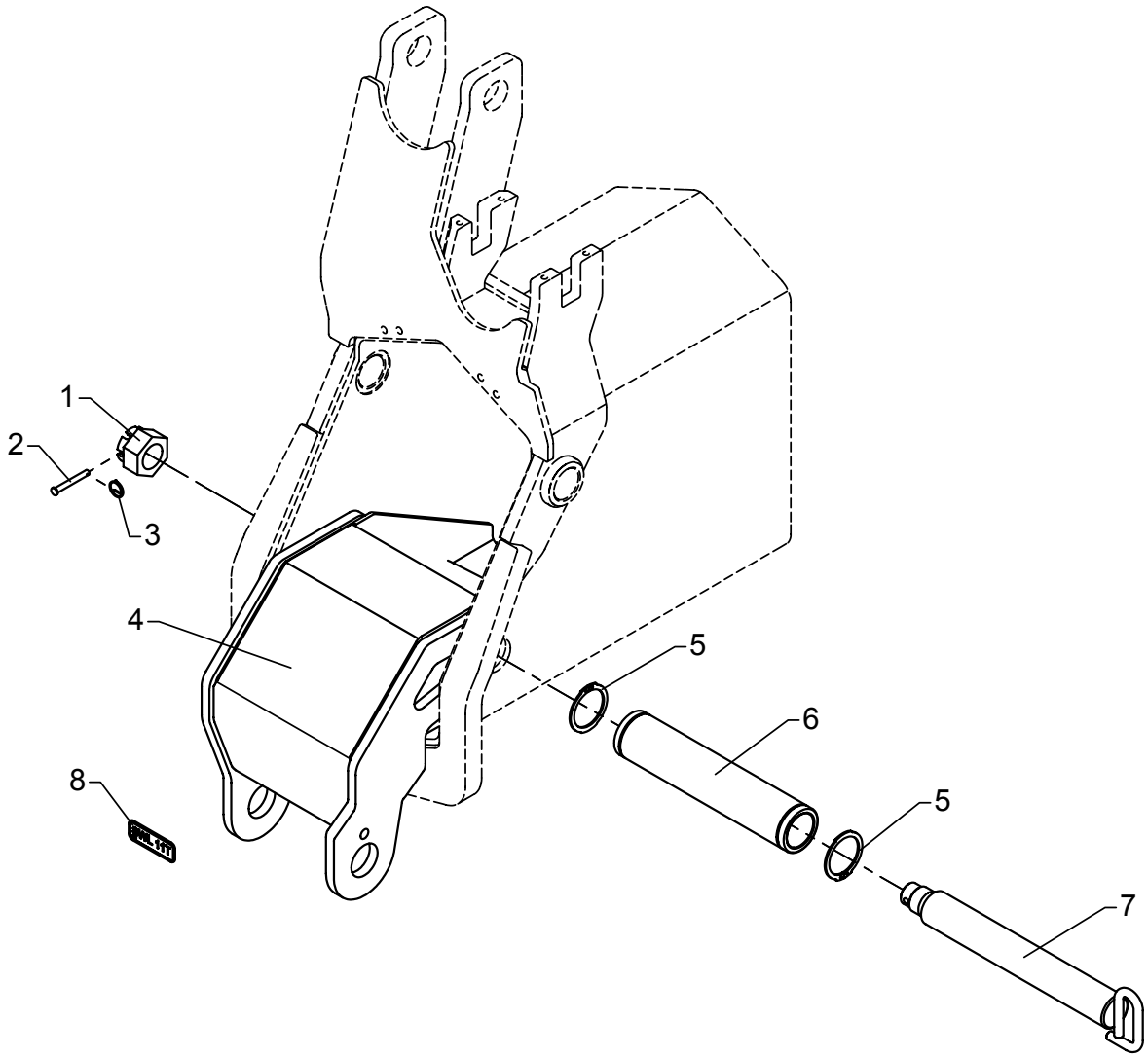

Separate hook suspension, OK2

As from / To loader no.: 96 00 00 /
Created: 03.10.2003
Modified: 13.04.2004

Item no.	Qty.	Part no.	Description	Remarks
1	1	30839	Nut	M30
2	1	31279	Cotter bolt	ø6 x 50
3	1	33458	Lock ring	
4	1	6300381	Hook suspension	
5	2	33129	Circlip	50U
6	1	6300376	Hub	
7	1	6300467	Pin for suspension	
8	1	66542	Plate SWL 11 t	

Intern ref.: 6300520

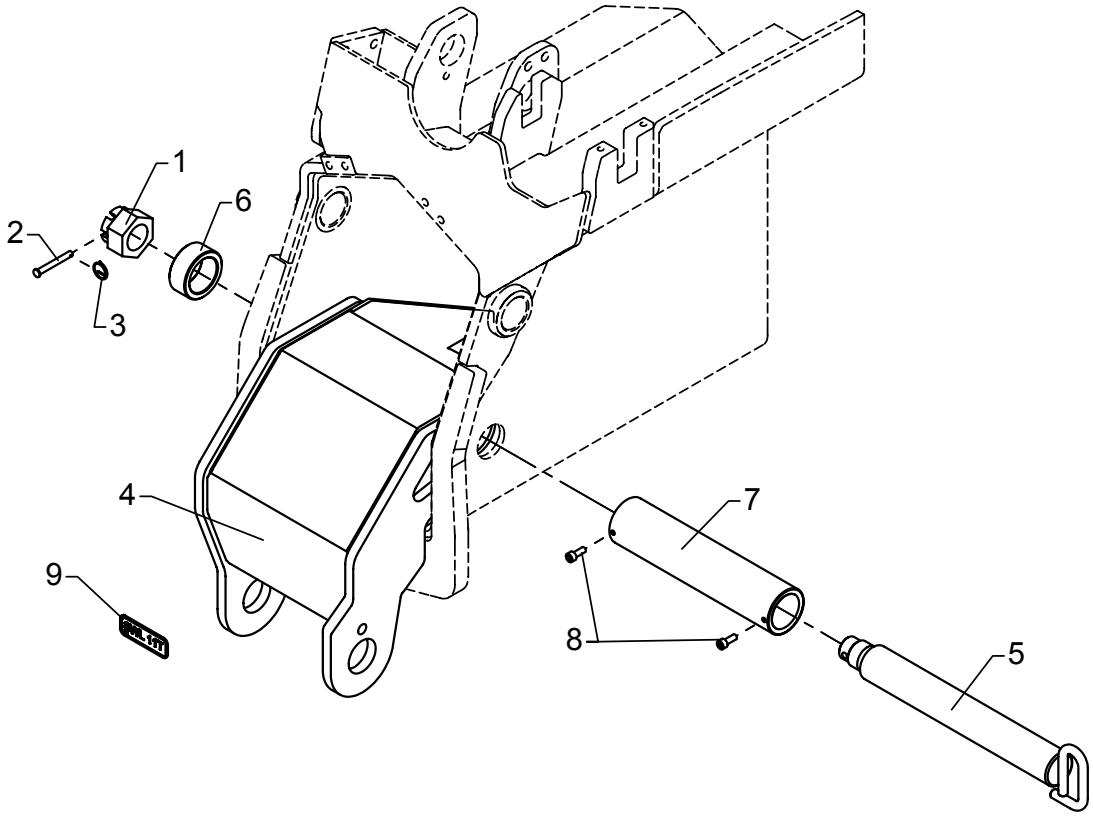

Separate hook suspension, OK3

As from / To loader no.: 96 00 00 /
Created: 03.10.2003
Modified: 13.04.2004

Item no.	Qty.	Part no.	Description	Remarks
1	1	30839	Nut	M30
2	1	31279	Cotter bolt	ø6 x 50
3	1	33458	Lock ring	
4	1	6300381	Hook suspension	
5	1	6300467	Pin for suspension	
6	1	6300469	Spacer	
7	1	6300479	Hub	
8	2	31539	Screw, stainless	MC6 x 16
9	1	66542	Plate SWL 11 t	

Intern ref.: 6301250

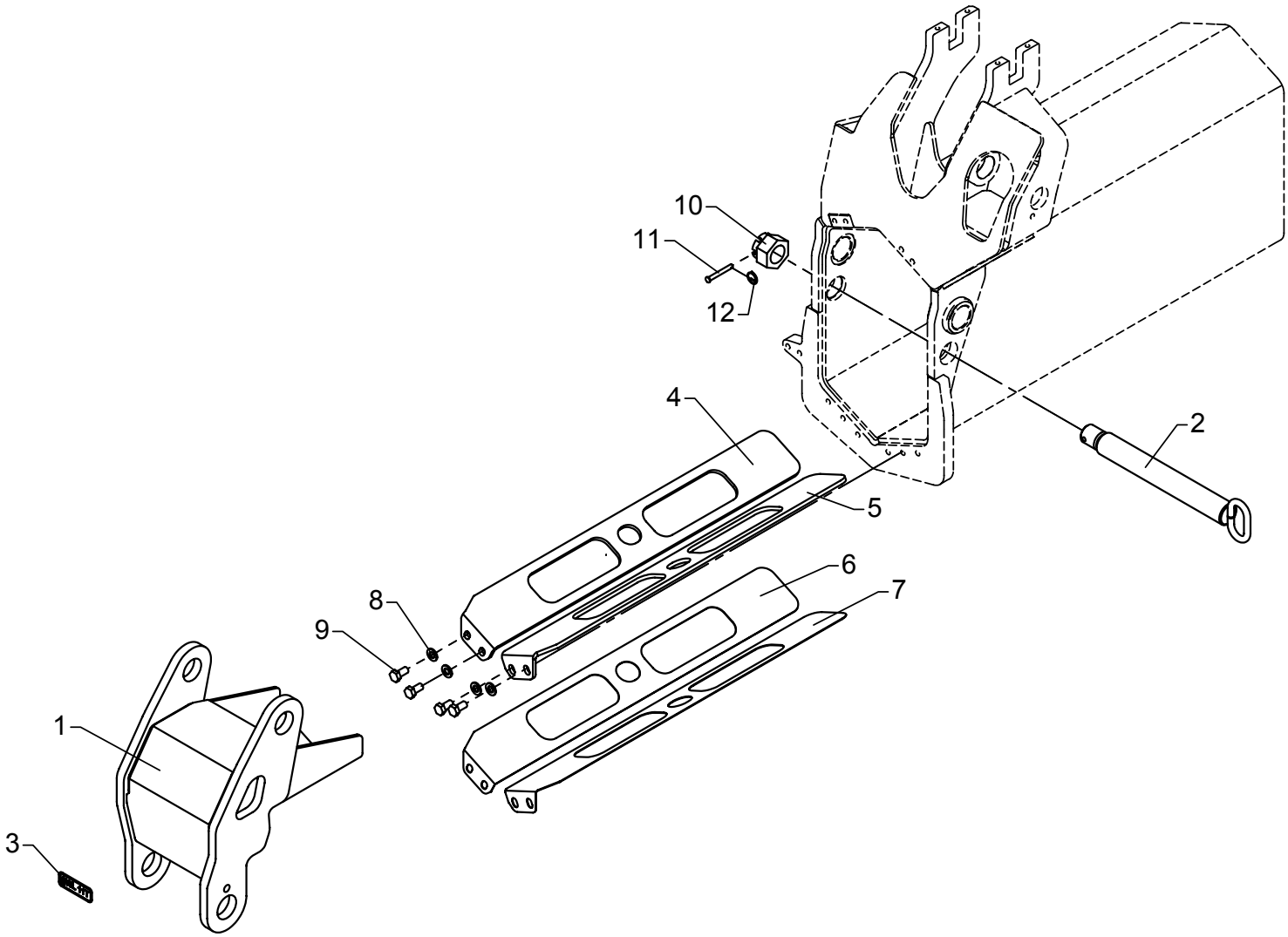

Separate hook suspension, OK4

As from / To loader no.: 96 00 00 /
Created: 03.10.2003
Modified: 13.04.2004

Item no.	Qty.	Part no.	Description	Remarks
1	1	6300715	Hook suspension OK4	
2	1	6302718	Pin for hook suspension	
3	1	66542	Plate SWL 11 t	
4	1	6300705	Spacer, right	
5	1	6300706	Spacer, right	
6	1	6300707	Shim, right	
7	1	6300708	Shim, right	
8	4	31177	Washer	10 mm
9	4	31517	Set screw, stainless	M10 x 20
10	1	30839	Nut	M30
11	1	31279	Cotter bolt	ø6 x 50
12	1	33458	Lock ring	

Intern ref.: 6301260

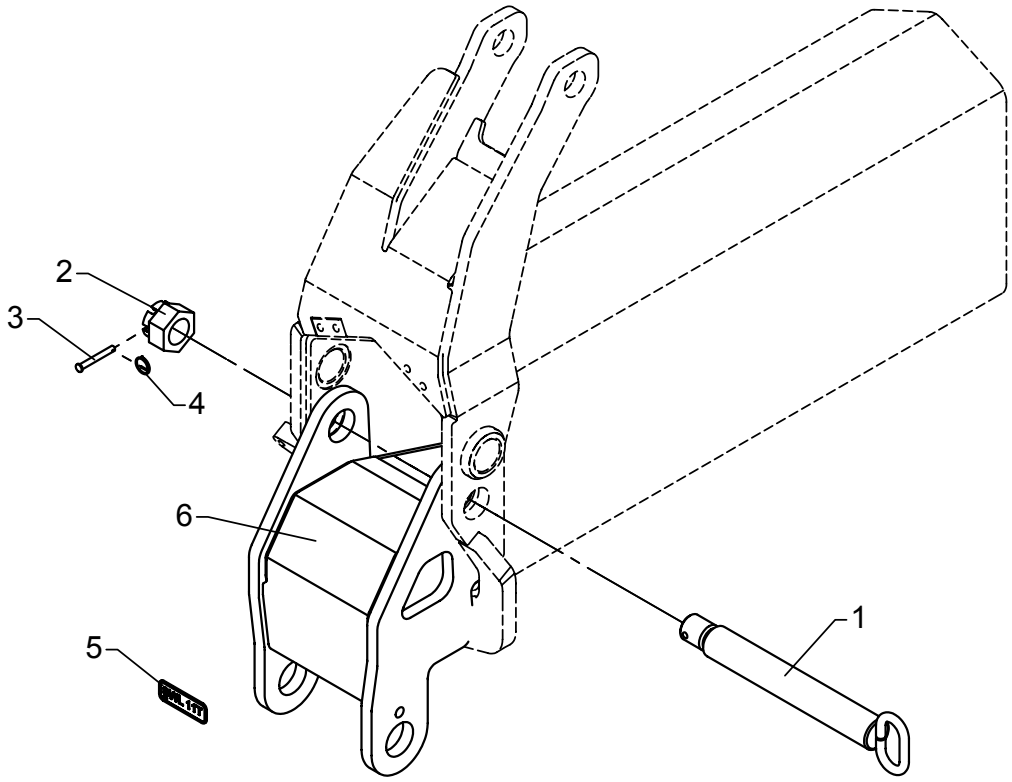

Separate hook suspension, OK5

As from / To loader no.: 96 00 00 /
Created: 03.10.2003
Modified: 13.04.2004

Item no.	Qty.	Part no.	Description	Remarks
1	1	6302728	Pin for suspension	
2	1	30839	Nut	M30
3	1	31279	Cotter bolt	ø6 x 50
4	1	33458	Lock ring	
5	1	66542	Plate SWL 11 t	
6	1	6300725	Hook suspension OK5	

Intern ref.: 6301270

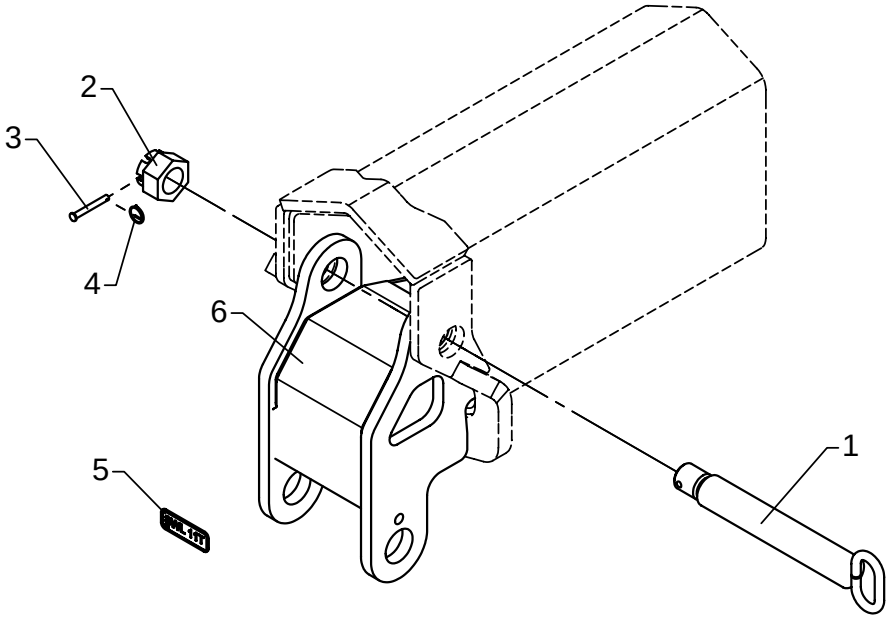

Separate hook suspension, OK6

As from / To loader no.: 96 00 00 /
Created: 12.05.2004
Modified:

Item no.	Qty.	Part no.	Description	Remarks
1	1	6302748	Pin for hook suspension	
2	1	30839	Nut	M30
3	1	31279	Cotter bolt	ø6 x 50
4	1	33458	Lock ring	
5	1	66542	Plate SWL 11 t	
6	1	6300735	Hook suspension OK6	

Intern ref.: 6300530

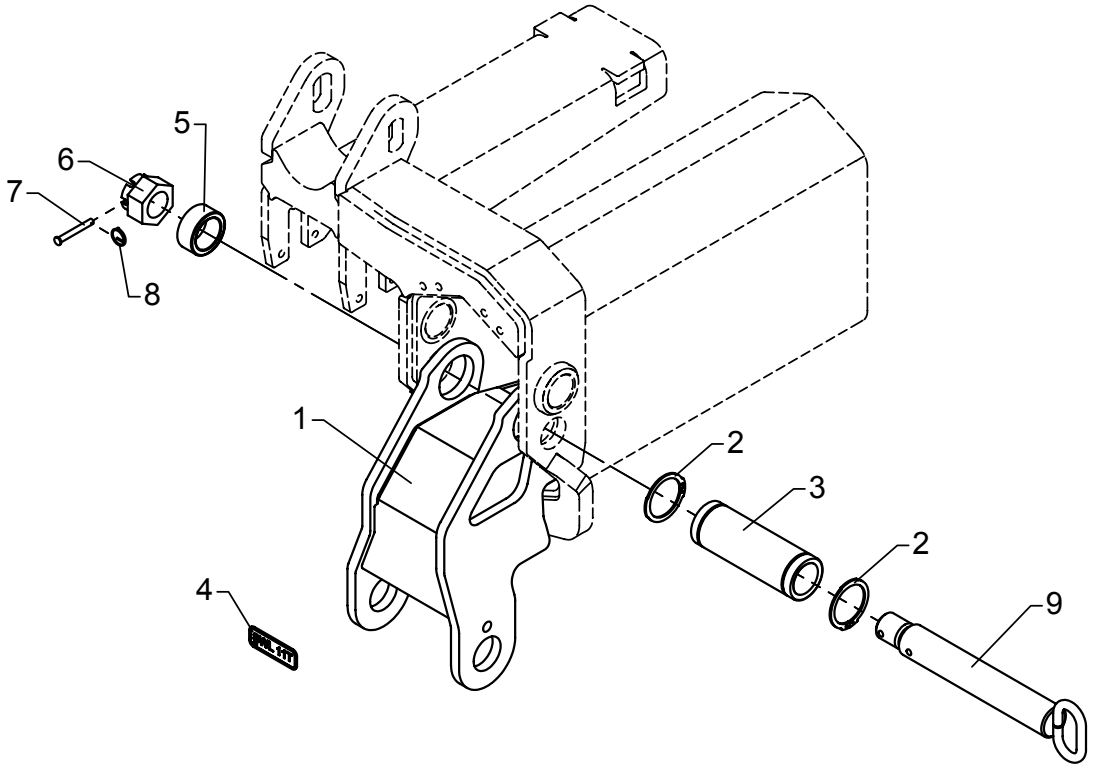

Separate hook suspension, K7

As from / To loader no.: 96 00 00 /
Created: 03.10.2003
Modified: 12.05.2004

Item no.	Qty.	Part no.	Description	Remarks
1	1	6300841	Hook suspension K7 - K8	
2	2	33129	Circlip	50U
3	1	6300847	Hub	
4	1	66542	Plate SWL 11 t	
5	1	6301036	Hub	
6	1	30839	Nut	M30
7	1	31279	Cotter bolt	ø6 x 50
8	1	33458	Lock ring	
9	1	6302748	Pin for hook suspension	

Intern ref.: 6300530

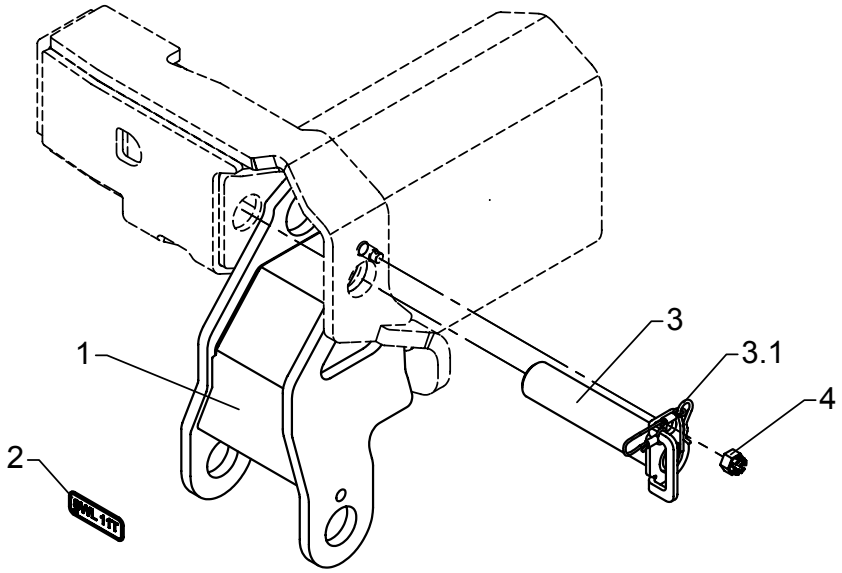

Separate hook suspension, K8

As from / To loader no.: 96 00 00 /
Created: 03.10.2003
Modified: 12.05.2004

Item no.	Qty.	Part no.	Description	Remarks
1	1	6300841	Hook suspension K7 - K8	
2	1	66542	Plate SWL 11 t	
3	1	6300593	Lock pin with lock spring	
4	1	32127	Nut	M12

Intern ref.: 6300270

OK2-OK5

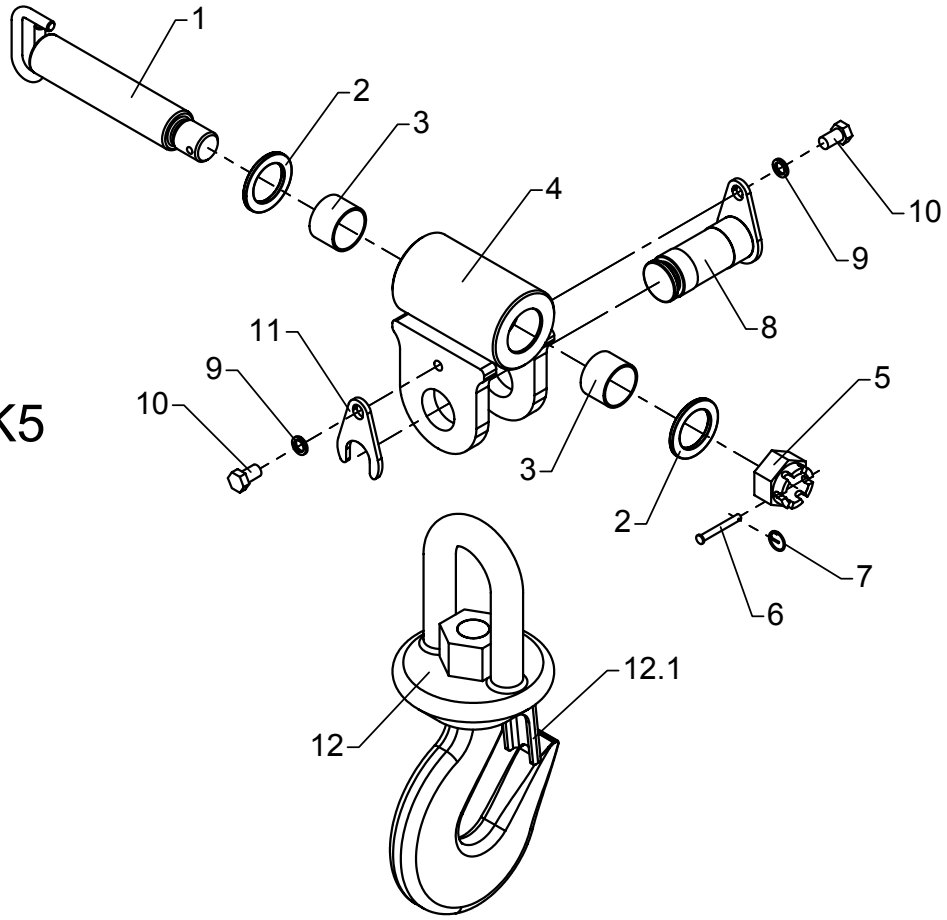

OK6
K7-K8

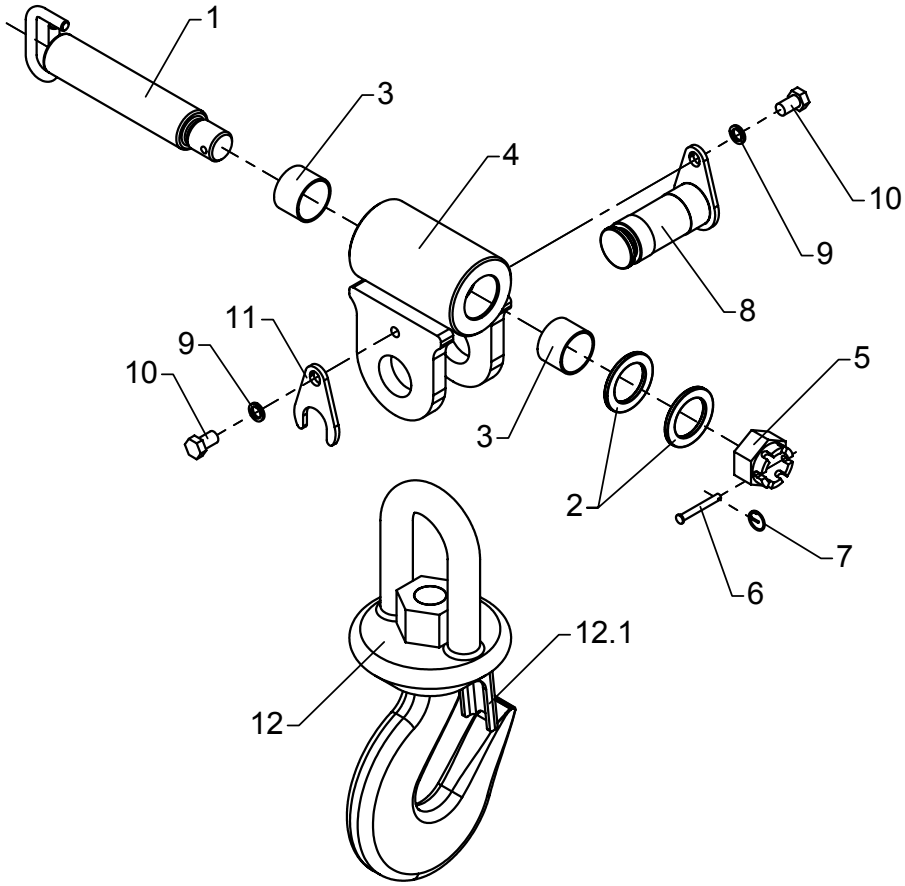

Hook suspension

As from / To loader no.: 96 00 00 /
Created: 13.04.2004
Modified: 12.05.2004

Item no.	Qty.	Part no.	Description	Remarks
1	1	6300387	Pin for suspension	
2	2	6193554	Distance ring	
3	2	23947	Composite bearing	ø40/44 x 30
4	1	6193483	Suspension	
5	1	30839	Nut	M30
6	1	31279	Cotter bolt	ø6 x 50
7	1	33458	Lock ring	
8	1	6193524	Pin	
9	2	31158	Spring washer	12 mm
10	2	30175	Set screw	M12 x 20
11	1	6193544	Lock plate	
12	1	62167	Hook with ball bearing	11,5T
		62159	Safety catch	

Intern ref.: 6300080

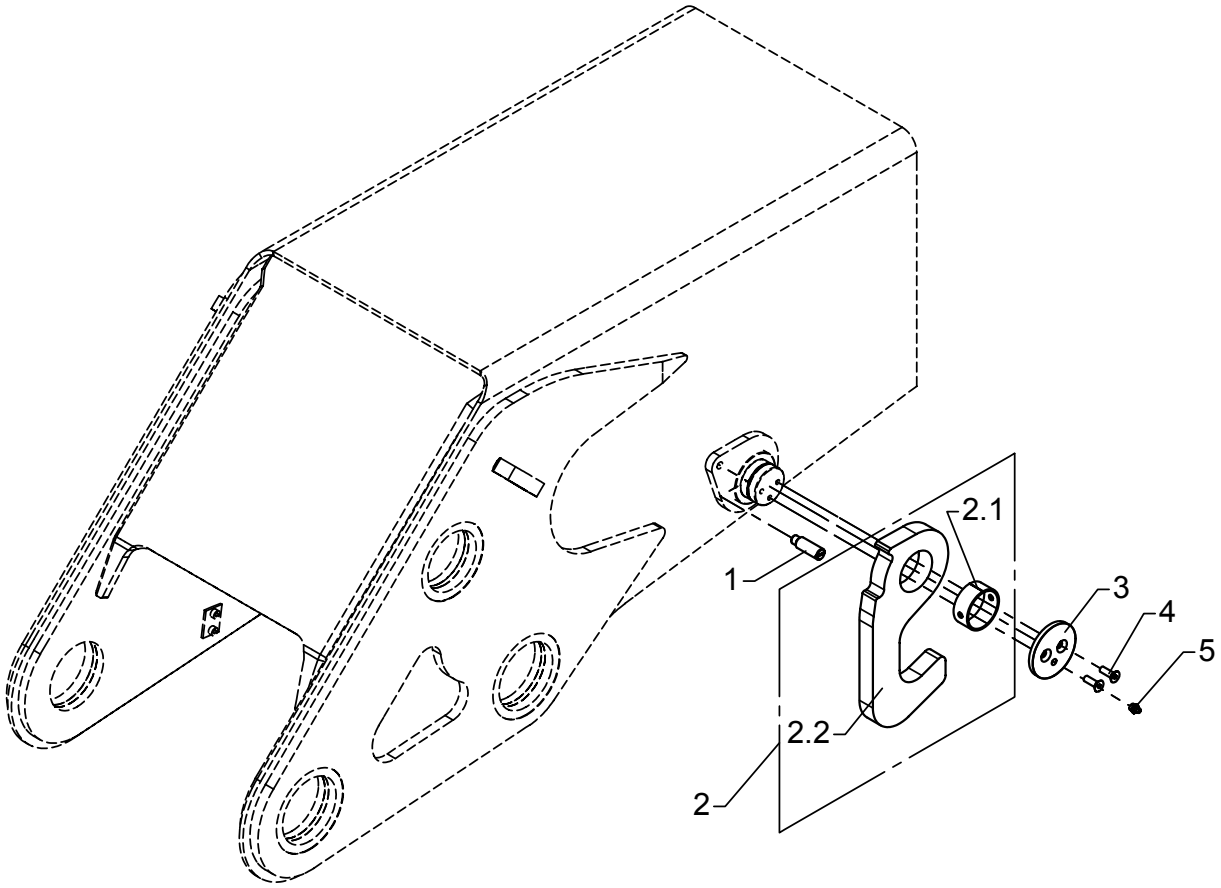

Stowing hook, complete

As from / To loader no.: 96 00 00 /
Created: 03.10.2003
Modified: 11.06.2004

Item no.	Qty.	Part no.	Description	Remarks
1	1	6302085	Locking pin	
2	1	6300020	Stowing hook incl. bushing	
	1	23929	Bushing	PM 5520 DX
	1	6300084	Stowing hook	
3	1	6302309	End plate	
4	2	31964	Counter sunk screw, stainless	MK8 x 25
5	1	31318	Lubricator	1/8" RG

52202630

6301100
6301110
Intern ref.: 6301120

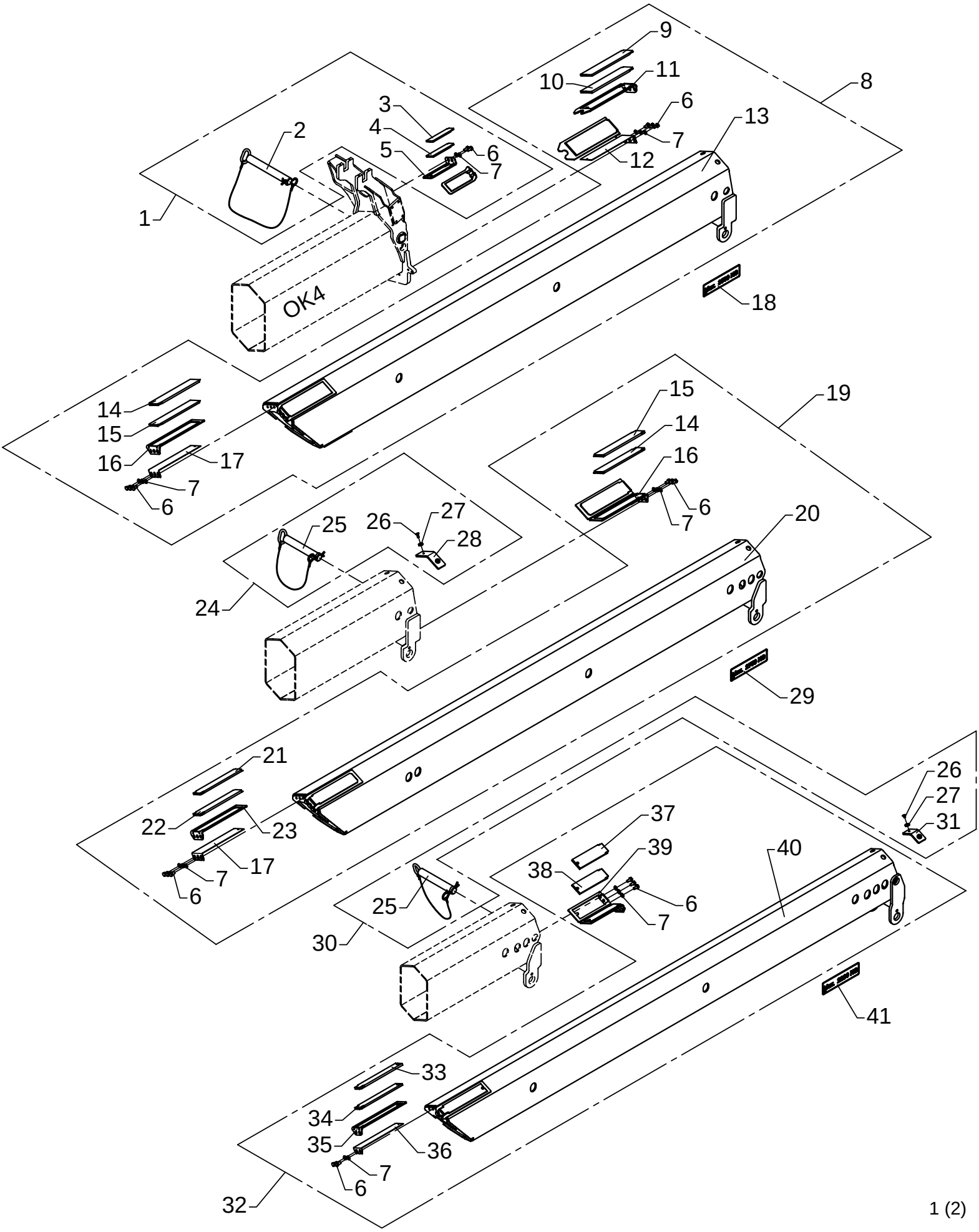

Manual extensions OK 4

As from / To loader no.: 96 00 15 /
Created: 03.10.2003
Modified:

Item no.	Qty.	Part no.	Description	Remarks
1	1	6301330	Fittings, man. ext. OF5,6	
2		6300517	Lock pin with split pin	
3		63698	Slide block	6 mm
4		63668	Slide block	7 mm
5		6300336	Bracket	
6		30154	Set screw	M10 x 20
7		31177	Washer	10 mm
8	1	6301100	Manual extension, OF5	
9		63521	Slide block	8 mm
10		63696	Slide block	9 mm
11		6300369	Bracket for slide block	
12		6300533	Shim	
13		6301101	Manual extension, OF5	
14		63760	Slide block	9 mm
15		63522	Slide block	8 mm
16		6300366	Bracket for slide block	
17		6300534	Shim	
18	2	66538	Label, max. 3500 kg	
19	1	6301110	Manual extension, OF6	
20		6301111	Manual extension, OF6	
21		63529	Slide block	8 mm
22		63761	Slide block	9 mm
23		6300399	Bracket for slide block	
24	1	6301340	Fittings, man. ext.OF6,7/K6-F8	
25		6300537	Lock pin with lock spring	
26		30597	Counter-sunk screw	MK8 x 12
27		6232974	Lock washer	
28		6301109	Division plate, 7 mm	7 mm
29	2	66535	Label, max. 2750 kg	
30	1	6301350	Fittings, man. ext. F7/8-OF7/8	
31		6301119	Division plate, 7 mm	7 mm
32	1	6301120	Manual extension, OF7	
33		63669	Slide block	9 mm
34		63520	Slide block	8 mm
35		6300368	Bracket for slide block	
36		6300568	Shim	
37		63695	Slide block	9 mm
38		63523	Slide block	8 mm
39		6300367	Bracket for slide block	
40		6301121	Manual extension, OF7	
41	2	65560	Label, max. 2200 kg	

52202640

6301110
6301120
Intern ref.: 6301130

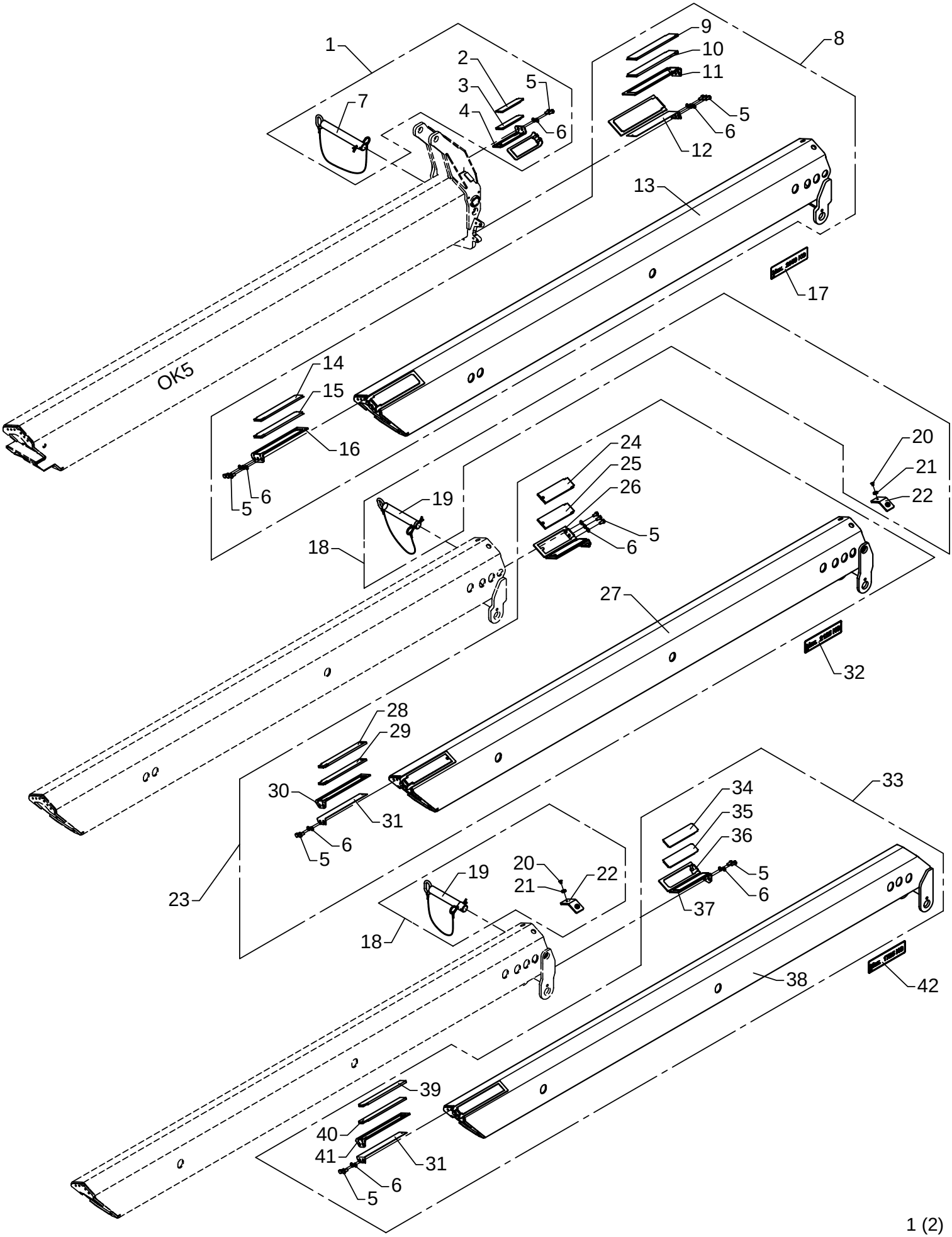

Manual extensions OK5

As from / To loader no.: 96 00 21 /
Created: 03.10.2003
Modified:

Item no.	Qty.	Part no.	Description	Remarks
1	1	6301330	Fittings, man. ext. OF5,6	
2		63698	Slide block	6 mm
3		63668	Slide block	7 mm
4		6300336	Bracket	
5		30154	Set screw	M10 x 20
6		31177	Washer	10 mm
7		6300517	Lock pin with split pin	
8	1	6301110	Manual extension, OF6	
9		63522	Slide block	8 mm
10		63760	Slide block	9 mm
11		6300366	Bracket for slide block	
12		6300534	Shim	
13		6301111	Manual extension, OF6	
14		63529	Slide block	8 mm
15		63761	Slide block	9 mm
16		6300399	Bracket for slide block	
17	2	66534	Label, max. 2650 kg	
18	2	6301350	Fittings, man. ext. F7/8-OF7/8	
19		6300537	Lock pin with lock spring	
20		30597	Counter-sunk screw	MK8 x 12
21		6232974	Lock washer	
22		6301119	Division plate, 7 mm	7 mm
23	1	6301120	Manual extension, OF7	
24		63695	Slide block	9 mm
25		63523	Slide block	8 mm
26		6300367	Bracket for slide block	
27		6301121	Manual extension, OF7	
28		63669	Slide block	9 mm
29		63520	Slide block	8 mm
30		6300368	Shim	
31		6300568	Shim	
32	2	66529	Label, max. 2125 kg	
33	1	6301130	Manual extension, OF8	
34		63516	Slide block	8 mm
35		63764	Slide block	9 mm
36		6239573	Bracket	
37		6239563	Bracket	
38		6301131	Manual extension, OF8	
39		63527	Slide block	9 mm
40		63528	Slide block	8 mm
41		6300443	Bracket for slide block	
42	2	66526	Label, max. 1725 kg	

52202650

6301140
6301150
Intern ref.: 6301160

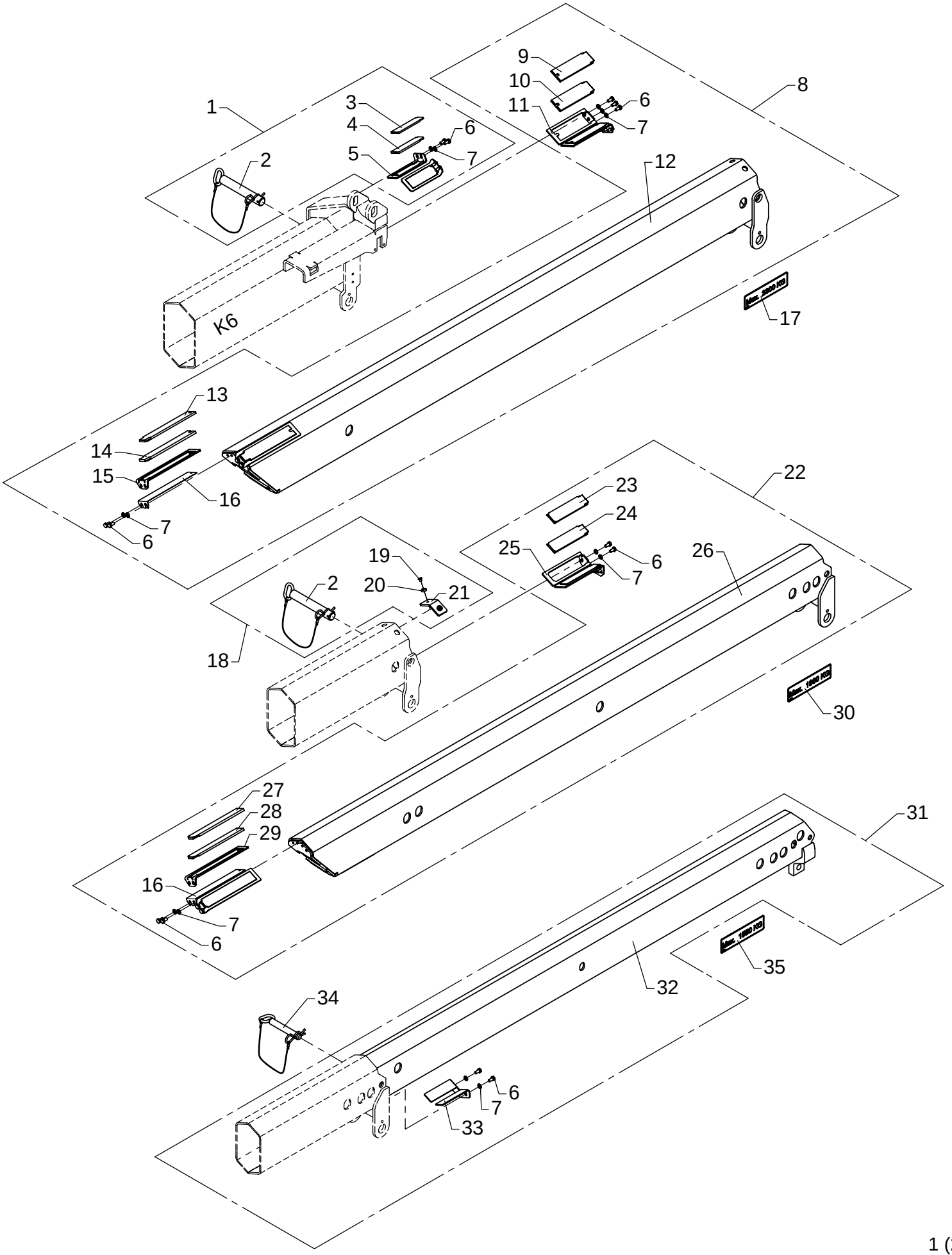

Manual extensions K6

As from / To loader no.: 96 00 00 /
Created: 03.10.2003
Modified:

Item no.	Qty.	Part no.	Description	Remarks
1	1	6301360	Fittings, man. ext. F7/8(K6/7)	
2		6300537	Lock pin with lock spring	
3		63698	Slide block	6 mm
4		63668	Slide block	7 mm
5		6300336	Bracket	
6		30154	Set screw	M10 x 20
7		31177	Washer	10 mm
8	1	6301140	Manual extension, F7	
9		63523	Slide block	8 mm
10		63695	Slide block	9 mm
11		6300367	Bracket for slide block	
12		6301141	Manual extension, F7	
13		63520	Slide block	8 mm
14		63669	Slide block	9 mm
15		6300368	Bracket for slide block	
16		6300568	Shim	
17	2	66532	Label, max. 2300 kg	
18	1	6301350	Fittings, man. ext. F7/8-OF7/8	
19		30597	Counter-sunk screw	MK8 x 12
20		6232974	Lock washer	
21		6301119	Division plate, 7 mm	7 mm
22	1	6301150	Manual extension, F8	
23		63516	Slide block	8 mm
24		63764	Slide block	9 mm
25		6239563	Bracket	
26		6301151	Manual extension, F8	
27		63527	Slide block	9 mm
28		63528	Slide block	8 mm
29		6300443	Bracket for slide block	
30	2	66528	Label, max. 1900 kg	
31	1	6301160	Manual extension, F9	
32		6301161	Manual extension, F9	
33		6301167	Compression block	
34		6657424	Lock pin with chain	
35	2	66525	Label, max. 1550 kg	

52202660

Intern ref.: 6301150
6301160
6301170

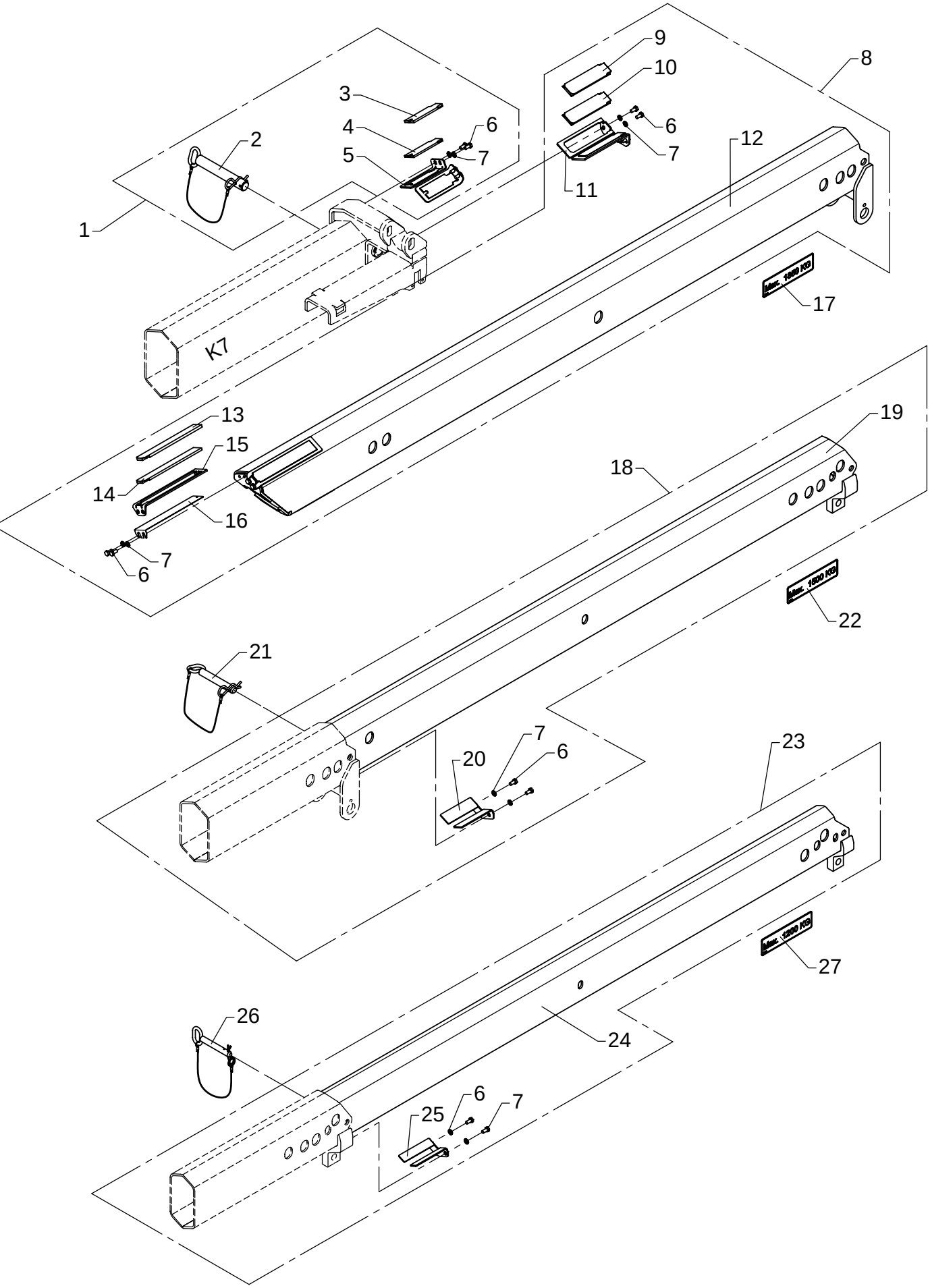

Manual extensions K7

As from / To loader no.: 96 00 00 /
Created: 03.10.2003
Modified:

Item no.	Qty.	Part no.	Description	Remarks
1	1	6301360	Fittings, man. ext. F7/8(K6/7)	
2		6300537	Lock pin with lock spring	
3		63668	Slide block	6 mm
4		63698	Slide block	7 mm
5		6300336	Bracket	
6		30154	Set screw	M10 x 20
7		31177	Washer	10 mm
8	1	6301150	Manual extension, F8	
9		63764	Slide block	9 mm
10		63516	Slide block	8 mm
11		6239563	Bracket	
12		6301151	Manual extension, F8	
13		63527	Slide block	9 mm
14		63528	Slide block	8 mm
15		6300443	Bracket for slide block	
16		6300568	Shim	
17	2	66527	Label, max. 1850 kg	
18	1	6301160	Manual extension, F9	
19		6301161	Manual extension, F9	
20		6301167	Compression block	
21	1	6657424	Lock pin with chain	
22	2	65199	Label. max. 1500 kg	
23	1	6301170	Manual extension, F10	
24		6301171	Manual extension, F10	
25		6301177	Compression block	
26	1	6301166	Lock pin with split pin	
27	2	65148	Label. max. 1200 kg	

52202670

6301160
6301170
Intern ref.: 6301180

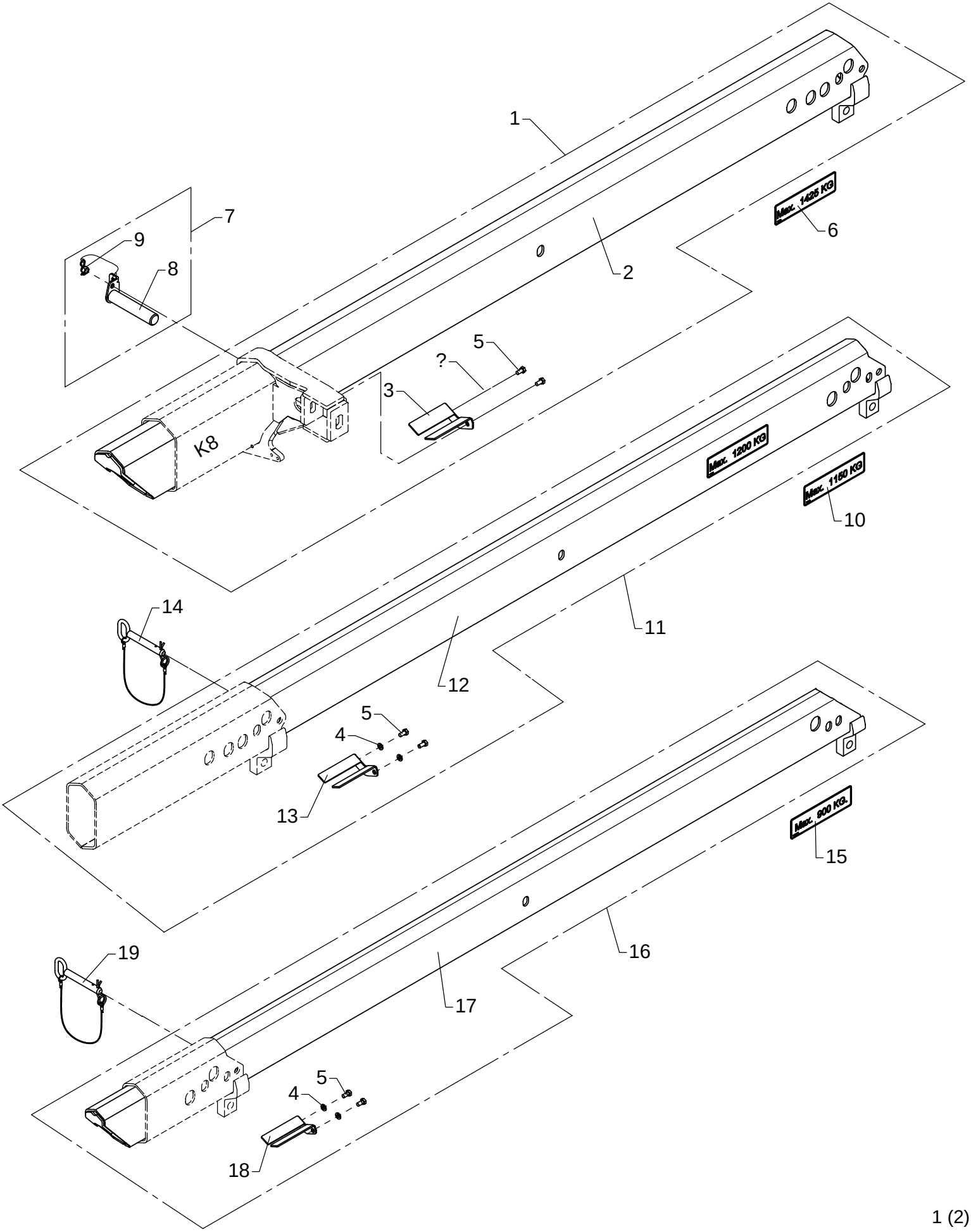

Manual extensions K8

As from / To loader no.: 96 00 00 /
Created: 03.10.2003
Modified:

Item no.	Qty.	Part no.	Description	Remarks
1	1	6301160	Manual extension, F9	
2		6301161	Manual extension, F9	
3		6301167	Compression block	
4		31177	Washer	10 mm
5		30154	Set screw	M10 x 20
6	2	66524	Label, max. 1425 kg	
7	1	6301370	Fittings, man. extension, F9	
8		6300593	Lock pin with lock spring	
9		32127	Nut	M12
10	2	65916	Max. label 1150 kg	
11	1	6301170	Manual extension, F10	
12		6301171	Manual extension, F10	
13		6301177	Compression block	
14	1	6301166	Lock pin with split pin	
15	2	65151	Label. max. 900 kg	
16	1	6301180	Manual extension, F11	
17		6301181	Manual extension, F11	
18		6301187	Compression block	
19	1	6301166	Lock pin with split pin	

52-380

Intern ref.: 62101+62114

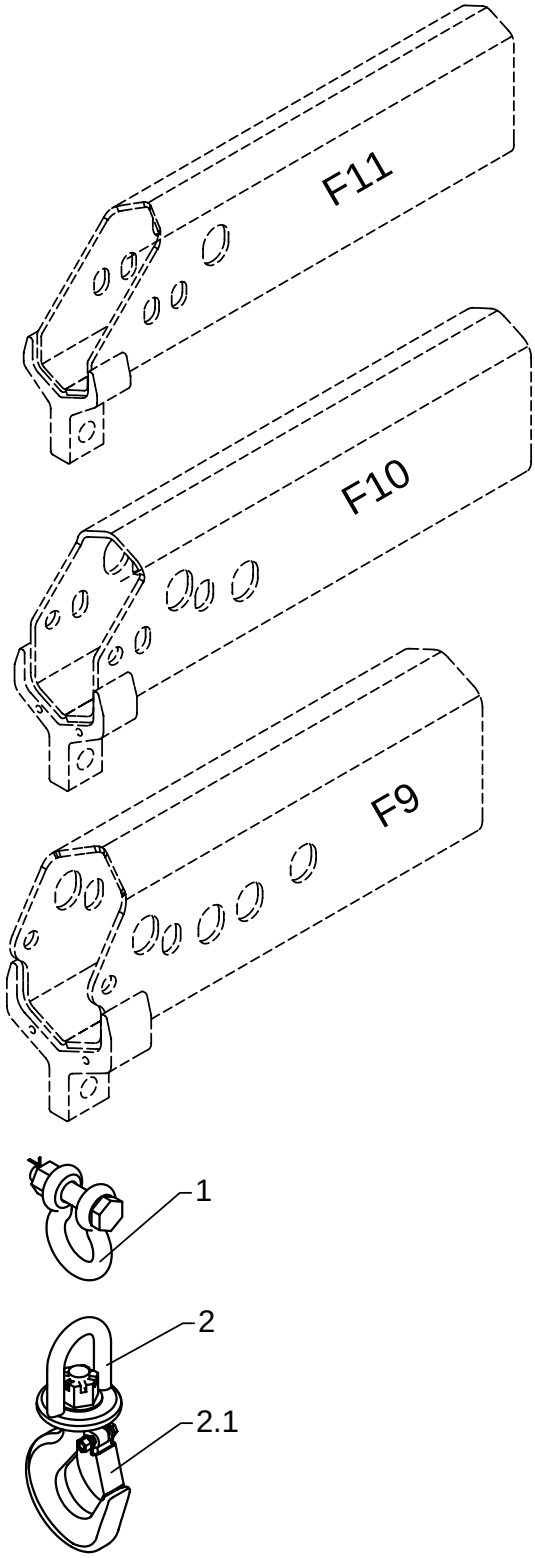

Hook suspension, F5-F11

As from / To loader no.: 96 00 00 /
Created: 03.10.2003
Modified: 01.08.2006

Item no.	Qty.	Part no.	Description	Remarks
1	1	62114	Shackle with nut	
2	1	62101	Hook 5 t	
		62143	Safety catch	

52-380

Intern ref.: 6300140

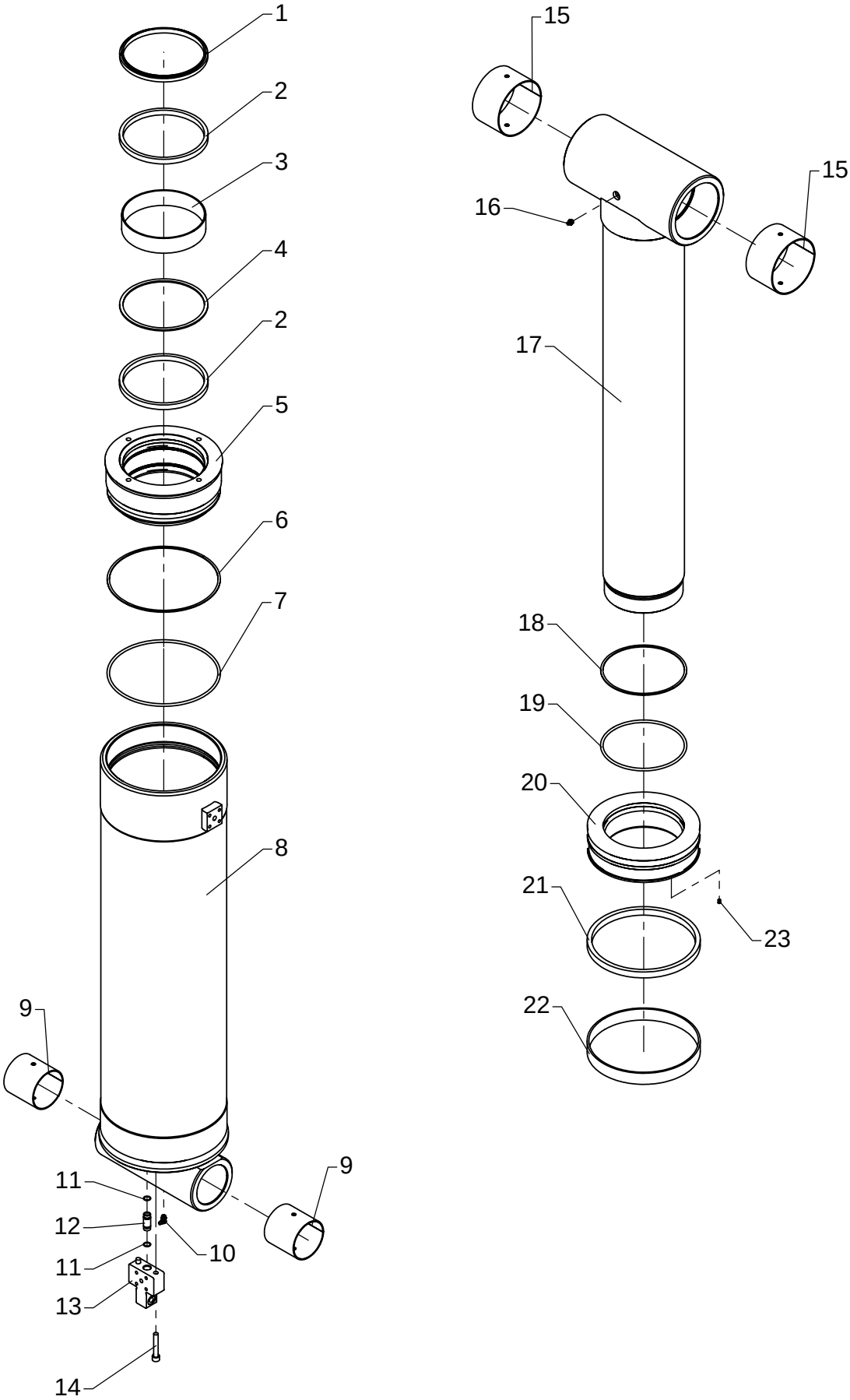

Boom cylinder, C250/180 x 837

As from / To loader no.: 96 00 00 /
Created: 03.10.2003
Modified:

Item no.	Qty.	Part no.	Description	Remarks
	1	6893580	Seal kit	Pos. 1,2,3,4,6,7,18,19,21,22
1	1	20957	Scraper	PA 180/195 x 9/12
2	2	20959	Seal	SI/L 180/196 x 12,5
3	1	20954	Guide ring	RWR 180/186 x 40 - PF
4	1	20961	Back ring	
5	1	6300144	Guide	
6	1	20875	Back ring	
7	1	20351	O-ring	OR 239,3 x 5,7
8	1	6300151	Cylinder	
9	2	23922	Bushing	PM 9090 DX
10	1	31322	Lubricator	1/8 RG - 90
11	2	20136	O-ring	OR 13,1 x 1,6
12	1	6292834	Pipe	
13	1	6300165	Block	
14	2	32452	Screw	MC10 x 60
15	2	23360	Bushing	PM 13080 DX
16	1	31318	Lubricator	1/8" RG
17	1	6300168	Piston rod	
18	1	20873	Back ring	
19	1	20350	O-ring	OR 179,3 x 5,7
20	1	6300146	Piston	
21	1	20951	Piston seal	GHT 250/230 x 16 - 292/N/A
22	1	20953	Guide ring	PWR 250/242 - 30 - PF
23	1	30903	Screw	MSP6 x 8

52-380

Intern ref.: 6300130

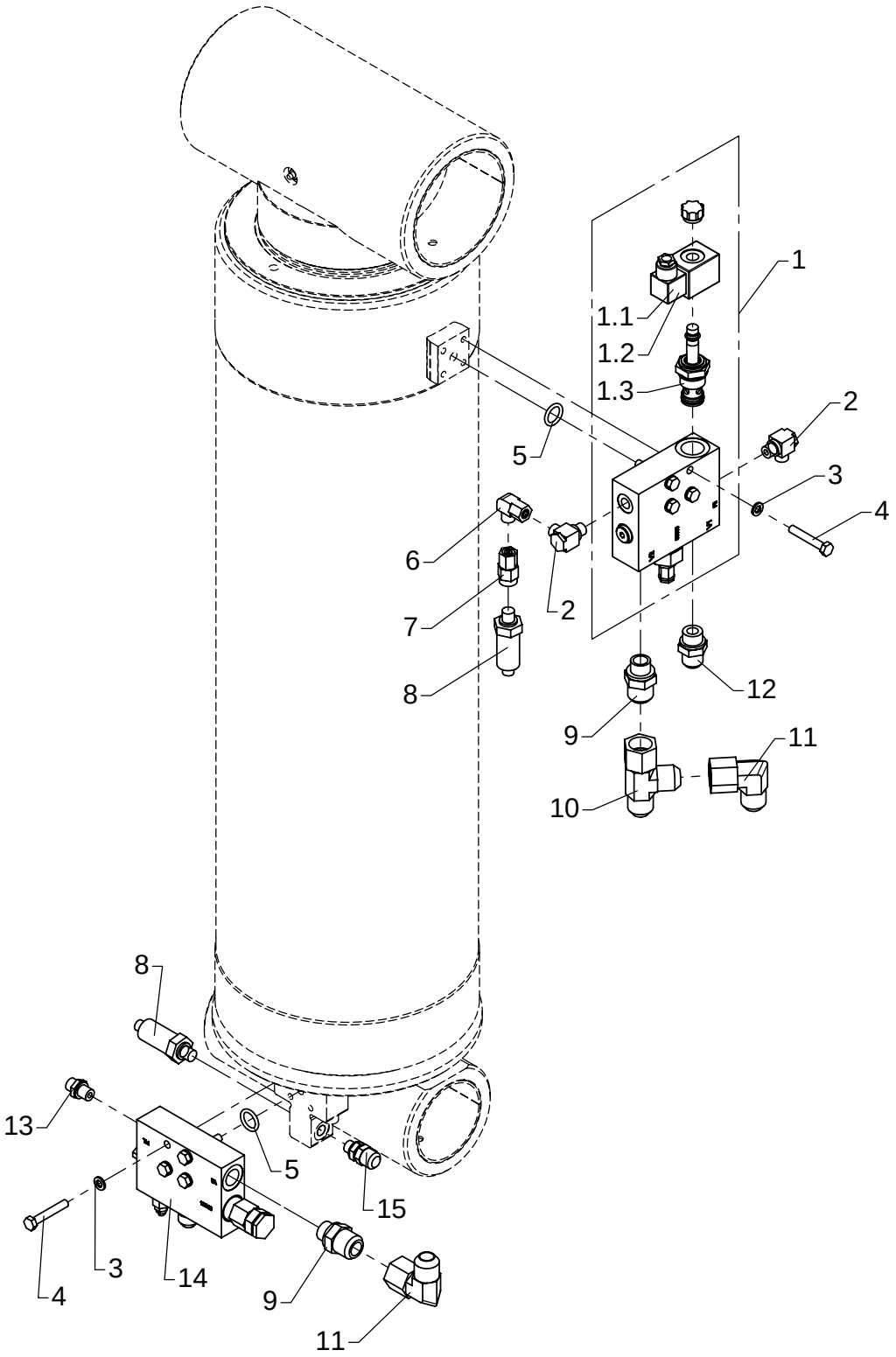

Boom cylinder with LHV

As from / To loader no.: 96 00 00 / 96 02 07
Created: 03.10.2003
Modified: 05.03.2008

Item no.	Qty.	Part no.	Description	Remarks
1	1	6300140	Boom cylinder	
2	1	59055	Electric regeneration valve	
		61777	Solenoid	12V
		61778	Solenoid	26V
		59074	Magnet coil	
3	2	25113	Banjo connection	RSWV 8 LR
4	8	31155	Spring washer	8 mm
5	8	30139	Steel bolt, stainless	M8 x 50
6	2	20221	O-ring	OR 18,64 x 3,53
7	1	26170	Elbow connection	EWSD 8 L
8	1	26370	Pressure gauge connection	EMASD 8 LR
9	2	28850	Pressure transducer	
10	2	25861	Connection	F40XS18/20 - 1-2
11	1	25828	Connection	R6XS 20 JIC
12	2	25827	Elbow connection	C6XS 20 JIC
13	1	25833	Straight connection	F40XS14/16 - 1/2
14	1	25109	Connection	GES 8 LR-WD
15	1	59054	Load-holding valve	
16	1	26103	Pressure-gauge connect.	
17	1	6300176	Pipe	
18	1	6300177	Pipe	

52-380

Intern ref.: 6300130

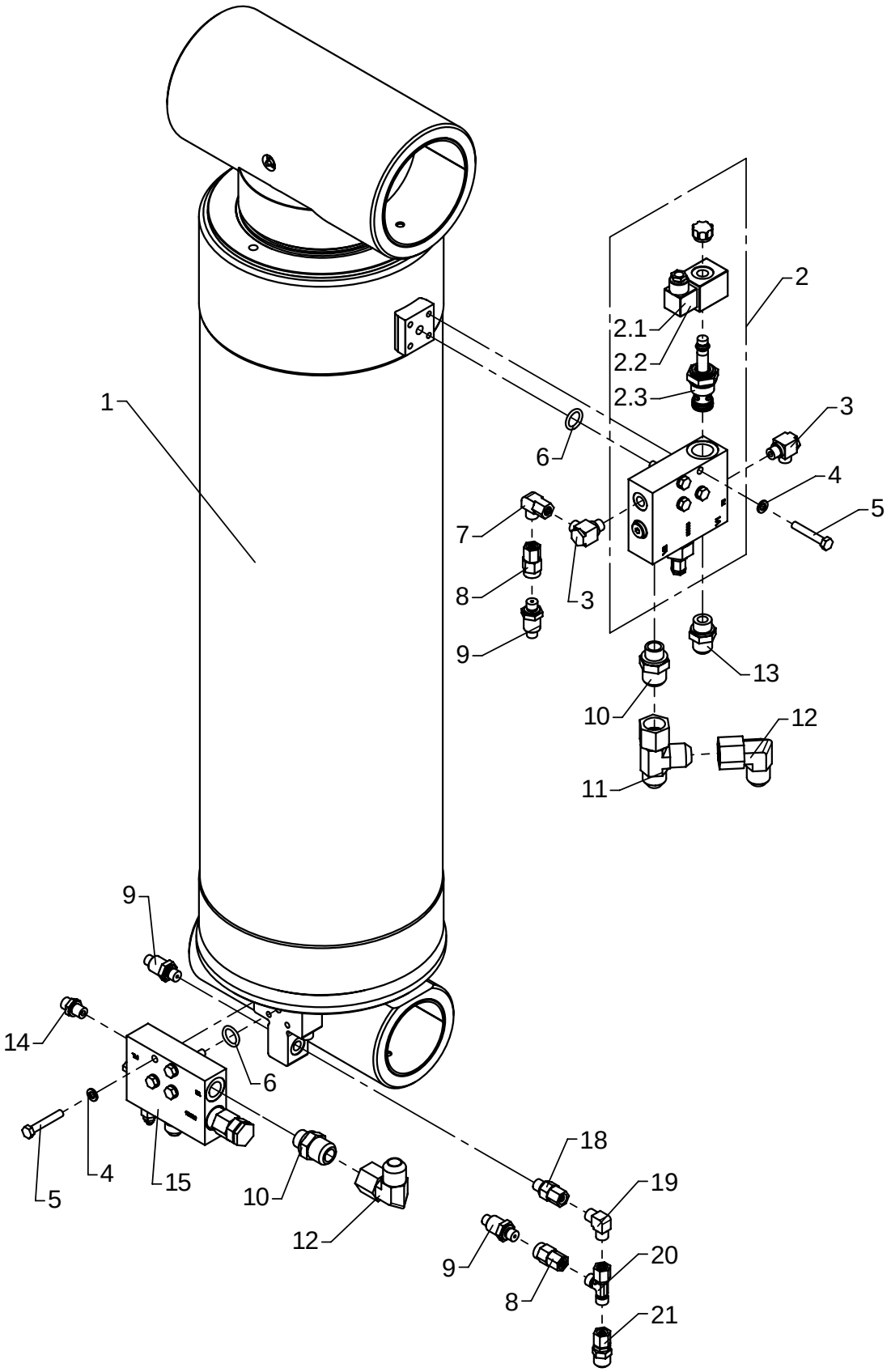

Boom cylinder with LHV

As from / To loader no.: 96 02 08
Created: 05.03.2008
Modified:

Item no.	Qty.	Part no.	Description	Remarks
1	1	6300140	Boom cylinder	
2	1	59055	Electric regeneration valve	
		61777	Solenoid	12V
		61778	Solenoid	26V
		59074	Magnet coil	
3	2	25113	Banjo connection	RSWV 8 LR
4	8	31155	Spring washer	8 mm
5	8	30139	Steel bolt, stainless	M8 x 50
6	2	20221	O-ring	OR 18,64 x 3,53
7	1	26170	Elbow connection	EWSD 8 L
8	2	26370	Pressure gauge connection	EMASD 8 LR
9	3	28850	Pressure transducer	
10	2	25861	Connection	F40XS18/20 - 1-2
11	1	25828	Connection	R6XS 20 JIC
12	2	25827	Elbow connection	C6XS 20 JIC
13	1	25833	Straight connection	F40XS14/16 - 1/2
14	1	25109	Connection	GES 8 LR-WD
15	1	59054	Load-holding valve	
16	1	6300176	Pipe	
17	1	6300177	Pipe	
18	1	26104	Connection	EGESD 8 LR-WD
19	1	25247	Elbow connection	WV 8 L
20	1	25249	Connection	ELSD 8 L
21	1	26148	Connection	

52-380

Intern ref.: 6300150

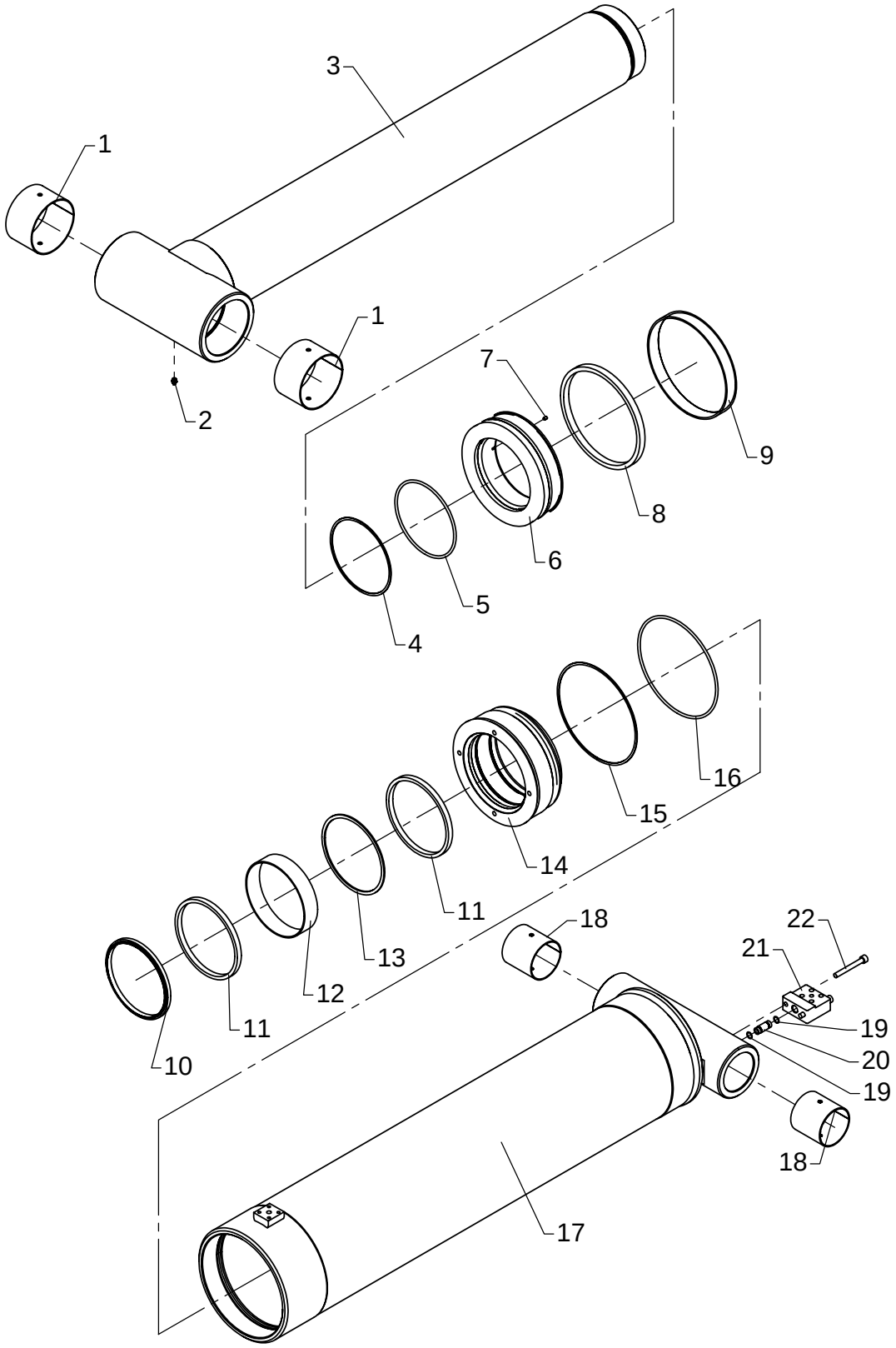

Jib cylinder, C250/180 x 1122

As from / To loader no.: 96 00 00 /
Created: 03.10.2003
Modified:

Item no.	Qty.	Part no.	Description	Remarks
	1	6893580	Seal kit	Pos. 4,5,8,9,10,11,12,13,15,16
1	2	23360	Bushing	PM 13080 DX
2	1	31318	Lubricator	1/8" RG
3	1	6300209	Piston rod	
4	1	20873	Back ring	
5	1	20350	O-ring	OR 179,3 x 5,7
6	1	6300146	Piston	
7	1	30903	Screw	MSP6 x 8
8	1	20951	Piston seal	GHT 250/230 x 16 - 292/N/A
9	1	20953	Guide ring	PWR 250/242 - 30 - PF
10	1	20957	Scraper	PA 180/195 x 9/12
11	2	20959	Seal	SI/L 180/196 x 12,5
12	1	20954	Guide ring	RWR 180/186 x 40 - PF
13	1	20961	Back ring	
14	1	6300144	Guide	
15	1	20875	Back ring	
16	1	20351	O-ring	OR 239,3 x 5,7
17	1	6300157	Cylinder	
18	2	23922	Bushing	PM 9090 DX
19	2	20136	O-ring	OR 13,1 x 1,6
20	1	6292834	Pipe	
21	1	6300167	Block	
22	2	32459	Screw	MC10 x 85

52-380

Intern ref.: 6300160

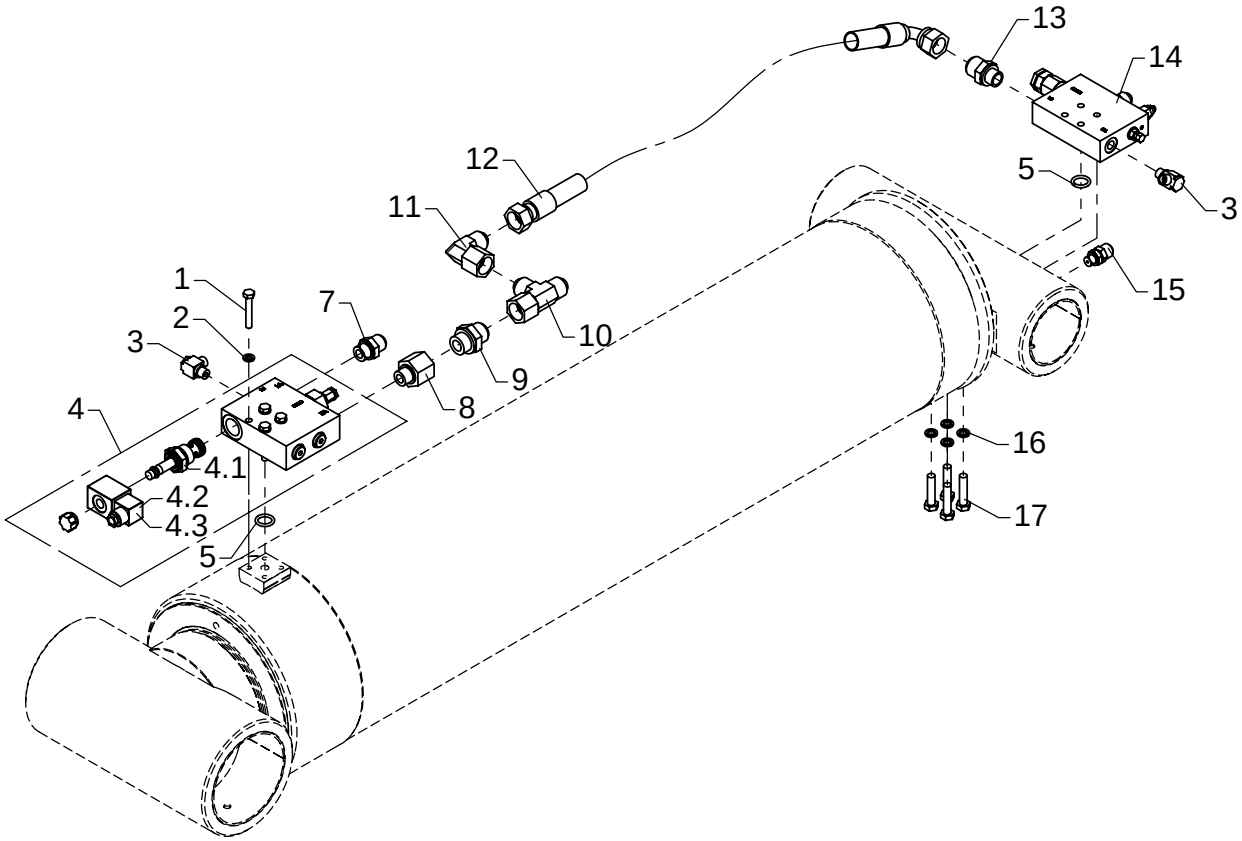

Jib cylinder with LHV

As from / To loader no.: 96 00 00 /
Created: 03.10.2003
Modified: 18.01.2005

Item no.	Qty.	Part no.	Description	Remarks
1	4	30139	Steel bolt, stainless	M8 x 50
2	4	31155	Spring washer	8 mm
3	2	25113	Banjo connection	RSWV 8 LR
4	1	59055	Electric regeneration valve	
		59074	Magnet coil	
		61777	Solenoid	12V
		61778	Solenoid	26V
5		20221	O-ring	OR 18,64 x 3,53
6	1	6300179	Pipe	
7	1	25833	Straight connection	F40XS 14/16-1/2 JIC
8	1	26111	Reducing connection	RED-R 1/2-WD/R 3/4
9	1	25834	Straight connection	F40XS 18/20-3/4 JIC
10	1	25828	Connection	R6XS 20 JIC
11	1	25827	Elbow connection	C6XS 20 JIC
12	1	56025	Hose	5/8" x 1150 mm v/o JIC
13	1	25861	Connection	F40XS 18/20-1/2 JIC
14	1	59054	Load-holding valve	
15	1	26103	Pressure-gauge connect.	
16	4	31156	Spring washer	10 mm
17	4	30165	Steel bolt	M10 x 45
18	1	63413	Cover for nut	

52-380

Intern ref.: 6300400

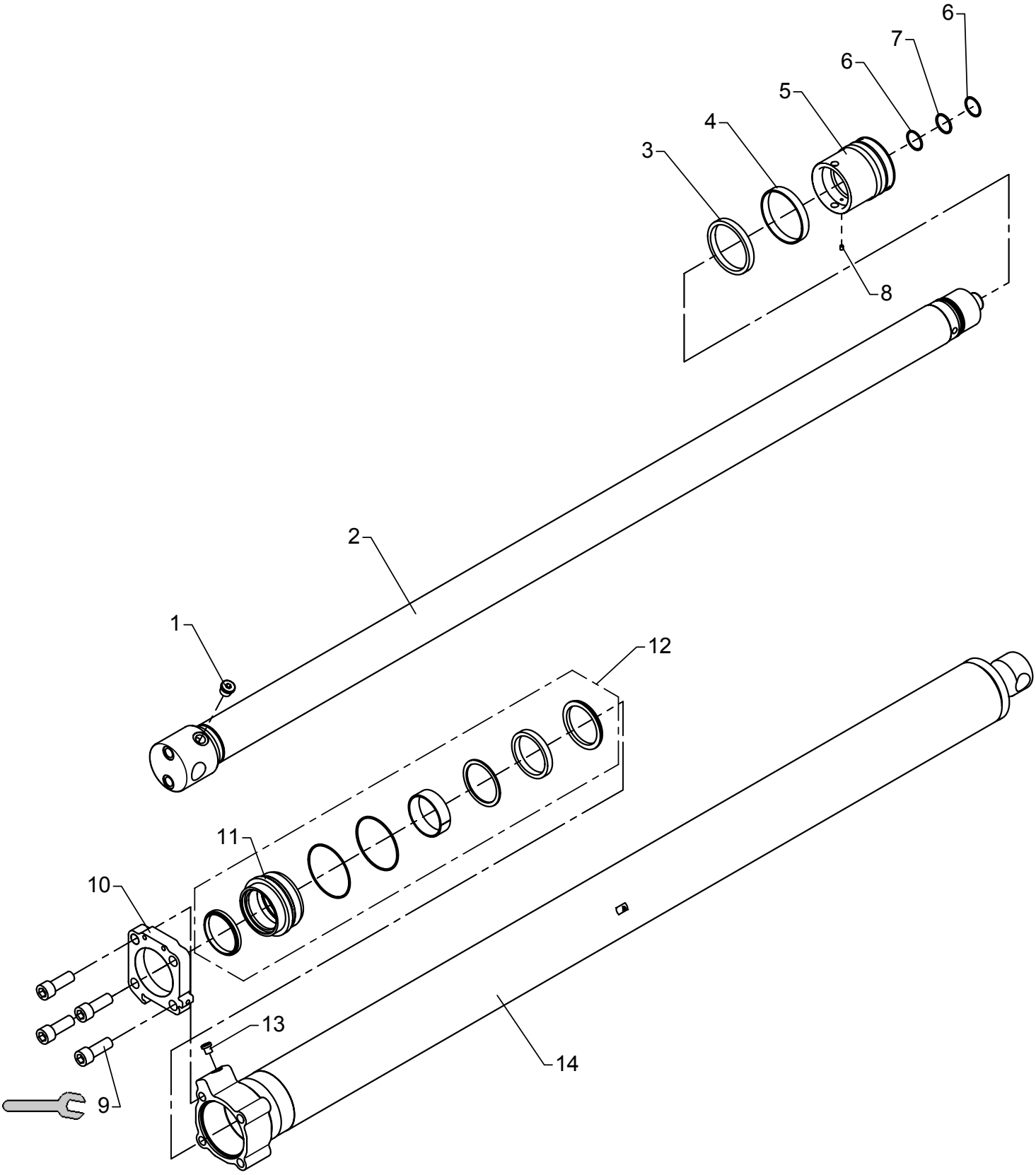

649 Nm

Extension cylinder I, C110/80h x 1850
Optimised boom system OK2-OK6

As from / To loader no.: 96 00 00 /
Created: 03.10.2003
Modified: 20.10.2004

Item no.	Qty.	Part no.	Description	Remarks
	1	6893600	Seal kit, C110/80h	Pos. 3, 4, 6, 7
1	1	25103	Plug	VS-R-1/2 WD
2	1	6300401	Piston rod	
3	1	22131	Seal	GHT 110/95 x 12,5 - PU/N/A
4	1	22130	Guide ring	PWR 110/104 x 16 - PF
5	1	6300406	Piston	
6	2	20705	Back ring	STR 35 x 40 x 1,3
7	1	20177	O-ring	OR 34,2 x 3
8	1	30903	Screw	MSP6 x 8
9	4	32449	Sockethead screw	MC20 x 55
10	1	6300405	Flange	
11	1	6302407	Guide	
12	1	22139	Seal kit	
13	1	25197	Plug	VS-R-1/4 WD
14	1	6300408	Cylinder pipe	

52-380

Intern ref.: 6300410

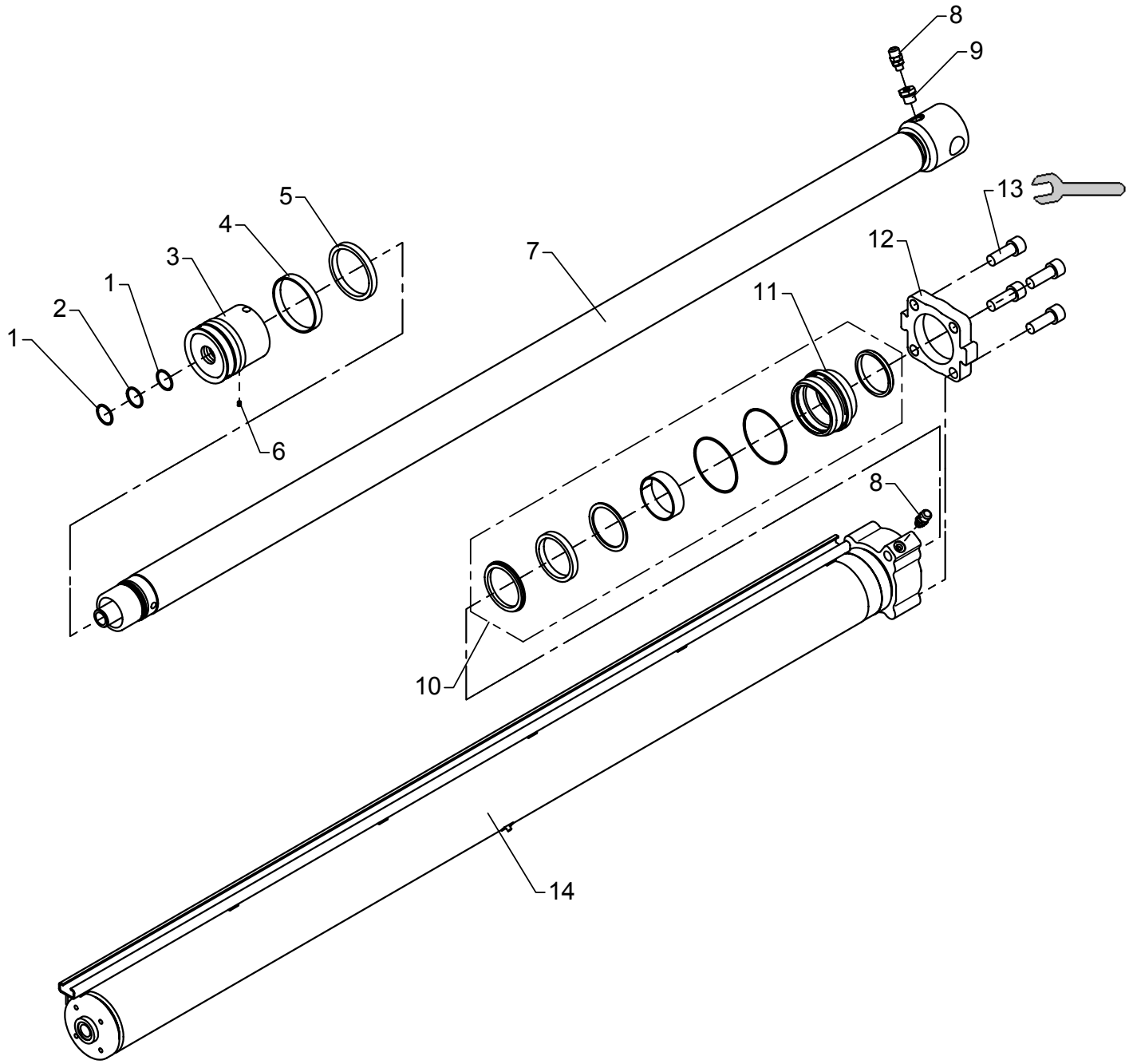

649 Nm

Extension cylinder II, C110/80h x 1900
Optimised boom system OK2-OK6

As from / To loader no.: 96 00 00 /
Created: 03.10.2003
Modified: 09.03.2006

Item no.	Qty.	Part no.	Description	Remarks
	1	6893600	Seal kit, C110/80h	Pos. 1, 2, 4, 5
1	2	20705	Back ring	STR 35 x 40 x 1,3
2	1	20177	O-ring	OR 34,2 x 3
3	1	6300406	Piston	
4	1	22130	Guide ring	PWR 110/104 x 16 - PF
5	1	22131	Seal	GHT 110/95 x 12,5 - PU/N/A
6	1	30903	Screw	MSP6 x 8
7	1	6300412	Piston rod	
8	2	26103	Pressure-gauge connect.	
9	1	25180	Connection	RED-R 1/2-WD/R 1/4
10	1	22139	Seal kit	
11	1	6302407	Guide	
12	1	6300419	Flange	
13	4	32449	Sockethead screw	MC20 x 55
14	1	6300415	Cylinder	

52-380

Intern ref.: 6300420

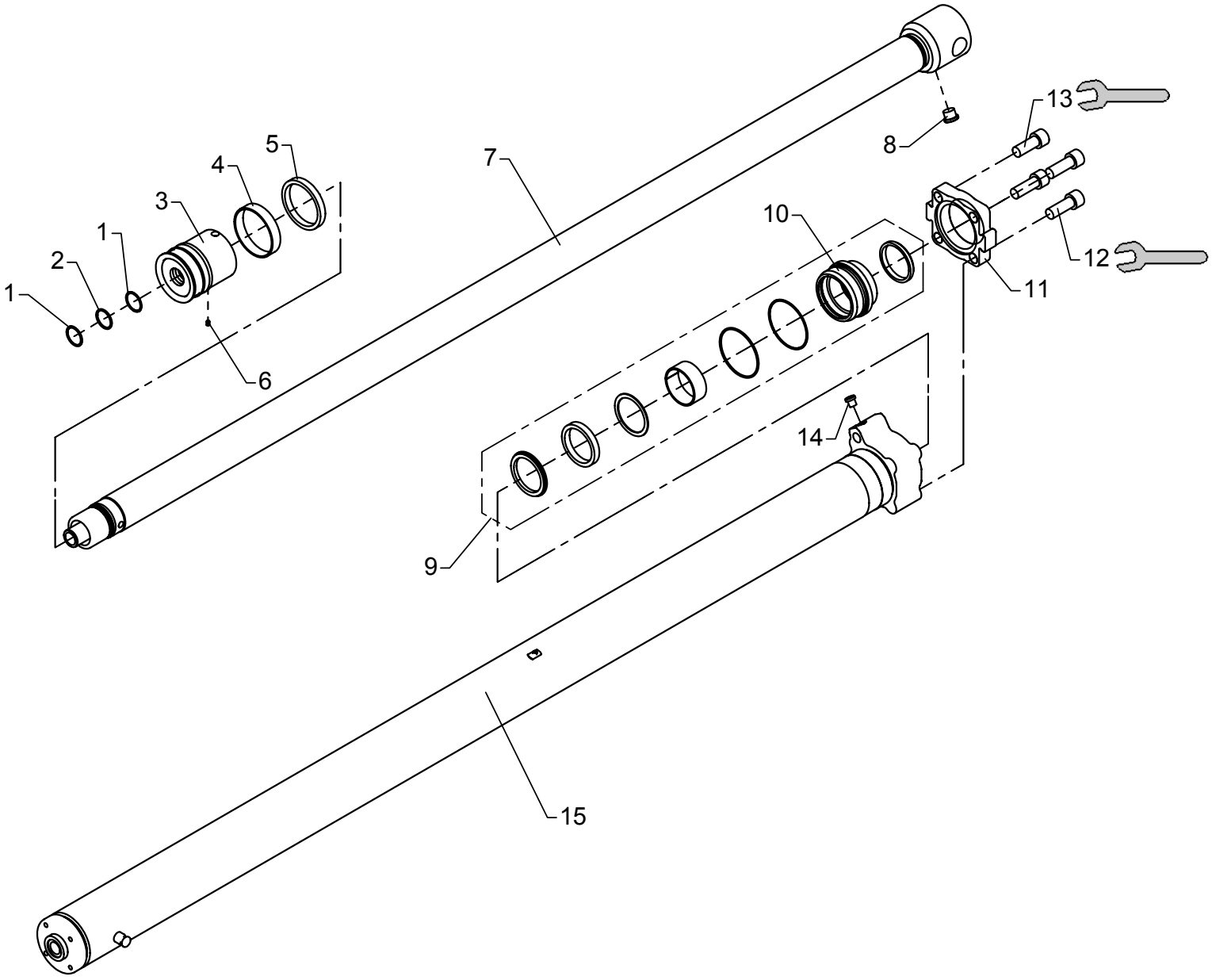

649 Nm

Extension cylinder III, C100/70h x 2000
Optimised boom system OK3-OK6

As from / To loader no.: 96 00 00 /
Created: 03.10.2003
Modified: 09.03.2006

Item no.	Qty.	Part no.	Description	Remarks
	1	6893610	Seal kit, C100/70h	Pos. 1, 2, 4, 5
1	2	20705	Back ring	STR 35 x 40 x 1,3
2	1	20177	O-ring	OR 34,2 x 3
3	1	6300424	Piston	
4	1	22142	Guide ring	PWR 100/94 x 20 - PF
5	1	22141	Seal	GHT 100/85 x 12,5
6	1	30903	Screw	MSP6 x 8
7	1	6300673	Piston rod	
8	1	25103	Plug	VS-R-1/2 WD
9	1	22140	Seal kit	
10	1	6300425	Guide	
11	1	6300426	Flange	
12	3	32449	Sockethead screw	MC20 x 55
13	1	30496	Sockethead screw	MC20 x 50
14	1	25197	Plug	VS-R-1/4 WD
15	1	6300427	Cylinder	

52-380

Intern ref.: 6302420

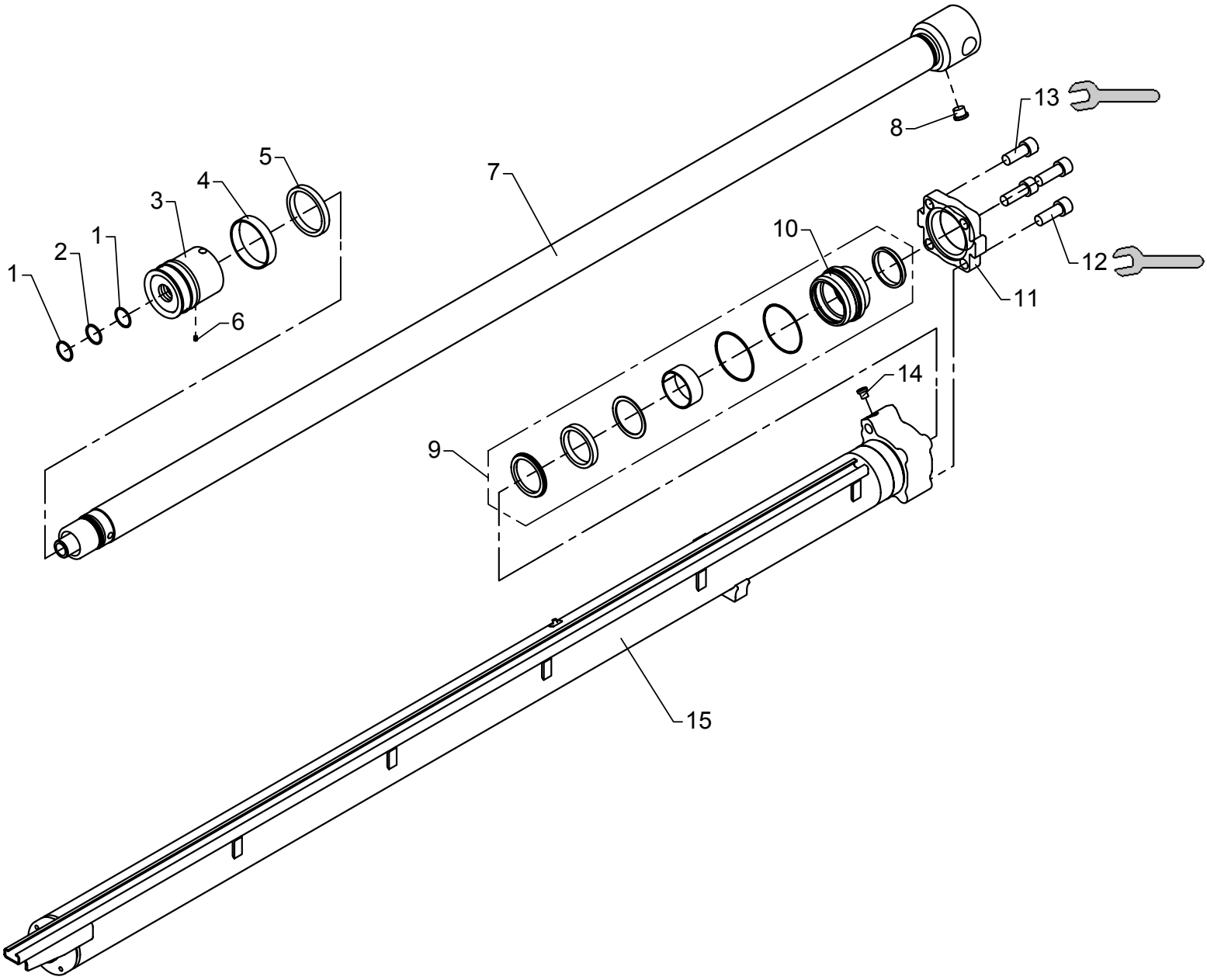

649 Nm

Extension cylinder IV, C100/70h x 2100
Optimised boom system OK4-OK6

As from / To loader no.: 96 00 00 /
Created: 03.10.2003
Modified: 09.03.2006

Item no.	Qty.	Part no.	Description	Remarks
	1	6893610	Seal kit, C100/70h	Pos. 1, 2, 4, 5
1	2	20705	Back ring	STR 35 x 40 x 1,3
2	1	20177	O-ring	OR 34,2 x 3
3	1	6300424	Piston	
4	1	22142	Guide ring	PWR 100/94 x 20 - PF
5	1	22141	Seal	GHT 100/85 x 12,5
6	1	30903	Screw	MSP6 x 8
7	1	6300421	Piston rod	
8	1	25103	Plug	VS-R-1/2 WD
9	1	22140	Seal kit	
10	1	6300425	Guide	
11	1	6300426	Flange	
12	3	32449	Sockethead screw	MC20 x 55
13	1	30496	Sockethead screw	MC20 x 50
14	1	6302427	Cylinder tube	

52-380

Intern ref.: 6300430

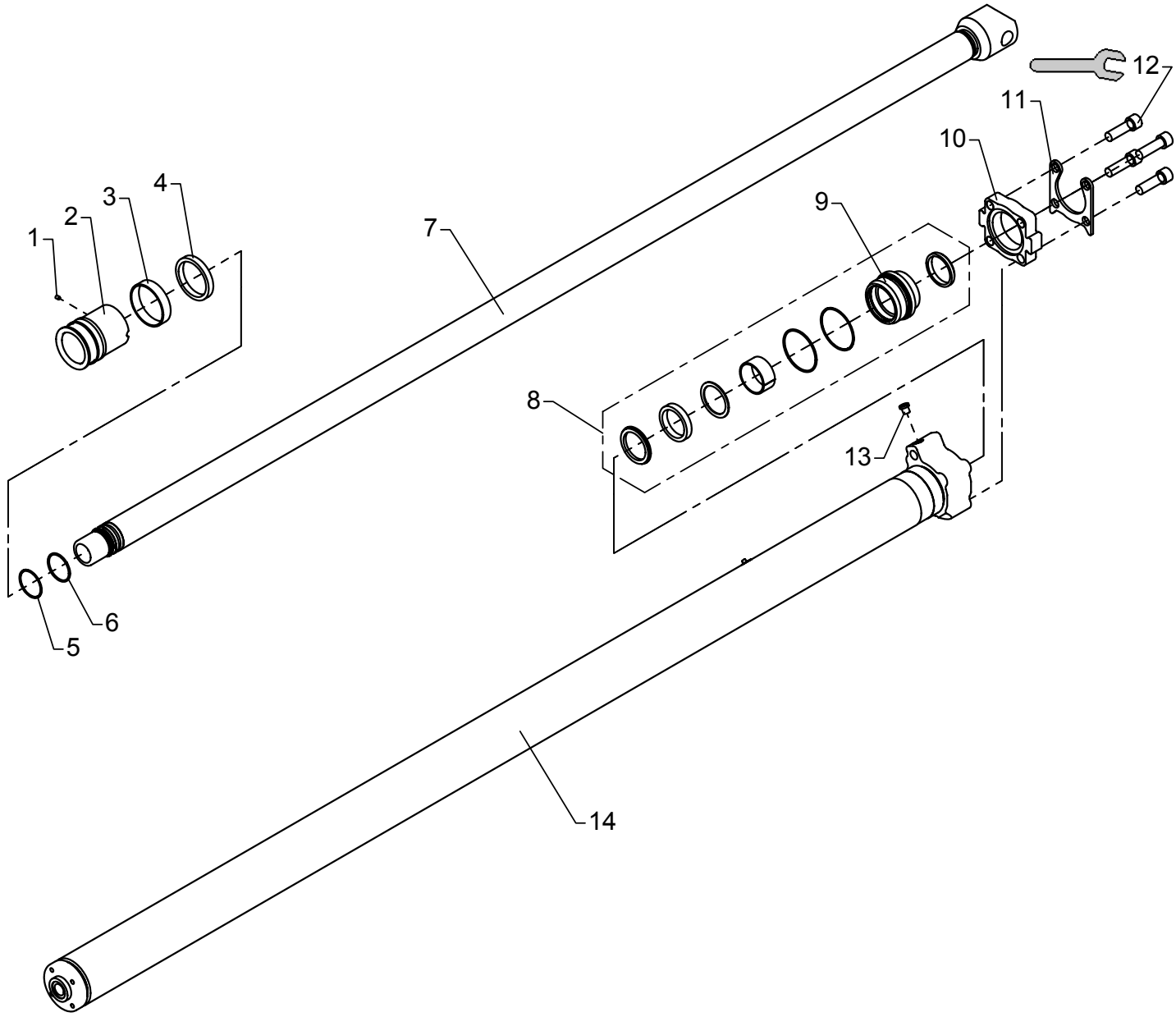

463 Nm

Extension cylinder V-OK5, C90/60s x 2250
Optimised boom system OK5

As from / To loader no.: 96 00 00 / 96 00 xx
Created: 03.10.2003
Modified: 09.03.2006

Item no.	Qty.	Part no.	Description	Remarks
	1	6893620	Seal kit, C90/60s	Pos. 3, 4
1	1	30903	Screw	MSP6 x 8
2	1	6300435	Piston	
3	1	22145	Guide ring	PWR 90/84 x 20 - PF
4	1	22144	Seal	GHT 90/75 x 12,5
5	1	20882	Back ring	54,5 x 3
6	1	20183	O-ring	OR 54,5 x 3
7	1	6300432	Piston rod	
8	1	22143	Seal kit	
9	1	6300441	Guide	
10	1	6300442	Flange	
11	1	6300536	Safety device	
12	4	32456	Screw	MC18 x 60
13	1	6300436	Cylinder	

52-380

Intern ref.: 6302400

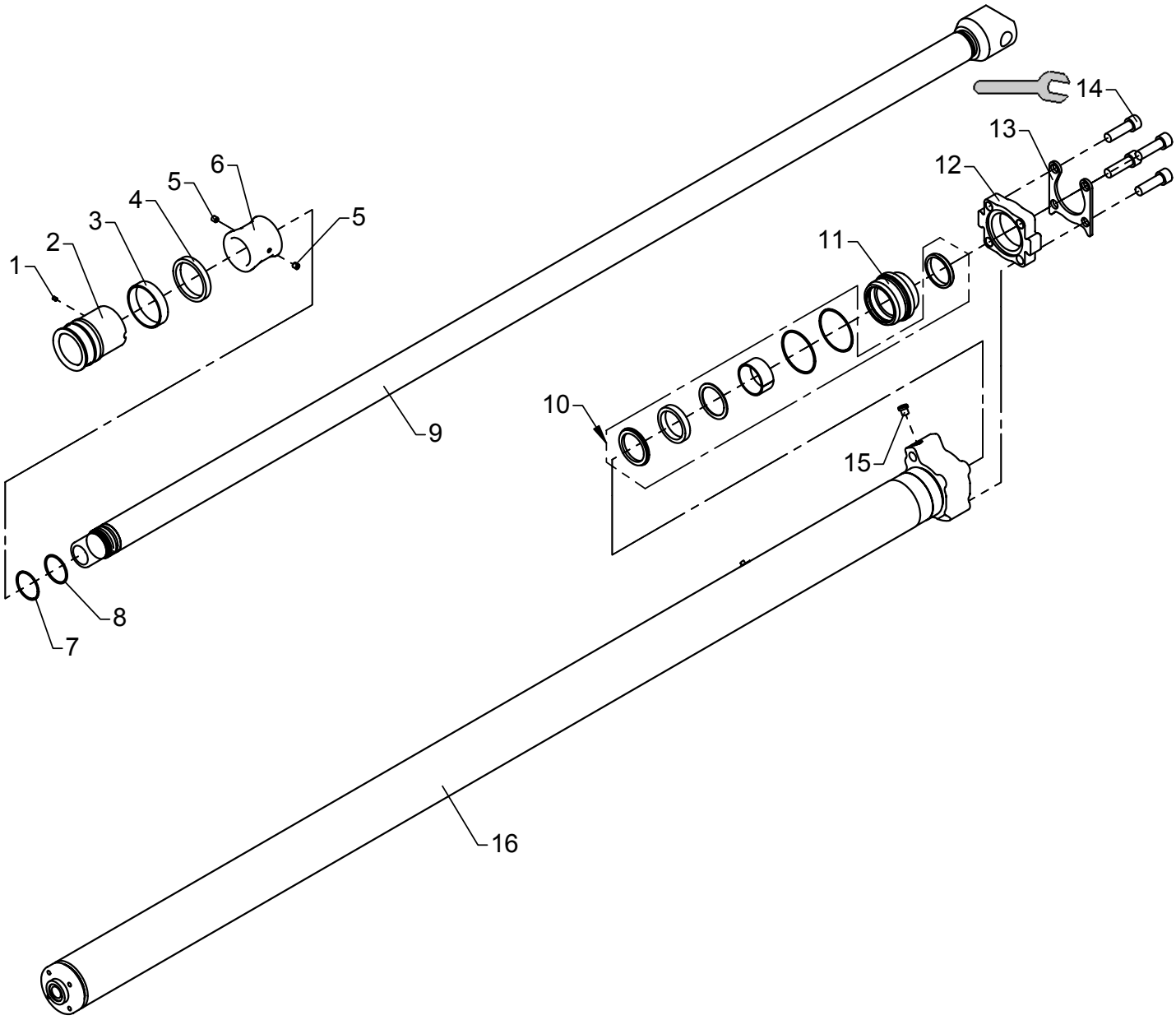

463 Nm

Extension cylinder V-OK5, C90/60s x 2175
Optimised boom system OK5

As from / To loader no.: 96 00 xx /
Created: 03.10.2003
Modified: 09.03.2006

Item no.	Qty.	Part no.	Description	Remarks
	1	6893620	Seal kit, C90/60s	Pos. 3, 4
1	1	30903	Screw	MSP6 x 8
2	1	6300435	Piston	
3	1	22145	Guide ring	PWR 90/84 x 20 - PF
4	1	22144	Seal	GHT 90/75 x 12,5
5	2	30555	Pointed screw, stainless	MSP10 x 10
6	1	6302453	Spacer	
7	1	20882	Back ring	54,5 x 3
8	1	20183	O-ring	OR 54,5 x 3
9	1	6300432	Piston rod	
10	1	22143	Seal kit	
11	1	6300441	Guide	
12	1	6300442	Flange	
13	1	6300536	Safety device	
14	4	32456	Screw	MC18 x 60
15	1	6300436	Cylinder	

52-380

Intern ref.: 6302350

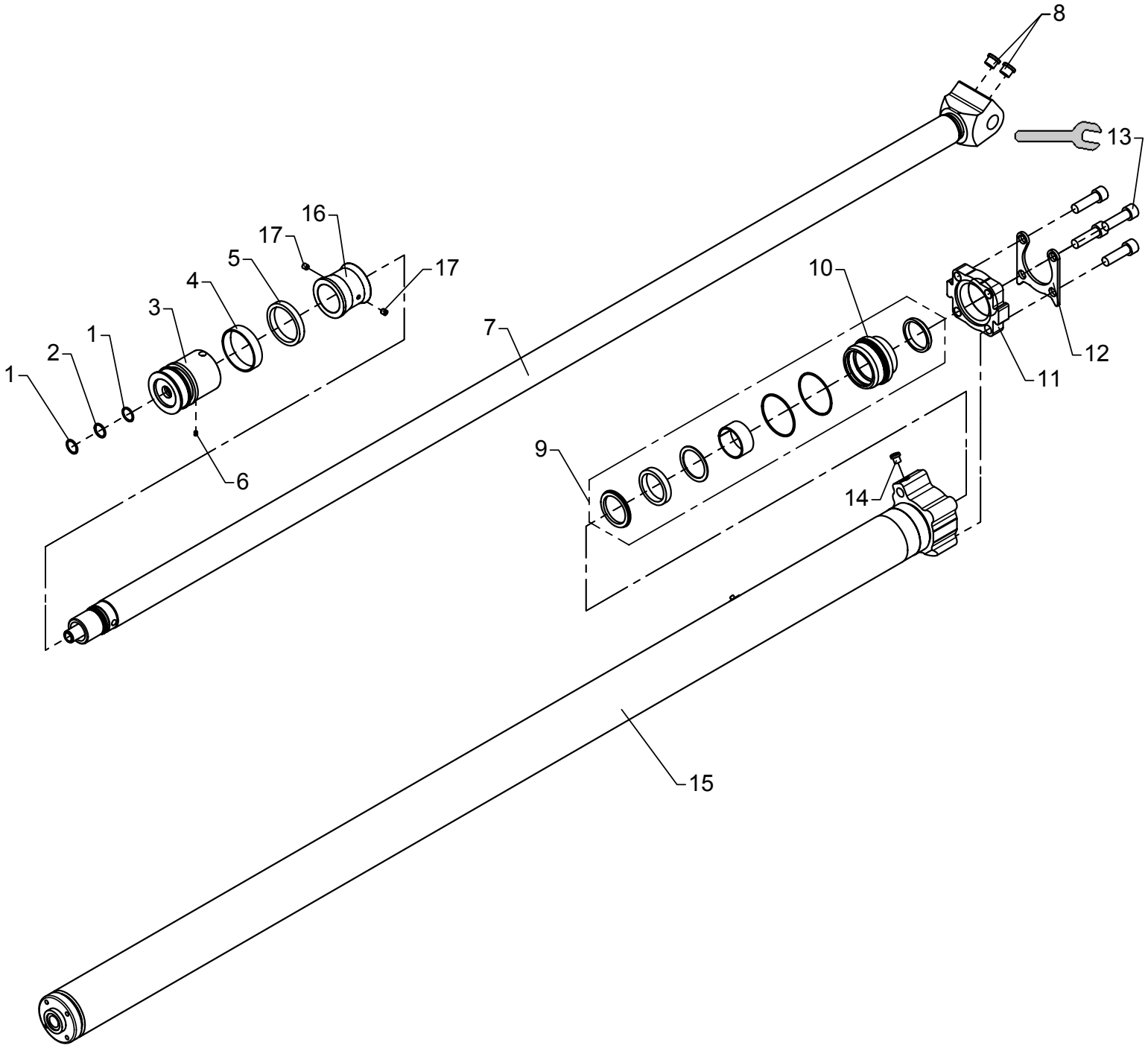

463 Nm

Extension cylinder V-OK6, C90/60h x 2175
Optimised boom system OK6

As from / To loader no.: 96 00 00 /
Created: 17.05.2004
Modified: 16.03.2006

Item no.	Qty.	Part no.	Description	Remarks
	1	6893630	Seal kit, C90/60h	Pos. 1, 2, 4, 5
1	2	20706	Back ring	STR 25 x 30 x 1,3
2	1	20174	O-ring	OR 24,2 x 3
3	1	6300477	Piston	
4	1	22145	Guide ring	PWR 90/84 x 20 - PF
5	1	22144	Seal	GHT 90/75 x 12,5
6	1	30903	Screw	MSP6 x 8
7	1	6302641	Piston rod	
8	1	22143	Seal kit	
9	1	6300441	Guide	
10	1	6300442	Flange	
11	1	6300536	Safety device	
12	4	32456	Screw	MC18 x 60
13	1	6300436	Cylinder	
14	1	6302453	Spacer	
15	2	30555	Pointed screw, stainless	MSP10 x 10

52-380

Intern ref.: 6302450

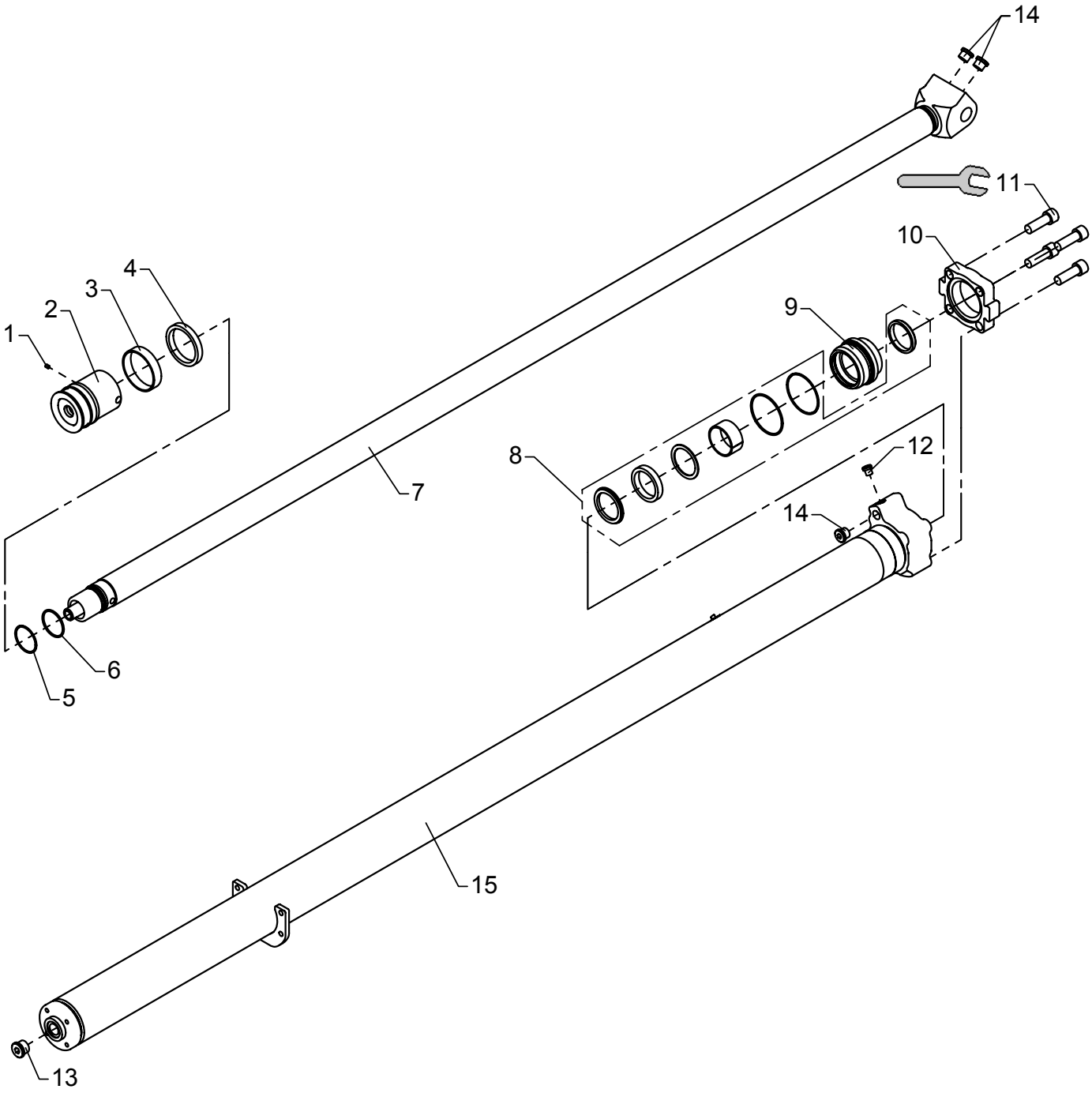

463 Nm

Extension cylinder VI, C90/60s x 2250
Optimised boom system OK6

As from / To loader no.: 96 00 00 /
Created: 17.05.2004
Modified: 09.03.2006

Item no.	Qty.	Part no.	Description	Remarks
	1	6893620	Seal kit, C90/60s	Pos. 3, 4
1	1	30903	Screw	MSP6 x 8
2	1	6300477	Piston	
3	1	22145	Guide ring	PWR 90/84 x 20 - PF
4	1	22144	Seal	GHT 90/75 x 12,5
5	2	20706	Back ring	STR 25 x 30 x 1,3
6	1	20174	O-ring	OR 24,2 x 3
7	1	6302641	Piston rod	
8	1	22143	Seal kit	
9	1	6300441	Guide	
10	1	6300442	Flange	
11	4	32450	Screw	MC18 x 55
12	1	26355	Plug	VS-R-3/4 WD
13	1	25103	Plug	VS-R-1/2 WD
14	1	6302451	Cylinder	

52-380

Intern ref.: 6300440

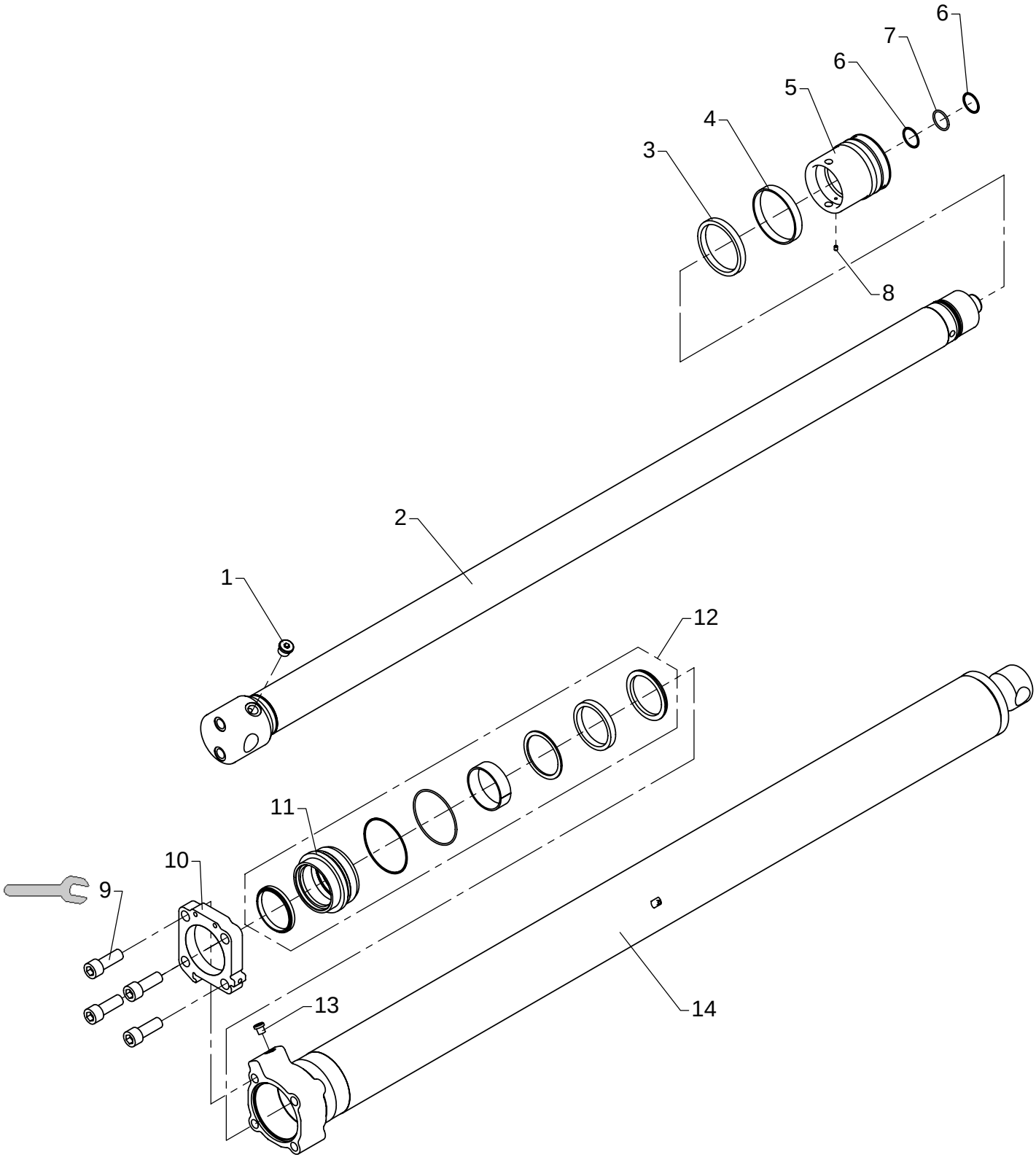

649 Nm

Extension cylinder I, C110/80h x 1650
Boom system K6-K8

As from / To loader no.: 96 00 00 /
Created: 03.10.2003
Modified: 09.03.2006

Item no.	Qty.	Part no.	Description	Remarks
	1	6893600	Seal kit, C110/80h	Pos. 3, 4, 6, 7
1	1	25103	Plug	VS-R-1/2 WD
2	1	6300445	Piston rod	
3	1	22131	Seal	GHT 110/95 x 12,5 - PU/N/A
4	1	22130	Guide ring	PWR 110/104 x 16 - PF
5	1	6300406	Piston	
6	2	20705	Back ring	STR 35 x 40 x 1,3
7	1	20177	O-ring	OR 34,2 x 3
8	1	30903	Screw	MSP6 x 8
9	4	32449	Sockethead screw	MC20 x 55
10	1	6300405	Flange	
11	1	6302407	Guide	
12	1	22139	Seal kit	
13	1	6300448	Cylinder	

52-380

Intern ref.: 6300450

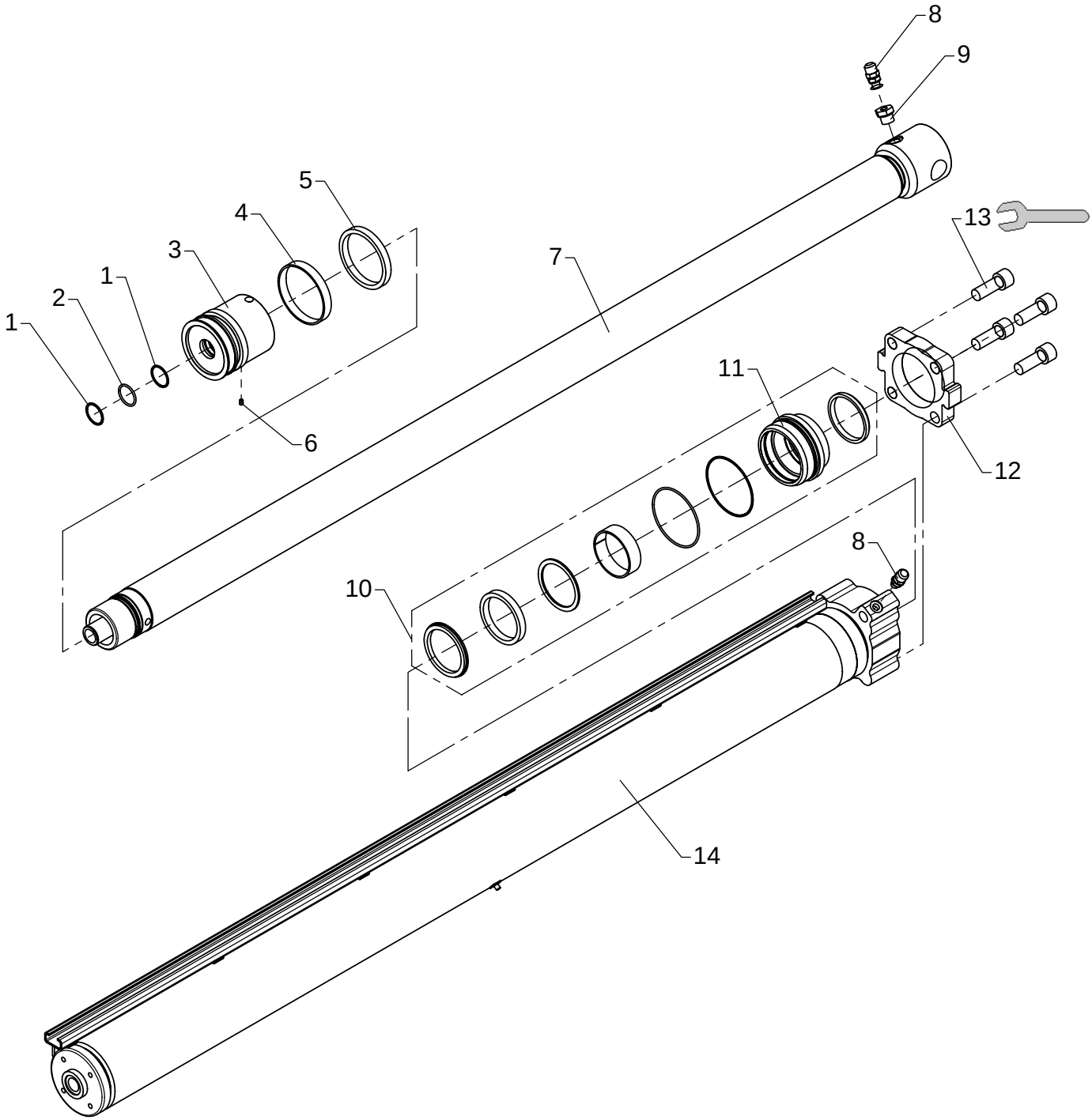

649 Nm

Extension cylinder II, C110/80h x 1700
Boom system K6-K8

As from / To loader no.: 96 00 00 /
Created: 03.10.2003
Modified: 09.03.2006

Item no.	Qty.	Part no.	Description	Remarks
	1	6893600	Seal kit, C110/80h	Pos. 1, 2, 4, 5
1	2	20705	Back ring	STR 35 x 40 x 1,3
2	1	20177	O-ring	OR 34,2 x 3
3	1	6300406	Piston	
4	1	22130	Guide ring	PWR 110/104 x 16 - PF
5	1	22131	Seal	GHT 110/95 x 12,5 - PU/N/A
6	1	30903	Screw	MSP6 x 8
7	1	6300451	Piston rod	
8	1	22139	Seal kit	
9	1	6302407	Guide	
10	1	6300419	Flange	
11	4	32449	Sockethead screw	MC20 x 55
12	1	6300454	Cylinder	

52-380

Intern ref.: 6300460

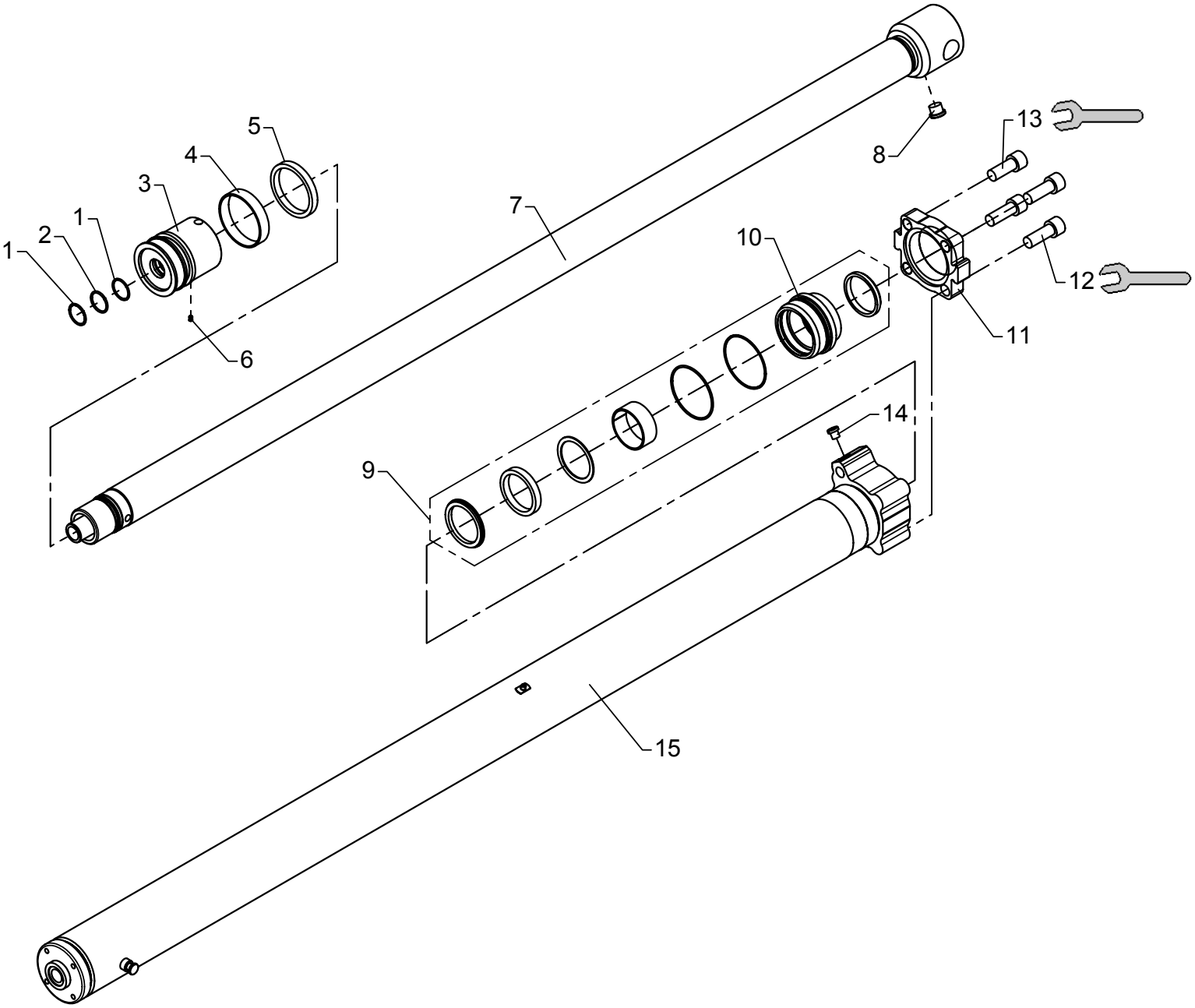

649 Nm

Extension cylinder III, C100/70h x 1800
Boom system K6-K8

As from / To loader no.: 96 00 00 /
Created: 03.10.2003
Modified: 09.03.2006

Item no.	Qty.	Part no.	Description	Remarks
	1	6893610	Seal kit, C100/70h	Pos. 1, 2, 4, 5
1	2	20705	Back ring	STR 35 x 40 x 1,3
2	1	20177	O-ring	OR 34,2 x 3
3	1	6300424	Piston	
4	1	22142	Guide ring	PWR 100/94 x 20 - PF
5	1	22141	Seal	GHT 100/85 x 12,5
6	1	30903	Screw	MSP6 x 8
7	1	6300676	Piston rod	
8	1	25103	Plug	VS-R-1/2 WD
9	1	22140	Seal kit	
10	1	6300425	Guide	
11	1	6300426	Flange	
12	3	32449	Sockethead screw	MC20 x 55
13	1	30496	Sockethead screw	MC20 x 50
14	1	6300464	Cylinder	

52-380

Intern ref.: 6302460

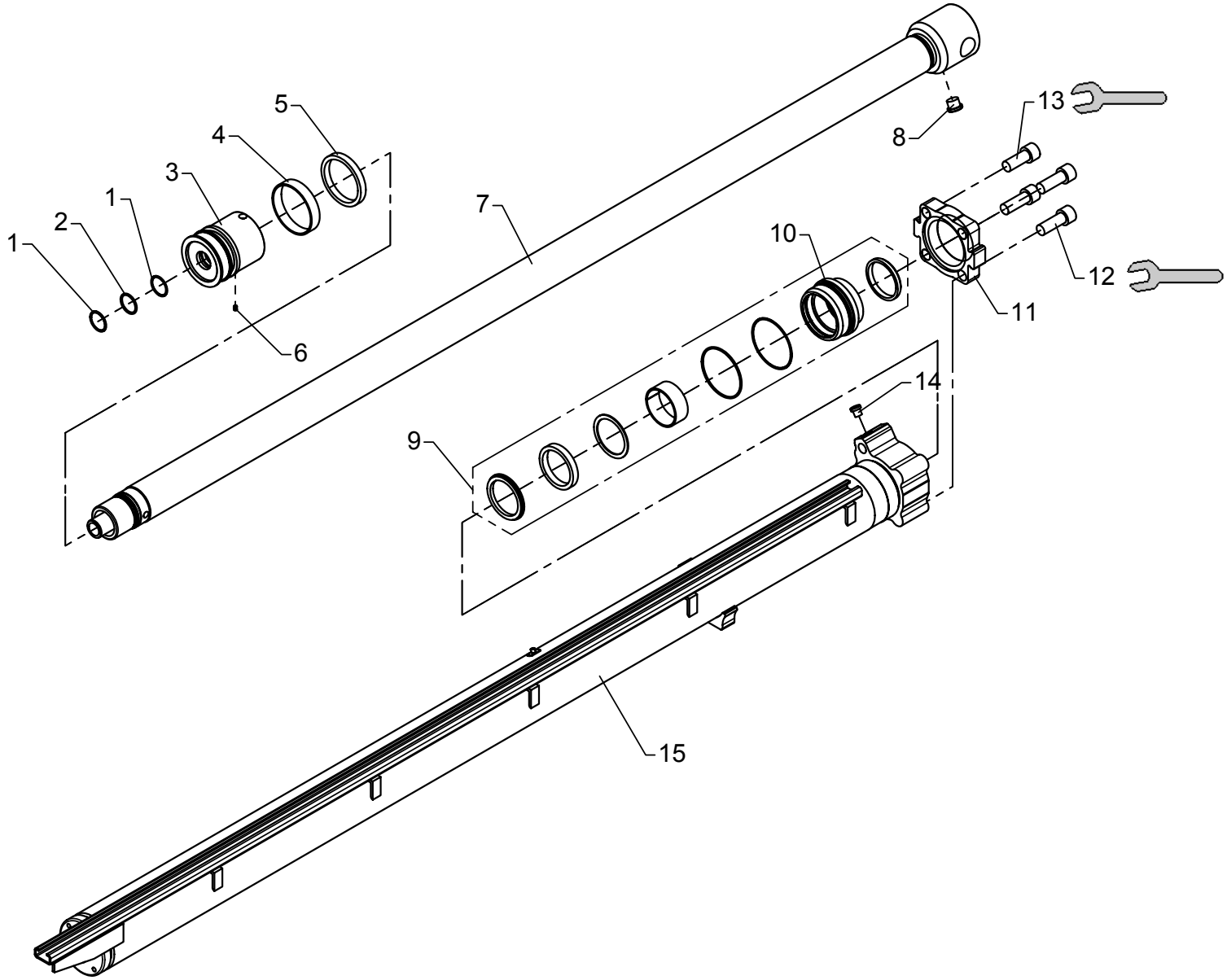

649 Nm

Extension cylinder IV, C100/70h x 1900
Boom system K6-K8

As from / To loader no.: 96 00 00 /
Created: 03.10.2003
Modified: 09.03.2006

Item no.	Qty.	Part no.	Description	Remarks
	1	6893610	Seal kit, C100/70h	Pos. 1, 2, 4, 5
1	2	20705	Back ring	STR 35 x 40 x 1,3
2	1	20177	O-ring	OR 34,2 x 3
3	1	6300424	Piston	
4	1	22142	Guide ring	PWR 100/94 x 20 - PF
5	1	22141	Seal	GHT 100/85 x 12,5
6	1	30903	Screw	MSP6 x 8
7	1	6300461	Piston rod	
8	1	25103	Plug	VS-R-1/2 WD
9	1	22140	Seal kit	
10	1	6300425	Guide	
11	1	6300426	Flange	
12	3	32449	Sockethead screw	MC20 x 55
13	1	30496	Sockethead screw	MC20 x 50
14	1	6302464	Cylinder tube	

52-380

Intern ref.: 6300470

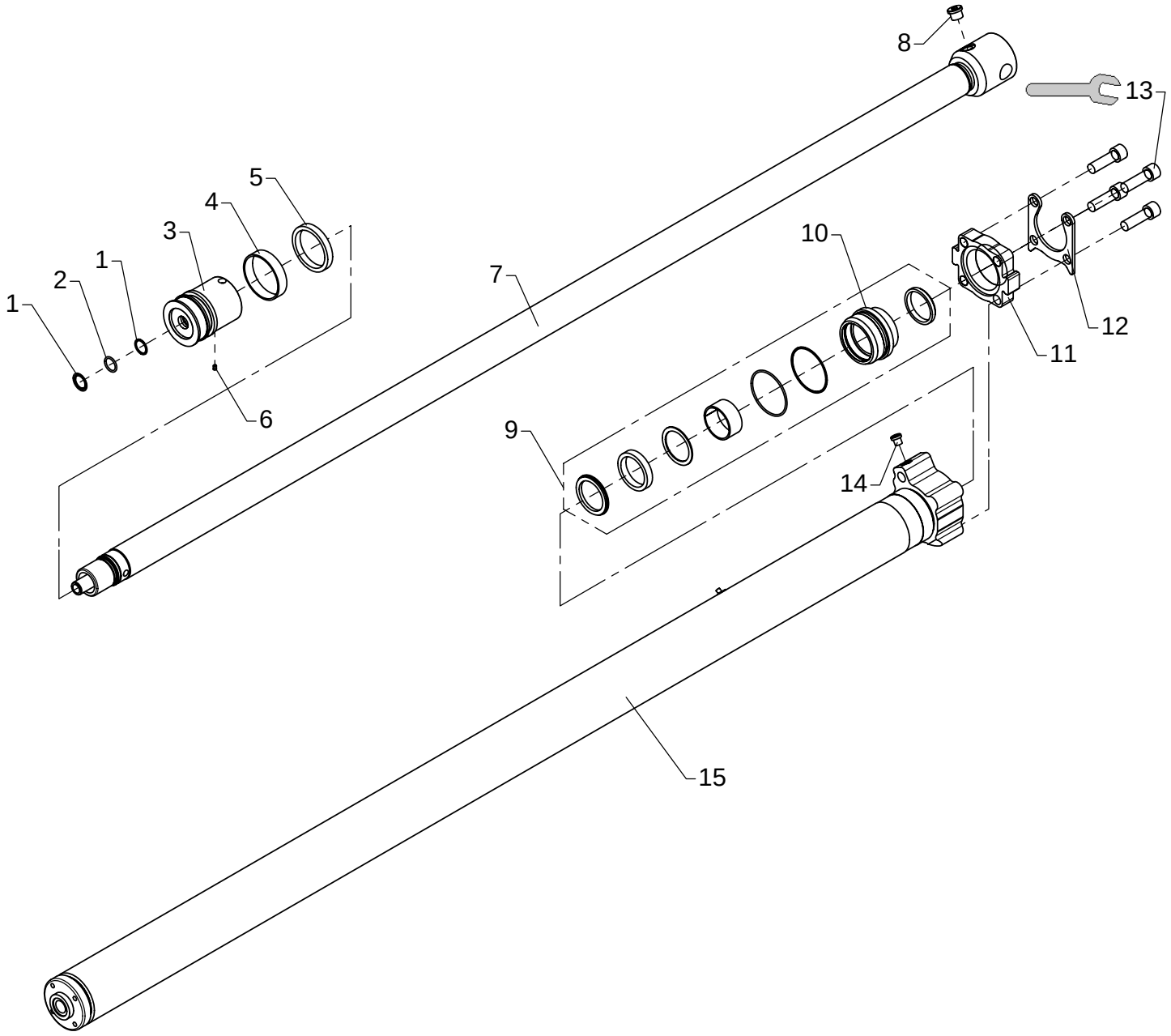

463 Nm

Extension cylinder V, C90/60h x 2050
Boom system K6-K8

As from / To loader no.: 96 00 00 /
Created: 03.10.2003
Modified: 09.03.2006

Item no.	Qty.	Part no.	Description	Remarks
	1	6893630	Seal kit, C90/60h	Pos. 1, 2, 4, 5
1	2	20706	Back ring	STR 25 x 30 x 1,3
2	1	20174	O-ring	OR 24,2 x 3
3	1	6300477	Piston	
4	1	22145	Guide ring	PWR 90/84 x 20 - PF
5	1	22144	Seal	GHT 90/75 x 12,5
6	1	30903	Screw	MSP6 x 8
7	1	6300471	Piston rod	
8	1	25103	Plug	VS-R-1/2 WD
9	1	22143	Seal kit	
10	1	6300441	Guide	
11	1	6300442	Flange	
12	1	6300536	Safety device	
13	4	32456	Screw	MC18 x 60
14	1	6300475	Cylinder	

52-380

Intern ref.: 6302470

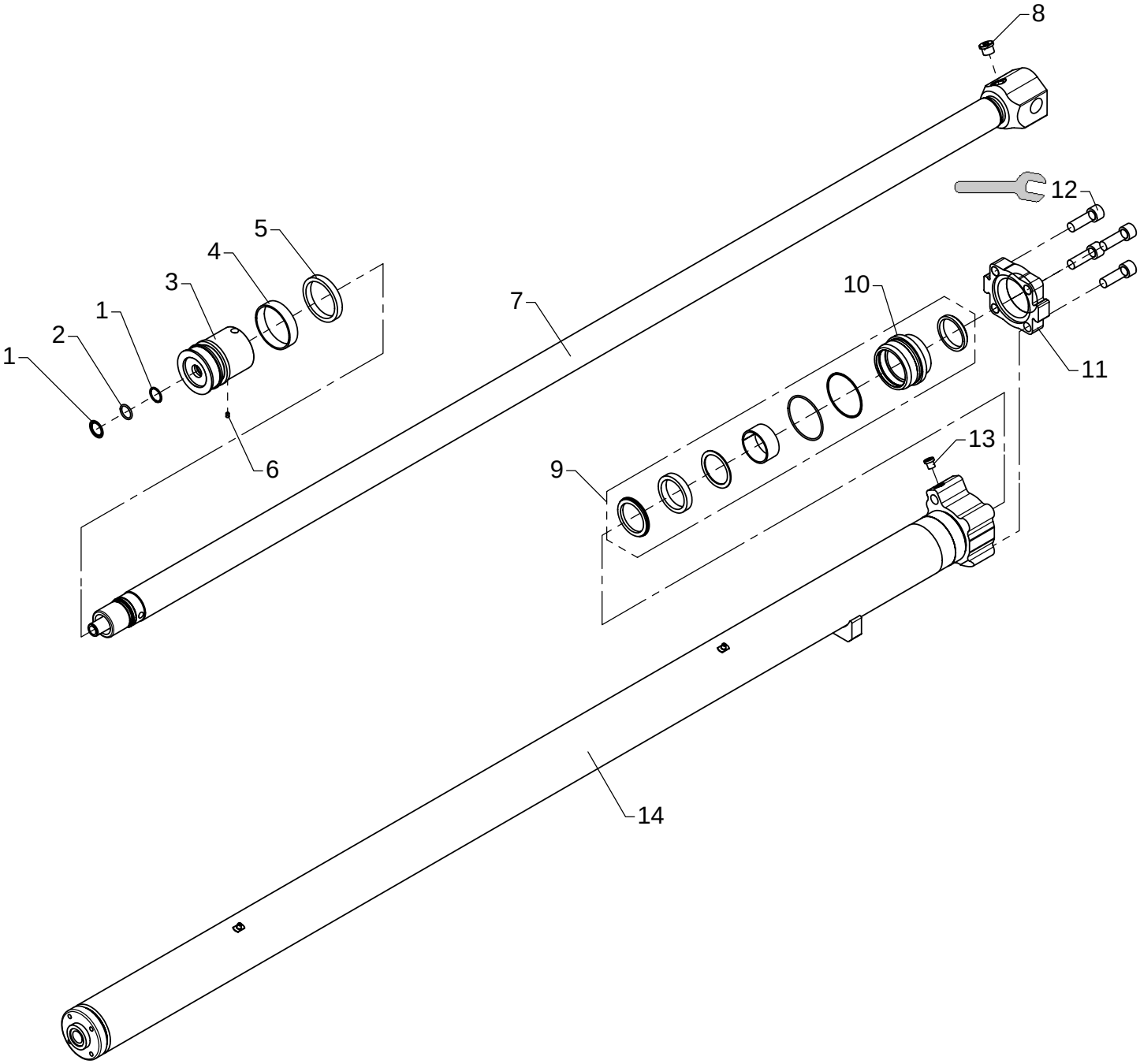

463 Nm

Extension cylinder VI, C90/60h x 2150
Boom system K6-K8

As from / To loader no.: 96 00 00 /
Created: 03.10.2003
Modified: 09.03.2006

Item no.	Qty.	Part no.	Description	Remarks
	1	6893630	Seal kit, C90/60h	Pos. 1, 2, 4, 5
1	2	20706	Back ring	STR 25 x 30 x 1,3
2	1	20174	O-ring	OR 24,2 x 3
3	1	6300477	Piston	
4	1	22145	Guide ring	PWR 90/84 x 20 - PF
5	1	22144	Seal	GHT 90/75 x 12,5
6	1	30903	Screw	MSP6 x 8
7	1	6302471	Piston rod	
8	1	25103	Plug	VS-R-1/2 WD
9	1	22143	Seal kit	
10	1	6300441	Guide	
11	1	6300442	Flange	
12	4	32450	Screw	MC18 x 55
13	1	6302475	Cylinder tube	

52-380

Intern ref.: 6300480

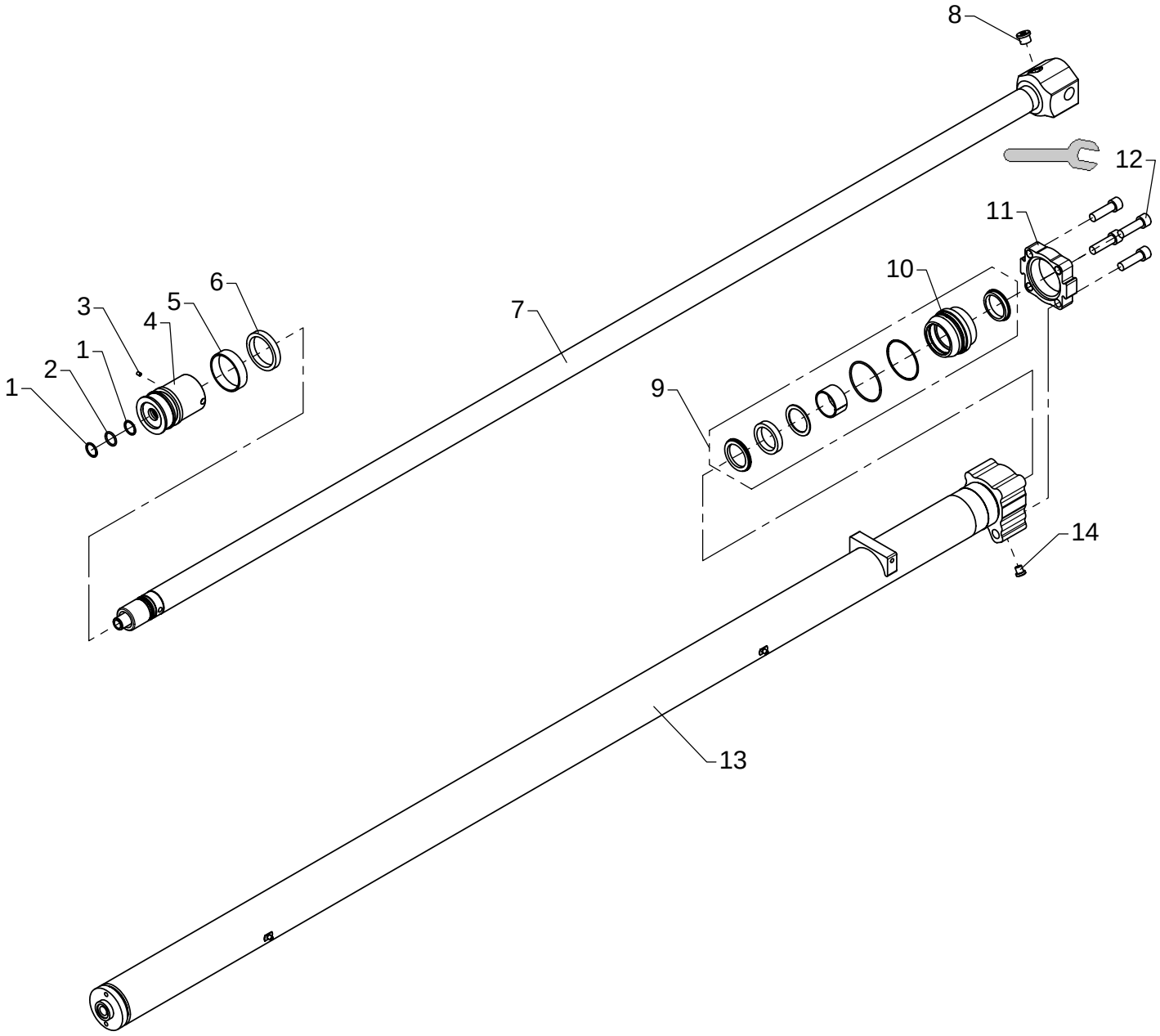

333 Nm

Extension cylinder VII/VIII, C80/50h x 2300
Boom system K6-K8

As from / To loader no.: 96 00 00 /
Created: 03.10.2003
Modified: 09.03.2006

Item no.	Qty.	Part no.	Description	Remarks
	1	6893640	Seal kit, C80/50h	Pos. 1, 2, 5, 6
1	2	20706	Back ring	STR 25 x 30 x 1,3
2	1	20174	O-ring	OR 24,2 x 3
3	1	30903	Screw	MSP6 x 8
4	1	6300489	Piston	
5	1	22149	Guide ring	PWR 80/74 x 20 - PF
6	1	22148	Seal	GHT 80/65 x 12,5 - PU/N/A
7	1	6300483	Piston rod	
8	1	25103	Plug	VS-R-1/2 WD
9	1	22150	Seal kit	
10	1	6300491	Guide	
11	1	6292733	Flange	
12	4	32420	Sockethead screw	MC16 x 55
13	1	6300487	Cylinder	

52-380

Intern ref.: 6300850

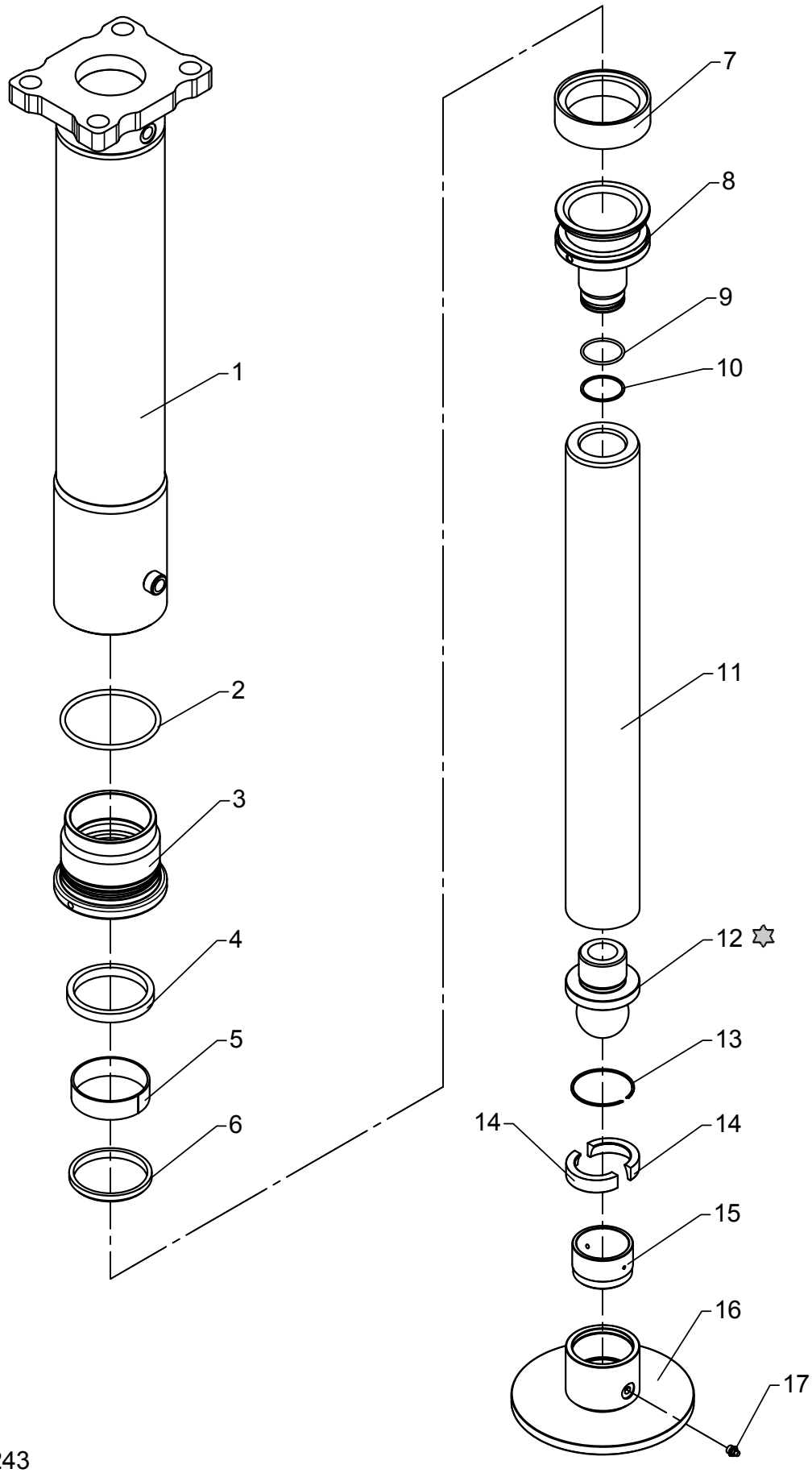

Loctite 243

Stabilizer cylinder C110-536, type V incl. ball joint

As from / To loader no.: 96 00 00 /
Created: 03.10.2003
Modified: 05.03.2004

Item no.	Qty.	Part no.	Description	Remarks
	1	6892650	Seal kit	Pos. 2, 4, 5, 6, 8, 9, 11
1	1	6194353	Cylinder tupe	
2	1	20338	O-ring	OR 104,1 x 5,7
3	1	6194333	Guide	
4	1	20619	Seal	NI300 85 x 100 x 12
5	1	21918	Bearing	HH506 85 x 90 x 25
6	1	20529	Scraper	AUAS 85 x 95 x 7/10
7	1	20642	Double sleeve	MDM 110 x 85 x 22
8	1	6194343	Piston	
9	1	20181	O-ring	OR 44,2 x 3
10	1	20709	Back ring	44,2 x 3
11	1	6300851	Piston rod	
12	1	6300852	Ball joint	
13	1	33270	Spring ring	SB70
14	2	6300854	Ball seat catch	
15	1	6300853	Ball seat	
16	1	6300855	Foot plate	
17	1	31318	Lubricator	1/8" RG

52-380

Intern ref.: 6198900

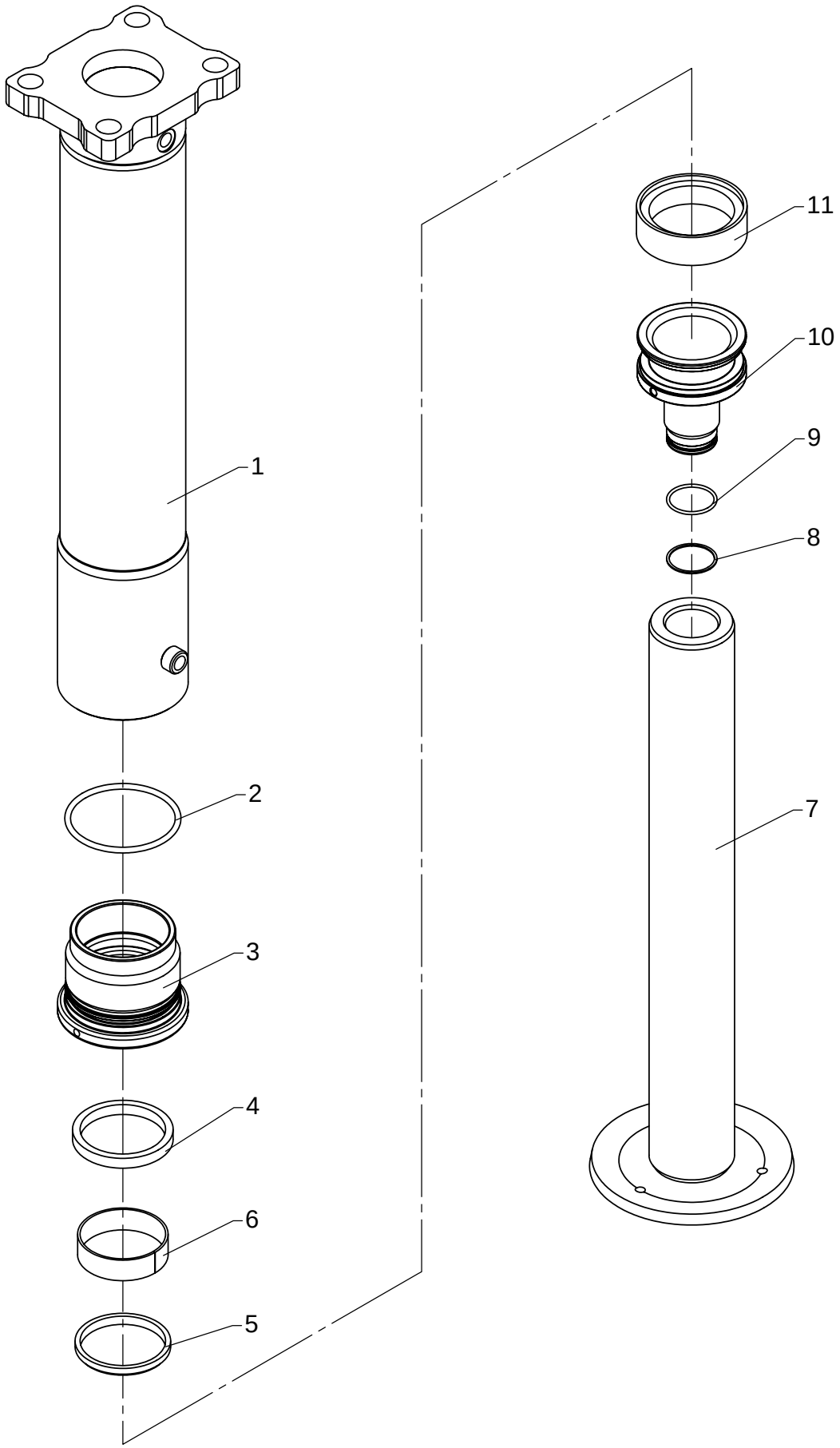

Stabilizer cylinder C110-536, type V incl. fixed footplate

As from / To loader no.: 96 00 00 /
Created: 03.10.2003
Modified:

Item no.	Qty.	Part no.	Description	Remarks
	1	6892650	Seal kit	Pos. 2, 4, 5, 6, 8, 9, 11
1	1	6194353	Cylinder tupe	
2	1	20338	O-ring	OR 104,1 x 5,7
3	1	6194333	Guide	
4	1	20619	Seal	NI300 85 x 100 x 12
5	1	20529	Scraper	AUAS 85 x 95 x 7/10
6	1	21918	Bearing	HH506 85 x 90 x 25
7	1	6194304	Piston rod	
8	1	20709	Back ring	44,2 x 3
9	1	20181	O-ring	OR 44,2 x 3
10	1	6194343	Piston	
11	1	20642	Double sleeve	MDM 110 x 85 x 22

52-380

Intern ref.: 6300860 / 7019340

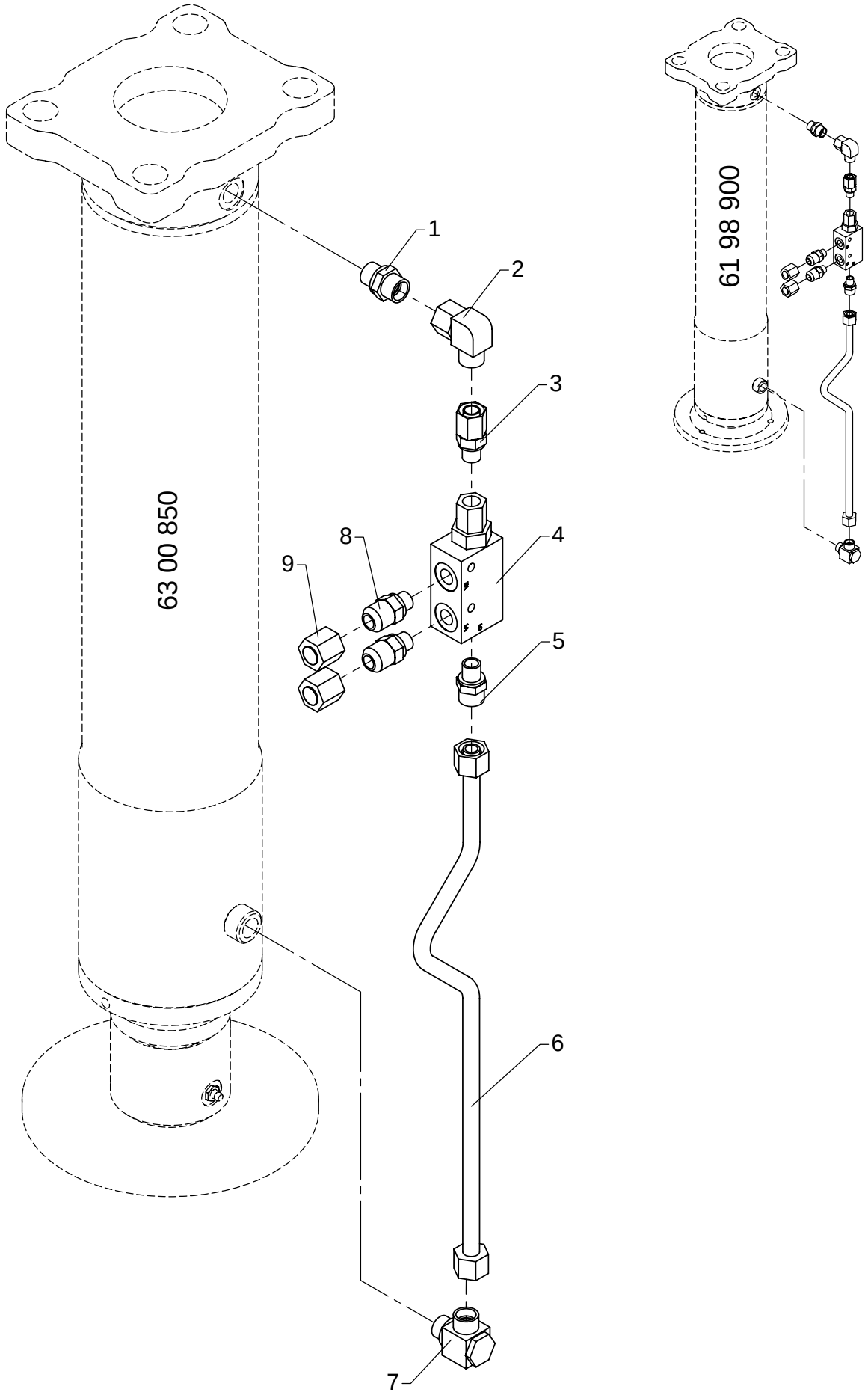

Stabilizer cylinder with check valve, type V

As from / To loader no.: 96 00 00 /
Created: 03.10.2003
Modified:

Item no.	Qty.	Part no.	Description	Remarks
1	1	25127	Connection	GES 12 LR-WD
2	1	25242	Elbow connection	EWSD 12 L
3	1	25241	Connection	EGESD 12 LR 1/4-WD
4	1	60472	Piloted check-valve	
5	1	25195	Connection	GEV 12 L/R 1/4-WD
6	1	6194964	Pipe	
7	1	25130	Banjo connection	RSWV 12 LR
8	2	25867	Straight connection	F40XS 12-1/4 JIC
9	2	25876	Screw cap	FNTXS 12 JIC

52-380

Intern ref.: 6300250

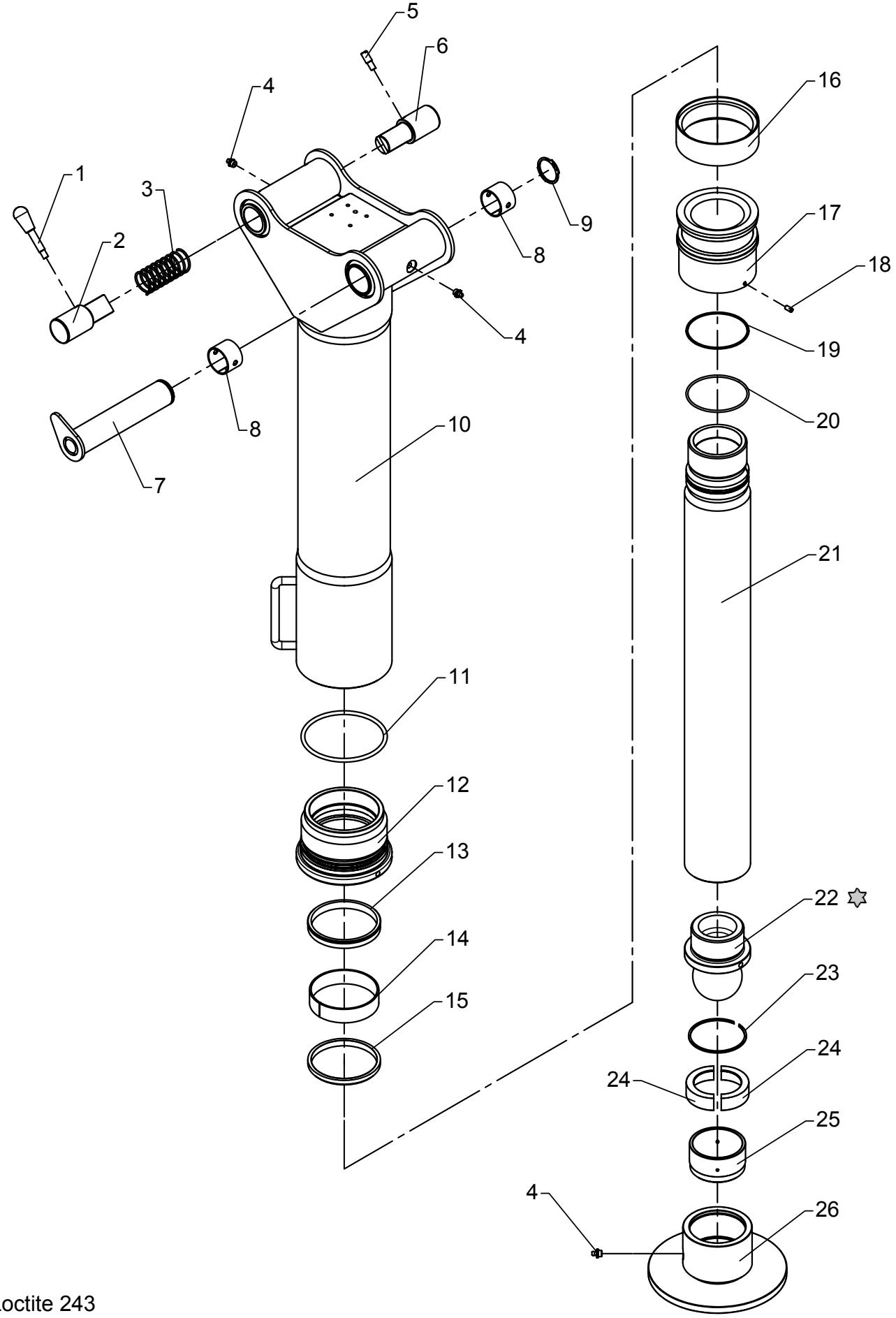

Loctite 243

Stabilizer cylinder C125-600, type R incl. ball joint

As from / To loader no.: 96 00 00 /
Created: 03.10.2003
Modified: 31.03.2004

Item no.	Qty.	Part no.	Description	Remarks
	1	6893590	Seal kit, C125/100	Pos. 12, 14, 15, 16, 17, 20, 21
1	1	64352	Lever with knob	
2	1	6300236	Drift	
3	1	33479	Compression spring	
4	3	31318	Lubricator	1/8" RG
5	1	6300268	Spacer	
6	1	6300237	Drift	
7	1	6300238	Stabilizer bolt	
8	2	23333	Bushing	PM 4030 DX
9	1	33121	Circlip	40U
10	1	6300251	Cylinder, swing-up leg	
11	1	20327	O-ring	OR 119,3 x 5,7
12	1	6300274	Guide	
13	1	20929	Seal	SI/L 100/110 x 12,5
14	1	21997	Bearing	HH506 100 x 105 x 25
15	1	20531	Scraper	GA 100 x 110 x 7/10
16	1	20791	Seal	MDM 125 x 108 x 26
17	1	6300273	Piston	
18	1	32256	Pointed screw	MSP6 x 12
19	1	20891	Back ring	89,5 x 3
20	1	20191	O-ring	OR 89,5 x 3
21	1	6300271	Piston rod	
22	1	6300272	Ball joint	
23	1	33271	Spring ring	SB85
24	2	6300266	Ball seat catch	
25	1	6300265	Ball seat	
26	1	6300262	Foot plate	

52-380

Intern ref.: 6300810

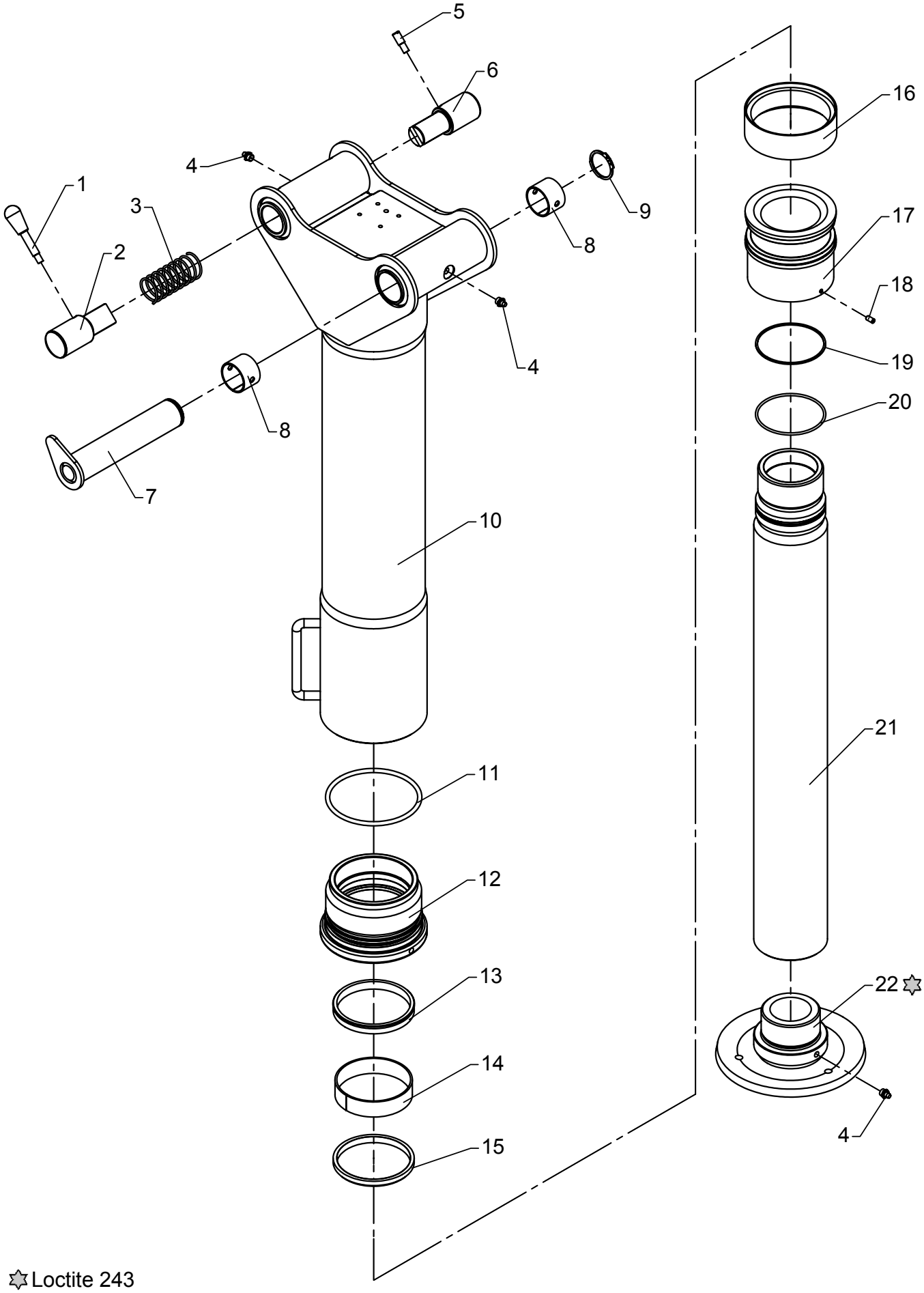

Loctite 243

Stabilizer cylinder C125-600, type R incl. fixed footplate

As from / To loader no.: 96 00 00 /
Created: 03.10.2003
Modified: 31.03.2004

Item no.	Qty.	Part no.	Description	Remarks
	1	6893590	Seal kit, C125/100	Pos. 12, 14, 15, 16, 17, 20, 21
1	1	64352	Lever with knob	
2	1	6300236	Drift	
3	1	33479	Compression spring	
4	3	31318	Lubricator	1/8" RG
5	1	6300268	Spacer	
6	1	6300237	Drift	
7	1	6300238	Stabilizer bolt	
8	2	23333	Bushing	PM 4030 DX
9	1	33121	Circlip	40U
10	1	6300251	Cylinder, swing-up leg	
11	1	20327	O-ring	OR 119,3 x 5,7
12	1	6300274	Guide	
13	1	20929	Seal	SI/L 100/110 x 12,5
14	1	21997	Bearing	HH506 100 x 105 x 25
15	1	20531	Scraper	GA 100 x 110 x 7/10
16	1	20791	Seal	MDM 125 x 108 x 26
17	1	6300273	Piston	
18	1	32256	Pointed screw	MSP6 x 12
19	1	20891	Back ring	89,5 x 3
20	1	20191	O-ring	OR 89,5 x 3
21	1	6300271	Piston rod	
22	1	6302262	Footplate, fixed	

52-380

Intern ref.: 6300240 / 6300800

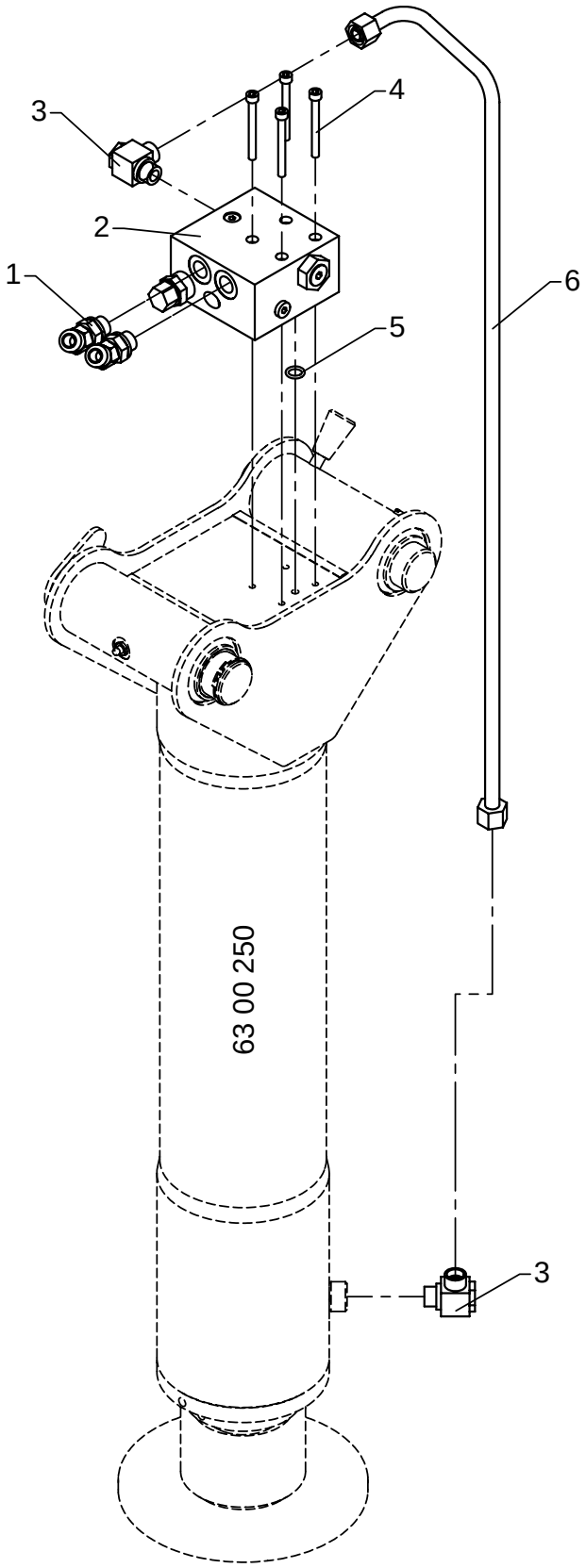

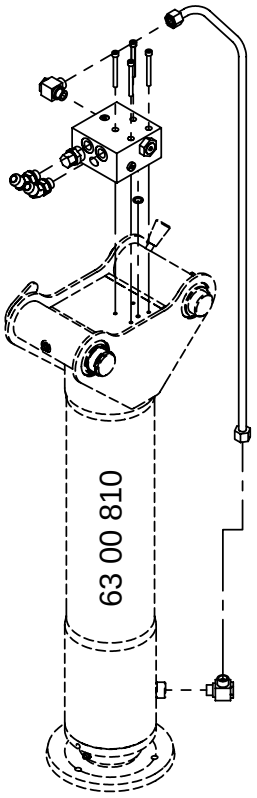

Stabilizer cylinder with check valve, type R

As from / To loader no.: 96 00 00 /
Created: 03.10.2003
Modified:

Item no.	Qty.	Part no.	Description	Remarks
1	2	26695	Elbow connection 45°	V40XS12 - 3/8
2	1	59058	Piloted check-valve	
3	2	25130	Banjo connection	RSWV 12 LR
4	4	30441	Screw	MC6 x 60
5	1	20126	O-ring	OR 11,3 x 2,4
6	1	6300275	Pipe	

52-380

Intern ref.: 6302430

Patentanmeldt.
Patent pending.
Patentangemeldet.
La demande de brêvet a été déposée.
Solicitud de patente.

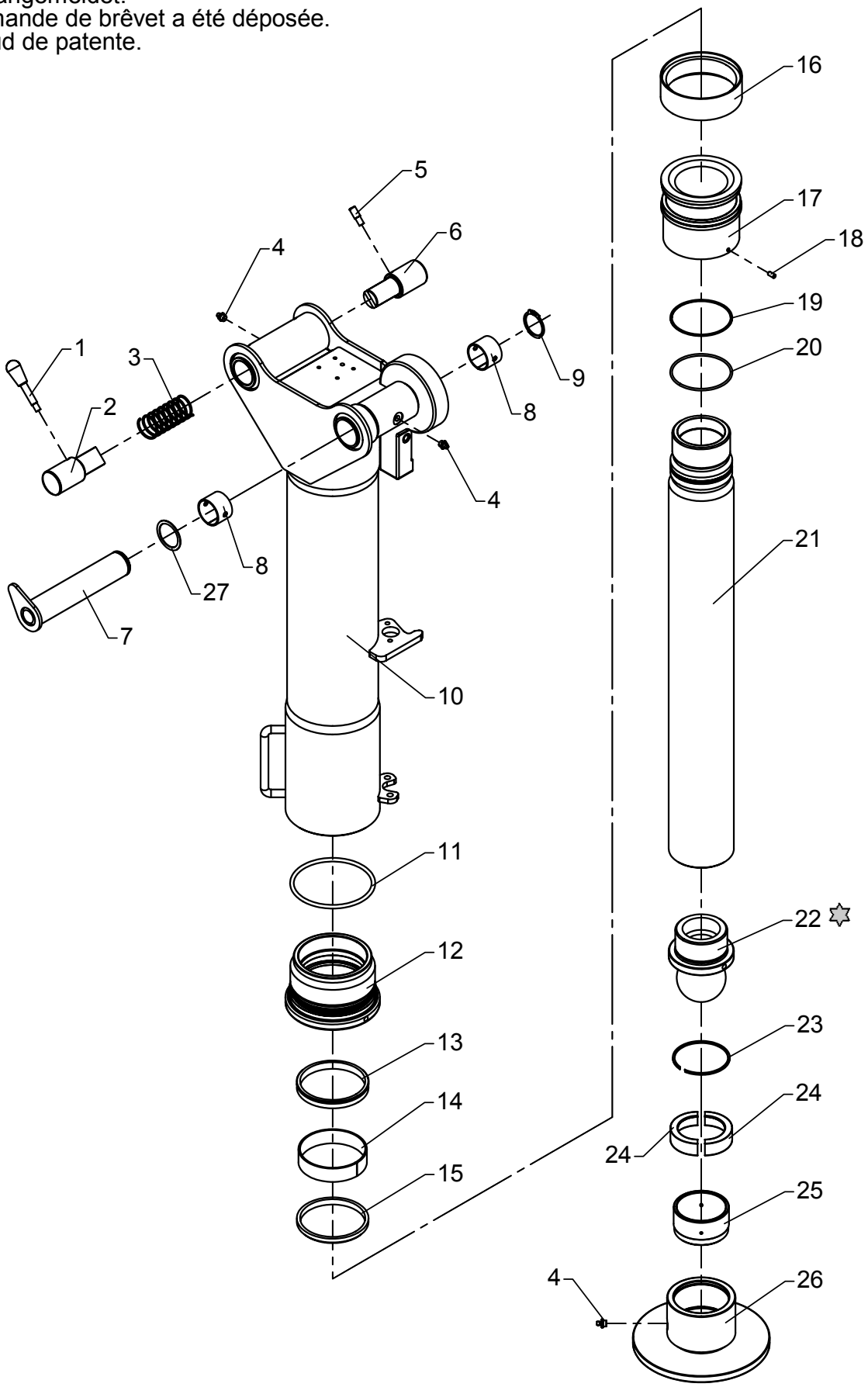

✡ Loctite 243

Swing-up stabilizer cylinder C125-xxx, type HR incl. ball joint

As from / To loader no.: 96 00 00 /
Created: 03.10.2003
Modified: 16.04.2007

Item no.	Qty.	Part no.	Description	Remarks
	1	6301600	Hydr. swingup stab. cyl. C125-500	
	1	6302430	Hydr. swingup stab. cyl. C125-600	
	1	6893590	Seal kit, C125/100	Pos. 11, 13, 14, 15, 16, 19, 20
1	1	64352	Lever with knob	
2	1	6300236	Drift	
3	1	33479	Compression spring	
4	3	31318	Lubricator	1/8" RG
5	1	6300268	Spacer	
6	1	6300237	Drift	
7	1	6300238	Stabilizer bolt	
8	2	23333	Bushing	PM 4030 DX
9	1	33121	Circlip	40U
10	1	6302421	Cylinder tube	C125-600
11	1	20327	O-ring	OR 119,3 x 5,7
12	1	6300274	Guide	
13	1	20929	Seal	SI/L 100/110 x 12,5
14	1	21997	Bearing	HH506 100 x 105 x 25
15	1	20531	Scraper	GA 100 x 110 x 7/10
16	1	20791	Seal	MDM 125 x 108 x 26
17	1	6300273	Piston	
18	1	32256	Pointed screw	MSP6 x 12
19	1	20891	Back ring	89,5 x 3
20	1	20191	O-ring	OR 89,5 x 3
21	1	6300271	Piston rod	C125-600
22	1	6300272	Ball joint	
23	1	33271	Spring ring	SB 85
24	2	6300266	Ball seat catch	
25	1	6300265	Ball seat	
26	1	6300262	Foot plate	
27	1	31102	Washer	ø40 x 50 x 1,0
28	1	6301561	Cylinder tube	C125-500
29	1	6301564	Piston rod	C125-500

52-380

Intern ref.: 6302520

Patentanmeldt.
Patent pending.
Patentangemeldet.
La demande de brêvet a été déposée.
Solicitud de patente.

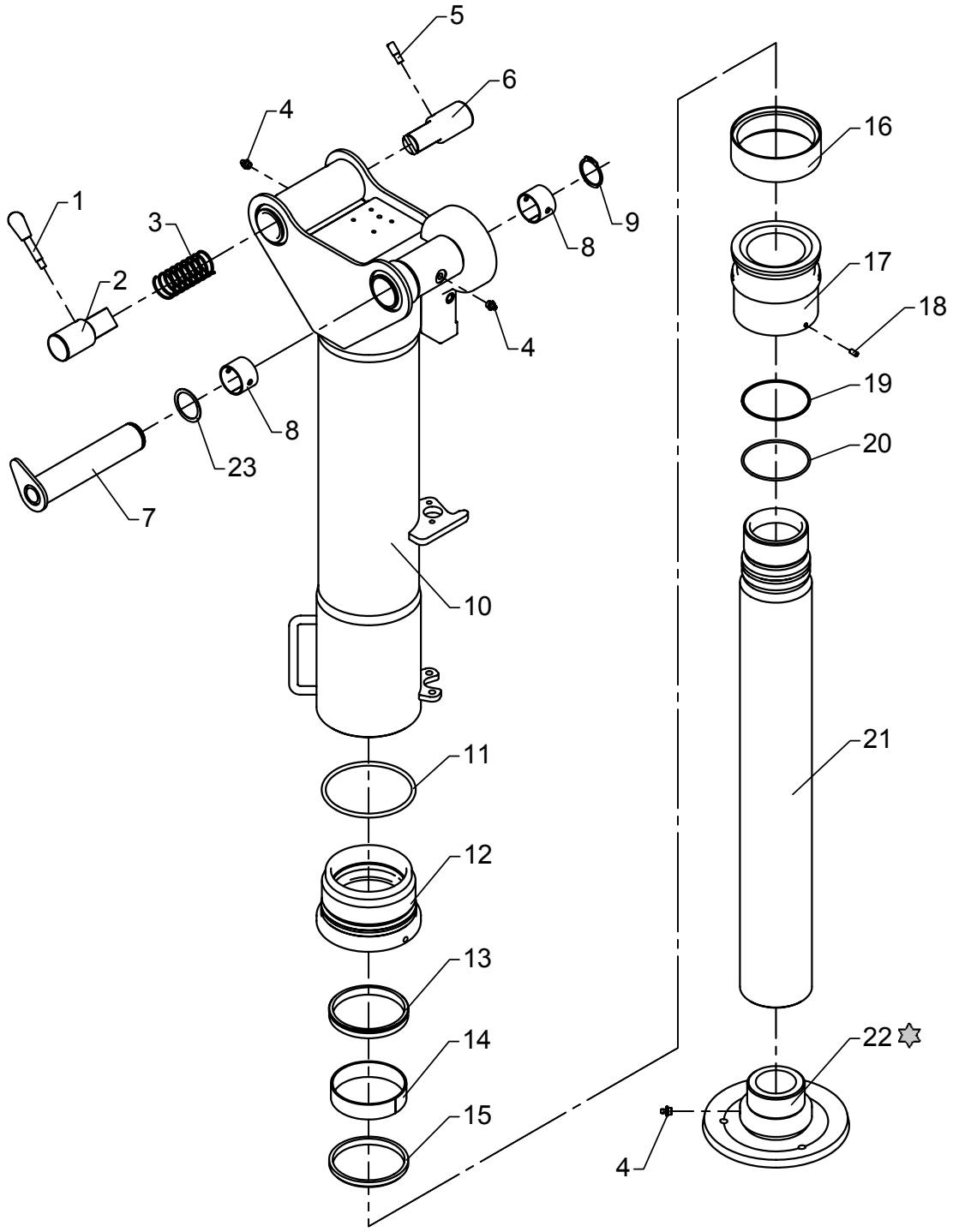

Loctite 243

Swing-up stabilizer cylinder C125-xxx, type HR incl. fixed footplate

As from / To loader no.: 96 00 00 /
Created: 03.10.2003
Modified: 16.04.2007

Item no.	Qty.	Part no.	Description	Remarks
	1	6301580	Hydr. swingup stab. cyl. C125-500	
	1	6302520	Hydr. swingup stab. cyl. C125-600	
	1	6893590	Seal kit, C125/100	Pos. 11, 13, 14, 15, 16, 19, 20
1	1	64352	Lever with knob	
2	1	6300236	Drift	
3	1	33479	Compression spring	
4	3	31318	Lubricator	1/8" RG
5	1	6300268	Spacer	
6	1	6300237	Drift	
7	1	6300238	Stabilizer bolt	
8	2	23333	Bushing	PM 4030 DX
9	1	33121	Circlip	40U
10	1	6302421	Cylinder tube	C125-600
11	1	20327	O-ring	OR 119,3 x 5,7
12	1	6300274	Guide	
13	1	20929	Seal	SI/L 100/110 x 12,5
14	1	21997	Bearing	HH506 100 x 105 x 25
15	1	20531	Scraper	GA 100 x 110 x 7/10
16	1	20791	Seal	MDM 125 x 108 x 26
17	1	6300273	Piston	
18	1	32256	Pointed screw	MSP6 x 12
19	1	20891	Back ring	89,5 x 3
20	1	20191	O-ring	OR 89,5 x 3
21	1	6300271	Piston rod	C125-600
22	1	6302262	Footplate, fixed	
23	1	31102	Washer	ø40 x 50 x 1,0
24	1	6301561	Cylinder tube	C125-500
25	1	6301564	Piston rod	C125-500

52-380

Intern ref.: 6302410

Patentanmeldt.
Patent pending.
Patentangemeldet.
La demande de brêvet a été déposée.
Solicitud de patente.

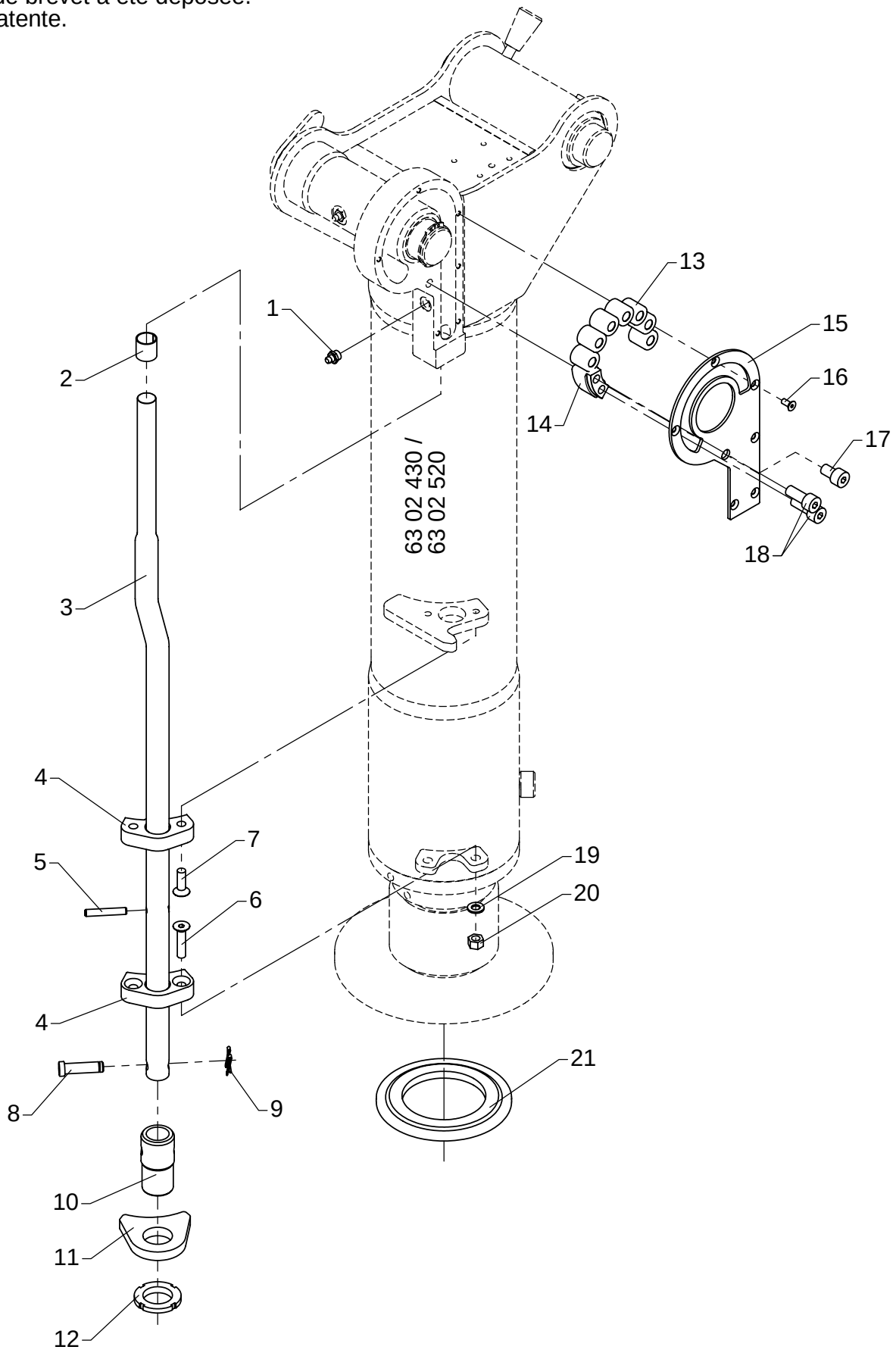

Parts for swing-up stabilizer cylinder

As from / To loader no.: 96 00 00 /
Created: 03.10.2003
Modified: 16.04.2007

Item no.	Qty.	Part no.	Description	Remarks
	1	6301590	Parts, swingup stab. cyl. C125-500	
	1	6302410	Parts, swingup stab. cyl. C125-600	
1	1	31318	Lubricator	1/8" RG
2	1	23939	Bushing	MB 1820 DU-B
3	1	6302434	Compression rod	C125-600
4	2	63524	Guide	
5	1	31228	Retaining pin, stainless	ø6 x 40
6	2	30584	Countersunk screw	MK8 x 35
7	2	31964	Counter sunk screw, stainless	MK8 x 25
8	1	6302437	Lock pin	
9	1	31905	Clip	
10	1	6302436	Adjusting piece	
11	1	6302435	Compression block	
12	1	23147	Nut	M30 x 1,5
13	7	23146	Cylindrical roller	RC 20 x 20 CD
14	1	6302433	Stop	
15	1	6302432	Cover	
16	6	32405	Sockethead screw	MK5 x 12
17	1	30964	Screw	MC10 x 16
18	2	30453	Screw	MC10 x 25
19	2	31147	Washer, stainless	8 mm
20	2	30886	Lock nut, stainless	M8
21	1	6302439	Carrier plate	
22	1	6301565	Compression rod	C125-500

52-380

Intern ref.: 6302440 / 6302530

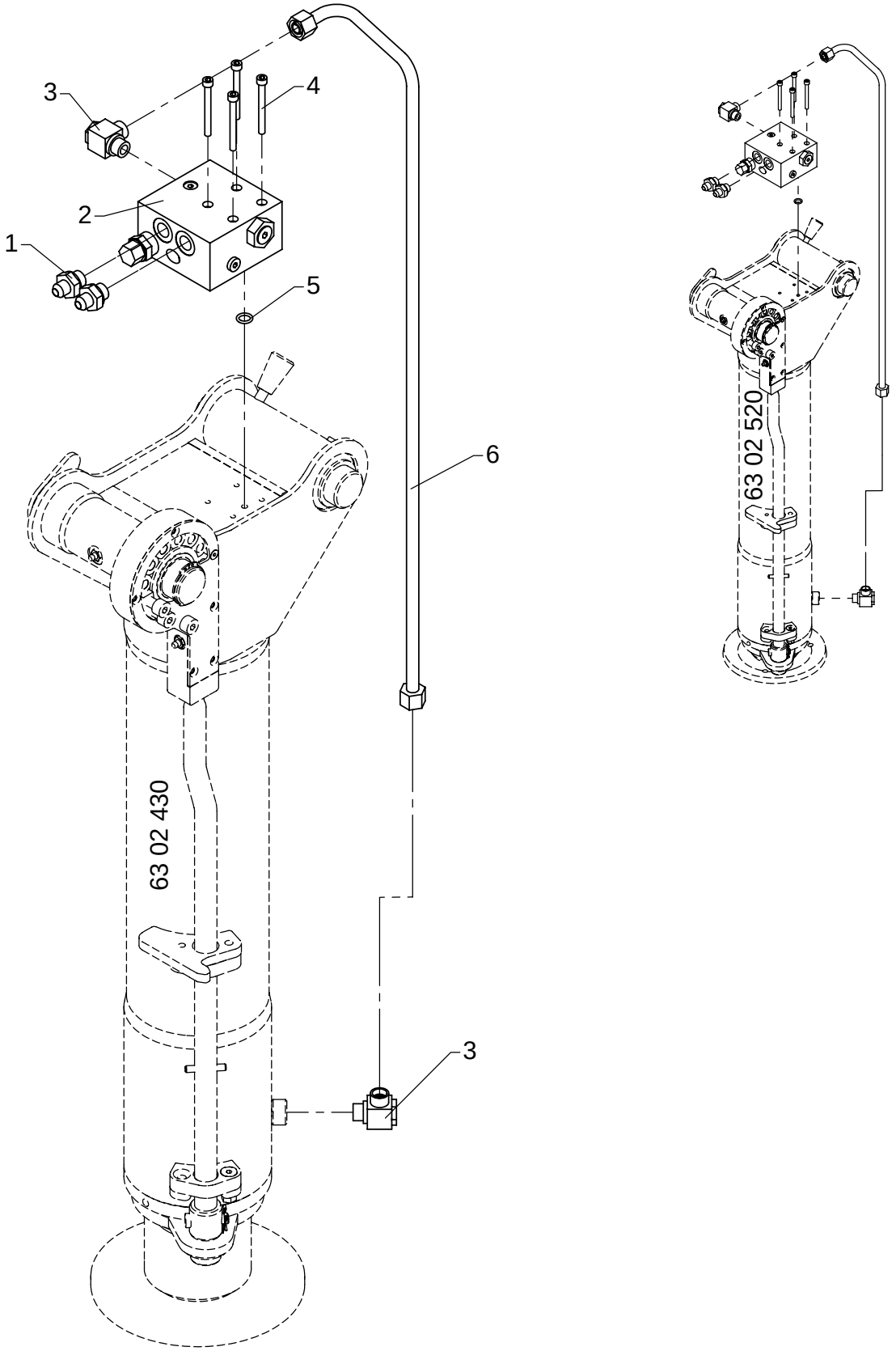

Stabilizer cylinder with check valve, type HR

As from / To loader no.: 96 00 00 /
Created: 03.10.2003
Modified: 16.04.2007

Item no.	Qty.	Part no.	Description	Remarks
1	2	25743	Straight connection	F40XS 10-3/8 JIC
2	1	59058	Piloted check-valve	
3	2	25130	Banjo connection	RSWV 12 LR
4	4	30441	Screw	MC6 x 60
5	1	20125	O-ring	OR 9,3 x 2,4
6	1	6301566	Pipe	C125-500
7	1	6300275	Pipe	C125-600
8	1	6301600	Hydr.swingup stab.cyl.C125-500	
9	1	6302430	Hydr.swingup stab.cyl.C125-600	
10	1	6301590	Parts,swingup stab.cylC125-500	
11	1	6302410	Parts,swingup stab.cylC125-600	
12	1	6301580	Hydr.swingup stab.cyl.C125-500	
13	1	6302520	Hydr.swingup stab.cyl.C125-600	

52-380

Intern ref.: 6300630

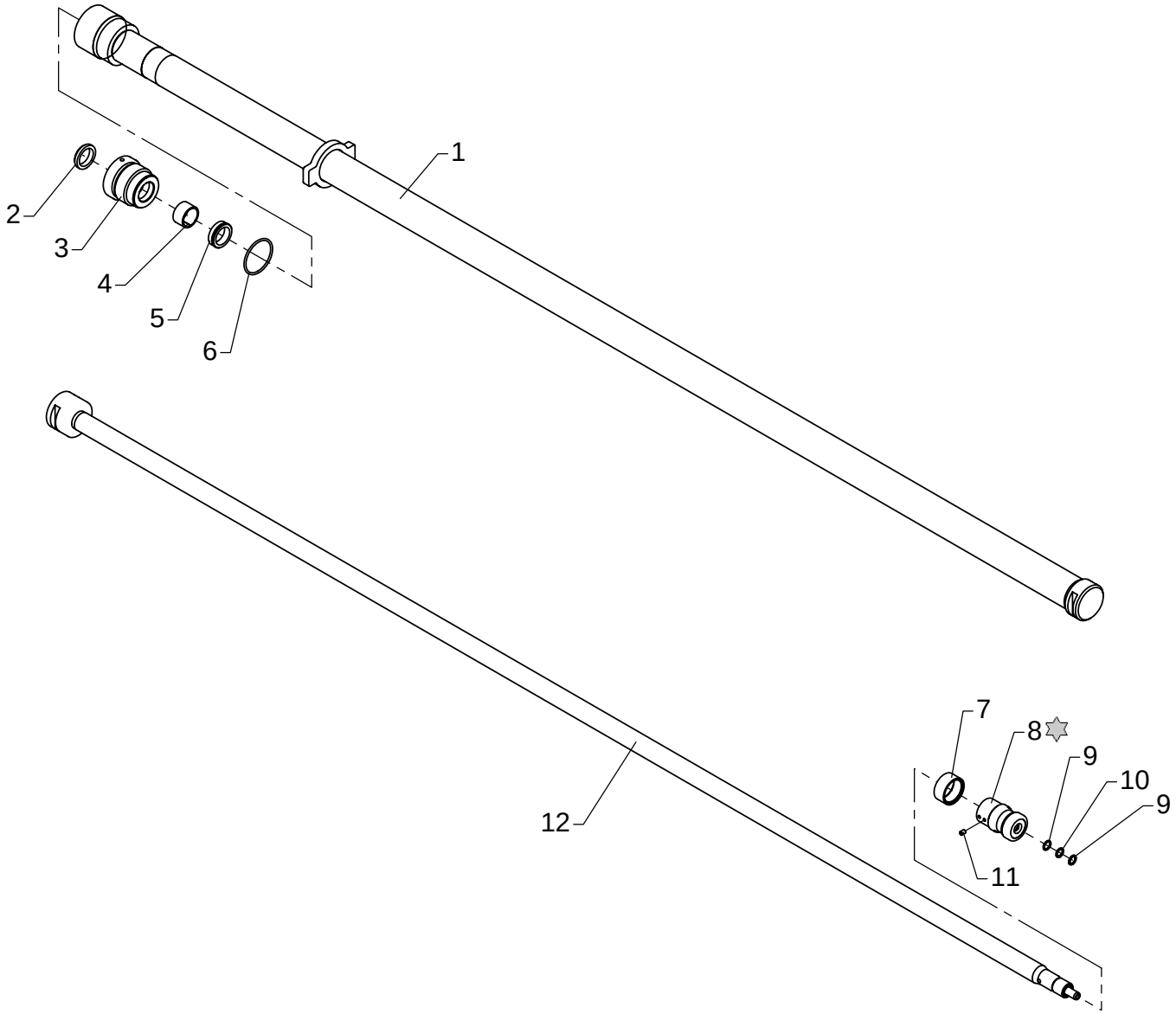

Loctite 243

Beam cylinder C45-2015, type DV+DR+DHR - 6325

As from / To loader no.: 96 00 00 /
Created: 03.10.2003
Modified: 10.10.2006

Item no.	Qty.	Part no.	Description	Remarks
	1	6893320	Seal kit C45	Pos. 2, 4, 5, 6, 7, 9, 10
1	1	6300631	Cylinder	
2	1	20507	Scraper	AUAS 30 x 40 x 5/8
3	1	1291323	Guide	
4	1	21912	Bearing	HH506 30 x 35 x 20
5	1	20683	Seal	HH605 30 x 40 x 11
6	1	20183	O-ring	OR 54,5 x 3
7	1	20949	Seal	45 x 37 x 15,5
8	1	1310733	Piston	
9	2	20879	Back ring	11,3 x 2,4
10	1	20126	O-ring	OR 11,3 x 2,4
11	1	30903	Screw	MSP6 x 8
12	1	6300636	Piston rod	

52-380

Intern ref.: 6300960

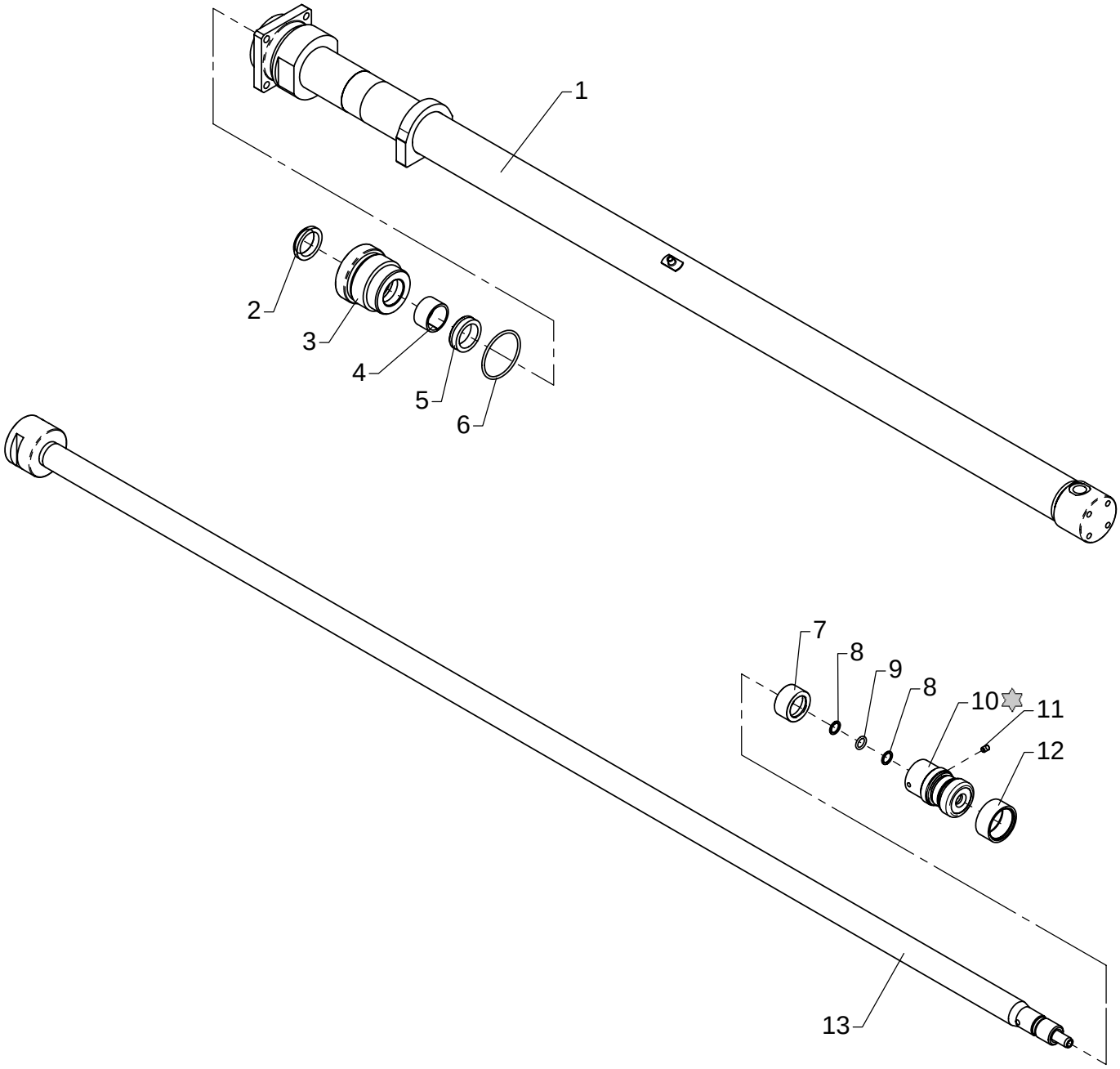

Loctite 243

Beam cylinder C45-1140, type DV+DR+DHR - 6725

As from / To loader no.: 96 00 00 /
Created: 03.10.2003
Modified: 10.10.2006

Item no.	Qty.	Part no.	Description	Remarks
	1	6893320	Seal kit C45	Pos. 2, 4, 5, 6, 8, 9, 12
1	1	6300961	Cylinder	
2	1	20507	Scraper	AUAS 30 x 40 x 5/8
3	1	1291323	Guide	
4	1	21912	Bearing	HH506 30 x 35 x 20
5	1	20683	Seal	HH605 30 x 40 x 11
6	1	20183	O-ring	OR 54,5 x 3
7	1	6300204	Spacer	
8	2	20879	Back ring	11,3 x 2,4
9	1	20126	O-ring	OR 11,3 x 2,4
10	1	1310733	Piston	
11	1	30903	Screw	MSP6 x 8
12	1	20949	Seal	45 x 37 x 15,5
13	1	6300205	Piston rod	

Please note: Drill a ø5 x 2-3 mm hole before the screw is fitted.

52-380

Intern ref.: 6300970

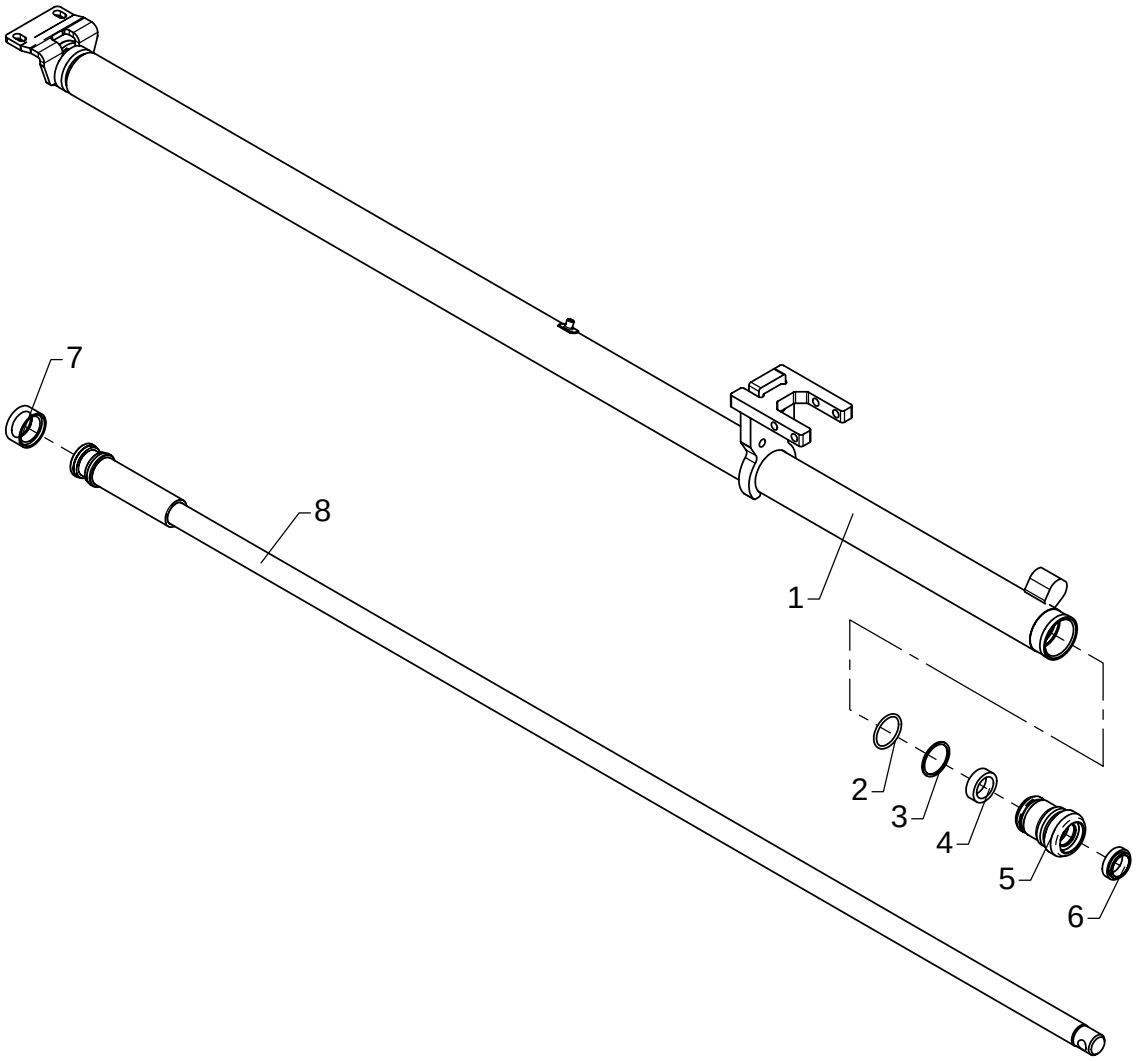

Beam cylinder C40-1275, type DV+DR+DHR - 6725

As from / To loader no.: 96 00 00 /
Created: 03.10.2003
Modified:

Item no.	Qty.	Part no.	Description	Remarks
	1	6892670	Seal kit C40	Pos. 2, 3, 4, 6, 7
1	1	6300971	Cylinder	
2	1	20177	O-ring	OR 34,2 x 3
3	1	20705	Back ring	STR 35 x 40 x 1,3
4	1	20651	Seal	HH605 25 x 35 x 11
5	1	6194183	Guide	
6	1	20505	Scraper	GA 25 x 35 x 7/10
7	1	20779	Double acting seal	MDM 40 x 30 x 12,3
8	1	6300973	Piston rod	

52-380

Intern ref.: 6300200

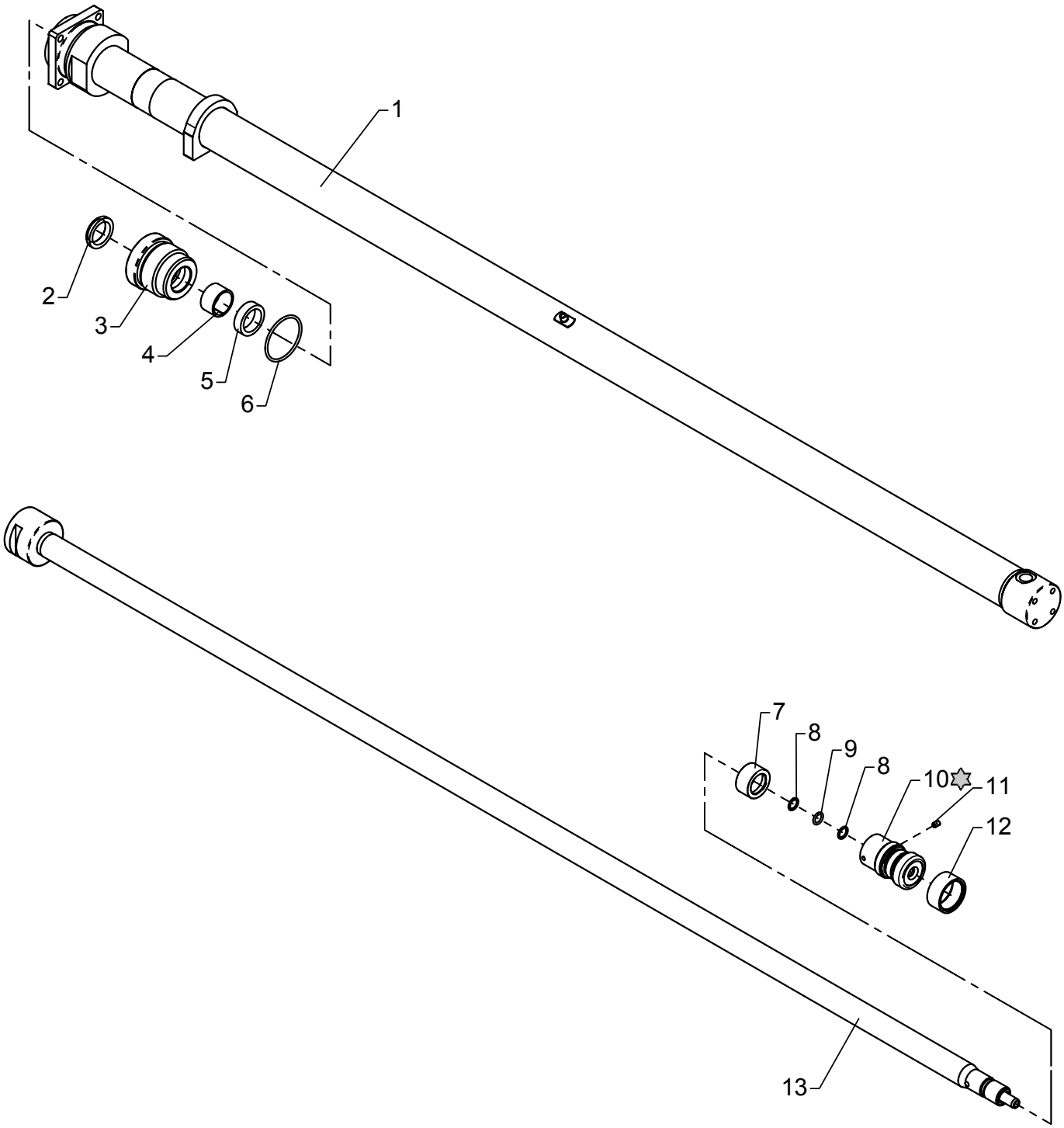

Loctite 243

Beam cylinder C45-1465, type DV+DR+DHR - 8420

As from / To loader no.: 96 00 00 /
Created: 03.10.2003
Modified: 10.10.2006

Item no.	Qty.	Part no.	Description	Remarks
	1	6893320	Seal kit C45	Pos. 2, 4, 5, 6, 8, 9, 12
1	1	6300201	Cylinder	
2	1	20507	Scraper	AUAS 30 x 40 x 5/8
3	1	1291323	Guide	
4	1	21912	Bearing	HH506 30 x 35 x 20
5	1	20683	Seal	HH605 30 x 40 x 11
6	1	20183	O-ring	OR 54,5 x 3
7	1	6300204	Spacer	
8	2	20879	Back ring	11,3 x 2,4
9	1	20126	O-ring	OR 11,3 x 2,4
10	1	1310733	Piston	
11	1	30903	Screw	MSP6 x 8
12	1	20949	Seal	45 x 37 x 15,5
13	1	6300205	Piston rod	

Please note: Drill a ø5 x 2-3 mm hole before the screw is fitted.

52-380

Intern ref.: 6300210

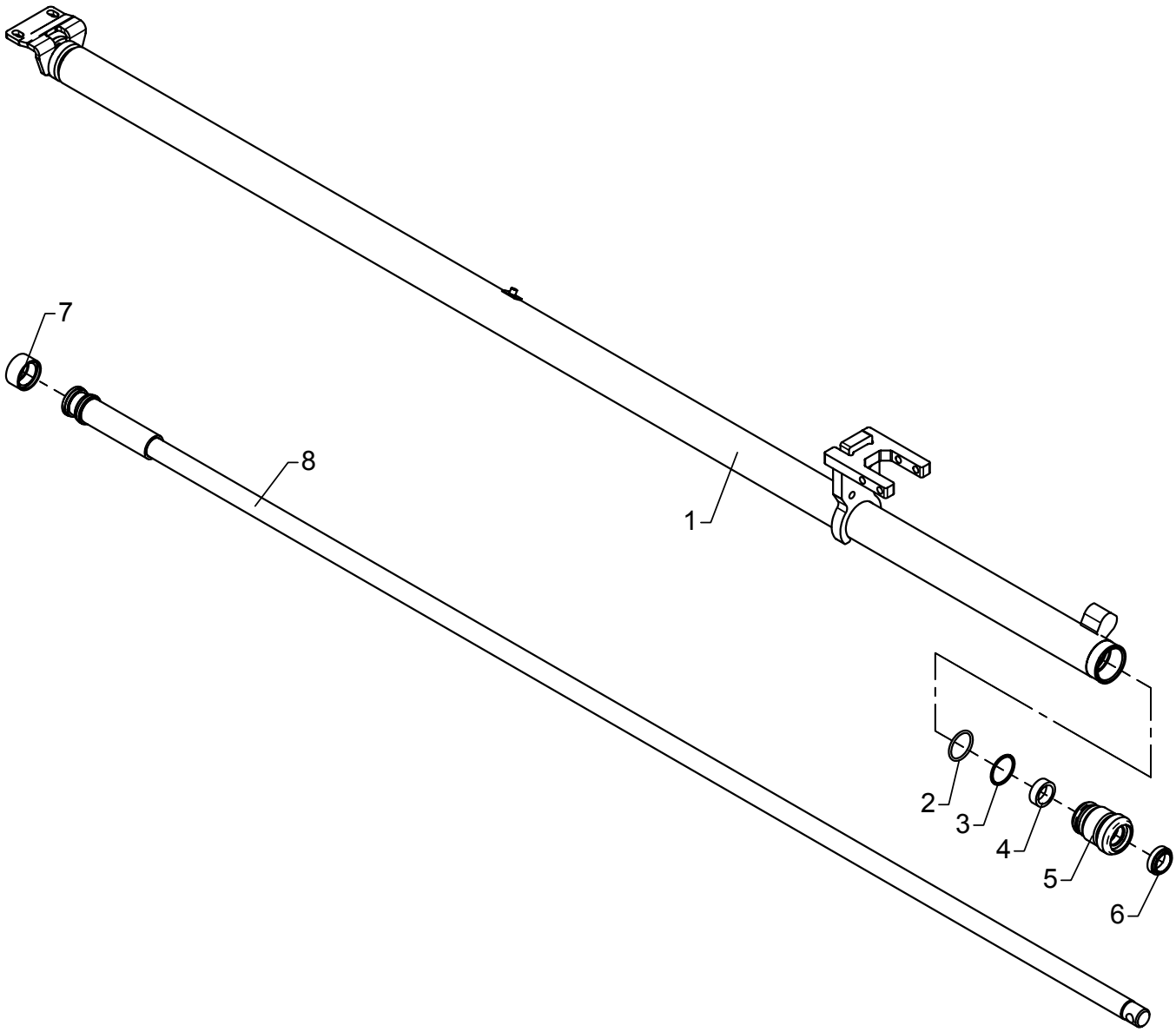

Beam cylinder C40-1600, type DV+DR - 8420

As from / To loader no.: 96 00 00 /
Created: 03.10.2003
Modified: 13.10.2004

Item no.	Qty.	Part no.	Description	Remarks
	1	6892670	Seal kit C40	Pos. 2, 3, 4, 6, 7
1	1	6300211	Cylinder	
2	1	20177	O-ring	OR 34,2 x 3
3	1	20705	Back ring	STR 35 x 40 x 1,3
4	1	20651	Seal	HH605 25 x 35 x 11
5	1	6194183	Guide	
6	1	20505	Scraper	GA 25 x 35 x 7/10
7	1	20779	Double acting seal	MDM 40 x 30 x 12,3
8	1	6300216	Piston rod	

52-380

Intern ref.: 6300610

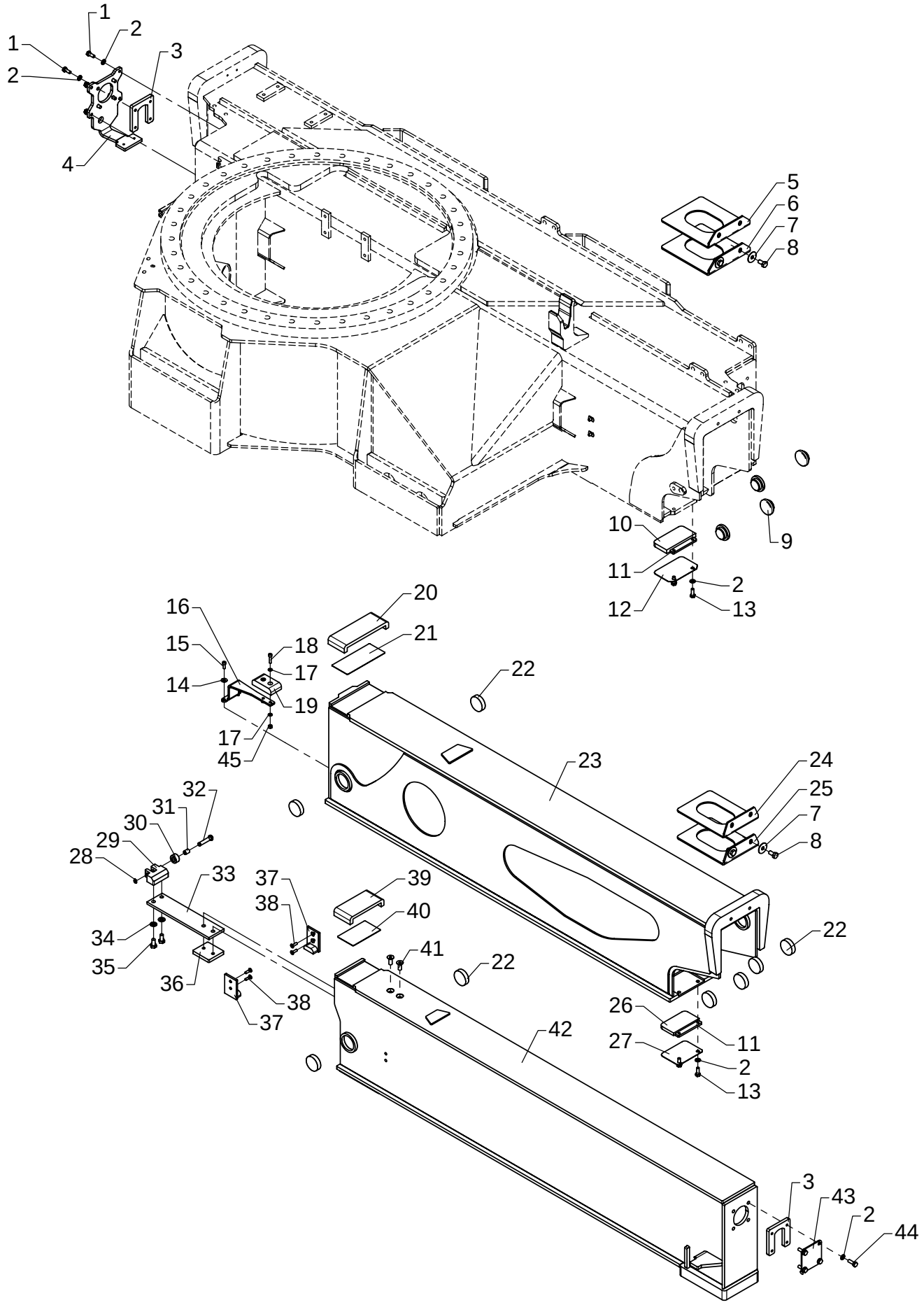

Stabilizer beam, type DV - 6325

As from / To loader no.: 96 00 00 /
Created: 03.10.2003
Modified:

Item no.	Qty.	Part no.	Description	Remarks
1	8	30132	Set screw, stainless	M8 x 20
2	16	31147	Washer, stainless	8 mm
3	2	6300086	Bracket	
4	1	6300085	End plate	
5	1	6300045	Spacer	
6	1	6300046	Spacer	
7	4	31141	Washer	35 x 10,5 x 1,5
8	4	31517	Set screw, stainless	M10 x 20
9	4	63739	Guide shoe	
10	1	63741	Slide block	
11	2	6300087	Spacer	
12	1	6302041	Division plate	
13	4	30133	Set screw, stainless	M8 x 22
14	2	31134	Washer, stainless	6 mm
15	2	31539	Screw, stainless	MC6 x 16
16	1	6300081	Bracket for slide block	
17	4	32302	Face washer, stainless	6 mm
18	2	30962	Sockethead screw	MC6 x 25
19	1	63744	Supporting block	
20	1	63745	Slide block	
21	1	6302045	Division plate	
22	8	63740	Slide block	
23	1	6300611	Stabilizer beam I, short	
24	1	6300048	Spacer	
25	1	6300049	Spacer	
26	1	63742	Slide block	
27	1	6302043	Division plate	
28	1	33101	Circlip	10U
29	1	6300643	Stop block	
30	1	6300641	Roller	
31	1	23934	Bushing	MB 1015 DU-B
32	1	6300642	Pin	
33	1	6300644	Spring leaf	
34	2	31177	Washer	10 mm
35	2	30154	Set screw	M10 x 20
36	1	6300645	Spacer	
37	2	63743	Guide	
38	4	30579	Countersunk screw	MK6 x 20
39	1	63746	Slide block	

Please note: All screws – Loctite 243

Stabilizer beam, type DV - 6325

As from / To loader no.: 96 00 00 /
Created: 03.10.2003
Modified:

Item no.	Qty.	Part no.	Description	Remarks
40	1	6302044	Division plate	
41	2	30546	Countersunk screw	MK10 x 25
42	1	6300621	Stabilizer beam II, short	
43	1	6300639	End plate	
44	4	30134	Set screw, stainless	M8 x 25
45	2	30884	Lock nut, stainless	M6

Please note: All screws – Loctite 243

52-380

Intern ref.: 6300950

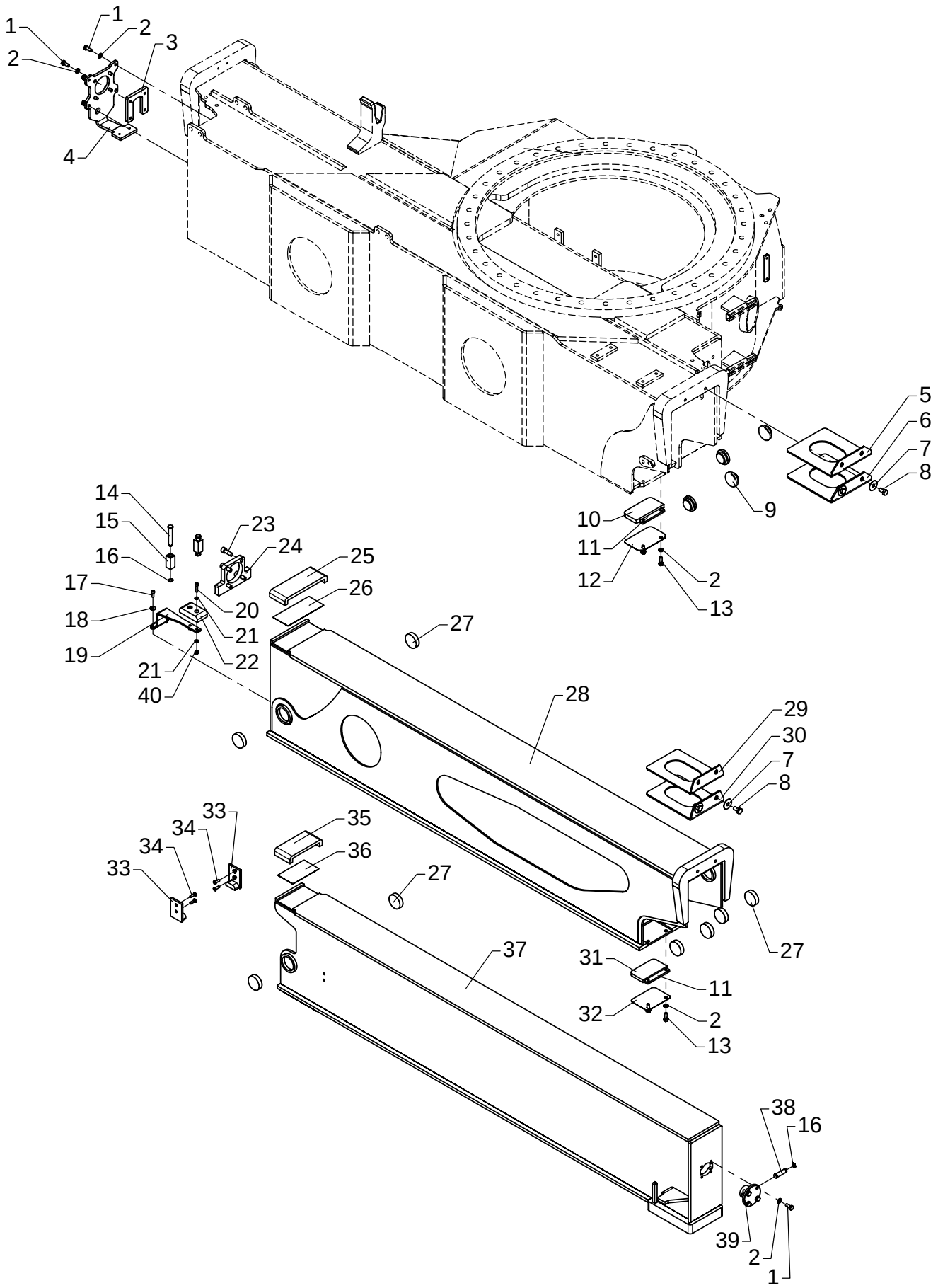

Stabilizer beam, type DV - 6725

As from / To loader no.: 96 00 00 /
Created: 03.10.2003
Modified:

Item no.	Qty.	Part no.	Description	Remarks
1	12	30132	Set screw, stainless	M8 x 20
2	16	31147	Washer, stainless	8 mm
3	1	6300086	Bracket	
4	1	6300085	End plate	
5	1	6300045	Spacer	
6	1	6300046	Spacer	
7	4	31141	Washer	35 x 10,5 x 1,5
8	4	31517	Set screw, stainless	M10 x 20
9	4	63739	Guide shoe	
10	1	63741	Slide block	
11	2	6300087	Spacer	
12	1	6302041	Division plate	
13	4	30133	Set screw, stainless	M8 x 22
14	2	6300088	Pin	
15	2	6300089	Block	
16	4	33102	Circlip	12U
17	2	31539	Screw, stainless	MC6 x 16
18	2	31134	Washer, stainless	6 mm
19	1	6300081	Bracket for slide block	
20	2	30962	Sockethead screw	MC6 x 25
21	4	32302	Face washer, stainless	6 mm
22	1	63744	Supporting block	
23	4	31568	Screw, stainless	MC10 x 30
24	1	6300207	Lock plate	
25	1	63745	Slide block	
26	1	6302045	Division plate	
27	8	63740	Slide block	
28	1	6300951	Stabilizer beam I	
29	1	6300048	Spacer	
30	1	6300049	Spacer	
31	1	63742	Slide block	
32	1	6302043	Division plate	
33	2	63743	Guide	
34	4	30579	Countersunk screw	MK6 x 20
35	1	63746	Slide block	
36	1	6302044	Division plate	
37	1	6300131	Stabilizer beam II	
38	1	6194264	Pin	
39	1	6194244	Bracket	
40	2	30884	Lock nut, stainless	M6

Please note: All screws – Loctite 243

52-380

Intern ref.: 6300090

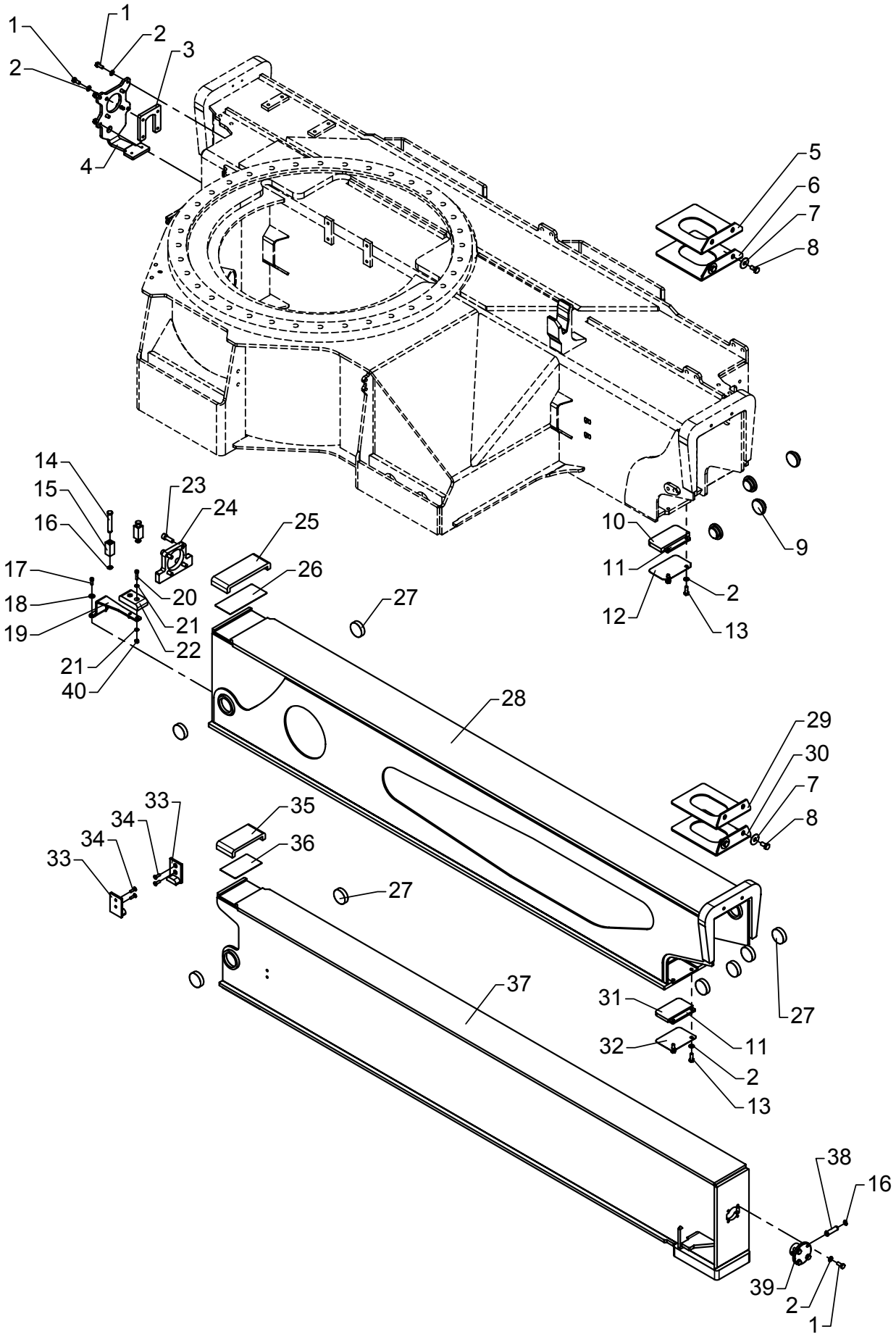

Stabilizer beam, type DV - 8420

As from / To loader no.: 96 00 00 /
Created: 13.10.2004
Modified:

Item no.	Qty.	Part no.	Description	Remarks
1	12	30132	Set screw, stainless	M8 x 20
2	16	31147	Washer, stainless	8 mm
3	1	6300086	Bracket	
4	1	6300085	End plate	
5	1	6300045	Spacer	
6	1	6300046	Spacer	
7	4	31141	Washer	35 x 10,5 x 1,5
8	4	31517	Set screw, stainless	M10 x 20
9	4	63739	Guide shoe	
10	1	63741	Slide block	
11	2	6300087	Spacer	
12	1	6302041	Division plate	
13	4	30133	Set screw, stainless	M8 x 22
14	2	6300088	Pin	
15	2	6300089	Block	
16	4	33102	Circlip	12U
17	2	31539	Screw, stainless	MC6 x 16
18	2	31134	Washer, stainless	6 mm
19	1	6300081	Bracket for slide block	
20	2	30962	Sockethead screw	MC6 x 25
21	4	32302	Face washer, stainless	6 mm
22	1	63744	Supporting block	
23	4	31568	Screw, stainless	MC10 x 30
24	1	6300207	Lock plate	
25	1	63745	Slide block	
26	1	6302045	Division plate	
27	8	63740	Slide block	
28	1	6300091	Stabilizer beam I	
29	1	6300048	Spacer	
30	1	6300049	Spacer	
31	1	63742	Slide block	
32	1	6302043	Division plate	
33	2	63743	Guide	
34	4	30579	Countersunk screw	MK6 x 20
35	1	63746	Slide block	
36	1	6302044	Division plate	
37	1	6301311	Stabilizer beam II	
38	1	6194264	Pin	
39	1	6194244	Bracket	
40	2	30884	Lock nut, stainless	M6

Please note: All screws – Loctite 243

52-380

Intern ref.: 6300610

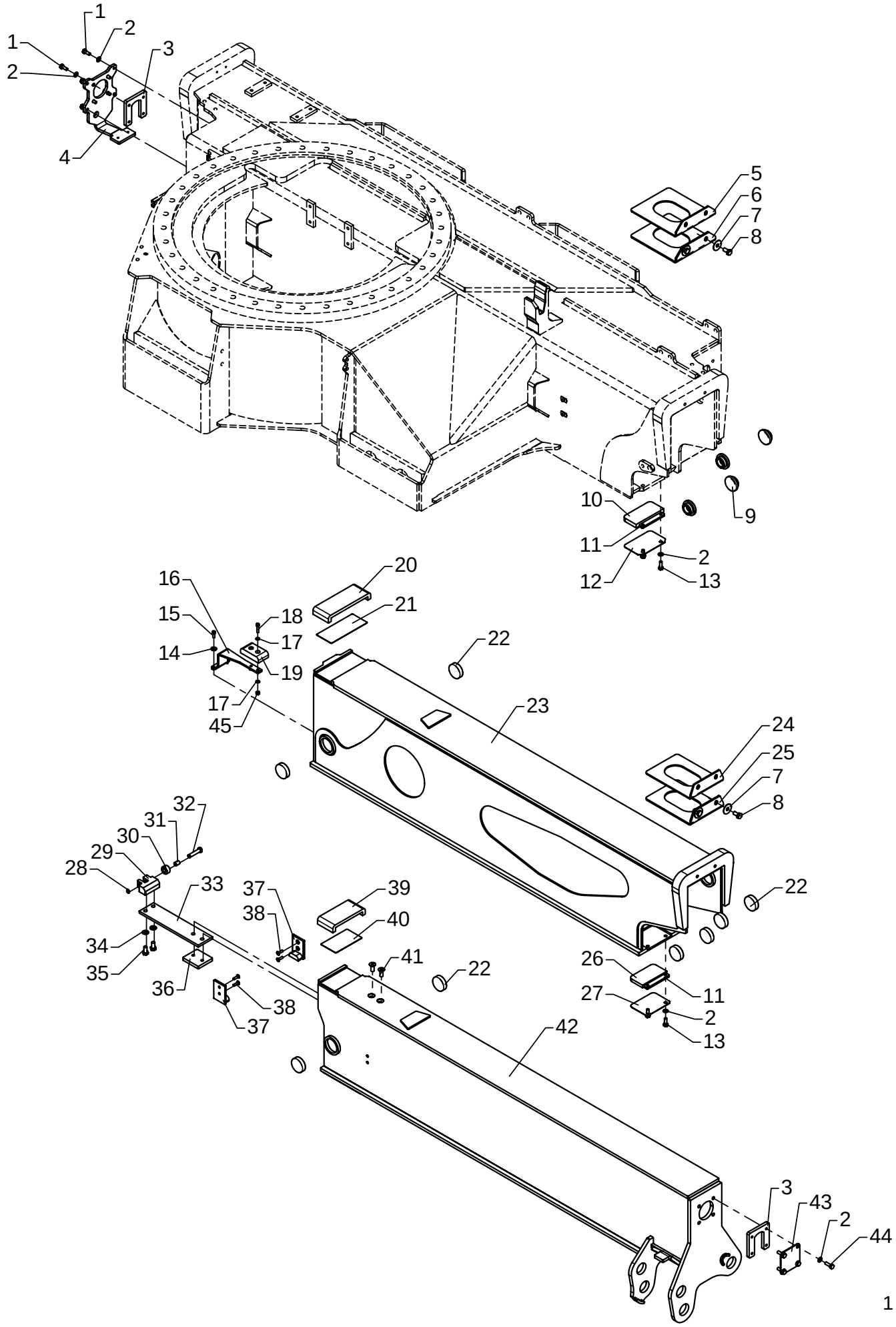

Stabilizer beam, type DR - 6325

As from / To loader no.: 96 00 00 /
Created: 22.06.2006
Modified:

Item no.	Qty.	Part no.	Description	Remarks
1	8	30132	Set screw, stainless	M8 x 20
2	16	31147	Washer, stainless	8 mm
3	2	6300086	Bracket	
4	1	6300085	End plate	
5	1	6300045	Spacer	
6	1	6300046	Spacer	
7	4	31141	Washer	35 x 10,5 x 1,5
8	4	31517	Set screw, stainless	M10 x 20
9	4	63739	Guide shoe	
10	1	63741	Slide block	
11	2	6300087	Spacer	
12	1	6302041	Division plate	
13	4	30133	Set screw, stainless	M8 x 22
14	2	31134	Washer, stainless	6 mm
15	2	31539	Screw, stainless	MC6 x 16
16	1	6300081	Bracket for slide block	
17	4	32302	Face washer, stainless	6 mm
18	2	30962	Screw, stainless	MC6 x 25
19	1	63744	Supporting block	
20	1	63745	Slide block	
21	1	6302045	Division plate	
22	8	63740	Slide block	
23	1	6300611	Stabilizer beam I, short	
24	1	6300048	Spacer	
25	1	6300049	Spacer	
26	1	63742	Slide block	
27	1	6302043	Division plate	
28	1	33101	Circlip	10U
29	1	6300643	Stop block	
30	1	6300641	Roller	
31	1	23934	Bushing	MB 1015 DU-B
32	1	6300642	Pin	
33	1	6300644	Spring leaf	
34	2	31177	Washer	10 mm
35	2	30154	Set screw	M10 x 20
36	1	6300645	Spacer	
37	2	63743	Guide	
38	4	30579	Countersunk screw	MK6 x 20
39	1	63746	Slide block	

Please note: All screws – Loctite 243

52-380

Intern ref.: 6300610

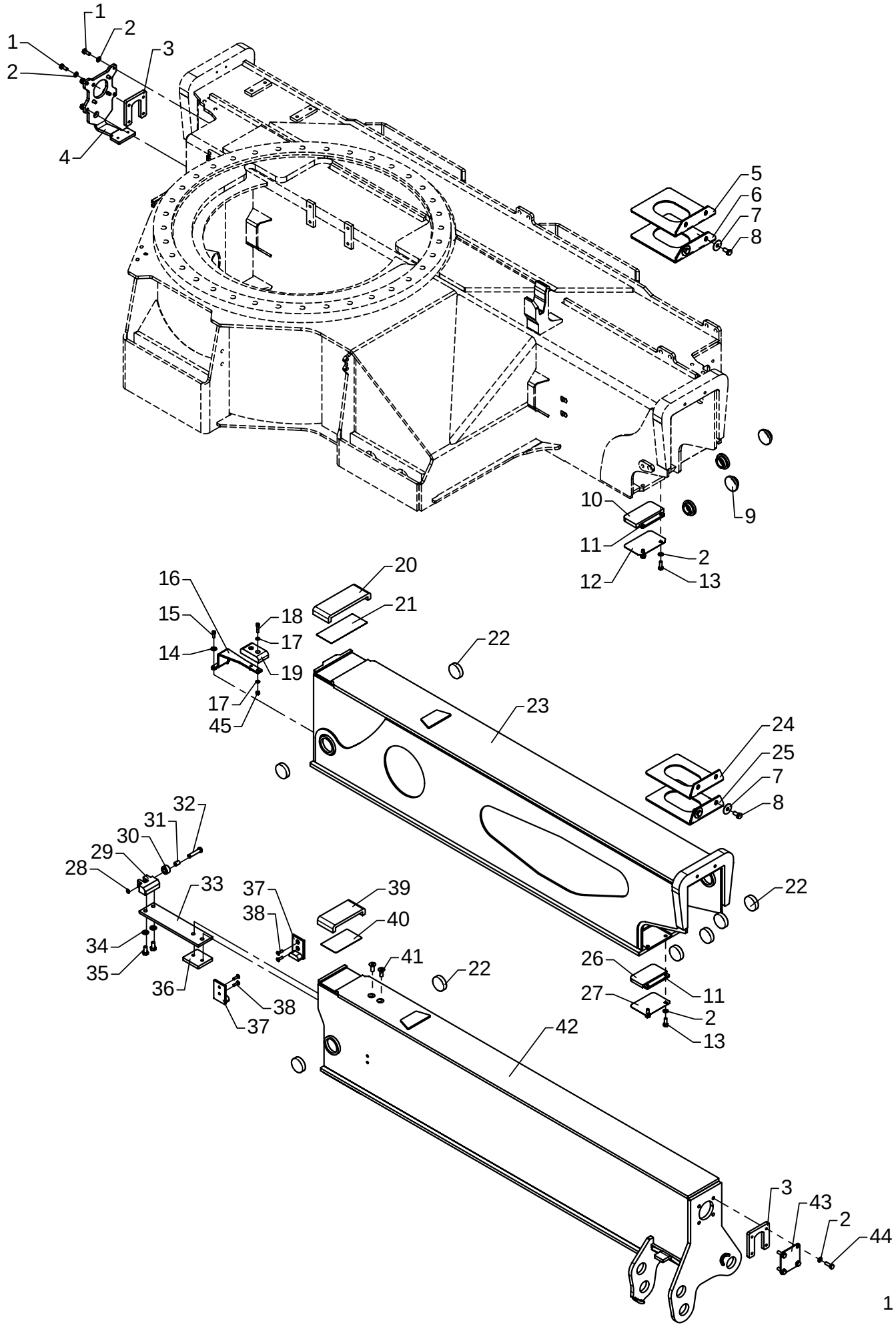

Stabilizer beam, type DR - 6325

As from / To loader no.: 96 00 00 /
Created: 22.06.2006
Modified:

Item no.	Qty.	Part no.	Description	Remarks
40	1	6302044	Division plate	
41	2	30546	Countersunk screw	MK10 x 25
42	1	6300965	Stabilizer beam, swing-up leg	
43	1	6300639	End plate	
44	4	30134	Set screw, stainless	M8 x 25
45	2	30884	Lock nut, stainless	M6

Please note: All screws – Loctite 243

52-380

Intern ref.: 6300950

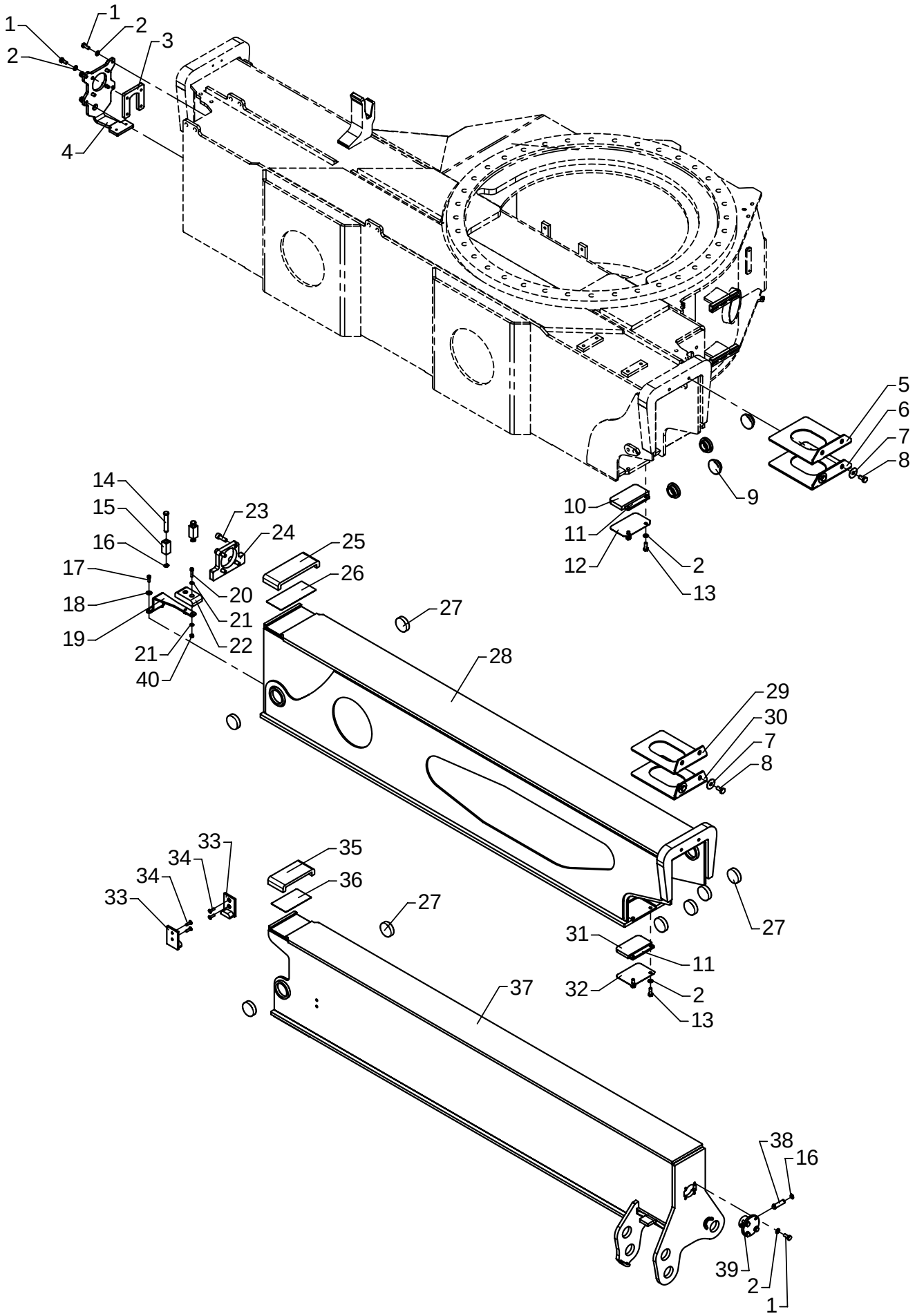

Stabilizer beam, type DR - 6725

As from / To loader no.: 96 00 00 /
Created: 22.06.2006
Modified:

Item no.	Qty.	Part no.	Description	Remarks
1	12	30132	Set screw, stainless	M8 x 20
2	16	31147	Washer, stainless	8 mm
3	1	6300086	Bracket	
4	1	6300085	End plate	
5	1	6300045	Spacer	
6	1	6300046	Spacer	
7	4	31141	Washer	35 x 10,5 x 1,5
8	4	31517	Set screw, stainless	M10 x 20
9	4	63739	Guide shoe	
10	1	63741	Slide block	
11	2	6300087	Spacer	
12	1	6302041	Division plate	
13	4	30133	Set screw, stainless	M8 x 22
14	2	6300088	Pin	
15	2	6300089	Block	
16	4	33102	Circlip	12U
17	2	31539	Screw, stainless	MC6 x 16
18	2	31134	Washer, stainless	6 mm
19	1	6300081	Bracket for slide block	
20	2	30962	Screw, stainless	MC6 x 25
21	4	32302	Face washer, stainless	6 mm
22	1	63744	Supporting block	
23	4	31568	Screw, stainless	MC10 x 30
24	1	6300207	Lock plate	
25	1	63745	Slide block	
26	1	6302045	Division plate	
27	8	63740	Slide block	
28	1	6300951	Stabilizer beam I	
29	1	6300048	Spacer	
30	1	6300049	Spacer	
31	1	63742	Slide block	
32	1	6302043	Division plate	
33	2	63743	Guide	
34	4	30579	Countersunk screw	MK6 x 20
35	1	63746	Slide block	
36	1	6302044	Division plate	
37	1	6300975	Stabilizer beam, swing-up leg	
38	1	6194264	Pin	
39	1	6194244	Bracket	
40	2	30884	Lock nut, stainless	M6

Please note: All screws – Loctite 243

52-380

Intern ref.: 6300090

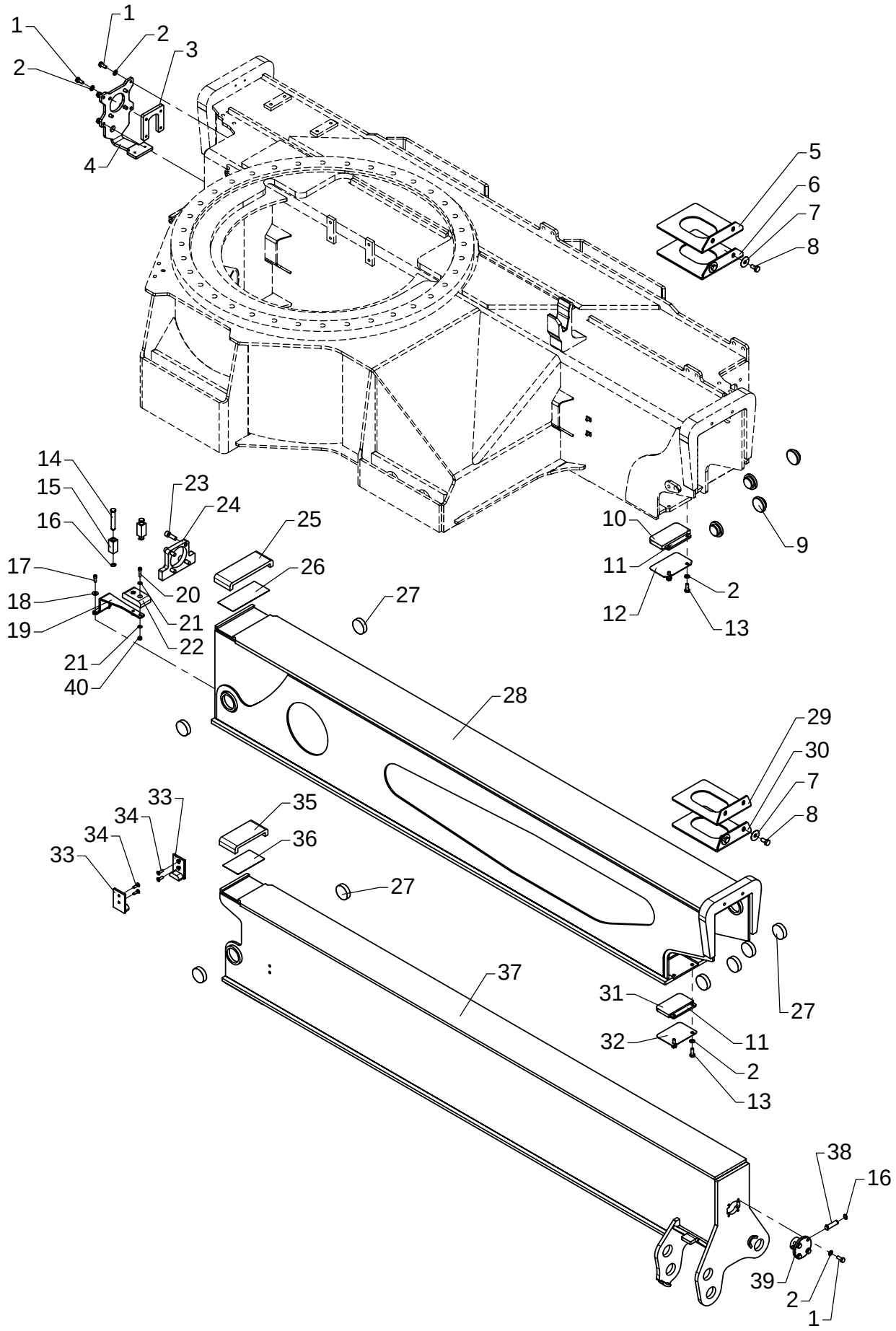

Stabilizer beam, type DR - 8420

As from / To loader no.: 96 00 00 /
Created: 03.10.2003
Modified:

Item no.	Qty.	Part no.	Description	Remarks
1	12	30132	Set screw, stainless	M8 x 20
2	16	31147	Washer, stainless	8 mm
3	1	6300086	Bracket	
4	1	6300085	End plate	
5	1	6300045	Spacer	
6	1	6300046	Spacer	
7	4	31141	Washer	35 x 10,5 x 1,5
8	4	31517	Set screw, stainless	M10 x 20
9	4	63739	Guide shoe	
10	1	63741	Slide block	
11	2	6300087	Spacer	
12	1	6302041	Division plate	
13	4	30133	Set screw, stainless	M8 x 22
14	2	6300088	Pin	
15	2	6300089	Block	
16	4	33102	Circlip	12U
17	2	31539	Screw, stainless	MC6 x 16
18	2	31134	Washer, stainless	6 mm
19	1	6300081	Bracket for slide block	
20	2	30962	Sockethead screw	MC6 x 25
21	4	32302	Face washer, stainless	6 mm
22	1	63744	Supporting block	
23	4	31568	Screw, stainless	MC10 x 30
24	1	6300207	Lock plate	
25	1	63745	Slide block	
26	1	6302045	Division plate	
27	8	63740	Slide block	
28	1	6300091	Stabilizer beam I	
29	1	6300048	Spacer	
30	1	6300049	Spacer	
31	1	63742	Slide block	
32	1	6302043	Division plate	
33	2	63743	Guide	
34	4	30579	Countersunk screw	MK6 x 20
35	1	63746	Slide block	
36	1	6302044	Division plate	
37	1	6300111	Stabilizer beam, swing-up leg	
38	1	6194264	Pin	
39	1	6194244	Bracket	
40	2	30884	Lock nut, stainless	M6

Please note: All screws – Loctite 243

52-380

Intern ref.: 6300610

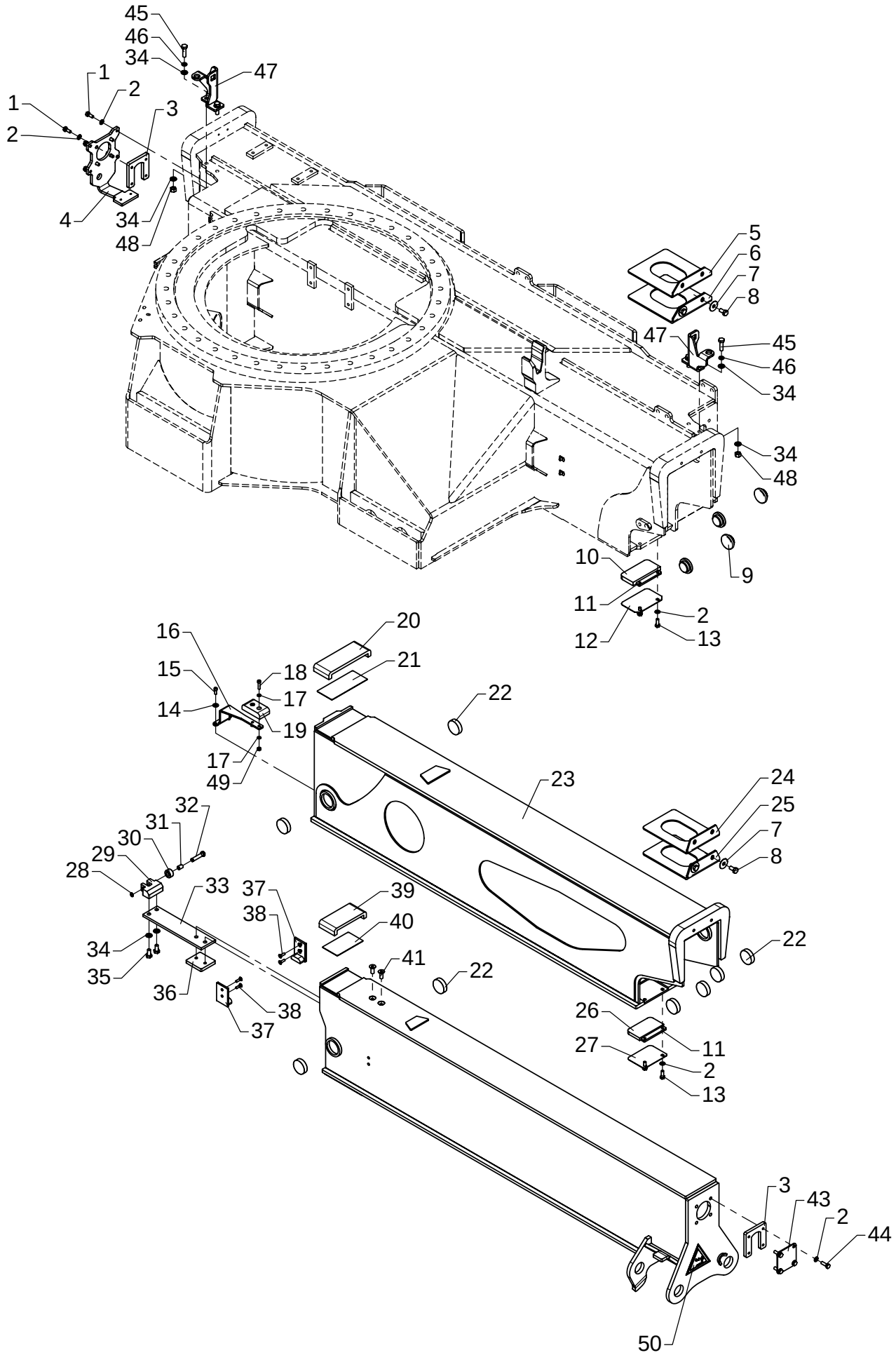

Stabilizer beam - swing-up legs, type DHR - 6325

As from / To loader no.: 96 00 00 /
Created: 03.10.2003
Modified:

Item no.	Qty.	Part no.	Description	Remarks
1	8	30132	Set screw, stainless	M8 x 20
2	16	31147	Washer, stainless	8 mm
3	2	6300086	Bracket	
4	1	6300085	End plate	
5	1	6300045	Spacer	
6	1	6300046	Spacer	
7	4	31141	Washer	35 x 10,5 x 1,5
8	4	31517	Set screw, stainless	M10 x 20
9	4	63739	Guide shoe	
10	1	63741	Slide block	
11	2	6300087	Spacer	
12	1	6302041	Division plate	
13	4	30133	Set screw, stainless	M8 x 22
14	2	31134	Washer, stainless	6 mm
15	2	31539	Screw, stainless	MC6 x 16
16	1	6300081	Bracket for slide block	
17	4	32302	Face washer, stainless	6 mm
18	2	30962	Sockethead screw	MC6 x 25
19	1	63744	Supporting block	
20	1	63745	Slide block	
21	1	6302045	Division plate	
22	8	63740	Slide block	
23	1	6300611	Stabilizer beam I, short	
24	1	6300048	Spacer	
25	1	6300049	Spacer	
26	1	63742	Slide block	
27	1	6302043	Division plate	
28	1	33101	Circlip	10U
29	1	6300643	Stop block	
30	1	6300641	Roller	
31	1	23934	Bushing	MB 1015 DU-B
32	1	6300642	Pin	
33	1	6300644	Spring leaf	
34	10	31177	Washer	10 mm
35	2	30154	Set screw	M10 x 20
36	1	6300645	Spacer	
37	2	63743	Guide	
38	4	30579	Countersunk screw	MK6 x 20
39	1	63746	Slide block	

Please note: All screws – Loctite 243

Stabilizer beam - swing-up legs, type DHR - 6325

As from / To loader no.: 96 00 00 /
Created: 03.10.2003
Modified:

Item no.	Qty.	Part no.	Description	Remarks
40	1	6302044	Division plate	
41	2	30546	Countersunk screw	MK10 x 25
42	1	6300991	Stabilizer beam II, swing-up	
43	1	6300639	End plate	
44	4	30134	Set screw, stainless	M8 x 25
45	4	30157	Set screw	M10 x 35
46	4	31156	Spring washer	10 mm
47	2	6300104	Bracket	
48	4	30888	Lock nut	M10
49	2	30884	Lock nut, stainless	M6
50	1	66463	Label"SWING-UP STABILIZER LEG"	

Please note: All screws – Loctite 243

52-380

Intern ref.: 6300950

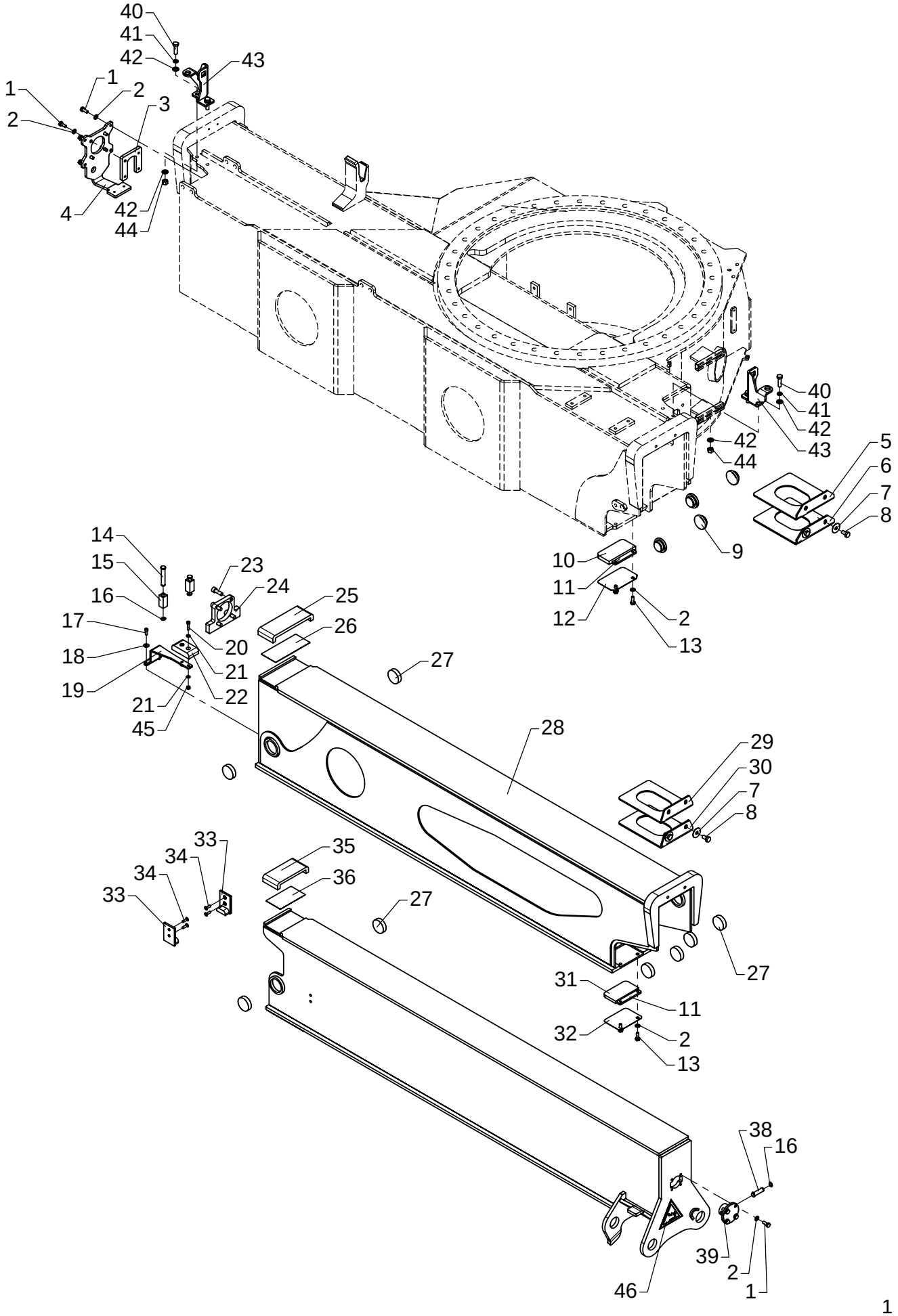

Stabilizer beam - swing-up legs, type DHR - 6725

As from / To loader no.: 96 00 00 /
Created: 03.10.2003
Modified:

Item no.	Qty.	Part no.	Description	Remarks
1	12	30132	Set screw, stainless	M8 x 20
2	16	31147	Washer, stainless	8 mm
3	1	6300086	Bracket	
4	1	6300085	End plate	
5	1	6300045	Spacer	
6	1	6300046	Spacer	
7	4	31141	Washer	35 x 10,5 x 1,5
8	4	31517	Set screw, stainless	M10 x 20
9	4	63739	Guide shoe	
10	1	63741	Slide block	
11	2	6300087	Spacer	
12	1	6302041	Division plate	
13	4	30133	Set screw, stainless	M8 x 22
14	2	6300088	Pin	
15	2	6300089	Block	
16	4	33102	Circlip	12U
17	2	31539	Screw, stainless	MC6 x 16
18	2	31134	Washer, stainless	6 mm
19	1	6300081	Bracket for slide block	
20	2	30962	Sockethead screw	MC6 x 25
21	4	32302	Face washer, stainless	6 mm
22	1	63744	Supporting block	
23	4	31568	Screw, stainless	MC10 x 30
24	1	6300207	Lock plate	
25	1	63745	Slide block	
26	1	6302045	Division plate	
27	8	63740	Slide block	
28	1	6300951	Stabilizer beam I	
29	1	6300048	Spacer	
30	1	6300049	Spacer	
31	1	63742	Slide block	
32	1	6302043	Division plate	
33	2	63743	Guide	
34	4	30579	Countersunk screw	MK6 x 20
35	1	63746	Slide block	
36	1	6302044	Division plate	
37	1	6300985	Stabilizer beam II, swing-up	
38	1	6194264	Pin	
39	1	6194244	Bracket	

Please note: All screws – Loctite 243

Stabilizer beam - swing-up legs, type DHR - 6725

As from / To loader no.: 96 00 00 /
Created: 03.10.2003
Modified:

Item no.	Qty.	Part no.	Description	Remarks
40	4	30157	Set screw	M10 x 35
41	4	31156	Spring washer	10 mm
42	8	31177	Washer	10 mm
43	2	6300104	Bracket	
44	4	30888	Lock nut	M10
45	2	30884	Lock nut, stainless	M6
46	1	66463	Label"SWING-UP STABILIZER LEG"	

Please note: All screws – Loctite 243

52-380

Intern ref.: 6300090

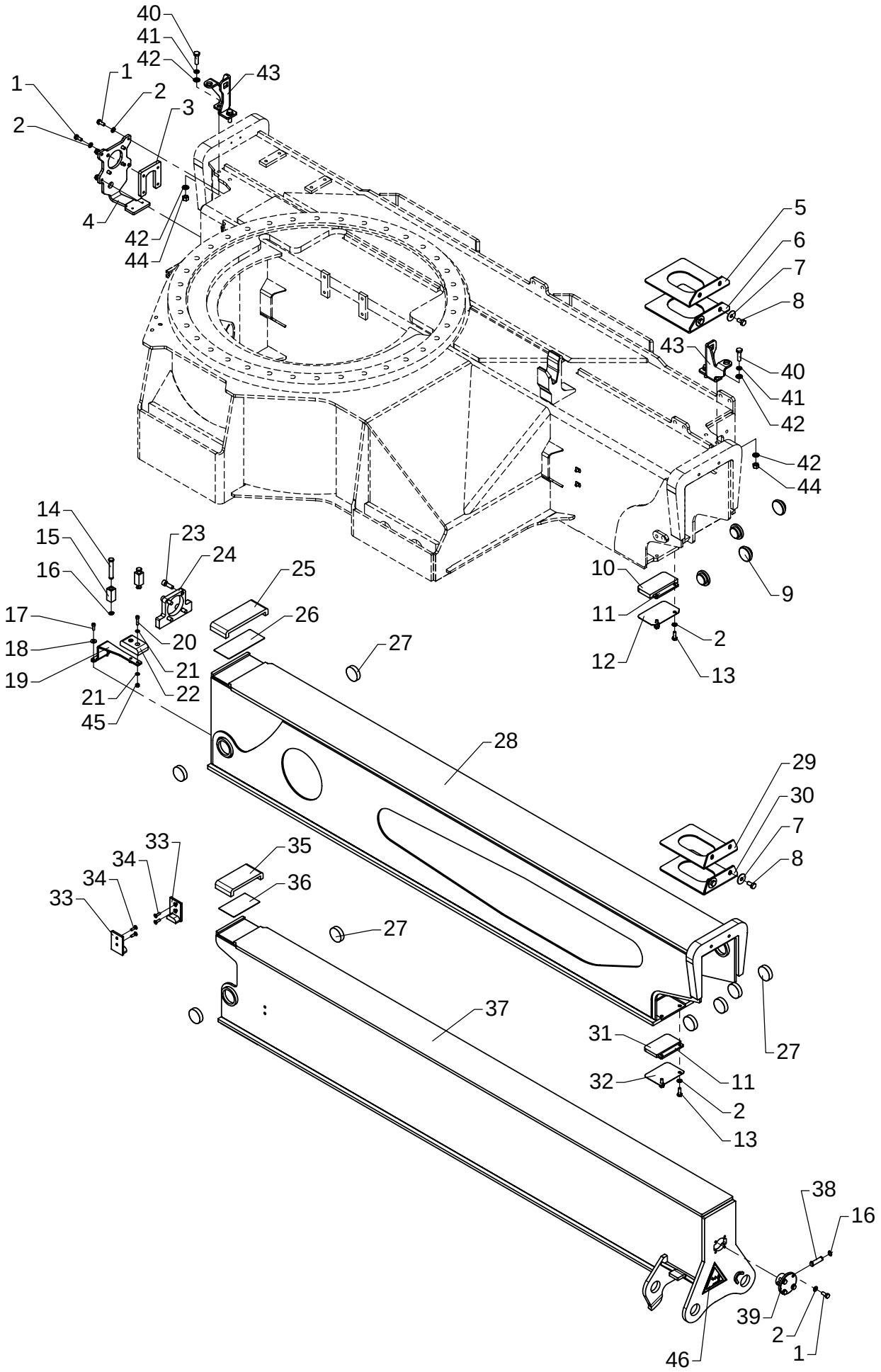

Stabilizer beam - swing-up legs, type DHR - 8420

As from / To loader no.: 96 00 00 /
Created: 03.10.2003
Modified:

Item no.	Qty.	Part no.	Description	Remarks
1	12	30132	Set screw, stainless	M8 x 20
2	16	31147	Washer, stainless	8 mm
3	1	6300086	Bracket	
4	1	6300085	End plate	
5	1	6300045	Spacer	
6	1	6300046	Spacer	
7	4	31141	Washer	35 x 10,5 x 1,5
8	4	31517	Set screw, stainless	M10 x 20
9	4	63739	Guide shoe	
10	1	63741	Slide block	
11	2	6300087	Spacer	
12	1	6302041	Division plate	
13	4	30133	Set screw, stainless	M8 x 22
14	2	6300088	Pin	
15	2	6300089	Block	
16	4	33102	Circlip	12U
17	2	31539	Screw, stainless	MC6 x 16
18	2	31134	Washer, stainless	6 mm
19	1	6300081	Bracket for slide block	
20	2	30962	Sockethead screw	MC6 x 25
21	4	32302	Face washer, stainless	6 mm
22	1	63744	Supporting block	
23	4	31568	Screw, stainless	MC10 x 30
24	1	6300207	Lock plate	
25	1	63745	Slide block	
26	1	6302045	Division plate	
27	8	63740	Slide block	
28	1	6300091	Stabilizer beam I	
29	1	6300048	Spacer	
30	1	6300049	Spacer	
31	1	63742	Slide block	
32	1	6302043	Division plate	
33	2	63743	Guide	
34	4	30579	Countersunk screw	MK6 x 20
35	1	63746	Slide block	
36	1	6302044	Division plate	
37	1	6300105	Stabilizer beam II, swing-up	
38	1	6194264	Pin	
39	1	6194244	Bracket	

Please note: All screws – Loctite 243

Stabilizer beam - swing-up legs, type DHR - 8420

As from / To loader no.: 96 00 00 /
Created: 03.10.2003
Modified:

Item no.	Qty.	Part no.	Description	Remarks
40	4	30157	Set screw	M10 x 35
41	4	31156	Spring washer	10 mm
42	8	31177	Washer	10 mm
43	2	6300104	Bracket	
44	4	30888	Lock nut	M10
45	2	30884	Lock nut, stainless	M6
46	1	66463	Label"SWING-UP STABILIZER LEG"	

Please note: All screws – Loctite 243

52-380

Intern ref.: 6300110

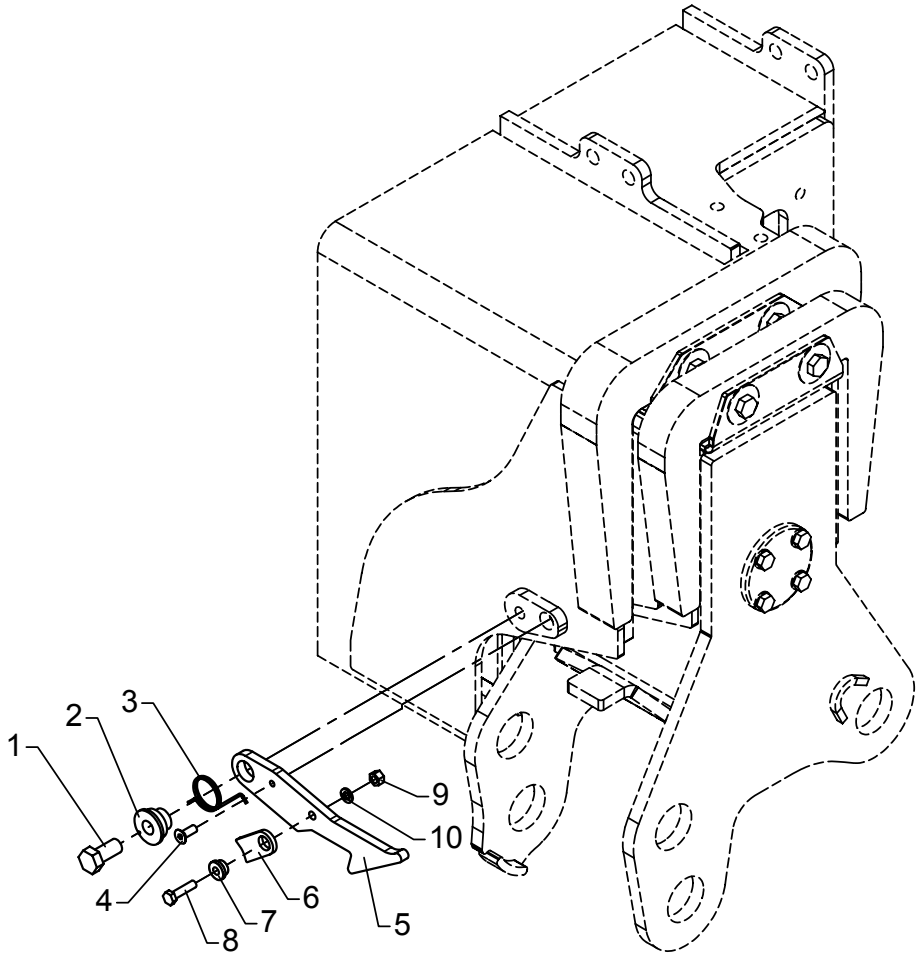

Safety lock DV, DR, DHR

As from / To loader no.: 96 00 00 /
Created: 03.10.2003
Modified: 14.01.2005

Item no.	Qty.	Part no.	Description	Remarks
1	1	31504	Set screw, stainless	M12 x 25
2	1	6245264	Bushing	
3	1	33473	Spring	6179044
4	1	31290	Spike, galvanized	7 x 20
5	1	6300078	Lock pawl	
6	1	6236054	Click	
7	1	63440	Washer	
8	1	30114	Set screw, stainless	M6 x 25
9	1	30884	Lock nut, stainless	M6
10	1	32302	Face washer, stainless	6 mm

52-380

Intern ref.: 6649790

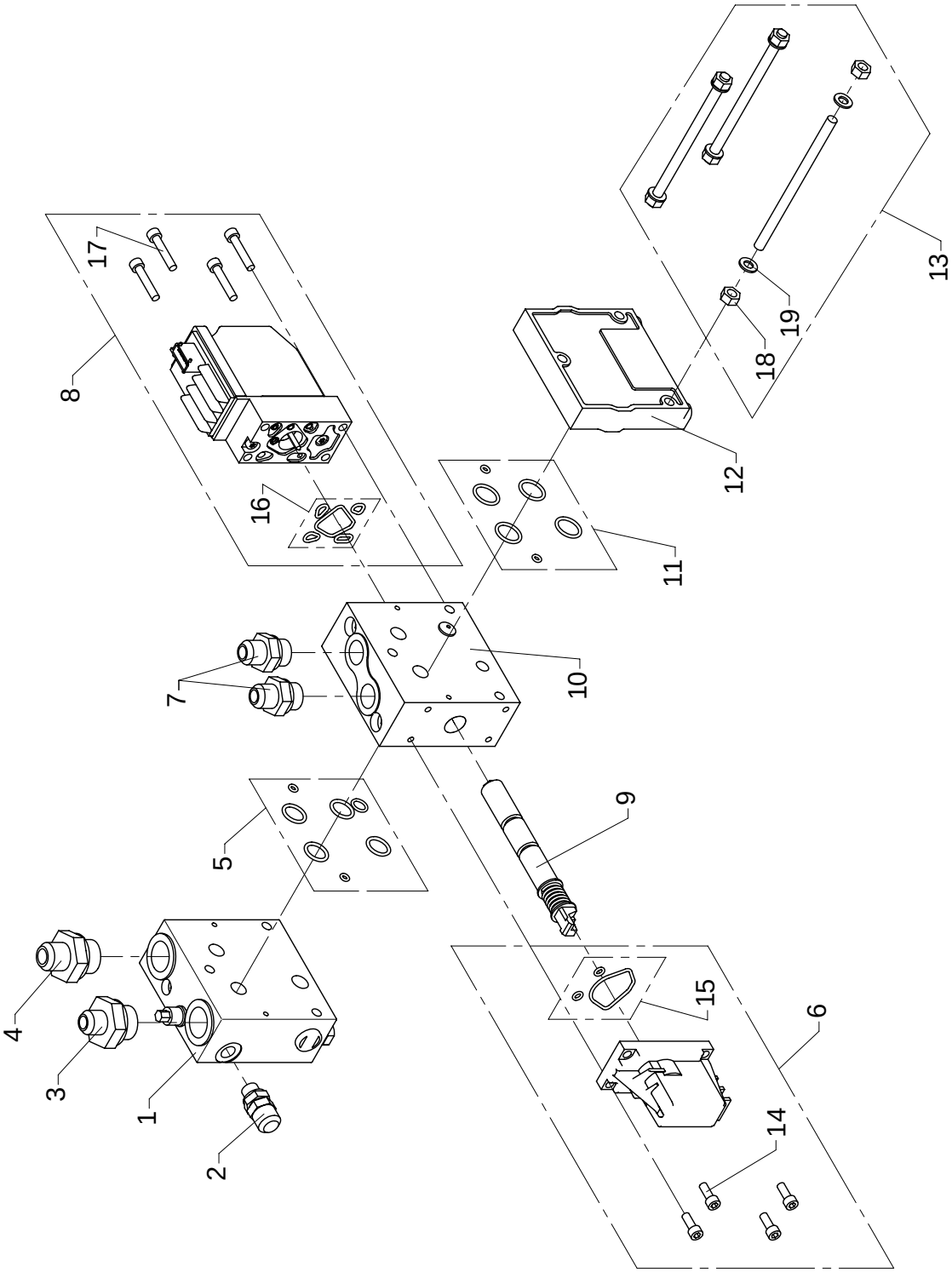

Valve block, 1 section (extra RC function)

As from / To loader no.: 96 00 00 / 96 02 07
Created: 16.03.2004
Modified: 01.09.2008

Item no.	Qty.	Part no.	Description	Remarks
	1	63039	Valve block	
1	1	62037	Inlet section	
2	1	26103	Pressure-gauge connect.	
3	1	26283	Connection	F40XS12 - 3/4
4	1	25866	Connection	F40XS14/16 - 3/4
5	1	62237	Seal kit	
6	1	58919	Lever module	
7	2	25832	Straight connection	F40XS12 - 1/2
8	1	58935	Electric activation	
9	1	62055	Spool	
10	1	62225	Basic module	
11	1	58925	Seal kit	
12	1	58921	End cover	
13	1	61990	Connecting kit - 1 modul	
14		30424	Screw	MC6 x 16
15		62239	Seal kit	
16		62240	Seal kit	
17		62241	Screw	
18		30856	Nut, stainless	M8
19		62044	Washer	

52-380

Intern ref.: 6651490

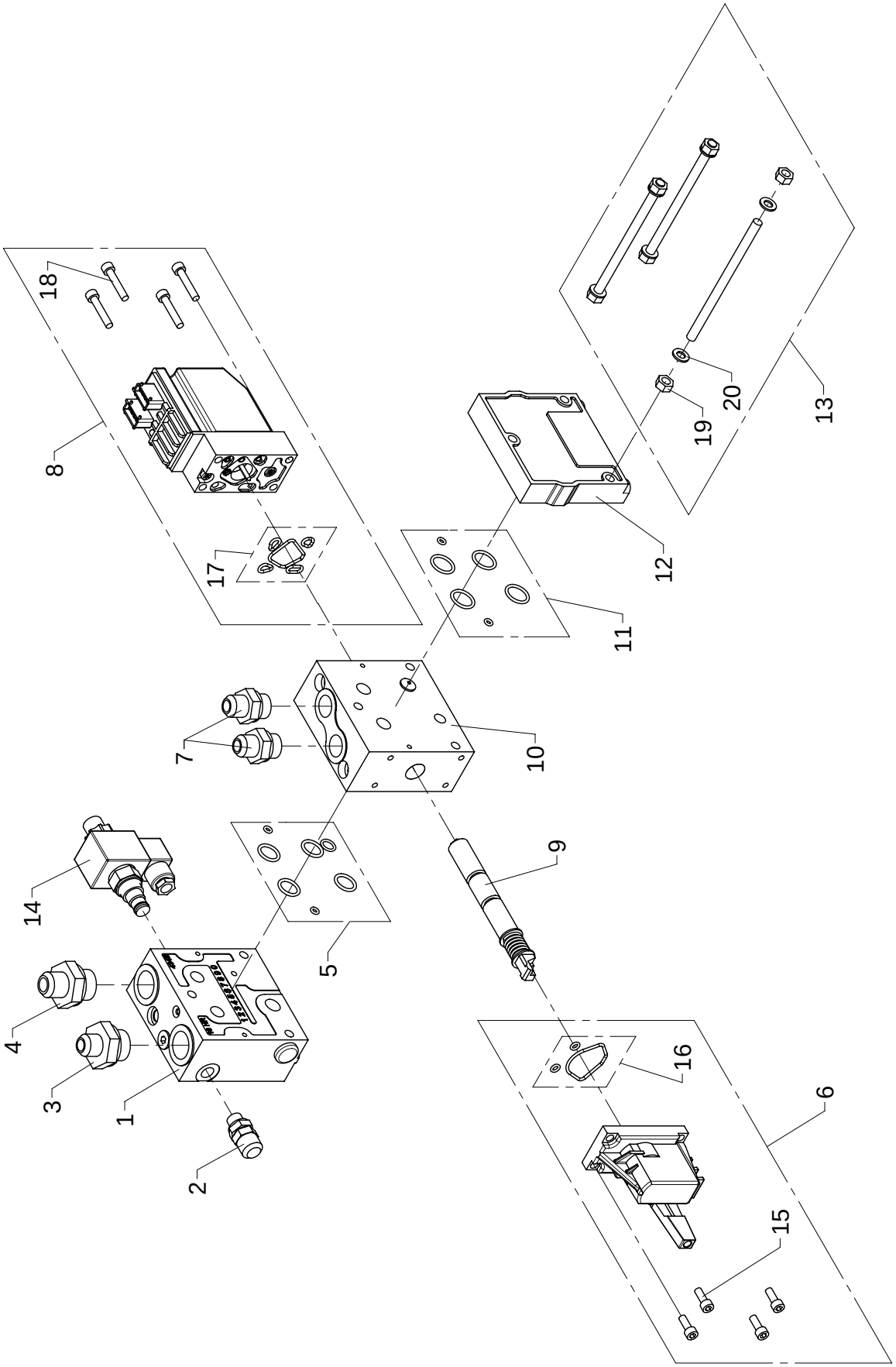

Valve block, 1 section (extra RC function)

As from / To loader no.: 96 02 08
Created: 01.09.2008
Modified:

Item no.	Qty.	Part no.	Description	Remarks
1	1	58974	Inlet section	
2	1	26103	Pressure-gauge connect.	
3	1	26283	Connection	F40XS12 - 3/4
4	1	25866	Connection	F40XS14/16 - 3/4
5	1	62237	Seal kit	
6	1	58945	Lever module incl. foot	
7	2	25832	Straight connection	F40XS12 - 1/2
8	1	62295	Electric activation	
9	1	62070	Spool	
10	1	62225	Basic module	
11	1	58925	Seal kit	
12	1	62235	End plate	
13	1	61990	Connecting kit - 1 modul	
14	1	59642	Magnet coil	
15	1	30424	Screw	MC6 x 16
16	1	62239	Seal kit	
17	1	62240	Seal kit	
18	1	62241	Screw	
19	1	30856	Nut, stainless	M8
20	1	62044	Washer	

52-380

Intern ref.: 6649690

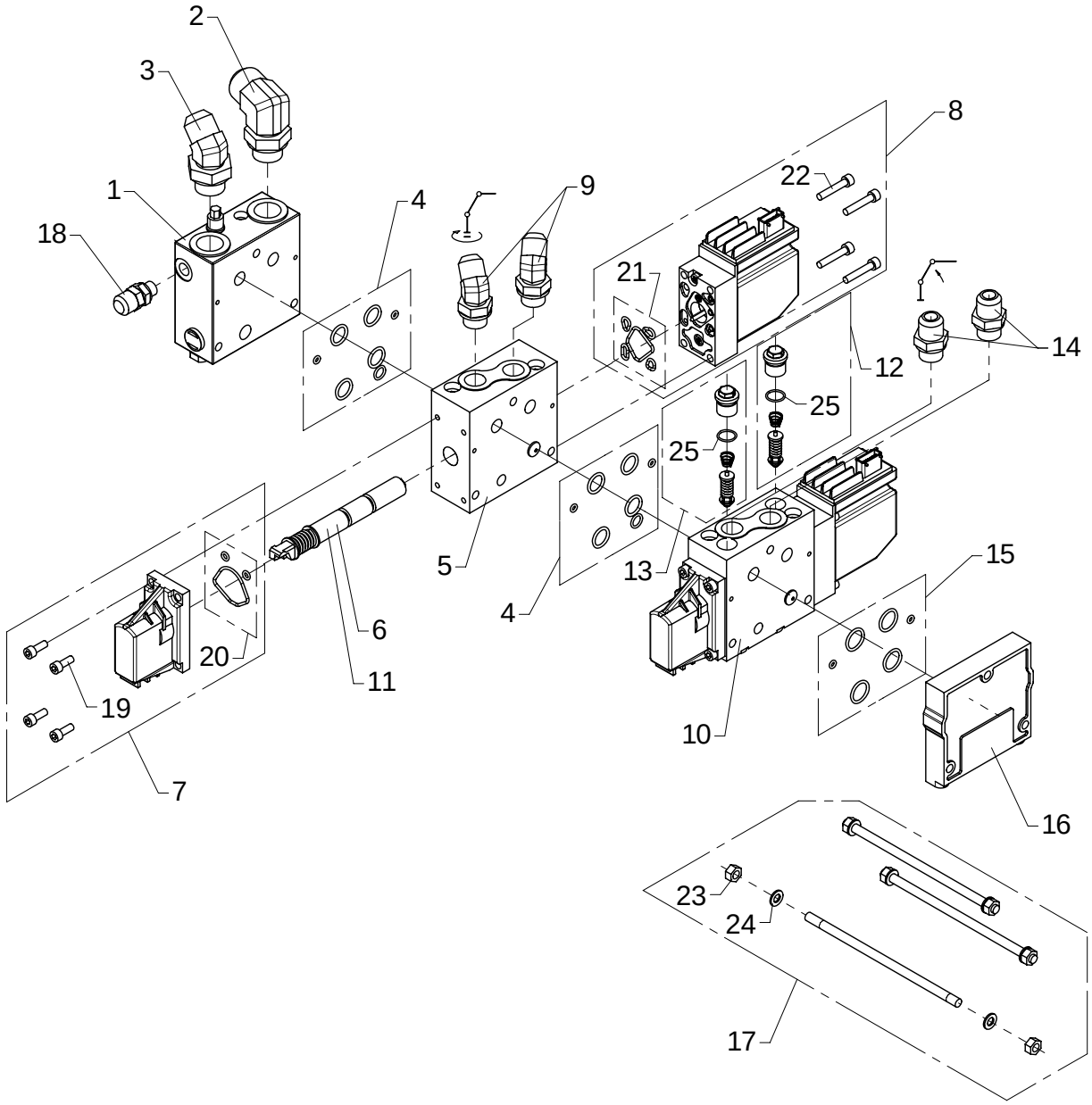

Valve block, 2 sections P1

As from / To loader no.: 96 00 00 / 96 02 07
Created: 03.10.2003
Modified: 01.09.2008

Item no.	Qty.	Part no.	Description	Remarks
	1	63024	Valve block	
1	1	62037	Inlet section	
2	1	25840	Elbow connection	C40XS25 - 3/4
3	1	26273	Elbow connection 45°	V40XS18-20 - 3/4
4	2	62237	Seal kit	
5	1	62225	Basic module	
6	1	62055	Spool	
7	2	58919	Lever module	
8	2	58935	Electric activation	
9	2	25723	Elbow connection 45°	V40XS14-16 - 1/2
10	1	62227	Basic module	
11	1	62029	Spool	
12	1	62271	Port-relief valve	
13	1	58931	Port-relief valve	
14	2	25833	Straight connection	F40XS14/16 - 1/2
15	1	58925	Seal kit	
16	1	62235	End plate	
17	1	58913	Connecting kit - 2 modules	
18	1	26103	Pressure-gauge connect.	
19		30424	Screw	MC6 x 16
20		62239	Seal kit	
21		62240	Seal kit	
22		62241	Screw	
23		30856	Nut, stainless	M8
24		62044	Washer	
25		62052	O-ring	

52-380

Intern ref.: 6649720

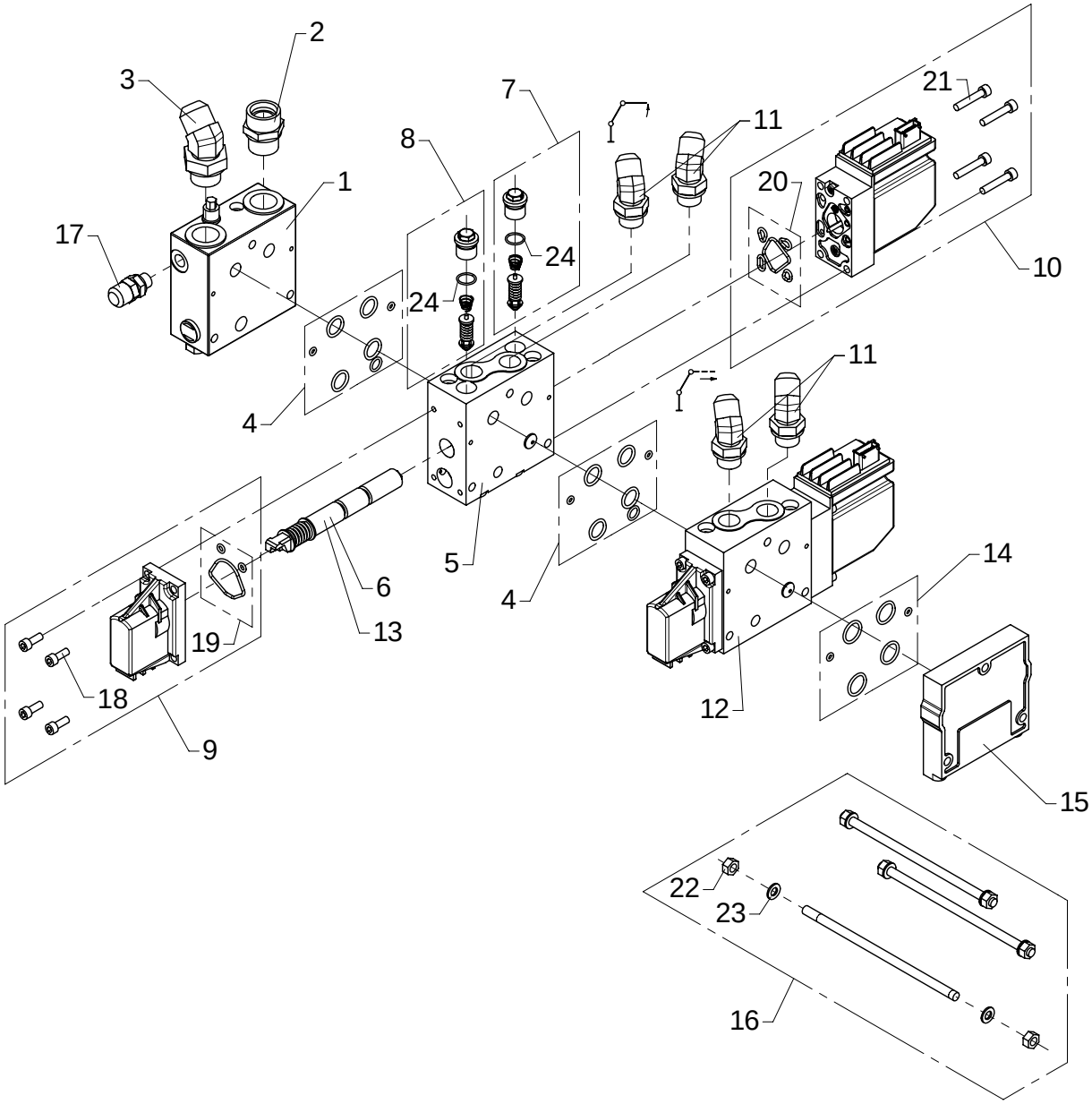

Valve block, 2 sections P2

As from / To loader no.: 96 00 00 / 96 02 07
Created: 03.10.2003
Modified: 01.09.2008

Item no.	Qty.	Part no.	Description	Remarks
		63025	Valve block	
1	1	62037	Inlet section	
2	1	25169	Connection	P-GEV 22 LR-WD
3	1	26273	Elbow connection 45°	V40XS18-20 - 3/4
4	2	62237	Seal kit	
5	1	62227	Basic module	
6	1	62029	Spool	
7	1	62271	Port-relief valve	
8	1	62283	Port-relief valve	
9	2	58919	Lever module	
10	2	58935	Electric activation	
11	4	25723	Elbow connection 45°	V40XS14-16 - 1/2
12	1	62225	Basic module	
13	1	62055	Spool	
14	1	58925	Seal kit	
15	1	58921	End cover	
16	1	58913	Connecting kit - 2 modules	
17	1	26103	Pressure-gauge connect.	
18		30424	Screw	MC6 x 16
19		62239	Seal kit	
20		62240	Seal kit	
21		62241	Screw	
22		30856	Nut, stainless	M8
23		62044	Washer	
24		62052	O-ring	

52-380

Intern ref.: 6649700

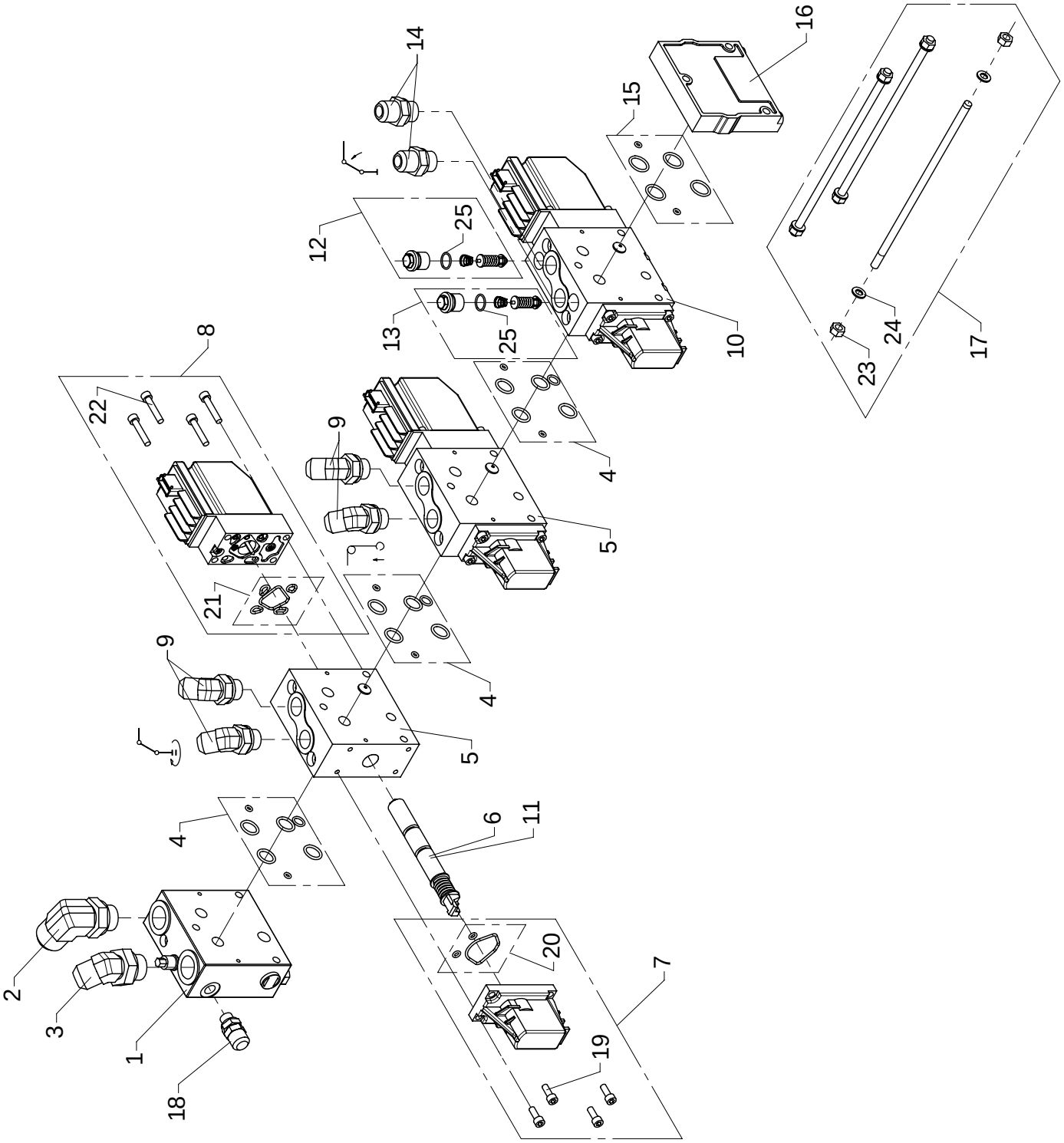

Valve block, 3 sections P1

As from / To loader no.: 96 00 00 / 96 02 07
Created: 03.10.2003
Modified: 01.09.2008

Item no.	Qty.	Part no.	Description	Remarks
	1	63026	Valve block	
1	1	62037	Inlet section	
2	1	25840	Elbow connection	C40XS25 - 3/4
3	1	26273	Elbow connection 45°	V40XS18-20 - 3/4
4	3	62237	Seal kit	
5	2	62225	Basic module	
6	2	62055	Spool	
7	3	58919	Lever module	
8	3	58935	Electric activation	
9	4	25723	Elbow connection 45°	V40XS14-16 - 1/2
10	1	62227	Basic module	
11	1	62029	Spool	
12	1	62271	Port-relief valve	
13	1	58931	Port-relief valve	
14	2	25833	Straight connection	F40XS14/16 - 1/2
15	1	58925	Seal kit	
16	1	62235	End plate	
17	1	62018	Connecting kit - 3 modules	
18	1	26103	Pressure-gauge connect.	
19		30424	Screw	MC6 x 16
20		62239	Seal kit	
21		62240	Seal kit	
22		62241	Screw	
23		30856	Nut, stainless	M8
24		62044	Washer	
25		62052	O-ring	

52-380

Intern ref.: 6649780

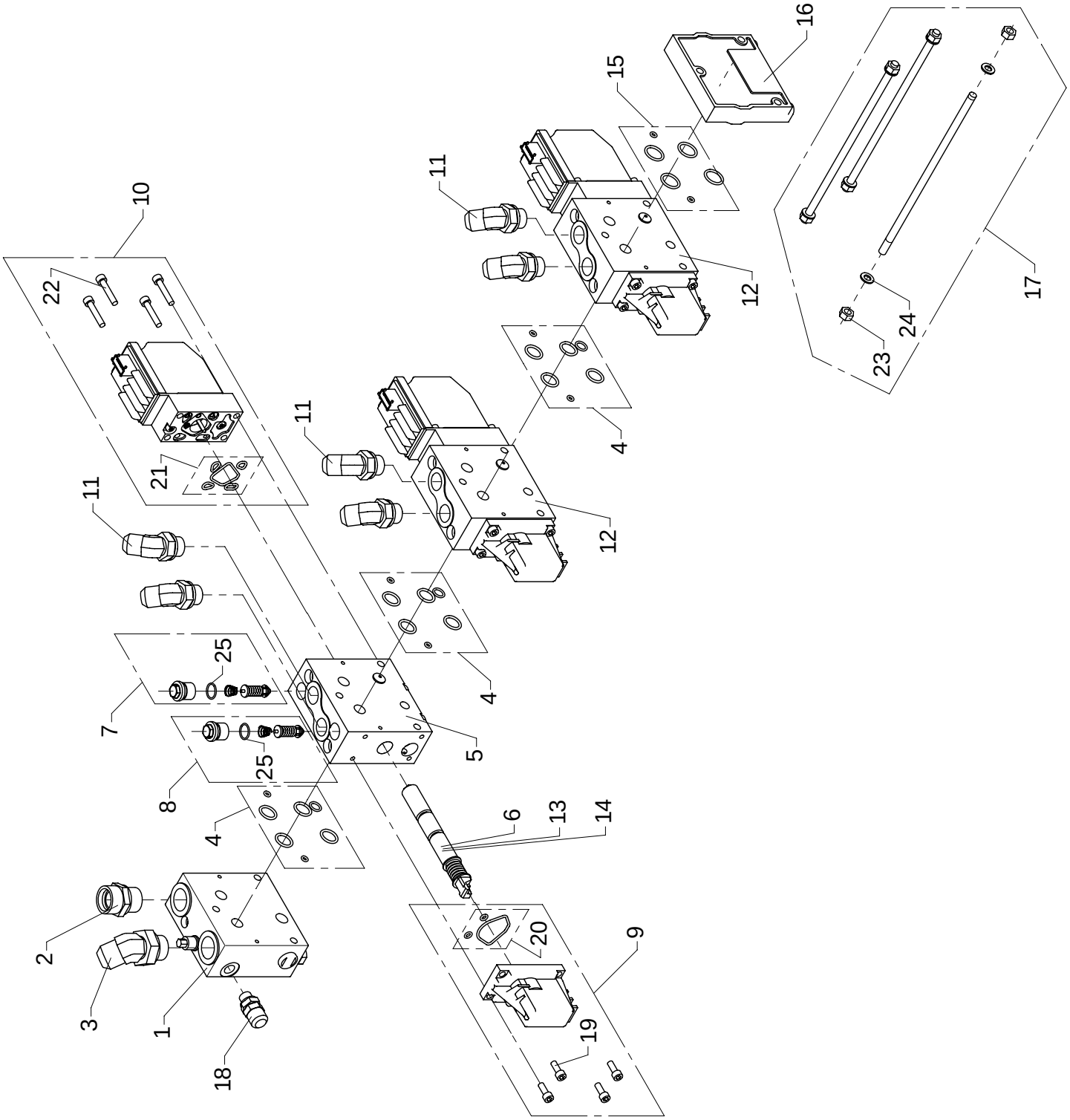

Valve block, 3 sections P2

As from / To loader no.: 96 00 00 / 96 02 07
Created: 26.02.2004
Modified: 01.09.2008

Item no.	Qty.	Part no.	Description	Remarks
	1	63041	Valve block	
1	1	62037	Inlet section	
2	1	25169	Connection	P-GEV 22 LR-WD
3	1	26273	Elbow connection 45°	V40XS18-20 - 3/4
4	3	62237	Seal kit	
5	1	62227	Basic module	
6	1	62029	Spool	
7	1	62271	Port-relief valve	
8	1	62283	Port-relief valve	
9	3	58919	Lever module	
10	3	58935	Electric activation	
11	6	25723	Elbow connection 45°	V40XS14-16 - 1/2
12	2	62225	Basic module	
13	1	62055	Spool	
14	1	62034	Spool	
15	1	58925	Seal kit	
16	1	58921	End cover	
17	1	62018	Connecting kit - 3 modules	
18	1	26103	Pressure-gauge connect.	
19		30424	Screw	MC6 x 16
20		62239	Seal kit	
21		62240	Seal kit	
22		62241	Screw	
23		30856	Nut, stainless	M8
24		62044	Washer	
25		62052	O-ring	

52-380

Intern ref.: 6649710

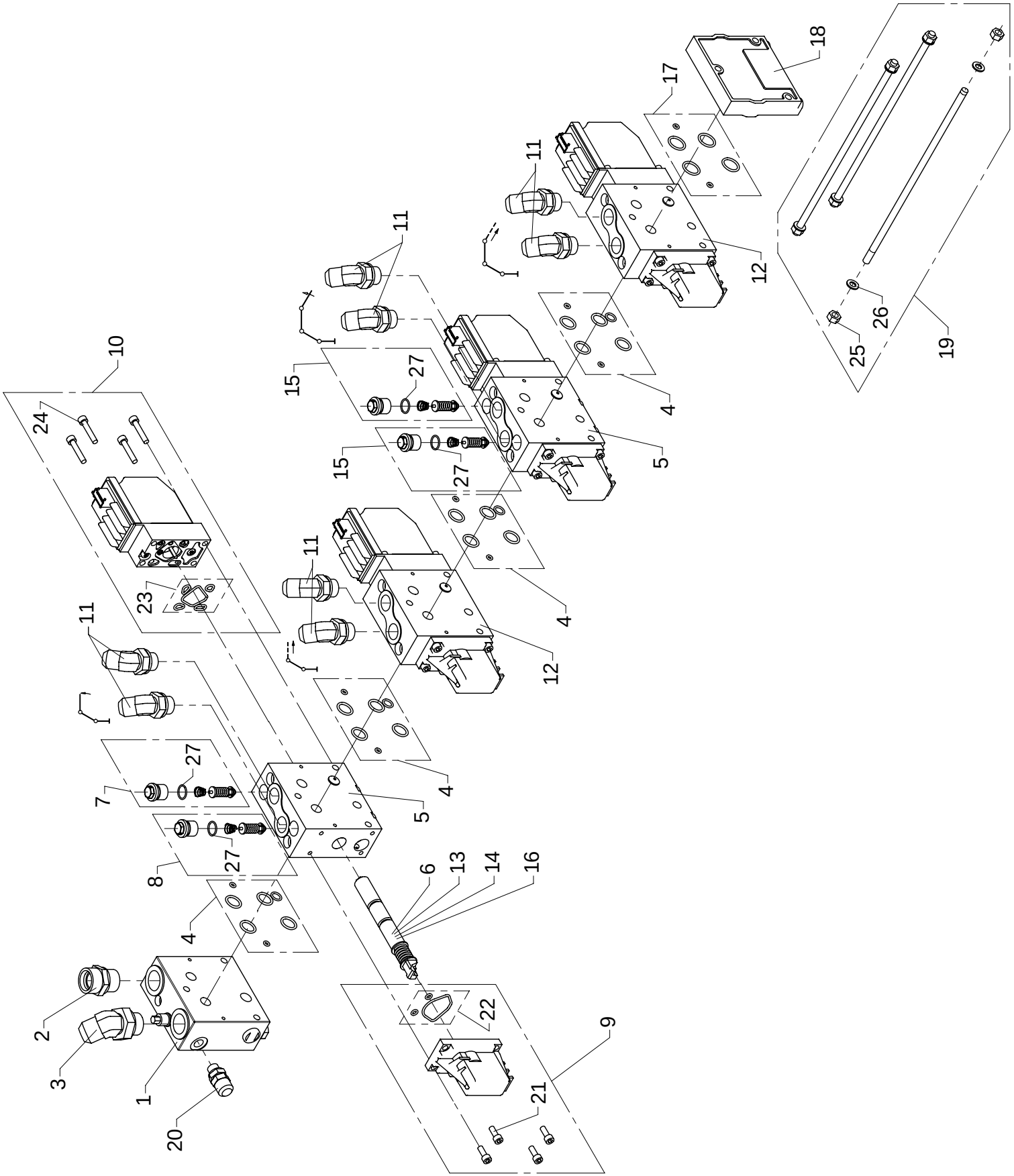

Valve block, 4 sections P2

As from / To loader no.: 96 00 00 / 96 02 07
Created: 03.10.2003
Modified: 01.09.2008

Item no.	Qty.	Part no.	Description	Remarks
	1	63027	Valve block	
1	1	62037	Inlet section	
2	1	25169	Connection	P-GEV 22 LR-WD
3	1	26273	Elbow connection 45°	V40XS18-20 - 3/4
4	4	62237	Seal kit	
5	2	62227	Basic module	
6	1	62029	Spool	
7	1	62271	Port-relief valve	
8	1	62283	Port-relief valve	
9	4	58919	Lever module	
10	4	58935	Electric activation	
11	8	25723	Elbow connection 45°	V40XS14-16 - 1/2
12	2	62225	Basic module	
13	1	62055	Spool	
14	1	62070	Spool	
15	2	62282	Port-relief valve	
16	1	62034	Spool	
17	1	58925	Seal kit	
18	1	58921	End cover	
19	1	62032	Connecting kit - 4 modules	
20	1	26103	Pressure-gauge connect.	
21		30424	Screw	MC6 x 16
22		62239	Seal kit	
23		62240	Seal kit	
24		62241	Screw	
25		30856	Nut, stainless	M8
26		62044	Washer	
27		62052	O-ring	

52-380

Intern ref.:

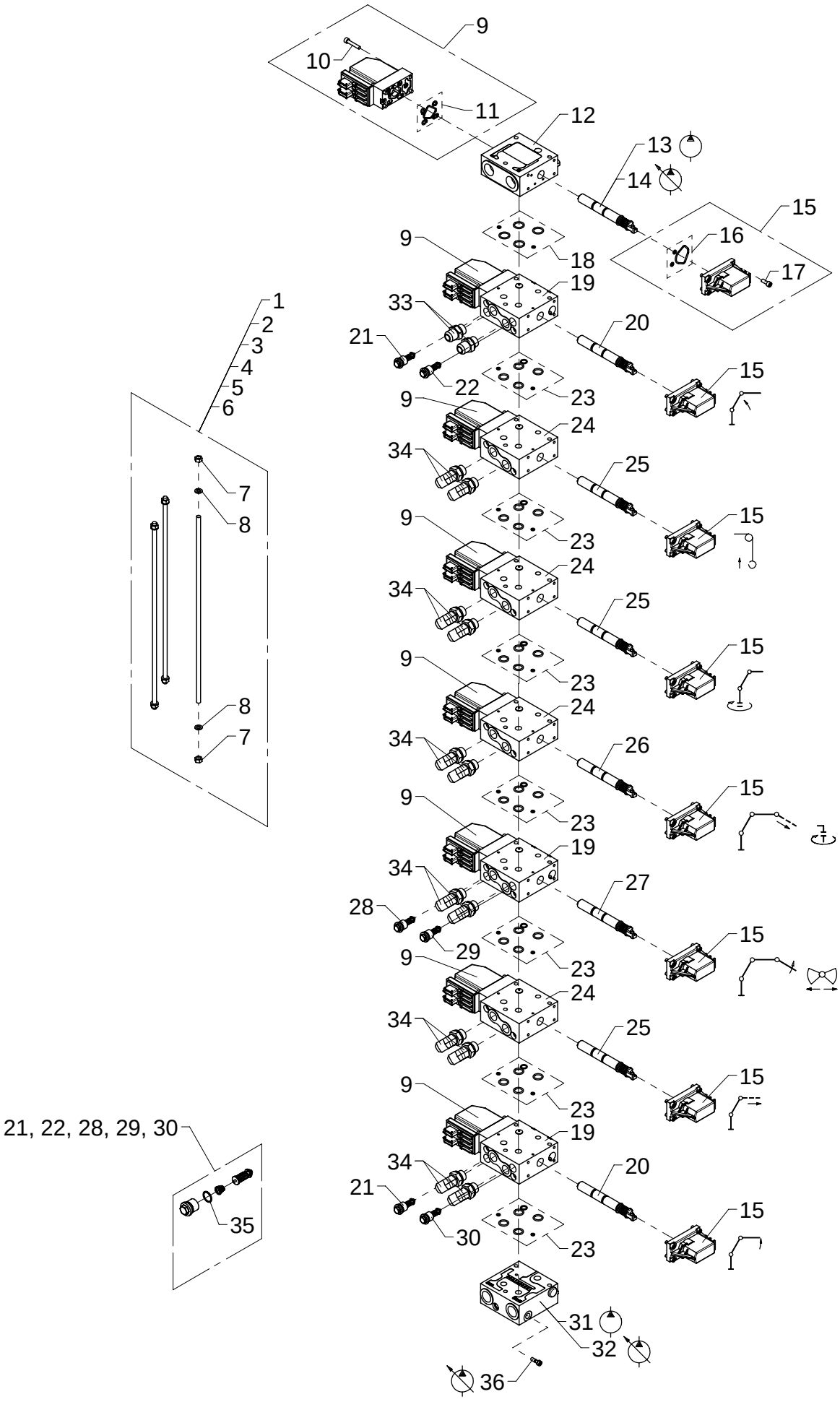

Valve block, 2-7 sections

As from / To loader no.: 96 02 08
Created: 01.09.2008
Modified:

Item no.	Qty.	Part no.	Description	Remarks
1		58963	Connecting kit 2 sections	Incl. pos. 7, 8, 18, 23
2		58964	Connecting kit, 3 sections	Incl. pos. 7, 8, 18, 23
3		58965	Connecting kit, 4 sections	Incl. pos. 7, 8, 18, 23
4		58966	Connecting kit, 5 sections	Incl. pos. 7, 8, 18, 23
5		58967	Connecting kit, 6 sections	Incl. pos. 7, 8, 18, 23
6		58968	Connecting kit, 7 sections	Incl. pos. 7, 8, 18, 23
7		30856	Nut, stainless	M8
8		62044	Washer	
9		62295	Electric activation	
10		62241	Screw	
11		62240	Seal kit	
12		58958	PVSK valve section	
13		58959	Spool, OC	Fixed flow pump
14		58960	Spool, CC	Variable flow pump
15		58919	Lever module	
16		62239	Seal kit	
17		30424	Screw	MC6 x 16
18		58925	Seal kit	
19		62227	Basic module	
20		62029	Spool	
21		62271	Port-relief valve	
22		58931	Port-relief valve	350 bar
23		62237	Seal kit	
24		62225	Basic module	
25		62055	Spool	
26		62034	Spool	
27		62070	Spool	
28		62281	Port-relief valve	280 bar
29		62282	Port-relief valve	300 bar
30		62283	Port-relief valve	320 bar
31		58955	Inlet section, OC	Fixed flow pump
32		58956	Inlet section, CC	Variable flow pump
33		25833	Straight connection	F40XS14/16 - 1/2
34		25723	Elbow connection 45°	V40XS14-16 - 1/2
35		62052	O-ring	
36		62065	Closed center kit	

52-380

Intern ref.: 6649730

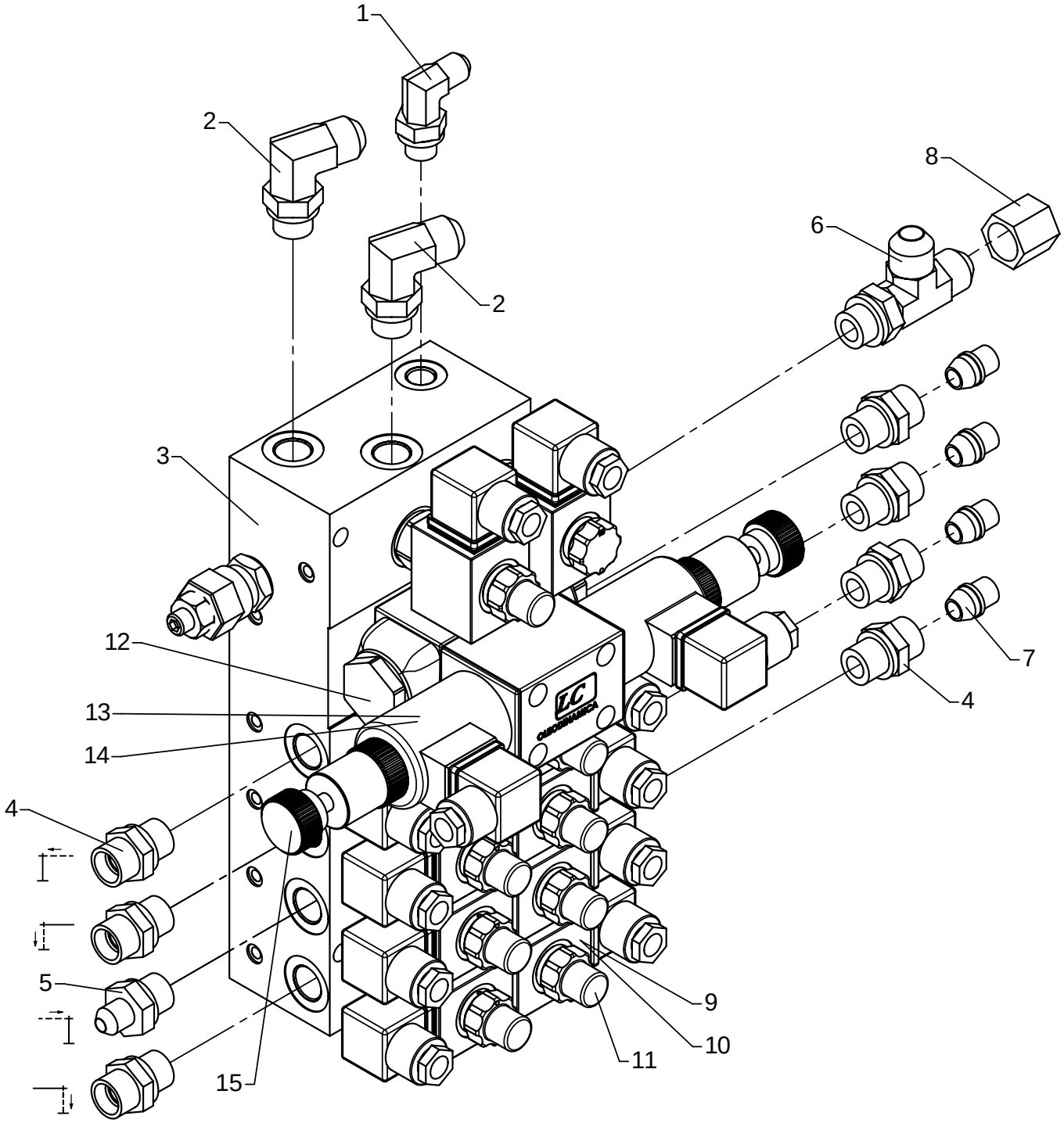

Stabilizer valve block, 8 functions

As from / To loader no.: 96 00 00 /
Created: 03.10.2003
Modified: 04.07.2005

Item no.	Qty.	Part no.	Description	Remarks
1	1	25858	Elbow connection	C40XS 12-3/8 JIC
2	2	25838	Elbow connection	C40XS 12-3/8 JIC
3	1	59049	Valve block	
4	7	25127	Connection	GES 12 LR-WD
5	1	25830	Straight connection	F40XS 8-3/8 JIC
6	1	25813	T-connection	R40XS 12-3/8 JIC
7	4	26180	Blanking plug	VSD 12L/S-O
8	1	25876	Screw cap	FNTXS 12 JIC
9		61778	Solenoid	
10		61777	Solenoid	
11		59057	Solenoid valve	
12		59079	Valve	
13		59073	Solenoid 12V	
14		59082	Solenoid 24V	
15		59095	Emergency screw	

52-380

Intern ref.: 6301200

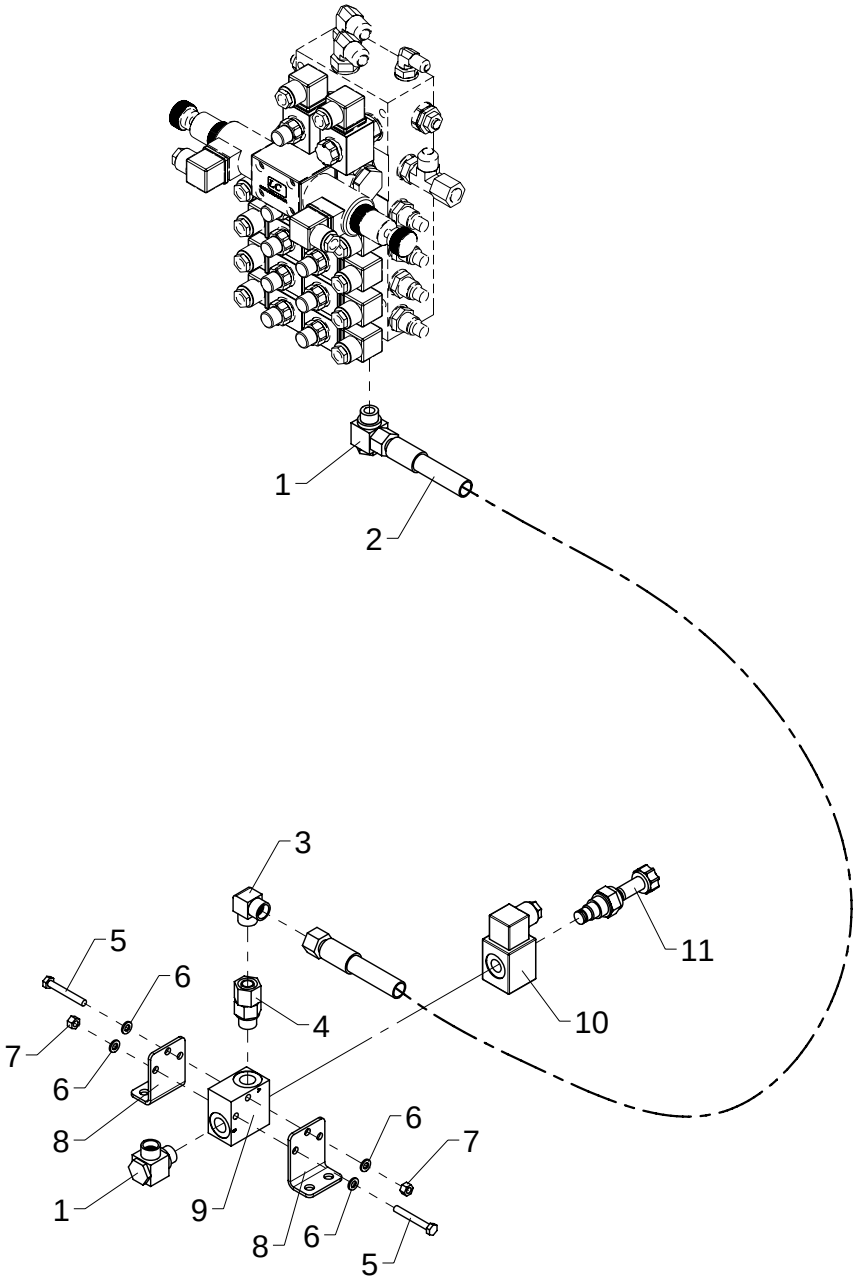

Stabilizer valve block, 5 available func.

As from / To loader no.: 96 00 00 / 96 02 07
Created: 26.01.2004
Modified: 23.06.2008

Item no.	Qty.	Part no.	Description	Remarks
1	2	25130	Banjo connection	RSWV 12 LR
2	1	0017130	Hose	3/8" x 1600 O/O
3	1	25129	Elbow connection	WV 12 L
4	1	25240	Connection	EGESD 12 LR-WD
5	2	30118	Steel pin, stainless	M6 x 45
6	4	32302	Face washer, stainless	6 mm
7	2	30884	Lock nut, stainless	M6
8	2	6301202	Bracket	
9	1	59771	Valve housing	
10	1	61778	Solenoid	
11	1	59057	Solenoid valve	

52-380

Intern ref.: 6301200

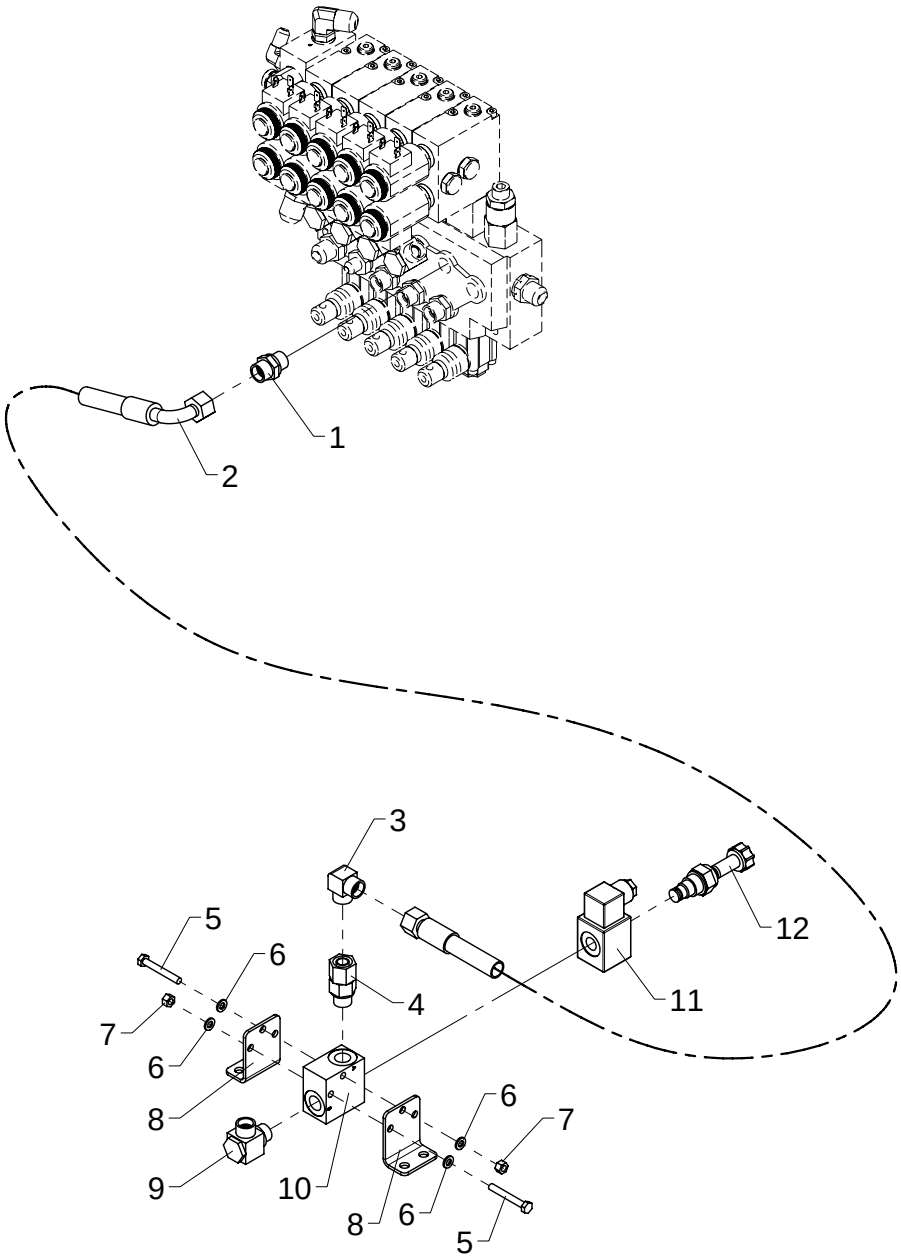

Stabilizer valve block, 5 available func.

As from / To loader no.: 96 02 08
Created: 23.06.2008
Modified:

Item no.	Qty.	Part no.	Description	Remarks
1	1	25127	Connection	P-GEV 12 LR-WD
2	1	0015020	Hose 3/8" x 1600 mm v/o	3/8" x 1600 V/O
3	1	25129	Elbow connection	WV 12 L
4	1	25240	Connection	EGESD 12 LR-WD
5	2	30118	Steel pin, stainless	M6 x 45
6	4	32302	Face washer, stainless	6 mm
7	2	30884	Lock nut, stainless	M6
8	2	6301202	Bracket	
9	1	25130	Banjo connection	RSWV 12 LR
10	1	59771	Valve housing	
11	1	61778	Solenoid	
12	1	59057	Solenoid valve	

52-380

Intern ref.: 6301210

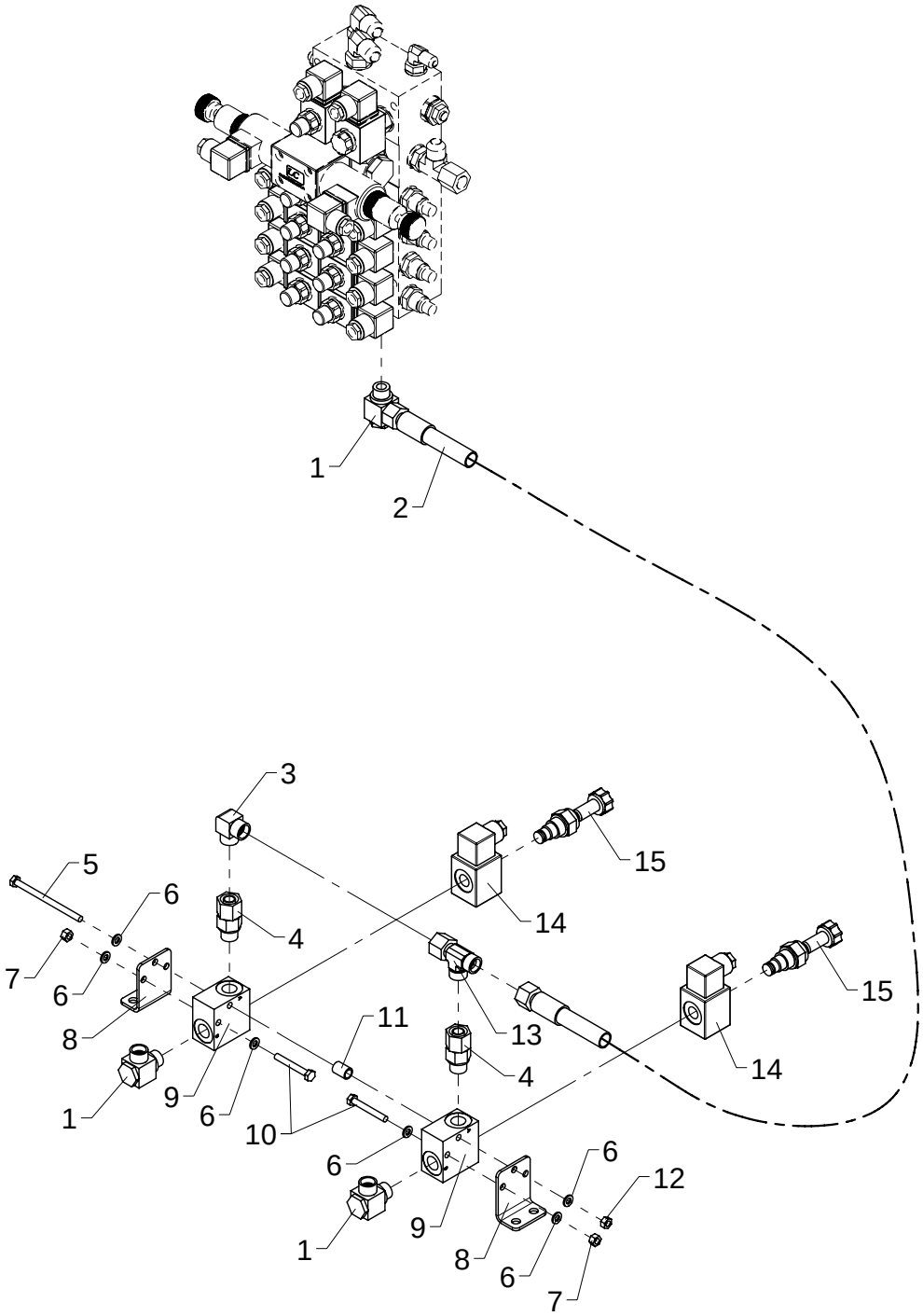

Stabilizer valve block, 6 available func.

As from / To loader no.: 96 00 00 / 96 02 07
Created: 26.01.2004
Modified: 23.06.2008

Item no.	Qty.	Part no.	Description	Remarks
1	3	25130	Banjo connection	RSWV 12 LR
2	1	0017130	Hose	3/8" x 1600 O/O
3	1	25129	Elbow connection	WV 12 L
4	2	25240	Connection	EGESD 12 LR-WD
5	1	30124	Steel bolt, stainless	M6 x 90
6	6	32302	Face washer, stainless	6 mm
7	2	30884	Lock nut, stainless	M6
8	2	6301202	Bracket	
9	2	59771	Valve housing	
10	2	30118	Steel pin, stainless	M6 x 45
11	1	6301203	Pipe	
12	1	30854	Nut, stainless	M6
13	1	25270	Connection	ELSD 12 L
14	2	61778	Solenoid	
15	2	59057	Solenoid valve	

52-380

Intern ref.: 6301210

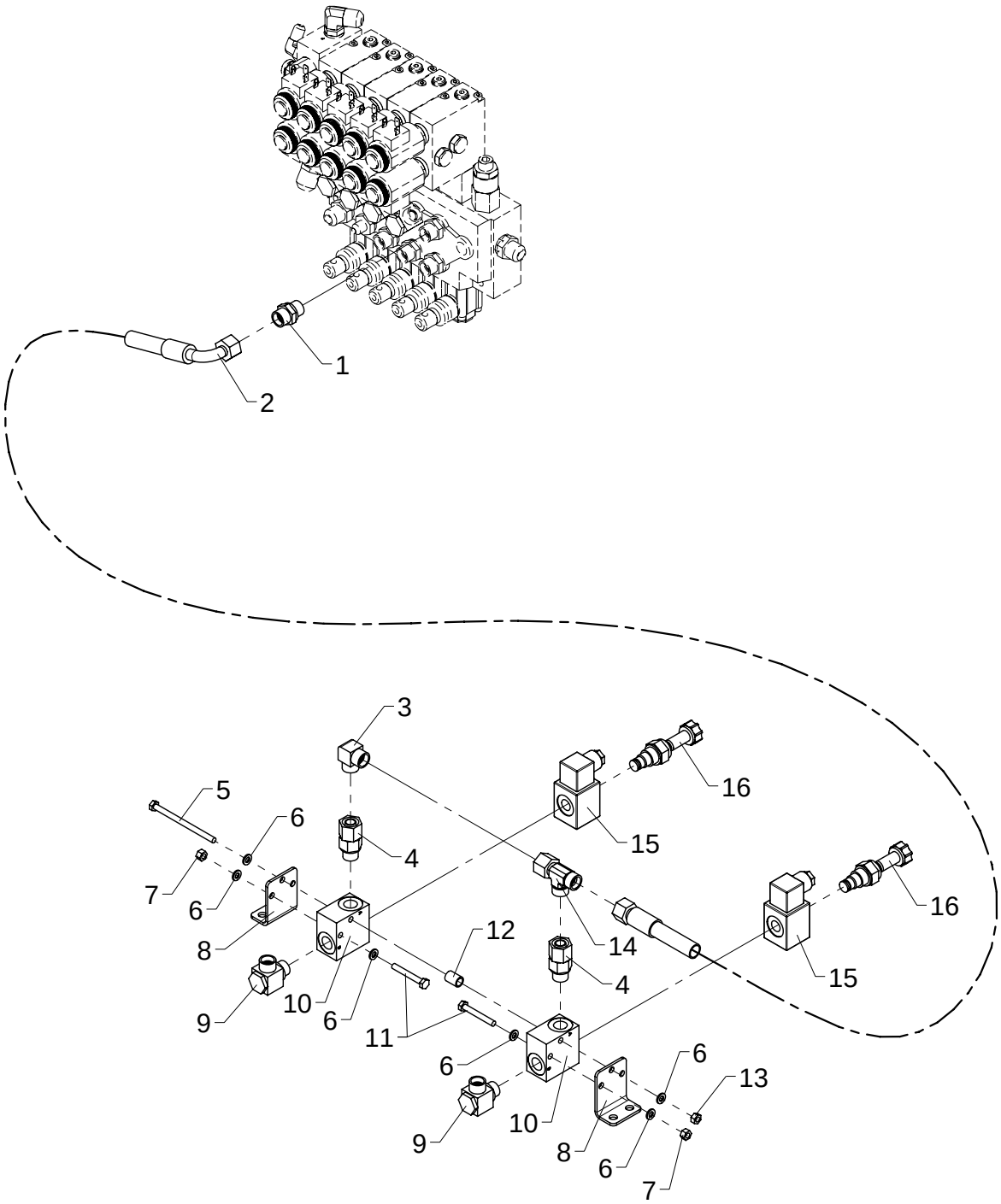

Stabilizer valve block, 6 available func.

As from / To loader no.: 96 02 08
Created: 23.06.2008
Modified:

Item no.	Qty.	Part no.	Description	Remarks
1	1	25127	Connection	P-GEV 12 LR-WD
2	1	0015020	Hose 3/8" x 1600 mm v/o	3/8" x 1600 V/O
3	1	25129	Elbow connection	WV 12 L
4	2	25240	Connection	EGESD 12 LR-WD
5	1	30124	Steel bolt, stainless	M6 x 90
6	6	32302	Face washer, stainless	6 mm
7	2	30884	Lock nut, stainless	M6
8	2	6301202	Bracket	
9	2	25130	Banjo connection	RSWV 12 LR
10	2	59771	Valve housing	
11	2	30118	Steel pin, stainless	M6 x 45
12	1	6301203	Pipe	
13	1	30854	Nut, stainless	M6
14	1	25270	Connection	ELSD 12 L
15	2	61778	Solenoid	
16	2	59057	Solenoid valve	

52-380

Intern ref.: 6301220

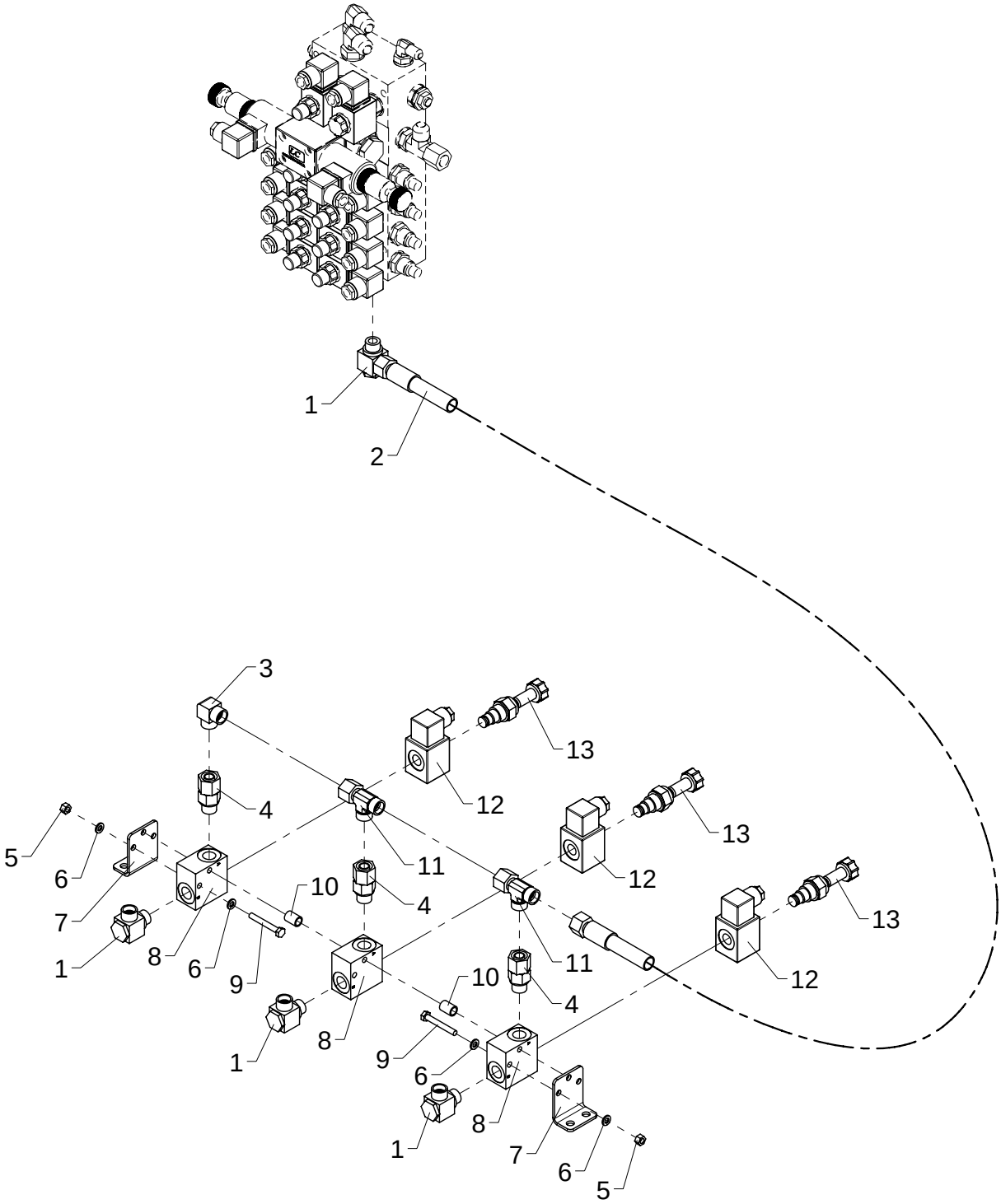

Stabilizer valve Block, 7 available func.

As from / To loader no.: 96 00 00 / 96 02 07
Created: 26.01.2004
Modified: 23.06.2008

Item no.	Qty.	Part no.	Description	Remarks
1	4	25130	Banjo connection	RSWV 12 LR
2	1	0017130	Hose	3/8" x 1600 O/O
3	1	25129	Elbow connection	WV 12 L
4	3	25240	Connection	EGESD 12 LR-WD
5	2	30884	Lock nut, stainless	M6
6	4	32302	Face washer, stainless	6 mm
7	2	6301202	Bracket	
8	3	59771	Valve housing	
9	2	30118	Steel pin, stainless	M6 x 45
10	2	6301203	Pipe	
11	2	25270	Connection	ELSD 12 L
12	3	61778	Solenoid	
13	3	59057	Solenoid valve	

52-380

Intern ref.: 6301220

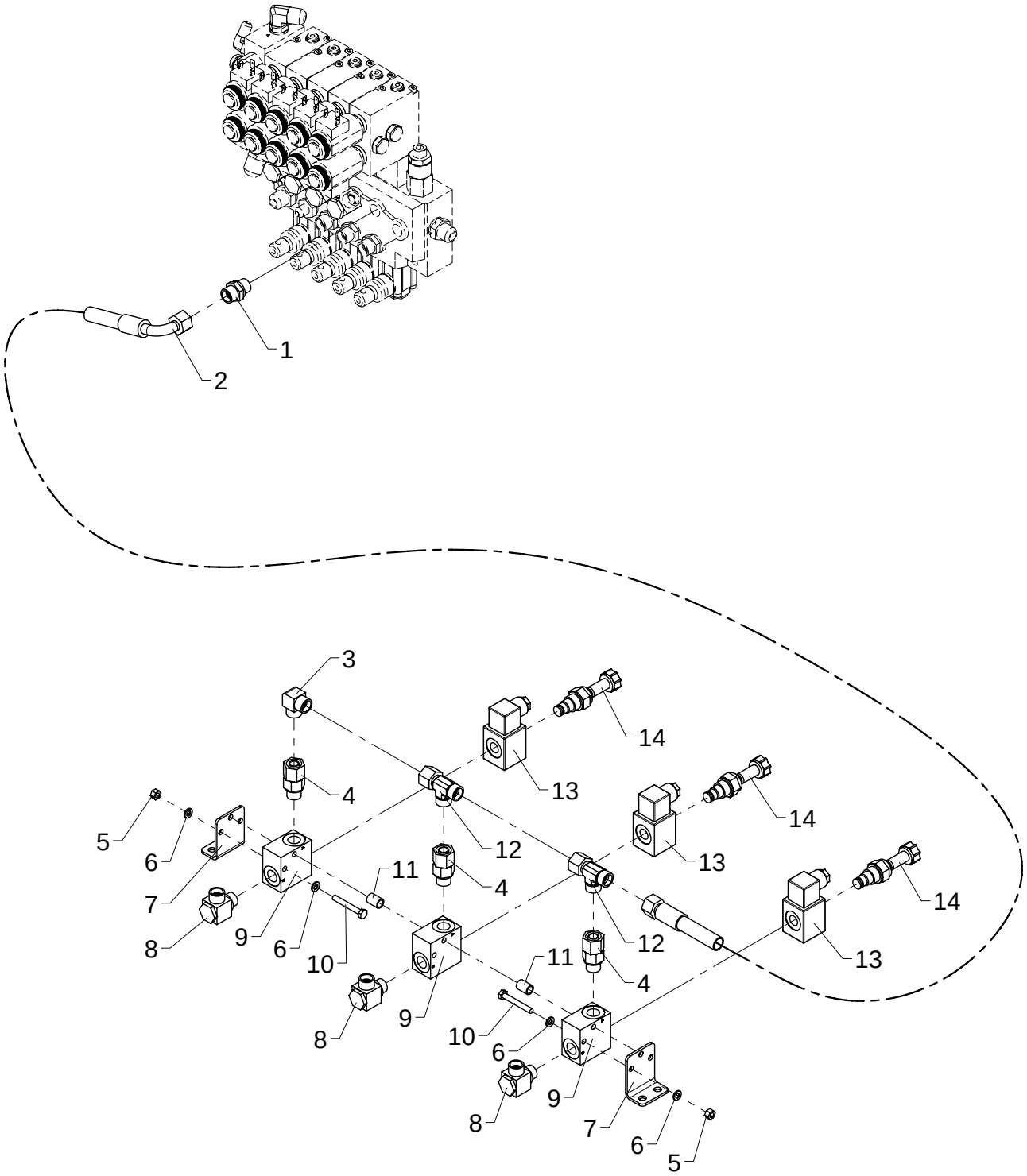

Stabilizer valve Block, 7 available func.

As from / To loader no.: 96 02 08
Created: 23.06.2008
Modified:

Item no.	Qty.	Part no.	Description	Remarks
1	1	25127	Connection	P-GEV 12 LR-WD
2	1	0015020	Hose 3/8" x 1600 mm v/o	3/8" x 1600 V/O
3	1	25129	Elbow connection	WV 12 L
4	3	25240	Connection	EGESD 12 LR-WD
5	2	30884	Lock nut, stainless	M6
6	4	32302	Face washer, stainless	6 mm
7	2	6301202	Bracket	
8	3	25130	Banjo connection	RSWV 12 LR
9	3	59771	Valve housing	
10	2	30118	Steel pin, stainless	M6 x 45
11	2	6301203	Pipe	
12	2	25270	Connection	ELSD 12 L
13	3	61778	Solenoid	
14	3	59057	Solenoid valve	

52-380

Intern ref.: 6301230

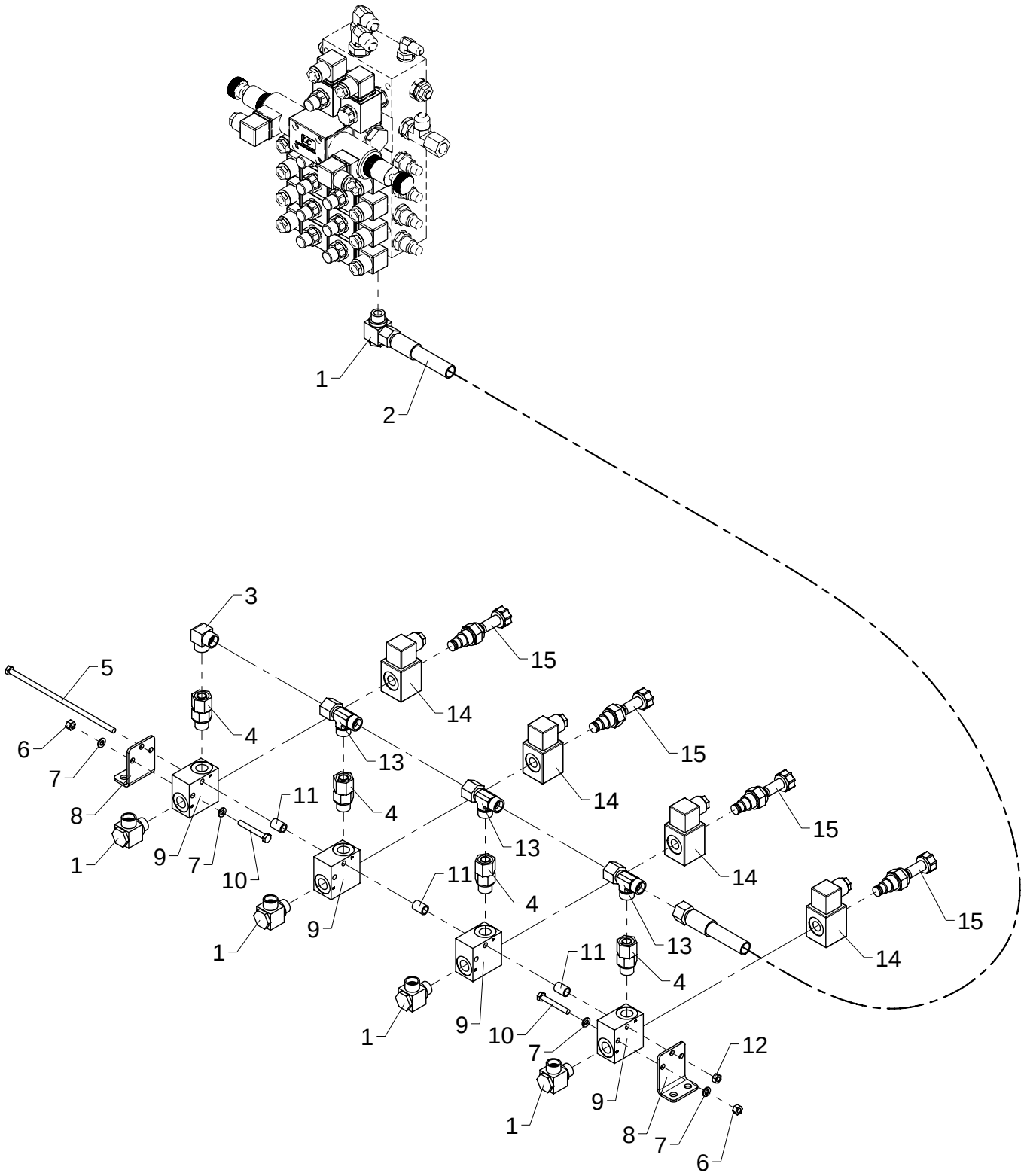

Stabilizer valve Block, 8 available func.

As from / To loader no.: 96 00 00 / 96 02 07
Created: 26.01.2004
Modified: 23.06.2008

Item no.	Qty.	Part no.	Description	Remarks
1	5	25130	Banjo connection	RSWV 12 LR
2	1	0017130	Hose	3/8" x 1600 O/O
3	1	25129	Elbow connection	WV 12 L
4	4	25240	Connection	EGESD 12 LR-WD
5	1	32257	Steel bolt	M6 x 180
6	2	30884	Lock nut, stainless	M6
7	4	32302	Face washer, stainless	6 mm
8	2	6301202	Bracket	
9	4	59771	Valve housing	
10	2	30118	Steel pin, stainless	M6 x 45
11	3	6301203	Pipe	
12	1	30854	Nut, stainless	M6
13	3	25270	Connection	ELSD 12 L
14	4	61778	Solenoid	
15	4	59057	Solenoid valve	

52-380

Intern ref.: 6301230

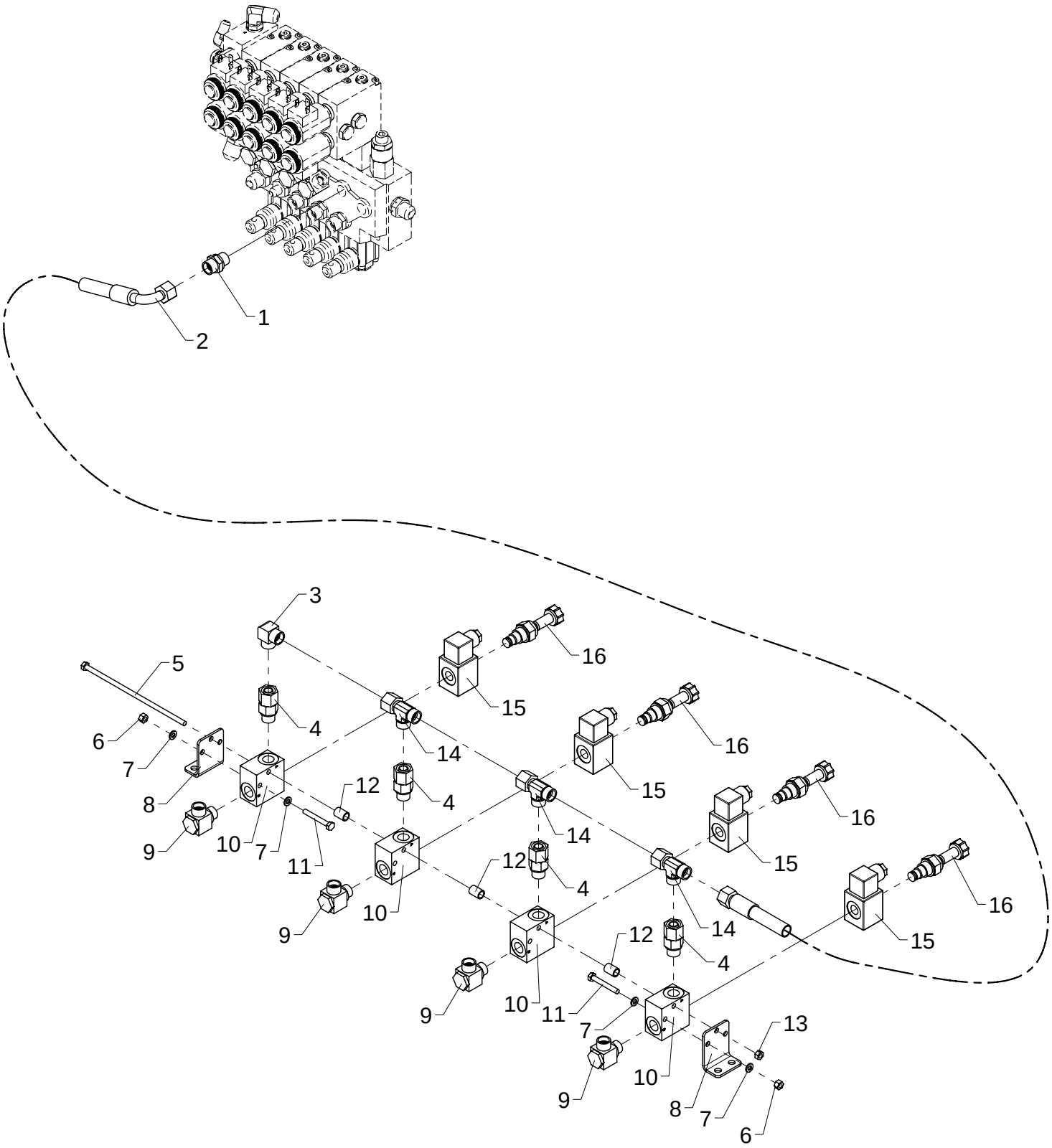

Stabilizer valve Block, 8 available func.

As from / To loader no.: 96 02 08
Created: 23.06.2008
Modified:

Item no.	Qty.	Part no.	Description	Remarks
1	1	25127	Connection	P-GEV 12 LR-WD
2	1	0015020	Hose 3/8" x 1600 mm v/o	3/8" x 1600 V/O
3	1	25129	Elbow connection	WV 12 L
4	4	25240	Connection	EGESD 12 LR-WD
5	1	32257	Steel bolt	M6 x 180
6	2	30884	Lock nut, stainless	M6
7	4	32302	Face washer, stainless	6 mm
8	2	6301202	Bracket	
9	4	25130	Banjo connection	RSWV 12 LR
10	4	59771	Valve housing	
11	2	30118	Steel pin, stainless	M6 x 45
12	3	6301203	Pipe	
13	1	30854	Nut, stainless	M6
14	3	25270	Connection	ELSD 12 L
15	4	61778	Solenoid	
16	4	59057	Solenoid valve	

52-380

Intern ref.: 6302760

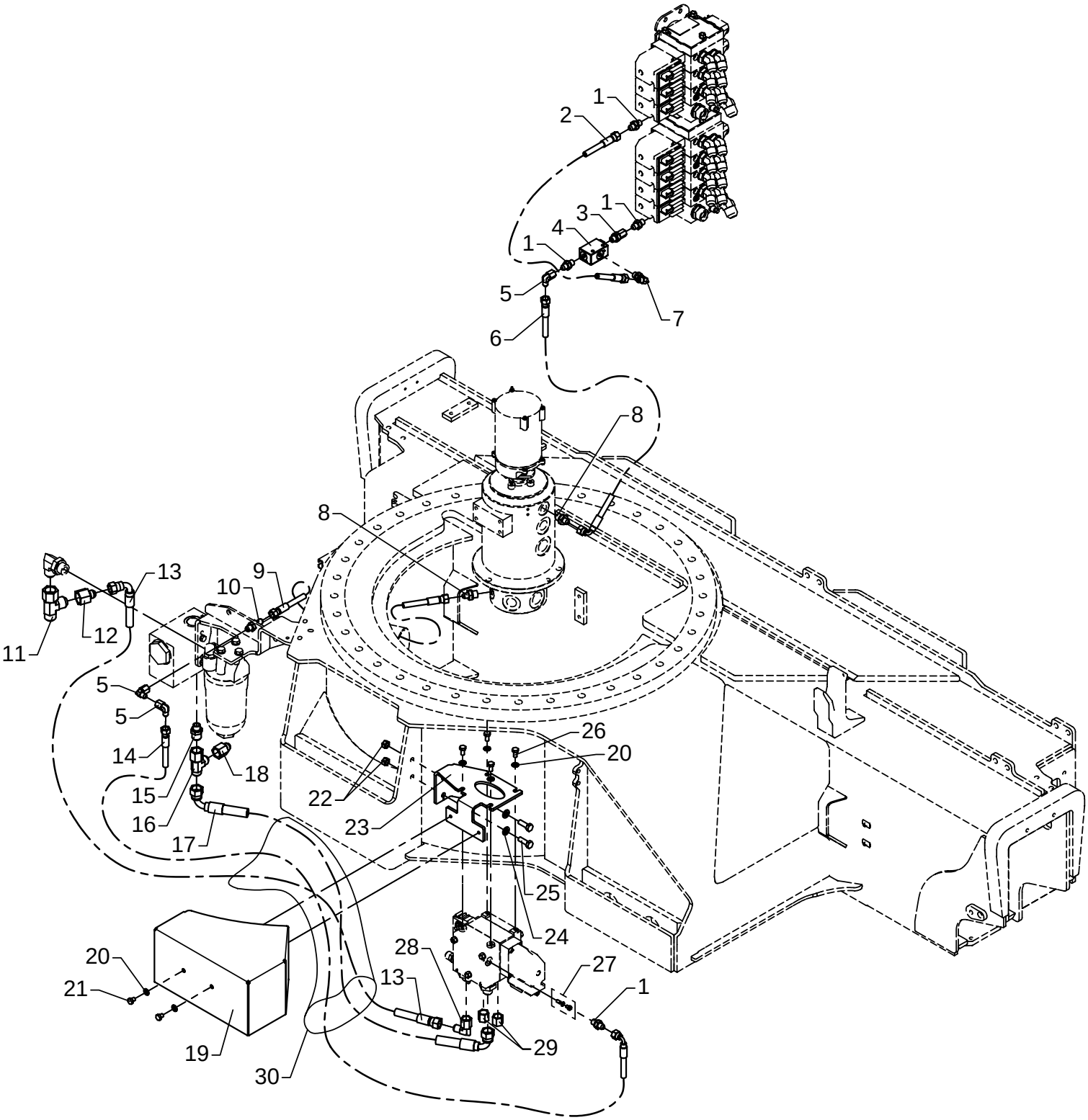

Extra RC function on base

As from / To loader no.: 96 00 00/96 00 64
Created: 06.07.2004
Modified:

Item no.	Qty.	Part no.	Description	Remarks
1	4	25829	Straight connection	F40XS 8-1/4 JIC
2	1	62870	Hose	1/4" x 650 L/L JIC
3	1	26272	Straight connection	F64XS 14/16 - 3/8" JIC
4	1	60338	Shuttle valve	
5	3	25826	Elbow connection	C6XS 8 JIC
6	1	62901	Hose	1/4" x 900 90/L JIC
7	1	25858	Elbow connection	C40XS 12-3/8 JIC
8	2	25830	Straight connection	F40XS8 - 3/8 JIC
9	1	56130	Hose	1/4" x 1150 L/L JIC
10	1	25823	Bulkhead connection	WTX-WLNS 8 JIC
11	1	25828	Connection	R6XS 20 JIC
12	1	25865	Reducing connection	TRTXS 8/20-12 JIC
13	1	62903	Hose	3/8" x 1100 90/L JIC
14	1	62934	Hose	1/4" x 1330 90/L JIC
15	1	25787	Connection	F40XS 14/16-3/8 JIC
16	1	25756	Connection	R6XS 12 JIC
17	1	62918	Hose JIC	1/2" x 1175 90/90 JIC
18	1	25872	Reduction	TRTXS 14/16-12 JIC
19	1	6302979	Valve protection	
20	6	31147	Washer, stainless	8 mm
21	2	30105	Set screw, stainless	M8 x 10
22	2	30858	Nut	
23	1	6302978	Valve bracket	
24	2	31565	Washer, stainless	10 mm
25	2	31515	Set screw, stainless	M10 x 30
26	4	30131	Set screw, stainless	M8 x 16
27	1	62065	Closed center kit	
28	1	25877	Elbow connection	C6XS 12 JIC
29	2	25876	Screw cap	FNTXS 12 JIC
30	1	62587	Protective cover	95 x 800 mm

52-380

Intern ref.: 6302760

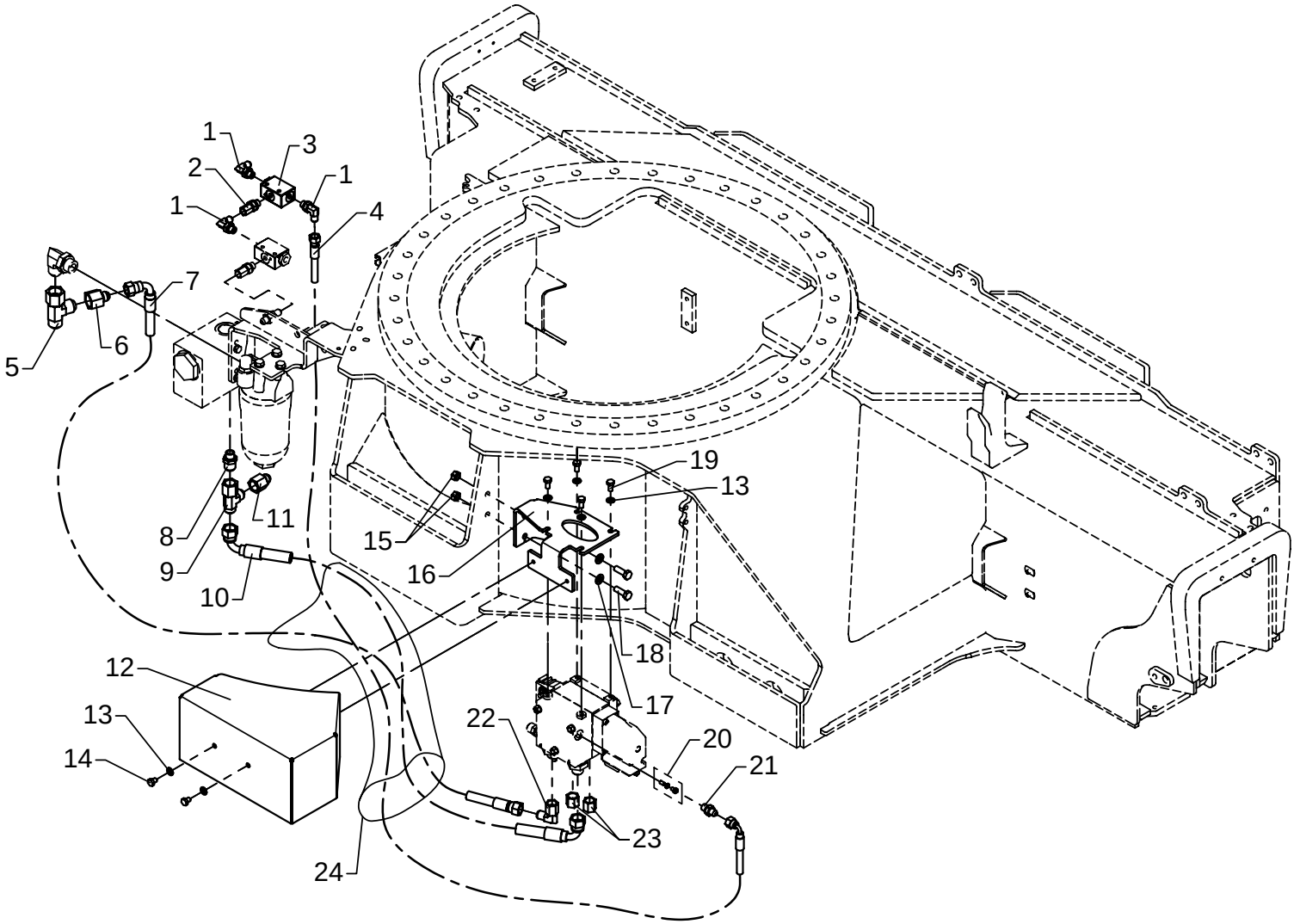

Extra RC function on base

As from / To loader no.: 96 00 65/
Created: 23.08.2004
Modified:

Item no.	Qty.	Part no.	Description	Remarks
1	3	25858	Elbow connection	C40XS 12-3/8 JIC
2	1	26272	Straight connection	F64XS 14/16 - 3/8" JIC
3	1	60338	Shuttle valve	
4	1	62934	Hose	1/4" x 1330 90/L JIC
5	1	25828	Connection	R6XS 20 JIC
6	1	25865	Reducing connection	TRTXS 8/20-12 JIC
7	1	62903	Hose	3/8" x 1100 90/L JIC
8	1	25787	Connection	F40XS 14/16-3/8 JIC
9	1	25756	Connection	R6XS 12 JIC
10	1	62918	Hose JIC	1/2" x 1175 90/90 JIC
11	1	25872	Reduction	TRTXS 14/16-12 JIC
12	1	6302979	Valve protection	
13	6	31147	Washer, stainless	8 mm
14	2	30105	Set screw, stainless	M8 x 10
15	2	30858	Nut	
16	1	6302978	Valve bracket	
17	2	31565	Washer, stainless	10 mm
18	2	31515	Set screw, stainless	M10 x 30
19	4	30131	Set screw, stainless	M8 x 16
20	1	62065	Closed center kit	
21	1	25829	Straight connection	F40XS 8-1/4 JIC
22	1	25877	Elbow connection	C6XS 12 JIC
23	2	25876	Screw cap	FNTXS 12 JIC
24	1	62587	Protective cover	95 x 800 mm

52-380

Intern ref.: 6302760

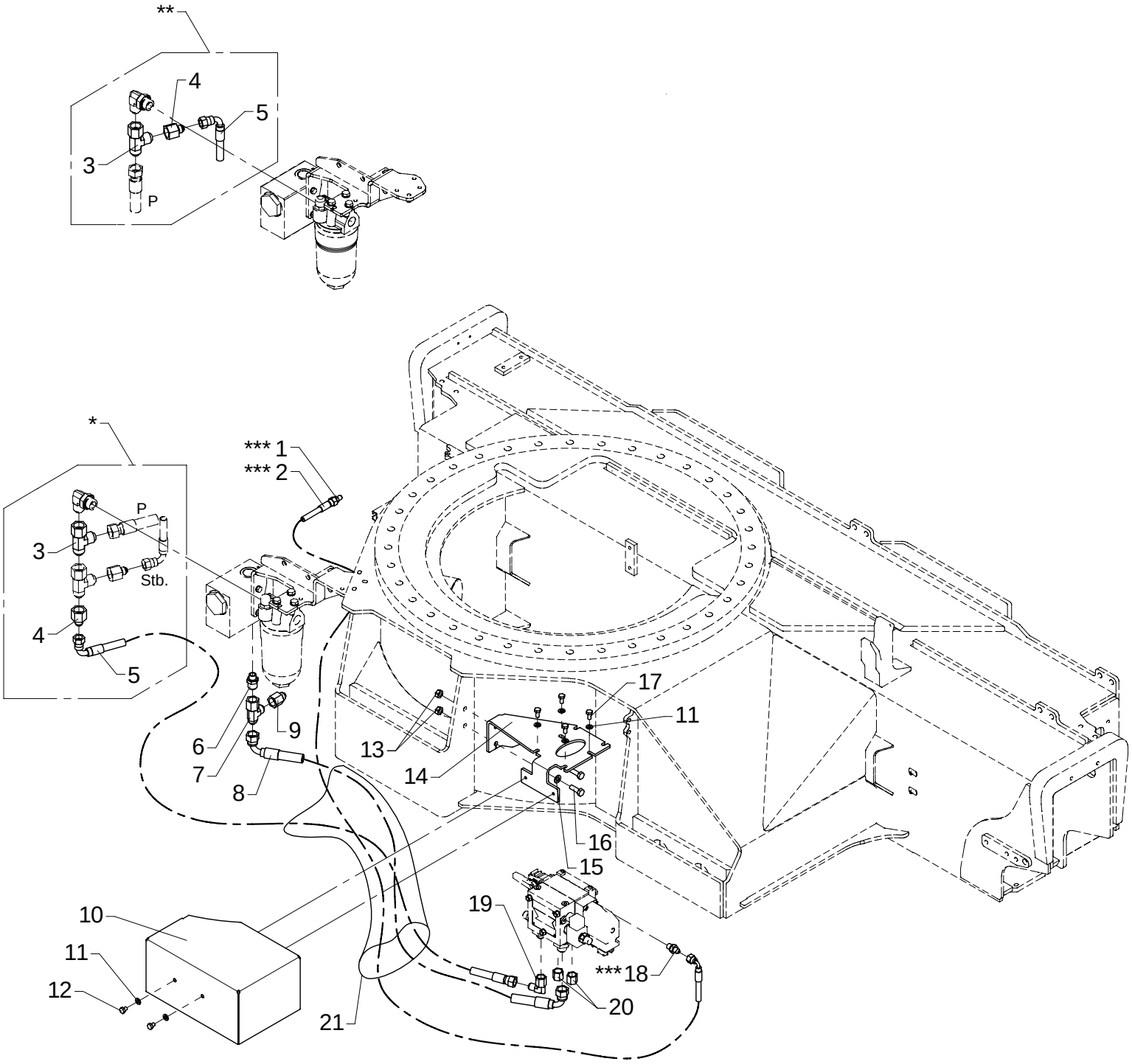

Extra RC function on base

As from / To loader no.: 96 02 08
Created: 08.10.2008
Modified:

Item no.	Qty.	Part no.	Description	Remarks
1	1	25857	Connection	HTXS8
2	1	62934	Hose	1/4" x 1330 90/L JIC
3	1	25828	Connection	R6XS 20 JIC
4	1	25865	Reducing connection	TRTXS8/20-12
5	1	62903	Hose	3/8" x 1100 90/L JIC
6	1	25787	Connection	F40XS14/16 - 3/8
7	1	25756	Connection	R6XS 12 JIC
8	1	62918	Hose JIC	1/2" x 1175 90/90 JIC
9	1	25872	Reduction	TRTXS14/16-12
10	1	6302979	Valve protection	
11	6	31147	Washer, stainless	8 mm
12	2	30105	Set screw, stainless	M8 x 10
13	2	30858	Nut	M10
14	1	6302978	Valve bracket	
15	2	31565	Washer, stainless	10 mm
16	2	30156	Set screw, stainless	M10 x 30
17	4	30131	Set screw, stainless	M8 x 16
18	1	25829	Straight connection	F40XS8 - 1/4
19	1	25877	Elbow connection	C6XS 12 JIC
20	2	25876	Screw cap	FNTXS 12 JIC
21	1	62587	Protective cover	

* 1 circuit ** 2 circuits *** Variable flow pump

52-380

Intern ref.: 6300260

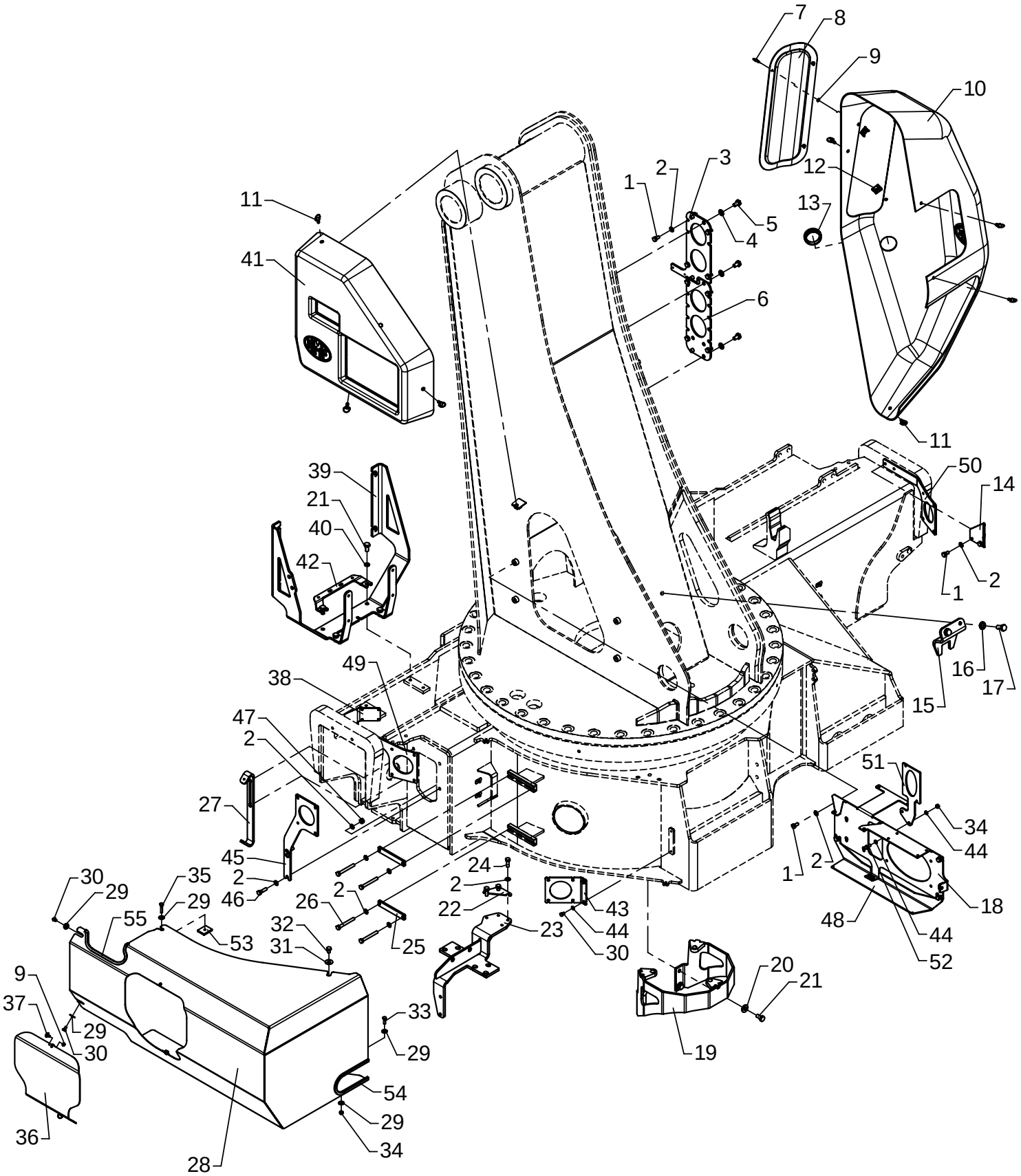

Brackets and protection plates

As from / To loader no.: 96 00 00 / 96 00 49
Created: 03.10.2003
Modified: 10.01.2005

Item no.	Qty.	Part no.	Description	Remarks
1	16	30131	Set screw, stainless	M8 x 16
2	27	31147	Washer, stainless	8 mm
3	1	6300603	Valve bracket, 2/3 distr.	
4	6	31177	Washer	10 mm
5	6	30153	Set screw	M10 x 16
6	1	6300604	Valve bracket, 2/4 distr.	
7	3	45129	Lock pin + ring	ø4 x 12 mm
8	1	64403	Cover	
9	5	45132	Washer	4 mm
10	1	64401	Protection plate	
11	7	45126	Lock pin + ring	ø6 x 14 mm
12	3	45131	Fastener	4 mm
13	1	64344	Plastic plug	
14	1	6302047	Fitting	STDRC
15	1	6300315	Carrier	
16	2	31131	Washer	12 mm
17	2	30176	Set screw	M12 x 25
18	1	6300883	Mounting bracket, Scanreco	
19	1	6300316	Adapter for swivel coupling	
20	4	31756	Washer	10 mm
21	8	30154	Set screw	M10 x 20
22	1	6300788	Division plate	
23	1	6300781	Bracket for filter	
24	3	31009	Set screw	M8 x 25
25	2	6300786	Threaded plate	
26	4	30142	Steel bolt, stainless	M8 x 70
27	1	6300876	Bracket	
28	1	6300871	Protection plate	
29	5	31134	Washer, stainless	6 mm
30	4	30110	Set screw, stainless	M6 x 10
31	1	31136	Washer, stainless	24 x 8,4 x 2
32	1	30130	Set screw, stainless	M8 x 12
33	1	30113	Set screw, stainless	M6 x 20
34	3	30884	Lock nut, stainless	M6
35	1	30115	Steel bolt, stainless	M6 x 30
36	1	6300875	Door	
37	2	45128	Lock pin + ring	ø4 x 10 mm
38	1	6302046	Fitting	STDRC
39	1	6300787	Cooler bracket	
40	4	31156	Spring washer	10 mm

Brackets and protection plates

As from / To loader no.: 96 00 00 / 96 00 49
Created: 03.10.2003
Modified: 10.01.2005

Item no.	Qty.	Part no.	Description	Remarks
41	1	64402	Protection plate	
42	1	6300734	Bracket	EVS
43	1	6300877	Mounting plate	
44	6	32302	Face washer, stainless	6 mm
45	1	6300979	Bracket for ECT 5075	
46	2	30135	Set screw, stainless	M8 x 30
47	2	30886	Lock nut, stainless	M8
48	1	6300946	Guide rails for cables	
49	1	6300968	Bracket, left	TSPR
50	1	6300967	Bracket, right	TSPR
51	1	6300969	Bracket	
52	2	30112	Set screw, stainless	M6 x 16
53	1	31418	Clamp, double	Only use bottom plate
54	1	46586	Rubber protection	330 mm
55	1	46586	Rubber protection	255 mm

52-380

Intern ref.: 6300260

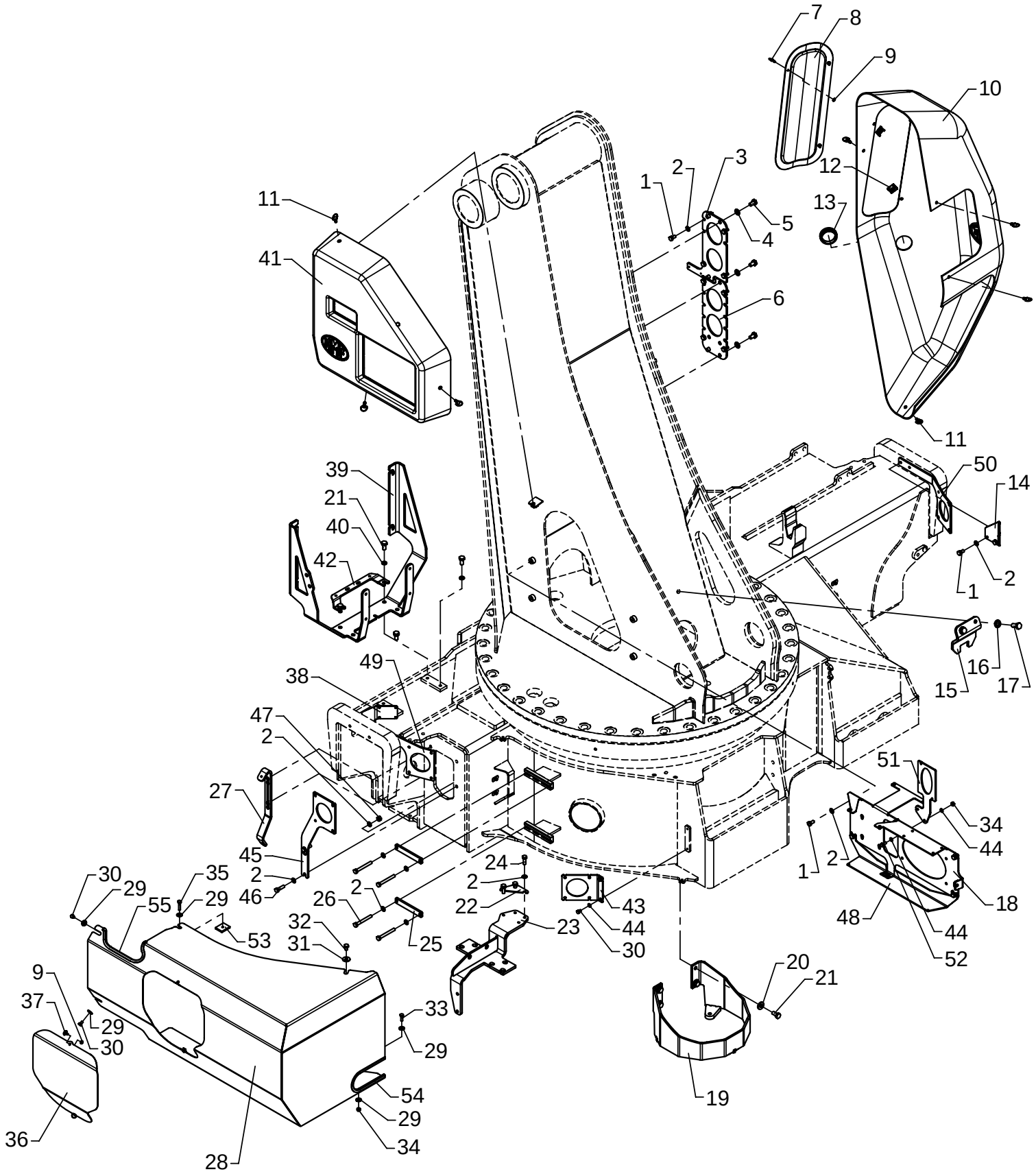

Brackets and protection plates

As from / To loader no.: 96 00 50 / 96 00 53
Created: 10.01.2005
Modified:

Item no.	Qty.	Part no.	Description	Remarks
1	16	30131	Set screw, stainless	M8 x 16
2	27	31147	Washer, stainless	8 mm
3	1	6300603	Valve bracket, 2/3 distr.	
4	6	31177	Washer	10 mm
5	6	30153	Set screw	M10 x 16
6	1	6300604	Valve bracket, 2/4 distr.	
7	3	45129	Lock pin + ring	ø4 x 12 mm
8	1	64403	Cover	
9	5	45132	Washer	4 mm
10	1	64401	Protection plate	
11	7	45126	Lock pin + ring	ø6 x 14 mm
12	3	45131	Fastener	4 mm
13	1	64344	Plastic plug	
14	1	6302047	Fitting	STDRC
15	1	6300648	Carrier	
16	2	31131	Washer	12 mm
17	2	30176	Set screw	M12 x 25
18	1	6300883	Mounting bracket, Scanreco	
19	1	6300756	Adapter for swivel coupling	
20	4	31756	Washer	10 mm
21	8	30154	Set screw	M10 x 20
22	1	6300788	Division plate	
23	1	6300781	Bracket for filter	
24	3	31009	Set screw	M8 x 25
25	2	6300786	Threaded plate	
26	4	30142	Steel bolt, stainless	M8 x 70
27	1	6302876	Bracket	
28	1	6300871	Protection plate	
29	5	31134	Washer, stainless	6 mm
30	4	30110	Set screw, stainless	M6 x 10
31	1	31136	Washer, stainless	24 x 8,4 x 2
32	1	30130	Set screw, stainless	M8 x 12
33	1	30113	Set screw, stainless	M6 x 20
34	3	30884	Lock nut, stainless	M6
35	1	30115	Steel bolt, stainless	M6 x 30
36	1	6302875	Door	
37	2	45128	Lock pin + ring	ø4 x 10 mm
38	1	6302046	Fitting	STDRC
39	1	6300787	Cooler bracket	
40	4	31156	Spring washer	10 mm

Brackets and protection plates

As from / To loader no.: 96 00 50 / 96 00 53
Created: 10.01.2005
Modified:

Item no.	Qty.	Part no.	Description	Remarks
41	1	64402	Protection plate	
42	1	6300734	Bracket	EVS
43	1	6300877	Mounting plate	
44	6	32302	Face washer, stainless	6 mm
45	1	6300979	Bracket for ECT 5075	
46	2	30135	Set screw, stainless	M8 x 30
47	2	30886	Lock nut, stainless	M8
48	1	6300946	Guide rails for cables	
49	1	6300968	Bracket, left	TSPR
50	1	6300967	Bracket, right	TSPR
51	1	6300969	Bracket	
52	2	30112	Set screw, stainless	M6 x 16
53	1	31418	Clamp, double	Only use bottom plate
54	1	46586	Rubber protection	330 mm
55	1	46586	Rubber protection	255 mm

52-380

Intern ref.: 6300260

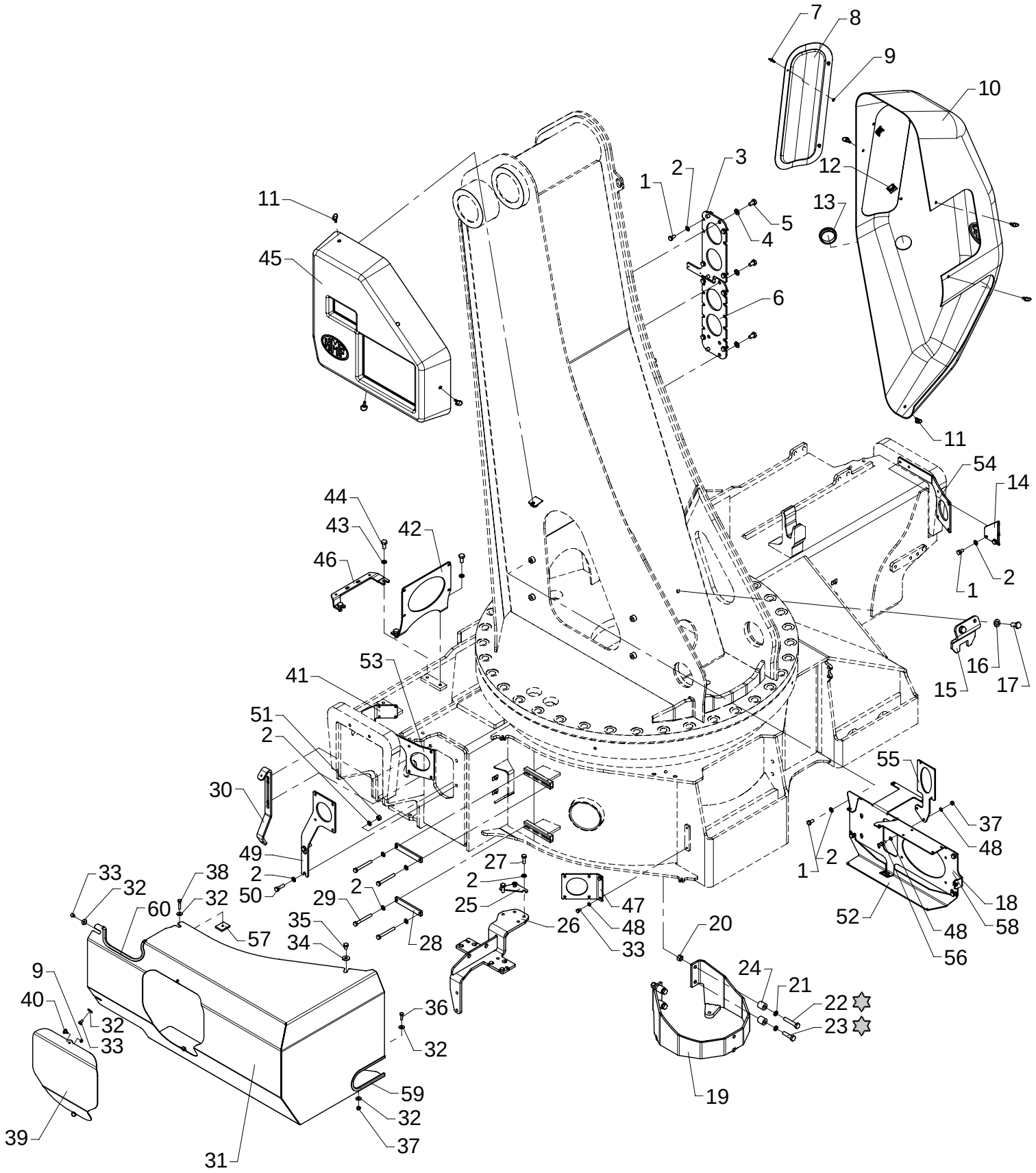

Loctite 243

Brackets and protection plates

As from / To loader no.: 96 00 54 / 96 02 07
Created: 10.01.2005
Modified: 02.06.2008

Item no.	Qty.	Part no.	Description	Remarks
1	16	30131	Set screw, stainless	M8 x 16
2	27	31147	Washer, stainless	8 mm
3	1	6300603	Valve bracket, 2/3 distr.	
4	6	31177	Washer	10 mm
5	6	30153	Set screw	M10 x 16
6	1	6300604	Valve bracket, 2/4 distr.	
7	3	45129	Lock pin + ring	ø4 x 12 mm
8	1	64403	Cover	
9	5	45132	Washer	4 mm
10	1	64401	Protection plate	
11	7	45126	Lock pin + ring	ø6 x 14 mm
12	3	45131	Fastener	4 mm
13	1	64344	Plastic plug	
14	1	6302047	Fitting	STDRC
15	1	6300648	Carrier	
16	2	31131	Washer	12 mm
17	2	30176	Set screw	M12 x 25
18	1	6300883	Mounting bracket, Scanreco	
19	1	6300756	Adapter for swivel coupling	
20	2	30888	Lock nut	M10
21	4	30933	Nordlock washer	10 mm
22	2	30160	Steel bolt	M10 x 55
23	2	30158	Steel bolt	M10 x 40
24	4	6301274	Spacer	
25	1	6300788	Division plate	
26	1	6300781	Bracket for filter	
27	2	31009	Set screw	M8 x 25
28	2	6300786	Threaded plate	
29	4	30142	Steel bolt, stainless	M8 x 70
30	1	6302876	Bracket	
31	1	6300871	Protection plate	
32	5	31134	Washer, stainless	6 mm
33	4	30110	Set screw, stainless	M6 x 10
34	1	31136	Washer, stainless	8 mm
35	1	30130	Set screw, stainless	M8 x 12
36	1	30113	Set screw, stainless	M6 x 20
37	3	30884	Lock nut, stainless	M6
38	1	30115	Steel pin, stainless	M6 x 30
39	1	6302875	Door	
40	2	45128	Lock pin + ring	ø4 x 10 mm

Brackets and protection plates

As from / To loader no.: 96 00 54 / 96 02 07
Created: 10.01.2005
Modified: 02.06.2008

Item no.	Qty.	Part no.	Description	Remarks
41	1	6302046	Fitting	STDRC
42	1	6300881	Bracket, electric box	
43	4	31156	Spring washer	10 mm
44	4	30154	Set screw	M10 x 20
45	1	64402	Protection plate	
46	1	6300734	Bracket	EVS
47	1	6300877	Mounting plate	
48	6	32302	Face washer, stainless	6 mm
49	1	6300979	Bracket for ECT 5075	
50	2	30135	Set screw, stainless	M8 x 30
51	2	30886	Lock nut, stainless	M8
52	1	6300946	Guide rails for cables	
53	1	31418	Clamp, double	Only use bottom plate
53	1	6300968	Bracket, left	TSPR
54	1	6300967	Bracket, right	TSPR
55	1	6300969	Bracket	
56	2	30112	Set screw, stainless	M6 x 16
57	1	31418	Clamp, double	
58	1	6300754	Mounting bracket, Hetronic	
59	1	46586	Rubber protection	330 mm
60	1	46586	Rubber protection	255 mm

52-380

Intern ref.: 6301700

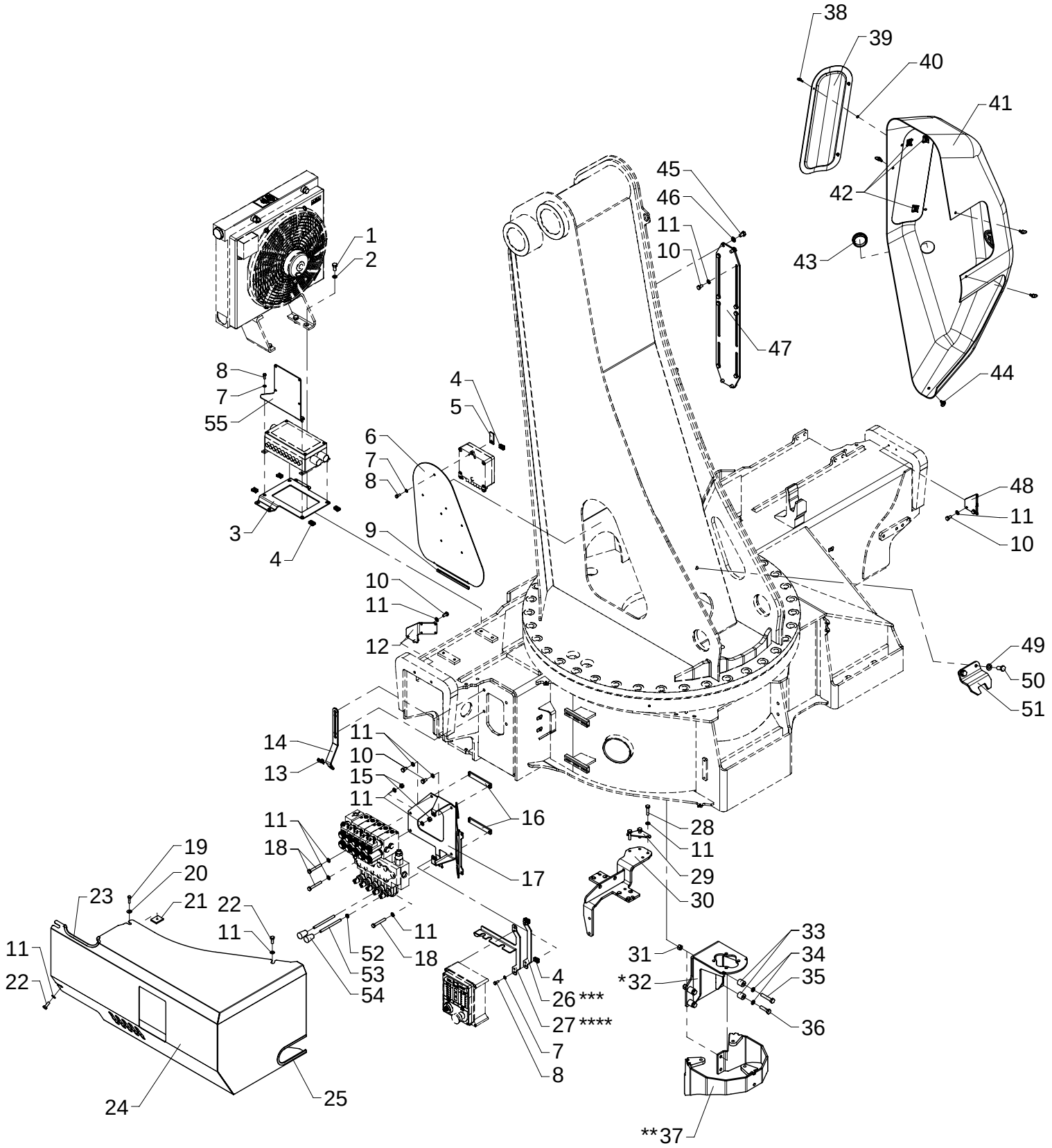

Brackets and protection plates

As from / To loader no.: 96 02 08
Created: 02.06.2008
Modified:

Item no.	Qty.	Part no.	Description	Remarks
1	4	30154	Set screw	M10 x 20
2	4	31156	Spring washer	10 mm
3	1	6301368	Bracket	
4	7	31068	Clip	M6 0,5 - 4,0 mm.
5	1	6301377	Plate	
6	1	6301378	Protection plate, column	
7	7	32302	Face washer, stainless	6 mm
8	7	30112	Set screw, stainless	M6 x 16
9	1	46586	Rubber protection	170 mm
10	14	30131	Set screw, stainless	M8 x 16
11	24	31147	Washer, stainless	8 mm
12	1	6302046	Fitting	STDRC
13	1	31069	Clip	M8 1,5 - 5,5 mm.
14	1	6301369	Bracket	
15	2	30886	Lock nut, stainless	M8
16	2	6300786	Threaded plate	
17	1	6301361	Bracket for stabilizer valve	
18	3	30141	Set screw, stainless	M8 x 60
19	1	30114	Set screw, stainless	M6 x 25
20	1	31134	Washer, stainless	6 mm
21	1	31418	Clamp, double	
22	2	30133	Set screw, stainless	M8 x 22
23	1	46586	Rubber protection	240 mm
24	1	6301381	Protection plate	
25	1	46586	Rubber protection	330 mm
26	1	6301366	Bracket for RCL 5300	
27	1	6301365	Bracket for cables	
28	3	30136	Steel bolt, stainless	M8 x 35
29	1	6300788	Division plate	
30	1	6300781	Bracket for filter	
31	2	30888	Lock nut	M10
32	1	6301326	Adapter, swivel coupling	
33	4	6301274	Spacer	
34	4	30933	Nordlock washer	10 mm
35	2	30160	Steel bolt	M10 x 55
36	2	30158	Steel bolt	M10 x 40
37	1	6300756	Adapter for swivel coupling	
38	3	45129	Lock pin + ring	ø4 x 12 mm
39	1	64403	Cover	

* 1 circuit ** 2 circuits
*** Stabilizer operation by RC **** Manual stabilizer operation

Brackets and protection plates

As from / To loader no.: 96 02 08
Created: 02.06.2008
Modified:

Item no.	Qty.	Part no.	Description	Remarks
40	3	45132	Washer	4 mm
41	1	64401	Protection plate	
42	3	45131	Fastener	4 mm
43	1	64344	Plastic plug	
44	4	45126	Lock pin + ring	ø6 x 14 mm
45	4	30153	Set screw	M10 x 16
46	4	31177	Washer	10 mm
47	1	6301077	Valve bracket	
48	1	6302047	Fitting	STDRC
49	2	31131	Washer	12 mm
50	2	30176	Set screw	M12 x 25
51	1	6300648	Carrier	
52	1	30874	Counter nut, stainless	M8
53	2	1330187	Control lever, long, straight	
54	2	59224	Knob for lever	
55	1	6301128	Plate for CIO	

* 1 circuit ** 2 circuits
*** Stabilizer operation by RC **** Manual stabilizer operation

52-380

Intern ref.: 6300900

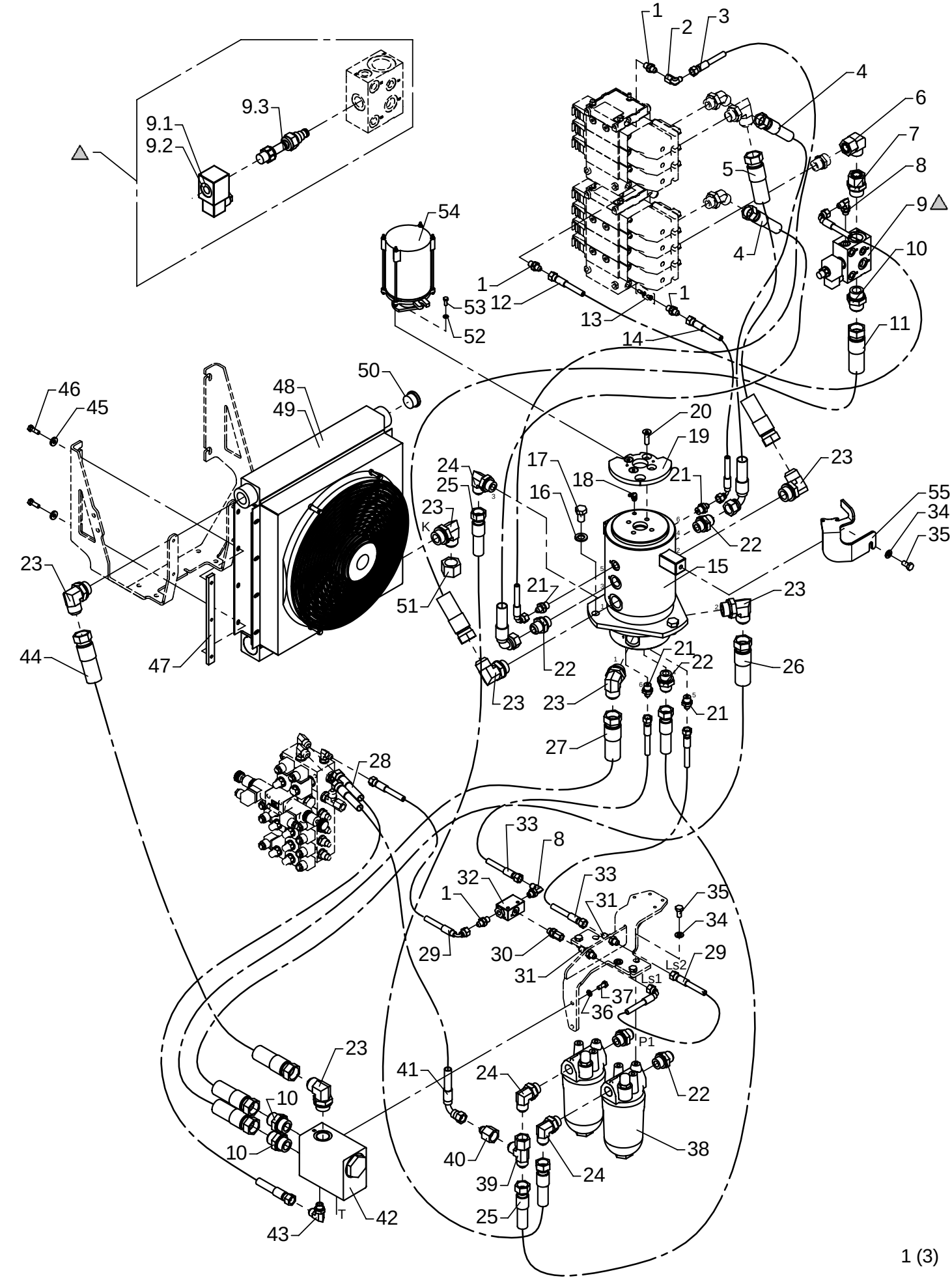

Hydraulic system, pump and return hoses, 1 circuit + fixed pump

As from / To loader no.: 96 00 00 / 96 00 49
Created: 03.10.2003
Modified: 17.06.2005

Item no.	Qty.	Part no.	Description	Remarks
1	4	25829	Straight connection	F40XS 8-1/4 JIC
2	1	25826	Elbow connection	C6XS 8 JIC
3	1	62934	Hose	1/4" x 1330 mm V/O JIC
4	2	62977	Hose	5/8" x 1100 mm V/O JIC
5	1	56046	Hose	1" x 1000 mm O/O JIC
6	1	25209	Elbow connection	EWSD 22 L
7	1	26391	Straight connection	EGESD 22 LR 1-WD
8	2	25858	Elbow connection	C40XS 12-3/8 JIC
9	1	59061	Dump valve	
		61777	Solenoid	12V
		61778	Solenoid	26V
		59642	Magnet coil	
10	3	25863	Straight connection	F40XS 25-1 JIC
11	1	56048	Hose	1" x 900 mm O/O JIC
12	1	62887	Hose	1/4" x 550 mm V/O JIC
13	1	62065	Closed center kit	
14	1	62901	Hose	1/4" x 900 mm V/O JIC
15	1	58727	Swivel coupling, hydraulic	
16	3	31135	Washer	16 mm
17	3	30266	Set screw	M16 x 25
18	1	31322	Lubricator	1/8 RG - 90
19	1	6301196	Cam disc, 2-stage LMB	
20	4	30955	Countersunk screw	MK10 x 35
21	4	25830	Straight connection	F40XS 8-3/8 JIC
22	5	25834	Straight connection	F40XS 18/20-3/4 JIC
23	7	26267	Elbow connection	C40XS 25-1 JIC
24	3	26693	Elbow connection	C40XS 18/20-3/4 JIC
25	2	56045	Hose	5/8" x 1450 mm O/O JIC
26	1	56050	Hose	1" x 1300 mm O/O JIC
27	1	56049	Hose	1" x 1050 mm O/O JIC
28	1	62884	Hose	3/8" x 500 mm O/O JIC
29	2	62974	Hose	1/4" x 350 mm V/O JIC
30	1	26272	Straight connection	F64XS 14/16 - 3/8" JIC
31	2	25823	Bulkhead connection	WTX-WLNS 8 JIC
32	1	60338	Shuttle valve	
33	2	56130	Hose	1/4" x 1150 mm O/O JIC
34	7	31177	Washer	10 mm
35	7	30154	Set screw	M10 x 20
36	2	31155	Spring washer	8 mm
37	2	30132	Set screw, stainless	M8 x 20

Hydraulic system, pump and return hoses, 1 circuit + fixed pump

As from / To loader no.: 96 00 00 / 96 00 49
Created: 03.10.2003
Modified: 17.06.2005

Item no.	Qty.	Part no.	Description	Remarks
38	2	60201	High pressure filter	
39	1	25828	Connection	R6XS 20 JIC
40	1	25865	Reducing connection	TRTXS 8/20-12 JIC
41	1	56091	Hose	3/8" x 350 mm V/O JIC
42	1	59056	Cooler valve	
43	1	25838	Elbow connection	C40XS 12-3/8 JIC
44	1	56047	Hose	3/4" x 1400 mm O/O JIC
45	4	31755	Washer	8 mm
46	4	30134	Set screw, stainless	M8 x 25
47	2	6381974	Threaded disc	
48	1	59310	Oil cooler 24 V	
49	1	59312	Oil cooler 12 V	
50	1	26321	Plug	VS-R 1" WD
51	1	25848	Screw cap JIC	FNTXS 25 JIC
52	2	31154	Spring washer, stainless	6 mm
53	2	30112	Set screw, stainless	M6 x 16
54	1	28549	Swivel coupling, electric	
55	1	6301197	Carrier	

52-380

Intern ref.: 6300900

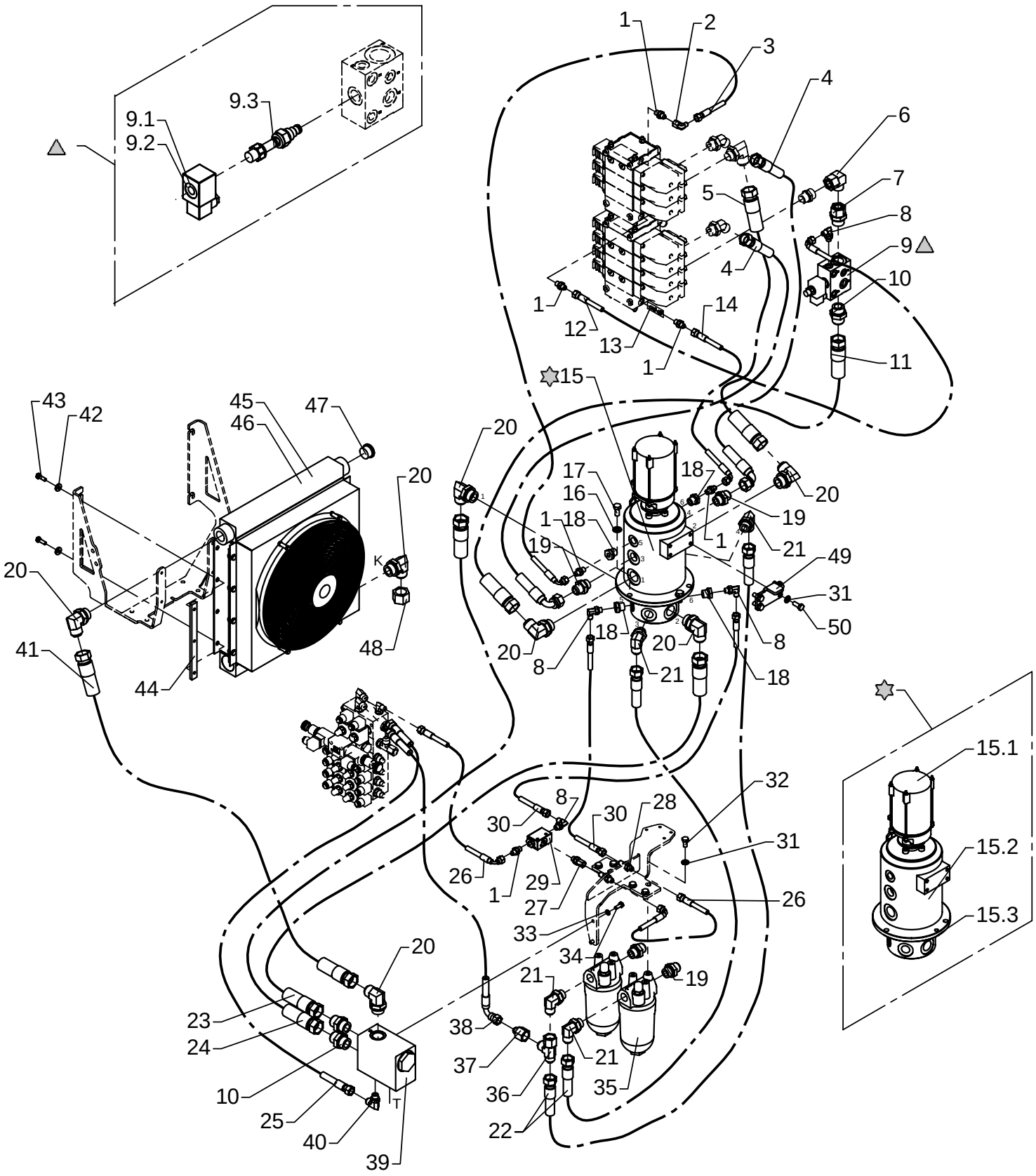

Hydraulic system, pump and return hoses, 1 circuit + fixed pump

As from / To loader no.: 96 00 50 / 96 00 53
Created: 17.06.2005
Modified: 05.10.2005

Item no.	Qty.	Part no.	Description	Remarks
1	6	25829	Straight connection	F40XS 8-1/4 JIC
2	1	25826	Elbow connection	C6XS 8 JIC
3	1	62934	Hose	1/4" x 1330 mm V/O JIC
4	2	62977	Hose	5/8" x 1100 mm V/O JIC
5	1	56046	Hose	1" x 1000 mm O/O JIC
6	1	25209	Elbow connection	EWSD 22 L
7	1	26391	Straight connection	EGESD 22 LR 1-WD
8	4	25858	Elbow connection	C40XS 12-3/8 JIC
9	1	59061	Dump valve	
		61777	Solenoid	12V
		61778	Solenoid	26V
		59642	Magnet coil	
10	3	25863	Straight connection	F40XS 25-1 JIC
11	1	56048	Hose	1" x 900 mm O/O JIC
12	1	62887	Hose	1/4" x 550 mm V/O JIC
13	1	62065	Closed center kit	
14	1	62901	Hose	1/4" x 900 mm V/O JIC
15	1	49105	Swivel coupling	
		28549	Swivel coupling, electric	
		49106	Unit hydraulic	
		49115	Seal kit	
16	3	31131	Washer	12 mm
17	3	30177	Set screw	M12 x 30
18	4	25180	Connection	RED-R 1/2-WD/R 1/4
19	4	25834	Straight connection	F40XS 18/20-3/4 JIC
20	7	26267	Elbow connection	C40XS 25-1 JIC
21	4	26693	Elbow connection	C40XS 18/20-3/4 JIC
22	2	56045	Hose	5/8" x 1450 mm O/O JIC
23	1	56050	Hose	1" x 1300 mm O/O JIC
24	1	56049	Hose	1" x 1050 mm O/O JIC
25	1	62884	Hose	3/8" x 500 mm O/O JIC
26	2	62974	Hose	1/4" x 350 mm V/O JIC
27	1	26272	Straight connection	F64XS 14/16 - 3/8" JIC
28	2	25823	Bulkhead connection	WTX-WLNS 8 JIC
29	1	60338	Shuttle valve	
30	2	56130	Hose	1/4" x 1150 mm O/O JIC
31	10	31177	Washer	10 mm
32	6	30154	Set screw	M10 x 20
33	2	31155	Spring washer	8 mm
34	2	30132	Set screw, stainless	M8 x 20

Hydraulic system, pump and return hoses, 1 circuit + fixed pump

As from / To loader no.: 96 00 50 / 96 00 53
Created: 17.06.2005
Modified: 05.10.2005

Item no.	Qty.	Part no.	Description	Remarks
35	2	60201	High pressure filter	
36	1	25828	Connection	R6XS 20 JIC
37	1	25865	Reducing connection	TRTXS 8/20-12 JIC
38	1	56091	Hose	3/8" x 350 mm V/O JIC
39	1	59056	Cooler valve	
40	1	25838	Elbow connection	C40XS 12-3/8 JIC
41	1	56047	Hose	3/4" x 1400 mm O/O JIC
42	4	31755	Washer	8 mm
43	4	30134	Set screw, stainless	M8 x 25
44	2	6381974	Threaded disc	
45	1	59310	Oil cooler 24 V	
46	1	59312	Oil cooler 12 V	
47	1	26321	Plug	VS-R 1" WD
48	1	25848	Screw cap JIC	FNTXS 25 JIC
49	1	6302621	Carrier fitting	
50	4	30155	Set screw	M10 x 25

52-380

Intern ref.: 6300900

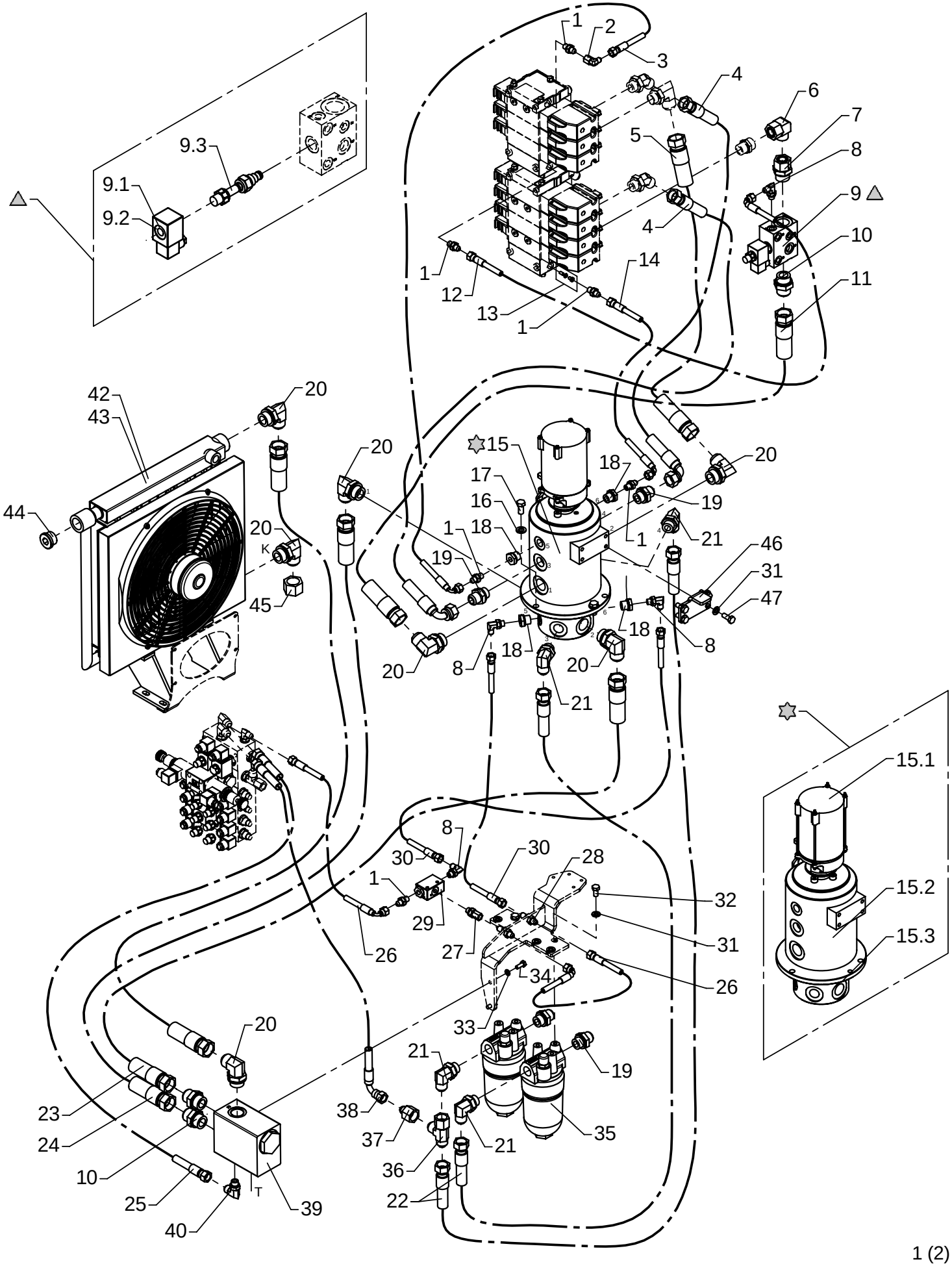

Hydraulic system, pump and return hoses, 1 circuit + fixed pump

As from / To loader no.: 96 00 54 / 96 01 49
Created: 17.06.2005
Modified: 30.10.2006

Item no.	Qty.	Part no.	Description	Remarks
1	6	25829	Straight connection	F40XS 8-1/4 JIC
2	1	25826	Elbow connection	C6XS 8 JIC
3	1	62934	Hose	1/4" x 1330 mm V/O JIC
4	2	62977	Hose	5/8" x 1100 mm V/O JIC
5	1	56046	Hose	1" x 1000 mm O/O JIC
6	1	25209	Elbow connection	EWSD 22 L
7	1	26391	Straight connection	EGESD 22 LR 1-WD
8	4	25858	Elbow connection	C40XS 12-3/8 JIC
9	1	59061	Dump valve	
		61777	Solenoid	12V
		61778	Solenoid	26V
		59642	Magnet coil	
10	3	25863	Straight connection	F40XS 25-1 JIC
11	1	56048	Hose	1" x 900 mm O/O JIC
12	1	62887	Hose	1/4" x 550 mm V/O JIC
13	1	62065	Closed center kit	
14	1	62901	Hose	1/4" x 900 mm V/O JIC
15	1	49105	Swivel coupling	
		28549	Swivel coupling, electric	
		49106	Unit hydraulic	
		49115	Seal kit	
16	3	31131	Washer	12 mm
17	3	30177	Set screw	M12 x 30
18	4	25180	Reducing connection	RED-R 1/2-WD/R 1/4
19	4	25834	Straight connection	F40XS 18/20-3/4 JIC
20	7	26267	Elbow connection	C40XS 25-1 JIC
21	4	26693	Elbow connection	C40XS 18/20-3/4 JIC
22	2	56045	Hose	5/8" x 1450 mm O/O JIC
23	1	56050	Hose	1" x 1300 mm O/O JIC
24	1	56049	Hose	1" x 1050 mm O/O JIC
25	1	62884	Hose	3/8" x 500 mm O/O JIC
26	2	62974	Hose	1/4" x 350 mm V/O JIC
27	1	26272	Straight connection	F64XS 14/16 - 3/8" JIC
28	2	25823	Bulkhead connection	WTX-WLNS 8 JIC
29	1	60338	Shuttle valve	
30	2	56130	Hose	1/4" x 1150 mm O/O JIC
31	10	31177	Washer	10 mm
32	6	30154	Set screw	M10 x 20
33	2	31155	Spring washer	8 mm
34	2	30132	Set screw, stainless	M8 x 20

Hydraulic system, pump and return hoses, 1 circuit + fixed pump

As from / To loader no.: 96 00 54 / 96 01 49
Created: 17.06.2005
Modified: 30.10.2006

Item no.	Qty.	Part no.	Description	Remarks
35	2	60201	High pressure filter	
36	1	25828	Connection	R6XS 20 JIC
37	1	25865	Reducing connection	TRTXS 8/20-12 JIC
38	1	56091	Hose	3/8" x 350 mm V/O JIC
39	1	59056	Cooler valve	
40	1	25838	Elbow connection	C40XS 12-3/8 JIC
41	1	56262	Hose	3/4" x 2000 mm O/O JIC
42	1	59310	Oil cooler 24 V	
43	1	59312	Oil cooler 12 V	
44	1	26321	Plug	VS-R 1" WD
45	1	25848	Screw cap JIC	FNTXS 25 JIC
46	1	6302621	Carrier fitting	
47	4	30155	Set screw	M10 x 25

52-380

Intern ref.: 6300900

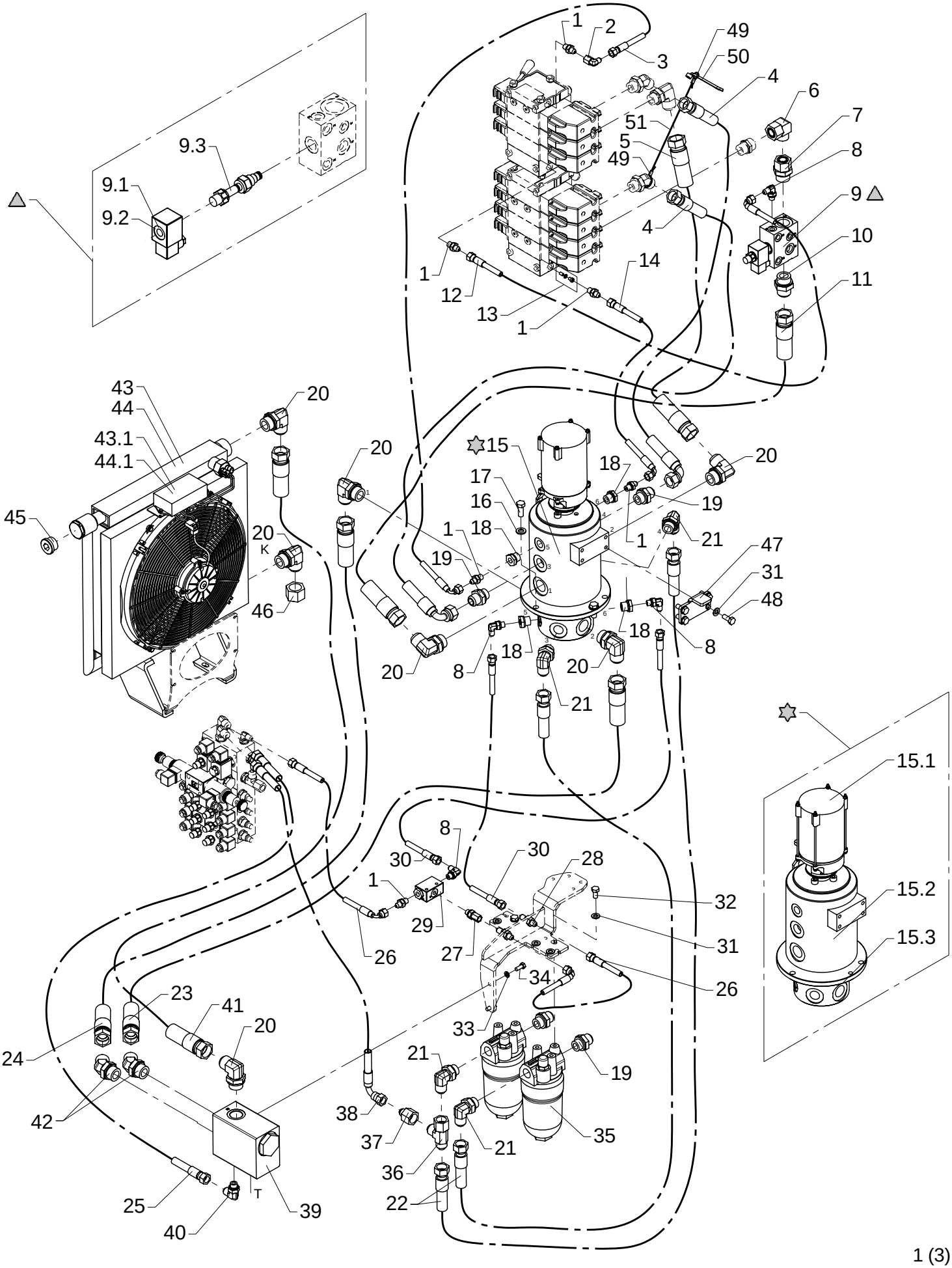

Hydraulic system, pump and return hoses, 1 circuit + fixed pump

As from / To loader no.: 96 01 50 / 96 02 07
Created: 30.10.2006
Modified: 02.06.2008

Item no.	Qty.	Part no.	Description	Remarks
1	6	25829	Straight connection	F40XS8 - 1/4
2	1	25826	Elbow connection	C6XS 8 JIC
3	1	62934	Hose	1/4" x 1330 mm V/O JIC
4	2	62977	Hose	5/8" x 1100 mm V/O JIC
5	1	56046	Hose	1" x 1000 mm O/O JIC
6	1	25209	Elbow connection	EWSD 22 L
7	1	26391	Straight connection	EGESD 22 LR 1-WD
8	4	25858	Elbow connection	C40XS8 - 1/4
9	1	59061	Dump valve	
		61777	Solenoid	12V
		61778	Solenoid	26V
		59642	Magnet coil	
10	1	25863	Straight connection	F40XS25 - 1
11	1	56048	Hose	1" x 900 mm O/O JIC
12	1	62887	Hose	1/4" x 550 mm V/O JIC
13	1	62065	Closed center kit	
14	1	62901	Hose	1/4" x 900 mm V/O JIC
15	1	49105	Swivel coupling	
		28549	Swivel coupling, electric	
		49106	Unit hydraulic	
		49115	Seal kit	
16	3	31131	Washer	12 mm
17	3	30177	Set screw	M12 x 30
18	4	25180	Reducing connection	RED-R 1/2-WD/R 1/4
19	4	25834	Straight connection	F40XS18/20 - 3/4
20	7	26267	Elbow connection	C40XS25 - 1
21	4	26693	Elbow connection	C40XS18/20 - 3/4
22	2	56045	Hose	5/8" x 1450 mm O/O JIC
23	1	56050	Hose	1" x 1300 mm O/O JIC
24	1	56049	Hose	1" x 1050 mm O/O JIC
25	1	62884	Hose	3/8" x 500 mm O/O JIC
26	2	62974	Hose	1/4" x 350 mm V/O JIC
27	1	26272	Straight connection	F64XS 14/16 - 3/8" JIC
28	2	25823	Bulkhead connection	WTX-WLNS 8 JIC
29	1	60338	Shuttle valve	
30	2	56130	Hose	1/4" x 1150 mm O/O JIC
31	10	31177	Washer	10 mm
32	6	30154	Set screw	M10 x 20
33	2	31155	Spring washer	8 mm
34	2	30132	Set screw, stainless	M8 x 20

Hydraulic system, pump and return hoses, 1 circuit + fixed pump

As from / To loader no.: 96 01 50 / 96 02 07
Created: 30.10.2006
Modified: 02.06.2008

Item no.	Qty.	Part no.	Description	Remarks
35	2	60201	High pressure filter	
36	1	25828	Connection	R6XS 20 JIC
37	1	25865	Reducing connection	TRTXS8/20-12
38	1	56091	Hose	3/8" x 350 mm V/O JIC
39	1	59056	Cooler valve	
40	1	25838	Elbow connection	C40XS12 - 3/8
41	1	56262	Hose	3/4" x 2000 mm O/O JIC
42	2	25734	Elbow connection 45°	V40XS25 - 1
43	1	50282	Oil cooler, 24 V + Smartdrive	
		50284	Smartdrive kit for oil cooler	
44	1	50283	Oil cooler, 12 V + Smartdrive	
		50284	Smartdrive kit for oil cooler	
45	1	26321	Plug	VS-R 1" WD
46	1	25848	Screw cap JIC	FNTXS 25 JIC
47	1	6302621	Carrier fitting	
48	4	30155	Set screw	M10 x 25
49	2	62161	Wire lock	
50	1	42953	Adjustable spanner	
51	1	62160	Wire rope, nylon	400 mm

52-380

Intern ref.: 6301710

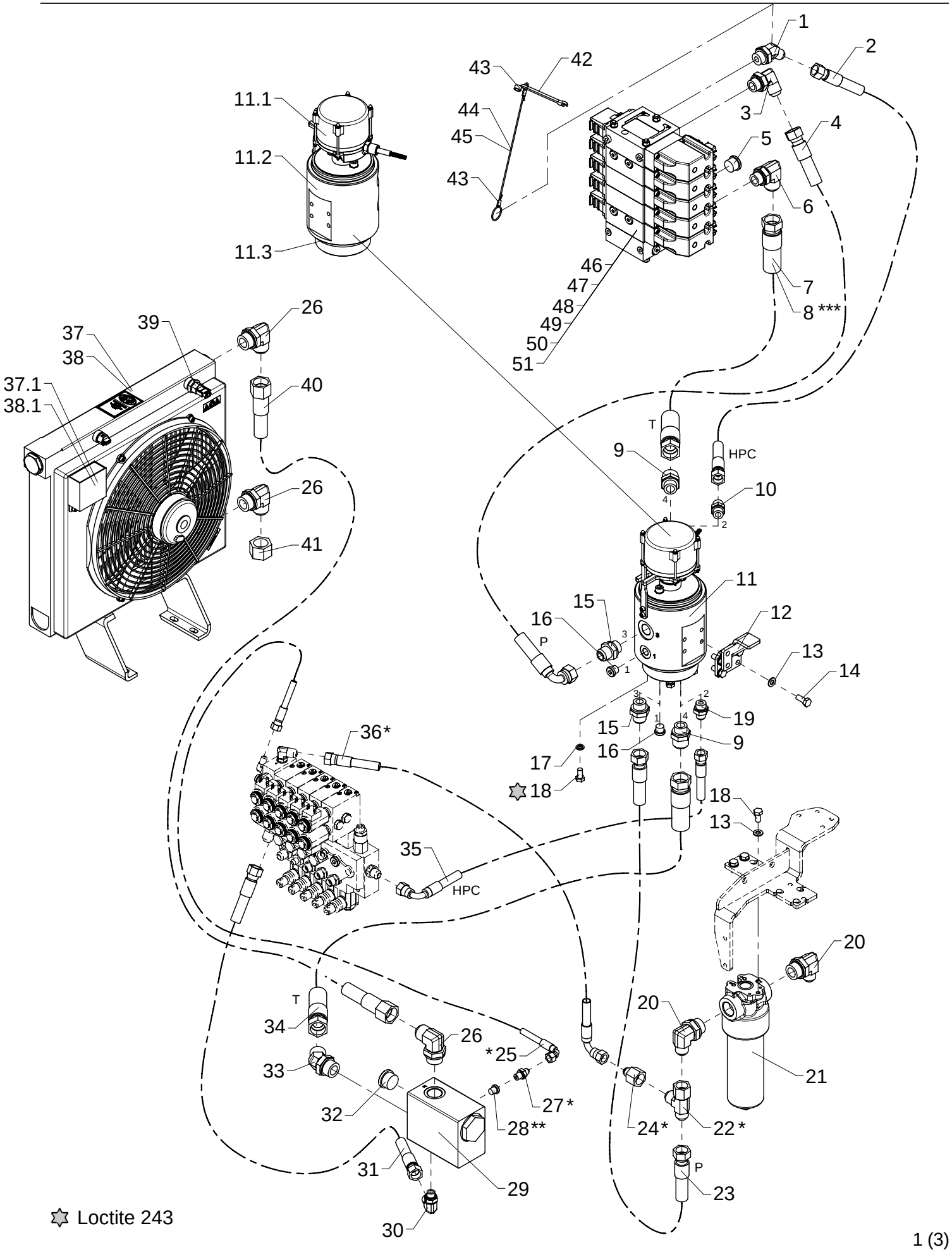

Loctite 243

Hydraulic system, pump and return hoses, 1 circuit + fixed pump

As from / To loader no.: 96 02 08
Created: 02.06.2008
Modified: 26.08.2008

Item no.	Qty.	Part no.	Description	Remarks
1	1	26291	Elbow connection 45°	V40XS14-16 - 3/4
2	1	62922	Hose JIC	1/2" x 1400 L/L JIC
3	1	26693	Elbow connection	C40XS18/20 - 3/4
4	1	56080	Hose	5/8" x 1400 90/L JIC
5	1	26355	Plug	VS-R-3/4 WD
6	1	25840	Elbow connection	C40XS25 - 3/4
7	1	56048	Hose	1" x 900 L/L JIC
8	1	56461	Hose	1" x 700 L/L JIC
9	2	25836	Straight connection	F40XS25 - 3/4
10	1	25833	Straight connection	F40XS14/16 - 1/2
11	1	49216	Swivel coupling	
		49237	Electric part, swivel coupling	
		49235	Hydraulic part,swivel coupling	
		49247	Seal kit	
12	1	6301329	Carrier fitting	
13	7	31177	Washer	10 mm
14	4	30155	Set screw	M10 x 25
15	2	25834	Straight connection	F40XS18/20 - 3/4
16	2	25277	Plug	VS-R-3/8 WD
17	4	30933	Nordlock washer	10 mm
18	7	30154	Set screw	M10 x 20
19	1	25832	Straight connection	F40XS12 - 1/2
20	2	26785	Elbow connection	C40XS18/20 - 1
21	1	49401	High pressure filter	
22	1	25828	Connection	R6XS 20 JIC
23	1	56045	Hose	5/8" x 1450 L/L JIC
24	1	25865	Reducing connection	TRTXS8/20-12
25	1	62901	Hose	1/4" x 900 90/L JIC
26	3	26267	Elbow connection	C40XS25 - 1
27	1	25829	Straight connection	F40XS8 - 1/4
28	1	25197	Plug	VS-R-1/4 WD
29	1	59056	Cooler valve	
30	1	26787	Elbow connection	C40XS14/16 - 3/8
31	1	62866	Hose, JIC	1/2" x 850 L/L JIC
32	1	26321	Plug	VS-R 1" WD
33	1	25734	Elbow connection 45°	V40XS25 - 1
34	1	56050	Hose	1" x 1300 L/L JIC
35	1	56110	Hose	3/8" x 1130 90/L JIC
36	1	62956	Hose	3/8" x 550 90/L JIC

* Stabilizer operation by RC ** Manual stabilizer operation *** Winch

Hydraulic system, pump and return hoses, 1 circuit + fixed pump

As from / To loader no.: 96 02 08
Created: 02.06.2008
Modified: 26.08.2008

Item no.	Qty.	Part no.	Description	Remarks
37	1	50262	Oil cooler, 24 V + Smartdrive	
		50292	Electronic box, kit 12+24 V	
38	1	50263	Oil cooler, 12 V + Smartdrive	
		50292	Electronic box, kit 12+24 V	
39	1	50290	Temperature sensor, oil cooler	
40	1	56262	Hose	3/4" x 2000 L/L JIC
41	1	25848	Screw cap JIC	FNTXS 25 JIC
42	2	42953	Adjustable spanner	
43	4	62161	Wire lock	
44	1	62160	Wire rope, nylon	450 mm
45	1	62160	Wire rope, nylon	600 mm
46	1	55602	Control valve	4 sekt.
47	1	55604	Control valve	5 sekt. Winch
48	1	55606	Control valve	5 sekt. 1 EXV
49	1	55608	Control valve	6 sekt. Winch+1 EXV
50	1	55610	Control valve	6 sekt. 2 EXV/FJ
51	1	55612	Control valve	7 sekt. Winch+2 EXV/FJ

* Stabilizer operation by RC ** Manual stabilizer operation *** Winch

52-380

Intern ref.: 6300920

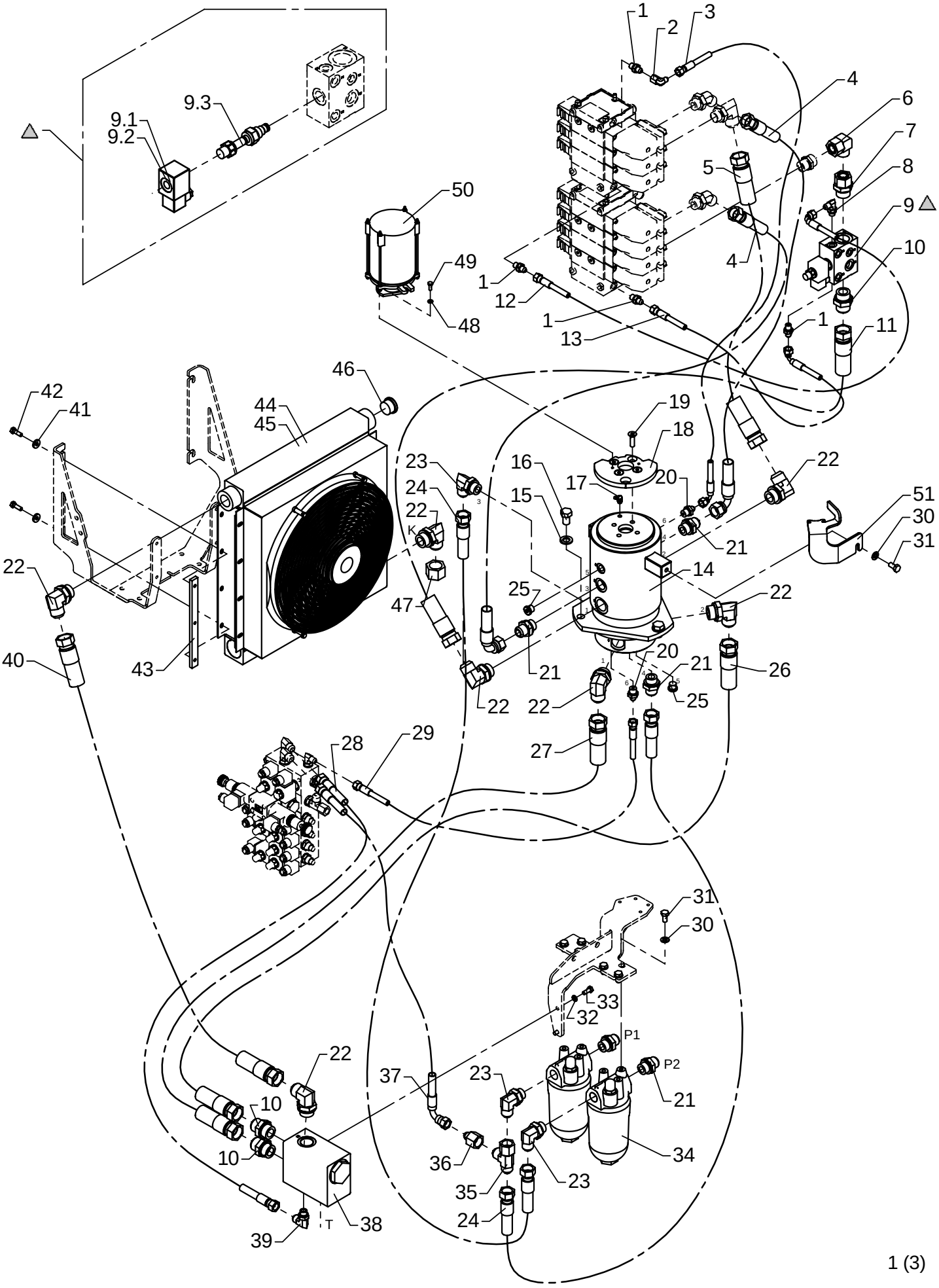

Hydraulic system, pump and return hoses, 2 circuits + fixed pump

As from / To loader no.: 96 00 00 / 96 00 49
Created: 03.10.2003
Modified: 17.06.2005

Item no.	Qty.	Part no.	Description	Remarks
1	4	25829	Straight connection	F40XS 8-1/4 JIC
2	1	25826	Elbow connection	C6XS 8 JIC
3	1	62934	Hose	1/4" x 1330 mm V/O JIC
4	2	62977	Hose	5/8" x 1100 mm V/O JIC
5	1	56046	Hose	1" x 1000 mm O/O JIC
6	1	25209	Elbow connection	EWSD 22 L
7	1	26391	Straight connection	EGESD 22 LR 1-WD
8	1	25858	Elbow connection	C40XS 12-3/8 JIC
9	1	59061	Dump valve	
		61777	Solenoid	12V
		61778	Solenoid	26V
		59642	Magnet coil	
10	3	25863	Straight connection	F40XS 25-1 JIC
11	1	56048	Hose	1" x 900 mm O/O JIC
12	1	62887	Hose	1/4" x 550 mm V/O JIC
13	1	62974	Hose	1/4" x 350 mm V/O JIC
14	1	58727	Swivel coupling, hydraulic	
15	3	31135	Washer	16 mm
16	3	30266	Set screw	M16 x 25
17	1	31322	Lubricator	1/8 RG - 90
18	1	6301196	Cam disc, 2-stage LMB	
19	4	30955	Countersunk screw	MK10 x 35
20	2	25830	Straight connection	F40XS8 - 3/8 JIC
21	5	25834	Straight connection	F40XS 18/20-3/4 JIC
22	7	26267	Elbow connection	C40XS 25-1 JIC
23	3	26693	Elbow connection	C40XS 18/20-3/4 JIC
24	2	56045	Hose	5/8" x 1450 mm O/O JIC
25	2	25277	Plug	VS-R-3/8 WD
26	1	56050	Hose	1" x 1300 mm O/O JIC
27	1	56049	Hose	1" x 1050 mm O/O JIC
28	1	62884	Hose	3/8" x 500 mm O/O JIC
29	1	56130	Hose	1/4" x 1150 mm O/O JIC
30	7	31177	Washer	10 mm
31	7	30154	Set screw	M10 x 20
32	2	31155	Spring washer	8 mm
33	2	30132	Set screw, stainless	M8 x 20
34	2	60201	High pressure filter	
35	1	25828	Connection	R6XS 20 JIC
36	1	25865	Reducing connection	TRTXS 8/20-12 JIC
37	1	56091	Hose	3/8" x 350 mm V/O JIC

Hydraulic system, pump and return hoses, 2 circuits + fixed pump

As from / To loader no.: 96 00 00 / 96 00 49
Created: 03.10.2003
Modified: 17.06.2005

Item no.	Qty.	Part no.	Description	Remarks
38	1	59056	Cooler valve	
39	1	25838	Elbow connection	C40XS 12-3/8 JIC
40	1	56047	Hose	3/4" x 1400 mm O/O JIC
41	4	31755	Washer	8 mm
42	4	30134	Set screw, stainless	M8 x 25
43	2	6381974	Threaded disc	
44	1	59310	Oil cooler 24 V	
45	1	59312	Oil cooler 12 V	
46	1	26321	Plug	VS-R 1" WD
47	1	25848	Screw cap JIC	FNTXS 25 JIC
48	2	31154	Spring washer, stainless	6 mm
49	2	30112	Set screw, stainless	M6 x 16
50	1	28549	Swivel coupling, electric	
51	1	6301197	Carrier	

52-380

Intern ref.: 6300920

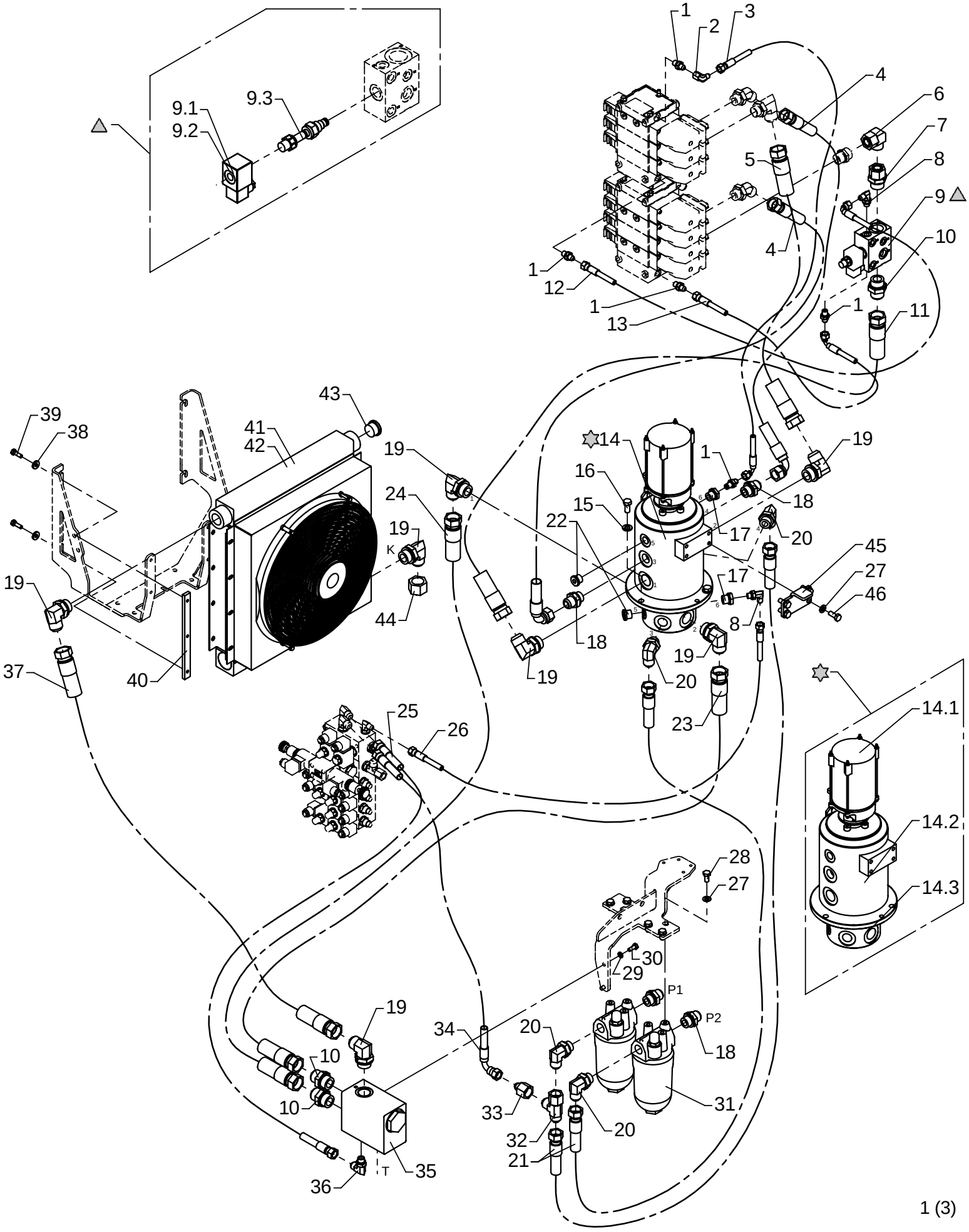

Hydraulic system, pump and return hoses, 2 circuits + fixed pump

As from / To loader no.: 96 00 50 / 96 00 53
Created: 17.06.2005
Modified: 05.10.2005

Item no.	Qty.	Part no.	Description	Remarks
1	5	25829	Straight connection	F40XS 8-1/4 JIC
2	1	25826	Elbow connection	C6XS 8 JIC
3	1	62934	Hose	1/4" x 1330 mm V/O JIC
4	2	62977	Hose	5/8" x 1100 mm V/O JIC
5	1	56046	Hose	1" x 1000 mm O/O JIC
6	1	25209	Elbow connection	EWSD 22 L
7	1	26391	Straight connection	EGESD 22 LR 1-WD
8	2	25858	Elbow connection	C40XS 12-3/8 JIC
9	1	59061	Dump valve	
		61777	Solenoid	12V
		61778	Solenoid	26V
		59642	Magnet coil	
10	3	25863	Straight connection	F40XS 25-1 JIC
11	1	56048	Hose	1" x 900 mm O/O JIC
12	1	62887	Hose	1/4" x 550 mm V/O JIC
13	1	62974	Hose	1/4" x 350 mm V/O JIC
14	1	49105	Swivel coupling	
		28549	Swivel coupling, electric	
		49106	Swivel coupling	
		49115	Seal kit	
15	3	31131	Washer	12 mm
16	3	30177	Set screw	M12 x 30
17	2	25180	Connection	RED-R 1/2-WD/R 1/4
18	4	25834	Straight connection	F40XS 18/20-3/4 JIC
19	7	26267	Elbow connection	C40XS 25-1 JIC
20	4	26693	Elbow connection	C40XS 18/20-3/4 JIC
21	2	56045	Hose	5/8" x 1450 mm O/O JIC
22	2	25103	Plug	VS-R-1/2 WD
23	1	56050	Hose	1" x 1300 mm O/O JIC
24	1	56049	Hose	1" x 1050 mm O/O JIC
25	1	62884	Hose	3/8" x 500 mm O/O JIC
26	1	56130	Hose	1/4" x 1150 mm O/O JIC
27	10	31177	Washer	10 mm
28	6	30154	Set screw	M10 x 20
29	2	31155	Spring washer	8 mm
30	2	30132	Set screw, stainless	M8 x 20
31	2	60201	High pressure filter	
32	1	25828	Connection	R6XS 20 JIC
33	1	25865	Reducing connection	TRTXS 8/20-12 JIC
34	1	56091	Hose	3/8" x 350 mm V/O JIC

Hydraulic system, pump and return hoses, 2 circuits + fixed pump

As from / To loader no.: 96 00 50 / 96 00 53
Created: 17.06.2005
Modified: 05.10.2005

Item no.	Qty.	Part no.	Description	Remarks
35	1	59056	Cooler valve	
36	1	25838	Elbow connection	C40XS 12-3/8 JIC
37	1	56047	Hose	3/4" x 1400 mm O/O JIC
38	4	31755	Washer	8 mm
39	4	30134	Set screw, stainless	M8 x 25
40	2	6381974	Threaded disc	
41	1	59310	Oil cooler 24 V	
42	1	59312	Oil cooler 12 V	
43	1	26321	Plug	VS-R 1" WD
44	1	25848	Screw cap JIC	FNTXS 25 JIC
45	1	6302621	Carrier fitting	
46	4	30155	Set screw	M10 x 25

52-380

Intern ref.: 6300920

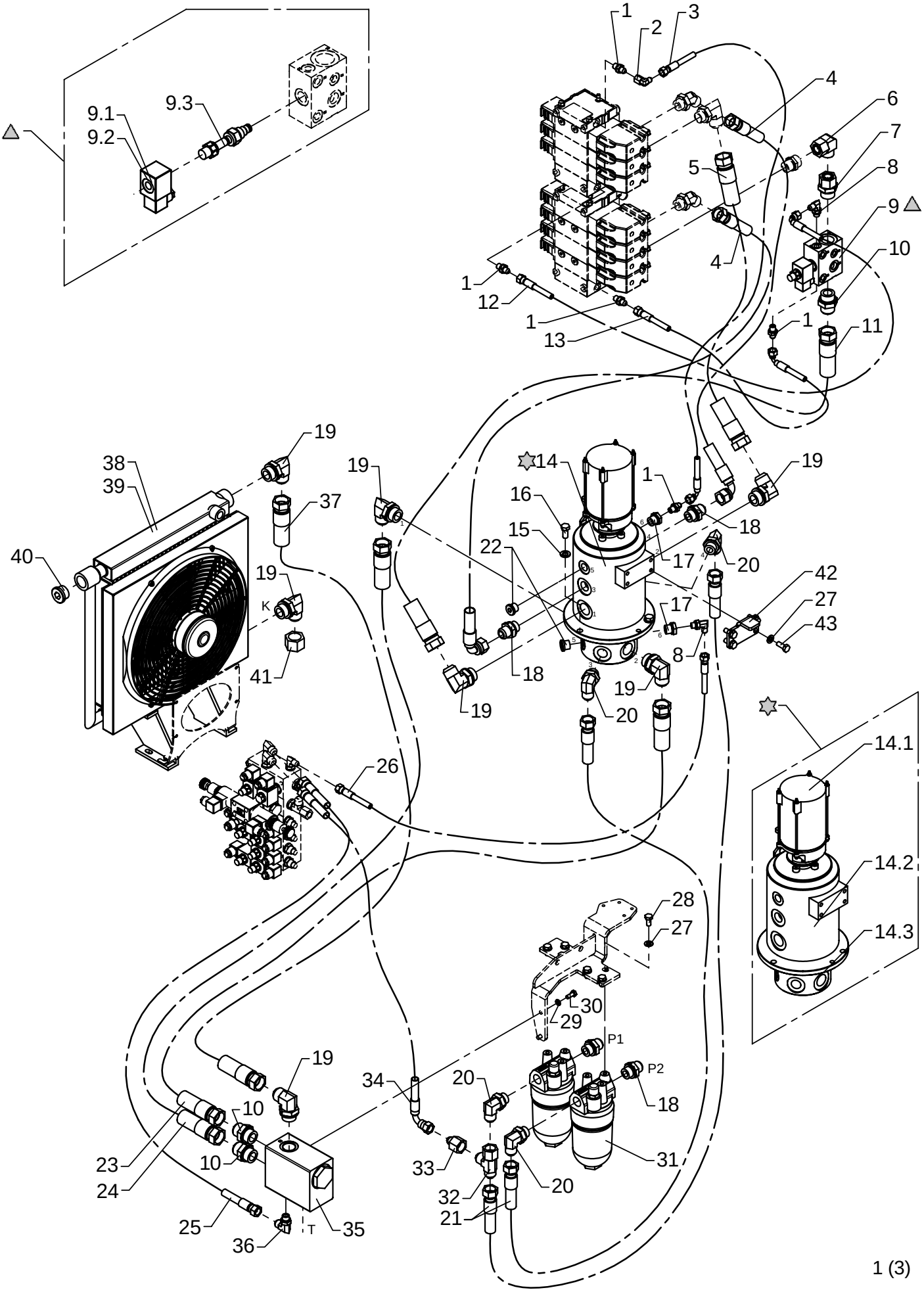

Hydraulic system, pump and return hoses, 2 circuits + fixed pump

As from / To loader no.: 96 00 54 / 96 01 49
Created: 17.06.2005
Modified: 30.10.2006

Item no.	Qty.	Part no.	Description	Remarks
1	5	25829	Straight connection	F40XS 8-1/4 JIC
2	1	25826	Elbow connection	C6XS 8 JIC
3	1	62934	Hose	1/4" x 1330 mm V/O JIC
4	2	62977	Hose	5/8" x 1100 mm V/O JIC
5	1	56046	Hose	1" x 1000 mm O/O JIC
6	1	25209	Elbow connection	EWSD 22 L
7	1	26391	Straight connection	EGESD 22 LR 1-WD
8	2	25858	Elbow connection	C40XS 12-3/8 JIC
9	1	59061	Dump valve	
		61777	Solenoid	12V
		61778	Solenoid	26V
		59642	Magnet coil	
10	3	25863	Straight connection	F40XS 25-1 JIC
11	1	56048	Hose	1" x 900 mm O/O JIC
12	1	62887	Hose	1/4" x 550 mm V/O JIC
13	1	62974	Hose	1/4" x 350 mm V/O JIC
14	1	49105	Swivel coupling	
		28549	Swivel coupling, electric	
		49106	Swivel coupling	
		49115	Seal kit	
15	3	31131	Washer	12 mm
16	3	30177	Set screw	M12 x 30
17	2	25180	Reducing connection	RED-R 1/2-WD/R 1/4
18	4	25834	Straight connection	F40XS 18/20-3/4 JIC
19	7	26267	Elbow connection	C40XS 25-1 JIC
20	4	26693	Elbow connection	C40XS 18/20-3/4 JIC
21	2	56045	Hose	5/8" x 1450 mm O/O JIC
22	2	25103	Plug	VS-R-1/2 WD
23	1	56050	Hose	1" x 1300 mm O/O JIC
24	1	56049	Hose	1" x 1050 mm O/O JIC
25	1	62884	Hose	3/8" x 500 mm O/O JIC
26	1	56130	Hose	1/4" x 1150 mm O/O JIC
27	10	31177	Washer	10 mm
28	6	30154	Set screw	M10 x 20
29	2	31155	Spring washer	8 mm
30	2	30132	Set screw, stainless	M8 x 20
31	2	60201	High pressure filter	
32	1	25828	Connection	R6XS 20 JIC
33	1	25865	Reducing connection	TRTXS 8/20-12 JIC
34	1	56091	Hose	3/8" x 350 mm V/O JIC

Hydraulic system, pump and return hoses, 2 circuits + fixed pump

As from / To loader no.: 96 00 54 / 96 01 49
Created: 17.06.2005
Modified: 30.10.2006

Item no.	Qty.	Part no.	Description	Remarks
35	1	59056	Cooler valve	
36	1	25838	Elbow connection	C40XS 12-3/8 JIC
37	1	56262	Hose	3/4" x 2000 mm O/O JIC
38	1	59310	Oil cooler 24 V	
39	1	59312	Oil cooler 12 V	
40	1	26321	Plug	VS-R 1" WD
41	1	25848	Screw cap JIC	FNTXS 25 JIC
42	1	6302621	Carrier fitting	
43	4	30155	Set screw	M10 x 25

52-380

Intern ref.: 6300920

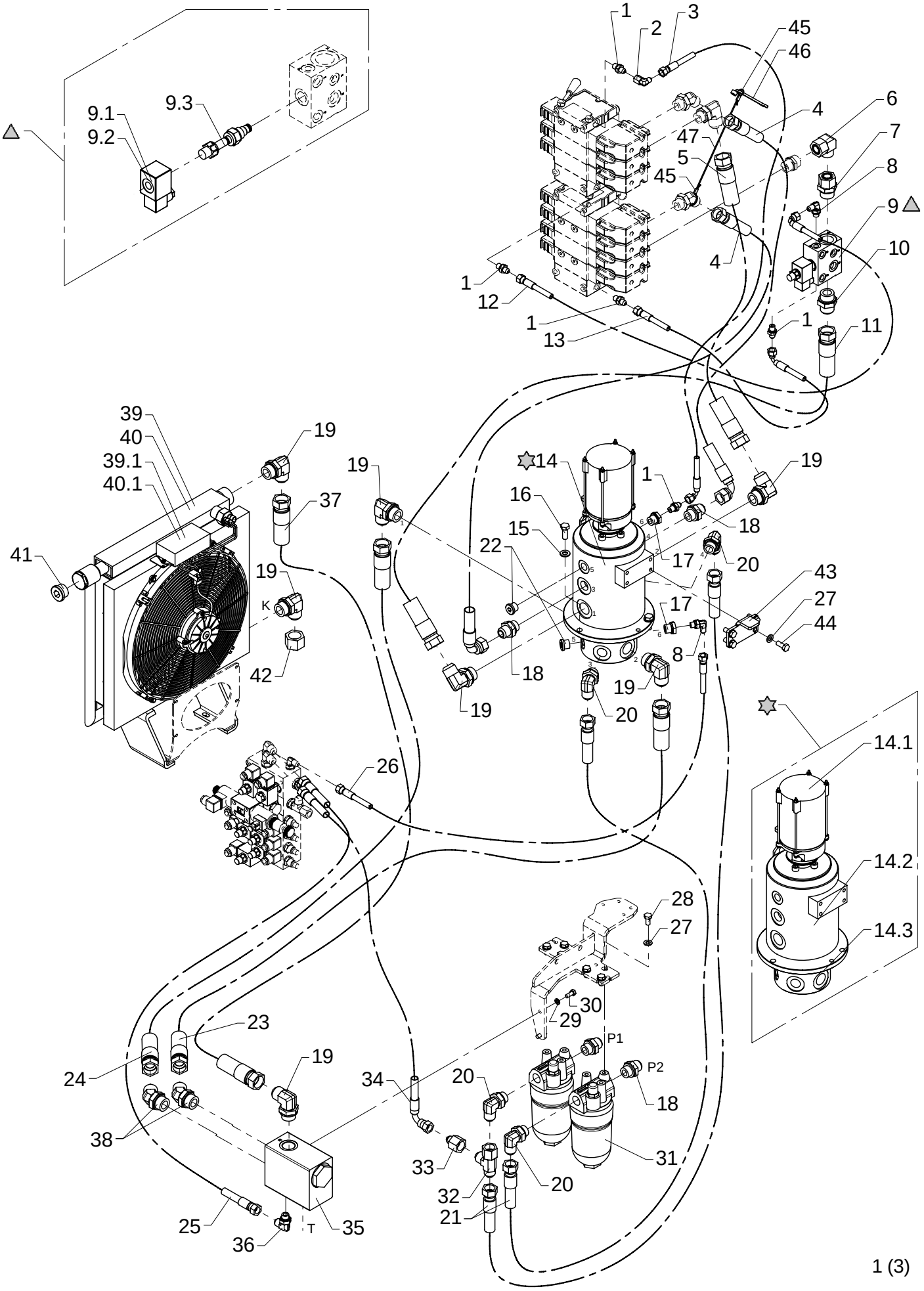

Hydraulic system, pump and return hoses, 2 circuits + fixed pump

As from / To loader no.: 96 01 50 / 96 02 07
Created: 30.10.2006
Modified: 02.06.2008

Item no.	Qty.	Part no.	Description	Remarks
1	5	25829	Straight connection	F40XS8 - 1/4
2	1	25826	Elbow connection	C6XS 8 JIC
3	1	62934	Hose	1/4" x 1330 mm V/O JIC
4	2	62977	Hose	5/8" x 1100 mm V/O JIC
5	1	56046	Hose	1" x 1000 mm O/O JIC
6	1	25209	Elbow connection	EWSD 22 L
7	1	26391	Straight connection	EGESD 22 LR 1-WD
8	2	25858	Elbow connection	C40XS8 - 1/4
9	1	59061	Dump valve	
		61777	Solenoid	12V
		61778	Solenoid	26V
		59642	Magnet coil	
10	1	25863	Straight connection	F40XS25 - 1
11	1	56048	Hose	1" x 900 mm O/O JIC
12	1	62887	Hose	1/4" x 550 mm V/O JIC
13	1	62974	Hose	1/4" x 350 mm V/O JIC
14	1	49105	Swivel coupling	
		28549	Swivel coupling, electric	
		49106	Swivel coupling	
		49115	Seal kit	
15	3	31131	Washer	12 mm
16	3	30177	Set screw	M12 x 30
17	2	25180	Reducing connection	RED-R 1/2-WD/R 1/4
18	4	25834	Straight connection	F40XS18/20 - 3/4
19	7	26267	Elbow connection	C40XS25 - 1
20	4	26693	Elbow connection	C40XS18/20 - 3/4
21	2	56045	Hose	5/8" x 1450 mm O/O JIC
22	2	25103	Plug	VS-R-1/2 WD
23	1	56050	Hose	1" x 1300 mm O/O JIC
24	1	56049	Hose	1" x 1050 mm O/O JIC
25	1	62884	Hose	3/8" x 500 mm O/O JIC
26	1	56130	Hose	1/4" x 1150 mm O/O JIC
27	10	31177	Washer	10 mm
28	6	30154	Set screw	M10 x 20
29	2	31155	Spring washer	8 mm
30	2	30132	Set screw, stainless	M8 x 20
31	2	60201	High pressure filter	
32	1	25828	Connection	R6XS 20 JIC
33	1	25865	Reducing connection	TRTXS8/20-12
34	1	56091	Hose	3/8" x 350 mm V/O JIC

Hydraulic system, pump and return hoses, 2 circuits + fixed pump

As from / To loader no.: 96 01 50 / 96 02 07
Created: 30.10.2006
Modified: 02.06.2008

Item no.	Qty.	Part no.	Description	Remarks
35	1	59056	Cooler valve	
36	1	25838	Elbow connection	C40XS12 - 3/8
37	1	56262	Hose	3/4" x 2000 mm O/O JIC
38	2	25734	Elbow connection 45°	V40XS25 - 1
39	1	50282	Oil cooler, 24 V + Smartdrive	
		50284	Smartdrive kit for oil cooler	
40	1	50283	Oil cooler, 12 V + Smartdrive	
		50284	Smartdrive kit for oil cooler	
41	1	26321	Plug	VS-R 1" WD
42	1	25848	Screw cap JIC	FNTXS 25 JIC
43	1	6302621	Carrier fitting	
44	4	30155	Set screw	M10 x 25
45	2	62161	Wire lock	
46	1	42953	Adjustable spanner	
47	1	62160	Wire rope, nylon	400 mm

52-380

Intern ref.: 6301720

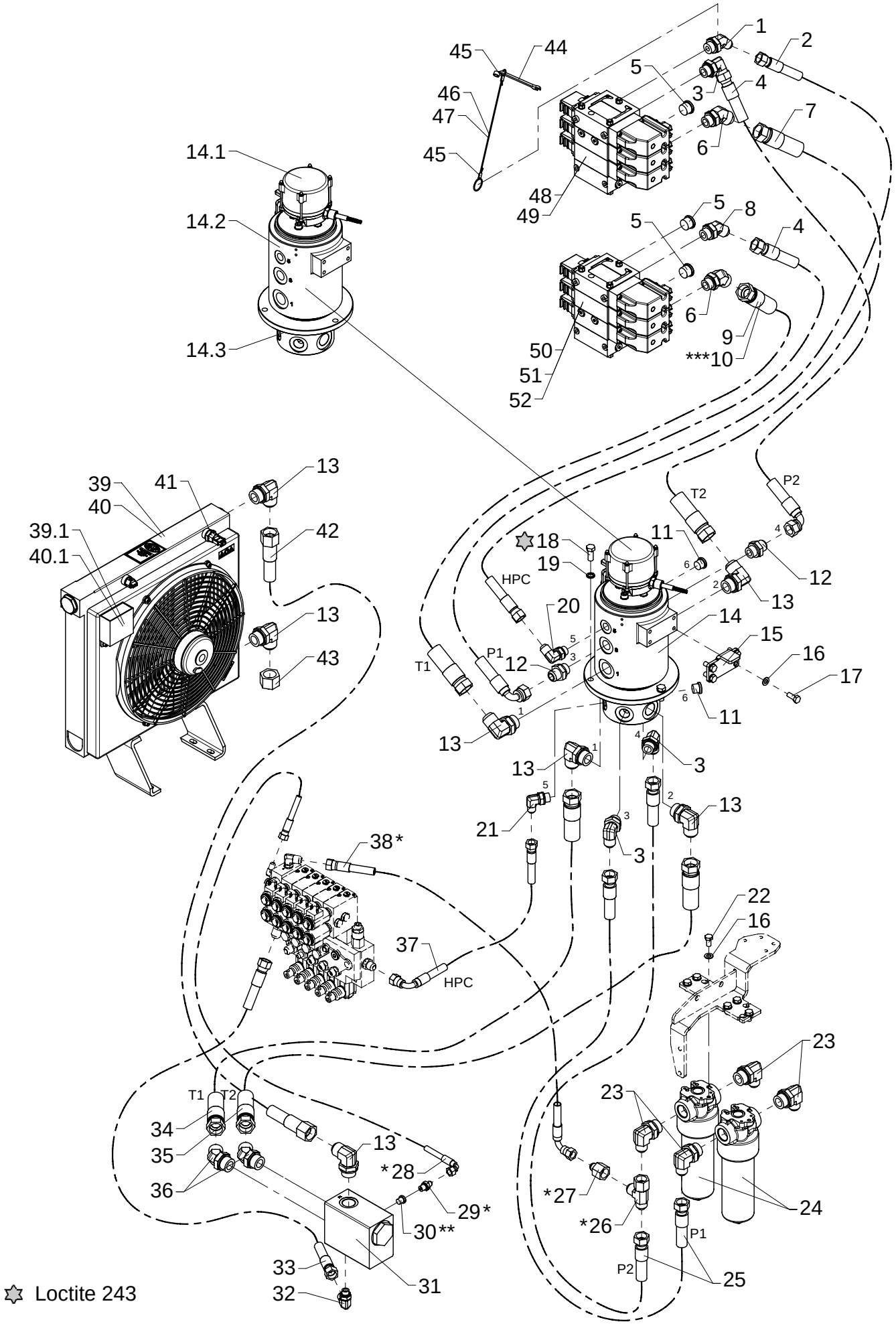

Loctite 243

Hydraulic system, pump and return hoses, 2 circuits + fixed pump

As from / To loader no.: 96 02 08
Created: 02.06.2008
Modified: 26.08.2008

Item no.	Qty.	Part no.	Description	Remarks
1	1	26291	Elbow connection 45°	V40XS14-16 - 3/4
2	1	62919	Hose	1/2" x 1550 L/L JIC
3	3	26693	Elbow connection	C40XS18/20 - 3/4
4	2	56080	Hose	5/8" x 1400 90/L JIC
5	3	26355	Plug	VS-R-3/4 WD
6	2	25786	Elbow connection 45°	V40XS25 - 3/4
7	1	56046	Hose	1" x 1050 L/L JIC
8	1	26273	Elbow connection 45°	V40XS18-20 - 3/4
9	1	56048	Hose	1" x 900 L/L JIC
10	1	56461	Hose	1" x 700 L/L JIC
11	2	25103	Plug	VS-R-1/2 WD
12	2	25834	Straight connection	F40XS18/20 - 3/4
13	7	26267	Elbow connection	C40XS25 - 1
14	1	49217	Swivel coupling	
		49237	Electric part, swivel coupling	
		49106	Hydraulic part,swivel coupling	
		49115	Seal kit	
15	1	6302621	Carrier fitting	
16	10	31177	Washer	10 mm
17	4	30155	Set screw	M10 x 25
18	3	30177	Set screw	M12 x 30
19	3	30935	Nordlock washer	12 mm
20	1	25839	Elbow connection	C40XS14/16 - 1/2
21	1	25806	Elbow connection	C40XS12 - 1/2
22	6	30154	Set screw	M10 x 20
23	4	26785	Elbow connection	C40XS18/20 - 1
24	2	49401	High pressure filter	
25	2	56045	Hose	5/8" x 1450 L/L JIC
26	1	25828	Connection	R6XS 20 JIC
27	1	25865	Reducing connection	TRTXS8/20-12
28	1	62901	Hose	1/4" x 900 90/L JIC
29	1	25829	Straight connection	F40XS8 - 1/4
30	1	25197	Plug	VS-R-1/4 WD
31	1	59056	Cooler valve	
32	1	26787	Elbow connection	C40XS14/16 - 3/8
33	1	62866	Hose, JIC	1/2" x 850 L/L JIC
34	1	56049	Hose	1" x 1050 L/L JIC
35	1	56050	Hose	1" x 1300 L/L JIC
36	2	25734	Elbow connection 45°	V40XS25 - 1
37	1	56110	Hose	3/8" x 1130 90/L JIC

* Stabilizer operation by RC ** Manual stabilizer operation ***Winch

Hydraulic system, pump and return hoses, 2 circuits + fixed pump

As from / To loader no.: 96 02 08
Created: 02.06.2008
Modified: 26.08.2008

Item no.	Qty.	Part no.	Description	Remarks
38	1	62956	Hose	3/8" x 550 90/L JIC
39	1	50262	Oil cooler, 24 V + Smartdrive	
		50292	Electronic box, kit 12+24 V	
40	1	50263	Oil cooler, 12 V + Smartdrive	
		50292	Electronic box, kit 12+24 V	
41	1	50290	Temperature sensor, oil cooler	
42	1	56262	Hose	3/4" x 2000 L/L JIC
43	1	25848	Screw cap JIC	FNTXS 25 JIC
44	2	42953	Adjustable spanner	
45	4	62161	Wire lock	
46	1	62160	Wire rope, nylon	450 mm
47	1	62160	Wire rope, nylon	600 mm
48	1	55614	Control valve	2 sekt.
49	1	55616	Control valve	3 sekt. Winch
50	1	55618	Control valve	2 sekt.
51	1	55620	Control valve	3 sekt. 1 EXV
52	1	55622	Control valve	4 sekt. 2 EXV/FJ

* Stabilizer operation by RC ** Manual stabilizer operation ***Winch

52-380

Intern ref.: 6300910

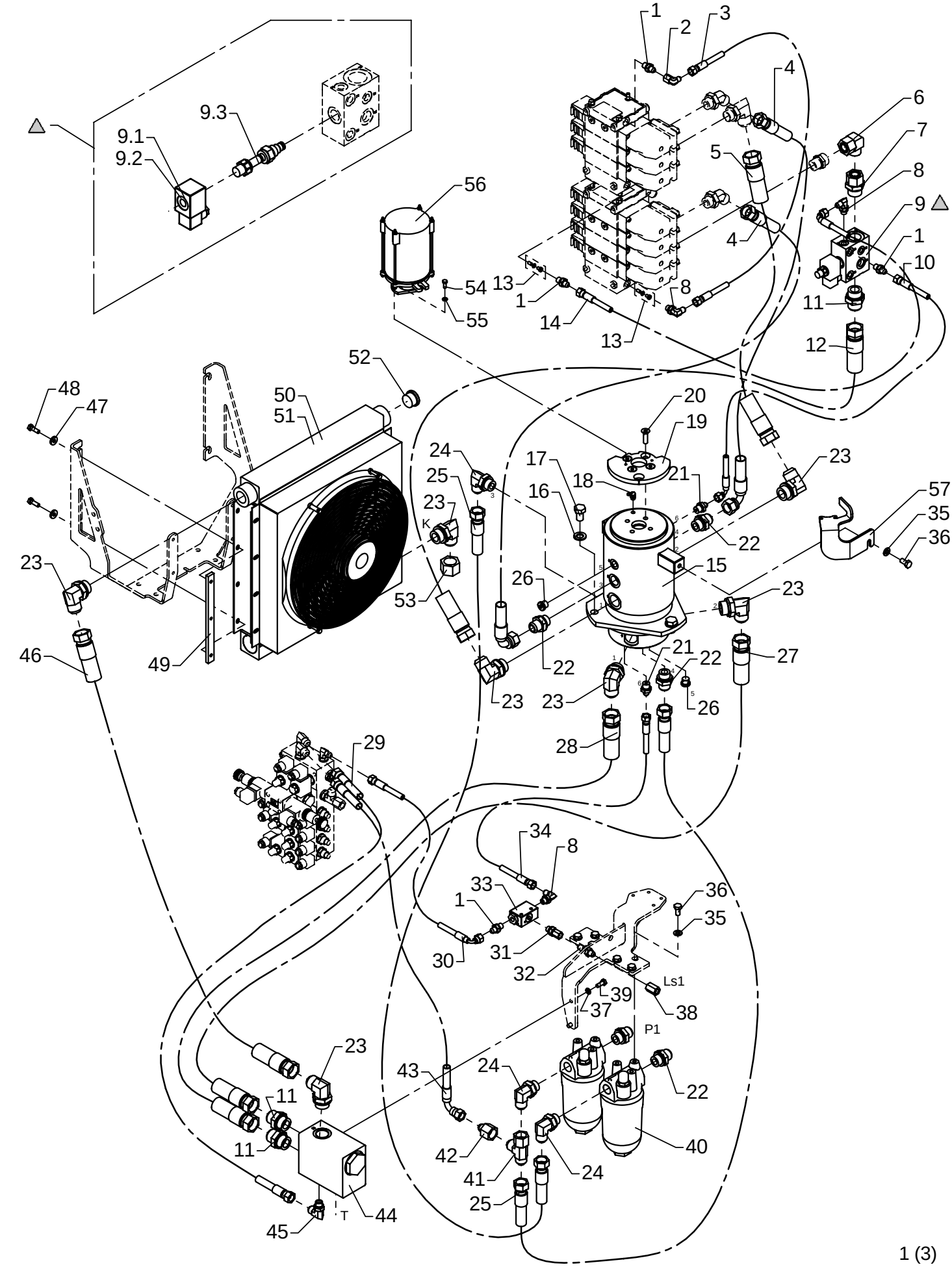

Hydraulic system, pump and return hoses, 1 circuit + variable pump

As from / To loader no.: 96 00 00 / 96 00 49
Created: 03.10.2003
Modified: 17.06.2005

Item no.	Qty.	Part no.	Description	Remarks
1	4	25829	Straight connection	F40XS 8-1/4 JIC
2	1	25826	Elbow connection	C6XS 8 JIC
3	1	62870	Hose	1/4" x 650 mm O/O JIC
4	2	62977	Hose	5/8" x 1100 mm V/O JIC
5	1	56046	Hose	1" x 1000 mm O/O JIC
6	1	25209	Elbow connection	EWSD 22 L
7	1	26391	Straight connection	EGESD 22 LR 1-WD
8	3	25858	Elbow connection	C40XS 12-3/8 JIC
9	1	59061	Dump valve	
		61777	Solenoid	12V
		61778	Solenoid	24V
		59642	Magnet coil	
10	1	62901	Hose	1/4" x 900 mm V/O JIC
11	3	25863	Straight connection	F40XS 25-1 JIC
12	1	56048	Hose	1" x 900 mm O/O JIC
13	2	62065	Closed center kit	
14	1	62887	Hose	1/4" x 550 mm V/O JIC
15	1	58727	Swivel coupling, hydraulic	
16	3	31135	Washer	16 mm
17	3	30266	Set screw	M16 x 25
18	1	31322	Lubricator	1/8 RG - 90
19	1	6301196	Cam disc, 2-stage LMB	
20	4	30955	Countersunk screw	MK10 x 35
21	2	25830	Straight connection	F40XS 8-3/8 JIC
22	5	25834	Straight connection	F40XS 18/20-3/4 JIC
23	7	26267	Elbow connection	C40XS 25-1 JIC
24	3	26693	Elbow connection	C40XS 18/20-3/4 JIC
25	2	56045	Hose	5/8" x 1450 mm O/O JIC
26	2	25277	Plug	VS-R-3/8 WD
27	1	56050	Hose	1" x 1300 mm O/O JIC
28	1	56049	Hose	1" x 1050 mm O/O JIC
29	1	62884	Hose	3/8" x 500 mm O/O JIC
30	1	62974	Hose	1/4" x 350 mm V/O JIC
31	1	26272	Straight connection	F64XS 14/16 - 3/8" JIC
32	1	25823	Bulkhead connection	WTX-WLNS 8 JIC
33	1	60338	Shuttle valve	
34	1	56130	Hose	1/4" x 1150 mm O/O JIC
35	7	31177	Washer	10 mm
36	7	30154	Set screw	M10 x 20
37	2	31155	Spring washer	8 mm

Hydraulic system, pump and return hoses, 1 circuit + variable pump

As from / To loader no.: 96 00 00 / 96 00 49
Created: 03.10.2003
Modified: 17.06.2005

Item no.	Qty.	Part no.	Description	Remarks
38	1	26270	Fitting	TTX4S 8-1/4 JIC
39	2	30132	Set screw, stainless	M8 x 20
40	2	60201	High pressure filter	
41	1	25828	Connection	R6XS 20 JIC
42	1	25865	Reducing connection	TRTXS 8/20-12 JIC
43	1	56091	Hose	3/8" x 350 mm V/O JIC
44	1	59056	Cooler valve	
45	1	25838	Elbow connection	C40XS 12-3/8 JIC
46	1	56047	Hose	3/4" x 1400 mm O/O JIC
47	4	31755	Washer	8 mm
48	4	30134	Set screw, stainless	M8 x 25
49	2	6381974	Threaded disc	
50	1	59310	Oil cooler 24 V	
51	1	59312	Oil cooler 12 V	
52	1	26321	Plug	VS-R 1" WD
53	1	25848	Screw cap JIC	FNTXS 25 JIC
54	2	30112	Set screw, stainless	M6 x 16
55	2	31154	Spring washer, stainless	6 mm
56	1	28549	Swivel coupling, electric	
57	1	6301197	Carrier	

52-380

Intern ref.: 6300910

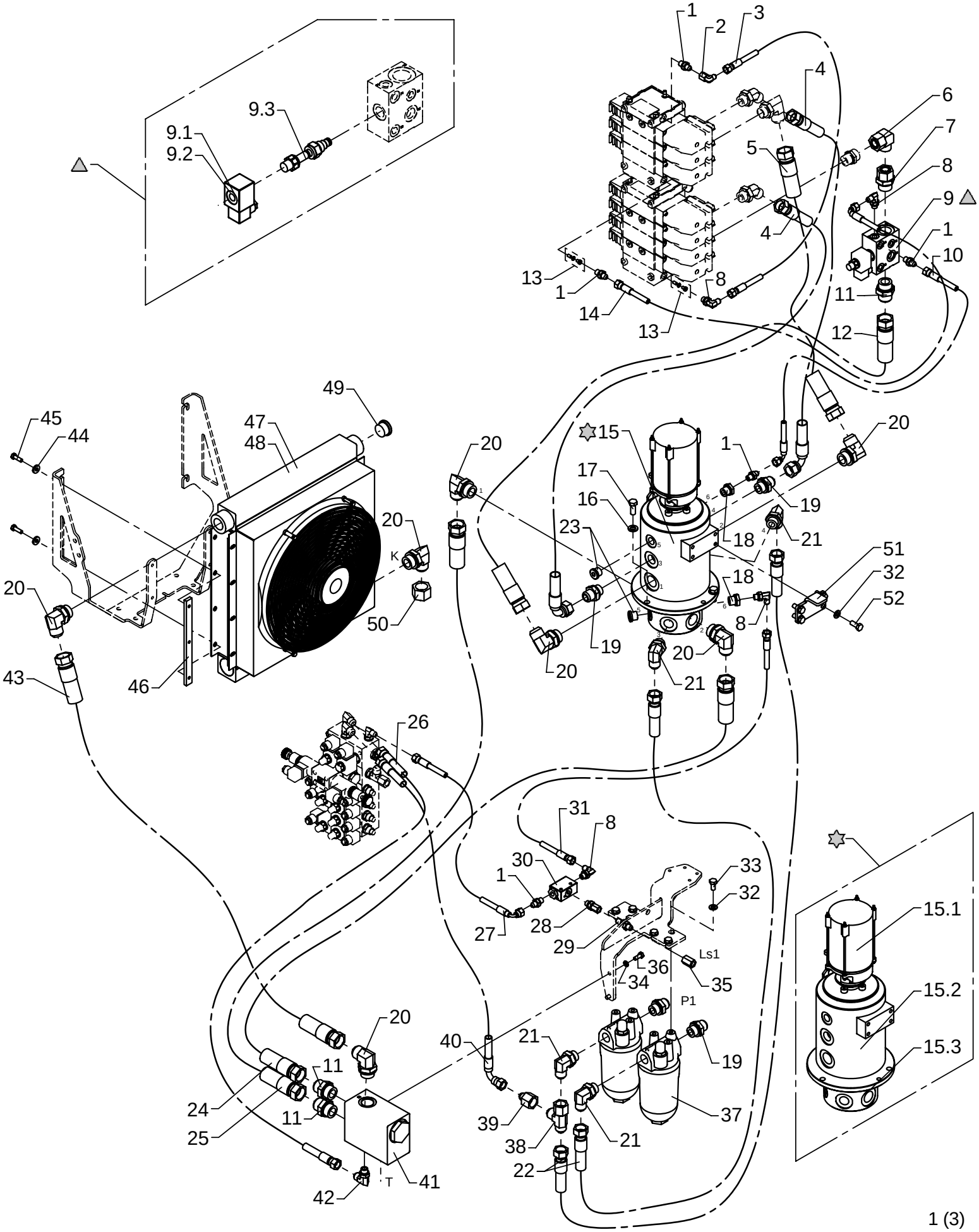

Hydraulic system, pump and return hoses, 1 circuit + variable pump

As from / To loader no.: 96 00 50 / 96 00 53
Created: 17.06.2005
Modified: 05.10.2005

Pos.	Antal	Vare nr.	Beskrivelse	Bemærkning
1	5	25829	Lige forskruning	F40XS 8-1/4 JIC
2	1	25826	Vinkelforskruning	C6XS 8 JIC
3	1	62870	Slange	1/4" x 650 mm O/O JIC
4	2	62977	Slange	5/8" x 1100 mm V/O JIC
5	1	56046	Slange	1" x 1000 mm O/O JIC
6	1	25209	Vinkelforskruning	EWSD 22 L
7	1	26391	Lige Forskruning	EGESD 22 LR 1-WD
8	4	25858	Vinkelforskruning	C40XS 12-3/8 JIC
9	1	59061	Dumpventil	
		61777	Solenoid	12V
		61778	Solenoid	26V
		59642	Magnet coil	
10	1	62901	Slange	1/4" x 900 mm V/O JIC
11	3	25863	Lige forskruning	F40XS 25-1 JIC
12	1	56048	Slange	1" x 900 mm O/O JIC
13	2	62065	Lukket Center Kit	
14	1	62887	Slange	1/4" x 550 mm V/O JIC
15	1	49105	Slæbering/rotorled	
		28549	Swivel coupling, electric	
		49106	Swivel coupling	
		49115	Seal kit	
16	3	31131	Facetskive, galv.	12 mm
17	3	30177	Sætskrue galv.	M12 x 30
18	2	25180	Reduktionsnippel	RED-R 1/2-WD/R 1/4
19	4	25834	Lige forskruning	F40XS 18/20-3/4 JIC
20	7	26267	Vinkel indskruning	C40XS 25-1 JIC
21	4	26693	Vinkelforskruning	C40XS 18/20-3/4 JIC
22	2	56045	Slange	5/8" x 1450 mm O/O JIC
23	2	25103	Prop	VS-R-1/2 WD
24	1	56050	Slange	1" x 1300 mm O/O JIC
25	1	56049	Slange	1" x 1050 mm O/O JIC
26	1	62884	Slange	3/8" x 500 mm O/O JIC
27	1	62974	Slange	1/4" x 350 mm V/O JIC
28	1	26272	Lige indskruning	F64XS 14/16 - 3/8" JIC
29	1	25823	Skotforskruning	WTX-WLNS 8 JIC
30	1	60338	Vekselventil	
31	1	56130	Slange	1/4" x 1150 mm O/O JIC
32	10	31177	Facetskive galv. 10mm	10 mm
33	6	30154	Sætskrue, galv.	M10 x 20
34	2	31155	Fjederskive rustfri 8mm	8 mm

Hydraulic system, pump and return hoses, 1 circuit + variable pump

As from / To loader no.: 96 00 50 / 96 00 53
Created: 17.06.2005
Modified: 05.10.2005

Item no.	Qty.	Part no.	Description	Remarks
35	1	26270	Fitting	TTX4S 8-1/4 JIC
36	2	30132	Set screw, stainless	M8 x 20
37	2	60201	High pressure filter	
38	1	25828	Connection	R6XS 20 JIC
39	1	25865	Reducing connection	TRTXS 8/20-12 JIC
40	1	56091	Hose	3/8" x 350 mm V/O JIC
41	1	59056	Cooler valve	
42	1	25838	Elbow connection	C40XS 12-3/8 JIC
43	1	56047	Hose	3/4" x 1400 mm O/O JIC
44	4	31755	Washer	8 mm
45	4	30134	Set screw, stainless	M8 x 25
46	2	6381974	Threaded disc	
47	1	59310	Oil cooler 24 V	
48	1	59312	Oil cooler 12 V	
49	1	26321	Plug	VS-R 1" WD
50	1	25848	Screw cap JIC	FNTXS 25 JIC
51	1	6302621	Carrier fitting	
52	4	30155	Set screw	M10 x 25

52-380

Intern ref.: 6300910

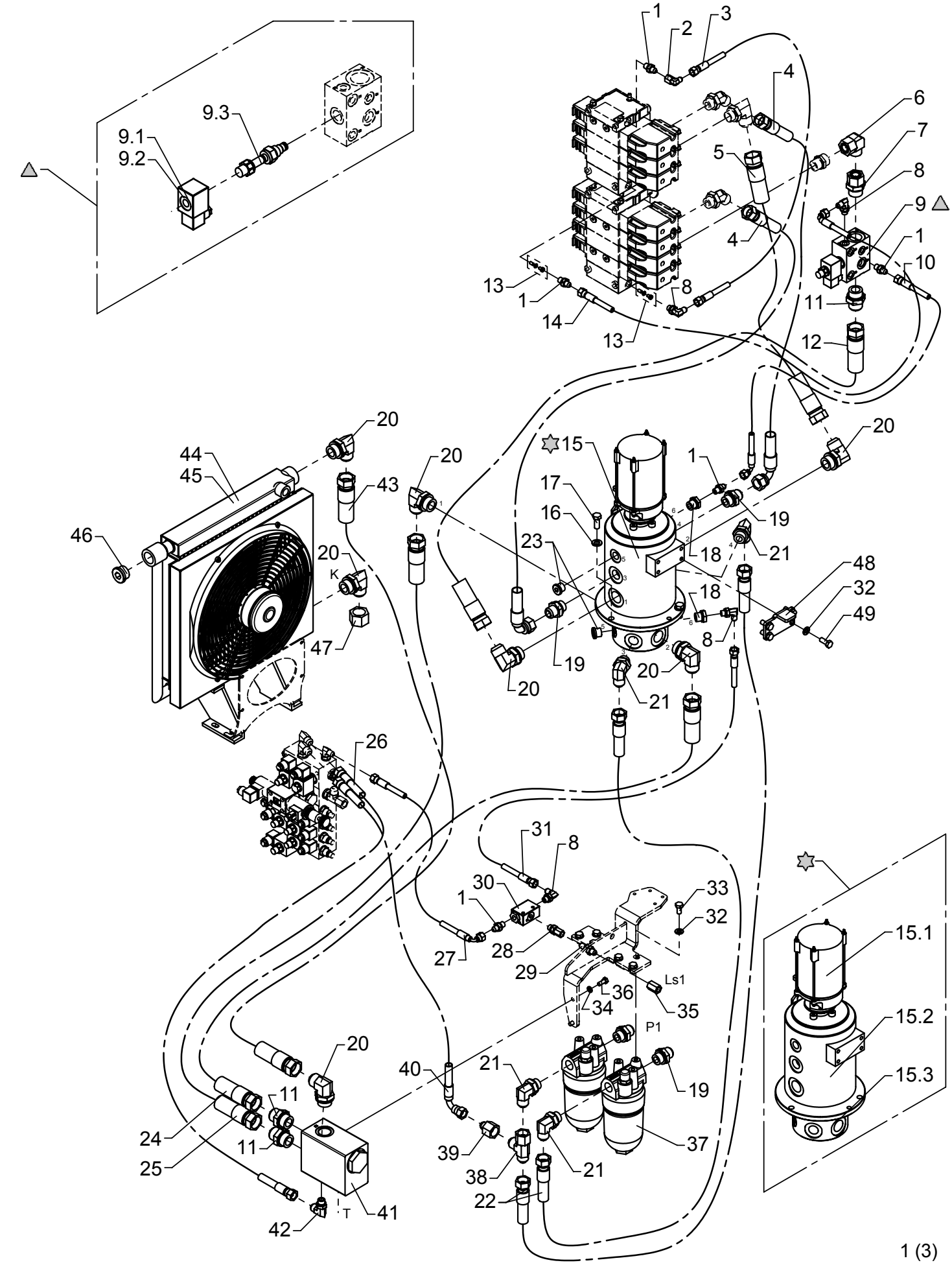

Hydraulic system, pump and return hoses, 1 circuit + variable pump

As from / To loader no.: 96 00 54 / 96 01 49
Created: 17.06.2005
Modified: 30.10.2006

Pos.	Antal	Vare nr.	Beskrivelse	Bemærkning
1	5	25829	Lige forskruning	F40XS 8-1/4 JIC
2	1	25826	Vinkelforskruning	C6XS 8 JIC
3	1	62870	Slange	1/4" x 650 mm O/O JIC
4	2	62977	Slange	5/8" x 1100 mm V/O JIC
5	1	56046	Slange	1" x 1000 mm O/O JIC
6	1	25209	Vinkelforskruning	EWSD 22 L
7	1	26391	Lige Forskruning	EGESD 22 LR 1-WD
8	4	25858	Vinkelforskruning	C40XS 12-3/8 JIC
9	1	59061	Dumpventil	
		61777	Solenoid	12V
		61778	Solenoid	26V
		59642	Magnet coil	
10	1	62901	Slange	1/4" x 900 mm V/O JIC
11	3	25863	Lige forskruning	F40XS 25-1 JIC
12	1	56048	Slange	1" x 900 mm O/O JIC
13	2	62065	Lukket Center Kit	
14	1	62887	Slange	1/4" x 550 mm V/O JIC
15	1	49105	Slæbering/rotorled	
		28549	Swivel coupling, electric	
		49106	Swivel coupling	
		49115	Seal kit	
16	3	31131	Facetskive galv. 12 mm.	12 mm
17	3	30177	Sætskrue galv. M12 x 30	M12 x 30
18	2	25180	Reduktionsforskruning	RED-R 1/2-WD/R 1/4
19	4	25834	Lige forskruning	F40XS 18/20-3/4 JIC
20	7	26267	Vinkel indskruning	C40XS 25-1 JIC
21	4	26693	Vinkelforskruning	C40XS 18/20-3/4 JIC
22	2	56045	Slange	5/8" x 1450 mm O/O JIC
23	2	25103	Prop	VS-R-1/2 WD
24	1	56050	Slange	1" x 1300 mm O/O JIC
25	1	56049	Slange	1" x 1050 mm O/O JIC
26	1	62884	Slange	3/8" x 500 mm O/O JIC
27	1	62974	Slange	1/4" x 350 mm V/O JIC
28	1	26272	Lige indskruning	F64XS 14/16 - 3/8" JIC
29	1	25823	Skotforskruning	WTX-WLNS 8 JIC
30	1	60338	Vekselventil	
31	1	56130	Slange	1/4" x 1150 mm O/O JIC
32	10	31177	Facetskive galv. 10mm	10 mm
33	6	30154	Sætskrue galv. M10 x 20	M10 x 20
34	2	31155	Fjederskive rustfri 8mm	8 mm

Hydraulic system, pump and return hoses, 1 circuit + variable pump

As from / To loader no.: 96 00 54 / 96 01 49
Created: 17.06.2005
Modified: 30.10.2006

Item no.	Qty.	Part no.	Description	Remarks
35	1	26270	Fitting	TTX4S 8-1/4 JIC
36	2	30132	Set screw, stainless	M8 x 20
37	2	60201	High pressure filter	
38	1	25828	Connection	R6XS 20 JIC
39	1	25865	Reducing connection	TRTXS 8/20-12 JIC
40	1	56091	Hose	3/8" x 350 mm V/O JIC
41	1	59056	Cooler valve	
42	1	25838	Elbow connection	C40XS 12-3/8 JIC
43	1	56262	Hose	3/4" x 2000 mm O/O JIC
44	1	59310	Oil cooler 24 V	
45	1	59312	Oil cooler 12 V	
46	1	26321	Plug	VS-R 1" WD
47	1	25848	Screw cap JIC	FNTXS 25 JIC
48	1	6302621	Carrier fitting	
49	4	30155	Set screw	M10 x 25

52-380

Intern ref.: 6300910

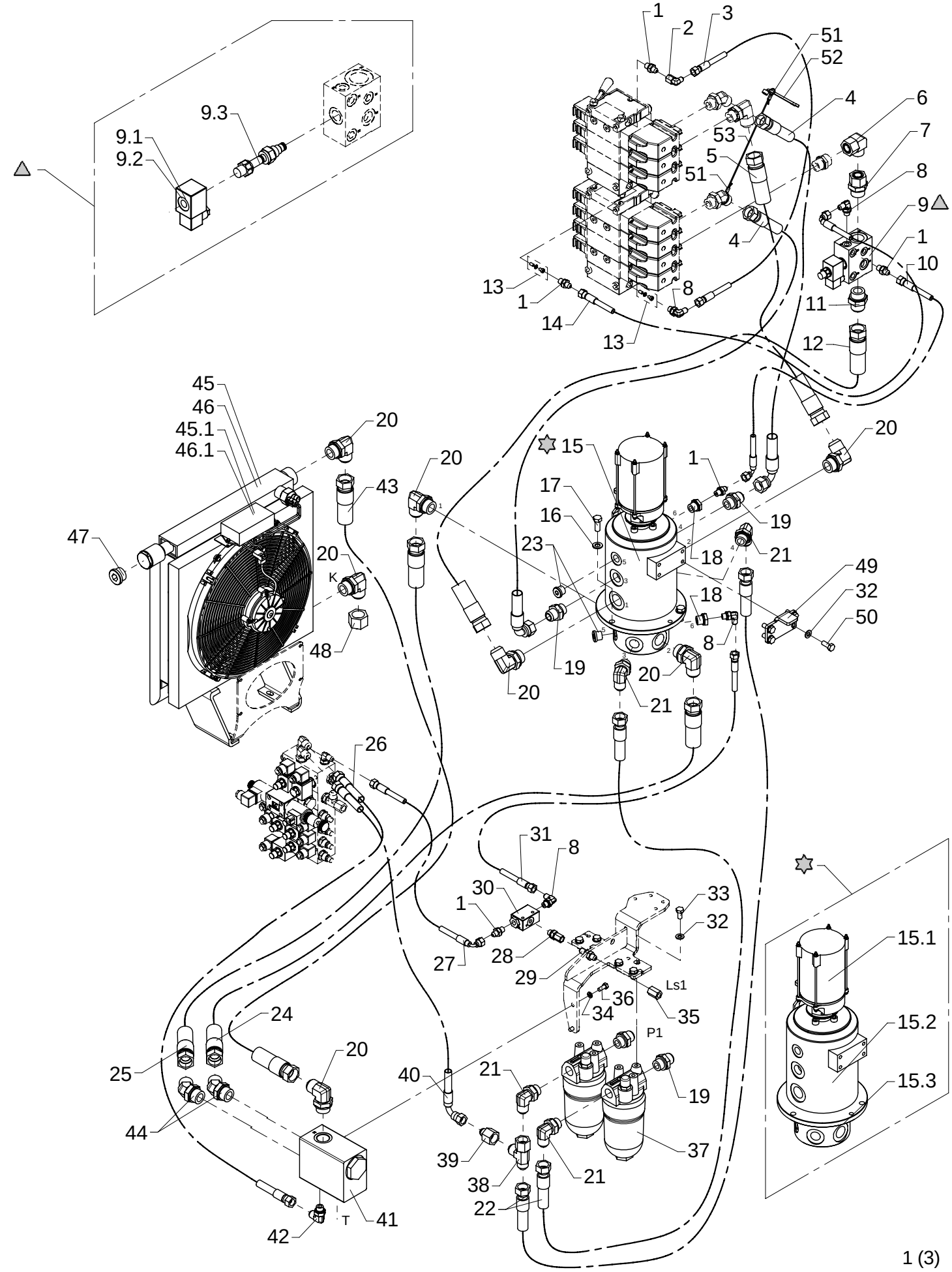

Hydraulic system, pump and return hoses, 1 circuit + variable pump

As from / To loader no.: 96 01 50 / 96 02 07
Created: 30.10.2006
Modified: 02.06.2008

Item no.	Qty.	Part no.	Description	Remarks
1	5	25829	Straight connection	F40XS8 - 1/4
2	1	25826	Elbow connection	C6XS 8 JIC
3	1	62870	Hose	1/4" x 650 mm O/O JIC
4	2	62977	Hose	5/8" x 1100 mm V/O JIC
5	1	56046	Hose	1" x 1000 mm O/O JIC
6	1	25209	Elbow connection	EWSD 22 L
7	1	26391	Straight connection	EGESD 22 LR 1-WD
8	4	25858	Elbow connection	C40XS8 - 1/4
9	1	59061	Dump valve	
		61777	Solenoid	
		61778	Solenoid	
		59642	Magnet coil	
10	1	62901	Hose	1/4" x 900 mm V/O JIC
11	1	25863	Straight connection	F40XS25 - 1
12	1	56048	Hose	1" x 900 mm O/O JIC
13	2	62065	Closed center kit	
14	1	62887	Hose	1/4" x 550 mm V/O JIC
15	1	49105	Swivel coupling	
		28549	Swivel coupling, electric	
		49106	Swivel coupling	
		49115	Seal kit	
16	3	31131	Washer	12 mm
17	3	30177	Set screw	M12 x 30
18	2	25180	Reducing connection	RED-R 1/2-WD/R 1/4
19	4	25834	Straight connection	F40XS18/20 - 3/4
20	7	26267	Elbow connection	C40XS25 - 1
21	4	26693	Elbow connection	C40XS18/20 - 3/4
22	2	56045	Hose	5/8" x 1450 mm O/O JIC
23	2	25103	Plug	VS-R-1/2 WD
24	1	56050	Hose	1" x 1300 mm O/O JIC
25	1	56049	Hose	1" x 1050 mm O/O JIC
26	1	62884	Hose	3/8" x 500 mm O/O JIC
27	1	62974	Hose	1/4" x 350 mm V/O JIC
28	1	26272	Straight connection	F64XS 14/16 - 3/8" JIC
29	1	25823	Bulkhead connection	WTX-WLNS 8 JIC
30	1	60338	Shuttle valve	
31	1	56130	Hose	1/4" x 1150 mm O/O JIC
32	10	31177	Washer	10 mm
33	6	30154	Set screw	M10 x 20
34	2	31155	Spring washer	8 mm

Hydraulic system, pump and return hoses, 1 circuit + variable pump

As from / To loader no.: 96 01 50 / 96 02 07
Created: 30.10.2006
Modified: 02.06.2008

Item no.	Qty.	Part no.	Description	Remarks
35	1	26270	Fitting	TTX4S 8-1/4 JIC
36	2	30132	Set screw, stainless	M8 x 20
37	2	60201	High pressure filter	
38	1	25828	Connection	R6XS 20 JIC
39	1	25865	Reducing connection	TRTXS8/20-12
40	1	56091	Hose	3/8" x 350 mm V/O JIC
41	1	59056	Cooler valve	
42	1	25838	Elbow connection	C40XS12 - 3/8
43	1	56262	Hose	3/4" x 2000 mm O/O JIC
44	2	25734	Elbow connection 45°	V40XS25 - 1
45	1	50282	Oil cooler, 24 V + Smartdrive	
		50284	Smartdrive kit for oil cooler	
46	1	50283	Oil cooler, 12 V + Smartdrive	
		50284	Smartdrive kit for oil cooler	
47	1	26321	Plug	VS-R 1" WD
48	1	25848	Screw cap JIC	FNTXS 25 JIC
49	1	6302621	Carrier fitting	
50	4	30155	Set screw	M10 x 25
51	2	62161	Wire lock	
52	1	42953	Adjustable spanner	
53	1	62160	Wire rope, nylon	400 mm

52-380

Intern ref.: 6301710

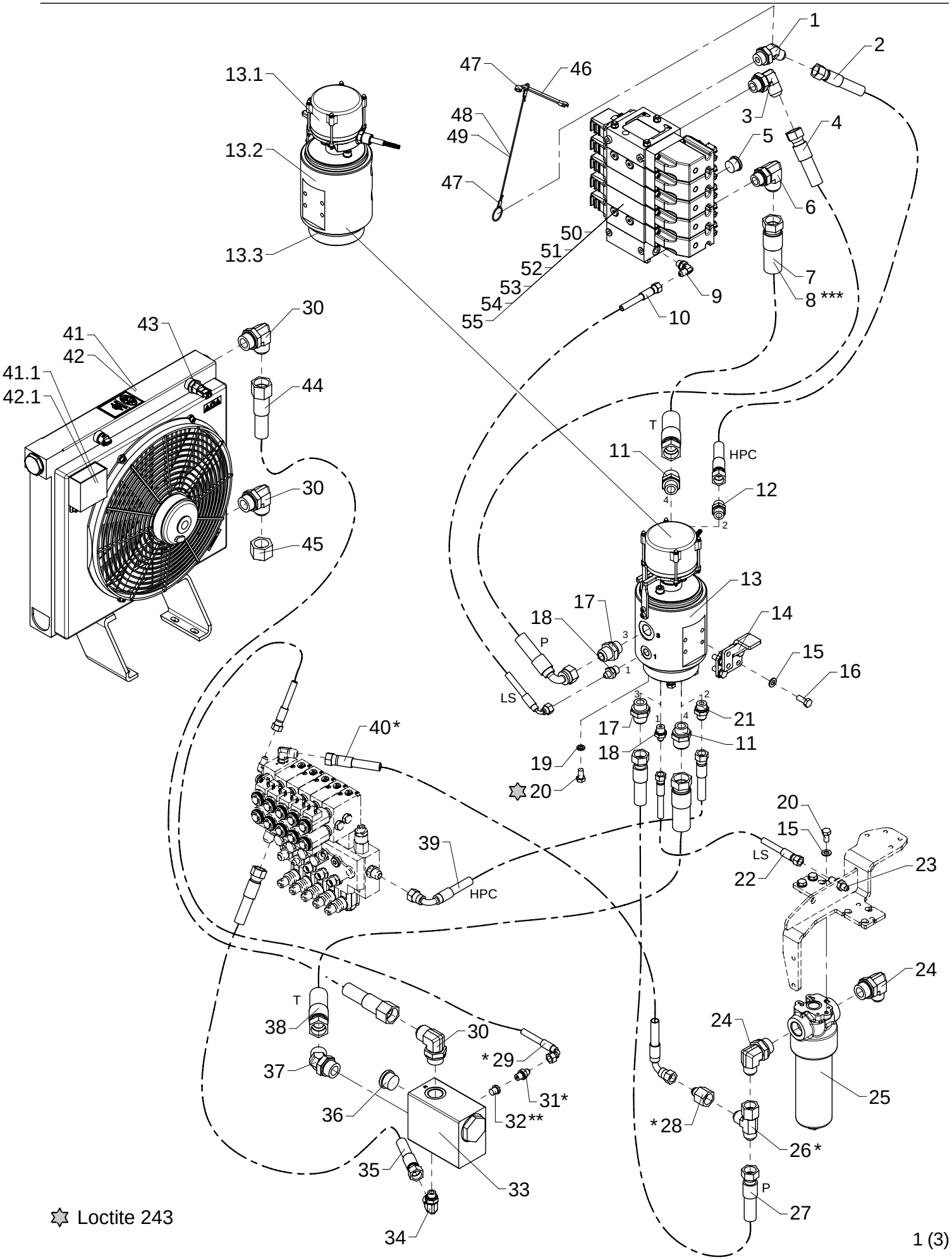

Loctite 243

Hydraulic system, pump and return hoses, 1 circuit + variable pump

As from / To loader no.: 96 02 08
Created: 02.06.2008
Modified: 26.08.2008

Item no.	Qty.	Part no.	Description	Remarks
1	1	26291	Elbow connection 45°	V40XS14-16 - 3/4
2	1	62922	Hose JIC	1/2" x 1400 L/L JIC
3	1	26693	Elbow connection	C40XS18/20 - 3/4
4	1	56080	Hose	5/8" x 1400 90/L JIC
5	1	26355	Plug	VS-R-3/4 WD
6	1	25840	Elbow connection	C40XS25 - 3/4
7	1	56048	Hose	1" x 900 L/L JIC
8	1	56461	Hose	1" x 700 L/L JIC
9	1	25858	Elbow connection	C40XS8 - 1/4
10	1	62934	Hose	1/4" x 1330 90/L JIC
11	2	25836	Straight connection	F40XS25 - 3/4
12	1	25833	Straight connection	F40XS14/16 - 1/2
13	1	49216	Swivel coupling	
		49237	Electric part, swivel coupling	
		49235	Hydraulic part,swivel coupling	
		49247	Seal kit	
14	1	6301329	Carrier fitting	
15	7	31177	Washer	10 mm
16	4	30155	Set screw	M10 x 25
17	2	25834	Straight connection	F40XS18/20 - 3/4
18	2	25830	Straight connection	F40XS8 - 3/8
19	4	30933	Nordlock washer	10 mm
20	7	30154	Set screw	M10 x 20
21	1	25832	Straight connection	F40XS12 - 1/2
22	1	56130	Hose	1/4" x 1150 L/L JIC
23	1	25823	Bulkhead connection	WTX-WLNS 8 JIC
24	2	26785	Elbow connection	C40XS18/20 - 1
25	1	49401	High pressure filter	
26	1	25828	Connection	R6XS 20 JIC
27	1	56045	Hose	5/8" x 1450 L/L JIC
28	1	25865	Reducing connection	TRTXS8/20-12
29	1	62901	Hose	1/4" x 900 90/L JIC
30	3	26267	Elbow connection	C40XS25 - 1
31	1	25829	Straight connection	F40XS8 - 1/4
32	1	25197	Plug	VS-R-1/4 WD
33	1	59056	Cooler valve	
34	1	26787	Elbow connection	C40XS14/16 - 3/8
35	1	62866	Hose, JIC	1/2" x 850 L/L JIC
36	1	26321	Plug	VS-R 1" WD
37	1	25734	Elbow connection 45°	V40XS25 - 1

* Stabilizer operation by RC ** Manual stabilizer operation *** Winch

Hydraulic system, pump and return hoses, 1 circuit + variable pump

As from / To loader no.: 96 02 08
Created: 02.06.2008
Modified: 26.08.2008

Item no.	Qty.	Part no.	Description	Remarks
38	1	56050	Hose	1" x 1300 L/L JIC
39	1	56110	Hose	3/8" x 1130 90/L JIC
40	1	62956	Hose	3/8" x 550 90/L JIC
41	1	50262	Oil cooler, 24 V + Smartdrive	
		50292	Electronic box, kit 12+24 V	
42	1	50263	Oil cooler, 12 V + Smartdrive	
		50292	Electronic box, kit 12+24 V	
43	1	50290	Temperature sensor, oil cooler	
44	1	56262	Hose	3/4" x 2000 L/L JIC
45	1	25848	Screw cap JIC	FNTXS 25 JIC
46	2	42953	Adjustable spanner	
47	4	62161	Wire lock	
48	1	62160	Wire rope, nylon	450 mm
49	1	62160	Wire rope, nylon	600 mm
50	1	55601	Control valve	4 sekt.
51	1	55603	Control valve	5 sekt. Winch
52	1	55605	Control valve	5 sekt. 1 EXV
53	1	55607	Control valve	6 sekt. Winch+1 EXV
54	1	55609	Control valve	6 sekt. 2 EXV/FJ
55	1	55611	Control valve	7 sekt. Winch+2 EXV/FJ

* Stabilizer operation by RC ** Manual stabilizer operation *** Winch

52-380

Intern ref.: 6300930

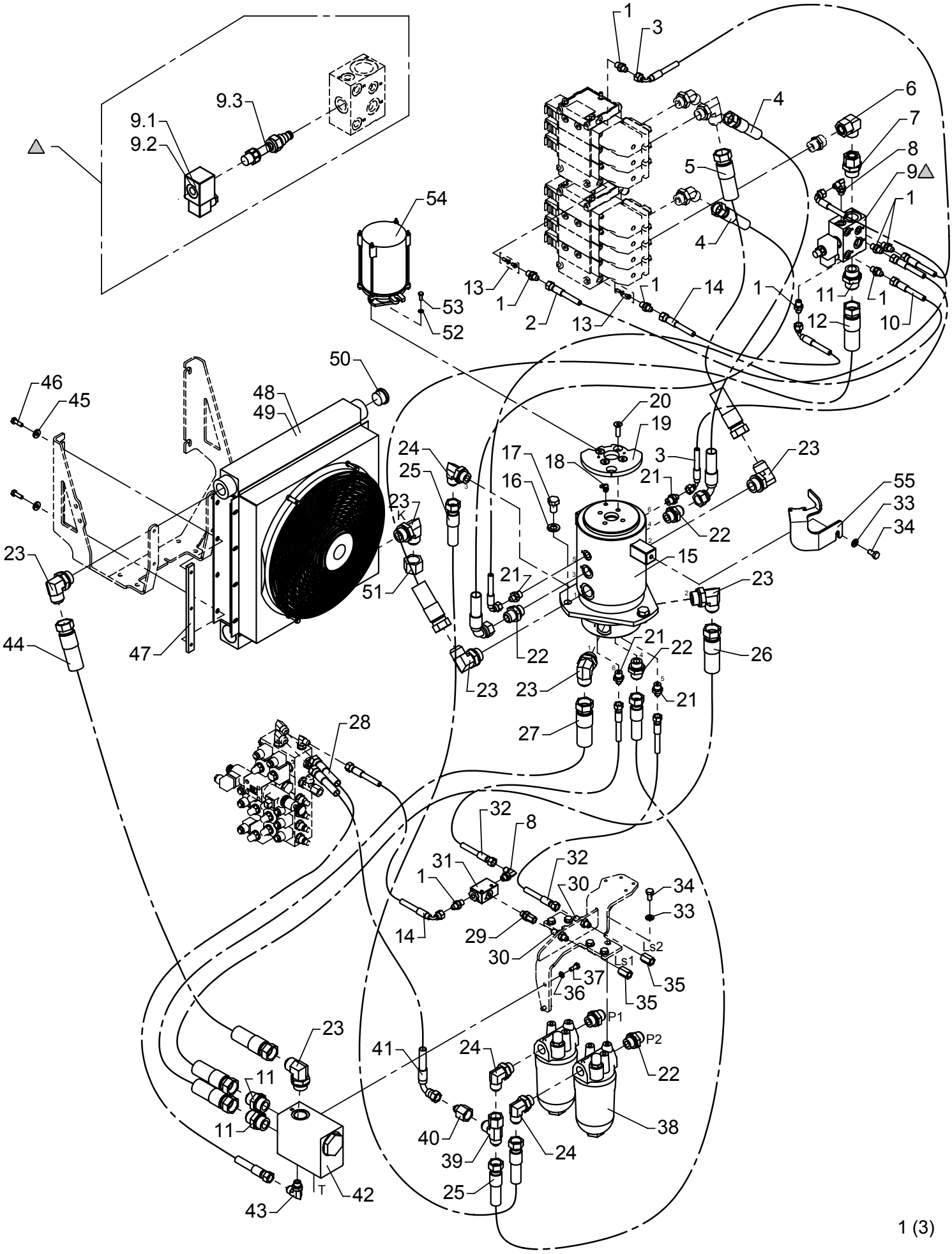

Hydraulic system, pump and return hoses, 2 circuits + variable pump

As from / To loader no.: 96 00 00 / 96 00 49
Created: 03.10.2003
Modified: 30.10.2006

Item no.	Qty.	Part no.	Description	Remarks
1	8	25829	Straight connection	F40XS 8-1/4 JIC
2	1	62887	Hose	1/4" x 550 mm V/O JIC
3	2	62901	Hose	1/4" x 900 mm V/O JIC
4	2	62977	Hose	5/8" x 1100 mm V/O JIC
5	1	56046	Hose	1" x 1000 mm O/O JIC
6	1	25209	Elbow connection	EWSD 22 L
7	1	26391	Straight connection	EGESD 22 LR 1-WD
8	2	25858	Elbow connection	C40XS 12-3/8 JIC
9	1	59061	Dump valve	
		61777	Solenoid	12V
		61778	Solenoid	26V
		59642	Magnet coil	
10	1	62934	Hose	1/4" x 1330 mm V/O JIC
11	3	25863	Straight connection	F40XS 25-1 JIC
12	1	56048	Hose	1" x 900 mm O/O JIC
13	2	62065	Closed center kit	
14	2	62974	Hose	1/4" x 350 mm V/O JIC
15	1	58727	Swivel coupling, hydraulic	
16	3	31135	Washer	16 mm
17	3	30266	Set screw	M16 x 25
18	1	31322	Lubricator	1/8 RG - 90
19	1	6301196	Cam disc, 2-stage LMB	
20	4	30955	Countersunk screw	MK10 x 35
21	4	25830	Straight connection	F40XS8 - 3/8 JIC
22	5	25834	Straight connection	F40XS 18/20-3/4 JIC
23	7	26267	Elbow connection	C40XS 25-1 JIC
24	3	26693	Elbow connection	C40XS 18/20-3/4 JIC
25	2	56045	Hose	5/8" x 1450 mm O/O JIC
26	1	56050	Hose	1" x 1300 mm O/O JIC
27	1	56049	Hose	1" x 1050 mm O/O JIC
28	1	62884	Hose	3/8" x 500 mm O/O JIC
29	1	26272	Straight connection	F64XS 14/16 - 3/8" JIC
30	2	25823	Bulkhead connection	WTX-WLNS 8 JIC
31	1	60338	Shuttle valve	
32	2	56130	Hose	1/4" x 1150 mm O/O JIC
33	7	31177	Washer	10 mm
34	7	30154	Set screw	M10 x 20
35	2	26270	Fitting	TTX4S 8-1/4 JIC
36	2	31155	Spring washer	8 mm
37	2	30132	Set screw, stainless	M8 x 20

Hydraulic system, pump and return hoses, 2 circuits + variable pump

As from / To loader no.: 96 00 00 / 96 00 49
Created: 03.10.2003
Modified: 30.10.2006

Item no.	Qty.	Part no.	Description	Remarks
38	2	60201	High pressure filter	
39	1	25828	Connection	R6XS 20 JIC
40	1	25865	Reducing connection	TRTXS 8/20-12 JIC
41	1	56091	Hose	3/8" x 350 mm V/O JIC
42	1	59056	Cooler valve	
43	1	25838	Elbow connection	C40XS 12-3/8 JIC
44	1	56047	Hose	3/4" x 1400 mm O/O JIC
45	4	31755	Washer	8 mm
46	4	30134	Set screw, stainless	M8 x 25
47	2	6381974	Threaded disc	
48	1	59310	Oil cooler 24 V	
49	1	59312	Oil cooler 12 V	
50	1	26321	Plug	VS-R 1" WD
51	1	25848	Screw cap JIC	FNTXS 25 JIC
52	2	31154	Spring washer, stainless	6 mm
53	2	30112	Set screw, stainless	M6 x 16
54	1	28549	Swivel coupling, electric	
55	1	6301197	Carrier	

52-380

Intern ref.: 6300930

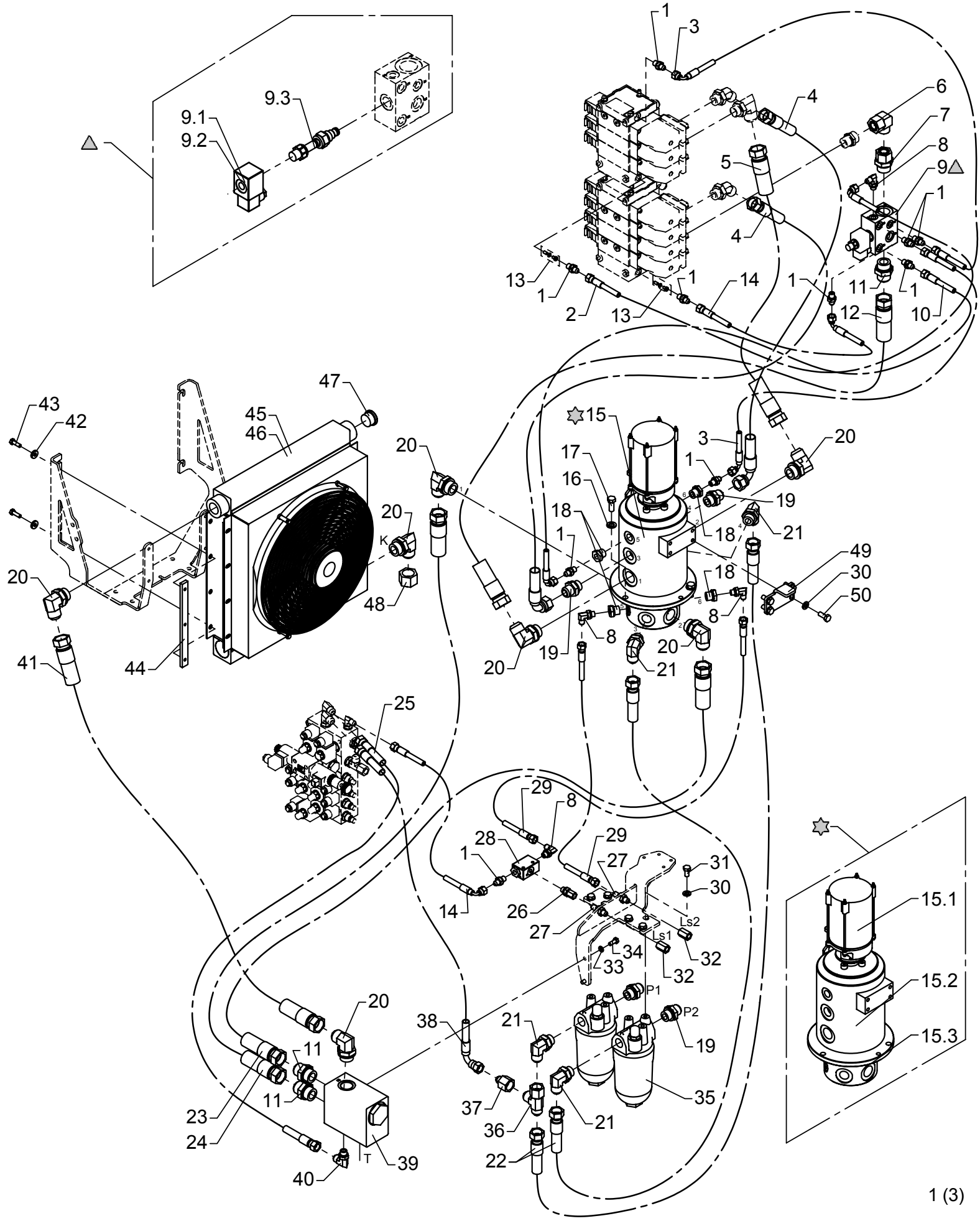

Hydraulic system, pump and return hoses, 2 circuits + variable pump

As from / To loader no.: 96 00 50 / 96 00 53
Created: 17.06.2005
Modified: 30.10.2006

Item no.	Qty.	Part no.	Description	Remarks
1	10	25829	Straight connection	F40XS 8-1/4 JIC
2	1	62887	Hose	1/4" x 550 mm V/O JIC
3	2	62901	Hose	1/4" x 900 mm V/O JIC
4	2	62977	Hose	5/8" x 1100 mm V/O JIC
5	1	56046	Hose	1" x 1000 mm O/O JIC
6	1	25209	Elbow connection	EWSD 22 L
7	1	26391	Straight connection	EGESD 22 LR 1-WD
8	4	25858	Elbow connection	C40XS 12-3/8 JIC
9	1	59061	Dump valve	
		61777	Solenoid	12V
		61778	Solenoid	26V
		59642	Magnet coil	
10	1	62934	Hose	1/4" x 1330 mm V/O JIC
11	3	25863	Straight connection	F40XS 25-1 JIC
12	1	56048	Hose	1" x 900 mm O/O JIC
13	2	62065	Closed center kit	
14	2	62974	Hose	1/4" x 350 mm V/O JIC
15	1	49105	Swivel coupling	
		28549	Swivel coupling, electric	
		49106	Swivel coupling	
		49115	Seal kit	
16	3	31131	Washer	12 mm
17	3	30177	Set screw	M12 x 30
18	4	25180	Reducing connection	RED-R 1/2-WD/R 1/4
19	4	25834	Straight connection	F40XS 18/20-3/4 JIC
20	7	26267	Elbow connection	C40XS 25-1 JIC
21	4	26693	Elbow connection	C40XS 18/20-3/4 JIC
22	2	56045	Hose	5/8" x 1450 mm O/O JIC
23	1	56050	Hose	1" x 1300 mm O/O JIC
24	1	56049	Hose	1" x 1050 mm O/O JIC
25	1	62884	Hose	3/8" x 500 mm O/O JIC
26	1	26272	Straight connection	F64XS 14/16 - 3/8" JIC
27	2	25823	Bulkhead connection	WTX-WLNS 8 JIC
28	1	60338	Shuttle valve	
29	2	56130	Hose	1/4" x 1150 mm O/O JIC
30	10	31177	Washer	10 mm
31	6	30154	Set screw	M10 x 20
32	2	26270	Fitting	TTX4S 8-1/4 JIC
33	2	31155	Spring washer	8 mm
34	2	30132	Set screw, stainless	M8 x 20

Hydraulic system, pump and return hoses, 2 circuits + variable pump

As from / To loader no.: 96 00 50 / 96 00 53
Created: 17.06.2005
Modified: 30.10.2006

Item no.	Qty.	Part no.	Description	Remarks
35	2	60201	High pressure filter	
36	1	25828	Connection	R6XS 20 JIC
37	1	25865	Reducing connection	TRTXS 8/20-12 JIC
38	1	56091	Hose	3/8" x 350 mm V/O JIC
39	1	59056	Cooler valve	
40	1	25838	Elbow connection	C40XS 12-3/8 JIC
41	1	56047	Hose	3/4" x 1400 mm O/O JIC
42	4	31755	Washer	8 mm
43	4	30134	Set screw, stainless	M8 x 25
44	2	6381974	Threaded disc	
45	1	59310	Oil cooler 24 V	
46	1	59312	Oil cooler 12 V	
47	1	26321	Plug	VS-R 1" WD
48	1	25848	Screw cap JIC	FNTXS 25 JIC
49	1	6302621	Carrier fitting	
50	4	30155	Set screw	M10 x 25

52-380

Intern ref.: 6300930

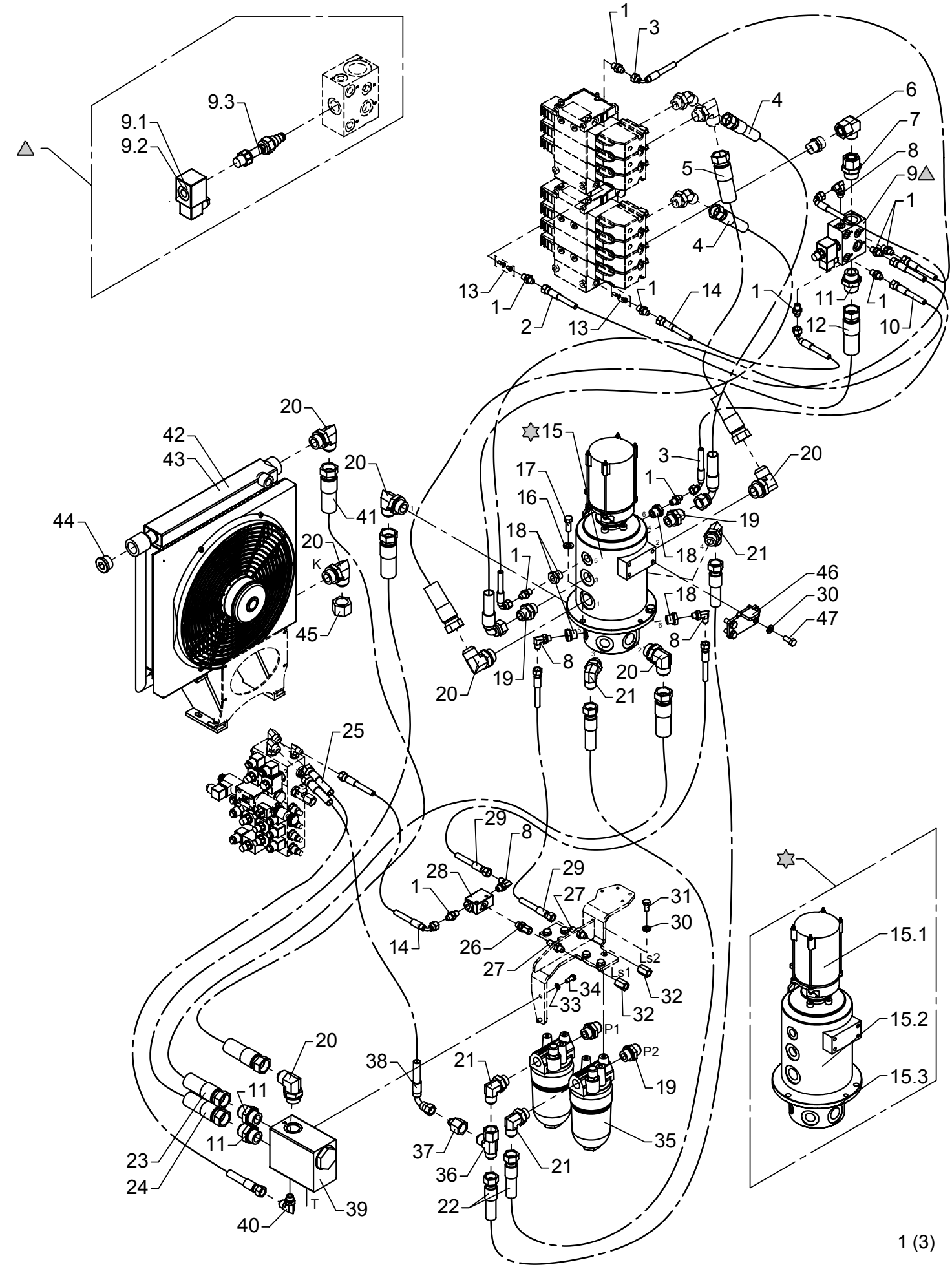

Hydraulic system, pump and return hoses, 2 circuits + variable pump

As from / To loader no.: 96 00 54 / 96 01 49
Created: 17.06.2005
Modified: 30.10.2006

Item no.	Qty.	Part no.	Description	Remarks
1	10	25829	Straight connection	F40XS 8-1/4 JIC
2	1	62887	Hose	1/4" x 550 mm V/O JIC
3	2	62901	Hose	1/4" x 900 mm V/O JIC
4	2	62977	Hose	5/8" x 1100 mm V/O JIC
5	1	56046	Hose	1" x 1000 mm O/O JIC
6	1	25209	Elbow connection	EWSD 22 L
7	1	26391	Straight connection	EGESD 22 LR 1-WD
8	4	25858	Elbow connection	C40XS 12-3/8 JIC
9	1	59061	Dump valve	
		61777	Solenoid	12V
		61778	Solenoid	26V
		59642	Magnet coil	
10	1	62934	Hose	1/4" x 1330 mm V/O JIC
11	3	25863	Straight connection	F40XS 25-1 JIC
12	1	56048	Hose	1" x 900 mm O/O JIC
13	2	62065	Closed center kit	
14	2	62974	Hose	1/4" x 350 mm V/O JIC
15	1	49105	Swivel coupling	
		28549	Swivel coupling, electric	
		49106	Swivel coupling	
		49115	Seal kit	
16	3	31131	Washer	12 mm
17	3	30177	Set screw	M12 x 30
18	4	25180	Reducing connection	RED-R 1/2-WD/R 1/4
19	4	25834	Straight connection	F40XS 18/20-3/4 JIC
20	7	26267	Elbow connection	C40XS 25-1 JIC
21	4	26693	Elbow connection	C40XS 18/20-3/4 JIC
22	2	56045	Hose	5/8" x 1450 mm O/O JIC
23	1	56050	Hose	1" x 1300 mm O/O JIC
24	1	56049	Hose	1" x 1050 mm O/O JIC
25	1	62884	Hose	3/8" x 500 mm O/O JIC
26	1	26272	Straight connection	F64XS 14/16 - 3/8" JIC
27	2	25823	Bulkhead connection	WTX-WLNS 8 JIC
28	1	60338	Shuttle valve	
29	2	56130	Hose	1/4" x 1150 mm O/O JIC
30	10	31177	Washer	10 mm
31	6	30154	Set screw	M10 x 20
32	2	26270	Fitting	TTX4S 8-1/4 JIC
33	2	31155	Spring washer	8 mm
34	2	30132	Set screw, stainless	M8 x 20

Hydraulic system, pump and return hoses, 2 circuits + variable pump

As from / To loader no.: 96 00 54 / 96 01 49
Created: 17.06.2005
Modified: 30.10.2006

Item no.	Qty.	Part no.	Description	Remarks
35	2	60201	High pressure filter	
36	1	25828	Connection	R6XS 20 JIC
37	1	25865	Reducing connection	TRTXS 8/20-12 JIC
38	1	56091	Hose	3/8" x 350 mm V/O JIC
39	1	59056	Cooler valve	
40	1	25838	Elbow connection	C40XS 12-3/8 JIC
41	1	56262	Hose	3/4" x 2000 mm O/O JIC
42	1	59310	Oil cooler 24 V	
43	1	59312	Oil cooler 12 V	
44	1	26321	Plug	VS-R 1" WD
45	1	25848	Screw cap JIC	FNTXS 25 JIC
46	1	6302621	Carrier fitting	
47	4	30155	Set screw	M10 x 25

52-380

Intern ref.: 6300930

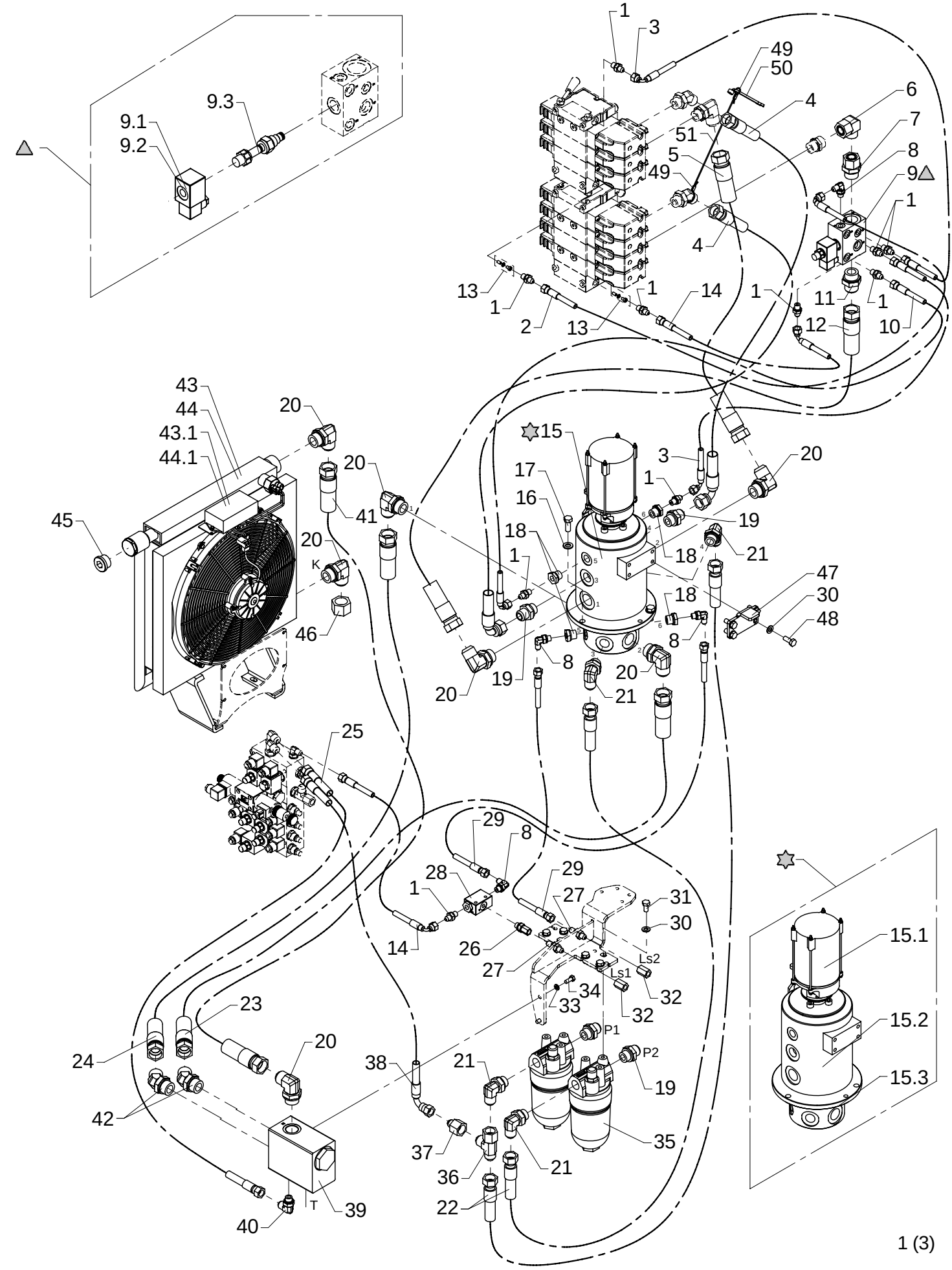

Hydraulic system, pump and return hoses, 2 circuits + variable pump

As from / To loader no.: 96 01 50 / 96 02 07
Created: 30.10.2006
Modified: 02.06.2008

Item no.	Qty.	Part no.	Description	Remarks
1	10	25829	Straight connection	F40XS8 - 1/4
2	1	62887	Hose	1/4" x 550 mm V/O JIC
3	2	62901	Hose	1/4" x 900 mm V/O JIC
4	2	62977	Hose	5/8" x 1100 mm V/O JIC
5	1	56046	Hose	1" x 1000 mm O/O JIC
6	1	25209	Elbow connection	EWSD 22 L
7	1	26391	Straight connection	EGESD 22 LR 1-WD
8	4	25858	Elbow connection	C40XS8 - 1/4
9	1	59061	Dump valve	
		61777	Solenoid	12V
		61778	Solenoid	26V
		59642	Magnet coil	
10	1	62934	Hose	1/4" x 1330 mm V/O JIC
11	1	25863	Straight connection	F40XS25 - 1
12	1	56048	Hose	1" x 900 mm O/O JIC
13	2	62065	Closed center kit	
14	2	62974	Hose	1/4" x 350 mm V/O JIC
15	1	49105	Swivel coupling	
		28549	Swivel coupling, electric	
		49106	Swivel coupling	
		49115	Seal kit	
16	3	31131	Washer	12 mm
17	3	30177	Set screw	M12 x 30
18	4	25180	Reducing connection	RED-R 1/2-WD/R 1/4
19	4	25834	Straight connection	F40XS18/20 - 3/4
20	7	26267	Elbow connection	C40XS25 - 1
21	4	26693	Elbow connection	C40XS18/20 - 3/4
22	2	56045	Hose	5/8" x 1450 mm O/O JIC
23	1	56050	Hose	1" x 1300 mm O/O JIC
24	1	56049	Hose	1" x 1050 mm O/O JIC
25	1	62884	Hose	3/8" x 500 mm O/O JIC
26	1	26272	Straight connection	F64XS 14/16 - 3/8" JIC
27	2	25823	Bulkhead connection	WTX-WLNS 8 JIC
28	1	60338	Shuttle valve	
29	2	56130	Hose	1/4" x 1150 mm O/O JIC
30	10	31177	Washer	10 mm
31	6	30154	Set screw	M10 x 20
32	2	26270	Fitting	TTX4S 8-1/4 JIC
33	2	31155	Spring washer	8 mm
34	2	30132	Set screw, stainless	M8 x 20

Hydraulic system, pump and return hoses, 2 circuits + variable pump

As from / To loader no.: 96 01 50 / 96 02 07
Created: 30.10.2006
Modified: 02.06.2008

Item no.	Qty.	Part no.	Description	Remarks
35	2	60201	High pressure filter	
36	1	25828	Connection	R6XS 20 JIC
37	1	25865	Reducing connection	TRTXS8/20-12
38	1	56091	Hose	3/8" x 350 mm V/O JIC
39	1	59056	Cooler valve	
40	1	25838	Elbow connection	C40XS12 - 3/8
41	1	56262	Hose	3/4" x 2000 mm O/O JIC
42	2	25734	Elbow connection 45°	V40XS25 - 1
43	1	50282	Oil cooler, 24 V + Smartdrive	
		50284	Smartdrive kit for oil cooler	
44	1	50283	Oil cooler, 12 V + Smartdrive	
		50284	Smartdrive kit for oil cooler	
45	1	26321	Plug	VS-R 1" WD
46	1	25848	Screw cap JIC	FNTXS 25 JIC
47	1	6302621	Carrier fitting	
48	4	30155	Set screw	M10 x 25
49	2	62161	Wire lock	
50	1	42953	Adjustable spanner	
51	1	62160	Wire rope, nylon	400 mm

52-380

Intern ref.: 6301730

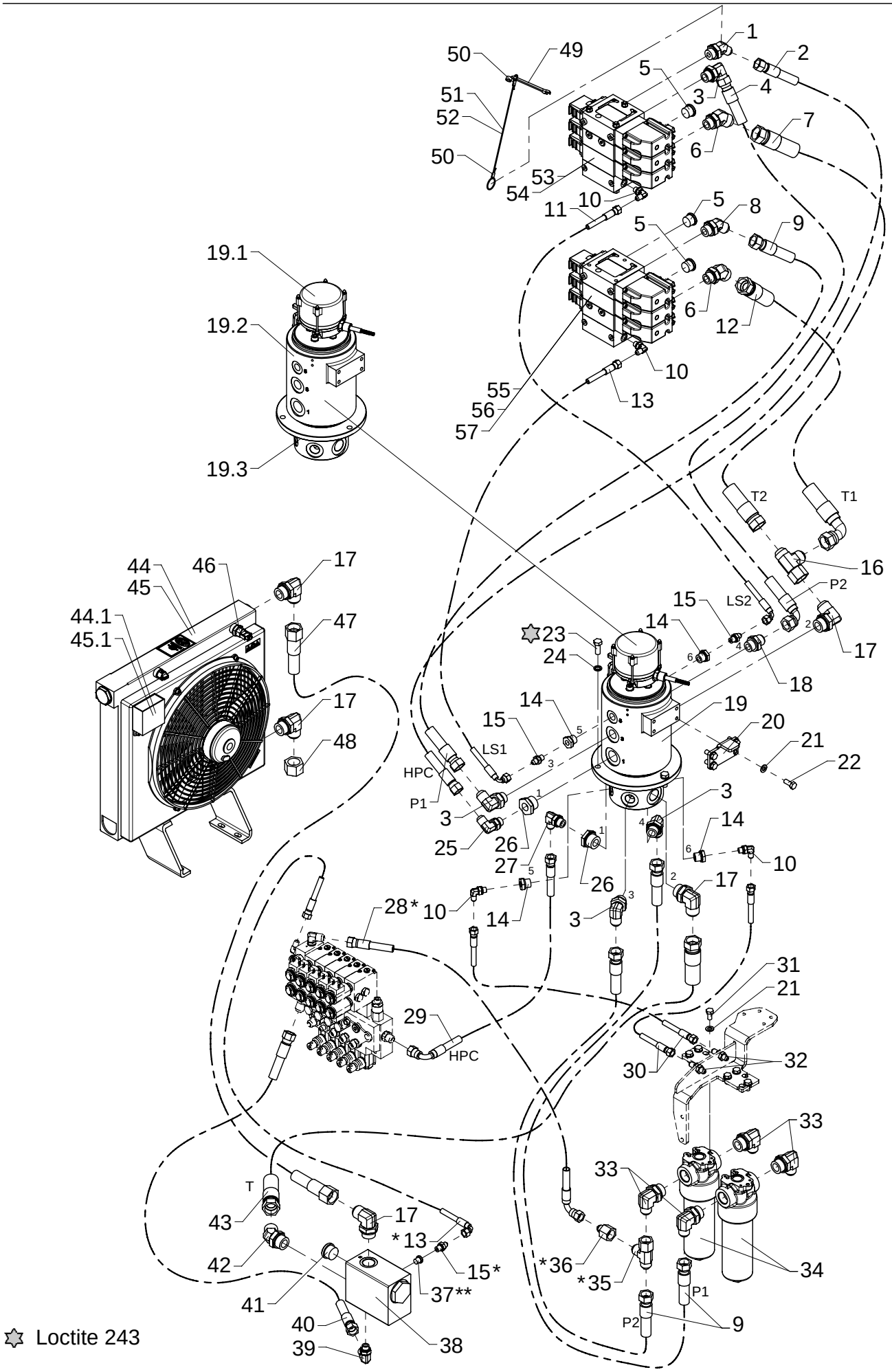

Loctite 243

Hydraulic system, pump and return hoses, 2 circuits + variable pump

As from / To loader no.: 96 02 08
Created: 02.06.2008
Modified: 26.08.2008

Item no.	Qty.	Part no.	Description	Remarks
1	1	26291	Elbow connection 45°	V40XS14-16 - 3/4
2	1	62919	Hose	1/2" x 1550 L/L JIC
3	4	26693	Elbow connection	C40XS18/20 - 3/4
4	1	56025	Hose	5/8" x 1150 90/L JIC
5	3	26355	Plug	VS-R-3/4 WD
6	2	25786	Elbow connection 45°	V40XS25 - 3/4
7	1	56046	Hose	1" x 1050 L/L JIC
8	1	26273	Elbow connection 45°	V40XS18-20 - 3/4
9	3	56045	Hose	5/8" x 1450 L/L JIC
10	4	25858	Elbow connection	C40XS8 - 1/4
11	1	62934	Hose	1/4" x 1330 90/L JIC
12	1	62968	Hose	1" x 900 90/L JIC
13	2	62901	Hose	1/4" x 900 90/L JIC
14	4	25180	Reducing connection	RED-R 1/2-WD/R 1/4
15	3	25829	Straight connection	F40XS8 - 1/4
16	1	25855	T-connection	R6XS 25 JIC
17	5	26267	Elbow connection	C40XS25 - 1
18	1	25834	Straight connection	F40XS18/20 - 3/4
19	1	49217	Swivel coupling	
		49237	Electric part, swivel coupling	
		49106	Hydraulic part,swivel coupling	
		49115	Seal kit	
20	1	6302621	Carrier fitting	
21	10	31177	Washer	10 mm
22	4	30155	Set screw	M10 x 25
23	3	30177	Set screw	M12 x 30
24	3	30935	Nordlock washer	12 mm
25	1	25839	Elbow connection	C40XS14/16 - 1/2
26	2	25227	Reducing connection	RED-R 1-WD/R 1/2
27	1	25806	Elbow connection	C40XS12 - 1/2
28	1	62956	Hose	3/8" x 550 90/L JIC
29	1	56110	Hose	3/8" x 1130 90/L JIC
30	2	56130	Hose	1/4" x 1150 L/L JIC
31	6	30154	Set screw	M10 x 20
32	2	25823	Bulkhead connection	WTX-WLNS 8 JIC
33	4	26785	Elbow connection	C40XS18/20 - 1
34	2	49401	High pressure filter	
35	1	25828	Connection	R6XS 20 JIC
36	1	25865	Reducing connection	TRTXS8/20-12
37	1	25197	Plug	VS-R-1/4 WD

* Stabilizer operation by RC ** Manual stabilizer operation

Hydraulic system, pump and return hoses, 2 circuits + variable pump

As from / To loader no.: 96 02 08
Created: 02.06.2008
Modified: 26.08.2008

Item no.	Qty.	Part no.	Description	Remarks
38	1	59056	Cooler valve	
39	1	26787	Elbow connection	C40XS14/16 - 3/8
40	1	62866	Hose, JIC	1/2" x 850 L/L JIC
41	1	26321	Plug	VS-R 1" WD
42	1	25734	Elbow connection 45°	V40XS25 - 1
43	1	56050	Hose	1" x 1300 L/L JIC
44	1	50262	Oil cooler, 24 V + Smartdrive	
		50292	Electronic box, kit 12+24 V	
45	1	50263	Oil cooler, 12 V + Smartdrive	
		50292	Electronic box, kit 12+24 V	
46	1	50290	Temperature sensor, oil cooler	
47	1	56262	Hose	3/4" x 2000 L/L JIC
48	1	25848	Screw cap JIC	FNTXS 25 JIC
49	2	42953	Adjustable spanner	
50	4	62161	Wire lock	
51	1	62160	Wire rope, nylon	450 mm
52	1	62160	Wire rope, nylon	600 mm
53	1	55613	Control valve	2 sekt.
54	1	55615	Control valve	3 sekt. Winch
55	1	55617	Control valve	2 sekt.
56	1	55619	Control valve	3 sekt. 1 EXV
57	1	55621	Control valve	4 sekt. 2 EXV/FJ

* Stabilizer operation by RC ** Manual stabilizer operation

52-380

Intern ref.: 6301090
6301490
6303090
6303490

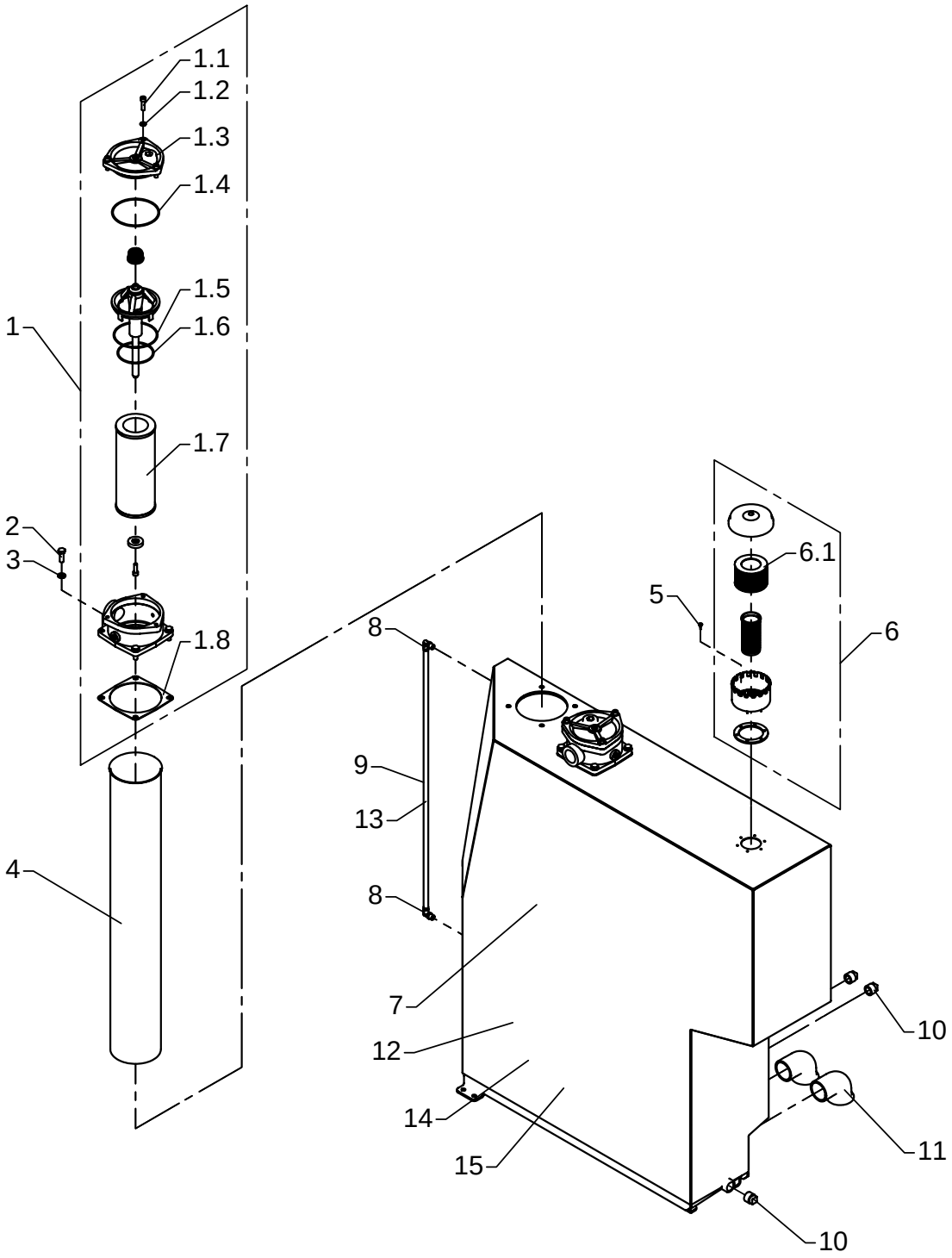

Tank, complete

As from / To loader no.: 96 00 00 /
Created: 15.09.2003
Modified: 29.06.2005

Item no.	Qty.	Part no.	Description	Remarks
1	2	60249	Return filter	
1,1	3	30442	Screw	MC8 x 30
1,2	3	31155	Spring washer	8 mm
1,3	1	60282	Cover	
1,4	1	20197	O-ring	OR 118 x 3
1,5	1	20196	O-ring	OR 109,5 x 3
1,6	1	20191	O-ring	OR 89,5 x 3
1,7	1	60250	Filter cartridge	
1,8	1	60283	Seal	
2	8	30156	Set screw, stainless	M10 x 30
3	8	31565	Washer, stainless	10 mm
4	2	58409	Pipe	
5	6	30737	Sheet metal screw	UH4,8 x 16
6	1	60275	Air filter	
6,1	1	60276	Filter	
7	1	49152	Oil tank, 320 l, black	
8	2	25535	Elbow connection	
9	1	62472	Nylon pipe	850 mm
10	3	26914	Plug 3/4"	
11	2	25430	Elbow	
12	1	49151	Oil tank 390 l, black	
13	1	62472	Nylon pipe	1040 mm
14	1	49154	Oil tank 390 l	
15	1	49155	Oil tank 320 l	

52-380

Intern ref.: 6301390

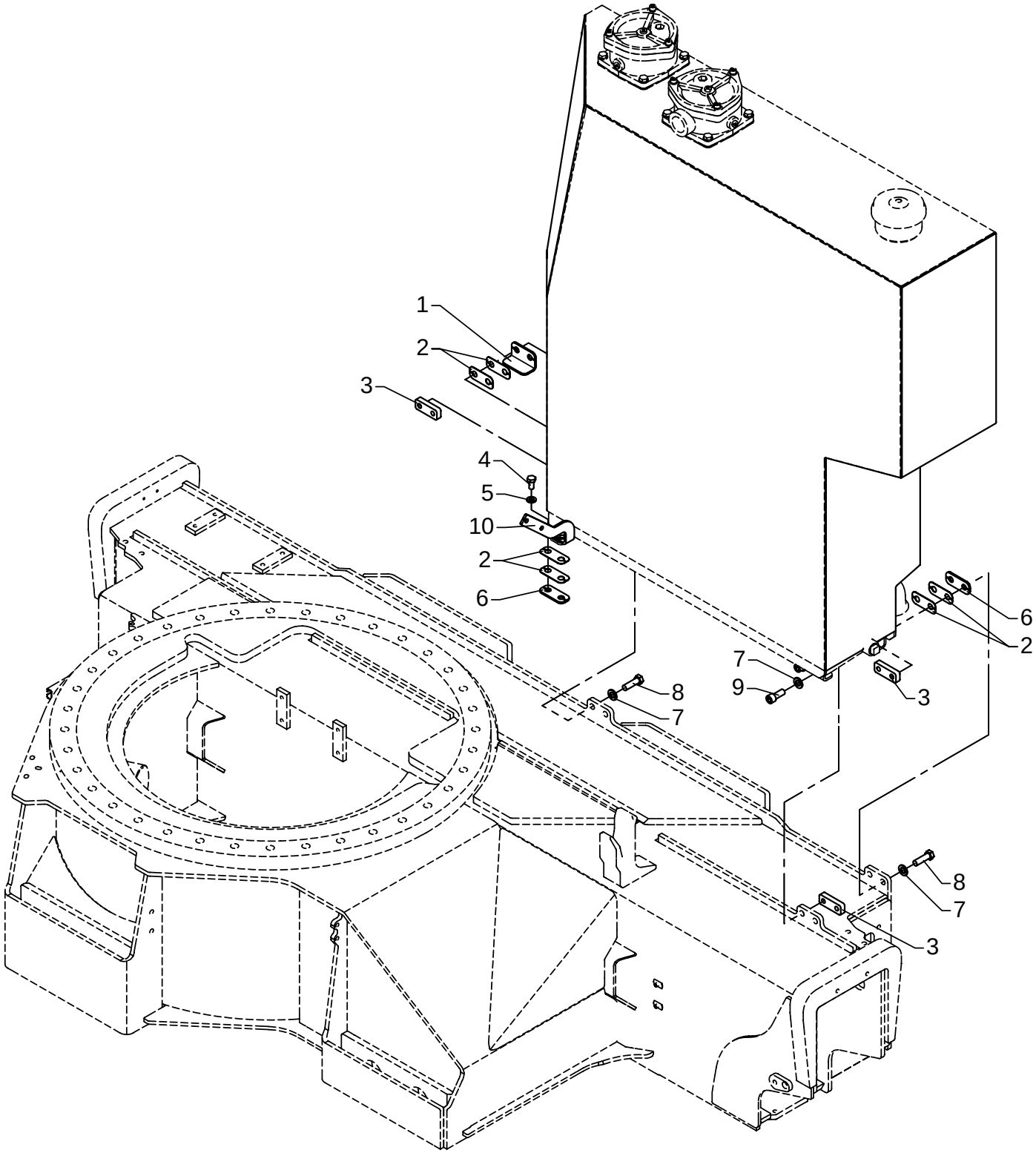

Fittings for tank

As from / To loader no.: 96 00 00 /
Created: 15.09.2003
Modified: 22.11.2003

Item no.	Qty.	Part no.	Description	Remarks
1	1	6301086	Spacer	
2	6	6301084	Division plate	
3	3	6301081	Spacer	
4	2	31517	Set screw, stainless	M10 x 20
5	2	31177	Washer	10 mm
6	2	6301085	Division plate	
7	6	31131	Washer	12 mm
8	4	31533	Set screw, stainless	M12 x 40
9	2	31542	Sockethead screw, stainless	MC12 x 30
10	1	6301069	Fitting	

52-380

Intern ref.: 6301420

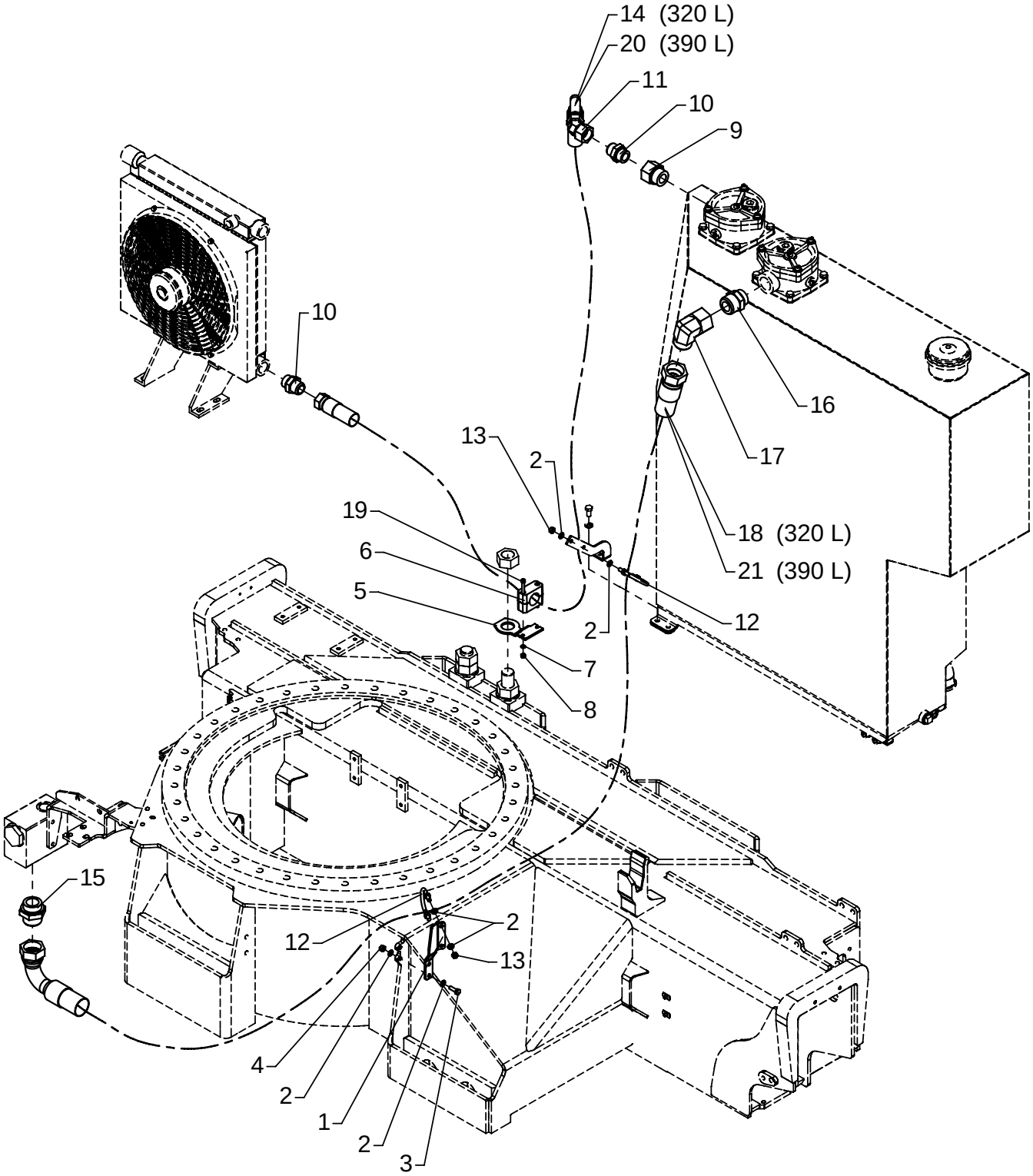

Hose kit for tank

As from / To loader no.: 96 00 00 /
Created: 20.11.2003
Modified: 25.06.2007

Item no.	Qty.	Part no.	Description	Remarks
1	1	6301068	Fitting	
2	12	31147	Washer, stainless	8 mm
3	2	31009	Set screw	M8 x 25
4	2	30886	Lock nut, stainless	M8
5	1	6301067	Fitting	
6	1	31468	Clamp	
7	2	32302	Face washer, stainless	6 mm
8	2	30884	Lock nut, stainless	M6
9	1	26818	Reducing connection	RED-R 1 1/4-WD/R 1
10	2	25863	Straight connection	F40XS 25-1 JIC
11	1	26285	Elbow connection	V6XS 25 JIC
12	2	31828	Hose clip	
13	4	30856	Nut, stainless	
14	1	56135	Hose	1" x 1650 mm V/O JIC
15	1	26742	Straight connection	F40XS 38-1 1/2 JIC
16	1	26735	Straight connection	F40XS 38-1 1/4 JIC
17	1	26741	Elbow	C6XS 38 JIC
18	1	56136	Hose	1.1/2" x 3200 mm V/O JIC
19	2	30966	Screw	MC6 x 65
20	1	56140	Hose	1" x 1840 mm V/O JIC
21	1	56141	Hose	1.1/2" x 3390 mm V/O JIC

52-380

Intern ref.: 6300640

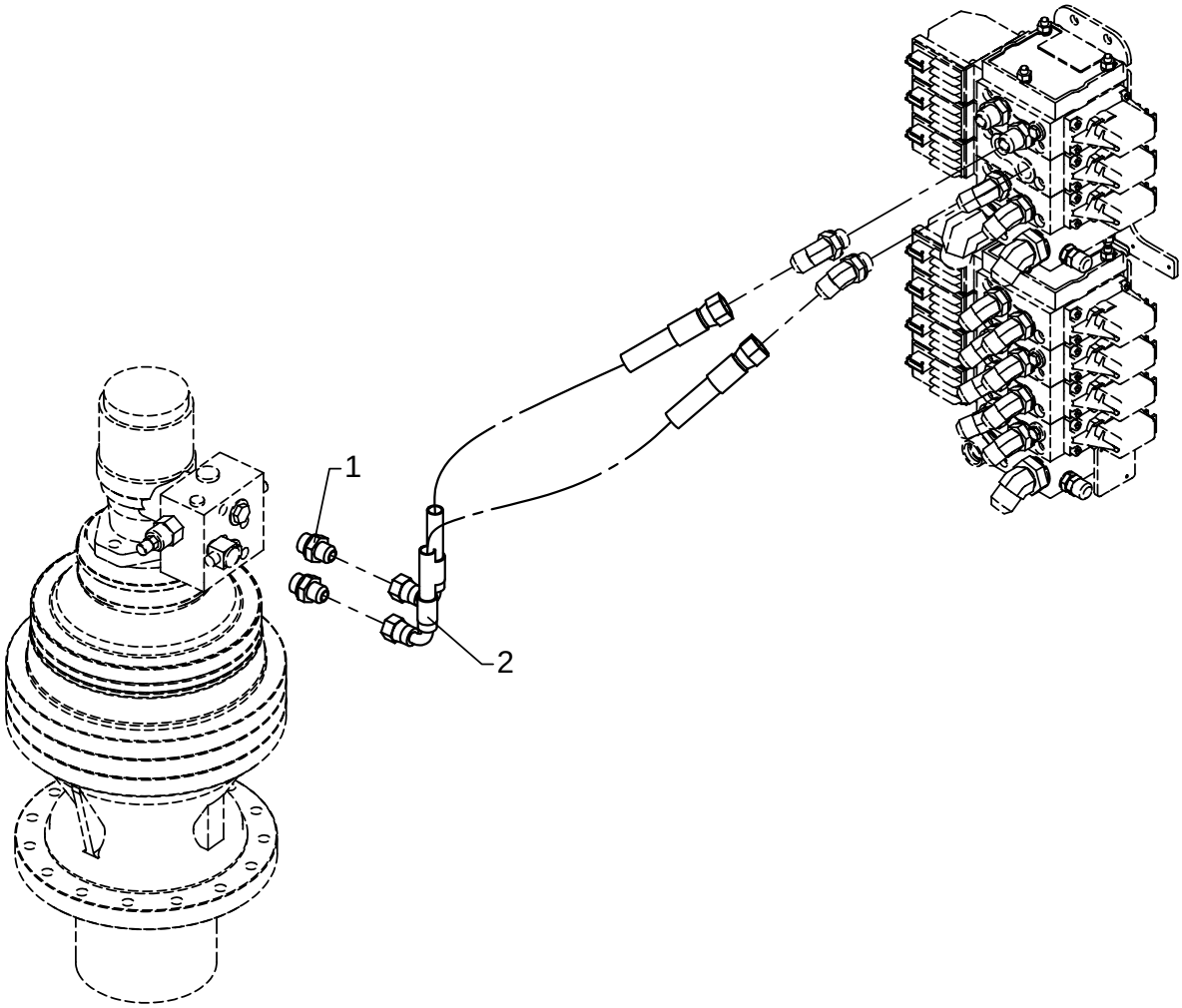

Hydraulic system, planetary gear

As from / To loader no.: 96 00 00 /
Created: 03.10.2003
Modified:

Item no.	Qty.	Part no.	Description	Remarks
1	2	25832	Straight connection	F40XS 12-1/2 JIC
2	2	56057	Hose	3/8" x 675 mm V/O JIC

52-380

Intern ref.: 6300120

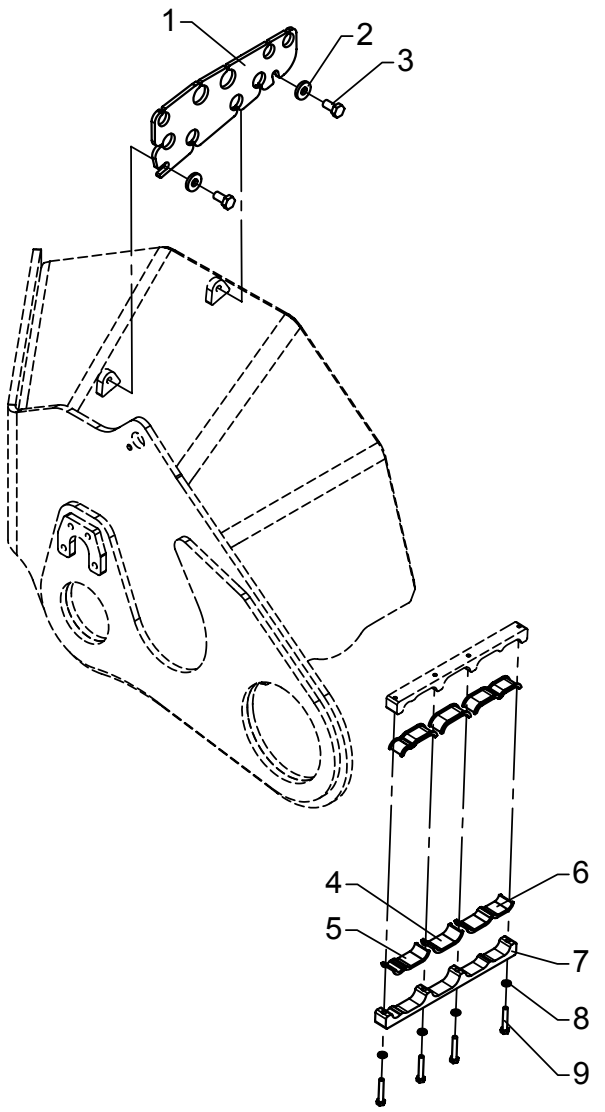

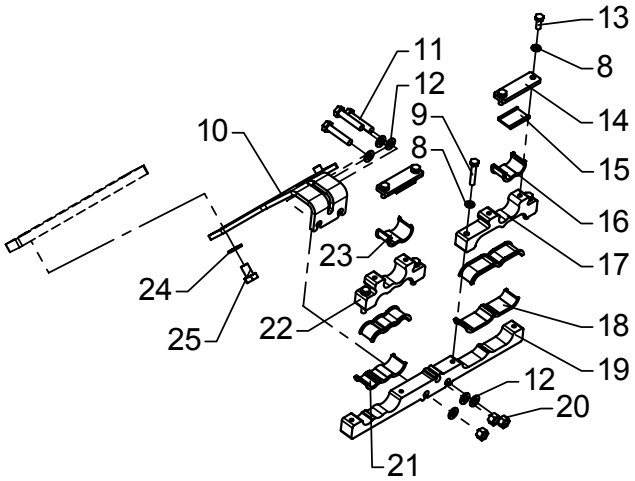

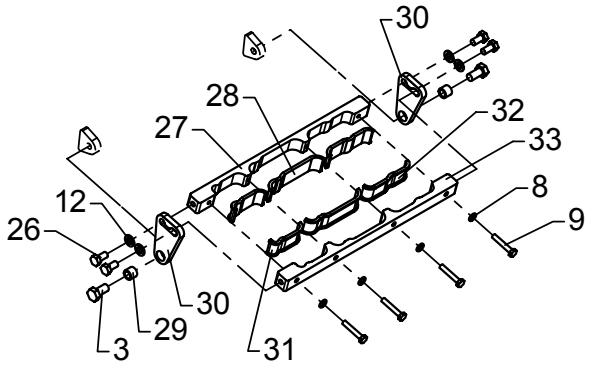

Hose clamp

As from / To loader no.: 96 00 00 / 96 01 57
Created: 03.10.2003
Modified: 02.04.2007

Item no.	Qty.	Part no.	Description	Remarks
1	1	6300667	Bracket, bulkhead connection K	
2	2	31756	Washer	10 mm
3	4	30154	Set screw	M10 x 20
4	2	64310	Rubber section	63 mm
5	2	64310	Rubber section	73 mm
6	2	64310	Rubber section	95 mm
7	1	6300665	Clamp - K	
8	16	31154	Spring washer, stainless	6 mm
9	12	30116	Steel bolt, stainless	M6 x 35
10	1	6300664	Bracket for clamp - N	
11	3	30137	Set screw, stainless	M8 x 40
12	10	31147	Washer, stainless	8 mm
13	4	30112	Set screw, stainless	M6 x 16
14	2	6300668	Fitting	
15	2	64310	Rubber section	35 mm
16	1	64310	Rubber section	62 mm
17	1	6300663	Clamp N - H	
18	2	64310	Rubber section	108 mm
19	1	6300661	Clamp N - 1	
20	3	30886	Lock nut, stainless	M8
21	2	64310	Rubber section	83 mm
22	1	6300662	Clamp N - V	
23	1	64310	Rubber section	67 mm
24	2	31177	Washer	10 mm
25	2	30153	Set screw	M10 x 16
26	4	30131	Set screw, stainless	M8 x 16
27	1	6300652	Hose bracket	
28	2	64310	Rubber section	109 mm
29	2	6302369	Spacer	
30	2	6300653	Clamp	
31	2	64310	Rubber section	68 mm
32	2	64310	Rubber section	90 mm
33	1	6300651	Hose bracket	

52-380

Intern ref.: 6300120

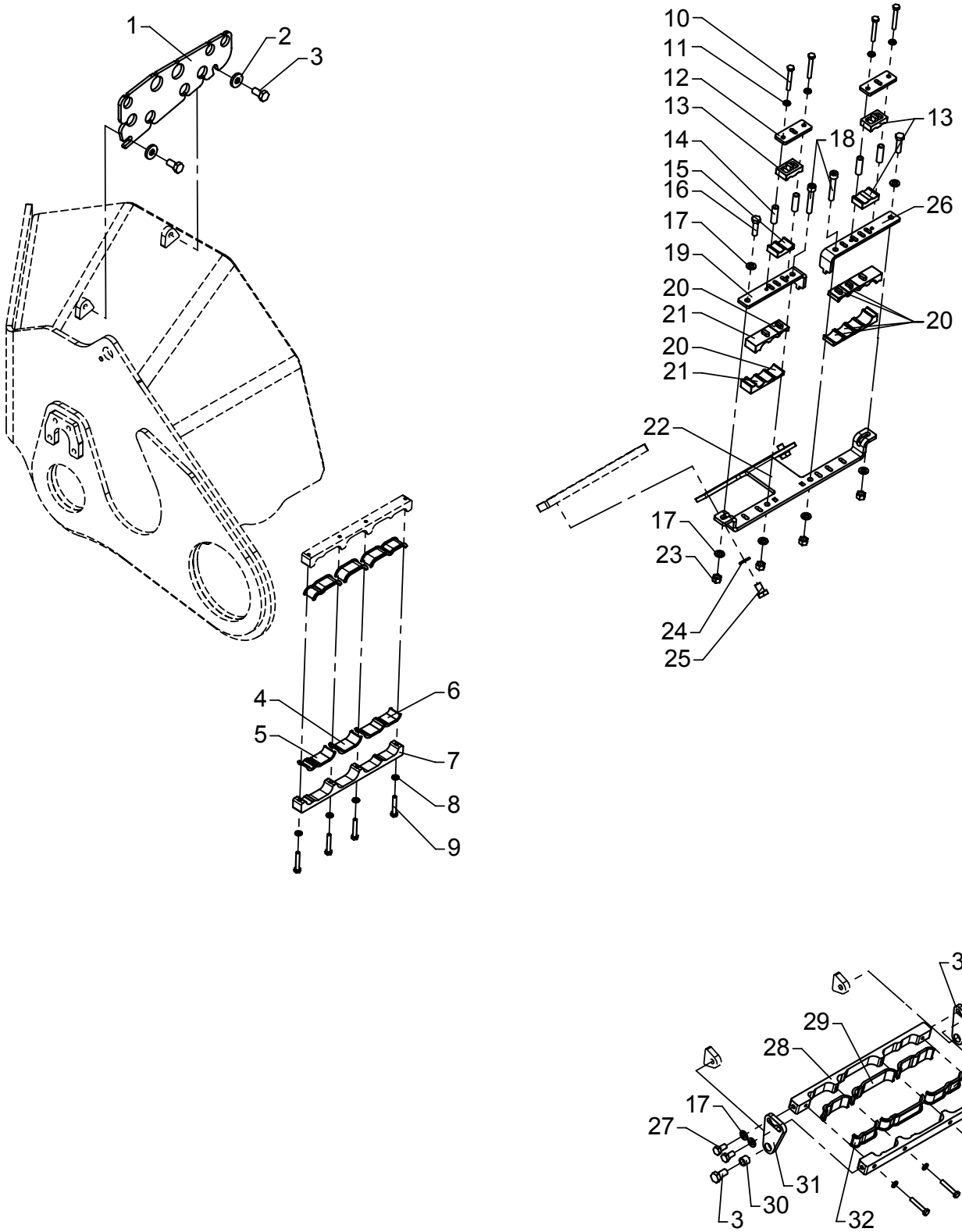

Hose clamp

As from / To loader no.: 96 01 58 /
Created: 03.10.2003
Modified:

Item no.	Qty.	Part no.	Description	Remarks
1	1	6300667	Bracket, bulkhead connection K	
2	2	31756	Washer	10 mm
3	4	30154	Set screw	M10 x 20
4	2	64310	Rubber section	63 mm
5	2	64310	Rubber section	73 mm
6	2	64310	Rubber section	95 mm
7	1	6300665	Clamp - K	
8	8	31154	Spring washer, stainless	6 mm
9	8	30116	Steel bolt, stainless	M6 x 35
10	4	30118	Steel bolt, stainless	M6 x 45
11	4	32302	Face washer, stainless	6 mm
12	2	6301155	Plate	
13	3	63561	Clamp	
14	4	6301157	Spacer	
15	1	63562	Clamp	
16	2	30135	Set screw, stainless	M8 x 30
17	10	31147	Washer, stainless	8 mm
18	2	30468	Screw	MC8 x 50
19	1	6301154	Plate	
20	6	63477	Clamp	
21	4	63563	Clamp	
22	1	6301153	Clamp	
23	4	30886	Lock nut, stainless	M8
24	2	31177	Washer	10 mm
25	2	30153	Set screw	M10 x 16
26	1	6301156	Plate	
27	4	30131	Set screw, stainless	M8 x 16
28	1	6300652	Hose bracket	
29	2	64310	Rubber section	109 mm
30	2	6302369	Spacer	
31	2	6300653	Clamp	
32	2	64310	Rubber section	68 mm
33	2	64310	Rubber section	90 mm
34	1	6300651	Hose bracket	

52-380

Intern ref.: 6300880

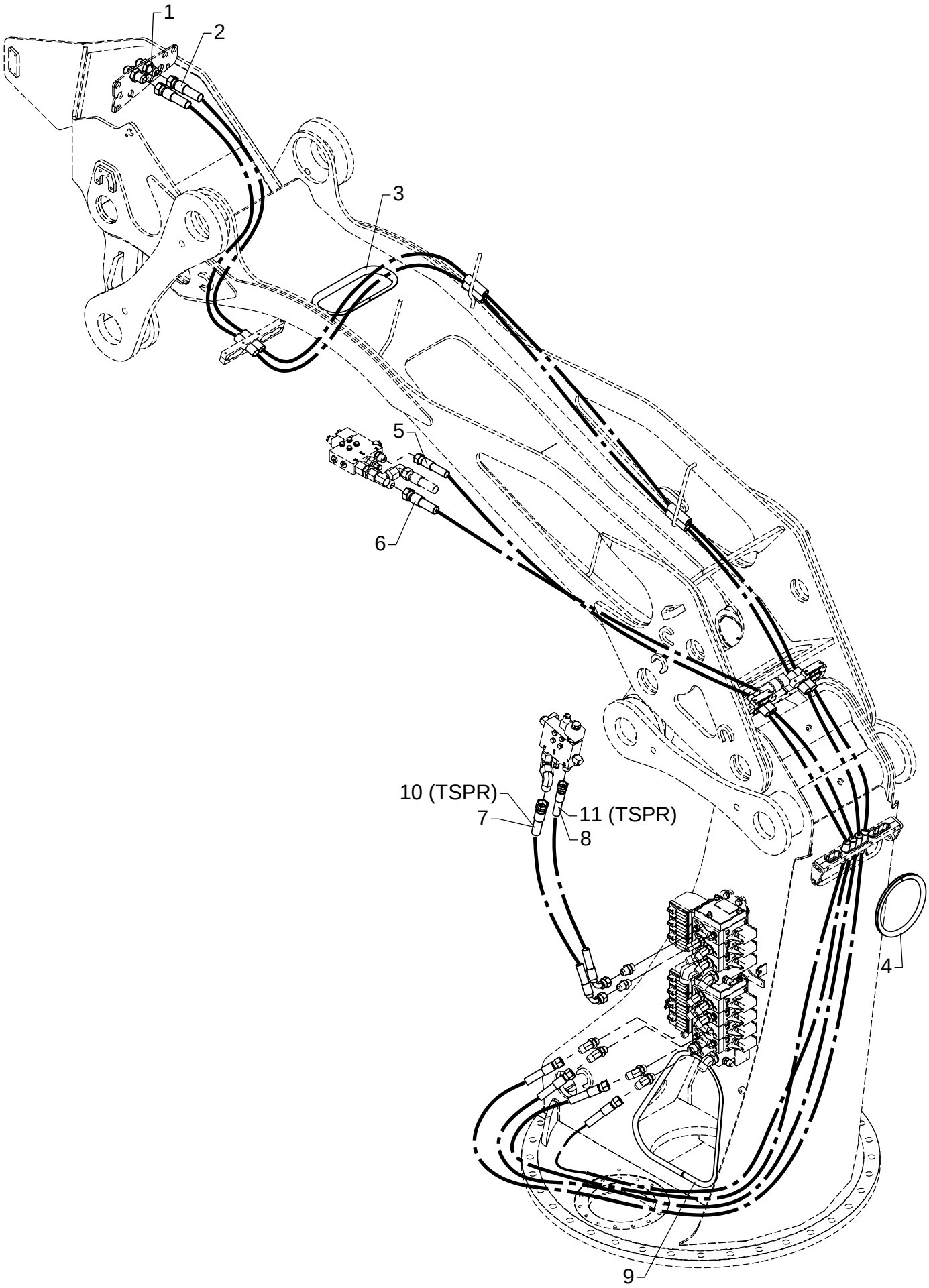

Hydraulic system, boom, jib and ext.

As from / To loader no.: 96 00 00 /
Created: 03.10.2003
Modified: 05.01.2005

Item no.	Qty.	Part no.	Description	Remarks
1	2	25862	Bulkhead connection	WTX-WLNS 20 JIC
2	2	56053	Hose	5/8" x 5900 mm O/O JIC
3	1	64300	PVC protection	684 mm
4	1	46587	Rubber protection	565 mm
5	1	62868	Hose, JIC	1/2" x 3900 mm O/O JIC
6	1	56054	Hose	5/8" x 3800 mm O/O JIC
7	1	56051	Hose	5/8" x 875 mm V/O JIC
8	1	56052	Hose	1/2" x 850 mm V/O JIC
9	1	46587	Rubber protection	1321 mm
10	1	56137	Hose	5/8" x 950 L/L JIC 20/16
11	1	62892	Hose	1/2" x 1000 L/L JIC
12	1	64300	PVC protection	820 mm

52-380

Intern ref.: 6300680

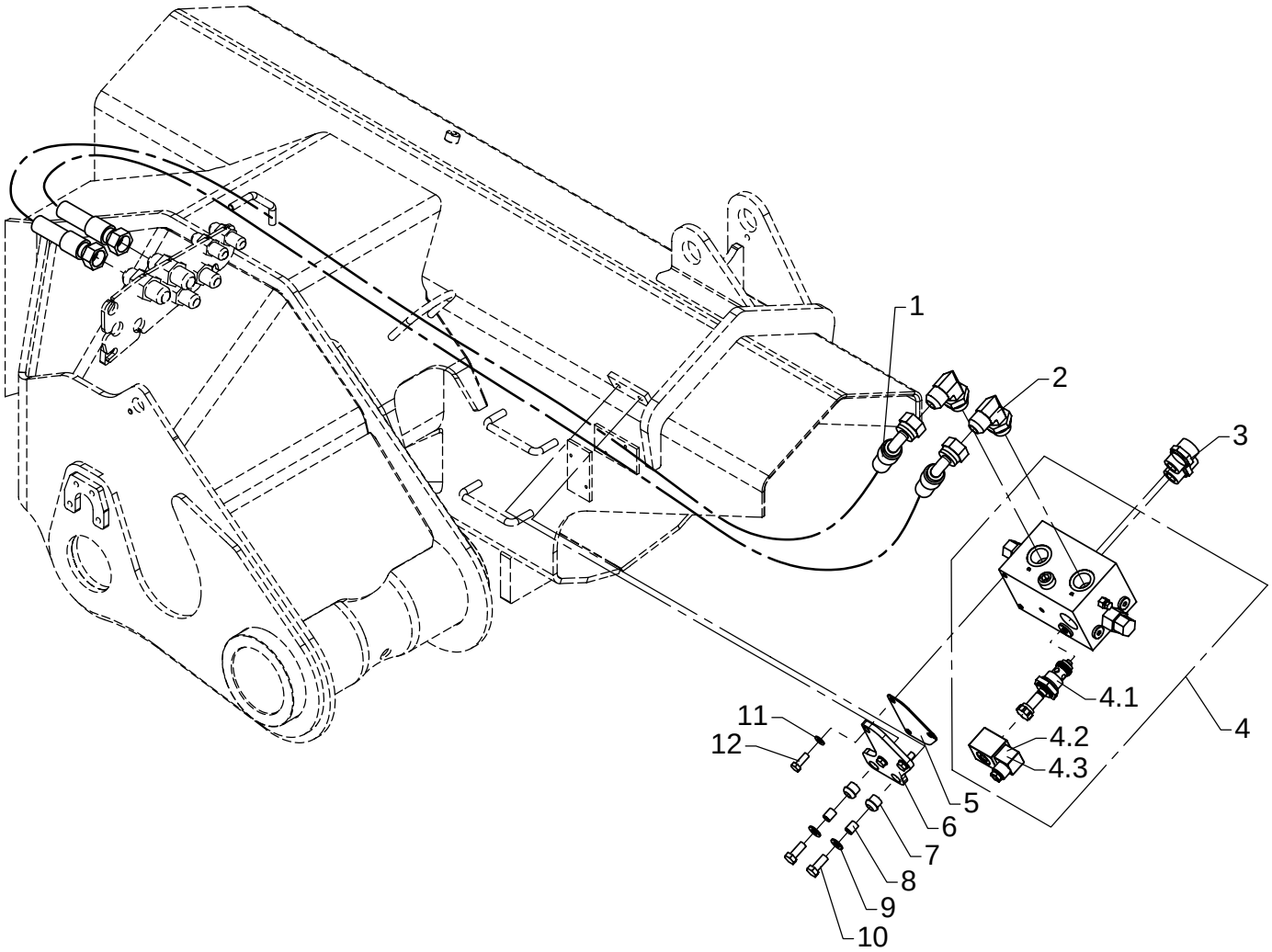

Hydraulic system, regeneration

As from / To loader no.: 96 00 00 /
Created: 03.10.2003
Modified:

Item no.	Qty.	Part no.	Description	Remarks
1	2	56080	Hose	5/8" x 1400 mm V/O JIC
2	2	26693	Elbow connection	C40XS 18/20-3/4 JIC
3	2	26197	Connection	GEV 20 SR-WD
4	1	59065	Regeneration valve	
		59071	Magnet coil	
		61777	Solenoid	12V
		61778	Solenoid	26V
5	1	6300608	Division plate	
6	1	6300605	Bracket	
7	2	27088	Rubber bushing	
8	2	6300607	Spacer	
9	2	31177	Washer	10 mm
10	2	30155	Set screw	M10 x 25
11	3	31147	Washer, stainless	8 mm
12	3	30133	Set screw, stainless	M8 x 22

52-380

Intern ref.: 6300700

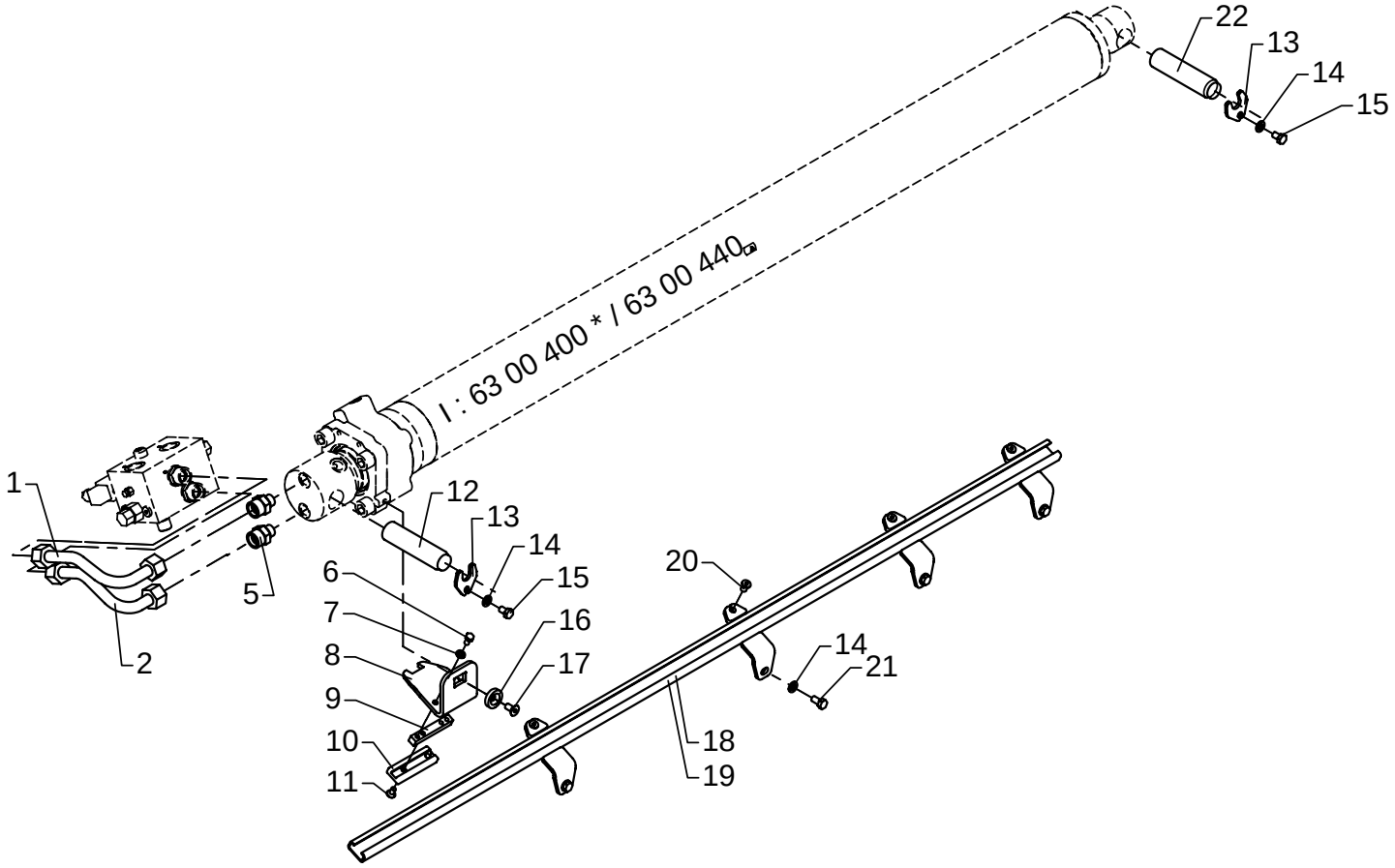

Hydraulic system, extension cylinder, I

As from / To loader no.: 96 00 00 /
Created: 03.10.2003
Modified: 13.09.2004

Item no.	Qty.	Part no.	Description	Remarks
1	1	6300701	Pipe	
2	1	6300702	Pipe	
3	1	6301701	Pipe	#
4	1	6301702	Pipe	#
5	2	26221	Connection	GEV 20 S/R 1/2-WD
6	2	30131	Set screw, stainless	M8 x 16
7	2	31147	Washer, stainless	8 mm
8	1	6300337	Bracket, C-I	
9	1	6300338	Spacer	
10	1	63686	Guide shoe	
11	2	30543	Countersunk screw	MK8 x 16
12	1	6302276	Pin	
13	2	6302277	Lock plate	
14	6	31177	Washer	10 mm
15	2	31510	Set screw, stainless	M10 x 16
16	1	6300339	Disc	
17	1	30545	Countersunk screw	MK10 x 20
18	1	6300354	Guide rail, I-K5	*
19	1	6300355	Guide rail, I-K8	
20	4	32423	Sockethead screw	MC10 x 16
21	4	30154	Set screw	M10 x 20
22	1	6302274	Pin	

* Optimised boom system

Personnel basket

52-380

Intern ref.: 6300710

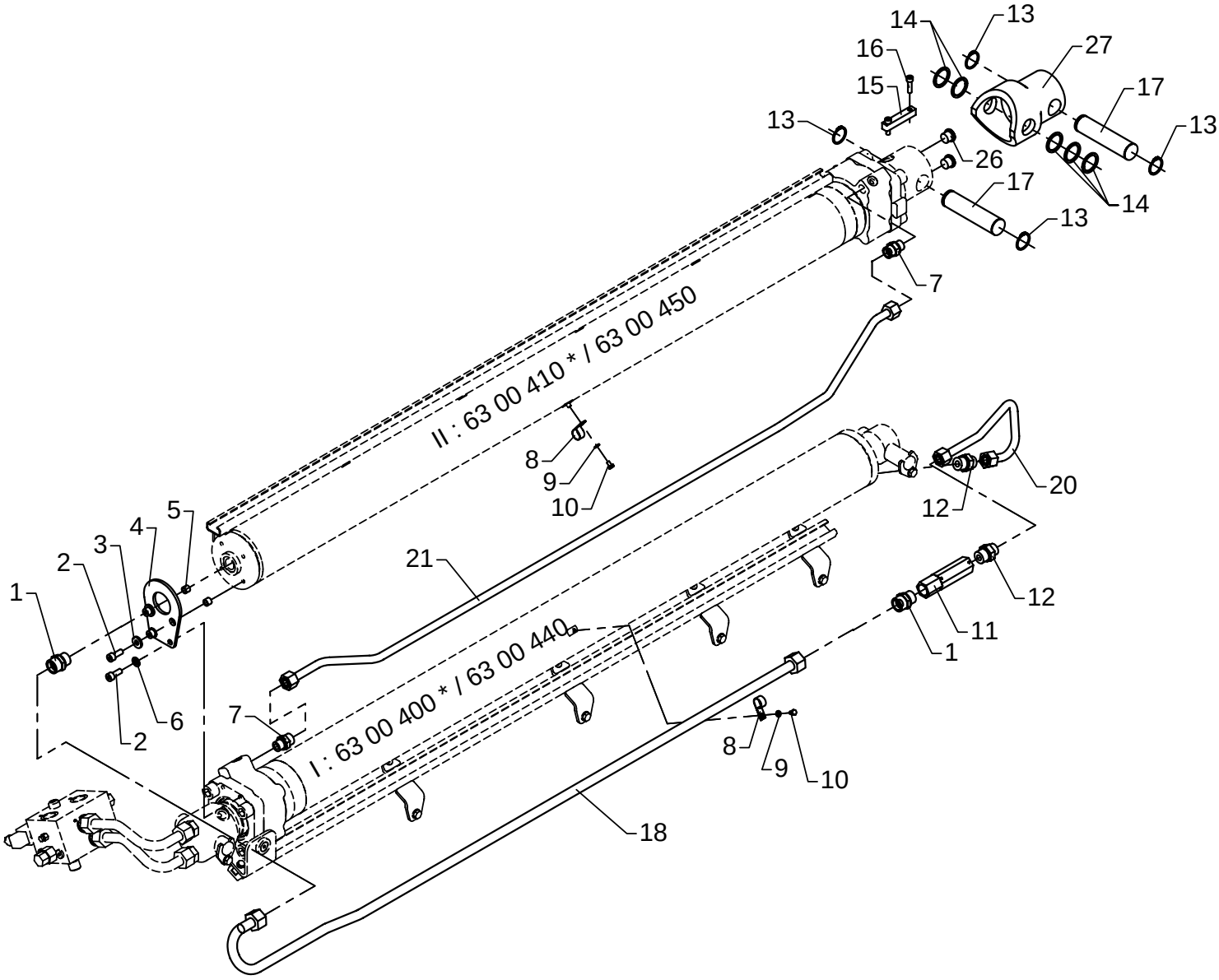

Hydraulic system, extension cylinder, II

As from / To loader no.: 96 00 00 /
Created: 03.10.2003
Modified: 13.09.2004

Item no.	Qty.	Part no.	Description	Remarks
1	2	26197	Connection	GEV 20 SR-WD
2	4	30453	Screw	MC10 x 25
3	2	31756	Washer	10 mm
4	1	6300348	Bracket, C-II	
5	2	6302369	Spacer	
6	2	31177	Washer	10 mm
7	2	26334	Connection	GEV 16 SR-WD
8	2	31449	Clamp	
9	2	32302	Face washer, stainless	6 mm
10	2	30110	Set screw, stainless	M6 x 10
11	1	59076	Counter-balance valve	
12	2	26390	Connection	GEV 16 S/R 3/4-WD
13	4	33119	Circlip	36U
14	5	33257	Supporting washer	SS 36 x 45 x 2,5
15	2	6302279	Lock plate	
16	4	30442	Screw	MC8 x 30
17	2	6193254	Pin	
18	1	6300711	Pipe	*
19	1	6302711	Pipe	
20	1	6300712	Pipe	
21	1	6300713	Pipe	*
22	1	6302713	Pipe	
23	1	6301711	Pipe	#
24	1	6301712	Pipe	#
25	1	6303711	Pipe	#
26	2	25103	Plug	VS-R-1/2 WD
27	1	6300377	Adapter	K2 + K3

* Optimised boom system

Personnel basket

52-380

Intern ref.: 6300720

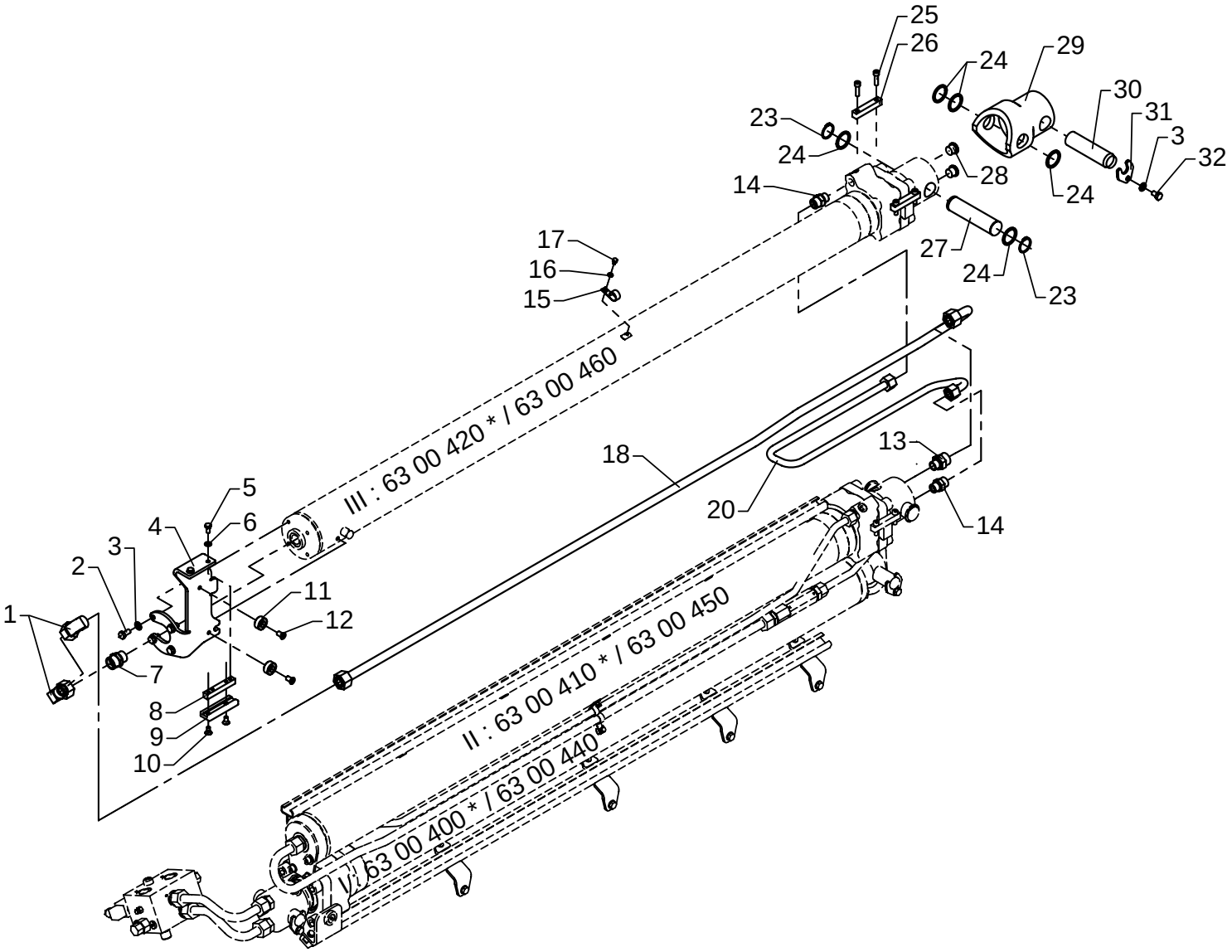

Hydraulic system, extension cylinder, III

As from / To loader no.: 96 00 00 /
Created: 03.10.2003
Modified: 13.09.2004

Item no.	Qty.	Part no.	Description	Remarks
1	2	26198	Elbow connection	EWVD 20 S-SV
2	4	30154	Set screw	M10 x 20
3	5	31177	Washer	10 mm
4	1	6300349	Bracket for guide shoe, C-III	
5	2	30131	Set screw, stainless	M8 x 16
6	2	31147	Washer, stainless	8 mm
7	1	26197	Connection	GEV 20 SR-WD
8	1	6300338	Spacer	
9	1	63686	Guide shoe	
10	2	30543	Countersunk screw	MK8 x 16
11	2	63503	Bushing	
12	2	32423	Sockethead screw	MC10 x 16
13	1	26221	Connection	GEV 20 S/R 1/2-WD
14	2	26334	Connection	GEV 16 SR-WD
15	1	31449	Clamp	
16	1	32302	Face washer, stainless	6 mm
17	1	30110	Set screw, stainless	M6 x 10
18	1	6300721	Pipe	*
19	1	6302721	Pipe	
20	1	6300722	Pipe	
21	1	6301721	Pipe	#
22	1	6303721	Pipe	#
23	2	33119	Circlip	36U
24	5	33257	Supporting washer	SS 36 x 45 x 2,5
25	4	30442	Screw	MC8 x 30
26	2	6302279	Lock plate	
27	1	6193254	Pin	
28	2	25103	Plug	VS-R-1/2 WD
29	1	6300377	Adapter	K2 + K3
30	1	6302276	Pin	
31	1	6302277	Lock plate	
32	1	31510	Set screw, stainless	M10 x 16

* Optimised boom system

Personnel basket

52-380

Intern ref.: 6300730

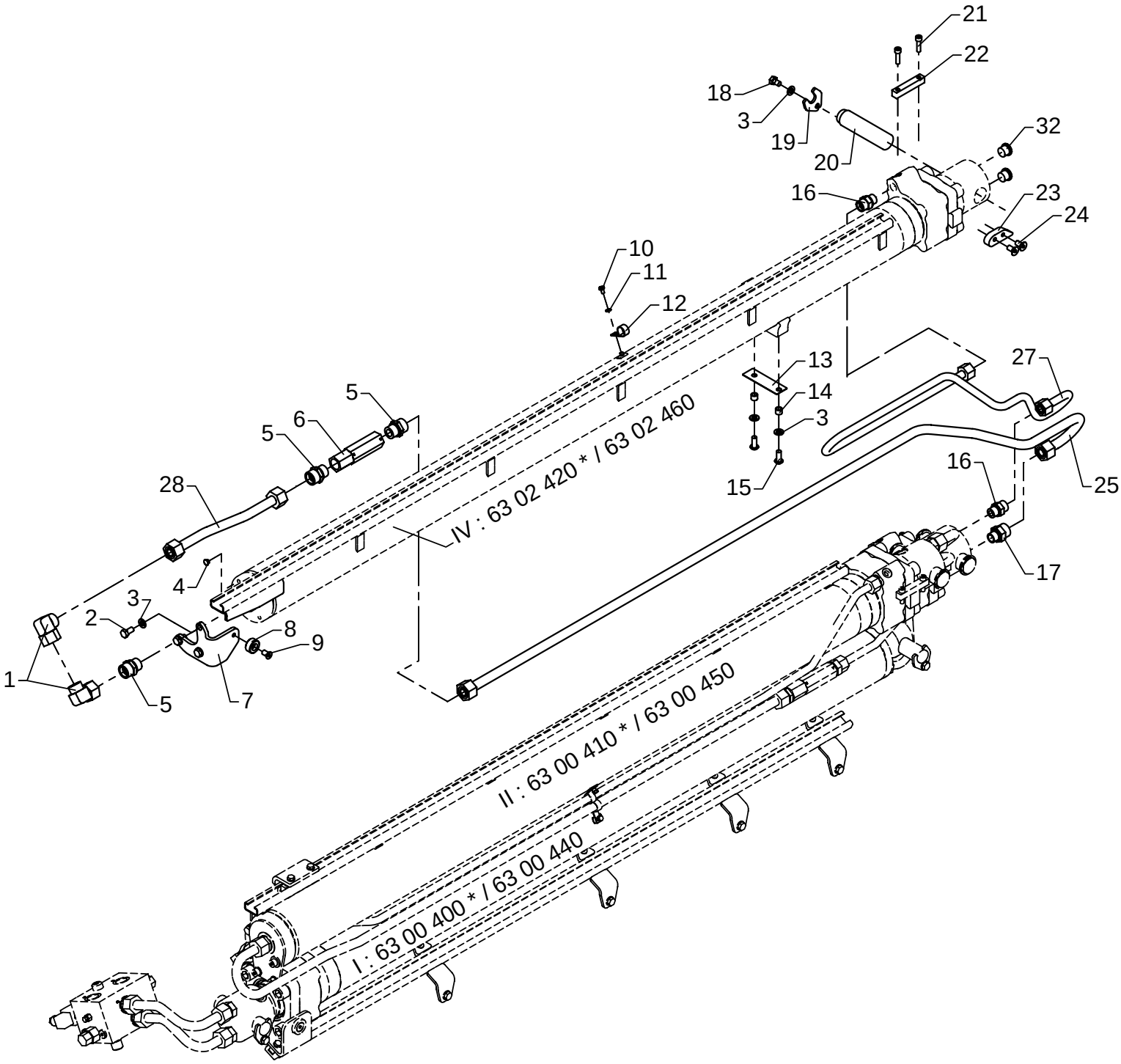

Hydraulic system, extension cylinder, IV

As from / To loader no.: 96 00 00 /
Created: 03.10.2003
Modified: 13.09.2004

Item no.	Qty.	Part no.	Description	Remarks
1	2	26198	Elbow connection	EWVD 20 S-SV
2	3	30154	Set screw	M10 x 20
3	6	31177	Washer	10 mm
4	1	64366	Plug	
5	3	26197	Connection	GEV 20 SR-WD
6	1	59076	Counter-balance valve	
7	1	6300457	Guide	
8	1	63503	Bushing	
9	1	32423	Sockethead screw	MC10 x 16
10	1	30110	Set screw, stainless	M6 x 10
11	1	32302	Face washer, stainless	6 mm
12	1	31449	Clamp	
13	1	6302389	Shim	
14	2	6302369	Spacer	
15	2	30652	Screw	M10 x 25
16	2	26334	Connection	GEV 16 SR-WD
17	1	26221	Connection	GEV 20 S/R 1/2-WD
18	1	31510	Set screw, stainless	M10 x 16
19	1	6302277	Lock plate	
20	1	6302276	Pin	
21	2	30442	Screw	MC8 x 30
22	1	6302279	Lock plate	
23	1	6302275	Lock plate	
24	2	30545	Countersunk screw	MK10 x 20
25	1	6300731	Pipe	*
26	1	6302731	Pipe	
27	1	6300732	Pipe	
28	1	6300733	Pipe	
29	1	6301731	Pipe	#
30	1	6301733	Pipe	#
31	1	6303731	Pipe	#
32	2	25103	Plug	VS-R-1/2 WD

* Optimised boom system

Personnel basket

52-380

Intern ref.: 6300740

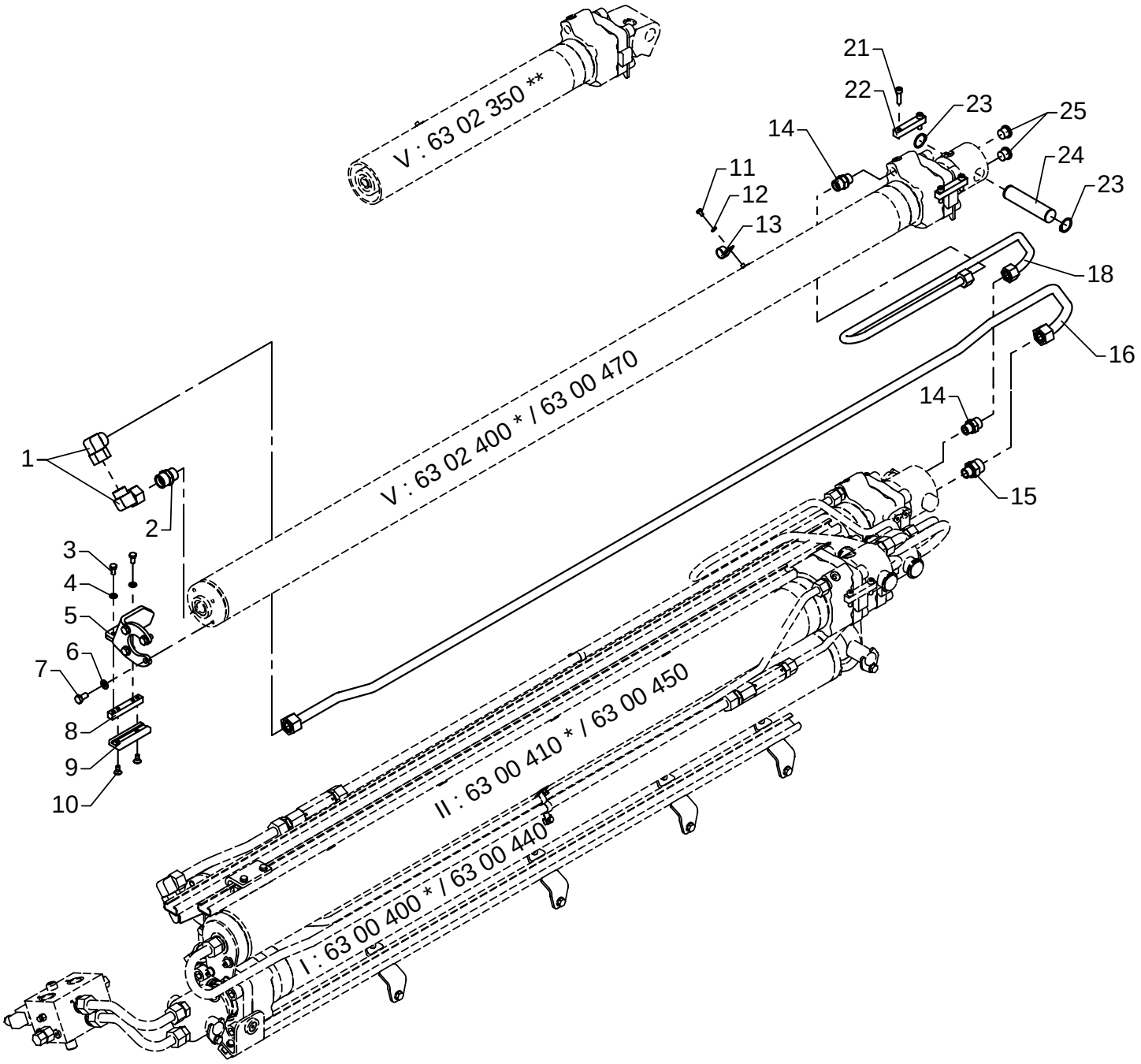

Hydraulic system, extension cylinder, V

As from / To loader no.: 96 00 00 /
Created: 03.10.2003
Modified: 13.09.2004

Item no.	Qty.	Part no.	Description	Remarks
1	2	26198	Elbow connection	EWVD 20 S-SV
2	1	26197	Connection	GEV 20 SR-WD
3	2	30131	Set screw, stainless	M8 x 16
4	2	31147	Washer, stainless	8 mm
5	1	6300456	Bracket for guide shoe, C-V	
6	4	31177	Washer	10 mm
7	4	30154	Set screw	M10 x 20
8	1	6300338	Spacer	
9	1	63686	Guide shoe	
10	2	30543	Countersunk screw	MK8 x 16
11	1	30110	Set screw, stainless	M6 x 10
12	1	32302	Face washer, stainless	6 mm
13	1	31449	Clamp	
14	2	26334	Connection	GEV 16 SR-WD
15	1	26221	Connection	GEV 20 S/R 1/2-WD
16	1	6300745	Pipe	*
17	1	6302745	Pipe	
18	1	6302746	Pipe	
19	1	6301745	Pipe	#
20	1	6303745	Pipe	#
21	4	30442	Screw	MC8 x 30
22	2	6302279	Lock plate	
23	2	33115	Circlip	24U
24	1	6302278	Pin	
25	2	25103	Plug	VS-R-1/2 WD

* Optimised boom system OK5
** Optimised boom system OK6

Personnel basket

52-380

Intern ref.: 6301530

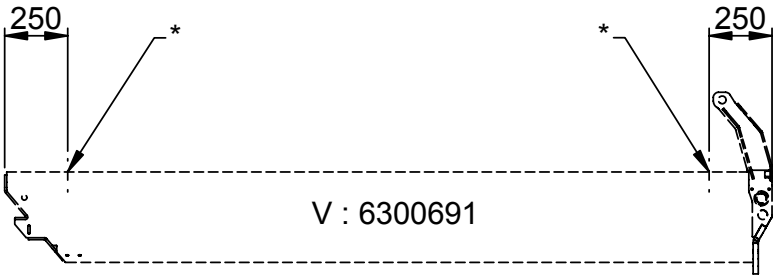

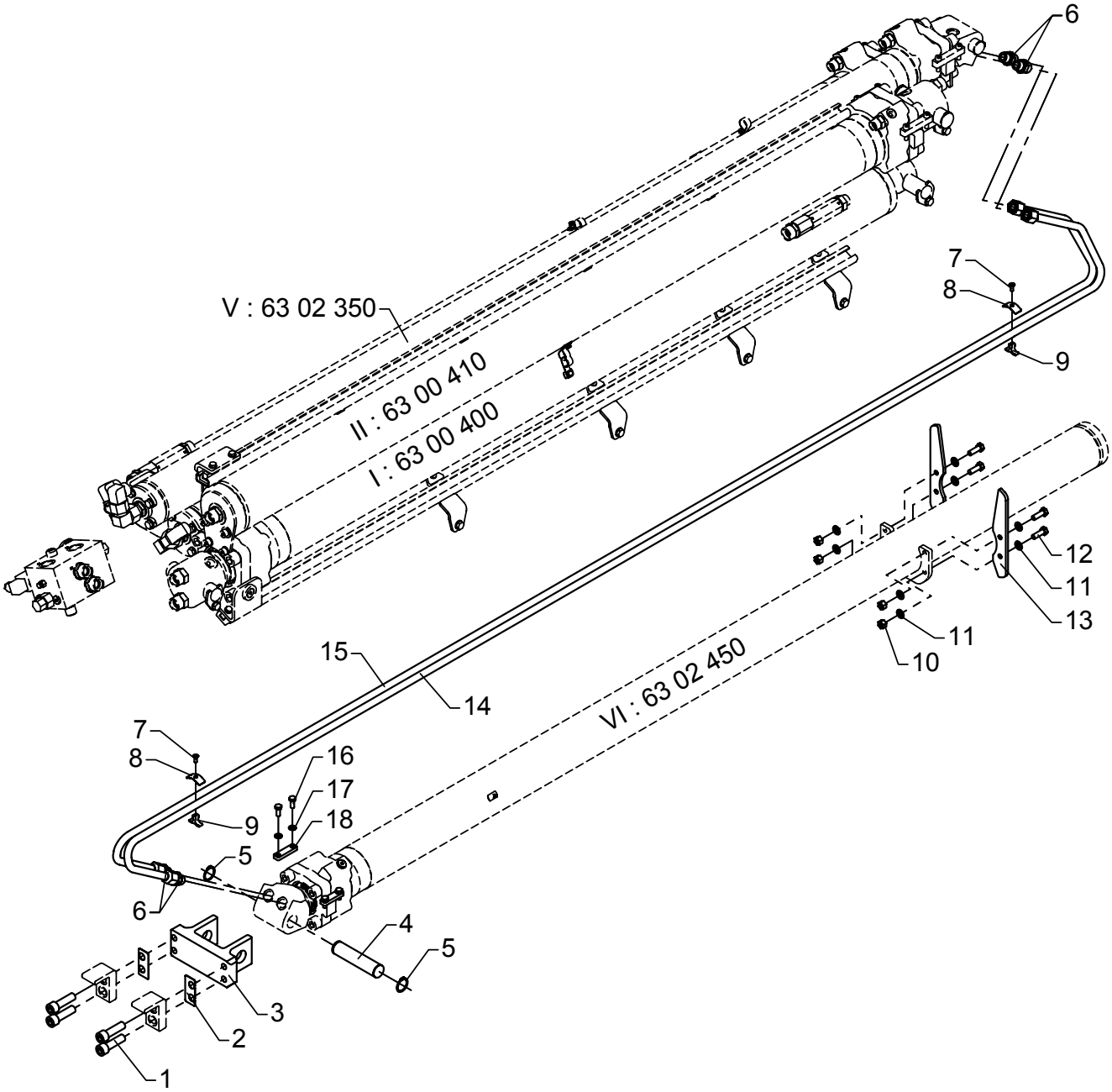

Hydraulic system, extension cylinder, VI
Optimised boom system OK6

As from / To loader no.: 96 00 00 /
Created: 27.05.2004
Modified: 23.08.2004

Item no.	Qty.	Part no.	Description	Remarks
1	4	32420	Sockethead screw	MC16 x 55
2	2	6302638	Base plate	
3	1	6302637	Adapter	
4	1	6302278	Pin	
5	2	33115	Circlip	24U
6	4	26334	Connection	GEV 16 SR-WD
7	2	32201	Countersunk screw	MK6 x 16
8	2	6302639	Base plate	
9	2	6300928	Clamp	
10	4	30888	Lock nut	M10
11	8	31177	Washer	10 mm
12	4	30156	Set screw, stainless	M10 x 30
13	2	6300459	Support plate	
14	1	6300748	Pipe	
15	1	6300749	Pipe	
16	4	30132	Set screw, stainless	M8 x 20
17	4	31147	Washer, stainless	8 mm
18	2	6232964	Stowing pin	

* Drill a ø6 mm countersunk hole before fitting.

52-380

Intern ref.: 6300750

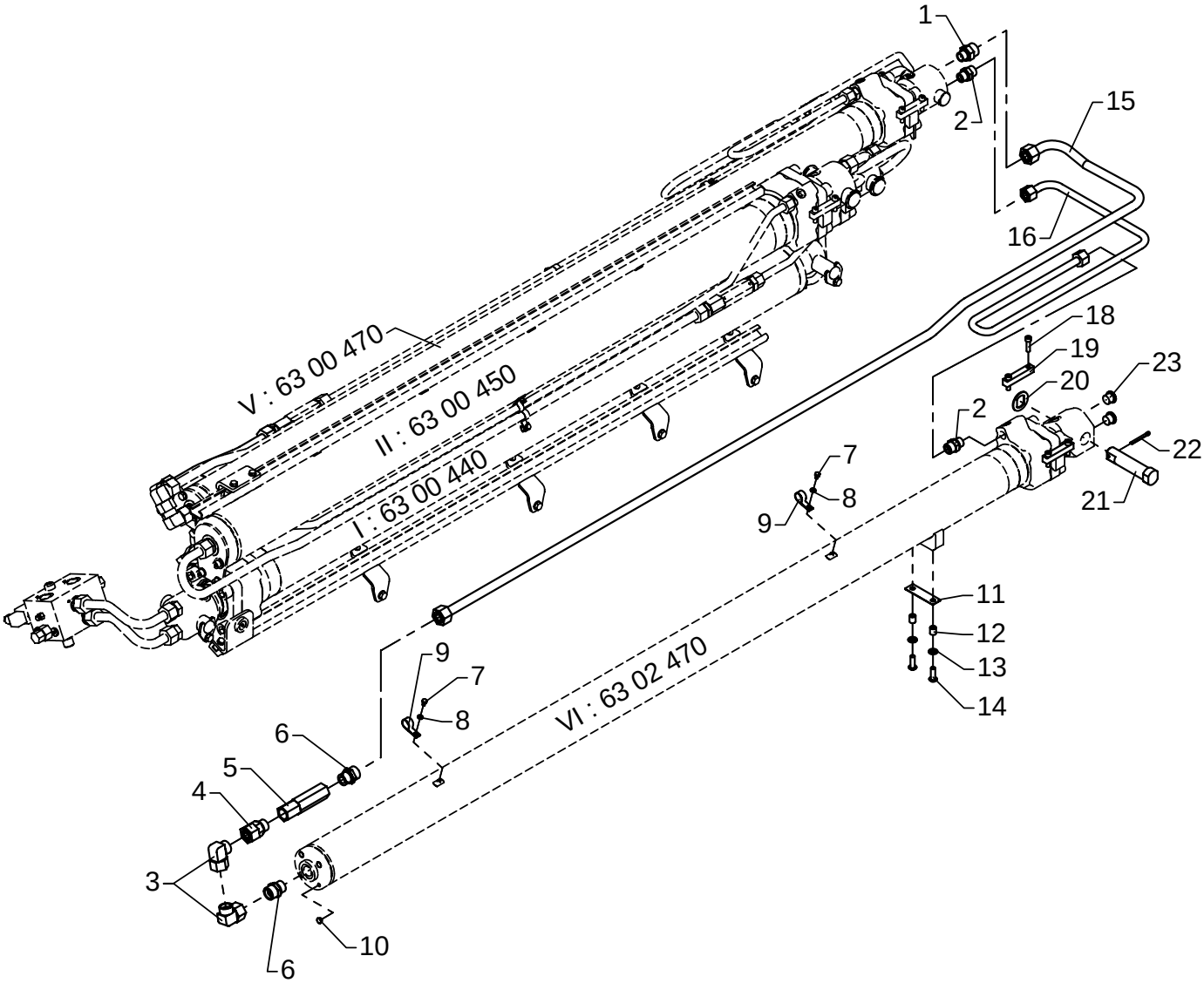

Hydraulic system, extension cylinder, VI Boom system K6-K8

As from / To loader no.: 96 00 00 /
Created: 03.10.2003
Modified: 13.09.2004

Item no.	Qty.	Part no.	Description	Remarks
1	1	26221	Connection	GEV 20 S/R 1/2-WD
2	2	26334	Connection	GEV 16 SR-WD
3	2	26198	Elbow connection	EWVD 20 S-SV
4	1	26358	Connection	EGESD 20 SR-WD
5	1	59076	Counter-balance valve	
6	2	26197	Connection	GEV 20 SR-WD
7	2	30110	Set screw, stainless	M6 x 10
8	2	32302	Face washer, stainless	6 mm
9	2	31449	Clamp	
10	4	64366	Plug	
11	1	6302478	Shim	
12	2	6302048	Spacer	
13	2	31177	Washer	10 mm
14	2	30649	Screw	M10 x 30
15	1	6302751	Pipe	
16	1	6302752	Pipe	
17	1	6303751	Pipe	#
18	4	30442	Screw	MC8 x 30
19	2	6302279	Lock plate	
20	1	6300493	Washer	
21	1	6300481	Pin	
22	1	31635	Split pin	ø5 x 50
23	2	25103	Plug	VS-R-1/2 WD

Personnel basket

52-380

Intern ref.: 6300760

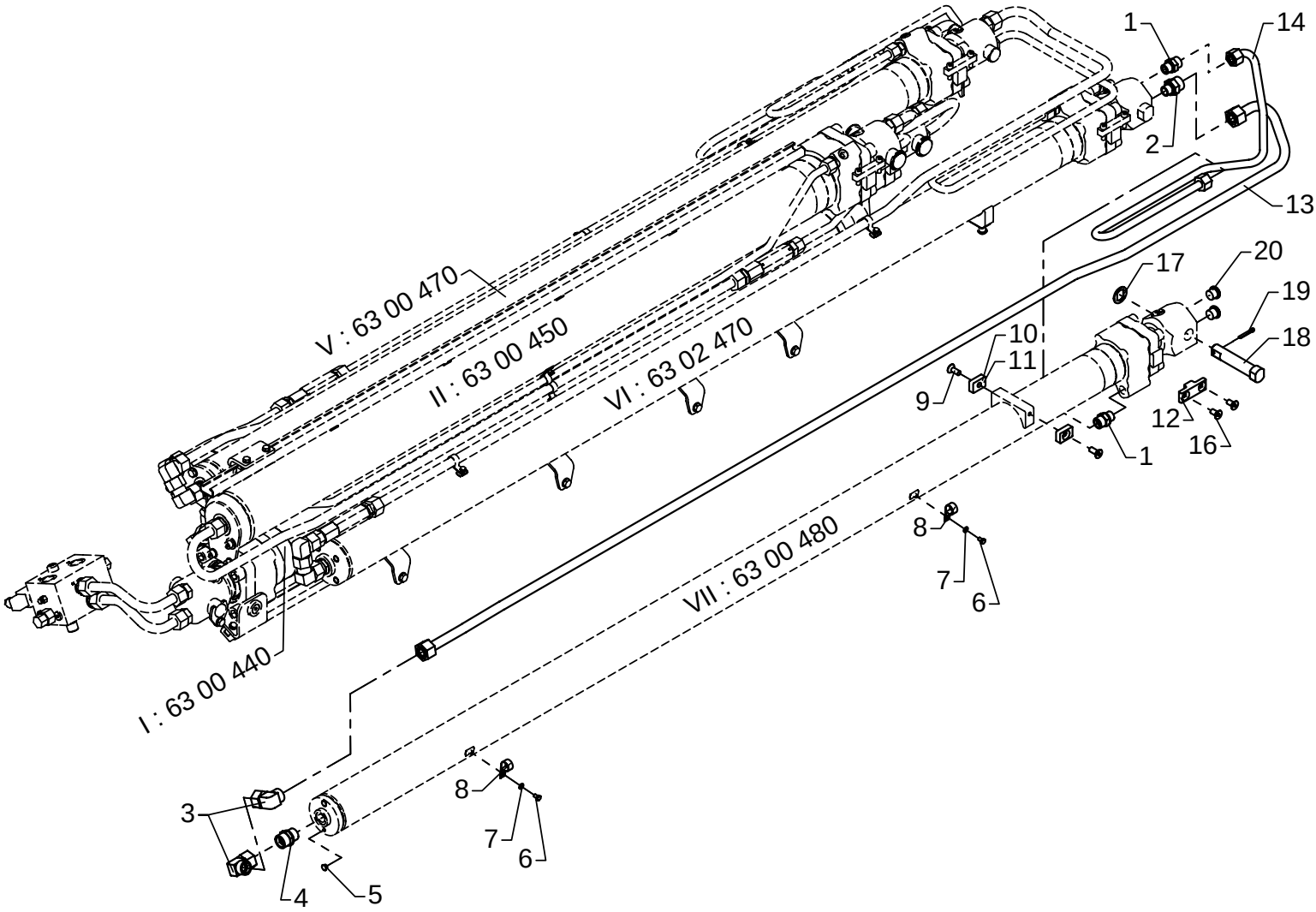

Hydraulic system, extension cylinder, VII

As from / To loader no.: 96 00 00 /
Created: 03.10.2003
Modified: 13.09.2004

Item no.	Qty.	Part no.	Description	Remarks
1	2	26334	Connection	GEV 16 SR-WD
2	1	26221	Connection	GEV 20 S/R 1/2-WD
3	2	26198	Elbow connection	EWVD 20 S-SV
4	1	26197	Connection	GEV 20 SR-WD
5	2	64366	Plug	
6	2	30110	Set screw, stainless	M6 x 10
7	2	32302	Face washer, stainless	6 mm
8	2	31449	Clamp	
9	2	30546	Countersunk screw	MK10 x 25
10	2	6302267	Washer	
11	2	6302268	Washer	
12	2	6302273	Lock plate	
13	1	6302761	Pipe	
14	1	6302762	Pipe	
15	1	6303761	Pipe	#
16	4	30545	Countersunk screw	MK10 x 20
17	1	6300494	Washer	
18	1	6300482	Pin	
19	1	31617	Split pin	ø5 x 35
20	2	25103	Plug	VS-R-1/2 WD

Personnel basket

52-380

Intern ref.: 6300770

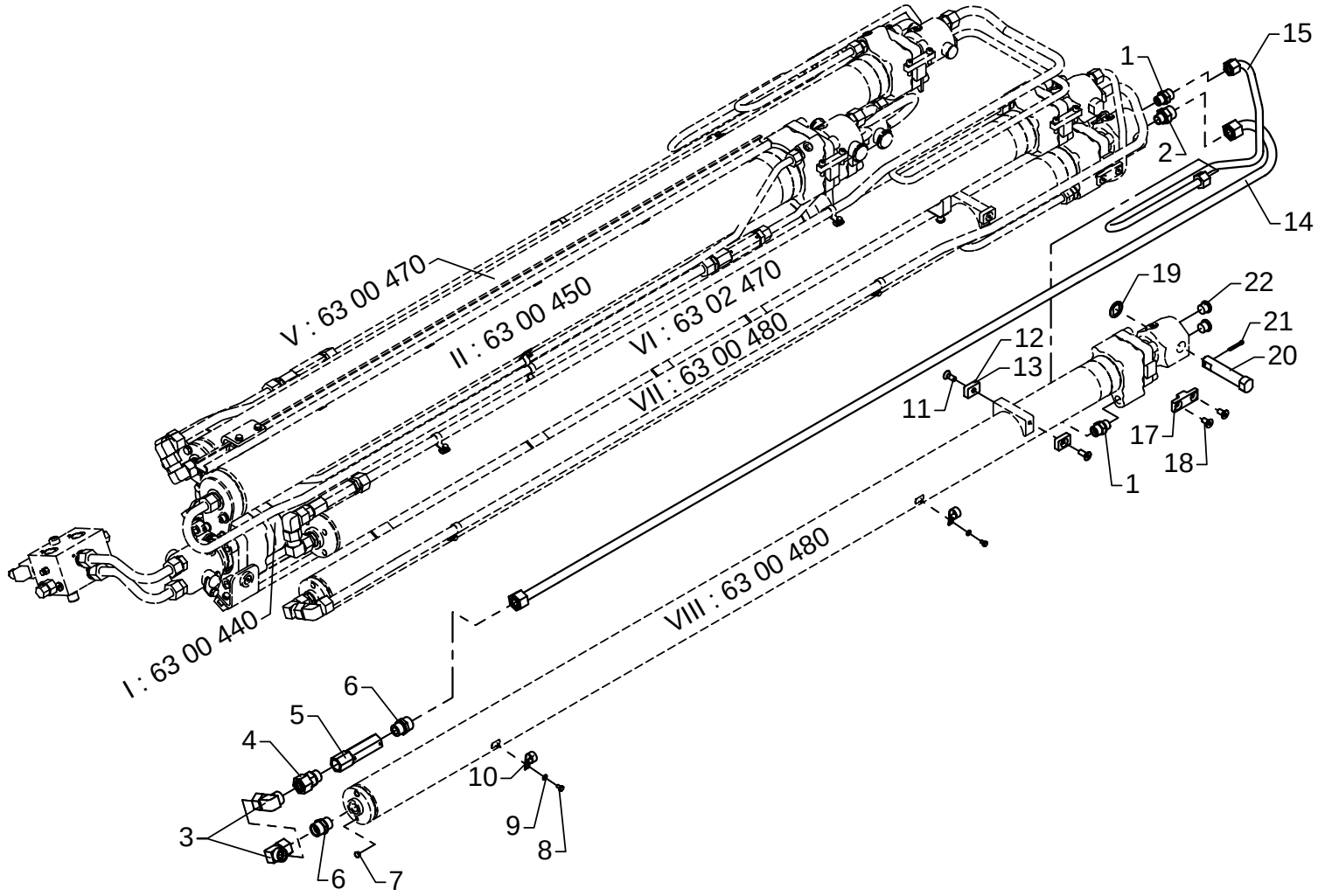

Hydraulic system, extension cylinder, VIII

As from / To loader no.: 96 00 00 /
Created: 03.10.2003
Modified: 13.09.2004

Item no.	Qty.	Part no.	Description	Remarks
1	2	26334	Connection	GEV 16 SR-WD
2	1	26221	Connection	GEV 20 S/R 1/2-WD
3	2	26198	Elbow connection	EWVD 20 S-SV
4	1	26358	Connection	EGESD 20 SR-WD
5	1	59076	Counter-balance valve	
6	2	26197	Connection	GEV 20 SR-WD
7	2	64366	Plug	
8	2	30110	Set screw, stainless	M6 x 10
9	2	32302	Face washer, stainless	6 mm
10	2	31449	Clamp	
11	2	30546	Countersunk screw	MK10 x 25
12	2	6302267	Washer	
13	2	6302268	Washer	
14	1	6302771	Pipe	
15	1	6302772	Pipe	
16	1	6303771	Pipe	#
17	2	6302273	Lock plate	
18	4	30545	Countersunk screw	MK10 x 20
19	1	6300494	Washer	
20	1	6300482	Pin	
21	1	31617	Split pin	ø5 x 35
22	2	25103	Plug	VS-R-1/2 WD

Personnel basket

52-380

Intern ref.: 6300620

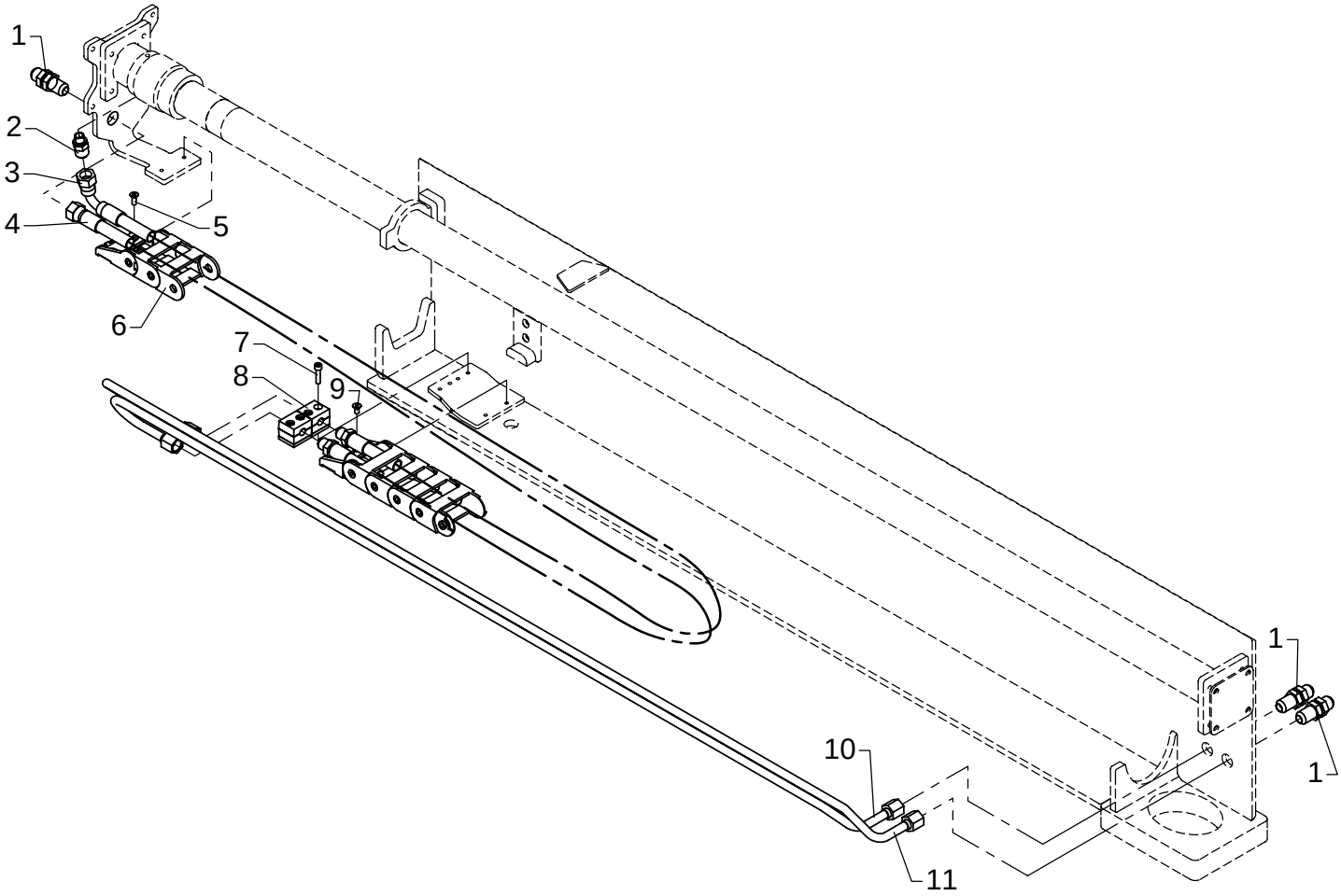

Hydraulic system, stabilizer beam, type DV - 6325

As from / To loader no.: 96 00 00 /
Created: 03.10.2003
Modified:

Item no.	Qty.	Part no.	Description	Remarks
1	3	25824	Bulkhead connection	WTX-WLNS 12 JIC
2	1	25867	Straight connection	F40XS 12-1/4 JIC
3	1	56079	Hose	3/8" x 3300 mm V/S JIC
4	1	56078	Hose	3/8" x 3300 mm O/S JIC
5	2	32201	Countersunk screw	MK6 x 16
6	1	27890	Nylon drag chain	
7	4	30962	Sockethead screw	MC6 x 25
8	2	31425	Clamp	
9	2	30542	Counter-sunk screw	MK6 x 12
10	1	6300647	Pipe	
11	1	6300646	Pipe	

52-380

Intern ref.: 6300980

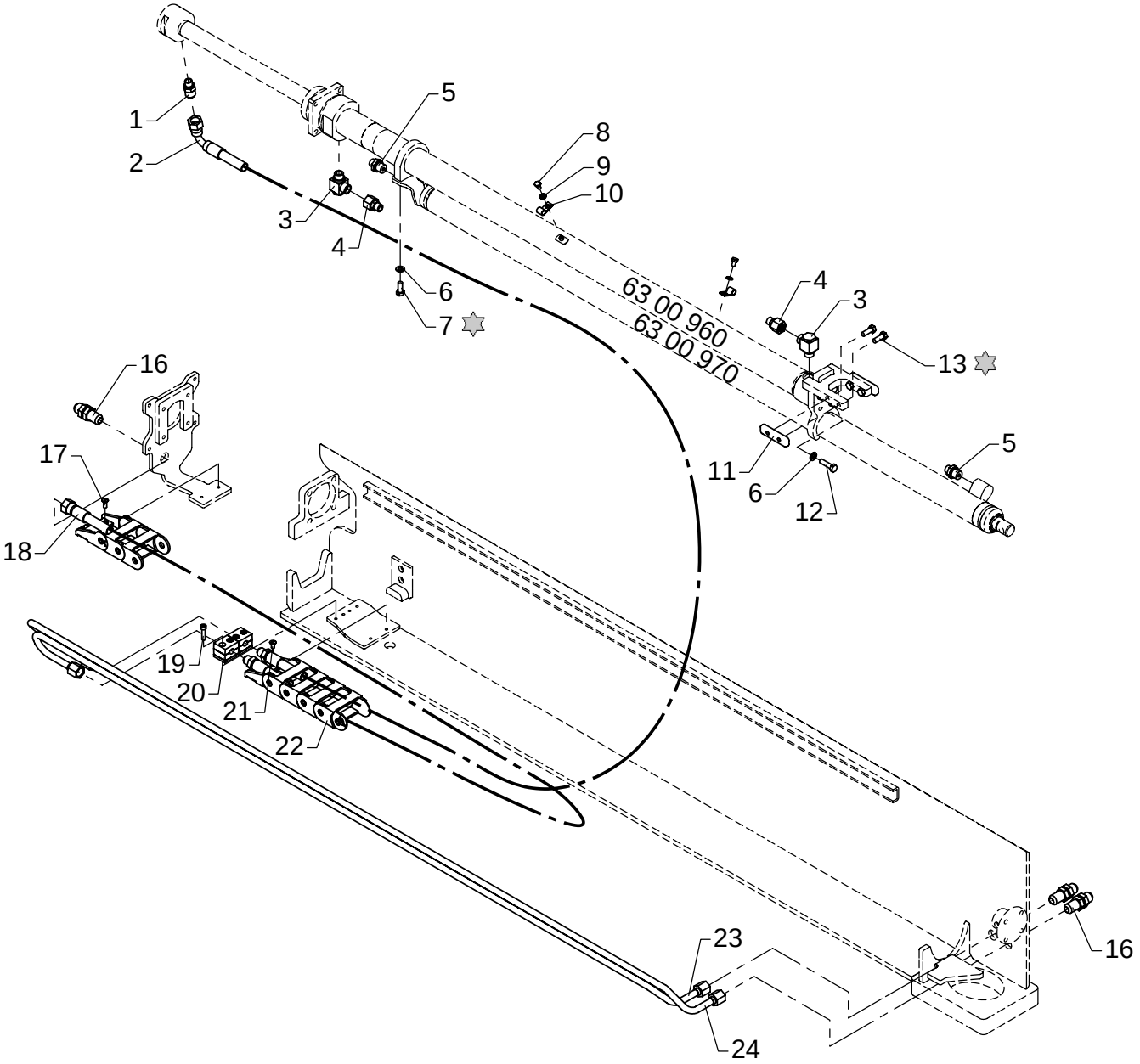

Loctite 243

Hydraulic system, stabilizer beam, type DV - 6725

As from / To loader no.: 96 00 00 /
Created: 03.10.2003
Modified:

Item no.	Qty.	Part no.	Description	Remarks
1	1	25867	Straight connection	F40XS 12-1/4 JIC
2	1	56081	Hose	3/8" x 3535 mm v/s JIC
3	2	25130	Banjo connection	RSWV 12 LR
4	2	26101	Reducing connection	REDVD 12/8 L
5	2	25244	Connection	GES 8 L/R 3/8-WD
6	6	31147	Washer, stainless	8 mm
7	2	30132	Set screw, stainless	M8 x 20
8	2	30110	Set screw, stainless	M6 x 10
9	2	32302	Face washer, stainless	6 mm
10	2	31445	Suspension	6-8 mm
11	2	6300208	Slide block	
12	4	30135	Set screw, stainless	M8 x 30
13	4	30133	Set screw, stainless	M8 x 22
14	1	6300983	Pipe	
15	1	6300984	Pipe	
16	3	25824	Bulkhead connection	WTX-WLNS 12 JIC
17	2	32201	Countersunk screw	MK6 x 16
18	1	56082	Hose	3/8" x 3535 mm o/s JIC
19	4	30962	Sockethead screw	MC6 x 25
20	2	31425	Clamp	
21	2	30542	Counter-sunk screw	MK6 x 12
22	1	27894	Nylon drag chain	
23	1	6300982	Pipe	
24	1	6300981	Pipe	

52-380

Intern ref.: 6300100

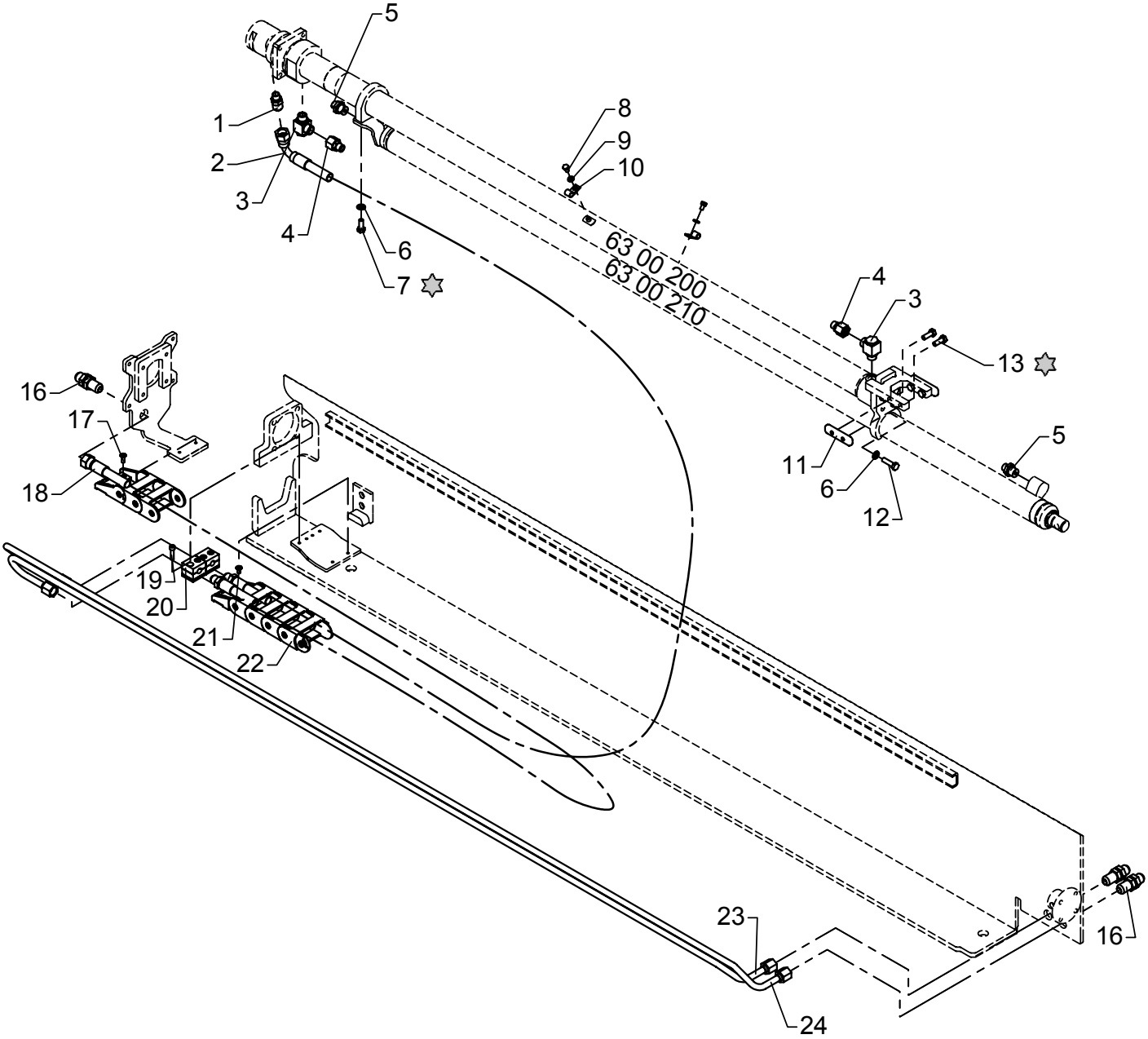

Loctite 243

Hydraulic system, stabilizer beam, type DV+DR - 8420

As from / To loader no.: 96 00 00 /
Created: 03.10.2003
Modified: 13.10.2004

Item no.	Qty.	Part no.	Description	Remarks
1	1	25867	Straight connection	F40XS 12-1/4 JIC
2	1	56026	Hose	3/8" x 3850 mm v/s JIC
3	2	25130	Banjo connection	RSWV 12 LR
4	2	26101	Reducing connection	REDVD 12/8 L
5	2	25244	Connection	GES 8 L/R 3/8-WD
6	6	31147	Washer, stainless	8 mm
7	2	30132	Set screw, stainless	M8 x 20
8	2	30110	Set screw, stainless	M6 x 10
9	2	32302	Face washer, stainless	6 mm
10	2	31445	Suspension	6-8 mm
11	2	6300208	Slide block	
12	4	30135	Set screw, stainless	M8 x 30
13	4	30133	Set screw, stainless	M8 x 22
14	1	6300218	Pipe	
15	1	6300219	Pipe	
16	3	25824	Bulkhead connection	WTX-WLNS 12 JIC
17	2	32201	Countersunk screw	MK6 x 16
18	1	56027	Hose	3/8" x 3850 mm o/s JIC
19	4	30962	Sockethead screw	MC6 x 25
20	2	31425	Clamp	
21	2	30542	Counter-sunk screw	MK6 x 12
22	1	27887	Nylon drag chain	
23	1	6300249	Pipe	
24	1	6300248	Pipe	

52-380

Intern ref.: 6300600

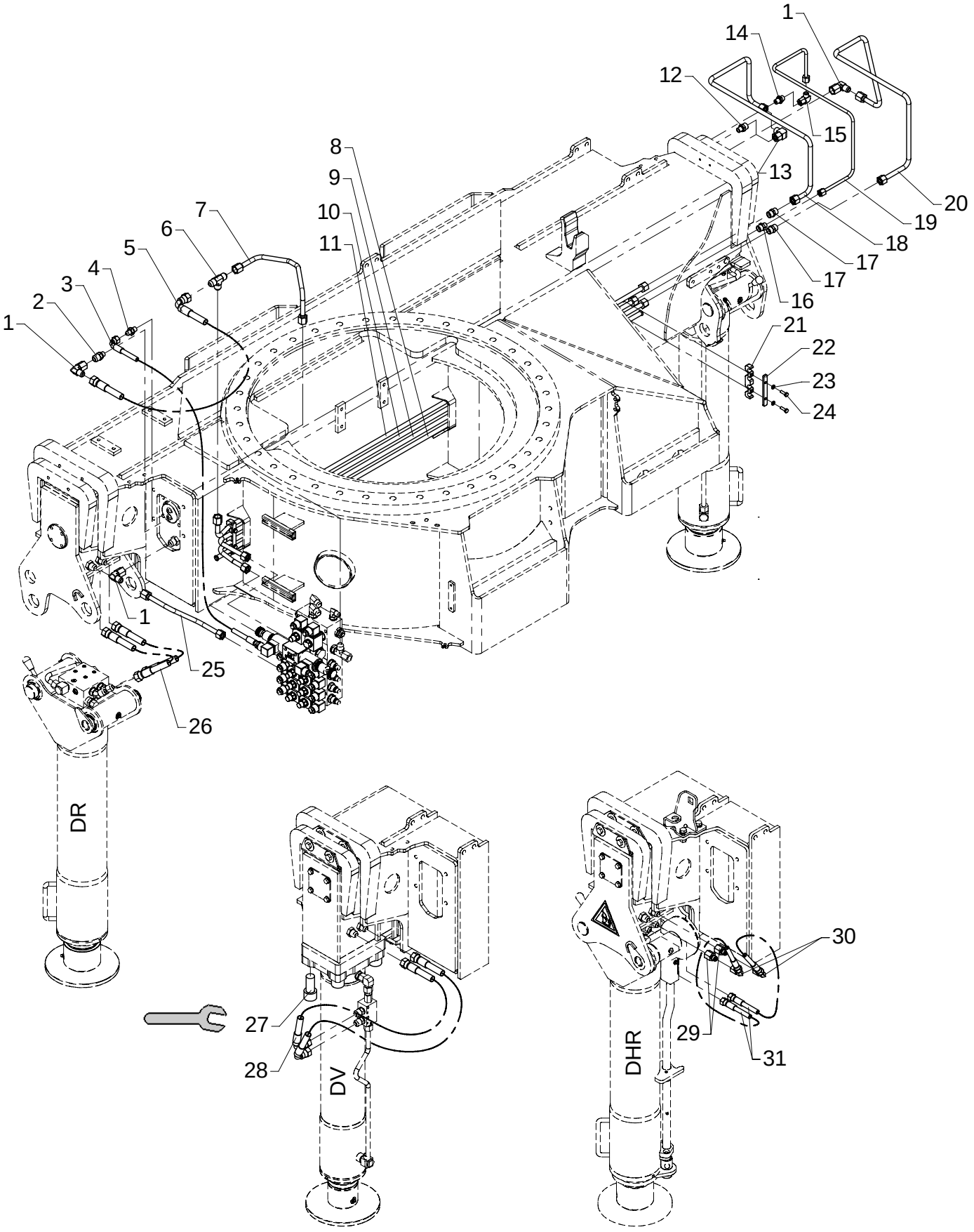

1100 Nm

Hydraulic system, stabilizers, type DV + DR + DHR

As from / To loader no.: 96 00 00 / 96 02 07
Created: 03.10.2003
Modified: 02.06.2008

Item no.	Qty.	Part no.	Description	Remarks
1	3	25877	Elbow connection	C6XS 12 JIC
2	1	25867	Straight connection	F40XS12 - 1/4
3	1	62886	Hose	1/4" x 400 mm V/O JIC
4	1	25829	Straight connection	F40XS8 - 1/4
5	1	56091	Hose	3/8" x 350 mm V/O JIC
6	1	26269	T-connection	JTXS 12 JIC
7	1	6300901	Pipe	
8	1	6300909	Pipe	
9	1	6300907	Pipe	
10	1	6300905	Pipe	
11	1	6300903	Pipe	
12	1	25195	Connection	P-GEV 12 LR 1/4-WD
13	1	25242	Elbow connection	EWSD 12 L
14	1	25109	Connection	GES 8 LR-WD
15	1	26170	Elbow connection	EWSD 8 L
16	1	25931	Connection	P-GV 12/8 L
17	2	25204	Double connection	P-GV 12 L
18	1	6300904	Pipe	
19	1	6300906	Pipe	
20	1	6300908	Pipe	
21	2	6300044	Clamp	
22	2	6300047	Plate	
23	4	32302	Face washer, stainless	6 mm
24	4	30113	Set screw, stainless	M6 x 20
25	1	6300902	Pipe	
26	4	62883	Hose	3/8" x 400 mm O/O JIC
27	8	30494	Screw	MC24 x 50
28	4	62956	Hose	3/8" x 550 mm V/O JIC
29	4	25846	Reducing connection	TRTXS12-10
30	4	25737	Elbow connection	C6XS 10 JIC
31	4	56108	Hose	1/4 X 470 L/L JIC

52-380

Intern ref.: 6301740

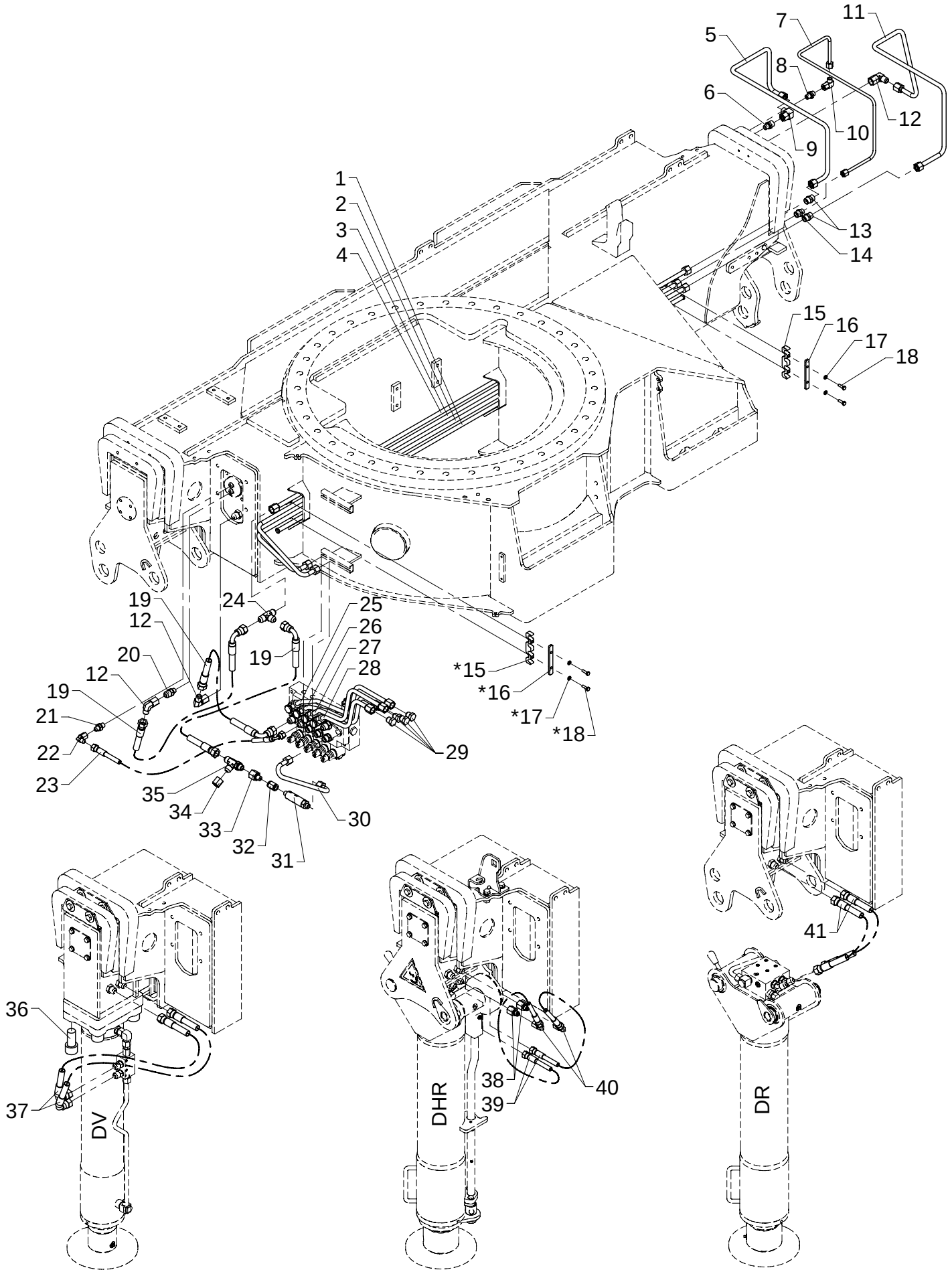

Hydraulic system, stabilizers, Type DV, DR and DHR

As from / To loader no.: 96 02 08
Created: 02.06.2008
Modified:

Item no.	Qty.	Part no.	Description	Remarks
1	1	6300909	Pipe	
2	1	6301375	Pipe	
3	1	6301376	Pipe, stabilizer 6	
4	1	6302903	Pipe	
5	1	6300904	Pipe	
6	1	25195	Connection	P-GEV 12 LR 1/4-WD
7	1	6300906	Pipe	
8	1	25109	Connection	GES 8 LR-WD
9	1	25242	Elbow connection	EWSD 12 L
10	1	26170	Elbow connection	EWSD 8 L
11	1	6300908	Pipe	
12	3	25877	Elbow connection	C6XS 12 JIC
13	2	25204	Double connection	P-GV 12 L
14	1	25931	Connection	P-GV 12/8 L
15	2	6300044	Clamp	
16	2	6300047	Plate	
17	4	32302	Face washer, stainless	6 mm
18	4	30113	Set screw, stainless	M6 x 20
19	3	56091	Hose	3/8" x 350 90/L JIC
20	1	25867	Straight connection	F40XS12 - 1/4
21	1	25829	Straight connection	F40XS8 - 1/4
22	1	25826	Elbow connection	C6XS 8 JIC
23	1	62886	Hose	1/4" x 400 90/L JIC
24	1	26269	T-connection	JTXS 12 JIC
25	1	6301371	Pipe, stabilizer 1	
26	1	6301372	Pipe, stabilizer 2	
27	1	6301373	Pipe, stabilizer 3	
28	1	6301374	Pipe, stabilizer 4	
29	4	25849	Plug	
30	1	6301362	Pipe	
31	1	55239	Counter-balance valve	
32	1	25904	Socket	
33	1	25229	Reducing connection	RED-R 1/4-WD/R 3/8
34	1	25876	Screw cap	FNTXS 12 JIC
35	1	25813	T-connection	R40XS 12-3/8 JIC
36	8	30494	Screw	MC24 x 50
37	4	62956	Hose	3/8" x 550 90/L JIC
38	4	25846	Reducing connection	TRTXS12-10
39	4	56108	Hose	1/4" x 470 L/L JIC
40	4	25737	Elbow connection	C6XS 10 JIC
41	4	62883	Hose	3/8" x 400 L/L JIC

* Stabilizer operation by RC

52-380

Intern ref.: 6301750

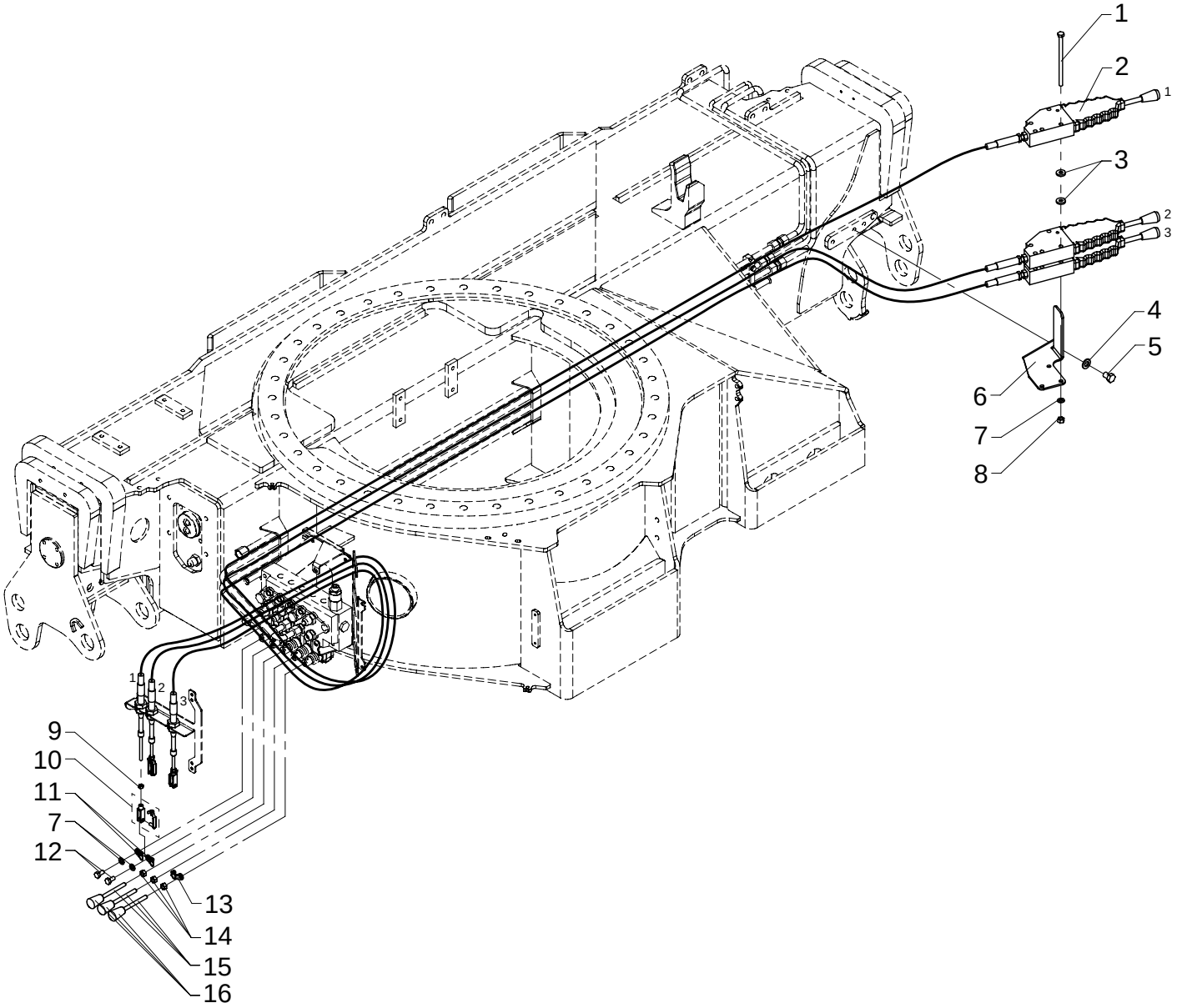

Manual stabilizer operation

As from / To loader no.: 96 02 08
Created: 02.06.2008
Modified:

Item no.	Qty.	Part no.	Description	Remarks
1	3	30149	Steel bolt	M8 x 140
2	3	48470	Push-pull cable incl. lever	3300 mm
3	12	31755	Washer	8 mm
4	2	31131	Washer	12 mm
5	2	31960	Set screw	M12 x 16
6	1	6301367	Bracket for lever	
7	5	31147	Washer, stainless	8 mm
8	3	30886	Lock nut, stainless	M8
9	3	30854	Nut, stainless	M6
10	3	48414	Clevis	
11	2	6301364	Fittings for cables, right	
12	2	30131	Set screw, stainless	M8 x 16
13	1	6301363	Fittings for cables, right	
14	3	30856	Nut, stainless	M8
15	3	1330187	Control lever, long, straight	
16	3	59224	Knob for lever	

DECAL KIT (95718310)

ITEM	QTY	DESCRIPTION	QTY	LOCATION
1.	70029251	DECAL-DIAMOND IMT 6.75X13.50	2	ON CRANE
2.	70391583	DECAL-SET UP/STOW-INSTRUCTIONS	1	AT OPERATOR STATION
3.	70391612	DECAL-GREASE WEEKLY (LEFT)	6	AT GREASE ZERKS
4.	70391613	DECAL-GREASE WEEKLY (RIGHT)	7	AT GREASE ZERKS
5.	70392813	DECAL-DANGER ELECTROCUTION	3	AT OPERATOR STATION, BY STABILIZER CONTROLS
6.	70392814	DECAL-DANGER OPERATOR TRAINING	2	BY STABILIZER CONTROLS
7.	70392815	DECAL-DANGER OPERATION	2	BY STABILIZER CONTROLS
8.	70392863	DECAL-DANGER HOISTING PERSONNL	3	AT OPERATOR STATION, BY STABILIZER CONTROLS
9.	70392866	DECAL-DANGER OPER CONDITIONS	2	BY STABILIZER CONTROLS
10.	70392888	DECAL-DANGER OPER CONDITIONS	2	BY STABILIZER CONTROLS
11.	70392890	DECAL-DANGER STOWING/UNFOLDING	3	AT OPERATOR STATION, BY STABILIZER CONTROLS
12.	70394670	DECAL-IMT MATL HANDLING SYSTEM	2	ON CRANE
13.	70396334	DECAL-ID 52/380 SERIES	2	ON CRANE
14.	70396389	DECAL-CP 52/380 K2	3REF	AT OPERATOR STATION, BY STABILIZER CONTROLS
	70393690	DECAL-CP 52/380 K3	3REF	"
	70393691	DECAL-CP 52/380 K4	3REF	"
	70396445	DECAL-CP 52/380 K4 FJ1800 K4	3REF	"
	70393692	DECAL-CP 52/380 K5	3REF	"
	70393693	DECAL-CP 52/380 K6	3REF	"
	70393694	DECAL-CP 52/380 K7	3REF	"
	70393695	DECAL-CP 52/380 K8	3REF	"
15.	70029119	SERIAL NUMBER TAG	1	ON SIDE OF CRANE BASE
16.		DECAL-GREASE GEAR	1	ON GEAR ASSEMBLY
17.		DECAL-NO HOOK	1	ON MAST

Decals Installed when Crane is Mounted:*(Shipped loose with crane)*

18.	70392862	DECAL-DANGER RC ELECTROCTN SM	1	ON REMOTE (IF APPLICBLE)
19.	70392889	DECAL-DANGER RC ELECTROCTN LG	1	NEAR REMOTE STORAGE POINT
20.	70392865	DECAL-DANGER ELEC HAZARD(LARGE	4	ALL FOUR SIDES OF CARRIER VEHICLE
21.	70392891	DECAL-DANGER DRIVELINE	2	AT OR NEAR DRIVELINE
22.	70392868	DECAL-DANGER CR LOADLINE (TRK)	4	ALL FOUR SIDES OF CARRIER VEHICLE
23.	70394189	DECAL-MOBILOIL RESERVOIR	1	ON RESERVOIR
24.	70392864	DECAL-DANGER STAB STAND CLEAR	2	ON STABILIZER LEG
25.	70392867	DECAL-DANGER STAB (MOVING)	2	ON STABILIZER LEG
26.	70392108	DECAL-SUCTION LINE	1	ON RESERVOIR SUCTION LINE
27.	70392109	DECAL-RETURN LINE	1	ON RESERVOIR RETURN LINE
28.	70396639	DECAL-MANUAL OPERATION, WALLBOARD	1	AT OR NEAR CONTROL STATION

Decal Locations on 52-380 Crane:
(Shown stowed for transport)

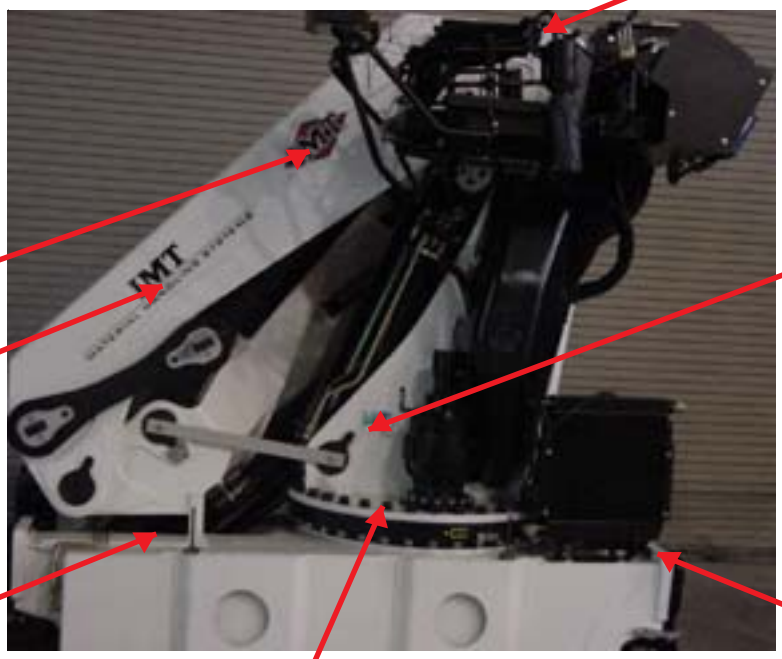

LOCATION A DECALS:

Decals are mounted on top rear section of crane inner boom for easy visibility when viewed from top seat operator's station.

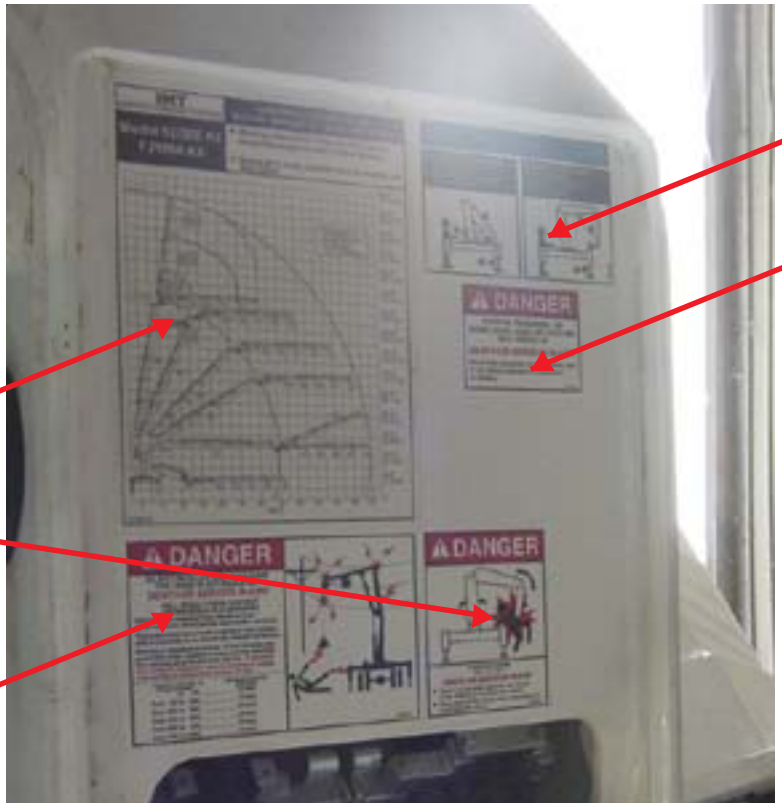

ID and product line decals are mounted on crane boom and extensions.

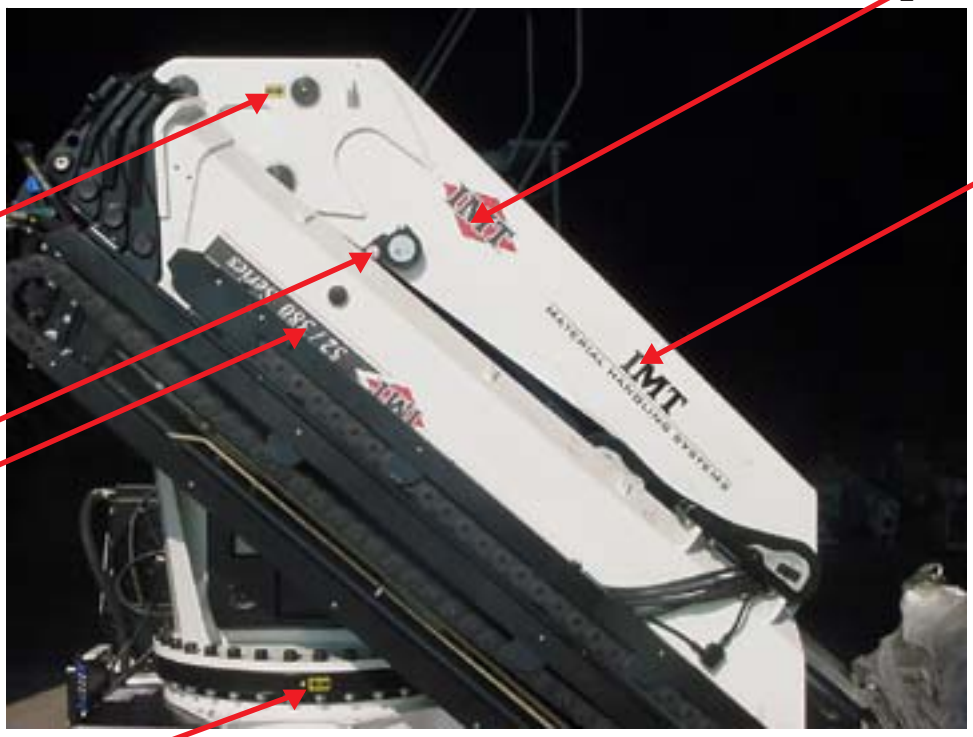

LOCATION B DECALS:
Decals are mounted on side of crane base near stabilizer control station.

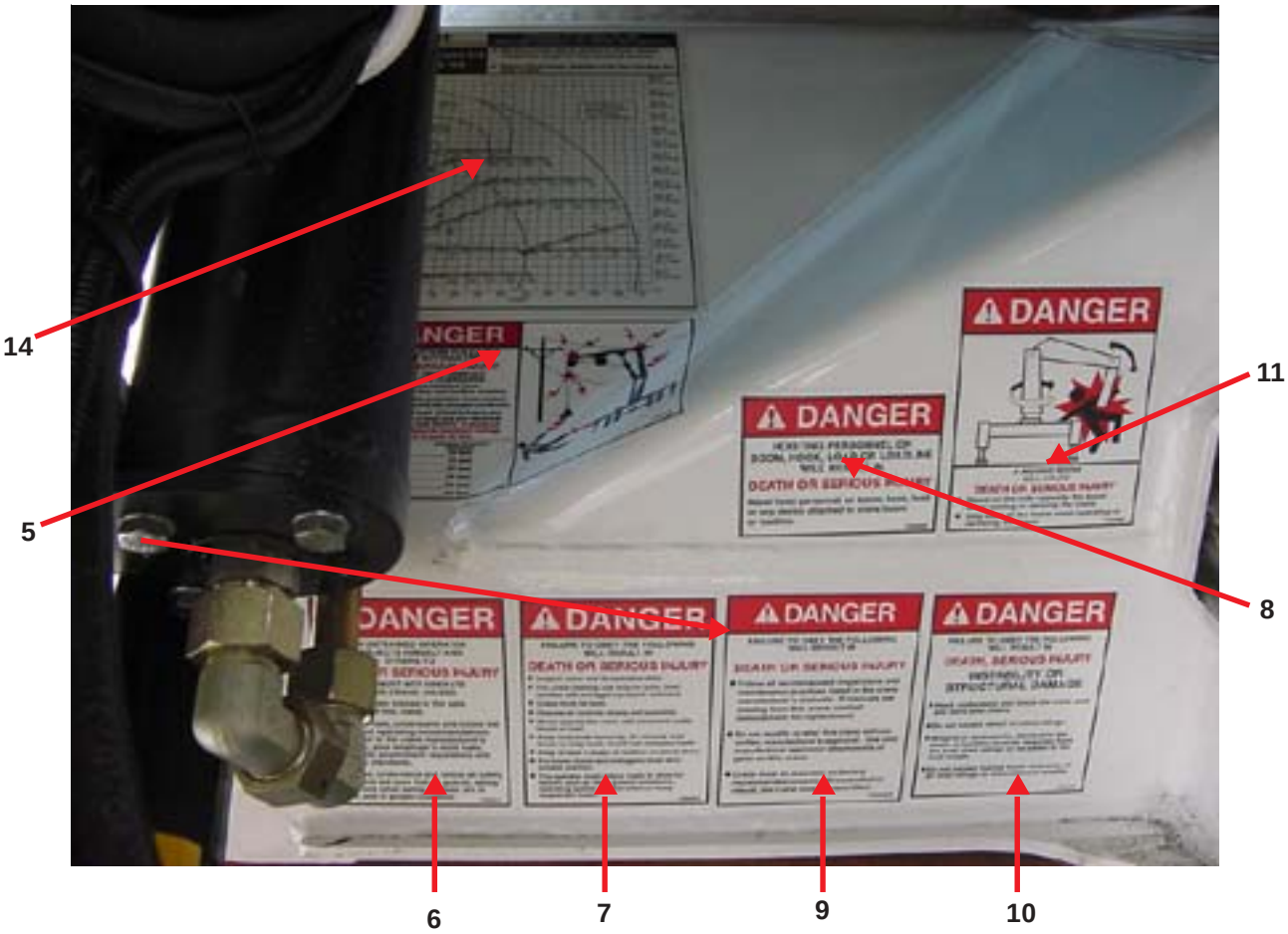

LOCATION C DECALS:
Decals are mounted on side of crane base near stabilizer control station.

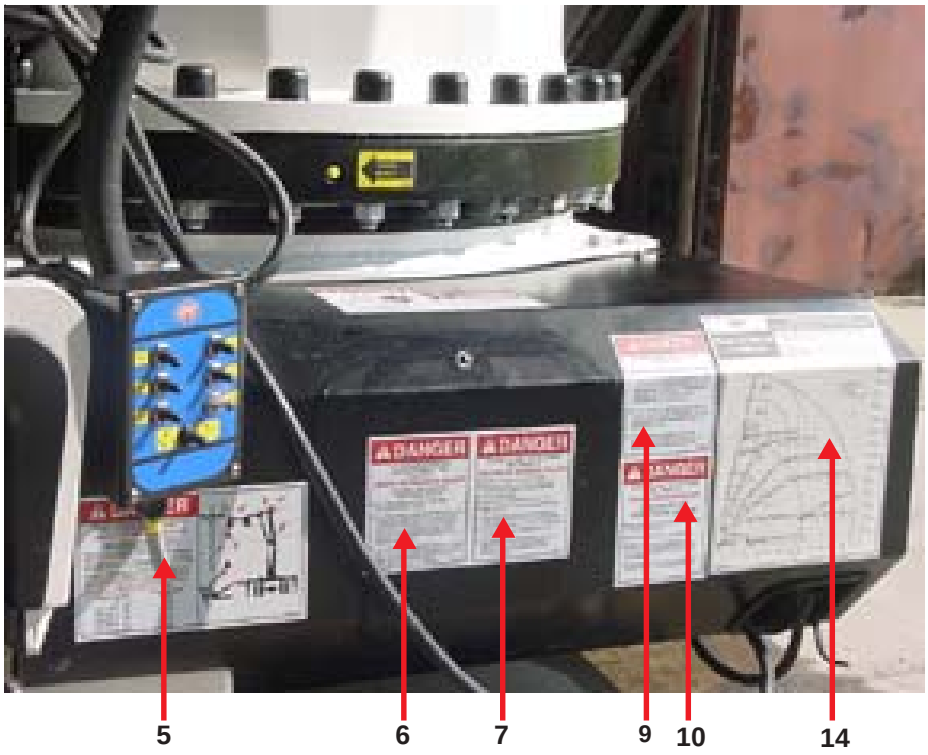

52-380

Intern ref.: 6668300

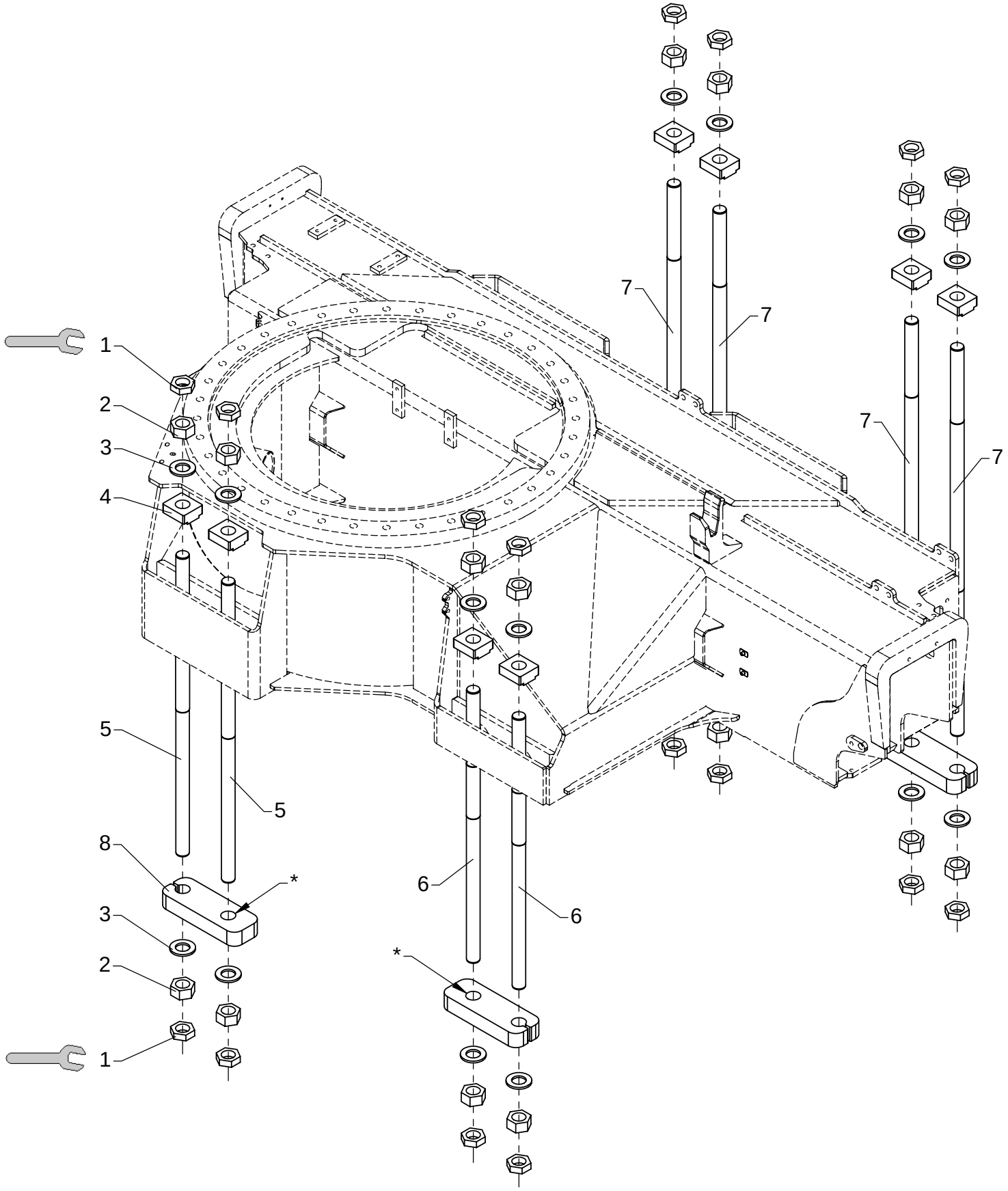

600 Nm

Mounting kit, standard
Chassis height: 230 - 490 mm.

As from / To loader no.: 96 00 00 /
Created: 03.10.2003
Modified:

Item no.	Qty.	Part no.	Description	Remarks
1	16	31056	Counter nut	M33 x 2
2	16	32342	Nut	M33 x 2
3	16	31058	Washer	34 mm
4	8	6300496	Mounting plate	
5	2	32902	Mounting bolt	850 mm
6	2	32903	Mounting bolt	770 mm
7	4	32901	Mounting bolt	1175 mm
8	4	6300999	Clamp	

* Drill a ø35 mm hole before fitting.

52-380

Intern ref.: 6668310

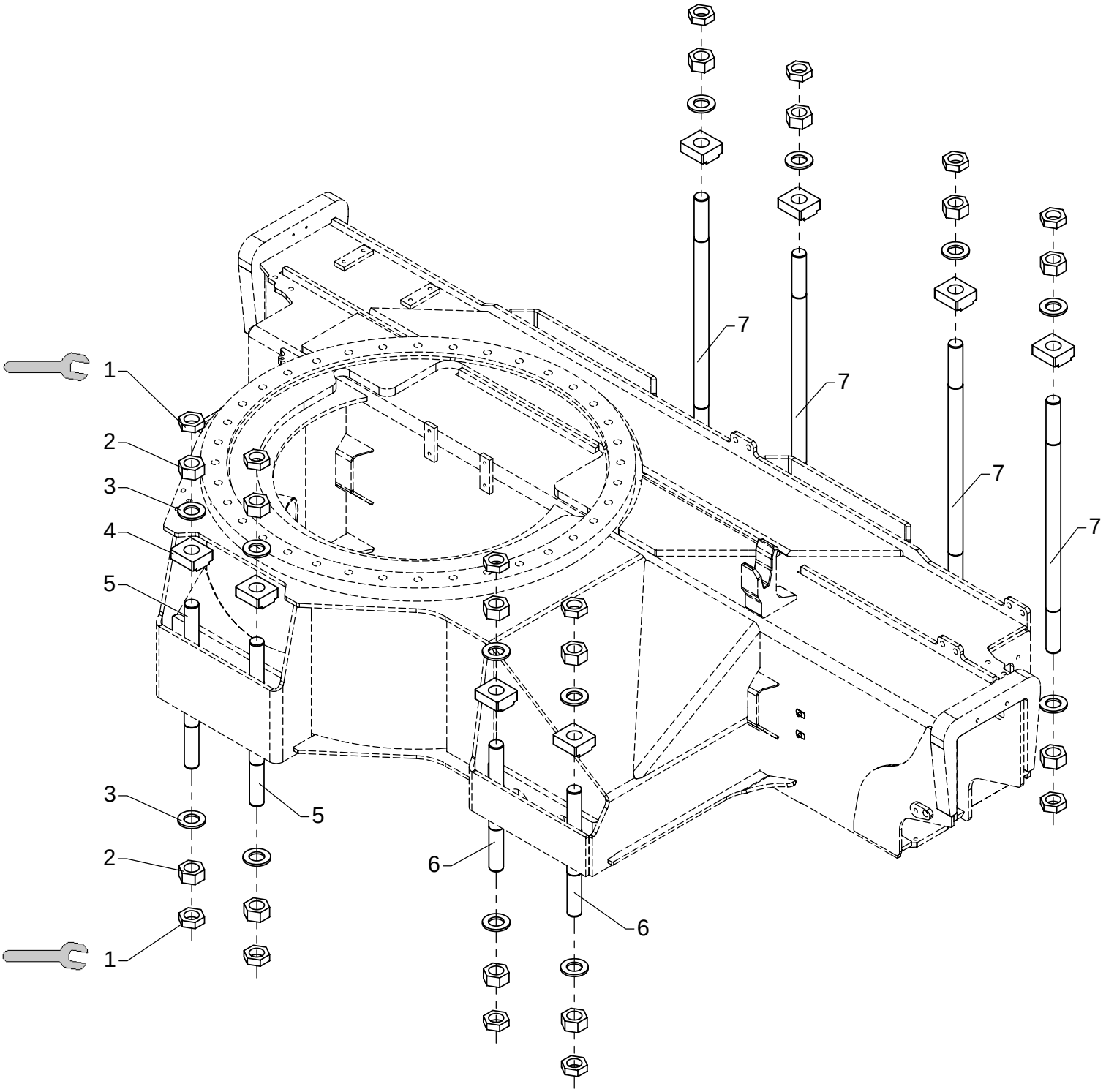

600 Nm

Mounting kit, subframe

As from / To loader no.: 96 00 00 /
Created: 03.10.2003
Modified:

Item no.	Qty.	Part no.	Description	Remarks
1	16	31056	Counter nut	M33 x 2
2	16	32342	Nut	M33 x 2
3	16	31058	Washer	34 mm
4	8	6300496	Mounting plate	
5	2	32905	Mounting bolt	430 mm
6	2	32906	Mounting bolt	330 mm
7	4	32904	Mounting bolt	665 mm

52-380

Intern ref.: 6668350

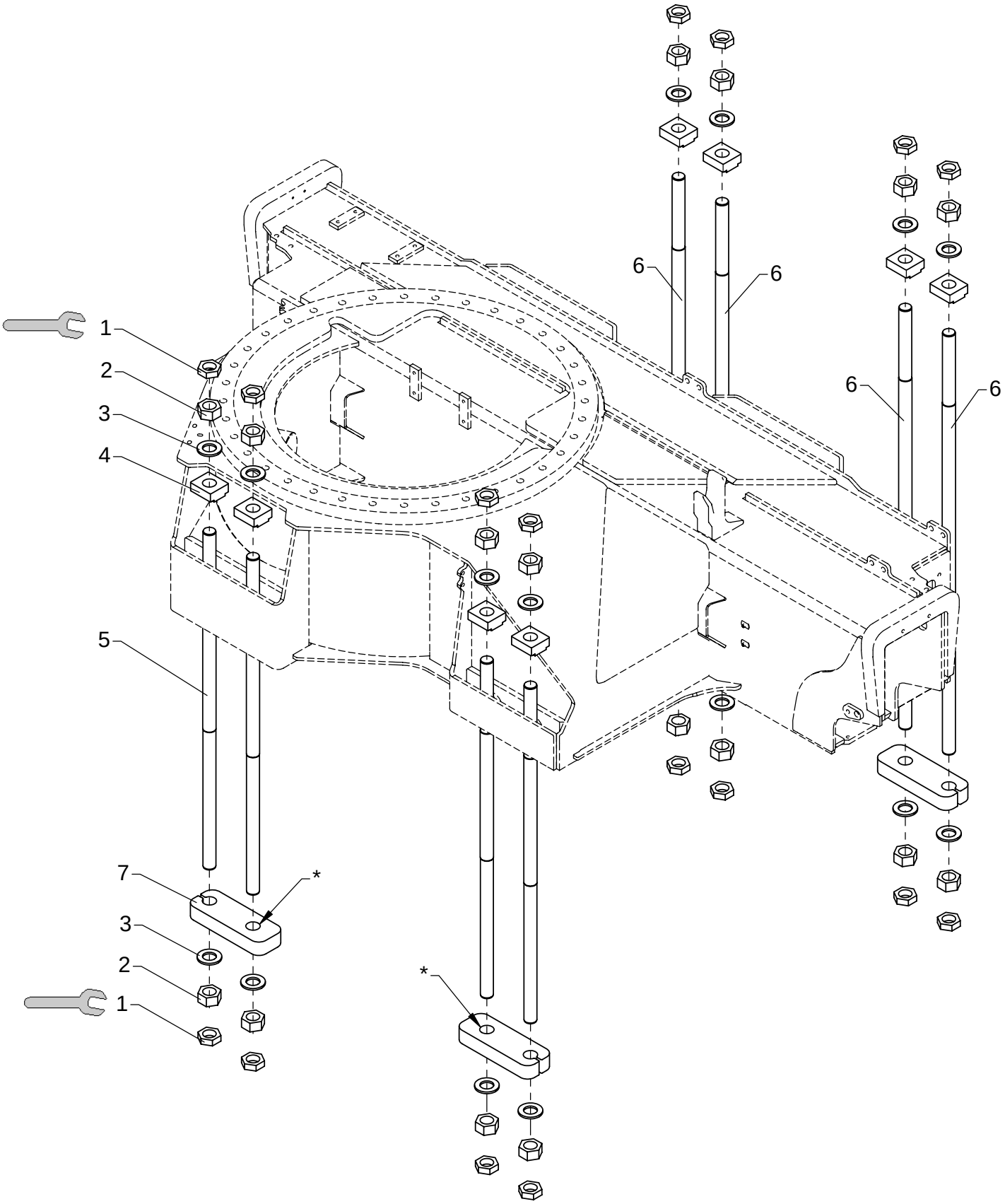

600 Nm

Mounting kit, long
Chassis height: 390 - 590 mm.

As from / To loader no.: 96 00 00 /
Created: 03.10.2003
Modified:

Item no.	Qty.	Part no.	Description	Remarks
1	16	31056	Counter nut	M33 x 2
2	16	32342	Nut	M33 x 2
3	16	31058	Washer	34 mm
4	8	6300496	Mounting plate	
5	4	32912	Mounting bolt, Delta	1000 mm
6	4	32913	Mounting bolt, Delta	1250 mm
7	4	6300999	Clamp	

* Drill a ø35 mm hole before fitting.

52-380

Intern ref.: 6302890

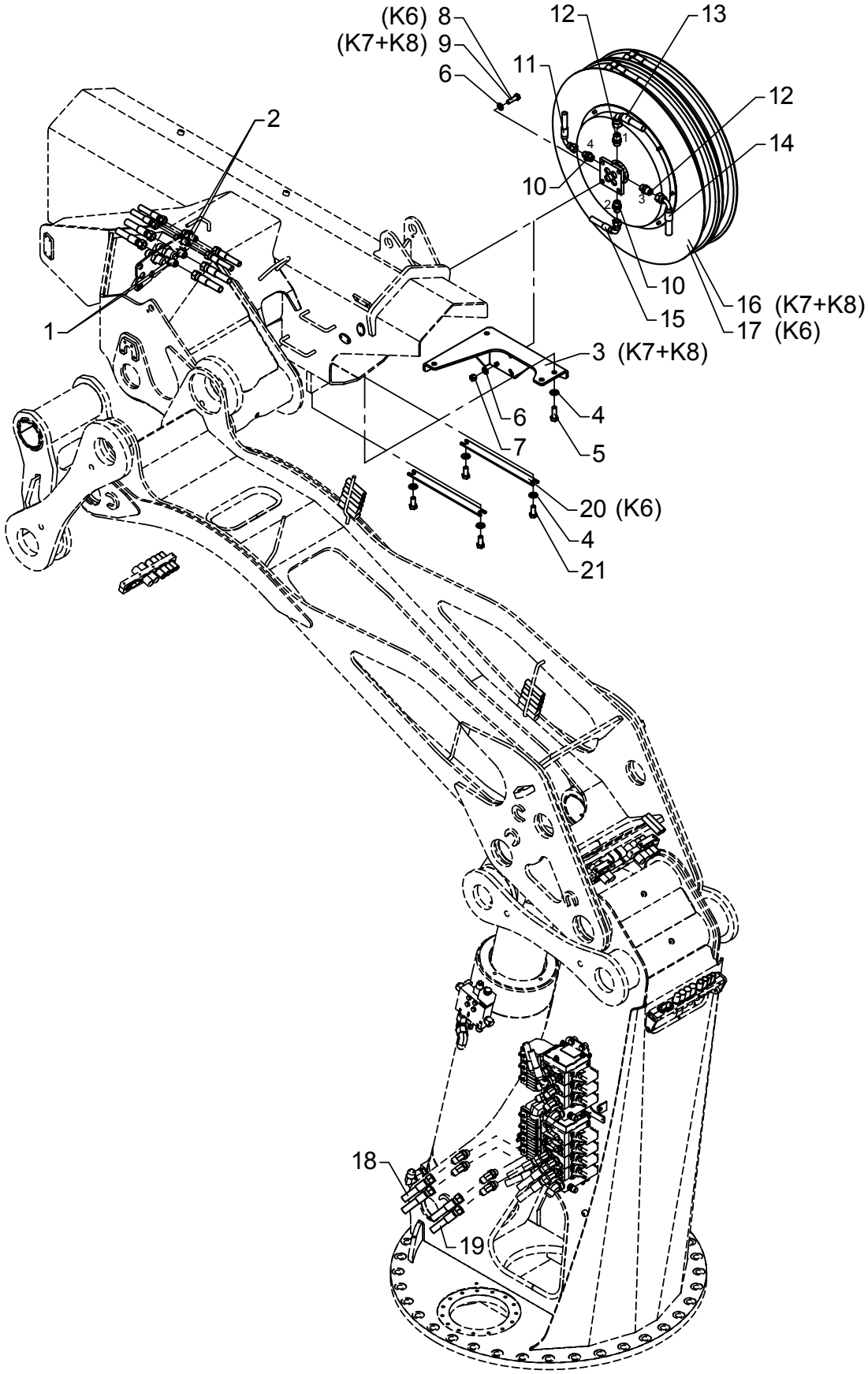

Hydraulic system, extra valves, without FJ and winch

As from / To loader no.: 96 00 00 / 96 00 86
Created: 03.10.2003
Modified: 28.03.2007

Item no.	Qty.	Part no.	Description	Remarks
1	2	25825	Bulkhead connection	WTX-WLNS 14/16 JIC
2	2	25824	Bulkhead connection	WTX-WLNS 12 JIC
3	1	6300929	Bracket for hose reel	
4	8	31178	Washer	14 mm
5	4	30207	Set screw	M14 x 40
6	8	31131	Washer	12 mm
7	4	30890	Lock nut	M12
8	4	30176	Set screw	M12 x 25
9	4	31533	Set screw, stainless	M12 x 40
10	2	25832	Straight connection	F40XS 12-1/2 JIC
11	1	56060	Hose	3/8" x 1950 mm V/O JIC (KN)
12	2	25833	Straight connection	F40XS 14/16-1/2 JIC
13	1	56059	Hose	1/2" x 1950 mm V/O JIC (UU)
14	1	56059	Hose	1/2" x 1950 mm V/O JIC (KO)
15	1	56060	Hose	3/8" x 1950 mm V/O JIC (UI)
16	1	56016	Hose reel, double	1/2" x 18500 mm
		56070	Double hose	1/2" x 18500 mm
		56067	Seal kit	
		56068	Spring for hose reel	
		56073	Cover	
17	1	56017	Hose reel, double	1/2" x 14200 mm
		56069	Double hose	1/2" x 14200 mm
		56067	Seal kit	
		56068	Spring for hose reel	
		56073	Cover	
18	2	56055	Hose	3/8" x 5900 mm O/O JIC
19	2	56056	Hose	1/2" x 5900 mm O/O JIC
20	2	6300444	Hose bracket	
21	4	30206	Set screw	M14 x 30

52-380

Intern ref.: 6302890

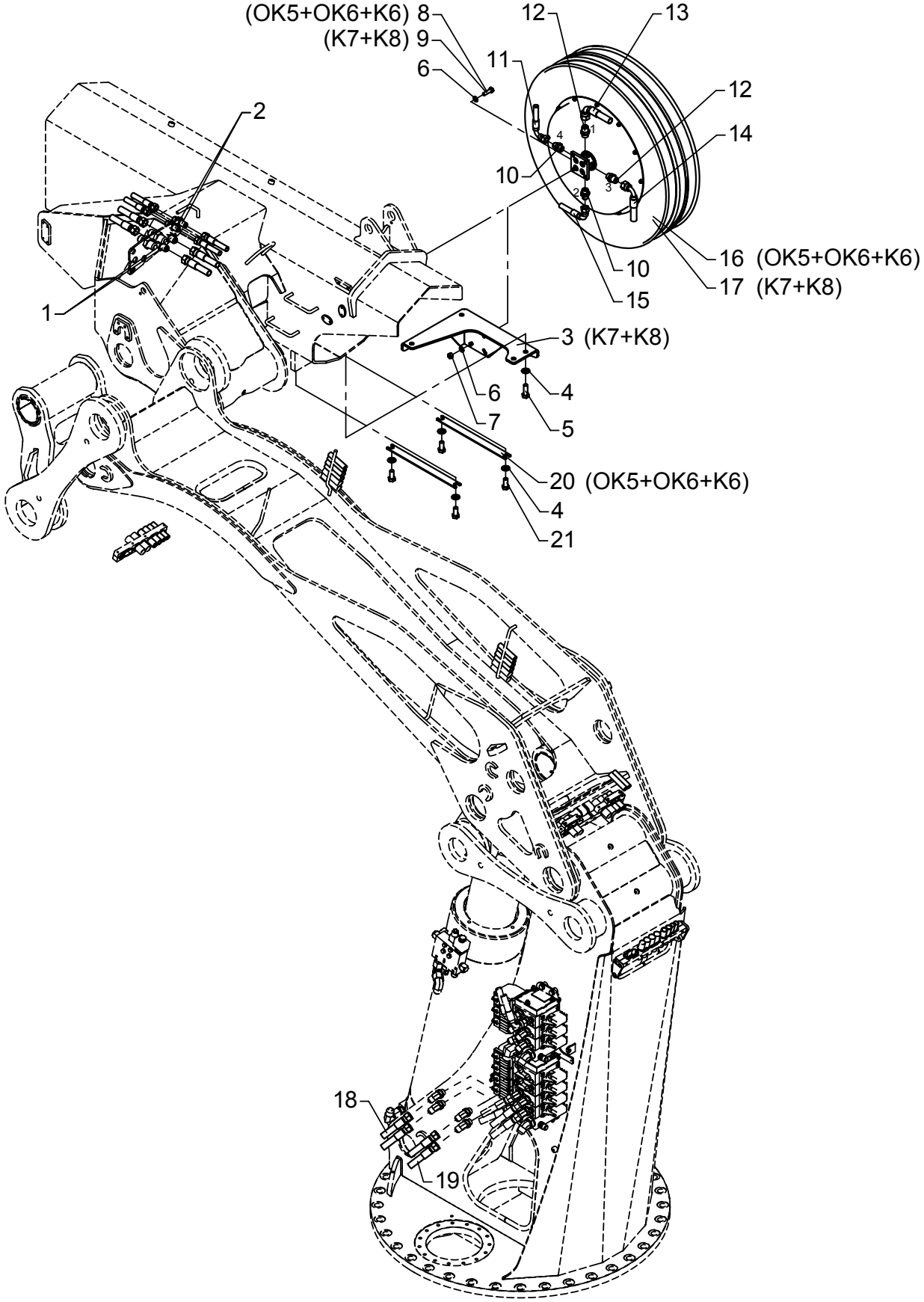

Hydraulic system, extra valves, without FJ and winch

As from / To loader no.: 96 00 87 /
Created: 30.06.2005
Modified: 28.03.2007

Item no.	Qty.	Part no.	Description	Remarks
1	2	25825	Bulkhead connection	WTX-WLNS 14/16 JIC
2	2	25824	Bulkhead connection	WTX-WLNS 12 JIC
3	1	6300929	Bracket for hose reel	
4	8	31178	Washer	14 mm
5	4	30207	Set screw	M14 x 40
6	8	31177	Washer	10 mm
7	4	31564	Lock nut, stainless	M10
8	4	31513	Set screw, stainless	M10 x 25
9	4	31519	Set screw	M10 x 35
10	2	25832	Straight connection	F40XS 12-1/2 JIC
11	1	56060	Hose	3/8" x 1950 mm V/O JIC (KN)
12	2	25833	Straight connection	F40XS 14/16-1/2 JIC
13	1	56059	Hose	1/2" x 1950 mm V/O JIC (UU)
14	1	56059	Hose	1/2" x 1950 mm V/O JIC (KO)
15	1	56060	Hose	3/8" x 1950 mm V/O JIC (UI)
16	1	56317	Hose reel, double	1/2" x 18500 mm
		56318	Hose	1/2" x 18500 mm
		56344	Spring	
		56346	Spring container	
		56347	Seal kit	
17	1	56315	Hose reel, double	1/2" x 15500 mm
		56316	Hose	1/2" x 15500 mm
		56344	Spring	
		56346	Spring container	
		56347	Seal kit	
18	2	56055	Hose	3/8" x 5900 mm O/O JIC
19	2	56056	Hose	1/2" x 5900 mm O/O JIC
20	2	6300444	Hose bracket	
21	4	30206	Set screw	M14 x 30

52-380

Intern ref.: 6302890

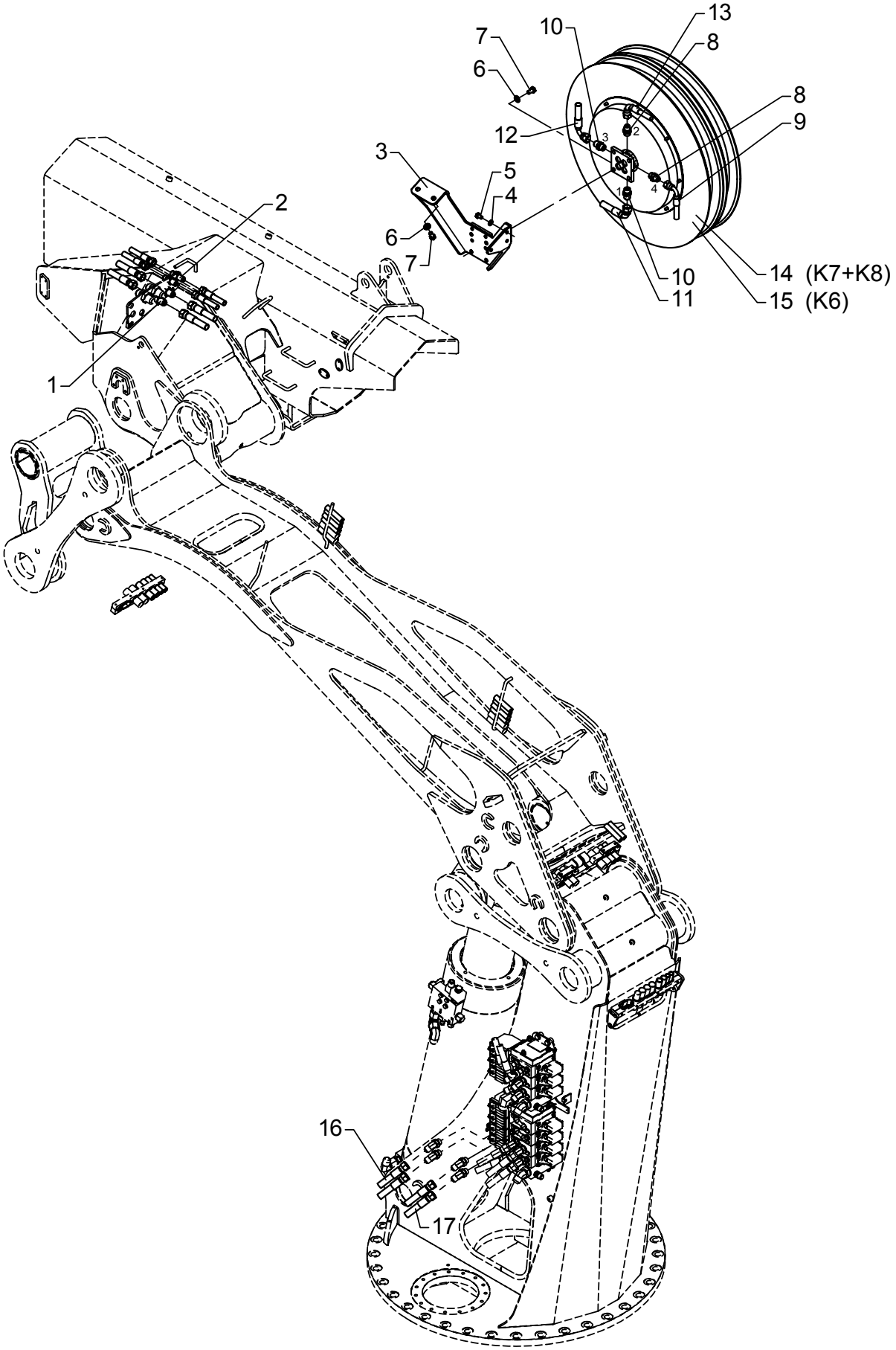

Hydraulic system, extra valves, without FJ, with winch

As from / To loader no.: 96 00 00 / 96 00 86
Created: 03.10.2003
Modified: 28.03.2007

Item no.	Qty.	Part no.	Description	Remarks
1	2	25825	Bulkhead connection	WTX-WLNS 14/16 JIC
2	2	25824	Bulkhead connection	WTX-WLNS 12 JIC
3	1	6300684	Bracket for hose reel	
4	3	31177	Washer	10 mm
5	3	31510	Set screw, stainless	M10 x 16
6	6	31131	Washer	12 mm
7	6	30175	Set screw	M12 x 20
8	2	25832	Straight connection	F40XS 12-1/2 JIC
9	1	62944	Hose, JIC	3/8" x 2200 mm V/O JIC (KN)
10	2	25833	Straight connection	F40XS 14/16-1/2 JIC
11	1	56074	Hose	1/2" x 2250 mm V/O JIC (UU)
12	1	56074	Hose	1/2" x 2250 mm V/O JIC (KO)
13	1	62907	Hose	3/8" x 2000 mm V/O JIC (UI)
14	1	56016	Hose reel, double	1/2" x 18500 mm
		56070	Double hose	1/2" x 18500 mm
		56067	Seal kit	
		56068	Spring for hose reel	
		56073	Cover	
15	1	56017	Hose reel, double	1/2" x 14200 mm
		56069	Double hose	1/2" x 14200 mm
		56067	Seal kit	
		56068	Spring for hose reel	
		56073	Cover	
16	2	56055	Hose	3/8" x 5900 mm O/O JIC
17	2	56056	Hose	1/2" x 5900 mm O/O JIC

52-380

Intern ref.: 6302890

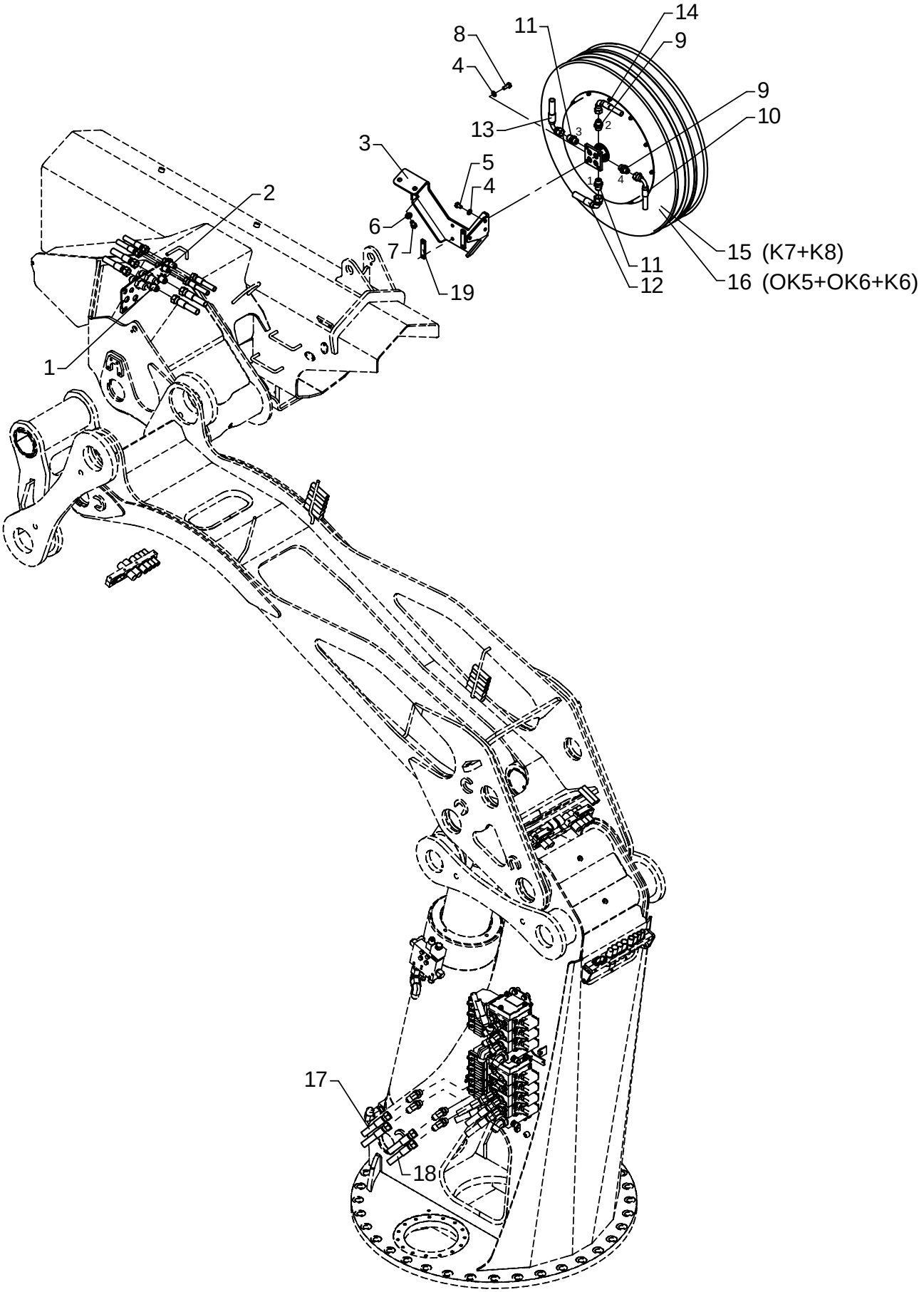

Hydraulic system, extra valves, without FJ, with winch

As from / To loader no.: 96 00 87 / 96 01 94
Created: 30.06.2005
Modified: 03.12.2008

Item no.	Qty.	Part no.	Description	Remarks
1	2	25825	Bulkhead connection	WTX-WLNS 14/16 JIC
2	2	25824	Bulkhead connection	WTX-WLNS 12 JIC
3	1	6300767	Bracket for hose reel	
4	7	31177	Washer	10 mm
5	3	31510	Set screw, stainless	M10 x 16
6	2	31131	Washer	12 mm
7	2	30175	Set screw	M12 x 20
8	4	31513	Set screw, stainless	M10 x 25
9	2	25832	Straight connection	F40XS12 - 1/2
10	1	62944	Hose, JIC	3/8" x 2200 mm V/O JIC (KN)
11	2	25833	Straight connection	F40XS14/16 - 1/2
12	1	56074	Hose	1/2" x 2250 mm V/O JIC (UU)
13	1	56074	Hose	1/2" x 2250 mm V/O JIC (KO)
14	1	62907	Hose	3/8" x 2000 mm V/O JIC (UI)
15	1	56317	Hose reel, double	1/2" x 18500 mm
		56318	Hose	1/2" x 18500 mm
		56344	Spring	
		56346	Spring container	
		56347	Seal kit	
16	1	56315	Hose reel, double	1/2" x 15500 mm
		56316	Hose	1/2" x 15500 mm
		56344	Spring	
		56346	Spring container	
		56347	Seal kit	
17	2	56055	Hose	3/8" x 5900 mm O/O JIC
18	2	56056	Hose	1/2" x 5900 mm O/O JIC
19	2	6304397	Spacer	

52-380

Intern ref.: 6302890

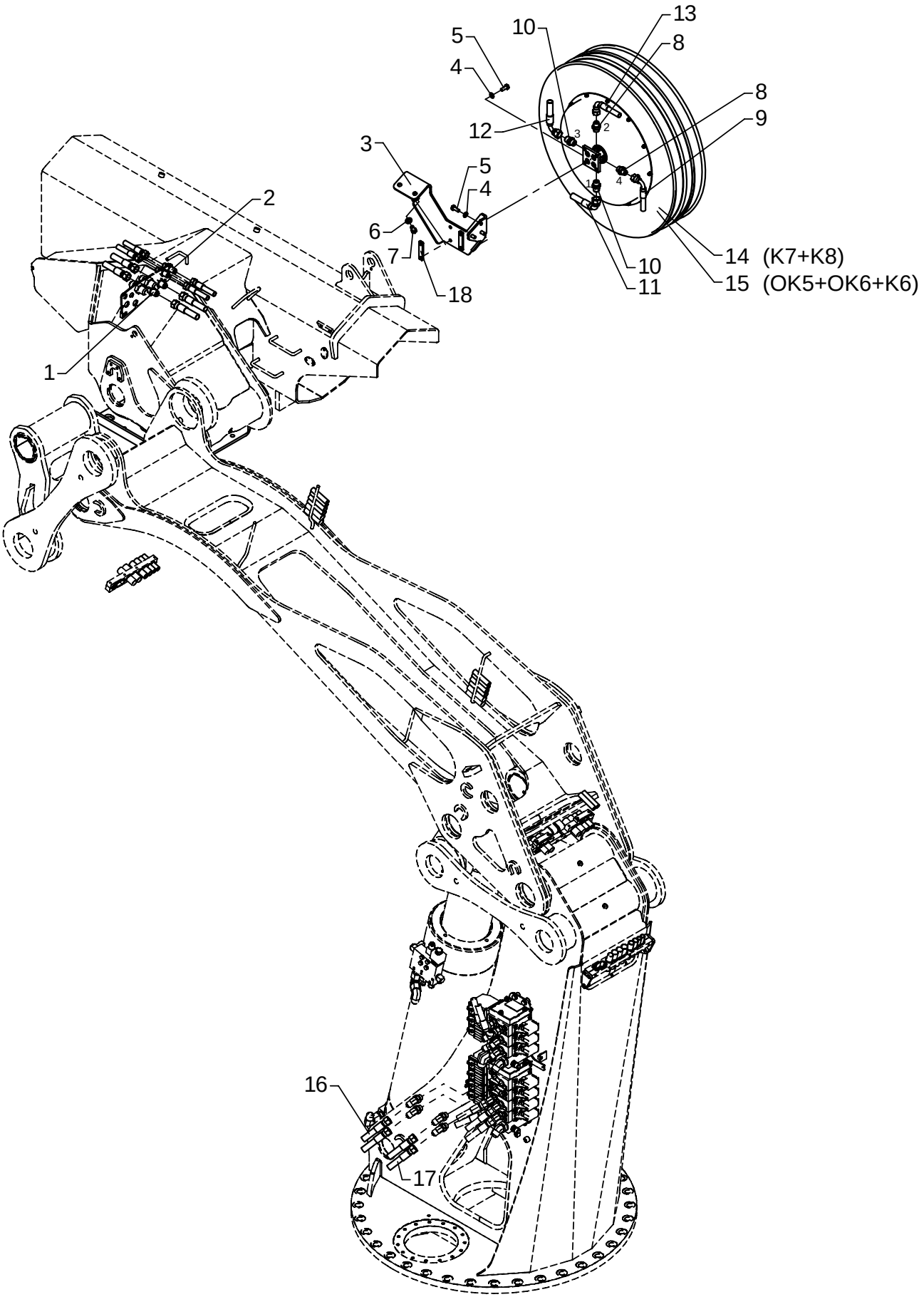

Hydraulic system, extra valves, without FJ, with winch

As from / To loader no.: 96 01 95
Created: 03.12.2008
Modified:

Item no.	Qty.	Part no.	Description	Remarks
1	2	25825	Bulkhead connection	WTX-WLNS 14/16 JIC
2	2	25824	Bulkhead connection	WTX-WLNS 12 JIC
3	1	6301296	Bracket for hose reel	
4	7	31177	Washer	10 mm
5	7	31513	Set screw, stainless	M10 x 25
6	2	31131	Washer	12 mm
7	2	30175	Set screw	M12 x 20
8	2	25832	Straight connection	F40XS12 - 1/2
9	1	62944	Hose, JIC	3/8" x 2200 mm V/O JIC (KN)
10	2	25833	Straight connection	F40XS14/16 - 1/2
11	1	56074	Hose	1/2" x 2250 mm V/O JIC (UU)
12	1	56074	Hose	1/2" x 2250 mm V/O JIC (KO)
13	1	62907	Hose	3/8" x 2000 mm V/O JIC (UI)
14	1	56317	Hose reel, double	1/2" x 18500 mm
		56318	Hose	1/2" x 18500 mm
		56344	Spring	
		56346	Spring container	
		56347	Seal kit	
15	1	56315	Hose reel, double	1/2" x 15500 mm
		56316	Hose	1/2" x 15500 mm
		56344	Spring	
		56346	Spring container	
		56347	Seal kit	
16	2	56055	Hose	3/8" x 5900 mm O/O JIC
17	2	56056	Hose	1/2" x 5900 mm O/O JIC
18	2	6304397	Spacer	

52-380

Intern ref.: 6302890

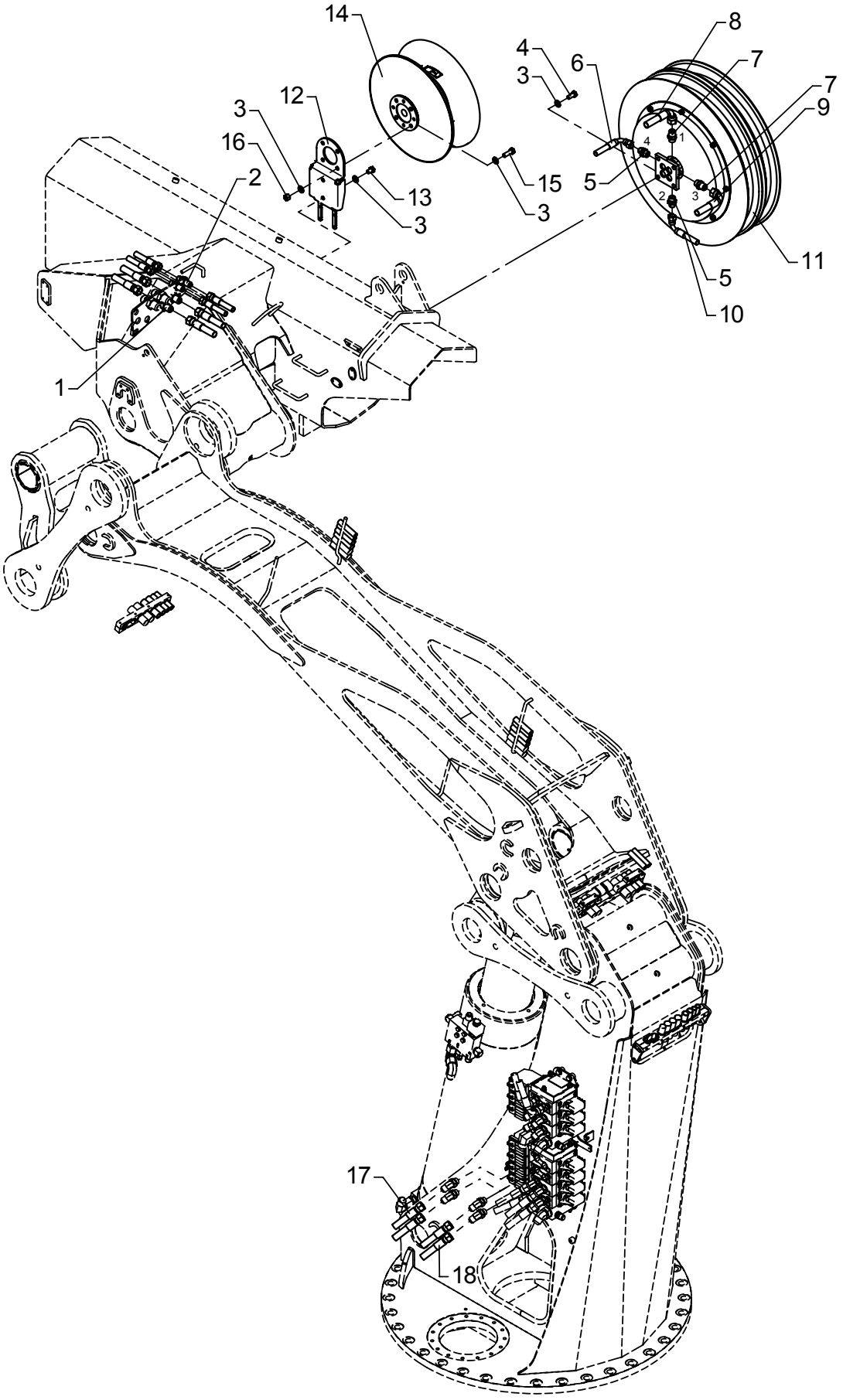

Hydraulic system, extra valves, with FJ

As from / To loader no.: 96 00 00 / 96 00 86
Created: 03.10.2003
Modified: 28.03.2007

Item no.	Qty.	Part no.	Description	Remarks
1	2	25825	Bulkhead connection	WTX-WLNS 14/16 JIC
2	2	25824	Bulkhead connection	WTX-WLNS 12 JIC
3	14	31131	Washer	12 mm
4	4	30176	Set screw	M12 x 25
5	2	25832	Straight connection	F40XS 12-1/2 JIC
6	1	56060	Hose	3/8" x 1950 mm V/O JIC (KN)
7	2	25833	Straight connection	F40XS 14/16-1/2 JIC
8	1	56059	Hose	1/2" x 1950 mm V/O JIC (UU)
9	1	56059	Hose	1/2" x 1950 mm V/O JIC (KO)
10	1	56060	Hose	3/8" x 1950 mm V/O JIC (UI)
11	1	56017	Hose reel, double	1/2" x 14200 mm
		56069	Double hose	1/2" x 14200 mm
		56067	Seal kit	
		56068	Spring for hose reel	
		56073	Cover	
12	1	6302879	Bracket for cable drum	
13	2	31960	Set screw	M12 x 16
14	1	28547	Cable drum	
15	4	30178	Set screw	M12 x 35
16	4	30890	Lock nut	M12
17	2	56055	Hose	3/8" x 5900 mm O/O JIC
18	2	56056	Hose	1/2" x 5900 mm O/O JIC

52-380

Intern ref.: 6302890

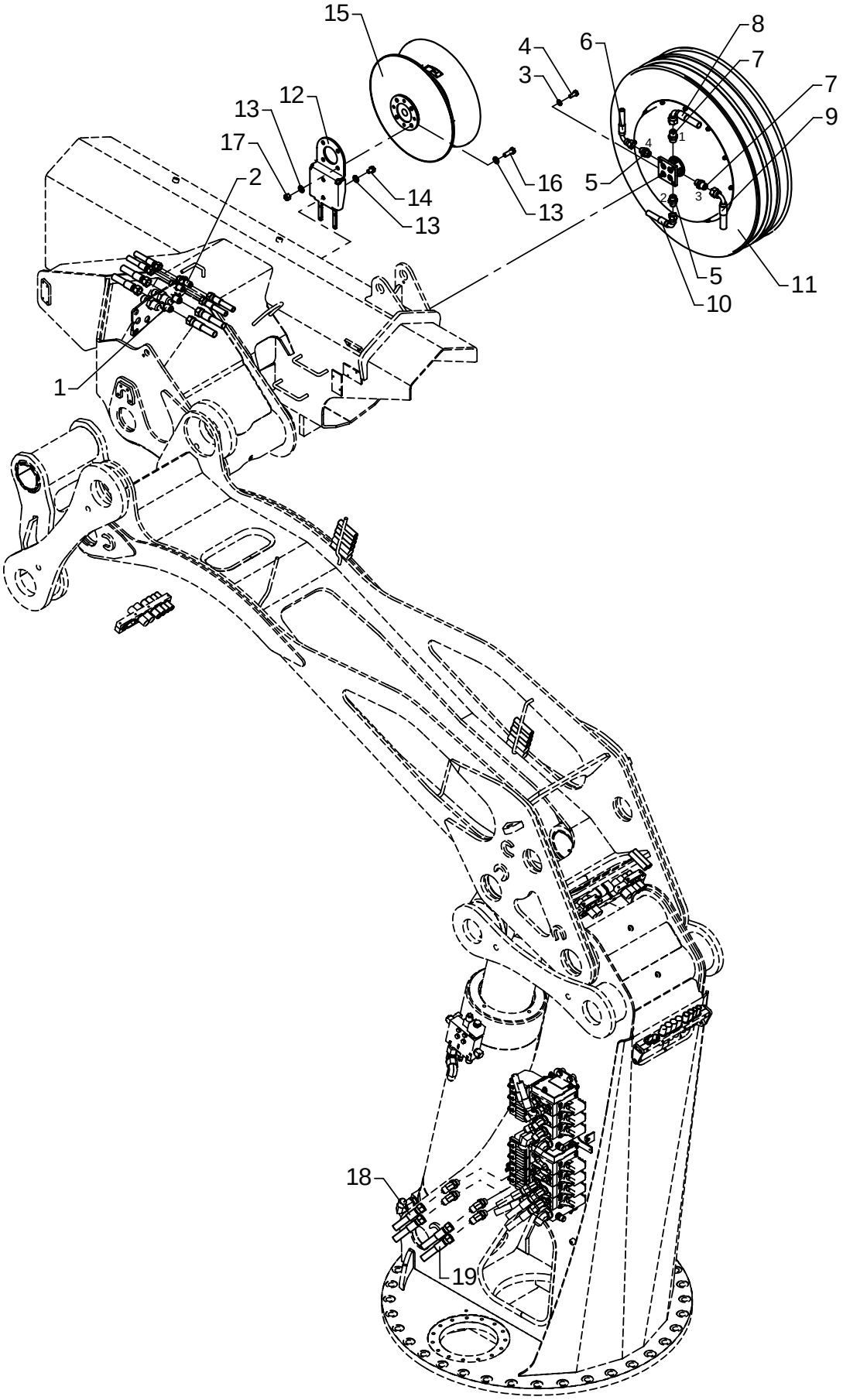

Hydraulic system, extra valves, with FJ

As from / To loader no.: 96 00 87 /
Created: 30.06.2005
Modified: 28.03.2007

Item no.	Qty.	Part no.	Description	Remarks
1	2	25825	Bulkhead connection	WTX-WLNS 14/16 JIC
2	2	25824	Bulkhead connection	WTX-WLNS 12 JIC
3	4	31177	Washer	10 mm
4	4	31513	Set screw, stainless	M10 x 25
5	2	25832	Straight connection	F40XS 12-1/2 JIC
6	1	56060	Hose	3/8" x 1950 mm V/O JIC (KN)
7	2	25833	Straight connection	F40XS 14/16-1/2 JIC
8	1	56059	Hose	1/2" x 1950 mm V/O JIC (UU)
9	1	56059	Hose	1/2" x 1950 mm V/O JIC (KO)
10	1	56060	Hose	3/8" x 1950 mm V/O JIC (UI)
11	1	56315	Hose reel, double	1/2" x 15500 mm
		56316	Hose	1/2" x 15500 mm
		56344	Spring	
		56346	Spring container	
		56347	Seal kit	
12	1	6302879	Bracket for cable drum	
13	10	31131	Washer	12 mm
14	2	31960	Set screw	M12 x 16
15	1	28547	Cable drum	
16	4	30178	Set screw	M12 x 35
17	4	30890	Lock nut	M12
18	2	56055	Hose	3/8" x 5900 mm O/O JIC
19	2	56056	Hose	1/2" x 5900 mm O/O JIC

52-380

Intern ref.: 6302860

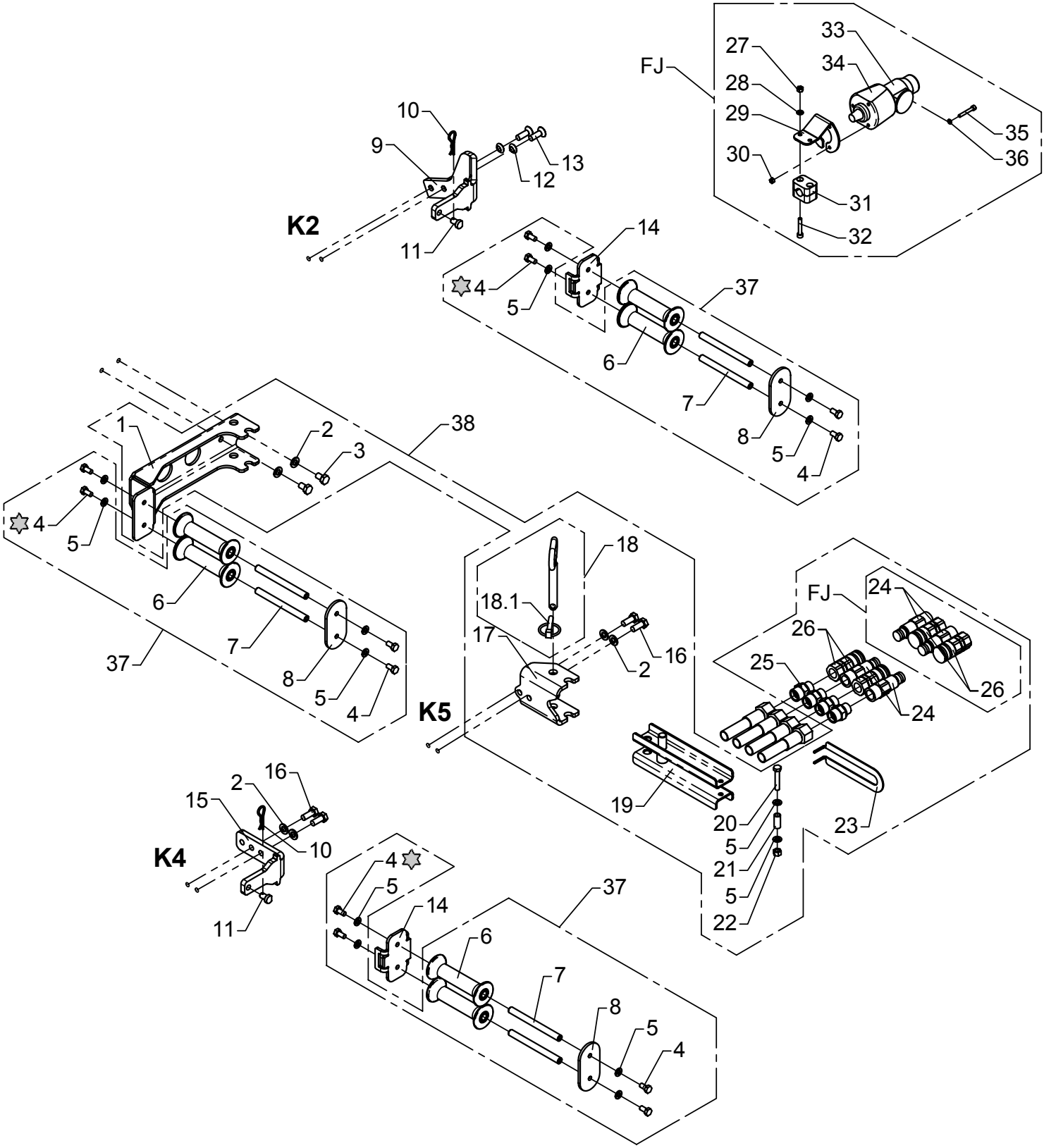

Loctite 243

Extra valves, OK5-2
Hose reels and quick-release couplings

As from / To loader no.: 96 00 00 /
Created: 09.08.2006
Modified:

Item no.	Qty.	Part no.	Description	Remarks
1	1	6302899	Attachment, jib	
2	6	31177	Washer	10 mm
3	2	30153	Set screw	M10 x 16
4	12	30131	Set screw, stainless	M8 x 16
5	14	31147	Washer, stainless	8 mm
6	6	63510	Guide roller	
7	6	6302883	Pin	
8	3	6302882	End plate	
9	1	6302626	Attachment - 2nd extension	
10	2	33379	Spring	
11	2	6302896	Lock pin	
12	2	31171	Washer	10 mm
13	2	30581	Counter-sunk screw	MK10 x 30
14	2	6302881	Plate	
15	1	6302598	Attachment - 4/6th extension	
16	4	30155	Set screw	M10 x 25
17	1	6302869	Adapter - 5th extension	
18	1	1261144	Lock pin with chain	
	1	33387	Ring split	ø8
19	1	6302897	Clamp	
20	1	30138	Steel bolt, stainless	M8 x 45
21	1	6302888	Pipe	
22	1	30886	Lock nut, stainless	M8
23	1	6302878	Bracket	
24	4	58447	Coupling	1/2"
25	4	26334	Connection	GEV 16 SR-WD
26	4	58448	Coupling	1/2"
27	2	30884	Lock nut, stainless	M6
28	2	32302	Face washer, stainless	6 mm
29	1	6301049	Bracket for 13 poles plug box	
30	3	30859	Lock nut, stainless	M5
31	1	31434	Clamp	
32	2	30959	Screw	MC6 x 35
33	1	27109	Plug	
34	1	27108	Plug box	
35	3	30422	Screw, stainless	MC5 x 35
36	3	31153	Spring washer, stainless	5 mm
37	3	6302900	Guide rollers and pins	
38	1	6302910	Quick-release couplings	

52-380

Intern ref.: 6302860

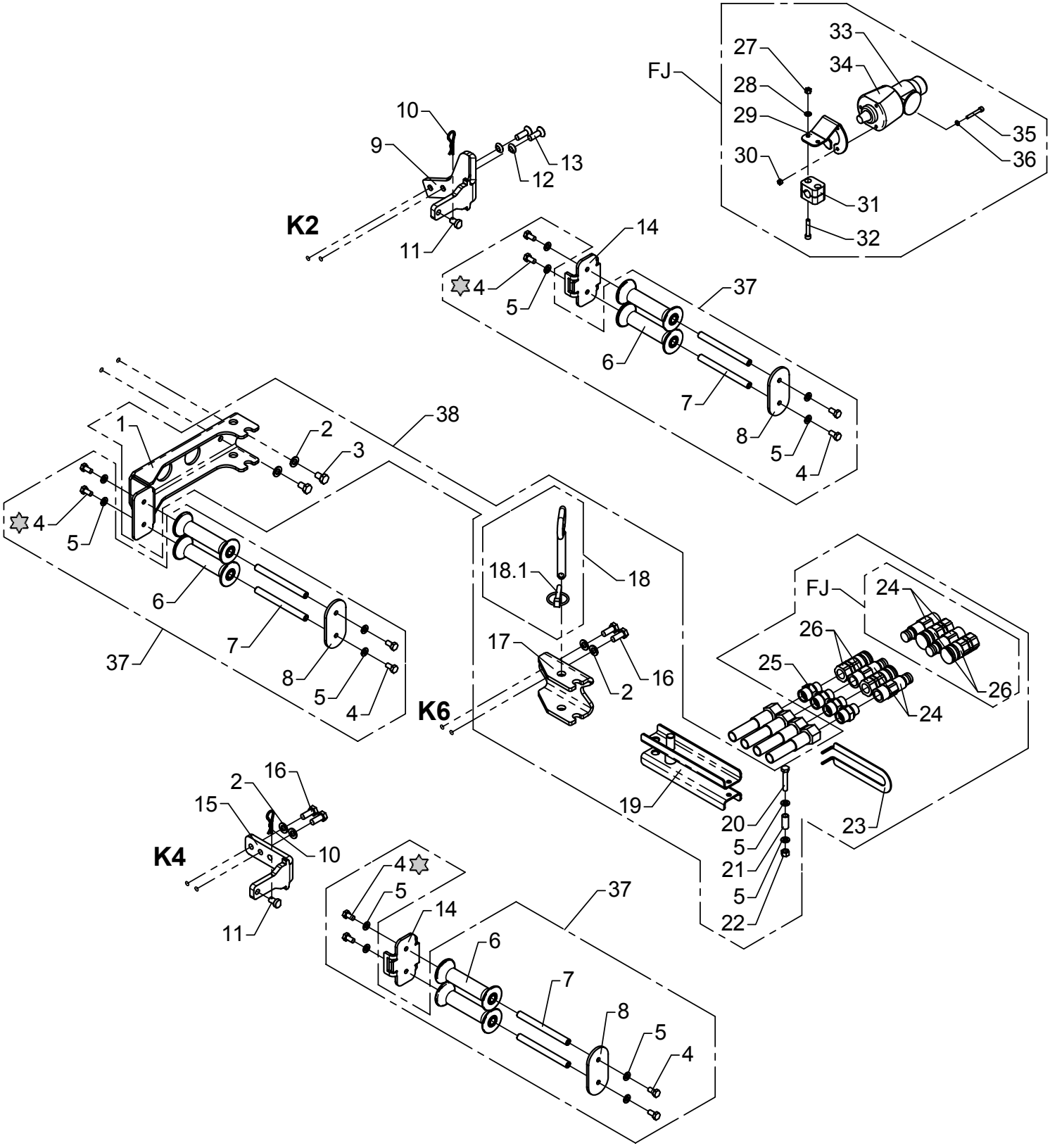

Loctite 243

Extra valves, OK6-2
Hose reels and quick-release couplings

As from / To loader no.: 96 00 00 /
Created: 09.08.2006
Modified:

Item no.	Qty.	Part no.	Description	Remarks
1	1	6302899	Attachment, jib	
2	6	31177	Washer	10 mm
3	2	30153	Set screw	M10 x 16
4	12	30131	Set screw, stainless	M8 x 16
5	14	31147	Washer, stainless	8 mm
6	6	63510	Guide roller	
7	6	6302883	Pin	
8	3	6302882	End plate	
9	1	6302626	Attachment - 2nd extension	
10	2	33379	Spring	
11	2	6302896	Lock pin	
12	2	31171	Washer	10 mm
13	2	30581	Counter-sunk screw	MK10 x 30
14	2	6302881	Plate	
15	1	6302598	Attachment - 4/6th extension	
16	4	30155	Set screw	M10 x 25
17	1	6302891	Adapter - 6/8th extension	
18	1	1261144	Lock pin with chain	
	1	33387	Ring split	ø8
19	1	6302897	Clamp	
20	1	30138	Steel bolt, stainless	M8 x 45
21	1	6302888	Pipe	
22	1	30886	Lock nut, stainless	M8
23	1	6302878	Bracket	
24	4	58447	Coupling	1/2"
25	4	26334	Connection	GEV 16 SR-WD
26	4	58448	Coupling	1/2"
27	2	30884	Lock nut, stainless	M6
28	2	32302	Face washer, stainless	6 mm
29	1	6301049	Bracket for 13 poles plug box	
30	3	30859	Lock nut, stainless	M5
31	1	31434	Clamp	
32	2	30959	Screw	MC6 x 35
33	1	27109	Plug	
34	1	27108	Plug box	
35	3	30422	Screw, stainless	MC5 x 35
36	3	31153	Spring washer, stainless	5 mm
37	3	6302900	Guide rollers and pins	
38	1	6302910	Quick-release couplings	

52-380

Intern ref.: 6302860

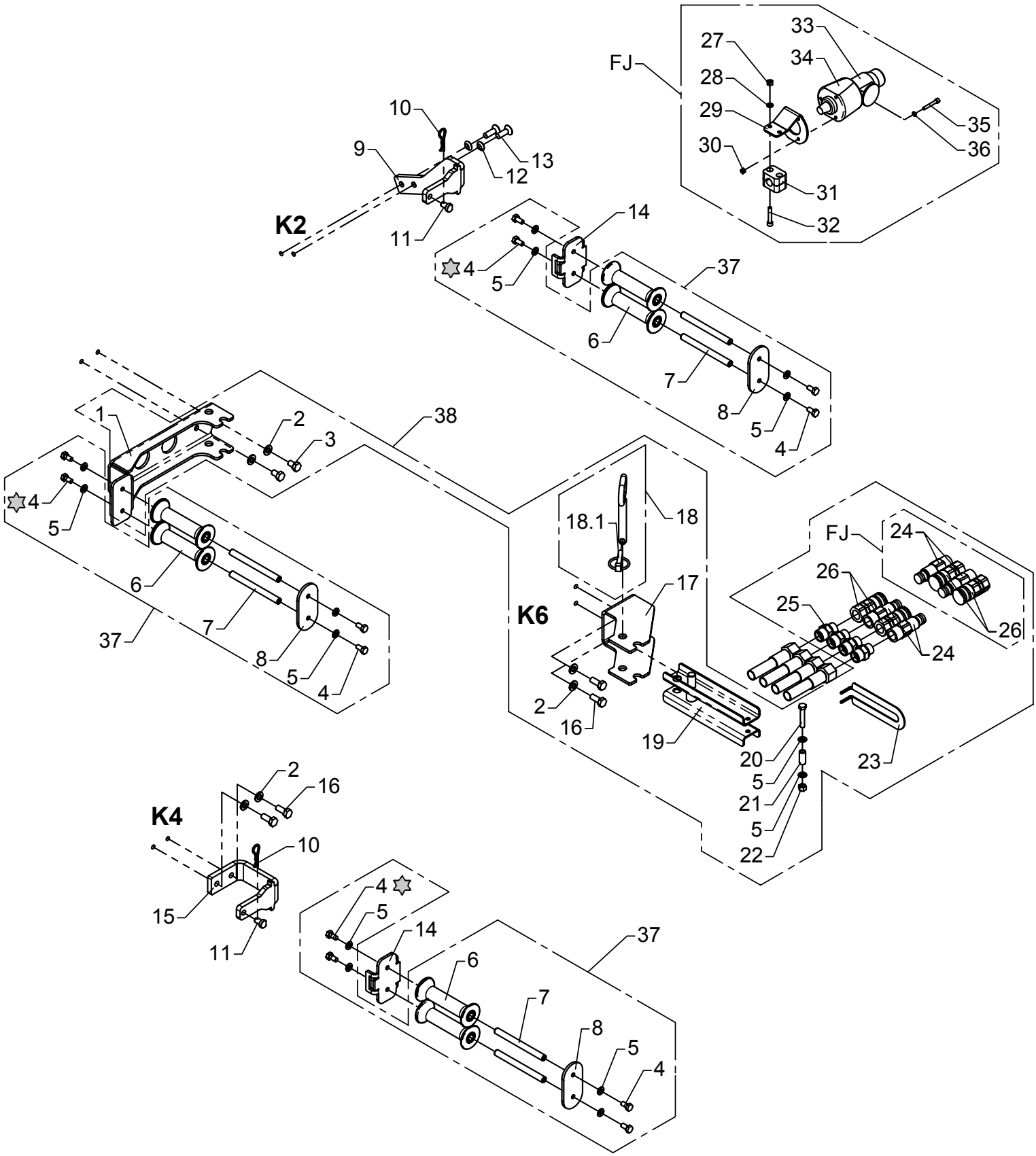

Loctite 243

Extra valves, K6-2
Hose reels and quick-release couplings

As from / To loader no.: 96 00 00 /
Created: 03.10.2003
Modified: 12.08.2004

Item no.	Qty.	Part no.	Description	Remarks
1	1	6302899	Attachment, jib	
2	6	31177	Washer	10 mm
3	2	30153	Set screw	M10 x 16
4	12	30131	Set screw, stainless	M8 x 16
5	14	31147	Washer, stainless	8 mm
6	6	63510	Guide roller	
7	6	6302883	Pin	
8	3	6302882	End plate	
9	1	6302884	Attachment - 2nd extension	
10	2	33379	Spring	
11	2	6302896	Lock pin	
12	2	31171	Washer	10 mm
13	2	30581	Counter-sunk screw	MK10 x 30
14	2	6302881	Plate	
15	1	6302885	Attachement - 4th extension	
16	4	30155	Set screw	M10 x 25
17	1	6300599	Adapter - 6th extension	
18	1	1261144	Lock pin with chain	
	1	33387	Ring split	ø8
19	1	6302897	Clamp	
20	1	30138	Steel bolt, stainless	M8 x 45
21	1	6302888	Pipe	
22	1	30886	Lock nut, stainless	M8
23	1	6302878	Bracket	
24	4	58447	Coupling	1/2"
25	4	26334	Connection	GEV 16 SR-WD
26	4	58448	Coupling	1/2"
27	2	30884	Lock nut, stainless	M6
28	2	32302	Face washer, stainless	6 mm
29	1	6301049	Bracket for 13 poles plug box	
30	3	30859	Lock nut, stainless	M5
31	1	31434	Clamp	
32	2	30959	Screw	MC6 x 35
33	1	27109	Plug	
34	1	27108	Plug box	
35	3	30422	Screw, stainless	MC5 x 35
36	3	31153	Spring washer, stainless	5 mm
37	3	6302900	Guide rollers and pins	
38	1	6302910	Quick-release couplings	

52-380

Intern ref.: 6302860 / 6302880

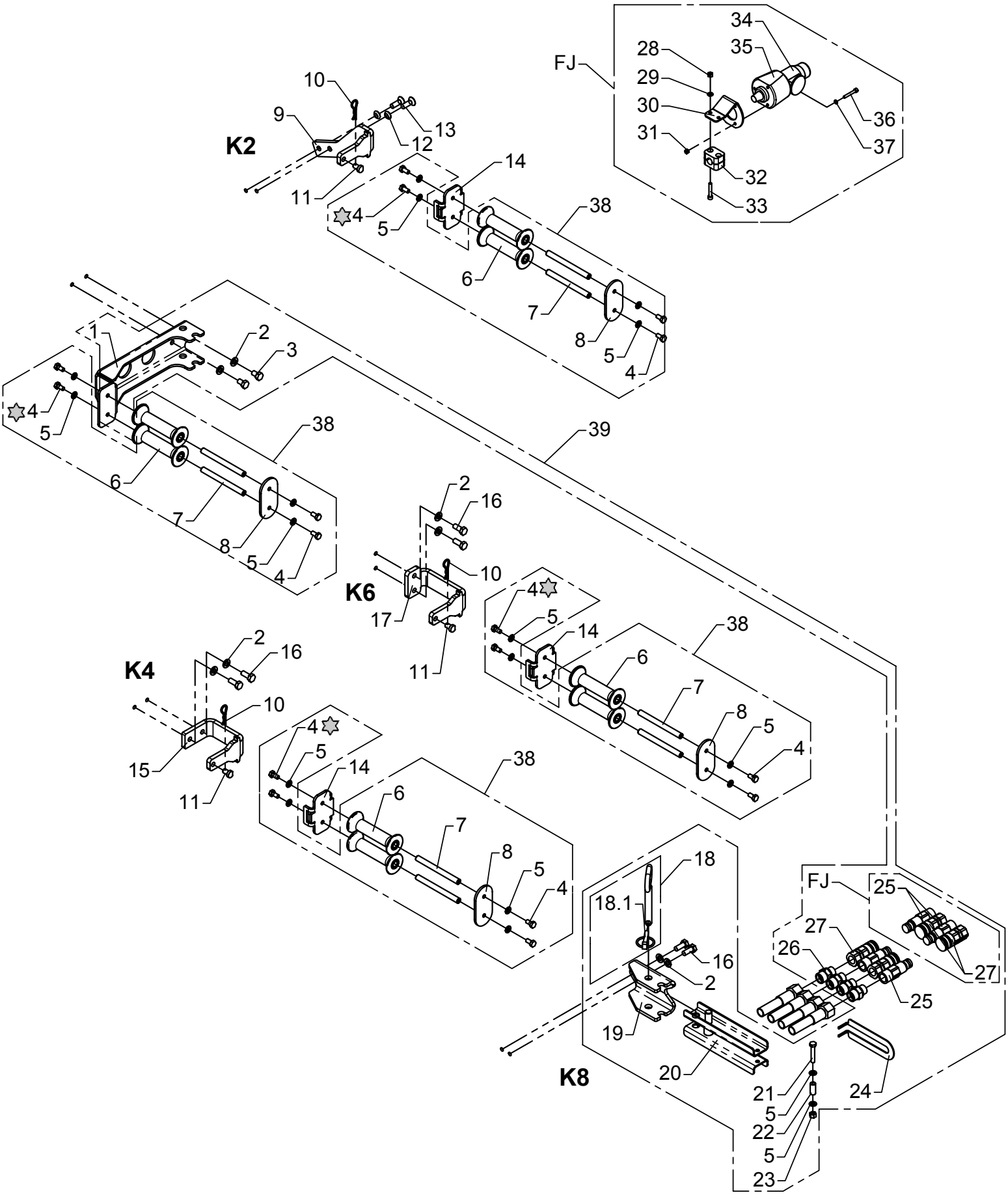

Loctite 243

Extra valves, K8-2
Hose reels and quick-release coupling

As from / To loader no.: 96 00 00 /
Created: 03.10.2003
Modified: 12.08.2004

Item no.	Qty.	Part no.	Description	Remarks
1	1	6302899	Attachment, jib	
2	8	31177	Washer	10 mm
3	2	30153	Set screw	M10 x 16
4	16	30131	Set screw, stainless	M8 x 16
5	18	31147	Washer, stainless	8 mm
6	8	63510	Guide roller	
7	8	6302883	Pin	
8	4	6302882	End plate	
9	1	6302884	Attachment - 2nd extension	
10	3	33379	Spring	
11	3	6302896	Lock pin	
12	2	31171	Washer	10 mm
13	2	30581	Counter-sunk screw	MK10 x 30
14	3	6302881	Plate	
15	1	6302885	Attachement - 4th extension	
16	6	30155	Set screw	M10 x 25
17	1	6300598	Attachement - 6th extension	
18	1	1261144	Lock pin with chain	
	1	33387	Ring split	ø8
19	1	6302891	Adapter - 8th extension	
20	1	6302897	Clamp	
21	1	30138	Steel bolt, stainless	M8 x 45
22	1	6302888	Pipe	
23	1	30886	Lock nut, stainless	M8
24	1	6302878	Bracket	
25	4	58447	Coupling	1/2"
26	4	26334	Connection	GEV 16 SR-WD
27	4	58448	Coupling	1/2"
28	2	30884	Lock nut, stainless	M6
29	2	32302	Face washer, stainless	6 mm
30	1	6301049	Bracket for 13 poles plug box	
31	3	30859	Lock nut, stainless	M5
32	1	31434	Clamp	
33	2	30959	Screw	MC6 x 35
34	1	27109	Plug	
35	1	27108	Plug box	
36	3	30422	Screw, stainless	MC5 x 35
37	3	31153	Spring washer, stainless	5 mm
38	4	6302900	Guide rollers and pins	
39	1	6302910	Quick-release couplings	

52-380

Intern ref.: 6302860

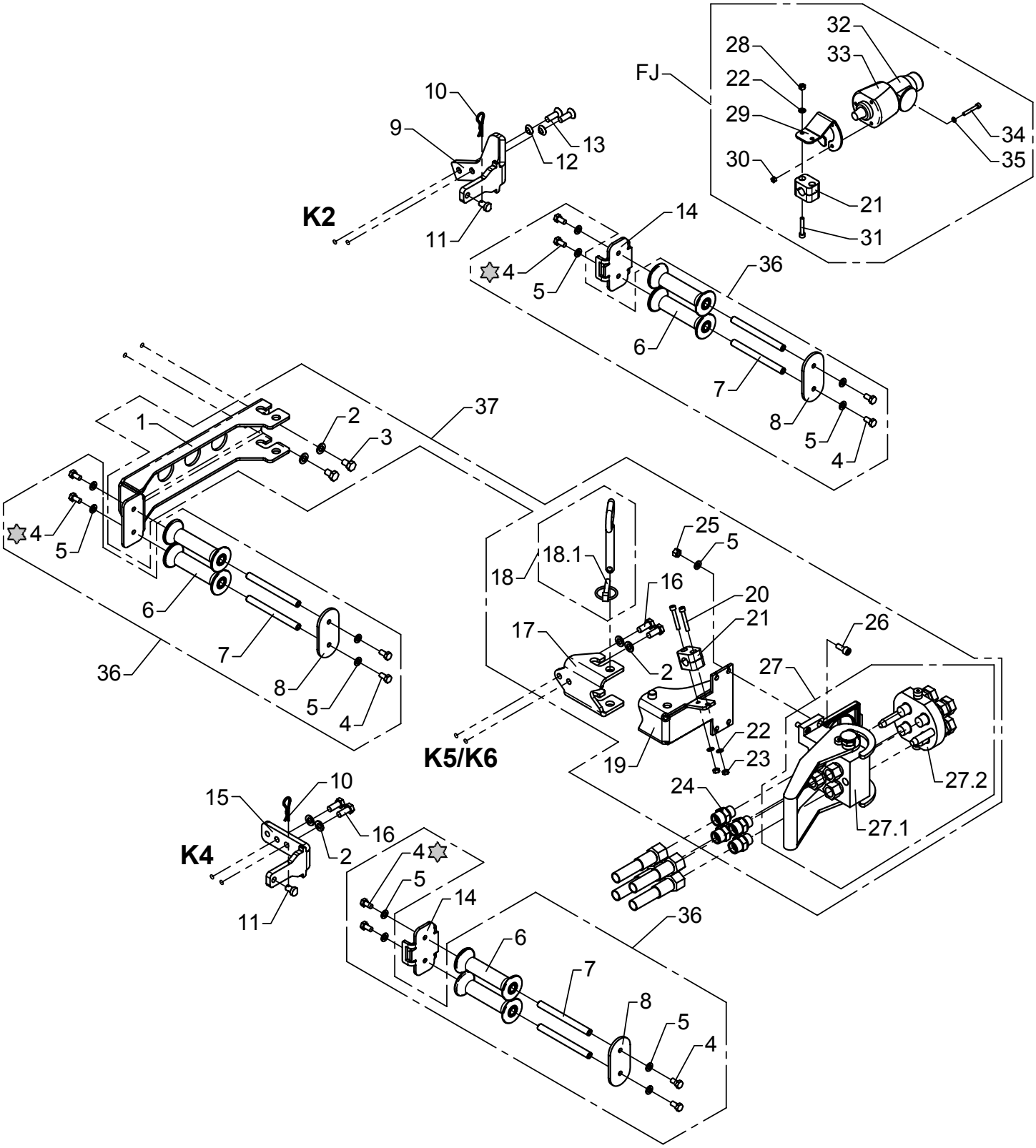

Loctite 243

Extra valves, OK5/OK6-2
Hose reels and multi-coupling

As from / To loader no.: 96 00 00 /
Created: 09.08.2006
Modified:

Item no.	Qty.	Part no.	Description	Remarks
1	1	6302877	Attachment - jib	
2	6	31177	Washer	10 mm
3	2	30153	Set screw	M10 x 16
4	12	30131	Set screw, stainless	M8 x 16
5	16	31147	Washer, stainless	8 mm
6	6	63510	Guide roller	
7	6	6302883	Pin	
8	3	6302882	End plate	
9	1	6302626	Attachment - 2nd extension	
10	2	33379	Spring	
11	2	6302896	Lock pin	
12	2	31171	Washer	10 mm
13	2	30581	Counter-sunk screw	MK10 x 30
14	2	6302881	Plate	
15	1	6302598	Attachment - 4/6th extension	
16	4	30155	Set screw	M10 x 25
17	1	6302926	Adapter - 5/6/8th extension	
18	1	1261144	Lock pin with chain	
	1	33387	Ring split	ø8
19	1	6302927	Bracket	
20	2	32410	Screw	MC6 x 40
21	2	31434	Clamp	
22	4	32302	Face washer, stainless	6 mm
23	2	30854	Nut, stainless	M6
24	4	26334	Connection	GEV 16 SR-WD
25	4	30886	Lock nut, stainless	M8
26	4	30438	Screw	MC8 x 20
27	1	58430	Multifaster coupling	1/2"
27.1	1	58432	Multifaster coupling	
27.2	1	58431	Multifaster coupling	
28	2	30884	Lock nut, stainless	M6
29	1	6301049	Bracket for 13 poles plug box	
30	3	30859	Lock nut, stainless	M5
31	2	30959	Screw	MC6 x 35
32	1	27109	Plug	
33	1	27108	Plug box	
34	3	30422	Screw, stainless	MC5 x 35
35	3	31153	Spring washer, stainless	5 mm
36	3	6302900	Guide rollers and pins	
37	1	6302920	Multifaster K6 - K8	

52-380

Intern ref.: 6302860

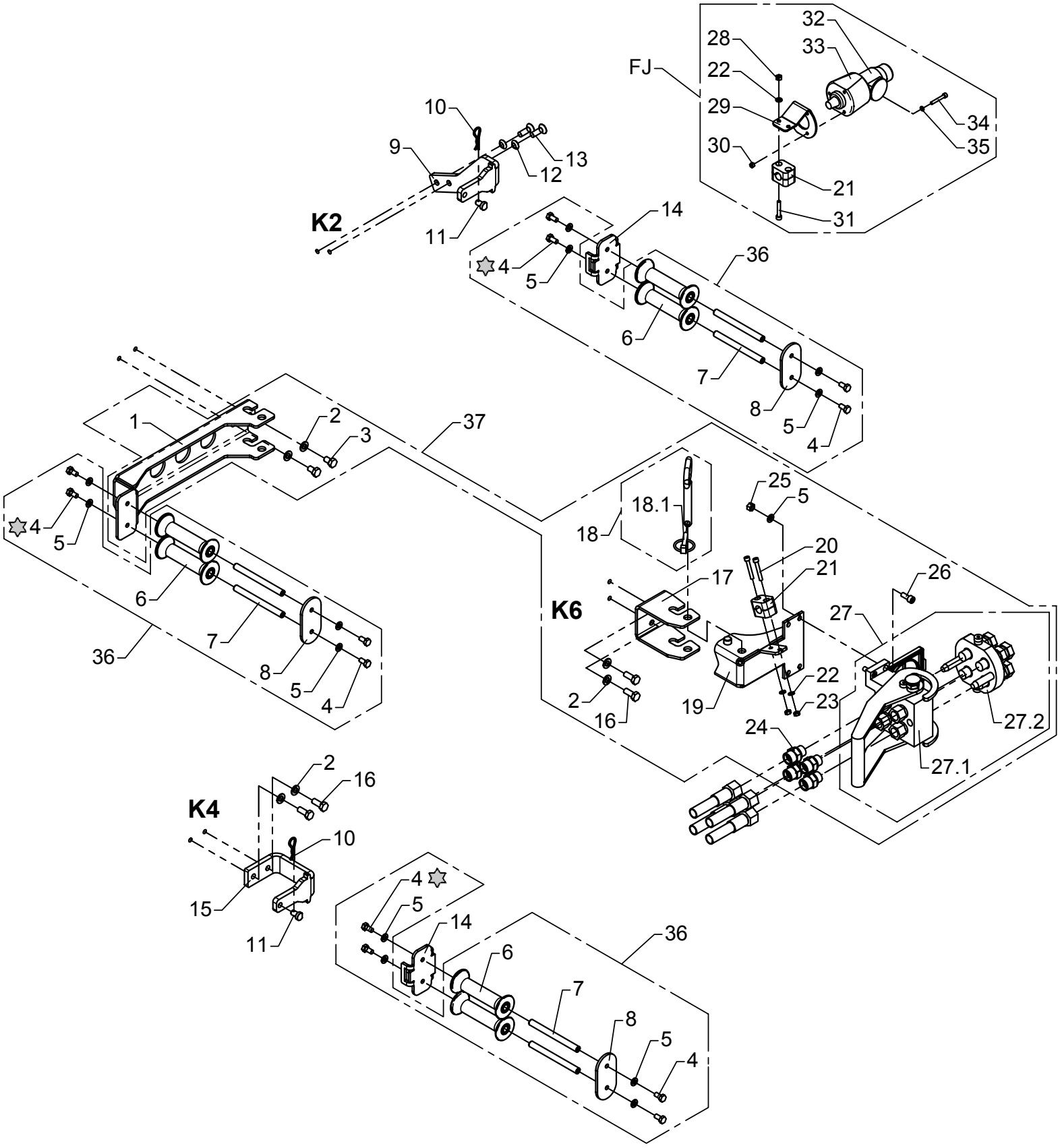

Loctite 243

Extra valves, K6-2
Hose reels and multi-coupling

As from / To loader no.: 96 00 00 /
Created: 17.11.2003
Modified: 12.08.2004

Item no.	Qty.	Part no.	Description	Remarks
1	1	6302877	Attachment - jib	
2	6	31177	Washer	10 mm
3	2	30153	Set screw	M10 x 16
4	12	30131	Set screw, stainless	M8 x 16
5	16	31147	Washer, stainless	8 mm
6	6	63510	Guide roller	
7	6	6302883	Pin	
8	3	6302882	End plate	
9	1	6302884	Attachment - 2nd extension	
10	2	33379	Spring	
11	2	6302896	Lock pin	
12	2	31171	Washer	10 mm
13	2	30581	Counter-sunk screw	MK10 x 30
14	2	6302881	Plate	
15	1	6302885	Attachement - 4th extension	
16	4	30155	Set screw	M10 x 25
17	1	6300925	Adapter - 6th extension	
18	1	1261144	Lock pin with chain	
	1	33387	Ring split	ø8
19	1	6302927	Bracket	
20	2	32410	Screw	MC6 x 40
21	2	31434	Clamp	
22	4	32302	Face washer, stainless	6 mm
23	2	30854	Nut, stainless	M6
24	4	26334	Connection	GEV 16 SR-WD
25	4	30886	Lock nut, stainless	M8
26	4	30438	Screw	MC8 x 20
27	1	58430	Multifaster coupling	1/2"
27.1	1	58432	Multifaster coupling	
27.2	1	58431	Multifaster coupling	
28	2	30884	Lock nut, stainless	M6
29	1	6301049	Bracket for 13 poles plug box	
30	3	30859	Lock nut, stainless	M5
31	2	30959	Screw	MC6 x 35
32	1	27109	Plug	
33	1	27108	Plug box	
34	3	30422	Screw, stainless	MC5 x 35
35	3	31153	Spring washer, stainless	5 mm
36	3	6302900	Guide rollers and pins	
37	1	6302920	Multifaster K6 - K8	

52-380

Intern ref.: 6302860 / 6302880

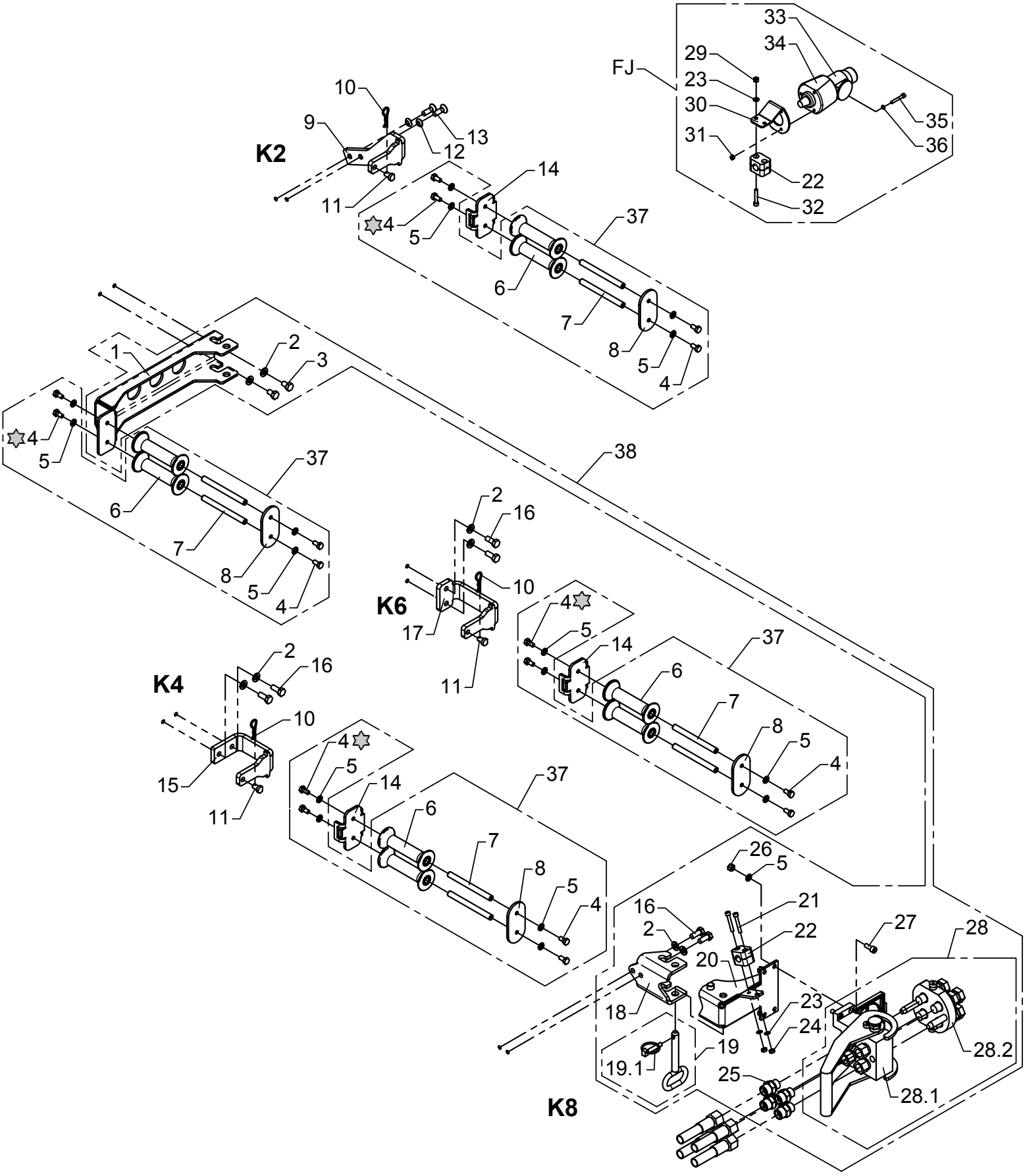

Loctite 243

Extra valves, K8-2
Hose reels and multi-coupling

As from / To loader no.: 96 00 00 /
Created: 17.11.2003
Modified: 12.08.2004

Item no.	Qty.	Part no.	Description	Remarks
1	1	6302877	Attachment - jib	
2	8	31177	Washer	10 mm
3	2	30153	Set screw	M10 x 16
4	16	30131	Set screw, stainless	M8 x 16
5	20	31147	Washer, stainless	8 mm
6	8	63510	Guide roller	
7	8	6302883	Pin	
8	4	6302882	End plate	
9	1	6302884	Attachment - 2nd extension	
10	3	33379	Spring	
11	3	6302896	Lock pin	
12	2	31171	Washer	10 mm
13	2	30581	Counter-sunk screw	MK10 x 30
14	3	6302881	Plate	
15	1	6302885	Attachement - 4th extension	
16	6	30155	Set screw	M10 x 25
17	1	6300598	Attachement - 6th extension	
18	1	6302926	Adapter - 8th extension	
19	1	1261144	Lock pin with chain	
	1	33387	Ring split	ø8
20	1	6302927	Bracket	
21	2	32410	Screw	MC6 x 40
22	2	31434	Clamp	
23	4	32302	Face washer, stainless	6 mm
24	2	30854	Nut, stainless	M6
25	4	26334	Connection	GEV 16 SR-WD
26	4	30886	Lock nut, stainless	M8
27	4	30438	Screw	MC8 x 20
28	1	58430	Multifaster coupling	1/2"
28.1	1	58432	Multifaster coupling	
28.2	1	58431	Multifaster coupling	
29	2	30884	Lock nut, stainless	M6
30	1	6301049	Bracket for 13 poles plug box	
31	3	30859	Lock nut, stainless	M5
32	2	30959	Screw	MC6 x 35
33	1	27109	Plug	
34	1	27108	Plug box	
35	3	30422	Screw, stainless	MC5 x 35
36	3	31153	Spring washer, stainless	5 mm
37	4	6302900	Guide rollers and pins	
38	1	6302920	Multifaster K6 - K8	

52-380

Intern ref.: 6302630

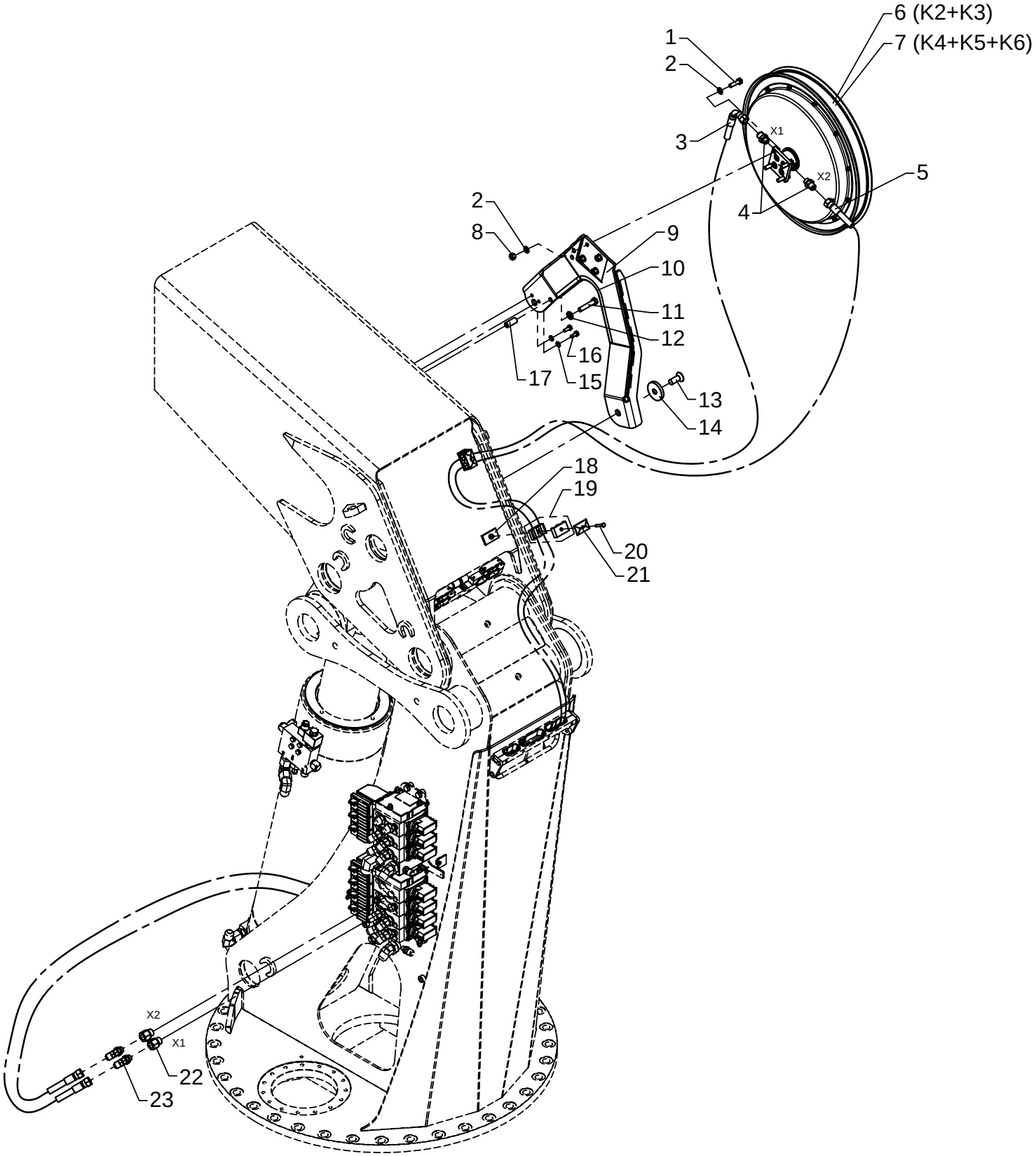

Hydraulic system, internal hose routing - 1 EXV

As from / To loader no.: 96 00 00 /
Created: 14.06.2006
Modified: 28.03.2007

Item no.	Qty.	Part no.	Description	Remarks
1	4	31519	Set screw	M10 x 35
2	8	31177	Washer	10 mm
3	1	62880	Hose	3/8" x 3700 V/O JIC
4	2	25831	Straight connection	F40XS 12-3/8 JIC
5	1	62948	Hose	3/8" x 3700 O/O JIC
6	1	56307	Hose reel	3/8" x 12400 mm
		56308	Hose	3/8" x 12400 mm
		56336	Seal kit	
		56345	Spring	
		56348	Cover	
7	1	56311	Hose reel	3/8" x 17000 mm
		56312	Hose	3/8" x 17000 mm
		56336	Seal kit	
		56345	Spring	
		56348	Cover	
8	4	31564	Lock nut, stainless	M10
9	1	6300958	Bracket for hose reel	
10	1	46587	Rubber protection	300 mm
11	1	30183	Steel bolt	M12 x 60
12	1	31131	Washer	12 mm
13	1	32360	Countersunk screw	MK16 x 40
14	1	6301024	Washer	
15	2	31147	Washer, stainless	8 mm
16	2	30132	Set screw, stainless	M8 x 20
17	1	6301023	Distance pipe	
18	2	31999	Plate	
19	2	31833	Clamp	2 x 18 mm
20	2	30116	Steel bolt, stainless	M6 x 35
21	2	31834	Cover plate	
22	2	25243	Reducing connection	RED-R 1/2-WD/R 3/8
23	2	26695	Elbow connection 45°	V40XS12 - 3/8

52-380

Intern ref.: 6302640

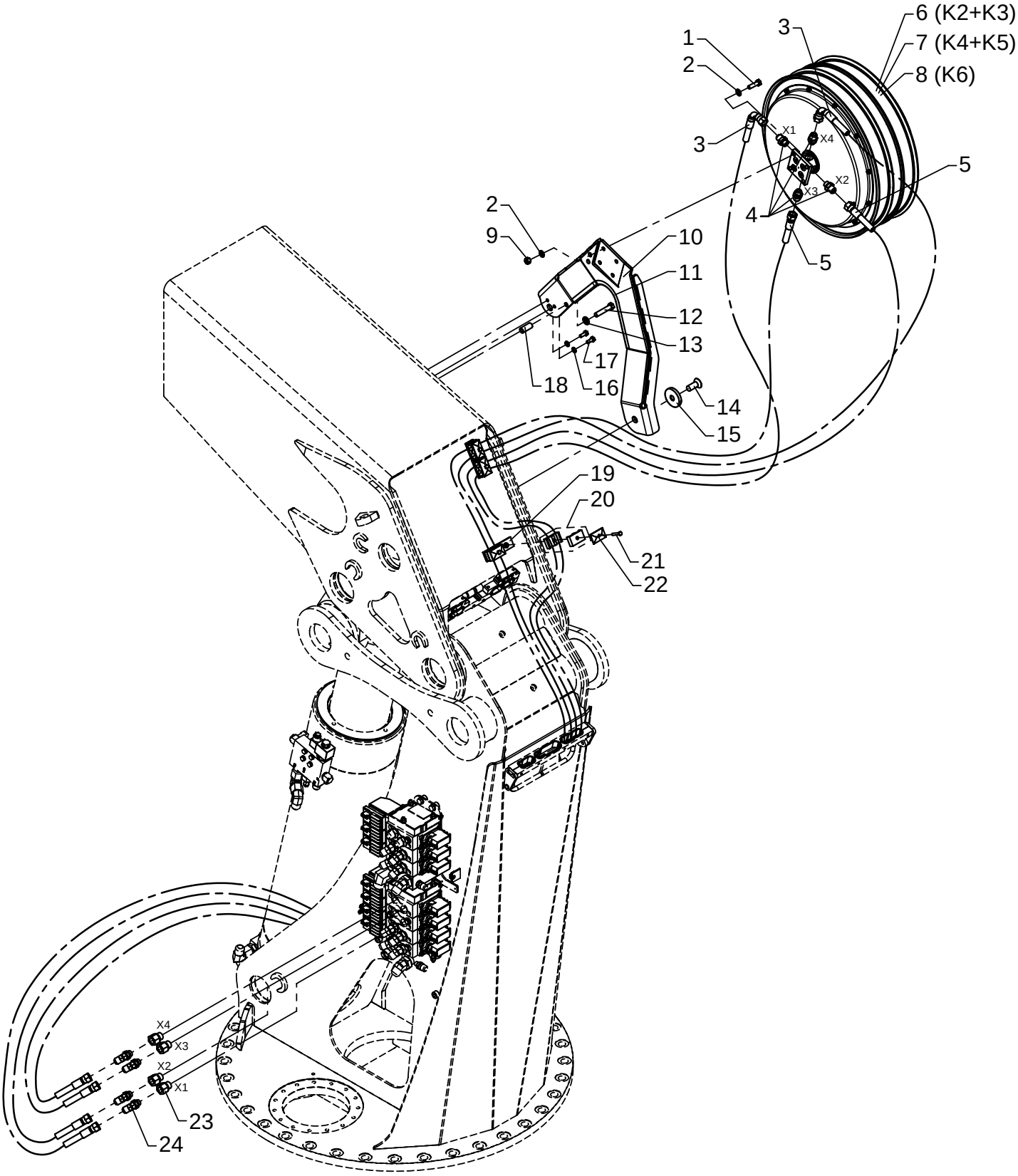

Hydraulic system, internal hose routing - 2 EXV

As from / To loader no.: 96 00 00 /
Created: 14.06.2006
Modified: 28.03.2007

Item no.	Qty.	Part no.	Description	Remarks
1	4	31519	Set screw	M10 x 35
2	8	31177	Washer	10 mm
3	2	62880	Hose, JIC	3/8" x 3700 V/O JIC
4	4	25831	Straight connection	F40XS 12-3/8 JIC
5	2	62948	Hose, JIC	3/8" x 3700 O/O JIC
6	1	56294	Hose reel, double	3/8" x 12400 mm
		56308	Hose	3/8" x 12400 mm
		56334	Spring container	
		56340	Seal kit	
		56345	Spring	
7	1	56319	Hose reel, double	3/8" x 15000 mm
		56310	Hose	3/8" x 15000 mm
		56345	Spring	
		56346	Spring container	
		56347	Seal kit	
8	1	56295	Hose reel, double	3/8" x 17000 mm
		56312	Hose	3/8" x 17000 mm
		56345	Spring	
		56346	Spring container	
		56347	Seal kit	
9	4	31564	Lock nut, stainless	M10
10	1	6300958	Bracket for hose reel	
11	1	46587	Rubber protection	300 mm
12	1	30183	Steel bolt	M12 x 60
13	1	31131	Washer	12 mm
14	1	32360	Countersunk screw	MK16 x 40
15	1	6301024	Washer	
16	2	31147	Washer, stainless	8 mm
17	2	30132	Set screw, stainless	M8 x 20
18	1	6301023	Distance pipe	
19	4	31999	Plate	
20	4	31833	Clamp	2 x 18 mm
21	4	30116	Steel bolt, stainless	M6 x 35
22	4	31834	Cover plate	
23	4	25243	Reducing connection	RED-R 1/2-WD/R 3/8
24	4	26695	Elbow connection 45°	V40XS12 - 3/8

52-380

Intern ref.:

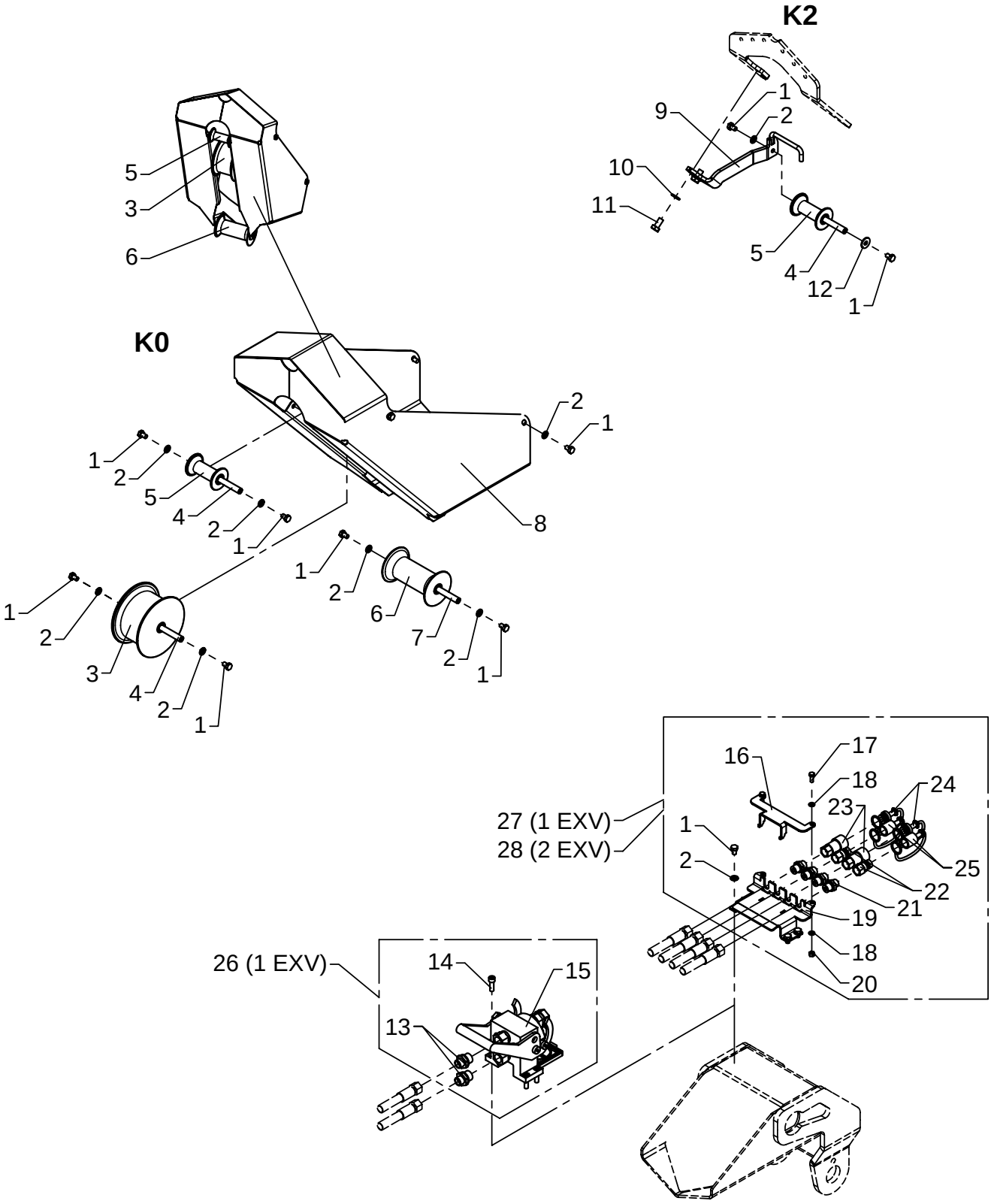

Extra valves, OK2
Internal hose routing

As from / To loader no.: 96 00 00 /
Created: 14.06.2006
Modified:

Item no.	Qty.	Part no.	Description	Remarks
1	16	30130	Set screw, stainless	M8 x 12
2	15	31147	Washer, stainless	8 mm
3	1	63404	Roller	
4	3	6301042	Pin	
5	2	63546	Guide roller	
6	1	63544	Guide roller	
7	1	6302883	Pin	
8	1	6301041	Protection plate, jib	
9	1	6301143	Roller bracket, K2	
10	2	31177	Washer	10 mm
11	2	30154	Set screw	M10 x 20
12	1	31136	Washer, stainless	24 x 8,4 x 2
13	2	25108	Connection	GES 12 L/R 1/2-WD
14	4	30440	Screw	MC8 x 25
15	1	58433	Multi-coupling	
16	1	6301075	Lock plate	
17	2	30112	Set screw, stainless	M6 x 16
18	4	32302	Face washer, stainless	6 mm
19	1	6301071	Bracket	
20	2	30884	Lock nut, stainless	M6
21	4	25253	Connection	GEV 10 L/R 3/8-WD
22	2	60620	Quick-release coupling,M	3/8"
23	2	60619	Quick-release coupling,F	3/8"
24	2	60621	Dust cap, M	3/8"
25	2	60622	Dust cap, F	3/8"
26	1	6302750	Kit for multi-coupling, 1 EXV	
27	1	6302730	Kit, quick-release coupl.,1EXV	
28	1	6302740	Kit, quick-release coupl.,2EXV	

52-380

Intern ref.:

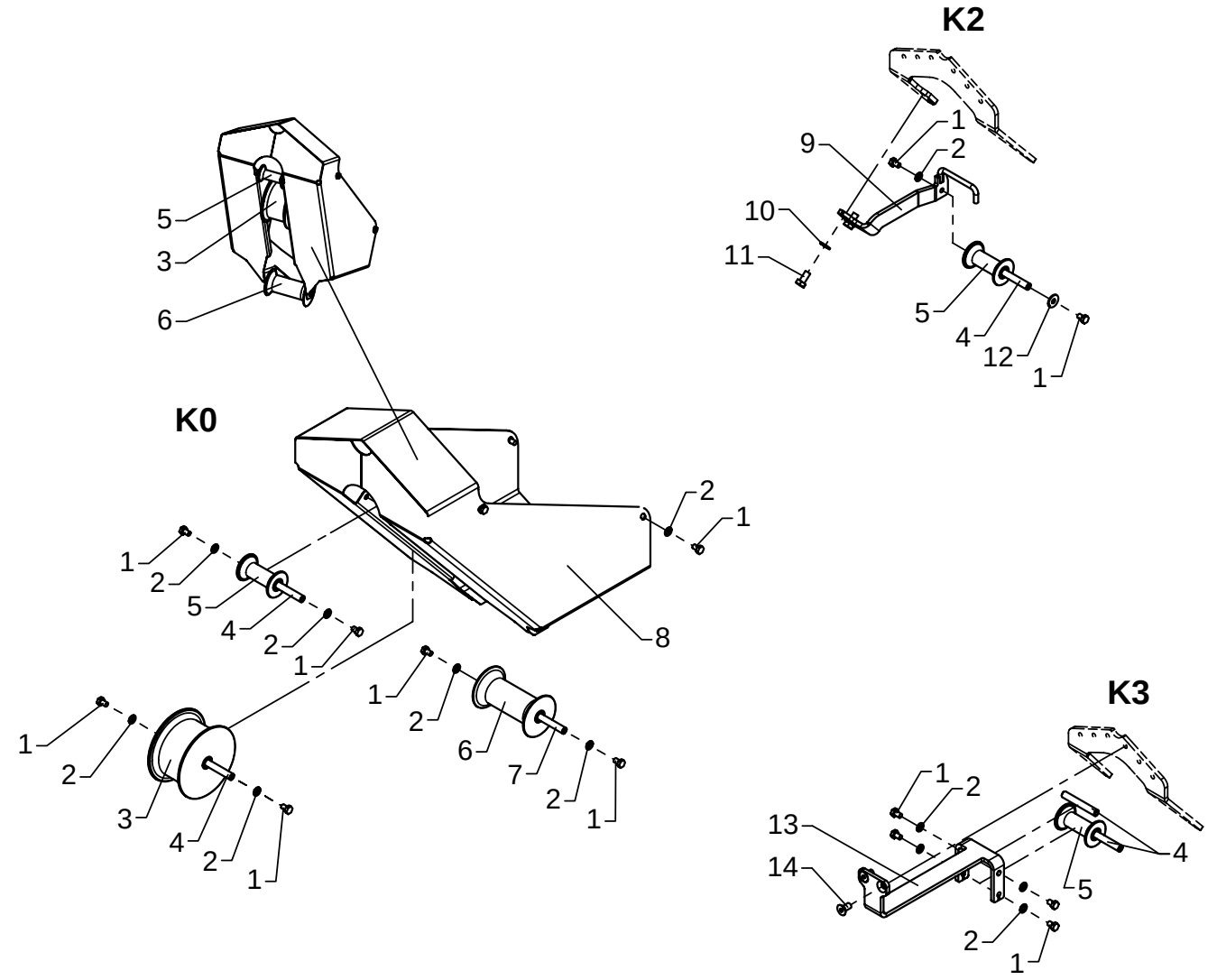

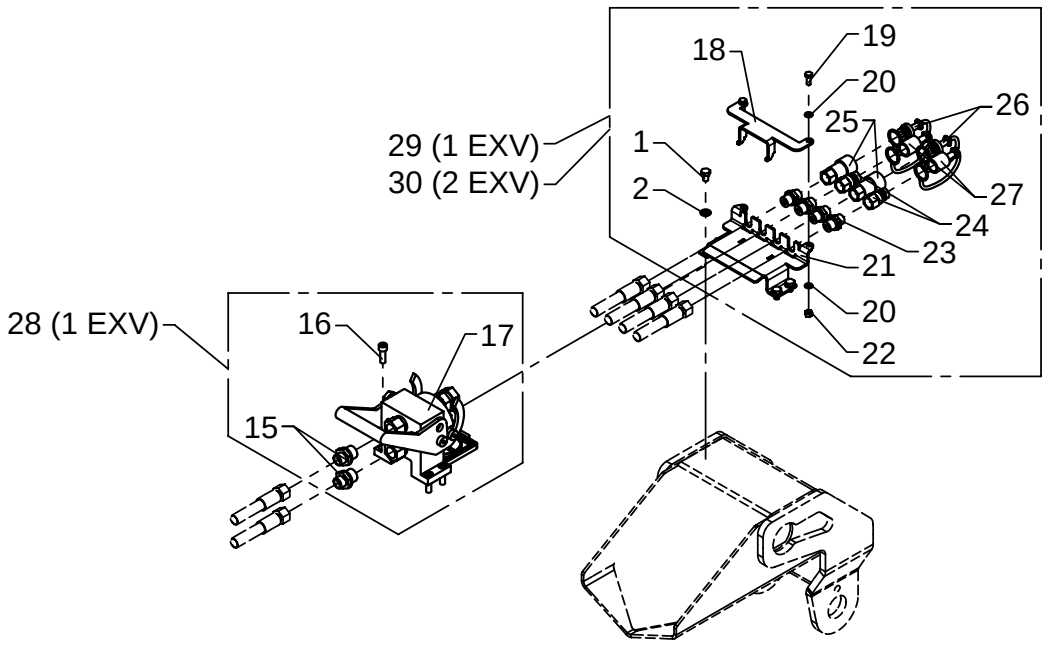

Extra valves, OK3
Internal hose routing

As from / To loader no.: 96 00 00 /
Created: 14.06.2006
Modified:

Item no.	Qty.	Part no.	Description	Remarks
1	20	30130	Set screw, stainless	M8 x 12
2	19	31147	Washer, stainless	8 mm
3	1	63404	Roller	
4	5	6301042	Pin	
5	3	63546	Guide roller	
6	1	63544	Guide roller	
7	1	6302883	Pin	
8	1	6301041	Protection plate, jib	
9	1	6301143	Roller bracket, K2	
10	2	31177	Washer	10 mm
11	2	30154	Set screw	M10 x 20
12	1	31136	Washer, stainless	24 x 8,4 x 2
13	1	6301044	Roller bracket - K3	
14	2	30545	Countersunk screw	MK10 x 20
15	2	25108	Connection	GES 12 L/R 1/2-WD
16	4	30440	Screw	MC8 x 25
17	1	58433	Multi-coupling	
18	1	6301075	Lock plate	
19	2	30112	Set screw, stainless	M6 x 16
20	4	32302	Face washer, stainless	6 mm
21	1	6301071	Bracket	
22	2	30884	Lock nut, stainless	M6
23	4	25253	Connection	GEV 10 L/R 3/8-WD
24	2	60620	Quick-release coupling,M	3/8"
25	2	60619	Quick-release coupling,F	3/8"
26	2	60621	Dust cap, M	3/8"
27	2	60622	Dust cap, F	3/8"
28	1	6302750	Kit for multi-coupling, 1 EXV	
29	1	6302730	Kit, quick-release coupl.,1EXV	
30	1	6302740	Kit, quick-release coupl.,2EXV	

52-380

Intern ref.:

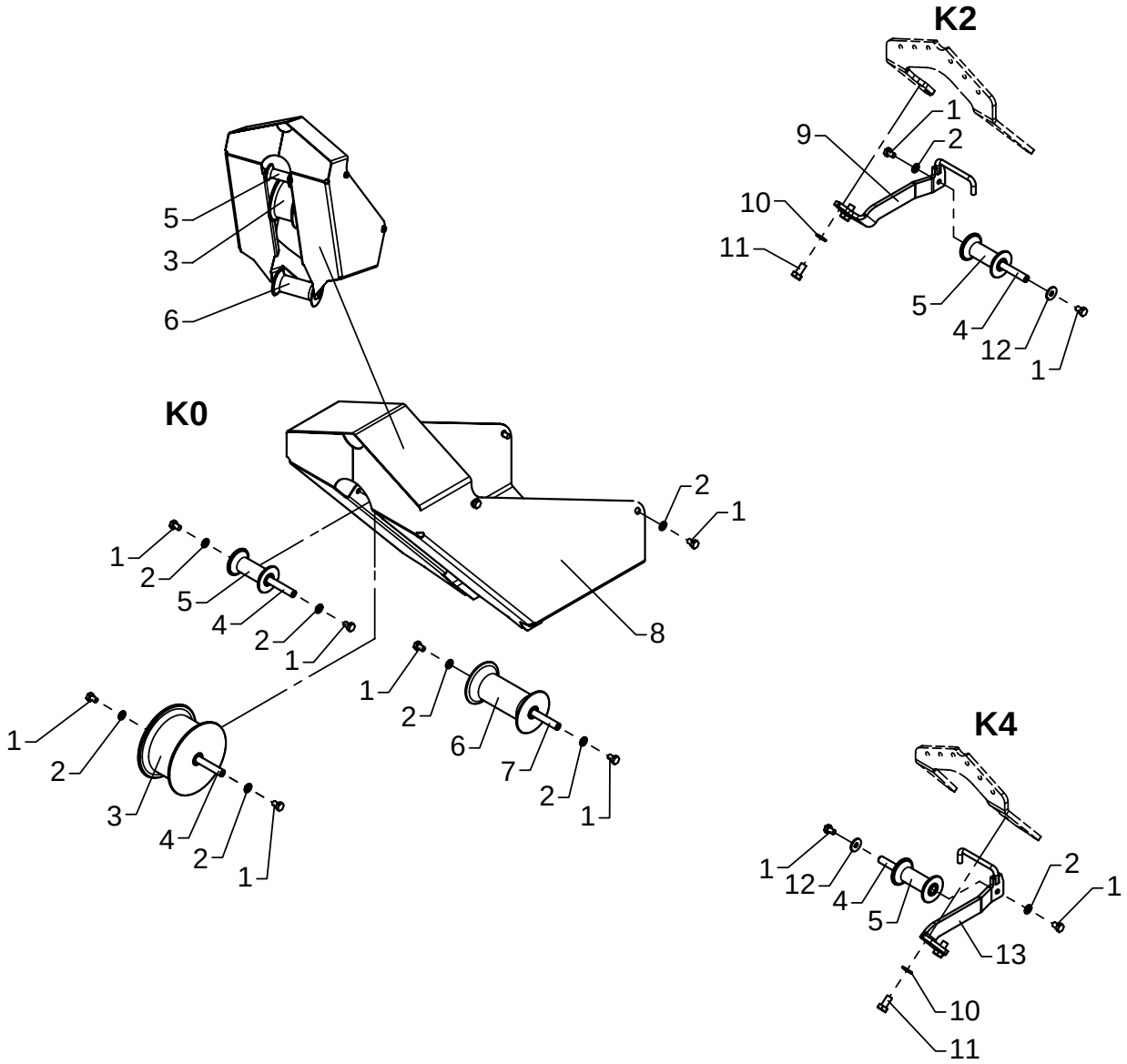

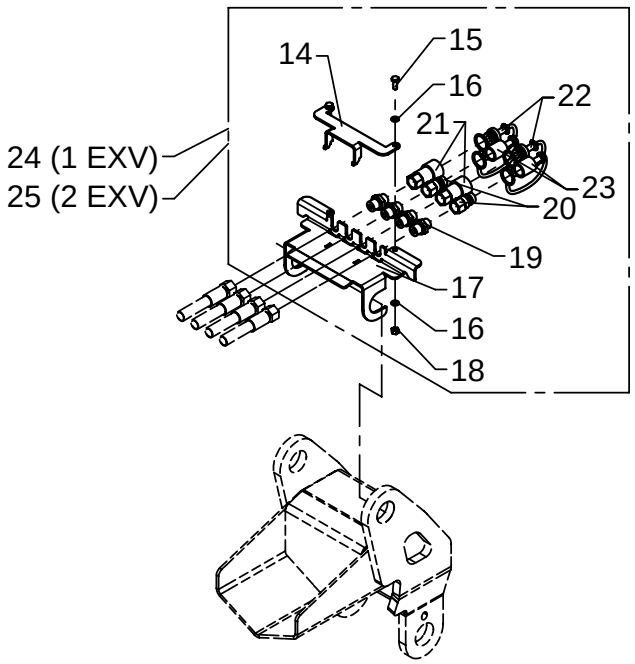

Extra valves, OK4
Internal hose routing

As from / To loader no.: 96 00 00 /
Created: 14.06.2006
Modified:

Item no.	Qty.	Part no.	Description	Remarks
1	14	30130	Set screw, stainless	M8 x 12
2	12	31147	Washer, stainless	8 mm
3	1	63404	Roller	
4	4	6301042	Pin	
5	3	63546	Guide roller	
6	1	63544	Guide roller	
7	1	6302883	Pin	
8	1	6301041	Protection plate, jib	
9	1	6301143	Roller bracket, K2	
10	4	31177	Washer	10 mm
11	4	30154	Set screw	M10 x 20
12	2	31136	Washer, stainless	24 x 8,4 x 2
13	1	6301145	Roller bracket - K4	
14	1	6301075	Lock plate	
15	2	30112	Set screw, stainless	M6 x 16
16	4	32302	Face washer, stainless	6 mm
17	1	6301072	Bracket	
18	2	30884	Lock nut, stainless	M6
19	4	25253	Connection	GEV 10 L/R 3/8-WD
20	2	60620	Quick-release coupling,M	3/8"
21	2	60619	Quick-release coupling,F	3/8"
22	2	60621	Dust cap, M	3/8"
23	2	60622	Dust cap, F	3/8"
24	1	6302730	Kit, quick-release coupl.,1EXV	
25	1	6302740	Kit, quick-release coupl.,2EXV	

52-380

Intern ref.:

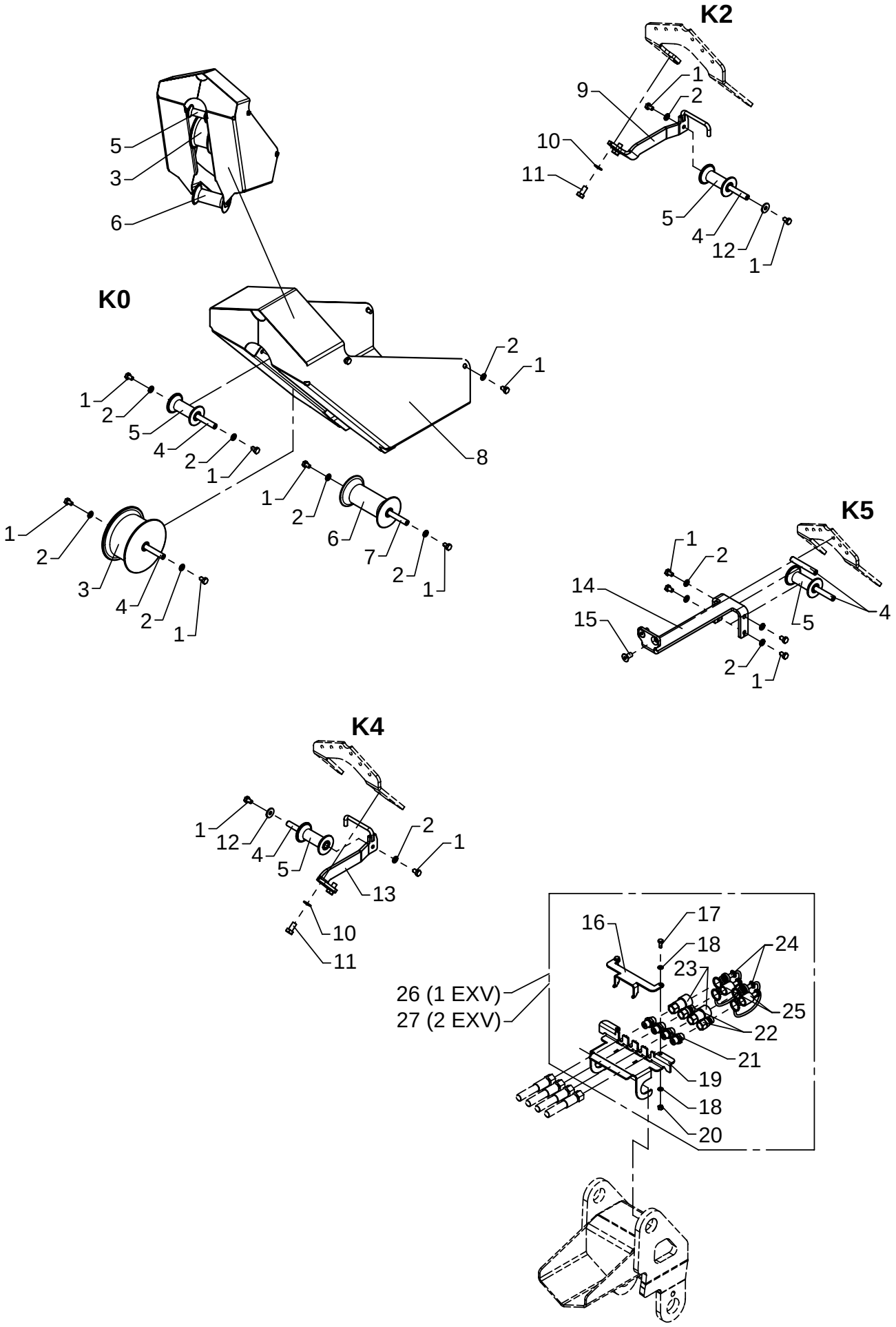

Extra valves, OK5
Internal hose routing

As from / To loader no.: 96 00 00 /
Created: 14.06.2006
Modified:

Item no.	Qty.	Part no.	Description	Remarks
1	18	30130	Set screw, stainless	M8 x 12
2	16	31147	Washer, stainless	8 mm
3	1	63404	Roller	
4	6	6301042	Pin	
5	4	63546	Guide roller	
6	1	63544	Guide roller	
7	1	6302883	Pin	
8	1	6301041	Protection plate, jib	
9	1	6301143	Roller bracket, K2	
10	4	31177	Washer	10 mm
11	4	30154	Set screw	M10 x 20
12	2	31136	Washer, stainless	24 x 8,4 x 2
13	1	6301145	Roller bracket - K4	
14	1	6301046	Roller bracket - K5	
15	2	30545	Countersunk screw	MK10 x 20
16	1	6301075	Lock plate	
17	2	30112	Set screw, stainless	M6 x 16
18	4	32302	Face washer, stainless	6 mm
19	1	6301073	Bracket	
20	2	30884	Lock nut, stainless	M6
21	4	25253	Connection	GEV 10 L/R 3/8-WD
22	2	60620	Quick-release coupling,M	3/8"
23	2	60619	Quick-release coupling,F	3/8"
24	2	60621	Dust cap, M	3/8"
25	2	60622	Dust cap, F	3/8"
26	1	6302730	Kit, quick-release coupl.,1EXV	
27	1	6302740	Kit, quick-release coupl.,2EXV	

52-380

Intern ref.:

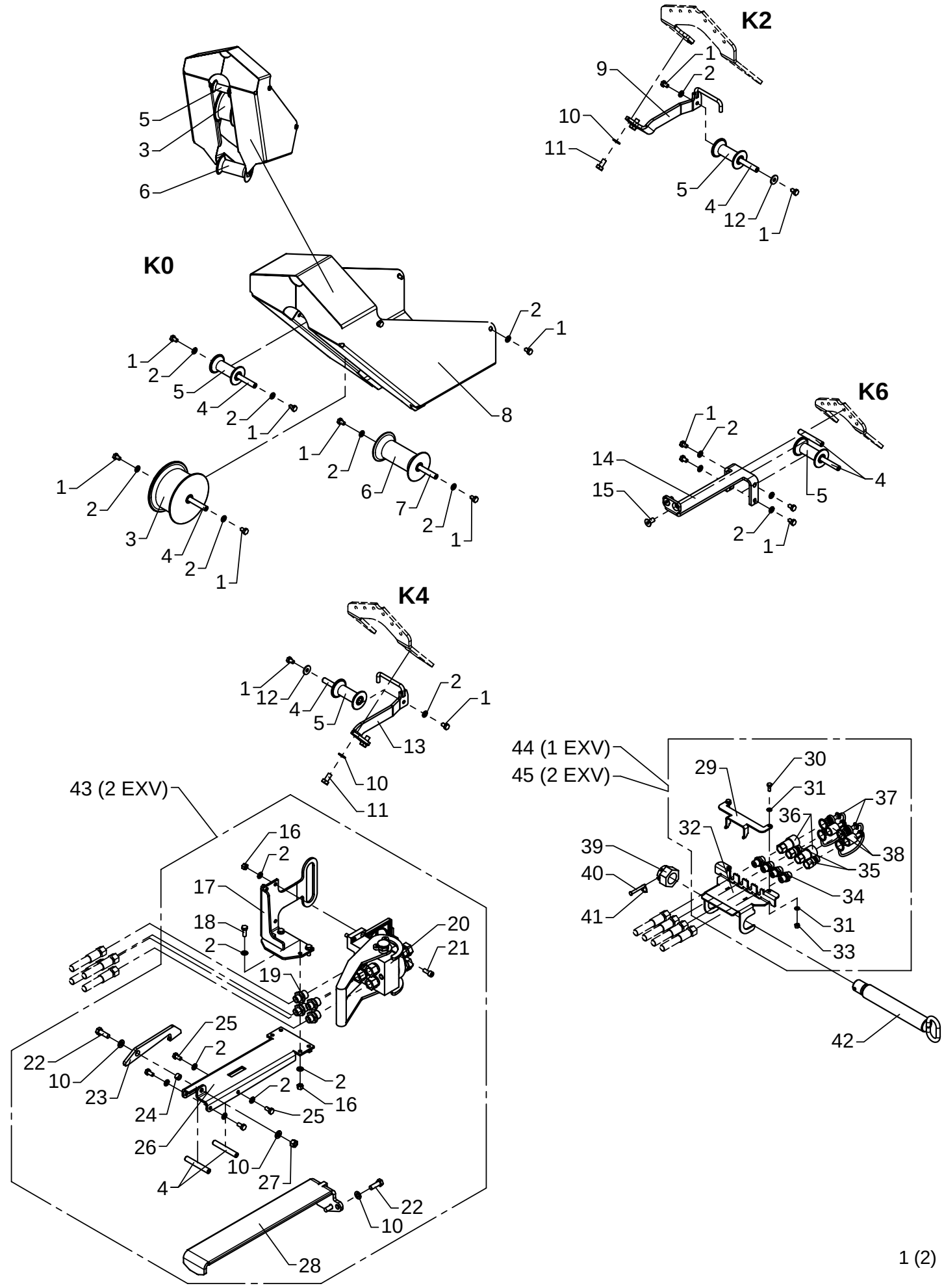

Extra valves, K6
Internal hose routing

As from / To loader no.: 96 00 00 /
Created: 14.06.2006
Modified:

Item no.	Qty.	Part no.	Description	Remarks
1	18	30130	Set screw, stainless	M8 x 12
2	32	31147	Washer, stainless	8 mm
3	1	63404	Roller	
4	8	6301042	Pin	
5	4	63546	Guide roller	
6	1	63544	Guide roller	
7	1	6302883	Pin	
8	1	6301041	Protection plate, jib	
9	1	6301143	Roller bracket, K2	
10	10	31177	Washer	10 mm
11	4	30154	Set screw	M10 x 20
12	2	31136	Washer, stainless	24 x 8,4 x 2
13	1	6301145	Roller bracket - K4	
14	1	6301047	Roller bracket - K6	
15	2	30545	Countersunk screw	MK10 x 20
16	8	30886	Lock nut, stainless	M8
17	1	6301053	Bracket for multi-coupling	
18	4	30133	Set screw, stainless	M8 x 22
19	4	25108	Connection	GES 12 L/R 1/2-WD
20	1	58430	Multifaster coupling	1/2"
21	4	30438	Screw	MC8 x 20
22	5	30156	Set screw, stainless	M10 x 30
23	1	6301054	Lock pawl	
24	1	6300799	Spacer	
25	4	30131	Set screw, stainless	M8 x 16
26	1	6301052	Plate	
27	1	30888	Lock nut	M10
28	1	6301051	Guide	
29	1	6301075	Lock plate	
30	2	30112	Set screw, stainless	M6 x 16
31	4	32302	Face washer, stainless	6 mm
32	1	6301074	Bracket	
33	2	30884	Lock nut, stainless	M6
34	4	25253	Connection	GEV 10 L/R 3/8-WD
35	2	60620	Quick-release coupling,M	3/8"
36	2	60619	Quick-release coupling,F	3/8"
37	2	60621	Dust cap, M	3/8"
38	2	60622	Dust cap, F	3/8"
39	1	30839	Nut	M30
40	1	31279	Cotter bolt	ø6 x 50

Extra valves, K6
Internal hose routing

As from / To loader no.: 96 00 00 /
Created: 14.06.2006
Modified:

Item no.	Qty.	Part no.	Description	Remarks
41	1	33458	Lock ring	
42	1	6302748	Pin for hook suspension	
43	1	6300820	Kit for multi-coupling, 2 EXV	
44	1	6302730	Kit, quick-release coupl.,1EXV	
45	1	6302740	Kit, quick-release coupl.,2EXV	

52-380

Intern ref.: 6301430

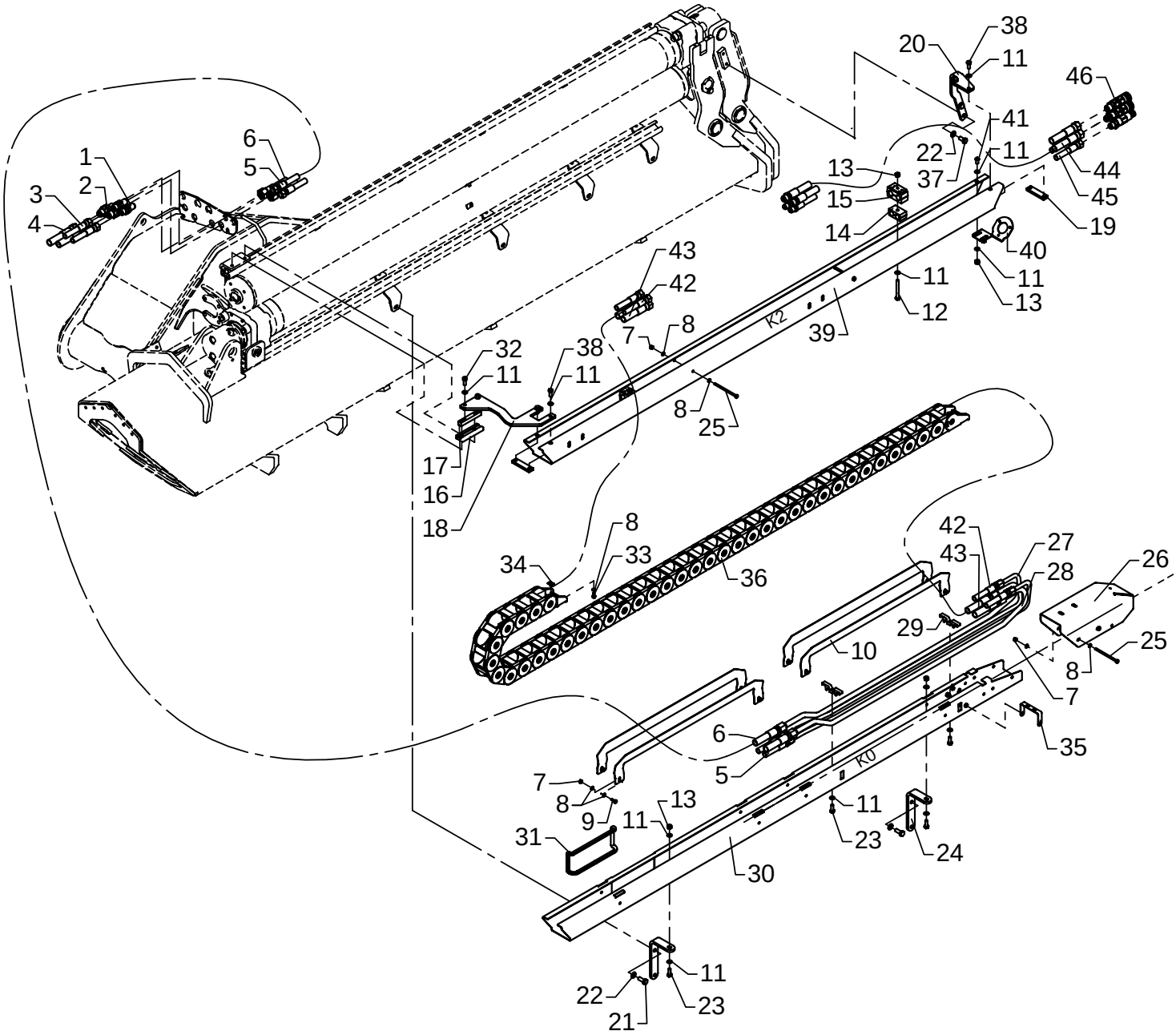

Extra valves, OK2-2
Hose guides

As from / To loader no.: 96 00 00 /
Created: 08.10.2004
Modified: 06.06.2006

Item no.	Qty.	Part no.	Description	Remarks
1	2	25824	Bulkhead connection	WTX-WLNS 12 JIC
2	2	25825	Bulkhead connection	WTX-WLNS 14/16 JIC
3	2	56055	Hose	3/8 x 5900mm L/L 16-12 JIC
4	2	56056	Hose	1/2 x 5900mm L/L 16-16 JIC
5	2	56116	Hose	3/8 x 2500 S/O JIC
6	2	56267	Hose	1/2 x 2700 S/O JIC
7	14	30884	Lock nut, stainless	M6
8	32	32302	Face washer, stainless	6 mm
9	10	30112	Set screw, stainless	M6 x 16
10	4	6301253	Guide plate	
11	18	31147	Washer, stainless	8 mm
12	2	30142	Steel bolt, stainless	M8 x 70
13	6	30886	Lock nut, stainless	M8
14	2	31833	Clamp	2 x 18 mm
15	2	31845	Clamp, rubber	
16	1	63686	Guide shoe	
17	1	6300338	Spacer	
18	1	6301258	Susp. K2-hose guide, rear	
19	2	6301239	Threaded disc 20x 8x80, 2xM8	
20	1	6301222	Susp. K2-hose guide, front	
21	2	30155	Set screw	M10 x 25
22	4	31177	Washer	10 mm
23	4	30133	Set screw, stainless	M8 x 22
24	2	6301243	Susp. K0-hose guide, K2-K4	
25	4	32112	Steel bolt stainless	M6 x 100
26	1	6301219	End protection plate	
27	2	6301242	Pipe JIC ø12 short exv.	
28	2	6301241	Pipe JIC ø16 short exv.	
29	2	6301218	Clamp	
30	1	6301213	Hose guide, K0	
31	1	46586	Rubber protection	
32	2	30438	Screw	MC8 x 20
33	4	30111	Set screw, stainless	M6 x 12
34	4	32122	Nut, stainless	
35	1	6301217	Chain fittings	
36	1	27893	Nylon drag chain	
37	2	31517	Set screw, stainless	M10 x 20
38	4	30132	Set screw, stainless	M8 x 20
39	1	6301214	Hose guide, K2	
40	1	6301048	Bracket for 13 poles plug box	

Extra valves, OK2-2
Hose guides

As from / To loader no.: 96 00 00 /
Created: 08.10.2004
Modified: 06.06.2006

Item no.	Qty.	Part no.	Description	Remarks
41	2	30925	Round-head screw	M8 x 16
42	2	56113	Hose	3/8 x 3750 S/O JIC
43	2	56112	Hose	1/2 x 3760 S/O JIC
44	2	56123	Hose	1/2 x 1150 S/O JIC
45	2	56124	Hose	3/8 x 1150 S/O JIC
46	1	6301240	Quick-release kit, O&T	

52-380

Intern ref.: 6301440

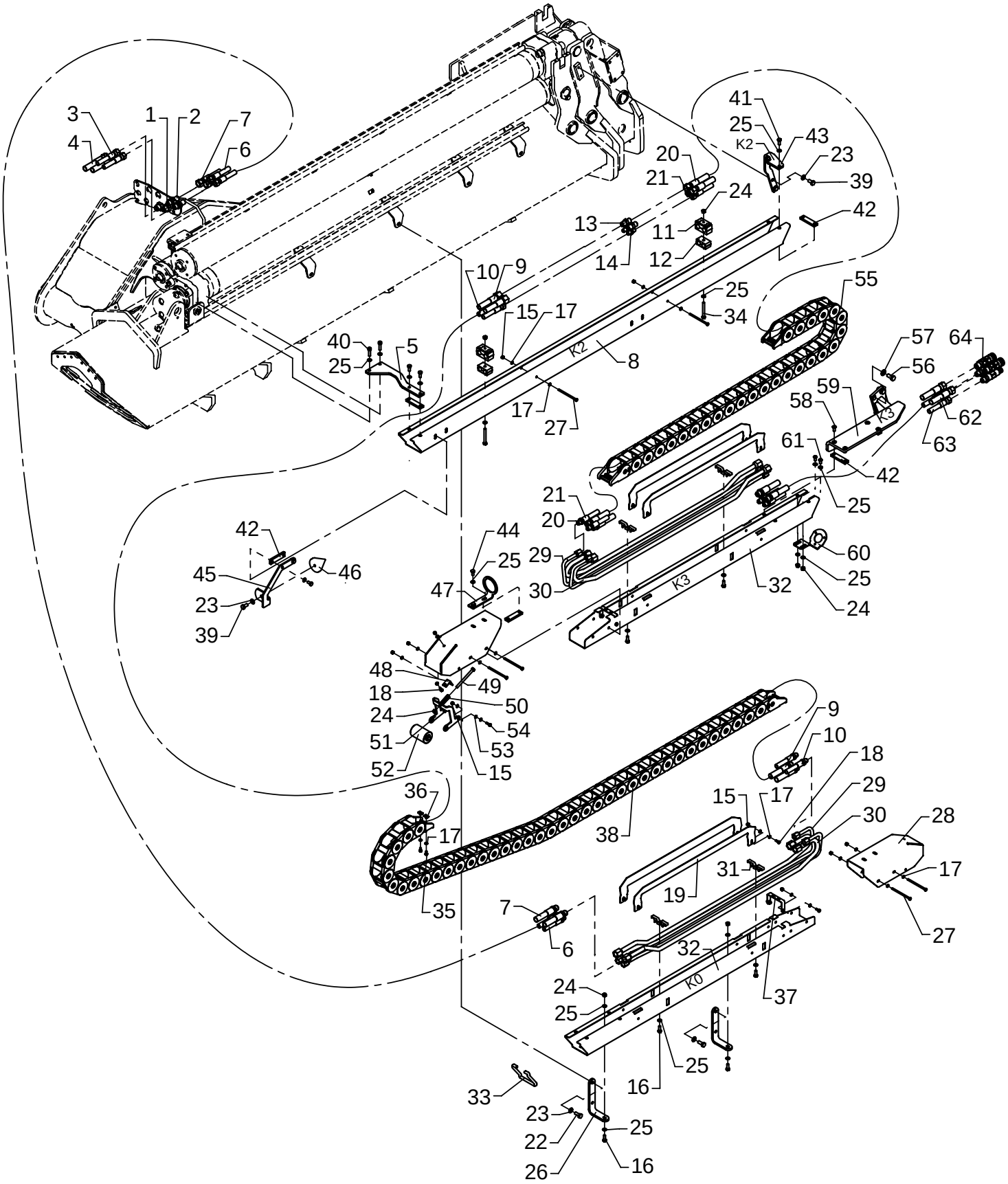

Extra valves, OK3-2
Hose guides

As from / To loader no.: 96 00 00 /
Created: 11.10.2004
Modified: 06.06.2006

Item no.	Qty.	Part no.	Description	Remarks
1	2	25825	Bulkhead connection	WTX-WLNS 14/16 JIC
2	2	25824	Bulkhead connection	WTX-WLNS 12 JIC
3	2	56055	Hose	3/8 x 5900mm L/L 16-12 JIC
4	2	56056	Hose	1/2 x 5900mm L/L 16-16 JIC
5	1	6301223	Suspension K2 hose guide, rear	
6	2	56116	Hose	3/8 x 2500mm S/O JIC
7	2	56267	Hose	1/2 x 2700 S/O JIC
8	1	6301214	Hose guide, K2	
9	2	56112	Hose	1/2 x 3760 S/O JIC
10	2	56113	Hose	3/8 x 3750 S/O JIC
11	2	31845	Clamp, rubber	
12	2	31833	Clamp	2 x 18 mm
13	2	26281	Union nut	HTXS14
14	2	25843	Double connection	HTXS12
15	19	30884	Lock nut, stainless	M6
16	6	30133	Set screw, stainless	M8 x 22
17	42	32302	Face washer, stainless	6 mm
18	11	30112	Set screw, stainless	M6 x 16
19	4	6301253	Guide plate	
20	2	56106	Hose	1/2 x 2900 S/O JIC
21	2	56107	Hose	3/8 x 2890 S/O JIC
22	2	30155	Set screw	M10 x 25
23	5	31177	Washer	10 mm
24	7	30886	Lock nut, stainless	M8
25	24	31147	Washer, stainless	8 mm
26	2	6301243	Susp. K0-hose guide, K2-K4	
27	6	32112	Steel bolt stainless	M6 x 100
28	2	6301219	End protection plate	
29	4	6301242	Pipe JIC ø12 short exv.	
30	4	6301241	Pipe JIC ø16 short exv.	
31	4	6301218	Clamp	
32	2	6301215	Hose guide, K3+K5	
33	1	46586	Rubber protection	
34	2	30142	Steel bolt, stainless	M8 x 70
35	4	30111	Set screw, stainless	M6 x 12
36	4	32122	Nut, stainless	
37	2	6301217	Chain fittings	
38	1	27893	Nylon drag chain	
39	3	31517	Set screw, stainless	M10 x 20
40	2	30442	Screw	MC8 x 30

Extra valves, OK3-2
Hose guides

As from / To loader no.: 96 00 00 /
Created: 11.10.2004
Modified: 06.06.2006

Item no.	Qty.	Part no.	Description	Remarks
41	4	30132	Set screw, stainless	M8 x 20
42	6	6301239	Threaded disc 20x 8x80, 2xM8	
43	1	6301222	Susp. K2-hose guide, front	
44	4	30131	Set screw, stainless	M8 x 16
45	1	6301251	Guide, upper part	
46	1	63540	Cone	
47	1	6301252	Guide, lower part	
48	1	6232984	Elbow	
49	1	30145	Steel bolt, stainless	M8 x 100
50	1	33377	Compression spring	6884924
51	1	6301225	Roller bracket	
52	1	63537	Guide roller	
53	2	64286	Washer	6 mm
54	2	30113	Set screw, stainless	M6 x 20
55	1	27892	Nylon drag chain	
56	4	30176	Set screw	M12 x 25
57	4	31131	Washer	12 mm
58	4	30957	Countersunk screw	MK8 x 20
59	1	6301238	Bracket K4, sl	
60	1	6301048	Bracket for 13 poles plug box	
61	2	30925	Round-head screw	M8 x 16
62	2	56121	Hose	1/2 x 405 S/O JIC
63	2	56122	Hose	3/8 x 380 S/O JIC
64	1	6301240	Quick-release kit, O&T	

52-380

Intern ref.: 6301450

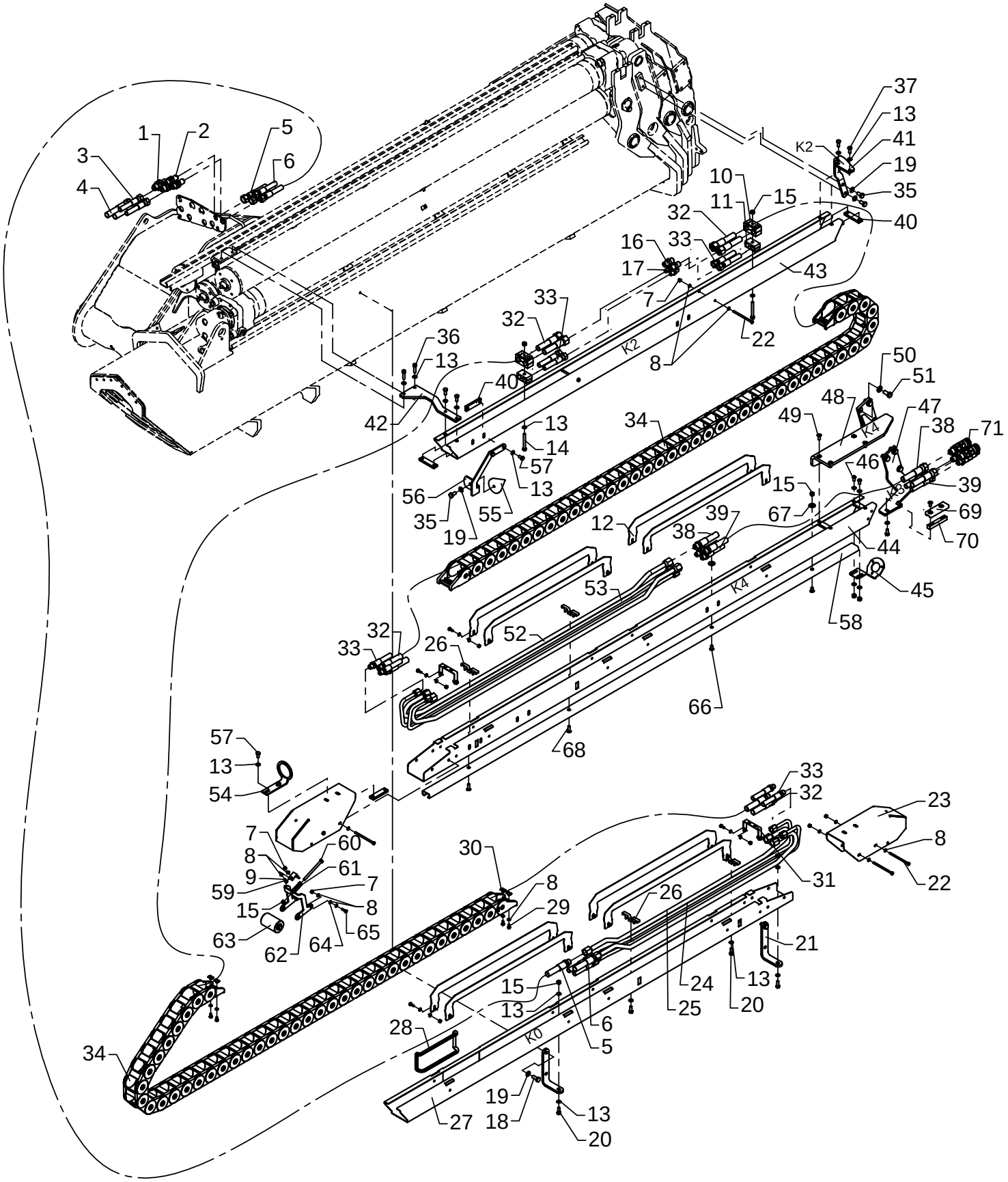

Extra valves, OK4-2
Hose guides

As from / To loader no.: 96 00 00 /
Created: 12.10.2004
Modified: 06.06.2006

Item no.	Qty.	Part no.	Description	Remarks
1	2	25825	Bulkhead connection	WTX-WLNS 14/16 JIC
2	2	25824	Bulkhead connection	WTX-WLNS 12 JIC
3	2	56055	Hose	3/8 x 5900mm L/L 16-12 JIC
4	2	56056	Hose	1/2 x 5900mm L/L 16-16 JIC
5	2	56267	Hose	1/2 x 2700 S/O JIC
6	2	56116	Hose	3/8 x 2500 S/O JIC
7	25	30884	Lock nut, stainless	M6
8	54	32302	Face washer, stainless	6 mm
9	17	30112	Set screw, stainless	M6 x 16
10	2	31845	Clamp, rubber	
11	2	31833	Clamp	2 x 18 mm
12	8	6301253	Guide plate	
13	24	31147	Washer, stainless	8 mm
14	2	30142	Steel bolt, stainless	M8 x 70
15	9	30886	Lock nut, stainless	M8
16	2	26281	Union nut	HTXS14
17	2	25843	Double connection	HTXS12
18	2	30155	Set screw	M10 x 25
19	5	31177	Washer	10 mm
20	4	30133	Set screw, stainless	M8 x 22
21	2	6301243	Susp. K0-hose guide, K2-K4	
22	6	32112	Steel bolt stainless	M6 x 100
23	2	6301219	End protection plate	
24	2	6301242	Pipe JIC ø12 short exv.	
25	2	6301241	Pipe JIC ø16 short exv.	
26	4	6301218	Clamp	
27	1	6301213	Hose guide, K0	
28	1	46586	Rubber protection	
29	4	30111	Set screw, stainless	M6 x 12
30	4	32122	Nut, stainless	
31	2	6301217	Chain fittings	
32	4	56112	Hose	1/2 x 3760 S/O JIC
33	4	56113	Hose	3/8 x 3750 S/O JIC
34	2	27893	Nylon drag chain	
35	3	31517	Set screw, stainless	M10 x 20
36	2	30442	Screw	MC8 x 30
37	6	30132	Set screw, stainless	M8 x 20
38	2	56123	Hose	1/2 x 1150 S/O JIC
39	2	56124	Hose	3/8 x 1150 S/O JIC
40	6	6301239	Threaded disc 20x 8x80, 2xM8	

Extra valves, OK4-2
Hose guides

As from / To loader no.: 96 00 00 /
Created: 12.10.2004
Modified: 06.06.2006

Item no.	Qty.	Part no.	Description	Remarks
41	1	6301222	Susp. K2-hose guide, front	
42	1	6301223	Suspension K2 hose guide, rear	
43	1	6301214	Hose guide, K2	
44	1	6301216	Hose guide, K4+K6	
45	1	6301048	Bracket for 13 poles plug box	
46	2	30925	Round-head screw	M8 x 16
47	1	6301233	Bracket for slide block - K3	
48	1	6301238	Bracket K4, sl	
49	4	30957	Countersunk screw	MK8 x 20
50	7	31131	Washer	12 mm
51	7	30176	Set screw	M12 x 25
52	2	6301211	Pipe JIC ø16 long exv.	
53	2	6301212	Pipe JIC ø12 long exv	
54	1	6301252	Guide, lower part	
55	1	63540	Cone	
56	1	6301251	Guide, upper part	
57	4	30131	Set screw, stainless	M8 x 16
58	1	6301224	C-profile 20x40, L=2350	
59	1	6232984	Elbow	
60	1	30145	Steel bolt, stainless	M8 x 100
61	1	33377	Compression spring	6884924
62	1	6301225	Roller bracket	
63	1	63537	Guide roller	
64	2	64286	Washer	6 mm
65	2	30113	Set screw, stainless	M6 x 20
66	4	30543	Countersunk screw	MK8 x 16
67	2	31136	Washer, stainless	24 x 8,4 x 2
68	2	31964	Counter sunk screw, stainless	MK8 x 25
69	1	63686	Guide shoe	
70	1	6300338	Spacer	
71	1	6301240	Quick-release kit, O&T	

52-380

Intern ref.: 6301460

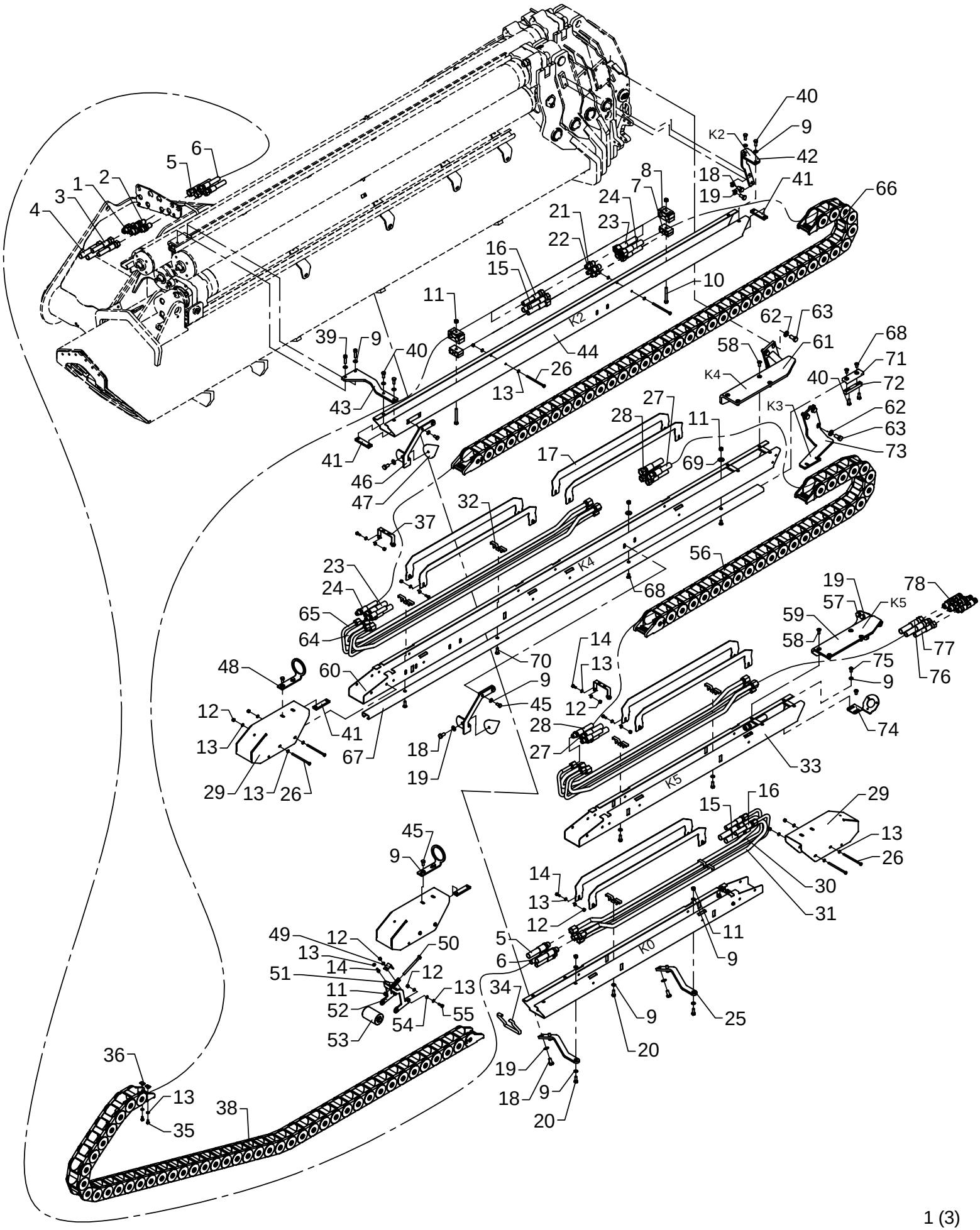

Extra valves. OK5-2
Hose guides

As from / To loader no.: 96 00 00
Created: 18.10.2004
Modified: 06.06.2006

Item no.	Qty.	Part no.	Description	Remarks
1	2	25825	Bulkhead connection	WTX-WLNS 14/16 JIC
2	2	25824	Bulkhead connection	WTX-WLNS 12 JIC
3	2	56055	Hose	3/8 x 5900 mm L/L 16-12 JIC
4	2	56056	Hose	1/2 x 5900 mm L/L 16-16 JIC
5	2	56267	Hose	1/2 x 2500 S/L JIC
6	2	56116	Hose	3/8 x 2350 S/L JIC
7	2	31833	Clamp	2 x 18 mm
8	2	31845	Clamp, rubber	
9	30	31147	Washer, stainless	8 mm
10	2	30142	Steel bolt, stainless	M8 x 70
11	9	30886	Lock nut, stainless	M8
12	27	30884	Lock nut, stainless	M6
13	58	32302	Face washer, stainless	6 mm
14	17	30112	Set screw, stainless	M6 x 16
15	2	56114	Hose	1/2 x 4095 S/O JIC
16	2	56115	Hose	3/8 x 4085 S/O JIC
17	8	6301253	Guide plate	
18	8	31517	Set screw, stainless	M10 x 20
19	12	31177	Washer	10 mm
20	6	30133	Set screw, stainless	M8 x 22
21	2	26281	Union nut	HTXS14
22	2	25843	Double connection	HTXS12
23	2	56112	Hose	1/2 x 3760 S/O JIC
24	2	56113	Hose	3/8 x 3750 S/O JIC
25	2	6301244	Susp. K0 hose guide, ODIN K5-6	
26	8	32112	Steel bolt stainless	M6 x 100
27	2	56106	Hose	1/2 x 2900 S/O JIC
28	2	56107	Hose	3/8 x 2890 S/O JIC
29	3	6301219	End protection plate	
30	4	6301242	Pipe JIC ø12 short exv.	
31	4	6301241	Pipe JIC ø16 short exv.	
32	6	6301218	Clamp	
33	2	6301215	Hose guide, K3+K5	
34	1	46586	Rubber protection	
35	4	30111	Set screw, stainless	M6 x 12
36	4	32122	Nut, stainless	
37	3	6301217	Chain fittings	
38	1	28587	Nylon drag chain (43 elts)	
39	2	30442	Screw	MC8 x 30
40	6	30132	Set screw, stainless	M8 x 20

Extra valves. OK5-2
Hose guides

As from / To loader no.: 96 00 00
Created: 18.10.2004
Modified: 06.06.2006

Item no.	Qty.	Part no.	Description	Remarks
41	10	6301239	Threaded disc 20x 8x80, 2xM8	
42	1	6301222	Susp. K2-hose guide, front	
43	1	6301223	Suspension K2 hose guide, rear	
44	1	6301214	Hose guide, K2	
45	8	30131	Set screw, stainless	M8 x 16
46	2	6301251	Guide, upper part	
47	2	63540	Cone	
48	2	6301252	Guide, lower part	
49	1	6232984	Elbow	
50	1	30145	Steel bolt, stainless	M8 x 100
51	1	33377	Compression spring	6884924
52	1	6301225	Roller bracket	
53	1	63537	Guide roller	
54	2	64286	Washer	6 mm
55	2	30113	Set screw, stainless	M6 x 20
56	1	27892	Nylon drag chain	
57	4	30155	Set screw	M10 x 25
58	8	30957	Countersunk screw	MK8 x 20
59	1	6301245	Bracket K5	
60	1	6301216	Hose guide, K4+K6	
61	1	6301238	Bracket K4, sl	
62	7	31131	Washer	12 mm
63	7	30176	Set screw	M12 x 25
64	2	6301211	Pipe JIC ø16 long exv.	
65	2	6301212	Pipe JIC ø12 long exv	
66	1	27893	Nylon drag chain	
67	1	6301224	C-profile 20x40, L=2350	
68	4	30543	Countersunk screw	MK8 x 16
69	2	31136	Washer, stainless	24 x 8,4 x 2
70	2	31964	Counter sunk screw, stainless	MK8 x 25
71	1	63686	Guide shoe	
72	1	6300338	Spacer	
73	1	6301233	Bracket for slide block - K3	
74	1	6301048	Bracket for 13 poles plug box	
75	2	30925	Round-head screw	M8 x 16
76	2	56121	Hose	1/2 x 405 S/O JIC
77	2	56122	Hose	3/8 x 380 S/O JIC
78	1	6301240	Quick-release kit, O&T	

52-380

Intern ref.: 6301470

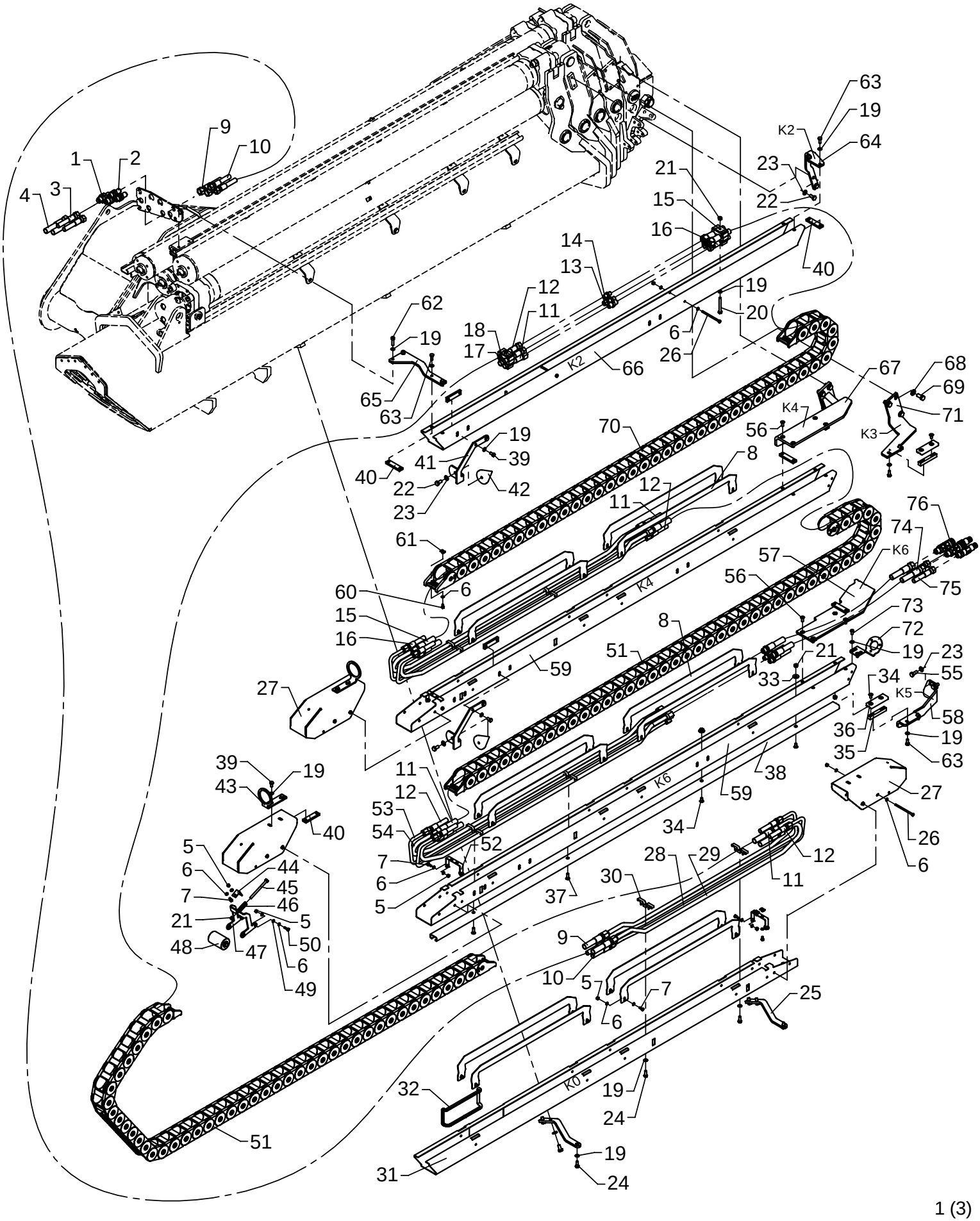

Extra valves, OK6-2
Hose guides

As from / To loader no.: 96 00 00
Created: 20.10.2004
Modified: 06.06.2006

Item no.	Qty.	Part no.	Description	Remarks
1	2	25825	Bulkhead connection	WTX-WLNS 14/16 JIC
2	2	25824	Bulkhead connection	WTX-WLNS 12 JIC
3	2	56055	Hose	3/8 x 5900 L/L 16-12 JIC
4	2	56056	Hose	1/2 x 5900 L/L 16-16 JIC
5	33	30884	Lock nut, stainless	M6
6	70	32302	Face washer, stainless	6 mm
7	23	30112	Set screw, stainless	M6 x 16
8	12	6301253	Guide plate	
9	2	56267	Hose	1/2 x 2700 S/O JIC
10	2	56116	Hose	3/8 x 2500 S/O JIC
11	4	56114	Hose	1/2 x 4095 S/O JIC
12	4	56115	Hose	3/8 x 4085 S/O JIC
13	2	26281	Union nut	HTXS14
14	2	25843	Double connection	HTXS12
15	2	56112	Hose	1/2 x 3760 S/O JIC
16	2	56113	Hose	3/8 x 3750 S/O JIC
17	2	31833	Clamp	2 x 18 mm
18	2	31845	Clamp, rubber	
19	28	31147	Washer, stainless	8 mm
20	2	30142	Steel bolt, stainless	M8 x 70
21	11	30886	Lock nut, stainless	M8
22	8	31517	Set screw, stainless	M10 x 20
23	12	31177	Washer	10 mm
24	4	30133	Set screw, stainless	M8 x 22
25	2	6301244	Susp. K0 hose guide, ODIN K5-6	
26	8	32112	Steel bolt stainless	M6 x 100
27	3	6301219	End protection plate	
28	2	6301242	Pipe JIC ø12 short exv.	
29	2	6301241	Pipe JIC ø16 short exv.	
30	6	6301218	Clamp	
31	1	6301213	Hose guide, K0	
32	1	46586	Rubber protection	
33	4	31136	Washer, stainless	24 x 8,4 x 2
34	8	30543	Countersunk screw	MK8 x 16
35	2	6300338	Spacer	
36	2	63686	Guide shoe	
37	4	31964	Counter sunk screw, stainless	MK8 x 25
38	2	6301224	C-profile 20x40, L=2350	
39	8	30131	Set screw, stainless	M8 x 16
40	10	6301239	Threaded disc 20x 8x80, 2xM8	

Extra valves, OK6-2
Hose guides

As from / To loader no.: 96 00 00
Created: 20.10.2004
Modified: 06.06.2006

Item no.	Qty.	Part no.	Description	Remarks
41	2	6301251	Guide, upper part	
42	2	63540	Cone	
43	2	6301252	Guide, lower part	
44	1	6232984	Elbow	
45	1	30145	Steel bolt, stainless	M8 x 100
46	1	33377	Compression spring	6884924
47	1	6301225	Roller bracket	
48	1	63537	Guide roller	
49	2	64286	Washer	6 mm
50	2	30113	Set screw, stainless	M6 x 20
51	2	28587	Nylon drag chain (43 elts)	
52	3	6301217	Chain fittings	
53	4	6301212	Pipe JIC ø12 long exv	
54	4	6301211	Pipe JIC ø16 long exv.	
55	4	30155	Set screw	M10 x 25
56	8	30957	Countersunk screw	MK8 x 20
57	1	6301275	Bracket, sl	
58	1	6301279	Bracket for slide block	
59	2	6301216	Hose guide, K4+K6	
60	4	30111	Set screw, stainless	M6 x 12
61	4	32122	Nut, stainless	
62	2	30442	Screw	MC8 x 30
63	8	30132	Set screw, stainless	M8 x 20
64	1	6301222	Susp. K2-hose guide, front	
65	1	6301223	Suspension K2 hose guide, rear	
66	1	6301214	Hose guide, K2	
67	1	6301238	Bracket K4, sl	
68	7	31131	Washer	12 mm
69	7	30176	Set screw	M12 x 25
70	1	27893	Nylon drag chain	
71	1	6301233	Bracket for slide block - K3	
72	1	6301048	Bracket for 13 poles plug box	
73	2	30925	Round-head screw	M8 x 16
74	2	56123	Hose	1/2 x 1150 S/O JIC
75	2	56124	Hose	3/8 x 1150 S/O JIC
76	1	6301240	Quick-release kit, O&T	

52-380

Intern ref.: 6301480

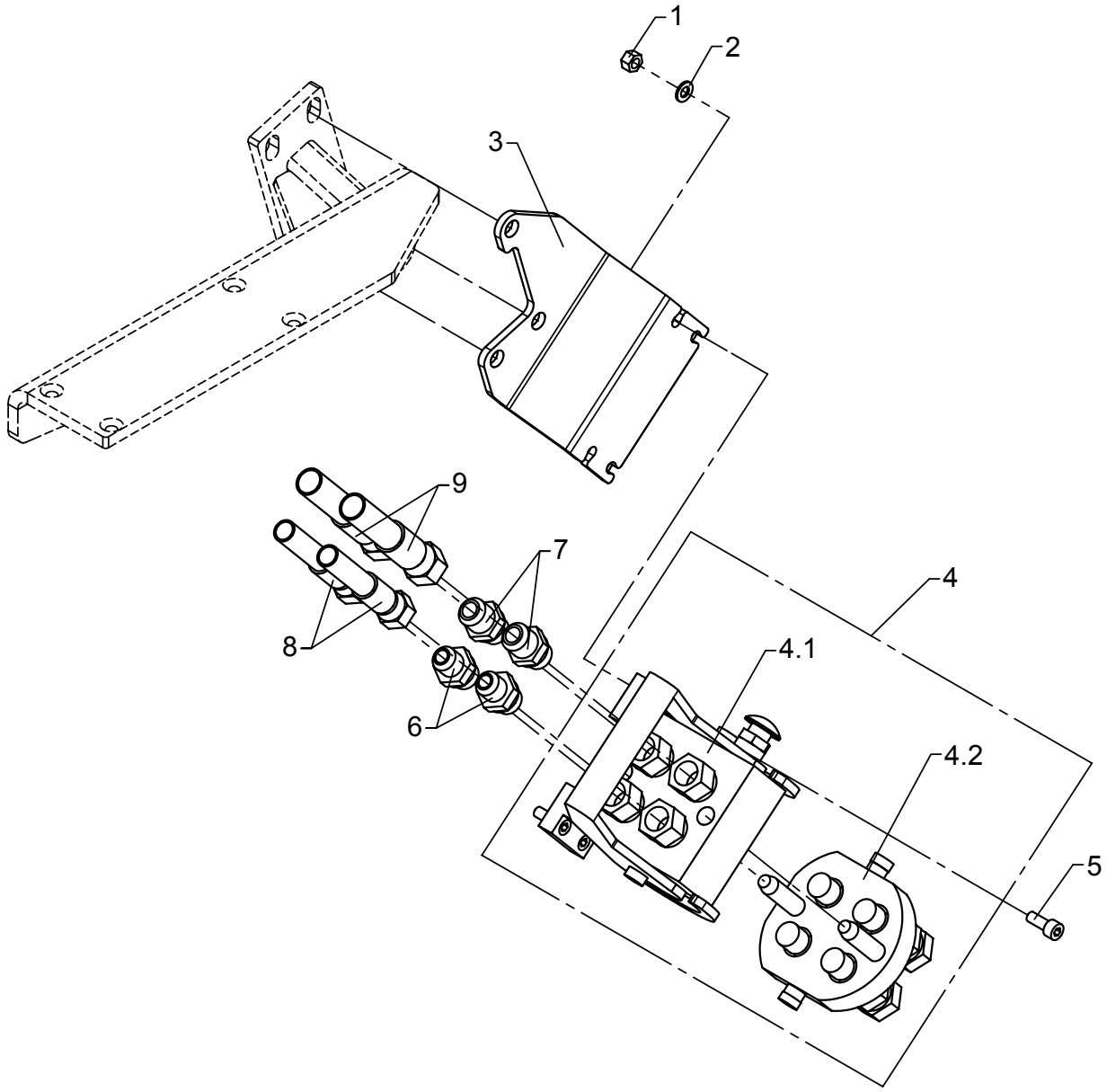

Multi-coupling OK4, hose guides

As from / To loader no.: 96 00 00 /
Created: 06.07.2006
Modified:

Item no.	Qty.	Part no.	Description	Remarks
1	4	30886	Lock nut, stainless	M8
2	4	31147	Washer, stainless	8 mm
3	1	6301271	Bracket	
4	1	58430	Multifaster coupling	1/2"
4.1	1	58432	Multifaster coupling	
4.2	1	58431	Multifaster coupling	
5	4	30438	Screw	MC8 x 20
6	2	25832	Straight connection	F40XS 12-1/2 JIC
7	2	25833	Straight connection	F40XS 14/16-1/2 JIC
8	2	56263	Hose	3/8" x 1260 S/O JIC
9	2	62891	Hose	1/2" x 1300 L/L JIC

52-380

Intern ref.: 6301480

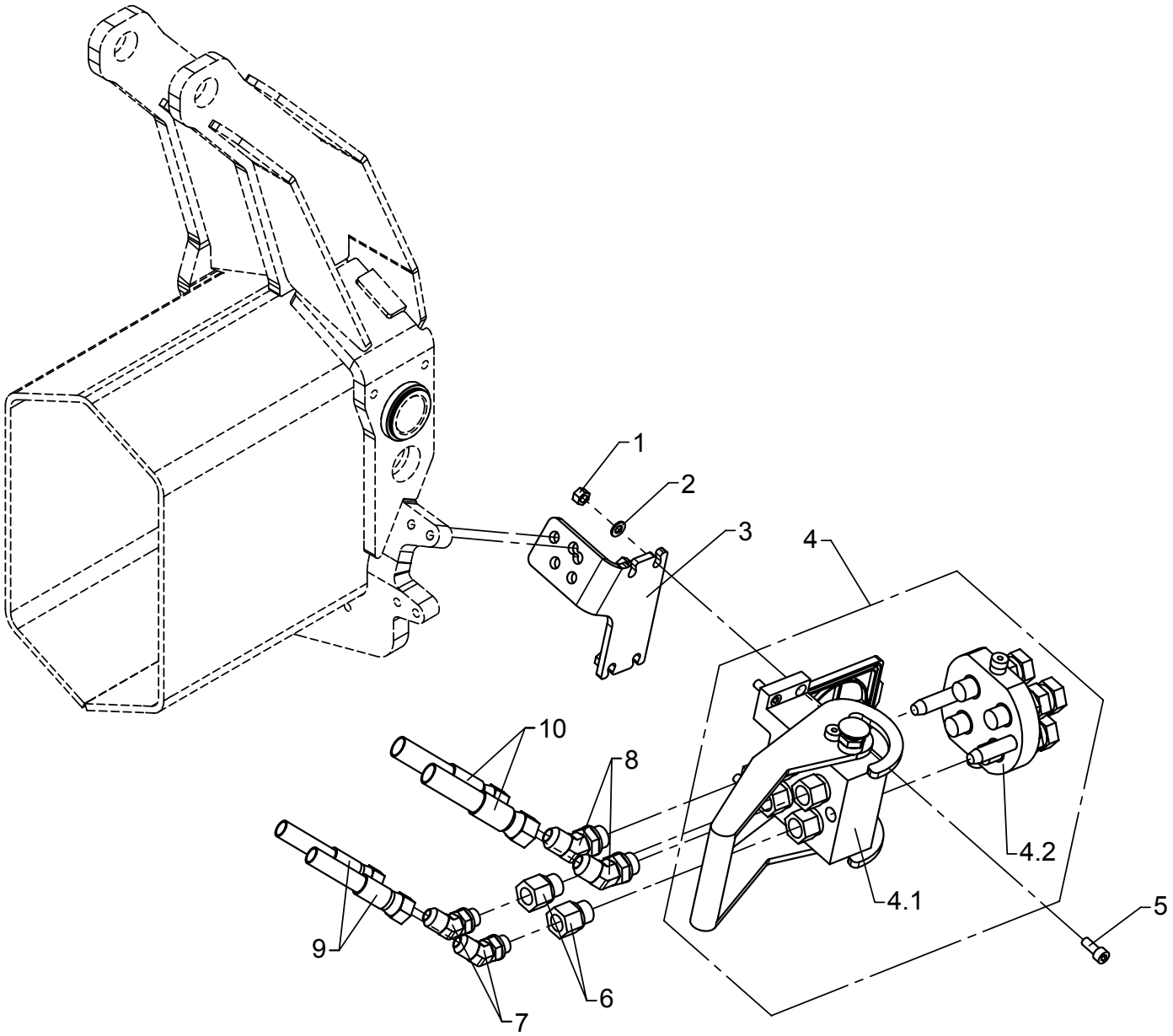

Multi-coupling OK5, hose guides

As from / To loader no.: 96 00 00 /
Created: 06.07.2006
Modified:

Item no.	Qty.	Part no.	Description	Remarks
1	4	30886	Lock nut, stainless	M8
2	4	31147	Washer, stainless	8 mm
3	1	6301273	Bracket	
4	1	58430	Multifaster coupling	1/2"
4.1	1	58432	Multifaster coupling	
4.2	1	58431	Multifaster coupling	
5	4	30438	Screw	MC8 x 20
6	2	25243	Reducing connection	RED-R 1/2-WD/R 3/8
7	2	26695	Elbow connection 45°	V40XS12 - 3/8
8	2	25723	Elbow connection 45°	V40XS14/16 - 1/2
9	2	56121	Hose	1/2" x 405 S/O JIC
10	2	56122	Hose	3/8" x 380 S/O JIC

52-380

Intern ref.: 6301480

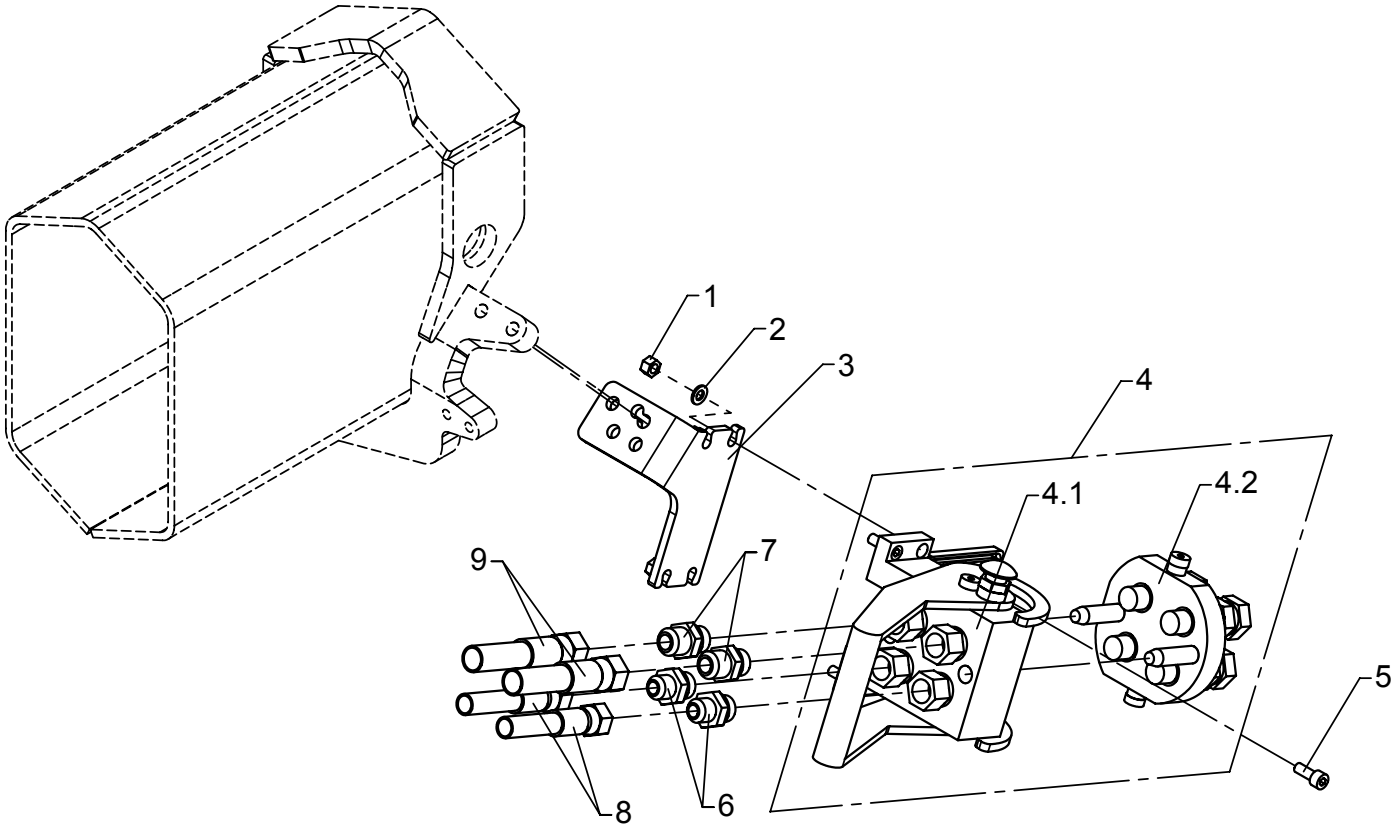

Multi-coupling OK6, hose guides

As from / To loader no.: 96 00 00 /
Created: 06.07.2006
Modified:

Item no.	Qty.	Part no.	Description	Remarks
1	4	30886	Lock nut, stainless	M8
2	4	31147	Washer, stainless	8 mm
3	1	6301273	Bracket	
4	1	58430	Multifaster coupling	1/2"
4.1	1	58432	Multifaster coupling	
4.2	1	58431	Multifaster coupling	
5	4	30438	Screw	MC8 x 20
6	2	25832	Straight connection	F40XS 12-1/2 JIC
7	2	25833	Straight connection	F40XS 14/16-1/2 JIC
8	2	56263	Hose	3/8" x 1260 S/O JIC
9	2	56264	Hose	1/2" x 1260 S/O JIC

52-380

Intern ref.: 1014330

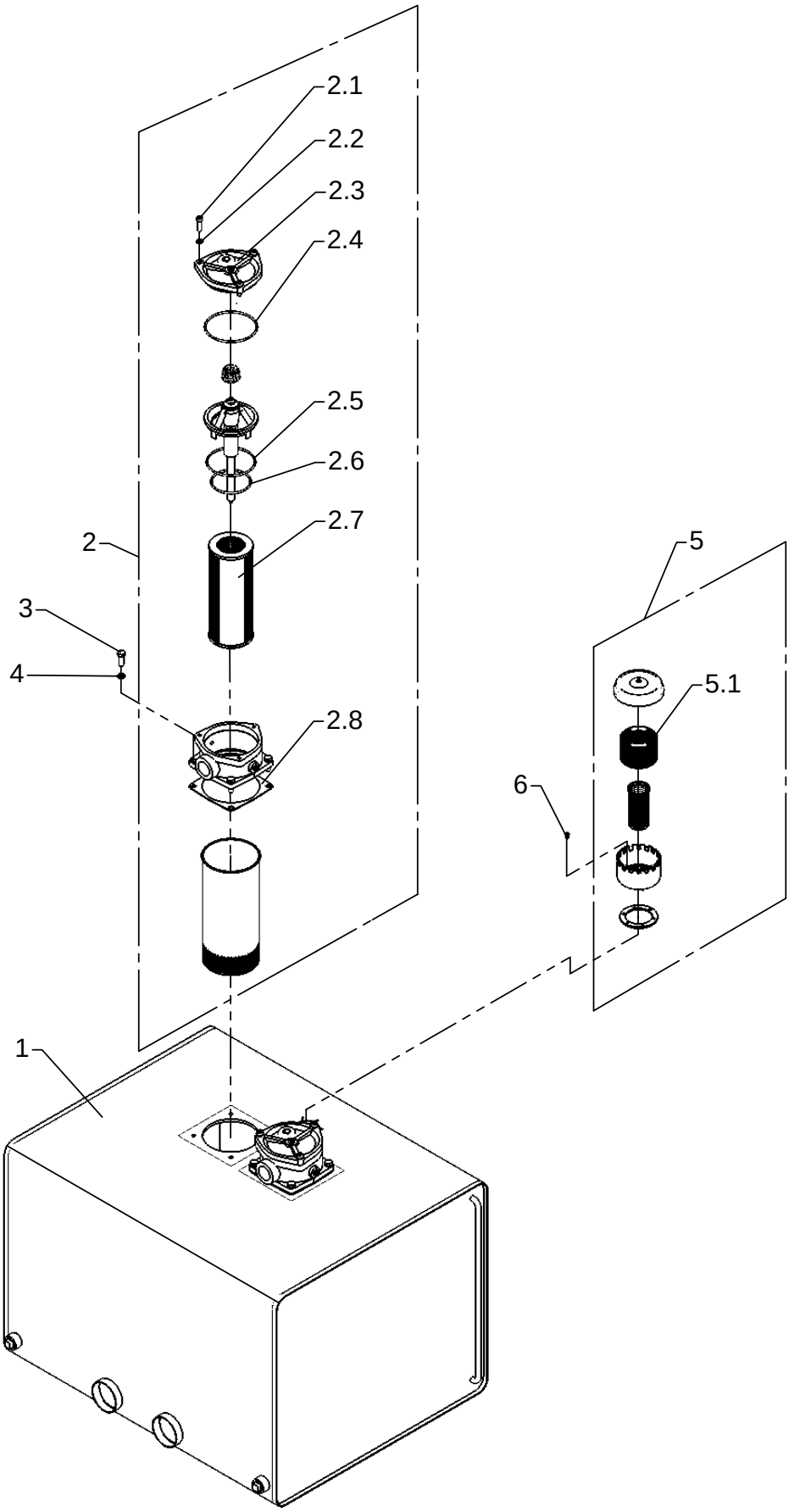

External hydraulic tank, 320 l

As from / To loader no.: 96 00 00
Created: 05.01.2004
Modified:

Item no.	Qty.	Part no.	Description	Remarks
1	1	58708		
2	2	60249	Return filter	
2,1	3	30442	Screw	MC8 x 30
2,2	3	31155	Spring washer, stainless	8 mm
2,3	1	60282	Cover	
2,4	1	20197	O-Ring	OR 118 x 3
2,5	1	20196	O-Ring	OR 109,5 x 3
2,6	1	20191	O-Ring	OR 89,5 x 3
2,7	1	60250	Filter cartridge	
2,8	1	60283	Seal	
3	8	31515	Set screw, stainless	M10 x 30
4	8	31571	Spring washer, stainless	10 mm
5	1	60275	Air filter	
5,1	1	60276	Filter	
6	3	25348	Plug	

52-380

Intern ref.: 1014340

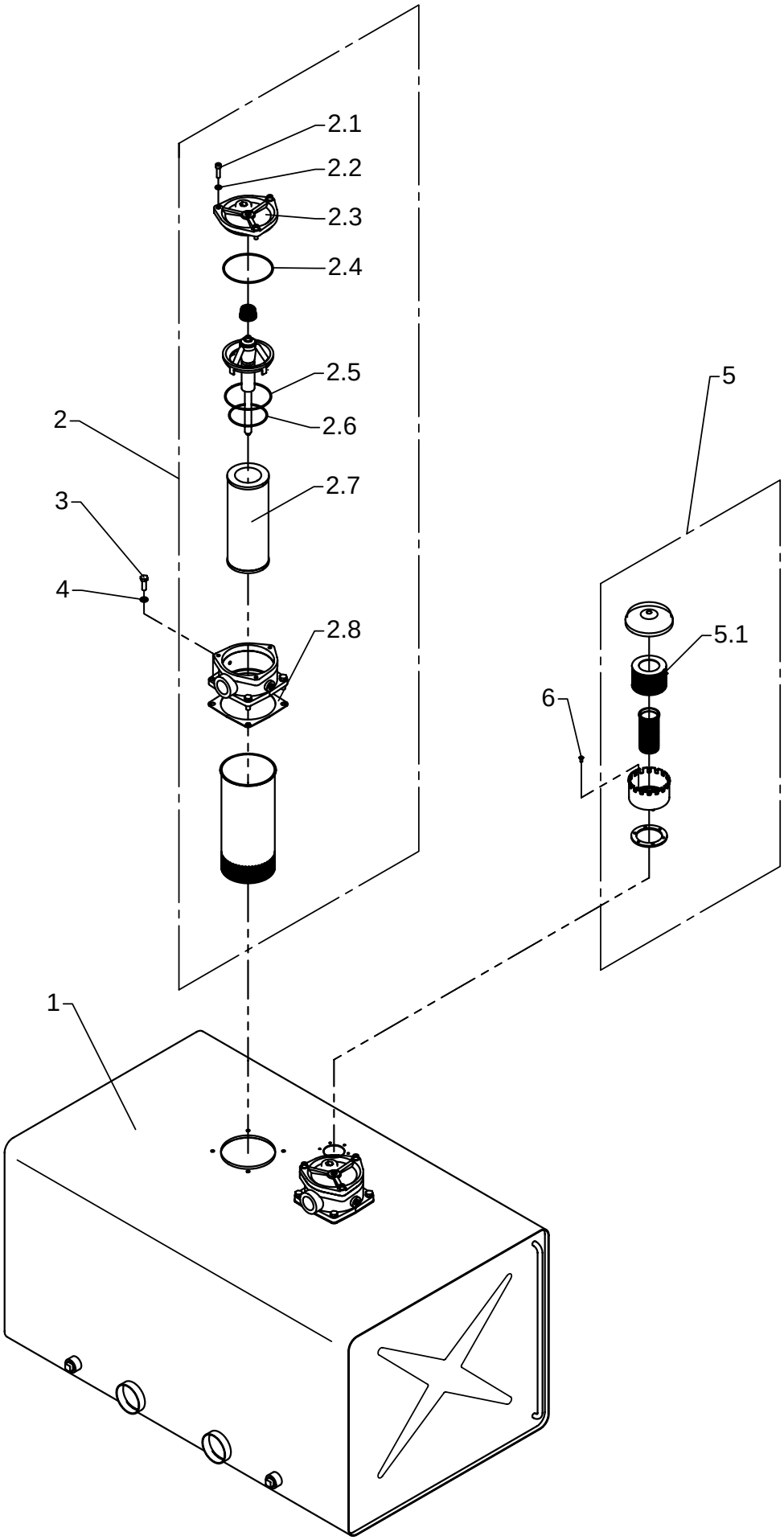

External hydraulic tank, 420 l

As from / To loader no.: 96 00 00
Created: 05.01.2004
Modified:

Item no.	Qty.	Part no.	Description	Remarks
1	1	58709	Oil tank, 420 l	
2	2	60249	Return filter	
2,1	3	30442	Screw	MC8 x 30
2,2	3	31155	Spring washer, stainless	8 mm
2,3	1	60282	Cover	
2,4	1	20197	O-Ring	OR 118 x 3
2,5	1	20196	O-Ring	OR 109,5 x 3
2,6	1	20191	O-Ring	OR 89,5 x 3
2,7	1	60250	Filter cartridge	
2,8	1	60283	Seal	
3	8	31515	Set screw, stainless	M10 x 30
4	8	31571	Spring washer, stainless	10 mm
5	1	60275	Air filter	
5,1	1	60276	Filter	
6	3	25348	Plug	

52-380

Intern ref.: 6300780

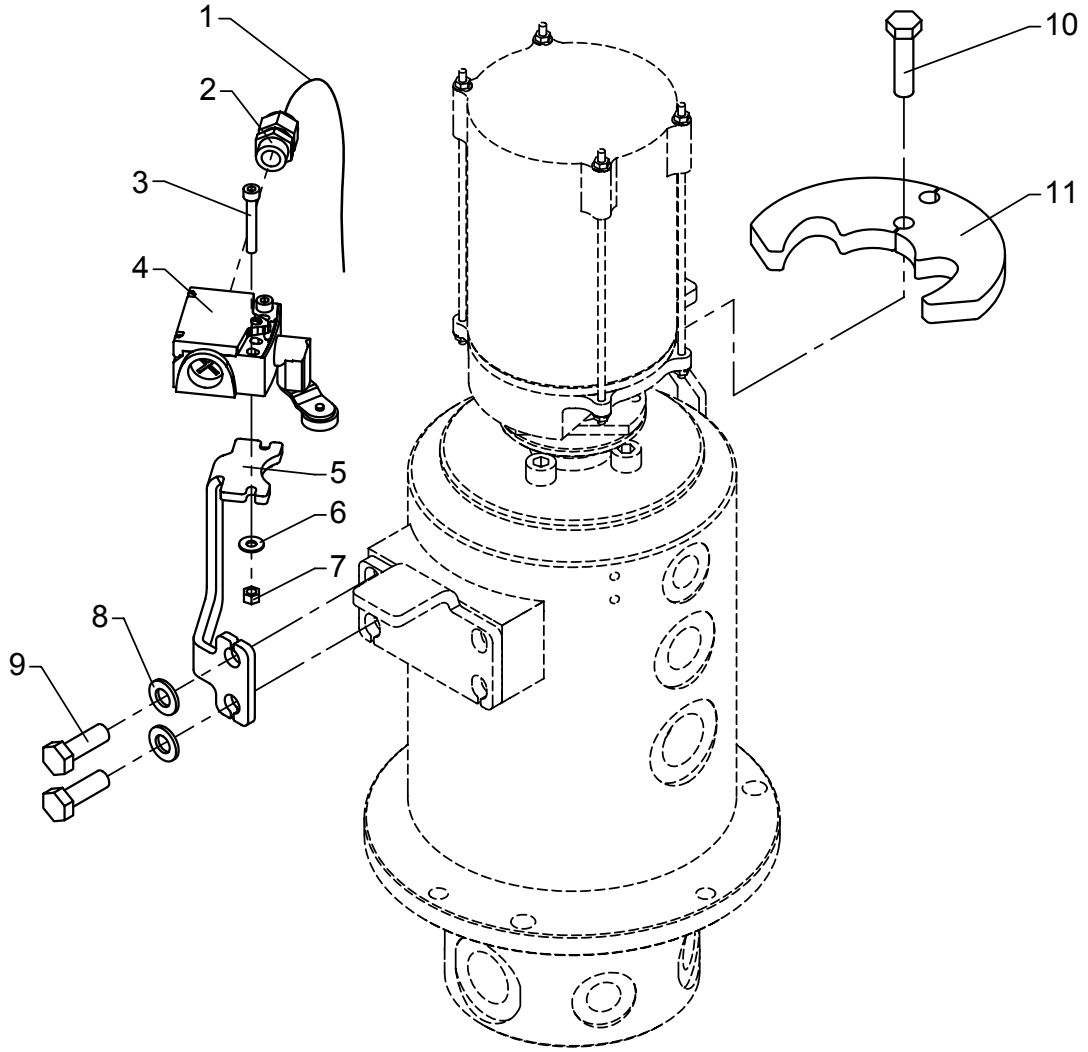

2-stage LMB

As from / To loader no.: 96 00 50 /
Created: 02.02.2007
Modified:

Item no.	Qty.	Part no.	Description	Remarks
1	1	28249	Cable	2 m.
2	1	28460	Connection	M16 x 1,5
3	2	30422	Screw, stainless	MC5 x 35
4	1	27600	Stop	
5	1	6302623	Bracket	
6	2	32308	Washer	5 mm
7	2	30859	Lock nut, stainless	M5
8	2	31177	Washer	10 mm
9	2	30156	Set screw, stainless	M10 x 30
10	1	30158	Steel bolt	M10 x 40
11	1	6302622	Cam disc	

52-380

Intern ref.: 6300670

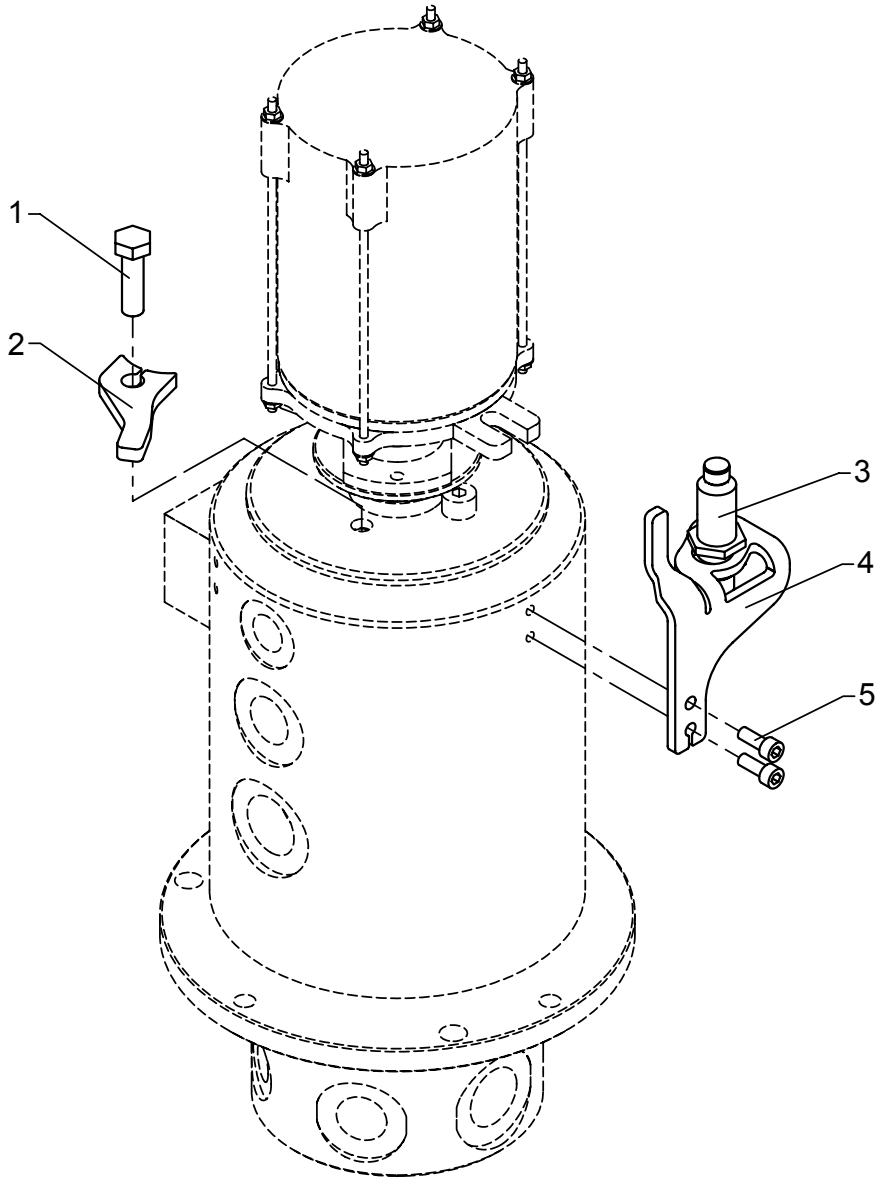

Calibrate Bypass Sensor System

As from / To loader no.: 96 00 50 /
Created: 02.02.2007
Modified:

Item no.	Qty.	Part no.	Description	Remarks
1	1	30157	Set screw	M10 x 35
2	1	6302625	Sensor	
3	1	28210	Proximity switch	
4	1	6302624	Sensor fitting	
5	2	30424	Screw	MC6 x 16

52-380

Intern ref.: 6301190

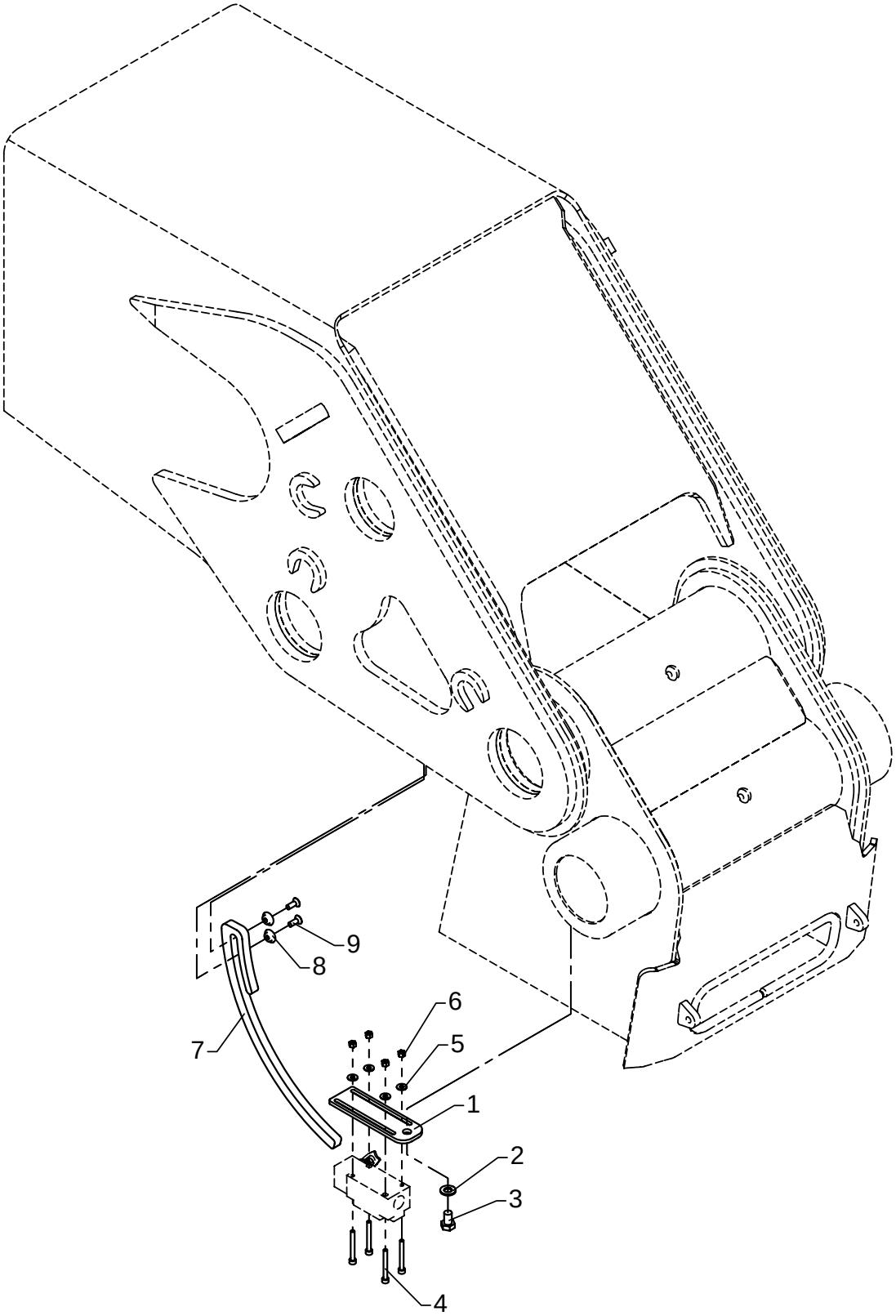

Height Indicator

As from / To loader no.: 96 00 00/
Created: 16.02.2004
Modified:

Item no.	Qty.	Part no.	Description	Remarks
1	1	6301191	Clamp	
2	1	31565	Washer, stainless	10 mm
3	1	30153	Set screw	M10 x 16
4	4	30400	Screw, stainless	MC5 x 45
5	4	31189	Washer	5 mm
6	4	30859	Lock nut, stainless	M5
7	1	6301192	Cam disc	
8	2	6301193	Washer	
9	2	32201	Countersunk screw	MK6 x 16

52-380

Intern ref.: 6306620

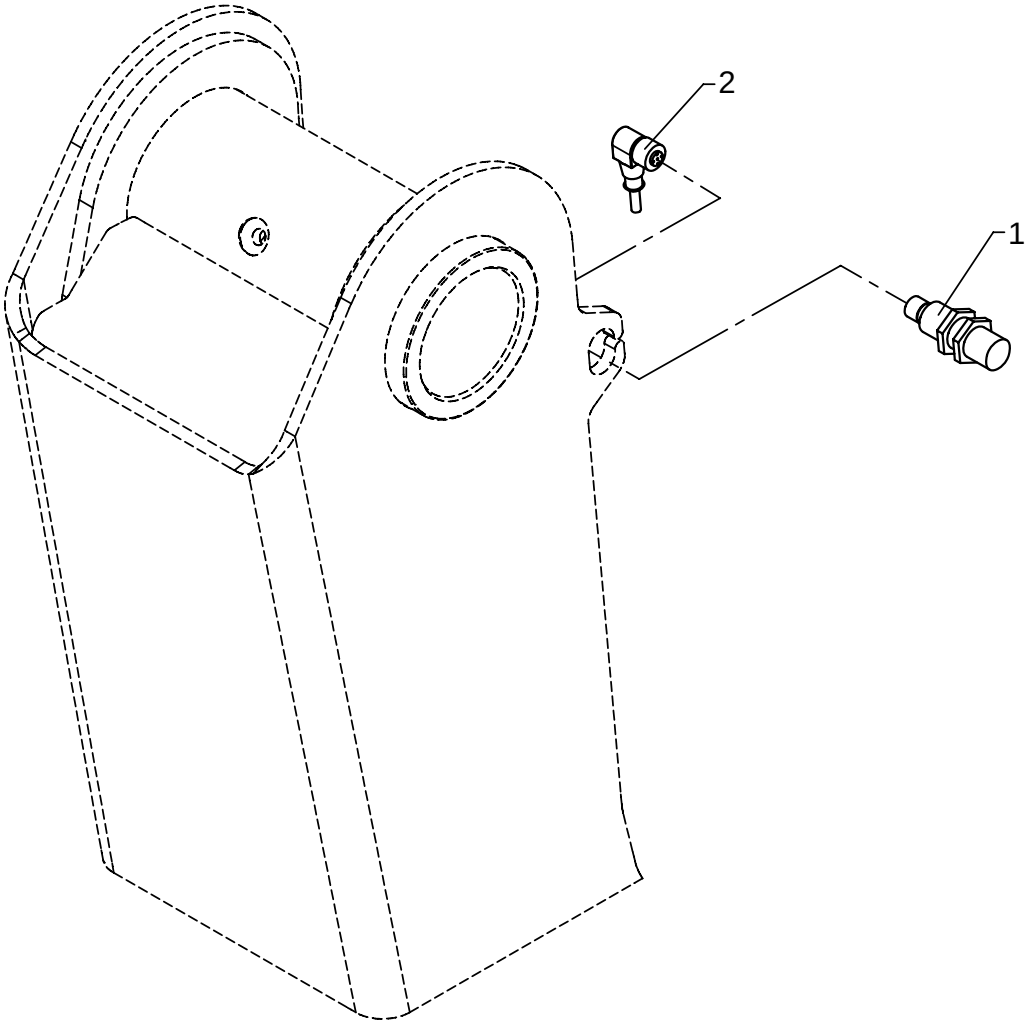

Height indicator

As from / To loader no.: 96 02 14
Created: 15.10.2008
Modified:

Item no.	Qty.	Part no.	Description	Remarks
1	1	29124	Proximity switch	
2	1	28902	Cable with plug, 10 m.	

52-380

Intern ref.: 6300510

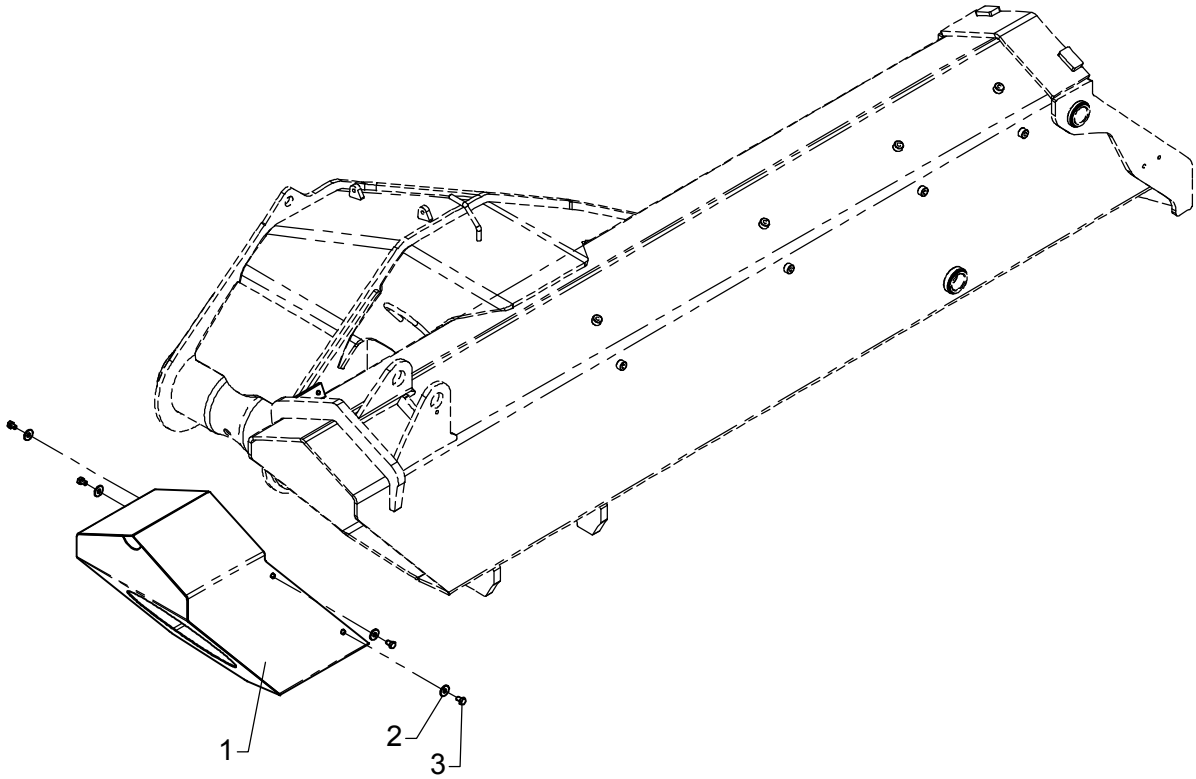

Shield at the end of the jib

As from / To loader no.: 96 00 00 / 96 00 xx
Created: 03.10.2003
Modified:

Item no.	Qty.	Part no.	Description	Remarks
1	1	6300507	Protection plate, jib	
2	4	31136	Washer, stainless	24 x 8,4 x 2
3	4	30130	Set screw, stainless	M8 x 12

52-380

Intern ref.: 6300510

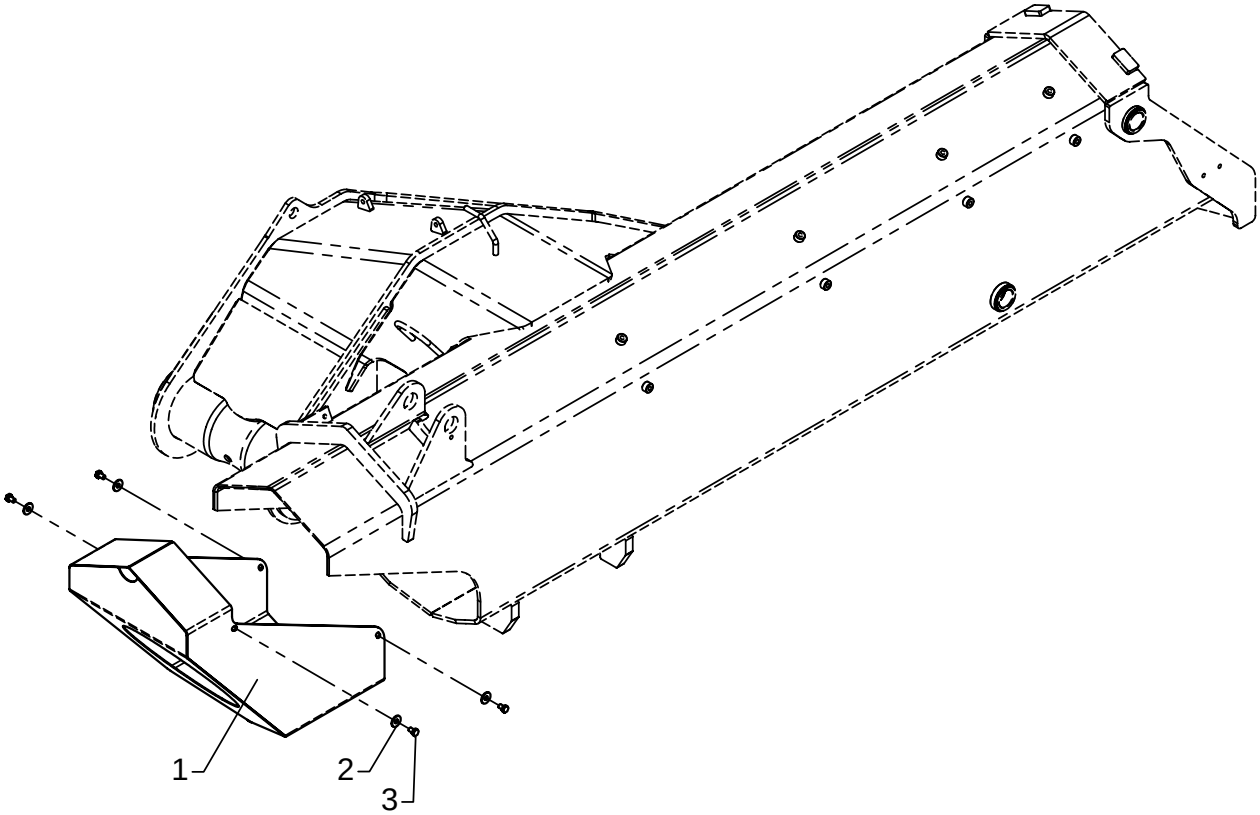

Shield at the end of the jib

As from / To loader no.: 96 00 xx /
Created: 03.10.2003
Modified:

Item no.	Qty.	Part no.	Description	Remarks
1	1	6301107	Protection plate, jib	
2	4	31136	Washer, stainless	24 x 8,4 x 2
3	4	30130	Set screw, stainless	M8 x 12

52-380

Intern ref.:

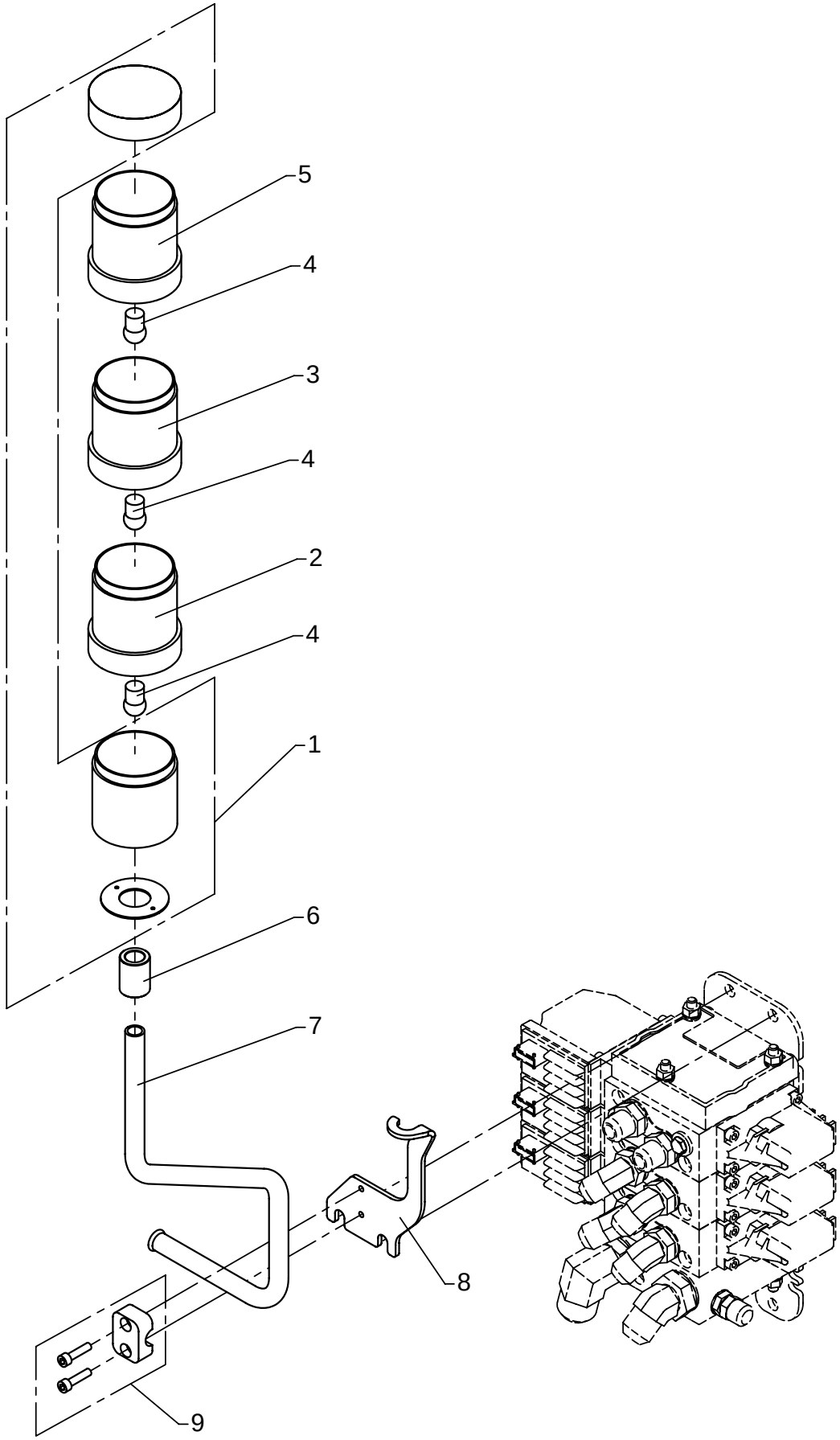

Light tower

As from / To loader no.: 96 00 00 /
Created: 26.11.2003
Modified: 23.06.2008

Item no.	Qty.	Part no.	Description	Remarks
1	3	27773	Bottom + cover	
2	1	27771	Diode, red	
3	1	27772	Diode, yellow	
4	3	27835	Bulb 24V, 5W	
5	1	27770	Diode, green	
6	1	63545	Adapter for light tower	
7	1	6301015	Pipe	
8	1	6301009	Bracket for light tower	
9	1	31434	Clamp	

52-380

Intern ref.: 7003910

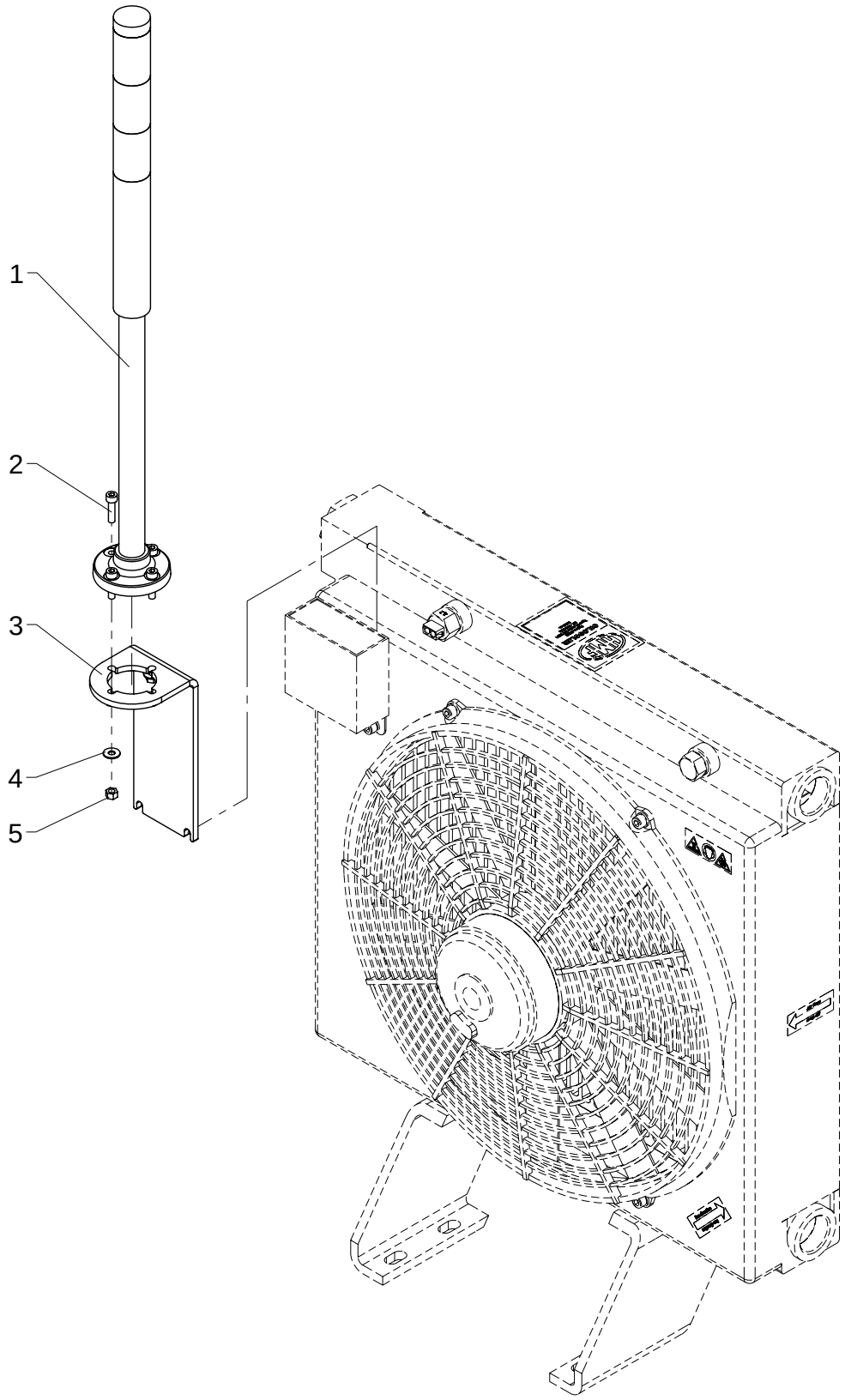

Light tower

As from / To loader no.: 96 02 08
Created: 23.06.2008
Modified:

Item no.	Qty.	Part no.	Description	Remarks
1	1	29195	Light tower incl. foot + cable	
2	4	31590	Sockethead screw	MC5 x 20
3	1	6301382	Bracket for light tower	
4	4	32308	Washer	5 mm
5	4	30859	Lock nut, stainless	M5

52-380

Intern ref.: 8512840

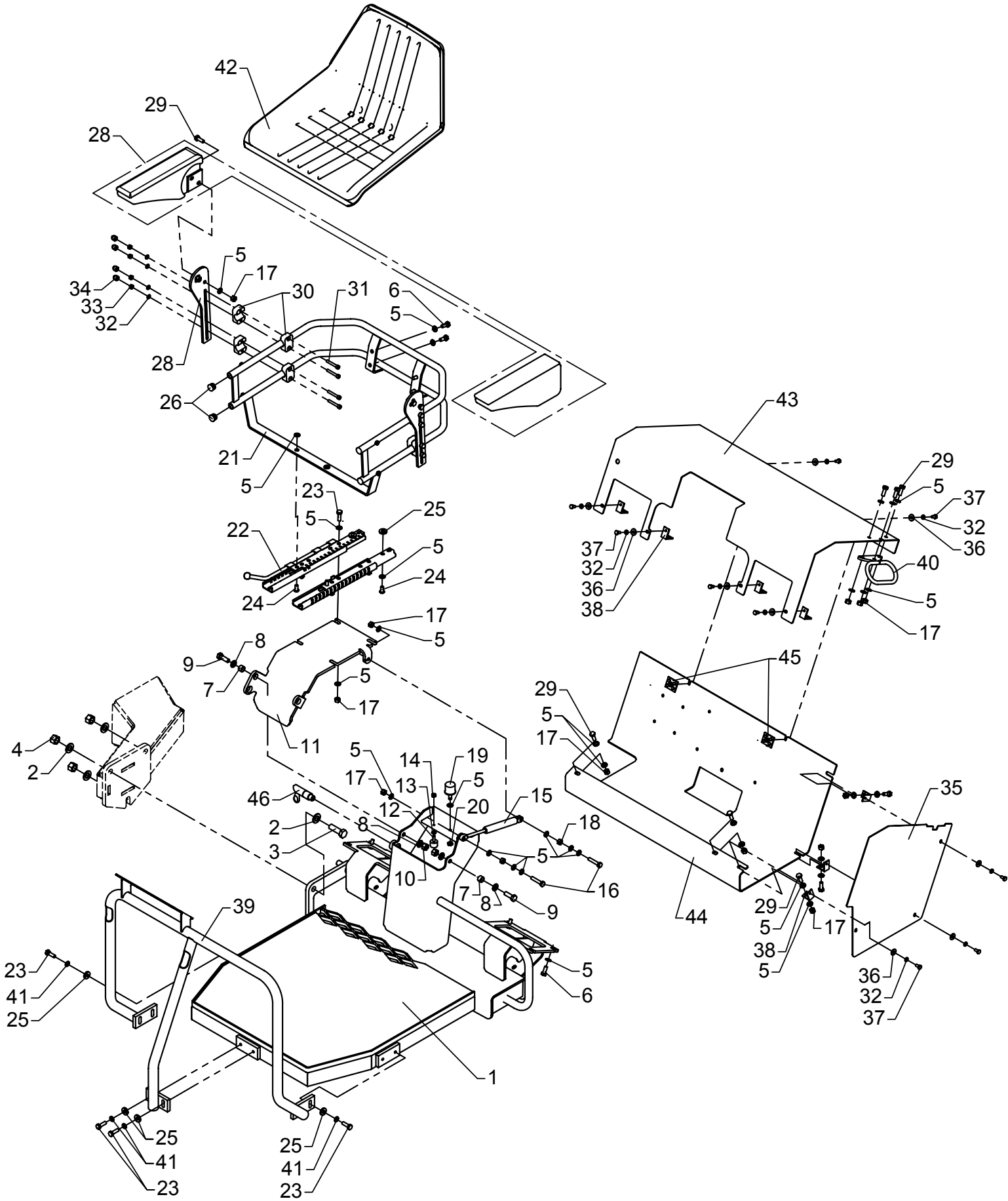

Top seat, TS

As from / To loader no.: 96 00 00 /
Created: 19.01.2004
Modified: 18.01.2005

Item no.	Qty.	Part no.	Description	Remarks
1	1	8512832	Top seat	
2	6	31178	Washer	14 mm
3	3	30208	Set screw	M14 x 45
4	3	30891	Lock nut	M14
5	53	31147	Washer, stainless	8 mm
6	12	30132	Set screw, stainless	M8 x 20
7	2	6383894	Spacer	
8	4	31565	Washer, stainless	10 mm
9	2	30156	Set screw, stainless	M10 x 30
10	2	31564	Lock nut, stainless	M10
11	1	6383883	Bracket for seat	
12	2	61916	Torsion balancer	
13	4	32302	Face washer, stainless	6 mm
14	2	30854	Nut, stainless	M6
15	1	48460	Gas spring	
16	2	30137	Set screw, stainless	M8 x 40
17	18	30886	Lock nut, stainless	M8
18	2	30856	Nut, stainless	
19	1	24115	Rubber buffer	
20	1	30874	Counter nut, stainless	M8
21	1	6382732	Armrest	
22	1	24101	Slide bar	
23	8	30134	Set screw, stainless	M8 x 25
24	4	30925	Round-head screw	M8 x 16
25	6	31755	Washer	
26	4	64518	Plastic plug	
27	1	24129	Armrest for seat	
28	2	6301308	Bracket for armrest	
29	12	30133	Set screw, stainless	M8 x 22
30	8	31805	Clamp sing.	
31	8	32410	Screw	MC6 x 40
32	17	31154	Spring washer, stainless	6 mm
33	9	30884	Lock nut, stainless	M6
34	8	64514	Cover for nut	
35	1	8513854	Plate	
36	9	31134	Washer, stainless	6 mm
37	9	30111	Set screw, stainless	M6 x 12
38	7	6232984	Elbow	
39	1	8514443	Safety guard	
40	1	6233533	Lock plate	

Top seat, TS

As from / To loader no.: 96 00 00 /
Created: 19.01.2004
Modified: 18.01.2005

Item no.	Qty.	Part no.	Description	Remarks
41	4	31155	Spring washer	8 mm
42	1	24102	Seat compl.	
43	1	8513472	Protective plate	
44	1	8513363	Protective plate, top seat	
45	2	31068	Clip	M6 0,5 - 4,0 mm.
46	1	46503	Snap lock, black	
47	1	6300557	Reinforcement plate	
48	1	30112	Set screw, stainless	M6 x 16

52-380

Intern ref.: 6383480

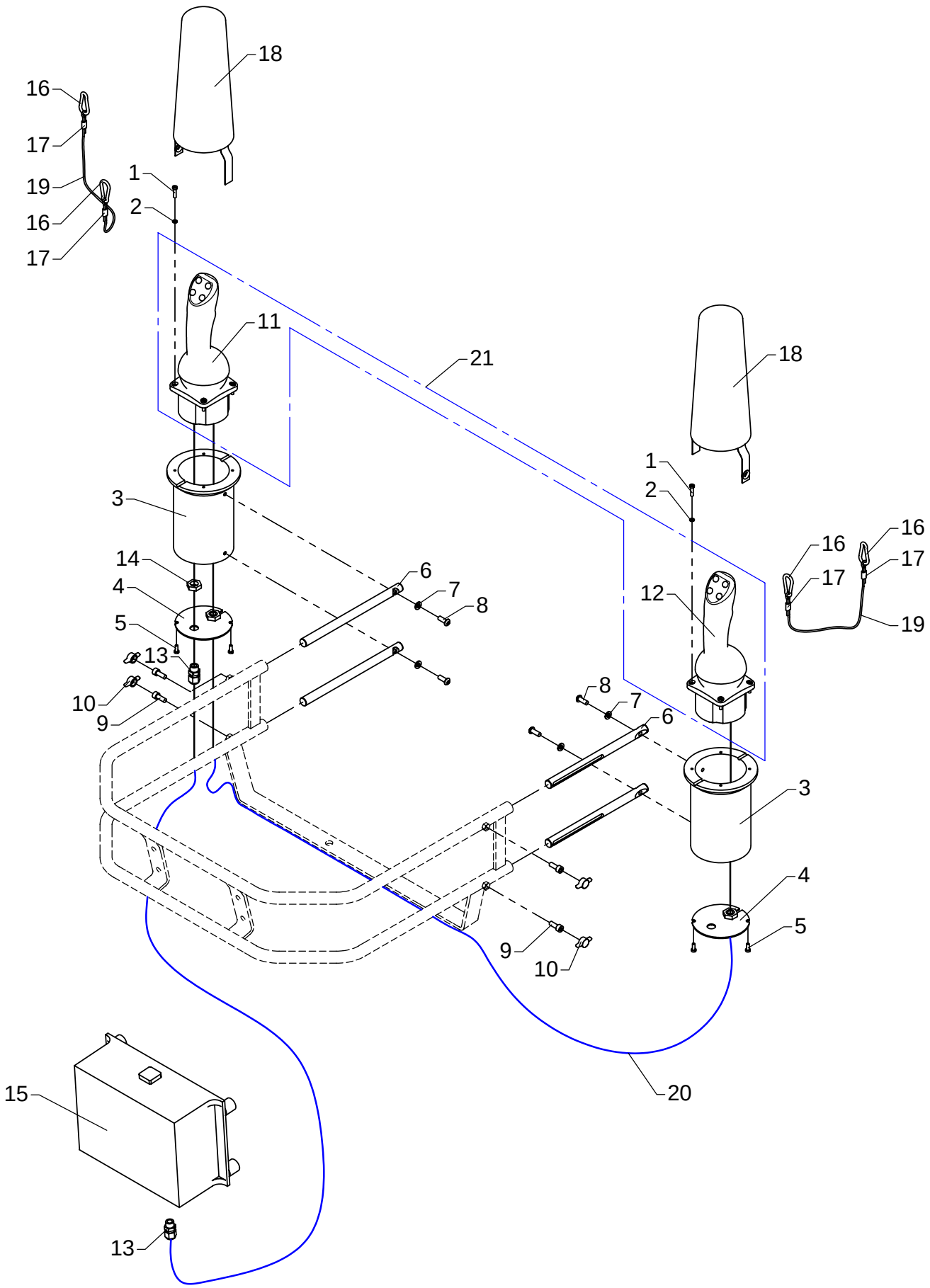

CAN-Joysticks incl. brackets

As from / To loader no.: 96 00 00 /
Created: 06.01.20004
Modified:

Item no.	Qty.	Part no.	Description	Remarks
1	8	30794	Screw	M4 x 16
2	8	31152	Spring washer, stainless	4 mm
3	2	63675	Joy stick bracket	
4	2	6383464	Cover	
5	4	30768	Screw, stainless	M4 x 10
6	4	6383434	Insert	
7	4	31154	Spring washer, stainless	6 mm
8	4	32222	Button head screw	M6 x 16
9	4	31539	Screw, stainless	MC6 x 16
10	4	64353	Thumb screw	M6
11		58928	CAN-Joystick, master excl.wire	
12		58927	CAN-Joystick, slave excl. wire	
13	2	28924	Cable lead-in	M12 x 1,5
14	1	28925	Counter nut	M12 x 1,5
15	1	57309	Electronic box for joystick	
16	4	62188	Snap hook	
17	4	62161	Wire lock	
18	2	49120	Cover for joystick	
19	2	62160	Wire rope, nylon	
20		58929	Cable for CAN-Joysticks	
21	1	58926	CAN-Joysticks, cpl. incl. wire	

52-380

Intern ref.: 6649740

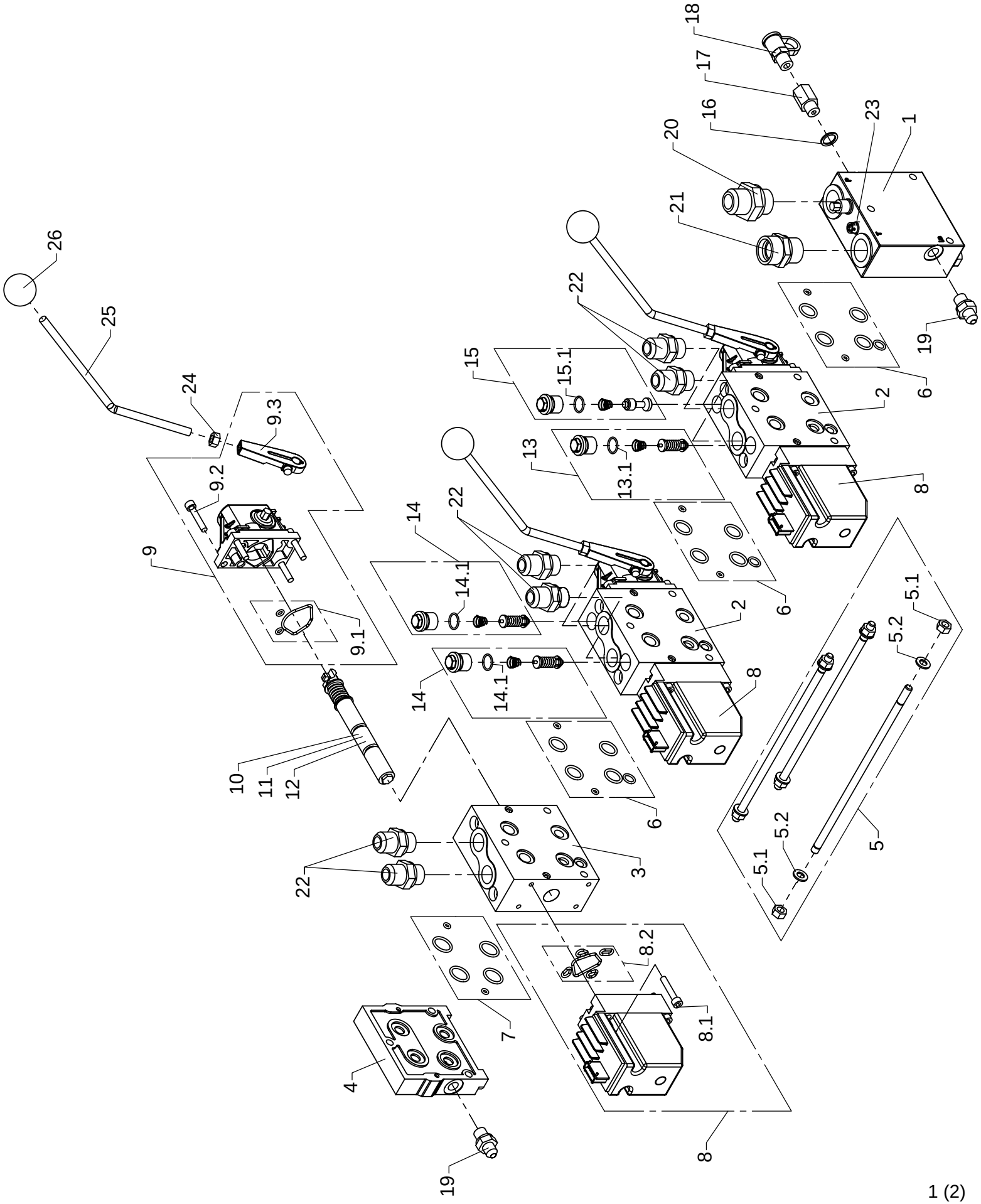

1st valve block, dual circuit, TS

As from / To loader no.: 96 00 00 /
Created: 03.12.2003
Modified:

Item no.	Qty.	Part no.	Description	Remarks
		62293	Valve block	
1	1	62037	Inlet section	
2	2	62227	Control valve	
3	1	62225	Control valve	
4	1	62235	End plate	
5	1	62018	Connecting kit - 3 modules	
	2	30856	Nut, stainless	M8
	2	31147	Washer, stainless	8,4x16x1,6 DIN125 A2
6	3	62237	Seal kit	
7	1	58925	Seal kit	
8	3	58935	Electric module	
	4	30420	Screw	MC5 X 14 DIN 912 KV 12.9
	1	62240	Seal kit	
9	3	58907	Lever module	
	1	62239	Seal kit	
	4	30420	Screw	MC5 X 14 DIN 912 KV 12.9
	1	59682	Foot for lever	
10	1	62029	Spool	
11	1	62287	Spool	
12	1	62034	Spool	
13	1	62277	Port-relief valve	
	1	62052	O-ring	
14	2	62276	Port-relief valve	
	1	62052	O-ring	
15	1	62271	Port-relief valve	
	1	62052	O-ring	
16	1	21102	Seal washer	ø14 x 18,7 x 1,5
17	1	25859	Adaptor	1/4 BSP x 1/4 NPT JIC
18	1	59840	Connection, male	1/8" NPTF
19	2	25829	Straight connection	F40XS 8-1/4 JIC
20	1	25834	Straight connection	F40XS 18/20-3/4 JIC
21	1	25169	Connection	GEV 22 LR-WD
22	6	25833	Straight connection	F40XS 14/16-1/2 JIC
23	1	61958	Plug	
24	3	30856	Nut, stainless	M8
25	3	6882914	Lever	
26	3	64535	Ball. black	

52-380

Intern ref.: 6649750

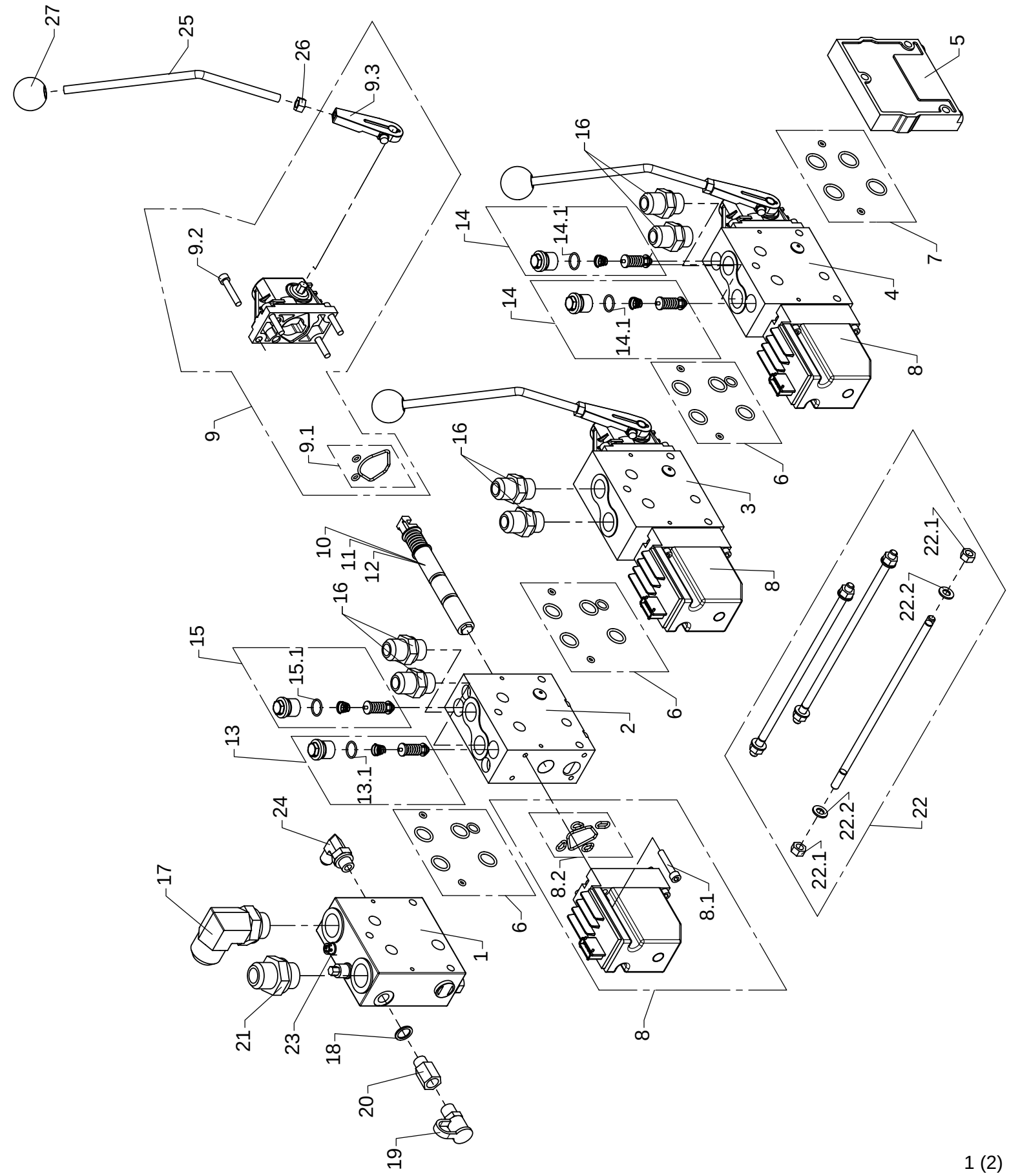

2nd valve block, dual circuit, TS

As from / To loader no.: 96 00 00 /
Created: 01.12.2003
Modified: 05.07.2005

Item no.	Qty.	Part no.	Description	Remarks
		62292	Valve block	
1	1	62037	Inlet section	
2	2	62227	Control valve	
3	1	62222	Basic module	
4	1	58921	End cover	
5	3	62237	Seal kit	
6	1	58925	Seal kit	
7	3	58935	Electric module	
	2	30420	Screw	MC5 X 14 DIN 912 KV 12.9
	2	62240	Seal kit	
8	3	58907	Lever module	
	1	62239	Seal kit	
	4	30420	Screw	MC5 X 14 DIN 912 KV 12.9
	1	59682	Foot for lever	
9	1	61960	Spool	
10	1	58923	Spool	
11	1	62041	Spool	
12	1	62277	Port-relief valve	
	1	62052	O-ring	
13	2	62276	Port-relief valve	
	1	62052	O-ring	
14	1	62282	Port-relief valve	
	1	62052	O-ring	
15	6	25833	Straight connection	F40XS 14/16-1/2 JIC
16	1	25840	Elbow connection	C40XS 25-3/4 JIC
17	1	21102	Seal washer	ø14 x 18,7 x 1,5
18	1	59840	Connection, male	1/8" NPTF
19	1	25859	Adaptor	1/4 BSP x 1/4 NPT JIC
20	1	25834	Straight connection	F40XS 18/20-3/4 JIC
21	1	62018	Connecting kit - 3 modules	
	2	30856	Nut, stainless	
	2	31147	Washer, stainless	8,4x16x1,6 DIN125 A2
22	1	61958	Plug	
23	1	25858	Elbow connection	C40XS 12-3/8 JIC
24	3	6882914	Lever	
25	3	30856	Nut, stainless	M8
26	3	64535	Ball. black	

52-380

Intern ref.: 8514370

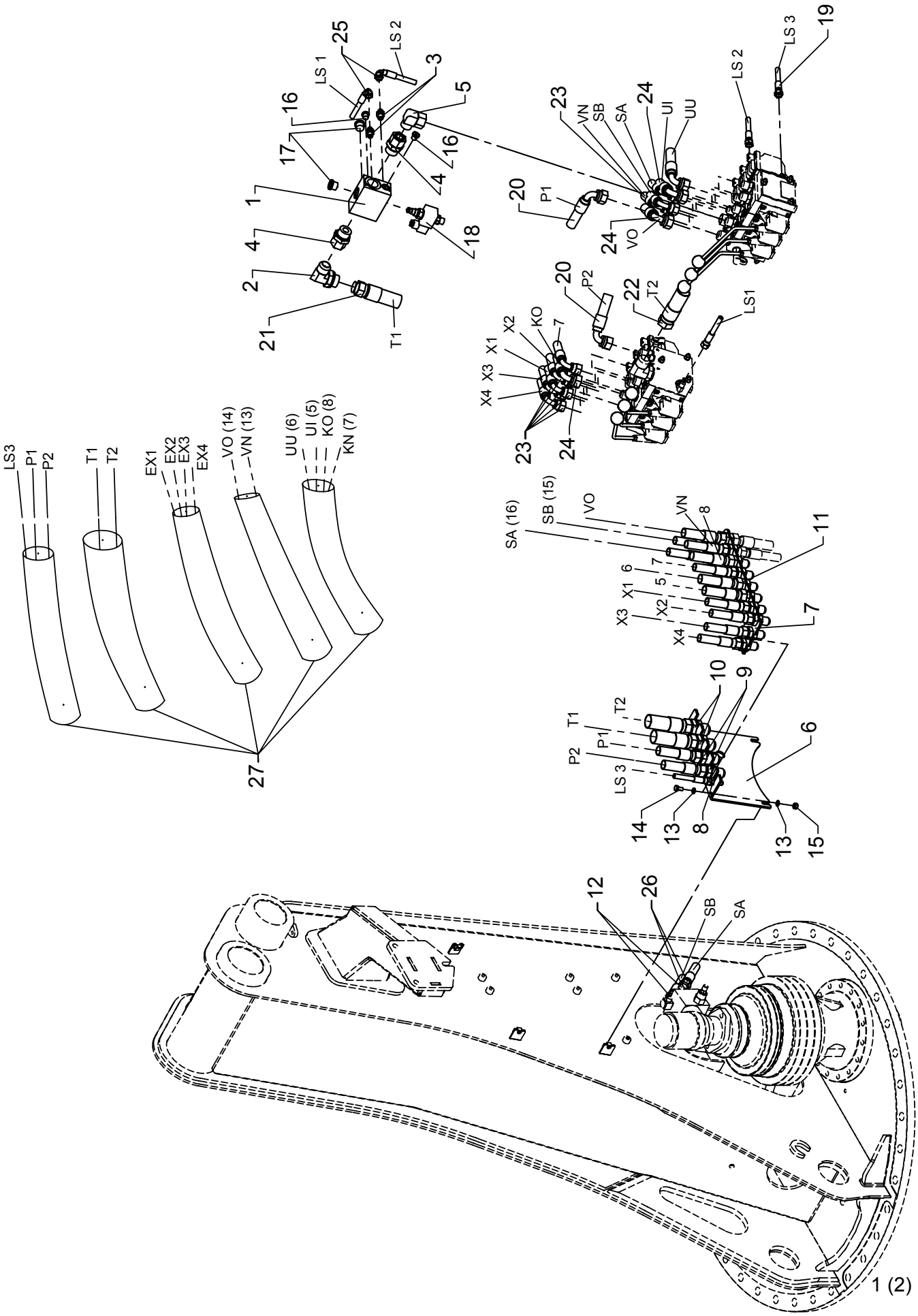

Hose kit, TS

As from / To loader no.: 96 00 00 /
Created: 26.11.2003
Modified: 09.09.2004

Item no.	Qty.	Part no.	Description	Remarks
1	1	59061	Dump valve	
2	1	26267	Elbow connection	C40XS 25-1 JIC
3	2	25829	Straight connection	F40XS 8-1/4 JIC
4	2	26391	Straight connection	EGESD 22 LR 1-WD
5	1	25209	Elbow connection	EWSD 22 L
6	1	8514394	Hose bracket (1), TS	
7	1	8514384	Hose bracket (2), TS	
8	1	25823	Bulkhead connection	WTX-WLNS 8 JIC
9	2	25862	Bulkhead connection	WTX-WLNS 20 JIC
10	2	25894	Bulkhead connection	WTX-WLNS 25 JIC
11	12	25825	Bulkhead connection	WTX-WLNS 14/16 JIC
12	2	25723	Elbow connection 45°	V40XS14/16 - 1/2
13	4	31155	Spring washer	8 mm
14	2	30131	Set screw, stainless	M8 x 16
15	2	30886	Lock nut, stainless	M8
16	3	25197	Plug	VS-R-1/4 WD
17	2	25103	Plug	VS-R-1/2 WD
18	1	59642	Magnet coil	
19	1	62855	Hose	1/4 X 1800 L/L JIC
20	2	56077	Hose	5/8 x 1500 L/90 JIC
21	1	56050	Hose	1 x 1200 L/L JIC 25/25
22	1	56058	Hose	3/4" x 1550 mm L/L JIC 25-25
23	8	56059	Hose	1/2 x 1950 L/90 16-16 JIC
24	4	56138	Hose	5/8 x 1950 L/V JIC 16/16
25	2	62886	Hose	1/4 X 400 L/90 JIC
26	2	62917	Hose, JIC	1/2 X 600 L/L JIC
27	5	62601	Protective cover	170 x 1530 mm

52-380

Intern ref.: 6301680

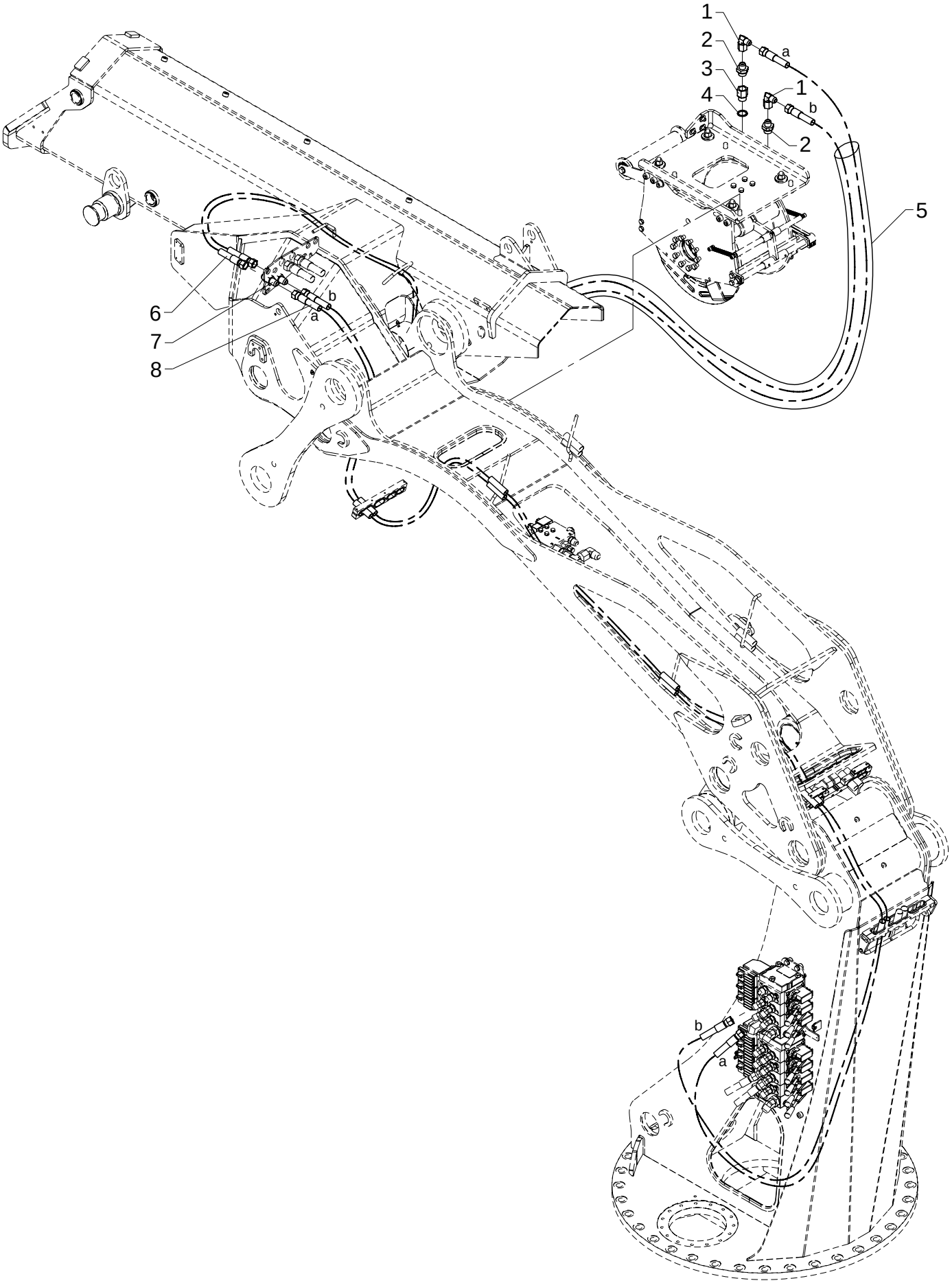

Hydraulic system, winch

As from / To loader no.: 96 01 95
Created: 02.11.2007
Modified:

Item no.	Qty.	Part no.	Description	Remarks
1	2	25741	Elbow connection	C6XS 14/16 JIC
2	2	25866	Connection	F40XS14/16 - 3/4
3	1	25949	Reducing nipple	3/4 BSP x 3/8 BSP
4	1	21108	Seal washer	ø27,05 x 34,93 x 2,34
5	1	62587	Protective cover	95 x 800 mm
6	2	56128	Hose	1/2" x 2000 L/L JIC
7	2	25825	Bulkhead connection	WTX-WLNS 14/16 JIC
8	2	56056	Hose	1/2" x 5900 L/L JIC

52-380

Intern ref.: 6301080

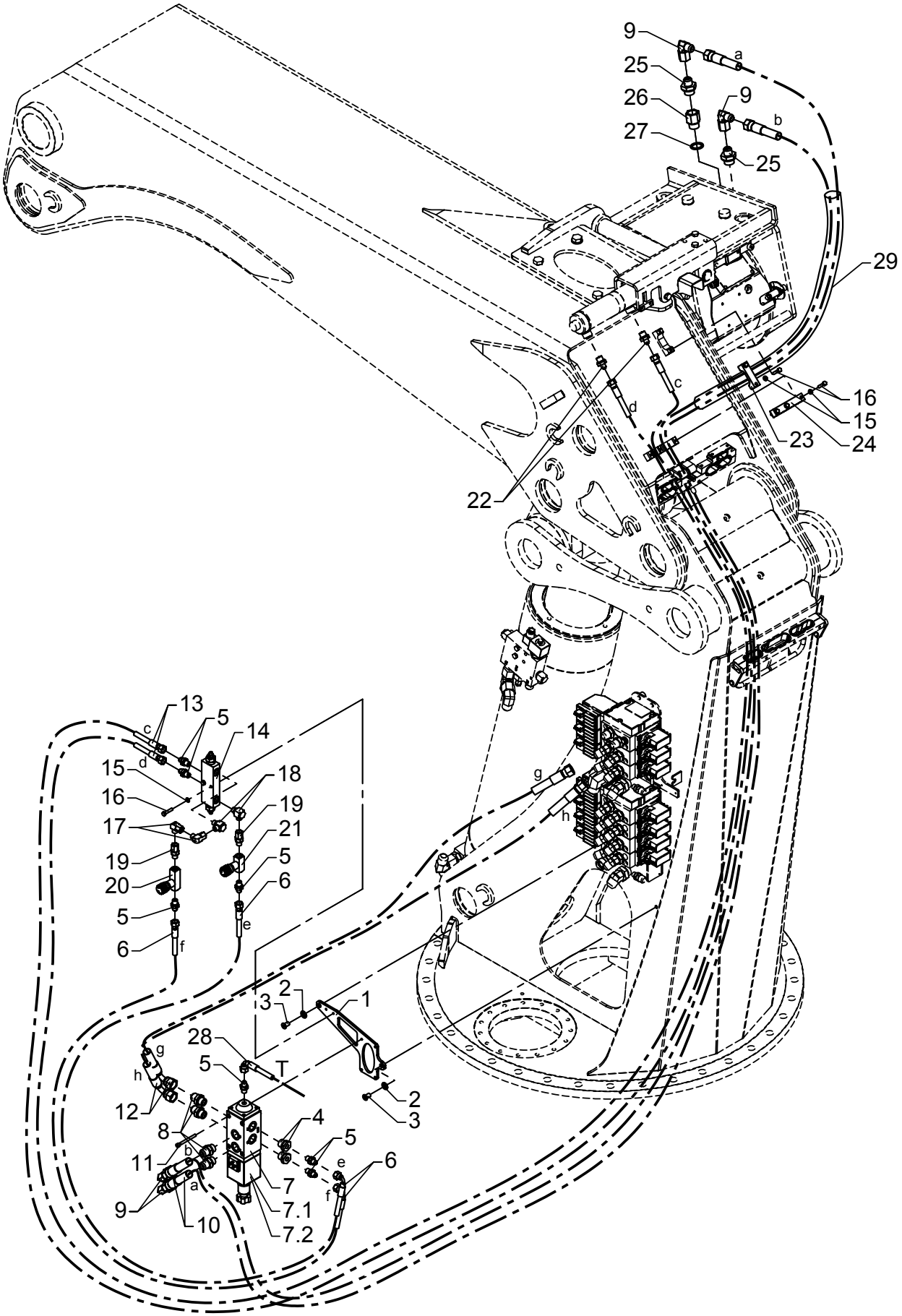

Hydraulic system, winch with FJ

As from / To loader no.: 96 00 00 / 96 01 94
Created: 04.05.2004
Modified: 02.11.2007

Item no.	Qty.	Part no.	Description	Remarks
1	1	6300606	Bracket	
2	2	31177	Washer	10 mm
3	2	32423	Sockethead screw	MC10 x 16
4	2	25180	Reducing connection	RED-R 1/2-WD/R 1/4
5	7	25829	Straight connection	F40XS 8-1/4 JIC
6	2	62887	Hose	1/4" x 550 mm V/O JIC
7	1	58476	Change-over valve	
		59067	Solenoid 24 V	
		59066	Solenoid 12 V	
8	2	25839	Elbow connection	C40XS 14/16-1/2 JIC
9	2	62868	Hose	1/2 X 3900 L/L JIC
10	3	30435	Screw	MC6 x 45
11	2	25833	Straight connection	F40XS 14/16-1/2 JIC
12	2	56105	Hose	1/2 X 750 V/O JIC
13	2	62874	Hose	1/4 X 3700 V/O JIC
14	1	59059	Load-holding valve	
15	10	32302	Face washer, stainless	6 mm
16	7	30115	Steel bolt, stainless	M6 x 30
17	2	26170	Elbow connection	EWSD 8 L
18	2	25113	Banjo connection	RSWV 8 LR
19	2	26104	Connection	EGESD 8 LR-WD
20	1	60286	One way restrictor valve	
21	1	60354	Restrictor valve	
22	2	25830	Straight connection	F40XS8 - 3/8 JIC
23	1	6300945	Clamp	
24	1	6300943	Clamp	
25	2	25741	Elbow connection	C6XS 14/16 JIC
26	2	25866	Connection	F40XS 14-3/4 JIC
27	1	25949	Reducing nipple	3/4 BSP x 3/8 BSP
28	1	21108	Seal washer	ø27,05 x 34,93 x 2,34
30	1	62587	Protective cover	95 x 800 mm
29	1	62974	Hose	1/4 x 350 90/L JIC

52-380

Intern ref.: 6301690

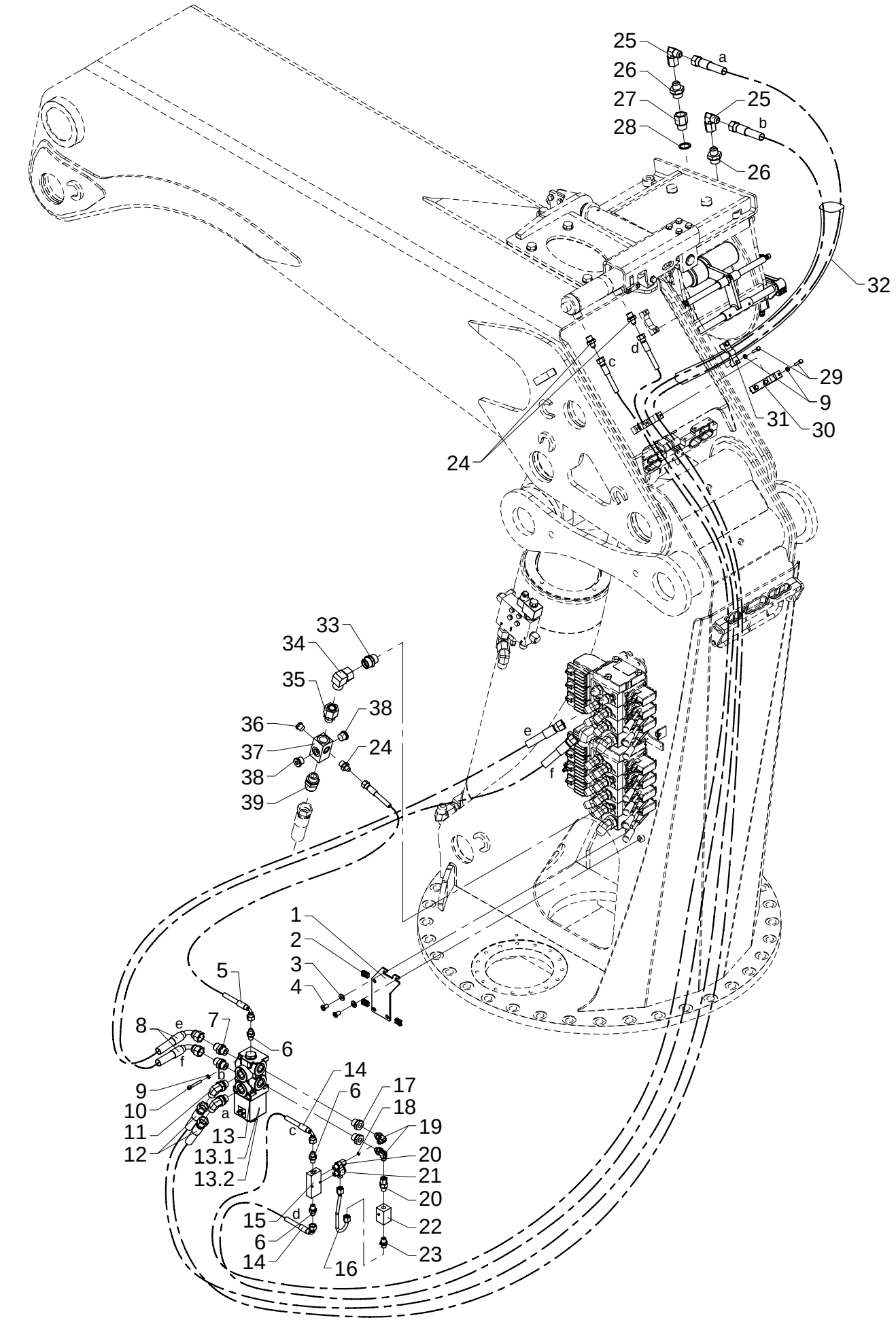

Hydraulic system, winch with FJ

As from / To loader no.: 96 01 95
Created: 02.11.2007
Modified: 14.02.2008

Item no.	Qty.	Part no.	Description	Remarks
1	1	6301116	Bracket for change-over valve	
2	3	31068	Clip	M6 0,5 - 4,0 mm.
3	2	31177	Washer	10 mm
4	2	32423	Sockethead screw	MC10 x 16
5	1	62974	Hose	1/4 x 350 90/L JIC
6	3	25829	Straight connection	F40XS8 - 1/4
7	2	25833	Straight connection	F40XS14/16 - 1/2
8	2	56105	Hose	1/2 X 750 V/O JIC
9	8	32302	Face washer, stainless	6 mm
10	3	30435	Screw	MC6 x 45
11	2	25839	Elbow connection	C40XS14/16 - 1/2
12	2	62868	Hose	1/2 X 3900 L/L JIC
13	1	58476	Change-over valve	
		59066	Solenoid 12 V	
		59067	Solenoid 24 V	
14	2	62874	Hose	1/4 X 3700 V/O JIC
15	1	49223	Piloted check-valve, double	
16	1	6301317	Pipe, winch system	
17	2	25180	Reducing connection	RED-R 1/2-WD/R 1/4
18	1	60960	Washer	
19	2	26898	Elbow connection	8 mm - 1/4"
20	2	26104	Connection	EGESD 8 LR-WD
21	1	25113	Banjo connection	RSWV 8 LR
22	1	49224	Throttle valve 1/4"	
23	1	25109	Connection	GES 8 LR-WD
24	3	25830	Straight connection	F40XS8 - 3/8
25	2	25741	Elbow connection	C6XS 14/16 JIC
26	2	25866	Connection	F40XS14/16 - 3/4
27	1	25949	Reducing nipple	3/4 BSP x 3/8 BSP
28	1	21108	Seal washer	ø27,05 x 34,93 x 2,34
29	5	30115	Steel pin, stainless	M6 x 30
30	1	6300943	Clamp	
31	1	6300945	Clamp	
32	1	62587	Protective cover	95 x 800 mm
33	1	25169	Connection	P-GEV 22 LR-WD
34	1	25209	Elbow connection	EWSD 22 L
35	1	25279	Connection	EGESD 22 LR-WD
36	1	25277	Plug	VS-R-3/8 WD
37	1	59355	Return block	
38	2	25103	Plug	VS-R-1/2 WD
39	1	25836	Straight connection	F40XS25 - 3/4

52-380

Intern ref.: 6301050

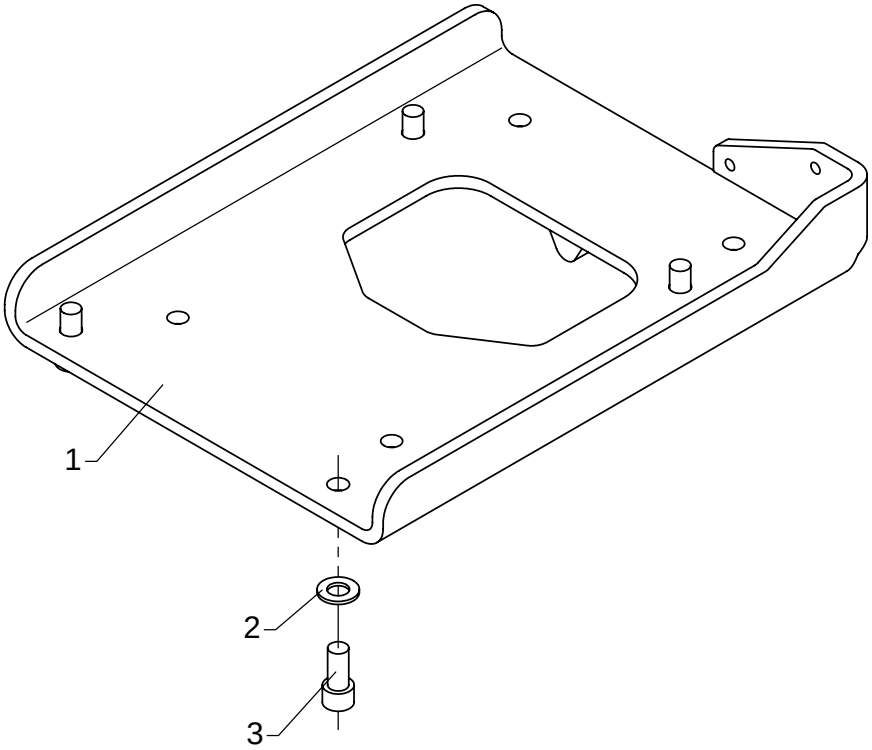

Stowing bracket

As from / To loader no.: 96 00 00 / 96 00 74
Created: 03.10.2003
Modified: 08.04.2005

Item no.	Qty.	Part no.	Description	Remarks
1	1	6300891	Winch bracket	
2	4	31178	Washer	14 mm
3	4	30480	Screw	MC14 x 30

52-380

Intern ref.: 6301050

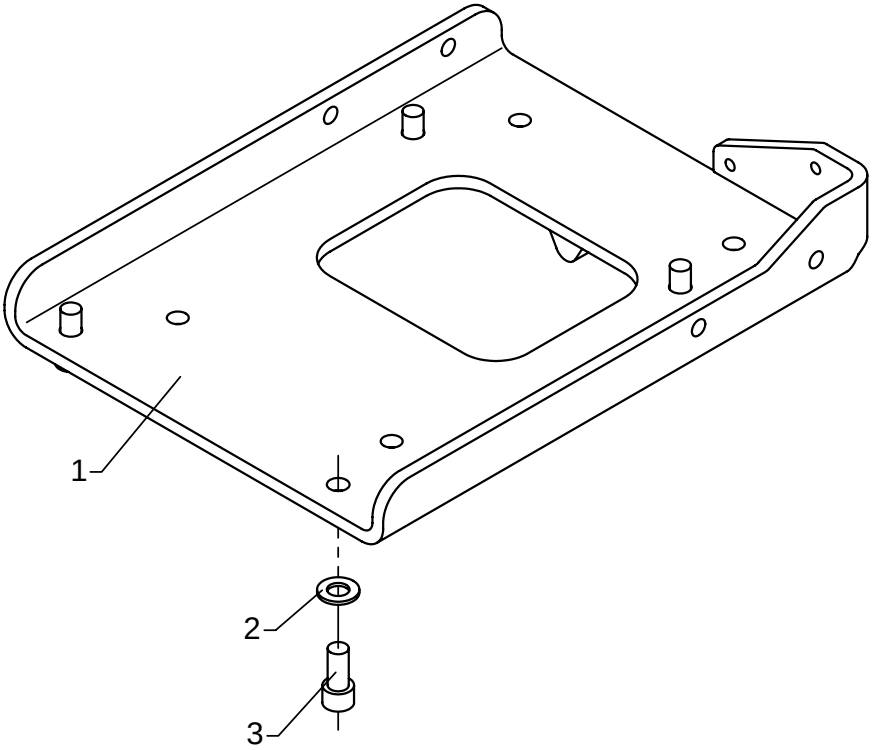

Stowing bracket

As from / To loader no.: 96 00 75 /
Created: 08.04.2005
Modified:

Item no.	Qty.	Part no.	Description	Remarks
1	1	6301205	Winch bracket	
2	4	31178	Washer	14 mm
3	4	30480	Screw	MC14 x 30

52-380

Intern ref.: 6301540

*

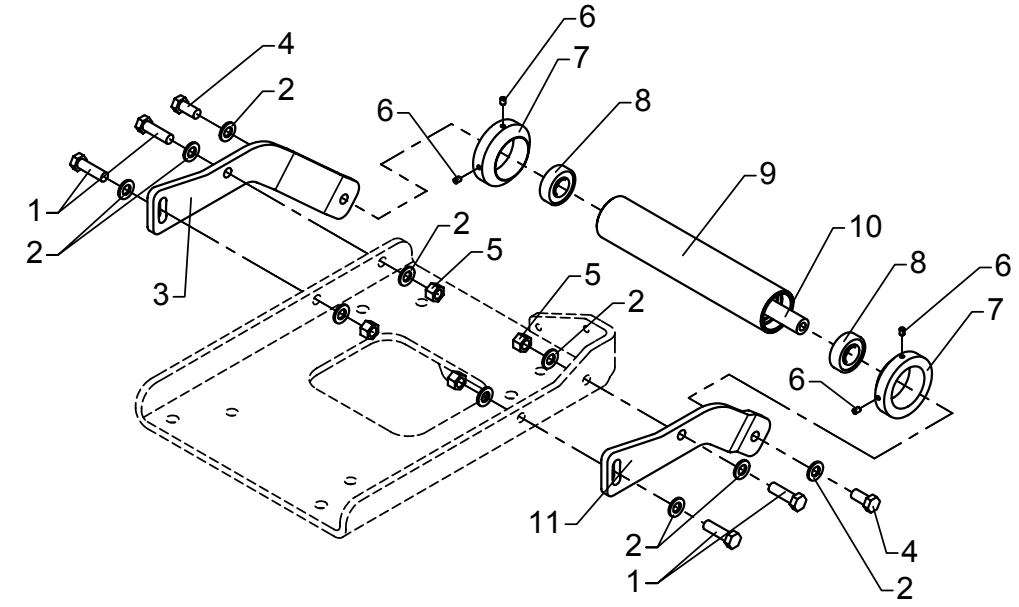

**

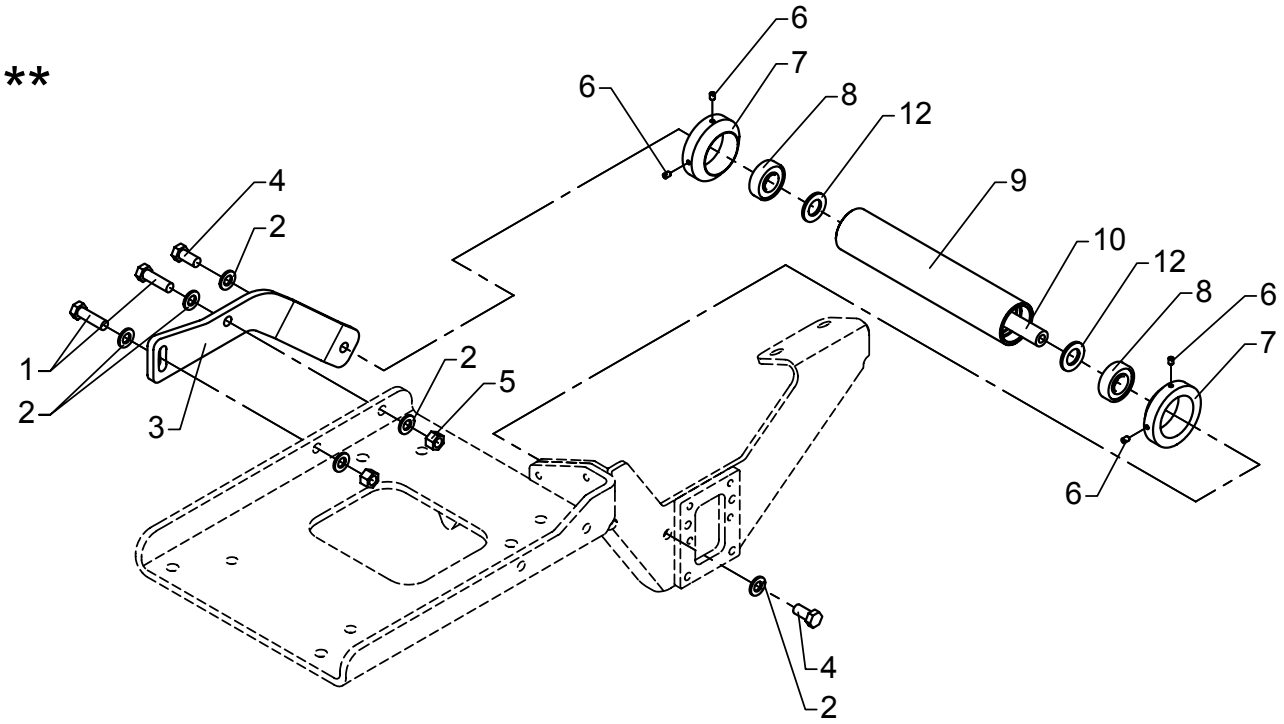

Guide Roller

As from / To loader no.: 96 00 00 / 96 01 94
Created: 10.08.2004
Modified: 02.11.2007

Item no.	Qty.	Part no.	Description	Remarks
1		31533	Set screw, stainless	M12 x 40
2		31131	Washer	12 mm
3	1	6300566	Side plate for guide roller, R	
4	2	31504	Set screw, stainless	M12 x 25
5		32216	Lock nut, stainless	M12
6	4	31577	Pointed screw, stainless	MSP6 x 8
7	2	6886764	Guide roller	
8	2	23178	Ball bearing	
9	1	6300571	Roller	
10	1	6300649	Pin	
11		6300567	Side plate for guide roller, L	
12		31179	Washer	20 mm

* Without hose reels
** With hose reels

52-380

Intern ref.: 6301070

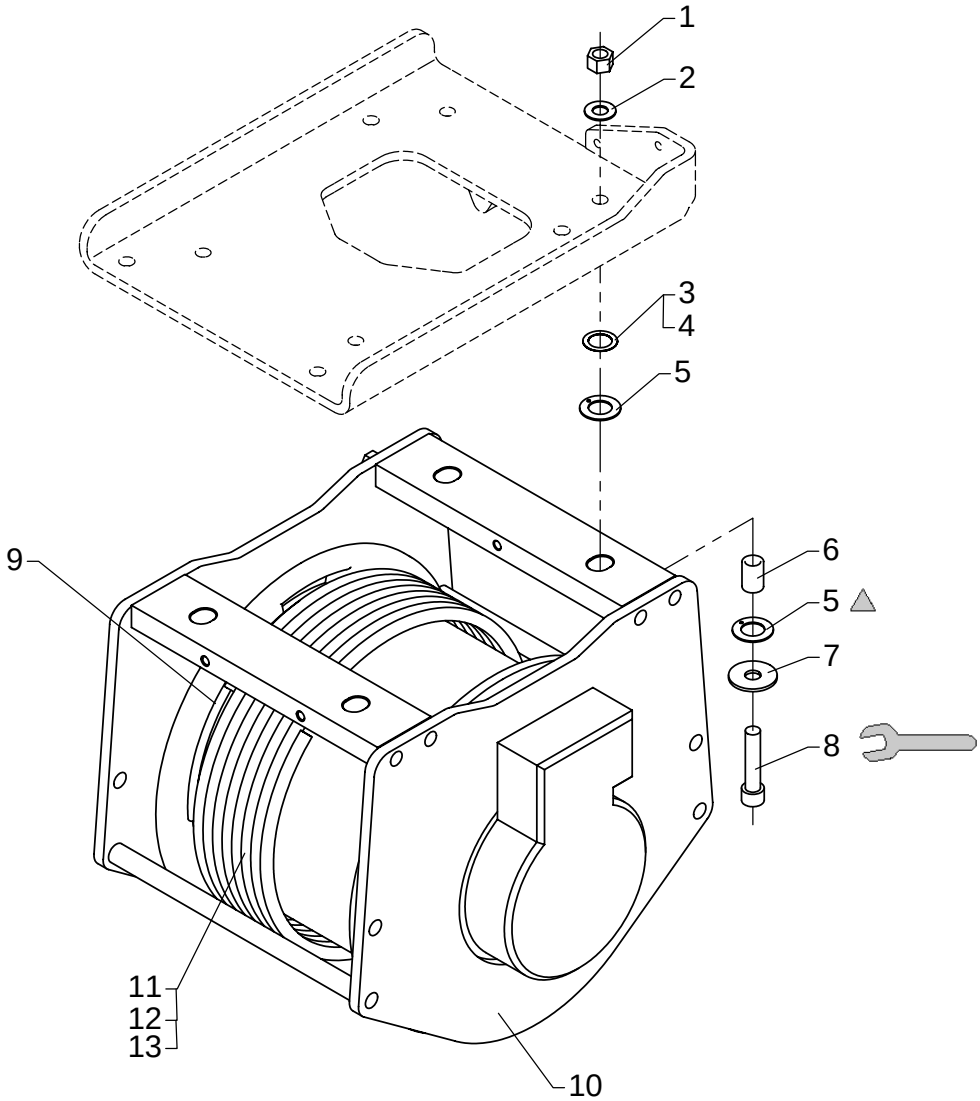

80 Nm

PBC 492

Winch, Brevini 2500

As from / To loader no.: 96 00 00 / 96 01 94
Created: 03.10.2003
Modified: 02.11.2007

Item no.	Qty.	Part no.	Description	Remarks
1	4	30891	Lock nut	M14
2	4	31195	Washer	14 mm
3	4	31770	Washer	ø22 x 32 x 0,5
4	4	31769	Washer	ø22 x 32 x 0,3
5	8	23900	Washer	WC 20 DU
6	4	6300894	Bushing	
7	4	31763	Washer	45 x 15 x 3
8	4	31903	Cylinder screw	MC14 x 65
9	1	6300524	Guide	
10	1	58245	Winch, left	
		58263	Seal kit	
11		63203	Wire rope	K2-K8 without FJ
12		63202	Wire rope	K2-K7 with FJ
13		63205	Wire rope	K8 with FJ

52-380

Intern ref.: 6301660

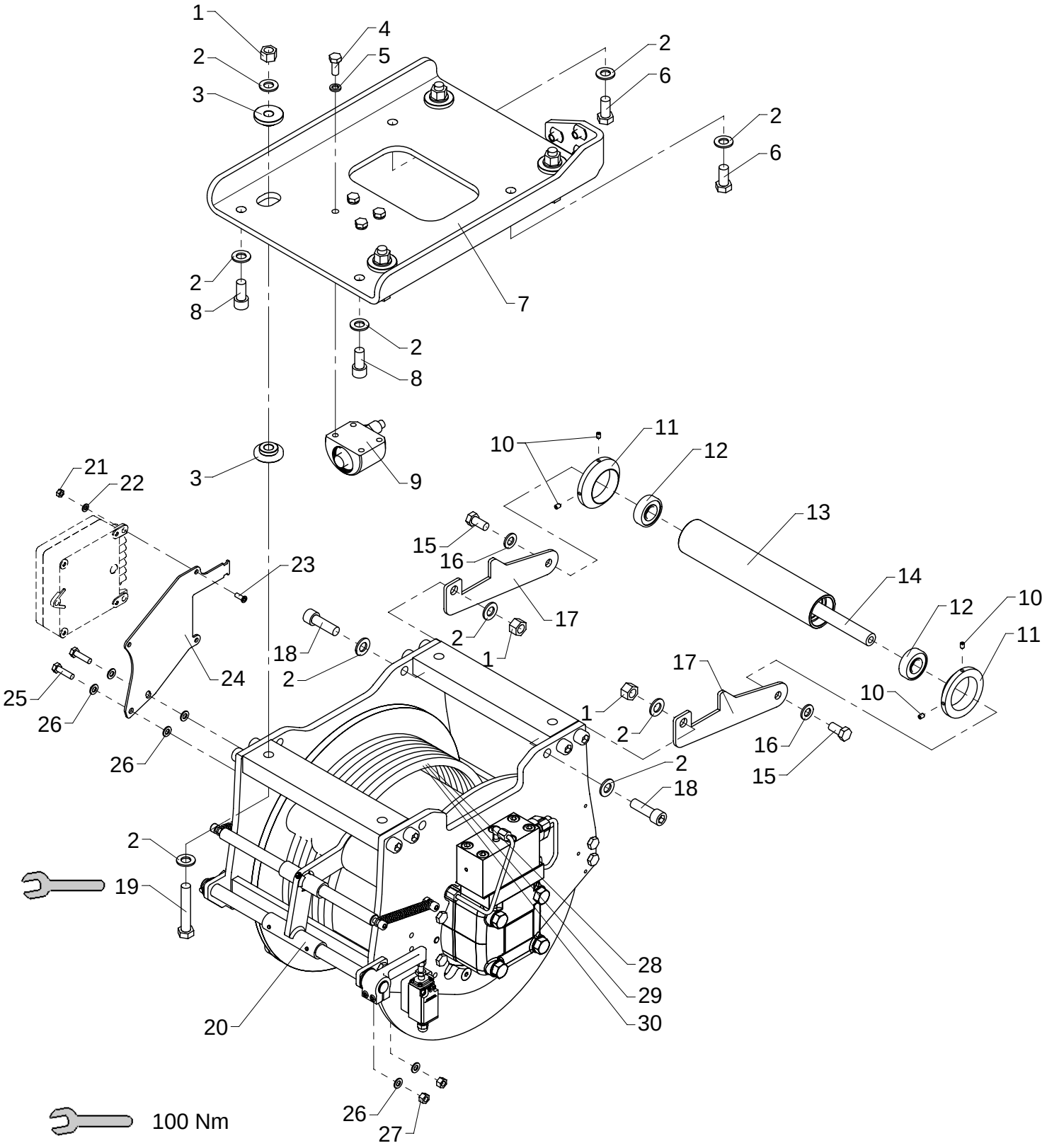

Winch, cpl.

As from / To loader no.: 96 01 95
Created: 02.11.2007
Modified: 13.02.2008

Item no.	Qty.	Part no.	Description	Remarks
1	6	30891	Lock nut	M14
2	16	31178	Washer	14 mm
3	8	6301337	Washer	
4	4	30155	Set screw	M10 x 25
5	4	30933	Nordlock washer	10 mm
6	2	30206	Set screw	M14 x 30
7	1	6301331	Winch bracket	
8	2	30480	Screw	MC14 x 30
9	1	6887210	Weighing cell, hydraul.	
10	4	31577	Pointed screw, stainless	MSP6 x 8
11	2	6886764	Guide roller	
12	2	23178	Ball bearing	
13	1	6300571	Roller	
14	1	6300649	Pin	
15	2	31504	Set screw, stainless	M12 x 25
16	2	31131	Washer	12 mm
17	2	6301335	Guide roller bracket	
18	2	32487	Screw	MC14 x 45
19	4	30214	Steel bolt	M14 x 80
20	1	58281	Winch	
21	3	30854	Nut, stainless	M6
22	3	32302	Face washer, stainless	6 mm
23	3	32490	Screw	MCL6 x 16
24	1	6301127	Plate for CIO	
25	2	30135	Set screw, stainless	M8 x 30
26	6	31147	Washer, stainless	8 mm
27	2	30886	Lock nut, stainless	M8
28	1	63203	Wire rope	ø12 x 61 mtr.
29	1	63202	Wire rope	ø12 x 71 mtr.
30	1	63205	Wire rope	ø12 x 78 mtr.

52-380

Intern ref.: 6301020

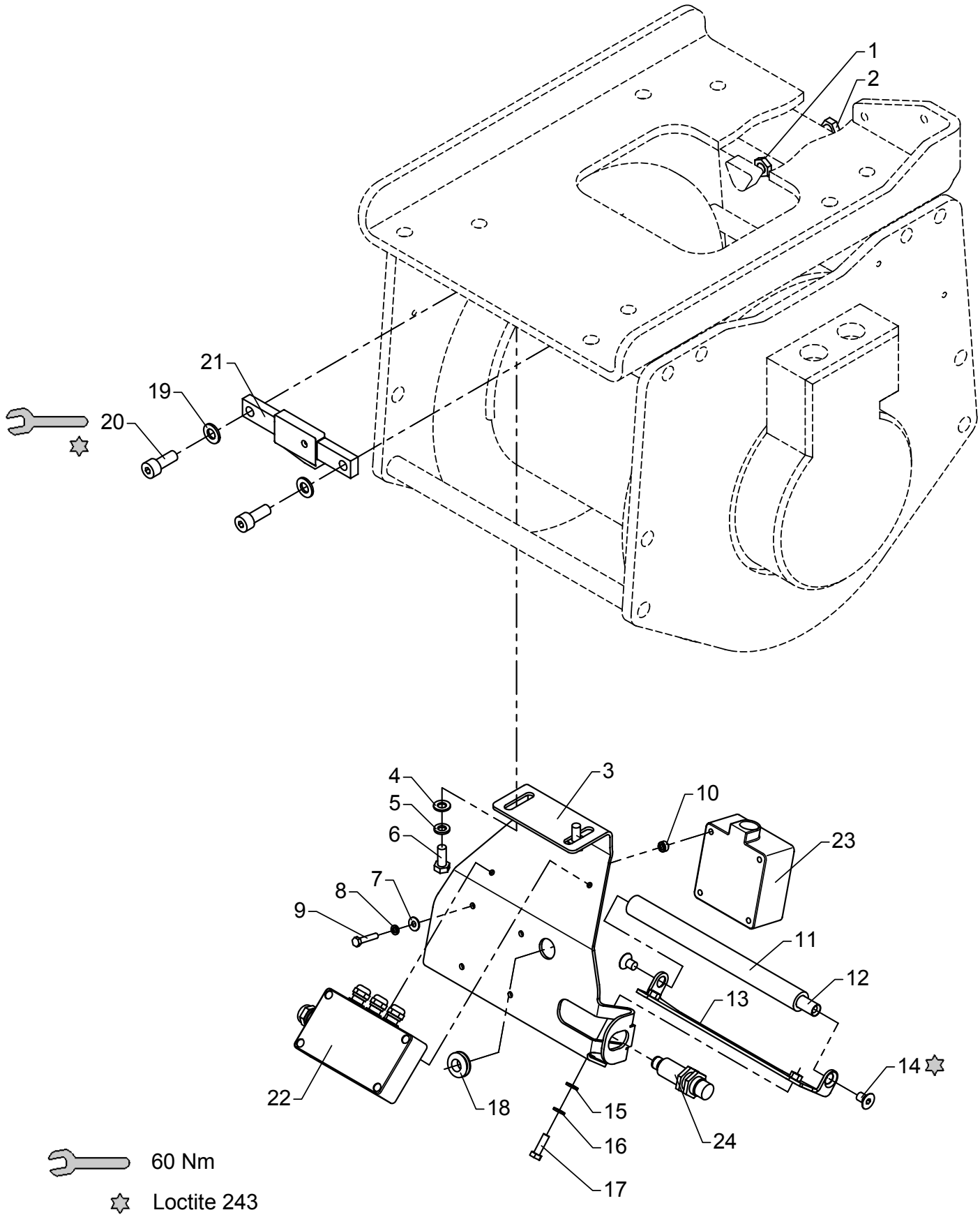

Safety system

As from / To loader no.: 96 00 00 / 96 00 74
Created: 03.10.2003
Modified: 08.04.2005

Item no.	Qty.	Part no.	Description	Remarks
1	1	32111	Counter nut	M10
2	1	30164	Steel bolt	M10 x 90
3	1	6300777	Protection plate	
4	2	31147	Washer, stainless	8 mm
5	2	31155	Spring washer	8 mm
6	2	30132	Set screw, stainless	M8 x 20
7	4	31189	Washer	5 mm
8	4	31153	Spring washer, stainless	5 mm
9	4	30102	Steel bolt, stainless	M5 x 25
10	4	42921	Bushing	
11	1	63519	Guard roller	
12	1	6300774	Pin for guide roller	
13	1	6300772	Bracket	
14	2	30597	Counter-sunk screw	MK8 x 12
15	2	32302	Face washer, stainless	6 mm
16	2	31154	Spring washer, stainless	6 mm
17	2	30113	Set screw, stainless	M6 x 20
18	1	27956	Cable lead-in	
19	2	31177	Washer	10 mm
20	2	30453	Screw	MC10 x 25
21	1	58251	Load cell	
22	1	28381	Weighing cell amplifier	
23	1	28320	Proximity switch	
24	1	28210	Proximity switch	
25	1	28371	Connecting box	
26	2	30734	Screw	M4 x 10

52-380

Intern ref.: 6301020

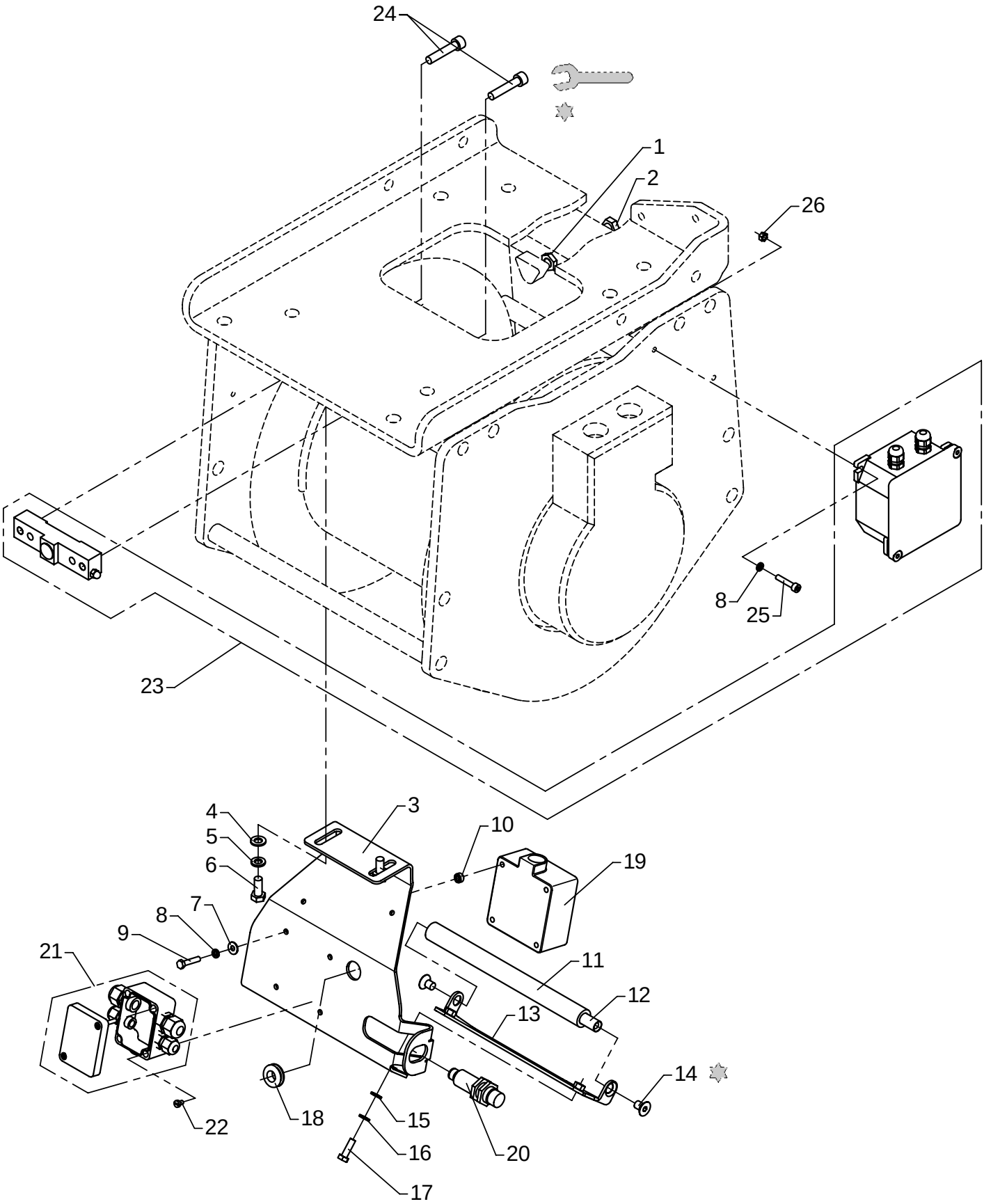

60 Nm

Loctite 243

Safety system

As from / To loader no.: 96 00 75 /
Created: 08.04.2005
Modified:

Item no.	Qty.	Part no.	Description	Remarks
1	1	32111	Counter nut	M10
2	1	30164	Steel bolt	M10 x 90
3	1	6300777	Protection plate	
4	2	31147	Washer, stainless	8 mm
5	2	31155	Spring washer	8 mm
6	2	30132	Set screw, stainless	M8 x 20
7	4	31189	Washer	5 mm
8	6	31153	Spring washer, stainless	5 mm
9	4	30102	Steel bolt, stainless	M5 x 25
10	4	42921	Bushing	
11	1	63519	Guard roller	
12	1	6300774	Pin for guide roller	
13	1	6300772	Bracket	
14	2	30597	Counter-sunk screw	MK8 x 12
15	2	32302	Face washer, stainless	6 mm
16	2	31154	Spring washer, stainless	6 mm
17	2	30113	Set screw, stainless	M6 x 20
18	1	27956	Cable lead-in	
19	1	28320	Proximity switch	
20	1	28210	Proximity switch	
21	1	28371	Connecting box	
22	2	30734	Screw	M4 x 10
23	1	58265	Load cell, 5000 kg capacity	
24	2	30445	Sockethead screw	MC8 x 40
25	2	30481	Screw	MC5 x 25
26	2	30853	Nut, stainless	M5

52-380

Intern ref.: 6887210

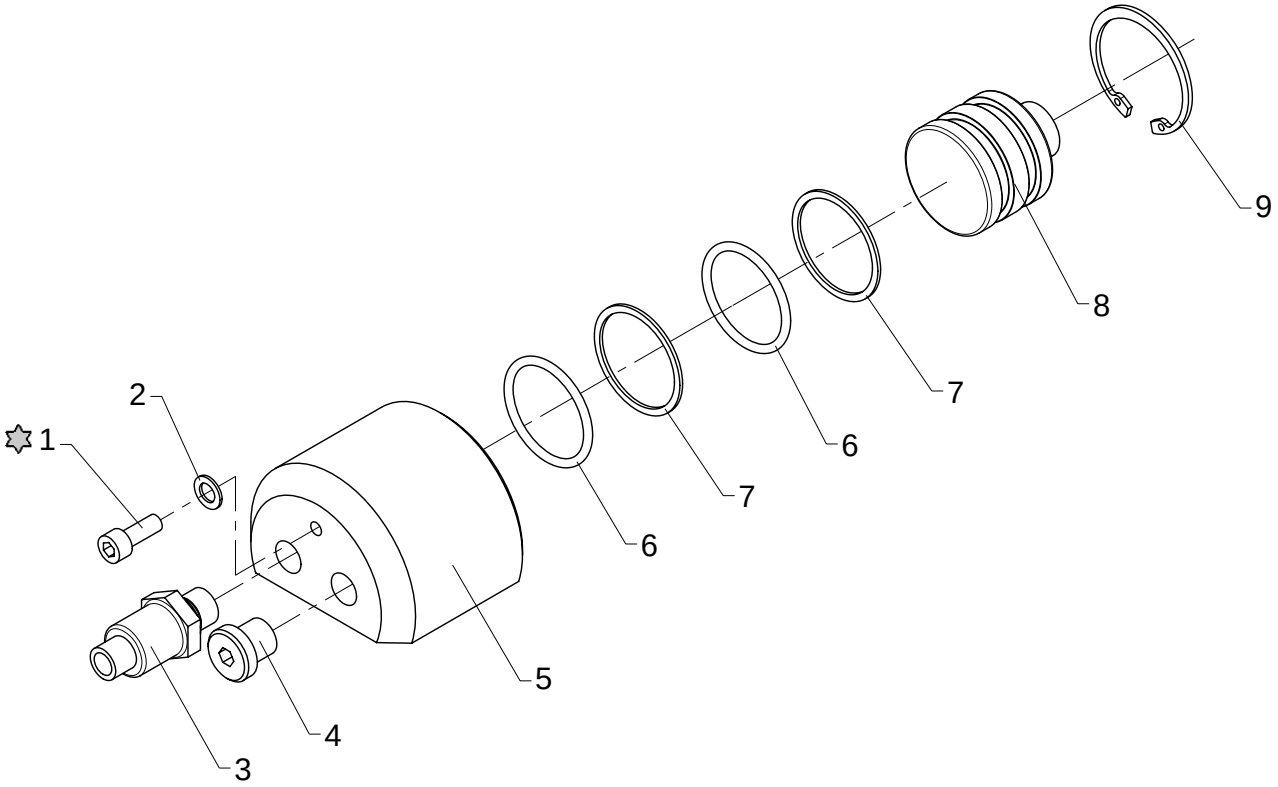

Loctite 542

Weighing cell

As from / To loader no.: 96 01 95
Created: 02.11.2007
Modified:

Item no.	Qty.	Part no.	Description	Remarks
1	1	30424	Screw	MC6 x 16
2	1	21109	Seal washer	ø7,1 x 12 x 1
3	1	28850	Pressure transducer	
4	1	25197	Plug	VS-R-1/4 WD
5	1	6300741	Housing	
6	2	20177	O-ring	OR 34,2 x 3
7	2	20705	Back ring	STR 35 x 40 x 1,3
8	1	6300742	Piston	
9	1	33178	Circlip	42 I

52-380

Intern ref.: 6886500

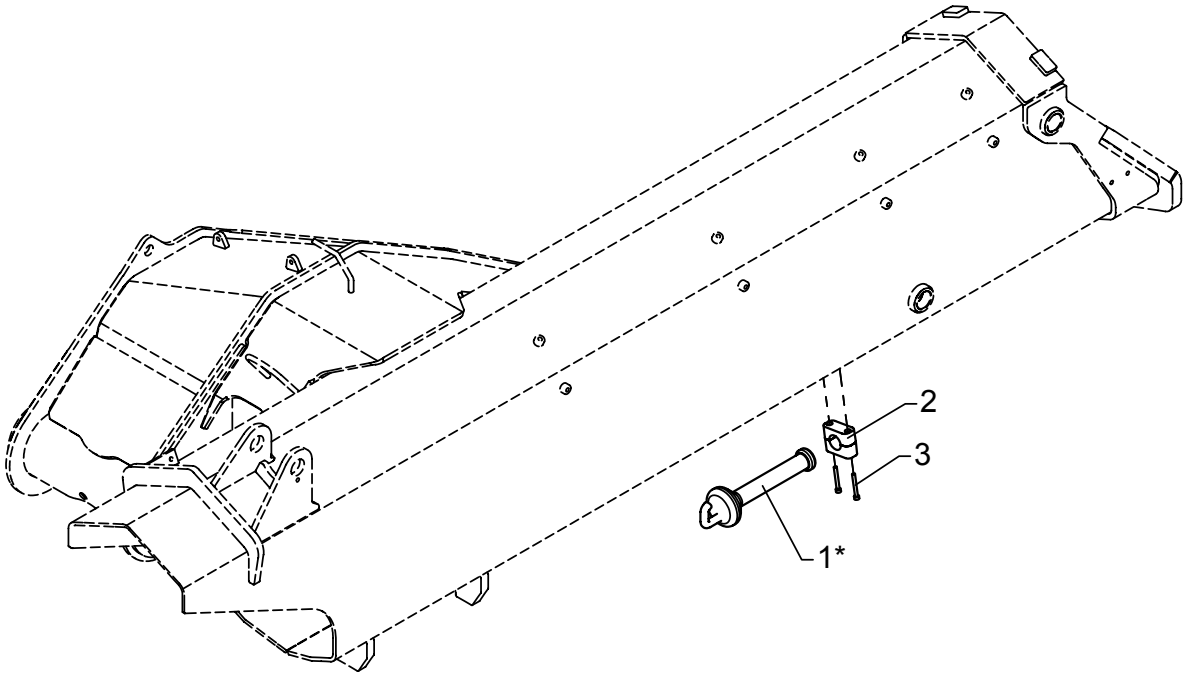

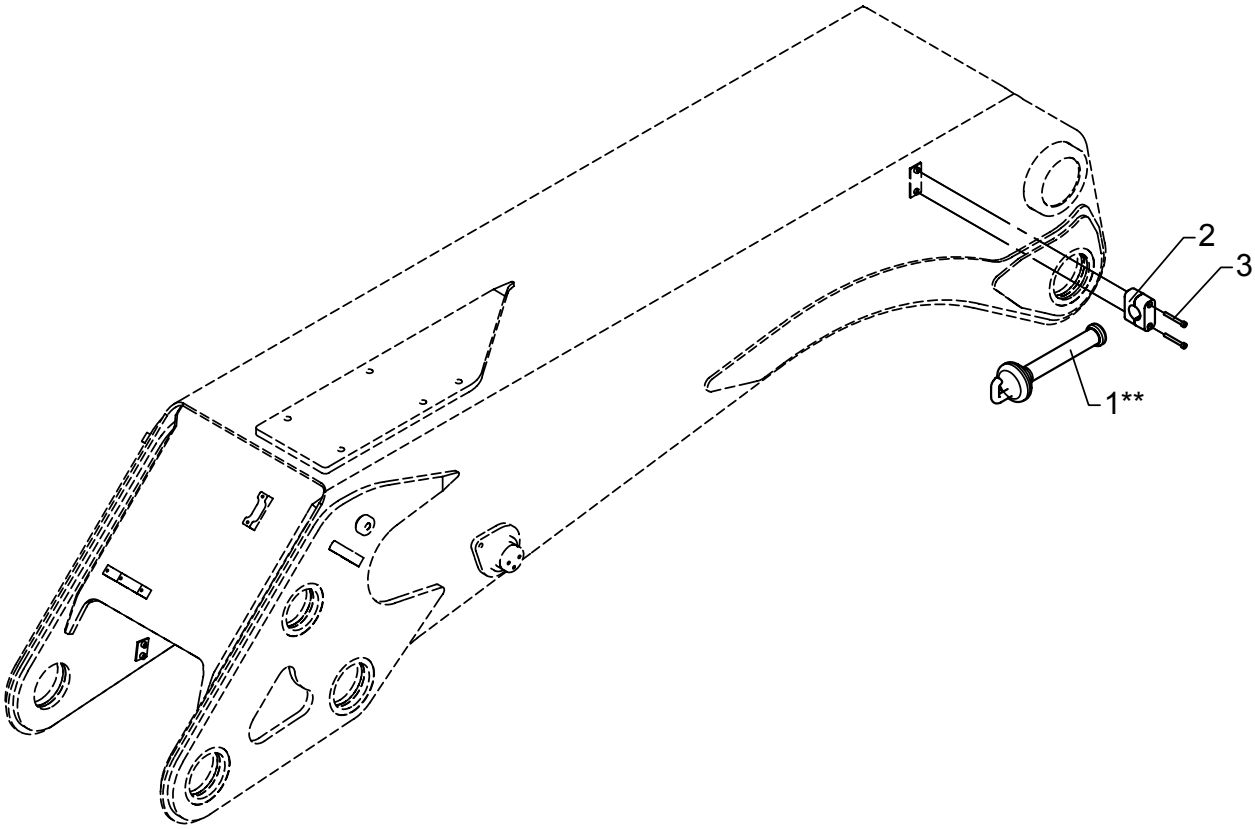

Cable stop

As from / To loader no.: 96 00 00 /
Created: 03.05.2004
Modified: 09.08.2004

Item no.	Qty.	Part no.	Description	Remarks
1	1	64404	Wire bracket with hook, cpl.	
2	1	31800	Clamp	32 mm
3	2	30457	Screw	MC6 x 50

* Without FJ
** With FJ

52-380

Intern ref.: 6300830

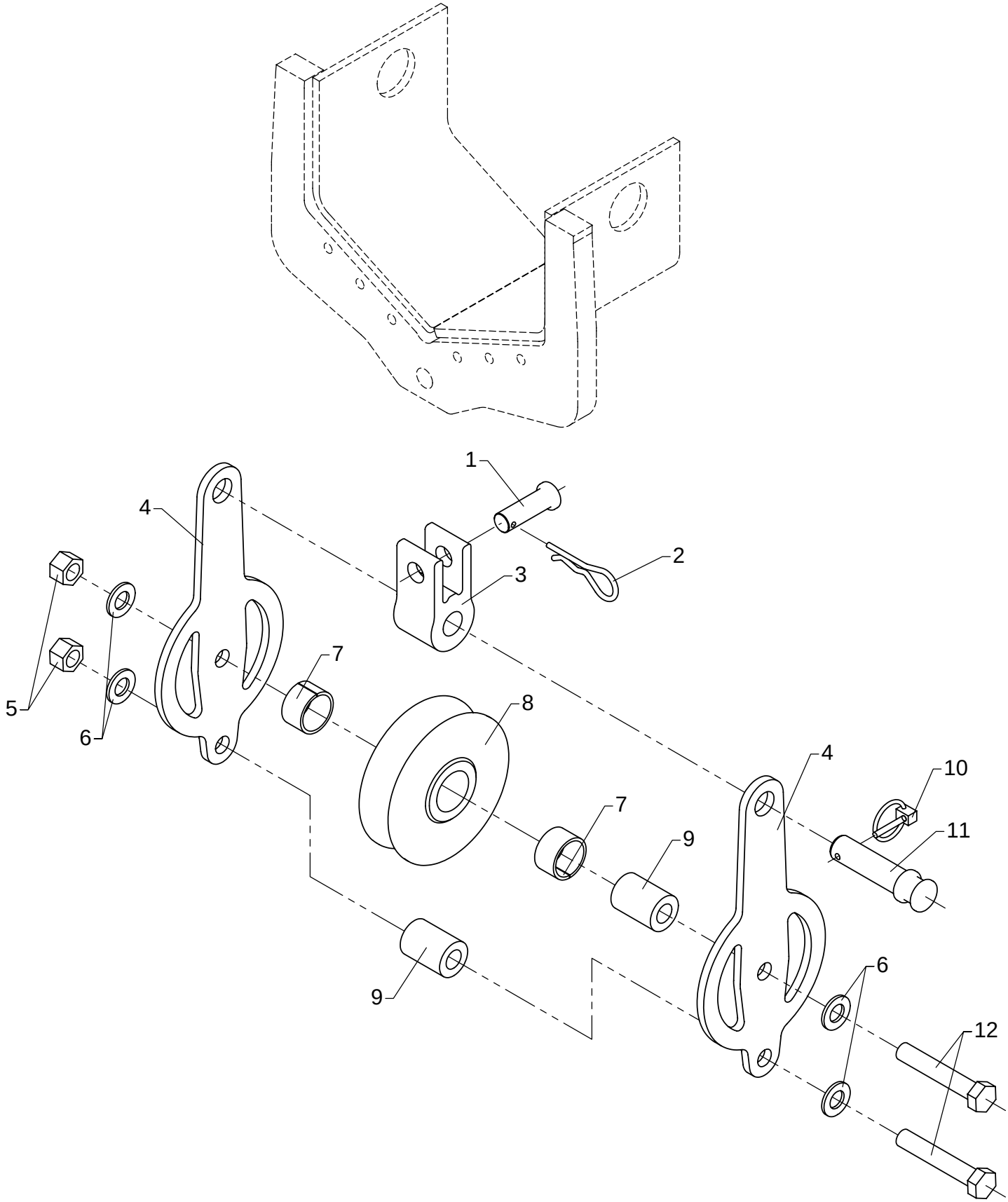

Wire roller guide, on extension K3 for K5, K6 versions

As from / To loader no.: 96 00 00 /
Created: 03.10.2003
Modified:

Item no.	Qty.	Part no.	Description	Remarks
1	1	6300858	Pin	
2	1	33399	Lock spring	
3	1	6300828	Suspension for roller guide	
4	2	6300829	Side plate for roller guide	
5	2	30891	Lock nut	M14
6	4	31178	Washer	14 mm
7	2	23302	Bushing	MB 3020 DU
8	1	63513	Wire roller guide	
9	2	6885504	Distance pipe	
10	1	33385	Ring split	ø4,5 x 27
11	1	6300859	Pin	
12	2	30214	Steel bolt	M14 x 80

52-380

Intern ref.: 6300840

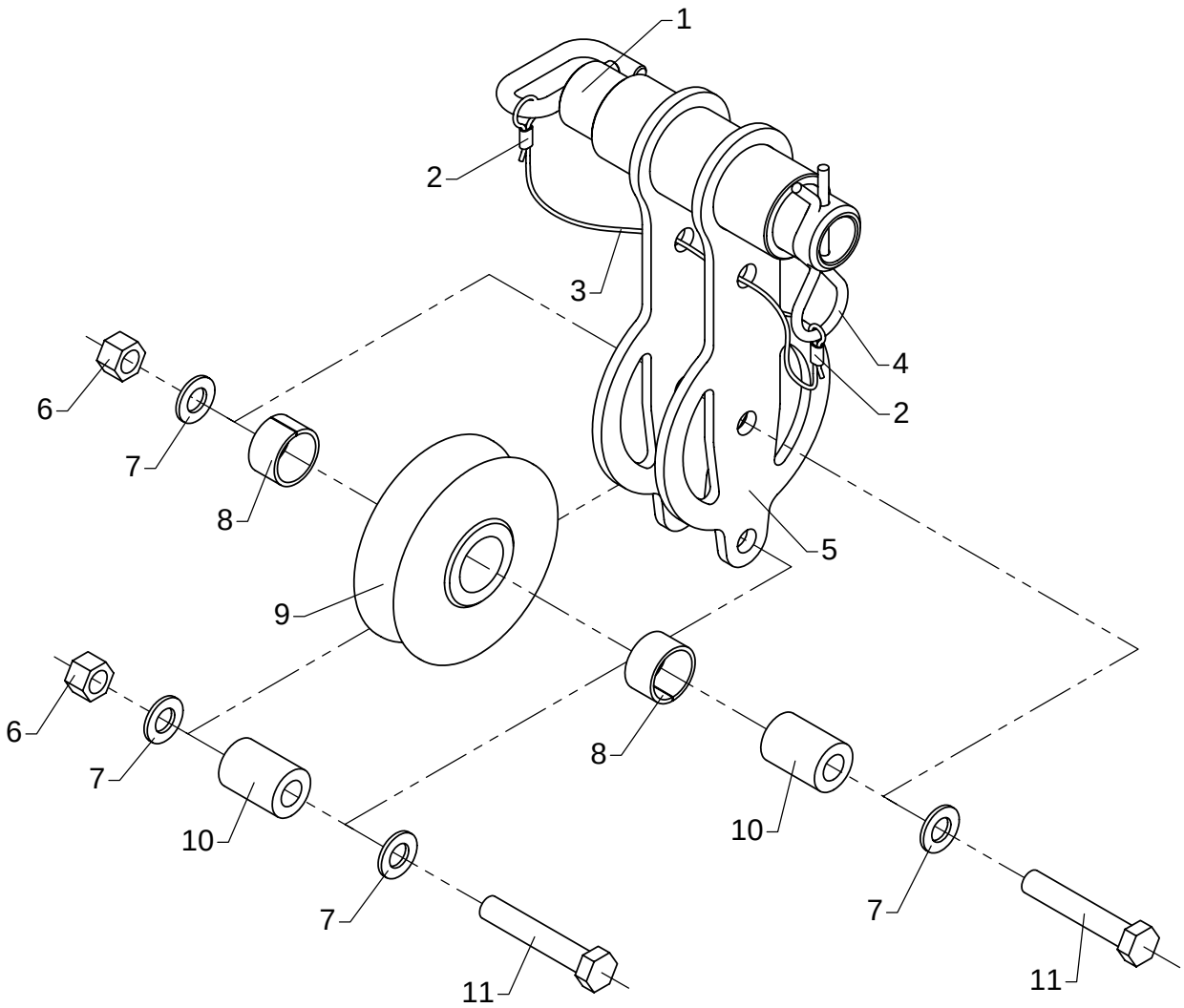

Wire roller guide, on extension K4 for K7, K8 versions

As from / To loader no.: 96 00 00 /
Created: 03.10.2003
Modified:

Item no.	Qty.	Part no.	Description	Remarks
1	1	6300555	Lock pin	
2	2	62161	Wire lock	
3	1	62160	Wire rope, nylon	0,3 m
4	1	33383	Lock spring	
5	1	6300848	Suspension for roller guide	
6	2	30891	Lock nut	M14
7	4	31178	Washer	14 mm
8	2	23302	Bushing	MB 3020 DU
9	1	63513	Wire roller guide	
10	2	6885504	Distance pipe	
11	2	30214	Steel bolt	M14 x 80

52-380

Intern ref.: 6301008

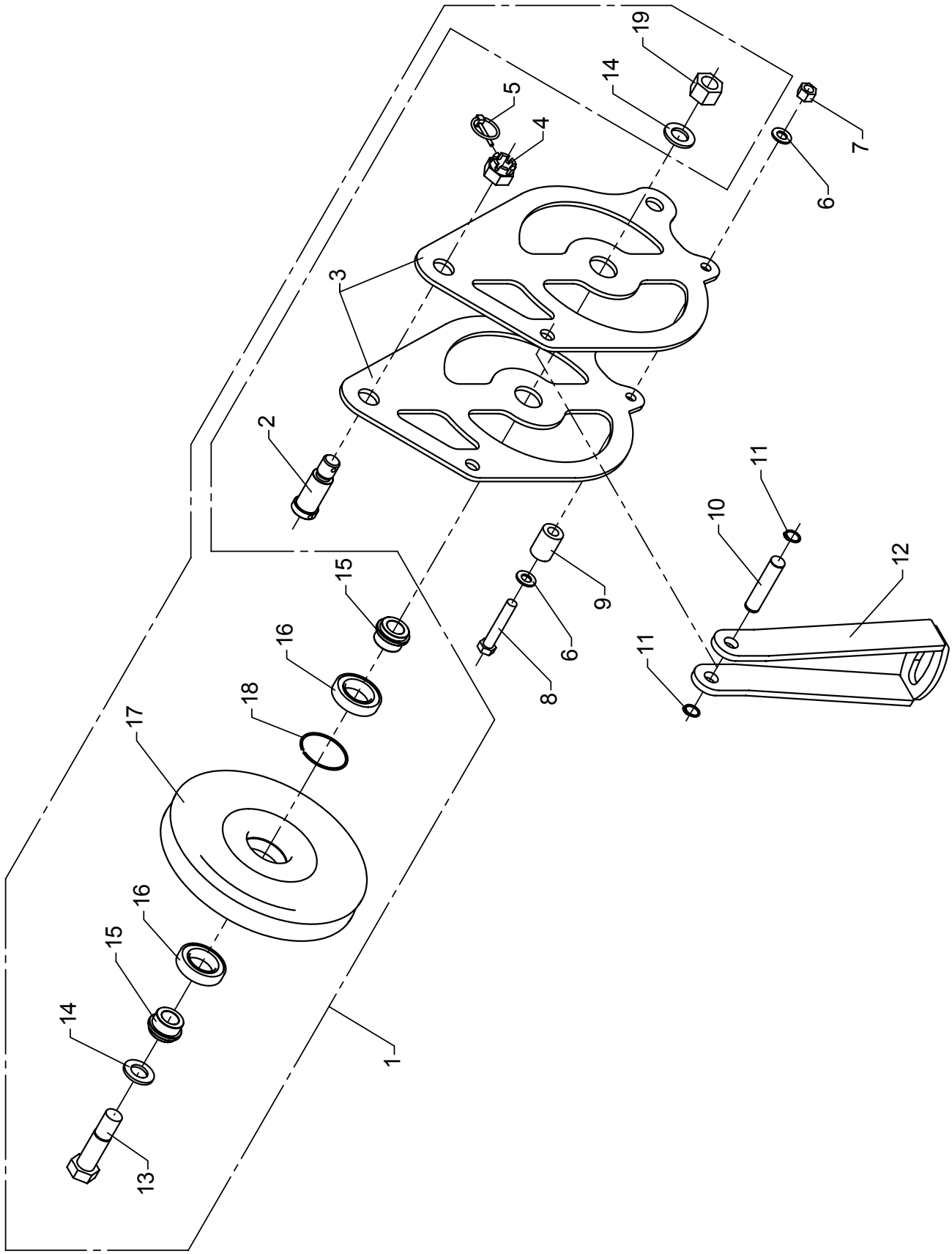

Wire sheave

As from / To loader no.: 96 00 00 / 96 00 71
Created: 03.10.2003
Modified: 16.02.2007

Item no.	Qty.	Part no.	Description	Remarks
1	1	6873490	Wire sheave incl. bearing	
2	1	6256324	Pin	
3	2	6300559	Side plate	
4	1	30837	Nut	M24
5	1	31967	Ring split	ø4,5 x 40
6	2	31178	Washer	14 mm
7	1	30891	Lock nut	M14
8	1	30214	Steel bolt	M14 x 80
9	1	6885504	Distance pipe	
10	1	6300543	Pin	
11	2	33108	Circlip	20U
12	1	6300548	Stop	
13		32476	Steel bolt	M24 x 95
14		31133	Washer	24 mm
15		6887334	Distance ring	
16		23150	Ball bearing	6008-2RS1
17		64136	Wire sheave	6873433
18		23904	Spring ring	BR 68
19		30897	Lock nut	M24

52-380

Intern ref.: 6301037

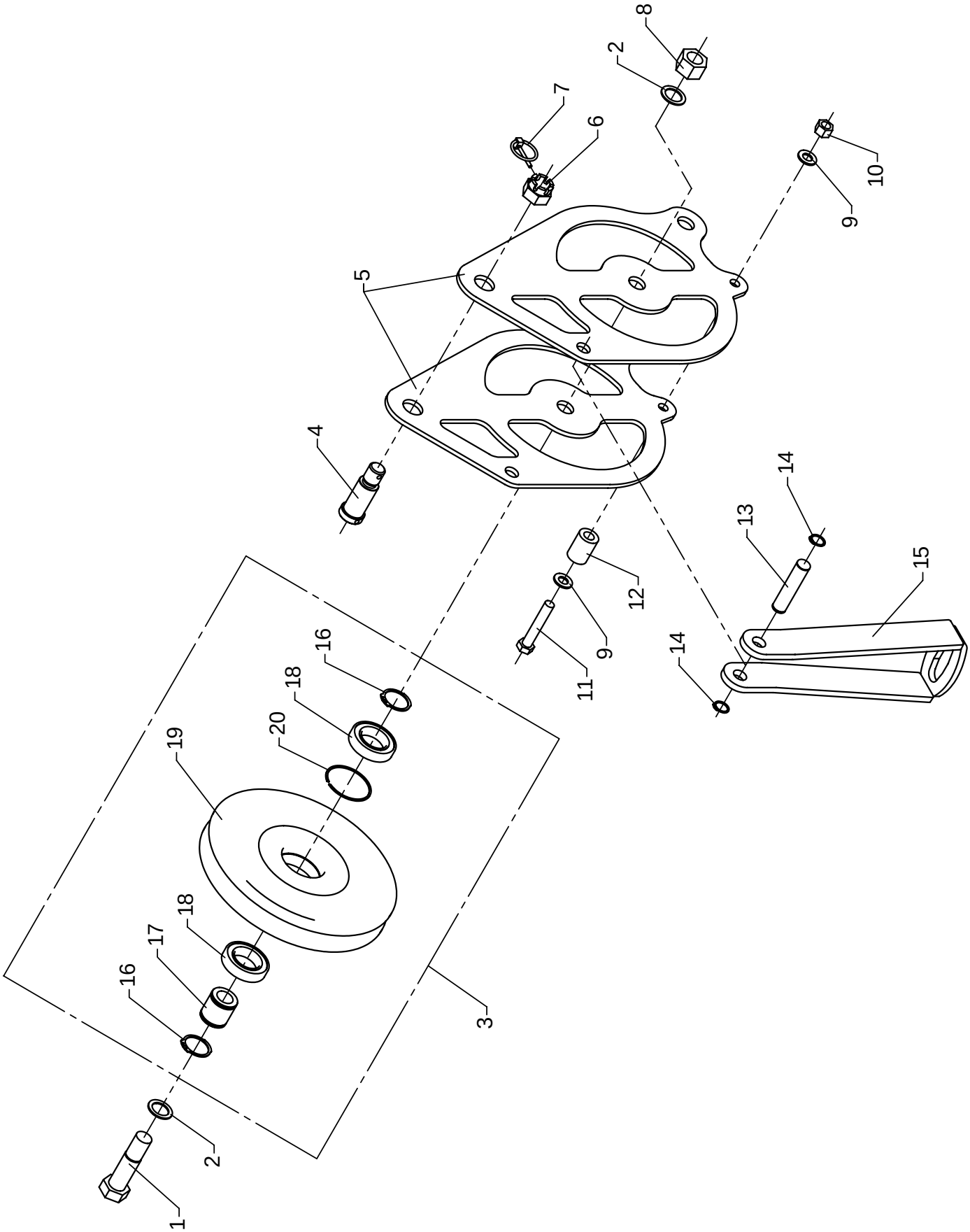

Wire sheave

As from / To loader no.: 96 00 72 /
Created: 20.10.2004
Modified: 08.11.2004

Item no.	Qty.	Part no.	Description	Remarks
1	1	32476	Steel bolt	M24 x 95
2	2	33254	Back ring	SS 26 x 37 x 2
3	1	6887290	Wire sheave incl. bearing	
4	1	6256324	Pin	
5	2	6301038	Side plate	
6	1	30837	Nut	M24
7	1	31967	Ring split	ø4,5 x 40
8	1	30897	Lock nut	M24
9	2	31178	Washer	14 mm
10	1	30891	Lock nut	M14
11	1	30214	Steel bolt	M14 x 80
12	1	6885504	Distance pipe	
13	1	6300543	Pin	
14	2	33108	Circlip	20U
15	1	6300548	Stop	
16		33121	Circlip	40U
17		6887304	Hub	
18		23150	Ball bearing	6008-2RS1
19		64136	Wire sheave	6873433
20		23904	Spring ring	BR 68

52-380

Intern ref.:

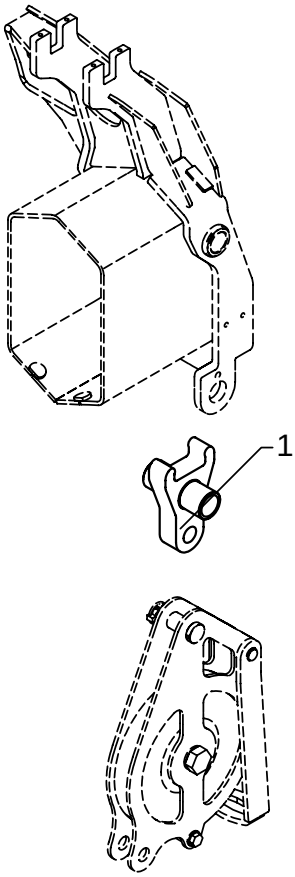

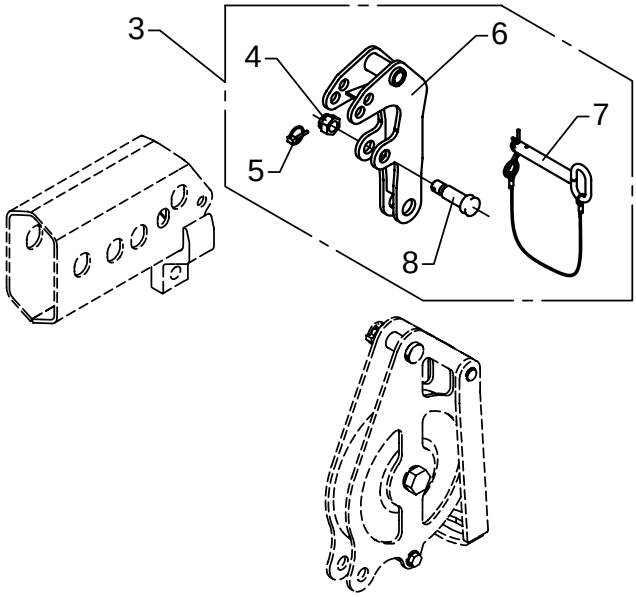

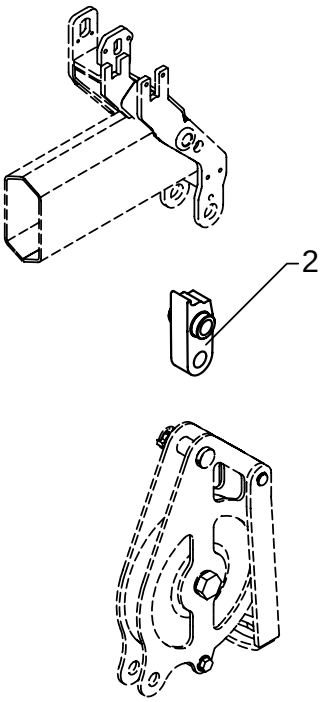

Wire pulley

As from / To loader no.: 96 00 00 /
Created: 03.10.2003
Modified:

Item no.	Qty.	Part no.	Description	Remarks
1	1	6302615	Wire pulley	ODIN/THOR
2	1	6304414	Wire pulley	FJ1200/FJ2000
3	1	6301280	Wire pulley	Manual extension
4		30878	Nut	M20
5		33385	Ring split	ø4,5 x 27
6		6301061	Wire pulley	
7		6301166	Lock pin with split pin	
8		6301014	Pin	

52-380

Intern ref.: 6873580

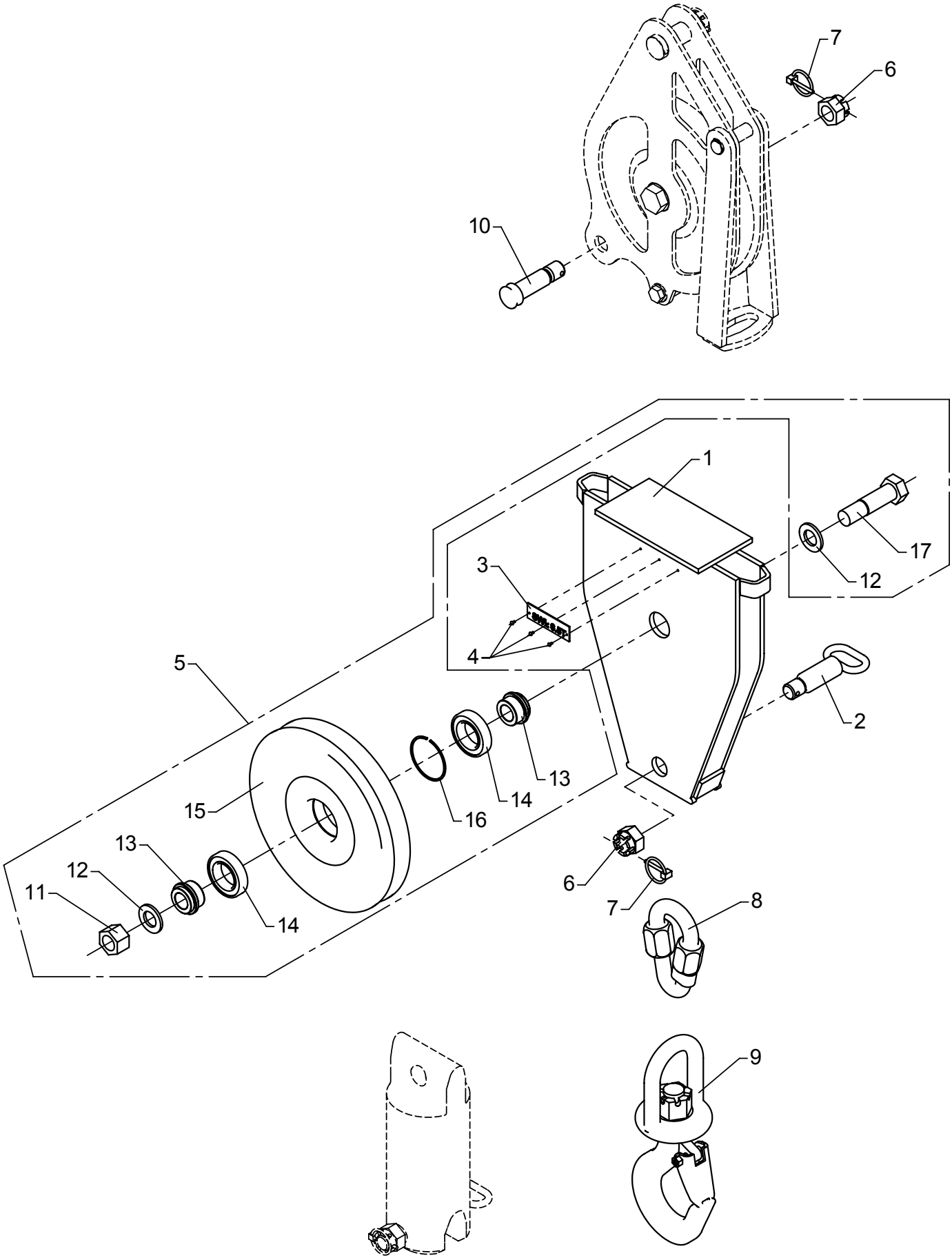

Snatch block

As from / To loader no.: 96 00 00 / 96 00 71
Created: 03.10.2003
Modified: 16.02.2007

Item no.	Qty.	Part no.	Description	Remarks
1	1	6873563	Snatch block	
2	1	6301004	Lock pin	
3	1	65699	Brass label	
4	3	31340	Rivet	
5	1	6873490	Wire sheave incl. bearing	
6	2	30837	Nut	M24
7	2	31967	Ring split	ø4,5 x 40
8	1	62111	Handy link	
9	1	62102	Hook	
10	1	6300558	Pin	
11		30897	Lock nut	M24
12		31133	Washer	24 mm
13		6887334	Distance ring	
14		23150	Ball bearing	6008-2RS1
15		64136	Wire sheave	6873433
16		23904	Spring ring	BR 68
17		32476	Steel bolt	M24 x 95

52-380

Intern ref.: 6887280

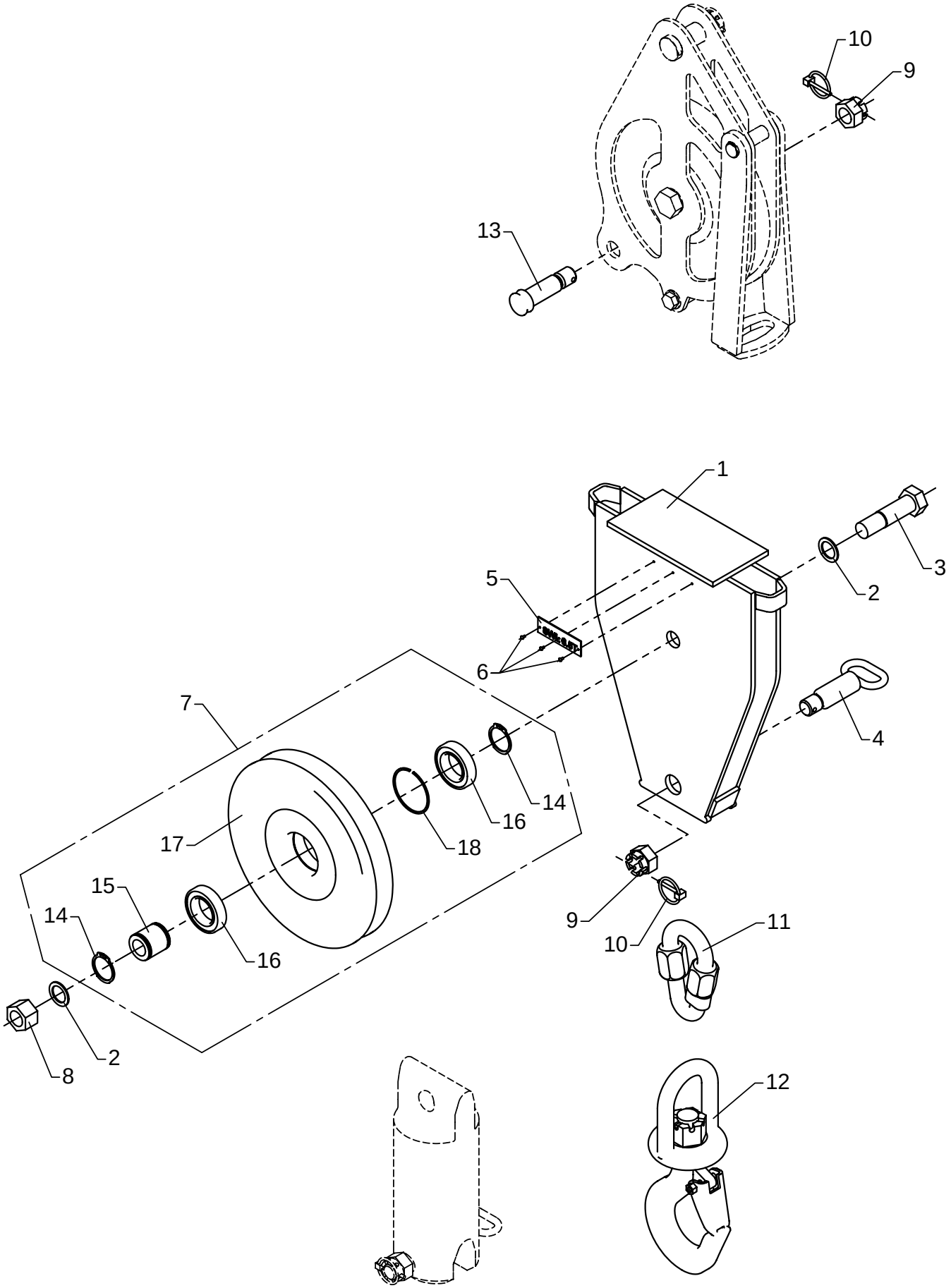

Snatch block

As from / To loader no.: 96 00 72 /
Created: 20.10.2004
Modified: 03.11.2004

Item no.	Qty.	Part no.	Description	Remarks
1	1	6887313	Snatch block	
2	2	33254	Back ring	SS 26 x 37 x 2
3	1	32476	Steel bolt	M24 x 95
4	1	6301004	Lock pin	
5	1	65699	Brass label	
6	3	31340	Rivet	
7	1	6887290	Wire sheave incl. bearing	
8	1	30897	Lock nut	M24
9	2	30837	Nut	M24
10	2	31967	Ring split	ø4,5 x 40
11	1	62111	Handy link	
12	1	62102	Hook	
13	1	6300558	Pin	
14		33121	Circlip	40U
15		6887304	Hub	
16		23150	Ball bearing	6008-2RS1
17		64136	Wire sheave	6873433
18		23904	Spring ring	BR 68

52-380

Intern ref.: 6256440+6301060

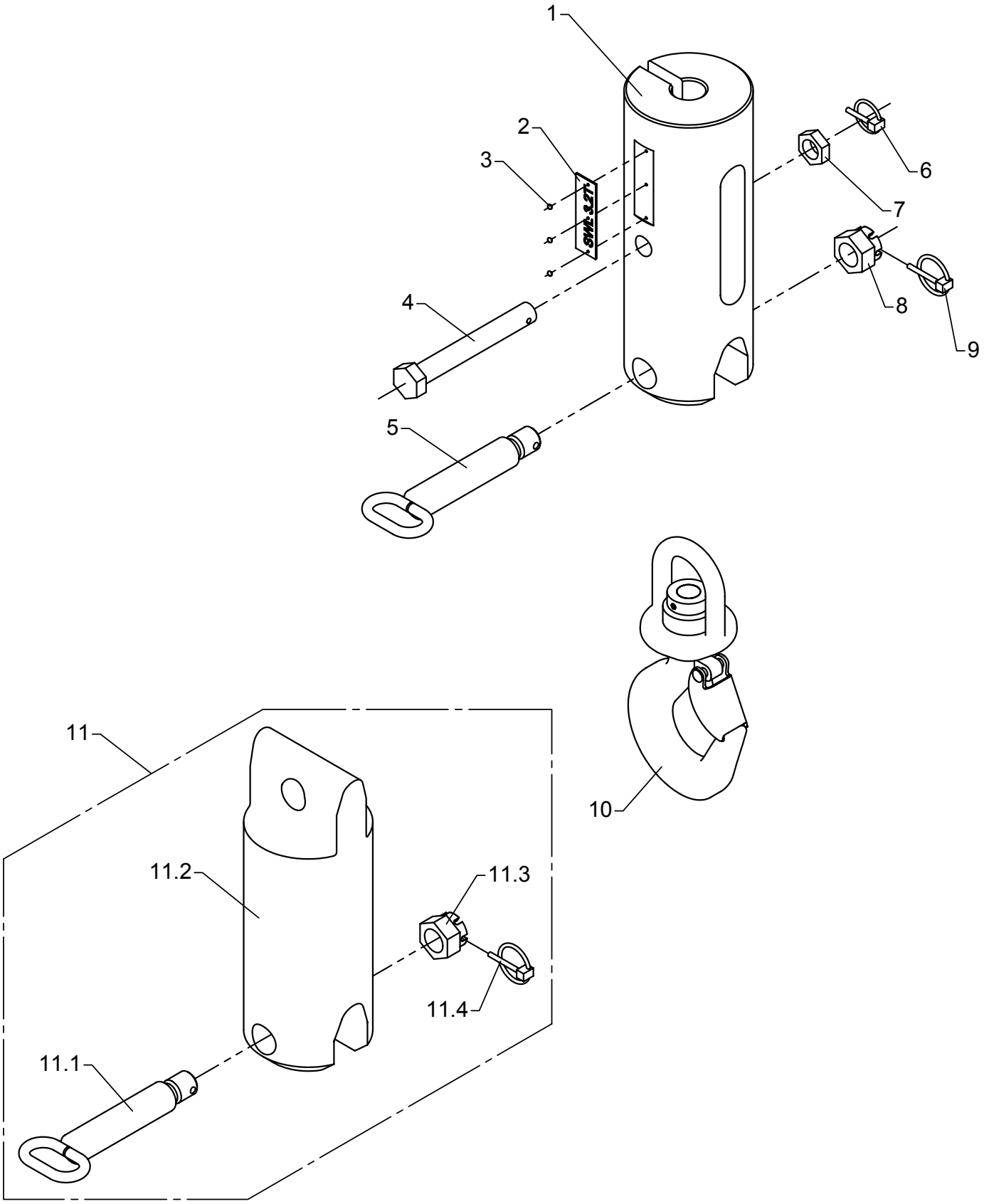

Swivel hook, 3,2 tonnes

As from / To loader no.: 96 00 00 /
Created: 03.10.2003
Modified: 03.05.2004

Item no.	Qty.	Part no.	Description	Remarks
1	1	6256452	Swivel hook	
2	1	64807	Brass label	
3	3	31340	Rivet	
4	1	6256464	Pin	
5	1	6301005	Lock pin	
6	1	33385	Ring split	ø4,5 x 27
7	1	30810	Counter nut	M20
8	1	30837	Nut	M24
9	1	31967	Ring split	ø4,5 x 40
10	1	62169	Hook with ball bearing	
11	1	6301060	Counter weight	
11.1		6301005	Lock pin	
11.2		6300839	Counter weight	
11.3		30837	Nut	M24
11.4		31967	Ring split	ø4,5 x 40

52-380

Intern ref.: 6301000

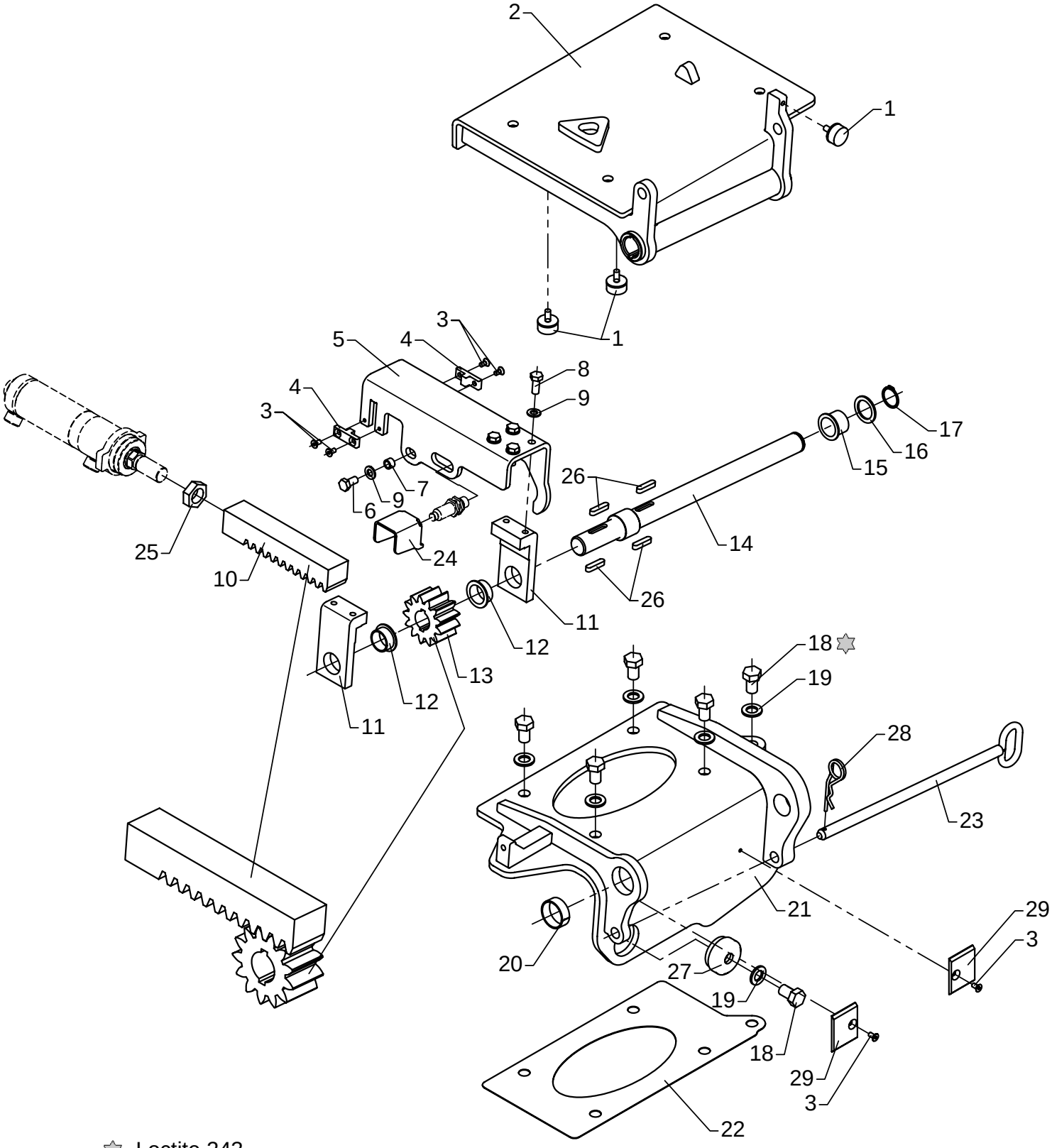

Loctite 243

Swing-up stowing bracket

As from / To loader no.: 96 00 00 / 96 00 74
Created: 03.10.2003
Modified: 08.04.2005

Item no.	Qty.	Part no.	Description	Remarks
1	3	61910	Rubber buffer	
2	1	6300811	Stowing bracket	
3	6	30542	Counter-sunk screw	MK6 x 12
4	2	6300789	Lock plate	
5	1	6300798	Cylinder bracket	
6	1	31517	Set screw, stainless	M10 x 20
7	1	6300799	Spacer	
8	4	30155	Set screw	M10 x 25
9	5	31177	Washer	10 mm
10	1	6300794	Rack	
11	2	6300797	Rack guide	
12	2	23931	Bushing	BB 3016 DU-B
13	1	6300795	Pinion	
14	1	6300796	Pin	
15	1	23938	Bushing	BB 3026 DU-B
16	1	33220	Back ring	SS 30 x 42 x 2,5
17	1	33115	Circlip	24U
18	6	30266	Set screw	M16 x 25
19	6	31135	Washer	16 mm
20	1	23937	Bushing	MB 4015 DU-B
21	1	6300801	Mounting bracket	ODIN
22	1	6300809	Adjusting plate	ODIN
23	1	6300821	Pin	
24	1	6300819	Protective guard	
25	1	31053	Counter nut	M24 x 1,5
26	4	31054	Spring	
27	1	6300823	Washer	
28	1	33382	Lock spring	
29	2	63724	Slide block	1210624

52-380

Intern ref.: 6301000

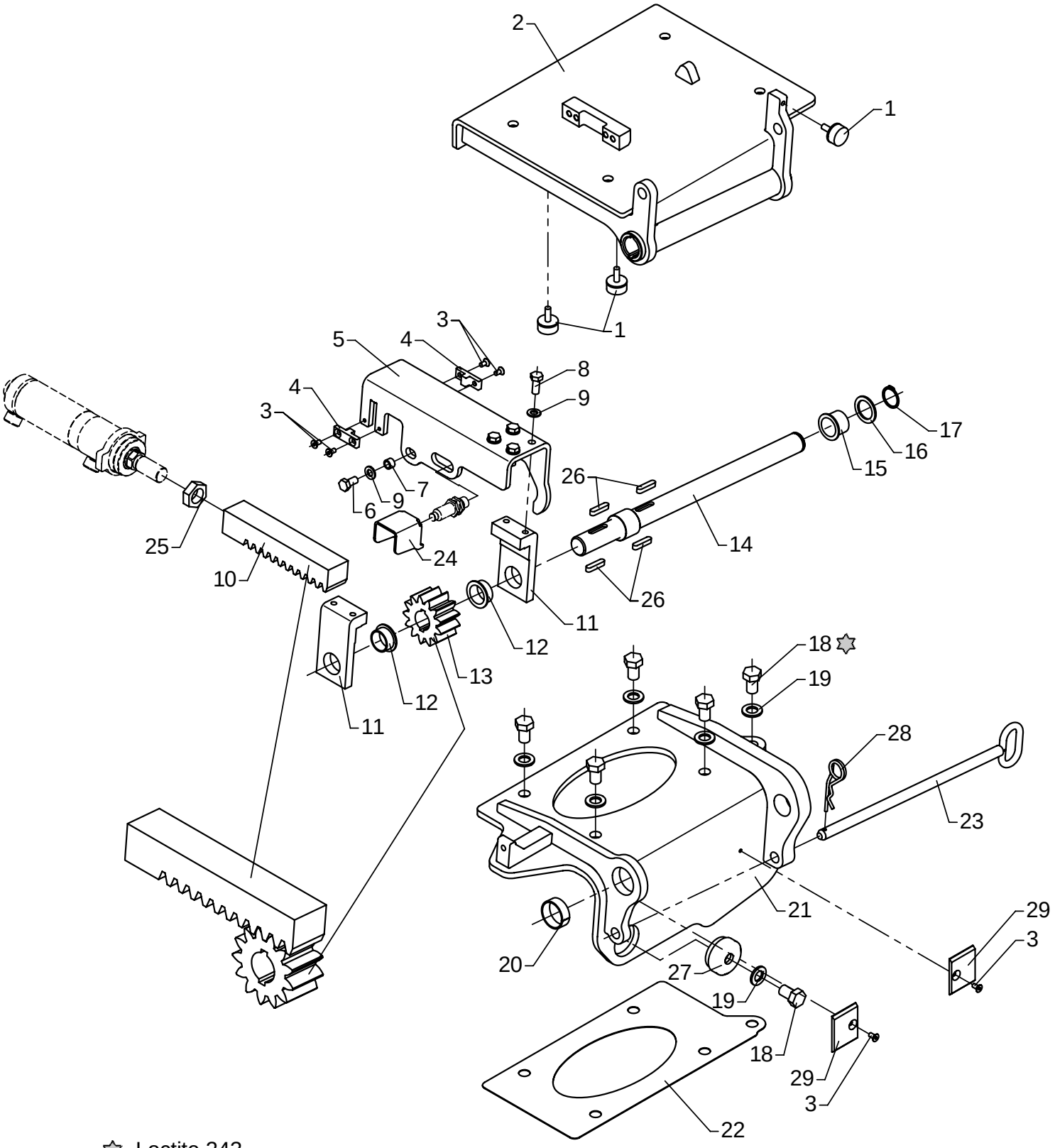

Loctite 243

Swing-up stowing bracket

As from / To loader no.: 96 00 75 /
Created: 08.04.2005
Modified:

Item no.	Qty.	Part no.	Description	Remarks
1	3	61910	Rubber buffer	
2	1	6301206	Stowing bracket	
3	6	30542	Counter-sunk screw	MK6 x 12
4	2	6300789	Lock plate	
5	1	6300798	Cylinder bracket	
6	1	31517	Set screw, stainless	M10 x 20
7	1	6300799	Spacer	
8	4	30155	Set screw	M10 x 25
9	5	31177	Washer	10 mm
10	1	6300794	Rack	
11	2	6300797	Rack guide	
12	2	23931	Bushing	BB 3016 DU-B
13	1	6300795	Pinion	
14	1	6300796	Pin	
15	1	23938	Bushing	BB 3026 DU-B
16	1	33220	Back ring	SS 30 x 42 x 2,5
17	1	33115	Circlip	24U
18	6	30266	Set screw	M16 x 25
19	6	31135	Washer	16 mm
20	1	23937	Bushing	MB 4015 DU-B
21	1	6300801	Mounting bracket	ODIN
22	1	6300809	Adjusting plate	ODIN
23	1	6300821	Pin	
24	1	6300819	Protective guard	
25	1	31053	Counter nut	M24 x 1,5
26	4	31054	Spring	
27	1	6300823	Washer	
28	1	33382	Lock spring	
29	2	63724	Slide block	1210624

52-380

Intern ref.: 6301670

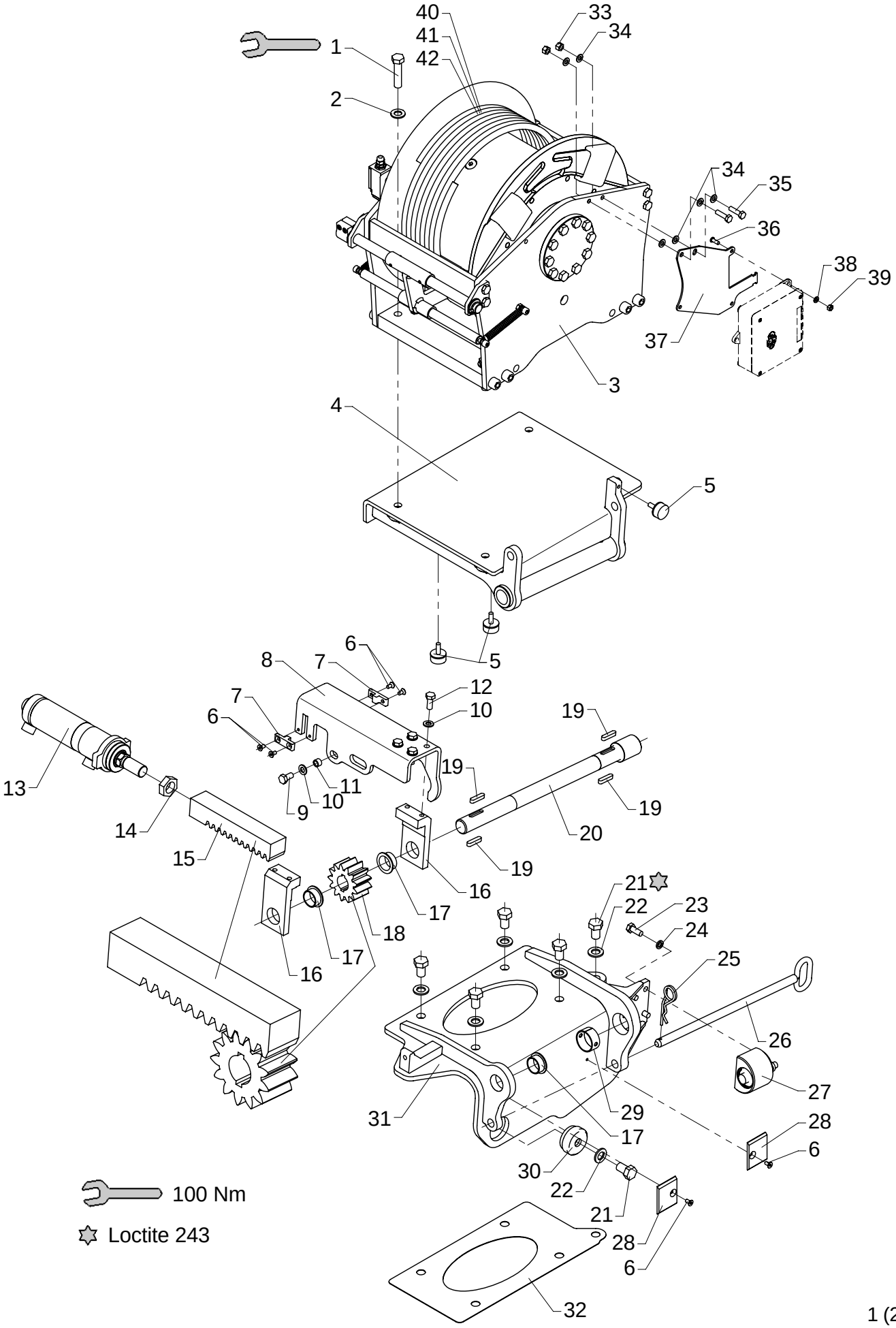

Swing-up winch, cpl.

As from / To loader no.: 96 01 95
Created: 02.11.2007
Modified: 13.02.2008

Item no.	Qty.	Part no.	Description	Remarks
1	4	30212	Steel bolt	M14 x 60
2	4	31178	Washer	14 mm
3	1	58281	Winch	
4	1	6301341	Stowing bracket	
5	3	61910	Rubber buffer	
6	6	30542	Counter-sunk screw	MK6 x 12
7	2	6300789	Lock plate	
8	1	6300798	Cylinder bracket	
9	1	31517	Set screw, stainless	M10 x 20
10	5	31177	Washer	10 mm
11	1	6300799	Spacer	
12	4	30155	Set screw	M10 x 25
13	1	6300790	Slewing cylinder C50 - 102	
14	1	31053	Counter nut	M24 x 1,5
15	1	6300794	Rack	
16	2	6300797	Rack guide	
17	3	23931	Bushing	BB 3016 DU-B
18	1	6300795	Pinion	
19	4	31054	Spring	
20	1	6301342	Pin	
21	6	30266	Set screw	M16 x 25
22	6	31135	Washer	16 mm
23	4	31513	Set screw, stainless	M10 x 25
24	4	30933	Nordlock washer	10 mm
25	1	33382	Lock spring	
26	1	6300821	Pin	
27	1	6887210	Weighing cell, hydraul.	
28	2	63724	Slide block	1210624
29	1	23311	Bushing	PM 4030 DX
30	1	6300823	Washer	
31	1	6301351	Mounting bracket	ODIN
32	1	6300809	Adjusting plate	
33	2	30886	Lock nut, stainless	M8
34	6	31147	Washer, stainless	8 mm
35	2	30135	Set screw, stainless	M8 x 30
36	3	32490	Screw	MCL6 x 16
37	1	6301127	Plate for CIO	
38	3	32302	Face washer, stainless	6 mm
39	3	30854	Nut, stainless	M6
40	1	63203	Wire rope	ø12 x 61 mtr.
41	1	63202	Wire rope	ø12 x 71 mtr.
42	1	63205	Wire rope	ø12 x 78 mtr.

52-380

Intern ref.: 6300790

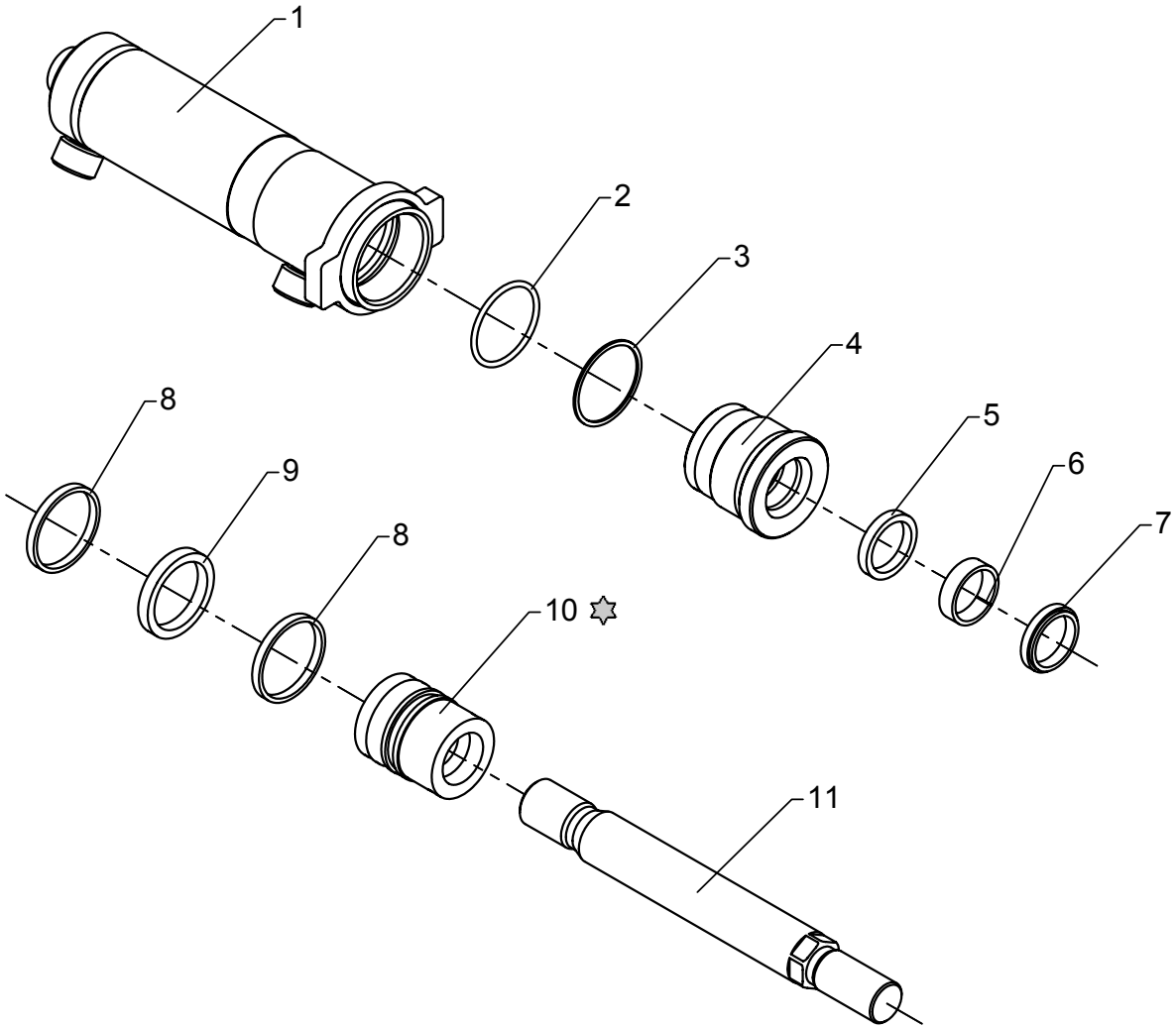

Loctite 243

Slewing cylinder, C50-102

As from / To loader no.: 96 00 00 / 96 01 94
Created: 03.10.2003
Modified: 02.11.2007

Item no.	Qty.	Part no.	Description	Remarks
	1	6893380	Seal kit	Pos. 2, 3, 5, 6, 7, 8, 9
1	1	6300791	Cylinder pipe	
2	1	20181	O-ring	OR 44,2 x 3
3	1	20709	Back ring	44,2 x 3
4	1	6321413	Guide	
5	1	20944	Seal	HH610 30 x 38 x 6/7
6	1	20933	Bearing	HH506 30 x 35 x 9,7
7	1	20925	Scraper	HH38 30 x 38 x 5
8	2	20928	Guide ring	PWR 50/45 x 5,6 - PF
9	1	20927	Piston seal	GHT 50/40 x 8 - PU/N/A
10	1	6324303	Piston	
11	1	6300793	Piston rod	

52-380

Intern ref.: 6300790

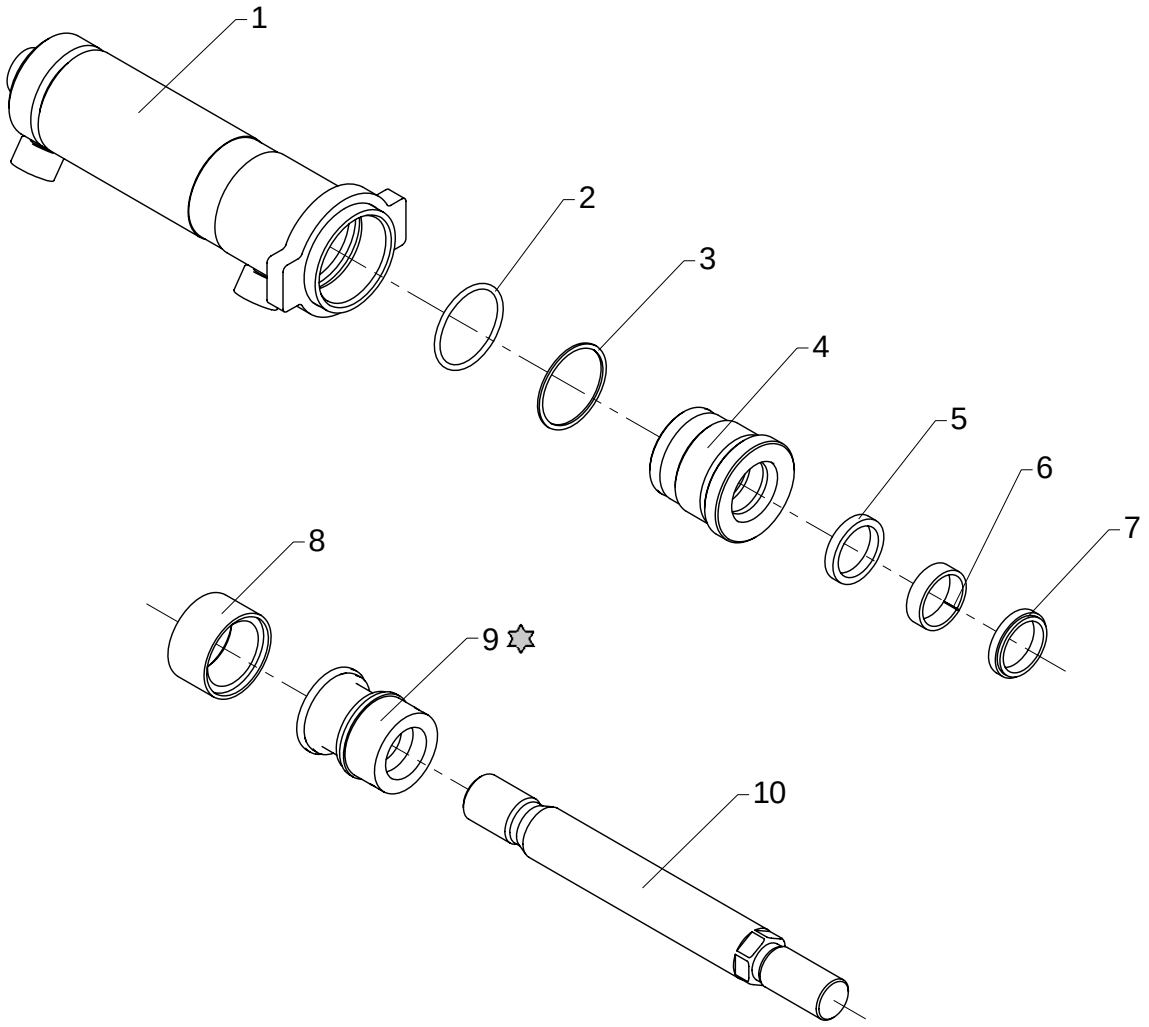

Loctite 243

Slewing cylinder, C50-102

As from / To loader no.: 96 01 95
Created: 02.11.2007
Modified:

Item no.	Qty.	Part no.	Description	Remarks
	1	6893890	Seal kit	Pos. 2, 3, 5, 6, 7, 8
1	1	6300791	Cylinder pipe	
2	1	20181	O-ring	OR 44,2 x 3
3	1	20709	Back ring	44,2 x 3
4	1	6321413	Guide	
5	1	20944	Seal	HH610 30 x 38 x 6/7
6	1	20933	Bearing	HH506 30 x 35 x 9,7
7	1	20925	Scraper	HH38 30 x 38 x 5
8	1	20780	Double acting seal	SKM 50 x 38 x 20
9	1	6325273	Piston	
10	1	6300793	Piston rod	

52-380

Intern ref.: 6301030

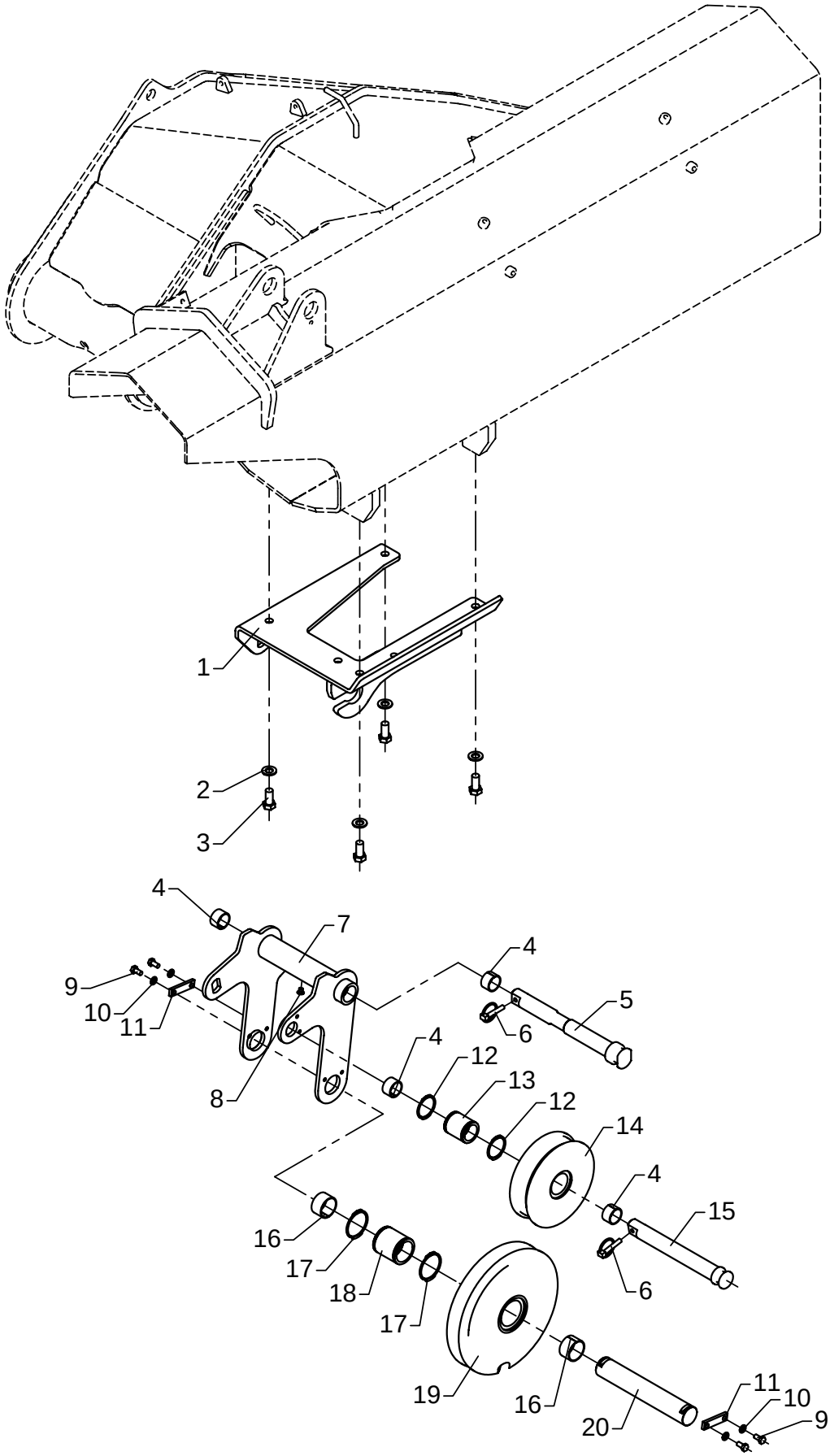

Movable wire guide

As from / To loader no.: 96 00 00 / 96 00 25
Created: 03.10.2003
Modified:

Item no.	Qty.	Part no.	Description	Remarks
1	1	6300835	Bracket for wire guide	
2	4	31178	Washer	14 mm
3	4	30206	Set screw	M14 x 30
4	4	23933	Bushing	MB 3020 DU-B
5	1	6300825	Mounting bolt for wire guide	
6	2	33387	Ring split	ø8 x 45
7	1	6300831	Wire guide	
8	1	32433	Sockethead screw	MC8 x 8
9	4	30131	Set screw, stainless	M8 x 16
10	4	31147	Washer, stainless	8 mm
11	2	6182444	Lock plate	
12	2	33125	Circlip	45U
13	1	6300278	Bushing for wire roller	
14	1	63507	Wire roller	
15	1	6300827	Pin for wire roller	
16	2	23932	Bushing	MB 4025 DU-B
17	2	33132	Circlip Din 471	55U
18	1	6300277	Bushing for wire sheave	
19	1	63508	Sheave	
20	1	6300826	Pin for wire sheave	

52-380

Intern ref.: 6301010+6304490

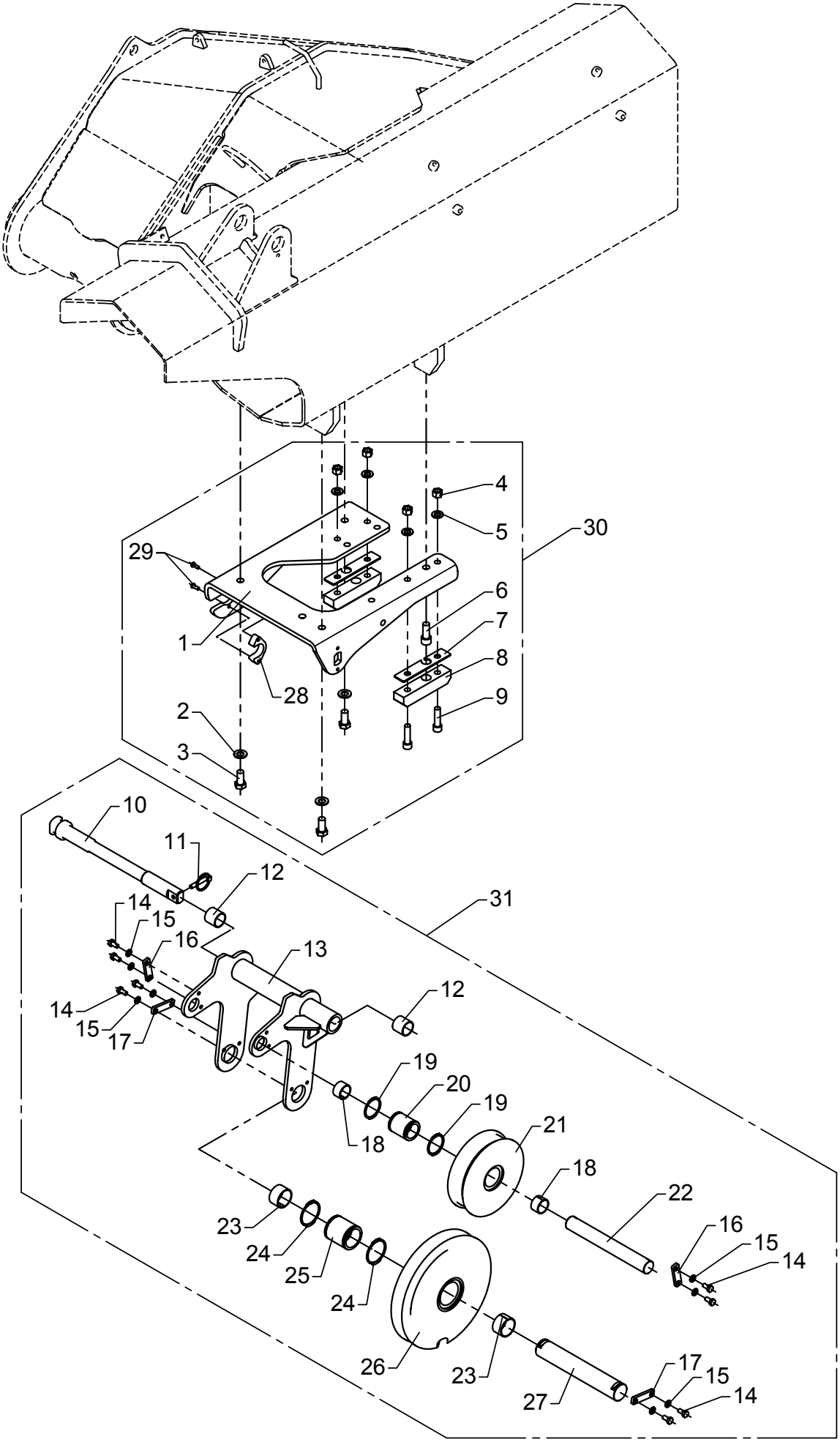

Movable wire guide

As from / To loader no.: 96 00 26 /
Created: 03.10.2003
Modified: 06.07.2004

Item no.	Qty.	Part no.	Description	Remarks
1	1	6300931	Bracket for wire pulley	
2	3	31178	Washer	14 mm
3	3	30206	Set screw	M14 x 30
4	4	30890	Lock nut	M12
5	4	31131	Washer	12 mm
6	1	30482	Screw	MC14 x 35
7	2	6300898	Spacer	
8	2	63538	Stop block	
9	4	30428	Sockethead screw	MC12 x 45
10	1	6300938	Mounting bolt for wire pulley	
11	1	33387	Ring split	ø8 x 45
12	2	23946	Composite bearing	ø30/34 x 30
13	1	6300932	Wire pulley	
14	8	30131	Set screw, stainless	M8 x 16
15	8	31147	Washer, stainless	8 mm
16	2	6300934	Lock plate	
17	2	6182444	Lock plate	
18	2	23933	Bushing	MB 3020 DU-B
19	2	33125	Circlip	45U
20	1	6300278	Bushing for wire roller	
21	1	63507	Wire roller	
22	1	6300937	Pin for wire sheave	
23	2	23932	Bushing	MB 4025 DU-B
24	2	33132	Circlip Din 471	55U
25	1	6300277	Bushing for wire sheave	
26	1	63508	Sheave	
27	1	6300826	Pin for wire sheave	
28	1	6300939	Spacer	
29	2	32222	Button head screw	M6 x 16
30	1	6304490	Stowing bracket for FJ	
31	1	6301010	Movable wire pulley	

52-380

Intern ref.: 6302600 / 6305600

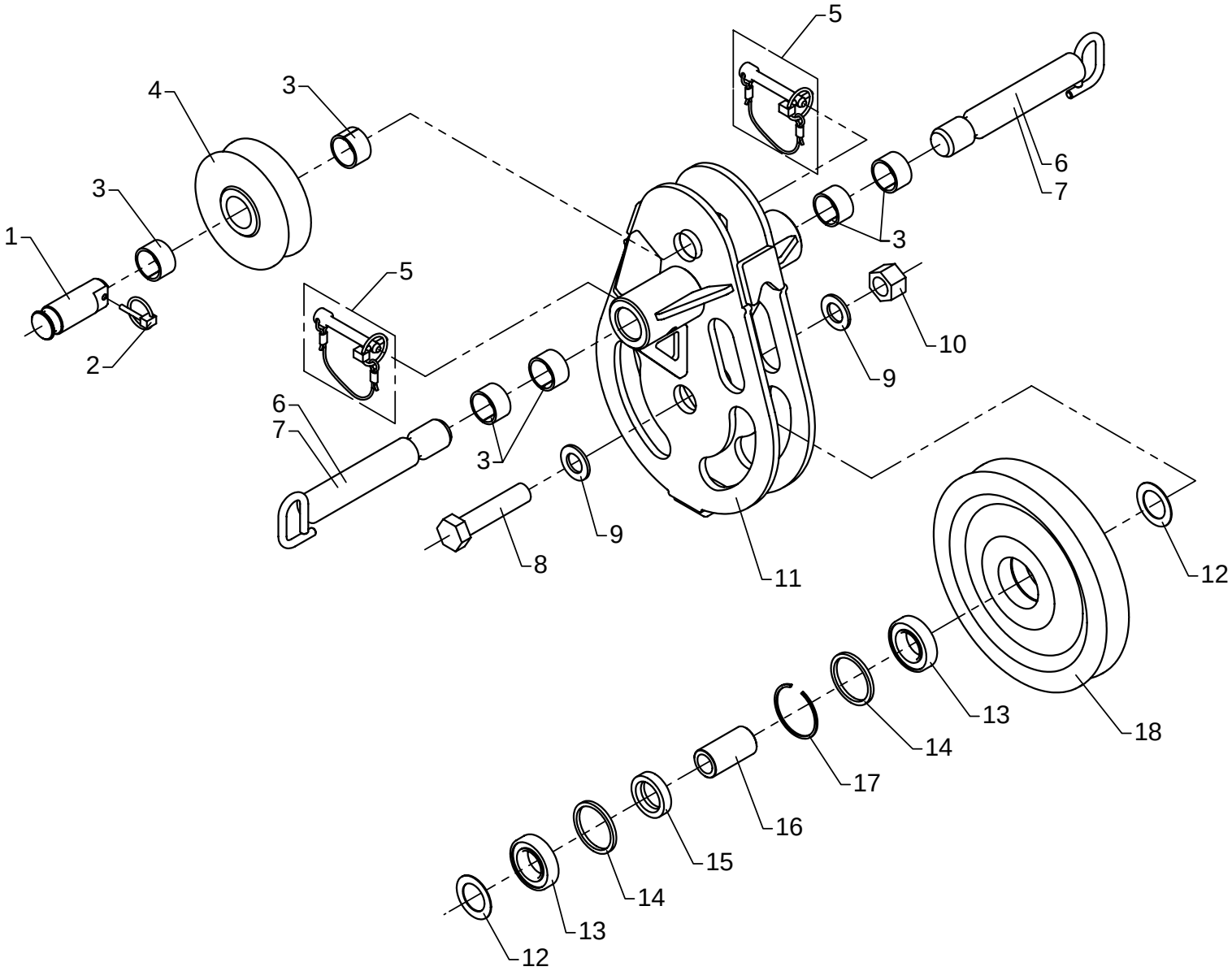

Wire sheave, WS12, complete

As from / To loader no.: 96 00 00 /
Created: 03.10.2003
Modified:

Item no.	Qty.	Part no.	Description	Remarks
1	1	6302607	Pin	
2	1	33385	Ring split	ø4,5 x 27
3	6	23302	Bushing	MB 3020 DU
4	1	63513	Wire roller guide	
5	2	6302613	Cotter bolt incl. ring split	
6	2	6302605	Lock bolt	FJ-1200
7	2	6305241	Lock bolt	FJ-1800
8	1	30250	Steel bolt	M20 x 90
9	2	31179	Washer	20 mm
10	1	30894	Lock nut	M20
11	1	6302601	Wire pulley	
12	2	23188	Spacer	
13	2	23187	Ball bearing	
14	2	6886024	Ring	
15	1	6886034	Distance ring	
16	1	6302618	Bushing	
17	1	23902	Spring ring	BR 55
18	1	63511	Wire sheave	

52-380

Intern ref.: 6304410

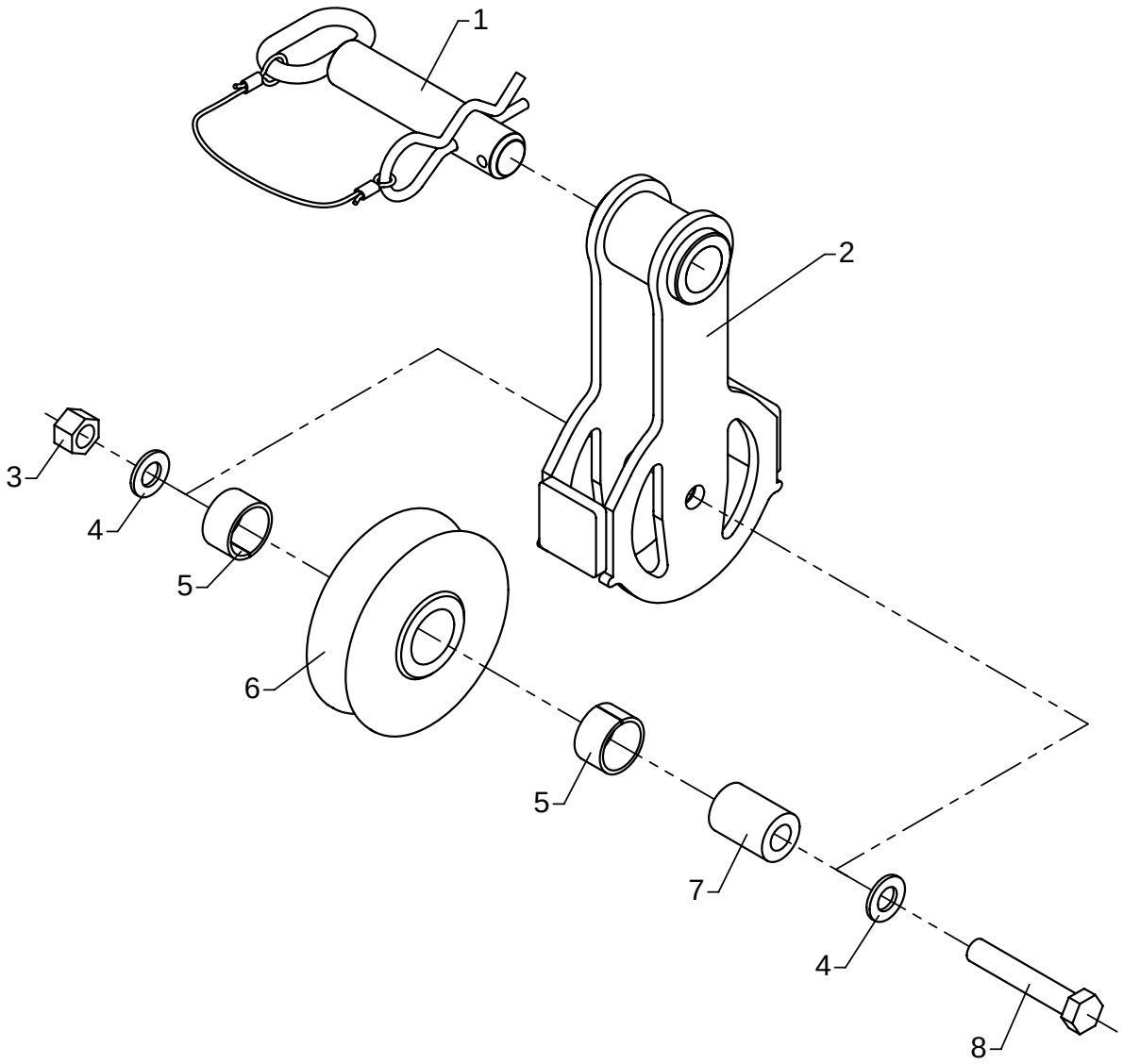

Wire roller guide, FJ

As from / To loader no.: 96 00 00 /
Created: 03.10.2003
Modified: 23.01.2008

Item no.	Qty.	Part no.	Description	Remarks
1	1	6304266	Lock pin with split pin	
2	1	6304411	Suspension for roller guide	
3	1	30891	Lock nut	M14
4	2	31178	Washer	14 mm
5	2	23302	Bushing	MB 3020 DU
6	1	63513	Wire roller guide	
7	1	6885504	Distance pipe	
8	1	30214	Steel bolt	M14 x 80