MATERIAL HANDLING SYSTEMS

INSTALLATION GUIDE

CRANE MODELS:
0.5/4
1.5/10
2.0/15T
2.6/19T

IOWA MOLD TOOLING CO., INC.
BOX 189, GARNER, IA 50438-0189
641-923-3711
TECHNICAL SUPPORT FAX: 641-923-2424
MANUAL PART NO: 99903431

Iowa Mold Tooling Co., Inc. is an Oshkosh Corporation Company.

TABLE OF CONTENTS

REVISIONS LIST 3
INTRODUCTION 4
MODEL 0.5/4 5
MOUNTING MODEL 0.5/4 ON A WOODEN PLATFORM 5
MOUNTING PARTS SUPPLIED WITH LOADERS 6
SERIES S.150 6
MODEL 1.5/10 6
MODEL 2.0/15T 6
MODEL 2.6/19T 6
MOUNTING - TYPICAL 7
MOUNTING - U-SECTION CHASSIS BUILD-UP 8
WITHOUT CHASSIS REINFORCEMENT 8
WITH CHASSIS REINFORCEMENT 9
MOUNTING OF STRAP PLATES 9
FLEXIBLE CONNECTION 9
MOUNTING BOLTS 10
CHASSIS REINFORCEMENT OPTIONS - DOUBLE HAT BUILD-UP 11
CHASSIS REINFORCEMENT OPTIONS - U-SECTION 13
BASE 15
MOUNTING OF M-BASE -- SERIES 150 16
MOUNTING P-BASE -- SERIES 150 17
HYDRAULICS 19
ELECTRO-HYDRAULIC SYSTEM 19
MODEL 1.5/10 PUMP HOUSING CODES: 19
MICRO-SWITCH 20
ADJUSTING THE MICRO-SWITCH 20
HYDRAULIC SYSTEM PTO 22
CHANGE OF SLEWING CYLINDER 23
FINAL TESTING & DELIVERY 24

In addition to the information presented in this manual, read and understand the IMT Crane Operator's Safety Manual before operating or performing any maintenance on your crane.

REVISIONS LIST

DATE	LOCATION	DESCRIPTION OF CHANGE
20070220	COVER	UPDATED WITH OSHKOSH INFORMATION.
20091119		ADDED 2.0/15T TO MANUAL
20100414		ADDED 2.6/19T TO MANUAL
20111129	16, 24	ECN 11628 - UPDATE WORDING TO STABILIZER
20120920		REMOVED MODEL 1.7/12

INTRODUCTION

A truck chassis and hydraulically operated crane (loader) are advanced technical products. When these products are combined into one efficient tool, it is important that the installation of the crane on the chassis, reinforcement of the chassis, and choice of pump and hydraulic connections be performed in a professional and correct manner.

Installation of the crane (loader), and reinforcement of the chassis, must be performed in accordance with the instructions of the carrier vehicle manufacturer and the information provided in this Installation Manual. The crane must always be installed on the chassis with the suspension traverse pointing forward. This applies to rear mounted cranes also.

WARNING

FAILURE TO ADHERE TO THE INSTRUCTIONS PROVIDED BY THE VEHICLE AND CRANE MANUFACTURER CAN RESULT IN EQUIPMENT FAILURE, SERIOUS INJURY, OR DEATH.

WARNING

READ AND UNDERSTAND THE IMT CRANE OPERATORS SAFETY MANUAL AND ALL OTHER APPLICABLE INSTRUCTION MANUALS WHICH ACCOMPANIED YOUR CRANE. FAILURE TO DO SO MANY RESULT IN EQUIPMENT FAILURE, SERIOUS INJURY, OR DEATH.

MODEL 0.5/4

- No mounting kit is supplied with the Model 0.5/4 loader.
- Crane mounting will be determined by the installer, who will supply mounting hardware.
- An On/Off switch should be added between the battery and the lift cylinder power unit, if the loader is equipped with a power unit.

MOUNTING MODEL 0.5/4 ON A WOODEN PLATFORM

Mounting on a wooden platform:
If the frame can be placed directly on an existing cross member, only one angle section is needed.

If the vehicle has a profiled platform, the same mounting applies although the spacer is eliminated.

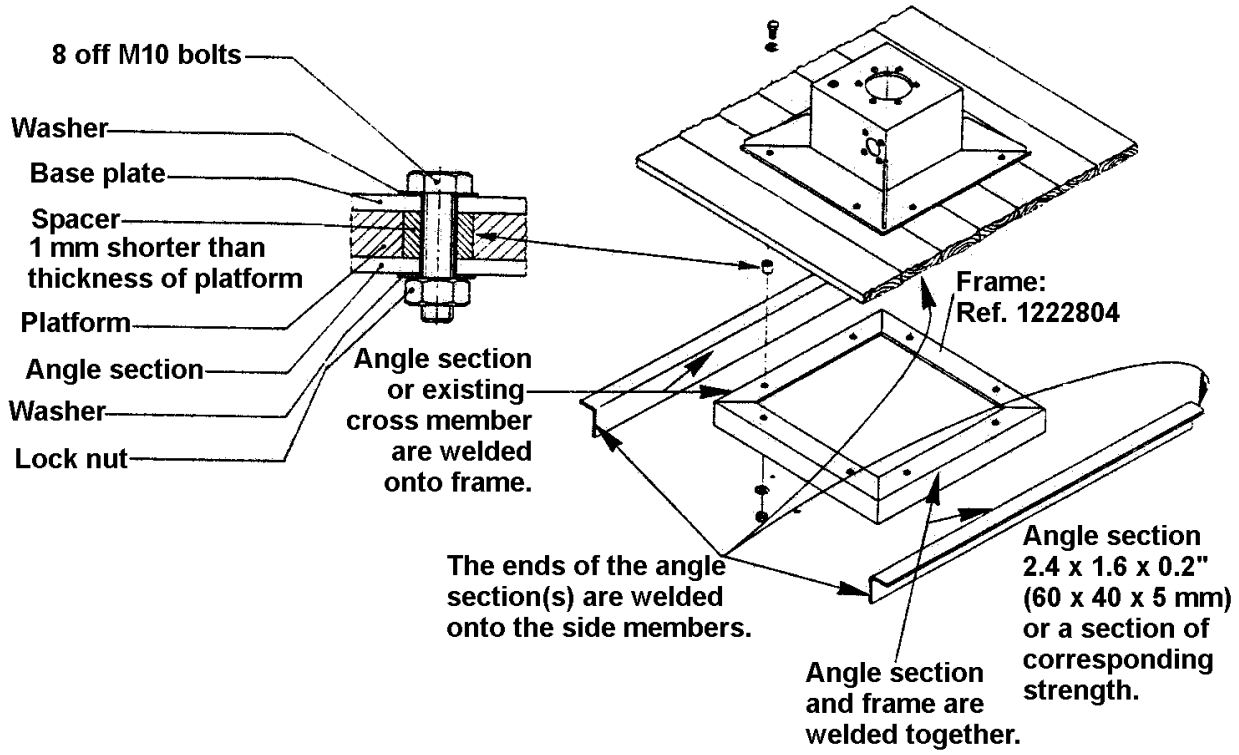

MOUNTING PARTS SUPPLIED WITH LOADERS

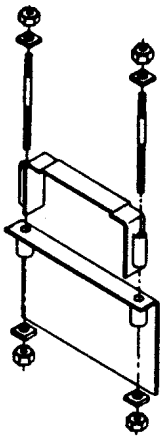

SERIES S.150

QUANTITY	DESCRIPTION	DIMENSIONS	REF NO.
4	LOCK NUT	M16	30892
4	WASHER		1226264
4	BOLT	M16 X 250	66023
2	MOUNTING CLAMP		1211324
2	MOUNTING BRACKET		1211784
4	WASHER		1226264
4	LOCK NUT	M16	30892
COMPLETE KIT, 1210160			

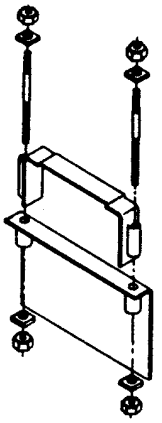

MODEL 1.5/10

QUANTITY	DESCRIPTION	DIMENSIONS	REF NO.
4	LOCK NUT	M16	30892
4	WASHER		1226264
4	BOLT	M16 X 250	66023
1	MOUNTING CLAMP		1226234
1	MOUNTING CLAMP		1226384
2	MOUNTING BRACKET		1211784
4	WASHER		1226264
4	LOCK NUT	M16	30892
COMPLETE KIT, 1229110			

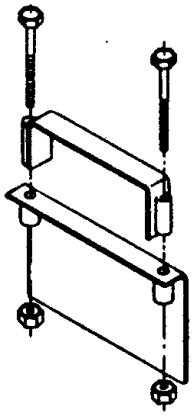

MODEL 2.0/15T

QUANTITY	DESCRIPTION	DIMENSIONS	REF NO.
4	BOLT	M20x200	66027
2	MOUNTING CLAMP		1231453
2	MOUNTING BRACKET		1231443
4	LOCK NUT	M20	30894
COMPLETE KIT, 1230040			

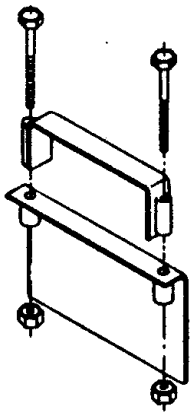

MODEL 2.6/19T

QUANTITY	DESCRIPTION	DIMENSIONS	REF NO.
4	LOCK NUT	M20	30894
4	BOLT	M20x290	66038
2	MOUNTING CLAMP		1282273
2	MOUNTING BRACKET		1282303
4	LOCK NUT	M20	30894

COMPLETE KIT, 1280520

MOUNTING - TYPICAL

In most cases, the crane is mounted below the platform, which has been cut out to accomodate the base.

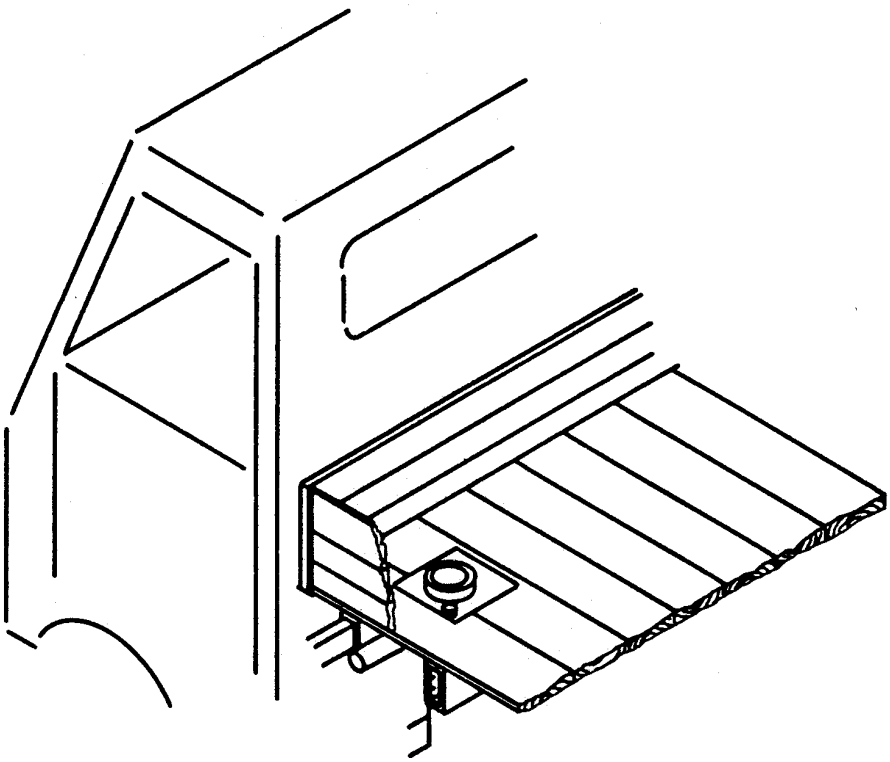

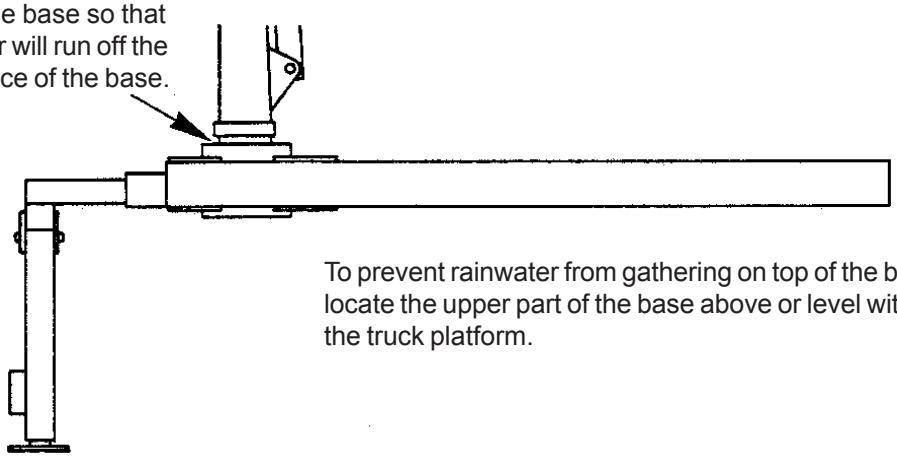

To prevent rainwater from gathering on top of the base, locate the upper part of the base above or level with the truck platform.

MOUNTING - U-SECTION CHASSIS BUILD-UP

On a wide chassis, the left mounting bracket of some models will get near the slewing section where a 5 mm reinforcement plate has been welded under the cross members. To prevent the loader from leaning to one side, the right mounting bracket is mounted 5 mm above the left one.

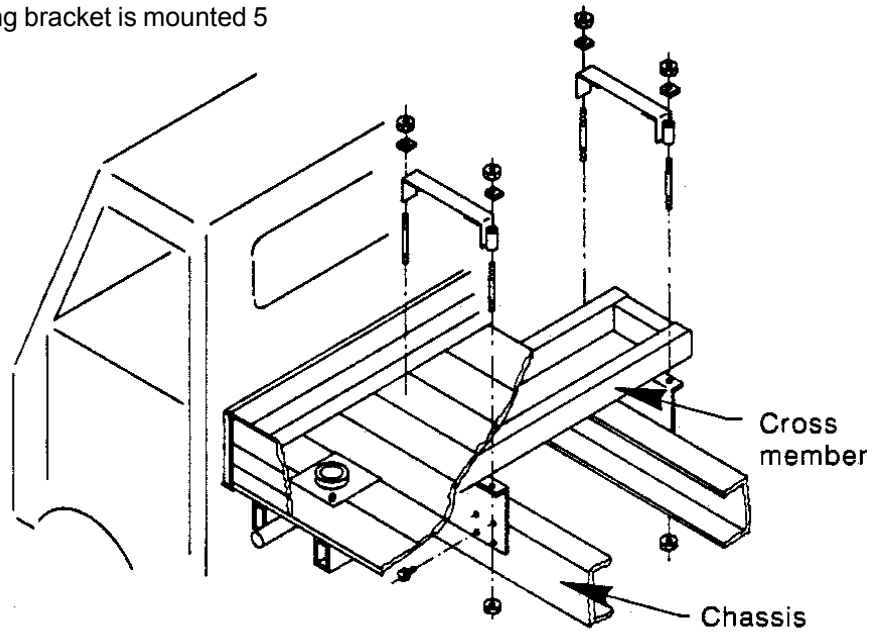

WITHOUT CHASSIS REINFORCEMENT

NOTE:
Tighten bolts in stages to ensure even mounting clamp pressure against the cross members.

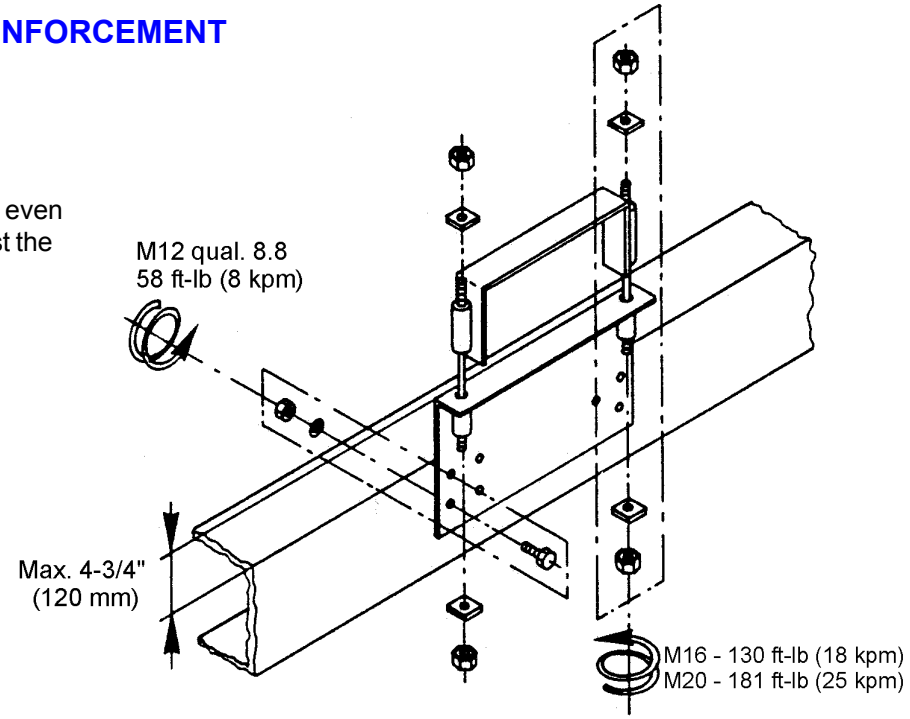

NUMBER OF M12 BOLTS IN MOUNTING BRACKET		
	LOADER SIDE	OPPOSITE SIDE
1-1.5 TM	2 X 3 STK.	2 X 2 STK.
1.5 - 2.6 TM	2 X 4 STK.	2 X 3 STK.

WITH CHASSIS REINFORCEMENT

The drawing below shows mounting of the subframe fastened to the chassis using strap-plates in front and flexible fastening at the rear. The subframe is made of U-sections. Another, slightly lower 4 mm U-section is welded across the frame between the frame members in line with the front mounting bolts. Once constructed, the U-sections are placed at a maximum distance of 6'-6" (2 m).

From the rear mounting bolt toward the rear, the subframe is fastened using strap-plates approximately 2'-7" (0.8 m) and using flexible fastening at a maximum distance of 3'-11" (1.2 m) to the rear. See drawing for details.

If the distance from the front mounting bolt to the front edge of the subframe is more than 8" (200 mm), mount a strap-plate.

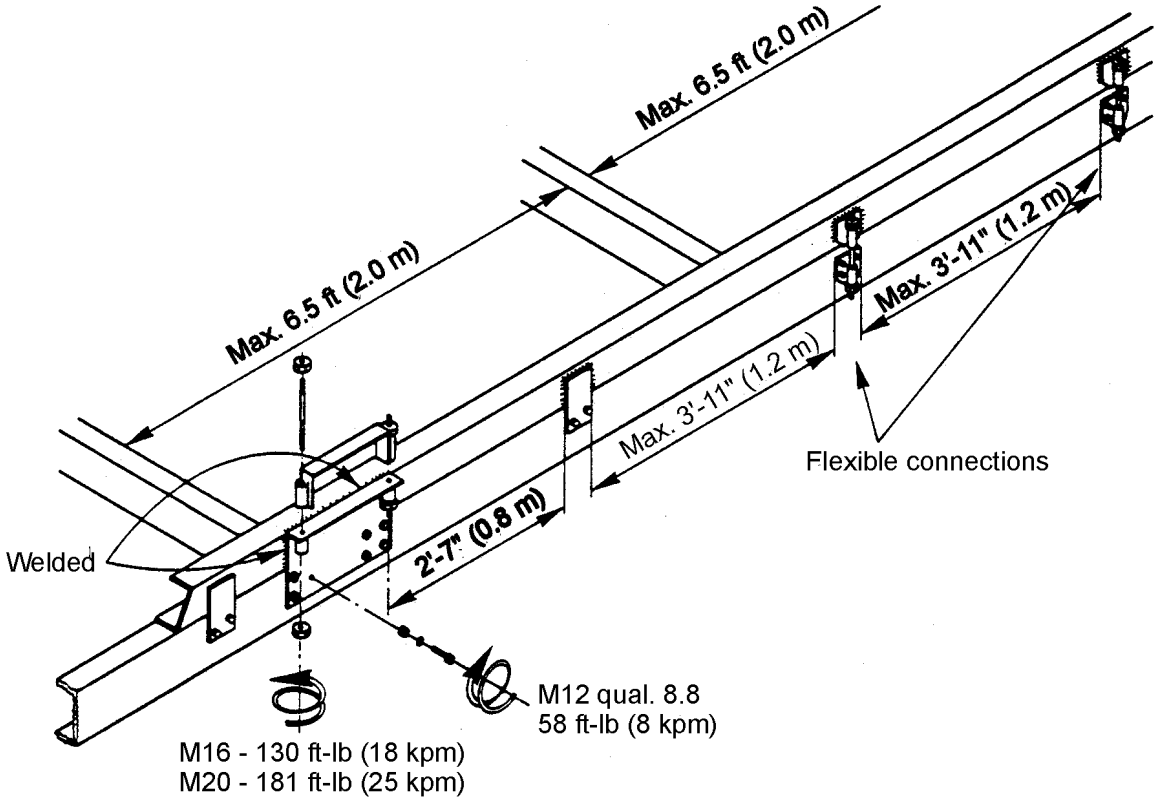

MOUNTING OF STRAP PLATES

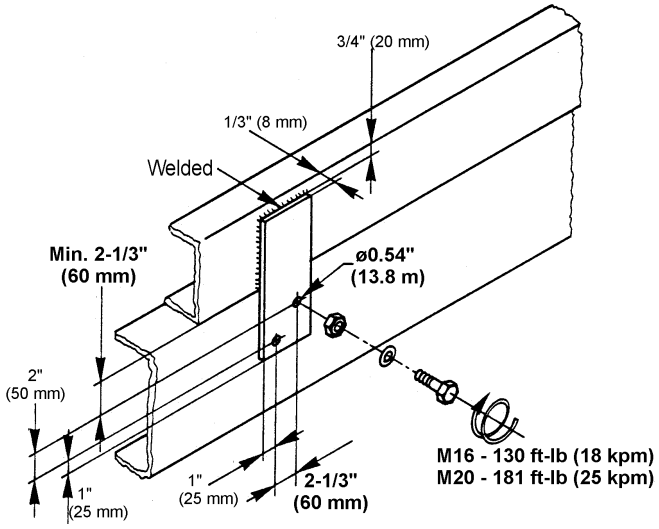

FLEXIBLE CONNECTION

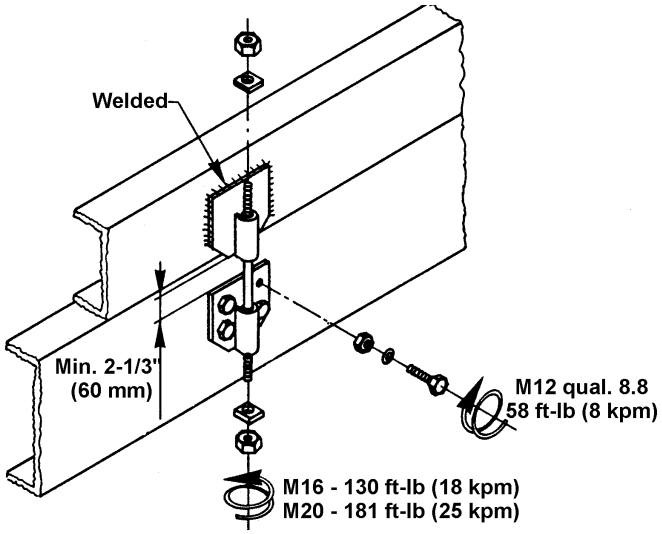

MOUNTING BOLTS

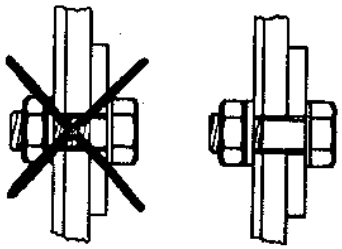

NOTE: Mounting bolts must be made of high quality, heat-treated steel. They must not be bent, heated, or altered in any way. The thread has been rolled, and it must not be lengthened through cutting, as this will weaken the bolts.

Nuts may not be tack welded.

The mounting fittings are bolted onto the chassis frame using driven bolt connections. Special bolts, which have a smooth part of the bolt shaft that nearly reaches through the mounting bracket and the chassis, must be used.

For a 12 mm bolt, use an 11.8 mm drilling diameter.

Use a hard washer (HB 200) under the head of the bolt and nut.

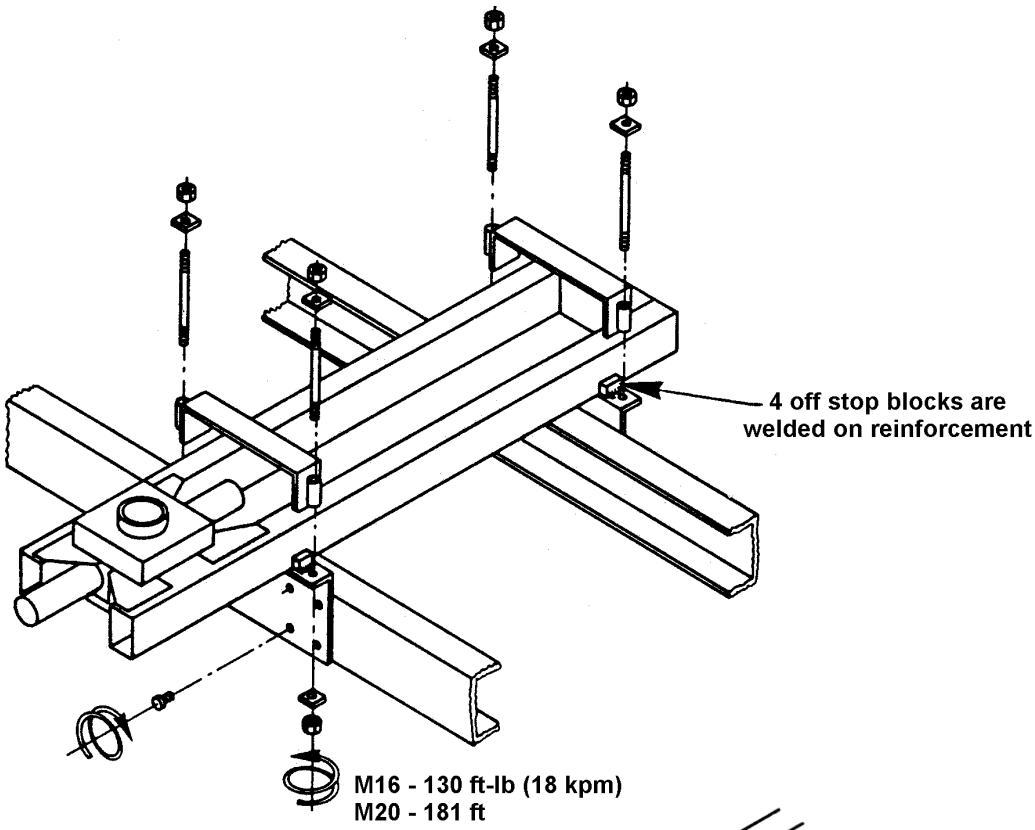

If the slewing system is blocking the mounting clamp, the mounting clamp must be split and welded onto the base.

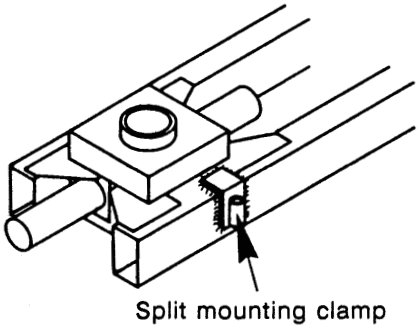

On very wide chassis types, it may be necessary to mount the mounting clamps (or a portion of them) on the inside of the chassis frame.

CHASSIS REINFORCEMENT OPTIONS - DOUBLE HAT BUILD-UP

OPTION A

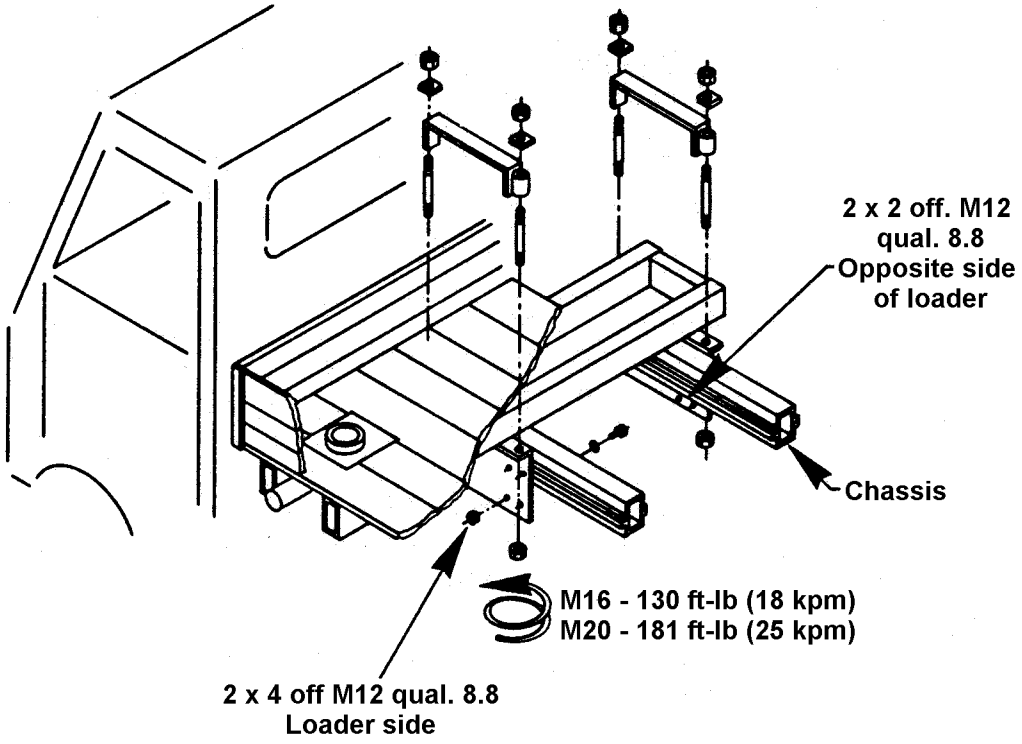

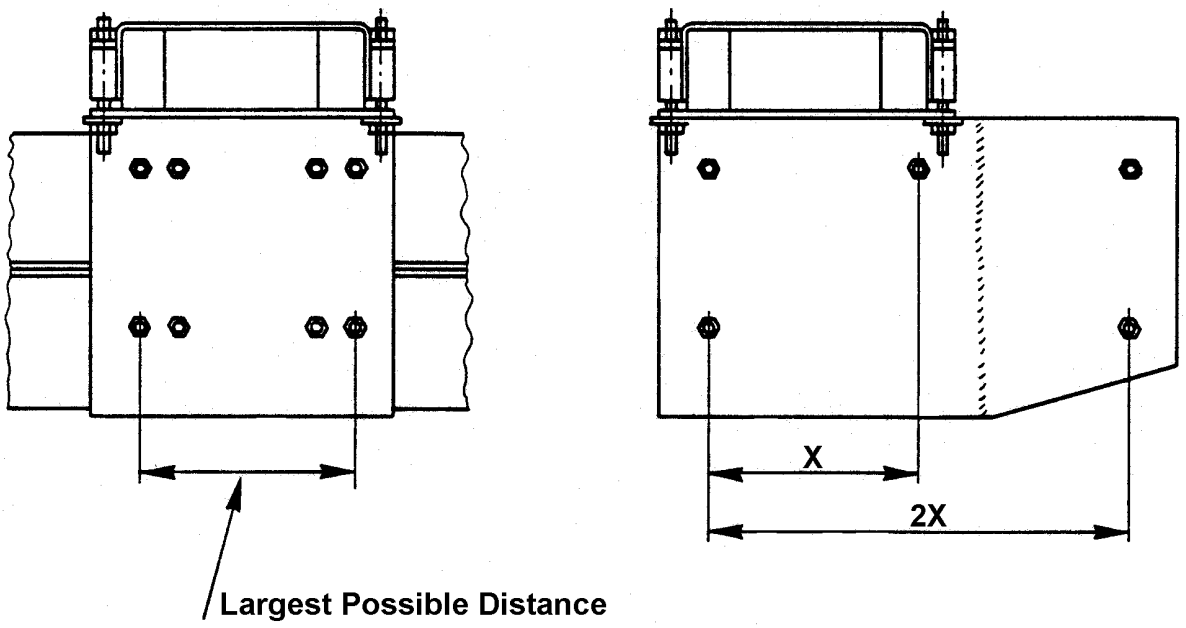

The mounting bracket could be extended. This will spread out the strain on the chassis over a longer distance, if necessary, on the loader side only.

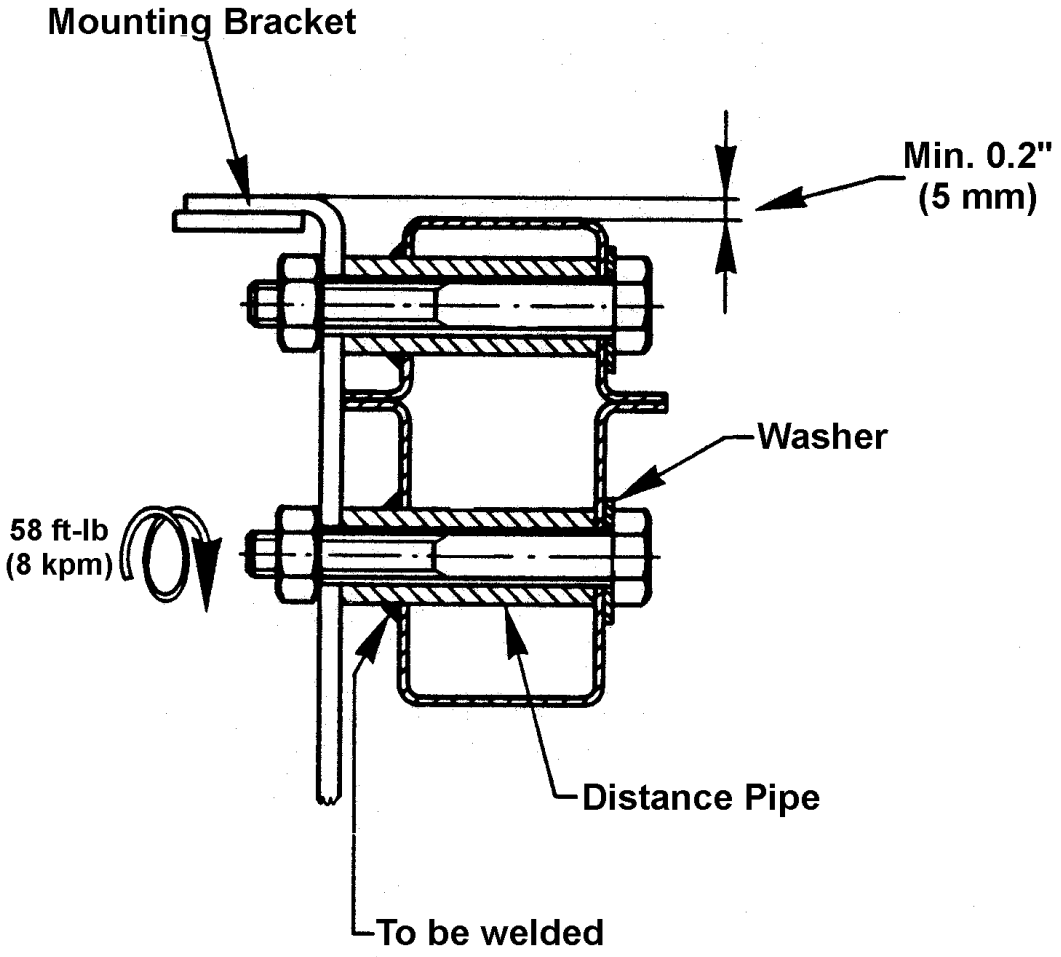

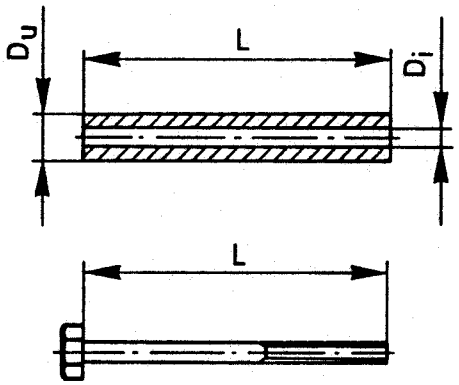

DESCRIPTION	DIMENSION	REF NO.
DISTANCE PIPE	Du = 0.8” (20 mm)	1213824
	Di = 0.5” (12.5 mm)	
	L = 5.5” (140 mm)	
STEEL BOLT	M12 x 150	30195
	M12 x 130	30198
LOCK NUT	M12	30890
FACET WASHER	ø24/ø13 x 2.5	31131

CHASSIS REINFORCEMENT OPTIONS - U-SECTION

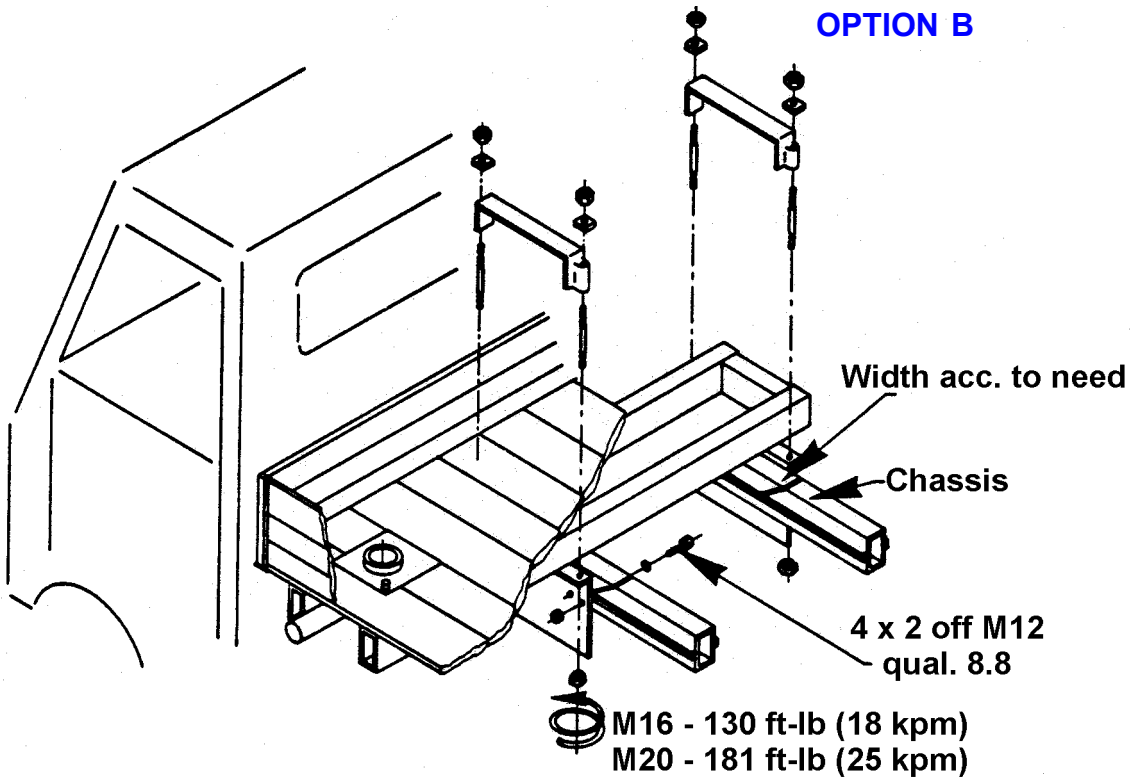

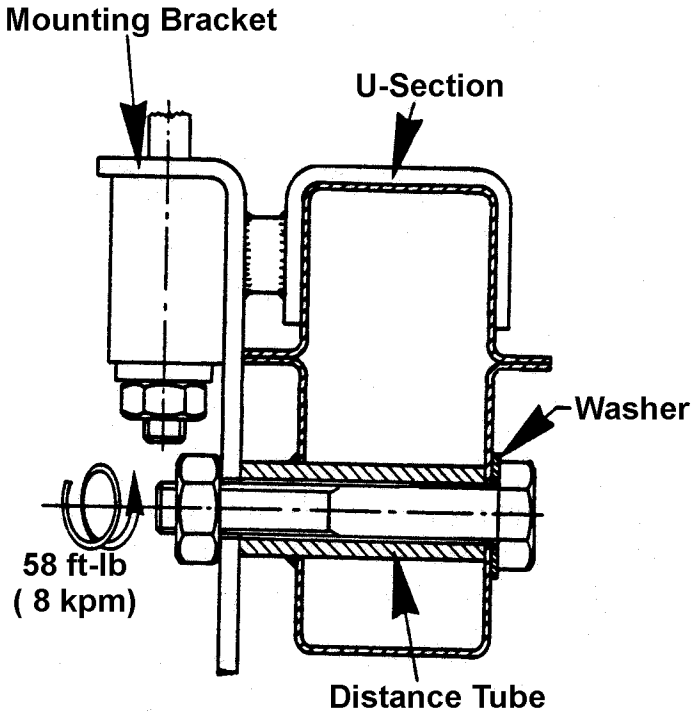

Rest the crane base directly on both the mounting bracket and the U-section. Clamp the U-section across the subframe and weld in place.

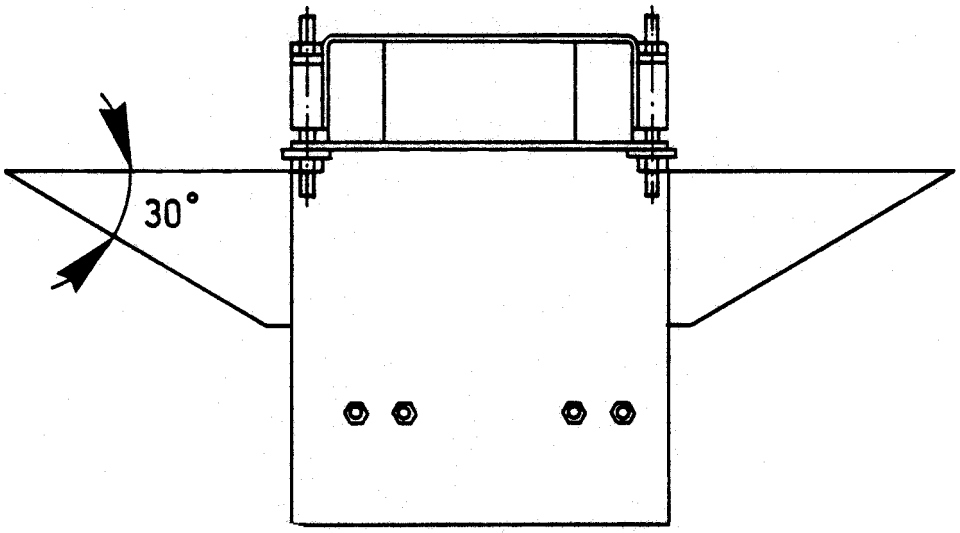

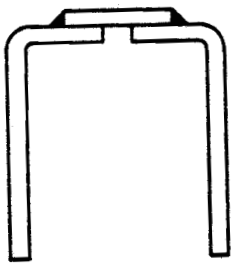

Make the U-section using 2 angular sections, welded together as shown.

See chart on page 10 for information on the distance tube, lock nut, and washer.

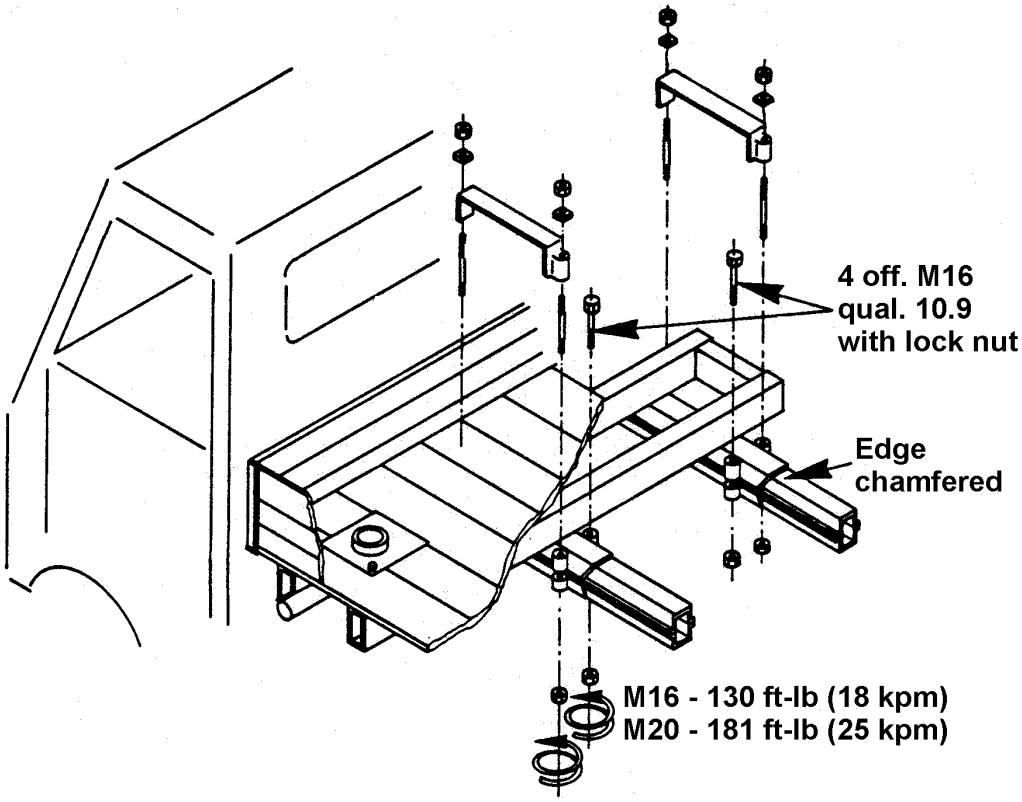

To avoid chassis deformation, adjust the lengths of tubes 1 and 2 so that distance *a* is approximately 3/64” (1 mm) when the fittings have been placed loosely around the chassis.

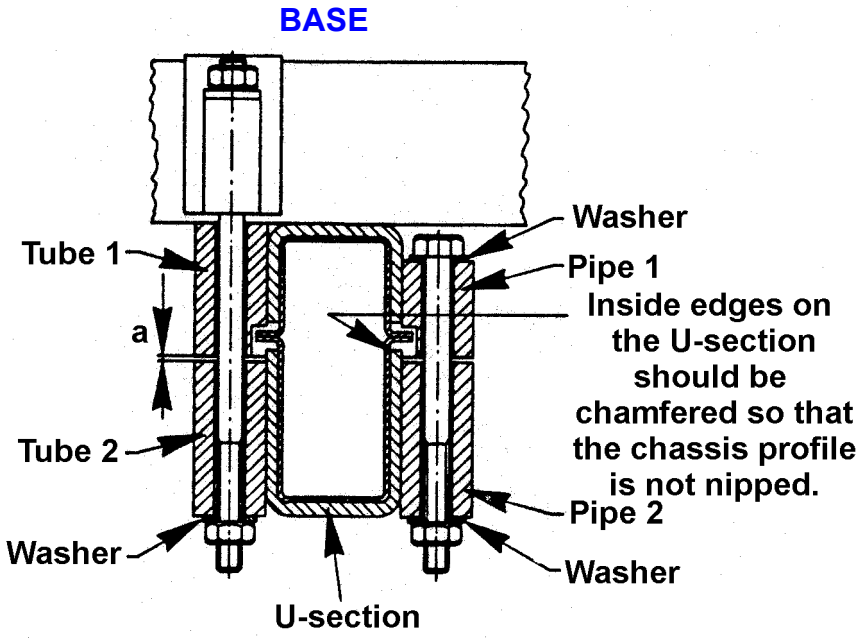

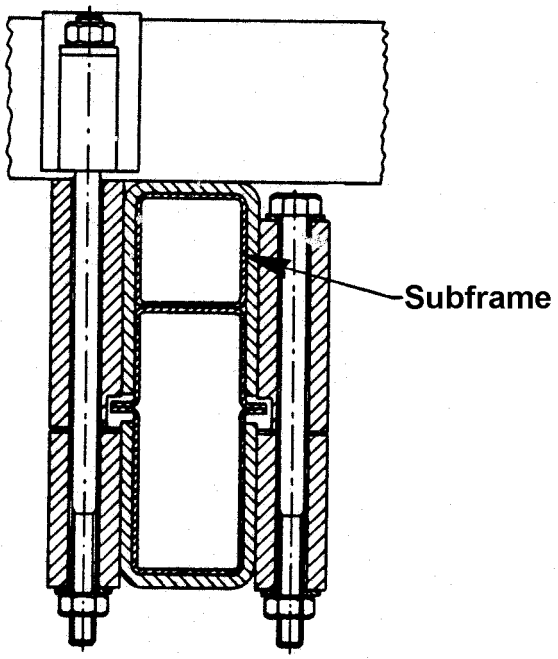

Make the U-section by welding 2 angular sections together, as shown.

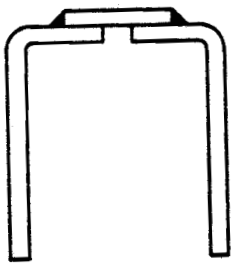

MOUNTING OF M-BASE -- SERIES 150

The drawings show two different options, A & B, for mounting on the chassis frame. Select option A or B depending on chassis space.

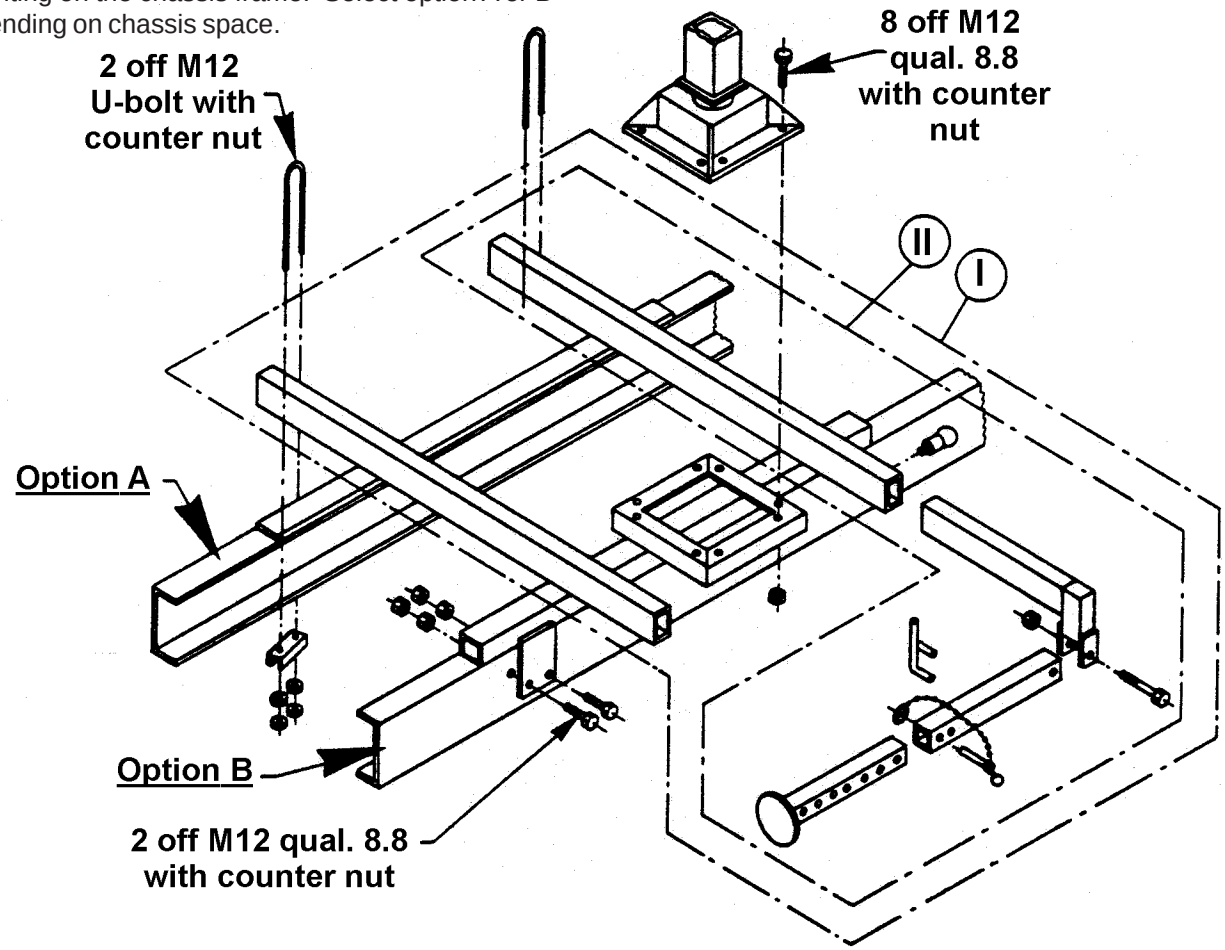

I - STABILIZER SET INCLUDING FRAME, REF. NUMBER 1212430

II - STABILIZER SET EXCLUDING FRAME, REF. NUMBER 1212420

AVOID WELDING ON CHASSIS FRAME.

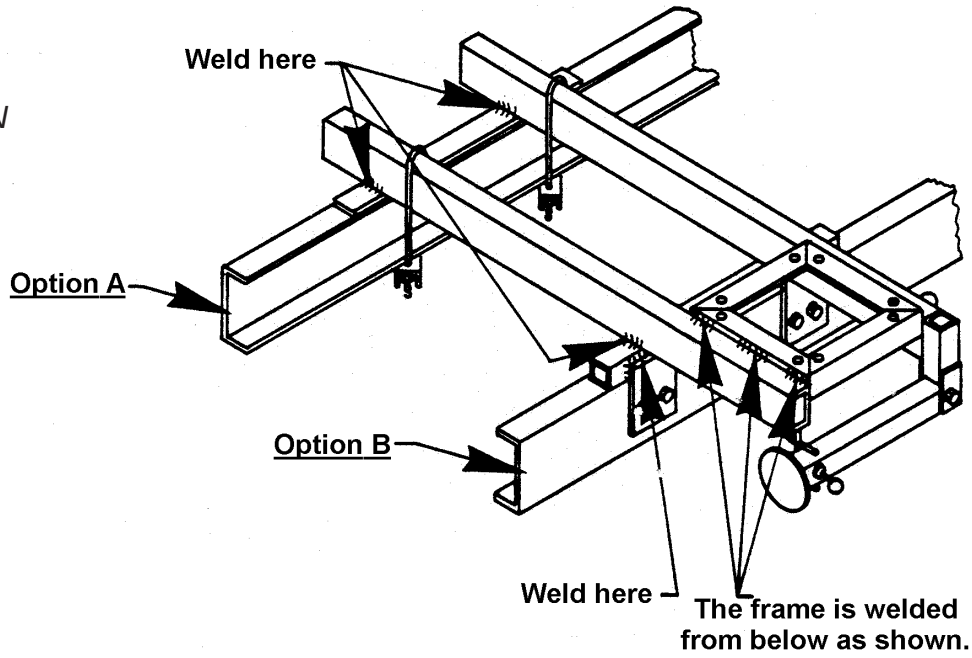

MOUNTING P-BASE -- SERIES 150

The base has been constructed so that it does not have to be connected to the chassis frame. It can be bolted directly onto the truck platform.

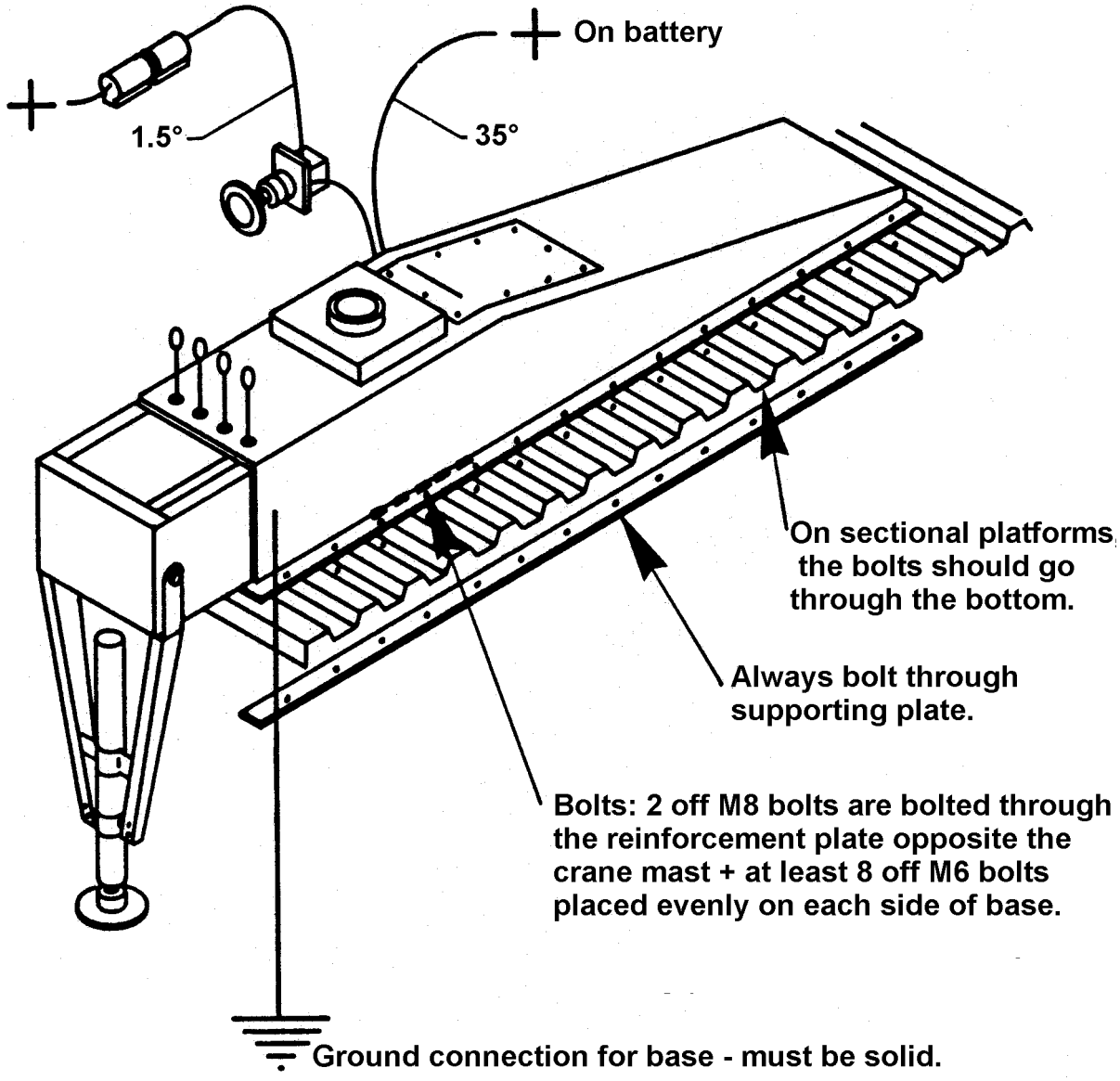

If the truck has a wooden platform, or if the sectional platform is too soft, it should be reinforced under the crane mast. See page 17 for reinforcement details.

The front of the platform should be securely fastened to the chassis so that the loader cannot lift the platform from the chassis.

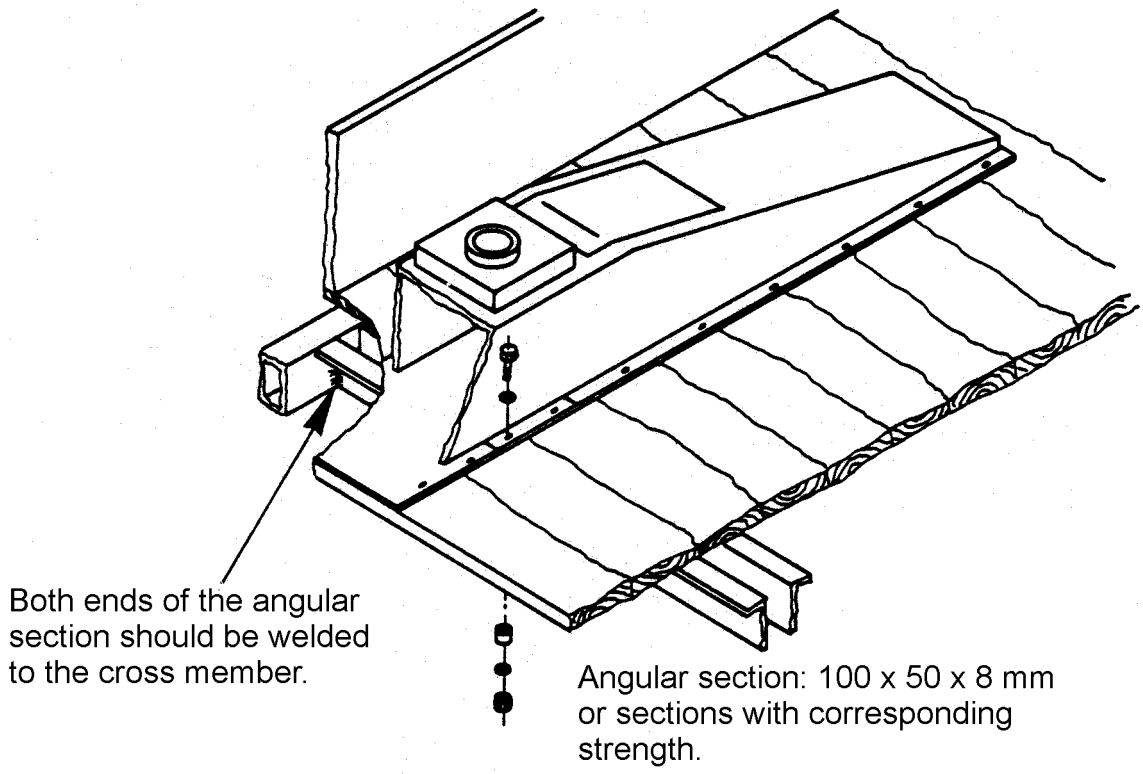

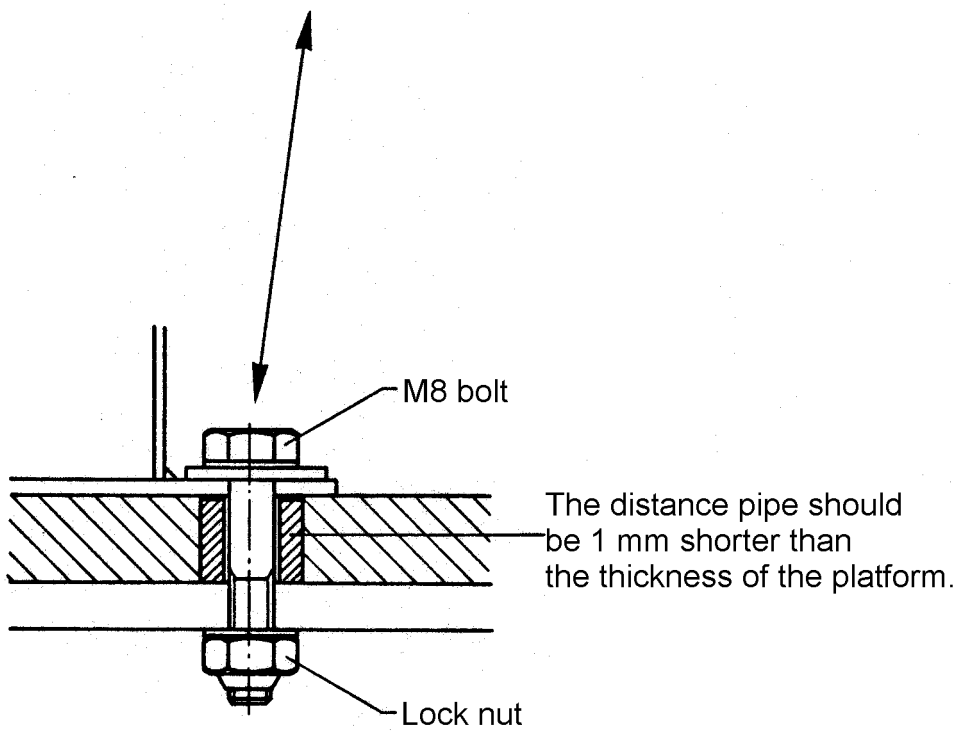

HYDRAULICS

ELECTRO-HYDRAULIC SYSTEM

Electricalconnections are protected against corrosion with Tectyl 894 or equivalent.

1. MOTOR
2. STARTER RELAY
3. THREMO RELAY
4. SWITCH
5. FUSE
6. MICRO-SWITCH

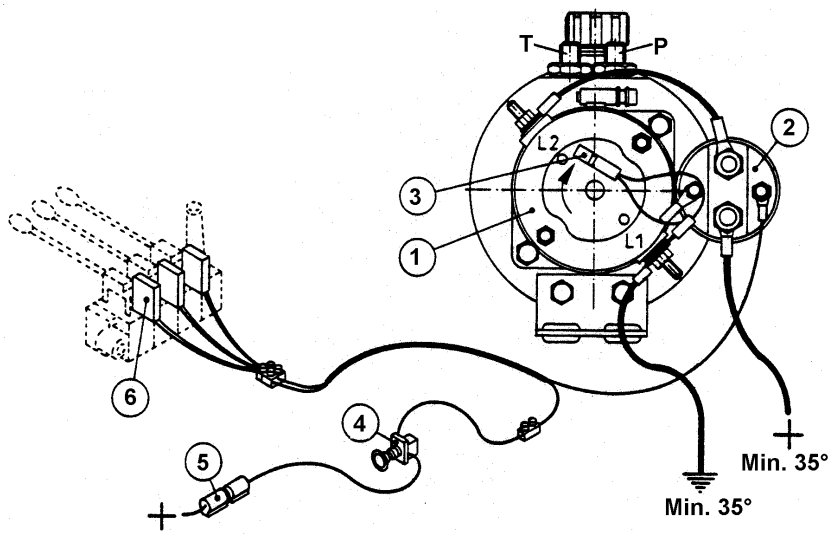

MODEL 1.5/10 PUMP HOUSING CODES:

- -□ v - - - D - - - - - -

□□□ 12 VOLT
VOLTAGE□□ 24 VOLT

□□□ 050 = 0.48‡ MODEL S.150
PUMP CAP.□ 130 = 0.97‡□MODEL 1.5/10

MONTH

YEAR

SERIAL NUMBER

	POWER CONSUMPTION		RECOMMENDED BATTERY CAPACITY	
	12 volt	24 volt	12 volt	24 volt
Series 150	115 amp	55 amp	83 Ah	60 Ah
Model 1.5/10	155 amp	80 amp	120 Ah	60 Ah
Series 260	280 amp	140 amp	143 Ah	84 Ah

MICRO-SWITCH

Adjust the micro-switch such that the motor starts at 0.3” to 0.4” (8 to 10 mm) of travel. The switch is cut off when the spool presses on the roller.

ADJUSTING THE MICRO-SWITCH

1. Unfasten screw A and position the micro-switch such that the roller is placed precisely under the top of the spool.

2. Adjust the travel of the lever by unfastening screw B or C and removing the spool or the micro-switch.

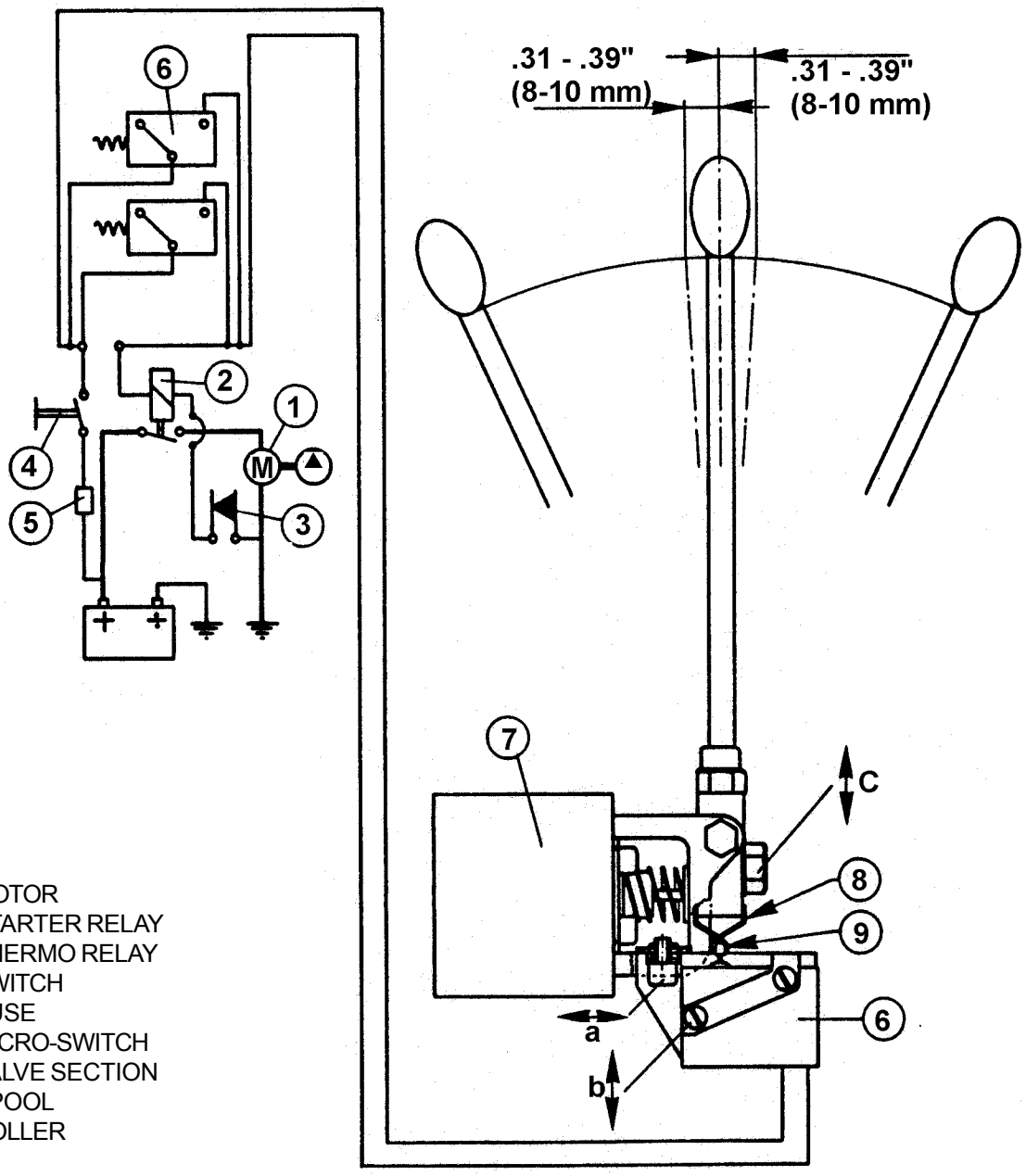

1. MOTOR
2. STARTER RELAY
3. THERMO RELAY
4. SWITCH
5. FUSE
6. MICRO-SWITCH
7. VALVE SECTION
8. SPOOL
9. ROLLER

The electro-hydraulic power pack is normally stored behind the driver's seat inthe truck cab. It may also be stored between the side members. If it is stored between the side members, it should be protected with a protection plate.

NOTE: ALWAYS REFILL THE TANK AFTER BLEEDING AIR FROM CYLINDERS.

When using a separate power pack, the loader base must be filled with oil to protect the slewing system against corrosion.

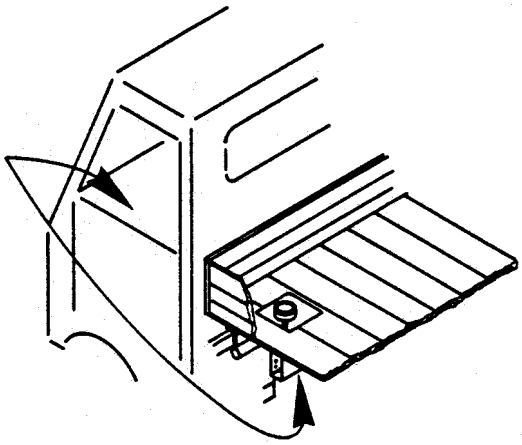

Series 150: 3/4 gallon (3 liters)
Model 1.5/10 (Series 200): 2.1 gallons (8 liters)

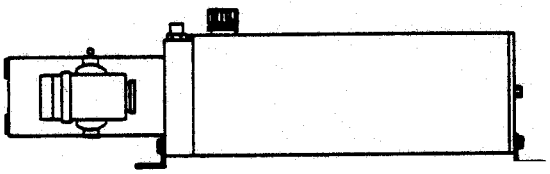

If necessary, turn the tank so the filler cap can be reached.

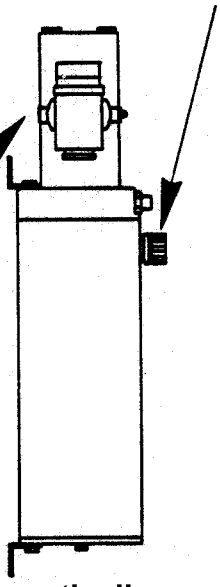

The power pack is mounted either horizontally or vertically.

When vertically mounting, the motor must be up.

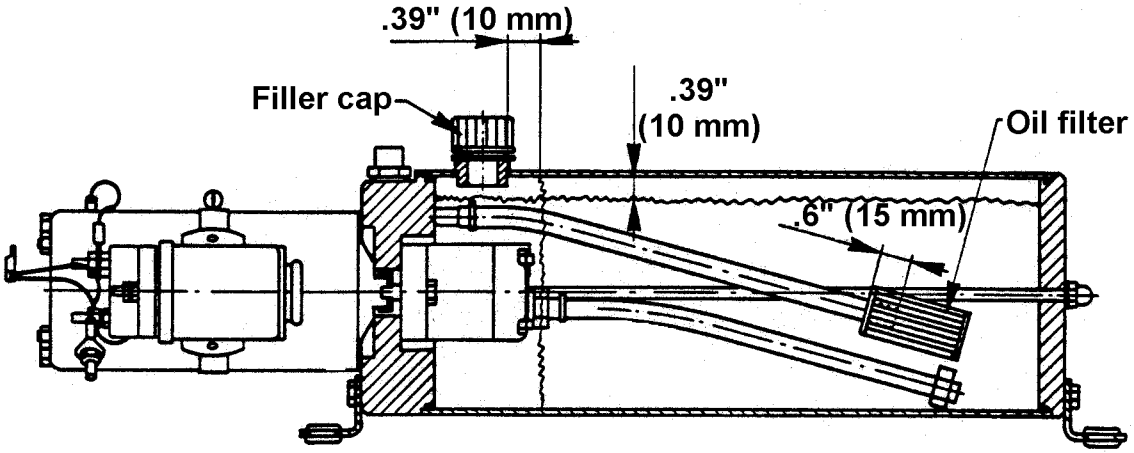

HYDRAULIC SYSTEM PTO

- The electric system is connected as indicated on the hydraulic system in the instruction manual.

- Fill with oil up to the level stated on the sight glass or the oil pin, and choose type of oil according to the table in the instruction manual.

- Always refill the oil tank after bleeding air from the cylinders.

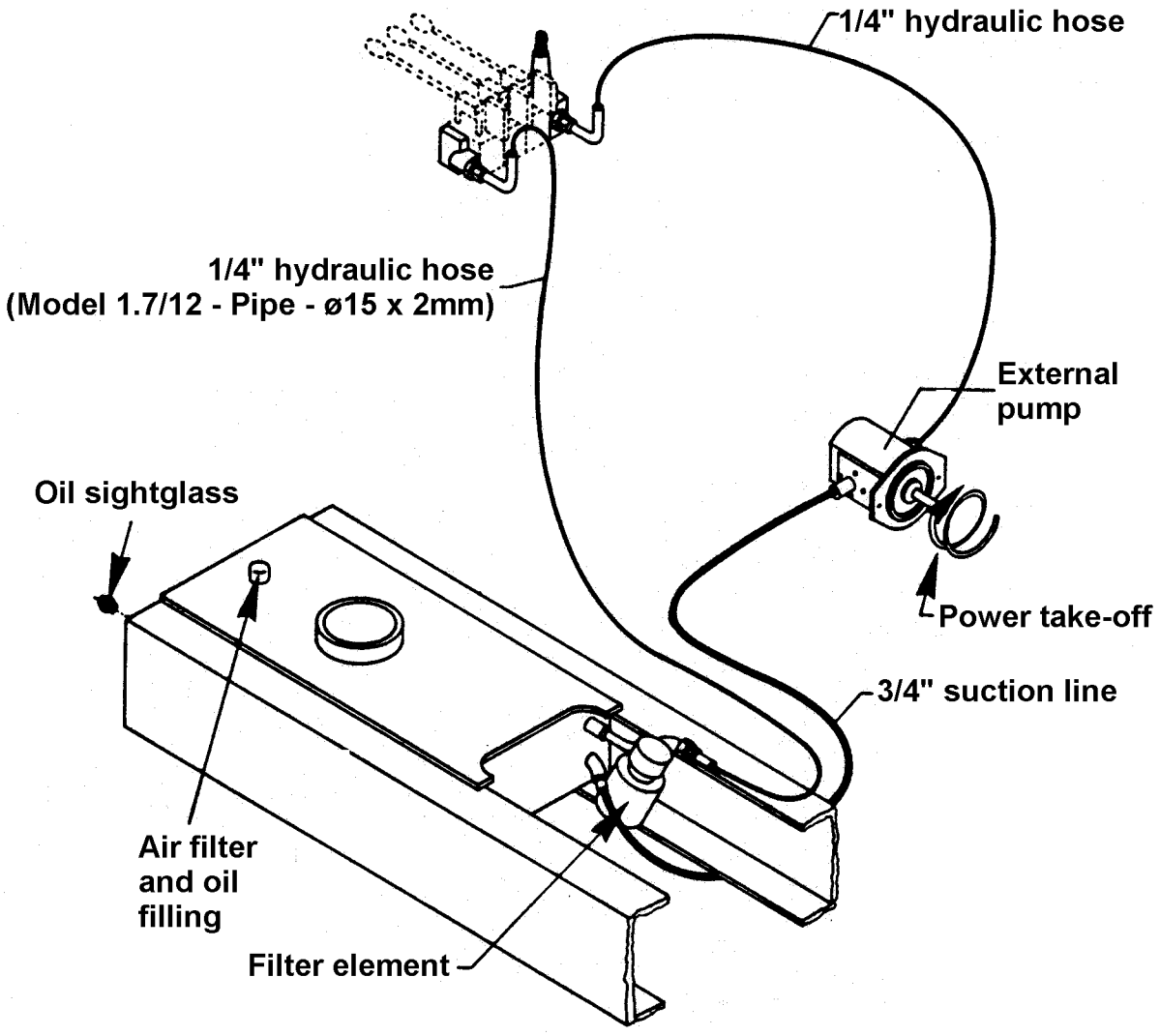

NOTE: The external pump is not supplied with the loader. However, it can be ordered separately.

CHANGE OF SLEWING CYLINDER

a. Position the loader so that the slew to both sides is exactly the same (neutral position).

b. Drain the oil from the base using the drain plug (5).

c. If the loader has two slewing cylinders, dismount one (1). If the loader has four slewing cylinders, dismount two (1).

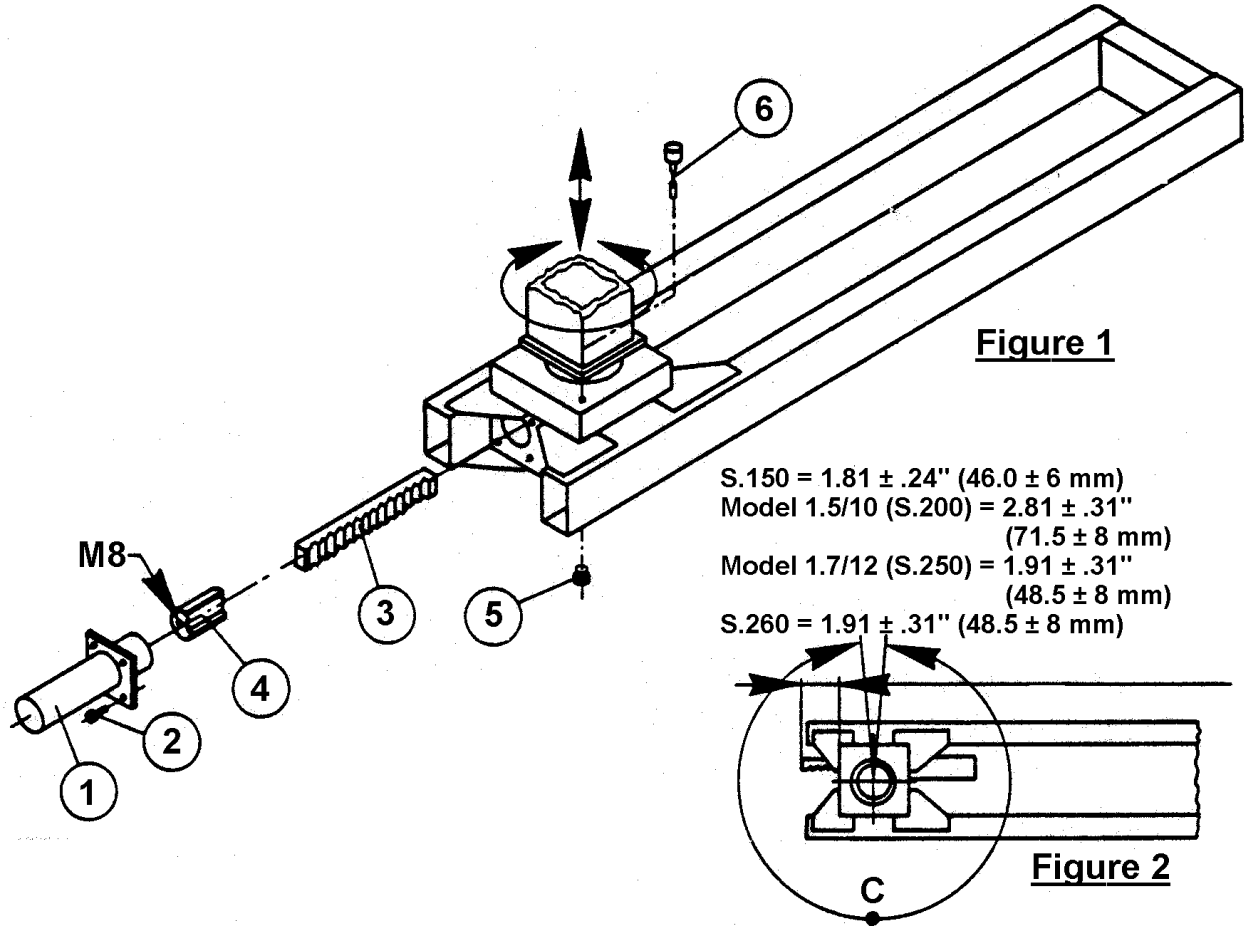

d. Pull out the slide block (4) using the threaded hole (M8).

e. Remove the rack (3).

f. Manually turn the crane column to the required “C” (“C” indicates the middle of the slewing area. Fig. II)

g. Place the rack (3) in the slewing house so that the distance on fig. II is observed, depending on the mutual mesh of the teeth.

h. Place the slide block (4) behind the rack (3). Remount the slewing cylinder (1).

i. Lubricate the bolts (2) with Locktite normal or Locktite 242. Remount bolts.

j. The drain plug (5) is remounted and oil is filled in the air filter (6).

ALWAYS REFILL BASE WITH OIL.

FINAL TESTING & DELIVERY

After mounting the loader, test as follows:

1. Fill the base of the loader with the recommended volume of oil. Lubricate the loader.

2. Bleed all loader functions.

3. Check the pressure settings using a pressure gauge.

4. Check that all adjustment screws are sealed.

5. Check, and tighten if necessary, all connections.

6. Check that the hydraulic hoses are not stuck or twisted. Check hose lengths.

7. Load and function test. Check adjustment on micro-switches.

8. Add hydraulic oil if needed.

Upon delivery to customer, demonstrate:

9. Use of stabilizers.

10. Loader operation.

11. Maintenance.

Use the instruction manual for operation information.

IOWA MOLD TOOLING CO., INC.
BOX 189, GARNER, IA 50438-0189
641-923-3711
TECHNICAL SUPPORT FAX: 641-923-2424