IOW MOLD TOOLING CO., INC.
PO BOX 189
GARNER, IOWA 50438
TEL; 641-923-3711
FAX: 641-923-2424
WEBSITE: www.imt.com

# Spare Parts Manual

# 60/427

P/N 99904933

Copyright © 2016 Iowa Mold Tooling Co., Inc. All rights reserved.

No part of this publication may be reproduced, stored in a retrieval system, or transmitted in any form or by any means, electronic, mechanical, photocopying, recording or otherwise without the prior written permission of Iowa Mold Tooling Co., Inc.

Iowa Mold Tooling Co., Inc. is an Oshkosh Corporation company.

| Description | Page | As from | To loader nr. |
|---|---|---|---|
| **Base, Column, Planetary Gear** | | | |
| Base with turntable | 52201010 | 96 00 00 | 96 02 63 |
| | 52201010A | 96 02 64 | 96 03 82 |
| | 52201010B | 96 03 83 | |
| Lubricating brush for planetary gear | 52201050 | 96 00 00 | |
| Column, complete | 52201100 | 96 00 00 | 96 02 63 |
| | 52201100A | 96 02 64 | |
| Planetary gear | 52201150 | 96 00 00 | 96 03 19 |
| | 52201150A | 96 03 20 | |
| Pins and link arm system N | 52201210 | 96 00 00 | 96 00 28 |
| | 52201210A | 96 00 29 | |
| **Boom System** | | | |
| Main boom, complete | 52202010 | 96 00 00 | 96 02 74 |
| | 52202010A | 96 02 75 | 96 02 94 |
| | 52202010B | 96 02 95 | |
| Pins and link arm system K | 52202020 | 96 00 00 | 96 00 28 |
| | 52202020A | 96 00 29 | 96 02 68 |
| | 52202020B | 96 02 69 | |
| Jib, complete | 52202100 | 96 00 00 | 96 02 74 |
| | 52202100A | 96 02 75 | |
| Fittings for extension I | 52202101 | 96 00 00 | 96 02 89 |
| | 52202101A | 96 02 90 | |
| Fittings for extension II | 52202102 | 96 00 00 | 96 02 89 |
| | 52202102A | 96 02 90 | |
| Fittings for extension III | 52202103 | 96 00 00 | 96 02 89 |
| | 52202103A | 96 02 90 | |
| Fittings for extension K4 | 52202104 | 96 00 00 | 96 00 04 |
| | 52202104A | 96 00 05 | 96 02 89 |
| | 52202104B | 96 02 90 | |
| Fittings for extension V | 52202105 | 96 00 00 | 96 00 03 |

| Description | Page | As from | To loader nr. |
|---|---|---|---|
| | 52202105A | 96 00 04 | 96 02 89 |
| | 52202105B | 96 02 90 | |
| Fittings for extension OK6 | 52202106 | 96 00 00 | 96 02 89 |
| | 52202106A | 96 02 90 | |
| Fittings for extension K6 | 52202107 | 96 00 00 | 96 02 89 |
| | 52202107A | 96 02 90 | |
| Fittings for extension VII | 52202108 | 96 00 00 | 96 02 89 |
| | 52202108A | 96 02 90 | |
| Fittings for extension VIII | 52202109 | 96 00 00 | 96 02 89 |
| | 52202109A | 96 02 90 | |
| Separate hook suspension, OK2 | 52202500 | 96 00 00 | 96 03 35 |
| | 52202500A | 96 03 36 | |
| Separate hook suspension, OK3 | 52202501 | 96 00 00 | 96 03 35 |
| | 52202501A | 96 03 36 | |
| Separate hook suspension, OK4 | 52202502 | 96 00 00 | 96 03 35 |
| | 52202502A | 96 03 36 | |
| Separate hook suspension, OK5 | 52202503 | 96 00 00 | 96 03 35 |
| | 52202503A | 96 03 36 | |
| Separate hook suspension, OK6 | 52202504 | 96 00 00 | 96 03 35 |
| | 52202504A | 96 03 36 | |
| Separate hook suspension, K7 | 52202506 | 96 00 00 | 96 03 35 |
| | 52202506A | 96 03 36 | |
| Separate hook suspension, K8 | 52202507 | 96 00 00 | 96 03 35 |
| | 52202507A | 96 03 36 | |
| Hook suspension | 52202520 | 96 00 00 | 96 03 35 |
| | 52202520A | 96 03 36 | |
| Stowing hook, complete | 52202550 | 96 00 00 | |
| Manual extensions OK 4 | 52202630 | 96 00 15 | |
| Manual extensions OK 5 | 52202640 | 96 00 21 | |

| Description | Page | As from | To loader nr. |
|---|---|---|---|
| Manual extensions K6 | 52202650 | 96 00 00 | |
| Manual extension + fittings OK 6 | 52202655 | 96 00 00 | |
| Manual extensions K7 | 52202660 | 96 00 00 | |
| Manual extensions K8 | 52202670 | 96 00 00 | |
| Hook suspension, F5-F11 | 52202680 | 96 00 00 | |
| Hook suspension for heavy lifting, manuel extension | 52202690 | | |
| **Cylinders** | | | |
| Boom cylinder, C250/180 x 837 | 52203010 | 96 00 00 | 96 02 40 |
| | 52203010A | 96 02 41 | 96 03 49 |
| | 52203010B | 96 03 50 | |
| Boom cylinder with LHV | 52203020 | 96 00 00 | 96 02 07 |
| | 52203020A | 96 02 08 | 96 02 52 |
| | 52203020B | 96 02 53 | 96 03 49 |
| | 52203020C | 96 03 50 | |
| Jib cylinder, C250/180 x 1122 | 52203050 | 96 00 00 | 96 03 49 |
| | 52203050A | 96 03 50 | |
| Jib cylinder with LHV | 52203060 | 96 00 00 | 96 03 49 |
| | 52203060A | 96 03 50 | |
| Extension cyl. I, C110/80h x 1850, optimised boom system OK2-OK6 | 52203100 | 96 00 00 | |
| Extension cyl. II, C110/80h x 1900, optimised boom system OK2-OK6 | 52203101 | 96 00 00 | |
| Extension cyl. III, C100/70h x 2000, optimised boom system OK3-OK6 | 52203102 | 96 00 00 | |
| Extension cyl. IV, C100/70h x 2100, optimised boom system OK4-OK6 | 52203103 | 96 00 00 | |
| Extension cyl. V-OK5, C90/60s x 2250, optimised boom system OK5 | 52203104 | 96 00 00 | 96 01 22 |
| Extension cyl. V-OK5, C90/60s x 2175, optimised boom system OK5 | 52203104A | 96 01 23 | |
| Extension cyl. V-OK6, C90/60h x 2175, optimised boom system OK6 | 52203105 | 96 00 00 | 96 03 68 |
| Extension cyl. V-OK6, C90/60h x 2175, optimised boom system OK6 | 52203105A | 96 03 69 | |
| Extension cyl. VI, C90/60s x 2250, optimised boom system OK6 | 52203106 | 96 00 00 | |
| Extension cylinder I, C110/80h x 1650, boom system K6-K8 | 52203110 | 96 00 00 | |
| Extension cylinder II, C110/80h x 1700, boom system K6-K8 | 52203111 | 96 00 00 | |
| Extension cylinder III, C100/70h x 1800, boom system K6-K8 | 52203112 | 96 00 00 | |

| Description | Page | As from | To loader nr. |
|---|---|---|---|
| Extension cylinder IV, C100/70h x 1900, boom system K6-K8 | 52203113 | 96 00 00 | |
| Extension cylinder V, C90/60h x 2050, boom system K6-K8 | 52203114 | 96 00 00 | |
| Extension cylinder VI, C90/60h x 2150, boom system K6-K8 | 52203115 | 96 00 00 | |
| Extension cylinder VII/VIII, C80/50h x 2300, boom system K6-K8 | 52203116 | 96 00 00 | |
| Stabilizer cylinder C110-536, type V incl. ball joint | 52203300 | 96 00 00 | 96 03 82 |
| Stabilizer cylinder C110-536, type V incl. fixed footplate | 52203305 | 96 00 00 | 96 03 30 |
| | 52203305A | 96 03 31 | 96 03 83 |
| Stabilizer cylinder with check valve, type V | 52203310 | 96 00 00 | 96 03 31 |
| | 52203310A | 96 03 32 | 96 03 82 |
| | 52203310B | 96 03 83 | |
| Stabilizer cylinder C125-600, type R incl. ball joint | 52203320 | 96 00 00 | 96 03 29 |
| Stabilizer cylinder C125-600, type R incl. fixed footplate | 52203325 | 96 00 00 | 96 03 29 |
| Stabilizer cylinder with check valve, type R | 52203330 | 96 00 00 | 96 01 99 |
| | 52203330A | 96 02 00 | 96 03 74 |
| | 52203330B | 96 03 75 | 96 04 02 |
| Stabilizer cylinder C125-600, R | 52203332 | 96 03 30 | |
| Stabilizer cylinder C125-600, R | 52203334 | 96 04 03 | |
| Swing-up stabilizer cylinder C125-xxx, type HR incl. ball joint | 52203340 | 96 00 00 | 96 03 29 |
| Stabilizer cylinder C125-600/500, HR | 52203342 | 96 03 30 | |
| Swing-up stabilizer cylinder C125-xxx, type HR incl. fixed footplate | 52203345 | 96 00 00 | 96 03 29 |
| Parts for swing-up stabilizer cylinder | 52203347 | 96 00 00 | |
| Stabilizer cylinder with check valve, type HR | 52203350 | 96 00 00 | 96 01 68 |
| | 52203350A | 96 01 69 | 96 03 82 |
| | 52203350B | 96 03 83 | |
| Stabilizer cylinder with check valve, type HR | 52203352 | 96 03 43 | 96 03 82 |
| | 52203352A | 96 03 83 | |
| Beam cylinder C45-2015, type DV+DR+DHR - 6325 | 52203400 | 96 00 00 | |
| Beam cylinder C45-1140, type DV+DR+DHR - 6725 | 52203410 | 96 00 00 | |
| Beam cylinder C40-1275, type DV+DR+DHR - 6725 | 52203420 | 96 00 00 | 96 03 73 |
| | 52203420A | 96 03 74 | |
| Beam cylinder C45-1465, type DV+DR+DHR - 8420 | 52203430 | 96 00 00 | |
| Beam cylinder C40-1600, type DV+DR+DHR - 8420 | 52203440 | 96 00 00 | 96 03 70 |

| Description | Page | As from | To loader nr. |
|---|---|---|---|
| | 52203440A | 96 03 71 | |
| **Stabilizer Beam** | | | |
| Stabilizer beam, type DV - 6325 | 52204010 | 96 00 00 | 96 03 82 |
| | 52204010A | 96 03 83 | |
| Stabilizer beam, type DV - 6725 | 52204030 | 96 00 00 | 96 03 82 |
| | 52204030A | 96 03 83 | |
| Stabilizer beam, type DV - 8420 | 52204035 | 96 00 00 | 96 03 82 |
| | 52204035A | 96 03 83 | |
| Stabilizer beam, type DR - 6325 | 52204037 | 96 00 00 | 96 03 82 |
| | 52204037A | 96 03 83 | |
| Stabilizer beam, type DR - 6725 | 52204038 | 96 00 00 | 96 03 82 |
| | 52204038A | 96 03 83 | |
| Stabilizer beam, type DR - 8420 | 52204040 | 96 00 00 | 96 03 82 |
| | 52204040A | 96 03 83 | |
| Stabilizer beam - swing-up legs, type DHR - 6325 | 52204060 | 96 00 00 | 96 03 82 |
| | 52204060A | 96 03 83 | |
| Stabilizer beam - swing-up legs, type DHR - 6725 | 52204070 | 96 00 00 | 96 03 82 |
| | 52204070A | 96 03 83 | |
| Stabilizer beam - swing-up legs, type DHR - 8420 | 52204080 | 96 00 00 | 96 03 82 |
| | 52204080A | 96 03 83 | |
| Safety lock DV, DR, DHR | 52204200 | 96 00 00 | |
| **Hydraulic Systems, Valve blocks** | | | |
| Valve block, 1 section (extra RC function) | 52205005 | 96 00 00 | 96 02 07 |
| | 52205005A | 96 02 08 | |
| Valve block, 2 sections P1 | 52205010 | 96 00 00 | 96 02 07 |
| Valve block, 2 sections P2 | 52205015 | 96 00 00 | 96 02 07 |
| Valve block, 3 sections P1 | 52205020 | 96 00 00 | 96 02 07 |
| Valve block, 3 sections P2 | 52205025 | 96 00 00 | 96 02 07 |
| Valve block, 4 sections P2 | 52205030 | 96 00 00 | 96 02 07 |
| Valve block, 2-7 sections | 52205050 | 96 02 08 | 96 02 52 |

| Description | Page | As from | To loader nr. |
|---|---|---|---|
| | 52205050A | 96 02 53 | |
| Stabilizer valve block, 8 functions | 52205100 | 96 00 00 | |
| Stabilizer valve block, RC | 52205105 | 96 02 08 | |
| Stabilizer valve block, 5 available func. | 52205110 | 96 00 00 | 96 02 07 |
| | 52205110A | 96 02 08 | 96 03 82 |
| | 52205110B | 96 03 83 | |
| Stabilizer valve block, 6 available func. | 52205120 | 96 00 00 | 96 02 07 |
| | 52205120A | 96 02 08 | 96 03 82 |
| | 52205120B | 96 03 83 | |
| Stabilizer valve block, 7 available func. | 52205130 | 96 00 00 | 96 02 07 |
| | 52205130A | 96 02 08 | 96 03 82 |
| | 52205130B | 96 03 83 | |
| Stabilizer valve block, 8 available func. | 52205140 | 96 00 00 | 96 02 07 |
| | 52205140A | 96 02 08 | 96 03 82 |
| | 52205140B | 96 03 83 | |
| Extra RC function on base | 52205145 | 96 00 00 | 96 00 64 |
| | 52205145A | 96 00 65 | 96 02 07 |
| | 52205145B | 96 02 08 | 96 03 82 |
| | 52205145C | 96 03 83 | |
| **Hydraulic Systems, Pump and Return Hoses** | | | |
| Brackets and protection plates | 52205150 | 96 00 00 | 96 00 49 |
| | 52205150A | 96 00 50 | 96 00 53 |
| | 52205150B | 96 00 54 | 96 02 07 |
| | 52205150C | 96 02 08 | 96 03 82 |
| | 52205150D | 96 03 83 | |
| Hydr. system, pump and return hoses, 1 circuit + fixed pump | 52205260 | 96 00 00 | 96 00 49 |
| | 52205260A | 96 00 50 | 96 00 53 |
| | 52205260B | 96 00 54 | 96 01 49 |
| | 52205260C | 96 01 50 | 96 02 07 |
| | 52205260D | 96 02 08 | 96 03 82 |

| Description | Page | As from | To loader nr. |
|---|---|---|---|
| | 52205260E | 96 03 83 | |
| Hydr. system, pump and return hoses, 2 circuits + fixed pump | 52205270 | 96 00 00 | 96 00 49 |
| | 52205270A | 96 00 50 | 96 00 53 |
| | 52205270B | 96 00 54 | 96 01 50 |
| | 52205270C | 96 01 50 | 96 02 69 |
| | 52205270D | 96 02 70 | 96 03 82 |
| | 52205270E | 96 03 83 | |
| Hydr. system, pump and return hoses, 1 circuit + variable pump | 52205280 | 96 00 00 | 96 00 49 |
| | 52205280A | 96 00 50 | 96 00 53 |
| | 52205280B | 96 00 54 | 96 01 49 |
| | 52205280C | 96 01 50 | 96 02 07 |
| | 52205280D | 96 02 08 | 96 03 82 |
| | 52205280E | 96 03 83 | |
| Hydr. system, pump and return hoses, 2 circuits + variable pump | 52205290 | 96 00 00 | 96 00 49 |
| | 52205290A | 96 00 50 | 96 00 53 |
| | 52205290B | 96 00 54 | 96 01 49 |
| | 52205290C | 96 01 50 | 96 02 69 |
| | 52205290D | 96 02 70 | 96 03 82 |
| | 52205290E | 96 03 83 | |
| **Hydraulic Systems, Slewing, Boom, Jib and Extensions** | | | |
| Tank, complete | 52205320 | 96 00 00 | 96 01 68 |
| | 52205320A | 96 01 69 | |
| Fittings for tank | 52205330 | 96 00 00 | |
| Hose kit for tank | 52205340 | 96 00 00 | 96 03 82 |
| | 52205340A | 96 03 83 | |
| Hydraulic system, planetary gear | 52205400 | 96 00 00 | |
| Hose clamp | 52205450 | 96 00 00 | 96 01 57 |
| | 52205450A | 96 01 58 | |
| Hydraulic system, boom, jib and ext. | 52205490 | 96 00 00 | 96 02 52 |

| Description | Page | As from | To loader nr. |
|---|---|---|---|
| | 52205490A | 96 02 53 | |
| **Hydraulic Systems, Extension Cylinders** | | | |
| Hydraulic system, regeneration | 52205500 | 96 00 00 | |
| Hydraulic system, extension cylinder, I | 52205501 | 96 00 00 | |
| Hydraulic system, extension cylinder, II | 52205502 | 96 00 00 | |
| Hydraulic system, extension cylinder, III | 52205503 | 96 00 00 | |
| Hydraulic system, extension cylinder, IV | 52205504 | 96 00 00 | |
| Hydraulic system, extension cylinder, V | 52205505 | 96 00 00 | |
| Hydraulic system, extension cylinder, VI - optimised boom system OK6 | 52205506 | 96 00 00 | |
| | 52205506A | | |
| Hydraulic system, extension cylinder, VI - boom system K6-K8 | 52205507 | 96 00 00 | |
| Hydraulic system, extension cylinder, VII | 52205508 | 96 00 00 | |
| Hydraulic system, extension cylinder, VIII | 52205509 | 96 00 00 | |
| **Hydraulic Systems, Stabilizer Beams** | | | |
| Hydraulic system, stabilizer beam, type DV+DR+DHR - 6325 | 52205600 | 96 00 00 | 96 03 82 |
| | 52205600A | 96 03 83 | |
| Hydraulic system, stabilizer beam, type DV+DR+DHR - 6725 | 52205620 | 96 00 00 | 96 02 56 |
| | 52205620A | 96 02 57 | 96 03 82 |
| | 52205620B | 96 03 83 | |
| Hydraulic system, stabilizer beam, type DV+DR+DHR - 8420 | 52205630 | 96 00 00 | 96 02 56 |
| | 52205630A | 96 02 57 | 96 03 82 |
| | 52205630B | 96 03 83 | |
| Hydraulic system, stabilizers, type DV+DR+DHR | 52205660 | 96 00 00 | 96 02 07 |
| | 52205660A | 96 02 08 | 96 02 47 |
| | 52205660B | 96 02 48 | 96 03 82 |
| | 52205660C | 96 03 83 | |
| Manual stabilizer operation | 52205700 | 96 02 08 | |
| **Labels and Mounting Kits** | | | |
| Labels | 52206010 | 96 00 00 | 96 00 xx |
| | 52206010A | 96 00 xx | 96 02 07 |

| Description | Page | As from | To loader nr. |
|---|---|---|---|
| | 52206010B | 96 02 08 | 96 02 40 |
| | 52206010C | 96 02 41 | |
| Mounting kit, standard. Chassis height: 230 - 490 mm. | 52206100 | 96 00 00 | 96 02 22 |
| Mounting kit, HMF-subframe | 52206110 | 96 00 00 | 96 02 22 |
| Mounting kit, long. Chassis height: 390 - 590 mm. | 52206120 | 96 00 00 | 96 02 22 |
| Mounting kit, long | 52206130 | 96 02 23 | |
| **Accessories, Extra Valves (Hose reels)** | | | |
| Hydraulic system, extra valves, without FJ and winch | 52207150 | 96 00 00 | 96 00 86 |
| | 52207150A | 96 00 87 | |
| Hydraulic system, extra valves, without FJ, with winch | 52207151 | 96 00 00 | 96 00 86 |
| | 52207151A | 96 00 87 | 96 01 94 |
| | 52207151B | 96 01 95 | |
| Hydraulic system, extra valves, with FJ | 52207152 | 96 00 00 | 96 00 86 |
| | 52207152A | 96 00 87 | 96 02 51 |
| | 52207152B | 96 02 52 | |
| Extra valves, OK5-2, Hose reels and quick-release couplings | 52207163 | 96 00 00 | |
| Extra valves, OK6-2, Hose reels and quick-release couplings | 52207164 | 96 00 00 | |
| Extra valves, K6-2, Hose reels and quick-release couplings | 52207165 | 96 00 00 | |
| Extra valves, K8-2, Hose reels and quick-release couplings | 52207167 | 96 00 00 | |
| Extra valves, OK5/OK6-2, Hose reels and multi-coupling | 52207173 | 96 00 00 | |
| Extra valves, K6-2, Hose reels and multi-coupling | 52207175 | 96 00 00 | |
| Extra valves, K8-2, Hose reels and multi-coupling | 52207177 | 96 00 00 | |
| **Accessories, Extra valves (hose reel and internal hose routing)** | | | |
| Hydraulic system, internal hose routing - 1 EXV | 52207180 | 96 00 00 | 96 02 74 |
| | 52207180A | 96 02 75 | |
| Hydraulic system, internal hose routing - 2 EXV | 52207181 | 96 00 00 | 96 02 74 |
| | 52207181A | 96 02 75 | |
| Extra valves, OK2, Internal hose routing | 52207191 | 96 00 00 | 96 02 93 |
| | 52207191A | 96 02 94 | |
| Extra valves, OK3, Internal hose routing | 52207192 | 96 00 00 | 96 02 93 |

| Description | Page | As from | To loader nr. |
|---|---|---|---|
| | 52207192A | 96 02 94 | |
| Extra valves, OK4, Internal hose routing | 52207193 | 96 00 00 | 96 02 93 |
| | 52207193A | 96 02 94 | |
| Extra valves, OK5, Internal hose routing | 52207194 | 96 00 00 | 96 02 93 |
| | 52207194A | 96 02 94 | |
| Extra valves, K6, Internal hose routing | 52207195 | 96 00 00 | 96 02 93 |
| | 52207195A | 96 02 94 | |
| **Accessories, Extra Valves (Hose guides)** | | | |
| Extra valves, OK2-2, Hose guides | 52207251 | 96 00 00 | |
| Extra valves, OK3-2, Hose guides | 52207252 | 96 00 00 | |
| Extra valves, OK4-2, Hose guides | 52207253 | 96 00 00 | |
| Extra valves, OK5-2, Hose guides | 52207254 | 96 00 00 | |
| Extra valves, OK6-2, Hose guides | 52207255 | 96 00 00 | |
| Multi-coupling OK4, hose guides | 52207273 | 96 00 00 | |
| Multi-coupling OK5, hose guides | 52207274 | 96 00 00 | |
| Multi-coupling OK6, hose guides | 52207275 | 96 00 00 | |
| **Accessories, Miscellaneous** | | | |
| External hydraulic tank, 320 L | 52207320 | 96 00 00 | 96 01 68 |
| | 52207320A | 96 01 69 | |
| External hydraulic tank, 420 L | 52207330 | 96 00 00 | 96 01 68 |
| | 52207330A | 96 01 69 | |
| 2-stage LMB | 52207500 | 96 00 50 | 96 02 57 |
| | 52207500B | 96 02 58 | |
| Calibrate Bypass Sensor System | 52207510 | 96 00 50 | |
| Height Indicator | 52207650 | 96 00 00 | 96 02 13 |
| | 52207650A | 96 02 14 | |
| Shield at the end of the jib | 52207700 | 96 00 00 | 96 00 xx |
| | 52207700A | 96 00 xx | 96 02 93 |

| Description | Page | As from | To loader nr. |
|---|---|---|---|
| | 52207700B | 96 02 94 | |
| Light tower | 52207800 | 96 00 00 | 96 02 07 |
| | 52207800A | 96 02 08 | |
| **Top seat, TS** | | | |
| Parts for top seat | 52211010 | 96 00 00 | |
| Joystick brackets, complete | 52211020 | 96 00 00 | |
| 1st valve block, dual circuit, TS | 52211110 | 96 00 00 | |
| 2nd valve block, dual circuit, TS | 52211111 | 96 00 00 | |
| Hydraulic System, TS, Pump and Tank | 52211200 | 96 00 00 | |
| **Accessories, Winch** | | | |
| Hydraulic system, winch | 52213005A | 96 01 95 | |
| Hydraulic system, winch with FJ | 52213007 | 96 00 00 | 96 01 94 |
| | 52213007A | 96 01 95 | |
| Stowing bracket | 52213010 | 96 00 00 | 96 00 74 |
| | 52213010A | 96 00 75 | 96 01 94 |
| Guide Roller | 52213030 | 96 00 00 | 96 01 94 |
| Winch, Brevini 2500 | 52213050 | 96 00 00 | 96 01 94 |
| Winch, cpl. | 52213050A | 96 01 95 | |
| Safety system | 52213100 | 96 00 00 | 96 00 74 |
| | 52213100A | 96 00 75 | 96 01 94 |
| Weighing cell | 52213110 | 96 01 95 | |
| Cable stop | 52213120 | 96 00 00 | |
| Wire roller guide, on extension K3 for K5, K6 versions | 52213150 | 96 00 00 | |
| Wire roller guide, on extension K4 for K7, K8 versions | 52213160 | 96 00 00 | |
| Wire sheave | 52213200 | 96 00 00 | 96 00 71 |
| | 52213200A | 96 00 72 | |
| Wire pulley | 52213220 | 96 00 00 | |
| Snatch block | 52213250 | 96 00 00 | 96 00 71 |
| | 52213250A | 96 00 72 | |

| Description | Page | As from | To loader nr. |
|---|---|---|---|
| Swivel hook, 3,2 tonnes | 52213300 | 96 00 00 | |
| Swing-up winch, cpl. | 52213400 | 96 00 00 | 96 00 74 |
| | 52213400A | 96 00 75 | 96 01 94 |
| | 52213400B | 96 01 95 | |
| Slewing cylinder, C50-102 | 52213430 | 96 00 00 | 96 01 94 |
| | 52213430A | 96 01 95 | |
| Sliding wire pulley | 52213450 | 96 00 00 | 96 00 25 |
| | 52213450A | 96 00 26 | |
| Wire sheave, WS12, complete | 52213500 | 96 00 00 | |
| Wire roller guide, FJ | 52213550 | 96 00 00 | |
| **Personnel basket.** | | | |
| Emergency pump | 52215050A | 96 00 xx | |
| Pressure gauge with hose | 52215100 | 96 00 00 | |
| Fittings for OK6 | 52215150 | 96 00 00 | |
| Hydr. parts personnel basket | 52215210 | 96 00 00 | |
| Pres. transducer kit, basket | 52215220 | 96 00 00 | |
| Pipe, walform OK5-K8 | 52216100 | 96 00 00 | |
| **Electronic parts, in general** | | | |
| CAN termination, RCL53xx | 52220150 | 96 00 01 | |
| 12V converter | 52220160 | 96 00 01 | |
| BEHEW | 52220300 | 96 00 01 | |
| CYL | 52220310 | 96 00 01 | |
| CYBEL | 52220320 | 96 00 01 | |
| PAS | 52220330 | 96 00 01 | |
| CYW | 52220340A | 96 00 01 | |
| Alarm flash | 52220350 | 96 00 01 | |
| Temperature monitoring without oil cooler | 52220410 | 96 00 01 | |
| Temperature monitoring for oil cooler | 52220420 | 96 00 01 | |
| Spotlight, boom | 52220430 | 96 00 01 | |
| Spotlight, jib | 52220440A | 96 00 01 | |
| Spotlight, radio remote controlled | 52220450 | 96 00 01 | |
| **Electronic parts, RC crane** | | | |
| Winch | 52222100 | 96 00 01 | |

| Description | Page | As from | To loader nr. |
|---|---|---|---|
| Basic electronic parts, base | 52222200 | 96 00 01 | |
| Basic electronic parts, column | 52222210 | 96 00 01 | |
| Terminal block, Box2, column | 52222220 | 96 00 01 | |
| Termination, PVED | 52222230 | 96 00 01 | |
| 2-stage LMB, 1 | 52222240A | 96 00 01 | |
| 2-stage LMB, 2 | 52222250 | 96 00 01 | |
| CBS, 1 | 52222260A | 96 00 01 | |
| CBS, 2 | 52222270 | 96 00 01 | |
| EVS | 52222290C | 96 00 01 | |
| Termination, G2 | 52222320 | 96 00 01 | |
| Stabilizer operation via RC, 16 plugs | 52222390A | 96 00 01 | |
| Electronic parts, swing-up stabilizer leg 3 o'clock | 52222420 | 96 00 01 | |
| Electronic parts, swing-up stabilizer leg 9 o'clock | 52222430 | 96 00 01 | |
| Extra RC-function on the base | 52222440 | 96 00 01 | |
| Winch, electric parts | 52222450A | 96 00 01 | |
| Electronic parts, swing-up winch | 52222460 | 96 00 01 | |
| Fly-Jib supply Column | 52222470A | 96 00 01 | |
| FJ supply, hose guides | 52222480 | 96 00 01 | |
| Cable drum, Fly-Jib power supply | 52222500 | 96 00 01 | |
| EJB5385, installation | 52222520 | 96 00 01 | |
| Light tower | 52222530B | 96 00 01 | 96 03 58 |
| | 52222530C | 96 03 59 | |

# ODIN

Intern ref.: 6300010

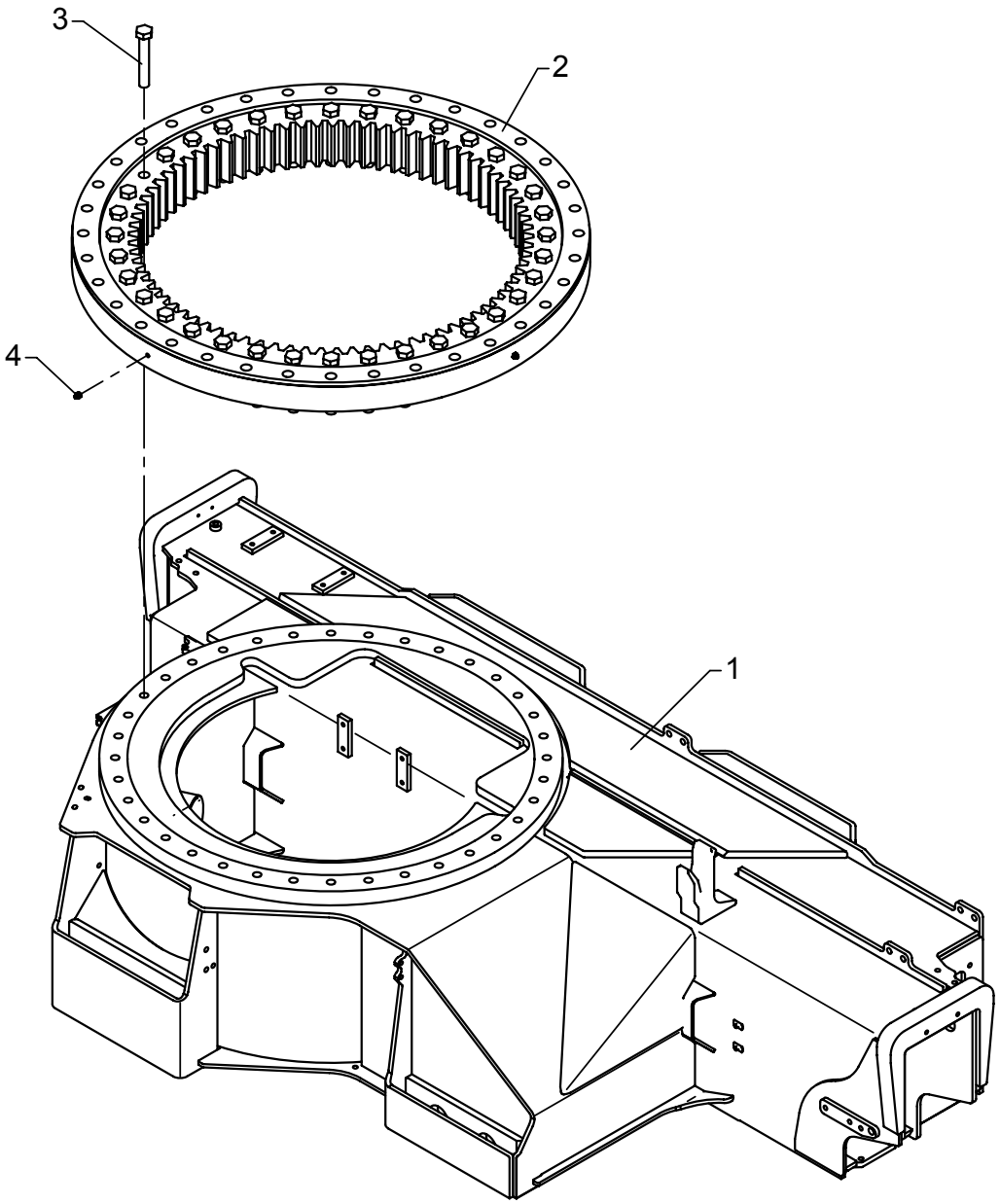

# Base with turntable

As from / To loader no.: 96 00 00 / 96 02 63
Created: 06.10.2003
Modified: 12.01.2011

| Item no. | Qty. | Part no. | Description | Remarks |
|---|---|---|---|---|
| 1 | 1 | 6300001 | Base | |
| 2 | 1 | 24121 | Turntable | |
| 3 | 36 | 32330 | Steel bolt | M20 x 125 |
| 4 | 4 | 31337 | Lubricator | M10 x 1 |
| | | 32460 | Kit of bolts | * |

*: Incl. bolts for the external ring
Please note! See the installation procedure for the turntable

# 6020K

Intern ref.: 6300010

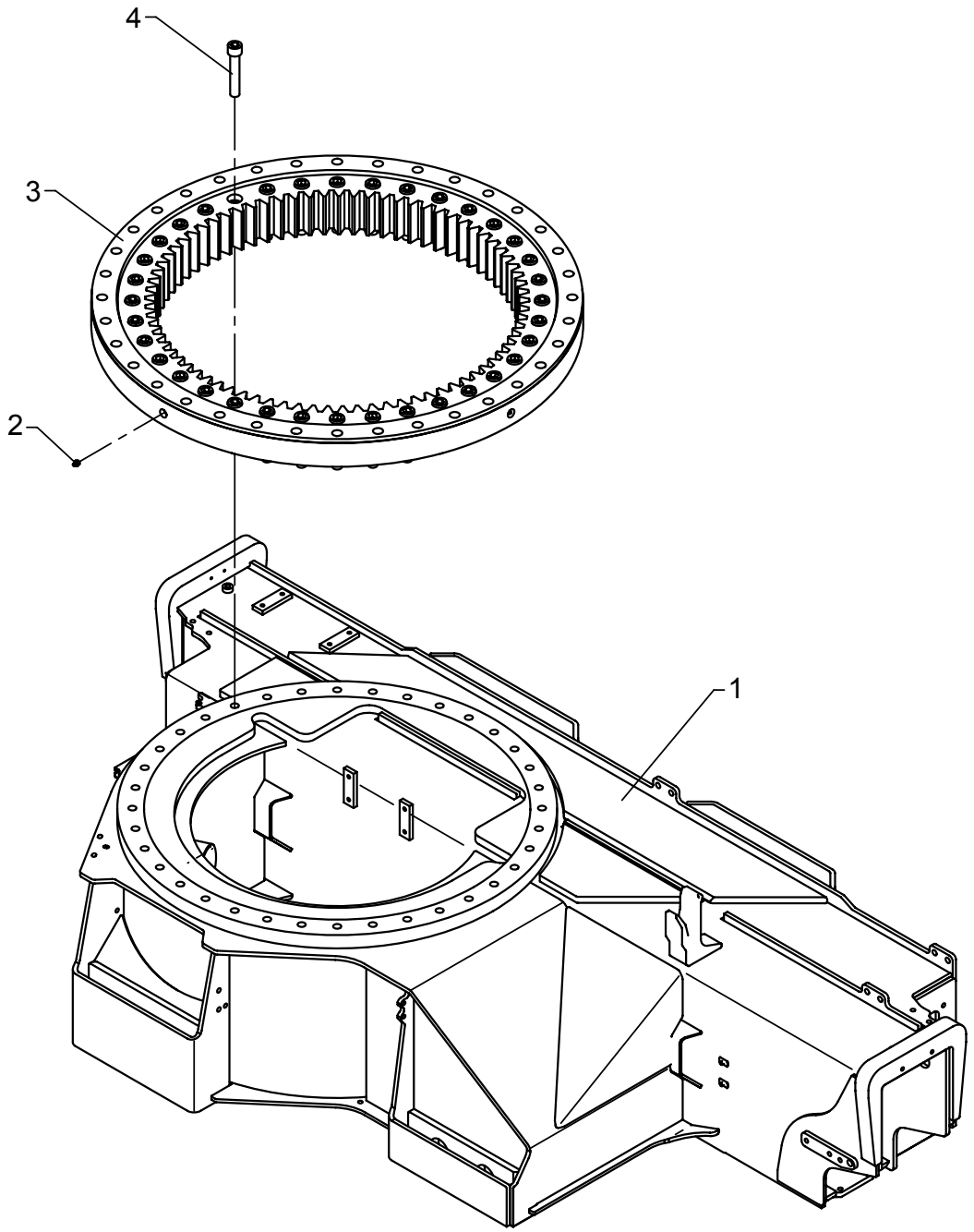

# Base with turntable

As from / To loader no.: 96 02 64 / 96 03 82
Created: 12.01.2011
Modified: 25.02.2015

| Item no. | Qty. | Part no. | Description | Remarks |
|---|---|---|---|---|
| 1 | 1 | 6300001 | Base | |
| 2 | 4 | 31337 | Lubricator | M10 x 1 |
| 3 | 1 | 24132 | Turntable, painted | |
| 4 | 36 | 32504 | Screw | MC20 x 110 |
| | | 32501 | Kit for bolts | * |

*: Incl. bolts for the external ring
Please note! See the installation procedure for the turntable

# 6020K

Intern ref.: 6300010

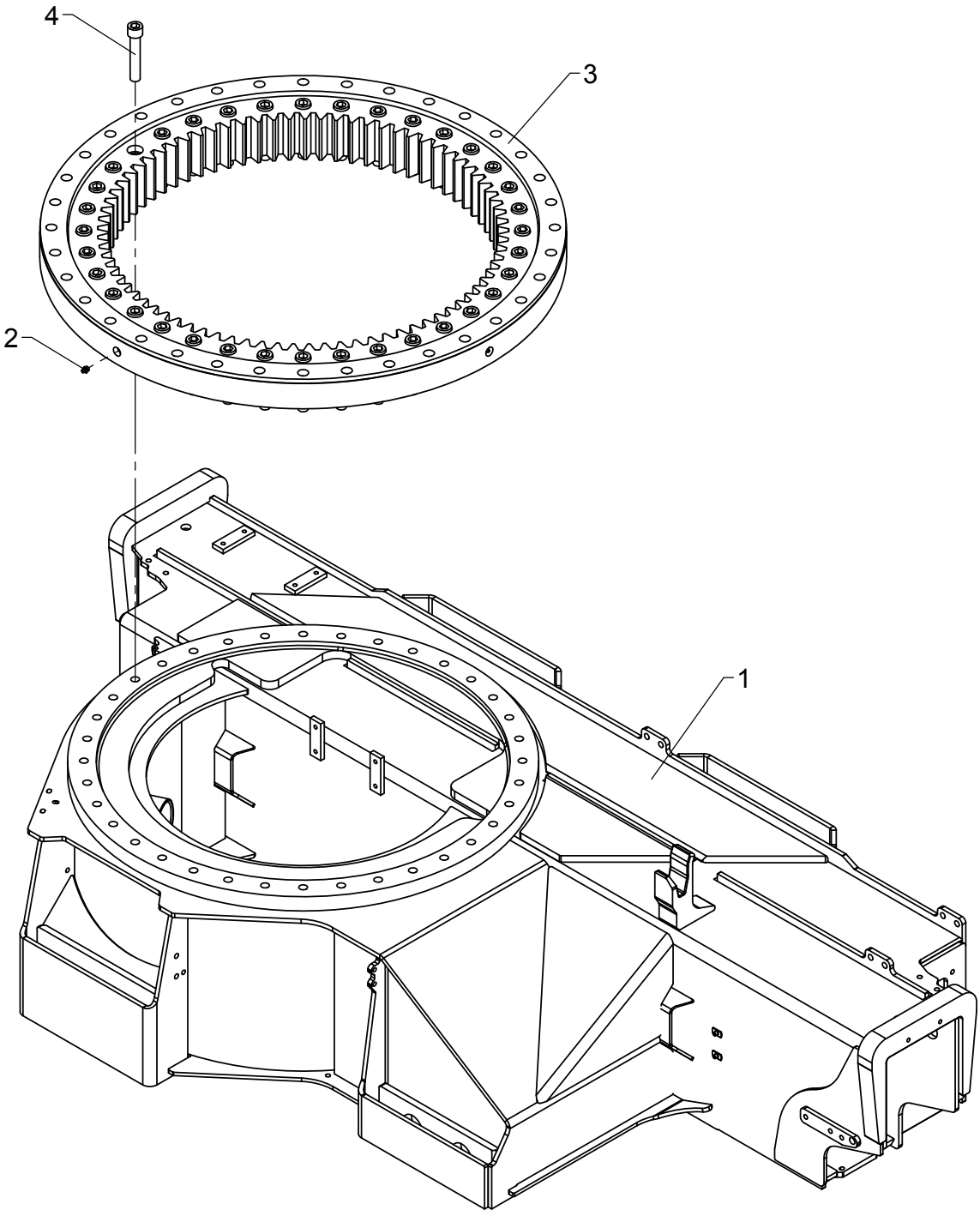

# Base with turntable

As from / To loader no.: 96 03 83
Created: 22.01.2015
Modified:

| Item no. | Qty. | Part no. | Description | Remarks |
|---|---|---|---|---|
| 1 | 1 | 6301431 | Base | |
| 2 | 4 | 31337 | Lubricator | M10 x 1 |
| 3 | 1 | 50190 | Turntable, painted | |
| 4 | 36 | 32504 | Screw | MC20 x 110 |
| | | 32501 | Kit of bolts | * |

* Incl. bolts for the external ring
Please note! See the installation procedure for the turntable

# ODIN

Intern ref.: 6300050

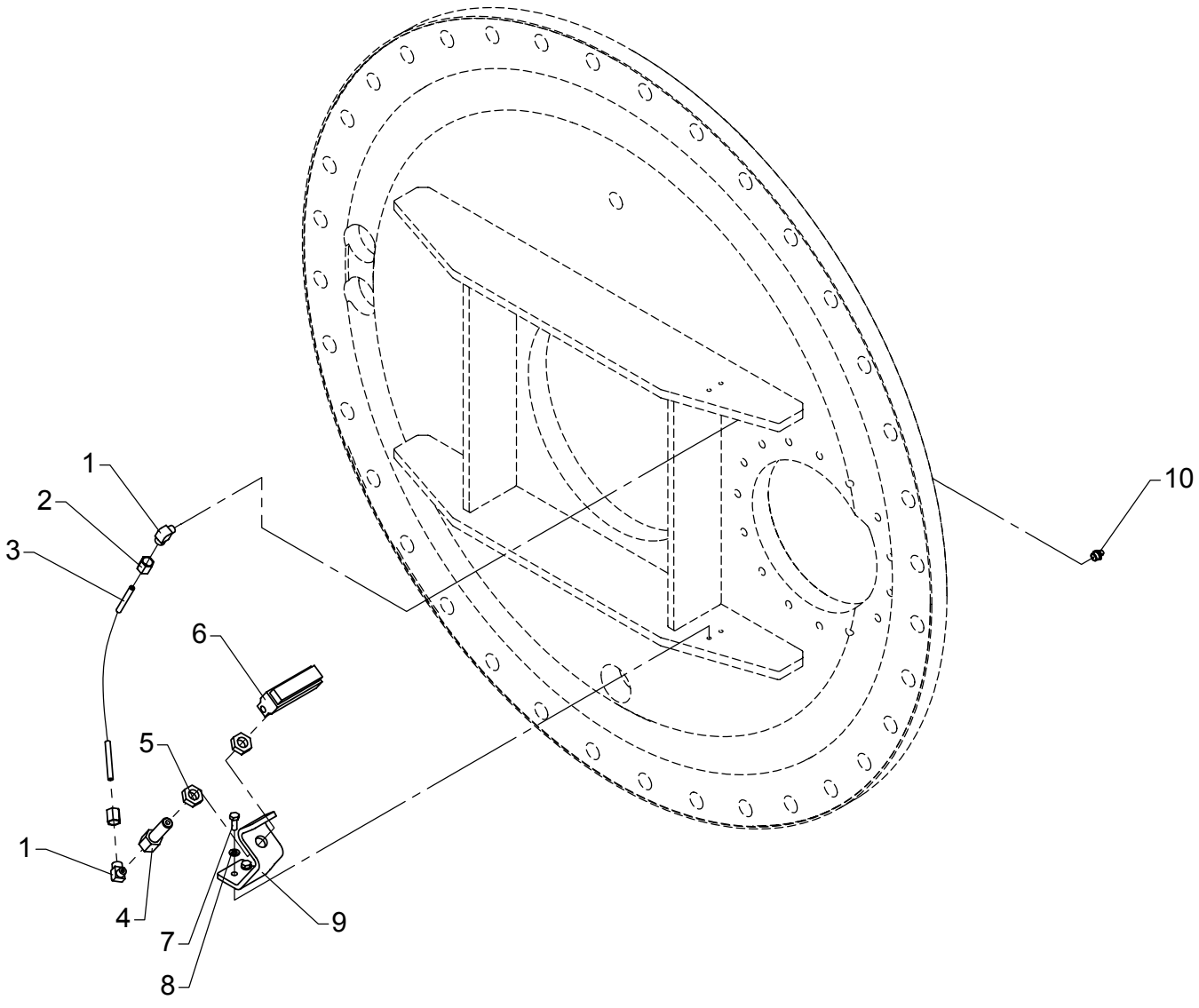


Loctite 243

# Lubricating brush for planetary gear

As from / To loader no.: 96 00 00 /
Created: 03.10.2003
Modified:

| Item no. | Qty. | Part no. | Description | Remarks |
|---|---|---|---|---|
| 1 | 2 | 26186 | Elbow connection | WEV 6 LRK |
| 2 | 2 | 26164 | Coupling nut | M6 L |
| 3 | 1 | 62821 | Nylon pipe | 6 x 1,5 x 300 mm |
| 4 | 1 | 6294614 | Nipple | |
| 5 | 2 | 25354 | Counter nut | 1/4" |
| 6 | 1 | 31395 | Brush | |
| 7 | 2 | 30112 | Set screw, stainless | M6 x 16 |
| 8 | 2 | 31154 | Spring washer, stainless | 6 mm |
| 9 | 1 | 6300079 | Bracket for lubricating brush | |
| 10 | 1 | 31318 | Lubricator | 1/8" RG |

# ODIN

Intern ref.: 6300060

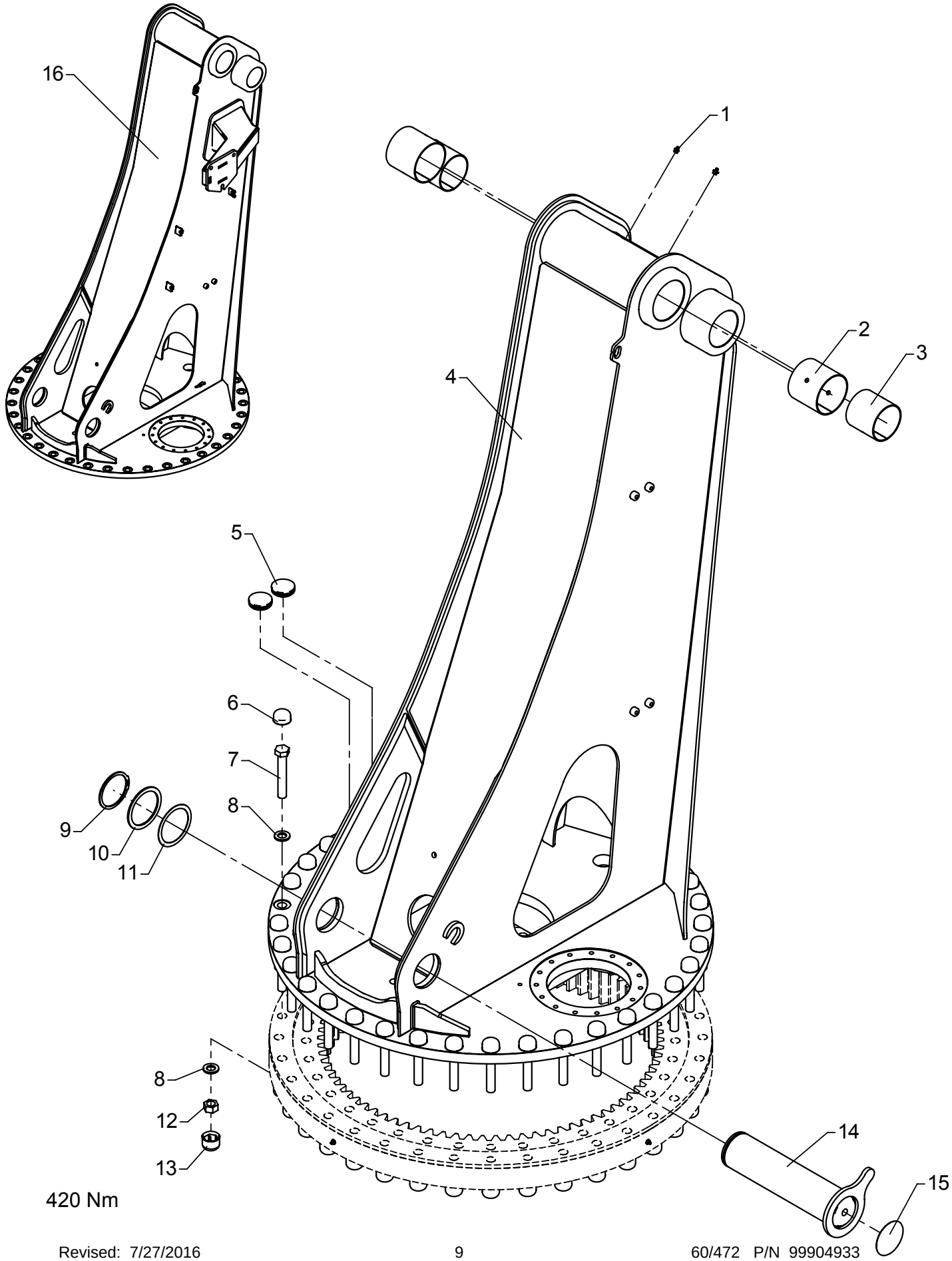

# Column, complete

As from / To loader no.: 96 00 00 /
Created: 03.10.2003
Modified: 07.07.2005

| Item no. | Qty. | Part no. | Description | Remarks |
|---|---|---|---|---|
| 1 | 2 | 31318 | Lubricator | 1/8" RG |
| 2 | 2 | 23927 | Bushing | PM 10095 DX |
| 3 | 2 | 23922 | Bushing | PM 9090 DX |
| 4 | 1 | 6300051 | Column | |
| 5 | 2 | 64344 | Plastic plug | |
| 6 | 36 | 63413 | Cover for nut | |
| 7 | 36 | 32330 | Steel bolt | M20 x 125 |
| 8 | 72 | 31761 | | 37 x 21 x 4 |
| 9 | 1 | 33241 | Circlip | 90U |
| 10 | 1 | 33232 | Back ring | SS 90 x 110 x 3,5 |
| 11 | 1 | 33245 | Washer | PS 90 x 110 x 1,0 |
| 12 | 36 | 32333 | Nut | M20 |
| 13 | 36 | 64358 | Cover for nut | |
| 14 | 1 | 6300226 | Bolt | |
| 15 | 1 | 63425 | Plug | |
| 16 | 1 | 8512853 | Column incl. TS-bracket | |
| | | 6300040 | Column with bushings | |
| | | 32460 | Kit of bolts | * |

*: Incl. pos. 6, 7, 8, 12, 13 and bolts for the internal ring
Please note! See the installation procedure for the turntable

# 6020K

Intern ref.: 6300060

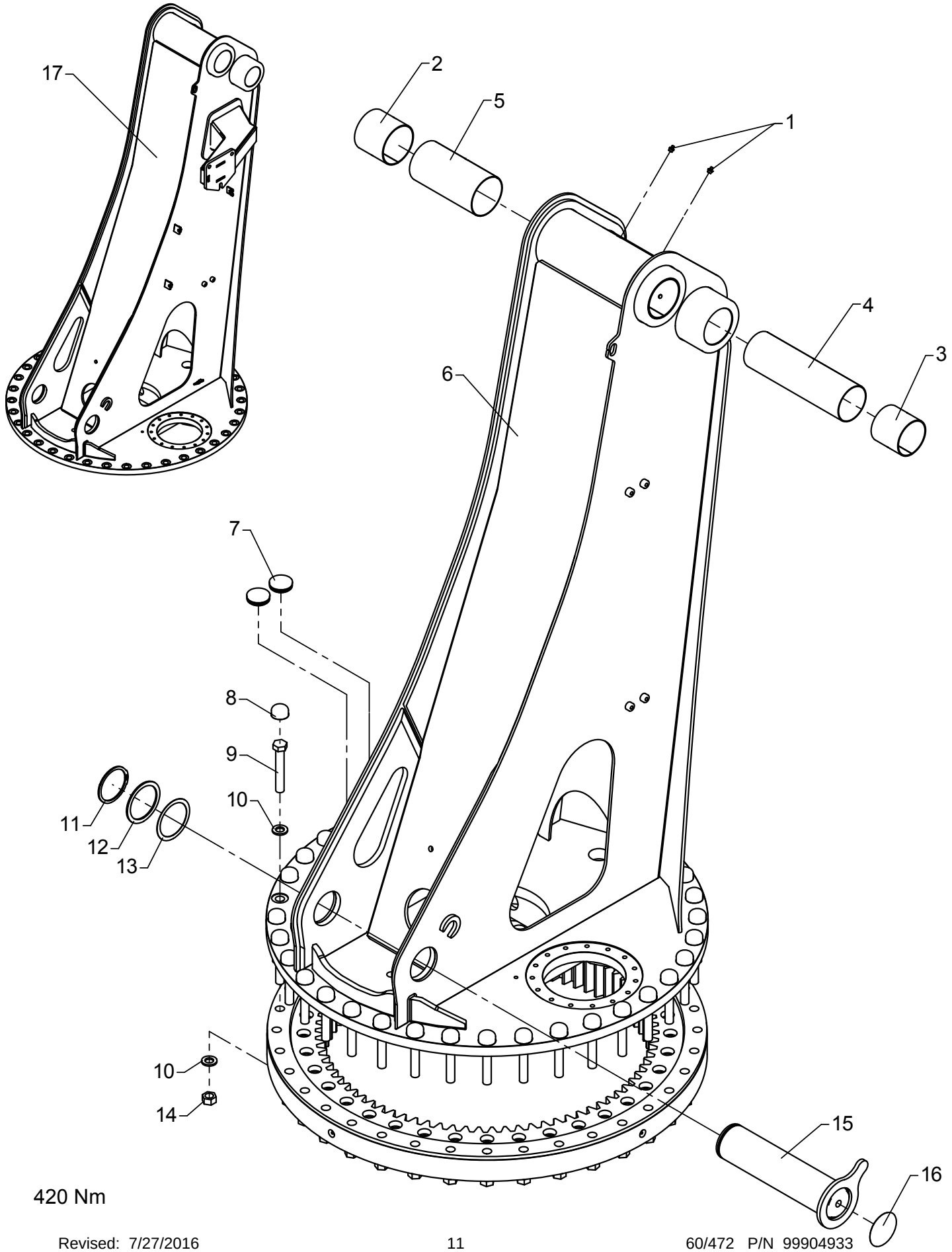


420 Nm

# Column, complete

As from / To loader no.: 96 02 64/
Created: 20.01.2011
Modified: 06.03.2013

| Item no. | Qty. | Part no. | Description | Remarks |
|---|---|---|---|---|
| 1 | 2 | 31318 | Lubricator | 1/8" RG |
| 2 | 2 | 23927 | Bushing | PM 10095 DX |
| 3 | 2 | 23922 | Bushing | PM 9090 DX |
| 4 | 1 | 68044 | Plate | |
| 5 | 1 | 68043 | Plate | |
| 6 | 1 | 6300051 | Column | |
| 7 | 2 | 64344 | Plastic plug | |
| 8 | 36 | 63413 | Cover for nut | |
| 9 | 36 | 32330 | Steel bolt | M20 x 125 |
| 10 | 72 | 31761 | Washer | 20 mm |
| 11 | 1 | 33241 | Circlip | 90U |
| 12 | 1 | 33232 | Back ring | SS 90 x 110 x 3,5 |
| 13 | 1 | 33245 | Washer | PS 90 x 110 x 1,0 |
| 14 | 36 | 32333 | Nut | M20 |
| 15 | 1 | 6300226 | Bolt | |
| 16 | 1 | 63425 | Plug | |
| 17 | 1 | 8512853 | Column incl. TS-bracket | |
| | | 6300040 | Column with bushings | |
| | | 32501 | Kit of bolts | * |

*: Incl. pos. 8, 9, 10, 14 and bolts for the internal ring
Please note! See the installation procedure for the turntable

# ODIN

Intern ref.: 6300030

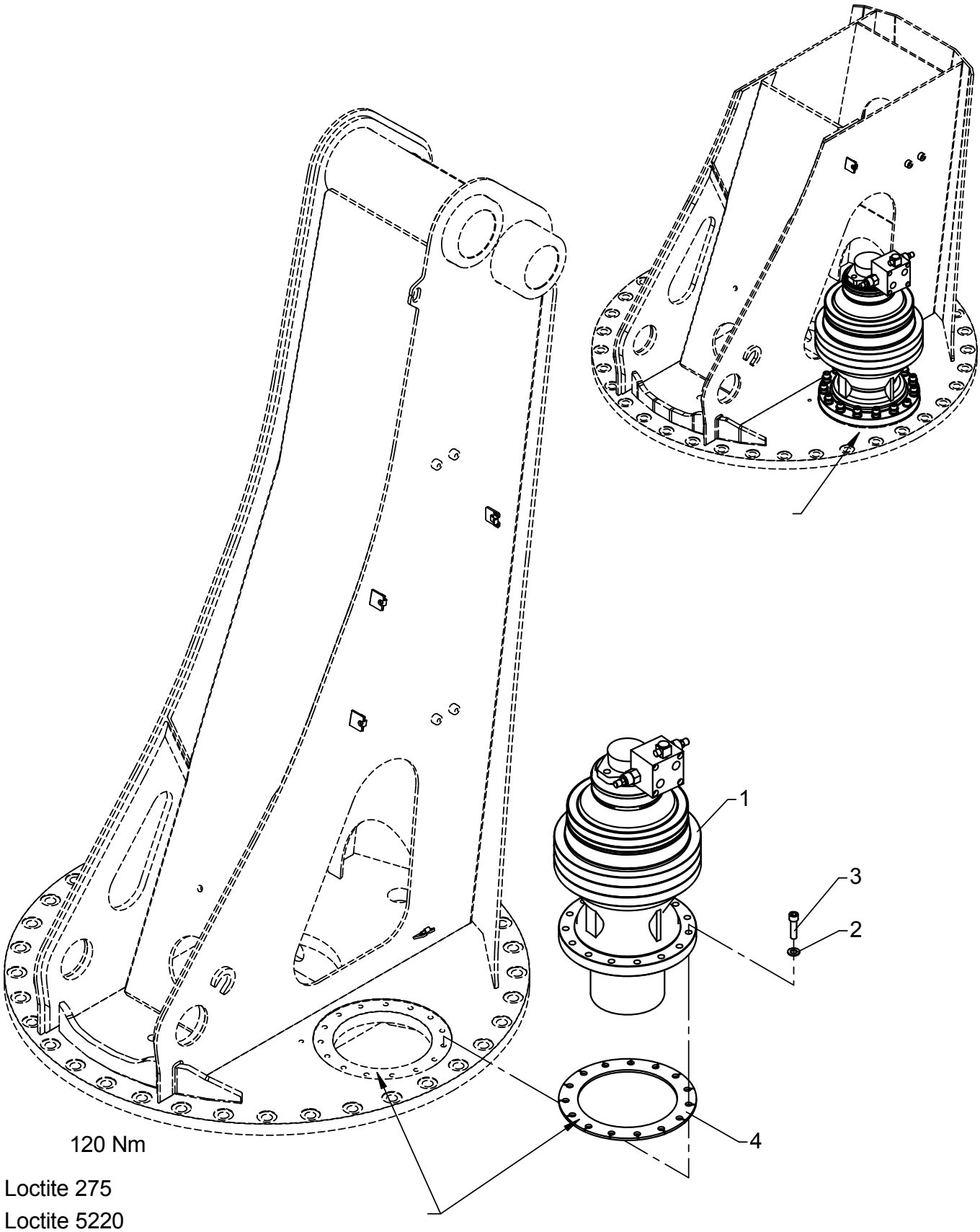

# Planetary gear

As from / To loader no.: 96 00 00 / 96 03 19
Created: 03.10.2003
Modified: 06.03.2013

| Item no. | Qty. | Part no. | Description | Remarks |
|---|---|---|---|---|
| 1 | 1 | 58721 | Planetary gear | |
| | | 49205 | Piping for planetary gear | |
| | | 49222 | Motor for planetary gear | |
| | | 58937 | Seal kit, gear | |
| | | 58938 | Seal kit, braking unit | |
| | | 58939 | Seal kit, motor unit | |
| 2 | 15 | 31131 | Washer | 12 mm |
| 3 | 15 | 30428 | Sockethead screw | MC12 x 45 |
| 4 | 1 | 6300776 | Division plate, planetary gear | |

# ODIN

Intern ref.: 6300030

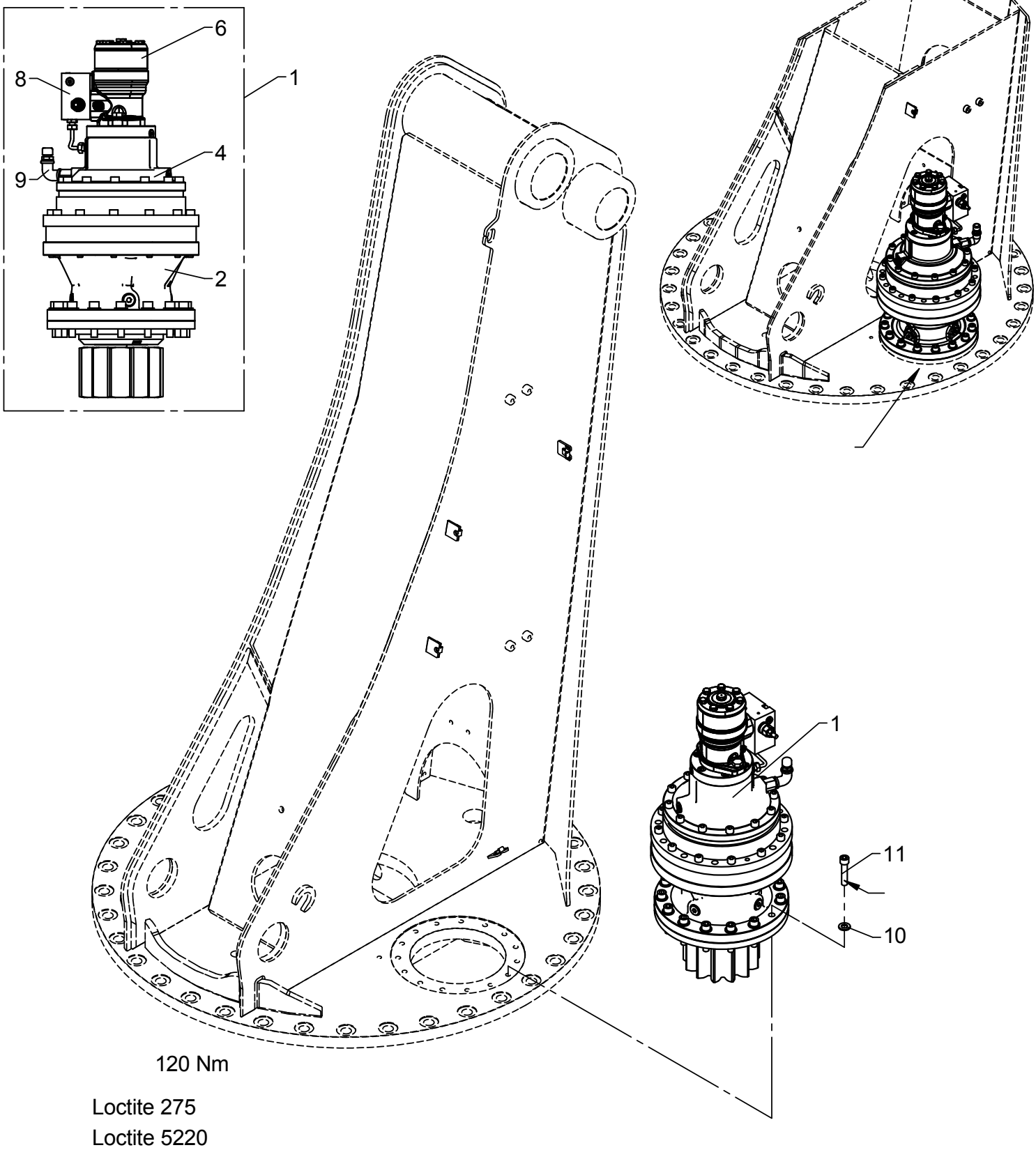

# Planetary gear

As from / To loader no.: 96 03 20 /
Created: 06.03.2013
Modified:

| Item no. | Qty. | Part no. | Description | Remarks |
|---|---|---|---|---|
| 1 | 1 | 49189 | Slewing gear RE 812 | |
| 2 | 1 | 58580 | Output support | 99366800 |
| | 1 | 58585 | Seal kit gearbox | |
| 4 | 1 | 58581 | Brake | VK0700DRF01 |
| 5 | 1 | 58587 | Discs and springs brake kit | 7x294181300 + 8x294182500 + 2x416201200 |
| 6 | 1 | 58582 | Motor | 425043100 |
| 7 | 1 | 58586 | Seal kit motor | 600008200 |
| 8 | 1 | 58583 | Valve | 438034300 |
| 9 | 1 | 58584 | Vent plug | 40200610500 |
| 10 | 15 | 31131 | Washer | 12 mm |
| 11 | 15 | 30464 | Sockethead screw | MC12 x 55 |

# ODIN

Intern ref.: 6300220

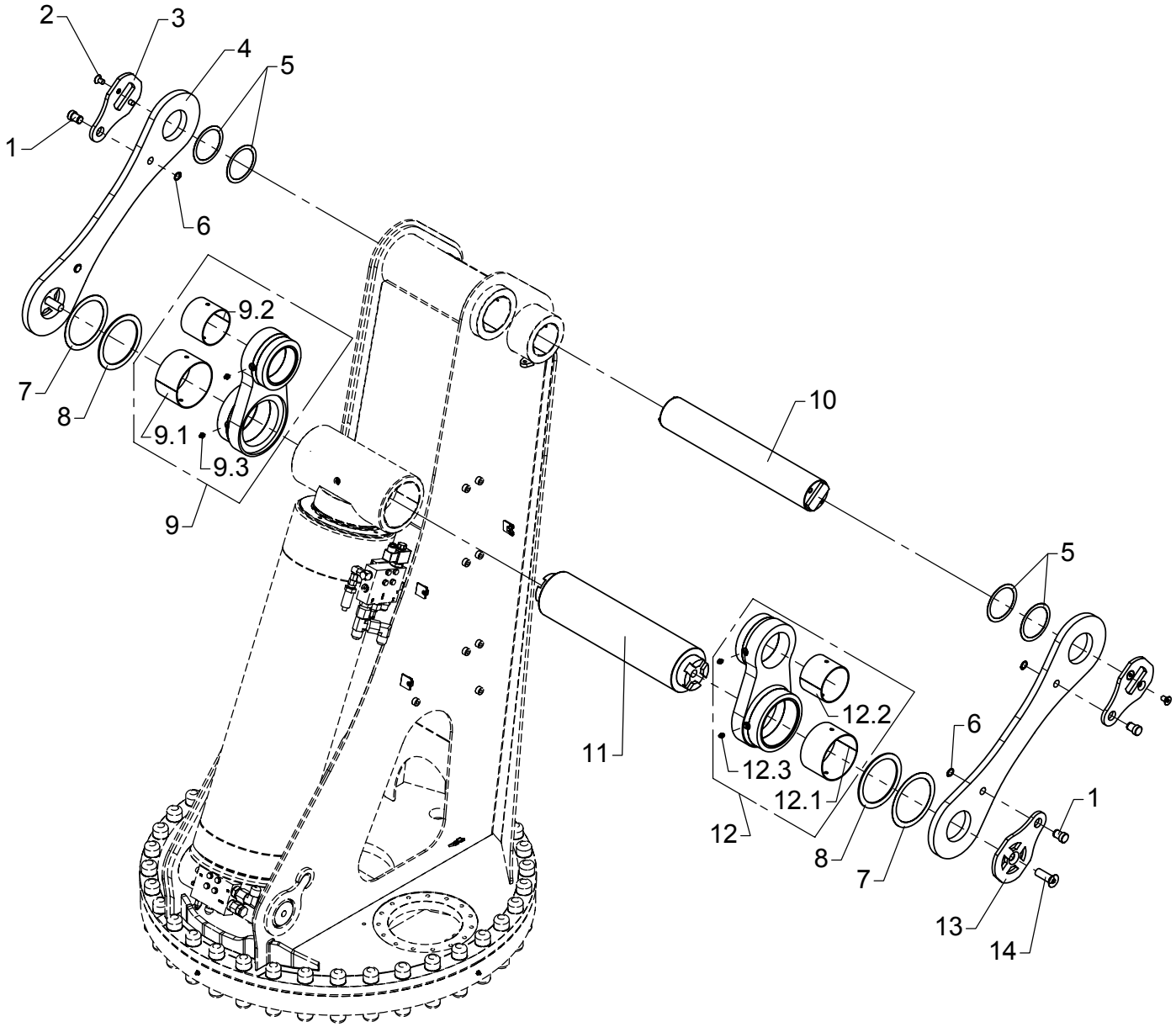

# Pins and link arm system N

As from / To loader no.: 96 00 00 / 96 00 28
Created: 03.10.2003
Modified:

| Item no. | Qty. | Part no. | Description | Remarks |
|---|---|---|---|---|
| 1 | 4 | 6302236 | Pin | |
| 2 | 4 | 30591 | Countersunk screw | MK12 x 20 |
| 3 | 2 | 6300232 | Lock plate | |
| 4 | 2 | 6300234 | Link arm, N | |
| 5 | 4 | 33245 | Washer | PS 90 x 110 x 1,0 |
| 6 | 4 | 33107 | Circlip | 19U |
| 7 | 2 | 33268 | Washer | PS 130 x 160 x 1,0 |
| 8 | 2 | 33267 | Back ring | SS 130 x 160 x 3,5 |
| | 1 | 23360 | Bushing | PM 13080 DX |
| | 1 | 23350 | Bushing | PM 10080 DX |
| | 2 | 31318 | Lubricator | 1/8" RG |
| 9 | 1 | 6300247 | Push rod | |
| 10 | 1 | 6300228 | Pin | |
| 11 | 1 | 6300764 | Pin | |
| | 1 | 23360 | Bushing | PM 13080 DX |
| | 1 | 23350 | Bushing | PM 10080 DX |
| | 2 | 31318 | Lubricator | 1/8" RG |
| 12 | 1 | 6300246 | Push rod | |
| 13 | 2 | 6300762 | Lock plate | |
| 14 | 2 | 32465 | Countersunk screw | MK20 x 60 |

# ODIN

Intern ref.: 6300220

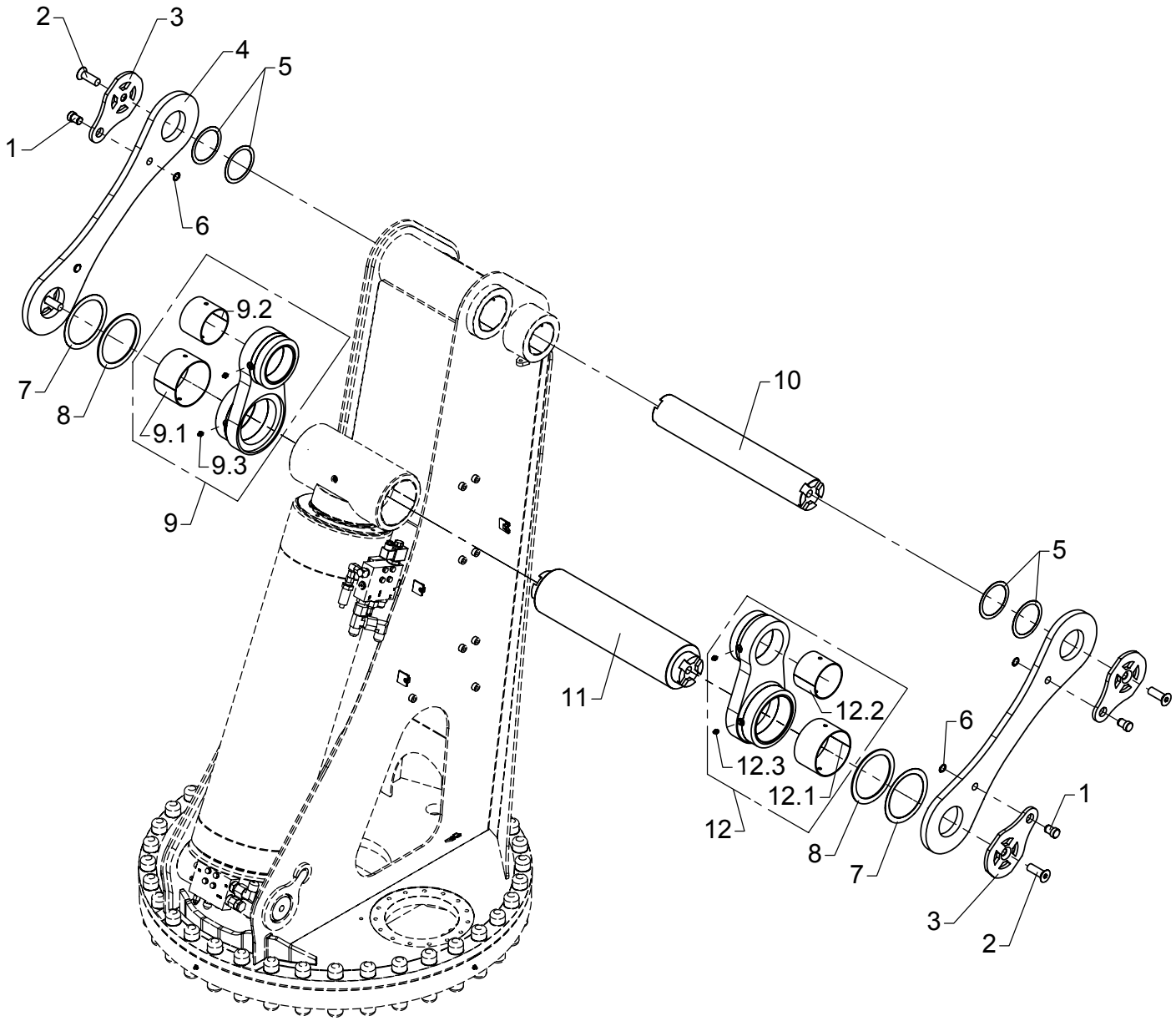


Loctte 243

# Pins and link arm system N

As from / To loader no.: 96 00 29 /
Created: 03.10.2003
Modified:

| Item no. | Qty. | Part no. | Description | Remarks |
|---|---|---|---|---|
| 1 | 4 | 6302236 | Pin | |
| 2 | 4 | 32465 | Countersunk screw | MK20 x 60 |
| 3 | 4 | 6300762 | Lock plate | |
| 4 | 2 | 6300234 | Link arm, N | |
| 5 | 4 | 33245 | Washer | PS 90 x 110 x 1,0 |
| 6 | 4 | 33107 | Circlip | 19U |
| 7 | 2 | 33268 | Washer | PS 130 x 160 x 1,0 |
| 8 | 2 | 33267 | Back ring | SS 130 x 160 x 3,5 |
| | 1 | 23360 | Bushing | PM 13080 DX |
| | 1 | 23350 | Bushing | PM 10080 DX |
| | 2 | 31318 | Lubricator | 1/8" RG |
| 9 | 1 | 6300247 | Push rod | |
| 10 | 1 | 6300763 | Pin | |
| 11 | 1 | 6300764 | Pin | |
| | 1 | 23360 | Bushing | PM 13080 DX |
| | 1 | 23350 | Bushing | PM 10080 DX |
| | 2 | 31318 | Lubricator | 1/8" RG |
| 12 | 1 | 6300246 | Push rod | |

# ODIN

Intern ref.: 6300180

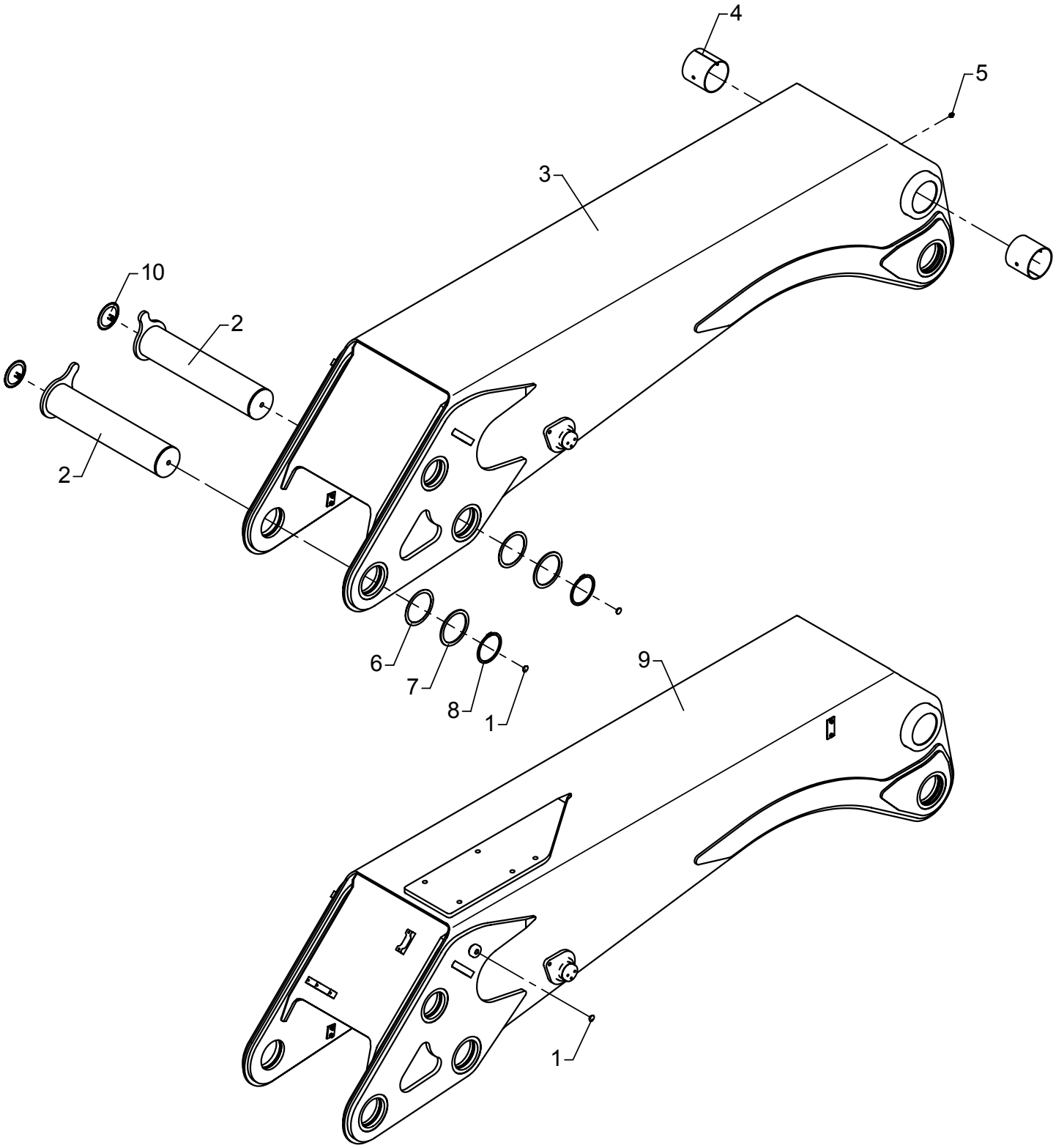

# Main boom, complete

As from / To loader no.: 96 00 00 / 96 02 74
Created: 03.10.2003
Modified: 11.08.2010

| Item no. | Qty. | Part no. | Description | Remarks |
|---|---|---|---|---|
| 1 | | 64360 | Plug | |
| 2 | 2 | 6300221 | Bolt | |
| 3 | 1 | 6300181 | Main boom | |
| 4 | 2 | 23927 | Bushing | PM 10095 DX |
| 5 | 1 | 31318 | Lubricator | 1/8" RG |
| 6 | 2 | 33250 | Washer DIN988 | PS 100 x 120 x 1,0 |
| 7 | 2 | 33226 | Back ring | SS 100 x 120 x 3,5 |
| 8 | 2 | 33148 | Circlip | 100U |
| 9 | 1 | 6300941 | Main boom + plate for winch | |
| 10 | 2 | 63425 | Plug | |
| | | 6300190 | Main boom with bushings | |
| | | 6300940 | Main boom+stow.bracket+bushing | |

# 6020K

Intern ref.: 6300180

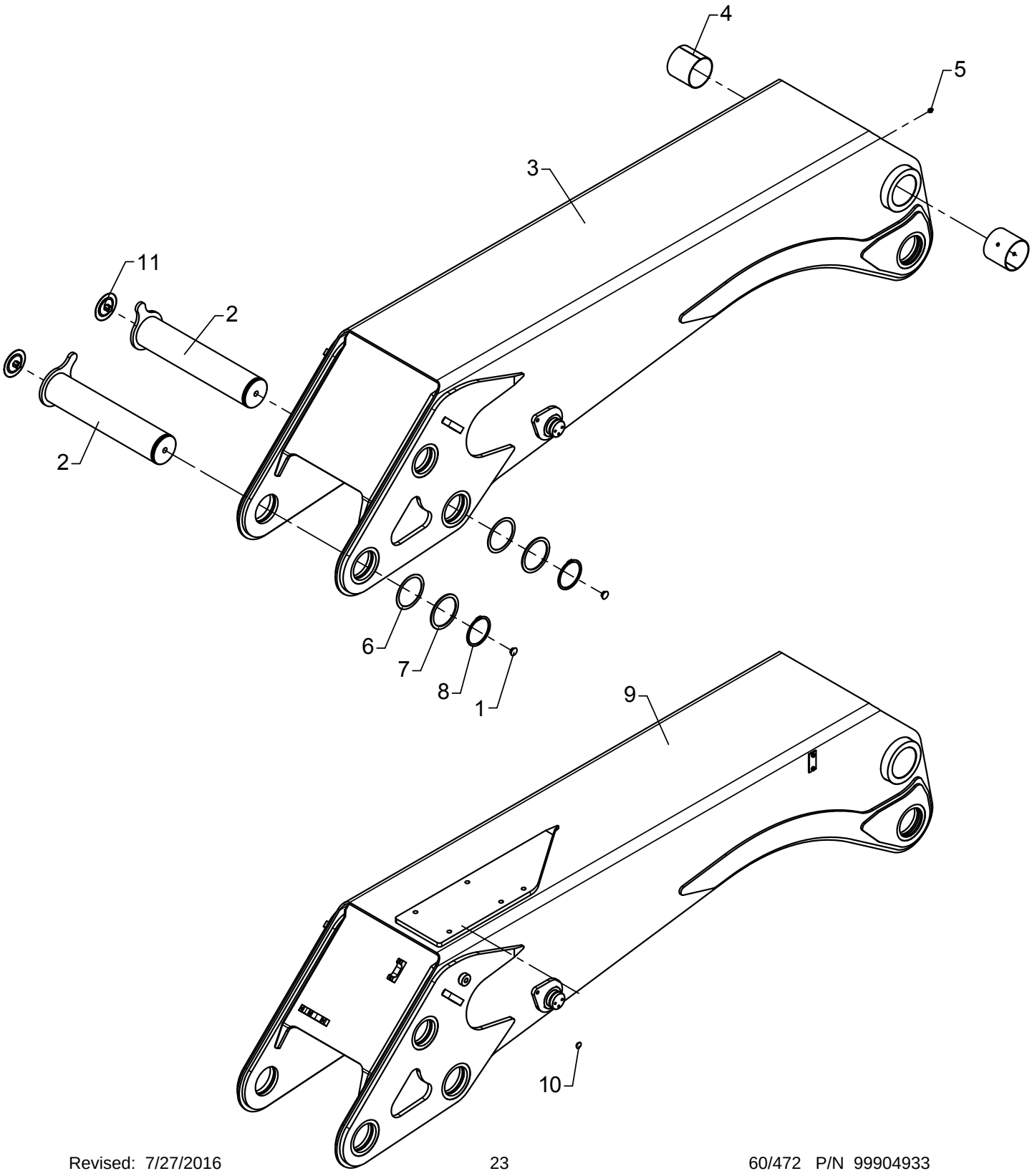

# Main boom, complete

As from / To loader no.: 96 02 75 / 96 02 94
Created: 03.10.2003
Modified: 30.03.2012

| Item no. | Qty. | Part no. | Description | Remarks |
|---|---|---|---|---|
| 1 | 2 | 68034 | Plug | |
| 2 | 2 | 6300221 | Bolt | |
| 3 | 1 | 6300181 | Main boom | |
| 4 | 2 | 23927 | Bushing | PM 10095 DX |
| 5 | 1 | 31318 | Lubricator | 1/8" RG |
| 6 | 2 | 33250 | Washer DIN988 | PS 100 x 120 x 1,0 |
| 7 | 2 | 33226 | Back ring | SS 100 x 120 x 3,5 |
| 8 | 2 | 33148 | Circlip | 100U |
| 9 | 1 | 6300941 | Main boom + plate for winch | |
| 10 | 1 | 64360 | Plug | |
| 11 | 2 | 68030 | Plug | |
| | | 6300190 | Main boom with bushings | |
| | | 6300940 | Main boom+stow.bracket+bushing | |

# 6020K

Intern ref.: 6300180

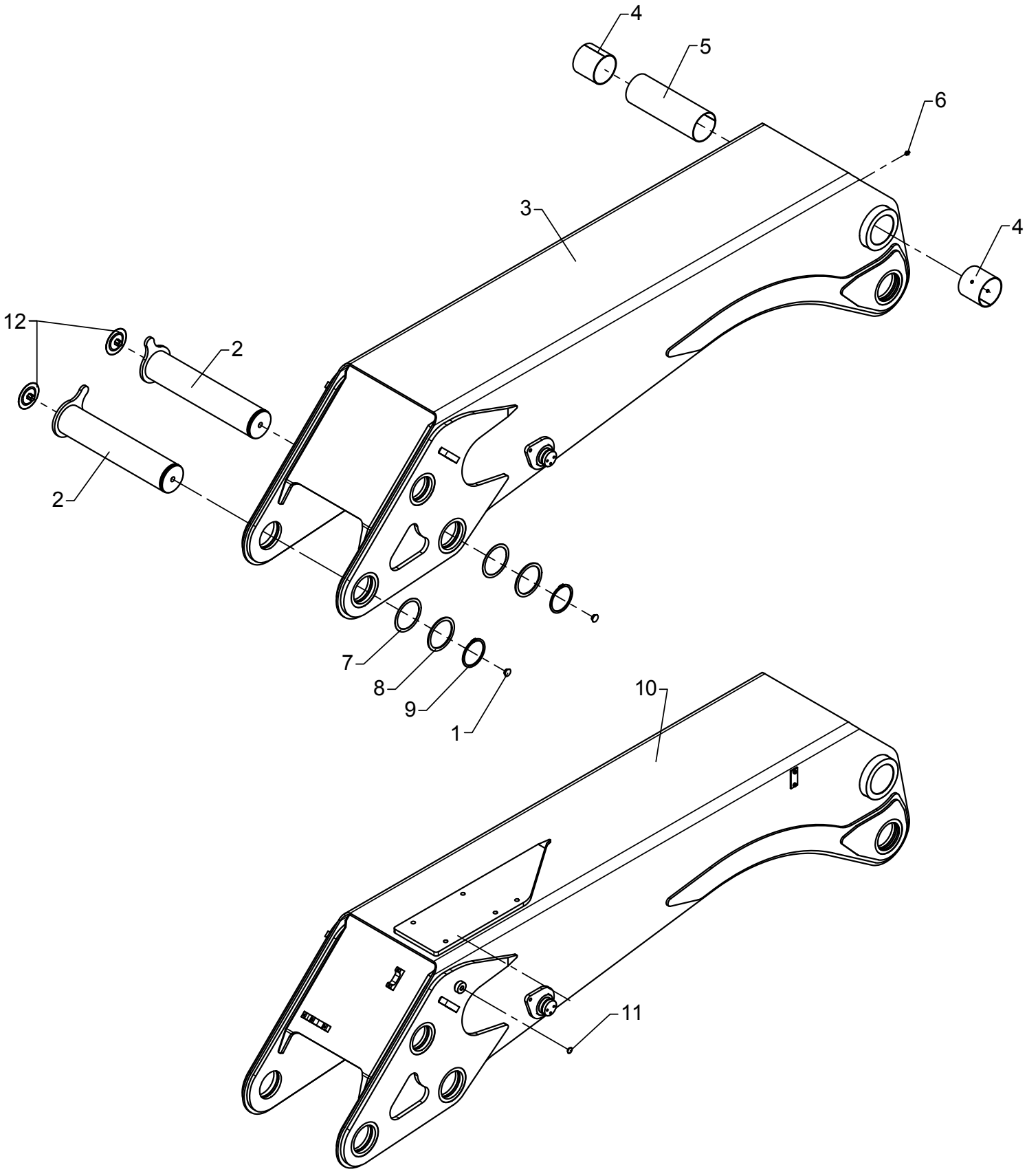

# Main boom, complete

As from / To loader no.: 96 02 95 /
Created: 30.03.2012
Modified:

| Item no. | Qty. | Part no. | Description | Remarks |
|---|---|---|---|---|
| 1 | 2 | 68034 | Plug | |
| 2 | 2 | 6300221 | Bolt | |
| 3 | 1 | 6300181 | Main boom | |
| 4 | 2 | 23927 | Bushing | PM 10095 DX |
| 5 | 1 | 68045 | Plate | |
| 6 | 1 | 31318 | Lubricator | 1/8" RG |
| 7 | 2 | 33250 | Washer DIN988 | PS 100 x 120 x 1,0 |
| 8 | 2 | 33226 | Back ring | SS 100 x 120 x 3,5 |
| 9 | 2 | 33148 | Circlip | 100U |
| 10 | 1 | 6300941 | Main boom + plate for winch | |
| 11 | 1 | 64360 | Plug | |
| 12 | 2 | 68030 | Plug | |
| | | 6300190 | Main boom with bushings | |
| | | 6300940 | Main boom+stow.bracket+bushing | |

# ODIN

Intern ref.: 6300230

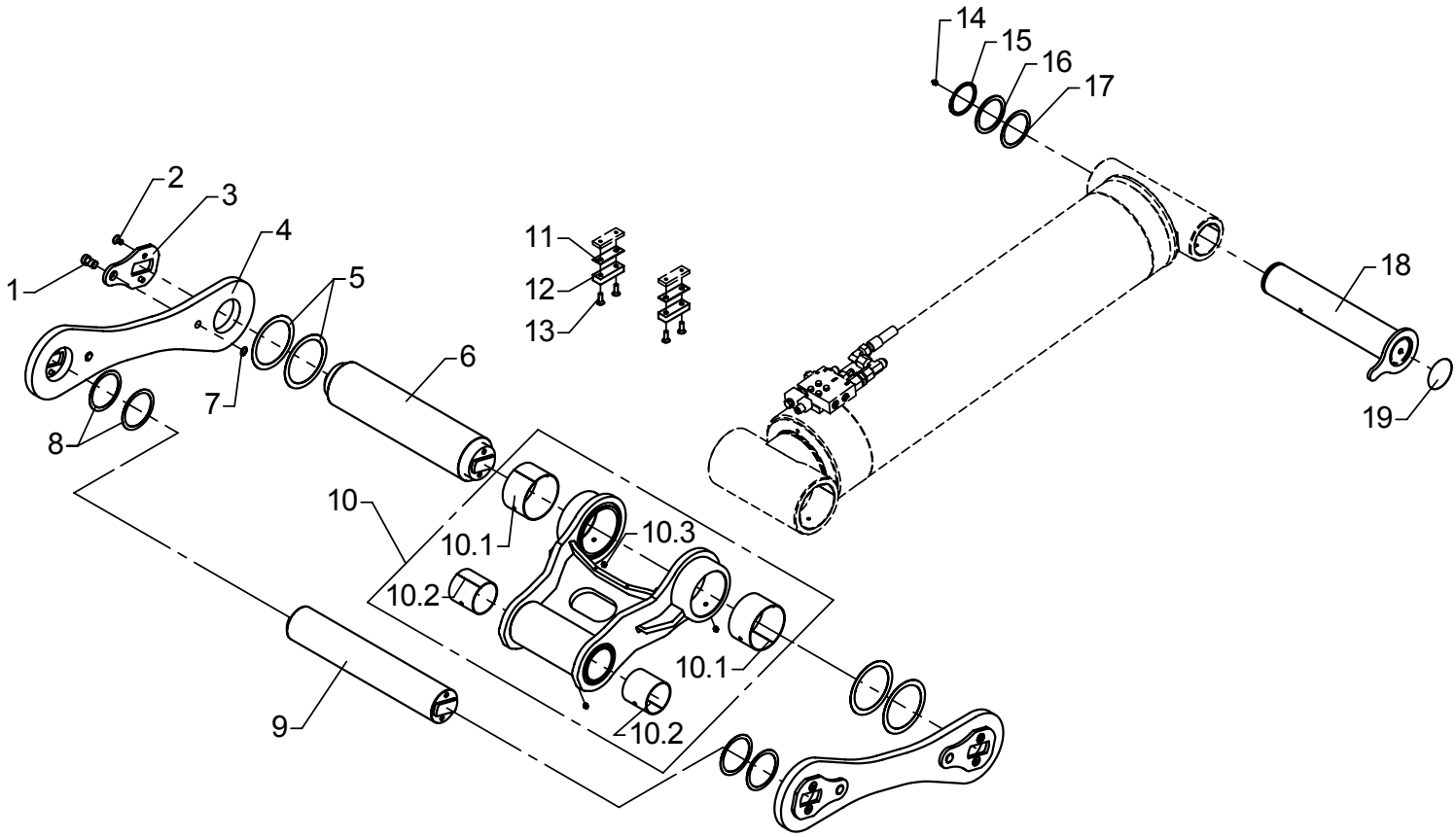


Loctte 243

# Pins and link arm system K

As from / To loader no.: 96 00 00 / 96 00 28
Created: 03.10.2003
Modified: 07.07.2005

| Item no. | Qty. | Part no. | Description | Remarks |
|---|---|---|---|---|
| 1 | 4 | 6302237 | Pin | |
| 2 | 8 | 30591 | Countersunk screw | MK12 x 20 |
| 3 | 4 | 6300232 | Lock plate | |
| 4 | 2 | 6300235 | Link arm, K | |
| 5 | 4 | 33268 | Washer | PS 130 x 160 x 1,0 |
| 6 | 1 | 6300231 | Pin | |
| 7 | 4 | 33107 | Circlip | 19U |
| 8 | 4 | 33250 | Washer DIN988 | PS 100 x 120 x 1,0 |
| 9 | 1 | 6300229 | Pin | |
| 10 | 1 | 6300171 | Push rod | |
| | 2 | 23360 | Bushing | PM 13080 DX |
| | 2 | 23922 | Bushing | PM 9090 DX |
| | 3 | 31318 | Lubricator | 1/8" RG |
| 11 | 2 | 6302201 | Division plate | |
| 12 | 2 | 63530 | Stop block | |
| 13 | 4 | 30581 | Counter-sunk screw | MK10 x 30 |
| 14 | 1 | 31318 | Lubricator | 1/8" RG |
| 15 | 1 | 33241 | Circlip | 90U |
| 16 | 1 | 33232 | Back ring | SS 90 x 110 x 3,5 |
| 17 | 1 | 33245 | Washer | PS 90 x 110 x 1,0 |
| 18 | 1 | 6300224 | Bolt | |
| 19 | 1 | 63425 | Plug | |

# ODIN

Intern ref.: 6300230

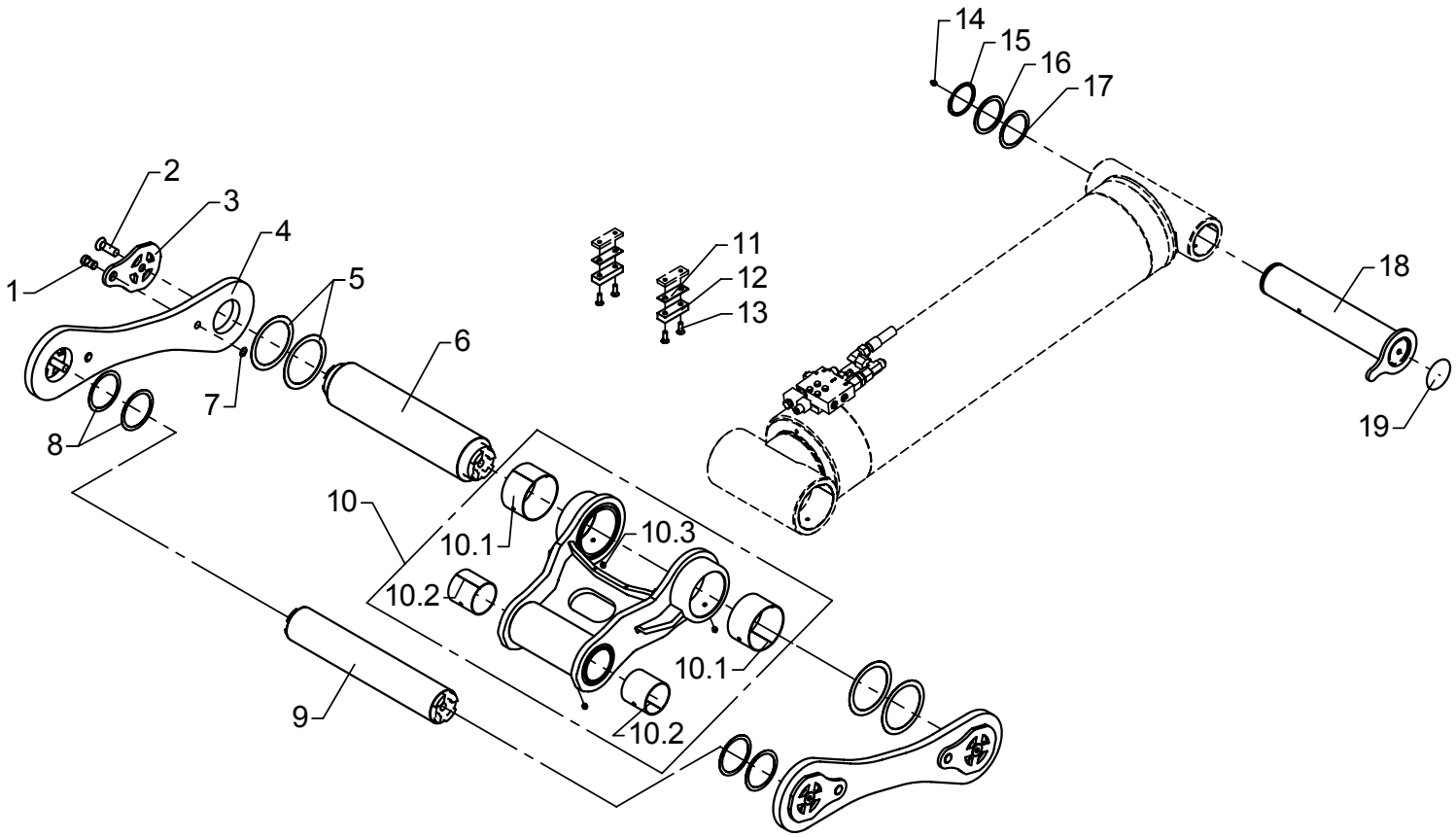


Loctite 243

# Pins and link arm system K

As from / To loader no.: 96 00 29 / 96 02 68
Created: 03.10.2003
Modified: 11.08.2010

| Item no. | Qty. | Part no. | Description | Remarks |
|---|---|---|---|---|
| 1 | 4 | 6302237 | Pin | |
| 2 | 4 | 32465 | Countersunk screw | MK20 x 60 |
| 3 | 4 | 6300762 | Lock plate | |
| 4 | 2 | 6300235 | Link arm, K | |
| 5 | 4 | 33268 | Washer | PS 130 x 160 x 1,0 |
| 6 | 1 | 6300766 | Pin | |
| 7 | 4 | 33107 | Circlip | |
| 8 | 4 | 33250 | Washer DIN988 | PS 100 x 120 x 1,0 |
| 9 | 1 | 6300765 | Pin | |
| 10 | 1 | 6300171 | Push rod | |
| | 2 | 23360 | Bushing | PM 13080 DX |
| | 2 | 23922 | Bushing | PM 9090 DX |
| | 3 | 31318 | Lubricator | 1/8" RG |
| 11 | 2 | 6302201 | Division plate | |
| 12 | 2 | 63530 | Stop block | |
| 13 | 4 | 30581 | Counter-sunk screw | MK10 x 30 |
| 14 | 1 | 31318 | Lubricator | 1/8" RG |
| 15 | 1 | 33241 | Circlip | 90U |
| 16 | 1 | 33232 | Back ring | SS 90 x 110 x 3,5 |
| 17 | 1 | 33245 | Washer | PS 90 x 110 x 1,0 |
| 18 | 1 | 6300224 | Bolt | |
| 19 | 1 | 63425 | Plug | |

# 6020K

Intern ref.: 6300230

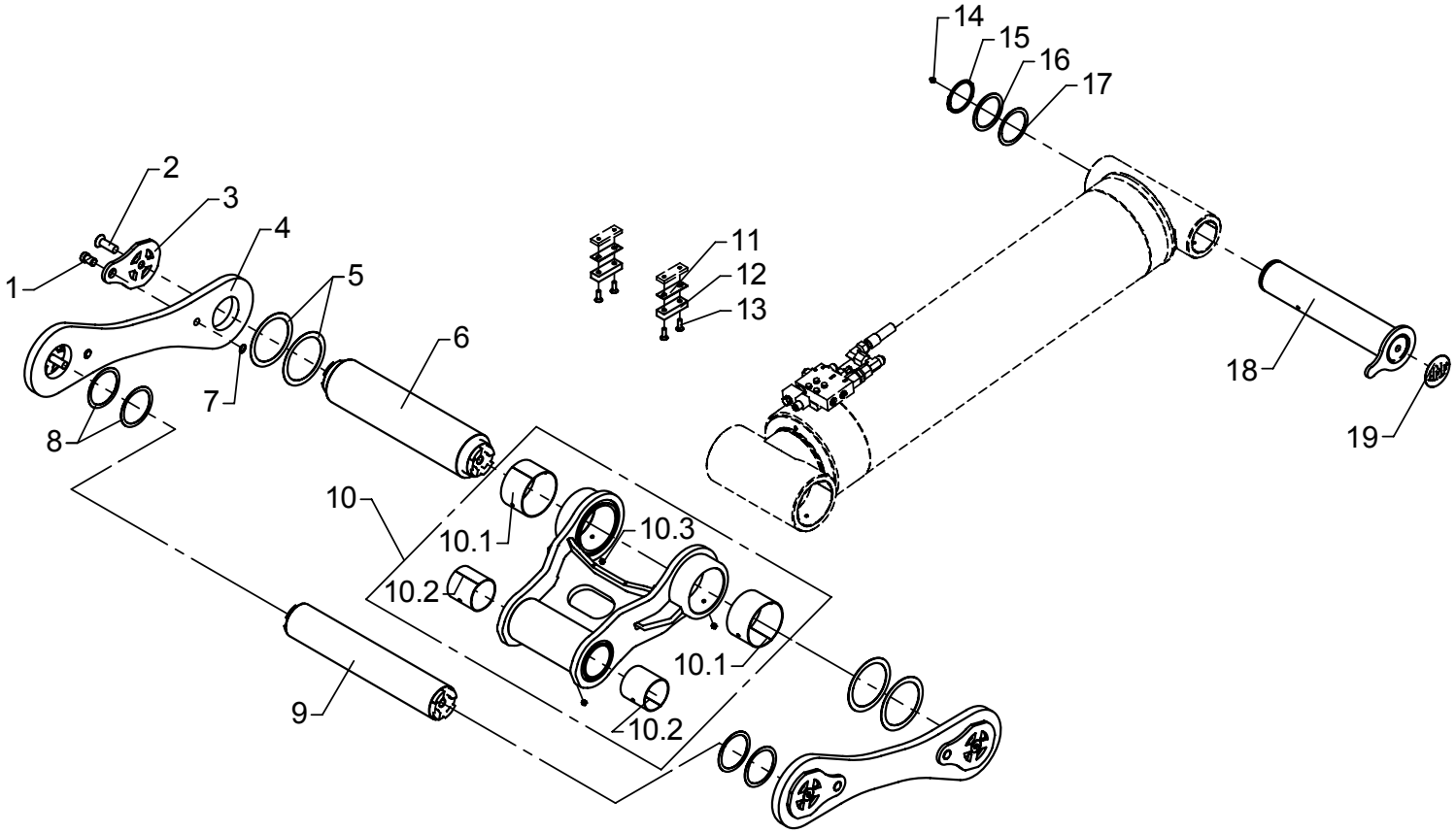


Loctite 243

# Pins and link arm system K

As from / To loader no.: 96 02 69 /
Created: 11.08.2010
Modified:

| Item no. | Qty. | Part no. | Description | Remarks |
|---|---|---|---|---|
| 1 | 4 | 6302237 | Pin | |
| 2 | 4 | 32465 | Countersunk screw | MK20 x 60 |
| 3 | 4 | 6300762 | Lock plate | |
| 4 | 2 | 6300235 | Link arm, K | |
| 5 | 4 | 33268 | Washer | PS 130 x 160 x 1,0 |
| 6 | 1 | 6300766 | Pin | |
| 7 | 4 | 33107 | Circlip | |
| 8 | 4 | 33250 | Washer DIN988 | PS 100 x 120 x 1,0 |
| 9 | 1 | 6300765 | Pin | |
| 10 | 1 | 6300171 | Push rod | |
| | 2 | 23360 | Bushing | PM 13080 DX |
| | 2 | 23922 | Bushing | PM 9090 DX |
| | 3 | 31318 | Lubricator | 1/8" RG |
| 11 | 2 | 6302201 | Division plate | |
| 12 | 2 | 63530 | Stop block | |
| 13 | 4 | 30581 | Counter-sunk screw | MK10 x 30 |
| 14 | 1 | 31318 | Lubricator | 1/8" RG |
| 15 | 1 | 33241 | Circlip | 90U |
| 16 | 1 | 33232 | Back ring | SS 90 x 110 x 3,5 |
| 17 | 1 | 33245 | Washer | PS 90 x 110 x 1,0 |
| 18 | 1 | 6300224 | Bolt | |
| 19 | 1 | 68030 | Plug | |

# ODIN

Intern ref.: 6300280 / 6300490

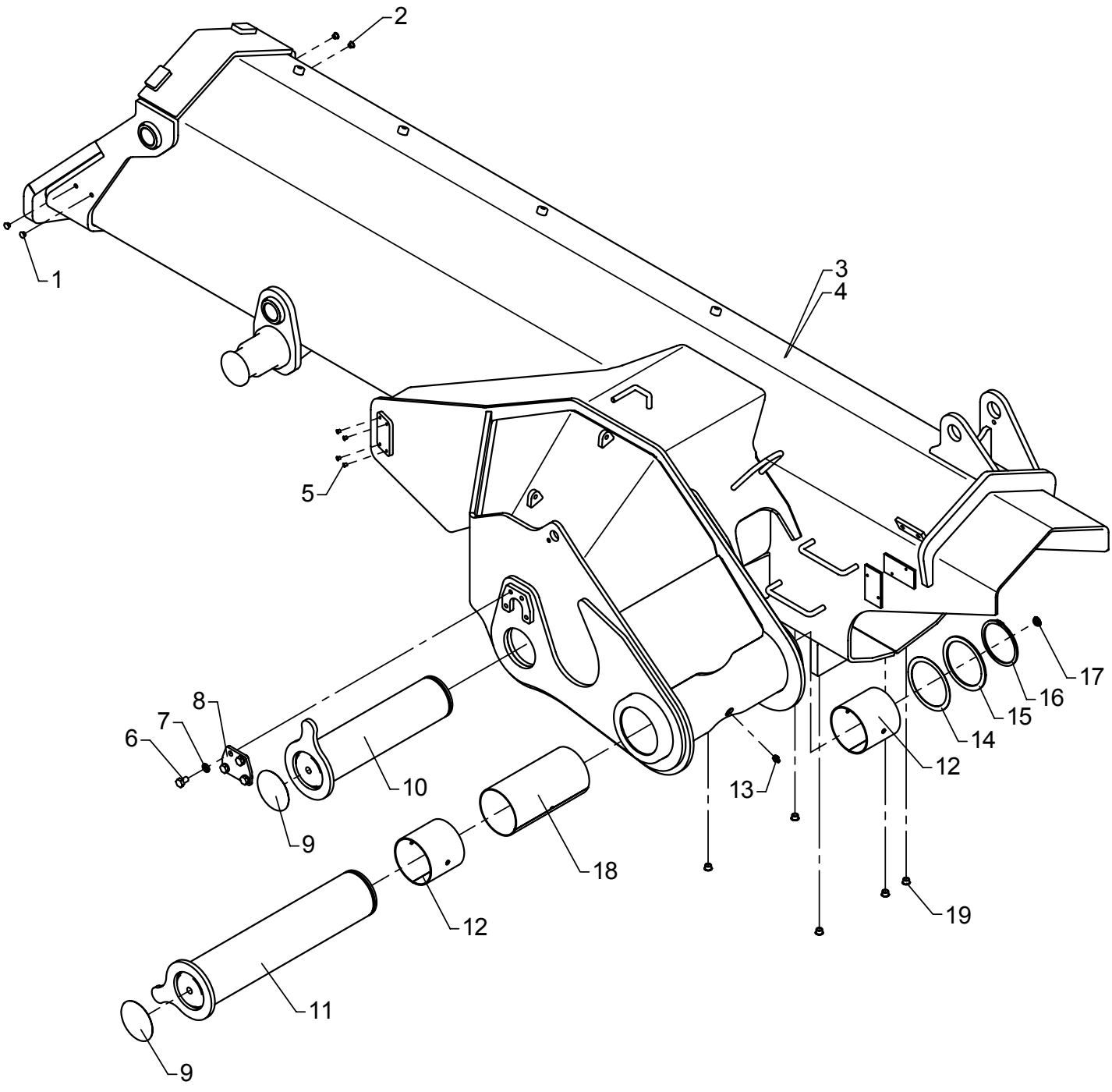


Loctite 243

# Jib, complete

As from / To loader no.: 96 00 00 / 96 02 74
Created: 03.10.2003
Modified: 11.08.2010

| Item no. | Qty. | Part no. | Description | Remarks |
|---|---|---|---|---|
| 1 | 2 | 64366 | Plug | |
| 2 | 2 | 64366 | Plug | ** |
| 3 | 1 | 6300281 | Jib | * |
| 4 | 1 | 6300501 | Jib | |
| 5 | 4 | 64365 | Plug | *** |
| 6 | 4 | 31510 | Set screw, stainless | M10 x 16 |
| 7 | 4 | 31571 | Spring washer, stainless | 10 mm |
| 8 | 1 | 6097684 | Lock plate | |
| 9 | 2 | 63425 | Plug | |
| 10 | 1 | 6300226 | Bolt | |
| 11 | 1 | 6300221 | Bolt | |
| 12 | 2 | 23927 | Bushing | PM 10095 DX |
| 13 | 1 | 31318 | Lubricator | 1/8" RG |
| 14 | 1 | 33250 | Washer DIN988 | PS 100 x 120 x 1,0 |
| 15 | 1 | 33226 | Back ring | SS 100 x 120 x 3,5 |
| 16 | 1 | 33148 | Circlip | 100U |
| 17 | 1 | 64360 | Plug | |
| 18 | 1 | 63548 | Plate | |
| 19 | 5 | 64372 | Plug | **** |
| | | 6300290 | Optimised jib + bushings | * |
| | | 6300500 | Jib with bushings | |

* Optimised boom system
** No extra valves
*** Excl. spotlight
**** Excl. winch

# 6020K

Intern ref.: 6300280 / 6300490

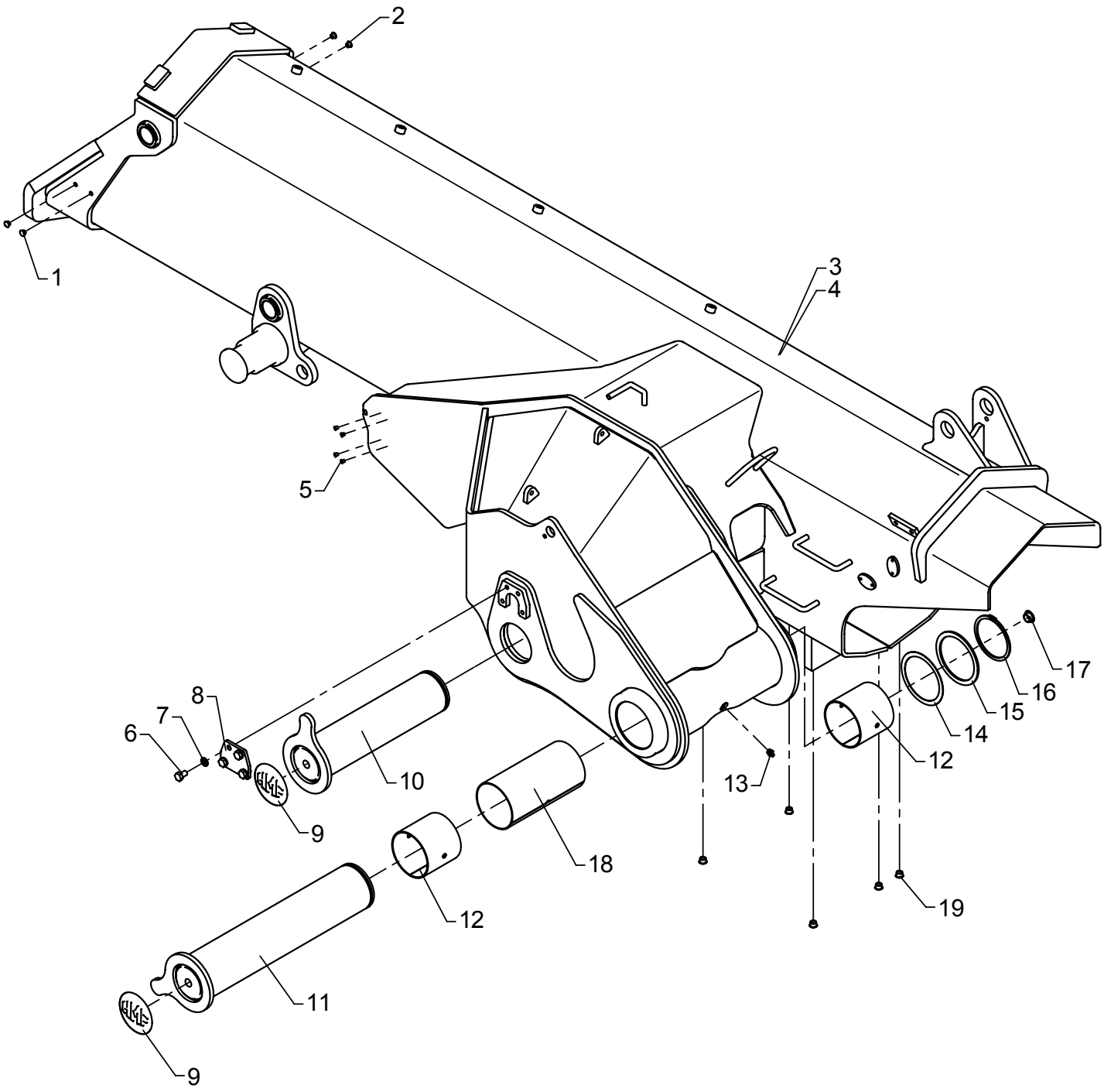


Loctite 243

# Jib, complete

As from / To loader no.: 96 02 75 /
Created: 03.10.2003
Modified: 11.08.2010

| Item no. | Qty. | Part no. | Description | Remarks |
|---|---|---|---|---|
| 1 | 2 | 64366 | Plug | |
| 2 | 2 | 64366 | Plug | ** |
| 3 | 1 | 6300281 | Jib | * |
| 4 | 1 | 6300501 | Jib | |
| 5 | 4 | 64365 | Plug | *** |
| 6 | 4 | 31510 | Set screw, stainless | M10 x 16 |
| 7 | 4 | 31571 | Spring washer, stainless | 10 mm |
| 8 | 1 | 6097684 | Lock plate | |
| 9 | 2 | 68030 | Plug | |
| 10 | 1 | 6300226 | Bolt | |
| 11 | 1 | 6300221 | Bolt | |
| 12 | 2 | 23927 | Bushing | PM 10095 DX |
| 13 | 1 | 31318 | Lubricator | 1/8" RG |
| 14 | 1 | 33250 | Washer DIN988 | PS 100 x 120 x 1,0 |
| 15 | 1 | 33226 | Back ring | SS 100 x 120 x 3,5 |
| 16 | 1 | 33148 | Circlip | 100U |
| 17 | 1 | 68034 | Plug | |
| 18 | 1 | 63548 | Plate | |
| 19 | 5 | 64372 | Plug | **** |
| | | 6300290 | Optimised jib + bushings | * |
| | | 6300500 | Jib with bushings | |

* Optimised boom system
** No extra valves
*** Excl. spotlight
**** Excl. winch

# ODIN

Intern ref.: 6300310

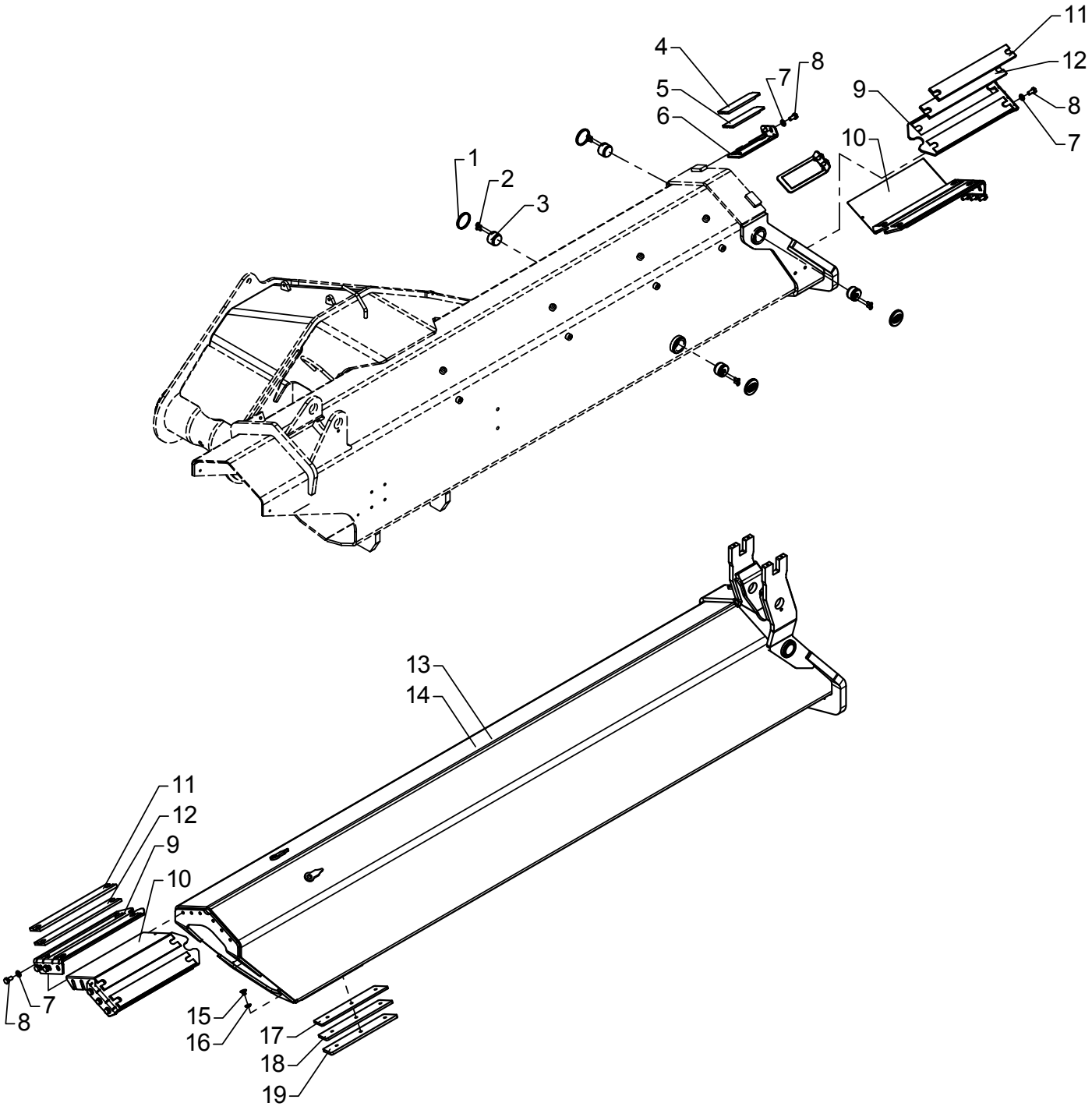


PBC
492

# Fittings for extension I

As from / To loader no.: 96 00 00 / 96 02 89
Created: 03.10.2003
Modified: 31.01.2012

| Item no. | Qty. | Part no. | Description | Remarks |
|---|---|---|---|---|
| 1 | 4 | 64362 | Plastic plug | |
| 2 | 8 | 30540 | Countersunk screw | MK6 x 16 |
| 3 | 4 | 6300334 | Guide | |
| 4 | 2 | 63668 | Slide block | 6381524, 7 mm |
| 5 | 2 | 63698 | Slide block | 6 mm |
| 6 | 2 | 6300336 | Bracket | |
| 7 | 16 | 31177 | Washer | 10 mm |
| 8 | 16 | 30154 | Set screw | M10 x 20 |
| 9 | 4 | 6300335 | Bracket | |
| 10 | 4 | 6300531 | Shim | |
| 11 | 8 | 63685 | Slide block | 9 mm |
| 12 | 8 | 63697 | Slide block | 8 mm |
| 13 | 1 | 6300311 | Jib extension I | * |
| 14 | 1 | 6300505 | Jib extension I | |
| 15 | 6 | 31863 | Countersunk screw | MK10 x 12 |
| 16 | 6 | 31171 | Washer | 10 mm |
| 17 | 2 | 6300321 | Spacer | 6 mm |
| 18 | 2 | 6300322 | Spacer | 7 mm |
| 19 | 2 | 6300341 | Spacer | 8 mm |

* Optimised boom system
Please note: All screws – Loctite 243

# ODIN

Intern ref.: 6300310

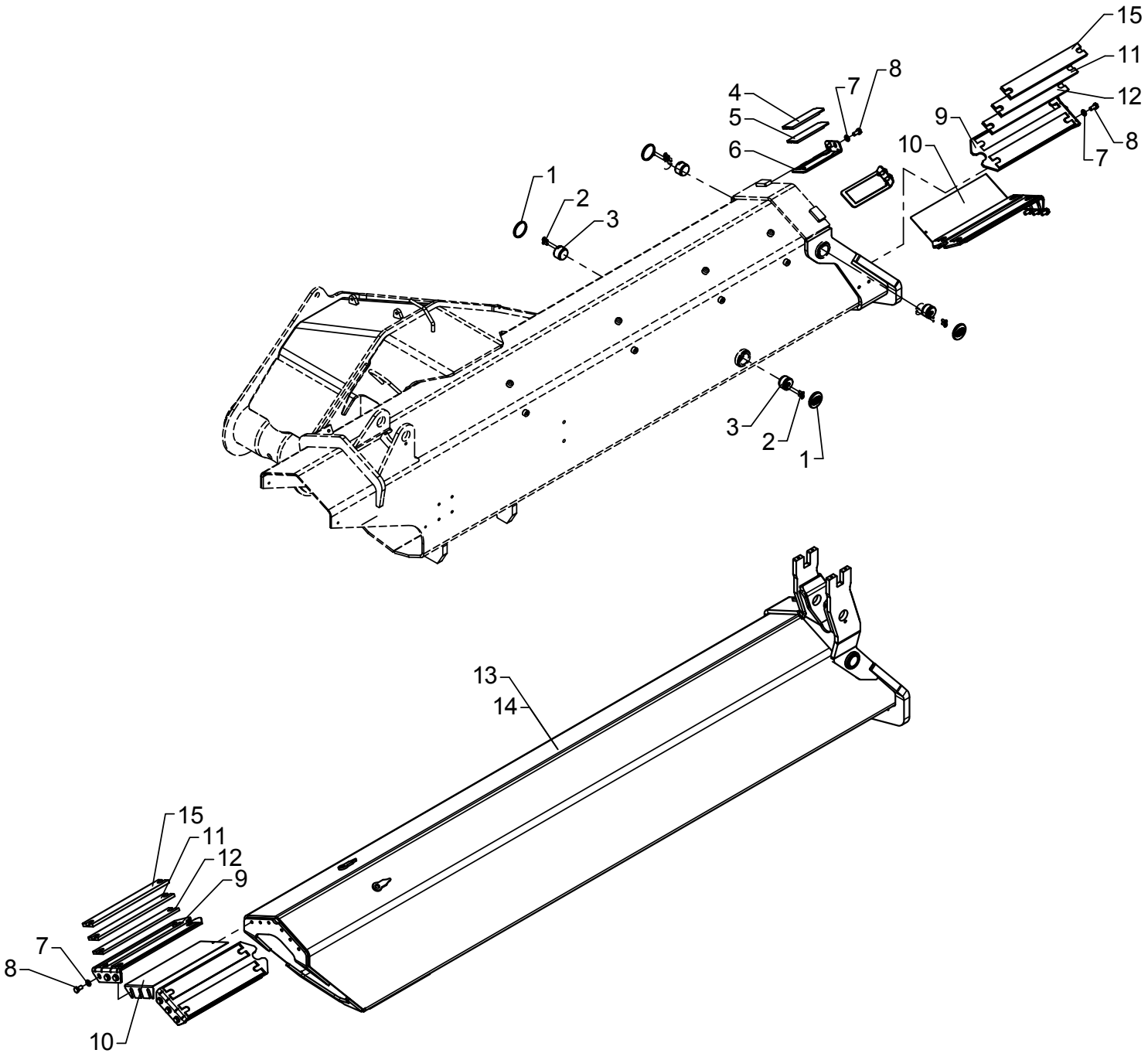


PBC
492

# Fittings for extension I

As from / To loader no.: 96 02 90 /
Created: 31.01.2012
Modified: 02.06.2014

| Item no. | Qty. | Part no. | Description | Remarks |
|---|---|---|---|---|
| 1 | 4 | 64362 | Plastic plug | |
| 2 | 8 | 30540 | Countersunk screw | MK6 x 16 |
| 3 | 4 | 6300334 | Guide | |
| 4 | 2 | 63668 | Slide block | 6381524, 7 mm |
| 5 | 2 | 63698 | Slide block | 6 mm |
| 6 | 2 | 6300336 | Bracket | |
| 7 | 16 | 31177 | Washer | 10 mm |
| 8 | 16 | 30154 | Set screw | M10 x 20 |
| 9 | 4 | 6300335 | Bracket | |
| 10 | 4 | 6300531 | Shim | |
| 11 | 8 | 63685 | Slide block | 9 mm |
| 12 | 8 | 63697 | Slide block | 8 mm |
| 13 | 1 | 6300311 | Jib extension I | * |
| 14 | 1 | 6300505 | Jib extension I | |
| 15 | 8 | 68083 | Slide block | 10 mm |

* Optimised boom system
Please note: All screws – Loctite 243

# ODIN

Intern ref.: 6300330

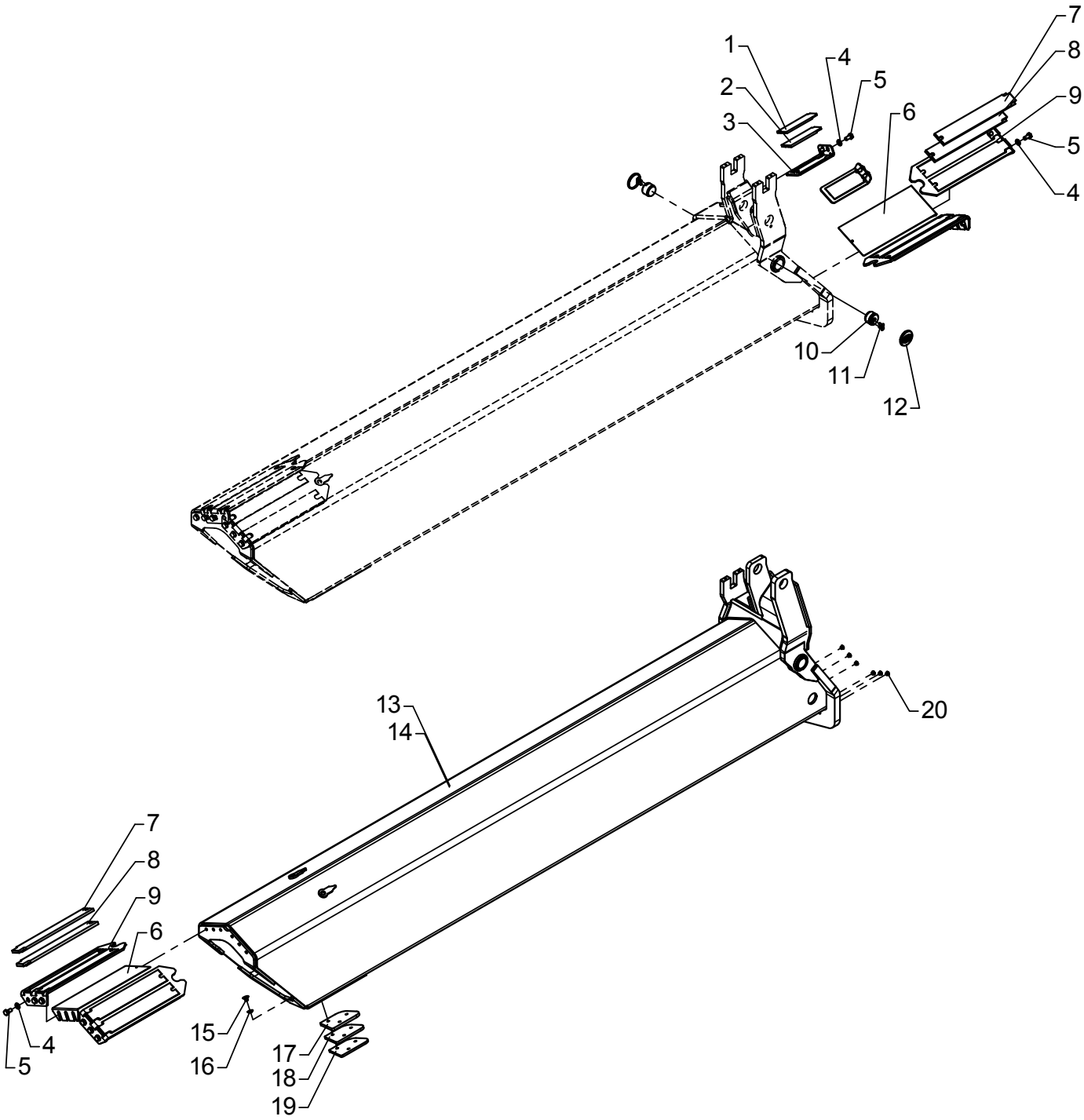


PBC 492

# Fittings for extension II

As from / To loader no.: 96 00 00 / 96 02 89
Created: 03.10.2003
Modified: 31.01.2012

| Item no. | Qty. | Part no. | Description | Remarks |
|---|---|---|---|---|
| 1 | 2 | 63698 | Slide block | 6 mm |
| 2 | 2 | 63668 | Slide block | 6381524, 7 mm |
| 3 | 2 | 6300336 | Bracket | |
| 4 | 16 | 31177 | Washer | 10 mm |
| 5 | 16 | 30154 | Set screw | M10 x 20 |
| 6 | 4 | 6300535 | Shim | |
| 7 | 8 | 63526 | Slide block | 8 mm |
| 8 | 8 | 63525 | Slide block | 9 mm |
| 9 | 4 | 6300375 | Bracket for slide block | |
| 10 | 2 | 6300334 | Guide | |
| 11 | 4 | 30540 | Countersunk screw | MK6 x 16 |
| 12 | 2 | 64362 | Plastic plug | |
| 13 | 1 | 6300331 | Jib extension II | * |
| 14 | 1 | 6300511 | Jib extension II | |
| 15 | 6 | 31863 | Countersunk screw | MK10 x 12 |
| 16 | 6 | 31171 | Washer | 10 mm |
| 17 | 2 | 6300342 | Spacer | 8 mm |
| 18 | 2 | 6300324 | Spacer | 7 mm |
| 19 | 2 | 6300323 | Spacer | 6 mm |
| 20 | 6 | 64366 | Plug | |

* Optimised boom system
Please note: All screws – Loctite 243

# ODIN

Intern ref.: 6300330

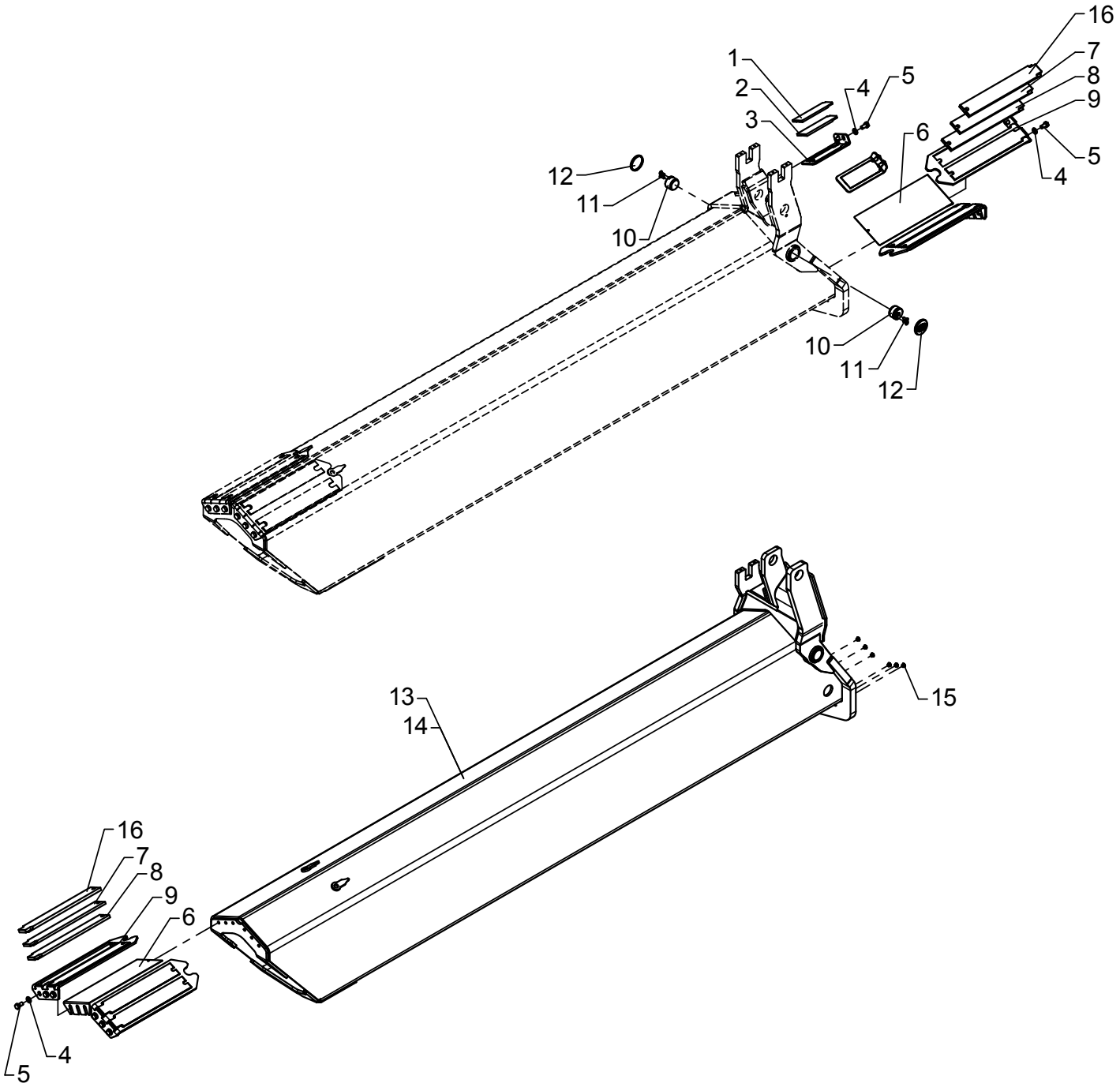


PBC 492

# Fittings for extension II

As from / To loader no.: 96 02 90 /
Created: 31.01.2012
Modified: 02.06.2014

| Item no. | Qty. | Part no. | Description | Remarks |
|---|---|---|---|---|
| 1 | 2 | 63698 | Slide block | 6 mm |
| 2 | 2 | 63668 | Slide block | 6381524, 7 mm |
| 3 | 2 | 6300336 | Bracket | |
| 4 | 16 | 31177 | Washer | 10 mm |
| 5 | 16 | 30154 | Set screw | M10 x 20 |
| 6 | 4 | 6300535 | Shim | |
| 7 | 8 | 63526 | Slide block | 8 mm |
| 8 | 8 | 63525 | Slide block | 9 mm |
| 9 | 4 | 6300375 | Bracket for slide block | |
| 10 | 2 | 6300334 | Guide | |
| 11 | 4 | 30540 | Countersunk screw | MK6 x 16 |
| 12 | 2 | 64362 | Plastic plug | |
| 13 | 1 | 6300331 | Jib extension II | * |
| 14 | 1 | 6300511 | Jib extension II | |
| 15 | 6 | 64366 | Plug | |
| 16 | 8 | 68085 | Slide block | 10 mm |

* Optimised boom system
Please note: All screws – Loctite 243

# ODIN

Intern ref.: 6300350

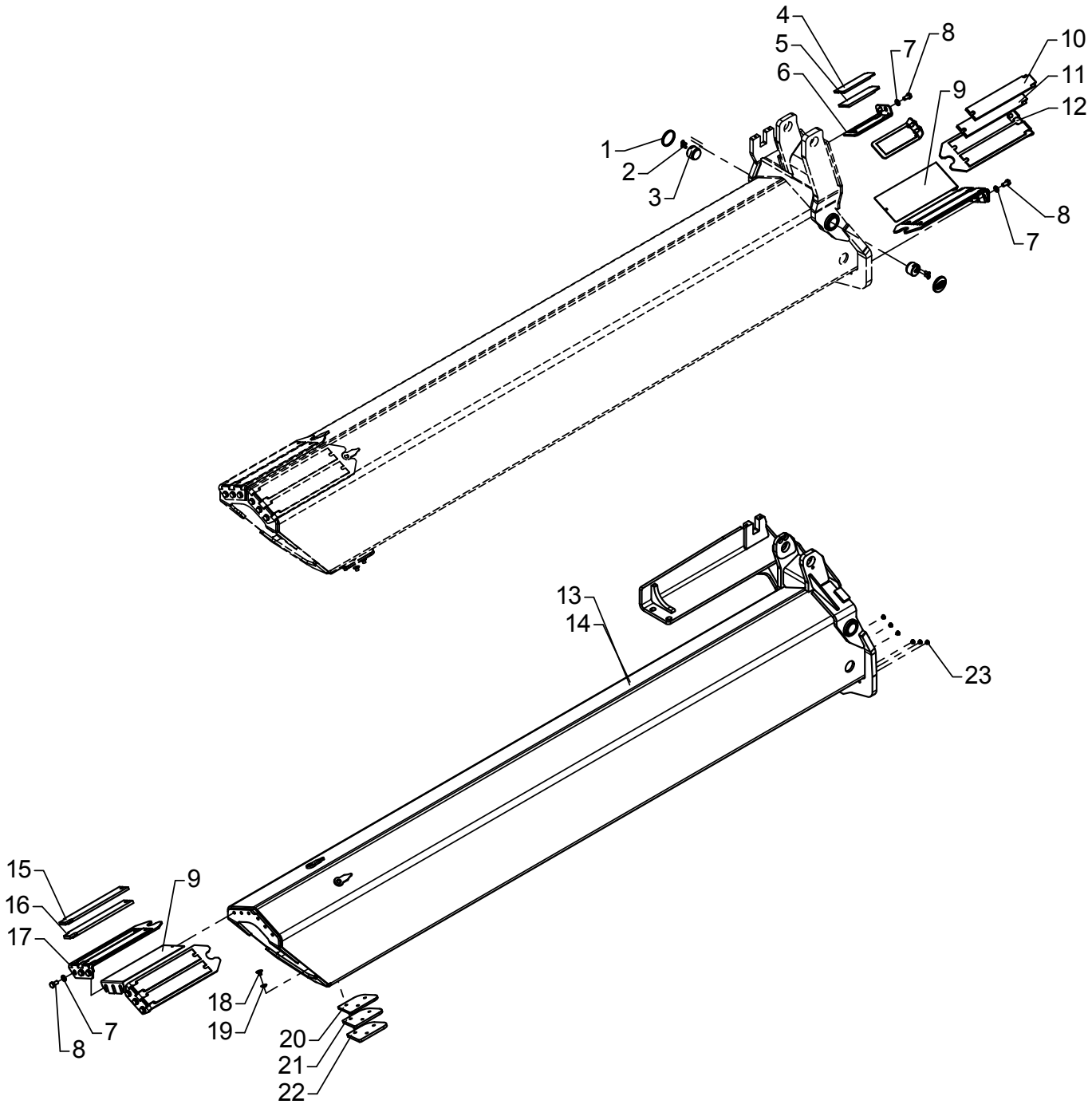


PBC 492

# Fittings for extension III

As from / To loader no.: 96 00 00 / 96 02 89
Created: 03.10.2003
Modified: 26.04.2012

| Item no. | Qty. | Part no. | Description | Remarks |
|---|---|---|---|---|
| 1 | 2 | 64362 | Plastic plug | |
| 2 | 4 | 30540 | Countersunk screw | MK6 x 16 |
| 3 | 2 | 6300334 | Guide | |
| 4 | 2 | 63698 | Slide block | 6 mm |
| 5 | 2 | 63668 | Slide block | 6381524, 7 mm |
| 6 | 2 | 6300336 | Bracket | |
| 7 | 16 | 31177 | Washer | 10 mm |
| 8 | 16 | 30154 | Set screw | M10 x 20 |
| 9 | 4 | 6300532 | Shim | |
| 10 | 4 | 63588 | Slide block | 8 mm |
| 11 | 4 | 63589 | Slide block | 9 mm |
| 12 | 2 | 6300379 | Bracket for slide block | |
| 13 | 1 | 6300351 | Jib extension III | * |
| 14 | 1 | 6300515 | Jib extension III | |
| 15 | 4 | 63528 | Slide block | 8 mm |
| 16 | 4 | 63527 | Slide block | 9 mm |
| 17 | 2 | 6300394 | Bracket for slide block | |
| 18 | 6 | 31863 | Countersunk screw | MK10 x 12 |
| 19 | 6 | 31171 | Washer | 10 mm |
| 20 | 2 | 6300323 | Spacer | 6 mm |
| 21 | 2 | 6300324 | Spacer | 7 mm |
| 22 | 2 | 6300342 | Spacer | 8 mm |
| 23 | 6 | 64366 | Plug | |

* Optimised boom system
Please note: All screws – Loctite 243

# ODIN

Intern ref.: 6300350

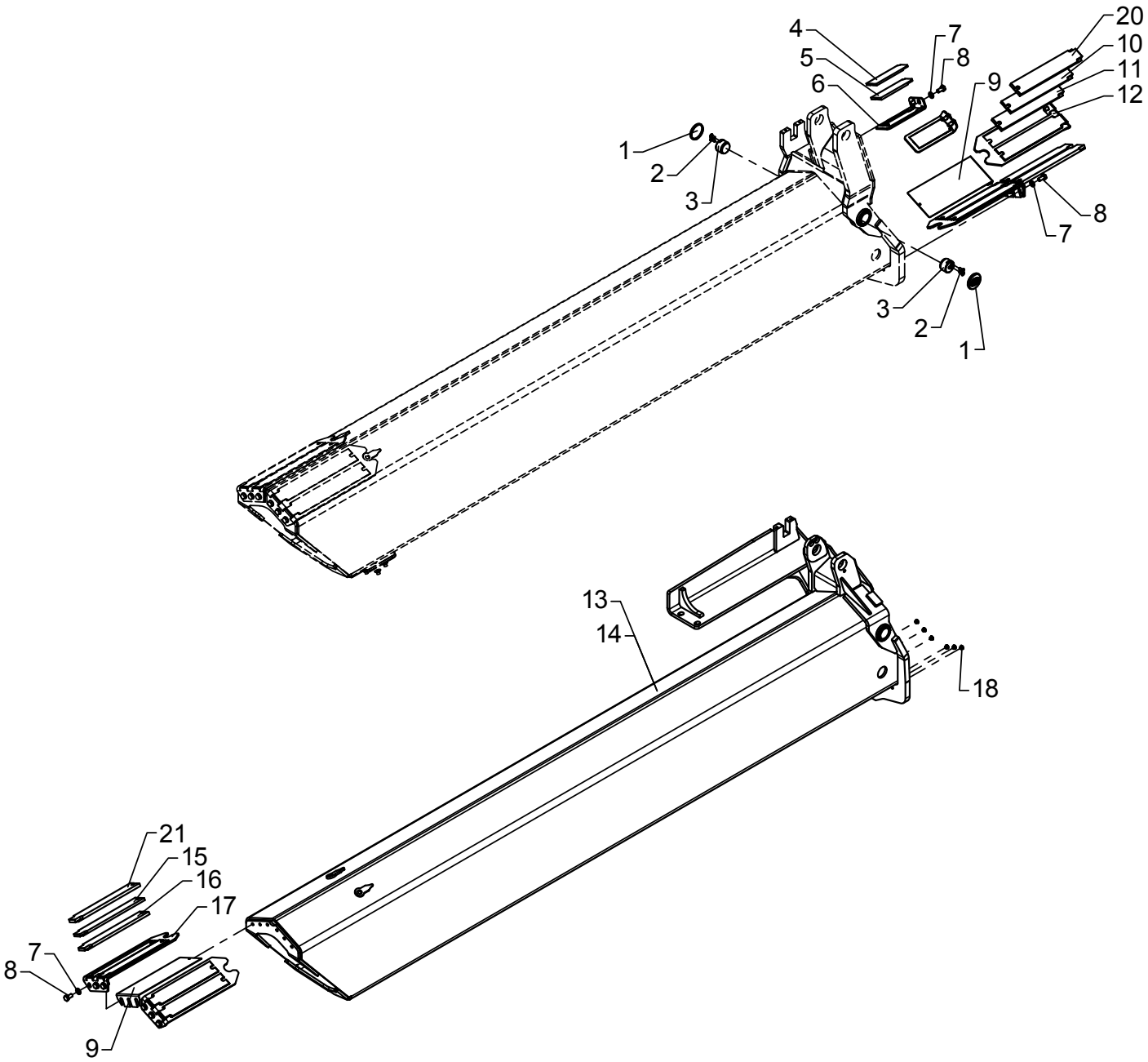


PBC 492

# Fittings for extension III

As from / To loader no.: 96 02 90 /
Created: 31.01.2012
Modified: 03.06.2014

| Item no. | Qty. | Part no. | Description | Remarks |
|---|---|---|---|---|
| 1 | 2 | 64362 | Plastic plug | |
| 2 | 4 | 30540 | Countersunk screw | MK6 x 16 |
| 3 | 2 | 6300334 | Guide | |
| 4 | 2 | 63698 | Slide block | 6 mm |
| 5 | 2 | 63668 | Slide block | 6381524, 7 mm |
| 6 | 2 | 6300336 | Bracket | |
| 7 | 16 | 31177 | Washer | 10 mm |
| 8 | 16 | 30154 | Set screw | M10 x 20 |
| 9 | 4 | 6300532 | Shim | |
| 10 | 4 | 63588 | Slide block | 8 mm |
| 11 | 4 | 63589 | Slide block | 9 mm |
| 12 | 2 | 6300379 | Bracket for slide block | |
| 13 | 1 | 6300351 | Jib extension III | * |
| 14 | 1 | 6300515 | Jib extension III | |
| 15 | 4 | 63528 | Slide block | 8 mm |
| 16 | 4 | 63527 | Slide block | 9 mm |
| 17 | 2 | 6300394 | Bracket for slide block | |
| 18 | 6 | 64366 | Plug | |
| 20 | 4 | 63590 | Slide block | 10 mm |
| 21 | 4 | 68084 | Slide block | 10 mm |

* Optimised boom system
Please note: All screws – Loctite 243

# ODIN

Intern ref.: 6300370

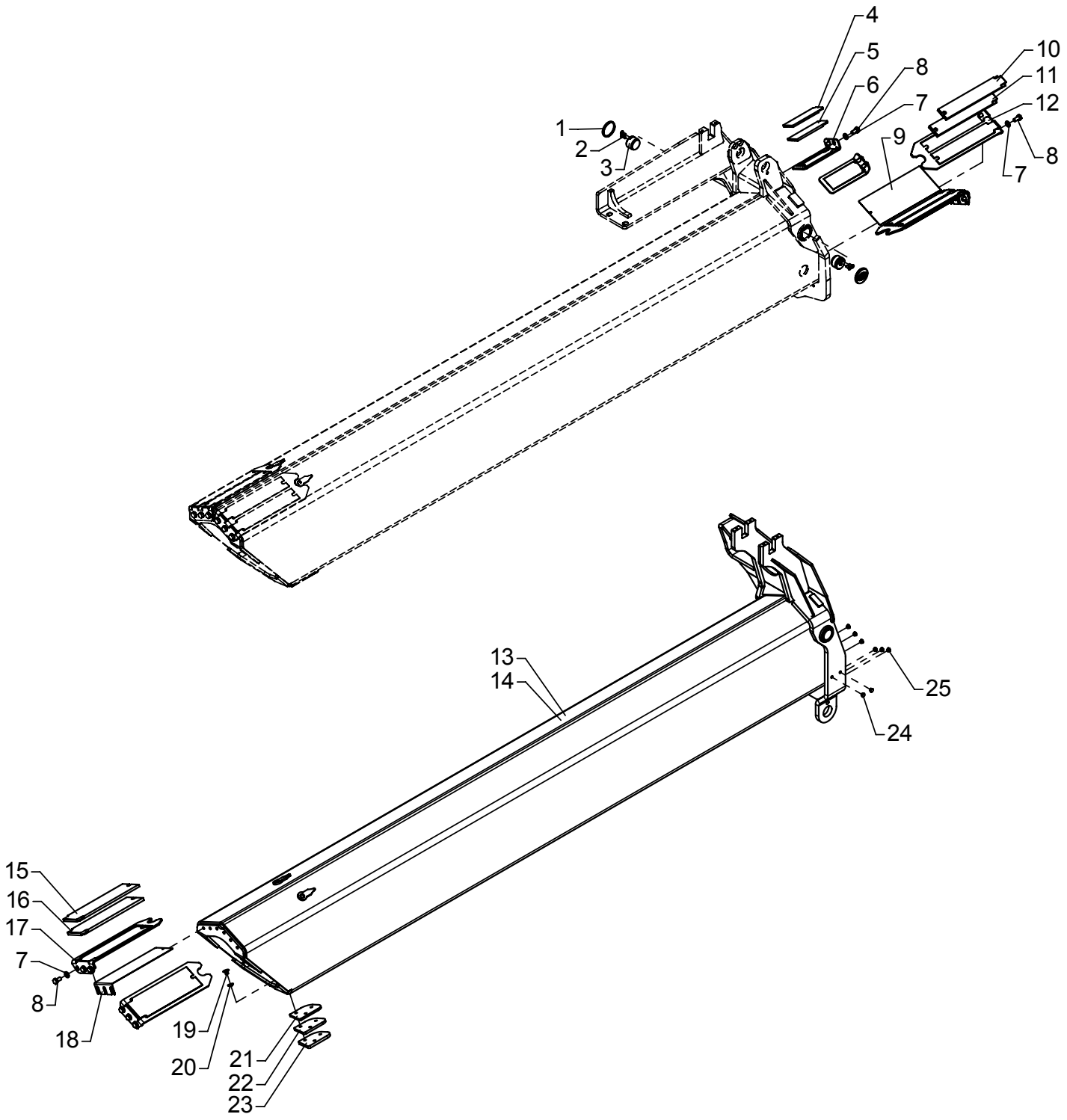


PBC 492

# Fittings for extension K4

As from / To loader no.: 96 00 00 / 96 00 04
Created: 03.10.2003
Modified:

| Item no. | Qty. | Part no. | Description | Remarks |
|---|---|---|---|---|
| 1 | 2 | 64362 | Plastic plug | |
| 2 | 4 | 30540 | Countersunk screw | MK6 x 16 |
| 3 | 2 | 6300334 | Guide | |
| 4 | 2 | 63698 | Slide block | 6 mm |
| 5 | 2 | 63668 | Slide block | 6381524, 7 mm |
| 6 | 2 | 6300336 | Bracket | |
| 7 | 16 | 31177 | Washer | 10 mm |
| 8 | 16 | 30154 | Set screw | M10 x 20 |
| 9 | 2 | 6300532 | Shim | |
| 10 | 4 | 63528 | Slide block | 8 mm |
| 11 | 4 | 63527 | Slide block | 9 mm |
| 12 | 2 | 6300394 | Bracket for slide block | |
| 13 | 1 | 6300371 | Jib extension K4 | * |
| 14 | 1 | 6300521 | Jib extension K4 | |
| 15 | 2 | 63521 | Slide block | 8 mm |
| 16 | 2 | 63696 | Slide block | 9 mm |
| 17 | 2 | 6300369 | Bracket for slide block | |
| 18 | 2 | 6300533 | Shim | |
| 19 | 6 | 31863 | Countersunk screw | MK10 x 12 |
| 20 | 6 | 31171 | Washer | 10 mm |
| 21 | 2 | 6300325 | Spacer | 6 mm |
| 22 | 2 | 6300326 | Spacer | 7 mm |
| 23 | 2 | 6300343 | Spacer | 8 mm |
| 24 | 2 | 64366 | Plug | ** |
| 25 | 6 | 64366 | Plug | |

* Optimised boom system
** No extra valves
Please note: All screws – Loctite 243

# ODIN

Intern ref.: 6300370

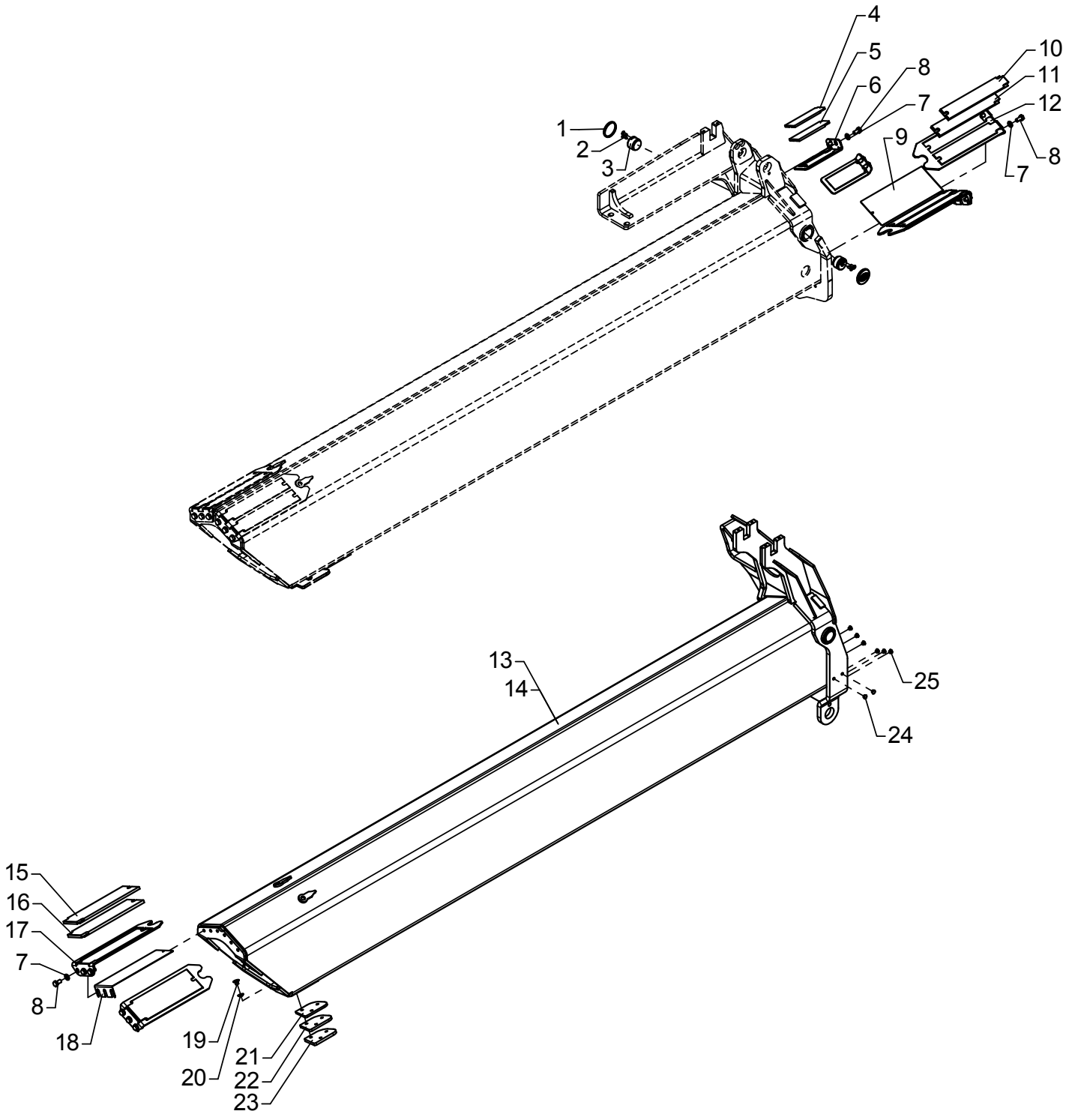


PBC 492

# Fittings for extension K4

As from / To loader no.: 96 00 05 / 96 02 89
Created: 03.10.2003
Modified: 31.01.2012

| Item no. | Qty. | Part no. | Description | Remarks |
|---|---|---|---|---|
| 1 | 2 | 64362 | Plastic plug | |
| 2 | 4 | 30540 | Countersunk screw | MK6 x 16 |
| 3 | 2 | 6300334 | Guide | |
| 4 | 2 | 63698 | Slide block | 6 mm |
| 5 | 2 | 63668 | Slide block | 6381524, 7 mm |
| 6 | 2 | 6300336 | Bracket | |
| 7 | 16 | 31177 | Washer | 10 mm |
| 8 | 16 | 30154 | Set screw | M10 x 20 |
| 9 | 2 | 6300532 | Shim | |
| 10 | 4 | 63528 | Slide block | 8 mm |
| 11 | 4 | 63527 | Slide block | 9 mm |
| 12 | 2 | 6300394 | Bracket for slide block | |
| 13 | 1 | 6300685 | Jib extension IV | * |
| 14 | 1 | 6300521 | Jib extension K4 | |
| 15 | 2 | 63521 | Slide block | 8 mm |
| 16 | 2 | 63696 | Slide block | 9 mm |
| 17 | 2 | 6300369 | Bracket for slide block | |
| 18 | 2 | 6300533 | Shim | |
| 19 | 6 | 31863 | Countersunk screw | MK10 x 12 |
| 20 | 6 | 31171 | Washer | 10 mm |
| 21 | 2 | 6300325 | Spacer | 6 mm |
| 22 | 2 | 6300326 | Spacer | 7 mm |
| 23 | 2 | 6300343 | Spacer | 8 mm |
| 24 | 2 | 64366 | Plug | ** |
| 25 | 6 | 64366 | Plug | |

* Optimised boom system
** No extra valves
Please note: All screws – Loctite 243

# ODIN

Intern ref.: 6300370

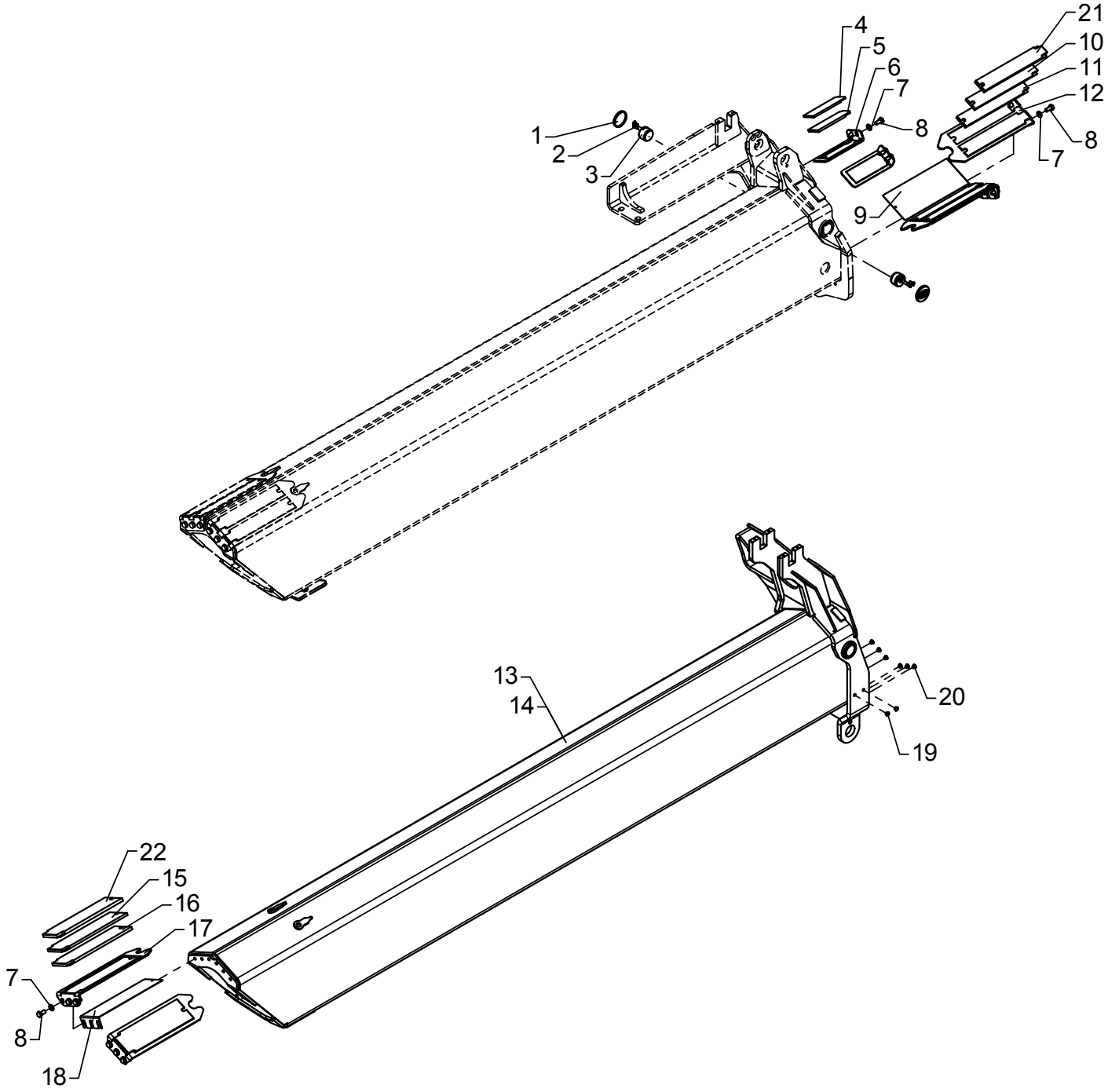


PBC 492

# Fittings for extension K4

As from / To loader no.: 96 02 90 /
Created: 31.01.2012
Modified: 04.06.2014

| Item no. | Qty. | Part no. | Description | Remarks |
|---|---|---|---|---|
| 1 | 2 | 64362 | Plastic plug | |
| 2 | 4 | 30540 | Countersunk screw | MK6 x 16 |
| 3 | 2 | 6300334 | Guide | |
| 4 | 2 | 63698 | Slide block | 6 mm |
| 5 | 2 | 63668 | Slide block | 6381524, 7 mm |
| 6 | 2 | 6300336 | Bracket | |
| 7 | 16 | 31177 | Washer | 10 mm |
| 8 | 16 | 30154 | Set screw | M10 x 20 |
| 9 | 2 | 6300532 | Shim | |
| 10 | 4 | 63528 | Slide block | 8 mm |
| 11 | 4 | 63527 | Slide block | 9 mm |
| 12 | 2 | 6300394 | Bracket for slide block | |
| 13 | 1 | 6300685 | Jib extension IV | * |
| 14 | 1 | 6300521 | Jib extension K4 | |
| 15 | 2 | 63521 | Slide block | 8 mm |
| 16 | 2 | 63696 | Slide block | 9 mm |
| 17 | 2 | 6300369 | Bracket for slide block | |
| 18 | 2 | 6300533 | Shim | |
| 19 | 2 | 64366 | Plug | ** |
| 20 | 6 | 64366 | Plug | |
| 21 | 4 | 68084 | Slide block | 10 mm |
| 22 | 2 | 68082 | Slide block | 10 mm |

* Optimised boom system
** No extra valves
Please note: All screws – Loctite 243

# ODIN

Intern ref.: 6300390

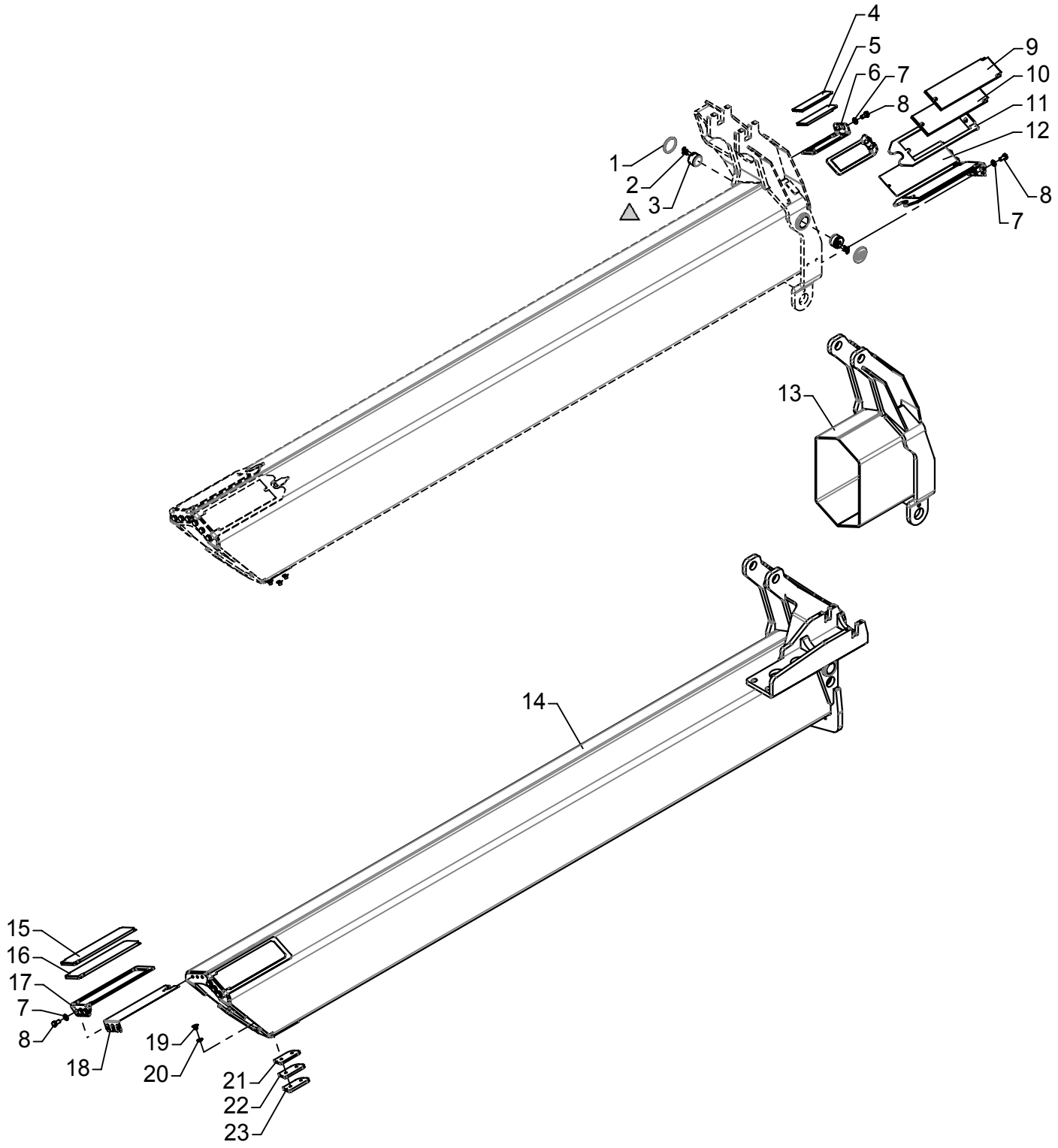


PBC 492

# Fittings for extension V

As from / To loader no.: 96 00 00 / 96 00 03
Created: 03.10.2003
Modified:

| Item no. | Qty. | Part no. | Description | Remarks |
|---|---|---|---|---|
| 1 | 2 | 64362 | Plastic plug | |
| 2 | 4 | 30540 | Countersunk screw | MK6 x 16 |
| 3 | 2 | 6300334 | Guide | |
| 4 | 2 | 63698 | Slide block | 6 mm |
| 5 | 2 | 63668 | Slide block | 6381524, 7 mm |
| 6 | 2 | 6300336 | Bracket | |
| 7 | 16 | 31177 | Washer | 10 mm |
| 8 | 16 | 30154 | Set screw | M10 x 20 |
| 9 | 2 | 63521 | Slide block | 8 mm |
| 10 | 2 | 63696 | Slide block | 9 mm |
| 11 | 2 | 6300369 | Bracket for slide block | |
| 12 | 2 | 6300533 | Shim | |
| 13 | 1 | 6300391 | Jib extension K5 | * |
| 14 | 1 | 6300525 | Jib extension V | |
| 15 | 2 | 63582 | Slide block | 8 mm |
| 16 | 2 | 63583 | Slide block | 9 mm |
| 17 | 2 | 6300366 | Bracket for slide block | |
| 18 | 2 | 6300534 | Shim | |
| 19 | 4 | 31863 | Countersunk screw | MK10 x 12 |
| 20 | 4 | 31171 | Washer | 10 mm |
| 21 | 2 | 6300396 | Spacer | 6 mm |
| 22 | 2 | 6300397 | Spacer | 7 mm |
| 23 | 2 | 6300398 | Spacer | 8 mm |

* Optimised boom system
Please note: All screws – Loctite 243

# ODIN

Intern ref.: 6300390

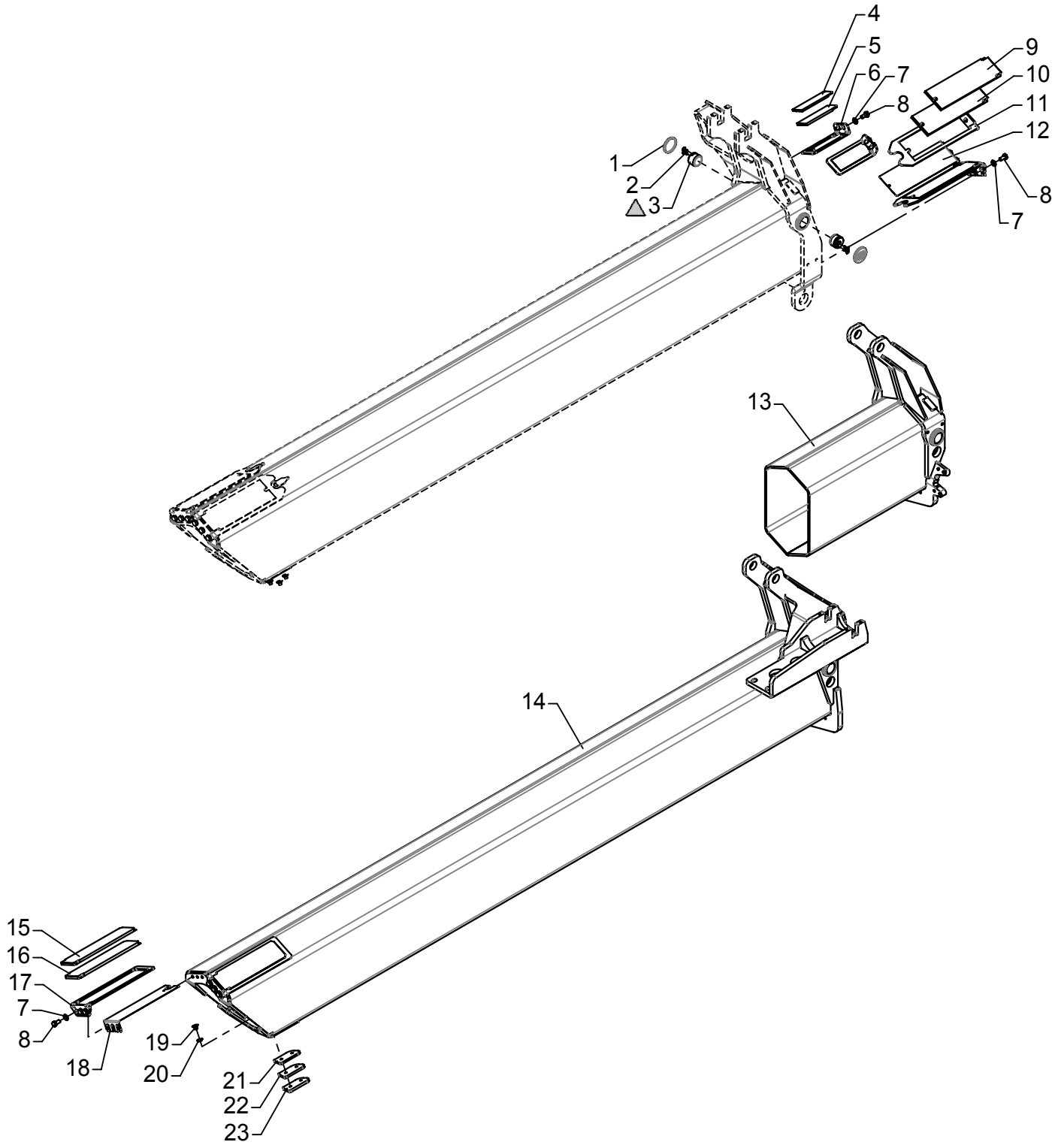


PBC 492

# Fittings for extension V

As from / To loader no.: 96 00 04 / 96 02 89
Created: 03.10.2003
Modified: 10.09.2012

| Item no. | Qty. | Part no. | Description | Remarks |
|---|---|---|---|---|
| 1 | 2 | 64362 | Plastic plug | |
| 2 | 4 | 30540 | Countersunk screw | MK6 x 16 |
| 3 | 2 | 6300334 | Guide | |
| 4 | 2 | 63698 | Slide block | 6 mm |
| 5 | 2 | 63668 | Slide block | 6381524, 7 mm |
| 6 | 2 | 6300336 | Bracket | |
| 7 | 16 | 31177 | Washer | 10 mm |
| 8 | 16 | 30154 | Set screw | M10 x 20 |
| 9 | 2 | 63521 | Slide block | 8 mm |
| 10 | 2 | 63696 | Slide block | 9 mm |
| 11 | 2 | 6300369 | Bracket for slide block | |
| 12 | 2 | 6300533 | Shim | |
| 13 | 1 | 6300691 | Jib extension V | * |
| 14 | 1 | 6300525 | Jib extension V | |
| 15 | 2 | 63582 | Slide block | 8 mm |
| 16 | 2 | 63583 | Slide block | 9 mm |
| 17 | 2 | 6300366 | Bracket for slide block | |
| 18 | 2 | 6300534 | Shim | |
| 19 | 4 | 31863 | Countersunk screw | MK10 x 12 |
| 20 | 4 | 31171 | Washer | 10 mm |
| 21 | 2 | 6300396 | Spacer | 6 mm |
| 22 | 2 | 6300397 | Spacer | 7 mm |
| 23 | 2 | 6300398 | Spacer | 8 mm |

* Optimised boom system
Please note: All screws – Loctite 243

# ODIN

Intern ref.: 6300390

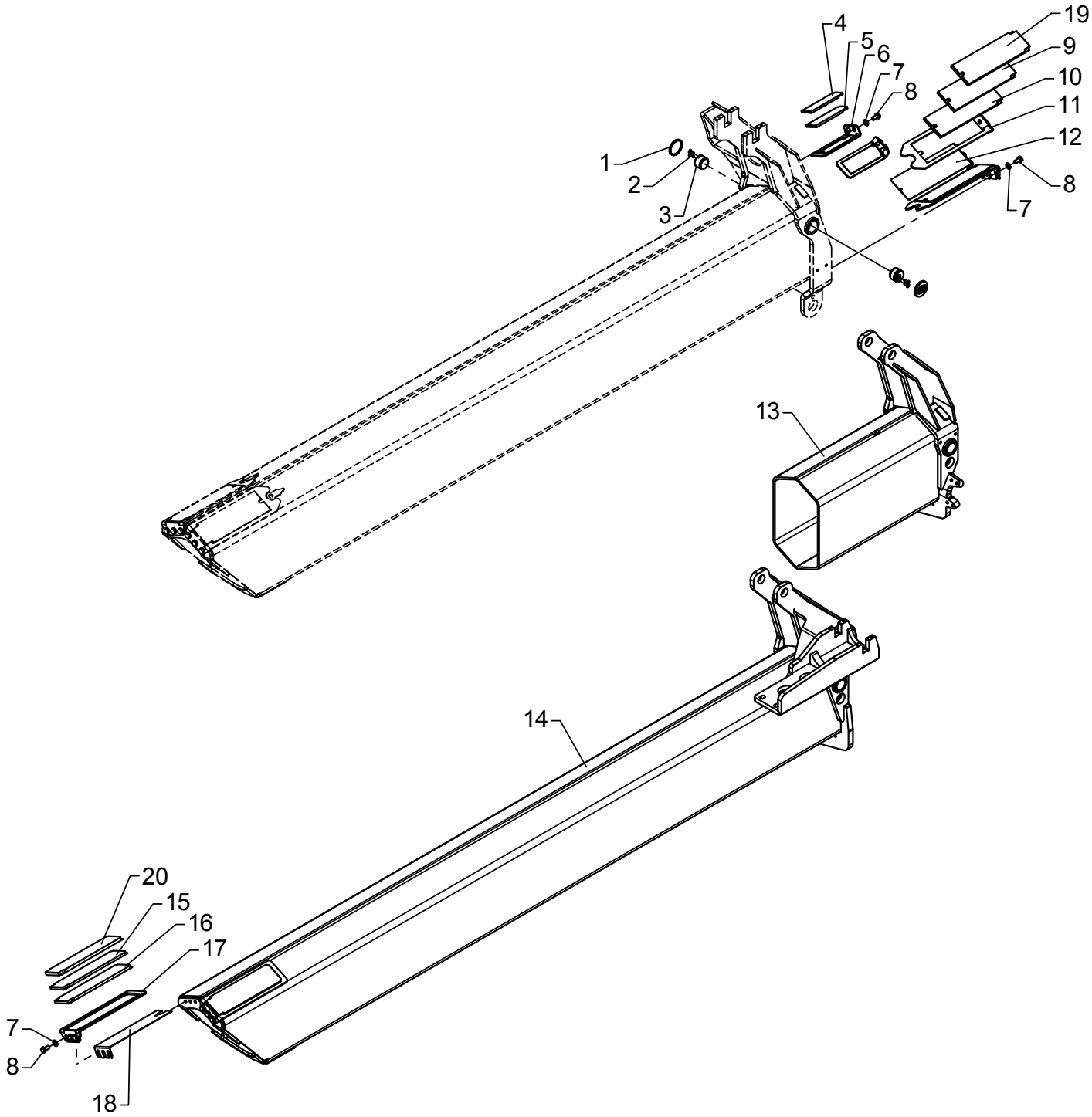


PBC 492

# Fittings for extension V

As from / To loader no.: 96 02 90 /
Created: 31.01.2012
Modified: 10.06.2014

| Item no. | Qty. | Part no. | Description | Remarks |
|---|---|---|---|---|
| 1 | 2 | 64362 | Plastic plug | |
| 2 | 4 | 30540 | Countersunk screw | MK6 x 16 |
| 3 | 2 | 6300334 | Guide | |
| 4 | 2 | 63698 | Slide block | 6 mm |
| 5 | 2 | 63668 | Slide block | 6381524, 7 mm |
| 6 | 2 | 6300336 | Bracket | |
| 7 | 16 | 31177 | Washer | 10 mm |
| 8 | 16 | 30154 | Set screw | M10 x 20 |
| 9 | 2 | 63521 | Slide block | 8 mm |
| 10 | 2 | 63696 | Slide block | 9 mm |
| 11 | 2 | 6300369 | Bracket for slide block | |
| 12 | 2 | 6300533 | Shim | |
| 13 | 1 | 6300691 | Jib extension V | * |
| 14 | 1 | 6300525 | Jib extension V | |
| 15 | 2 | 63582 | Slide block | 8 mm |
| 16 | 2 | 63583 | Slide block | 9 mm |
| 17 | 2 | 6300366 | Bracket for slide block | |
| 18 | 2 | 6300534 | Shim | |
| 19 | 2 | 68082 | Slide block | 10 mm |
| 20 | 2 | 63584 | Slide block | 10 mm |

* Optimised boom system
Please note: All screws – Loctite 243

# ODIN

Intern ref.: 6300550

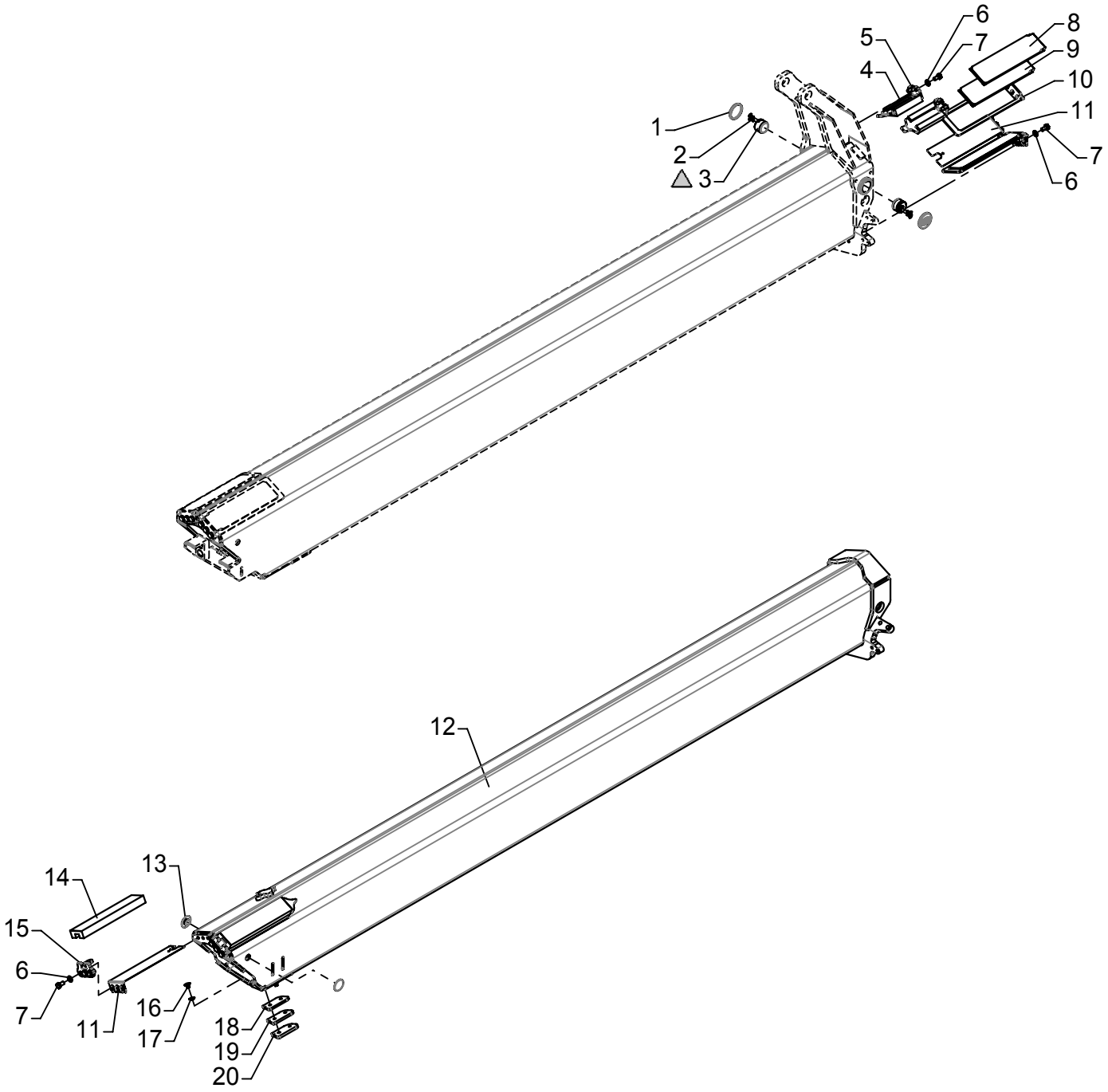


PBC 492

# Fittings for extension OK6

As from / To loader no.: 96 00 00 / 96 02 89
Created: 13.05.2004
Modified: 10.09.2012

| Item no. | Qty. | Part no. | Description | Remarks |
|---|---|---|---|---|
| 1 | 2 | 64362 | Plastic plug | |
| 2 | 4 | 30540 | Countersunk screw | MK6 x 16 |
| 3 | 2 | 6300334 | Guide | |
| 4 | 2 | 63401 | Slide block | 6299064, 9 mm |
| 5 | 2 | 6302636 | Bracket for slide block | |
| 6 | 16 | 31177 | Washer | 10 mm |
| 7 | 16 | 30154 | Set screw | M10 x 20 |
| 8 | 2 | 63582 | Slide block | 8 mm |
| 9 | 2 | 63583 | Slide block | 9 mm |
| 10 | 2 | 6300366 | Bracket for slide block | |
| 11 | 4 | 6300534 | Shim | |
| 12 | 1 | 6300911 | Jib extension VI | |
| 13 | 2 | 6381484 | Guide | |
| 14 | 2 | 63402 | Slide block | 6299064, 9 mm |
| 15 | 2 | 6302635 | Bracket for slide block | |
| 16 | 4 | 31863 | Countersunk screw | MK10 x 12 |
| 17 | 4 | 31171 | Washer | 10 mm |
| 18 | 2 | 6300396 | Spacer | 6 mm |
| 19 | 2 | 6300397 | Spacer | 7 mm |
| 20 | 2 | 6300398 | Spacer | 8 mm |

Please note: All screws – Loctite 243

# ODIN

Intern ref.: 6300550

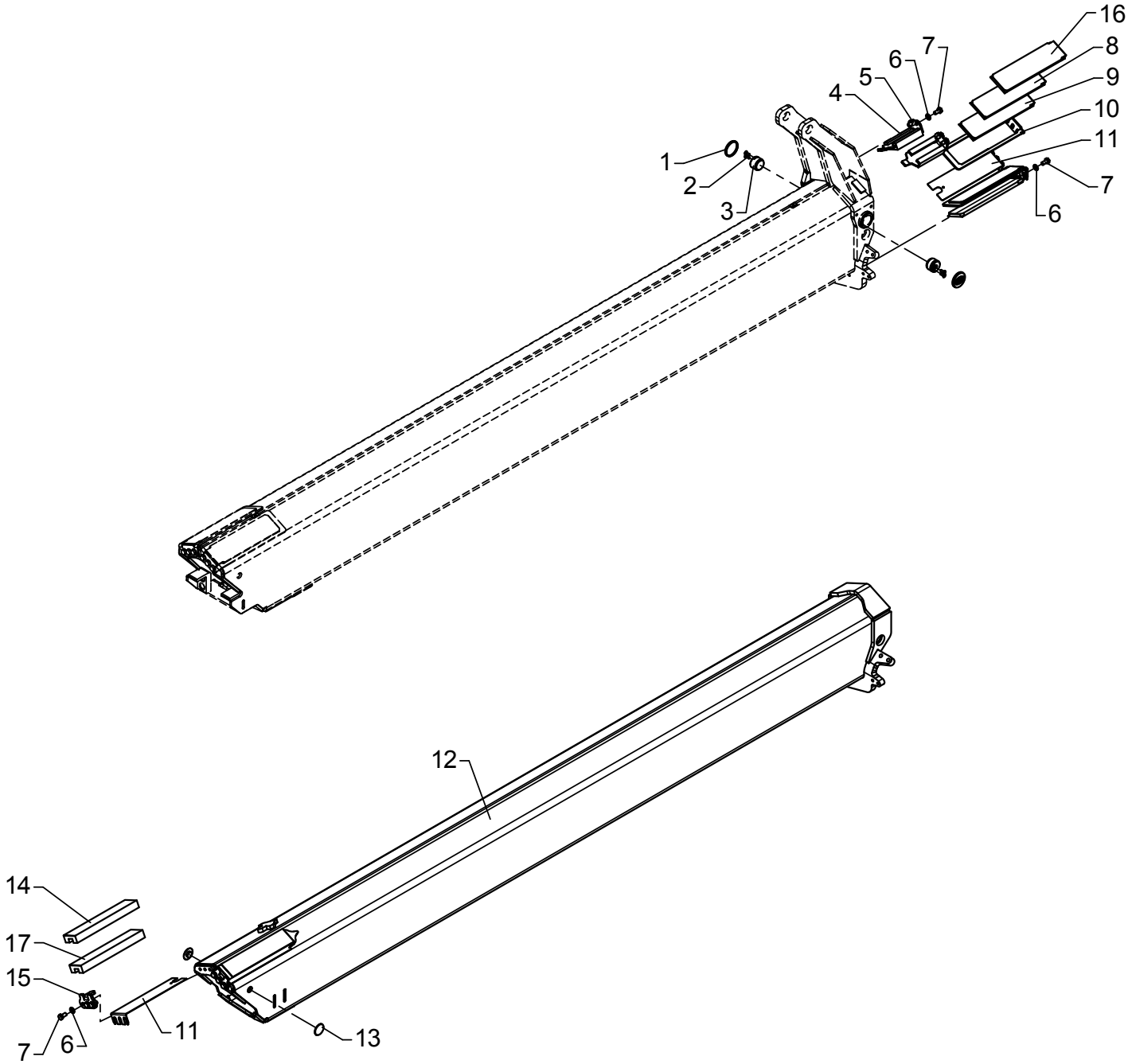


PBC 42

# Fittings for extension OK6

As from / To loader no.: 96 02 90 /
Created: 01.02.2012
Modified: 03.06.2014

| Item no. | Qty. | Part no. | Description | Remarks |
|---|---|---|---|---|
| 1 | 2 | 64362 | Plastic plug | |
| 2 | 4 | 30540 | Countersunk screw | MK6 x 16 |
| 3 | 2 | 6300334 | Guide | |
| 4 | 2 | 63401 | Slide block | 6299064, 9 mm |
| 5 | 2 | 6302636 | Bracket for slide block | |
| 6 | 16 | 31177 | Washer | 10 mm |
| 7 | 16 | 30154 | Set screw | M10 x 20 |
| 8 | 2 | 63582 | Slide block | 8 mm |
| 9 | 2 | 63583 | Slide block | 9 mm |
| 10 | 2 | 6300366 | Bracket for slide block | |
| 11 | 4 | 6300534 | Shim | |
| 12 | 1 | 6300911 | Jib extension VI | |
| 13 | 2 | 6381484 | Guide | |
| 14 | 2 | 63402 | Slide block | 6299064, 9 mm |
| 15 | 2 | 6302635 | Bracket for slide block | |
| 16 | 2 | 63584 | Slide block | 10 mm |
| 17 | 2 | 68081 | Slide block | 10 mm |

Please note: All screws – Loctite 243

# ODIN

Intern ref.: 6300550

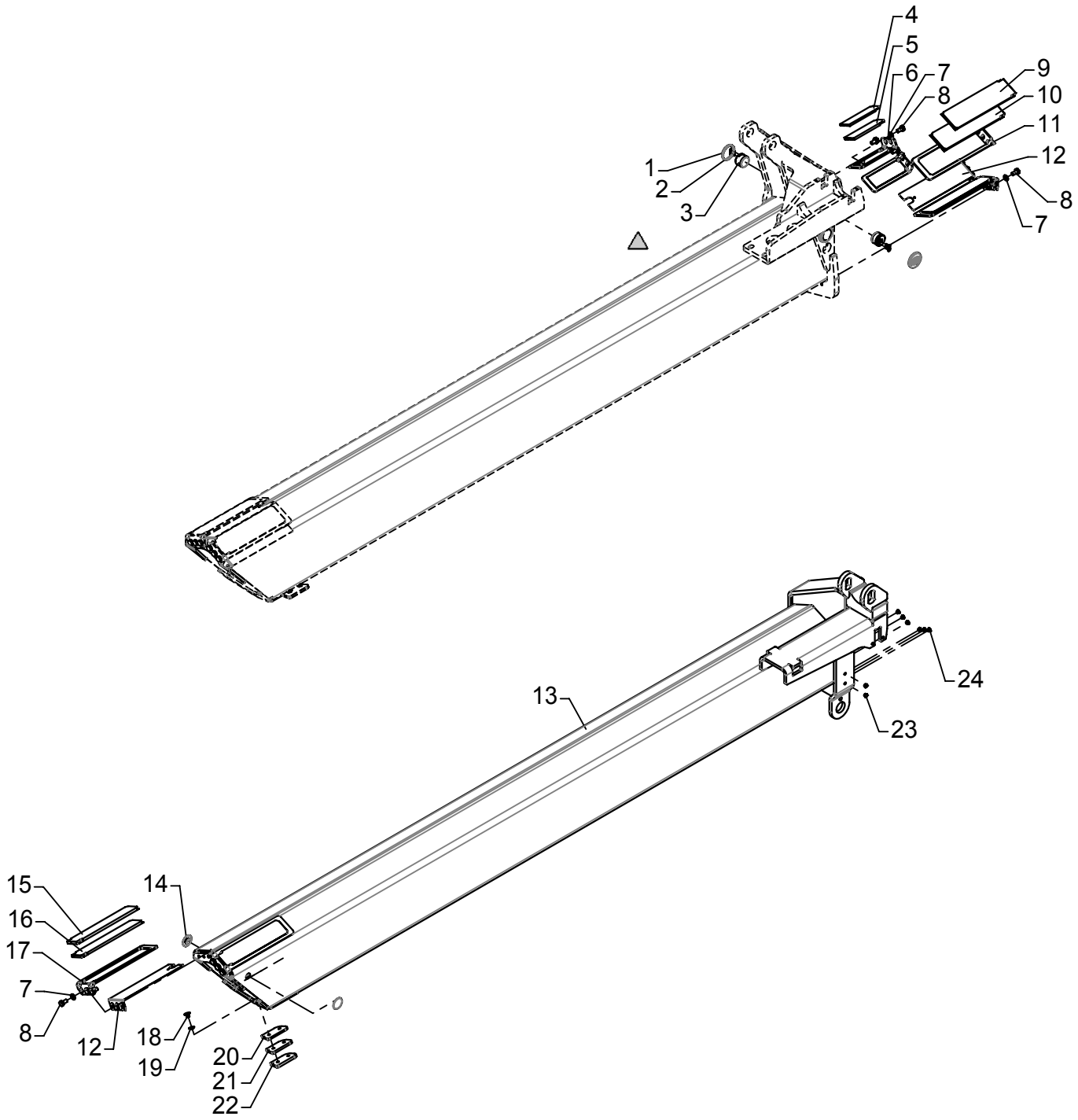


PBC 492

# Fittings for extension K6

As from / To loader no.: 96 00 00 / 96 02 89
Created: 03.10.2003
Modified: 10.09.2012

| Item no. | Qty. | Part no. | Description | Remarks |
|---|---|---|---|---|
| 1 | 2 | 64362 | Plastic plug | |
| 2 | 4 | 30540 | Countersunk screw | MK6 x 16 |
| 3 | 2 | 6300334 | Guide | |
| 4 | 2 | 63698 | Slide block | 6 mm |
| 5 | 2 | 63668 | Slide block | 6381524, 7 mm |
| 6 | 2 | 6300336 | Bracket | |
| 7 | 16 | 31177 | Washer | 10 mm |
| 8 | 16 | 30154 | Set screw | M10 x 20 |
| 9 | 2 | 63582 | Slide block | 8 mm |
| 10 | 2 | 63583 | Slide block | 9 mm |
| 11 | 2 | 6300366 | Bracket for slide block | |
| 12 | 4 | 6300534 | Shim | |
| 13 | 1 | 6300541 | Jib extension K6 | |
| 14 | 2 | 6381484 | Guide | |
| 15 | 2 | 63586 | Slide block | 9 mm |
| 16 | 2 | 63585 | Slide block | 8 mm |
| 17 | 2 | 6300399 | Bracket for slide block | |
| 18 | 4 | 31863 | Countersunk screw | MK10 x 12 |
| 19 | 4 | 31171 | Washer | 10 mm |
| 20 | 2 | 6300396 | Spacer | 6 mm |
| 21 | 2 | 6300397 | Spacer | 7 mm |
| 22 | 2 | 6300398 | Spacer | 8 mm |
| 23 | 2 | 64366 | Plug | ** |
| 24 | 6 | 64366 | Plug | |

** No extra valves
Please note: All screws – Loctite 243

# ODIN

Intern ref.: 6300550

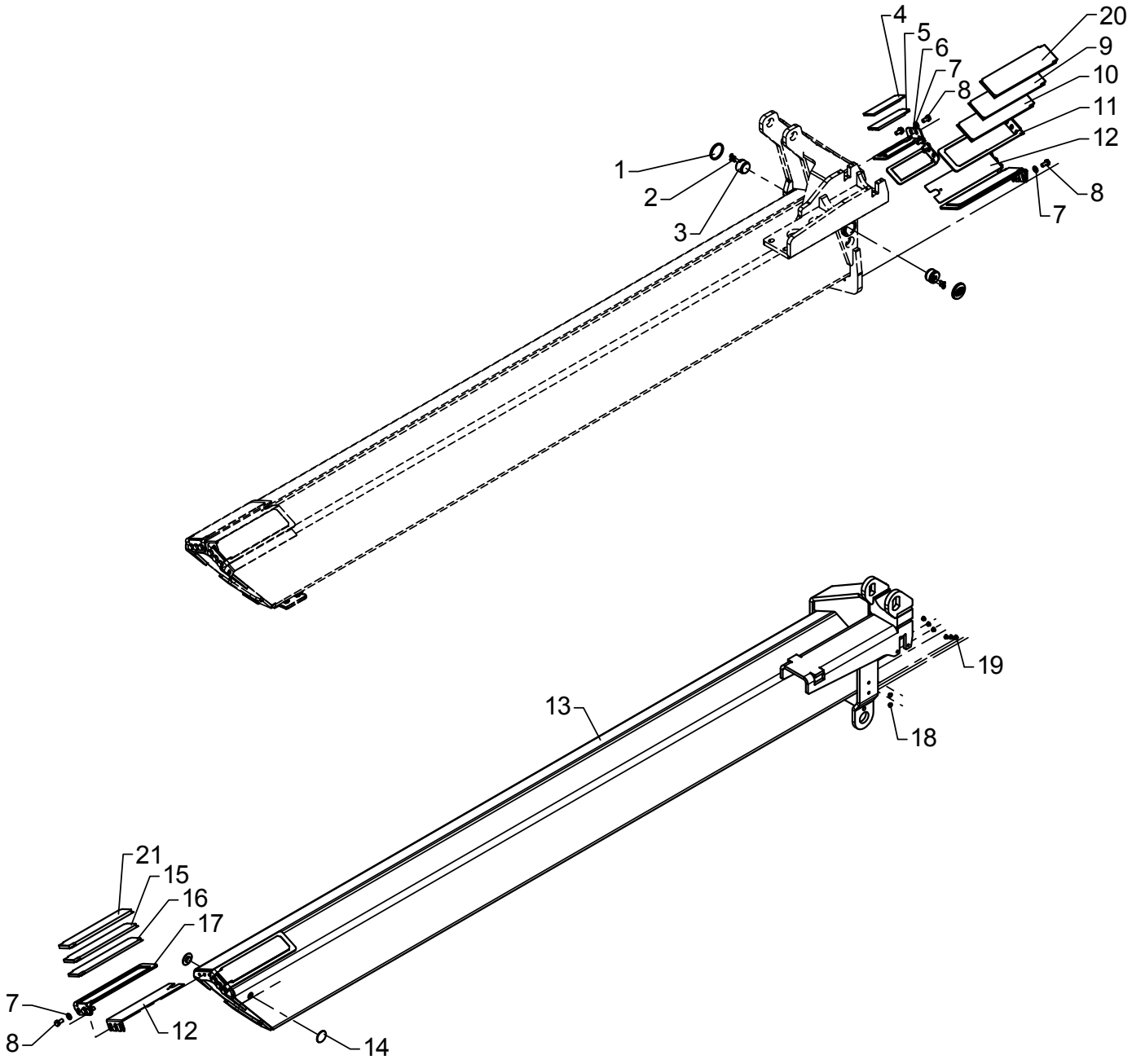


PBC 492

# Fittings for extension K6

As from / To loader no.: 97 01 71 /
Created: 01.02.2012
Modified: 03.06.2014

| Item no. | Qty. | Part no. | Description | Remarks |
|---|---|---|---|---|
| 1 | 2 | 64362 | Plastic plug | |
| 2 | 4 | 30540 | Countersunk screw | MK6 x 16 |
| 3 | 2 | 6300334 | Guide | |
| 4 | 2 | 63698 | Slide block | 6 mm |
| 5 | 2 | 63668 | Slide block | 6381524, 7 mm |
| 6 | 2 | 6300336 | Bracket | |
| 7 | 16 | 31177 | Washer | 10 mm |
| 8 | 16 | 30154 | Set screw | M10 x 20 |
| 9 | 2 | 63582 | Slide block | 8 mm |
| 10 | 2 | 63583 | Slide block | 9 mm |
| 11 | 2 | 6300366 | Bracket for slide block | |
| 12 | 4 | 6300534 | Shim | |
| 13 | 1 | 6300541 | Jib extension K6 | |
| 14 | 2 | 6381484 | Guide | |
| 15 | 2 | 63586 | Slide block | 9 mm |
| 16 | 2 | 63585 | Slide block | 8 mm |
| 17 | 2 | 6300399 | Bracket for slide block | |
| 18 | 2 | 64366 | Plug | ** |
| 19 | 6 | 64366 | Plug | |
| 20 | 2 | 63584 | Slide block | 10 mm |
| 21 | 2 | 63587 | Slide block | 10 mm |

** No extra valves
Please note: All screws – Loctite 243

# ODIN

Intern ref.: 6300570

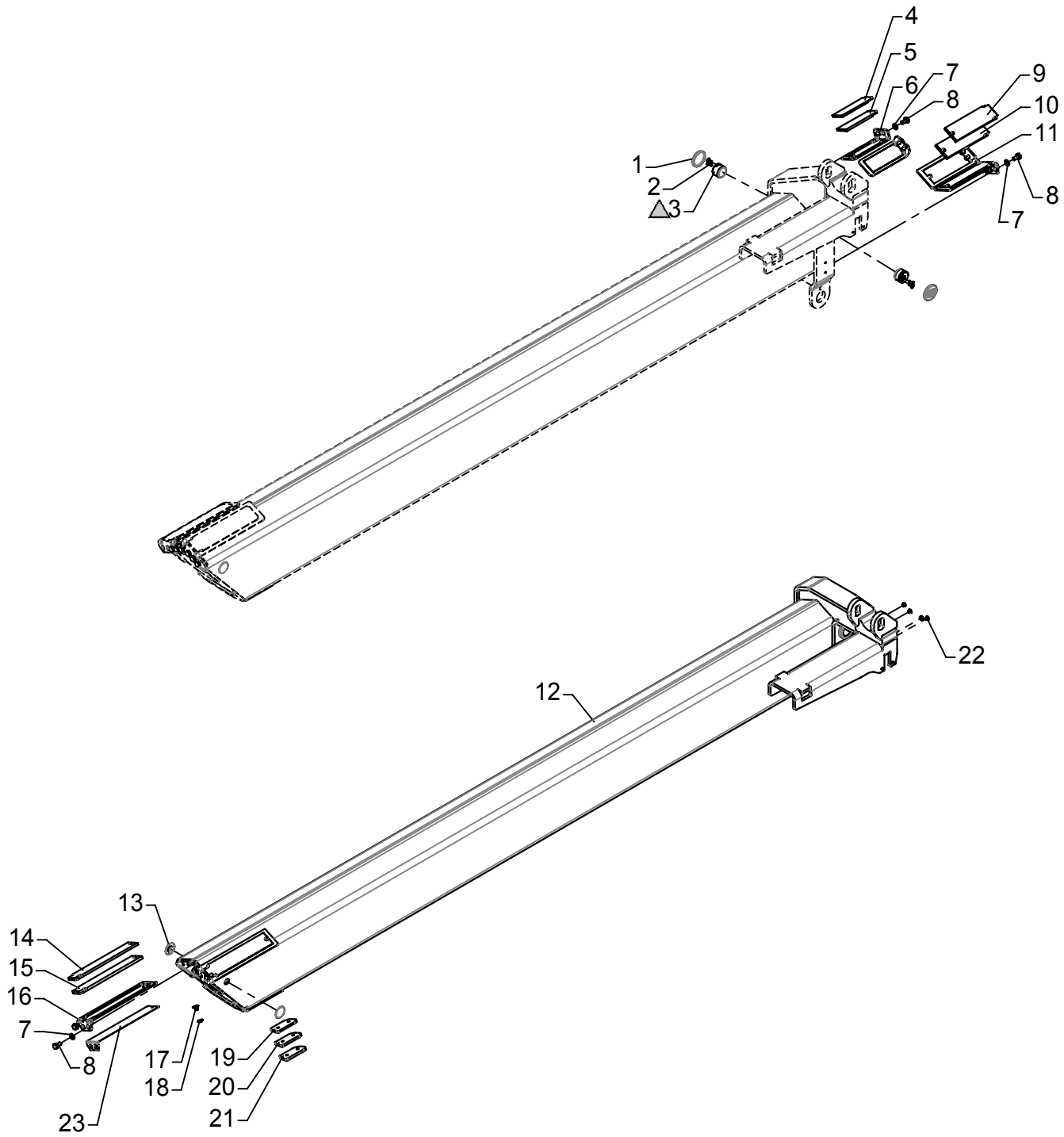


PBC 492

# Fittings for extension VII

As from / To loader no.: 96 00 00 / 96 02 89
Created: 13.05.2004
Modified: 27.04.2012

| Item no. | Qty. | Part no. | Description | Remarks |
|---|---|---|---|---|
| 1 | 2 | 64362 | Plastic plug | |
| 2 | 4 | 30540 | Countersunk screw | MK6 x 16 |
| 3 | 2 | 6300334 | Guide | |
| 4 | 2 | 63698 | Slide block | 6 mm |
| 5 | 2 | 63668 | Slide block | 6381524, 7 mm |
| 6 | 2 | 6300336 | Bracket | |
| 7 | 14 | 31177 | Washer | 10 mm |
| 8 | 14 | 30154 | Set screw | M10 x 20 |
| 9 | 2 | 63523 | Slide block | 8 mm |
| 10 | 2 | 63695 | Slide block | 9 mm |
| 11 | 2 | 6300367 | Bracket for slide block | |
| 12 | 1 | 6300561 | Jib extension VII | |
| 13 | 2 | 6381484 | Guide | |
| 14 | 2 | 63588 | Slide block | 8 mm |
| 15 | 2 | 63589 | Slide block | 9 mm |
| 16 | 2 | 6300368 | Bracket for slide block | |
| 17 | 4 | 31863 | Countersunk screw | MK10 x 12 |
| 18 | 4 | 31171 | Washer | 10 mm |
| 19 | 2 | 6300396 | Spacer | 6 mm |
| 20 | 2 | 6300397 | Spacer | 7 mm |
| 21 | 2 | 6300398 | Spacer | 8 mm |
| 22 | 4 | 64366 | Plug | |
| 23 | 2 | 6300568 | Shim | |

Please note: All screws – Loctite 243

# ODIN

Intern ref.: 6300570

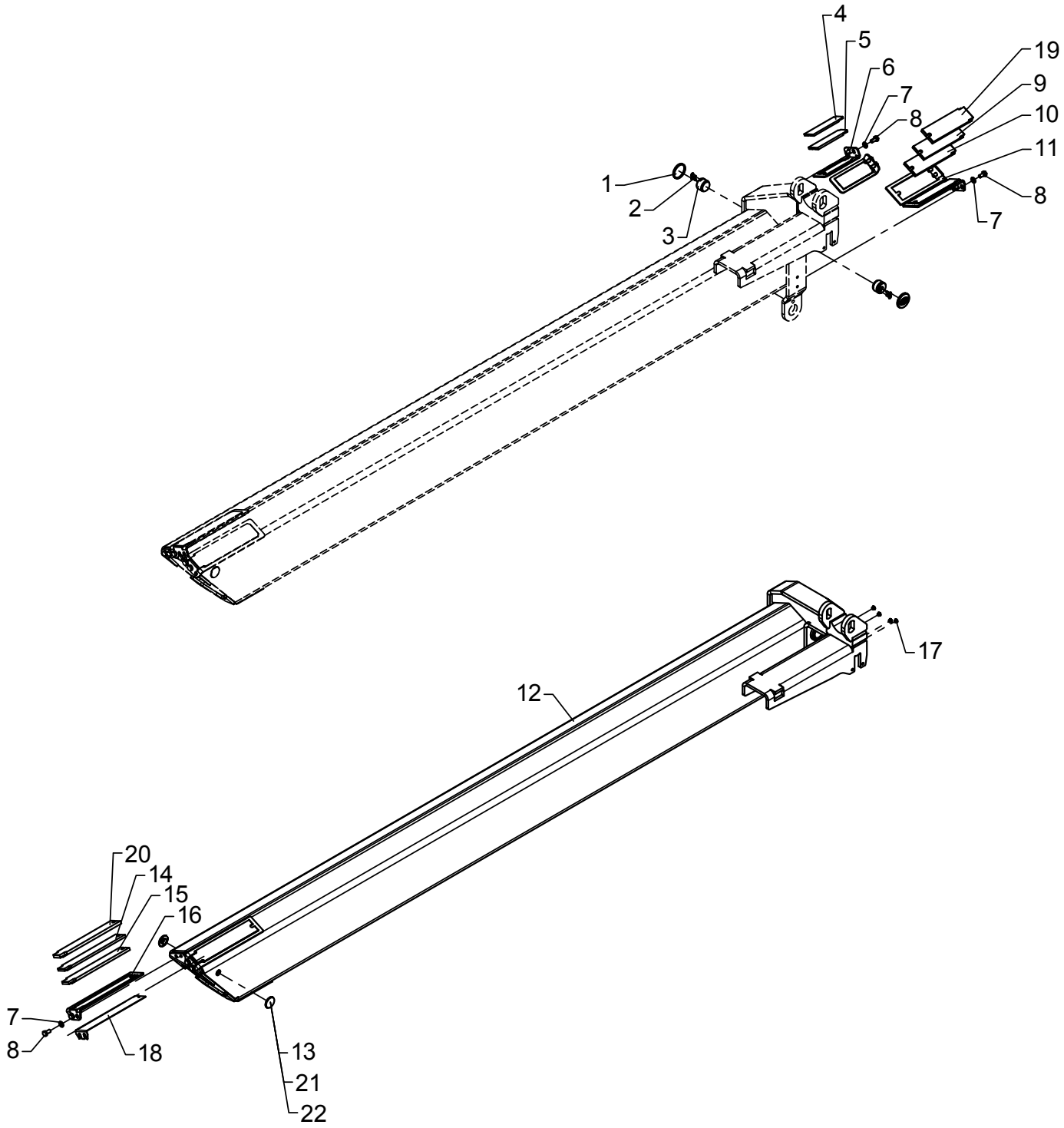


PBC 492

# Fittings for extension VII

As from / To loader no.: 96 02 90 /
Created: 01.02.2012
Modified: 10.06.2014

| Item no. | Qty. | Part no. | Description | Remarks |
|---|---|---|---|---|
| 1 | 2 | 64362 | Plastic plug | |
| 2 | 4 | 30540 | Countersunk screw | MK6 x 16 |
| 3 | 2 | 6300334 | Guide | |
| 4 | 2 | 63698 | Slide block | 6 mm |
| 5 | 2 | 63668 | Slide block | 6381524, 7 mm |
| 6 | 2 | 6300336 | Bracket | |
| 7 | 14 | 31177 | Washer | 10 mm |
| 8 | 14 | 30154 | Set screw | M10 x 20 |
| 9 | 2 | 63523 | Slide block | 8 mm |
| 10 | 2 | 63695 | Slide block | 9 mm |
| 11 | 2 | 6300367 | Bracket for slide block | |
| 12 | 1 | 6300561 | Jib extension VII | |
| 13 | 2 | 6381484 | Guide | |
| 14 | 2 | 63588 | Slide block | 8 mm |
| 15 | 2 | 63589 | Slide block | 9 mm |
| 16 | 2 | 6300368 | Bracket for slide block | |
| 17 | 4 | 64366 | Plug | |
| 18 | 2 | 6300568 | Shim | |
| 19 | 2 | 68080 | Slide block | 10 mm |
| 20 | 2 | 63590 | Slide block | 10 mm |
| 21 | 2 | 6306312 | Guide | 5 + 3,5mm |
| 22 | 2 | 6394633 | Guide | |

Please note: All screws – Loctite 243

# ODIN

Intern ref.: 6300590

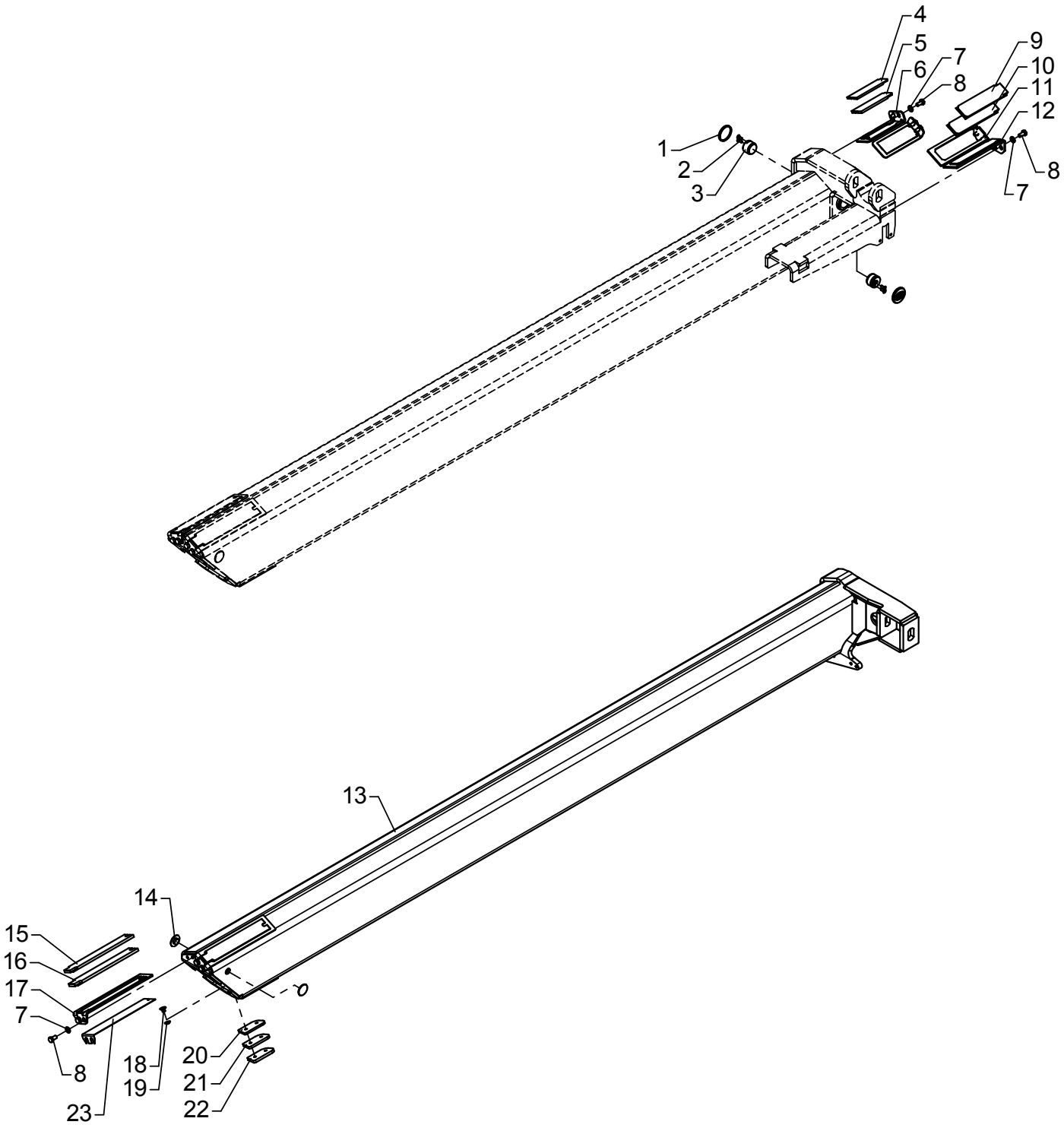


PBC 492

# Fittings for extension VIII

As from / To loader no.: 96 00 00 / 96 02 89
Created: 13.05.2004
Modified: 01.02.2012

| Item no. | Qty. | Part no. | Description | Remarks |
|---|---|---|---|---|
| 1 | 2 | 64362 | Plastic plug | |
| 2 | 4 | 30540 | Countersunk screw | MK6 x 16 |
| 3 | 2 | 6300334 | Guide | |
| 4 | 2 | 63698 | Slide block | 6 mm |
| 5 | 2 | 63668 | Slide block | 6381524, 7 mm |
| 6 | 2 | 6300336 | Bracket | |
| 7 | 12 | 31177 | Washer | 10 mm |
| 8 | 12 | 30154 | Set screw | M10 x 20 |
| 9 | 2 | 63516 | Slide block | 8 mm |
| 10 | 2 | 63764 | Slide block | 6239674, 9 mm |
| 11 | 1 | 6239573 | Bracket | |
| 12 | 1 | 6239563 | Bracket | |
| 13 | 1 | 6300581 | Jib extension VIII | |
| 14 | 2 | 6381484 | Guide | |
| 15 | 2 | 63528 | Slide block | 8 mm |
| 16 | 2 | 63527 | Slide block | 9 mm |
| 17 | 2 | 6300443 | Bracket for slide block | |
| 18 | 4 | 31863 | Countersunk screw | MK10 x 12 |
| 19 | 4 | 31171 | Washer | 10 mm |
| 20 | 2 | 6300396 | Spacer | 6 mm |
| 21 | 2 | 6300397 | Spacer | 7 mm |
| 22 | 2 | 6300398 | Spacer | 8 mm |
| 23 | 2 | 6300568 | Shim | |

Please note: All screws – Loctite 243

# ODIN

Intern ref.: 6300590

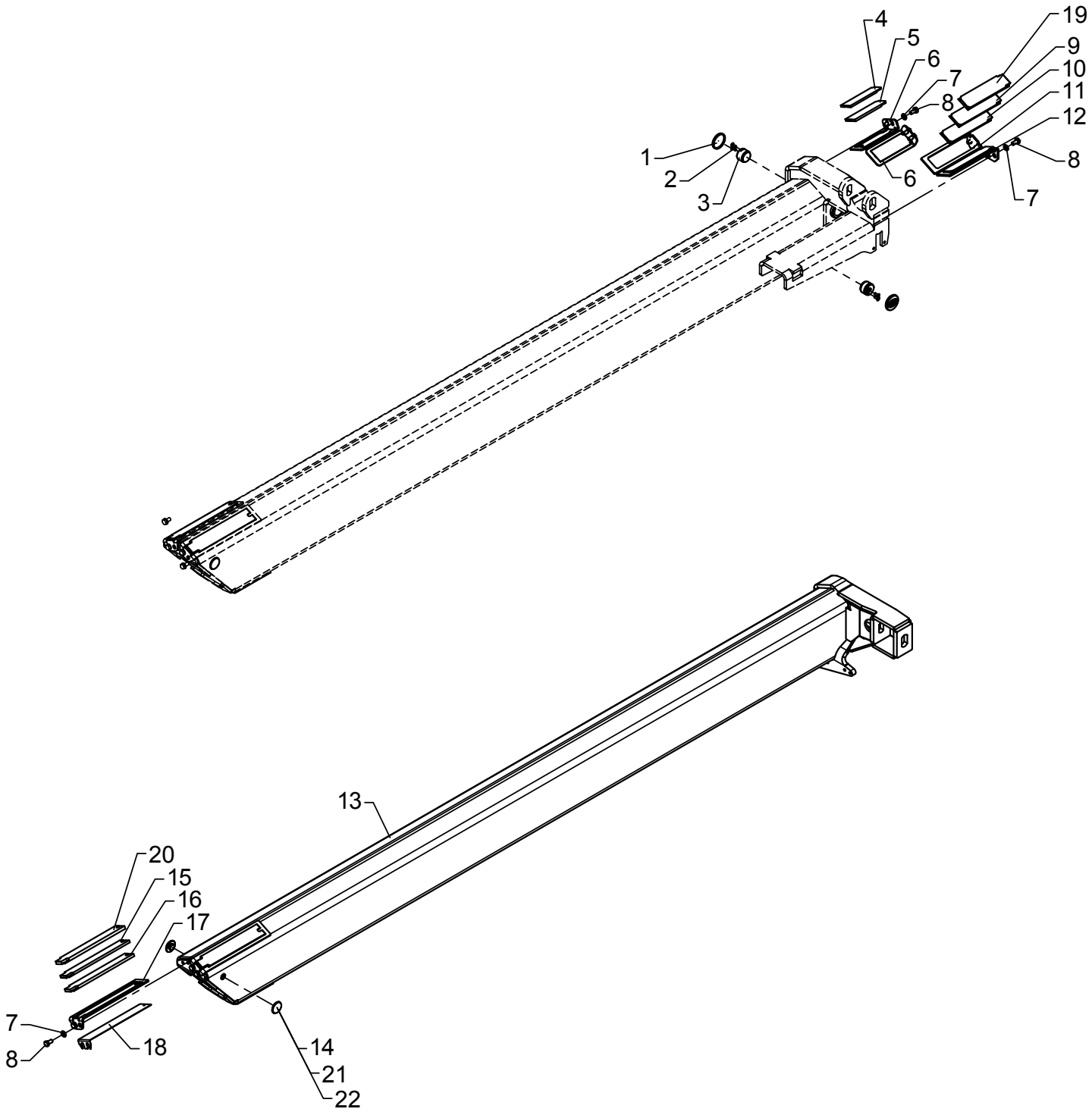


PBC 492

# Fittings for extension VIII

As from / To loader no.: 96 02 90 /
Created: 01.02.2012
Modified: 10.06.2014

| Item no. | Qty. | Part no. | Description | Remarks |
|---|---|---|---|---|
| 1 | 2 | 64362 | Plastic plug | |
| 2 | 4 | 30540 | Countersunk screw | MK6 x 16 |
| 3 | 2 | 6300334 | Guide | |
| 4 | 2 | 63698 | Slide block | 6 mm |
| 5 | 2 | 63668 | Slide block | 6381524, 7 mm |
| 6 | 2 | 6300336 | Bracket | |
| 7 | 12 | 31177 | Washer | 10 mm |
| 8 | 12 | 30154 | Set screw | M10 x 20 |
| 9 | 2 | 63516 | Slide block | 8 mm |
| 10 | 2 | 63764 | Slide block | 9 mm |
| 11 | 1 | 6239573 | Bracket | |
| 12 | 1 | 6239563 | Bracket | |
| 13 | 1 | 6300581 | Jib extension VIII | |
| 14 | 2 | 6381484 | Guide | |
| 15 | 2 | 63528 | Slide block | 8 mm |
| 16 | 2 | 63527 | Slide block | 9 mm |
| 17 | 2 | 6300443 | Bracket for slide block | |
| 18 | 2 | 6300568 | Shim | |
| 19 | 2 | 68078 | Slide block | 10 mm |
| 20 | 2 | 68084 | Slide block | 10 mm |
| 21 | 2 | 6394633 | Guide | |
| 22 | 2 | 6306312 | Guide | 5 + 3,5mm |

Please note: All screws – Loctite 243

# ODIN

Intern ref.: 6300520

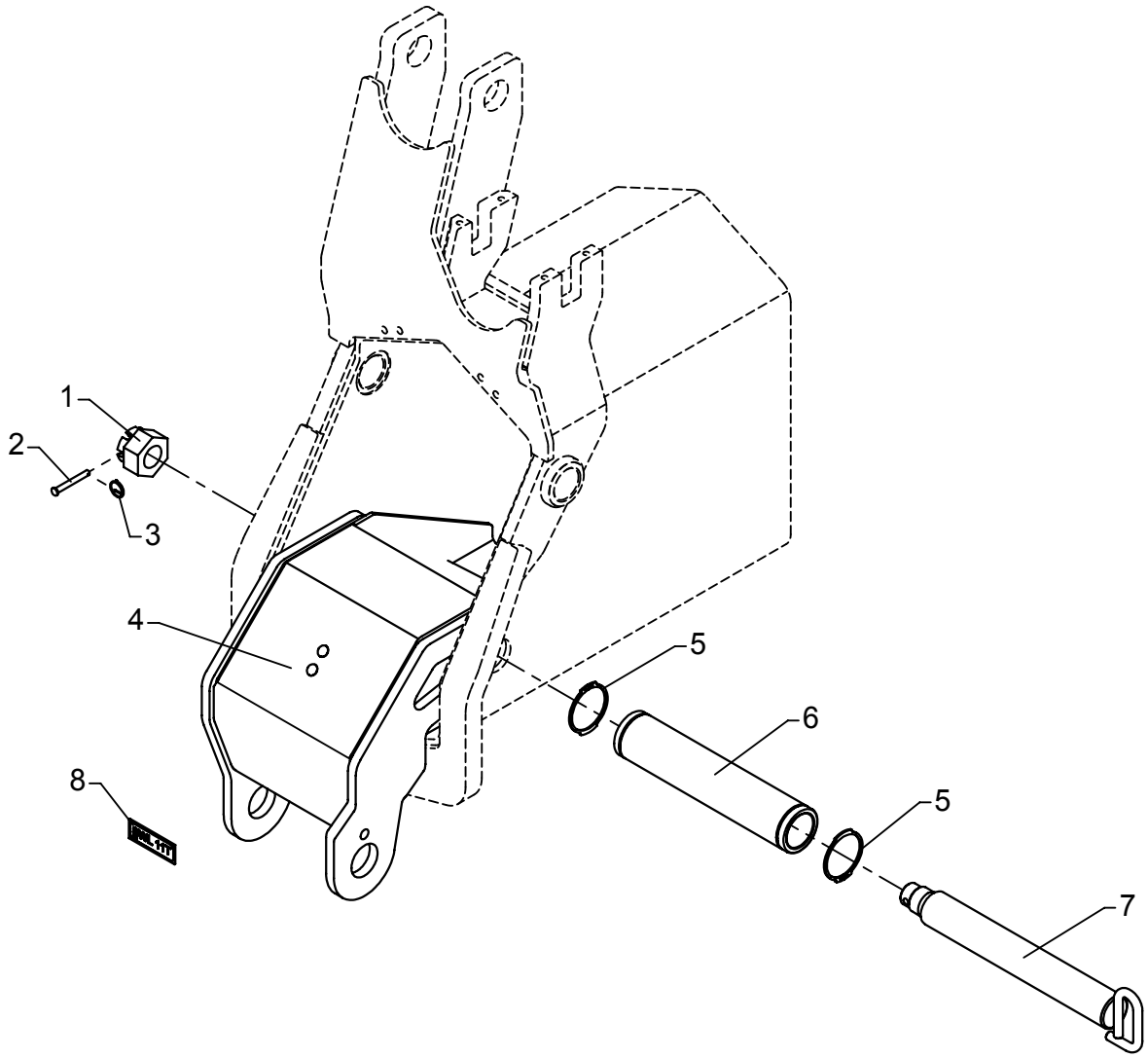

# Separate hook suspension, OK2

As from / To loader no.: 96 00 00 / 96 03 35
Created: 03.10.2003
Modified: 29.10.2013

| Item no. | Qty. | Part no. | Description | Remarks |
|---|---|---|---|---|
| 1 | 1 | 30839 | Nut | M30 |
| 2 | 1 | 31279 | Cotter bolt | ø6 x 50 |
| 3 | 1 | 33458 | Lock ring | |
| 4 | 1 | 6300381 | Hook suspension | |
| 5 | 2 | 33132 | Circlip Din 471 | 55U |
| 6 | 1 | 6300376 | Hub | |
| 7 | 1 | 6300467 | Pin for suspension | |
| 8 | 1 | 66542 | Plate SWL 11 t | |

# ODIN

Intern ref.: 6300520

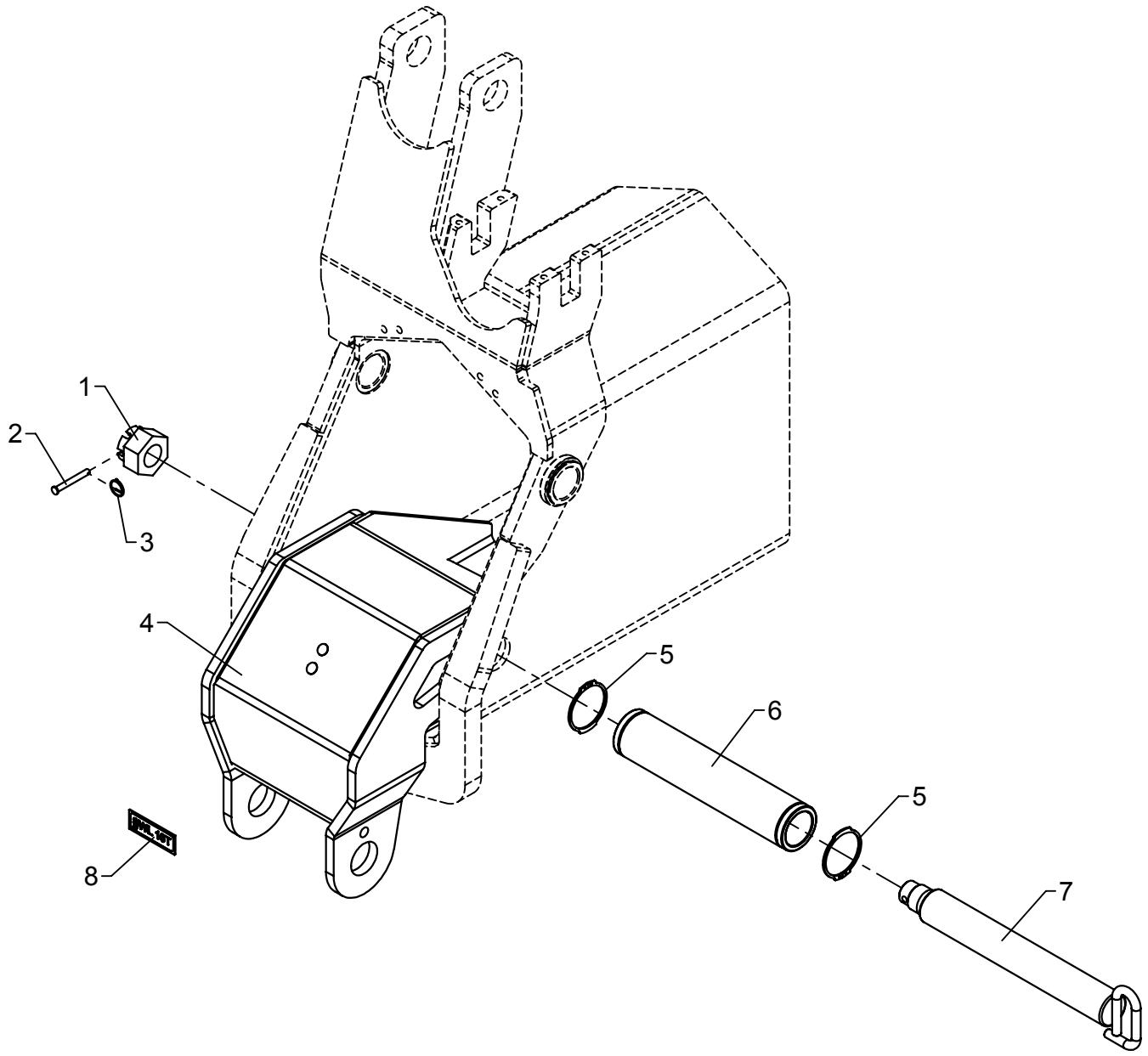

# Separate hook suspension, OK2

As from / To loader no.: 96 03 36
Created: 29.10.2013
Modified:

| Item no. | Qty. | Part no. | Description | Remarks |
|---|---|---|---|---|
| 1 | 1 | 30839 | Nut | M30 |
| 2 | 1 | 31279 | Cotter bolt | ø6 x 50 |
| 3 | 1 | 33458 | Lock ring | |
| 4 | 1 | 6300381 | Hook suspension | |
| 5 | 2 | 33132 | Circlip Din 471 | 55U |
| 6 | 1 | 6300376 | Hub | |
| 7 | 1 | 6300467 | Pin for suspension | |
| 8 | 1 | 66541 | Plate SWL 16 t | |

# ODIN

Intern ref.: 6300520

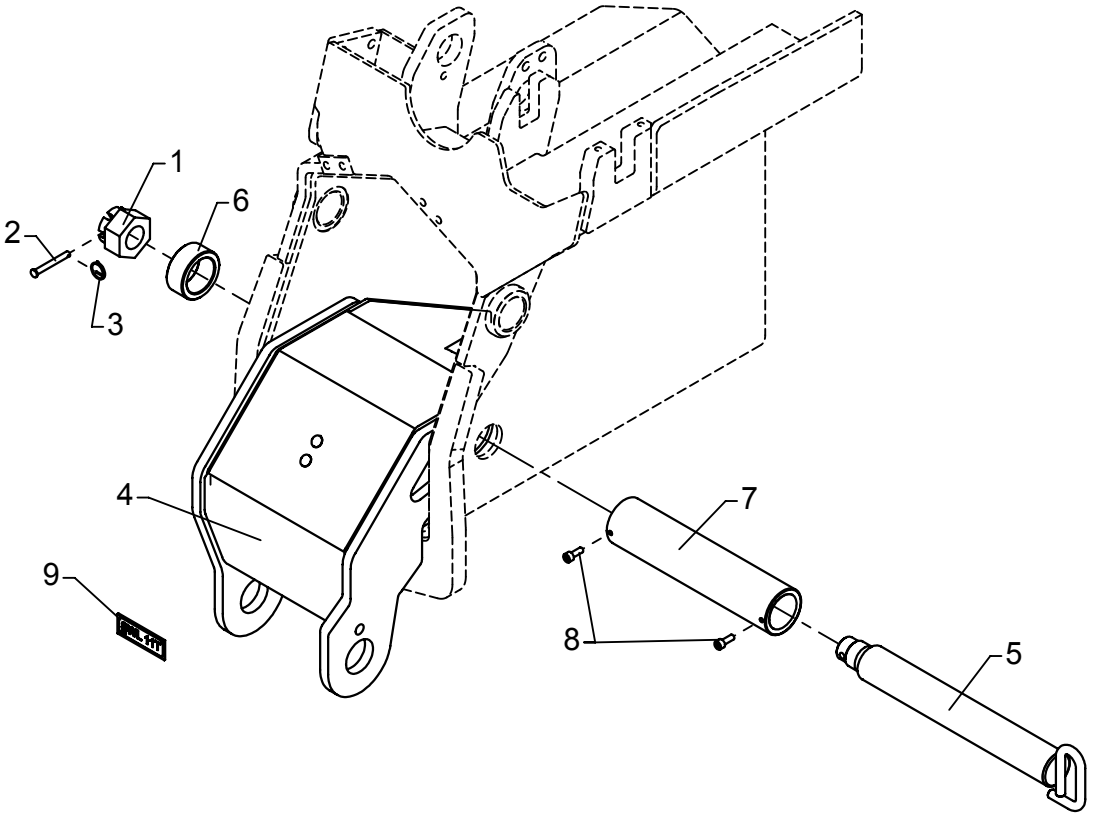

# Separate hook suspension, OK3

As from / To loader no.: 96 00 00 / 96 03 35
Created: 03.10.2003
Modified: 29.10.2013

| Item no. | Qty. | Part no. | Description | Remarks |
|---|---|---|---|---|
| 1 | 1 | 30839 | Nut | M30 |
| 2 | 1 | 31279 | Cotter bolt | ø6 x 50 |
| 3 | 1 | 33458 | Lock ring | |
| 4 | 1 | 6300381 | Hook suspension | |
| 5 | 1 | 6300467 | Pin for suspension | |
| 6 | 1 | 6300469 | Spacer | |
| 7 | 1 | 6300479 | Hub | |
| 8 | 2 | 31539 | Screw, stainless | MC6 x 16 |
| 9 | 1 | 66542 | Plate SWL 11 t | |

# ODIN

Intern ref.: 6300520

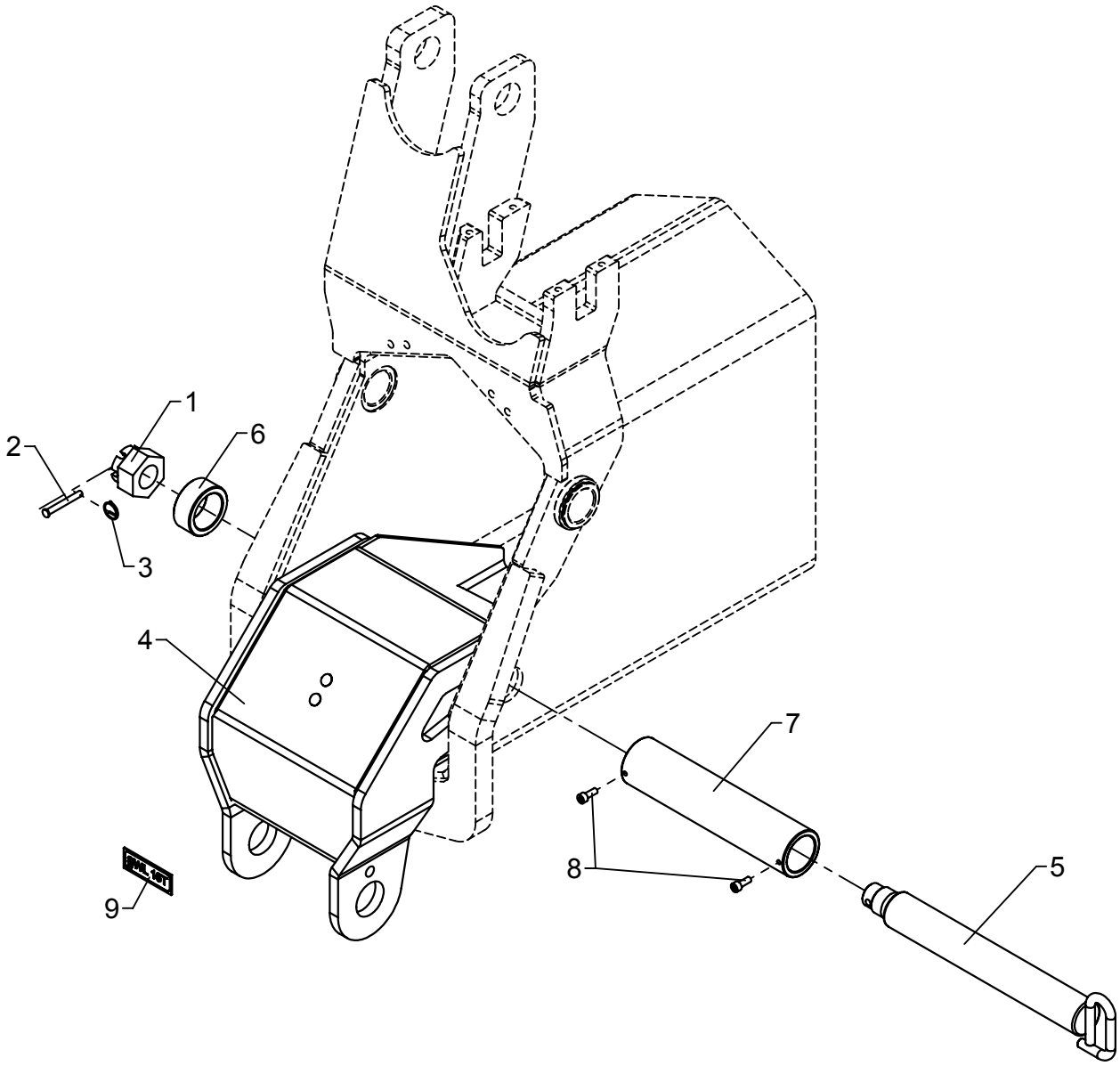

# Separate hook suspension, OK3

As from / To loader no.: 96 03 36
Created: 29.10.2013
Modified:

| Item no. | Qty. | Part no. | Description | Remarks |
|---|---|---|---|---|
| 1 | 1 | 30839 | Nut | M30 |
| 2 | 1 | 31279 | Cotter bolt | ø6 x 50 |
| 3 | 1 | 33458 | Lock ring | |
| 4 | 1 | 6300381 | Hook suspension | |
| 5 | 1 | 6300467 | Pin for suspension | |
| 6 | 1 | 6300469 | Spacer | |
| 7 | 1 | 6300479 | Hub | |
| 8 | 2 | 31539 | Screw, stainless | MC6 x 16 |
| 9 | 1 | 66541 | Plate SWL 16 t | |

# ODIN

Intern ref.: 6301250

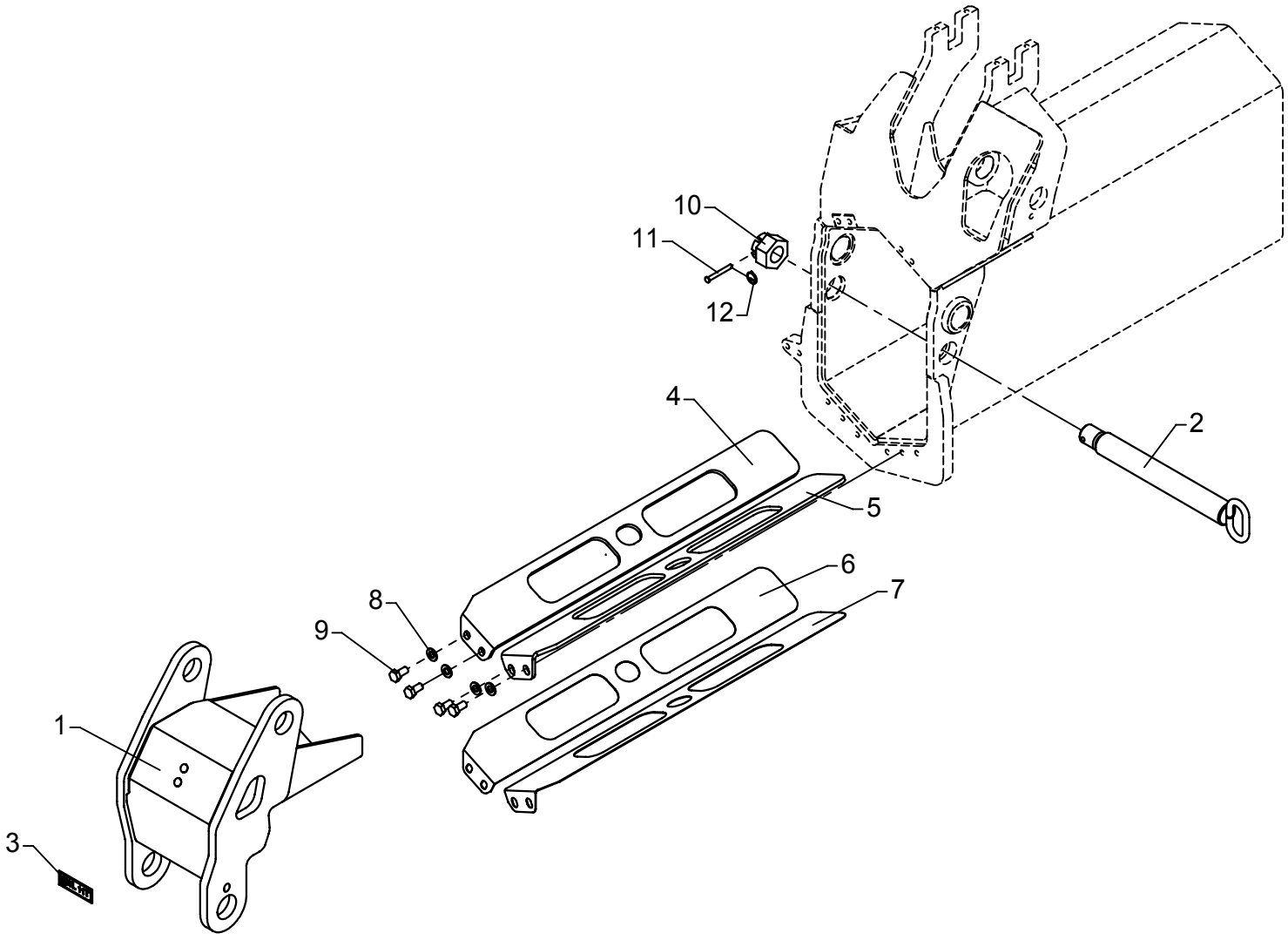

# Separate hook suspension, OK4

As from / To loader no.: 96 00 00 / 96 03 35
Created: 03.10.2003
Modified: 12.06.2013

| Item no. | Qty. | Part no. | Description | Remarks |
|---|---|---|---|---|
| 1 | 1 | 6300715 | Hook suspension OK4 | |
| 2 | 1 | 6302718 | Pin for hook suspension | |
| 3 | 1 | 66542 | Plate SWL 11 t | |
| 4 | 1 | 6300705 | Spacer, right | |
| 5 | 1 | 6300706 | Spacer, right | |
| 6 | 1 | 6300707 | Shim, right | |
| 7 | 1 | 6300708 | Shim, right | |
| 8 | 4 | 31177 | Washer | 10 mm |
| 9 | 4 | 31517 | Set screw, stainless | M10 x 20 |
| 10 | 1 | 30839 | Nut | M30 |
| 11 | 1 | 31279 | Cotter bolt | ø6 x 50 |
| 12 | 1 | 33458 | Lock ring | |

# ODIN

Intern ref.: 6301250

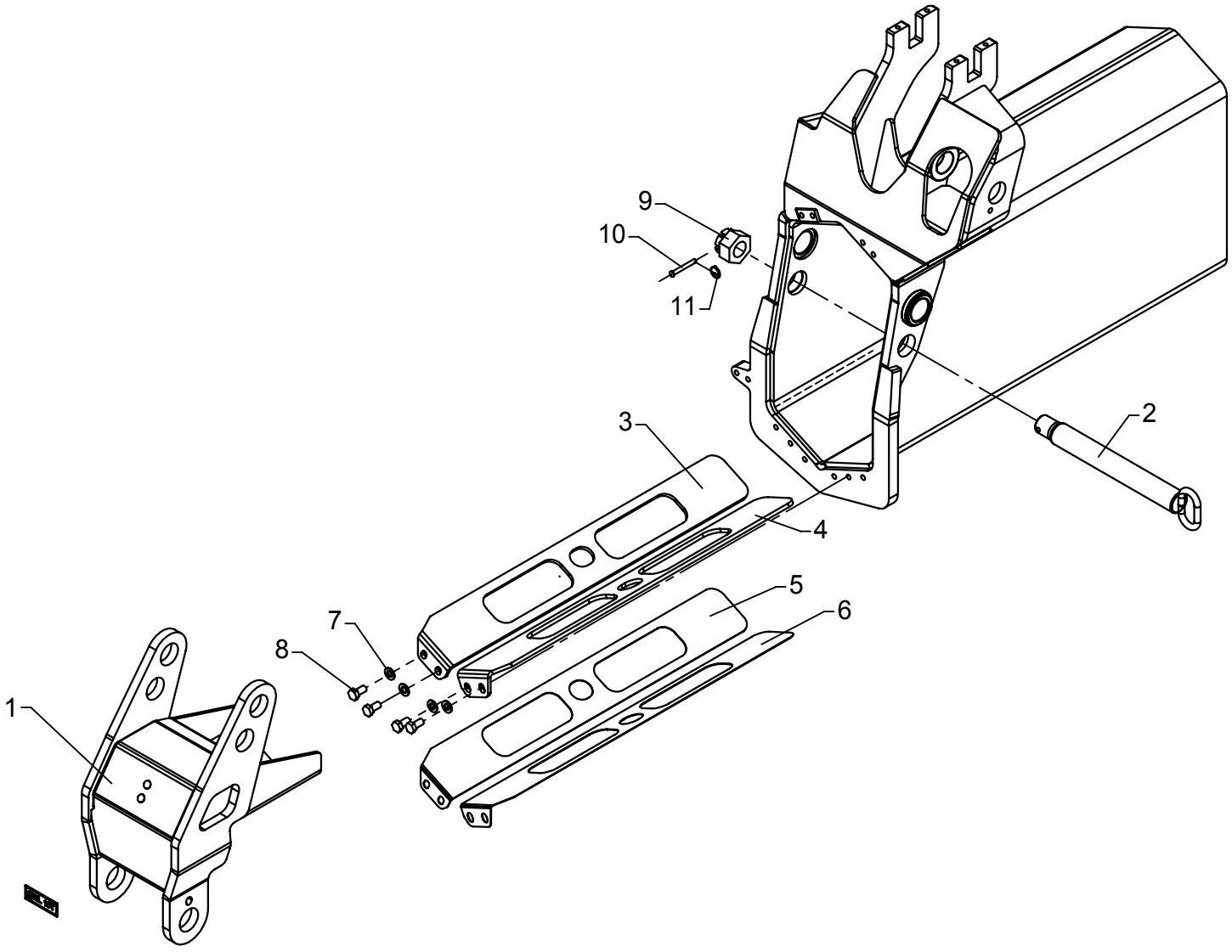

# Separate hook suspension, OK4

As from / To loader no.: 96 03 36
Created: 04.11.2013
Modified:

| Item no. | Qty. | Part no. | Description | Remarks |
|---|---|---|---|---|
| 1 | 1 | 6302715 | Hook suspension OK4 | |
| 2 | 1 | 6302718 | Pin for hook suspension | |
| 3 | 1 | 6300705 | Spacer, right | |
| 4 | 1 | 6300706 | Spacer, right | |
| 5 | 1 | 6300707 | Shim, right | |
| 6 | 1 | 6300708 | Shim, right | |
| 7 | 4 | 31177 | Washer | 10 mm |
| 8 | 4 | 31517 | Set screw, stainless | M10 x 20 |
| 9 | 1 | 30839 | Nut | M30 |
| 10 | 1 | 31279 | Cotter bolt | ø6 x 50 |
| 11 | 1 | 33458 | Lock ring | |
| 12 | 1 | 66541 | Plate SWL 16 t | |

# ODIN

Intern ref.: 6301260

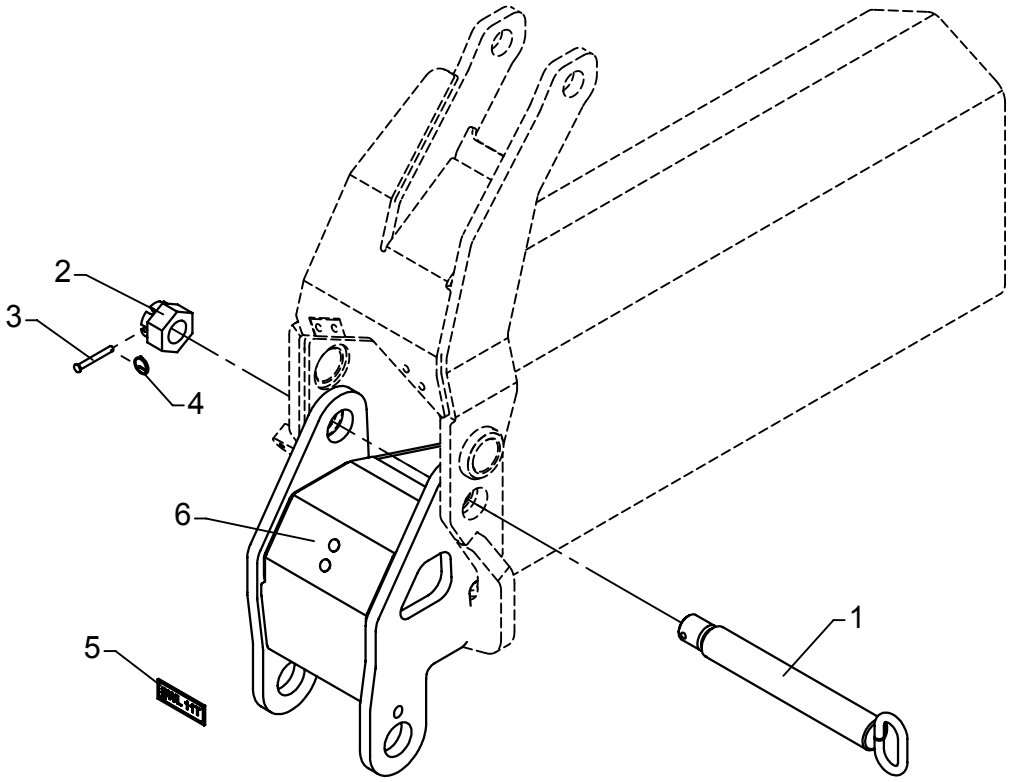

# Separate hook suspension, OK5

As from / To loader no.: 96 02 90 / 96 03 35
Created: 03.10.2003
Modified: 12.06.2013

| Item no. | Qty. | Part no. | Description | Remarks |
|---|---|---|---|---|
| 1 | 1 | 6302728 | Pin for suspension | |
| 2 | 1 | 30839 | Nut | M30 |
| 3 | 1 | 31279 | Cotter bolt | ø6 x 50 |
| 4 | 1 | 33458 | Lock ring | |
| 5 | 1 | 66542 | Plate SWL 11 t | |
| 6 | 1 | 6300725 | Hook suspension OK5 | |

# ODIN

Intern ref.: 6301260

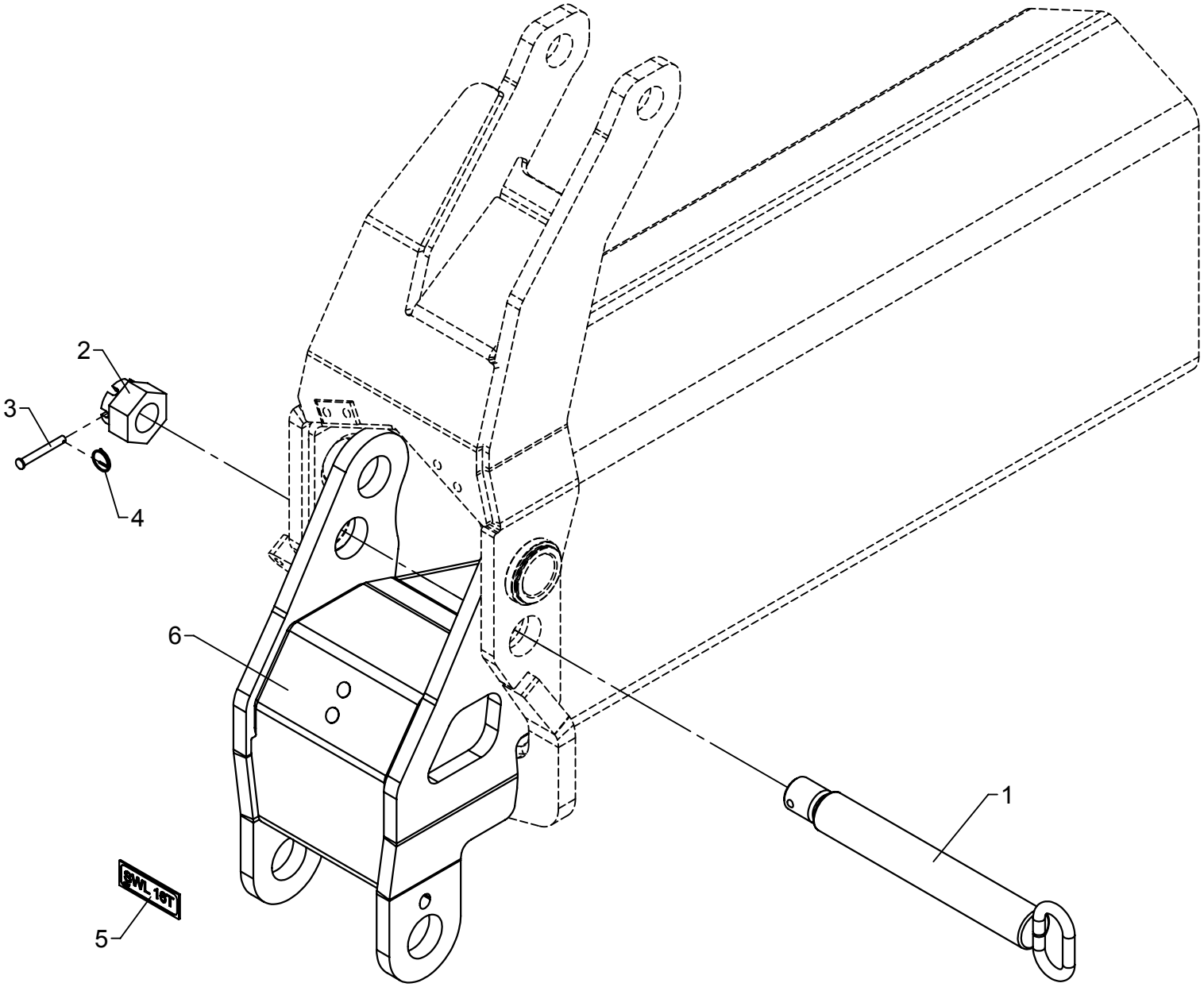

# Separate hook suspension, OK5

As from / To loader no.: 96 03 36 /
Created: 03.10.2003
Modified: 12.06.2013

| Item no. | Qty. | Part no. | Description | Remarks |
|---|---|---|---|---|
| 1 | 1 | 6302728 | Pin for suspension | |
| 2 | 1 | 30839 | Nut | M30 |
| 3 | 1 | 31279 | Cotter bolt | ø6 x 50 |
| 4 | 1 | 33458 | Lock ring | |
| 5 | 1 | 66541 | Plate SWL 16 t | |
| 6 | 1 | 6302725 | Hook suspension OK5 | |

# ODIN

Intern ref.: 6301270

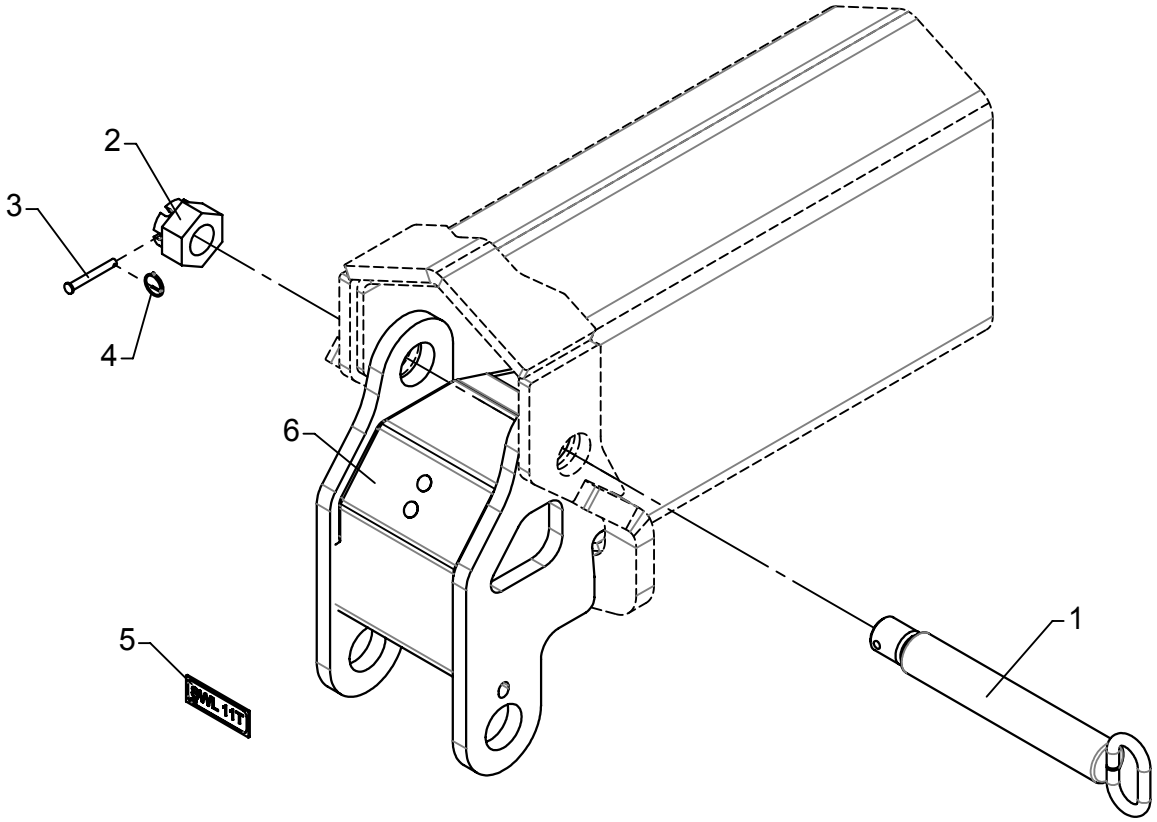

# Separate hook suspension, OK6

As from / To loader no.: 96 00 00 / 96 03 35
Created: 12.05.2004
Modified: 12.06.2013

| Item no. | Qty. | Part no. | Description | Remarks |
|---|---|---|---|---|
| 1 | 1 | 6302748 | Pin for hook suspension | |
| 2 | 1 | 30839 | Nut | M30 |
| 3 | 1 | 31279 | Cotter bolt | ø6 x 50 |
| 4 | 1 | 33458 | Lock ring | |
| 5 | 1 | 66542 | Plate SWL 11 t | |
| 6 | 1 | 6300735 | Hook suspension OK6 | |

# ODIN

Intern ref.: 6303270

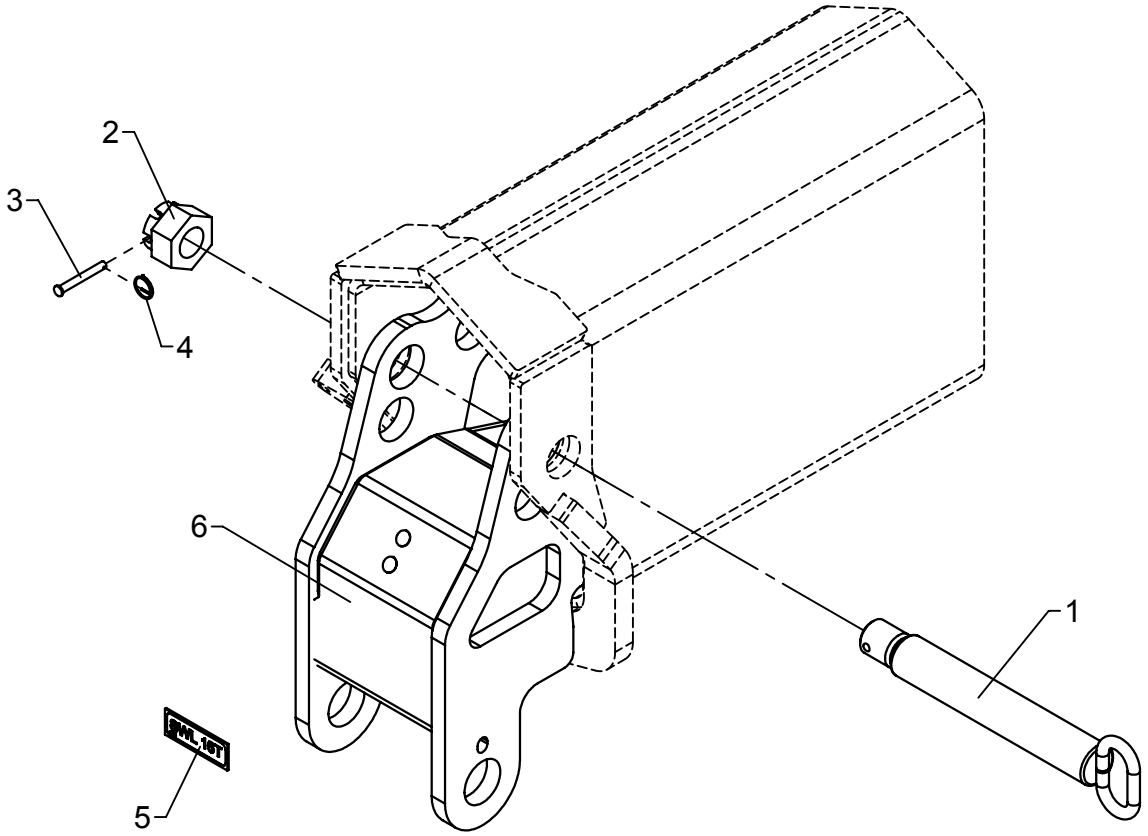

# Separate hook suspension, OK6

As from / To loader no.: 96 03 36 /
Created: 12.06.2013
Modified: 27.11.2013

| Item no. | Qty. | Part no. | Description | Remarks |
|---|---|---|---|---|
| 1 | 1 | 6302748 | Pin for hook suspension | |
| 2 | 1 | 30839 | Nut | M30 |
| 3 | 1 | 31279 | Cotter bolt | ø6 x 50 |
| 4 | 1 | 33458 | Lock ring | |
| 5 | 1 | 66541 | Plate SWL 16 t | |
| 6 | 1 | 6302735 | Hook suspension OK6 | |

# ODIN

Intern ref.: 6300530

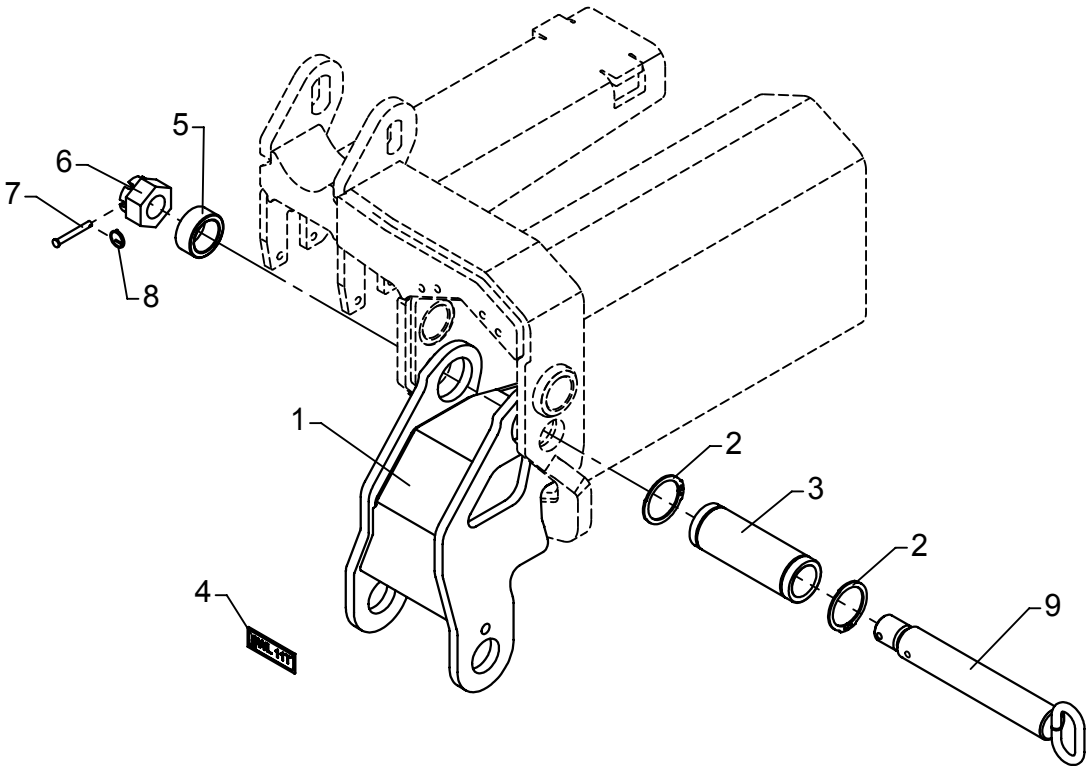

# Separate hook suspension, K7

As from / To loader no.: 96 00 00 / 96 03 35
Created: 03.10.2003
Modified: 29.10.2013

| Item no. | Qty. | Part no. | Description | Remarks |
|---|---|---|---|---|
| 1 | 1 | 6300841 | Hook suspension K7 - K8 | |
| 2 | 2 | 33129 | Circlip | 50U |
| 3 | 1 | 6300847 | Hub | |
| 4 | 1 | 66542 | Plate SWL 11 t | |
| 5 | 1 | 6301036 | Hub | |
| 6 | 1 | 30839 | Nut | M30 |
| 7 | 1 | 31279 | Cotter bolt | ø6 x 50 |
| 8 | 1 | 33458 | Lock ring | |
| 9 | 1 | 6302748 | Pin for hook suspension | |

# ODIN

Intern ref.: 6300530

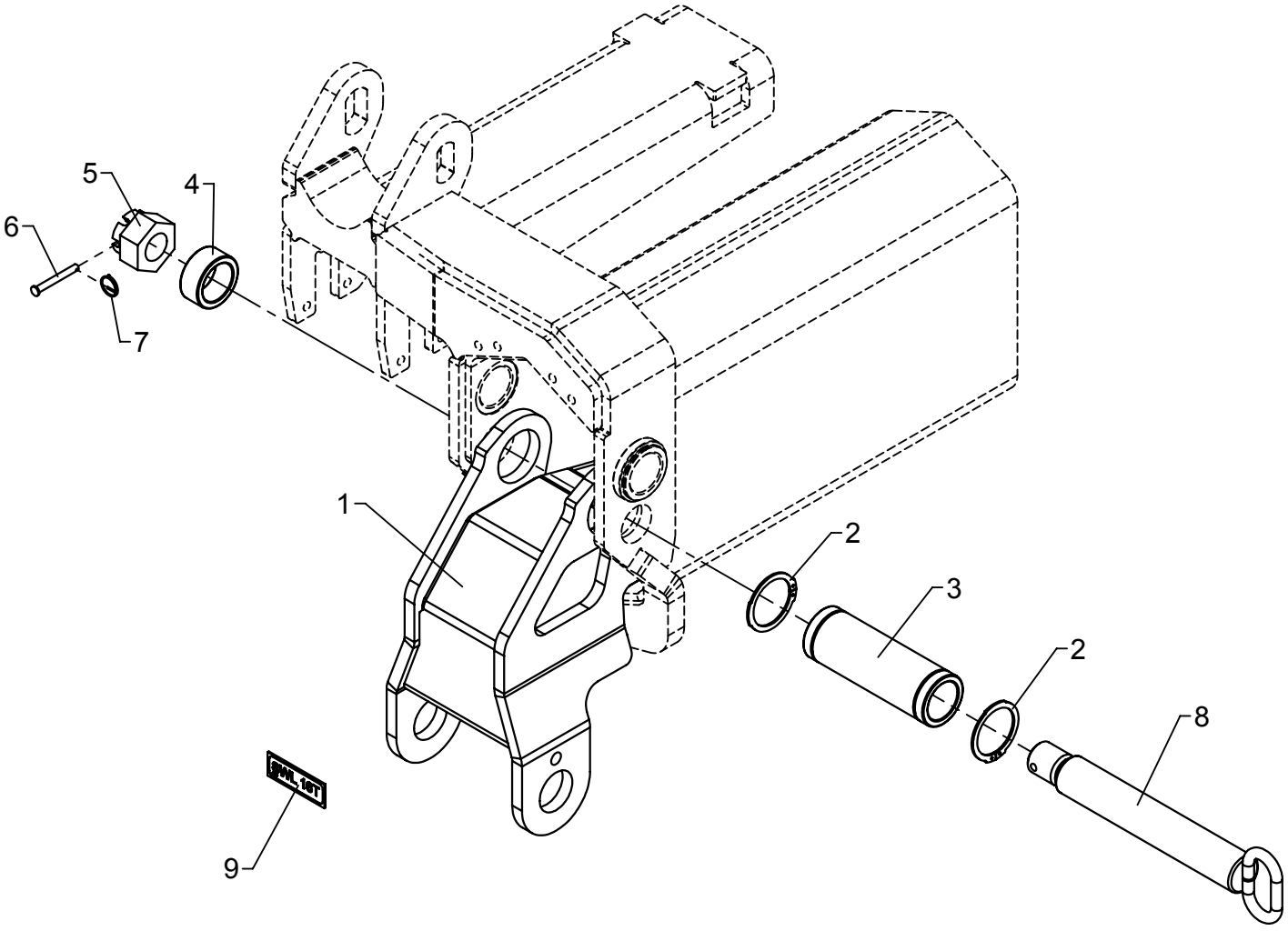

# Separate hook suspension, K7

As from / To loader no.: 96 03 36
Created: 29.10.2013
Modified:

| Item no. | Qty. | Part no. | Description | Remarks |
|---|---|---|---|---|
| 1 | 1 | 6300841 | Hook suspension K7 - K8 | |
| 2 | 2 | 33129 | Circlip | 50U |
| 3 | 1 | 6300847 | Hub | |
| 4 | 1 | 6301036 | Hub | |
| 5 | 1 | 30839 | Nut | M30 |
| 6 | 1 | 31279 | Cotter bolt | ø6 x 50 |
| 7 | 1 | 33458 | Lock ring | |
| 8 | 1 | 6302748 | Pin for hook suspension | |
| 9 | 1 | 66541 | Plate SWL 16 t | |

# ODIN

Intern ref.: 6300530

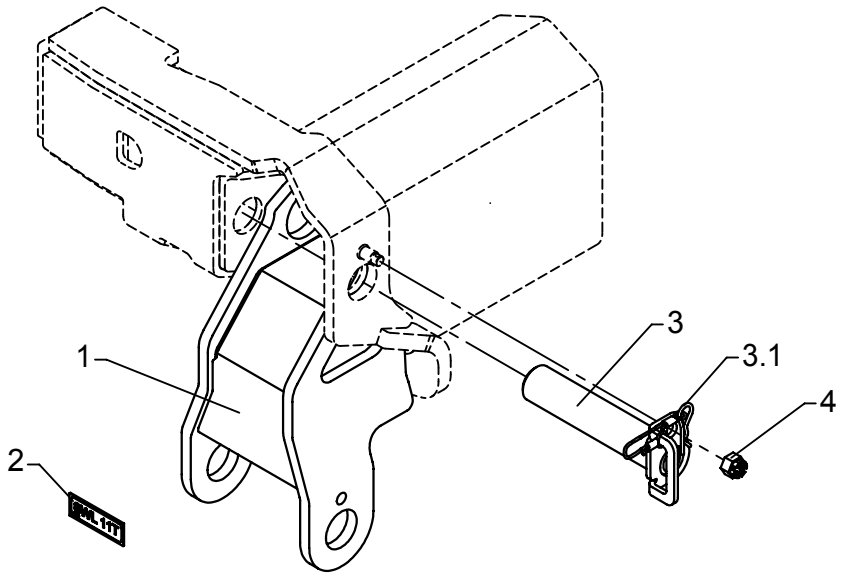

# Separate hook suspension, K8

As from / To loader no.: 96 00 00 / 96 03 35
Created: 03.10.2003
Modified: 29.10.2013

| Item no. | Qty. | Part no. | Description | Remarks |
|---|---|---|---|---|
| 1 | 1 | 6300841 | Hook suspension K7 - K8 | |
| 2 | 1 | 66542 | Plate SWL 11 t | |
| 3 | 1 | 6300593 | Lock pin with lock spring | |
| 4 | 1 | 32127 | Nut | M12 |

# ODIN

Intern ref.: 6300530

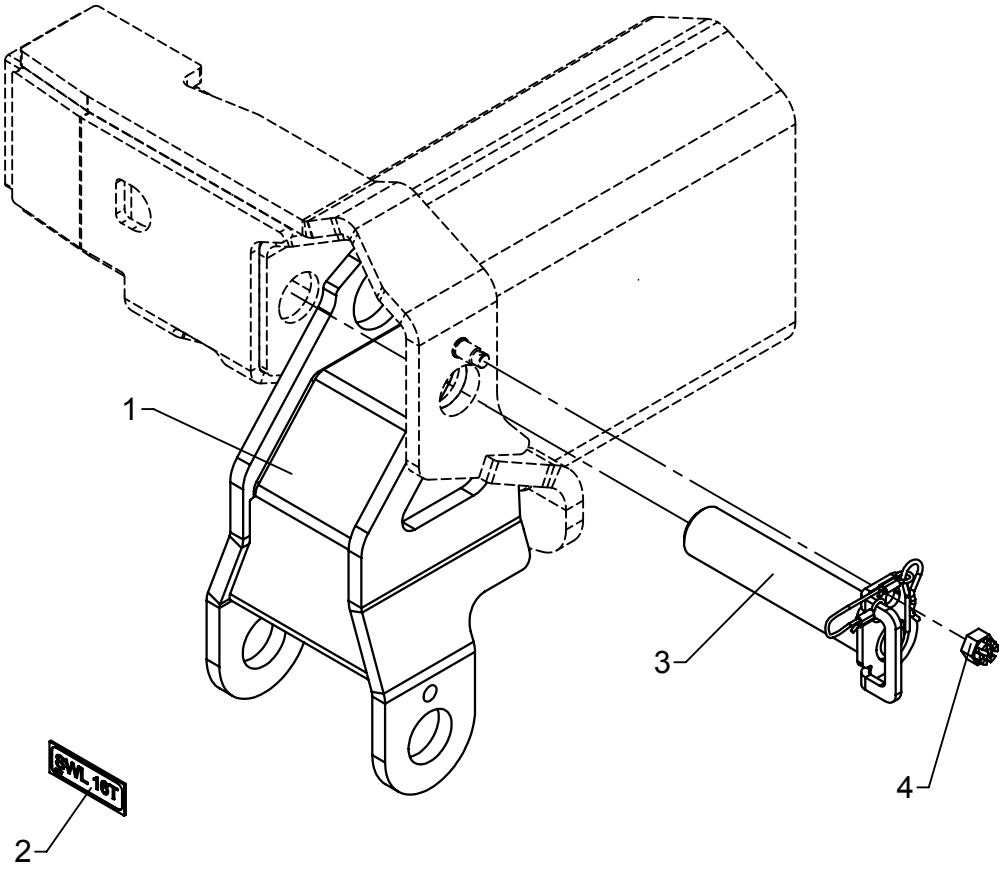

# Separate hook suspension, K8

As from / To loader no.: 96 03 36
Created: 29.10.2013
Modified:

| Item no. | Qty. | Part no. | Description | Remarks |
|---|---|---|---|---|
| 1 | 1 | 6300841 | Hook suspension K7 - K8 | |
| 2 | 1 | 66541 | Plate SWL 16 t | |
| 3 | 1 | 6300593 | Lock pin with lock spring | |
| 4 | 1 | 32127 | Nut | M12 |

# ODIN

Intern ref.: 6300270

OK2-OK5

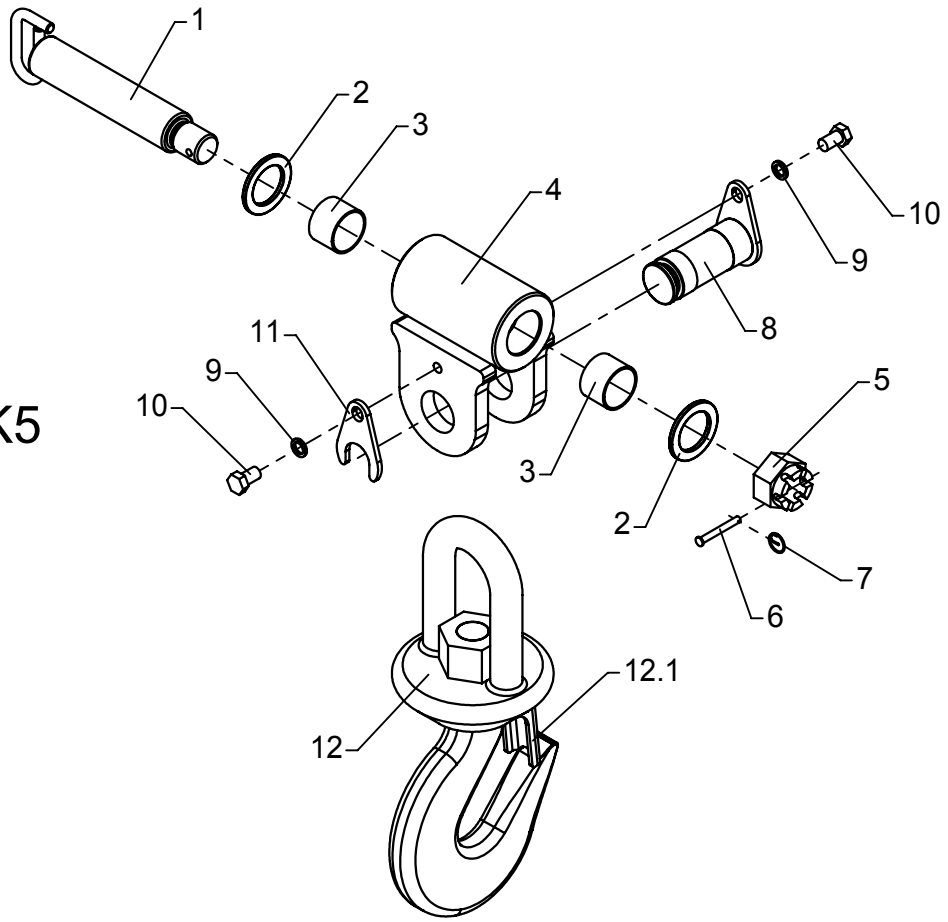


OK6
K7-K8

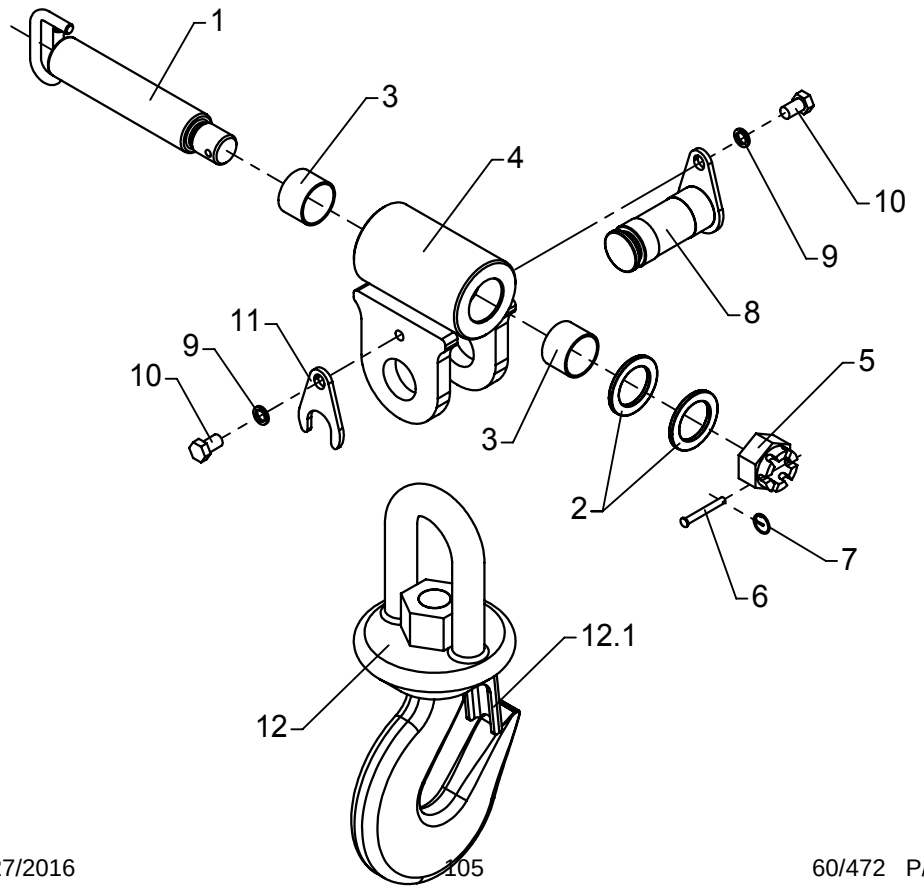

# Hook suspension

As from / To loader no.: 96 00 00 / 96 03 35
Created: 13.04.2004
Modified: 29.10.2013

| Item no. | Qty. | Part no. | Description | Remarks |
|---|---|---|---|---|
| 1 | 1 | 6300387 | Pin for suspension | |
| 2 | 2 | 6193554 | Distance ring | |
| 3 | 2 | 23947 | Composite bearing | ø40/44 x 30 |
| 4 | 1 | 6193483 | Suspension | |
| 5 | 1 | 30839 | Nut | M30 |
| 6 | 1 | 31279 | Cotter bolt | ø6 x 50 |
| 7 | 1 | 33458 | Lock ring | |
| 8 | 1 | 6193524 | Pin | |
| 9 | 2 | 31158 | Spring washer | 12 mm |
| 10 | 2 | 30175 | Set screw | M12 x 20 |
| 11 | 1 | 6193544 | Lock plate | |
| 12 | 1 | 62167 | Hook with ball bearing | 11,5T |
| | | 62159 | Safety catch | |

# ODIN

Intern ref.: 6300270

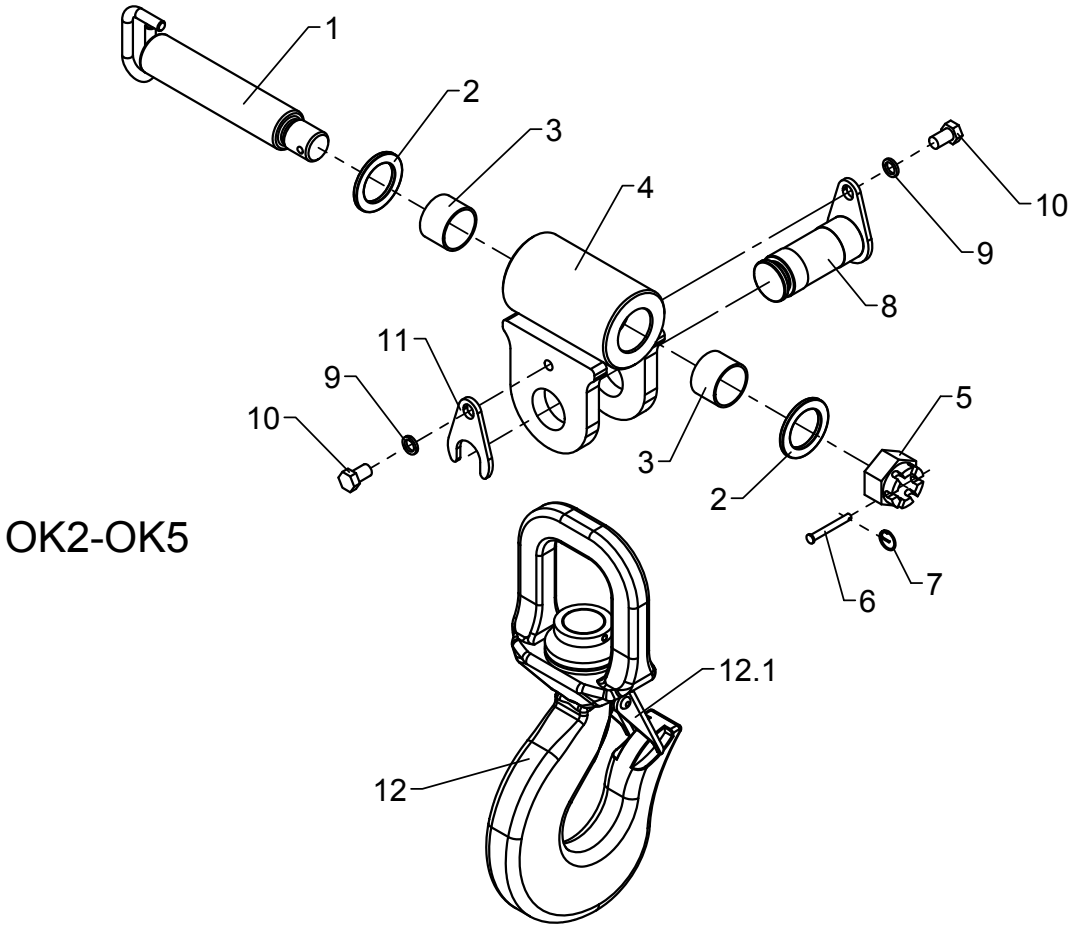


OK2-OK5

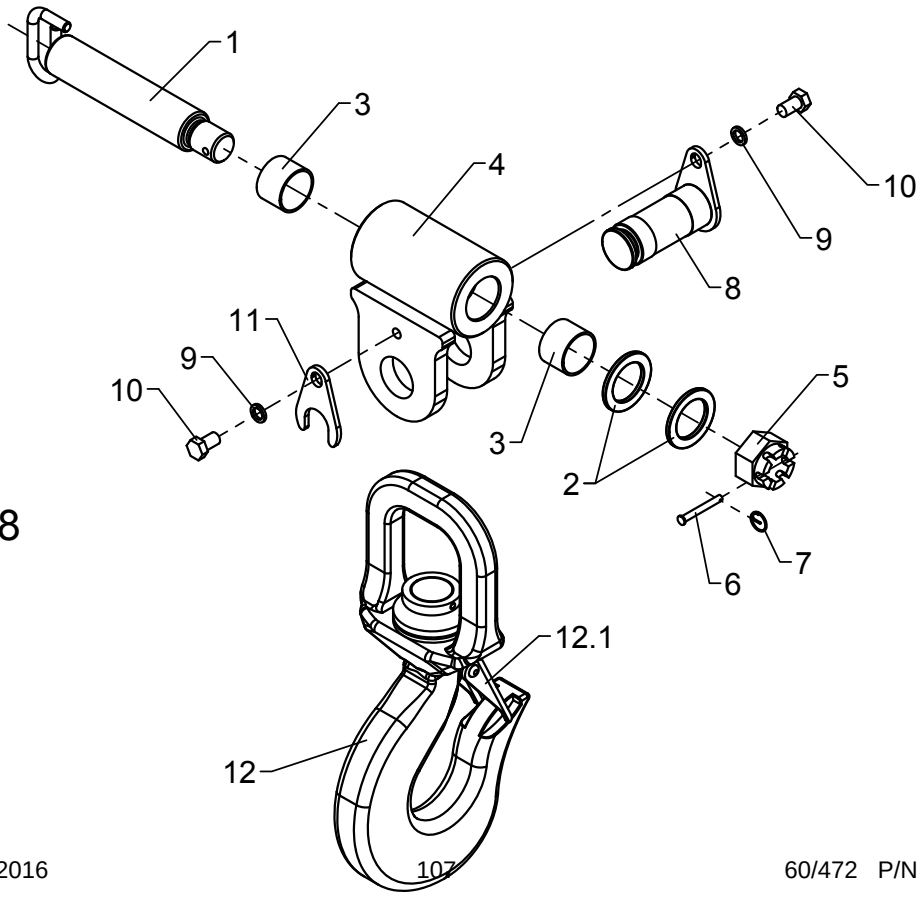


OK6
K7-K8

# Hook suspension

As from / To loader no.: 96 03 36
Created: 16.10.2013
Modified:

| Item no. | Qty. | Part no. | Description | Remarks |
|---|---|---|---|---|
| 1 | 1 | 6300387 | Pin for suspension | |
| 2 | 2 | 6193554 | Distance ring | |
| 3 | 2 | 23947 | Composite bearing | ø40/44 x 30 |
| 4 | 1 | 6193483 | Suspension | |
| 5 | 1 | 30839 | Nut | M30 |
| 6 | 1 | 31279 | Cotter bolt | ø6 x 50 |
| 7 | 1 | 33458 | Lock ring | |
| 8 | 1 | 6193524 | Pin | |
| 9 | 2 | 31158 | Spring washer | 12 mm |
| 10 | 2 | 30175 | Set screw | M12 x 20 |
| 11 | 1 | 6193544 | Lock plate | |
| 12 | 1 | 62196 | Hook with ball bearing | |
| 12.1 | | 62197 | Safety catch | |

# ODIN

6300020
Intern ref.: 6303020

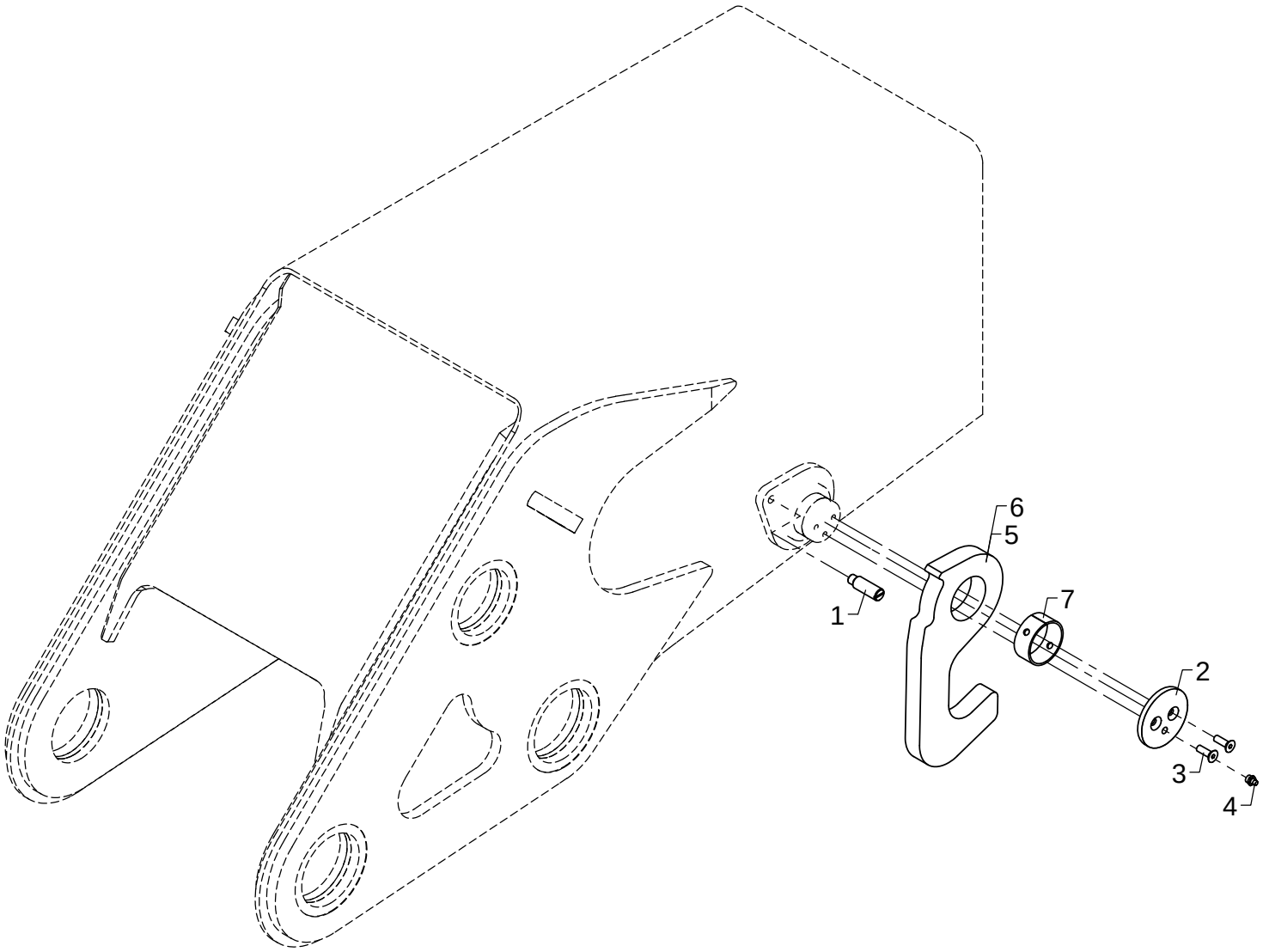

# Stowing hook, complete

As from / To loader no.: 96 00 00 /
Created: 03.10.2003
Modified: 11.06.2004

| Item no. | Qty. | Part no. | Description | Remarks |
|---|---|---|---|---|
| 1 | 1 | 6302085 | Locking pin | |
| 2 | 1 | 6302309 | End plate | |
| 3 | 2 | 31964 | Counter sunk screw, stainless | MK8 x 25 |
| 4 | 1 | 31318 | Lubricator | 1/8" RG |
| 5 | 1 | 6300084 | Stowing hook | |
| 6 | 1 | 6300703 | Stowing hook | FJ |
| 7 | 1 | 23929 | Bushing | PM 5525 DX |

# ODIN

6301100
6301110
Intern ref.: 6301120

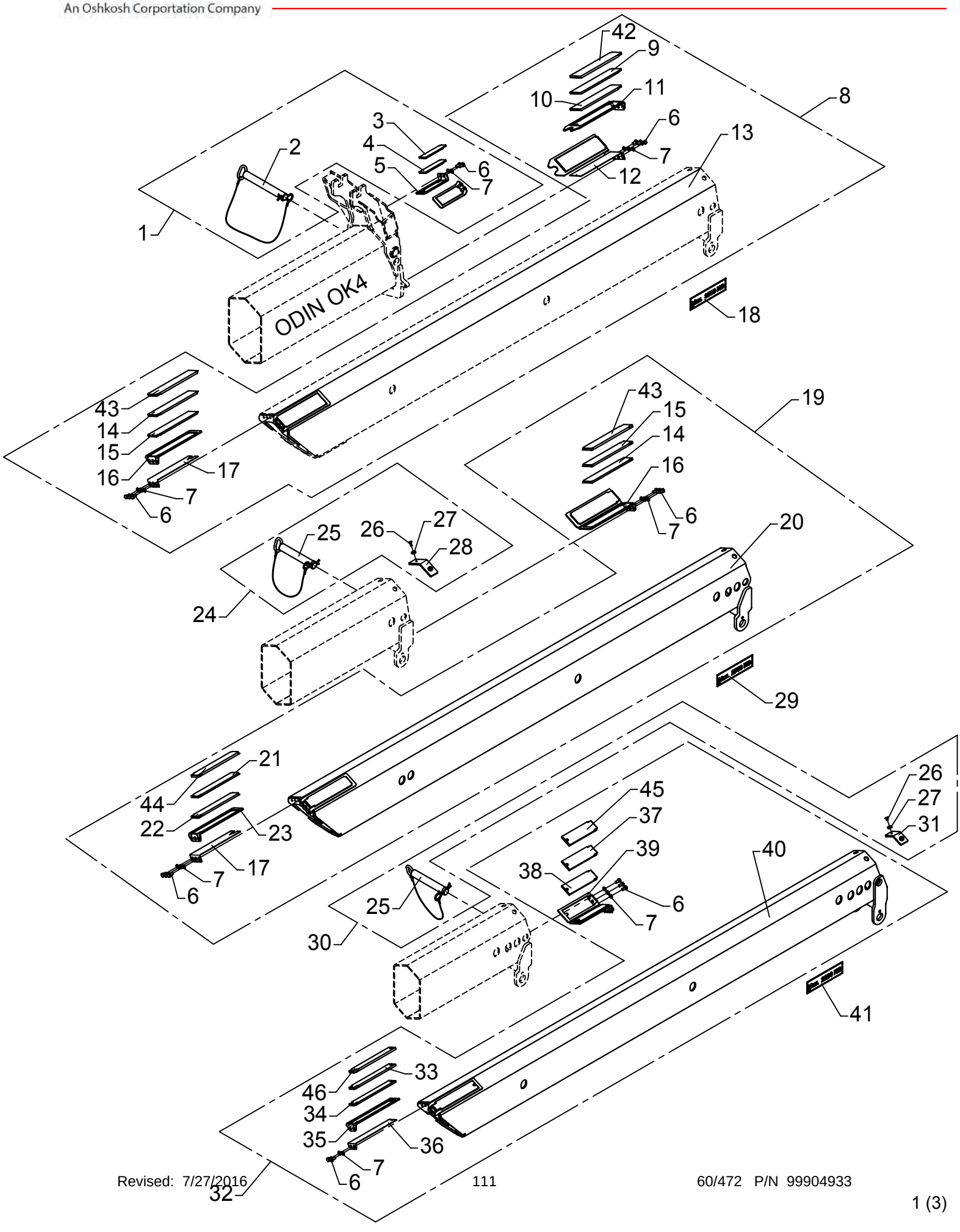

# Manual extensions OK 4

As from / To loader no.: 96 00 15 /
Created: 03.10.2003
Modified: 20.10.2014

| Item no. | Qty. | Part no. | Description | Remarks |
|---|---|---|---|---|
| 1 | 1 | 6301330 | Fittings, man. ext. OF5,6 | |
| 2 | | 6300517 | Lock pin with split pin | |
| 3 | | 63698 | Slide block | 6 mm |
| 4 | | 63668 | Slide block | 7 mm |
| 5 | | 6300336 | Bracket | |
| 6 | | 30154 | Set screw | M10 x 20 |
| 7 | | 31177 | Washer | 10 mm |
| 8 | 1 | 6301100 | Manual extension, OF5 | |
| 9 | | 63521 | Slide block | 8 mm |
| 10 | | 63696 | Slide block | 9 mm |
| 11 | | 6300369 | Bracket for slide block | |
| 12 | | 6300533 | Shim | |
| 13 | | 6301101 | Manual extension, OF5 | |
| 14 | | 63583 | Slide block | 9 mm |
| 15 | | 63582 | Slide block | 8 mm |
| 16 | | 6300366 | Bracket for slide block | |
| 17 | | 6300534 | Shim | |
| 18 | 2 | 66538 | Label, max. 3500 kg | |
| 19 | 1 | 6301110 | Manual extension, OF6 | |
| 20 | | 6301111 | Manual extension, OF6 | |
| 21 | | 63585 | Slide block | 8 mm |
| 22 | | 63586 | Slide block | 9 mm |
| 23 | | 6300399 | Bracket for slide block | |
| 24 | 1 | 6301340 | Fittings, man. ext.OF6,7/K6-F8 | |
| 25 | | 6300537 | Lock pin with lock spring | |
| 26 | | 30597 | Counter-sunk screw | MK8 x 12 |
| 27 | | 6232974 | Lock washer | |
| 28 | | 6301109 | Division plate, 7 mm | 7 mm |
| 29 | 2 | 66535 | Label, max. 2750 kg | |
| 30 | 1 | 6301350 | Fittings, man. ext. F7/8-OF7/8 | |
| 31 | | 6301119 | Division plate, 7 mm | 7 mm |
| 32 | 1 | 6301120 | Manual extension, OF7 | |
| 33 | | 63589 | Slide block | 9 mm |
| 34 | | 63588 | Slide block | 8 mm |
| 35 | | 6300368 | Bracket for slide block | |
| 36 | | 6300568 | Shim | |
| 37 | | 63695 | Slide block | 9 mm |
| 38 | | 63523 | Slide block | 8 mm |
| 39 | | 6300367 | Bracket for slide block | |
| 40 | | 6301121 | Manual extension, OF7 | |
| 41 | 2 | 65560 | Label, max. 2200 kg | |

# ODIN

6301100
6301110
Intern ref.: 6301120

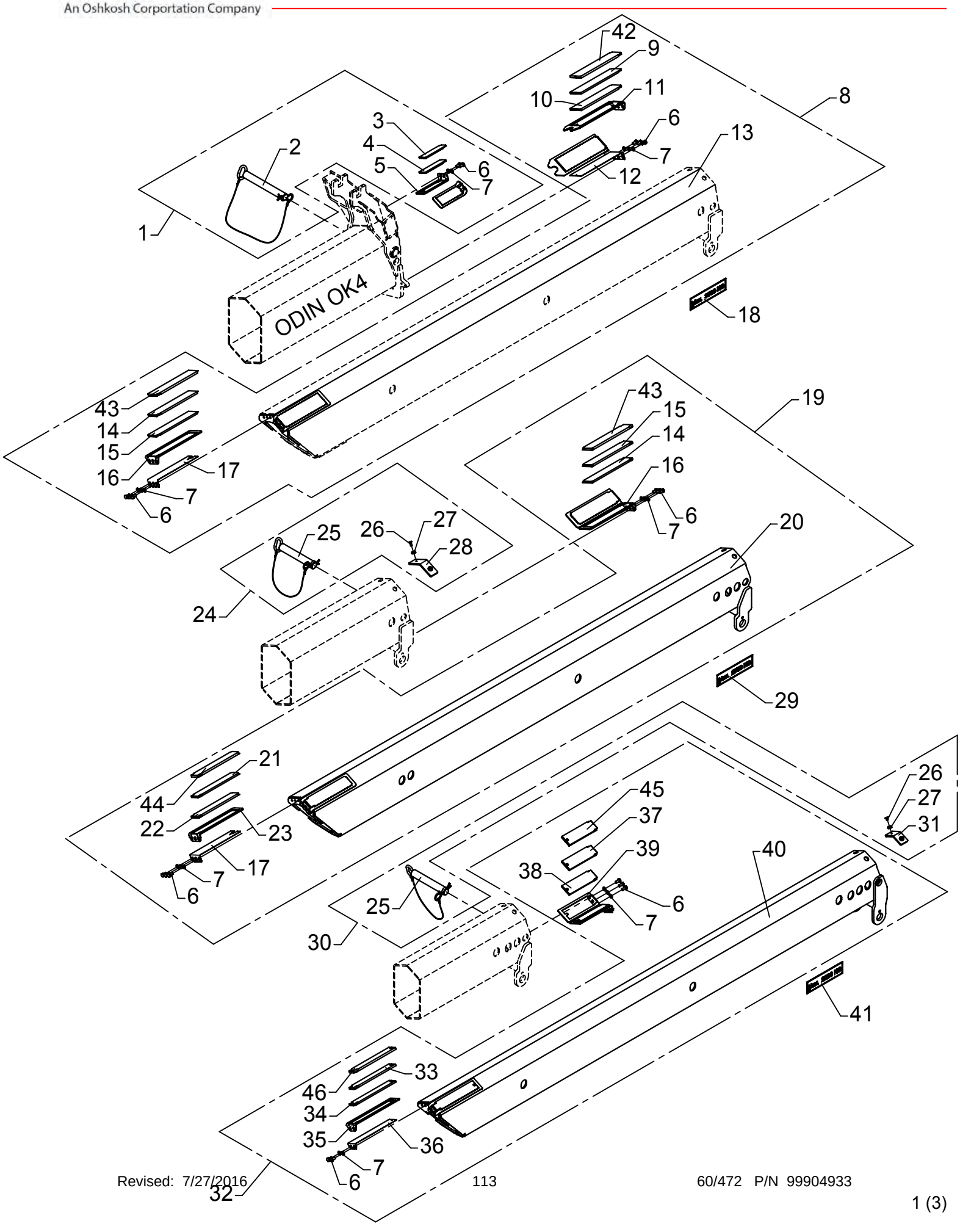

# Manual extensions OK 4

As from / To loader no.: 96 00 15 /
Created: 03.10.2003
Modified: 20.10.2014

| Item no. | Qty. | Part no. | Description | Remarks |
|---|---|---|---|---|
| 42 | | 68082 | Slide block | 10 mm |
| 43 | | 63584 | Slide block | 10 mm |
| 44 | | 63587 | Slide block | 10 mm |
| 45 | | 68080 | Slide block | 10 mm |
| 46 | | 63590 | Slide block | 10 mm |

# ODIN

6301110
6301120
Intern ref.: 6301130

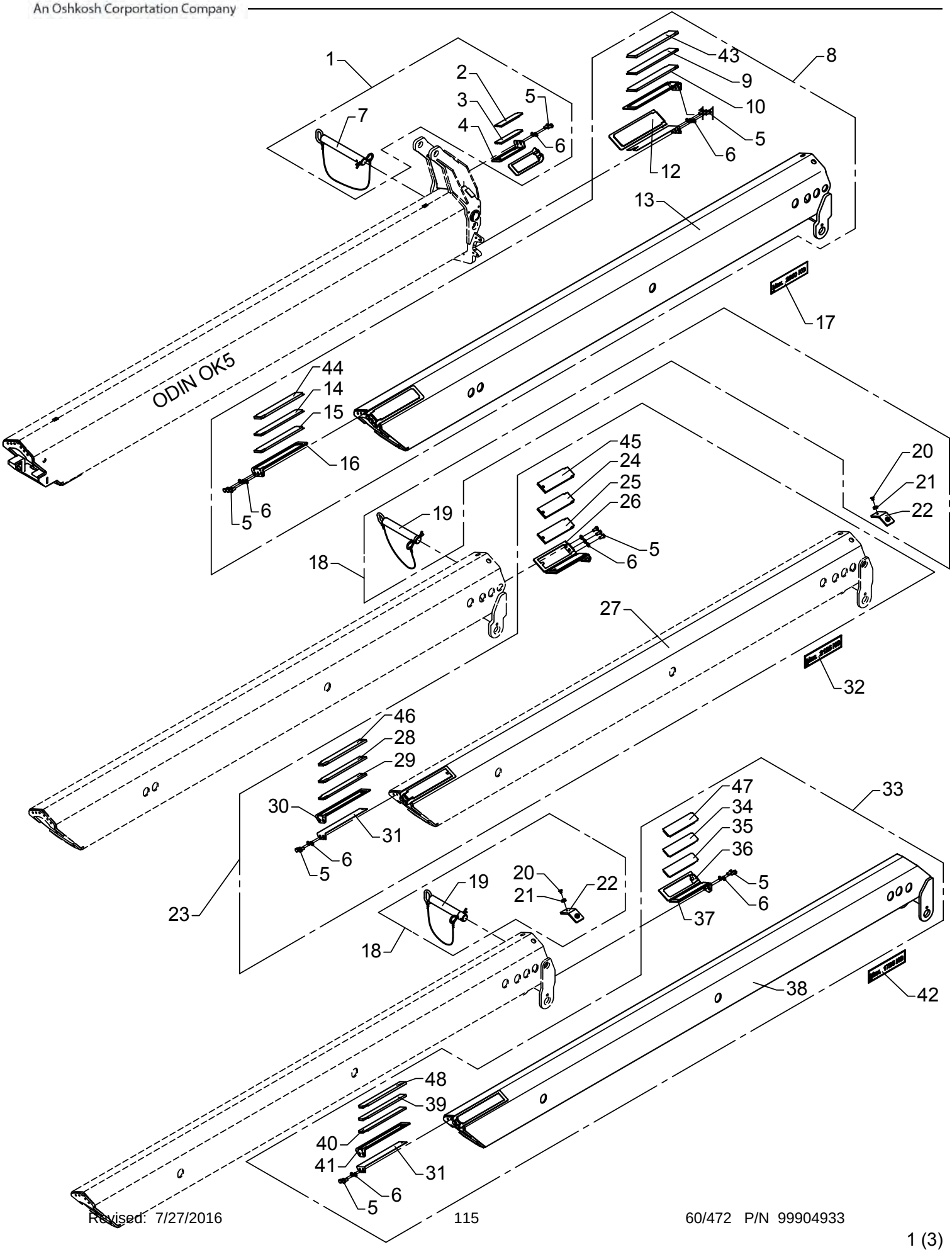

# Manual extensions OK5

As from / To loader no.: 96 00 21 /
Created: 03.10.2003
Modified: 20.10.2014

| Item no. | Qty. | Part no. | Description | Remarks |
|---|---|---|---|---|
| 1 | 1 | 6301330 | Fittings, man. ext. OF5,6 | |
| 2 | | 63698 | Slide block | 6 mm |
| 3 | | 63668 | Slide block | 7 mm |
| 4 | | 6300336 | Bracket | |
| 5 | | 30154 | Set screw | M10 x 20 |
| 6 | | 31177 | Washer | 10 mm |
| 7 | | 6300517 | Lock pin with split pin | |
| 8 | 1 | 6301110 | Manual extension, OF6 | |
| 9 | | 63582 | Slide block | 8 mm |
| 10 | | 63583 | Slide block | 9 mm |
| 11 | | 6300366 | Bracket for slide block | |
| 12 | | 6300534 | Shim | |
| 13 | | 6301111 | Manual extension, OF6 | |
| 14 | | 63585 | Slide block | 8 mm |
| 15 | | 63586 | Slide block | 9 mm |
| 16 | | 6300399 | Bracket for slide block | |
| 17 | 2 | 66534 | Label, max. 2650 kg | |
| 18 | 2 | 6301350 | Fittings, man. ext. F7/8-OF7/8 | |
| 19 | | 6300537 | Lock pin with lock spring | |
| 20 | | 30597 | Counter-sunk screw | MK8 x 12 |
| 21 | | 6232974 | Lock washer | |
| 22 | | 6301119 | Division plate, 7 mm | 7 mm |
| 23 | 1 | 6301120 | Manual extension, OF7 | |
| 24 | | 63695 | Slide block | 9 mm |
| 25 | | 63523 | Slide block | 8 mm |
| 26 | | 6300367 | Bracket for slide block | |
| 27 | | 6301121 | Manual extension, OF7 | |
| 28 | | 63589 | Slide block | 9 mm |
| 29 | | 63588 | Slide block | 8 mm |
| 30 | | 6300368 | Shim | |
| 31 | | 6300568 | Shim | |
| 32 | 2 | 66529 | Label, max. 2125 kg | |
| 33 | 1 | 6301130 | Manual extension, OF8 | |
| 34 | | 63516 | Slide block | 8 mm |
| 35 | | 63764 | Slide block | 9 mm |
| 36 | | 6239573 | Bracket | |
| 37 | | 6239563 | Bracket | |
| 38 | | 6301131 | Manual extension, OF8 | |
| 39 | | 63527 | Slide block | 9 mm |
| 40 | | 63528 | Slide block | 8 mm |
| 41 | | 6300443 | Bracket for slide block | |

# ODIN

6301110
6301120
Intern ref.: 6301130

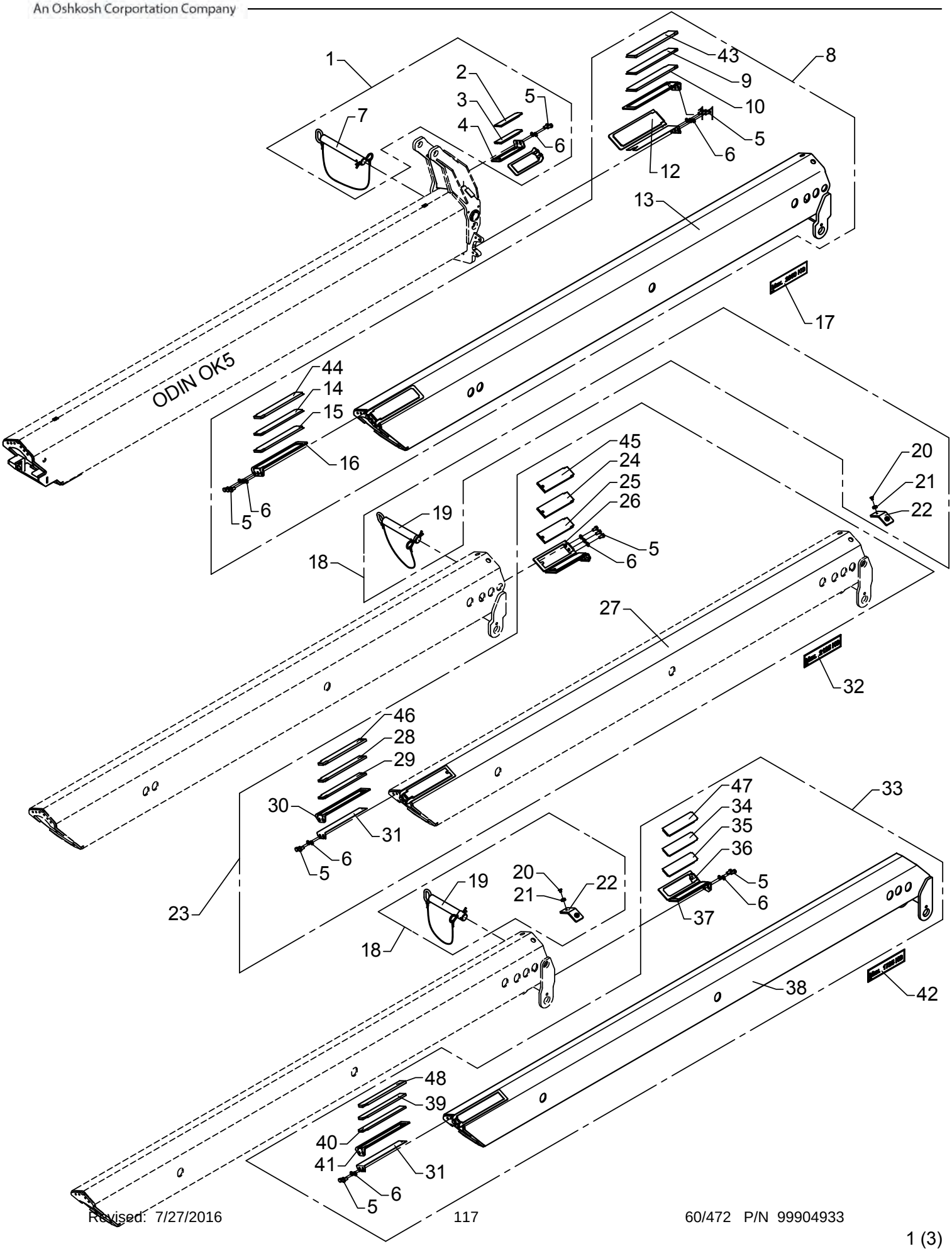

# Manual extensions OK5

As from / To loader no.: 96 00 21 /
Created: 03.10.2003
Modified: 20.10.2014

| Item no. | Qty. | Part no. | Description | Remarks |
|---|---|---|---|---|
| 42 | 2 | 66526 | Label, max. 1725 kg | |
| 43 | | 63584 | Slide block | 10 mm |
| 44 | | 63587 | Slide block | 10 mm |
| 45 | | 68080 | Slide block | 10 mm |
| 46 | | 63590 | Slide block | 10 mm |
| 47 | | 68078 | Slide block | 10 mm |
| 48 | | 68084 | Slide block | 10 mm |

# ODIN

6301140
6301150
Intern ref.: 6301160

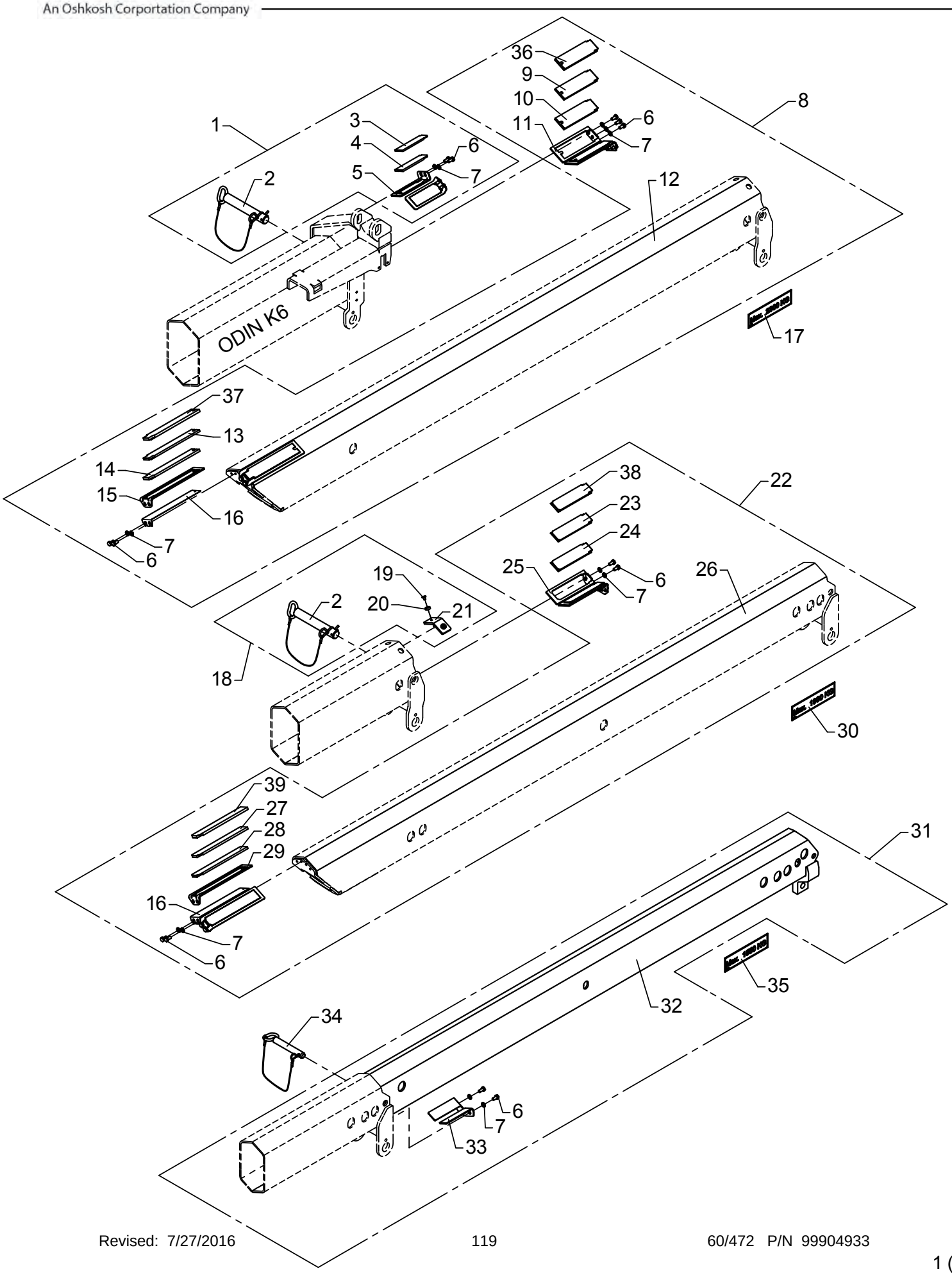

# Manual extensions K6

As from / To loader no.: 96 00 00 /
Created: 03.10.2003
Modified: 21.10.2014

| Item no. | Qty. | Part no. | Description | Remarks |
|---|---|---|---|---|
| 1 | 1 | 6301360 | Fittings, man. ext. F7/8(K6/7) | |
| 2 | | 6300537 | Lock pin with lock spring | |
| 3 | | 63698 | Slide block | 6 mm |
| 4 | | 63668 | Slide block | 7 mm |
| 5 | | 6300336 | Bracket | |
| 6 | | 30154 | Set screw | M10 x 20 |
| 7 | | 31177 | Washer | 10 mm |
| 8 | 1 | 6301140 | Manual extension, F7 | |
| 9 | | 63523 | Slide block | 8 mm |
| 10 | | 63695 | Slide block | 9 mm |
| 11 | | 6300367 | Bracket for slide block | |
| 12 | | 6301141 | Manual extension, F7 | |
| 13 | | 63588 | Slide block | 8 mm |
| 14 | | 63589 | Slide block | 9 mm |
| 15 | | 6300368 | Bracket for slide block | |
| 16 | | 6300568 | Shim | |
| 17 | 2 | 66532 | Label, max. 2300 kg | |
| 18 | 1 | 6301350 | Fittings, man. ext. F7/8-OF7/8 | |
| 19 | | 30597 | Counter-sunk screw | MK8 x 12 |
| 20 | | 6232974 | Lock washer | |
| 21 | | 6301119 | Division plate, 7 mm | 7 mm |
| 22 | 1 | 6301150 | Manual extension, F8 | |
| 23 | | 63516 | Slide block | 8 mm |
| 24 | | 63764 | Slide block | 9 mm |
| 25 | | 6239563 | Bracket | |
| 26 | | 6301151 | Manual extension, F8 | |
| 27 | | 63527 | Slide block | 9 mm |
| 28 | | 63528 | Slide block | 8 mm |
| 29 | | 6300443 | Bracket for slide block | |
| 30 | 2 | 66528 | Label, max. 1900 kg | |
| 31 | 1 | 6301160 | Manual extension, F9 | |
| 32 | | 6301161 | Manual extension, F9 | |
| 33 | | 6301167 | Compression block | |
| 34 | | 6657424 | Lock pin with chain | |
| 35 | 2 | 66525 | Label, max. 1550 kg | |
| 36 | | 68080 | Slide block | 10 mm |
| 37 | | 63590 | Slide block | 10 mm |
| 38 | | 68078 | Slide block | 10 mm |
| 39 | | 68084 | Slide block | 10 mm |

# 6020 K

Intern ref.: 6303200

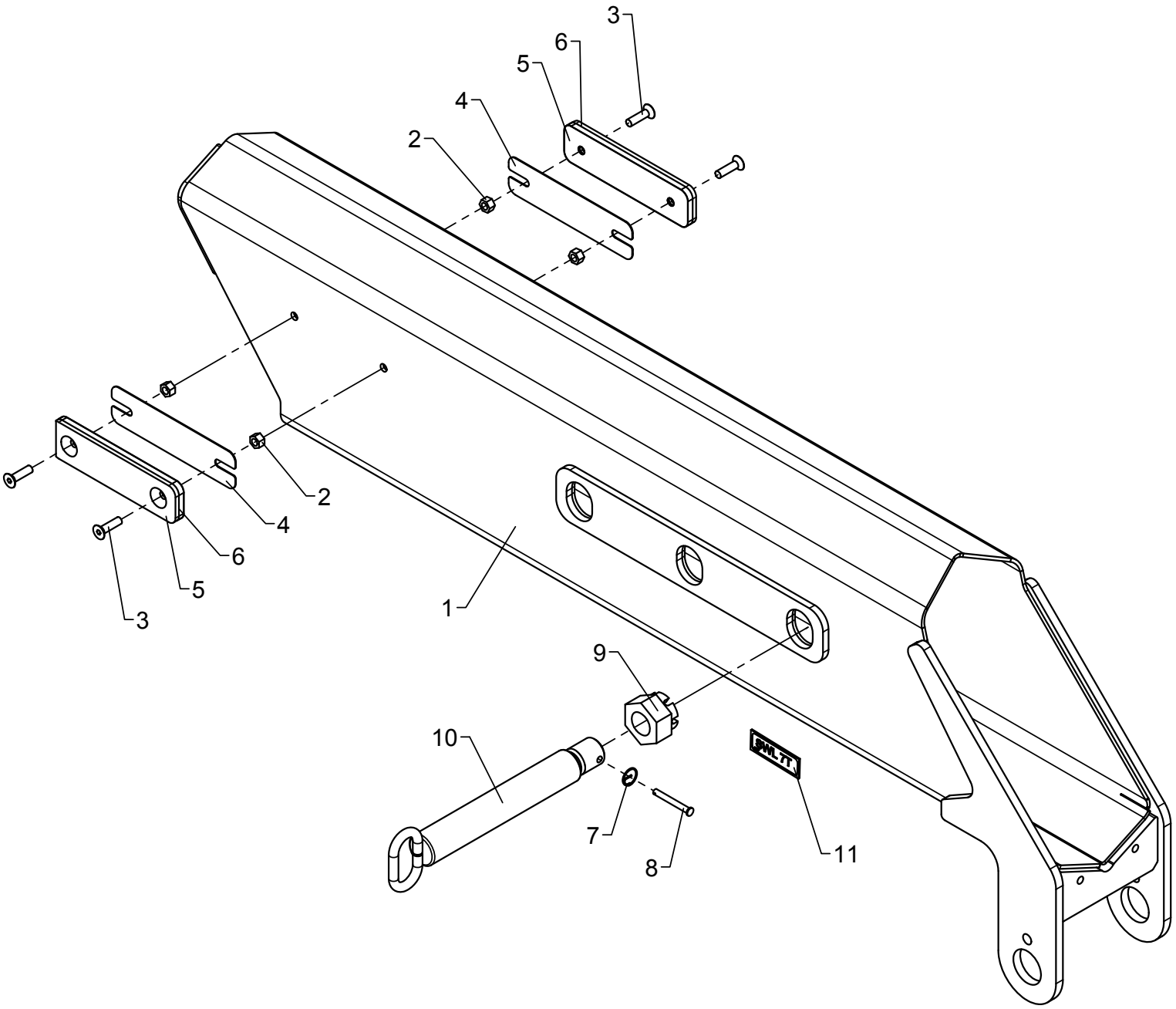

# Manual extension + fittings 6020-OK6

As from / To loader no.: 96 00 00
Created: 18.06.2013
Modified:

| Item no. | Qty. | Part no. | Description | Remarks |
|---|---|---|---|---|
| 1 | 1 | 6303201 | Manual extension OK 6 | |
| 2 | 4 | 30886 | Lock nut, stainless | M8 |
| 3 | 4 | 30995 | Countersunk screw | MK8 x 30 |
| 4 | 2 | 6305108 | Adjusting plate | |
| 5 | 2 | 6304359 | Spacer | |
| 6 | 2 | 6348211 | Spacer | |
| 7 | 1 | 33458 | Lock ring | |
| 8 | 1 | 31279 | Cotter bolt | ø6 x 50 |
| 9 | 1 | 30839 | Nut | M30 |
| 10 | 1 | 6302748 | Pin for hook suspension | |
| 11 | 1 | 66917 | Label, SWL 7T | |

# ODIN

Intern ref.: 6301150
6301160
6301170

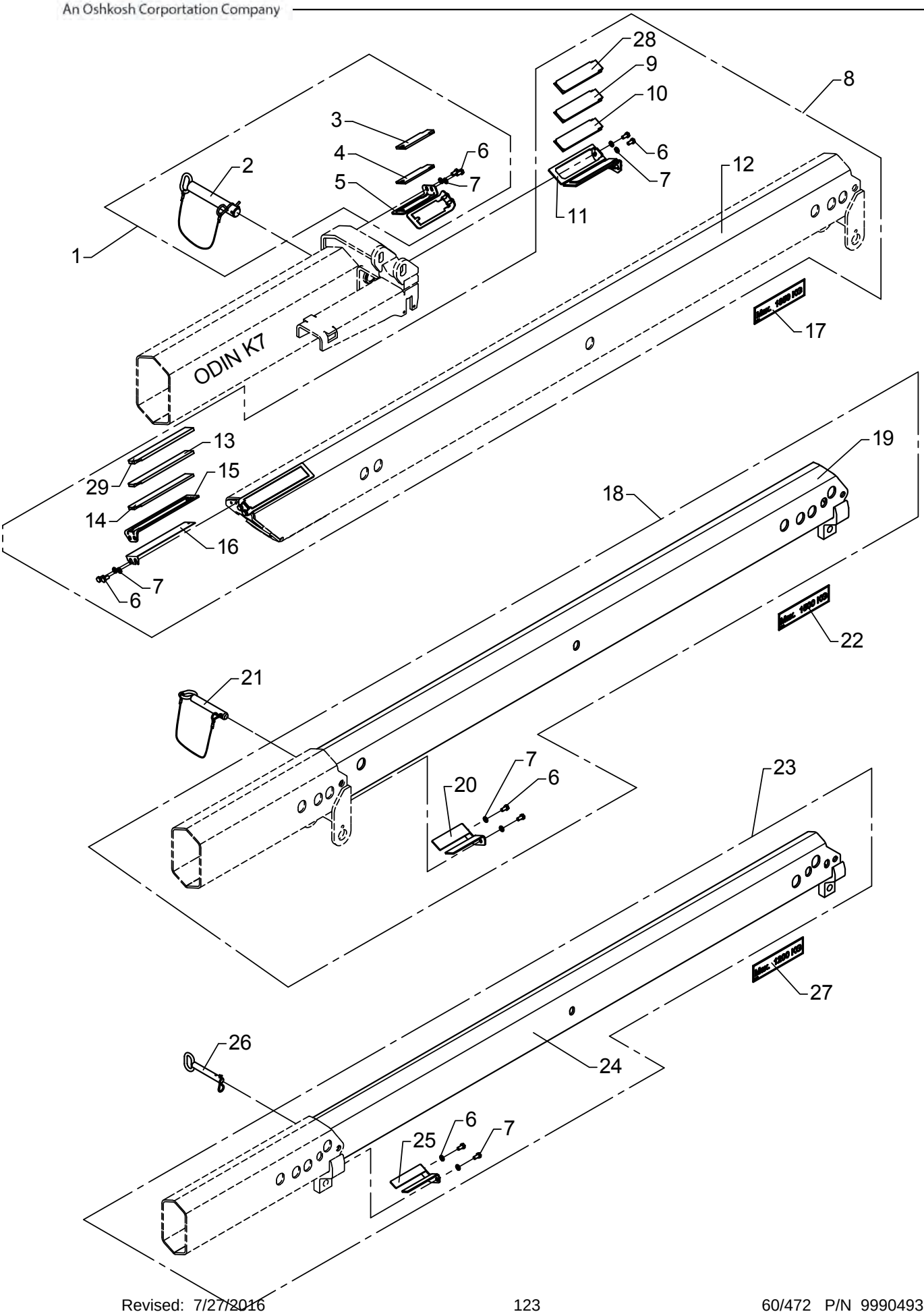

# Manual extensions K7

As from / To loader no.: 96 00 00 /
Created: 03.10.2003
Modified: 21.10.2014

| Item no. | Qty. | Part no. | Description | Remarks |
|---|---|---|---|---|
| 1 | 1 | 6301360 | Fittings, man. ext. F7/8(K6/7) | |
| 2 | | 6300537 | Lock pin with lock spring | |
| 3 | | 63668 | Slide block | 6 mm |
| 4 | | 63698 | Slide block | 7 mm |
| 5 | | 6300336 | Bracket | |
| 6 | | 30154 | Set screw | M10 x 20 |
| 7 | | 31177 | Washer | 10 mm |
| 8 | 1 | 6301150 | Manual extension, F8 | |
| 9 | | 63764 | Slide block | 9 mm |
| 10 | | 63516 | Slide block | 8 mm |
| 11 | | 6239563 | Bracket | |
| 12 | | 6301151 | Manual extension, F8 | |
| 13 | | 63527 | Slide block | 9 mm |
| 14 | | 63528 | Slide block | 8 mm |
| 15 | | 6300443 | Bracket for slide block | |
| 16 | | 6300568 | Shim | |
| 17 | 2 | 66527 | Label, max. 1850 kg | |
| 18 | 1 | 6301160 | Manual extension, F9 | |
| 19 | | 6301161 | Manual extension, F9 | |
| 20 | | 6301167 | Compression block | |
| 21 | 1 | 6657424 | Lock pin with chain | |
| 22 | 2 | 65199 | Label. max. 1500 kg | |
| 23 | 1 | 6301170 | Manual extension, F10 | |
| 24 | | 6301171 | Manual extension, F10 | |
| 25 | | 6301177 | Compression block | |
| 26 | 1 | 6301166 | Lock pin with split pin | |
| 27 | 2 | 65148 | Label. max. 1200 kg | |
| 28 | | 68078 | Slide block | 10 mm |
| 29 | | 68084 | Slide block | 10 mm |

# ODIN

6301160
6301170
Intern ref.: 6301180

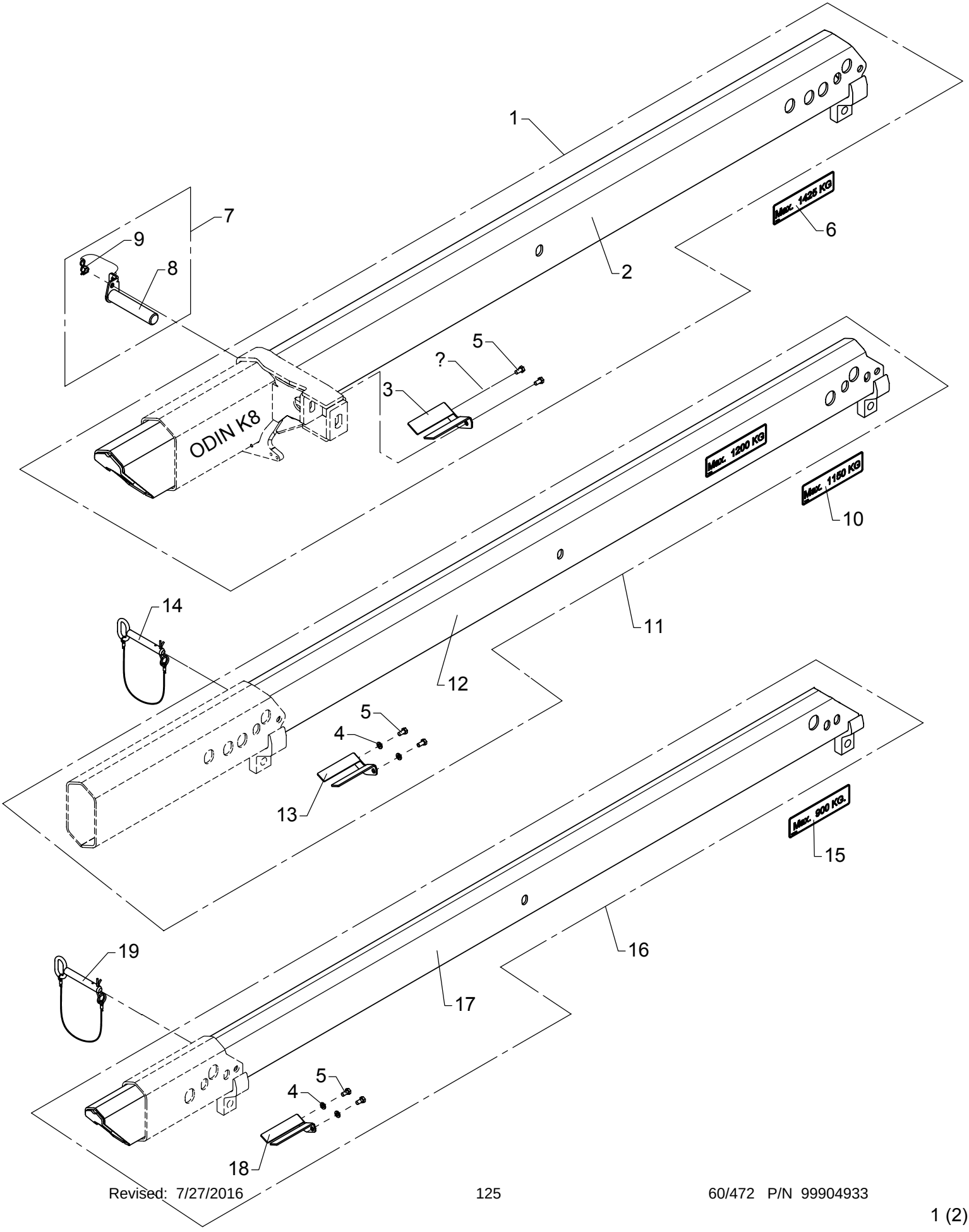

# Manual extensions K8

As from / To loader no.: 96 00 00 /
Created: 03.10.2003
Modified:

| Item no. | Qty. | Part no. | Description | Remarks |
|---|---|---|---|---|
| 1 | 1 | 6301160 | Manual extension, F9 | |
| 2 | | 6301161 | Manual extension, F9 | |
| 3 | | 6301167 | Compression block | |
| 4 | | 31177 | Washer | 10 mm |
| 5 | | 30154 | Set screw | M10 x 20 |
| 6 | 2 | 66524 | Label, max. 1425 kg | |
| 7 | 1 | 6301370 | Fittings, man. extension, F9 | |
| 8 | | 6300593 | Lock pin with lock spring | |
| 9 | | 32127 | Nut | M12 |
| 10 | 2 | 65916 | Max. label 1150 kg | |
| 11 | 1 | 6301170 | Manual extension, F10 | |
| 12 | | 6301171 | Manual extension, F10 | |
| 13 | | 6301177 | Compression block | |
| 14 | 1 | 6301166 | Lock pin with split pin | |
| 15 | 2 | 65151 | Label. max. 900 kg | |
| 16 | 1 | 6301180 | Manual extension, F11 | |
| 17 | | 6301181 | Manual extension, F11 | |
| 18 | | 6301187 | Compression block | |
| 19 | 1 | 6301166 | Lock pin with split pin | |

# ODIN

Intern ref.: 62101+62114

## F5-F8

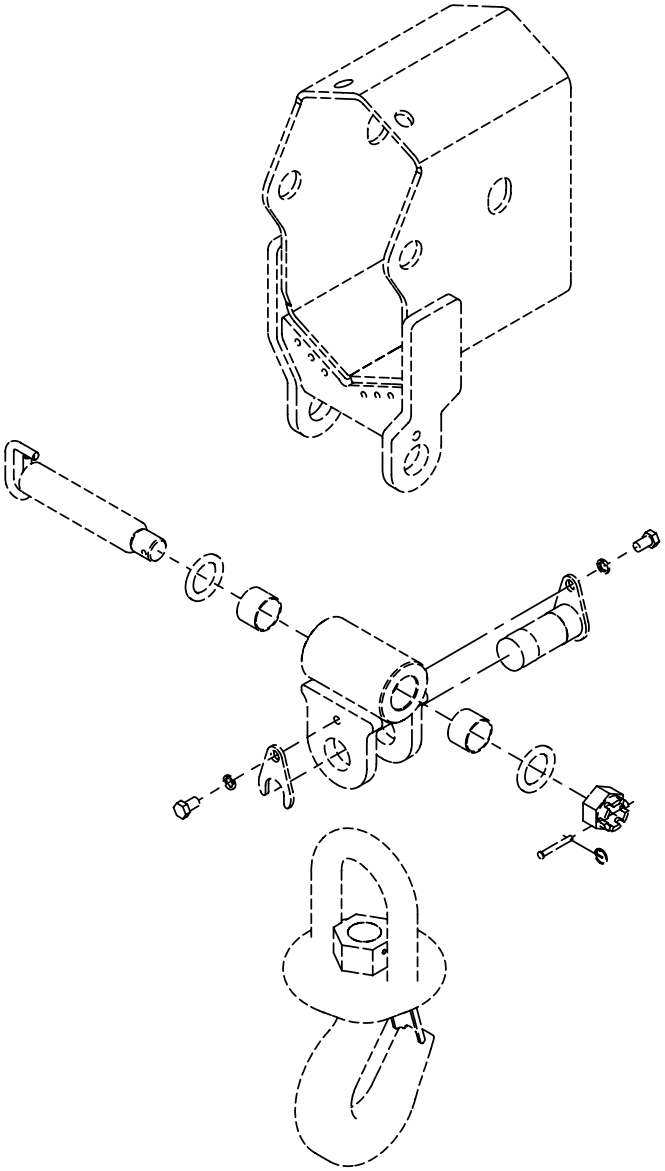

## F9-F11

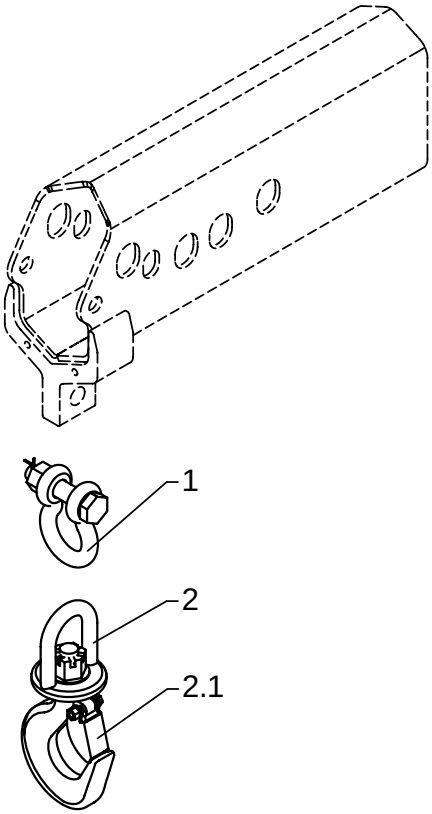

# Hook suspension, F5-F11

As from / To loader no.: 96 00 00 /
Created: 03.10.2003
Modified: 01.08.2006

| Item no. | Qty. | Part no. | Description | Remarks |
|---|---|---|---|---|
| 1 | 1 | 62114 | Shackle with nut | |
| 2 | 1 | 62101 | Hook 5 t | |
| | | 62143 | Safety catch | |

# ODIN F9 - F11

Intern ref.: 6302610

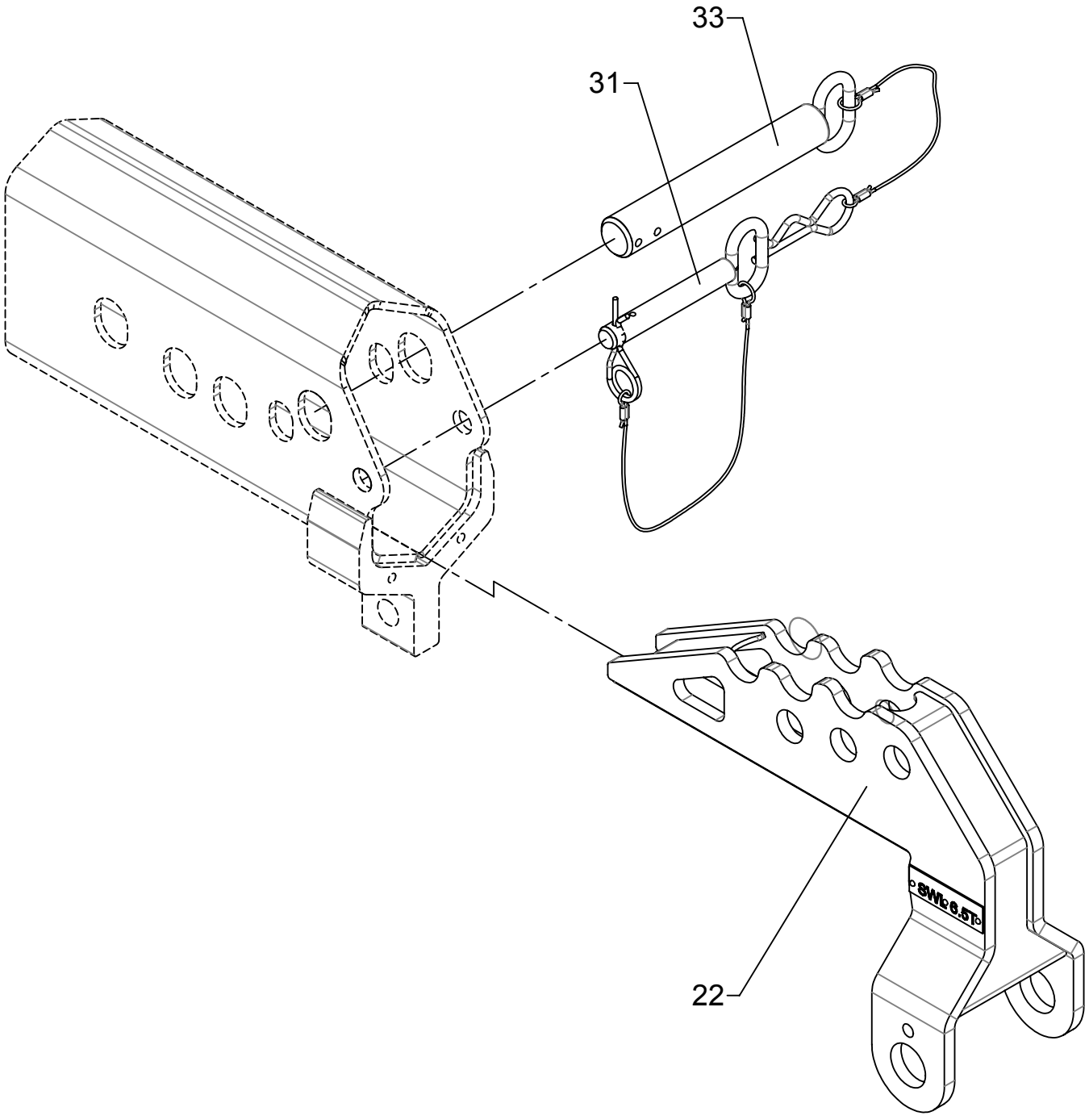

# Hook suspension for heavy lifting, manuel extension

As from / To loader no.:
Created: 28.06.2012
Modified:

| Item no. | Qty. | Part no. | Description | Remarks |
|---|---|---|---|---|
| 1 | 1 | 6301281 | Hook suspension for manual ext | |
| 2 | 1 | 6301166 | Lock pin with split pin | |
| 3 | 1 | 6300537 | Lock pin with lock spring | |

# ODIN

Intern ref.: 6300140

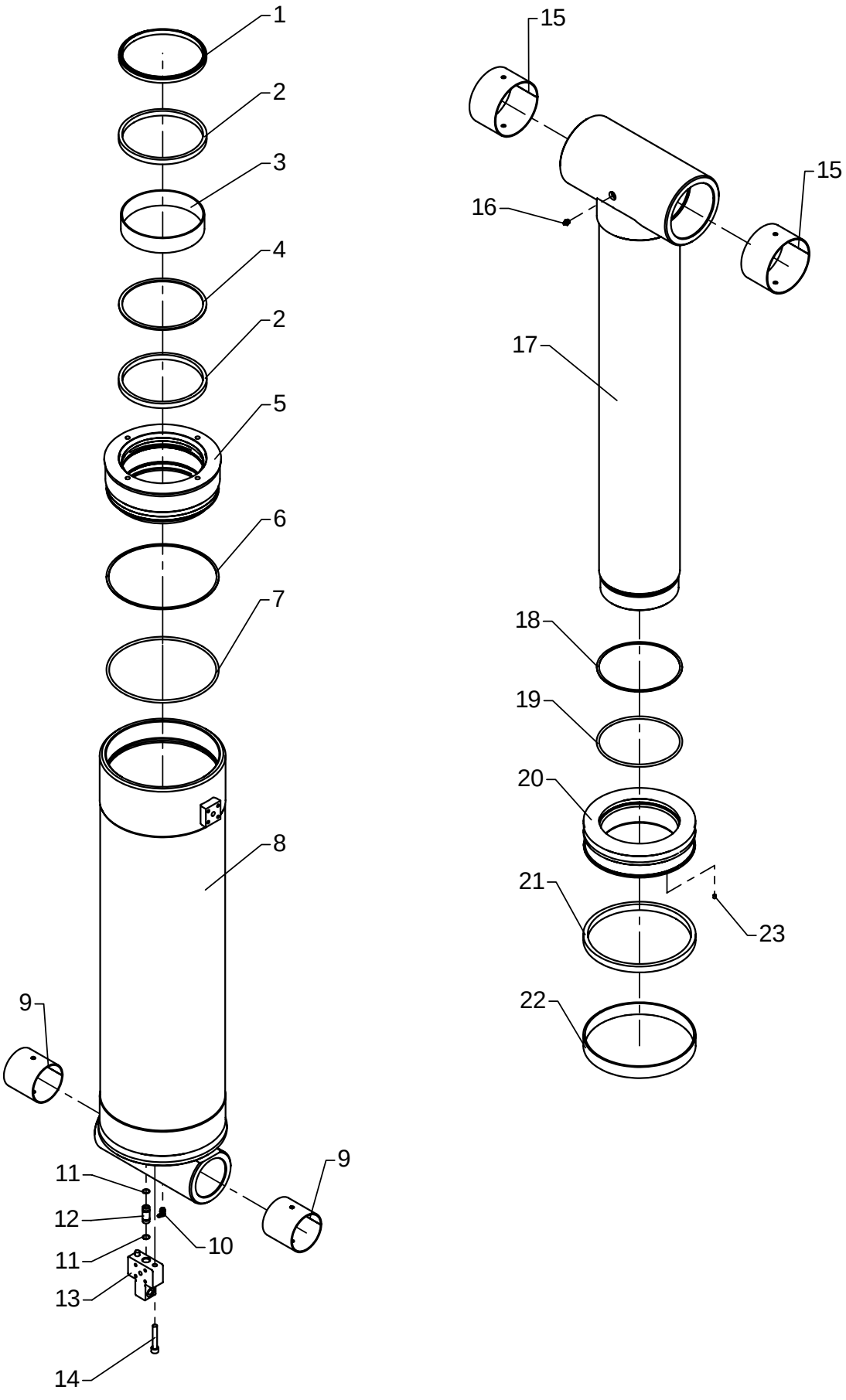

# Boom cylinder, C250/180 x 837

As from / To loader no.: 96 00 00 / 96 02 40
Created: 03.10.2003
Modified: 13.07.2009

| Item no. | Qty. | Part no. | Description | Remarks |
|---|---|---|---|---|
| | 1 | 6893580 | Seal kit | Pos. 1,2,3,4,6,7,18,19,21,22 |
| 1 | 1 | 20957 | Scraper | PA 180/195 x 9/12 |
| 2 | 2 | 20959 | Seal | SI/L 180/196 x 12,5 |
| 3 | 1 | 20954 | Guide ring | RWR 180/186 x 40 - PF |
| 4 | 1 | 20961 | Back ring | |
| 5 | 1 | 6300144 | Guide | |
| 6 | 1 | 20875 | Back ring | STR 240 x 250 x 1,7 |
| 7 | 1 | 20353 | O-ring | OR 238 x 6 |
| 9 | 1 | 6300151 | Cylinder | |
| 10 | 2 | 23922 | Bushing | PM 9090 DX |
| 11 | 1 | 31322 | Lubricator | 1/8 RG - 90 |
| 12 | 2 | 20136 | O-ring | OR 13,1 x 1,6 |
| 13 | 1 | 6292834 | Pipe | |
| 14 | 1 | 6300165 | Block | |
| 15 | 2 | 32452 | Screw | MC10 x 60 |
| 16 | 2 | 23360 | Bushing | PM 13080 DX |
| 17 | 1 | 31318 | Lubricator | 1/8" RG |
| 18 | 1 | 6300168 | Piston rod | |
| 19 | 1 | 20873 | Back ring | |
| 20 | 1 | 20350 | O-ring | OR 179,3 x 5,7 |
| 21 | 1 | 6300146 | Piston | |
| 22 | 1 | 20951 | Piston seal | GHT 250/230 x 16 - 292/N/A |
| 23 | 1 | 20953 | Guide ring | PWR 250/242 - 30 - PF |
| 24 | 1 | 30903 | Screw | MSP6 x 8 |

# 6020

An Oshkosh Corportation Company

Intern ref.: 6300140

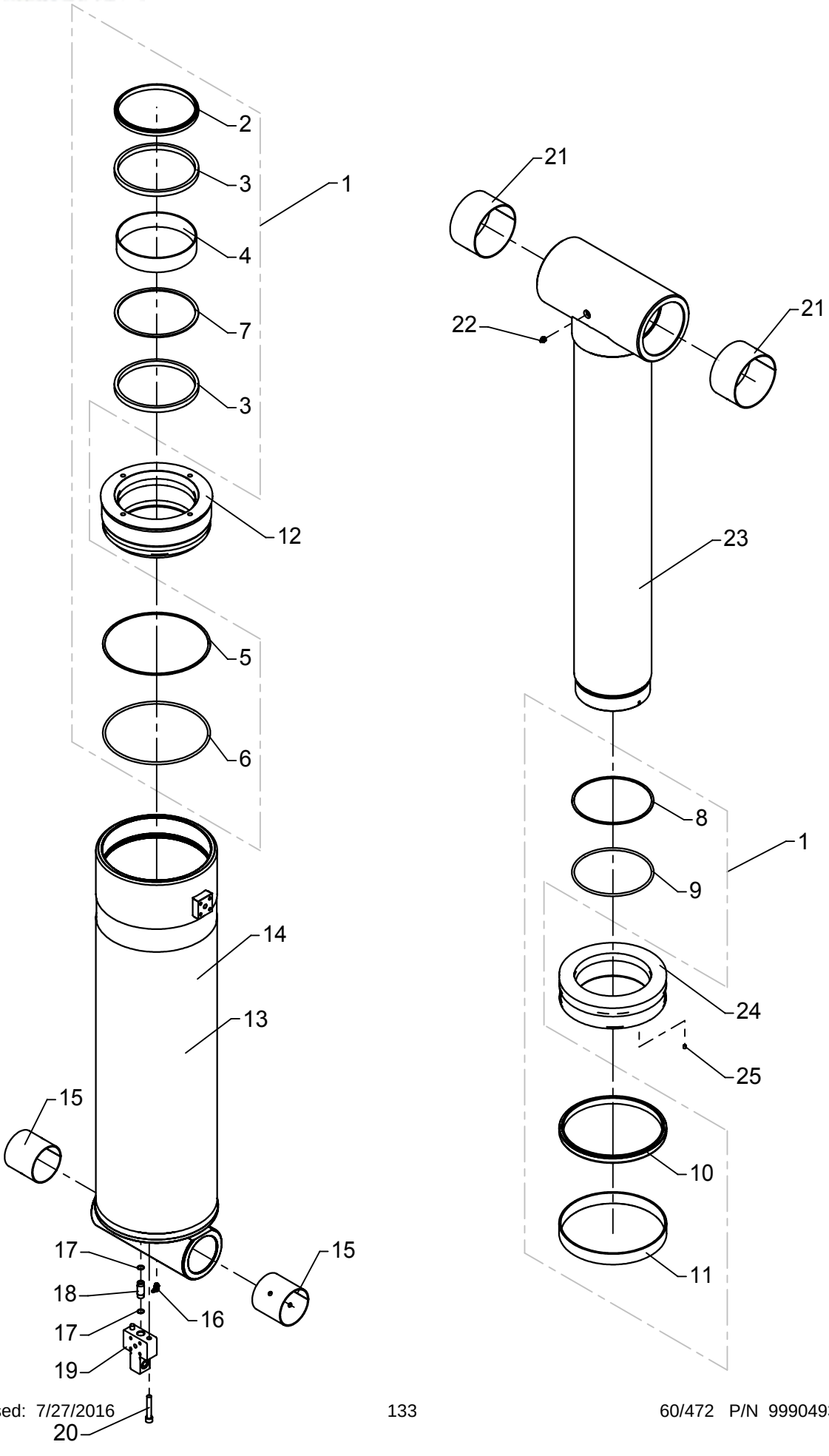

# Boom cylinder, C250/180 x 837

As from / To loader no.: 96 02 41/ 96 03 49
Created: 13.07.2009
Modified: 13.03.2014

| Item no. | Qty. | Part no. | Description | Remarks |
|---|---|---|---|---|
| 1 | 1 | 6893580 | Seal kit | |
| 2 | 1 | 20957 | Scraper | PA 180/195 x 9/12 |
| 3 | 2 | 20959 | Seal | SI/L 180/196 x 12,5 |
| 4 | 1 | 20954 | Guide ring | RWR 180/186 x 40 - PF |
| 5 | 1 | 20875 | Back ring | STR 240 x 250 x 1,7 |
| 6 | 1 | 20353 | O-ring | OR 238 x 6 |
| 7 | 1 | 20961 | Back ring | |
| 8 | 1 | 20873 | Back ring | |
| 9 | 1 | 20350 | O-ring | OR 179,3 x 5,7 |
| 10 | 1 | 20951 | Piston seal | GHT 250/230 x 16 - 292/N/A |
| 11 | 1 | 20953 | Guide ring | PWR 250/242 - 30 - PF |
| 12 | 1 | 6300144 | Guide | |
| 13 | 1 | 6301158 | | |
| 14 | 1 | 6300151 | Cylinder | |
| 15 | 2 | 23922 | Bushing | PM 9090 DX |
| 16 | 1 | 31322 | Lubricator | 1/8 RG - 90 |
| 17 | 2 | 20136 | O-ring | OR 13,1 x 1,6 |
| 18 | 1 | 6292834 | Pipe | |
| 19 | 1 | 6300165 | Block | |
| 20 | 2 | 32452 | Screw | MC10 x 60 |
| 21 | 2 | 23360 | Bushing | PM 13080 DX |
| 22 | 1 | 31318 | Lubricator | 1/8" RG |
| 23 | 1 | 6300168 | Piston rod | |
| 24 | 1 | 6300146 | Piston | |
| 25 | 1 | 30903 | Screw | MSP6 x 8 |

# ODIN

An Oshkosh Corportation Company

Intern ref.: 6301810

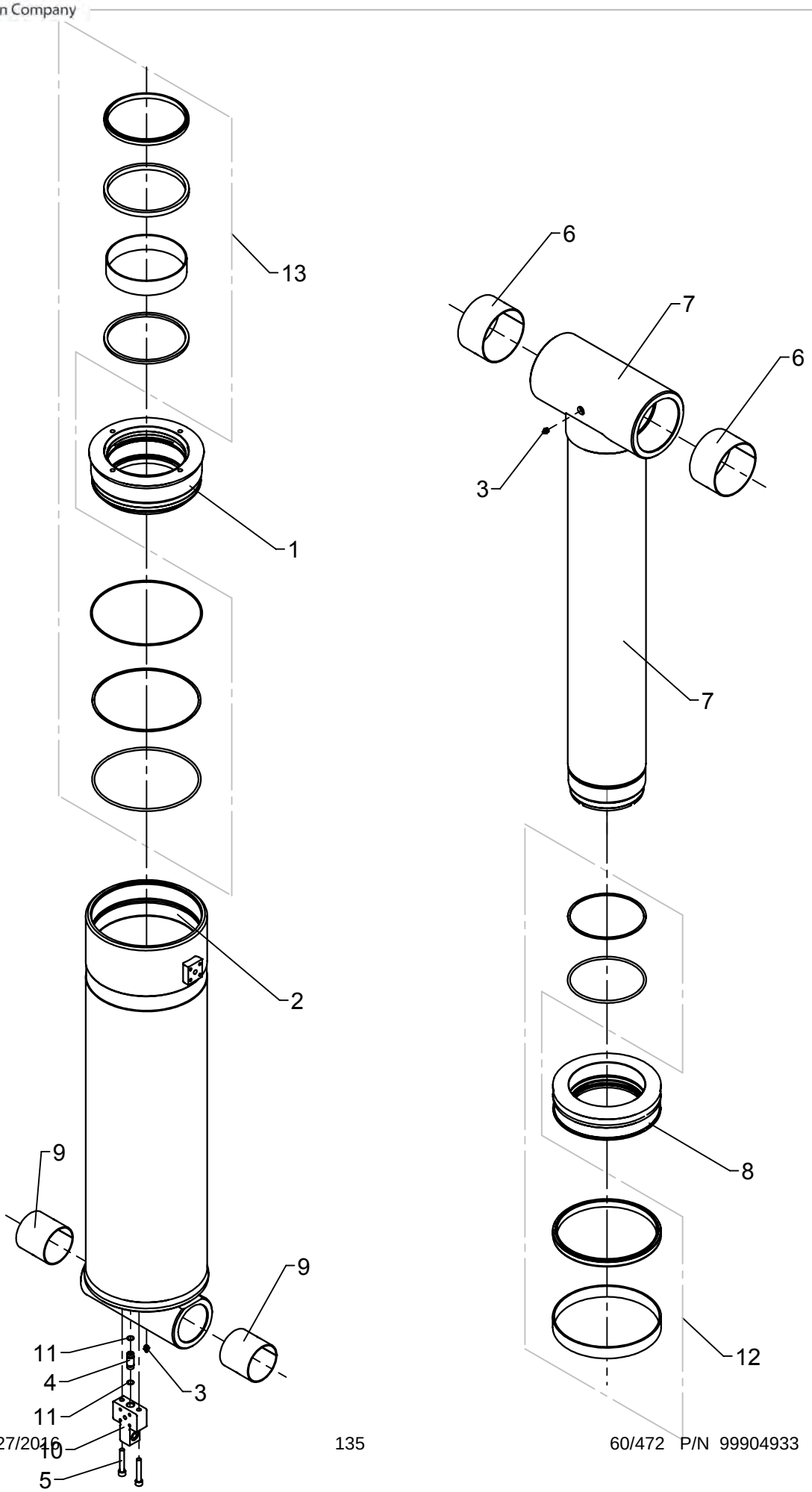

# Boom cylinder, C250/180 x 837

As from / To loader no.: 96 03 50/
Created: 13.03.2014
Modified:

| Item no. | Qty. | Part no. | Description | Remarks |
|---|---|---|---|---|
| 1 | 1 | 6301812 | Guide | |
| 2 | 1 | 6301816 | Cylinder | |
| 3 | 2 | 31318 | Lubricator | 1/8" RG |
| 4 | 1 | 6292834 | Pipe | |
| 5 | 2 | 32452 | Screw | MC10 x 60 |
| 6 | 2 | 23360 | Bushing | PM 13080 DX |
| 7 | 1 | 6301817 | Piston rod | |
| 8 | 1 | 6301811 | Piston | |
| 9 | 2 | 23922 | Bushing | PM 9090 DX |
| 10 | 1 | 6300165 | Block | |
| 11 | 2 | 20136 | O-ring | OR 13,1 x 1,6 |
| 12 | 1 | 6894600 | Seal kit for piston | |
| 13 | 1 | 6894610 | Seal kit for piston | |

# ODIN

Intern ref.: 6300130

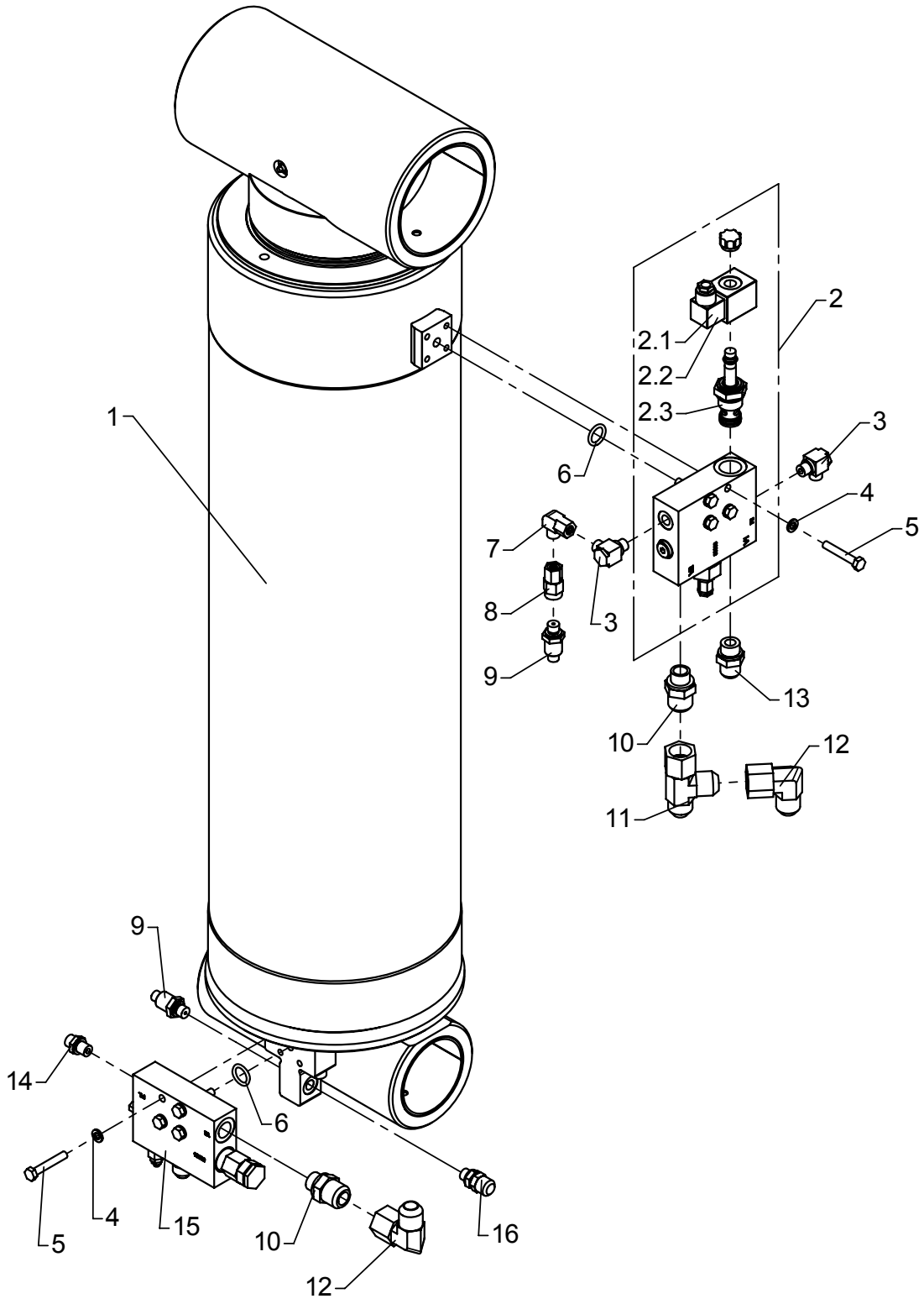

# Boom cylinder with LHV

As from / To loader no.: 96 00 00 / 96 02 07
Created: 03.10.2003
Modified: 05.03.2008

| Item no. | Qty. | Part no. | Description | Remarks |
|---|---|---|---|---|
| 1 | 1 | 6300140 | Boom cylinder | |
| 2 | 1 | 59055 | Electric regeneration valve | |
| | | 61777 | Solenoid | 12V |
| | | 61778 | Solenoid | 26V |
| | | 59074 | Magnet coil | |
| 3 | 2 | 25113 | Banjo connection | RSWV 8 LR |
| 4 | 8 | 31155 | Spring washer | 8 mm |
| 5 | 8 | 30139 | Steel bolt, stainless | M8 x 50 |
| 6 | 2 | 20221 | O-ring | OR 18,64 x 3,53 |
| 7 | 1 | 26170 | Elbow connection | EWSD 8 L |
| 8 | 1 | 26370 | Pressure gauge connection | EMASD 8 LR |
| 9 | 2 | 28850 | Pressure transducer | |
| 10 | 2 | 25861 | Connection | F40XS18/20 - 1-2 |
| 11 | 1 | 25828 | Connection | R6XS 20 JIC |
| 12 | 2 | 25827 | Elbow connection | C6XS 20 JIC |
| 13 | 1 | 25833 | Straight connection | F40XS14/16 - 1/2 |
| 14 | 1 | 25109 | Connection | GES 8 LR-WD |
| 15 | 1 | 59054 | Load-holding valve | |
| 16 | 1 | 26103 | Pressure-gauge connect. | |
| 17 | 1 | 6300176 | Pipe | |
| 18 | 1 | 6300177 | Pipe | |

# ODIN

Intern ref.: 6300130

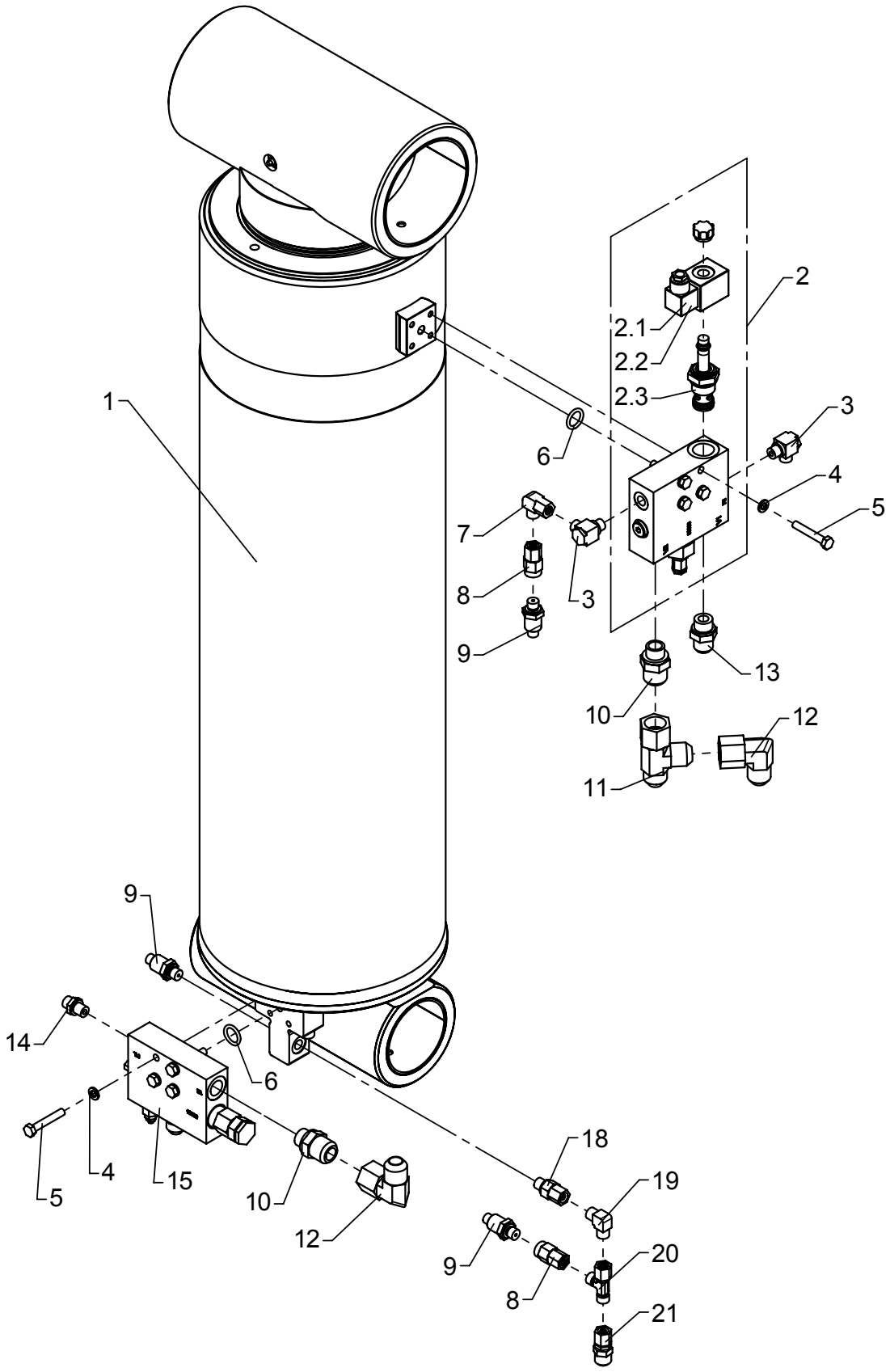

# Boom cylinder with LHV

As from / To loader no.: 96 02 08 / 96 02 52
Created: 05.03.2008
Modified: 06.07.2010

| Item no. | Qty. | Part no. | Description | Remarks |
|---|---|---|---|---|
| 1 | 1 | 6300140 | Boom cylinder | |
| 2 | 1 | 59055 | Electric regeneration valve | |
| | | 61777 | Solenoid | 12V |
| | | 61778 | Solenoid | 26V |
| | | 59074 | Magnet coil | |
| 3 | 2 | 25113 | Banjo connection | RSWV 8 LR |
| 4 | 8 | 31155 | Spring washer | 8 mm |
| 5 | 8 | 30139 | Steel bolt, stainless | M8 x 50 |
| 6 | 2 | 20221 | O-ring | OR 18,64 x 3,53 |
| 7 | 1 | 26170 | Elbow connection | EWSD 8 L |
| 8 | 2 | 26370 | Pressure gauge connection | EMASD 8 LR |
| 9 | 3 | 28850 | Pressure transducer | |
| 10 | 2 | 25861 | Connection | F40XS18/20 - 1-2 |
| 11 | 1 | 25828 | Connection | R6XS 20 JIC |
| 12 | 2 | 25827 | Elbow connection | C6XS 20 JIC |
| 13 | 1 | 25833 | Straight connection | F40XS14/16 - 1/2 |
| 14 | 1 | 25109 | Connection | GES 8 LR-WD |
| 15 | 1 | 59054 | Load-holding valve | |
| 16 | 1 | 6300176 | Pipe | |
| 17 | 1 | 6300177 | Pipe | |
| 18 | 1 | 26104 | Connection | EGESD 8 LR-WD |
| 19 | 1 | 25247 | Elbow connection | WV 8 L |
| 20 | 1 | 25249 | Connection | ELSD 8 L |
| 21 | 1 | 26148 | Connection | |

# 6020K

Intern ref.: 6300130

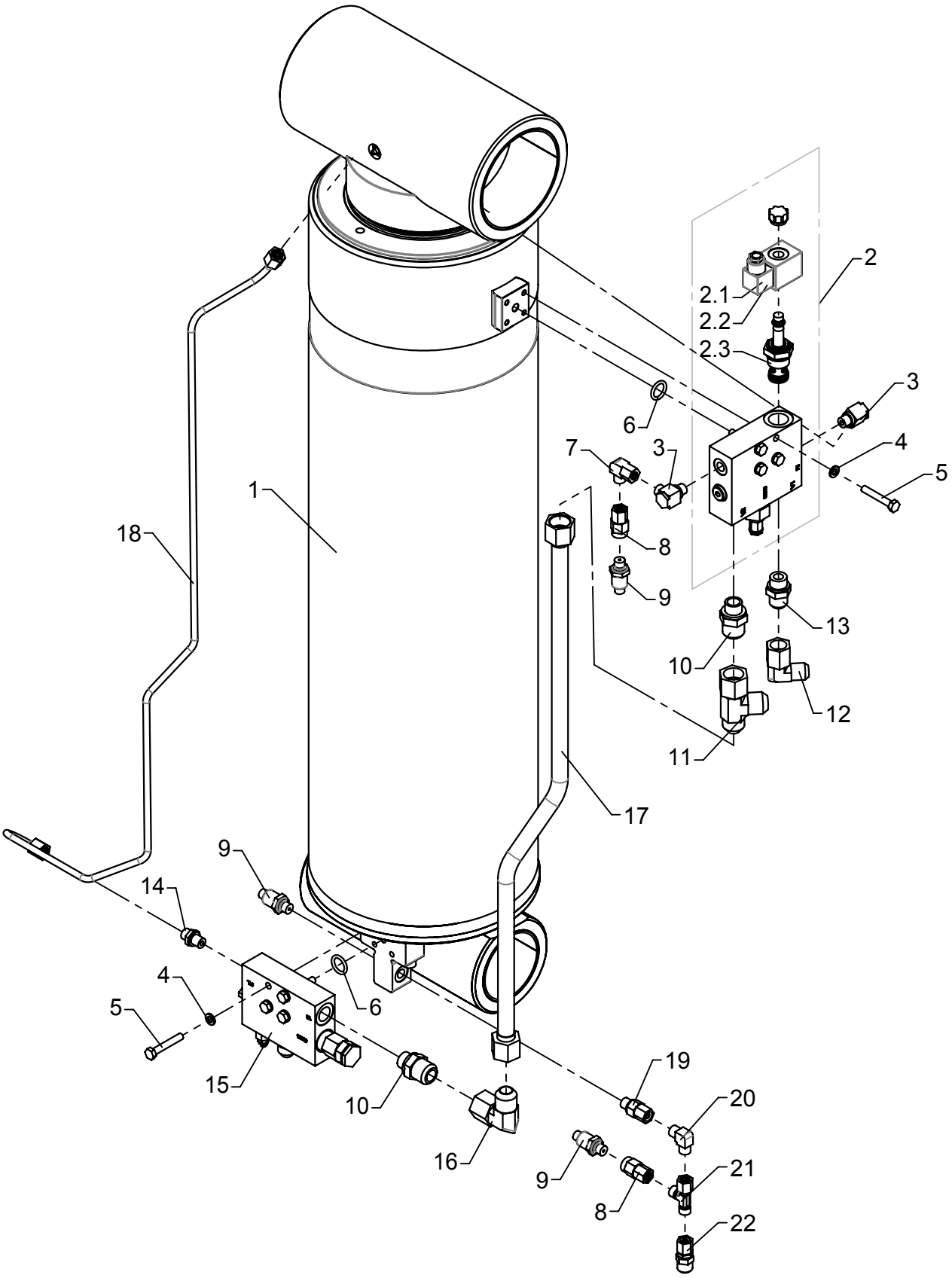

# Boom cylinder with LHV

As from / To loader no.: 96 02 53/ 96 03 349
Created: 06.07.2010
Modified: 13.03.2014

| Item no. | Qty. | Part no. | Description | Remarks |
|---|---|---|---|---|
| 1 | 1 | 6300140 | Boom cylinder | |
| 2 | 1 | 59055 | Electric regeneration valve | |
| | | 61777 | Solenoid | 12V |
| | | 61778 | Solenoid | 26V |
| | | 59074 | Magnet coil | |
| 3 | 2 | 25113 | Banjo connection | RSWV 8 LR |
| 4 | 8 | 31155 | Spring washer | 8 mm |
| 5 | 8 | 30139 | Steel bolt, stainless | M8 x 50 |
| 6 | 2 | 20221 | O-ring | OR 18,64 x 3,53 |
| 7 | 1 | 26170 | Elbow connection | EWSD 8 L |
| 8 | 2 | 26370 | Pressure gauge connection | EMASD 8 LR |
| 9 | 3 | 28850 | Pressure transducer | |
| 10 | 2 | 25861 | Connection | F40XS18/20 - 1-2 |
| 11 | 1 | 25828 | Connection | R6XS 20 JIC |
| 12 | 1 | 25741 | Elbow connection | C6XS 14/16 JIC |
| 13 | 1 | 25833 | Straight connection | F40XS14/16 - 1/2 |
| 14 | 1 | 25109 | Connection | GES 8 LR-WD |
| 15 | 1 | 59054 | Load-holding valve | |
| 16 | 1 | 25827 | Elbow connection | C6XS 20 JIC |
| 17 | 1 | 6300176 | Pipe | |
| 18 | 1 | 6300177 | Pipe | |
| 19 | 1 | 26104 | Connection | EGESD 8 LR-WD |
| 20 | 1 | 25247 | Elbow connection | WV 8 L |
| 21 | 1 | 25249 | Connection | ELSD 8 L |
| 22 | 1 | 26148 | Connection | |

# 6020K

Intern ref.: 6300130

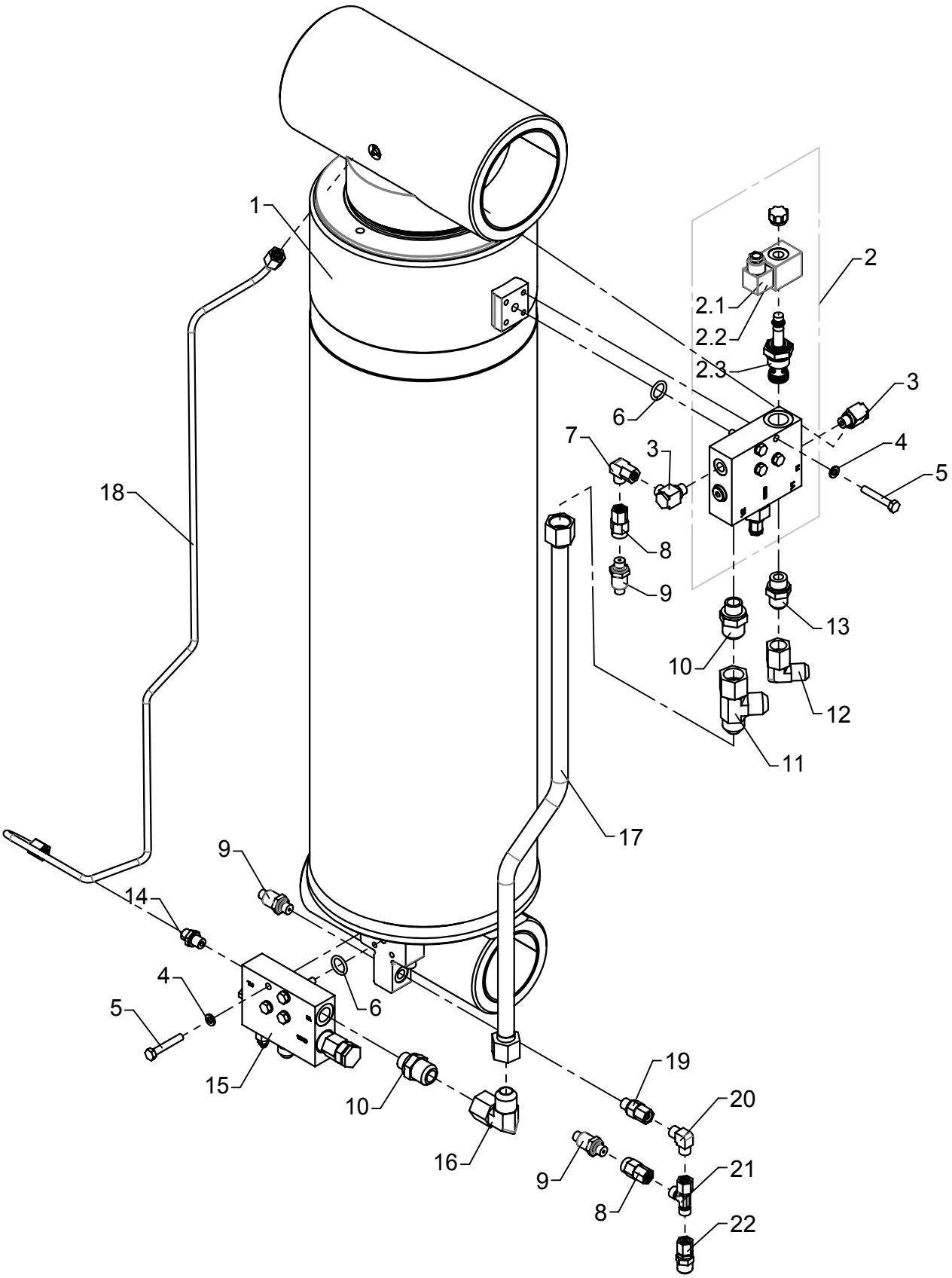

# Boom cylinder with LHV

As from / To loader no.: 96 03 350
Created: 13.03.2014
Modified:

| Item no. | Qty. | Part no. | Description | Remarks |
|---|---|---|---|---|
| 1 | 1 | 6301810 | Boom cylinder C250/180 x 837 | |
| 2 | 1 | 59055 | Electric regeneration valve | |
| 2.1 | | 61777 | Solenoid | 12V |
| 2.2 | | 61778 | Solenoid | 26V |
| 2.3 | | 59074 | Magnet coil | |
| 3 | 2 | 25113 | Banjo connection | RSWV 8 LR |
| 4 | 8 | 31155 | Spring washer | 8 mm |
| 5 | 8 | 30139 | Steel bolt, stainless | M8 x 50 |
| 6 | 2 | 20221 | O-ring | OR 18,64 x 3,53 |
| 7 | 1 | 26170 | Elbow connection | EWSD 8 L |
| 8 | 2 | 26370 | Pressure gauge connection | EMASD 8 LR |
| 9 | 3 | 28850 | Pressure transducer | |
| 10 | 2 | 25861 | Connection | F40XS18/20 - 1-2 |
| 11 | 1 | 25828 | Connection | R6XS 20 JIC |
| 12 | 1 | 25741 | Elbow connection | C6XS 14/16 JIC |
| 13 | 1 | 25833 | Straight connection | F40XS14/16 - 1/2 |
| 14 | 1 | 25109 | Connection | GES 8 LR-WD |
| 15 | 1 | 59054 | Load-holding valve | |
| 16 | 1 | 25827 | Elbow connection | C6XS 20 JIC |
| 17 | 1 | 6300176 | Pipe | |
| 18 | 1 | 6300177 | Pipe | |
| 19 | 1 | 26104 | Connection | EGESD 8 LR-WD |
| 20 | 1 | 25247 | Elbow connection | WV 8 L |
| 21 | 1 | 25249 | Connection | ELSD 8 L |
| 22 | 1 | 26148 | Connection | |

# ODIN

Intern ref.: 6300150

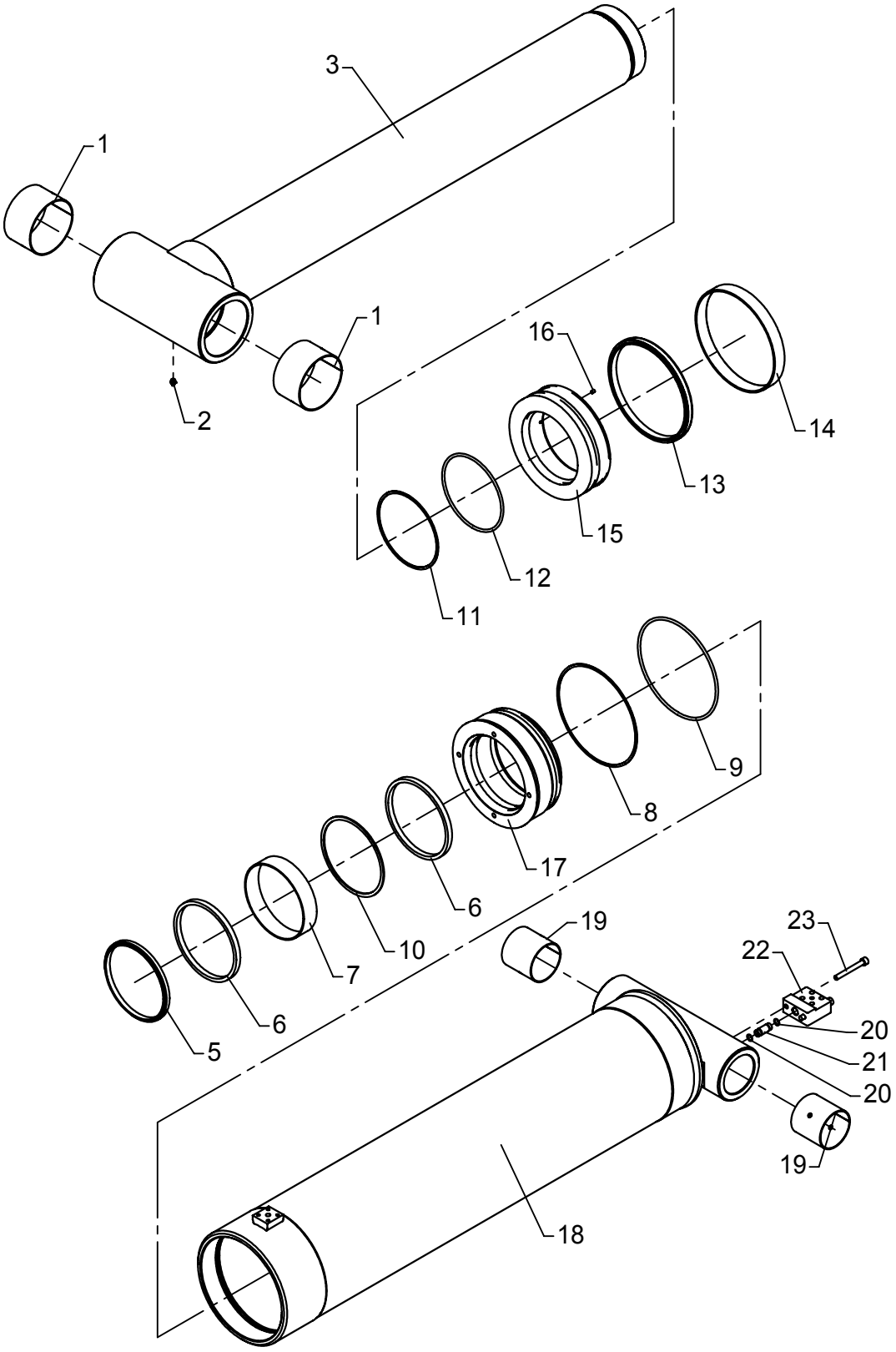

# Jib cylinder, C250/180 x 1122

As from / To loader no.: 96 00 00 /96 03 49
Created: 03.10.2003
Modified: 13.03.2014

| Item no. | Qty. | Part no. | Description | Remarks |
|---|---|---|---|---|
| | 1 | 6893580 | Seal kit | Pos. 4,5,8,9,10,11,12,13,15,16 |
| 1 | 2 | 23360 | Bushing | PM 13080 DX |
| 2 | 1 | 31318 | Lubricator | 1/8" RG |
| 3 | 1 | 6300209 | Piston rod | |
| 5 | 1 | 20957 | Scraper | PA 180/195 x 9/12 |
| 6 | 2 | 20959 | Seal | SI/L 180/196 x 12,5 |
| 7 | 1 | 20954 | Guide ring | RWR 180/186 x 40 - PF |
| 8 | 1 | 20875 | Back ring | STR 240 x 250 x 1,7 |
| 9 | 1 | 20353 | O-ring | OR 238 x 6 |
| 10 | 1 | 20961 | Back ring | |
| 11 | 1 | 20873 | Back ring | |
| 12 | 1 | 20350 | O-ring | OR 179,3 x 5,7 |
| 13 | 1 | 20951 | Piston seal | GHT 250/230 x 16 - 292/N/A |
| 14 | 1 | 20953 | Guide ring | PWR 250/242 - 30 - PF |
| 15 | 1 | 6300146 | Piston | |
| 16 | 1 | 30903 | Screw | MSP6 x 8 |
| 17 | 1 | 6300144 | Guide | |
| 18 | 1 | 6300157 | Cylinder | |
| 19 | 2 | 23922 | Bushing | PM 9090 DX |
| 20 | 2 | 20136 | O-ring | OR 13,1 x 1,6 |
| 21 | 1 | 6292834 | Pipe | |
| 22 | 1 | 6300167 | Block | |
| 23 | 2 | 32459 | Screw | MC10 x 85 |

# ODIN

Intern ref.: 6301820

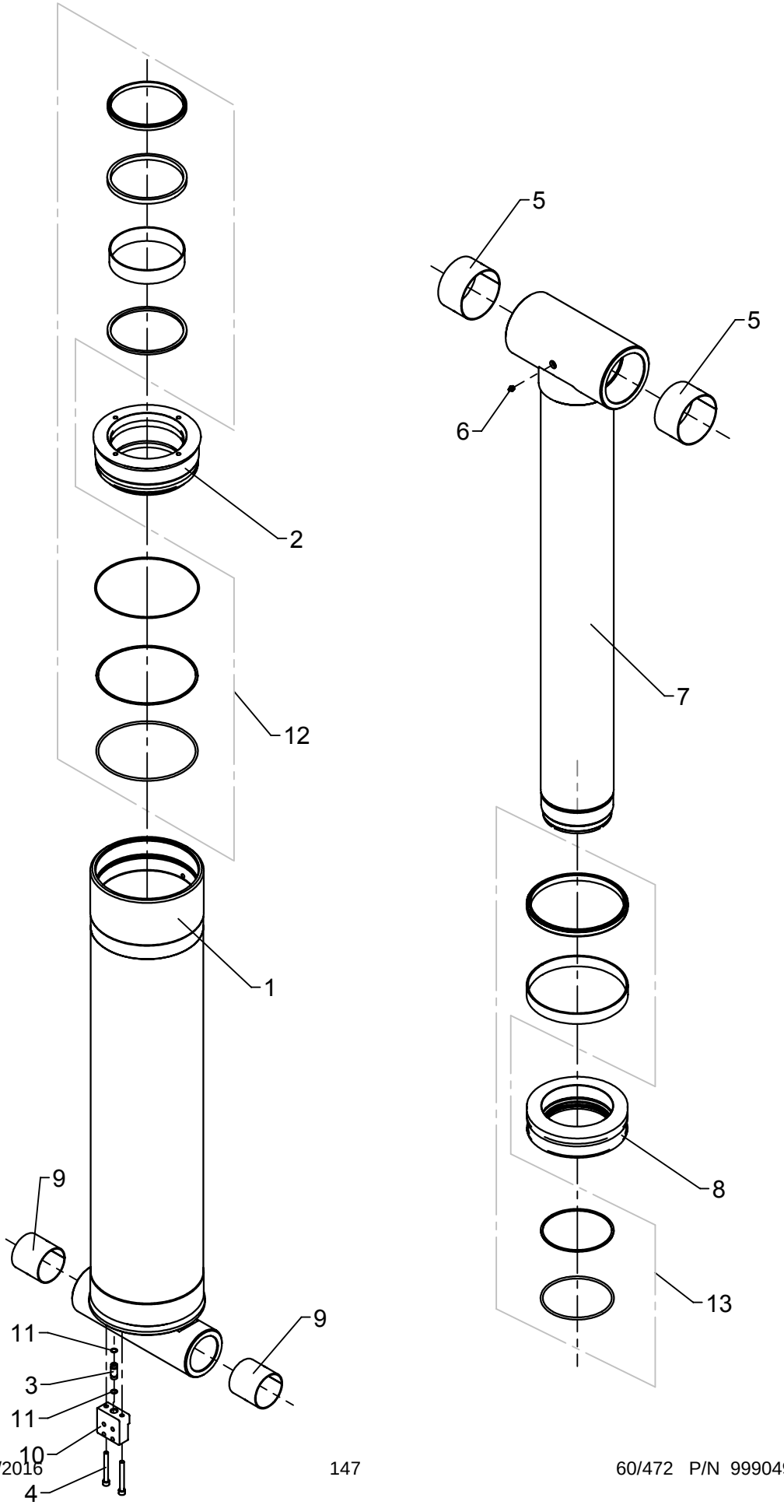

# Jib cylinder, C250/180 x 1122

As from / To loader no.: 96 03 50
Created: 13.03.2014
Modified:

| Item no. | Qty. | Part no. | Description | Remarks |
|---|---|---|---|---|
| 1 | 1 | 6301818 | Cylinder | |
| 2 | 1 | 6301812 | Guide | |
| 3 | 1 | 6292834 | Pipe | |
| 4 | 2 | 32459 | Screw | MC10 x 85 |
| 5 | 2 | 23360 | Bushing | PM 13080 DX |
| 6 | 1 | 31318 | Lubricator | 1/8" RG |
| 7 | 1 | 6301819 | Piston rod | |
| 8 | 1 | 6301811 | Piston | |
| 9 | 2 | 23922 | Bushing | PM 9090 DX |
| 10 | 1 | 6300167 | Block | |
| 11 | 2 | 20136 | O-ring | OR 13,1 x 1,6 |
| 12 | 1 | 6894610 | Seal kit for piston | |
| 13 | 1 | 6894600 | Seal kit for piston | |

# ODIN

Intern ref.: 6300160

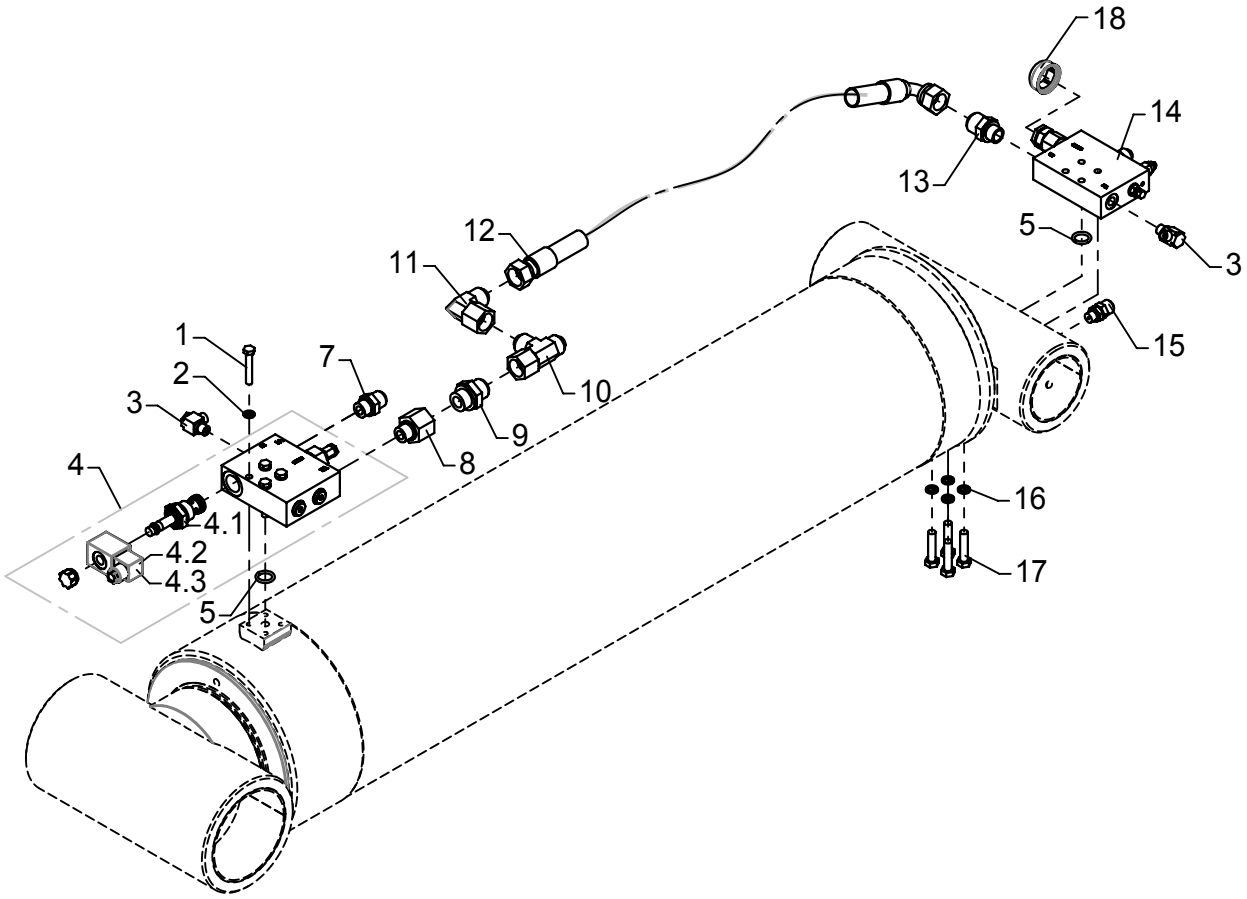

# Jib cylinder with LHV

As from / To loader no.: 96 00 00 /96 03 49
Created: 03.10.2003
Modified: 13.03.2014

| Item no. | Qty. | Part no. | Description | Remarks |
|---|---|---|---|---|
| 1 | 4 | 30139 | Steel bolt, stainless | M8 x 50 |
| 2 | 4 | 31155 | Spring washer | 8 mm |
| 3 | 2 | 25113 | Banjo connection | RSWV 8 LR |
| 4 | 1 | 59055 | Electric regeneration valve | |
| 4.1 | | 59074 | Magnet coil | |
| 4.2 | | 61777 | Solenoid | 12V |
| 4.2 | | 61778 | Solenoid | 26V |
| 5 | 2 | 20221 | O-ring | OR 18,64 x 3,53 |
| 6 | 1 | 6300179 | Pipe | |
| 7 | 1 | 25833 | Straight connection | F40XS14/16 - 1/2 |
| 8 | 1 | 26111 | Reducing connection | RED-R 1/2-WD/R 3/4 |
| 9 | 1 | 25834 | Straight connection | F40XS18/20 - 3/4 |
| 10 | 1 | 25828 | Connection | R6XS 20 JIC |
| 11 | 1 | 25827 | Elbow connection | C6XS 20 JIC |
| 12 | 1 | 56025 | Hose | 5/8" x 1150 mm v/o JIC |
| 13 | 1 | 25861 | Connection | F40XS18/20 - 1-2 |
| 14 | 1 | 59054 | Load-holding valve | |
| 15 | 1 | 26103 | Pressure-gauge connect. | |
| 16 | 4 | 31156 | Spring washer | 10 mm |
| 17 | 4 | 30165 | Steel bolt | M10 x 45 |
| 18 | 1 | 63413 | Cover for nut | |

# ODIN

Intern ref.: 6300160

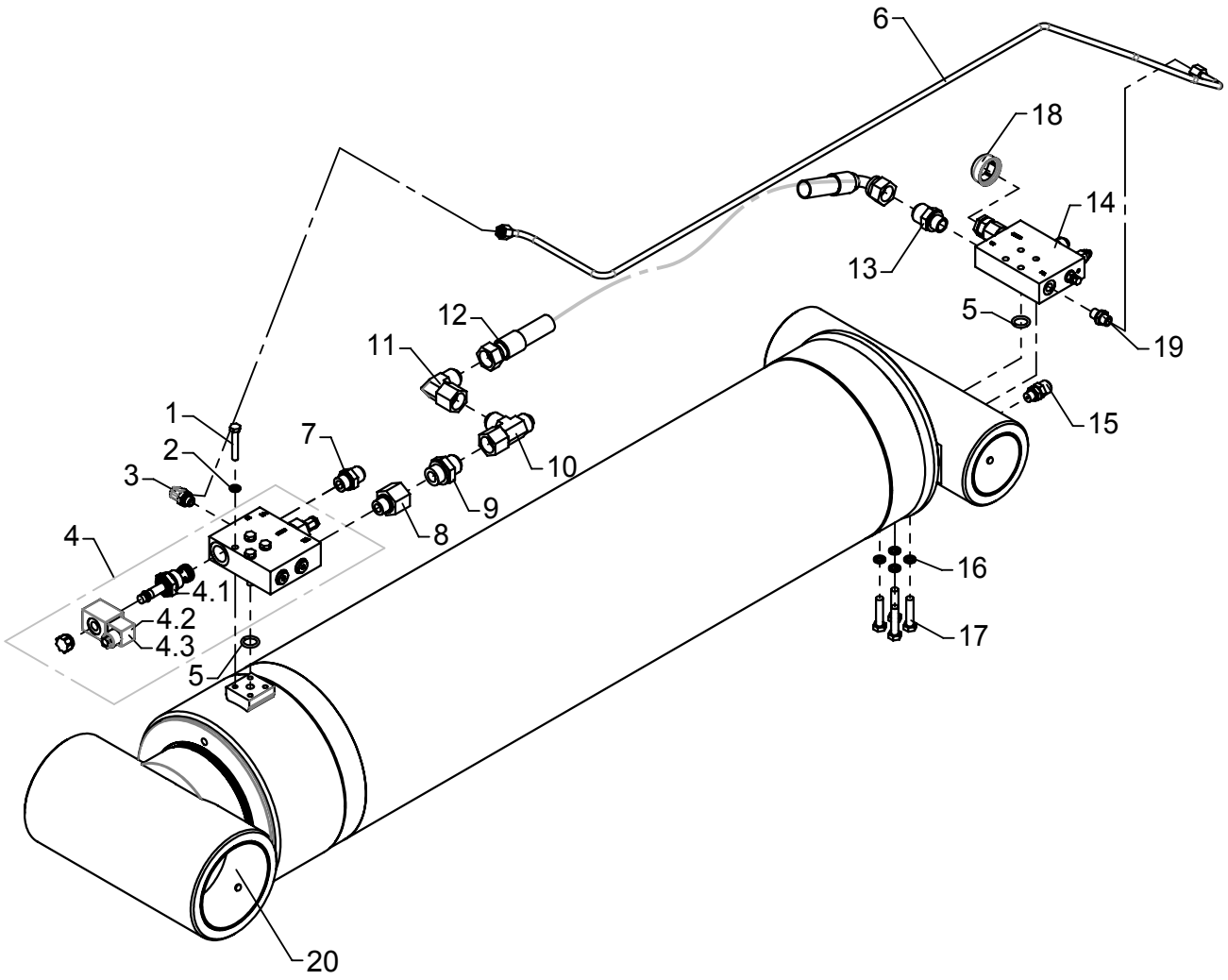

# Jib cylinder with LHV

As from / To loader no.: 96 03 50
Created: 03.10.2003
Modified:

| Item no. | Qty. | Part no. | Description | Remarks |
|---|---|---|---|---|
| 1 | 4 | 30139 | Steel bolt, stainless | M8 x 50 |
| 2 | 4 | 31155 | Spring washer | 8 mm |
| 3 | 1 | 26898 | Elbow connection | 8 mm - 1/4" |
| 4 | 1 | 59055 | Electric regeneration valve | |
| 4,1 | | 59074 | Magnet coil | |
| 4,2 | | 61777 | Solenoid | 12V |
| 4,3 | | 61778 | Solenoid | 26V |
| 5 | 2 | 20221 | O-ring | OR 18,64 x 3,53 |
| 6 | 1 | 6300179 | Pipe | |
| 7 | 1 | 25833 | Straight connection | F40XS14/16 - 1/2 |
| 8 | 1 | 26111 | Reducing connection | RED-R 1/2-WD/R 3/4 |
| 9 | 1 | 25834 | Straight connection | F40XS18/20 - 3/4 |
| 10 | 1 | 25828 | Connection | R6XS 20 JIC |
| 11 | 1 | 25827 | Elbow connection | C6XS 20 JIC |
| 12 | 1 | 56025 | Hose | 5/8" x 1150 mm v/o JIC |
| 13 | 1 | 25861 | Connection | F40XS18/20 - 1-2 |
| 14 | 1 | 59054 | Load-holding valve | |
| 15 | 1 | 26103 | Pressure-gauge connect. | |
| 16 | 4 | 31156 | Spring washer | 10 mm |
| 17 | 4 | 30165 | Steel bolt | M10 x 45 |
| 18 | 1 | 63413 | Cover for nut | |
| 19 | 1 | 25109 | Connection | GES 8 LR-WD |
| 20 | 1 | 6301820 | Jib cylinder, C250/180 x 1122 | |

# ODIN

Intern ref.: 6300400

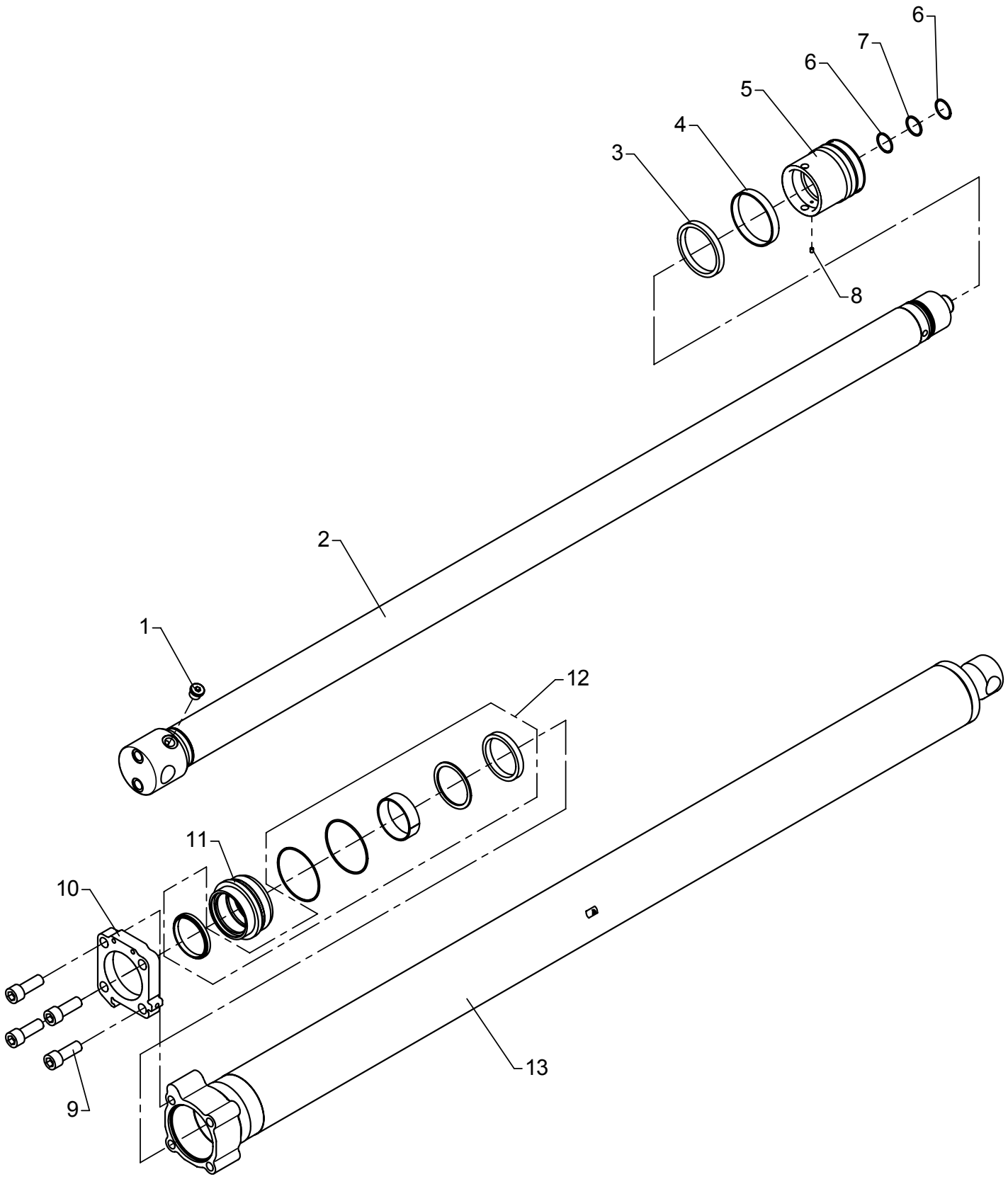


649 Nm

# Extension cylinder I, C110/80h x 1850
# Optimised boom system OK2-OK6

As from / To loader no.: 96 00 00 /
Created: 03.10.2003
Modified: 09.03.2006

| Item no. | Qty. | Part no. | Description | Remarks |
|---|---|---|---|---|
| | 1 | 6893600 | Seal kit, C110/80h | Pos. 3, 4, 6, 7 |
| 1 | 1 | 25103 | Plug | VS-R-1/2 WD |
| 2 | 1 | 6300401 | Piston rod | |
| 3 | 1 | 22131 | Seal | GHT 110/95 x 12,5 - PU/N/A |
| 4 | 1 | 22130 | Guide ring | PWR 110/104 x 16 - PF |
| 5 | 1 | 6300406 | Piston | |
| 6 | 2 | 20705 | Back ring | STR 35 x 40 x 1,3 |
| 7 | 1 | 20177 | O-ring | OR 34,2 x 3 |
| 8 | 1 | 30903 | Screw | MSP6 x 8 |
| 9 | 4 | 32449 | Sockethead screw | MC20 x 55 |
| 10 | 1 | 6300405 | Flange | |
| 11 | 1 | 6302407 | Guide | |
| 12 | 1 | 22139 | Seal kit | |
| 13 | 1 | 6300408 | Cylinder pipe | |

# ODIN

Intern ref.: 6300410

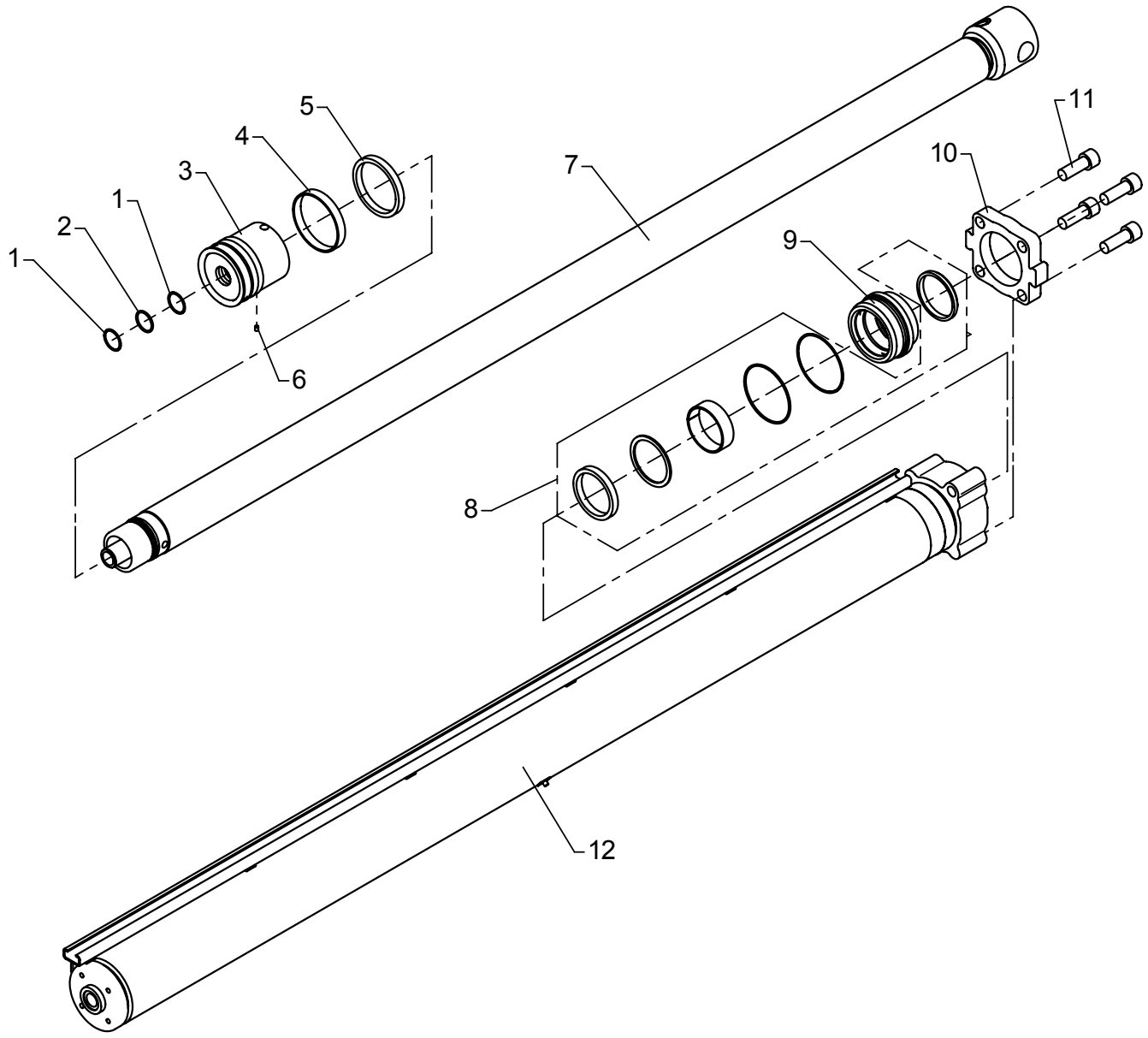


649 Nm

# Extension cylinder II, C110/80h x 1900
# Optimised boom system OK2-OK6

As from / To loader no.: 96 00 00 /
Created: 03.10.2003
Modified: 09.03.2006

| Item no. | Qty. | Part no. | Description | Remarks |
|---|---|---|---|---|
| | 1 | 6893600 | Seal kit, C110/80h | Pos. 1, 2, 4, 5 |
| 1 | 2 | 20705 | Back ring | STR 35 x 40 x 1,3 |
| 2 | 1 | 20177 | O-ring | OR 34,2 x 3 |
| 3 | 1 | 6300406 | Piston | |
| 4 | 1 | 22130 | Guide ring | PWR 110/104 x 16 - PF |
| 5 | 1 | 22131 | Seal | GHT 110/95 x 12,5 - PU/N/A |
| 6 | 1 | 30903 | Screw | MSP6 x 8 |
| 7 | 1 | 6300412 | Piston rod | |
| 8 | 1 | 22139 | Seal kit | |
| 9 | 1 | 6302407 | Guide | |
| 10 | 1 | 6300419 | Flange | |
| 11 | 4 | 32449 | Sockethead screw | MC20 x 55 |
| 12 | 1 | 6300415 | Cylinder | |

# ODIN

Intern ref.: 6300420

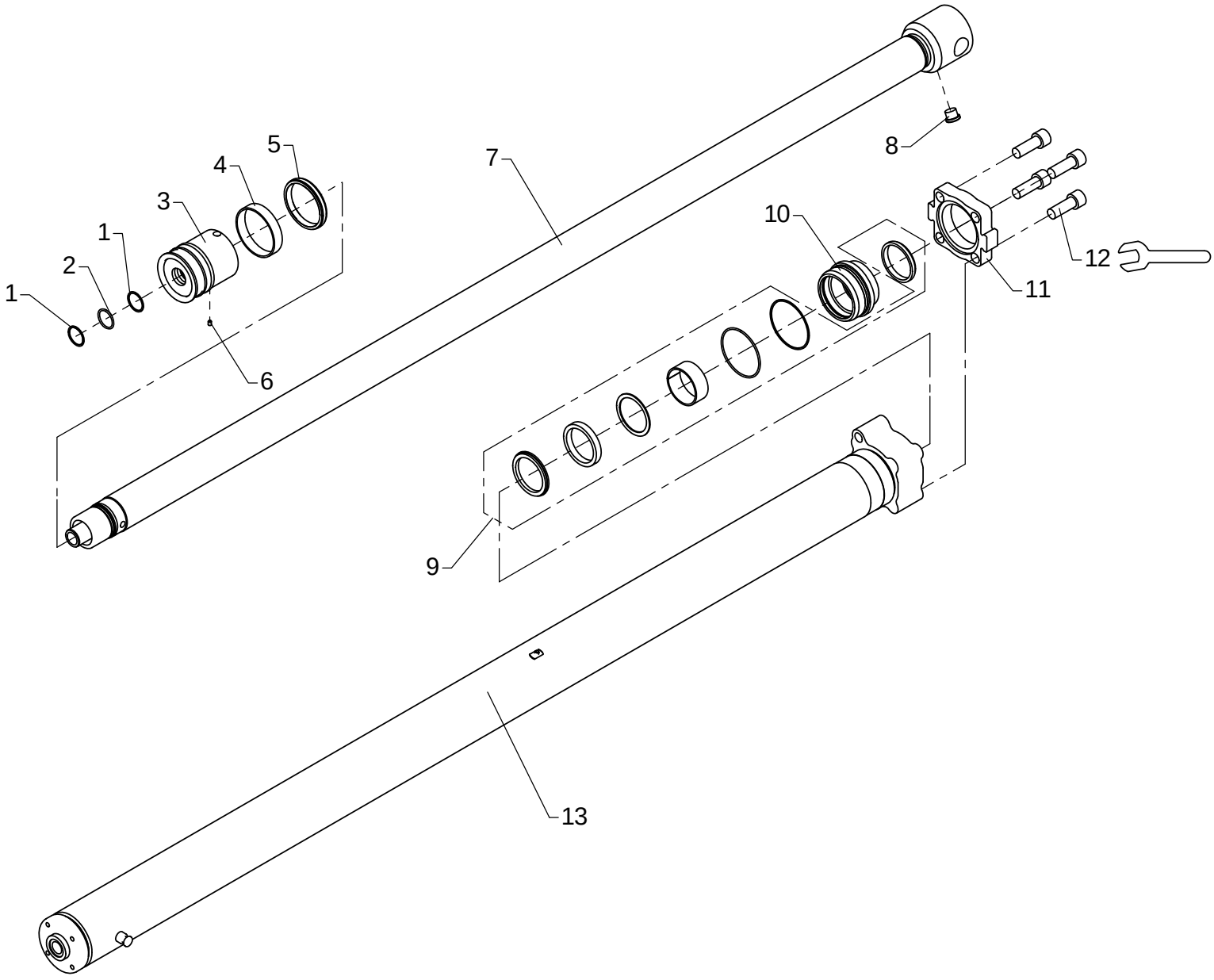


400 Nm

# Extension cylinder III, C100/70h x 2000
# Optimised boom system OK3-OK6

As from / To loader no.: 96 00 00 /
Created: 03.10.2003
Modified: 07.04.2016

| Item no. | Qty. | Part no. | Description | Remarks |
|---|---|---|---|---|
| | 1 | 6893610 | Seal kit, C100/70h | Pos. 1, 2, 4, 5 |
| 1 | 2 | 20705 | Back ring | STR 35 x 40 x 1,3 |
| 2 | 1 | 20177 | O-ring | OR 34,2 x 3 |
| 3 | 1 | 6300424 | Piston | |
| 4 | 1 | 22142 | Guide ring | PWR 100/94 x 20 - PF |
| 5 | 1 | 22141 | Seal | GHT 100/85 x 12,5 |
| 6 | 1 | 30903 | Pointed screw | MSP6 x 8 |
| 7 | 1 | 6300673 | Piston rod | |
| 8 | 1 | 25103 | Plug | VS-R-1/2 WD |
| 9 | 1 | 22140 | Seal kit | |
| 10 | 1 | 6300425 | Guide | |
| 11 | 1 | 6300426 | Flange | |
| 12 | 4 | 32449 | Sockethead screw | MC20 x 55 |
| 13 | 1 | 6300427 | Cylinder | |

# ODIN

Intern ref.: 6302420

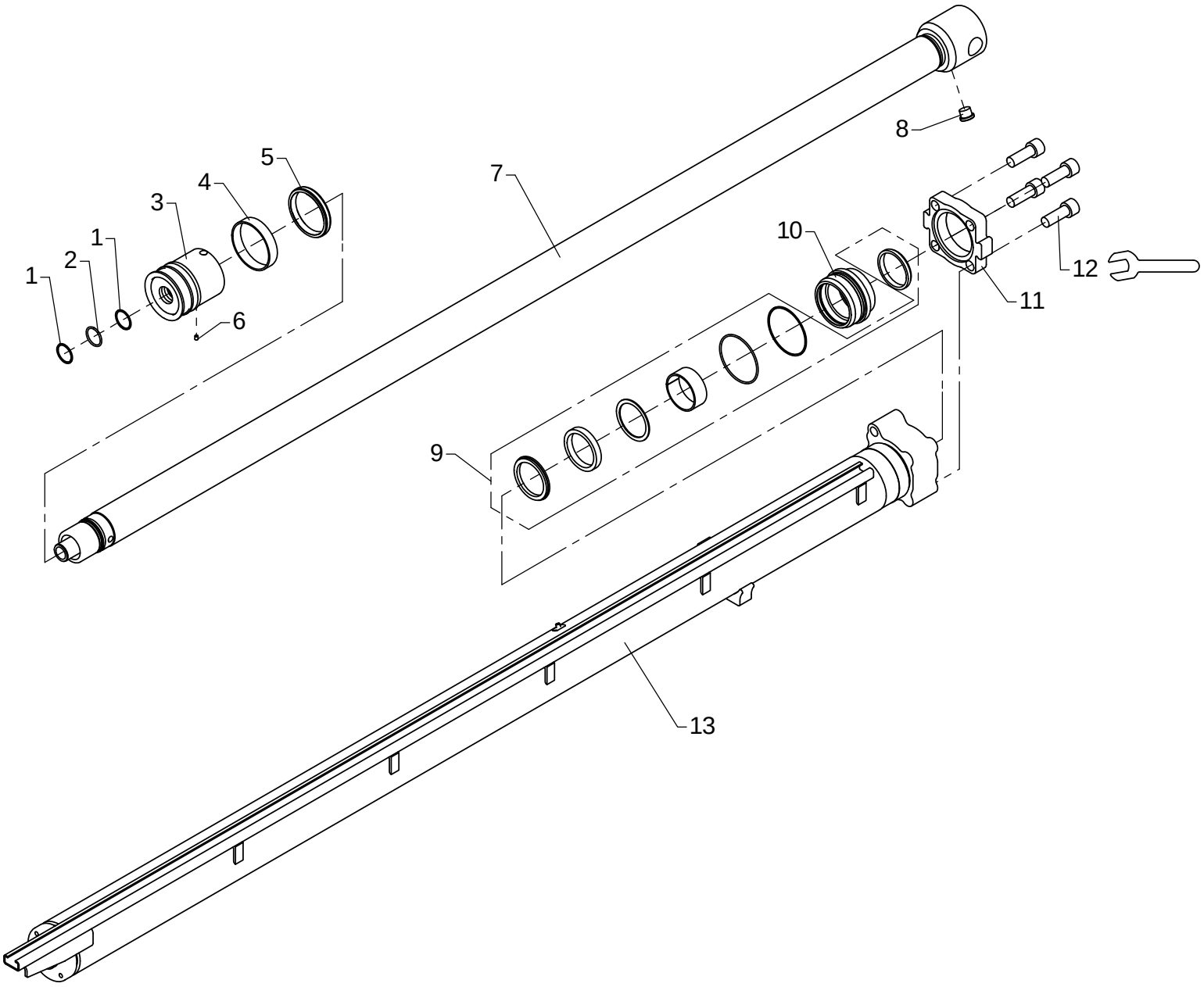


400 Nm

# Extension cylinder IV, C100/70h x 2100
# Optimised boom system OK4-OK6

As from / To loader no.: 96 00 00 /
Created: 03.10.2003
Modified: 08.04.2016

| Item no. | Qty. | Part no. | Description | Remarks |
|---|---|---|---|---|
| | 1 | 6893610 | Seal kit, C100/70h | Pos. 1, 2, 4, 5 |
| 1 | 2 | 20705 | Back ring | STR 35 x 40 x 1,3 |
| 2 | 1 | 20177 | O-ring | OR 34,2 x 3 |
| 3 | 1 | 6300424 | Piston | |
| 4 | 1 | 22142 | Guide ring | PWR 100/94 x 20 - PF |
| 5 | 1 | 22141 | Seal | GHT 100/85 x 12,5 |
| 6 | 1 | 30903 | Pointed screw | MSP6 x 8 |
| 7 | 1 | 6300421 | Piston rod | |
| 8 | 1 | 25103 | Plug | VS-R-1/2 WD |
| 9 | 1 | 22140 | Seal kit | |
| 10 | 1 | 6300425 | Guide | |
| 11 | 1 | 6300426 | Flange | |
| 12 | 4 | 32449 | Sockethead screw | MC20 x 55 |
| 13 | 1 | 6302427 | Cylinder tube | |

# ODIN

Intern ref.: 6300430

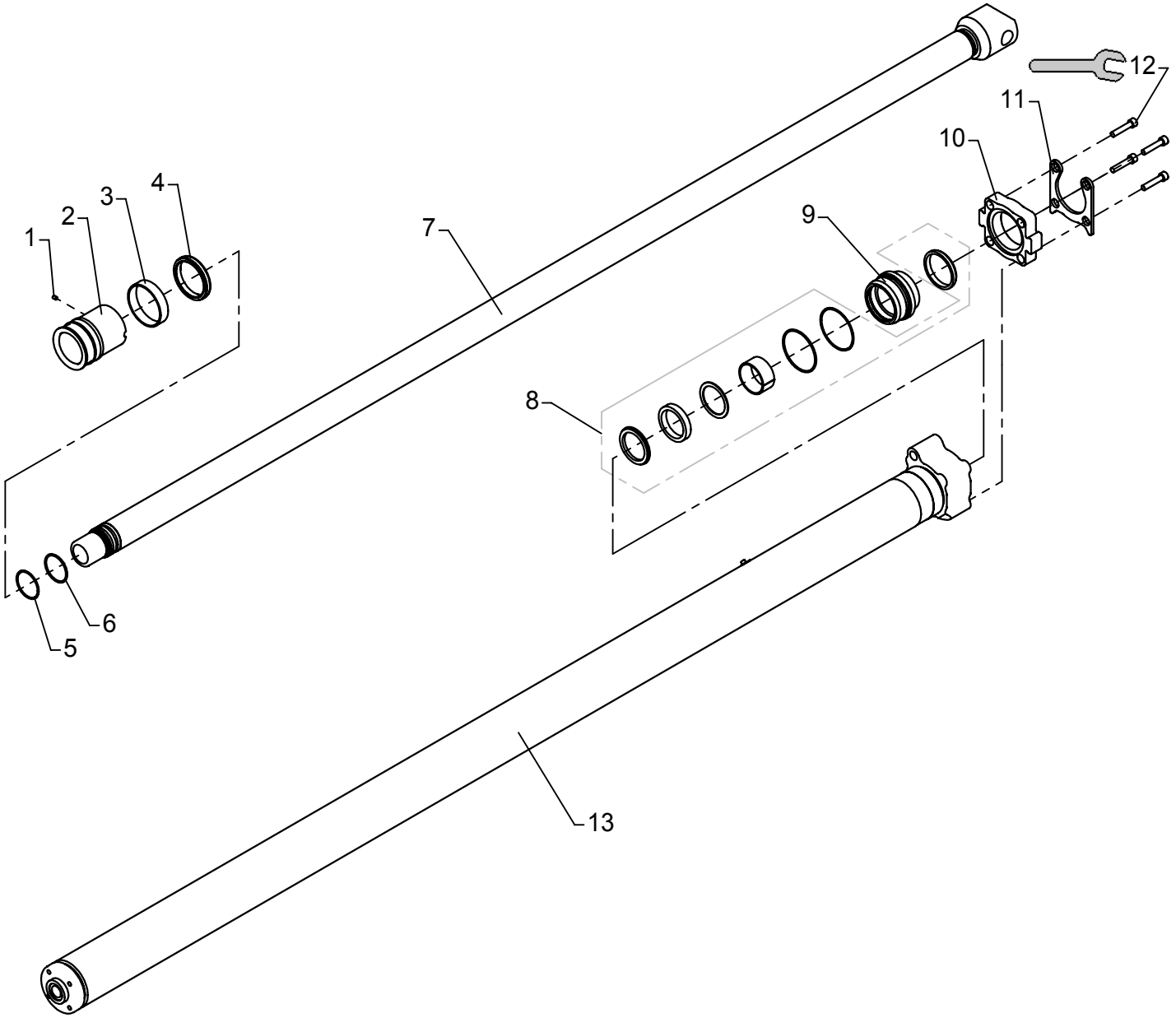


463 Nm

# Extension cylinder V-OK5, C90/60s x 2250
# Optimised boom system OK5

As from / To loader no.: 96 00 00 / 96 01 22
Created: 03.10.2003
Modified: 09.03.2006

| Item no. | Qty. | Part no. | Description | Remarks |
|---|---|---|---|---|
| | 1 | 6893620 | Seal kit, C90/60s | Pos. 3, 4 |
| 1 | 1 | 30903 | Screw | MSP6 x 8 |
| 2 | 1 | 6300435 | Piston | |
| 3 | 1 | 22145 | Guide ring | PWR 90/84 x 20 - PF |
| 4 | 1 | 22144 | Seal | GHT 90/75 x 12,5 |
| 5 | 1 | 20882 | Back ring | 54,5 x 3 |
| 6 | 1 | 20183 | O-ring | OR 54,5 x 3 |
| 7 | 1 | 6300432 | Piston rod | |
| 8 | 1 | 22143 | Seal kit | |
| 9 | 1 | 6300441 | Guide | |
| 10 | 1 | 6300442 | Flange | |
| 11 | 1 | 6300536 | Safety device | |
| 12 | 4 | 30458 | Screw | MC10 x 50 |
| 13 | 1 | 6300436 | Cylinder | |

# ODIN

Intern ref.: 6302400

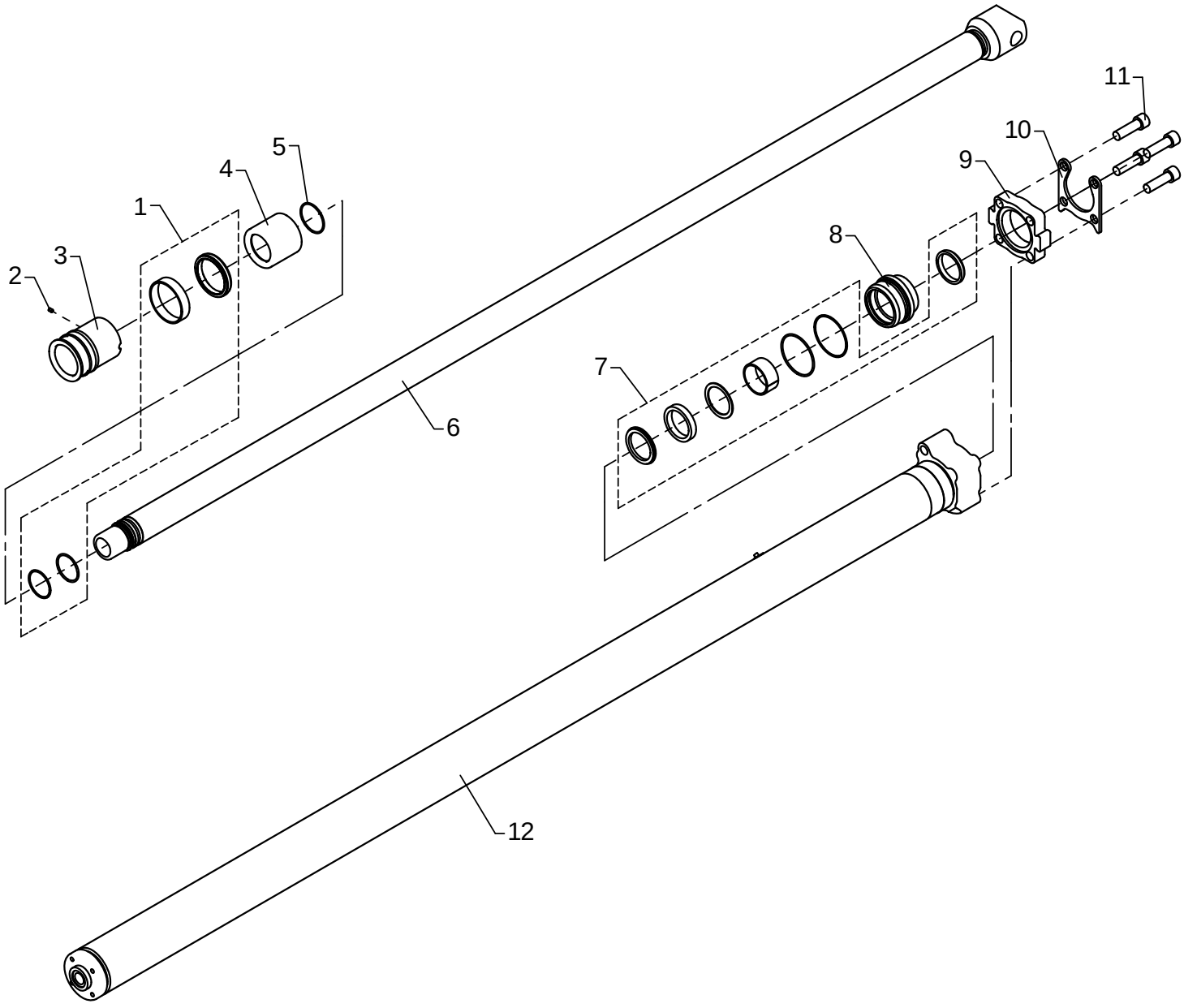


4 Nm + Loctite 243  463 Nm

# Extension cylinder V-OK5, C90/60s x 2175
# Optimised boom system OK5

As from / To loader no.: 96 01 23 /
Created: 03.10.2003
Modified: 27.01.2016

| Item no. | Qty. | Part no. | Description | Remarks |
|---|---|---|---|---|
| 1 | 1 | 6894940 | Seal kit, C90/60s | |
| 2 | 1 | 30903 | Pointed screw | MSP6 x 8 |
| 3 | 1 | 6300435 | Piston | |
| 4 | 1 | 6302453 | Spacer | |
| 5 | 1 | 61236 | O-ring | OR 60 x 2,62 |
| 6 | 1 | 6300432 | Piston rod | |
| 7 | 1 | 22143 | Seal kit | |
| 8 | 1 | 6300441 | Guide | |
| 9 | 1 | 6300442 | Flange | |
| 10 | 1 | 6300536 | Safety device | |
| 11 | 4 | 32456 | Screw | MC18 x 60 |
| 12 | 1 | 6300436 | Cylinder | |

# ODIN

Intern ref.: 6302350

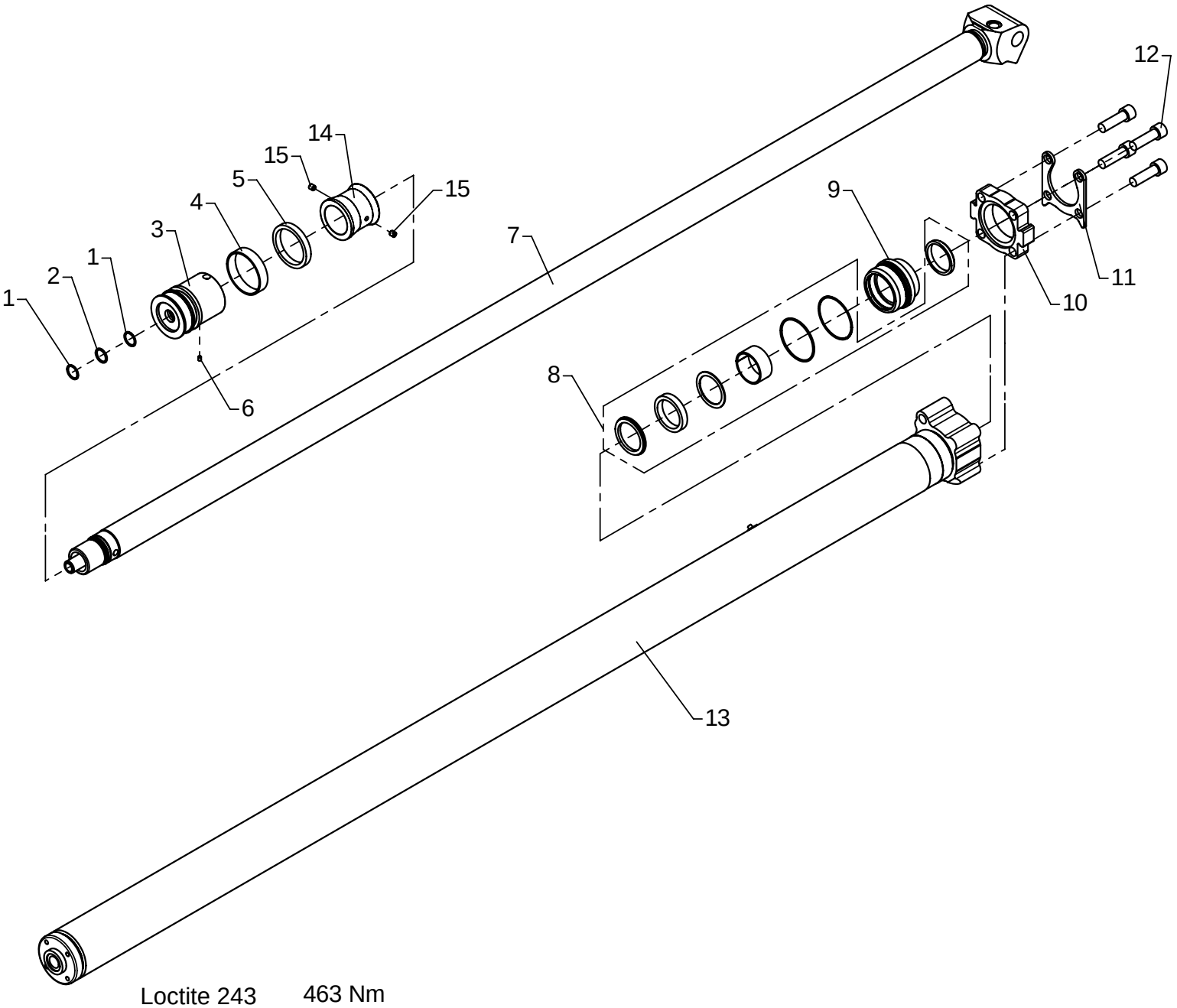

# Extension cylinder V-OK6, C90/60h x 2175
# Optimised boom system OK6

As from / To loader no.: 96 00 00 /96 03 68
Created: 17.05.2004
Modified: 20.01.2016

| Item no. | Qty. | Part no. | Description | Remarks |
|---|---|---|---|---|
| | 1 | 6893630 | Seal kit, C90/60h | Pos. 1, 2, 4, 5 |
| 1 | 2 | 20706 | Back ring | STR 25 x 30 x 1,3 |
| 2 | 1 | 20174 | O-ring | OR 24,2 x 3 |
| 3 | 1 | 6300477 | Piston | |
| 4 | 1 | 22145 | Guide ring | PWR 90/84 x 20 - PF |
| 5 | 1 | 22144 | Seal | GHT 90/75 x 12,5 |
| 6 | 1 | 30903 | Screw | MSP6 x 8 |
| 7 | 1 | 6302641 | Piston rod | |
| 8 | 1 | 22143 | Seal kit | |
| 9 | 1 | 6300441 | Guide | |
| 10 | 1 | 6300442 | Flange | |
| 11 | 1 | 6300536 | Safety device | |
| 12 | 4 | 32456 | Screw | MC18 x 60 |
| 13 | 1 | 6300436 | Cylinder | |
| 14 | 1 | 6302453 | Spacer | |
| 15 | 2 | 30555 | Pointed screw, stainless | MSP10 x 10 |

# ODIN

Intern ref.: 6302350

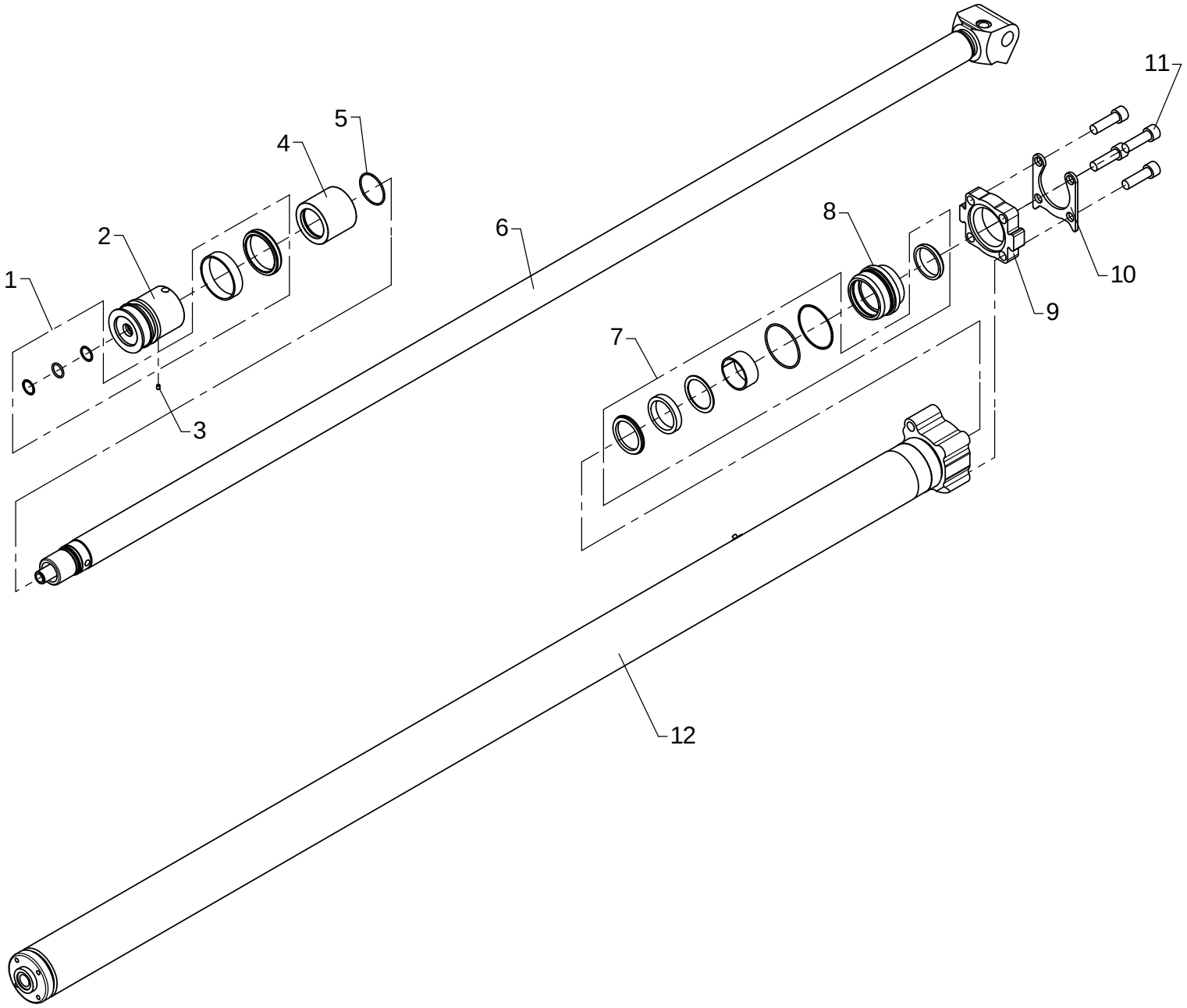


4 Nm + Loctite 243 463 Nm

# Extension cylinder V-OK6, C90/60h x 2175
# Optimised boom system OK6

As from / To loader no.: 96 03 69 /
Created: 20.01.2016
Modified:

| Item no. | Qty. | Part no. | Description | Remarks |
|---|---|---|---|---|
| 1 | 1 | 6893630 | Seal kit, C90/60h | |
| 2 | 1 | 6300477 | Piston | |
| 3 | 1 | 30903 | Pointed screw | MSP6 x 8 |
| 4 | 1 | 6302453 | Spacer | |
| 5 | 1 | 61236 | O-ring | OR 60 x 2,62 |
| 6 | 1 | 6302641 | Piston rod | |
| 7 | 1 | 22143 | Seal kit | |
| 8 | 1 | 6300441 | Guide | |
| 9 | 1 | 6300442 | Flange | |
| 10 | 1 | 6300536 | Safety device | |
| 11 | 4 | 32456 | Screw | MC18 x 60 |
| 12 | 1 | 6300436 | Cylinder | |

# ODIN

Intern ref.: 6302450

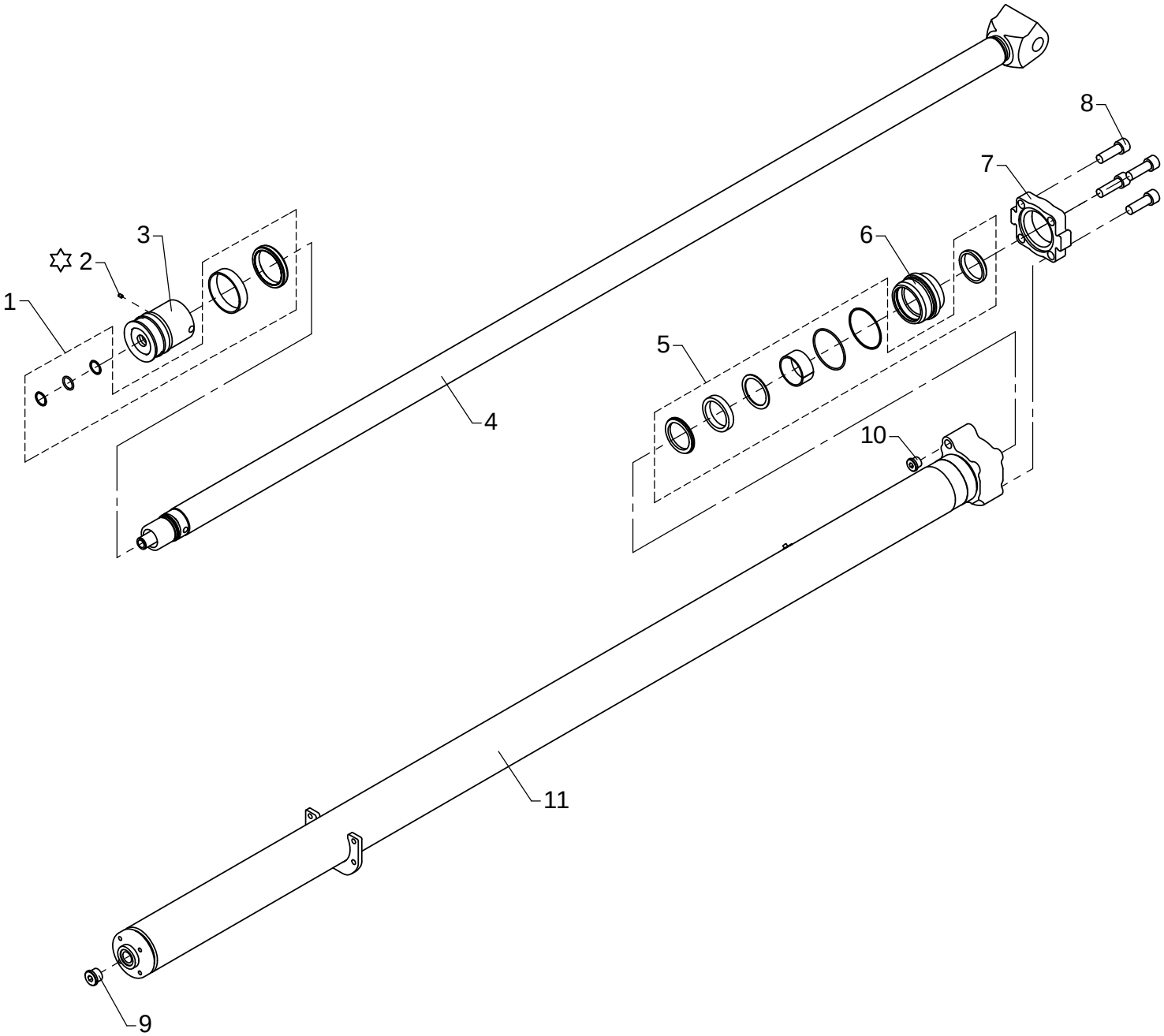


4 Nm + Loctite 243  463 Nm

# Extension cylinder VI, C90/60s x 2250
# Optimised boom system OK6

As from / To loader no.: 96 00 00 /
Created: 17.05.2004
Modified: 27.01.2016

| Item no. | Qty. | Part no. | Description | Remarks |
|---|---|---|---|---|
| 1 | 1 | 6893630 | Seal kit, C90/60h | |
| 2 | 1 | 30903 | Pointed screw | MSP6 x 8 |
| 3 | 1 | 6300477 | Piston | |
| 4 | 1 | 6302641 | Piston rod | |
| 5 | 1 | 22143 | Seal kit | |
| 6 | 1 | 6300441 | Guide | |
| 7 | 1 | 6300442 | Flange | |
| 8 | 4 | 32450 | Screw | MC18 x 55 |
| 9 | 1 | 26355 | Plug | VS-R-3/4 WD |
| 10 | 1 | 25103 | Plug | VS-R-1/2 WD |
| 11 | 1 | 6302451 | Cylinder | |

# ODIN

Intern ref.: 6300440

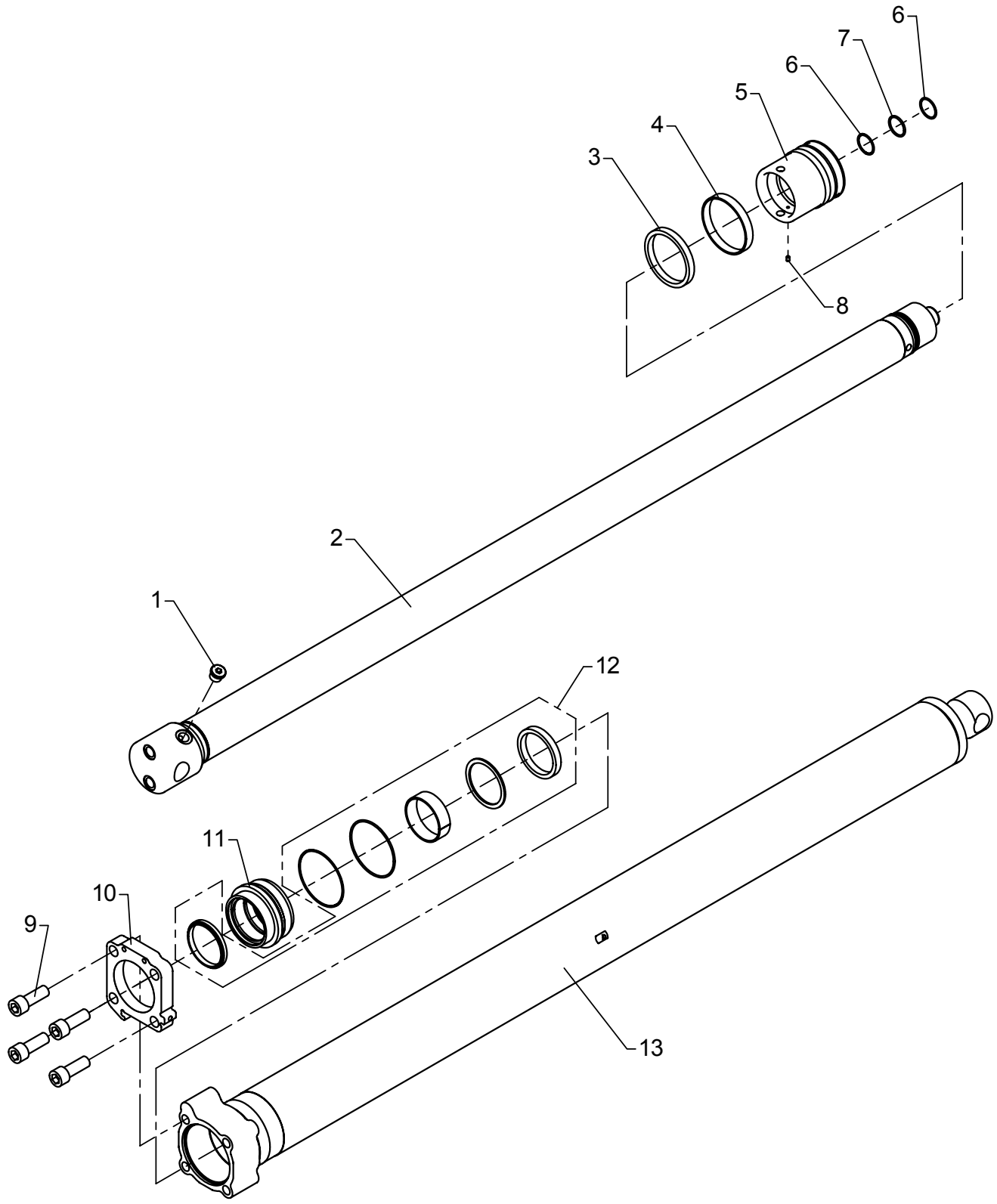


649 Nm

# Extension cylinder I, C110/80h x 1650
# Boom system K6-K8

As from / To loader no.: 96 00 00 /
Created: 03.10.2003
Modified: 09.03.2006

| Item no. | Qty. | Part no. | Description | Remarks |
|---|---|---|---|---|
| | 1 | 6893600 | Seal kit, C110/80h | Pos. 3, 4, 6, 7 |
| 1 | 1 | 25103 | Plug | VS-R-1/2 WD |
| 2 | 1 | 6300445 | Piston rod | |
| 3 | 1 | 22131 | Seal | GHT 110/95 x 12,5 - PU/N/A |
| 4 | 1 | 22130 | Guide ring | PWR 110/104 x 16 - PF |
| 5 | 1 | 6300406 | Piston | |
| 6 | 2 | 20705 | Back ring | STR 35 x 40 x 1,3 |
| 7 | 1 | 20177 | O-ring | OR 34,2 x 3 |
| 8 | 1 | 30903 | Screw | MSP6 x 8 |
| 9 | 4 | 32449 | Sockethead screw | MC20 x 55 |
| 10 | 1 | 6300405 | Flange | |
| 11 | 1 | 6302407 | Guide | |
| 12 | 1 | 22139 | Seal kit | |
| 13 | 1 | 6300448 | Cylinder | |

# ODIN

Intern ref.: 6300450

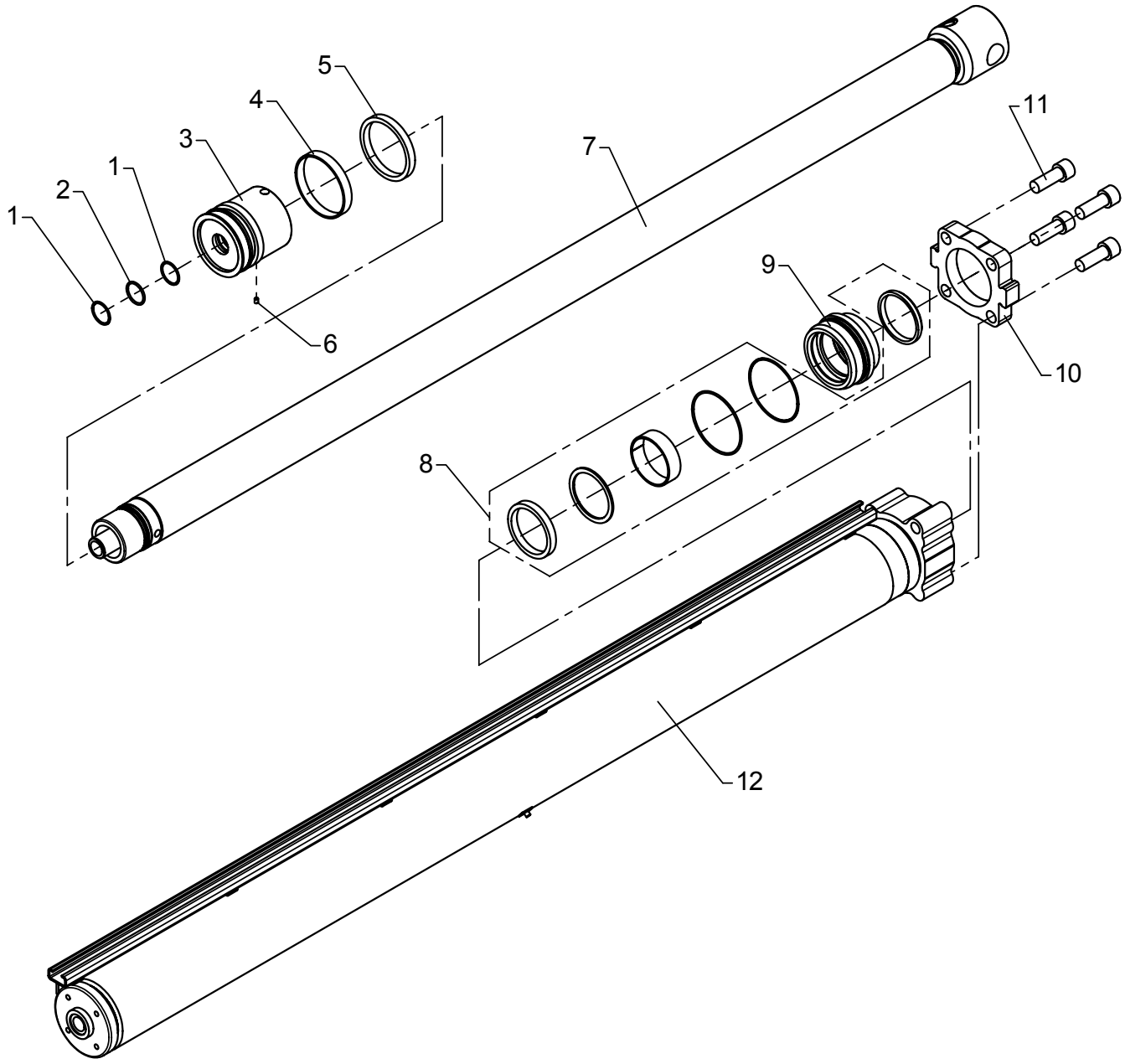


649 Nm

# Extension cylinder II, C110/80h x 1700
# Boom system K6-K8

As from / To loader no.: 96 00 00 /
Created: 03.10.2003
Modified: 09.03.2006

| Item no. | Qty. | Part no. | Description | Remarks |
|---|---|---|---|---|
| | 1 | 6893600 | Seal kit, C110/80h | Pos. 1, 2, 4, 5 |
| 1 | 2 | 20705 | Back ring | STR 35 x 40 x 1,3 |
| 2 | 1 | 20177 | O-ring | OR 34,2 x 3 |
| 3 | 1 | 6300406 | Piston | |
| 4 | 1 | 22130 | Guide ring | PWR 110/104 x 16 - PF |
| 5 | 1 | 22131 | Seal | GHT 110/95 x 12,5 - PU/N/A |
| 6 | 1 | 30903 | Screw | MSP6 x 8 |
| 7 | 1 | 6300451 | Piston rod | |
| 8 | 1 | 22139 | Seal kit | |
| 9 | 1 | 6302407 | Guide | |
| 10 | 1 | 6300419 | Flange | |
| 11 | 4 | 32449 | Sockethead screw | MC20 x 55 |
| 12 | 1 | 6300454 | Cylinder | |

# ODIN

Intern ref.: 6300460

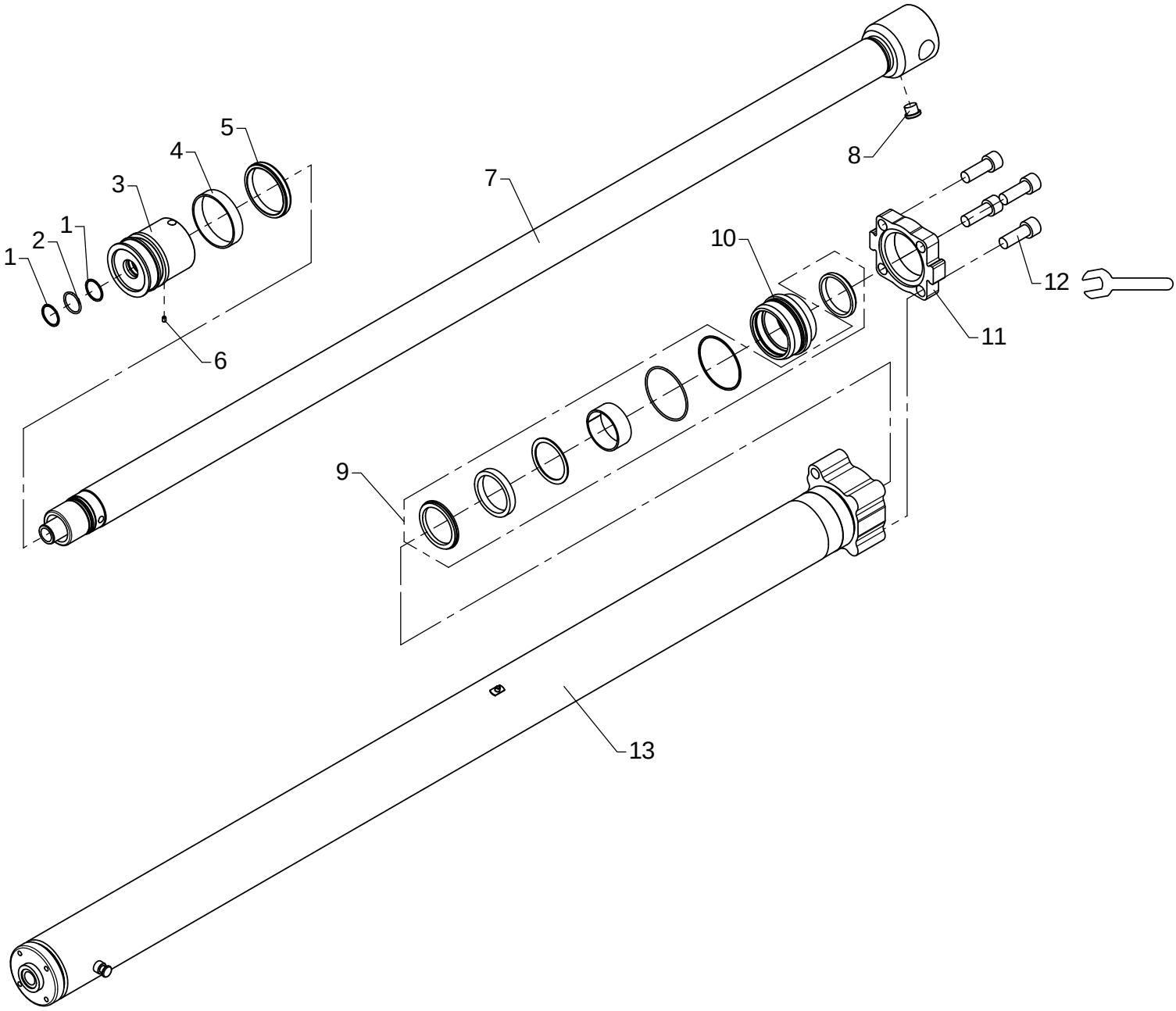


400 Nm

# Extension cylinder III, C100/70h x 1800
# Boom system K6-K8

As from / To loader no.: 96 00 00 /
Created: 03.10.2003
Modified: 08.04.2016

| Item no. | Qty. | Part no. | Description | Remarks |
|---|---|---|---|---|
| | 1 | 6893610 | Seal kit, C100/70h | Pos. 1, 2, 4, 5 |
| 1 | 2 | 20705 | Back ring | STR 35 x 40 x 1,3 |
| 2 | 1 | 20177 | O-ring | OR 34,2 x 3 |
| 3 | 1 | 6300424 | Piston | |
| 4 | 1 | 22142 | Guide ring | PWR 100/94 x 20 - PF |
| 5 | 1 | 22141 | Seal | GHT 100/85 x 12,5 |
| 6 | 1 | 30903 | Pointed screw | MSP6 x 8 |
| 7 | 1 | 6300676 | Piston rod | |
| 8 | 1 | 25103 | Plug | VS-R-1/2 WD |
| 9 | 1 | 22140 | Seal kit | |
| 10 | 1 | 6300425 | Guide | |
| 11 | 1 | 6300426 | Flange | |
| 12 | 4 | 32449 | Sockethead screw | MC20 x 55 |
| 13 | 1 | 6300464 | Cylinder | |

# ODIN

Intern ref.: 6302460

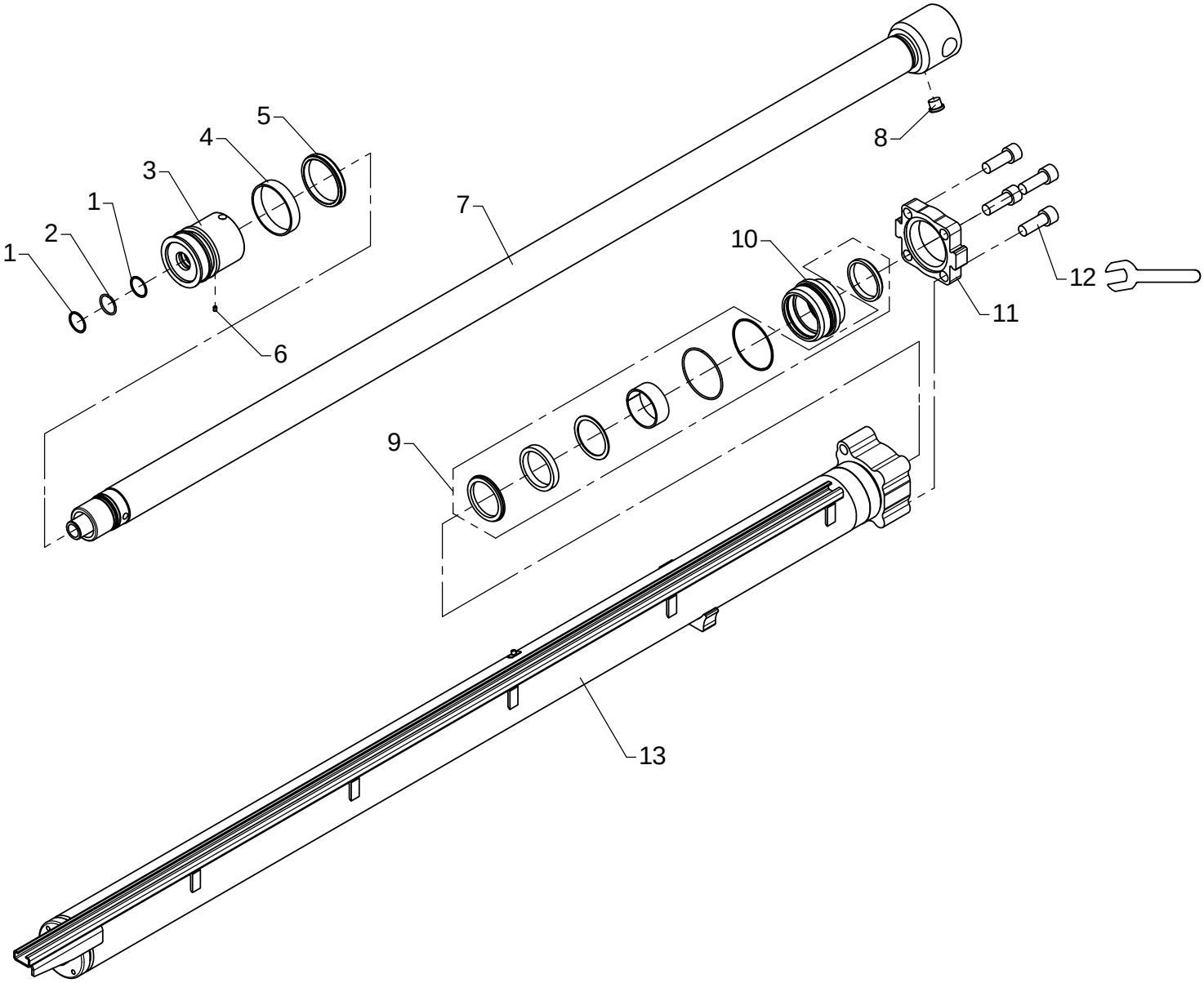


400 Nm

# Extension cylinder IV, C100/70h x 1900

As from / To loader no.: 96 00 00 /
Created: 06.01.2003
Modified: 08.04.2016

| Item no. | Qty. | Part no. | Description | Remarks |
|---|---|---|---|---|
| 1 | 2 | 20705 | Back ring | STR 35 x 40 x 1,3 |
| 2 | 1 | 20177 | O-ring | OR 34,2 x 3 |
| 3 | 1 | 6300424 | Piston | |
| 4 | 1 | 22142 | Guide ring | PWR 100/94 x 20 - PF |
| 5 | 1 | 22141 | Seal | GHT 100/85 x 12,5 |
| 6 | 1 | 30903 | Pointed screw | MSP6 x 8 |
| 7 | 1 | 6300461 | Piston rod | |
| 8 | 1 | 25103 | Plug | VS-R-1/2 WD |
| 9 | 1 | 22140 | Seal kit | |
| 10 | 1 | 6300425 | Guide | |
| 11 | 1 | 6300426 | Flange | |
| 12 | 4 | 32449 | Sockethead screw | MC20 x 55 |
| 13 | 1 | 6302464 | Cylinder tube | |

# ODIN

Intern ref.: 6300470

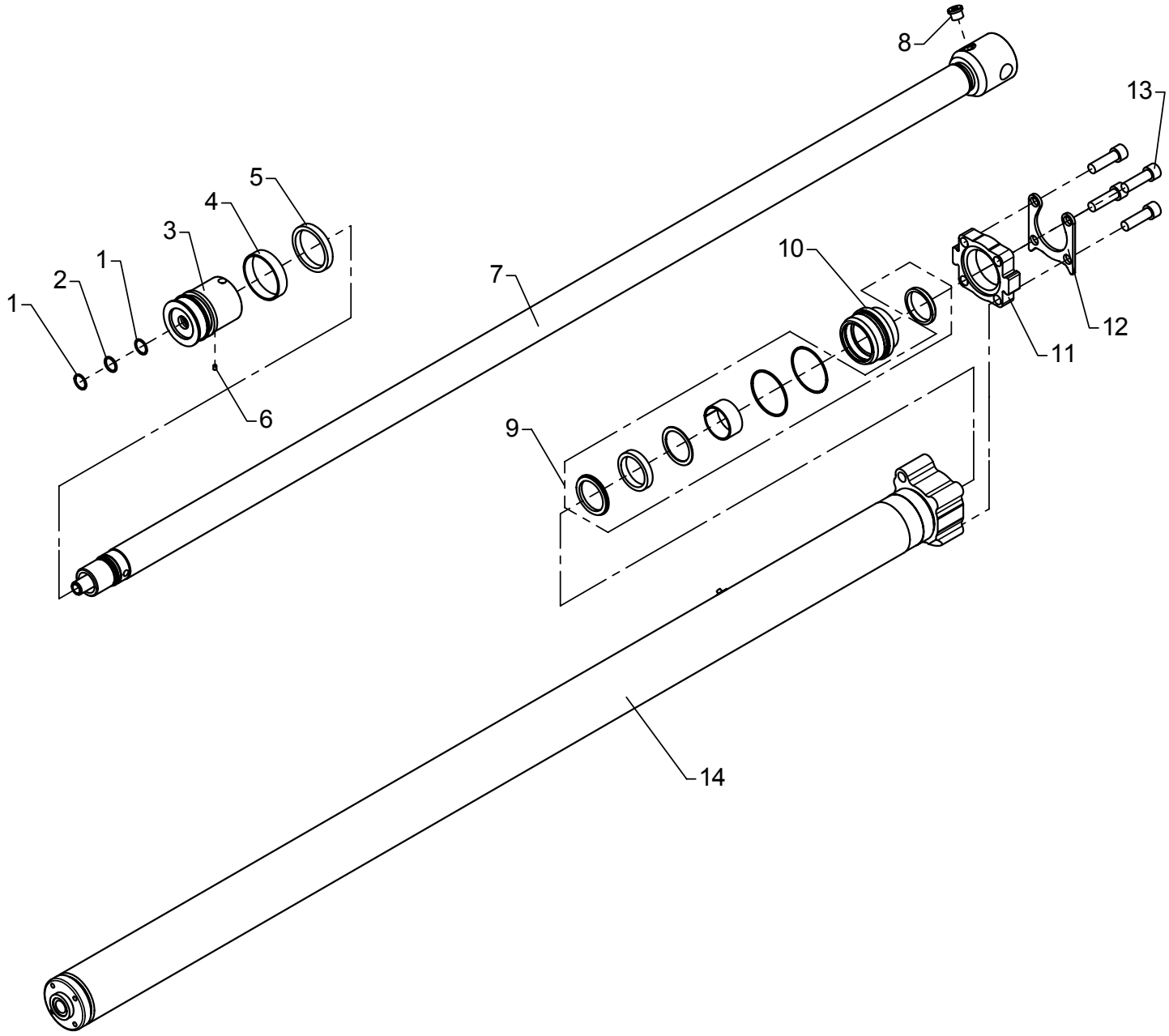

# Extension cylinder V, C90/60h x 2050
# Boom system K6-K8

As from / To loader no.: 96 00 00 /
Created: 03.10.2003
Modified: 09.03.2006

| Item no. | Qty. | Part no. | Description | Remarks |
|---|---|---|---|---|
| | 1 | 6893630 | Seal kit, C90/60h | Pos. 1, 2, 4, 5 |
| 1 | 2 | 20706 | Back ring | STR 25 x 30 x 1,3 |
| 2 | 1 | 20174 | O-ring | OR 24,2 x 3 |
| 3 | 1 | 6300477 | Piston | |
| 4 | 1 | 22145 | Guide ring | PWR 90/84 x 20 - PF |
| 5 | 1 | 22144 | Seal | GHT 90/75 x 12,5 |
| 6 | 1 | 30903 | Screw | MSP6 x 8 |
| 7 | 1 | 6300471 | Piston rod | |
| 8 | 1 | 25103 | Plug | VS-R-1/2 WD |
| 9 | 1 | 22143 | Seal kit | |
| 10 | 1 | 6300441 | Guide | |
| 11 | 1 | 6300442 | Flange | |
| 12 | 1 | 6300536 | Safety device | |
| 13 | 4 | 32456 | Screw | MC18 x 60 |
| 14 | 1 | 6300475 | Cylinder | |

# ODIN

Intern ref.: 6302470

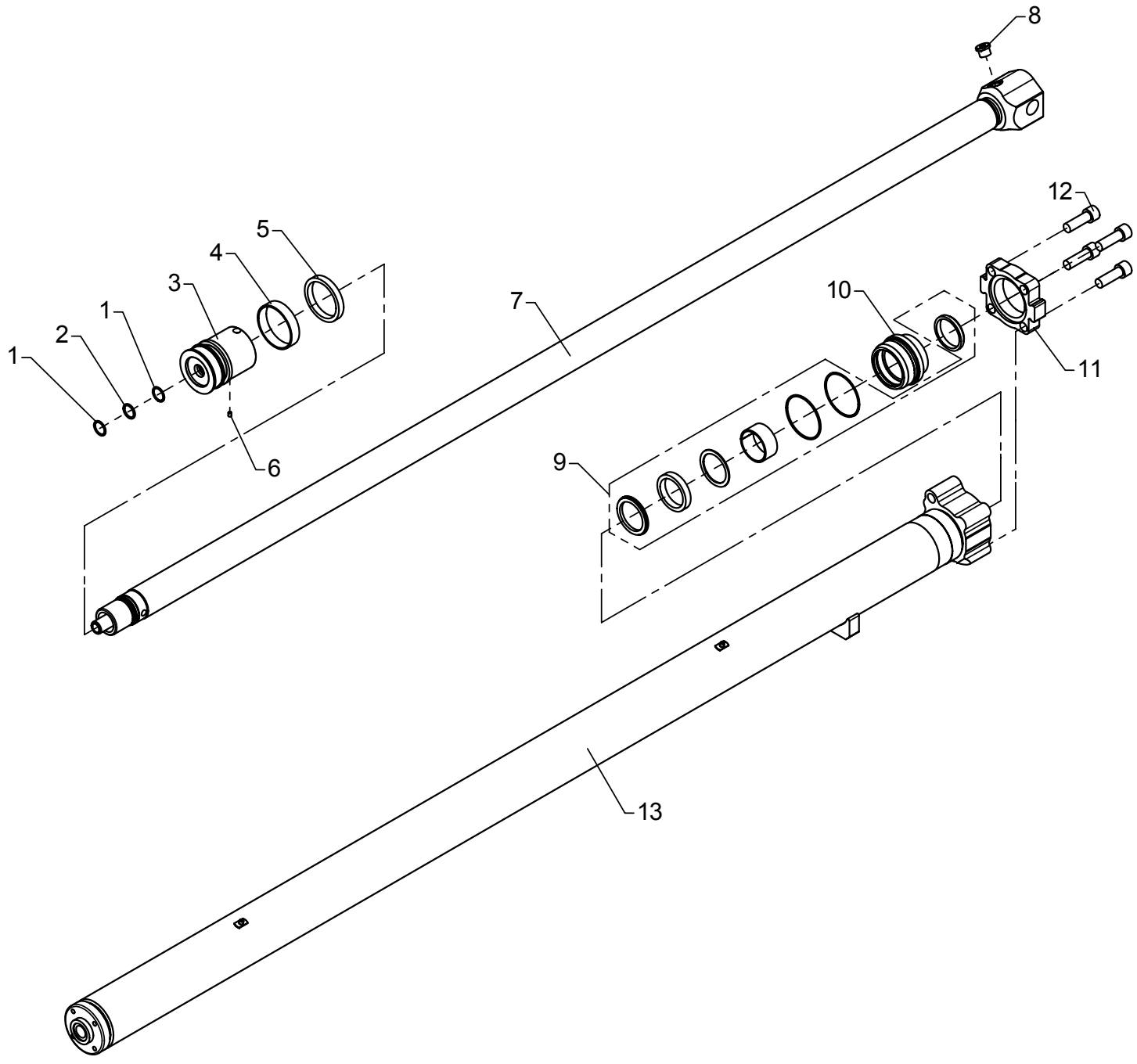

# Extension cylinder VI, C90/60h x 2150
# Boom system K6-K8

As from / To loader no.: 96 00 00 /
Created: 03.10.2003
Modified: 09.03.2006

| Item no. | Qty. | Part no. | Description | Remarks |
|---|---|---|---|---|
| | 1 | 6893630 | Seal kit, C90/60h | Pos. 1, 2, 4, 5 |
| 1 | 2 | 20706 | Back ring | STR 25 x 30 x 1,3 |
| 2 | 1 | 20174 | O-ring | OR 24,2 x 3 |
| 3 | 1 | 6300477 | Piston | |
| 4 | 1 | 22145 | Guide ring | PWR 90/84 x 20 - PF |
| 5 | 1 | 22144 | Seal | GHT 90/75 x 12,5 |
| 6 | 1 | 30903 | Screw | MSP6 x 8 |
| 7 | 1 | 6302471 | Piston rod | |
| 8 | 1 | 25103 | Plug | VS-R-1/2 WD |
| 9 | 1 | 22143 | Seal kit | |
| 10 | 1 | 6300441 | Guide | |
| 11 | 1 | 6300442 | Flange | |
| 12 | 4 | 32450 | Screw | MC18 x 55 |
| 13 | 1 | 6302475 | Cylinder tube | |

# ODIN

Intern ref.: 6300480

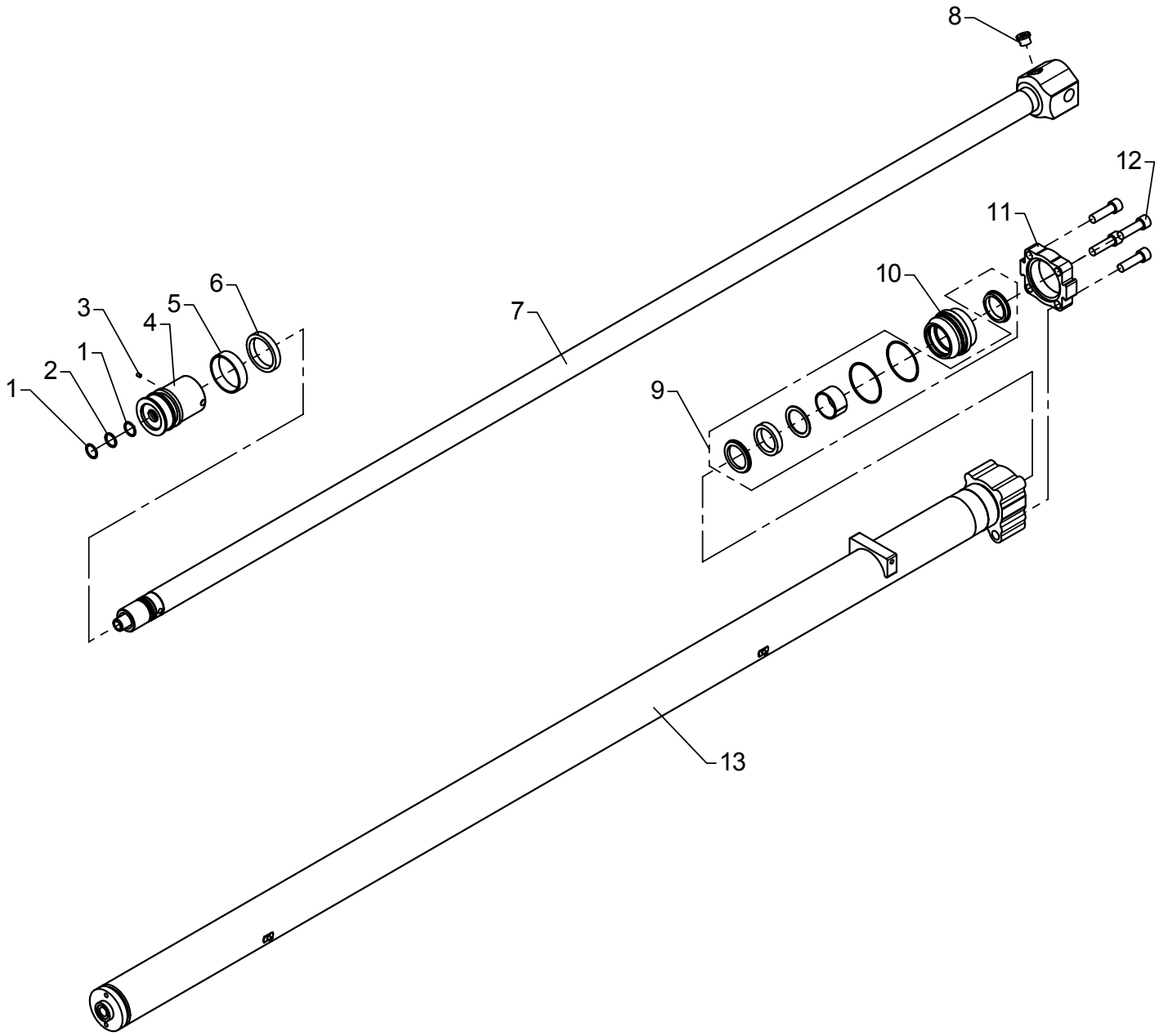

# Extension cylinder VII/VIII, C80/50h x 2300
# Boom system K6-K8

As from / To loader no.: 96 00 00 /
Created: 03.10.2003
Modified: 09.03.2006

| Item no. | Qty. | Part no. | Description | Remarks |
|---|---|---|---|---|
| | 1 | 6893640 | Seal kit, C80/50h | Pos. 1, 2, 5, 6 |
| 1 | 2 | 20706 | Back ring | STR 25 x 30 x 1,3 |
| 2 | 1 | 20174 | O-ring | OR 24,2 x 3 |
| 3 | 1 | 30903 | Screw | MSP6 x 8 |
| 4 | 1 | 6300489 | Piston | |
| 5 | 1 | 22149 | Guide ring | PWR 80/74 x 20 - PF |
| 6 | 1 | 22148 | Seal | GHT 80/65 x 12,5 - PU/N/A |
| 7 | 1 | 6300483 | Piston rod | |
| 8 | 1 | 25103 | Plug | VS-R-1/2 WD |
| 9 | 1 | 22150 | Seal kit | |
| 10 | 1 | 6300491 | Guide | |
| 11 | 1 | 6292733 | Flange | |
| 12 | 4 | 32420 | Sockethead screw | MC16 x 55 |
| 13 | 1 | 6300487 | Cylinder | |

# ODIN

Intern ref.: 6300850

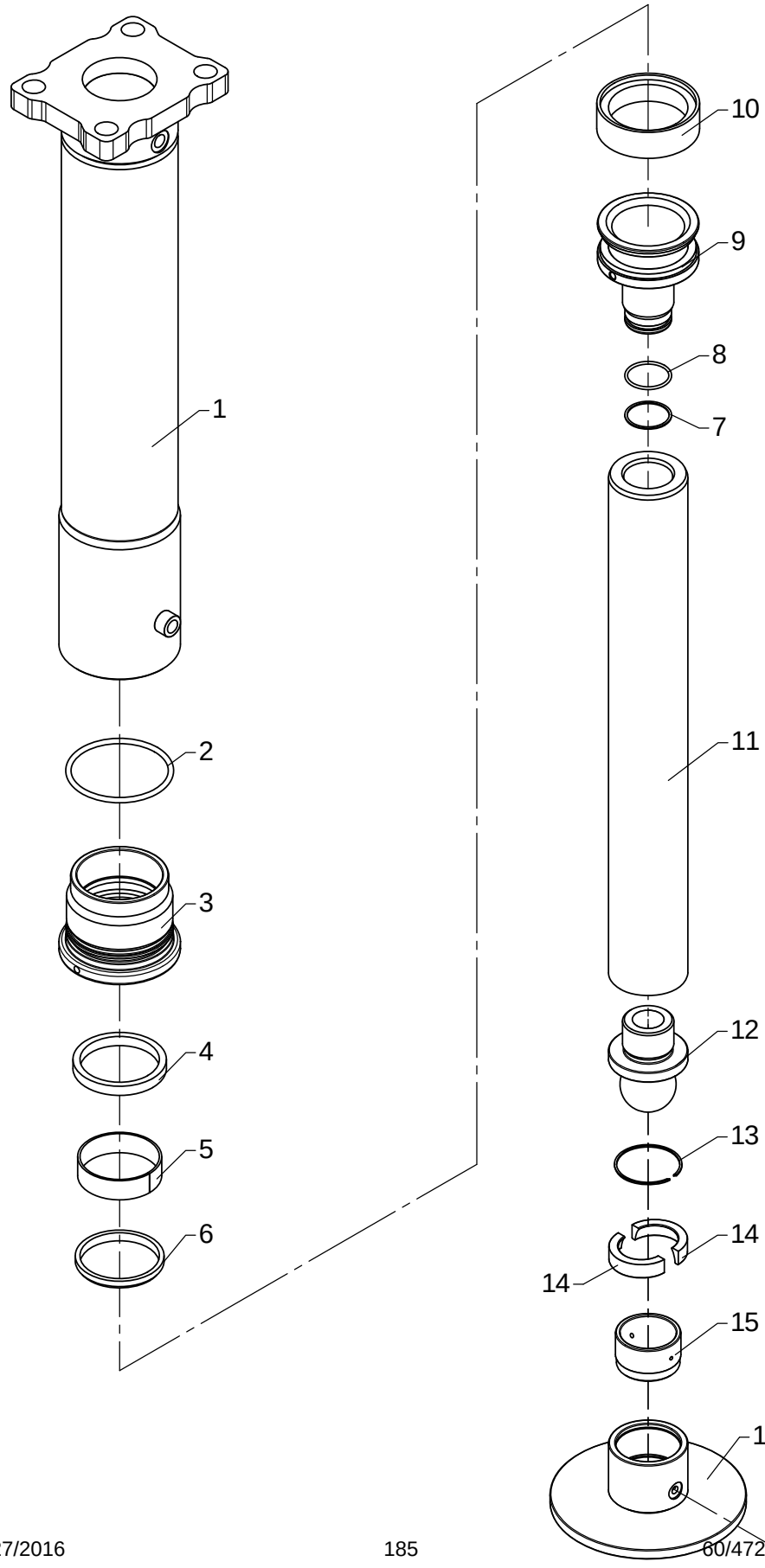

# Stabilizer cylinder C110-536, type V incl. ball joint

As from / To loader no.: 96 00 00 / 96 03 82
Created: 03.10.2003
Modified: 01.10.2013

| Item no. | Qty. | Part no. | Description | Remarks |
|---|---|---|---|---|
| | 1 | 6892650 | Seal kit | Pos. 2, 4, 5, 6, 8, 9, 11 |
| 1 | 1 | 6194353 | Cylinder tupe | |
| 2 | 1 | 20338 | O-ring | OR 104,1 x 5,7 |
| 3 | 1 | 6194333 | Guide | |
| 4 | 1 | 20619 | Seal | NI300 85 x 100 x 12 |
| 5 | 1 | 21918 | Bearing | HH506 85 x 90 x 25 |
| 6 | 1 | 20529 | Scraper | AUAS 85 x 95 x 7/10 |
| 7 | 1 | 20709 | Back ring | 44,2 x 3 |
| 8 | 1 | 20181 | O-ring | OR 44,2 x 3 |
| 9 | 1 | 6194343 | Piston | |
| 10 | 1 | 20642 | Double sleeve | MDM 110 x 85 x 22 |
| 11 | 1 | 6300851 | Piston rod | |
| 12 | 1 | 6300852 | Ball joint | |
| 13 | 1 | 33270 | Spring ring | SB 70 |
| 14 | 2 | 6300854 | Ball seat catch | |
| 15 | 1 | 6300853 | Ball seat | |
| 16 | 1 | 6300855 | Foot plate | |
| 17 | 1 | 31318 | Lubricator | 1/8" RG |

# ODIN

Intern ref.: 6198900

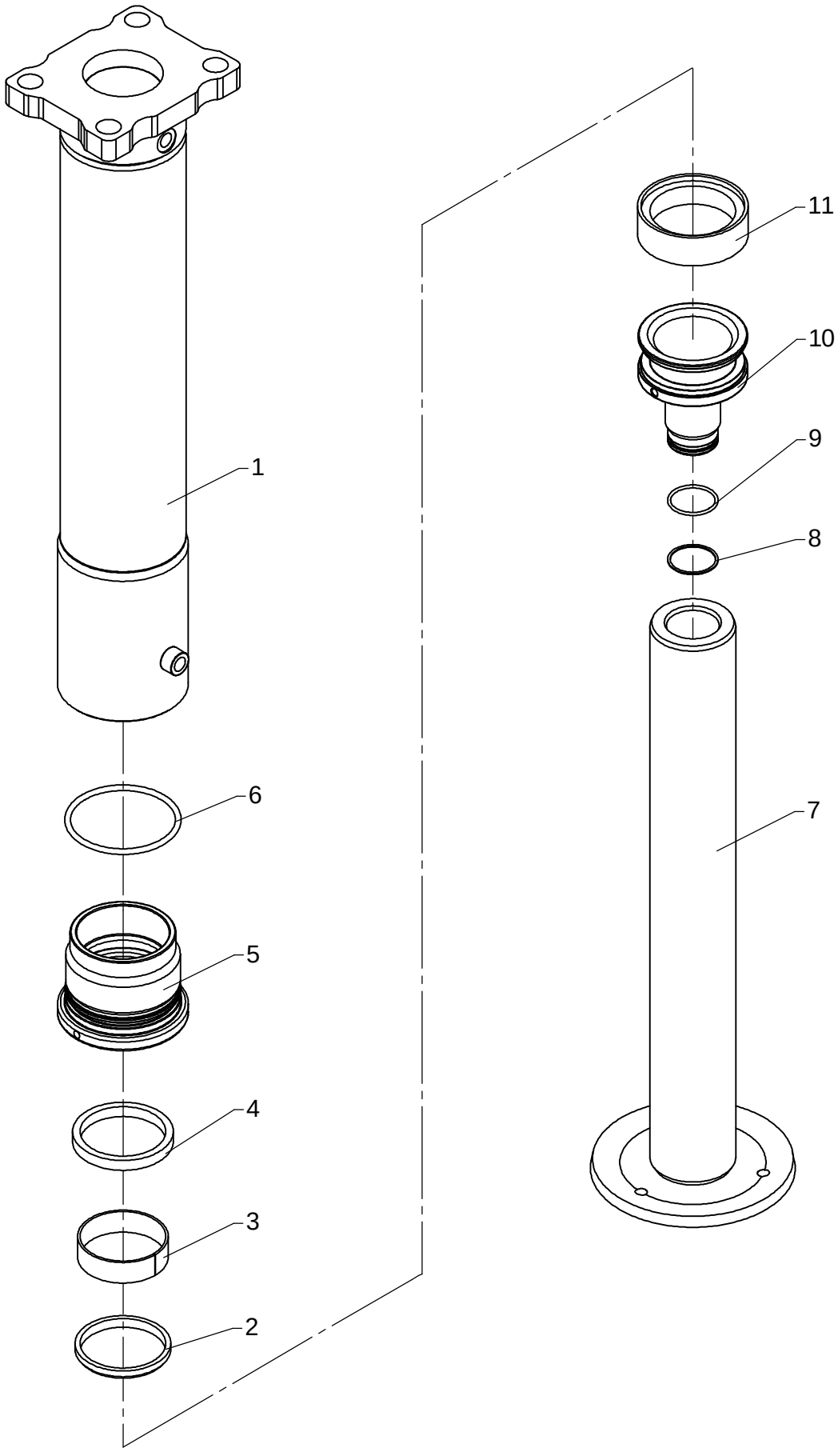

# Stabilizer cylinder C110-536, type V incl. fixed footplate

As from / To loader no.: 96 00 00/96 03 30
Created: 03.10.2003
Modified: 01.10.2013

| Item no. | Qty. | Part no. | Description | Remarks |
|---|---|---|---|---|
| | 1 | 6892650 | Seal kit | Pos. 2, 4, 5, 6, 8, 9, 11 |
| 1 | 1 | 6194353 | Cylinder tupe | |
| 2 | 1 | 20529 | Scraper | AUAS 85 x 95 x 7/10 |
| 3 | 1 | 21918 | Bearing | HH506 85 x 90 x 25 |
| 4 | 1 | 20619 | Seal | NI300 85 x 100 x 12 |
| 5 | 1 | 6194333 | Guide | |
| 6 | 1 | 20338 | O-ring | OR 104,1 x 5,7 |
| 7 | 1 | 6194304 | Piston rod | |
| 8 | 1 | 20709 | Back ring | 44,2 x 3 |
| 9 | 1 | 20181 | O-ring | OR 44,2 x 3 |
| 10 | 1 | 6194343 | Piston | |
| 11 | 1 | 20642 | Double sleeve | MDM 110 x 85 x 22 |

# ODIN

Intern ref.: 6384350

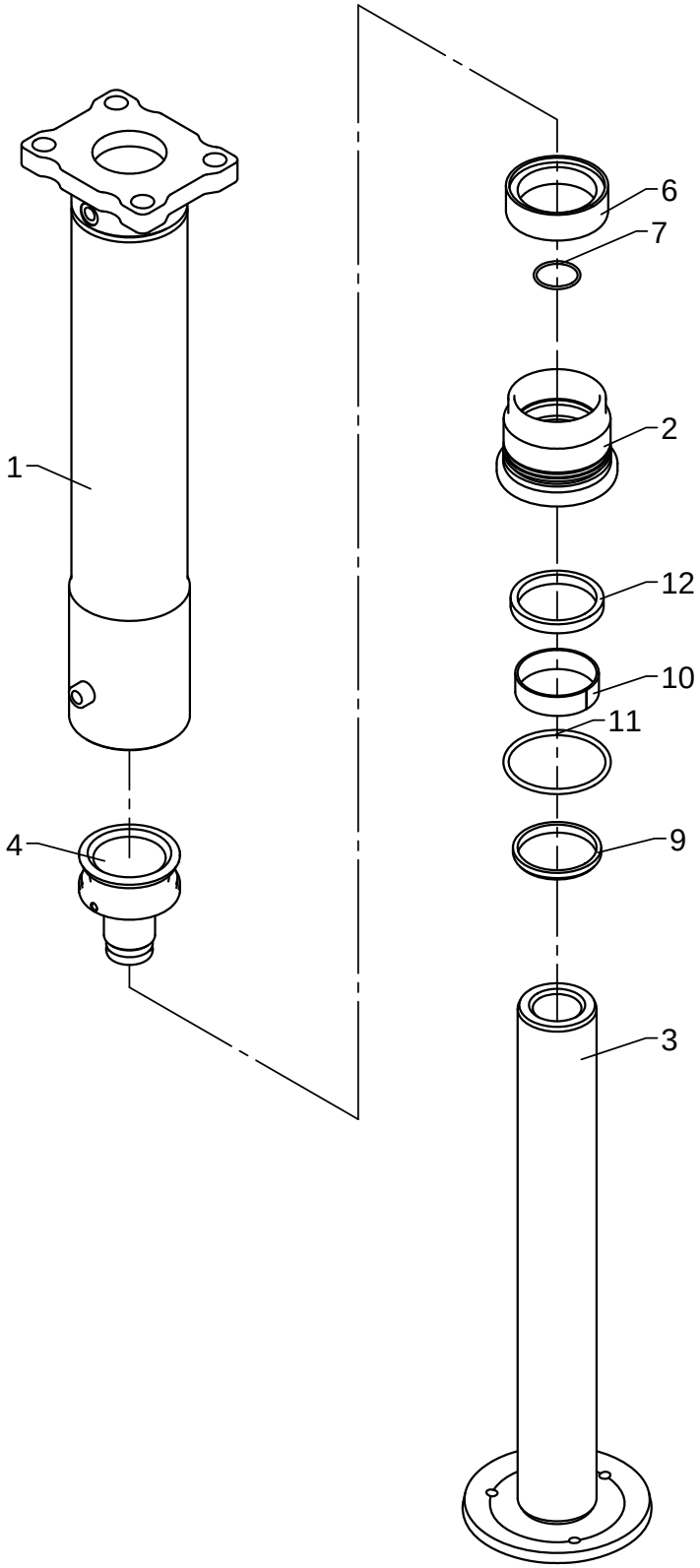

# Stabilizer cylinder, C110-536, type V incl. fixed footplate

As from / To loader no.: 96 03 31/ 96 03 83
Created: 03.10.2003
Modified: 24.04.2015

| Item no. | Qty. | Part no. | Description | Remarks |
|---|---|---|---|---|
| 1 | 1 | 6384393 | Cylinder tupe | |
| 2 | 1 | 6384363 | Guide | |
| 3 | 1 | 6384413 | Piston rod | |
| 4 | 1 | 6384373 | Piston | |
| 5 | 1 | 6892650 | Seal kit | Pos. 6, 7, 8, 9, 10, 11, 12 |
| 6 | 1 | 20642 | Double sleeve | MDM 110 x 85 x 22 |
| 7 | 1 | 20181 | O-ring | OR 44,2 x 3 |
| 8 | 1 | 20709 | Back ring | 44,2 x 3 |
| 9 | 1 | 20529 | Scraper | AUAS 85 x 95 x 7/10 |
| 10 | 1 | 21918 | Bearing | HH506 85 x 90 x 25 |
| 11 | 1 | 20338 | O-ring | OR 104,1 x 5,7 |
| 12 | 1 | 20619 | Seal | NI300 85 x 100 x 12 |

# ODIN

An Oshkosh Corportation Company

Intern ref.: 6300860 / 7019340

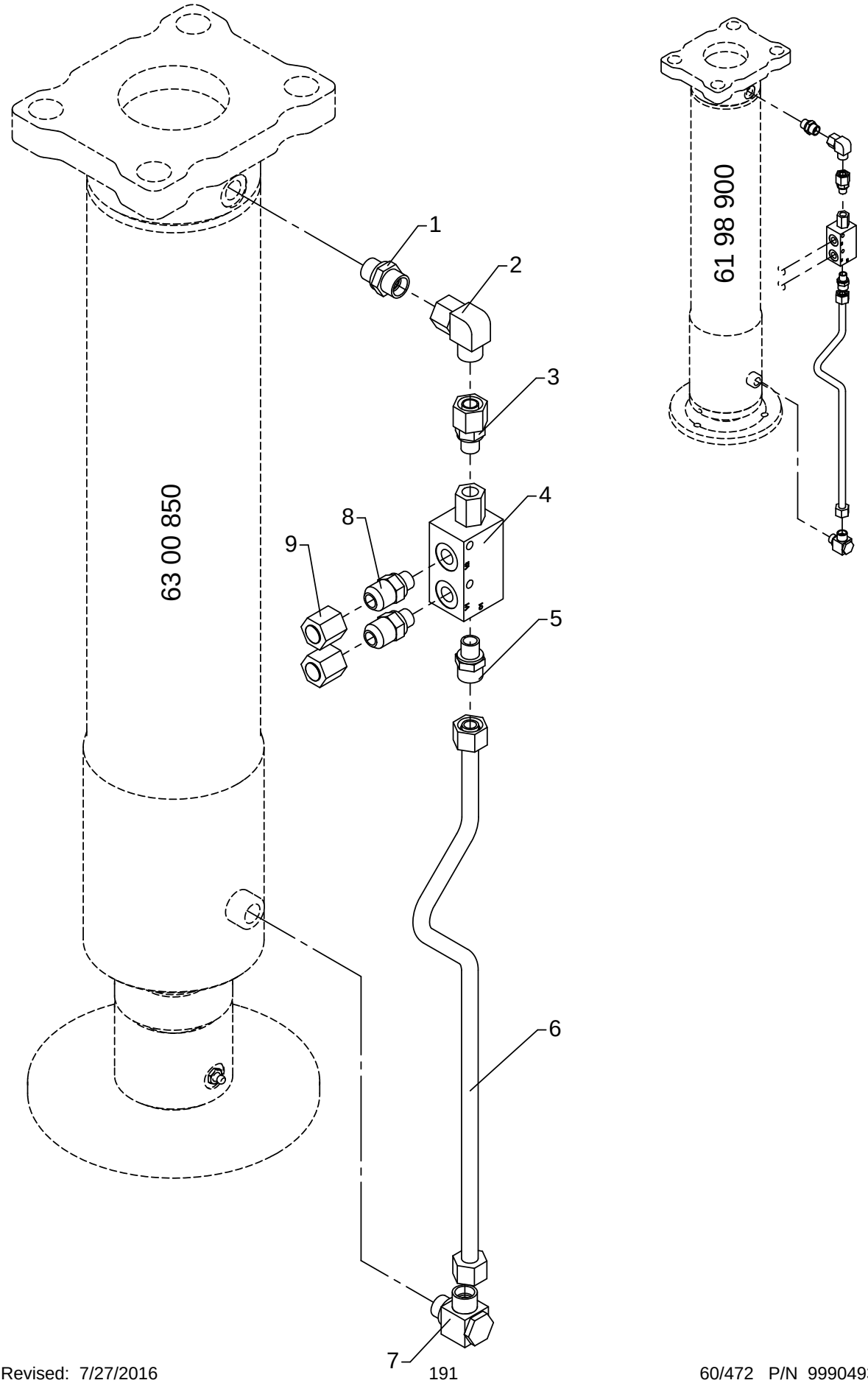

# Stabilizer cylinder with check valve, type V

As from / To loader no.: 96 00 00 / 96 03 31
Created: 03.10.2003
Modified: 01.10.2013

| Item no. | Qty. | Part no. | Description | Remarks |
|---|---|---|---|---|
| 1 | 1 | 25127 | Connection | P-GEV 12 LR-WD |
| 2 | 1 | 25242 | Elbow connection | EWSD 12 L |
| 3 | 1 | 25241 | Connection | EGESD 12 LR 1/4-WD |
| 4 | 1 | 60472 | Piloted check-valve | |
| 5 | 1 | 25195 | Connection | P-GEV 12 LR 1/4-WD |
| 6 | 1 | 6194964 | Pipe | |
| 7 | 1 | 25130 | Banjo connection | RSWV 12 LR |
| 8 | 2 | 25867 | Straight connection | F40XS12 - 1/4 |
| 9 | 2 | 25876 | Screw cap | FNTXS 12 JIC |

# ODIN

An Oshkosh Corportation Company

Intern ref.: 6300860 / 6384340

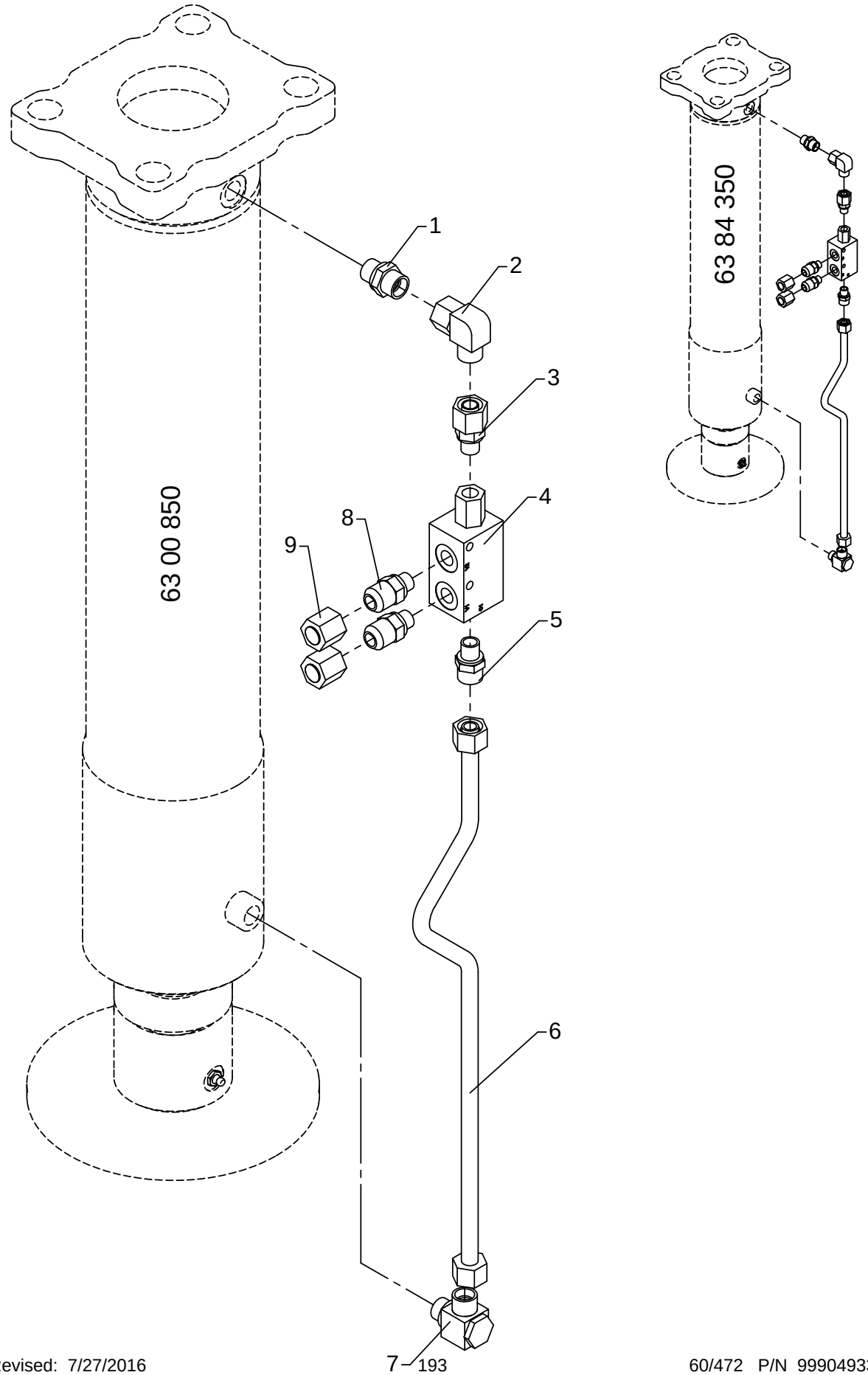

# Stabilizer cylinder with check valve, type V

As from / To loader no.: 96 03 32 / 96 03 82
Created: 03.10.2003
Modified: 24.04.2015

| Item no. | Qty. | Part no. | Description | Remarks |
|---|---|---|---|---|
| 1 | 1 | 25127 | Connection | P-GEV 12 LR-WD |
| 2 | 1 | 25242 | Elbow connection | EWSD 12 L |
| 3 | 1 | 25241 | Connection | EGESD 12 LR 1/4-WD |
| 4 | 1 | 60472 | Piloted check-valve | |
| 5 | 1 | 25195 | Connection | P-GEV 12 LR 1/4-WD |
| 6 | 1 | 6194964 | Pipe | |
| 7 | 1 | 25130 | Banjo connection | RSWV 12 LR |
| 8 | 2 | 25867 | Straight connection | F40XS12 - 1/4 |
| 9 | 2 | 25876 | Screw cap | FNTXS 12 JIC |

# ODIN

Intern ref.: 6300250

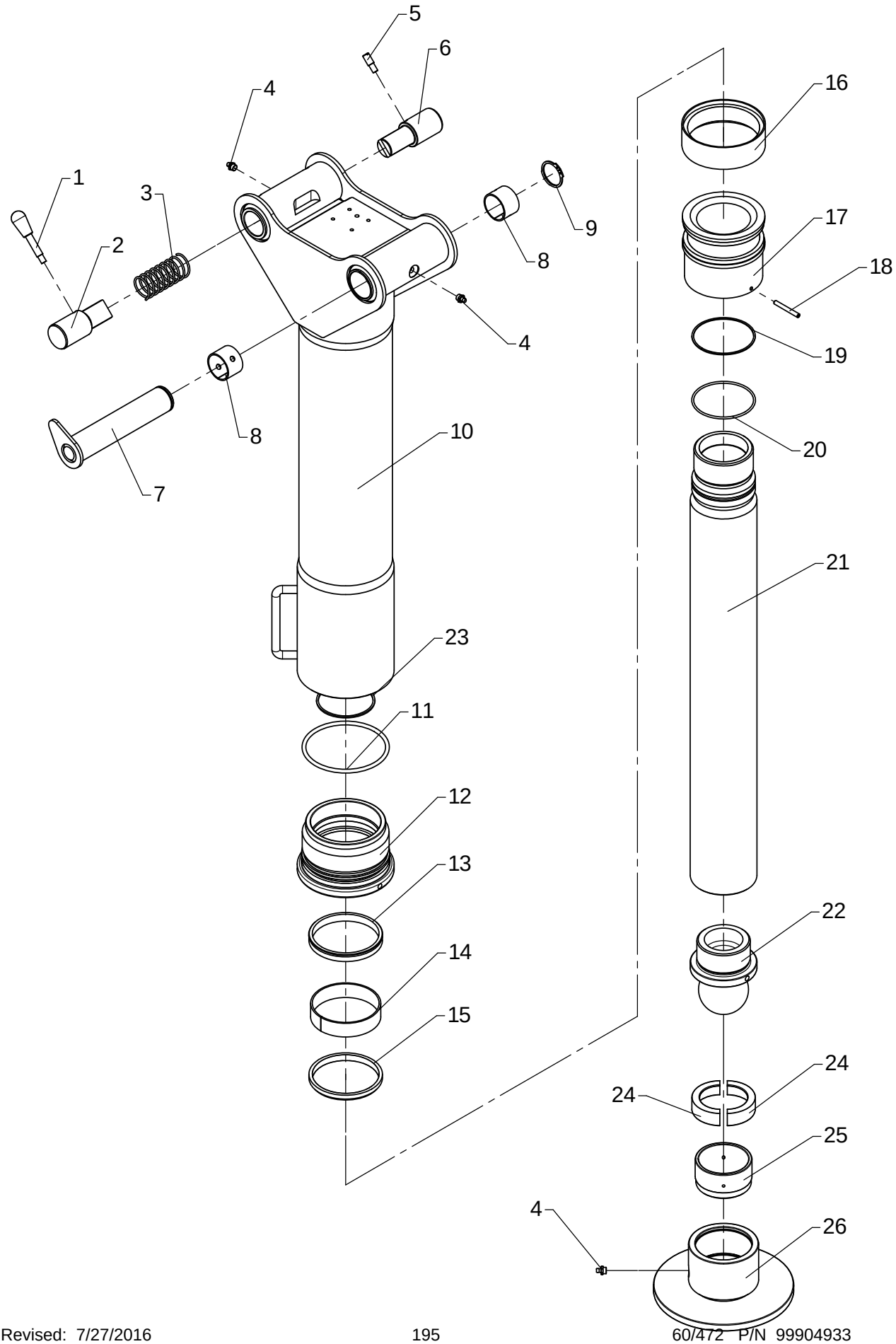

# Stabilizer cylinder C125-600, type R incl. ball joint

As from / To loader no.: 96 00 00 / 96 03 29
Created: 03.10.2003
Modified: 04.11.2013

| Item no. | Qty. | Part no. | Description | Remarks |
|---|---|---|---|---|
| | 1 | 6893590 | Seal kit, C125/100 | Pos. 11, 13, 14, 15, 16, 19, 20 |
| 1 | 1 | 64352 | Lever with knob | |
| 2 | 1 | 6300236 | Drift | |
| 3 | 1 | 33479 | Compression spring | |
| 4 | 3 | 31318 | Lubricator | 1/8" RG |
| 5 | 1 | 6300268 | Spacer | |
| 6 | 1 | 6300237 | Drift | |
| 7 | 1 | 6300238 | Stabilizer bolt | |
| 8 | 2 | 23333 | Bushing | PM 4030 DX |
| 9 | 1 | 33121 | Circlip | 40U |
| 10 | 1 | 6300251 | Cylinder, swing-up leg | C125-600 |
| 11 | 1 | 20327 | O-ring | OR 119,3 x 5,7 |
| 12 | 1 | 6300274 | Guide | |
| 13 | 1 | 20929 | Seal | SI/L 100/110 x 12,5 |
| 14 | 1 | 21997 | Bearing | HH506 100 x 105 x 25 |
| 15 | 1 | 20531 | Scraper | GA 100 x 110 x 7/10 |
| 16 | 1 | 20791 | Seal | MDM 125 x 108 x 26 |
| 17 | 1 | 6300273 | Piston | |
| 18 | 1 | 31045 | Pointed screw | MSP6 x 50 |
| 19 | 1 | 20891 | Back ring | 89,5 x 3 |
| 20 | 1 | 20191 | O-ring | OR 89,5 x 3 |
| 21 | 1 | 6300271 | Piston rod | C125-600 |
| 22 | 1 | 6300272 | Ball joint | |
| 23 | 1 | 33271 | Spring ring | SB 85 |
| 24 | 2 | 6300266 | Ball seat catch | |
| 25 | 1 | 6300265 | Ball seat | |
| 26 | 1 | 6300262 | Foot plate | |

# ODIN

An Oshkosh Corportation Company

Intern ref.: 6300810

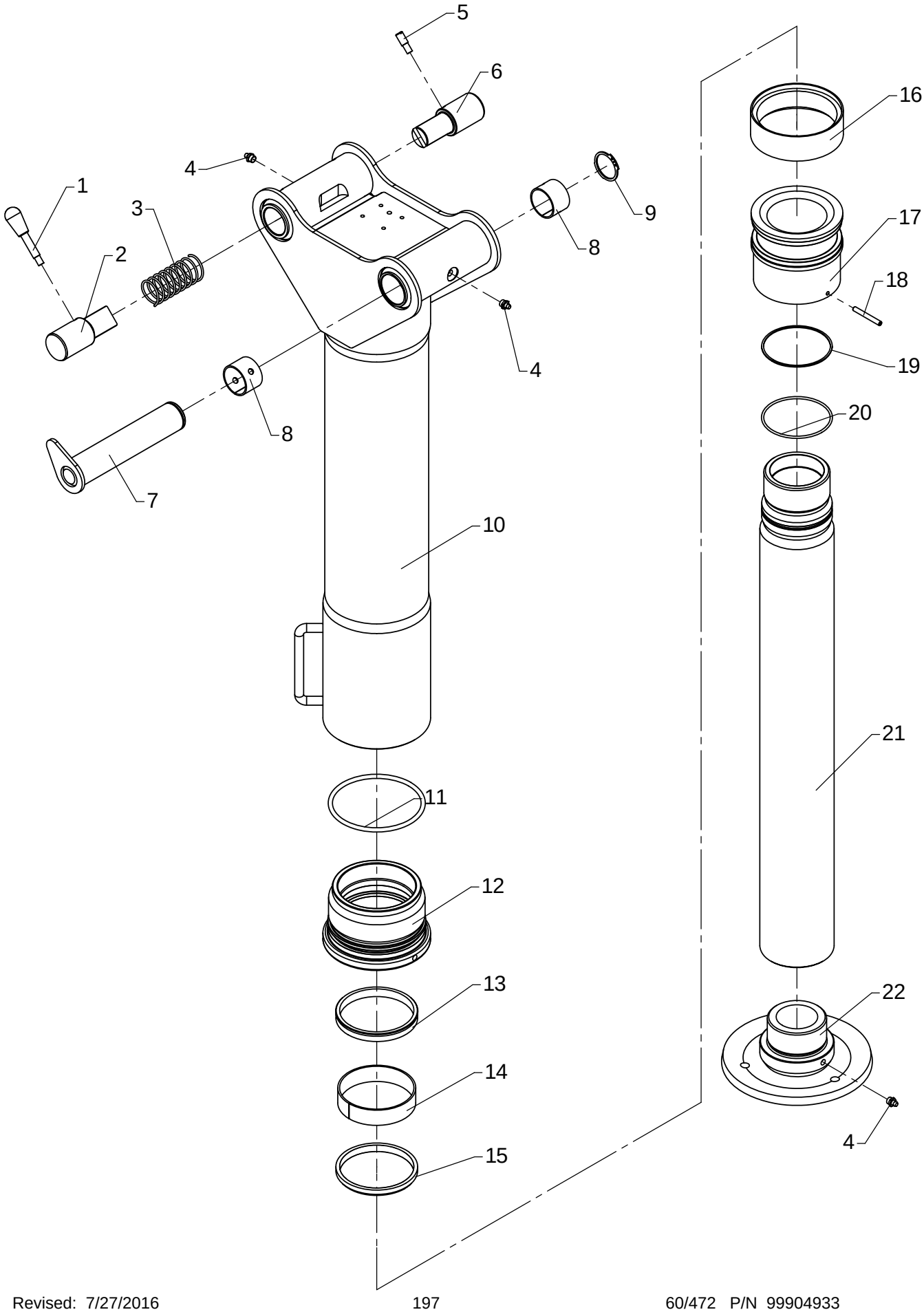

# Stabilizer cylinder C125-600, type R incl. fixed footplate

As from / To loader no.: 96 00 00 / 96 03 29
Created: 03.10.2003
Modified: 04.11.2013

| Item no. | Qty. | Part no. | Description | Remarks |
|---|---|---|---|---|
| | 1 | 6893590 | Seal kit, C125/100 | Pos. 11, 13, 14, 15, 16, 19, 20 |
| 1 | 1 | 64352 | Lever with knob | |
| 2 | 1 | 6300236 | Drift | |
| 3 | 1 | 33479 | Compression spring | |
| 4 | 3 | 31318 | Lubricator | 1/8" RG |
| 5 | 1 | 6300268 | Spacer | |
| 6 | 1 | 6300237 | Drift | |
| 7 | 1 | 6300238 | Stabilizer bolt | |
| 8 | 2 | 23333 | Bushing | PM 4030 DX |
| 9 | 1 | 33121 | Circlip | 40U |
| 10 | 1 | 6300251 | Cylinder, swing-up leg | C125-600 |
| 11 | 1 | 20327 | O-ring | OR 119,3 x 5,7 |
| 12 | 1 | 6300274 | Guide | |
| 13 | 1 | 20929 | Seal | SI/L 100/110 x 12,5 |
| 14 | 1 | 21997 | Bearing | HH506 100 x 105 x 25 |
| 15 | 1 | 20531 | Scraper | GA 100 x 110 x 7/10 |
| 16 | 1 | 20791 | Seal | MDM 125 x 108 x 26 |
| 17 | 1 | 6300273 | Piston | |
| 18 | 1 | 31045 | Pointed screw | MSP6 x 50 |
| 19 | 1 | 20891 | Back ring | 89,5 x 3 |
| 20 | 1 | 20191 | O-ring | OR 89,5 x 3 |
| 21 | 1 | 6300271 | Piston rod | C125-600 |
| 22 | 1 | 6302262 | Footplate, fixed | |

# ODIN

Intern ref.: 6300240 / 6300800

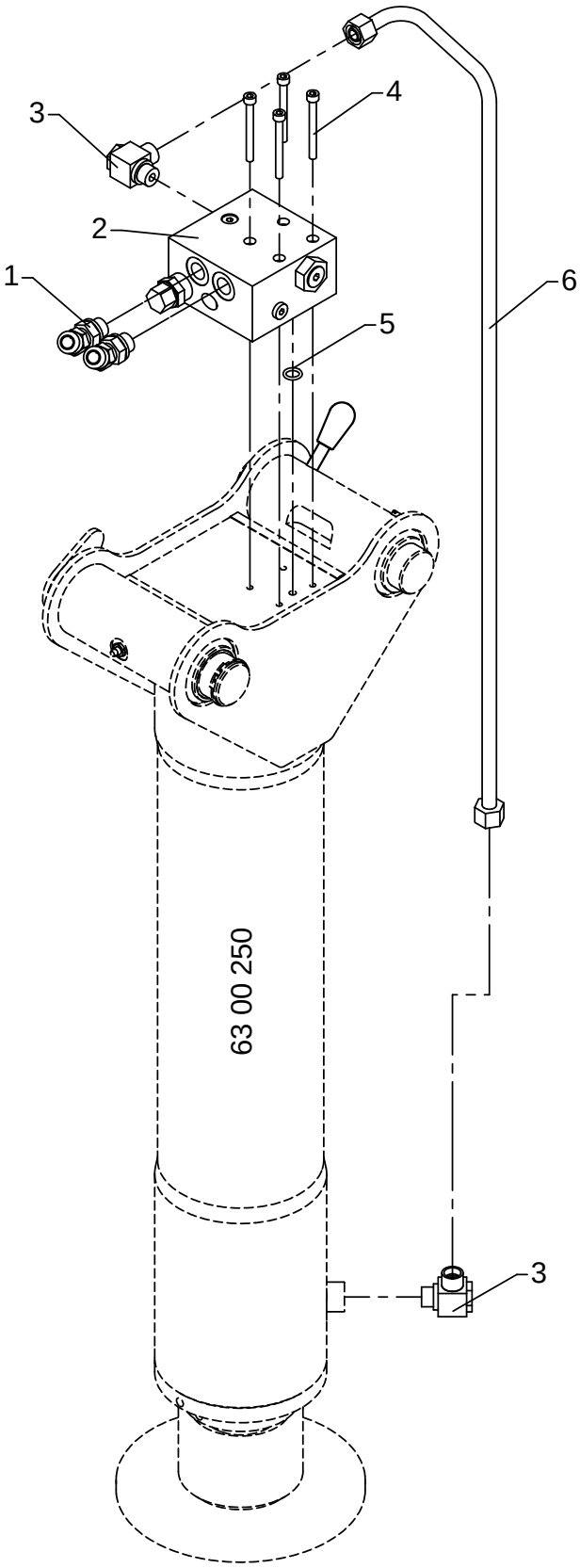


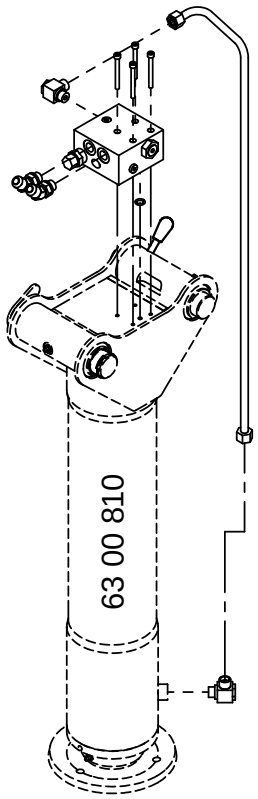

# Stabilizer cylinder with check valve, type R

As from / To loader no.: 96 00 00 / 96 01 99
Created: 03.10.2003
Modified:

| Item no. | Qty. | Part no. | Description | Remarks |
|---|---|---|---|---|
| 1 | 2 | 26695 | Elbow connection 45° | V40XS12 - 3/8 |
| 2 | 1 | 59058 | Piloted check-valve | |
| 3 | 2 | 25130 | Banjo connection | RSWV 12 LR |
| 4 | 4 | 30441 | Screw | MC6 x 60 |
| 5 | 1 | 20126 | O-ring | OR 11,3 x 2,4 |
| 6 | 1 | 6300275 | Pipe | C125-600 |

# ODIN

Intern ref.: 6300240 / 6300800

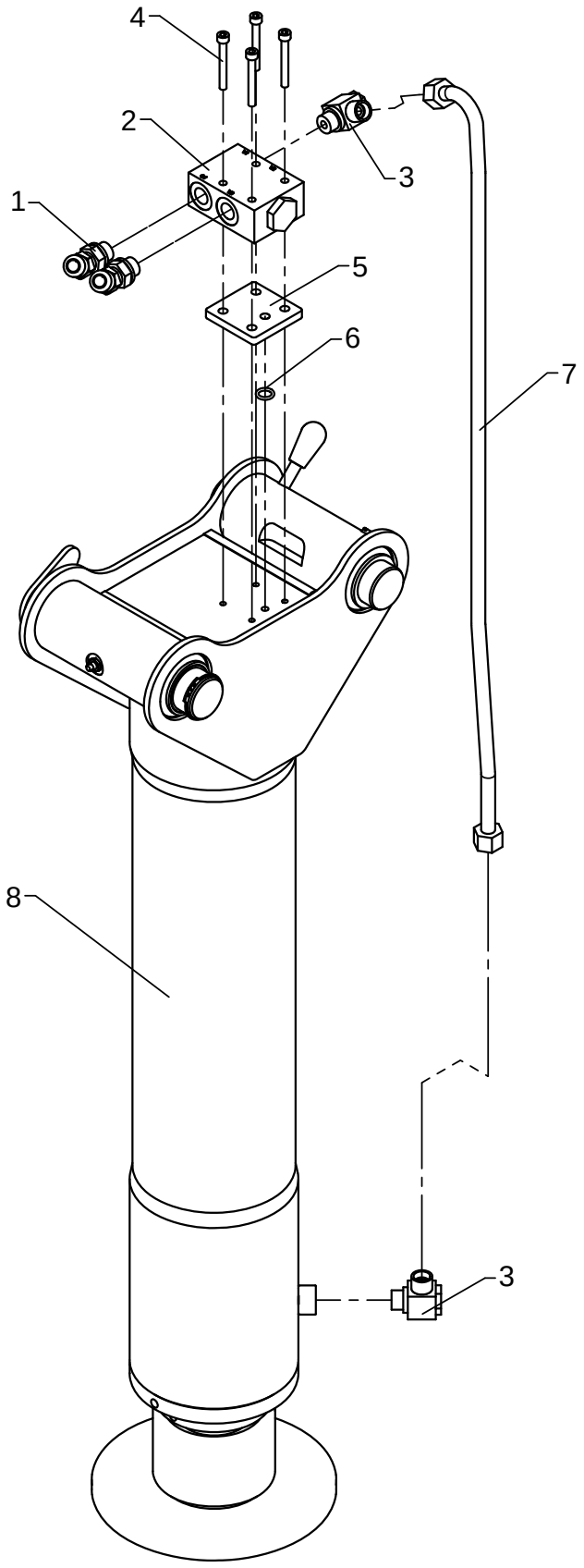


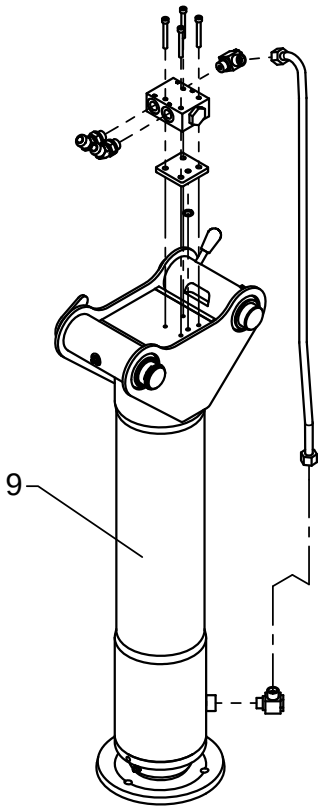

# Stabilizer cylinder with check valve, type R

As from / To loader no.: 96 02 00 / 96 03 74
Created: 17.12.2007
Modified: 16.02.2015

| Item no. | Qty. | Part no. | Description | Remarks |
|---|---|---|---|---|
| 1 | 2 | 26695 | Elbow connection 45° | V40XS12 - 3/8 |
| 2 | 1 | 59924 | Piloted check-valve | |
| 3 | 2 | 25130 | Banjo connection | RSWV 12 LR |
| 4 | 4 | 30457 | Screw | MC6 x 50 |
| 5 | 1 | 6301076 | Block | |
| 6 | 1 | 20126 | O-ring | OR 11,3 x 2,4 |
| 7 | 1 | 6301288 | Pipe | C125-600 |
| 8 | 1 | 6300250 | Swing-up stab. cyl. C125-600 | |
| 9 | 1 | 6300810 | Swing-up stab. cyl. C125-600 | |

# 6020K

6308250 / 6308260
6308270 / 6308230
Intern ref.: 6893590

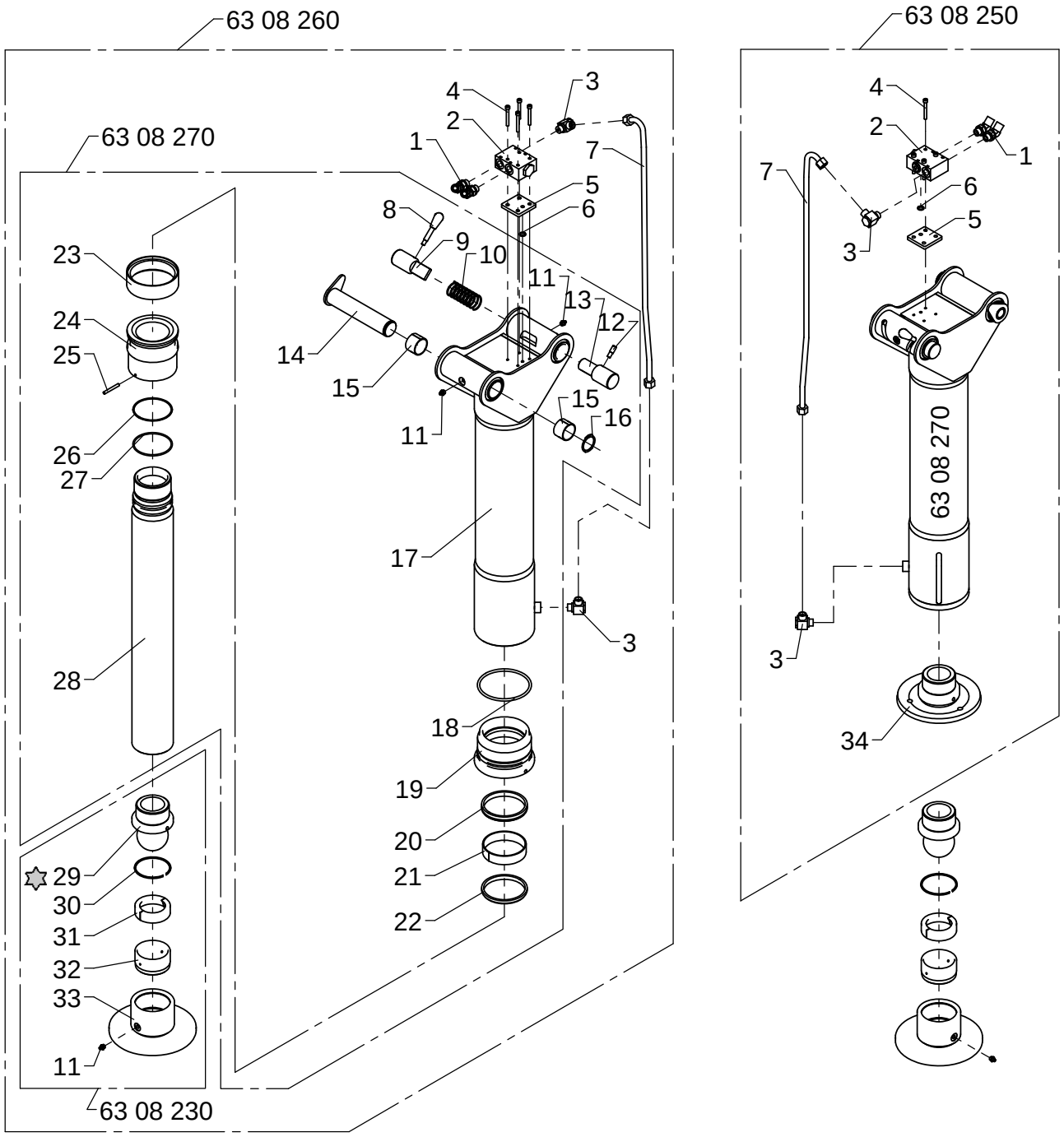




Loctite 243

# Stabilizer cylinder with check valve, type R

As from / To loader no.: 96 03 75 / 96 04 02
Created: 16.02.2015
Modified: 19.11.2015

| Item no. | Qty. | Part no. | Description | Remarks |
|---|---|---|---|---|
| | | 6308250 | Stabilizer cylinder | C125-600 |
| | | 6308260 | Stabilizer cylinder, type R incl. Ball joint | C125-600 |
| | | 6308270 | Stabilizer cylinder, type R | C125-600 |
| | | 6308230 | Ball joint | |
| | | 6893590 | Seal kit C125/100 | Pos. 18, 20, 21, 22, 23, 26, 27 |
| 1 | 2 | 26951 | Elbow connection 45° | EV L12 - 3/8" |
| 2 | 1 | 59924 | Piloted check-valve | |
| 3 | 2 | 25130 | Banjo connection | RSWV 12 LR |
| 4 | 4 | 30457 | Screw | MC6 x 50 |
| 5 | 1 | 6301076 | Block | |
| 6 | 1 | 20126 | O-ring | OR 11,3 x 2,4 |
| 7 | 1 | 6301288 | Pipe | C125-600 |
| 8 | 1 | 64352 | Lever with knob | |
| 9 | 1 | 6300236 | Drift | |
| 10 | 1 | 33479 | Compression spring | |
| 11 | 3 | 31318 | Lubricator | 1/8" RG |
| 12 | 1 | 6300268 | Spacer | |
| 13 | 1 | 6300237 | Drift | |
| 14 | 1 | 6300238 | Stabilizer bolt | |
| 15 | 2 | 23333 | Bushing | PM 4030 DX |
| 16 | 1 | 33121 | Circlip | 40U |
| 17 | 1 | 6308251 | Cylinder, swing-up leg | C125-600 |
| 18 | 1 | 20327 | O-ring | OR 119,3 x 5,7 |
| 19 | 1 | 6308254 | Guide | |
| 20 | 1 | 20929 | Seal | SI/L 100/110 x 12,5 |
| 21 | 1 | 21997 | Bearing | HH506 100 x 105 x 25 |
| 22 | 1 | 20531 | Scraper | GA 100 x 110 x 7/10 |
| 23 | 1 | 20791 | Seal | MDM 125 x 108 x 26 |
| 24 | 1 | 6300273 | Piston | |
| 25 | 1 | 31045 | Pointed screw | MSP6 x 50 |
| 26 | 1 | 20891 | Back ring | 89,5 x 3 |
| 27 | 1 | 20191 | O-ring | OR 89,5 x 3 |
| 28 | 1 | 6300271 | Piston rod | C125-600 |
| 29 | 1 | 6300272 | Ball joint | |
| 30 | 1 | 33271 | Spring ring | SB 85 |
| 31 | 2 | 6300266 | Ball seat catch | |
| 34 | 1 | 6302262 | Foot plate | |
| 32 | 1 | 6300265 | Ball seat | |
| 33 | 1 | 6300262 | Foot plate | |

# ODIN

Intern ref.: 6308270

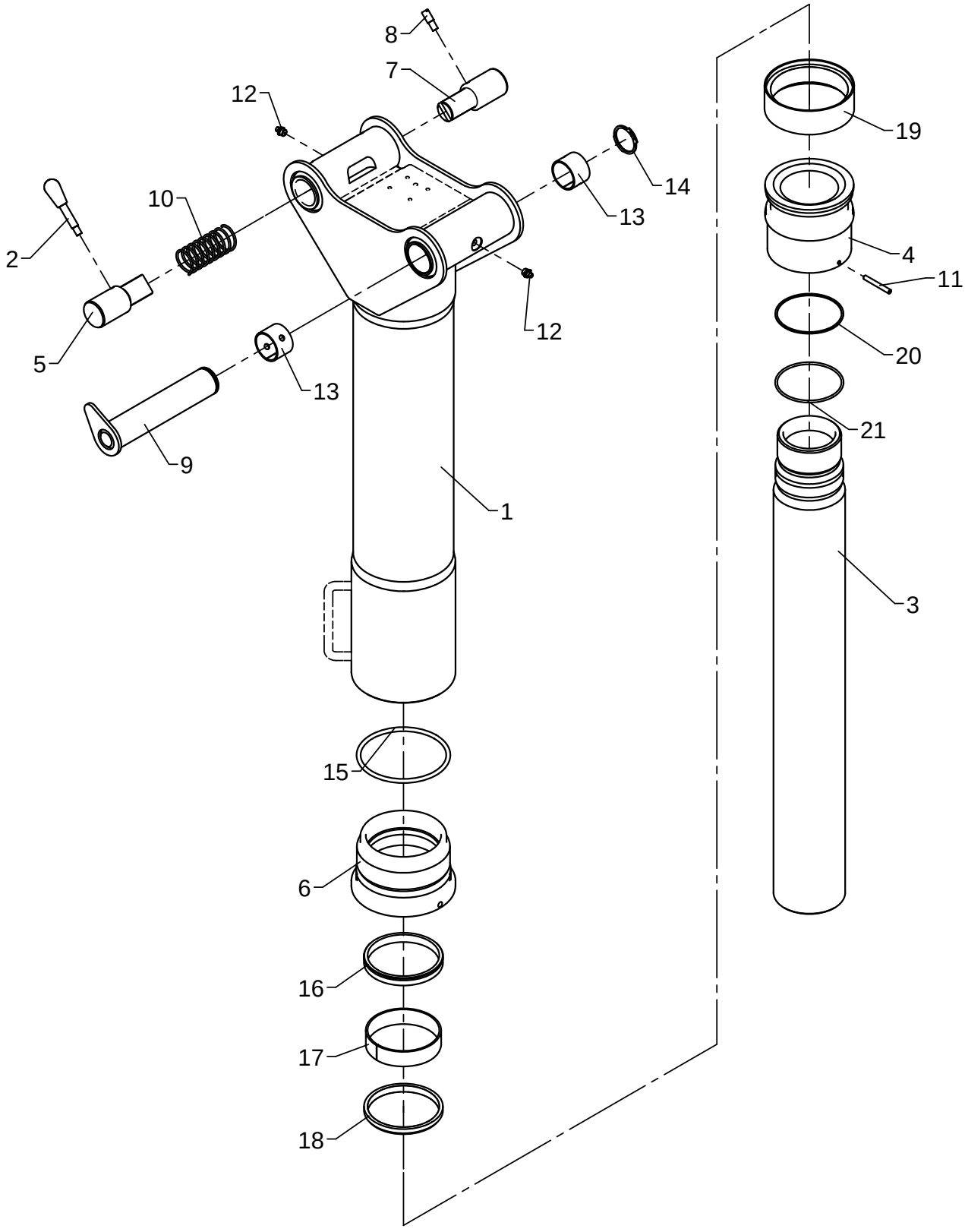

# Stabilizer cylinde C125-600, R

As from / To loader no.: 96 03 30 /
Created: 04.11.2013
Modified:

| Item no. | Qty. | Part no. | Description | Remarks |
|---|---|---|---|---|
| | 1 | 6301590 | Parts, swingup stab. cyl. C125-500 | |
| | 1 | 6302410 | Parts, swingup stab. cyl. C125-600 | |
| 1 | 1 | 6308251 | Cylinder, swing-up leg | C125-600 |
| 2 | 1 | 64352 | Lever with knob | |
| 3 | 1 | 6300271 | Piston rod | C125-600 |
| 4 | 1 | 6300273 | Piston | |
| 5 | 1 | 6300236 | Drift | |
| 6 | 1 | 6308254 | Guide | |
| 7 | 1 | 6300237 | Drift | |
| 8 | 1 | 6300268 | Spacer | |
| 9 | 1 | 6300238 | Stabilizer bolt | |
| 10 | 1 | 33479 | Compression spring | |
| 11 | 1 | 31045 | Pointed screw | MSP6 x 50 |
| 12 | 2 | 31318 | Lubricator | 1/8" RG |
| 13 | 2 | 23333 | Bushing | PM 4030 DX |
| 14 | 1 | 33121 | Circlip | 40U |
| 15 | 1 | 20327 | O-ring | OR 119,3 x 5,7 |
| 16 | 1 | 20929 | Seal | SI/L 100/110 x 12,5 |
| 17 | 1 | 21997 | Bearing | HH506 100 x 105 x 25 |
| 18 | 1 | 20531 | Scraper | GA 100 x 110 x 7/10 |
| 19 | 1 | 20791 | Seal | MDM 125 x 108 x 26 |
| 20 | 1 | 20891 | Back ring | 89,5 x 3 |
| 21 | 1 | 20191 | O-ring | OR 89,5 x 3 |

# 6020K

Intern ref.: 6303570

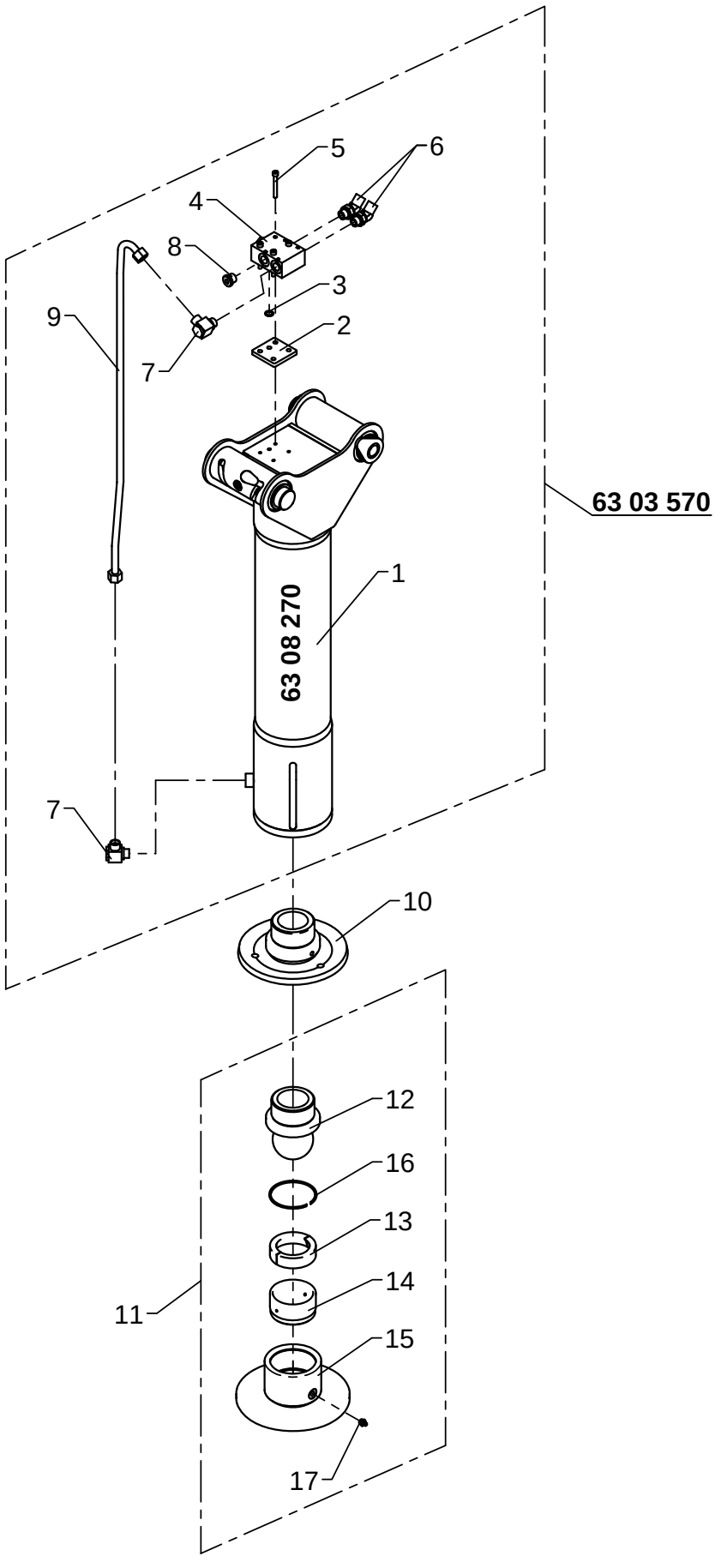

# Stabilizer cylinder C125-600 R

As from / To loader no.: 96 04 03 /
Created: 19.11.2015
Modified:

| Item no. | Qty. | Part no. | Description | Remarks |
|---|---|---|---|---|
| 1 | 1 | 6308270 | Swing-up stab. cyl. C125-600, R | |
| 2 | 1 | 6301076 | Block | |
| 3 | 1 | 20126 | O-ring | OR 11,3 x 2,4 |
| 4 | 1 | 59924 | Piloted check-valve | |
| 5 | 4 | 30457 | Screw | MC6 x 50 |
| 6 | 2 | 26951 | Elbow connection 45° | EV L12 - 3/8" |
| 7 | 2 | 25130 | Banjo connection | RSWV 12 LR |
| 8 | 1 | 25277 | Plug | VS-R-3/8 WD |
| 9 | 1 | 6301288 | Pipe | C125-600 |
| 10 | 1 | 6302262 | Footplate, fixed | |
| 11 | 1 | 6308230 | Ball joint, C110 | |
| 12 | 1 | 6300272 | Ball joint | |
| 13 | 2 | 6300266 | Ball seat catch | |
| 14 | 1 | 6300265 | Ball seat | |
| 15 | 1 | 6300262 | Foot plate | |
| 16 | 1 | 33271 | Spring ring | SB 85 |
| 17 | 1 | 31318 | Lubricator | 1/8" RG |

# ODIN

Intern ref.: 6302430 / 6301600

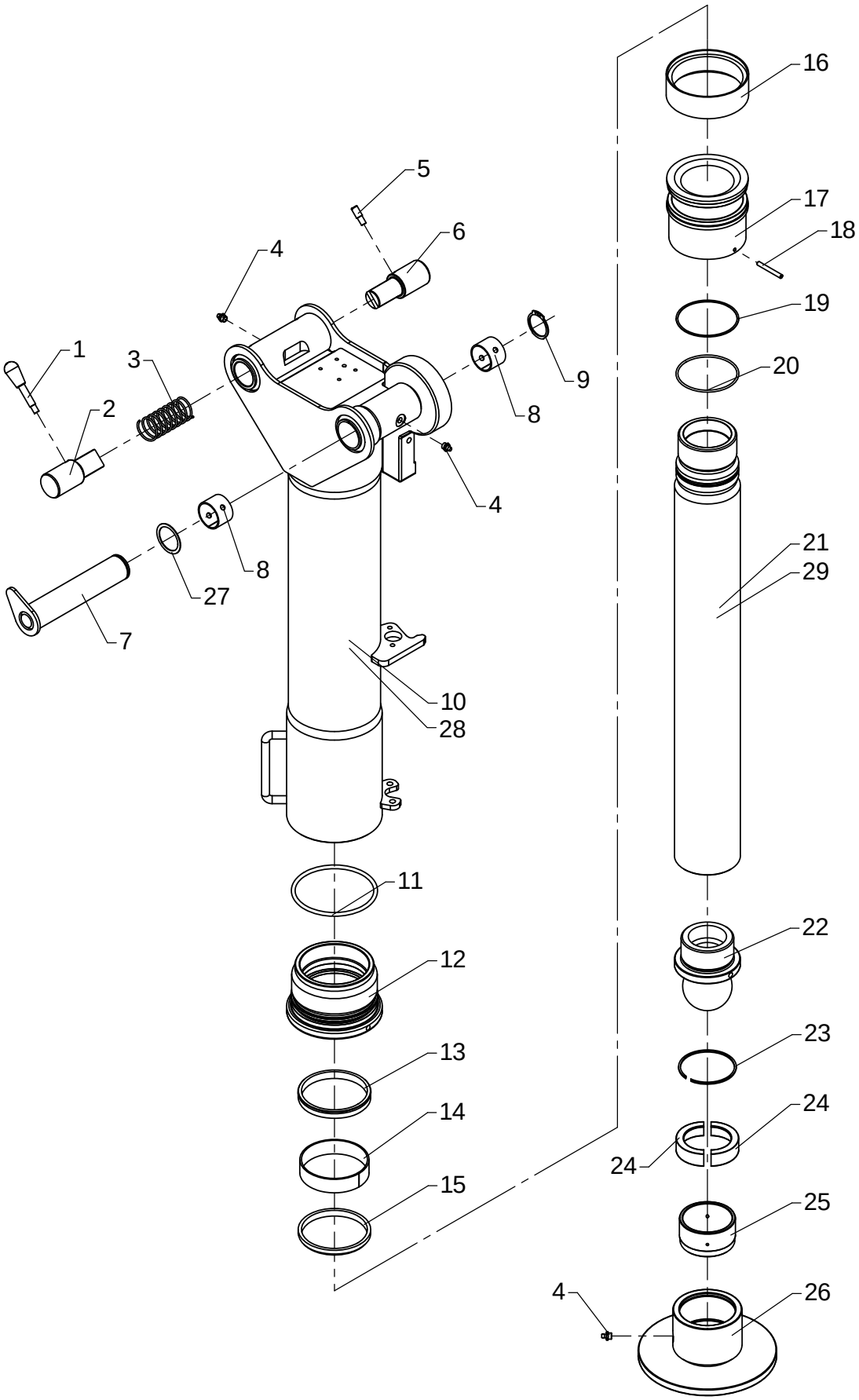

# Swing-up stabilizer cylinder C125-xxx, type HR incl. ball joint

As from / To loader no.: 96 00 00 / 96 03 29
Created: 03.10.2003
Modified: 04.11.2013

| Item no. | Qty. | Part no. | Description | Remarks |
|---|---|---|---|---|
| | 1 | 6301600 | Hydr. swingup stab. cyl. C125-500 | |
| | 1 | 6302430 | Hydr. swingup stab. cyl. C125-600 | |
| | 1 | 6893590 | Seal kit, C125/100 | Pos. 11, 13, 14, 15, 16, 19, 20 |
| 1 | 1 | 64352 | Lever with knob | |
| 2 | 1 | 6300236 | Drift | |
| 3 | 1 | 33479 | Compression spring | |
| 4 | 3 | 31318 | Lubricator | 1/8" RG |
| 5 | 1 | 6300268 | Spacer | |
| 6 | 1 | 6300237 | Drift | |
| 7 | 1 | 6300238 | Stabilizer bolt | |
| 8 | 2 | 23333 | Bushing | PM 4030 DX |
| 9 | 1 | 33121 | Circlip | 40U |
| 10 | 1 | 6302421 | Cylinder tube | C125-600 |
| 11 | 1 | 20327 | O-ring | OR 119,3 x 5,7 |
| 12 | 1 | 6300274 | Guide | |
| 13 | 1 | 20929 | Seal | SI/L 100/110 x 12,5 |
| 14 | 1 | 21997 | Bearing | HH506 100 x 105 x 25 |
| 15 | 1 | 20531 | Scraper | GA 100 x 110 x 7/10 |
| 16 | 1 | 20791 | Seal | MDM 125 x 108 x 26 |
| 17 | 1 | 6300273 | Piston | |
| 18 | 1 | 31045 | Pointed screw | MSP6 x 50 |
| 19 | 1 | 20891 | Back ring | 89,5 x 3 |
| 20 | 1 | 20191 | O-ring | OR 89,5 x 3 |
| 21 | 1 | 6300271 | Piston rod | C125-600 |
| 22 | 1 | 6300272 | Ball joint | |
| 23 | 1 | 33271 | Spring ring | SB 85 |
| 24 | 2 | 6300266 | Ball seat catch | |
| 25 | 1 | 6300265 | Ball seat | |
| 26 | 1 | 6300262 | Foot plate | |
| 27 | 1 | 31102 | Washer | ø40 x 50 x 1,0 |
| 28 | 1 | 6301561 | Cylinder tube | C125-500 |
| 29 | 1 | 6301564 | Piston rod | C125-500 |

# ODIN

Intern ref.: 6308610 / 6308620

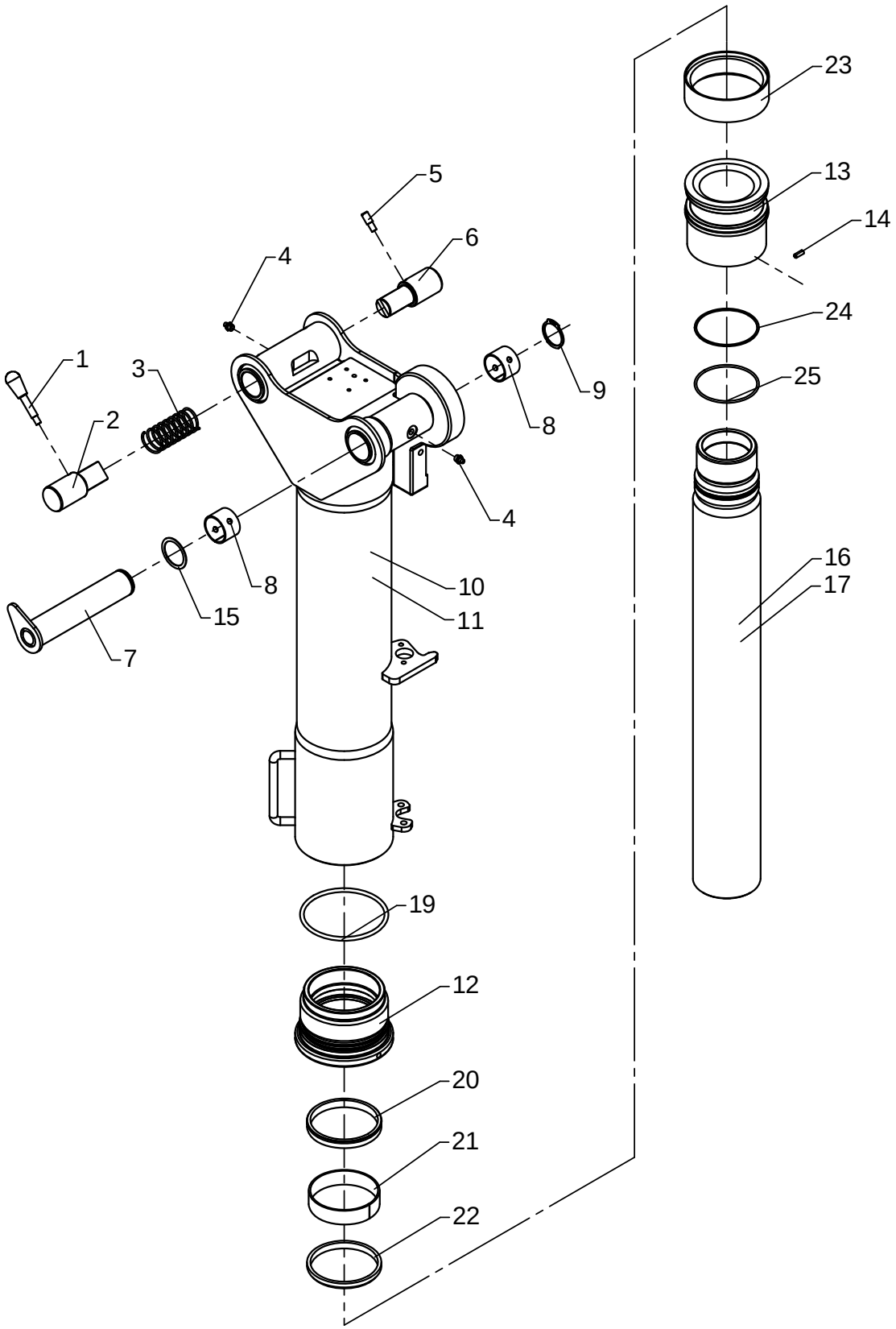

# Stabilizer cylinder C125-600/500, HR

As from / To loader no.: 96 03 30 /
Created: 04.11.2013
Modified:

| Item no. | Qty. | Part no. | Description | Remarks |
|---|---|---|---|---|
| | 1 | 6301600 | Hydr. swingup stab. cyl. C125-500 | Pos.11, 17 |
| | 1 | 6302430 | Hydr. swingup stab. cyl. C125-600 | Pos.10, 16 |
| | 1 | 6893590 | Seal kit, C125/100 | Pos.19, 20, 21, 22, 23, 24, 25 |
| 1 | 1 | 64352 | Lever with knob | |
| 2 | 1 | 6300236 | Drift | |
| 3 | 1 | 33479 | Compression spring | |
| 4 | 2 | 31318 | Lubricator | 1/8" RG |
| 5 | 1 | 6300268 | Spacer | |
| 6 | 1 | 6300237 | Drift | |
| 7 | 1 | 6300238 | Stabilizer bolt | |
| 8 | 2 | 23333 | Bushing | PM 4030 DX |
| 9 | 1 | 33121 | Circlip | 40U |
| 10 | 1 | 6308611 | Cylinder tube | C125-600 |
| 11 | 1 | 6308621 | Cylinder tube | C125-500 |
| 12 | 1 | 6308254 | Guide | |
| 13 | 1 | 6300273 | Piston | |
| 14 | 1 | 30562 | Pointed screw | MPS6 x 16 |
| 15 | 1 | 31102 | Washer | ø40 x 50 x 1,0 |
| 16 | 1 | 6300271 | Piston rod | C125-600 |
| 17 | 1 | 6301564 | Piston rod | C125-500 |
| 19 | 1 | 20327 | O-ring | OR 119,3 x 5,7 |
| 20 | 1 | 20929 | Seal | SI/L 100/110 x 12,5 |
| 21 | 1 | 21997 | Bearing | HH506 100 x 105 x 25 |
| 22 | 1 | 20531 | Scraper | GA 100 x 110 x 7/10 |
| 23 | 1 | 20791 | Seal | MDM 125 x 108 x 26 |
| 24 | 1 | 20891 | Back ring | 89,5 x 3 |
| 25 | 1 | 20191 | O-ring | OR 89,5 x 3 |

# ODIN

Intern ref.: 6302520 / 6301580

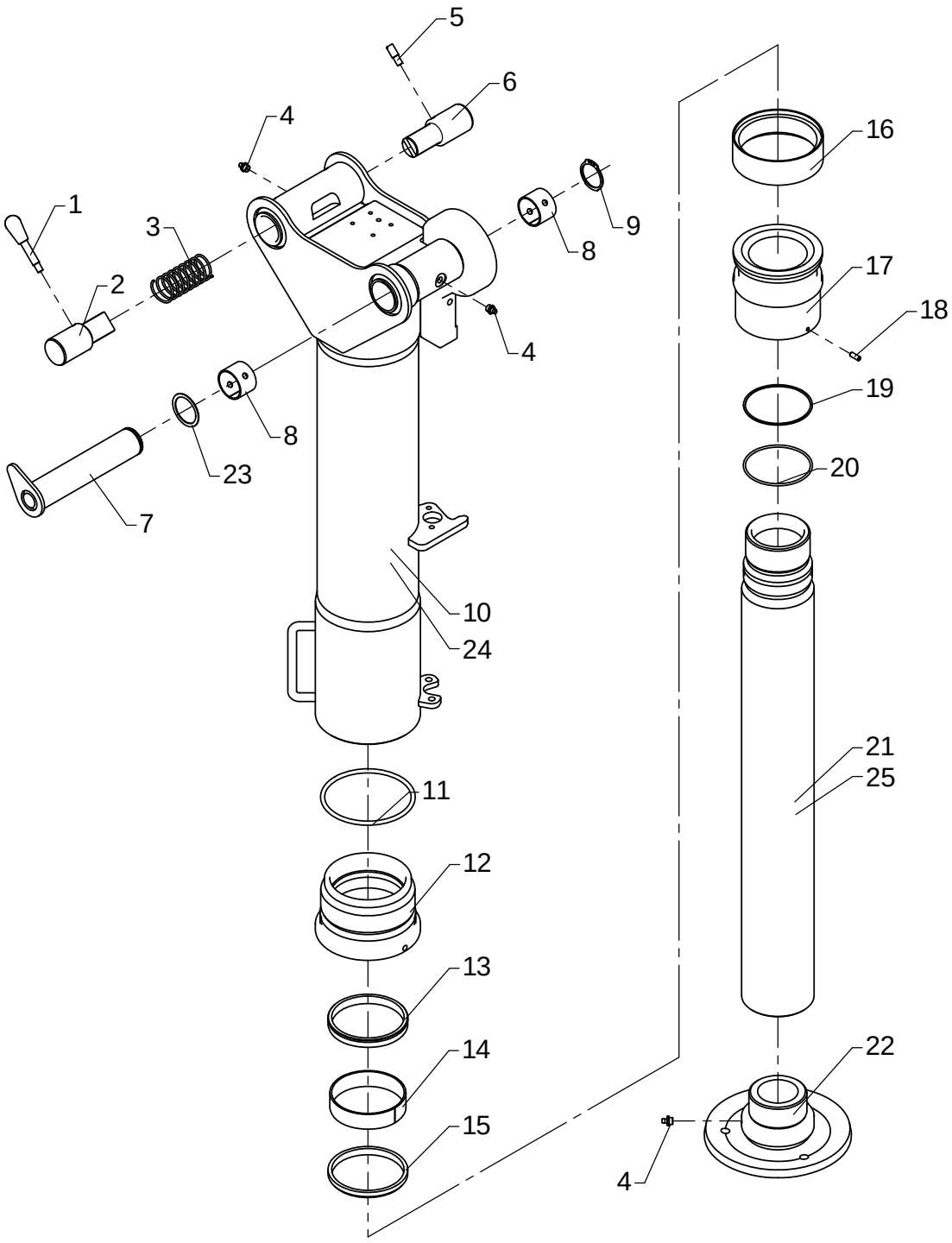

# Swing-up stabilizer cylinder C125-xxx, type HR incl. fixed footplate

As from / To loader no.: 96 00 00 / 96 03 29
Created: 03.10.2003
Modified: 04.11.2013

| Item no. | Qty. | Part no. | Description | Remarks |
|---|---|---|---|---|
| | 1 | 6301580 | Hydr. swingup stab. cyl. C125-500 | |
| | 1 | 6302520 | Hydr. swingup stab. cyl. C125-600 | |
| | 1 | 6893590 | Seal kit, C125/100 | Pos. 11, 13, 14, 15, 16, 19, 20 |
| 1 | 1 | 64352 | Lever with knob | |
| 2 | 1 | 6300236 | Drift | |
| 3 | 1 | 33479 | Compression spring | |
| 4 | 3 | 31318 | Lubricator | 1/8" RG |
| 5 | 1 | 6300268 | Spacer | |
| 6 | 1 | 6300237 | Drift | |
| 7 | 1 | 6300238 | Stabilizer bolt | |
| 8 | 2 | 23333 | Bushing | PM 4030 DX |
| 9 | 1 | 33121 | Circlip | 40U |
| 10 | 1 | 6302421 | Cylinder tube | C125-600 |
| 11 | 1 | 20327 | O-ring | OR 119,3 x 5,7 |
| 12 | 1 | 6300274 | Guide | |
| 13 | 1 | 20929 | Seal | SI/L 100/110 x 12,5 |
| 14 | 1 | 21997 | Bearing | HH506 100 x 105 x 25 |
| 15 | 1 | 20531 | Scraper | GA 100 x 110 x 7/10 |
| 16 | 1 | 20791 | Seal | MDM 125 x 108 x 26 |
| 17 | 1 | 6300273 | Piston | |
| 18 | 1 | 30562 | Pointed screw | MPS6 x 16 |
| 19 | 1 | 20891 | Back ring | 89,5 x 3 |
| 20 | 1 | 20191 | O-ring | OR 89,5 x 3 |
| 21 | 1 | 6300271 | Piston rod | C125-600 |
| 22 | 1 | 6302262 | Footplate, fixed | |
| 23 | 1 | 31102 | Washer | ø40 x 50 x 1,0 |
| 24 | 1 | 6301561 | Cylinder tube | C125-500 |
| 25 | 1 | 6301564 | Piston rod | C125-500 |

# ODIN

Intern ref.: 6302410 / 6301590

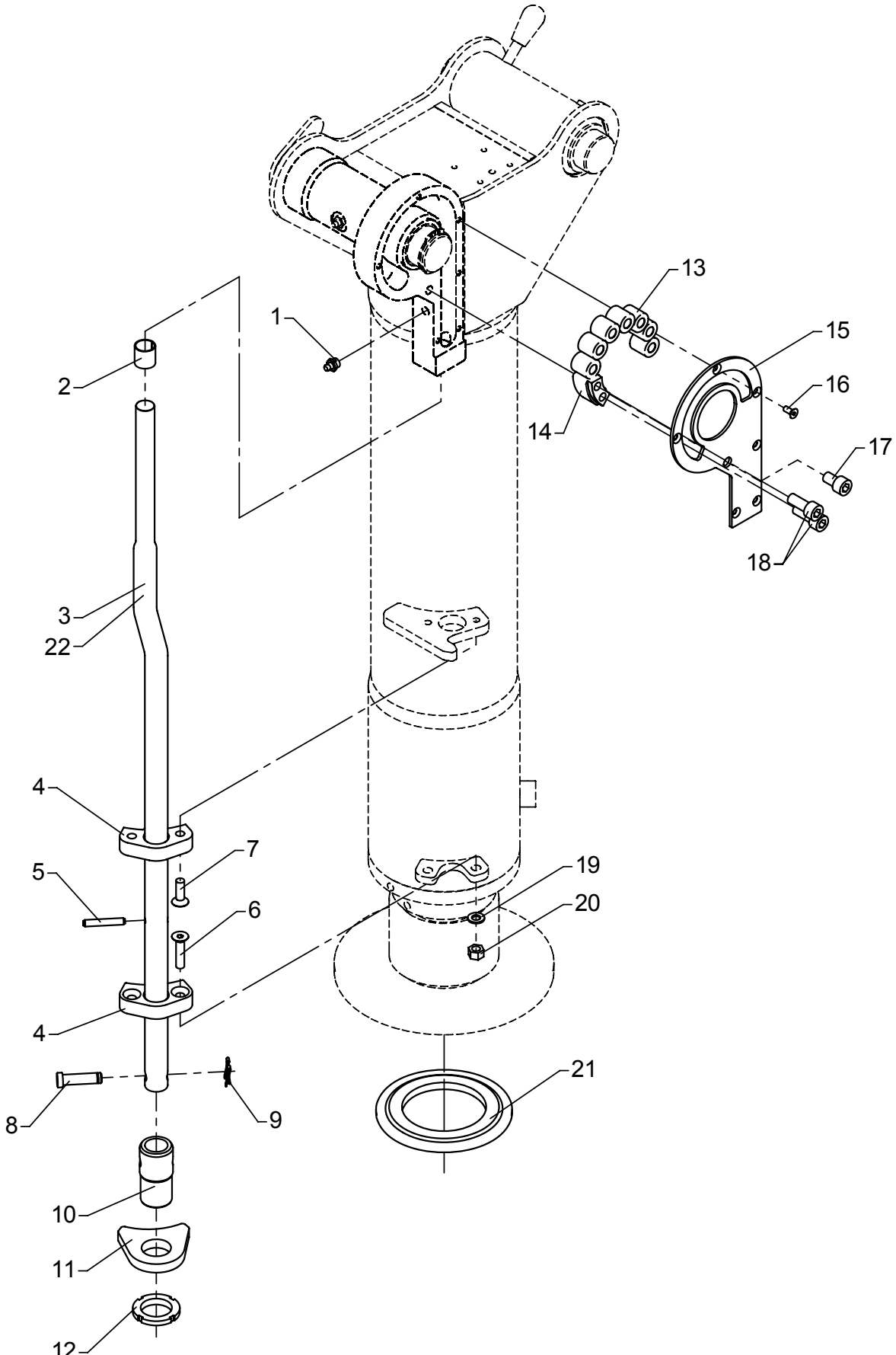

# Parts for swing-up stabilizer cylinder

As from / To loader no.: 96 00 00 /
Created: 03.10.2003
Modified: 16.04.2007

| Item no. | Qty. | Part no. | Description | Remarks |
|---|---|---|---|---|
| | 1 | 6301590 | Parts, swingup stab. cyl. C125-500 | |
| | 1 | 6302410 | Parts, swingup stab. cyl. C125-600 | |
| 1 | 1 | 31318 | Lubricator | 1/8" RG |
| 2 | 1 | 23939 | Bushing | MB 1820 DU-B |
| 3 | 1 | 6302434 | Compression rod | C125-600 |
| 4 | 2 | 63524 | Guide | |
| 5 | 1 | 31228 | Retaining pin, stainless | ø6 x 40 |
| 6 | 2 | 30584 | Countersunk screw | MK8 x 35 |
| 7 | 2 | 31964 | Counter sunk screw, stainless | MK8 x 25 |
| 8 | 1 | 6302437 | Lock pin | |
| 9 | 1 | 31905 | Clip | |
| 10 | 1 | 6302436 | Adjusting piece | |
| 11 | 1 | 6302435 | Compression block | |
| 12 | 1 | 23147 | Nut | M30 x 1,5 |
| 13 | 7 | 23146 | Cylindrical roller | RC 20 x 20 CD |
| 14 | 1 | 6302433 | Stop | |
| 15 | 1 | 6302432 | Cover | |
| 16 | 6 | 32405 | Sockethead screw | MK5 x 12 |
| 17 | 1 | 30964 | Screw | MC10 x 16 |
| 18 | 2 | 30453 | Screw | MC10 x 25 |
| 19 | 2 | 31147 | Washer, stainless | 8 mm |
| 20 | 2 | 30886 | Lock nut, stainless | M8 |
| 21 | 1 | 6302439 | Carrier plate | |
| 22 | 1 | 6301565 | Compression rod | C125-500 |

# ODIN

6301560 / 6301570
Intern ref.: 6302440 / 6302530

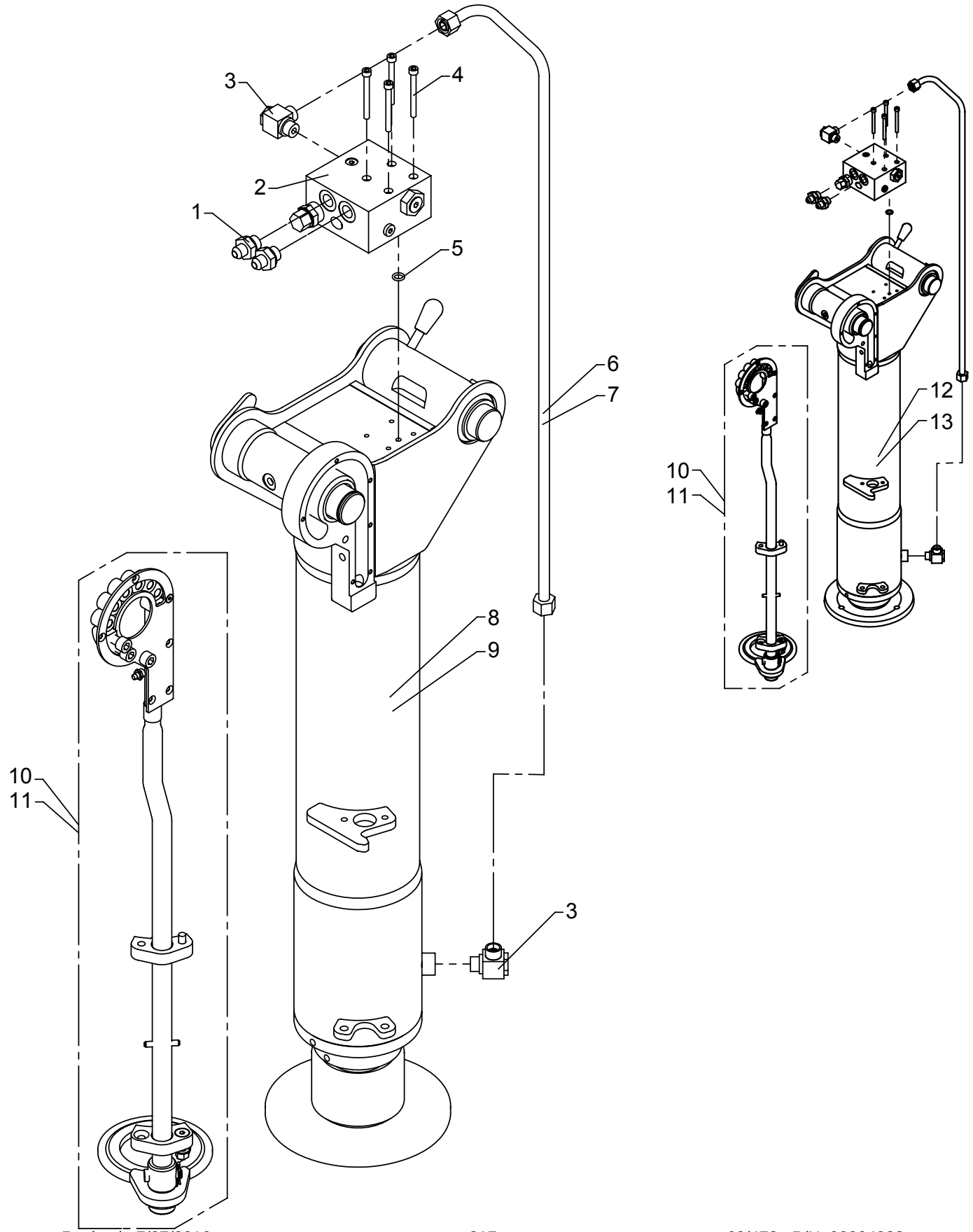

# Stabilizer cylinder with check valve, type HR

As from / To loader no.: 96 00 00 / 96 01 68
Created: 03.10.2003
Modified: 11.08.2010

| Item no. | Qty. | Part no. | Description | Remarks |
|---|---|---|---|---|
| 1 | 2 | 25743 | Straight connection | F40XS10 - 3/8 |
| 2 | 1 | 59058 | Piloted check-valve | |
| 3 | 2 | 25130 | Banjo connection | RSWV 12 LR |
| 4 | 4 | 30441 | Screw | MC6 x 60 |
| 5 | 1 | 20125 | O-ring | OR 9,3 x 2,4 |
| 6 | 1 | 6301566 | Pipe | C125-500 |
| 7 | 1 | 6300275 | Pipe | C125-600 |
| 8 | 1 | 6301600 | Hydr.swingup stab.cyl.C125-500 | |
| 9 | 1 | 6302430 | Hydr.swingup stab.cyl.C125-600 | |
| 10 | 1 | 6301590 | Parts,swingup stab.cylC125-500 | |
| 11 | 1 | 6302410 | Parts,swingup stab.cylC125-600 | |
| 12 | 1 | 6301580 | Hydr.swingup stab.cyl.C125-500 | |
| 13 | 1 | 6302520 | Hydr.swingup stab.cyl.C125-600 | |

# 6020K

6301560 / 6301570
Intern ref.: 6302440 / 6302530

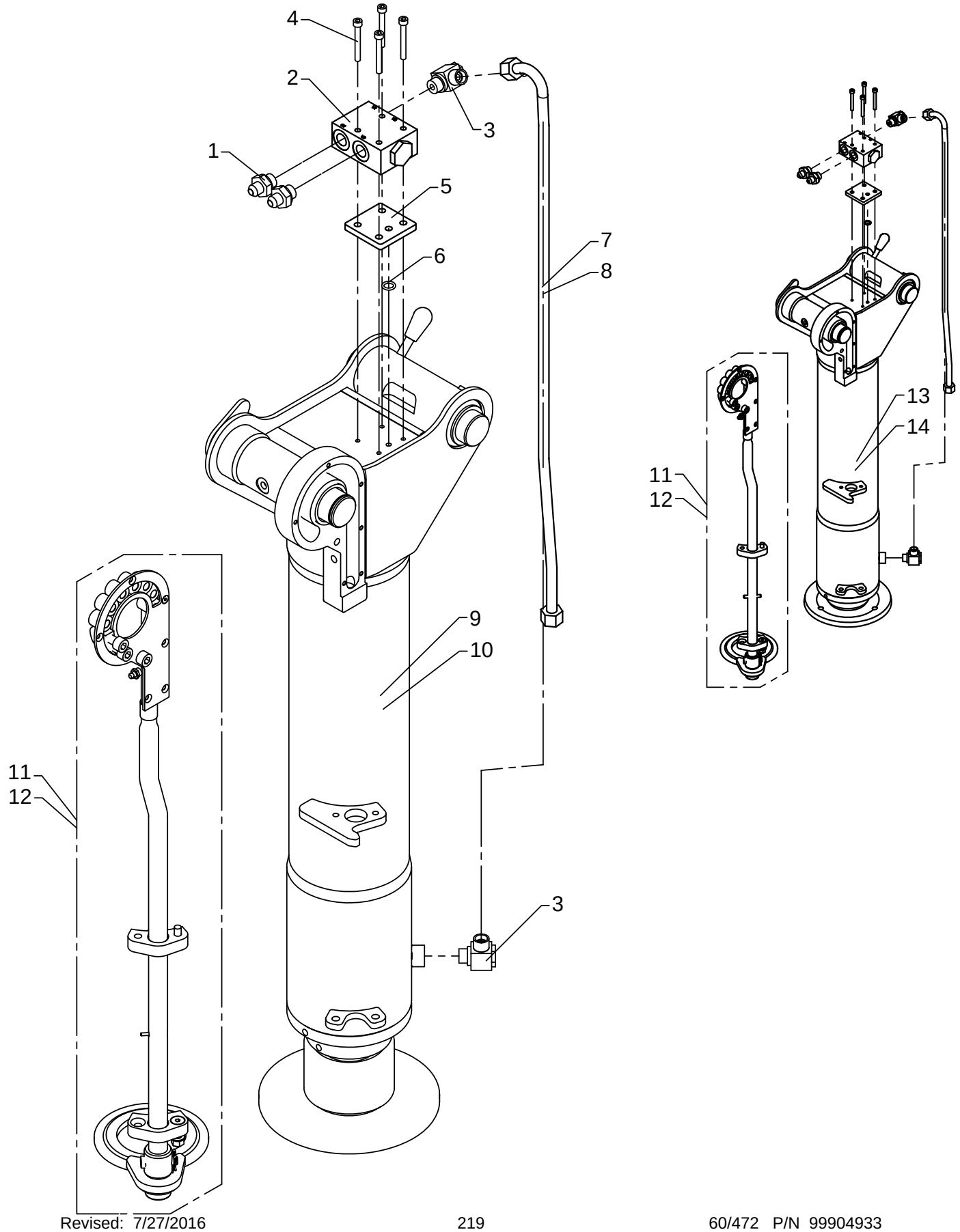

# Stabilizer cylinder with check valve, type HR

As from / To loader no.: 96 01 69 / 96 03 82
Created: 11.08.2010
Modified: 18.12.2014

| Item no. | Qty. | Part no. | Description | Remarks |
|---|---|---|---|---|
| 1 | 2 | 25743 | Straight connection | F40XS10 - 3/8 |
| 2 | 1 | 59924 | Piloted check-valve | |
| 3 | 2 | 25130 | Banjo connection | RSWV 12 LR |
| 4 | 4 | 30457 | Screw | MC6 x 50 |
| 5 | 1 | 6301076 | Block | |
| 6 | 1 | 20126 | O-ring | OR 11,3 x 2,4 |
| 7 | 1 | 6301289 | Pipe | C125-500 |
| 8 | 1 | 6301288 | Pipe | C125-600 |
| 9 | 1 | 6301600 | Hydr.swingup stab.cyl.C125-500 | |
| 10 | 1 | 6302430 | Hydr.swingup stab.cyl.C125-600 | |
| 11 | 1 | 6301590 | Parts,swingup stab.cylC125-500 | |
| 12 | 1 | 6302410 | Parts,swingup stab.cylC125-600 | |
| 13 | 1 | 6301580 | Hydr.swingup stab.cyl.C125-500 | |
| 14 | 1 | 6302520 | Hydr.swingup stab.cyl.C125-600 | |

# 6020K

6308590 / 6308600
Intern ref.: 6308570 / 6308580

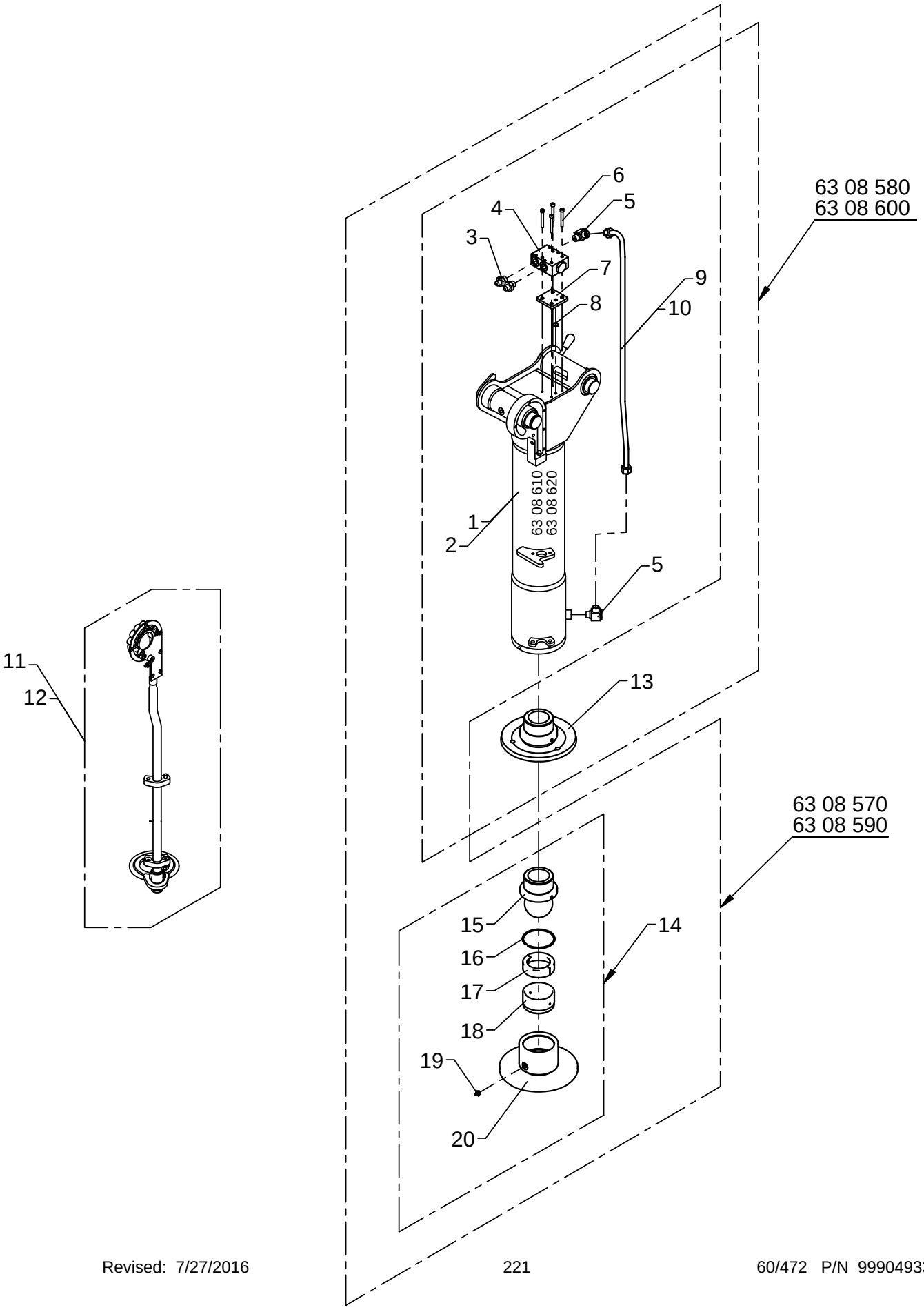

# Stabilizer cylinder with check valve, type HR

As from / To loader no.: 96 03 43 / 96 03 82
Created: 05.11.2013
Modified: 18.12.2014

| Item no. | Qty. | Part no. | Description | Remarks |
|---|---|---|---|---|
| | | 6308570 | Hydr.swingup stab.cyl. C125-500, Kpl. | Pos. 2, 9, 12, 14 |
| | | 6308580 | Hydr.swingup stab.cyl. C125-500, Kpl. | Pos. 2, 9, 12, 13 |
| | | 6308590 | Hydr.swingup stab.cyl. C125-600, Kpl. | Pos. 1, 10, 11, 14 |
| | | 6308600 | Hydr.swingup stab.cyl. C125-600, Kpl. | Pos. 1, 10, 11, 13 |
| 1 | 1 | 6308610 | | |
| 2 | 1 | 6308620 | Stabilizer cylinder C125-500 | |
| 3 | 2 | 25743 | Straight connection | F40XS10 - 3/8 |
| 4 | 1 | 59924 | Piloted check-valve | |
| 5 | 2 | 25130 | Banjo connection | RSWV 12 LR |
| 6 | 4 | 30457 | Screw | MC6 x 50 |
| 7 | 1 | 6301076 | Block | |
| 8 | 1 | 20126 | O-ring | OR 11,3 x 2,4 |
| 9 | 1 | 6301289 | Pipe | C125-500 |
| 10 | 1 | 6301288 | Pipe | C125-600 |
| 11 | 1 | 6302410 | Parts,swingup stab.cylC125-600 | |
| 12 | 1 | 6301590 | Parts,swingup stab.cylC125-500 | |
| 13 | 1 | 6302262 | Footplate, fixed | |
| 14 | 1 | 6308230 | Ball joint, C110 | |
| 15 | 1 | 6300272 | Ball joint | |
| 16 | 1 | 33271 | Spring ring | SB 85 |
| 17 | 2 | 6300266 | Ball seat catch | |
| 18 | 1 | 6300265 | Ball seat | |
| 19 | 1 | 31318 | Lubricator | 1/8" RG |
| 20 | 1 | 6300262 | Foot plate | |

# 6020K

Intern ref.: 6303580/6303590

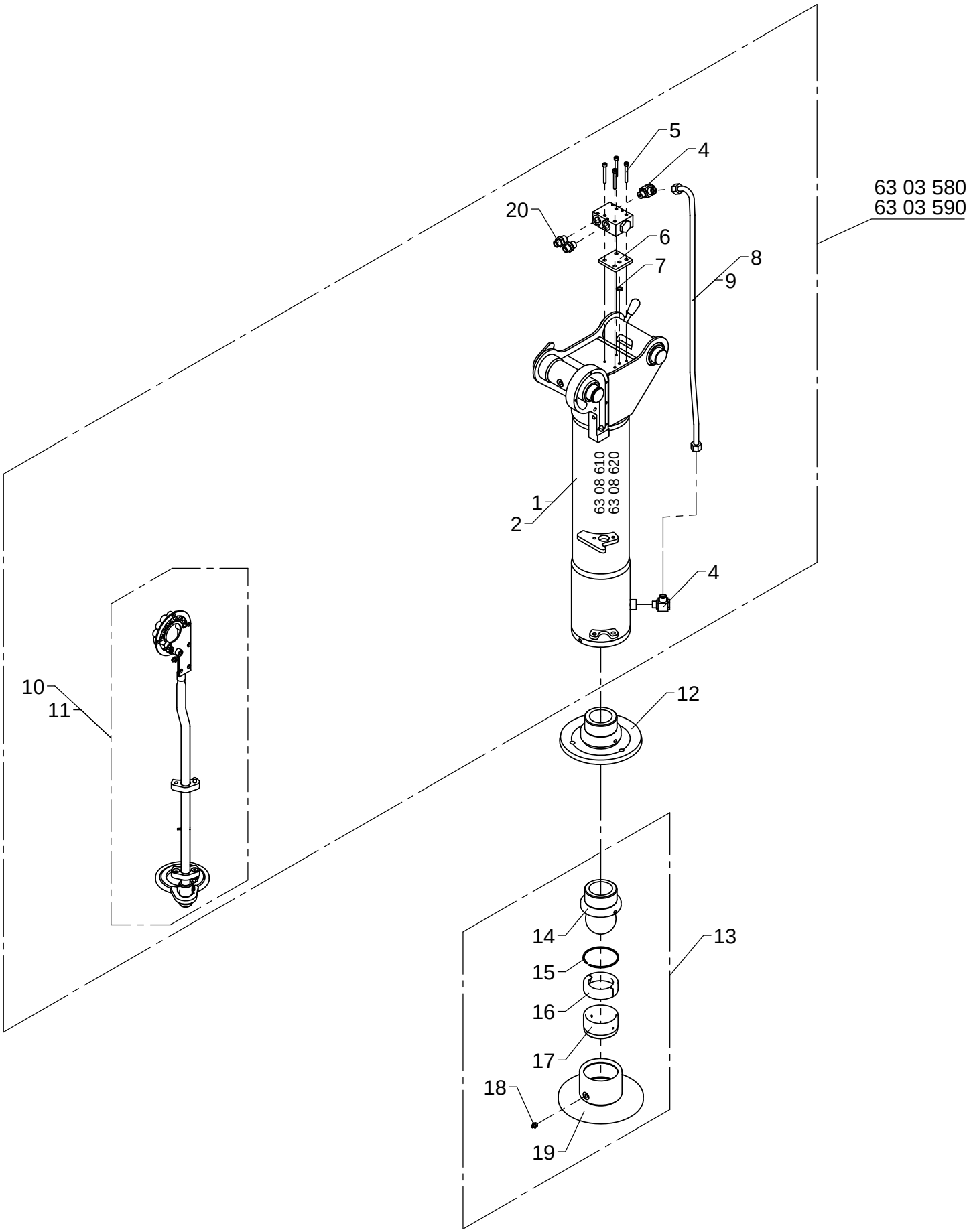

# Stabilizer cylinder with check valve, type HP

AS from / To loader no.: 96 03 83 /
Created: 18.12.2014
Modified:

| Item no. | Qty. | Part no. | Description | Remarks |
|---|---|---|---|---|
| | | 6303580 | Hydr.swingup stab.cyl. C125-500, Kpl. | Pos. 2, 8, 11 |
| | | 6303590 | Hydr.swingup stab.cyl. C125-600, Kpl. | Pos. 1, 9, 10 |
| 1 | 1 | 6308610 | | |
| 2 | 1 | 6308620 | Stabilizer cylinder C125-500 | |
| 3 | 1 | 59924 | Piloted check-valve | |
| 4 | 2 | 25130 | Banjo connection | RSWV 12 LR |
| 5 | 4 | 30457 | Screw | MC6 x 50 |
| 6 | 1 | 6301076 | Block | |
| 7 | 1 | 20126 | O-ring | OR 11,3 x 2,4 |
| 8 | 1 | 6301289 | Pipe | C125-500 |
| 9 | 1 | 6301288 | Pipe | C125-600 |
| 10 | 1 | 6302410 | Parts,swingup stab.cylC125-600 | |
| 11 | 1 | 6301590 | Parts,swingup stab.cylC125-500 | |
| 12 | 1 | 6302262 | Footplate, fixed | |
| 13 | 1 | 6308230 | Ball joint, C110 | |
| 14 | 1 | 6300272 | Ball joint | |
| 15 | 1 | 33271 | Spring ring | SB 85 |
| 16 | 2 | 6300266 | Ball seat catch | |
| 17 | 1 | 6300265 | Ball seat | |
| 18 | 1 | 31318 | Lubricator | 1/8" RG |
| 19 | 1 | 6300262 | Foot plate | |
| 20 | 2 | 25253 | Connection | P-GEV 10 LR 3/8-WD |

# 6020

Intern ref.: 6300630

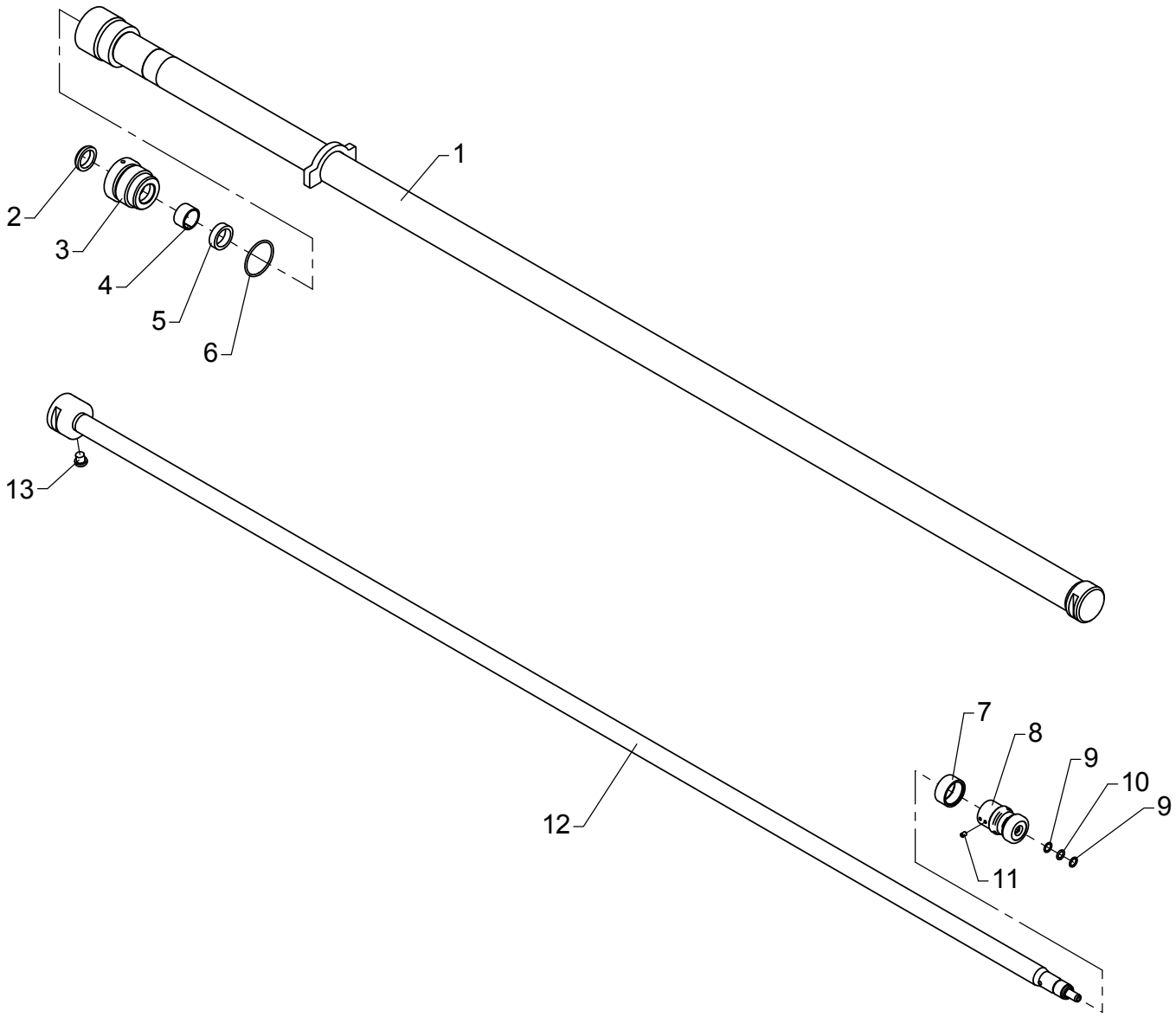

# Beam cylinder C45-2015, type DV+DR+DHR - 6325

As from / To loader no.: 96 00 00 /
Created: 03.10.2003
Modified: 29.01.2015

| Item no. | Qty. | Part no. | Description | Remarks |
|---|---|---|---|---|
| | 1 | 6893320 | Seal kit C45 | Pos. 2, 4, 5, 6, 7, 9, 10 |
| 1 | 1 | 6300631 | Cylinder | |
| 2 | 1 | 20507 | Scraper | AUAS 30 x 40 x 5/8 |
| 3 | 1 | 1291323 | Guide | |
| 4 | 1 | 21912 | Bearing | HH506 30 x 35 x 20 |
| 5 | 1 | 20683 | Seal | HH605 30 x 40 x 11 |
| 6 | 1 | 20183 | O-ring | OR 54,5 x 3 |
| 7 | 1 | 20949 | Seal | 45 x 37 x 15,5 |
| 8 | 1 | 1310733 | Piston | |
| 9 | 2 | 20879 | Back ring | 11,3 x 2,4 |
| 10 | 1 | 20126 | O-ring | OR 11,3 x 2,4 |
| 11 | 1 | 30903 | Pointed screw | MSP6 x 8 |
| 12 | 1 | 6300636 | Piston rod | |
| 13 | 1 | 25197 | Plug | VS-R-1/4 WD |

# ODIN

Intern ref.: 6300960

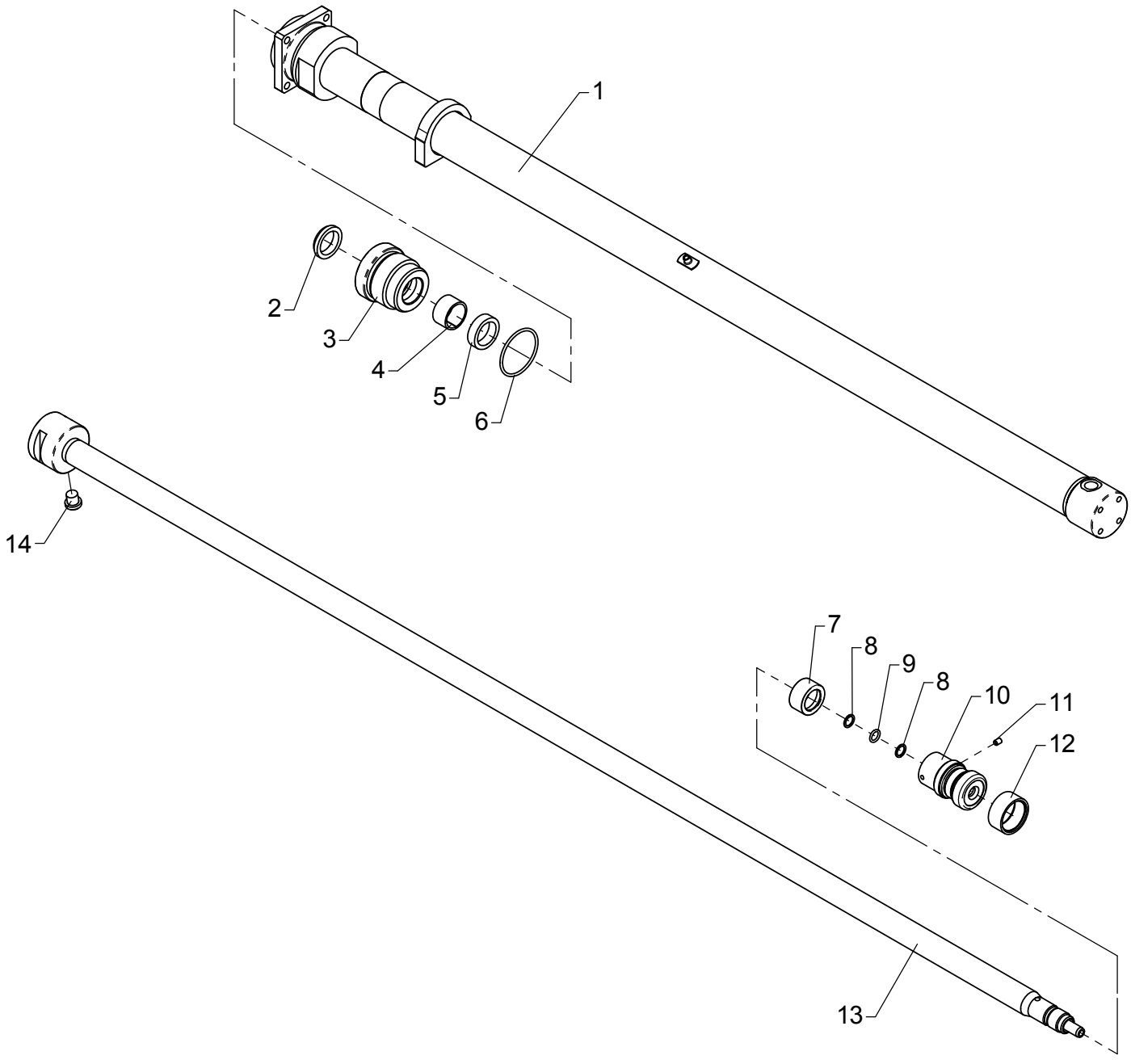

# Beam cylinder C45-1140, type DV+DR+DHR - 6725

As from / To loader no.: 96 00 00 /
Created: 03.10.2003
Modified: 29.01.2015

| Item no. | Qty. | Part no. | Description | Remarks |
|---|---|---|---|---|
| | 1 | 6893320 | Seal kit C45 | Pos. 2, 4, 5, 6, 8, 9, 12 |
| 1 | 1 | 6300961 | Cylinder | |
| 2 | 1 | 20507 | Scraper | AUAS 30 x 40 x 5/8 |
| 3 | 1 | 1291323 | Guide | |
| 4 | 1 | 21912 | Bearing | HH506 30 x 35 x 20 |
| 5 | 1 | 20683 | Seal | HH605 30 x 40 x 11 |
| 6 | 1 | 20183 | O-ring | OR 54,5 x 3 |
| 7 | 1 | 6300204 | Spacer | |
| 8 | 2 | 20879 | Back ring | 11,3 x 2,4 |
| 9 | 1 | 20126 | O-ring | OR 11,3 x 2,4 |
| 10 | 1 | 1310733 | Piston | |
| 11 | 1 | 30903 | Pointed screw | MSP6 x 8 |
| 12 | 1 | 20949 | Seal | 45 x 37 x 15,5 |
| 13 | 1 | 6300205 | Piston rod | |
| 14 | 1 | 25197 | Plug | VS-R-1/4 WD |

Please note: Drill a ø5 x 2-3 mm hole before the screw is fitted.

# ODIN

Intern ref.: 6300970

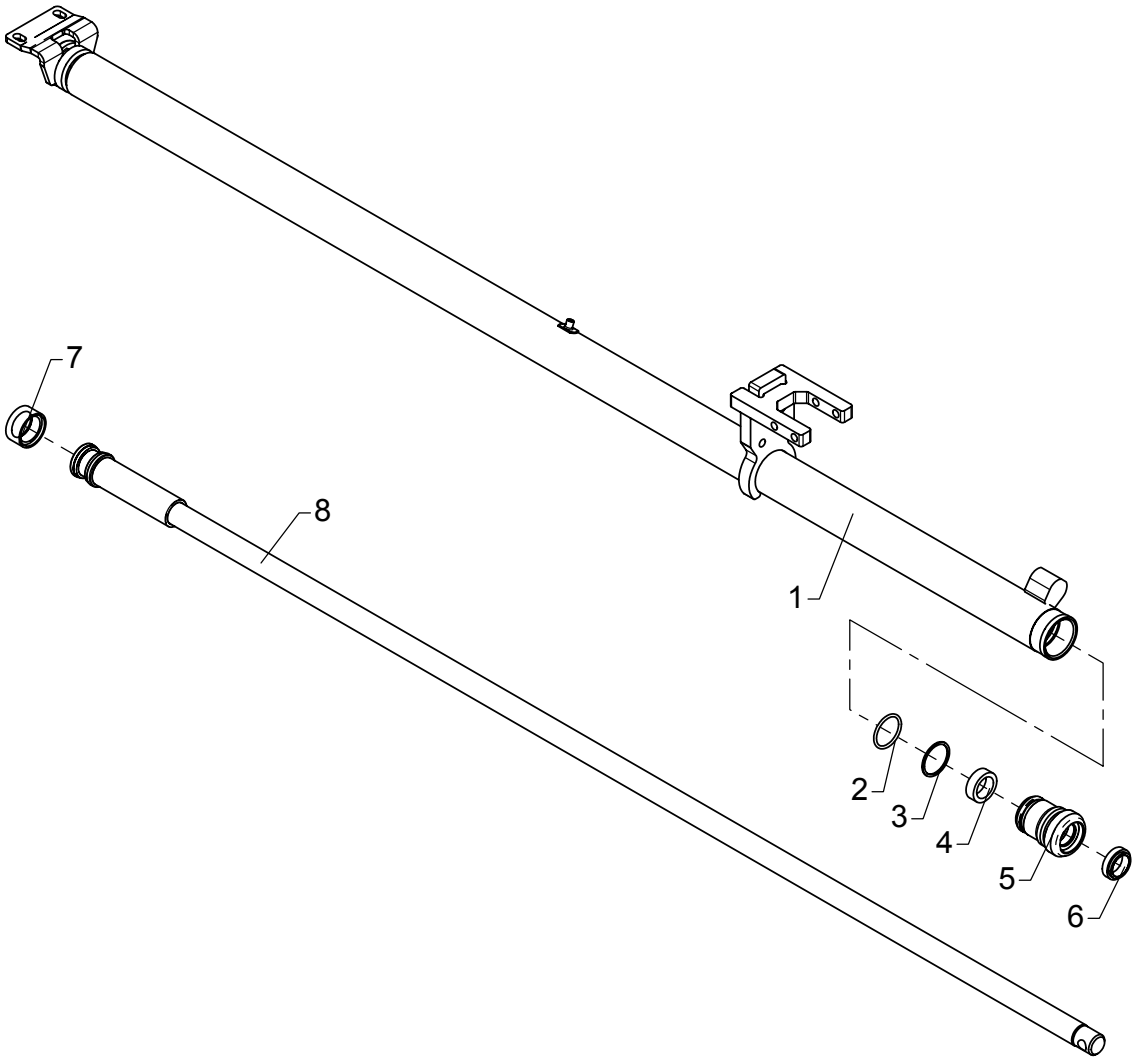

# Beam cylinder C40-1275, type DV+DR+DHR - 6725

As from / To loader no.: 96 00 00 /96 03 73
Created: 03.10.2003
Modified: 23.02.2015

| Item no. | Qty. | Part no. | Description | Remarks |
|---|---|---|---|---|
| | 1 | 6892670 | Seal kit C40 | Pos. 2, 3, 4, 6, 7 |
| 1 | 1 | 6300971 | Cylinder | |
| 2 | 1 | 20177 | O-ring | OR 34,2 x 3 |
| 3 | 1 | 20705 | Back ring | STR 35 x 40 x 1,3 |
| 4 | 1 | 20651 | Seal | HH605 25 x 35 x 11 |
| 5 | 1 | 6194183 | Guide | |
| 6 | 1 | 20505 | Scraper | GA 25 x 35 x 7/10 |
| 7 | 1 | 20779 | Double acting seal | MDM 40 x 30 x 12,3 |
| 8 | 1 | 6300973 | Piston rod | |

# ODIN

Intern ref.: 6300970

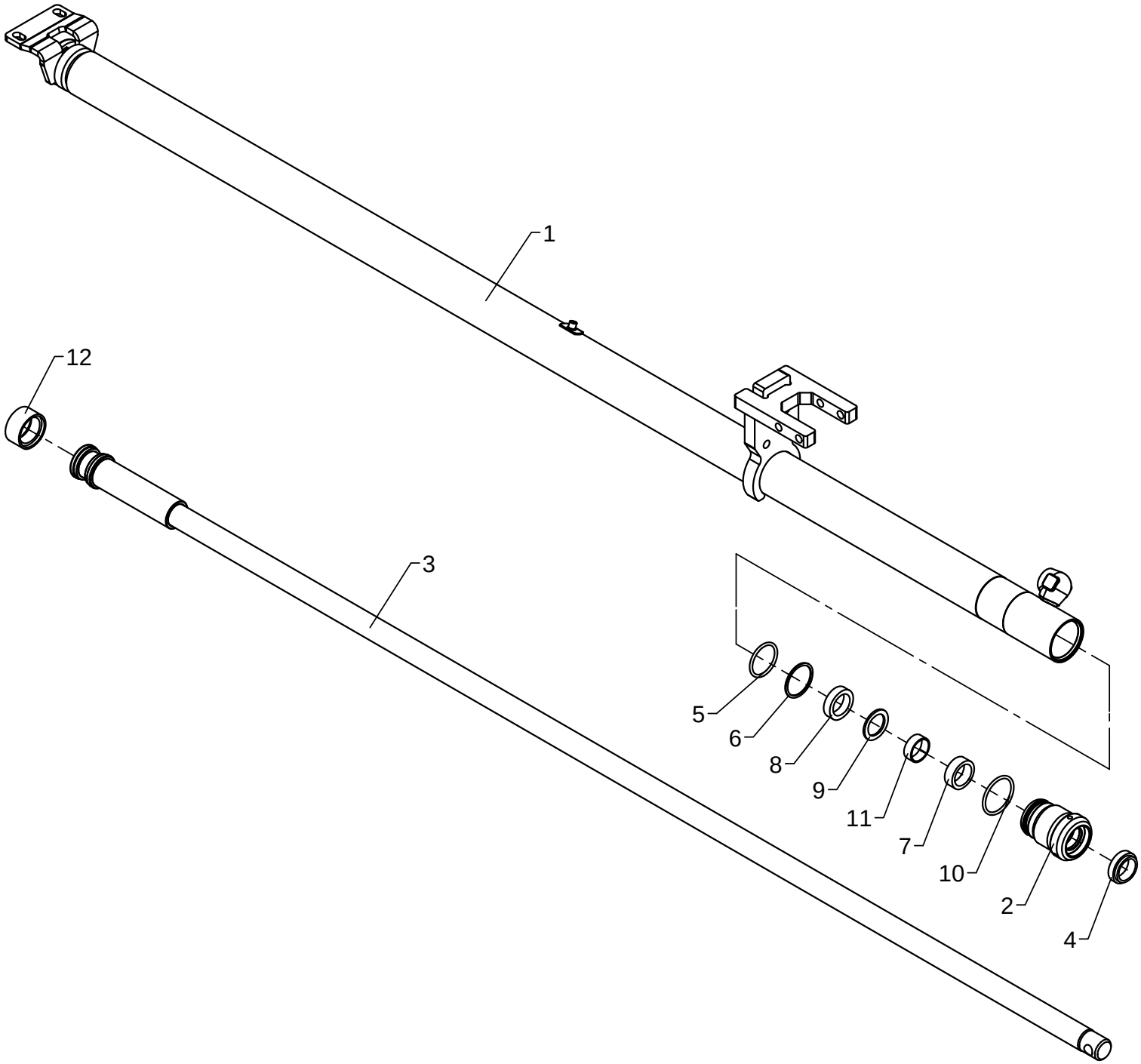

# Beam cylinder C40-1275, type DV+DR+DHR - 6725

As from / To loader no.: 96 03 74/
Created: 23.02.2015
Modified:

| Item no. | Qty. | Part no. | Description | Remarks |
|---|---|---|---|---|
| | 1 | 6894770 | Seal kit C40 | Pos. 4, 5, 6, 7, 8, 9, 10, 11, 12 |
| 1 | 1 | 6300771 | Cylinder | |
| 2 | 1 | 6390509 | Guide | |
| 3 | 1 | 6300973 | Piston rod | |
| 4 | 1 | 20505 | Scraper | GA 25 x 35 x 7/10 |
| 5 | 1 | 20177 | O-ring | OR 34,2 x 3 |
| 6 | 1 | 20705 | Back ring | STR 35 x 40 x 1,3 |
| 7 | 1 | 20651 | Seal | HH605 25 x 33 x 11 |
| 8 | 1 | 21825 | Seal | HH605 75 x 85 x 13 |
| 9 | 1 | 21824 | Back ring | STR 25 x 35 x 2 |
| 10 | 1 | 20180 | O-ring | OR 39,2 x 3,53 |
| 11 | 1 | 21826 | Bearing | HH506 60 x 65 x 25 |
| 12 | 1 | 20779 | Double acting seal | MDM 40 x 30 x 12,3 |

# ODIN

Intern ref.: 6300200

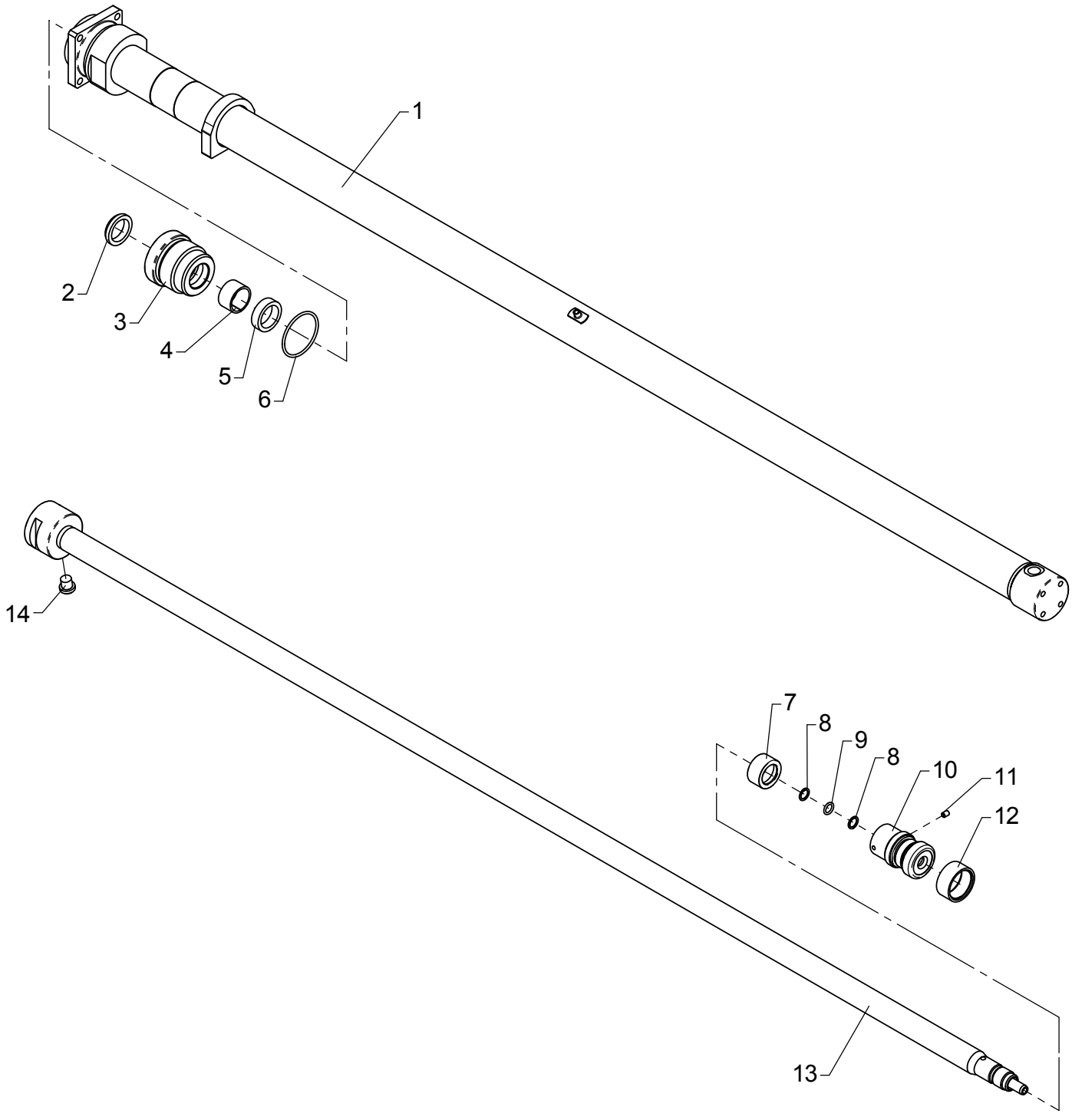

# Beam cylinder C45-1465, type DV+DR+DHR - 8420

As from / To loader no.: 96 00 00 /
Created: 03.10.2003
Modified: 29.01.2015

| Item no. | Qty. | Part no. | Description | Remarks |
|---|---|---|---|---|
| | 1 | 6893320 | Seal kit C45 | Pos. 2, 4, 5, 6, 8, 9, 12 |
| 1 | 1 | 6300201 | Cylinder | |
| 2 | 1 | 20507 | Scraper | AUAS 30 x 40 x 5/8 |
| 3 | 1 | 1291323 | Guide | |
| 4 | 1 | 21912 | Bearing | HH506 30 x 35 x 20 |
| 5 | 1 | 20683 | Seal | HH605 30 x 40 x 11 |
| 6 | 1 | 20183 | O-ring | OR 54,5 x 3 |
| 7 | 1 | 6300204 | Spacer | |
| 8 | 2 | 20879 | Back ring | 11,3 x 2,4 |
| 9 | 1 | 20126 | O-ring | OR 11,3 x 2,4 |
| 10 | 1 | 1310733 | Piston | |
| 11 | 1 | 30903 | Pointed screw | MSP6 x 8 |
| 12 | 1 | 20949 | Seal | 45 x 37 x 15,5 |
| 13 | 1 | 6300205 | Piston rod | |
| 14 | 1 | 25197 | Plug | VS-R-1/4 WD |

Please note: Drill a ø5 x 2-3 mm hole before the screw is fitted.

# ODIN

Intern ref.: 6300210

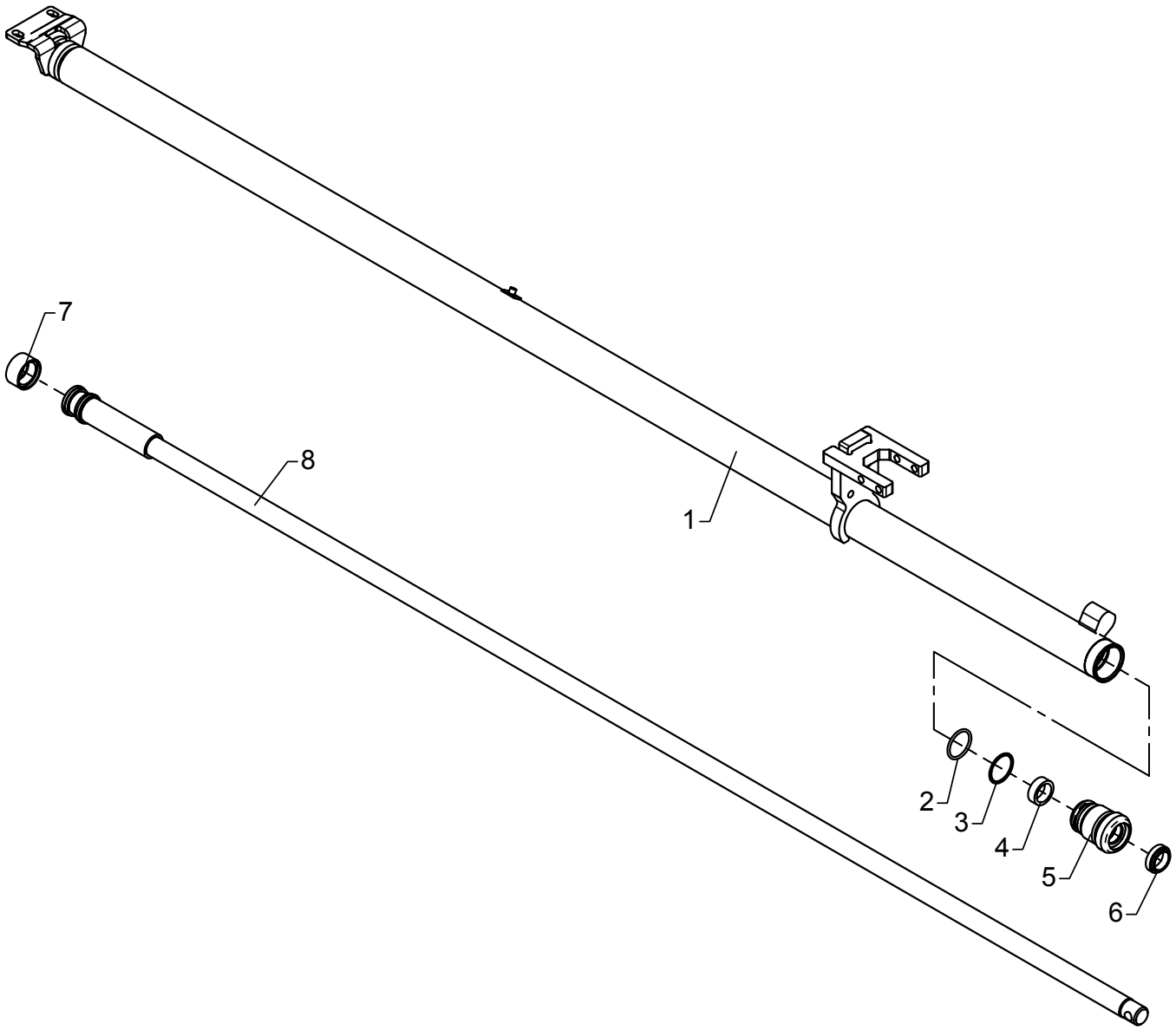

# Beam cylinder C40-1600, type DV+DR+DHR - 8420

As from / To loader no.: 96 00 00 /96 03 70
Created: 03.10.2003
Modified: 23.02.2015

| Item no. | Qty. | Part no. | Description | Remarks |
|---|---|---|---|---|
| | 1 | 6892670 | Seal kit C40 | Pos. 2, 3, 4, 6, 7 |
| 1 | 1 | 6300211 | Cylinder | |
| 2 | 1 | 20177 | O-ring | OR 34,2 x 3 |
| 3 | 1 | 20705 | Back ring | STR 35 x 40 x 1,3 |
| 4 | 1 | 20651 | Seal | HH605 25 x 35 x 11 |
| 5 | 1 | 6194183 | Guide | |
| 6 | 1 | 20505 | Scraper | GA 25 x 35 x 7/10 |
| 7 | 1 | 20779 | Double acting seal | MDM 40 x 30 x 12,3 |
| 8 | 1 | 6300216 | Piston rod | |

# ODIN

Intern ref.: 6300210

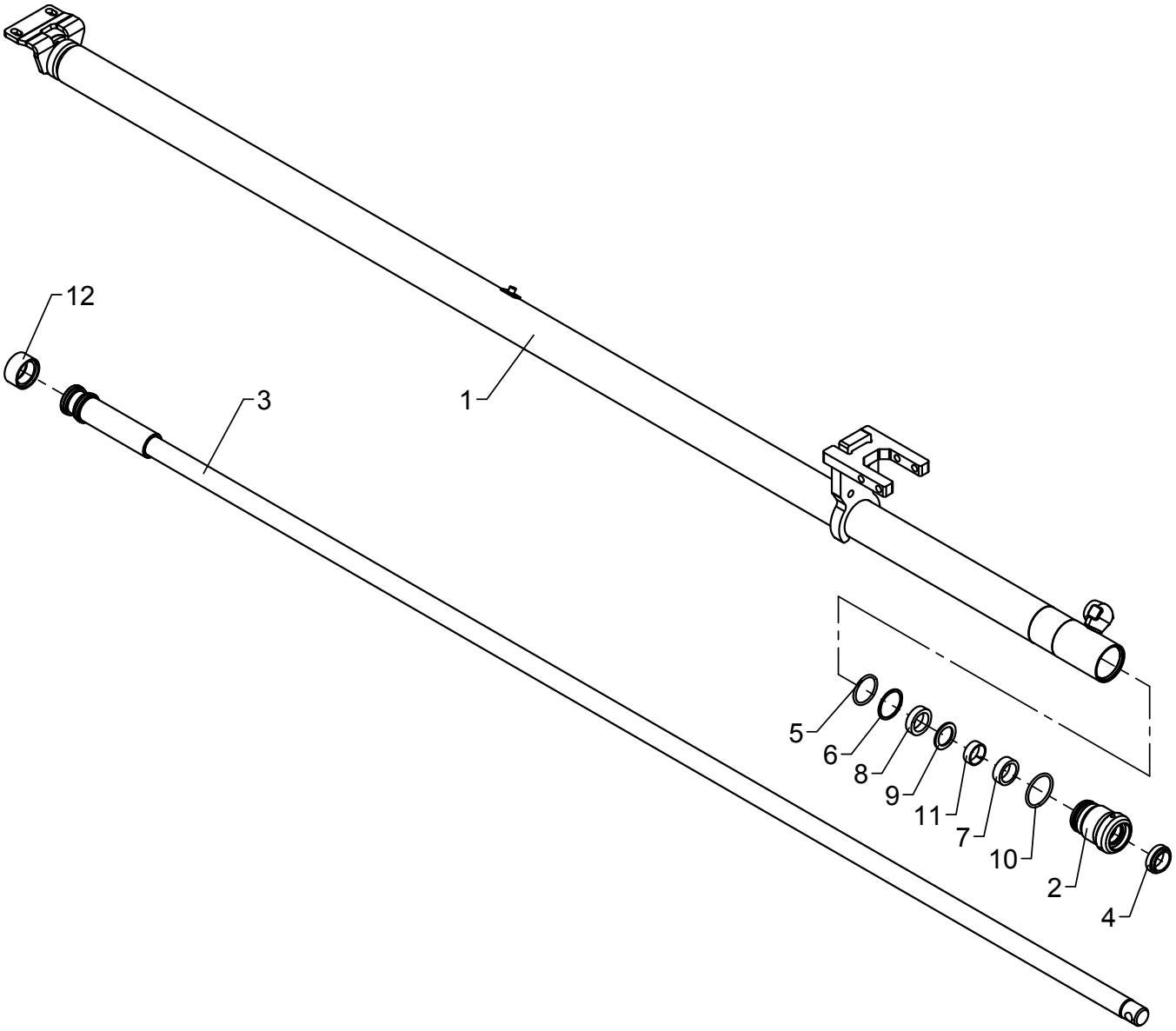

# Beam cylinder C40-1600, type DV+DR+DHR - 8420

As from / To loader no.: 96 03 71/
Created: 23.02.2015
Modified:

| Item no. | Qty. | Part no. | Description | Remarks |
|---|---|---|---|---|
| | 1 | 6894770 | Seal kit C40 | Pos. 4, 5, 6, 7, 8, 9, 10, 11, 12 |
| 1 | 1 | 6300747 | Cylinder | |
| 2 | 1 | 6390509 | Guide | |
| 3 | 1 | 6300216 | Piston rod | |
| 4 | 1 | 20505 | Scraper | GA 25 x 35 x 7/10 |
| 5 | 1 | 20177 | O-ring | OR 34,2 x 3 |
| 6 | 1 | 20705 | Back ring | STR 35 x 40 x 1,3 |
| 7 | 1 | 20651 | Seal | HH605 25 x 33 x 11 |
| 8 | 1 | 21825 | Seal | HH605 75 x 85 x 13 |
| 9 | 1 | 21824 | Back ring | STR 25 x 35 x 2 |
| 10 | 1 | 20180 | O-ring | OR 39,2 x 3,53 |
| 11 | 1 | 21826 | Bearing | HH506 60 x 65 x 25 |
| 12 | 1 | 20779 | Double acting seal | MDM 40 x 30 x 12,3 |

# ODIN

Intern ref.: 6300610

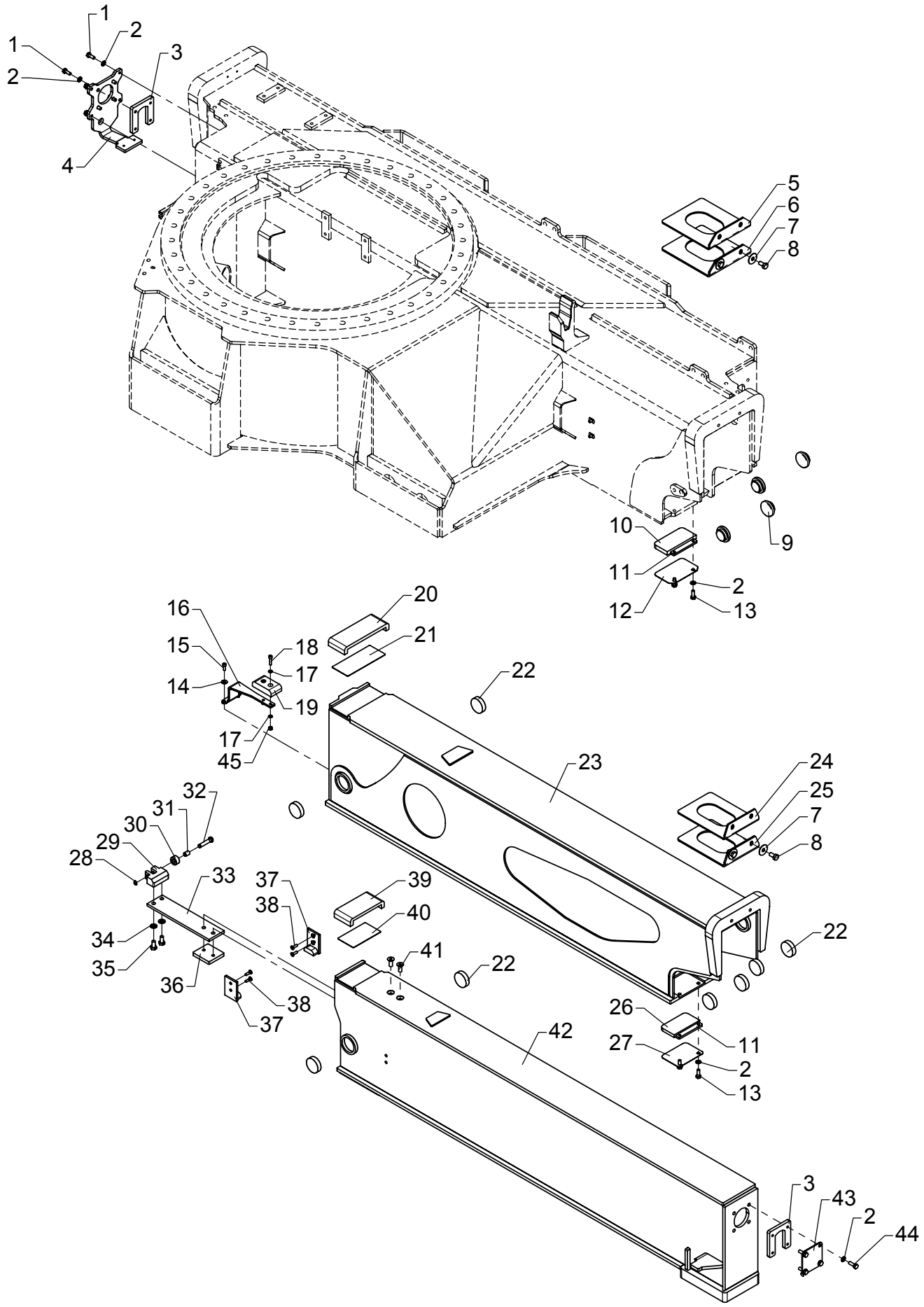

# Stabilizer beam, type DV - 6325

As from / To loader no.: 96 00 00 / 96 03 82
Created: 03.10.2003
Modified:

| Item no. | Qty. | Part no. | Description | Remarks |
|---|---|---|---|---|
| 1 | 8 | 30132 | Set screw, stainless | |
| 2 | 16 | 31147 | Face washer, 8 mm | |
| 3 | 2 | 6300086 | Bracket | |
| 4 | 1 | 6300085 | End plate | |
| 5 | 1 | 6300045 | Spacer | |
| 6 | 1 | 6300046 | Spacer | |
| 7 | 4 | 31141 | Washer | 10 mm |
| 8 | 4 | 31517 | Set screw, stainless | M10 x 20 |
| 9 | 4 | 63739 | Guide shoe | |
| 10 | 1 | 63741 | Slide block | |
| 11 | 2 | 6300087 | Spacer | |
| 12 | 1 | 6302041 | Division plate | |
| 13 | 4 | 30133 | Set screw, stainless | |
| 14 | 2 | 31134 | Washer, stainless | |
| 15 | 2 | 31539 | Screw, stainless | MC6 x 16 |
| 16 | 1 | 6300081 | Bracket for slide block | |
| 17 | 4 | 32302 | Face washer, stainless | 6 mm |
| 18 | 2 | 30962 | Screw | MC6 x 25 |
| 19 | 1 | 63744 | Supporting block | |
| 20 | 1 | 63745 | Slide block | |
| 21 | 1 | 6302045 | Division plate | |
| 22 | 8 | 63740 | Slide block | |
| 23 | 1 | 6300611 | Stabilizer beam I, short | |
| 24 | 1 | 6300048 | Spacer | |
| 25 | 1 | 6300049 | Spacer | |
| 26 | 1 | 63742 | Slide block | |
| 27 | 1 | 6302043 | Division plate | |
| 28 | 1 | 33101 | Circlip | 10U |
| 29 | 1 | 6300643 | Stop block | |
| 30 | 1 | 6300641 | Roller | |
| 31 | 1 | 23934 | Bushing | MB 1015 DU-B |
| 32 | 1 | 6300642 | Pin | |
| 33 | 1 | 6300644 | Spring leaf | |
| 34 | 2 | 31177 | Washer | 10 mm |
| 35 | 2 | 30154 | Set screw | M10 x 20 |
| 36 | 1 | 6300645 | Spacer | |
| 37 | 2 | 63743 | Guide | |
| 38 | 4 | 30579 | Countersunk screw | MK6 x 20 |
| 39 | 1 | 63746 | Slide block | |

# ODIN

Intern ref.: 6300610

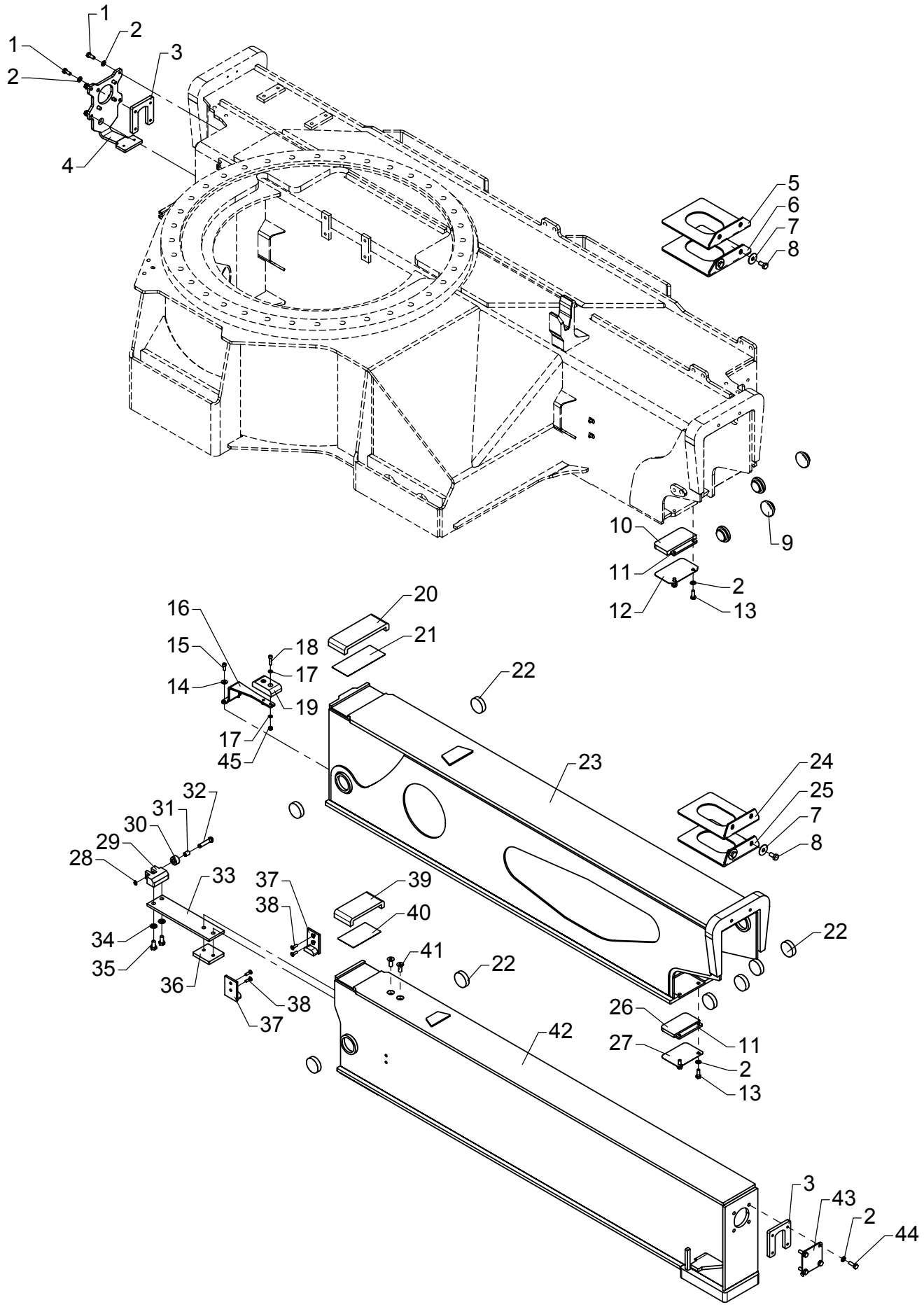

# Stabilizer beam, type DV - 6325

As from / To loader no.: 96 00 00 / 96 03 82
Created: 03.10.2003
Modified:

| Item no. | Qty. | Part no. | Description | Remarks |
|---|---|---|---|---|
| 40 | 1 | 6302044 | Division plate | |
| 41 | 2 | 30546 | Countersunk screw | MK10 x 25 |
| 42 | 1 | 6300621 | Stabilizer beam II, short | |
| 43 | 1 | 6300639 | End plate | |
| 44 | 4 | 30134 | Set screw, stainless | M8 x 25 |
| 45 | 2 | 30884 | Lock nut, stainless | M6 |

Please note: All screws – Loctite 243

# 6020

Intern ref.: 6300610 / 6300621

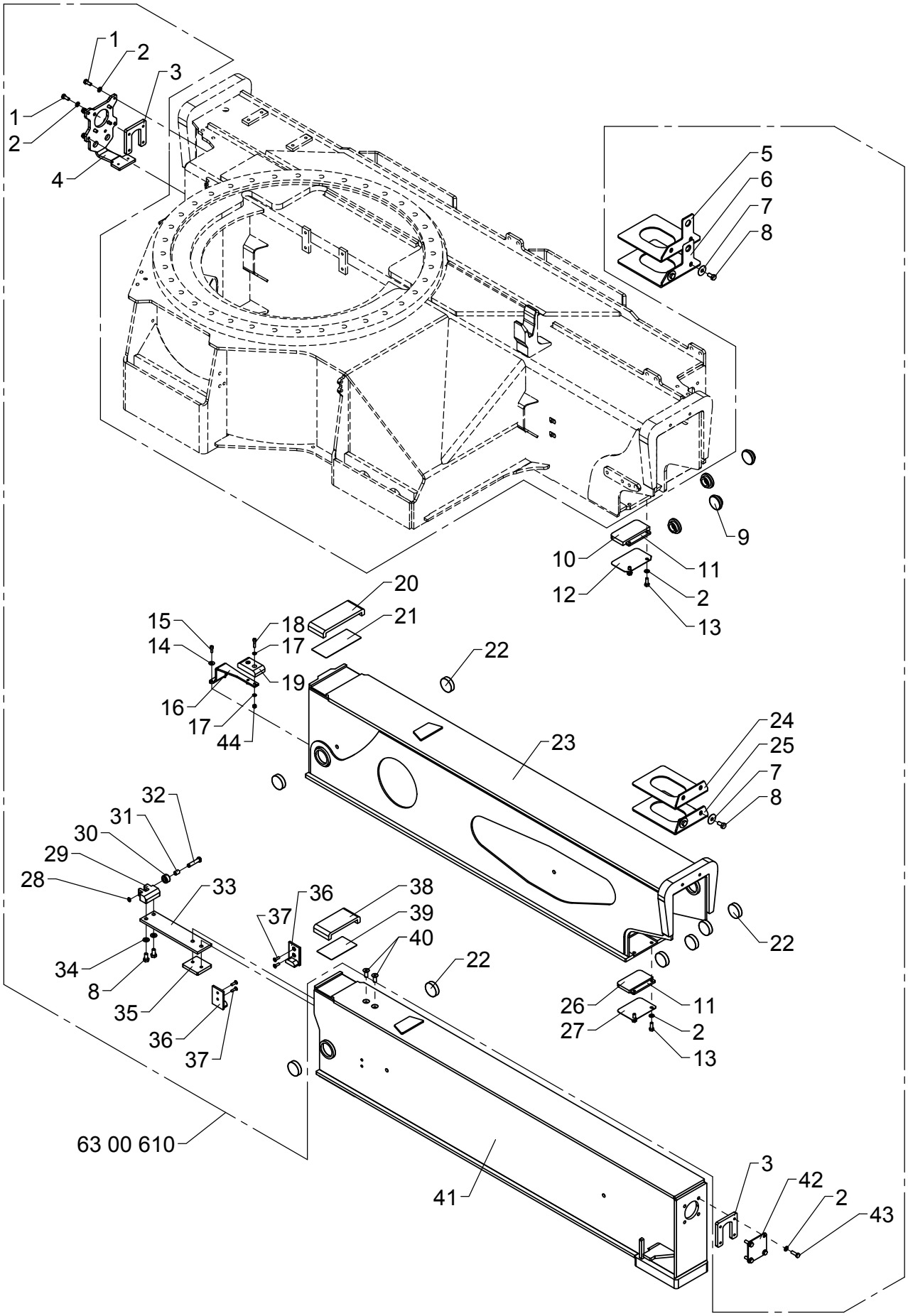

# Stabilizer beam, type DV - 6325

As from / To loader no.: 96 03 83
Created: 08.01.2015
Modified:

| Item no. | Qty. | Part no. | Description | Remarks |
|---|---|---|---|---|
| 1 | 8 | 30132 | Set screw, stainless | |
| 2 | 16 | 31147 | Face washer, 8 mm | |
| 3 | 2 | 6300086 | Bracket | |
| 4 | 1 | 6301394 | End plate | |
| 5 | 1 | 6300045 | Spacer | |
| 6 | 1 | 6300046 | Spacer | |
| 7 | 4 | 31141 | Washer | 10 mm |
| 8 | 6 | 31517 | Set screw, stainless | M10 x 20 |
| 9 | 4 | 63739 | Guide shoe | |
| 10 | 1 | 63741 | Slide block | |
| 11 | 2 | 6300087 | Spacer | |
| 12 | 1 | 6302041 | Division plate | |
| 13 | 4 | 30133 | Set screw, stainless | |
| 14 | 2 | 31134 | Washer, stainless | |
| 15 | 2 | 31539 | Screw, stainless | MC6 x 16 |
| 16 | 1 | 6300081 | Bracket for slide block | |
| 17 | 4 | 32302 | Face washer, stainless | 6 mm |
| 18 | 2 | 30962 | Screw | MC6 x 25 |
| 19 | 1 | 63744 | Supporting block | |
| 20 | 1 | 63745 | Slide block | |
| 21 | 1 | 6302045 | Division plate | |
| 22 | 8 | 63740 | Slide block | |
| 23 | 1 | 6300611 | Stabilizer beam I, short | |
| 24 | 1 | 6300048 | Spacer | |
| 25 | 1 | 6300049 | Spacer | |
| 26 | 1 | 63742 | Slide block | |
| 27 | 1 | 6302043 | Division plate | |
| 28 | 1 | 33101 | Circlip | 10U |
| 29 | 1 | 6300643 | Stop block | |
| 30 | 1 | 6300641 | Roller | |
| 31 | 1 | 23934 | Bushing | MB 1015 DU-B |
| 32 | 1 | 6300642 | Pin | |
| 33 | 1 | 6300644 | Spring leaf | |
| 34 | 2 | 31177 | Washer | 10 mm |
| 35 | 1 | 6300645 | Spacer | |
| 36 | 2 | 63743 | Guide | |
| 37 | 4 | 30579 | Countersunk screw | MK6 x 20 |
| 38 | 1 | 63746 | Slide block | |
| 39 | 1 | 6302044 | Division plate | |

# 6020

Intern ref.: 6300610 / 6300621

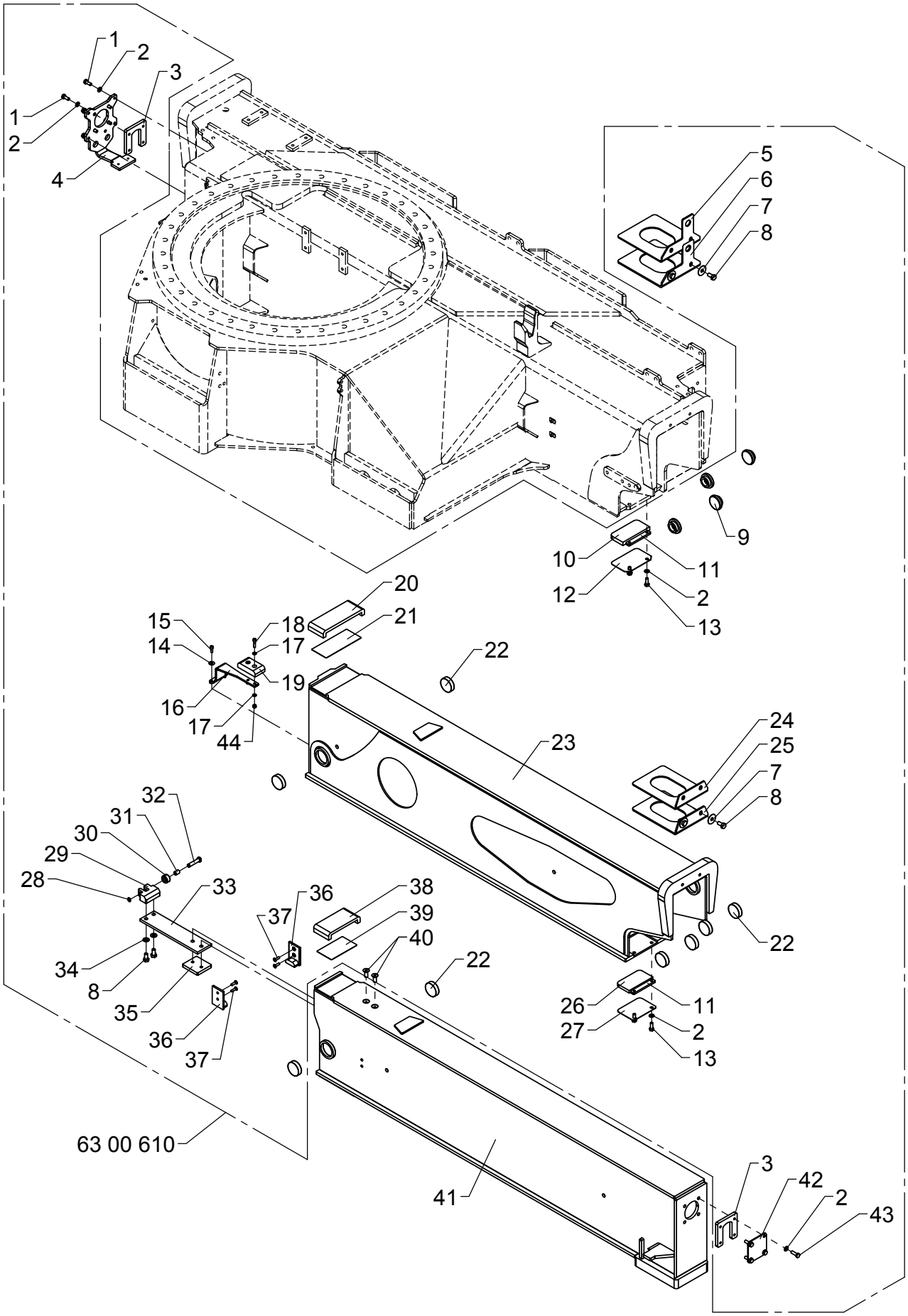

# Stabilizer beam, type DV - 6325

As from / To loader no.: 96 03 83
Created: 08.01.2015
Modified:

| Item no. | Qty. | Part no. | Description | Remarks |
|---|---|---|---|---|
| 40 | 2 | 30546 | Countersunk screw | MK10 x 25 |
| 41 | 1 | 6300621 | Stabilizer beam II, short | |
| 42 | 1 | 6300639 | End plate | |
| 43 | 4 | 30134 | Set screw, stainless | M8 x 25 |
| 44 | 2 | 30884 | Lock nut, stainless | M6 |

Please note: All screws - Loctite 243

# ODIN

Intern ref.: 6300950

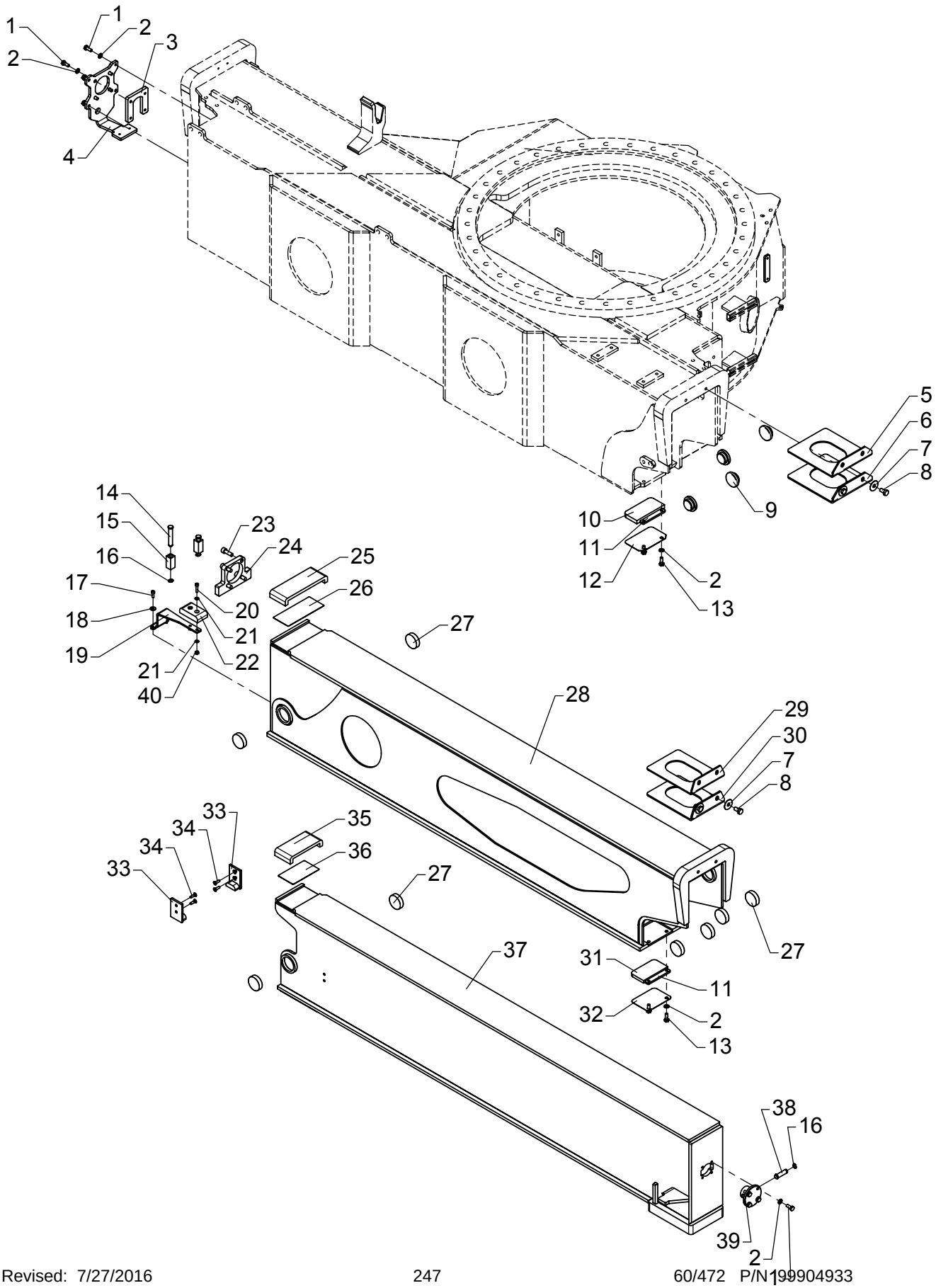

# Stabilizer beam, type DV - 6725

As from / To loader no.: 96 00 00 / 96 03 82
Created: 03.10.2003
Modified:

| Item no. | Qty. | Part no. | Description | Remarks |
|---|---|---|---|---|
| 1 | 12 | 30132 | Set screw, stainless | |
| 2 | 16 | 31147 | Face washer, 8 mm | |
| 3 | 1 | 6300086 | Bracket | |
| 4 | 1 | 6300085 | End plate | |
| 5 | 1 | 6300045 | Spacer | |
| 6 | 1 | 6300046 | Spacer | |
| 7 | 4 | 31141 | Washer | 10 mm |
| 8 | 4 | 31517 | Set screw, stainless | M10 x 20 |
| 9 | 4 | 63739 | Guide shoe | |
| 10 | 1 | 63741 | Slide block | |
| 11 | 2 | 6300087 | Spacer | |
| 12 | 1 | 6302041 | Division plate | |
| 13 | 4 | 30133 | Set screw, stainless | |
| 14 | 2 | 6300088 | Pin | |
| 15 | 2 | 6300089 | Block | |
| 16 | 4 | 33102 | Circlip | 12U |
| 17 | 2 | 31539 | Screw, stainless | MC6 x 16 |
| 18 | 2 | 31134 | Washer, stainless | |
| 19 | 1 | 6300081 | Bracket for slide block | |
| 20 | 2 | 30962 | Screw | MC6 x 25 |
| 21 | 4 | 32302 | Face washer, stainless | 6 mm |
| 22 | 1 | 63744 | Supporting block | |
| 23 | 4 | 31568 | Screw, stainless | MC10 x 30 |
| 24 | 1 | 6300207 | Lock plate | |
| 25 | 1 | 63745 | Slide block | |
| 26 | 1 | 6302045 | Division plate | |
| 27 | 8 | 63740 | Slide block | |
| 28 | 1 | 6300951 | Stabilizer beam I | |
| 29 | 1 | 6300048 | Spacer | |
| 30 | 1 | 6300049 | Spacer | |
| 31 | 1 | 63742 | Slide block | |
| 32 | 1 | 6302043 | Division plate | |
| 33 | 2 | 63743 | Guide | |
| 34 | 4 | 30579 | Countersunk screw | MK6 x 20 |
| 35 | 1 | 63746 | Slide block | |
| 36 | 1 | 6302044 | Division plate | |
| 37 | 1 | 6194264 | Pin | |
| 38 | 1 | 6194244 | Bracket | |
| 39 | 2 | 30884 | Lock nut, stainless | M6 |
| 40 | 1 | 6300131 | Stabilizer beam II | |

# 6020

Intern ref.: 6300950 / 6300131

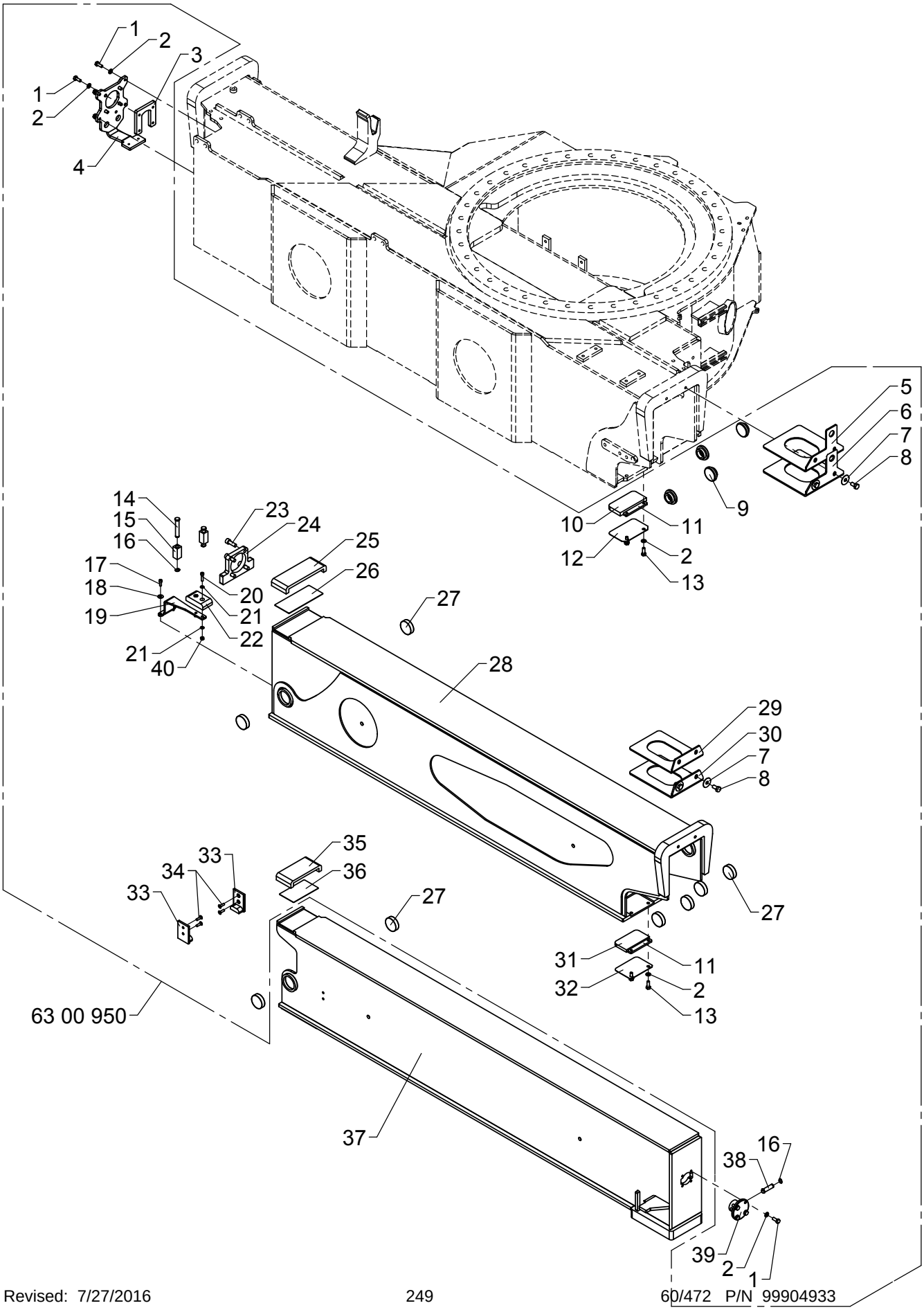

# Stabilizer beam, type DV - 6725

As from / To loader no.: 96 03 83
Created: 08.01.2015
Modified:

| Item no. | Qty. | Part no. | Description | Remarks |
|---|---|---|---|---|
| 1 | 12 | 30132 | Set screw, stainless | |
| 2 | 16 | 31147 | Face washer, 8 mm | |
| 3 | 1 | 6300086 | Bracket | |
| 4 | 1 | 6301394 | End plate | |
| 5 | 1 | 6300045 | Spacer | |
| 6 | 1 | 6300046 | Spacer | |
| 7 | 4 | 31141 | Washer | 10 mm |
| 8 | 4 | 31517 | Set screw, stainless | M10 x 20 |
| 9 | 4 | 63739 | Guide shoe | |
| 10 | 1 | 63741 | Slide block | |
| 11 | 2 | 6300087 | Spacer | |
| 12 | 1 | 6302041 | Division plate | |
| 13 | 4 | 30133 | Set screw, stainless | |
| 14 | 2 | 6300088 | Pin | |
| 15 | 2 | 6300089 | Block | |
| 16 | 4 | 33102 | Circlip | 12U |
| 17 | 2 | 31539 | Screw, stainless | MC6 x 16 |
| 18 | 2 | 31134 | Washer, stainless | |
| 19 | 1 | 6300081 | Bracket for slide block | |
| 20 | 2 | 30962 | Screw | MC6 x 25 |
| 21 | 4 | 32302 | Face washer, stainless | 6 mm |
| 22 | 1 | 63744 | Supporting block | |
| 23 | 4 | 31568 | Screw, stainless | MC10 x 30 |
| 24 | 1 | 6300207 | Lock plate | |
| 25 | 1 | 63745 | Slide block | |
| 26 | 1 | 6302045 | Division plate | |
| 27 | 8 | 63740 | Slide block | |
| 28 | 1 | 6300951 | Stabilizer beam I | |
| 29 | 1 | 6300048 | Spacer | |
| 30 | 1 | 6300049 | Spacer | |
| 31 | 1 | 63742 | Slide block | |
| 32 | 1 | 6302043 | Division plate | |
| 33 | 2 | 63743 | Guide | |
| 34 | 4 | 30579 | Countersunk screw | MK6 x 20 |
| 35 | 1 | 63746 | Slide block | |
| 36 | 1 | 6302044 | Division plate | |
| 37 | 1 | 6300131 | Stabilizer beam II | |
| 38 | 1 | 6194264 | Pin | |
| 39 | 1 | 6194244 | Bracket | |
| 40 | 2 | 30884 | Lock nut, stainless | M6 |

# ODIN

Intern ref.: 6300090

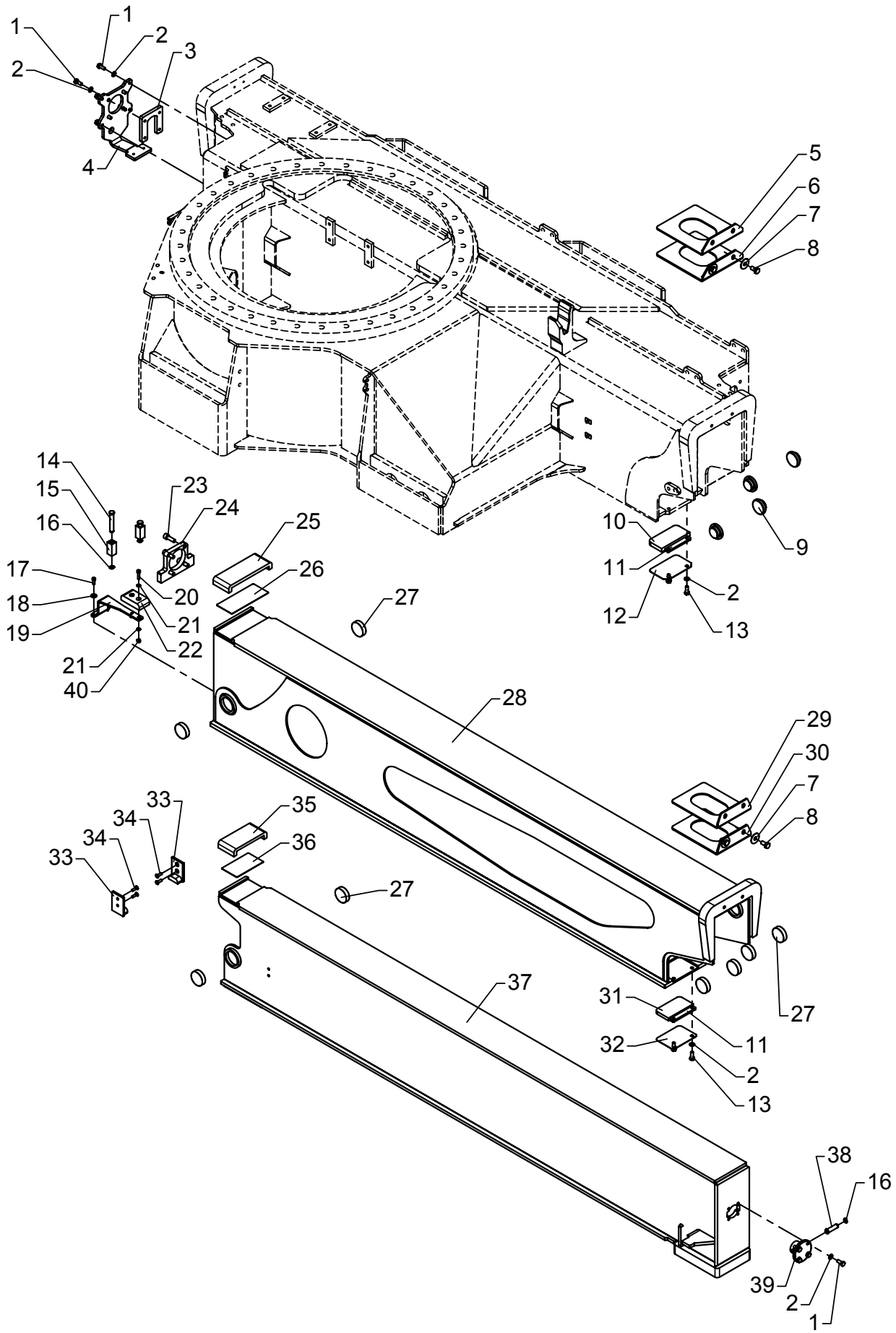

# Stabilizer beam, type DV - 8420

As from / To loader no.: 96 00 00 / 96 03 82
Created: 13.10.2004
Modified: 25.02.2015

| Item no. | Qty. | Part no. | Description | Remarks |
|---|---|---|---|---|
| 1 | 12 | 30132 | Set screw, stainless | |
| 2 | 16 | 31147 | Face washer, 8 mm | |
| 3 | 1 | 6300086 | Bracket | |
| 4 | 1 | 6300085 | End plate | |
| 5 | 1 | 6300045 | Spacer | |
| 6 | 1 | 6300046 | Spacer | |
| 7 | 4 | 31141 | Washer | 10 mm |
| 8 | 4 | 31517 | Set screw, stainless | M10 x 20 |
| 9 | 4 | 63739 | Guide shoe | |
| 10 | 1 | 63741 | Slide block | |
| 11 | 2 | 6300087 | Spacer | |
| 12 | 1 | 6302041 | Division plate | |
| 13 | 4 | 30133 | Set screw, stainless | |
| 14 | 2 | 6300088 | Pin | |
| 15 | 2 | 6300089 | Block | |
| 16 | 4 | 33102 | Circlip | 12U |
| 17 | 2 | 31539 | Screw, stainless | MC6 x 16 |
| 18 | 2 | 31134 | Washer, stainless | |
| 19 | 1 | 6300081 | Bracket for slide block | |
| 20 | 2 | 30962 | Screw | MC6 x 25 |
| 21 | 4 | 32302 | Face washer, stainless | 6 mm |
| 22 | 1 | 63744 | Supporting block | |
| 23 | 4 | 31568 | Screw, stainless | MC10 x 30 |
| 24 | 1 | 6300207 | Lock plate | |
| 25 | 1 | 63745 | Slide block | |
| 26 | 1 | 6302045 | Division plate | |
| 27 | 8 | 63740 | Slide block | |
| 28 | 1 | 6300091 | Stabilizer beam I | |
| 29 | 1 | 6300048 | Spacer | |
| 30 | 1 | 6300049 | Spacer | |
| 31 | 1 | 63742 | Slide block | |
| 32 | 1 | 6302043 | Division plate | |
| 33 | 2 | 63743 | Guide | |
| 34 | 4 | 30579 | Countersunk screw | MK6 x 20 |
| 35 | 1 | 63746 | Slide block | |
| 36 | 1 | 6302044 | Division plate | |
| 37 | 1 | 6301311 | Stabilizer beam II | |
| 38 | 1 | 6194264 | Pin | |
| 39 | 1 | 6194244 | Bracket | |
| 40 | 2 | 30884 | Lock nut, stainless | M6 |

# 6020

6303080 / 6300091
Intern ref.: 6301311

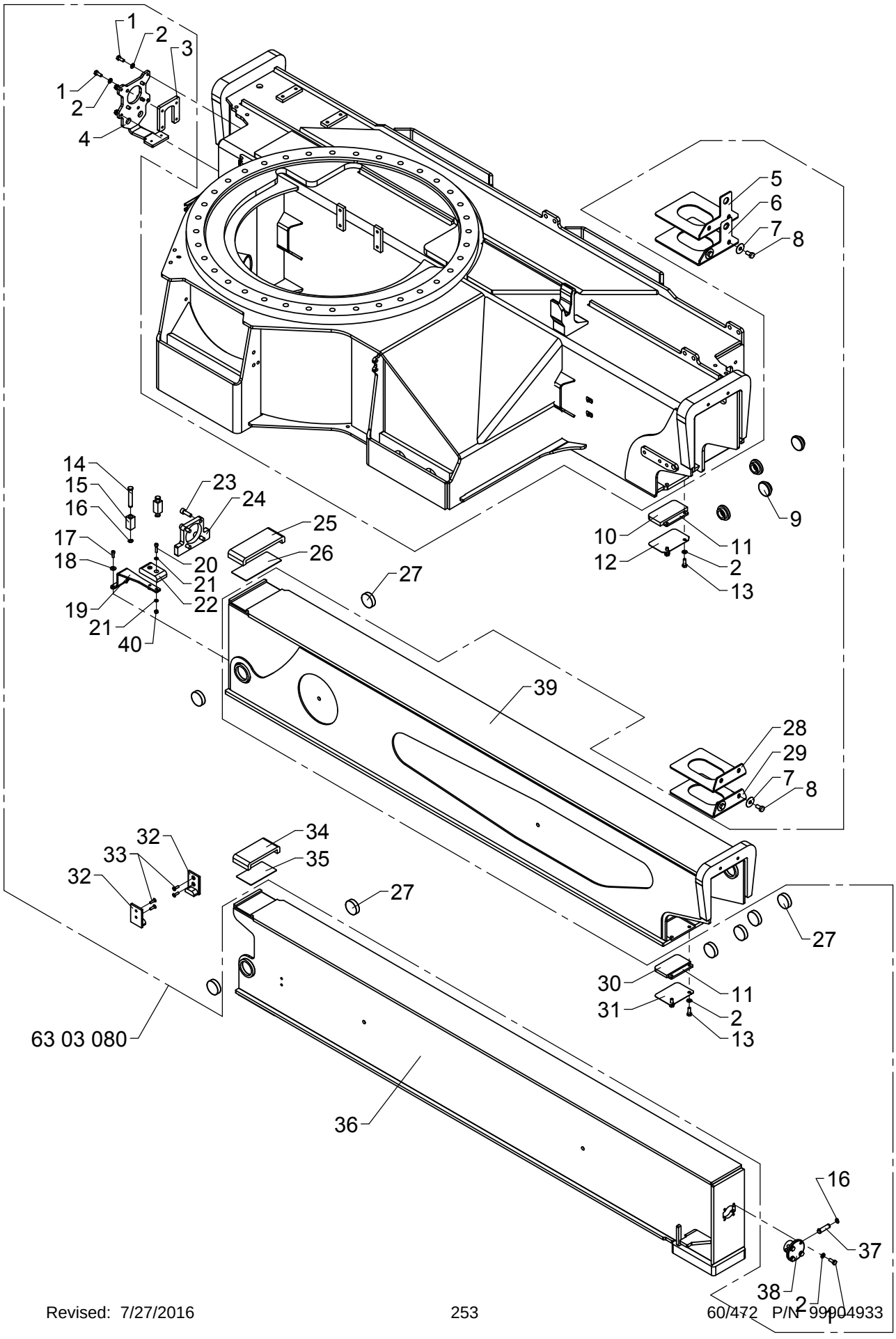

# Stabilizer beam, type DV - 8420

As from / To loader no.: 96 03 83
Created: 07.01.2015
Modified:

| Item no. | Qty. | Part no. | Description | Remarks |
|---|---|---|---|---|
| 1 | 12 | 30132 | Set screw, stainless | |
| 2 | 16 | 31147 | Face washer, 8 mm | |
| 3 | 1 | 6300086 | Bracket | |
| 4 | 1 | 6301394 | End plate | |
| 5 | 1 | 6300045 | Spacer | |
| 6 | 1 | 6300046 | Spacer | |
| 7 | 4 | 31141 | Washer | 10 mm |
| 8 | 4 | 31517 | Set screw, stainless | M10 x 20 |
| 9 | 4 | 63739 | Guide shoe | |
| 10 | 1 | 63741 | Slide block | |
| 11 | 2 | 6300087 | Spacer | |
| 12 | 1 | 6302041 | Division plate | |
| 13 | 4 | 30133 | Set screw, stainless | |
| 14 | 2 | 6300088 | Pin | |
| 15 | 2 | 6300089 | Block | |
| 16 | 4 | 33102 | Circlip | 12U |
| 17 | 2 | 31539 | Screw, stainless | MC6 x 16 |
| 18 | 2 | 31134 | Washer, stainless | |
| 19 | 1 | 6300081 | Bracket for slide block | |
| 20 | 2 | 30962 | Screw | MC6 x 25 |
| 21 | 4 | 32302 | Face washer, stainless | 6 mm |
| 22 | 1 | 63744 | Supporting block | |
| 23 | 4 | 31568 | Screw, stainless | MC10 x 30 |
| 24 | 1 | 6300207 | Lock plate | |
| 25 | 1 | 63745 | Slide block | |
| 26 | 1 | 6302045 | Division plate | |
| 27 | 8 | 63740 | Slide block | |
| 28 | 1 | 6300048 | Spacer | |
| 29 | 1 | 6300049 | Spacer | |
| 30 | 1 | 63742 | Slide block | |
| 31 | 1 | 6302043 | Division plate | |
| 32 | 2 | 63743 | Guide | |
| 33 | 4 | 30579 | Countersunk screw | MK6 x 20 |
| 34 | 1 | 63746 | Slide block | |
| 35 | 1 | 6302044 | Division plate | |
| 36 | 1 | 6301311 | Stabilizer beam II | |
| 37 | 1 | 6194264 | Pin | |
| 38 | 1 | 6194244 | Bracket | |
| 39 | 1 | 6300091 | Stabilizer beam I | |
| 40 | 2 | 30884 | Lock nut, stainless | M6 |

# ODIN

Intern ref.: 6300610

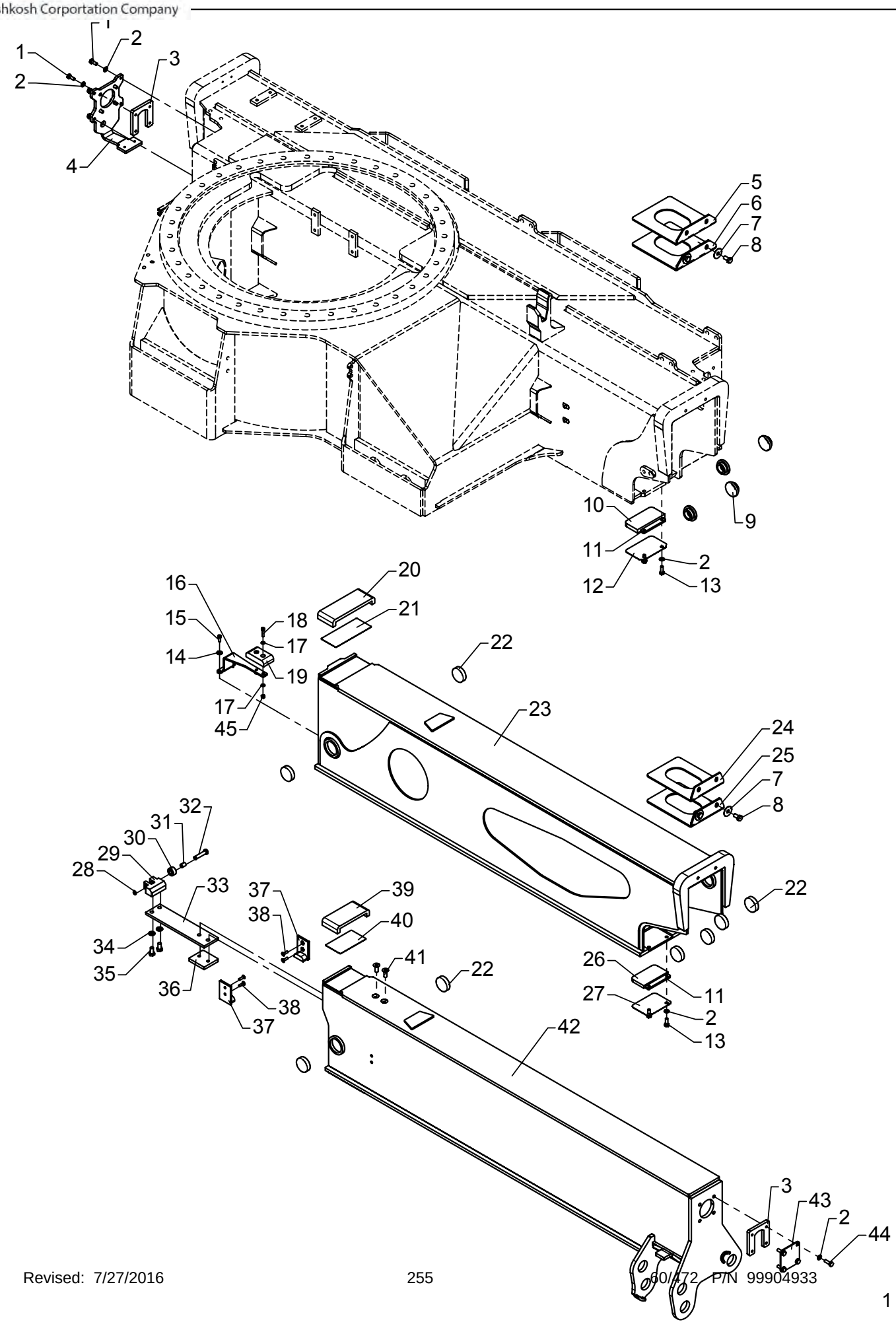

# Stabilizer beam, type DR - 6325

As from / To loader no.: 96 00 00 / 96 03 82
Created: 22.06.2006
Modified: 26.02.2015

| Item no. | Qty. | Part no. | Description | Remarks |
|---|---|---|---|---|
| 1 | 8 | 30132 | Set screw, stainless | |
| 2 | 16 | 31147 | Face washer, 8 mm | |
| 3 | 2 | 6300086 | Bracket | |
| 4 | 1 | 6300085 | End plate | |
| 5 | 1 | 6300045 | Spacer | |
| 6 | 1 | 6300046 | Spacer | |
| 7 | 4 | 31141 | Washer | 10 mm |
| 8 | 4 | 31517 | Set screw, stainless | M10 x 20 |
| 9 | 4 | 63739 | Guide shoe | |
| 10 | 1 | 63741 | Slide block | |
| 11 | 2 | 6300087 | Spacer | |
| 12 | 1 | 6302041 | Division plate | |
| 13 | 4 | 30133 | Set screw, stainless | |
| 14 | 2 | 31134 | Washer, stainless | |
| 15 | 2 | 31539 | Screw, stainless | MC6 x 16 |
| 16 | 1 | 6300081 | Bracket for slide block | |
| 17 | 4 | 32302 | Face washer, stainless | 6 mm |
| 18 | 2 | 30962 | Screw | MC6 x 25 |
| 19 | 1 | 63744 | Supporting block | |
| 20 | 1 | 63745 | Slide block | |
| 21 | 1 | 6302045 | Division plate | |
| 22 | 8 | 63740 | Slide block | |
| 23 | 1 | 6300611 | Stabilizer beam I, short | |
| 24 | 1 | 6300048 | Spacer | |
| 25 | 1 | 6300049 | Spacer | |
| 26 | 1 | 63742 | Slide block | |
| 27 | 1 | 6302043 | Division plate | |
| 28 | 1 | 33101 | Circlip | 10U |
| 29 | 1 | 6300643 | Stop block | |
| 30 | 1 | 6300641 | Roller | |
| 31 | 1 | 23934 | Bushing | MB 1015 DU-B |
| 32 | 1 | 6300642 | Pin | |
| 33 | 1 | 6300644 | Spring leaf | |
| 34 | 2 | 31177 | Washer | 10 mm |
| 35 | 2 | 30154 | Set screw | M10 x 20 |
| 36 | 1 | 6300645 | Spacer | |
| 37 | 2 | 63743 | Guide | |
| 38 | 4 | 30579 | Countersunk screw | MK6 x 20 |
| 39 | 1 | 63746 | Slide block | |

# ODIN

Intern ref.: 6300610

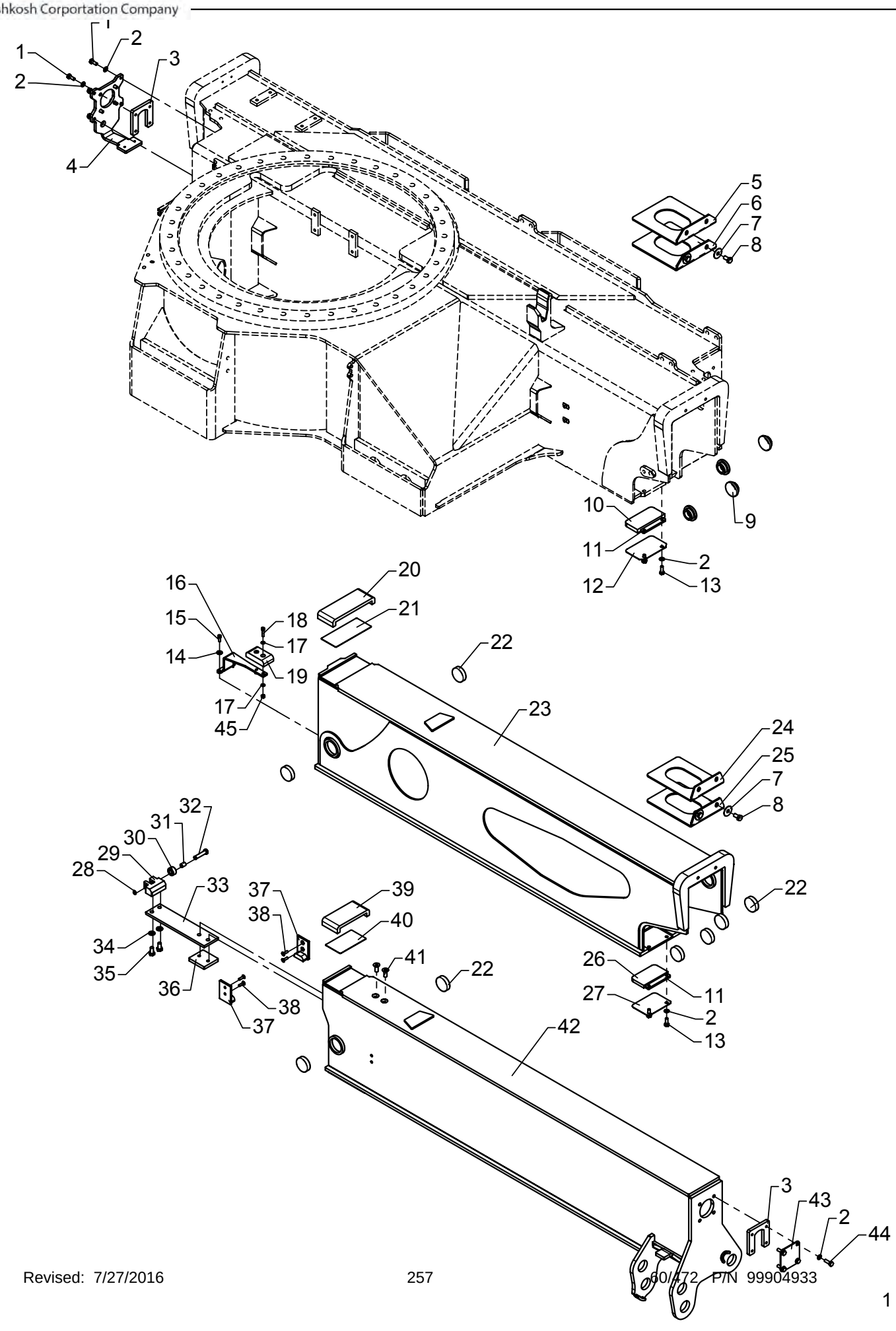

# Stabilizer beam, type DR - 6325

As from / To loader no.: 96 00 00 / 96 03 82
Created: 22.06.2006
Modified: 26.02.2015

| Item no. | Qty. | Part no. | Description | Remarks |
|---|---|---|---|---|
| 40 | 1 | 6302044 | Division plate | |
| 41 | 2 | 30546 | Countersunk screw | MK10 x 25 |
| 42 | 1 | 6300965 | Stabilizer beam, swing-up leg | |
| 43 | 1 | 6300639 | End plate | |
| 44 | 4 | 30134 | Set screw, stainless | M8 x 25 |
| 45 | 2 | 30884 | Lock nut, stainless | M6 |

Please note: All screws – Loctite 243

# 6020

Intern ref.: 6300610 / 6300965

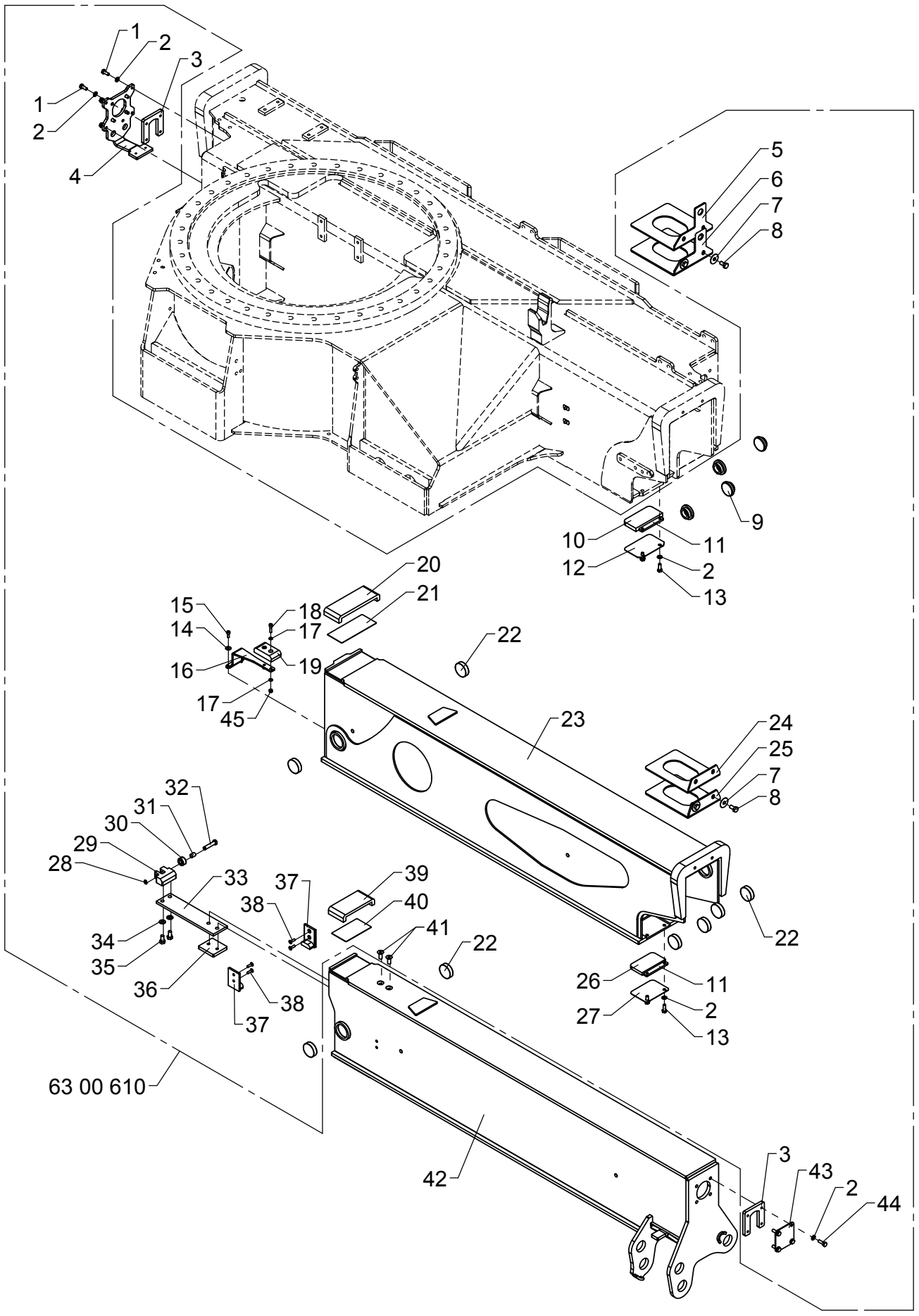

# Stabilizer beam, type DR - 6325

As from / To loader no.: 96 03 83
Created: 08.01.2015
Modified:

| Item no. | Qty. | Part no. | Description | Remarks |
|---|---|---|---|---|
| 1 | 8 | 30132 | Set screw, stainless | |
| 2 | 16 | 31147 | Face washer, 8 mm | |
| 3 | 2 | 6300086 | Bracket | |
| 4 | 1 | 6301394 | End plate | |
| 5 | 1 | 6300045 | Spacer | |
| 6 | 1 | 6300046 | Spacer | |
| 7 | 4 | 31141 | Washer | 10 mm |
| 8 | 4 | 31517 | Set screw, stainless | M10 x 20 |
| 9 | 4 | 63739 | Guide shoe | |
| 10 | 1 | 63741 | Slide block | |
| 11 | 2 | 6300087 | Spacer | |
| 12 | 1 | 6302041 | Division plate | |
| 13 | 4 | 30133 | Set screw, stainless | |
| 14 | 2 | 31134 | Washer, stainless | |
| 15 | 2 | 31539 | Screw, stainless | MC6 x 16 |
| 16 | 1 | 6300081 | Bracket for slide block | |
| 17 | 4 | 32302 | Face washer, stainless | 6 mm |
| 18 | 2 | 30962 | Screw | MC6 x 25 |
| 19 | 1 | 63744 | Supporting block | |
| 20 | 1 | 63745 | Slide block | |
| 21 | 1 | 6302045 | Division plate | |
| 22 | 8 | 63740 | Slide block | |
| 23 | 1 | 6300611 | Stabilizer beam I, short | |
| 24 | 1 | 6300048 | Spacer | |
| 25 | 1 | 6300049 | Spacer | |
| 26 | 1 | 63742 | Slide block | |
| 27 | 1 | 6302043 | Division plate | |
| 28 | 1 | 33101 | Circlip | 10U |
| 29 | 1 | 6300643 | Stop block | |
| 30 | 1 | 6300641 | Roller | |
| 31 | 1 | 23934 | Bushing | MB 1015 DU-B |
| 32 | 1 | 6300642 | Pin | |
| 33 | 1 | 6300644 | Spring leaf | |
| 34 | 2 | 31177 | Washer | 10 mm |
| 35 | 2 | 30154 | Set screw | M10 x 20 |
| 36 | 1 | 6300645 | Spacer | |
| 37 | 2 | 63743 | Guide | |
| 38 | 4 | 30579 | Countersunk screw | MK6 x 20 |
| 39 | 1 | 63746 | Slide block | |

# 6020

Intern ref.: 6300610 / 6300965

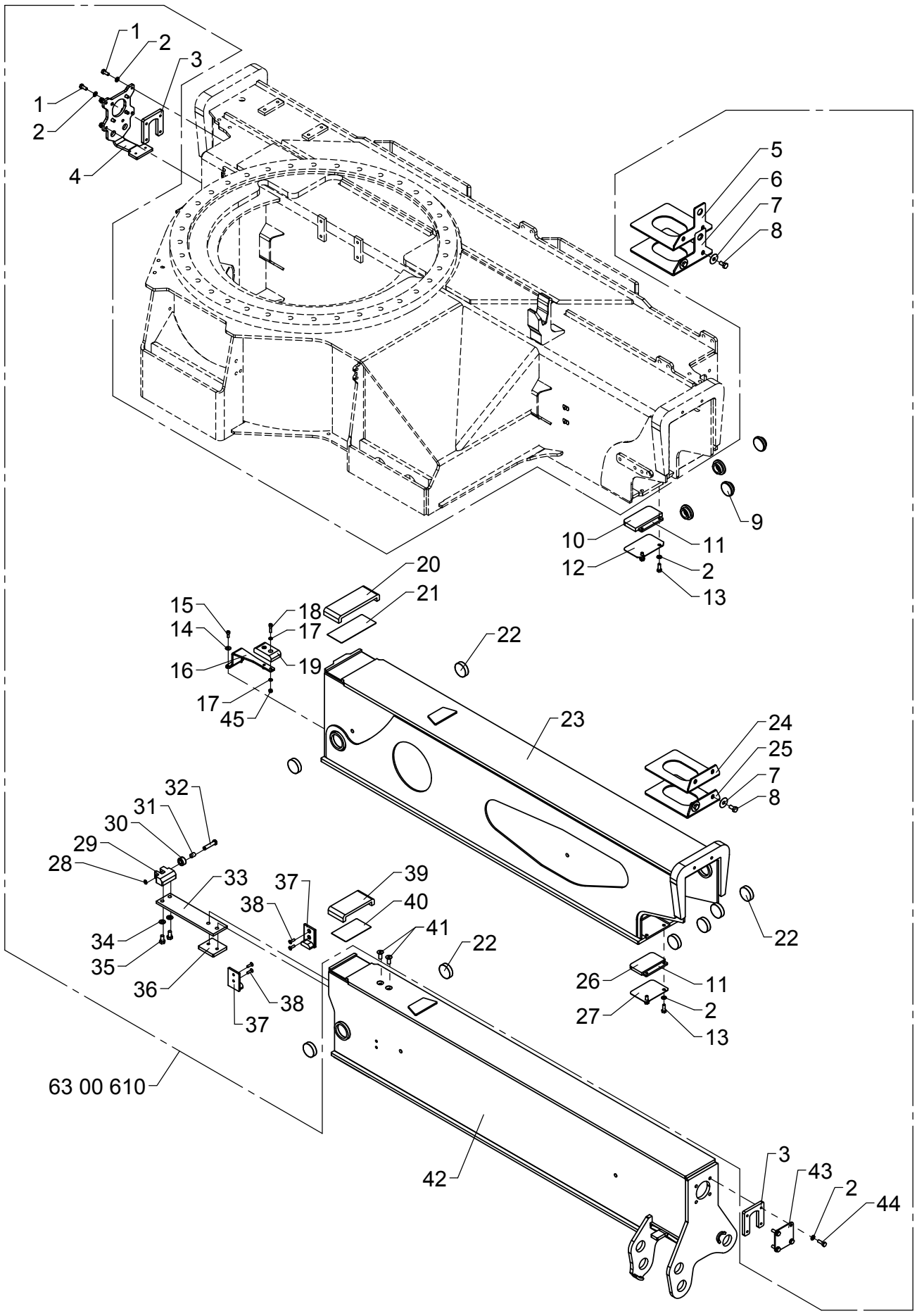

# Stabilizer beam, type DR - 6325

As from / To loader no.: 96 03 83
Created: 08.01.2015
Modified:

| Item no. | Qty. | Part no. | Description | Remarks |
|---|---|---|---|---|
| 40 | 1 | 6302044 | Division plate | |
| 41 | 2 | 30546 | Countersunk screw | MK10 x 25 |
| 42 | 1 | 6300965 | Stabilizer beam, swing-up leg | |
| 43 | 1 | 6300639 | End plate | |
| 44 | 4 | 30134 | Set screw, stainless | M8 x 25 |
| 45 | 2 | 30884 | Lock nut, stainless | M6 |

# ODIN

Intern ref.: 6300950

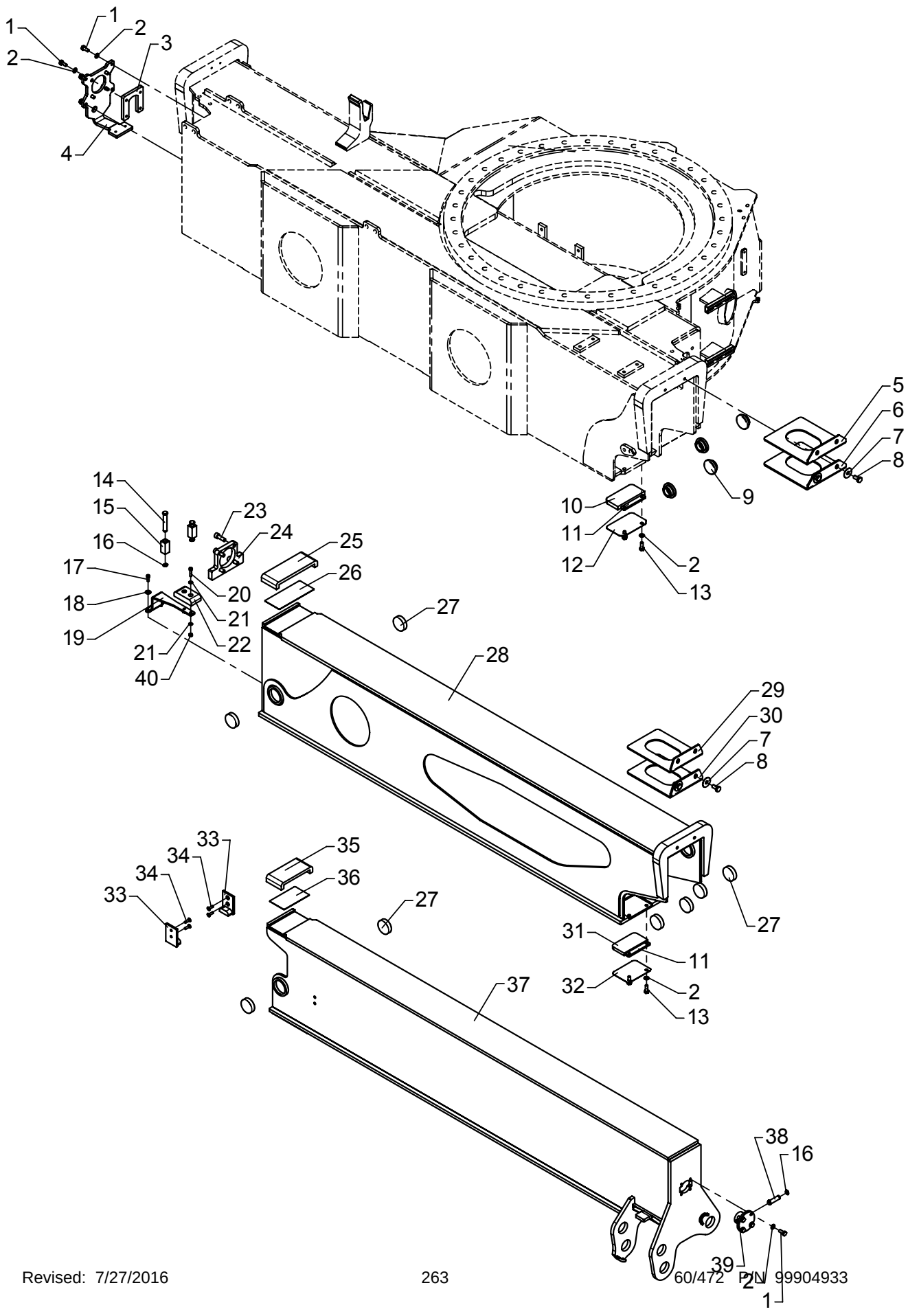

# Stabilizer beam, type DR - 6725

As from / To loader no.: 96 00 00 / 96 03 82
Created: 22.06.2006
Modified: 08.01.2015

| Item no. | Qty. | Part no. | Description | Remarks |
|---|---|---|---|---|
| 1 | 12 | 30132 | Set screw, stainless | |
| 2 | 16 | 31147 | Face washer, 8 mm | |
| 3 | 1 | 6300086 | Bracket | |
| 4 | 1 | 6300085 | End plate | |
| 5 | 1 | 6300045 | Spacer | |
| 6 | 1 | 6300046 | Spacer | |
| 7 | 4 | 31141 | Washer | 10 mm |
| 8 | 4 | 31517 | Set screw, stainless | M10 x 20 |
| 9 | 4 | 63739 | Guide shoe | |
| 10 | 1 | 63741 | Slide block | |
| 11 | 2 | 6300087 | Spacer | |
| 12 | 1 | 6302041 | Division plate | |
| 13 | 4 | 30133 | Set screw, stainless | |
| 14 | 2 | 6300088 | Pin | |
| 15 | 2 | 6300089 | Block | |
| 16 | 4 | 33102 | Circlip | 12U |
| 17 | 2 | 31539 | Screw, stainless | MC6 x 16 |
| 18 | 2 | 31134 | Washer, stainless | |
| 19 | 1 | 6300081 | Bracket for slide block | |
| 20 | 2 | 30962 | Screw | MC6 x 25 |
| 21 | 4 | 32302 | Face washer, stainless | 6 mm |
| 22 | 1 | 63744 | Supporting block | |
| 23 | 4 | 31568 | Screw, stainless | MC10 x 30 |
| 24 | 1 | 6300207 | Lock plate | |
| 25 | 1 | 63745 | Slide block | |
| 26 | 1 | 6302045 | Division plate | |
| 27 | 8 | 63740 | Slide block | |
| 28 | 1 | 6300951 | Stabilizer beam I | |
| 29 | 1 | 6300048 | Spacer | |
| 30 | 1 | 6300049 | Spacer | |
| 31 | 1 | 63742 | Slide block | |
| 32 | 1 | 6302043 | Division plate | |
| 33 | 2 | 63743 | Guide | |
| 34 | 4 | 30579 | Countersunk screw | MK6 x 20 |
| 35 | 1 | 63746 | Slide block | |
| 36 | 1 | 6302044 | Division plate | |
| 37 | 1 | 6300975 | Stabilizer beam, swing-up leg | |
| 38 | 1 | 6194264 | Pin | |
| 39 | 1 | 6194244 | Bracket | |
| 40 | 2 | 30884 | Lock nut, stainless | M6 |

# 6020

Intern ref.: 6300950 / 6300975

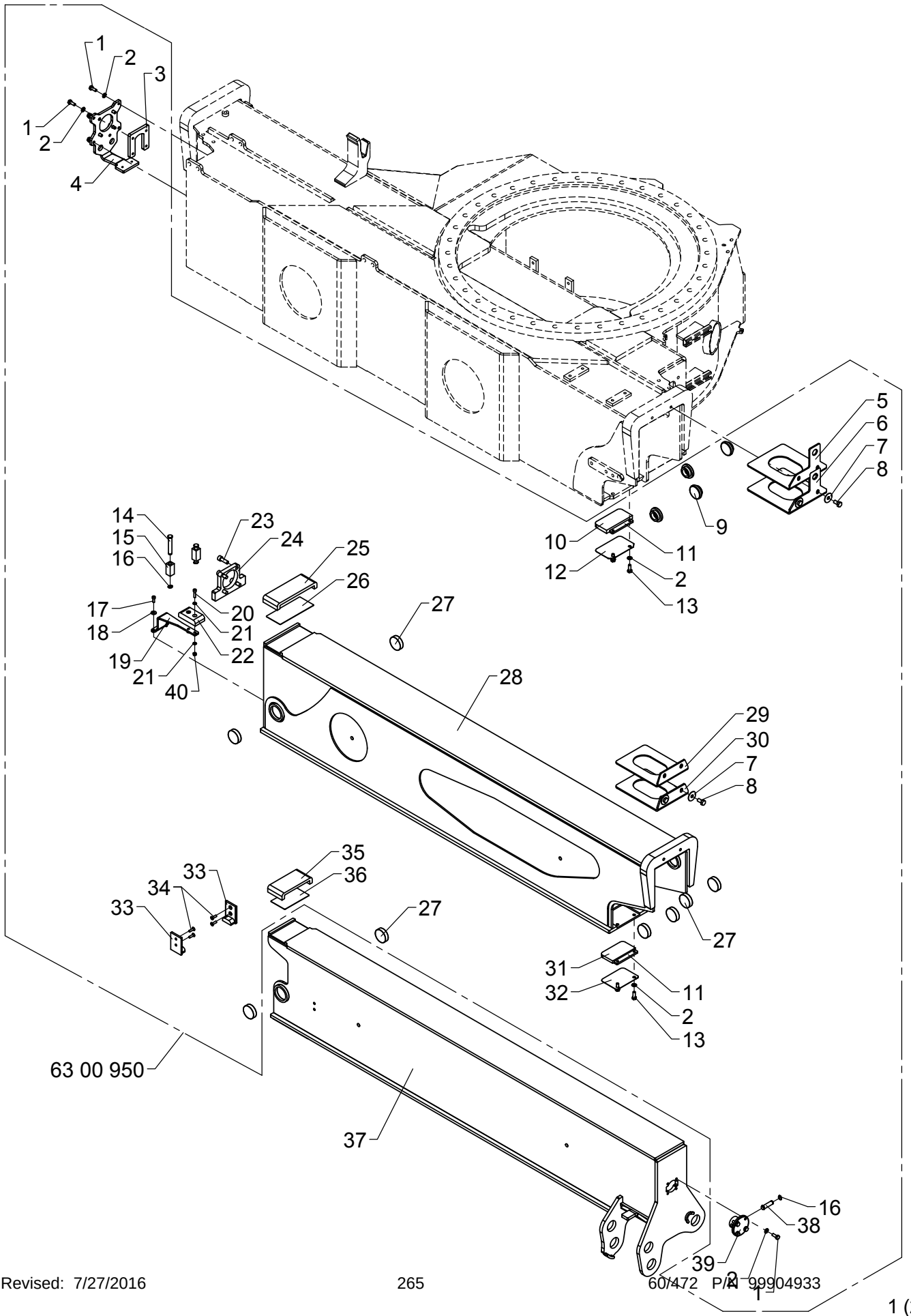

# Stabilizer beam, type DR - 6725

As from / To loader no.: 96 03 83
Created: 08.01.2015
Modified:

| Item no. | Qty. | Part no. | Description | Remarks |
|---|---|---|---|---|
| 1 | 12 | 30132 | Set screw, stainless | |
| 2 | 16 | 31147 | Face washer, 8 mm | |
| 3 | 1 | 6300086 | Bracket | |
| 4 | 1 | 6301394 | End plate | |
| 5 | 1 | 6300045 | Spacer | |
| 6 | 1 | 6300046 | Spacer | |
| 7 | 4 | 31141 | Washer | 10 mm |
| 8 | 4 | 31517 | Set screw, stainless | M10 x 20 |
| 9 | 4 | 63739 | Guide shoe | |
| 10 | 1 | 63741 | Slide block | |
| 11 | 2 | 6300087 | Spacer | |
| 12 | 1 | 6302041 | Division plate | |
| 13 | 4 | 30133 | Set screw, stainless | |
| 14 | 2 | 6300088 | Pin | |
| 15 | 2 | 6300089 | Block | |
| 16 | 4 | 33102 | Circlip | 12U |
| 17 | 2 | 31539 | Screw, stainless | MC6 x 16 |
| 18 | 2 | 31134 | Washer, stainless | |
| 19 | 1 | 6300081 | Bracket for slide block | |
| 20 | 2 | 30962 | Screw | MC6 x 25 |
| 21 | 4 | 32302 | Face washer, stainless | 6 mm |
| 22 | 1 | 63744 | Supporting block | |
| 23 | 4 | 31568 | Screw, stainless | MC10 x 30 |
| 24 | 1 | 6300207 | Lock plate | |
| 25 | 1 | 63745 | Slide block | |
| 26 | 1 | 6302045 | Division plate | |
| 27 | 8 | 63740 | Slide block | |
| 28 | 1 | 6300951 | Stabilizer beam I | |
| 29 | 1 | 6300048 | Spacer | |
| 30 | 1 | 6300049 | Spacer | |
| 31 | 1 | 63742 | Slide block | |
| 32 | 1 | 6302043 | Division plate | |
| 33 | 2 | 63743 | Guide | |
| 34 | 4 | 30579 | Countersunk screw | MK6 x 20 |
| 35 | 1 | 63746 | Slide block | |
| 36 | 1 | 6302044 | Division plate | |
| 37 | 1 | 6300975 | Stabilizer beam, swing-up leg | |
| 38 | 1 | 6194264 | Pin | |
| 39 | 1 | 6194244 | Bracket | |
| 40 | 2 | 30884 | Lock nut, stainless | M6 |

# ODIN

Intern ref.: 6300090

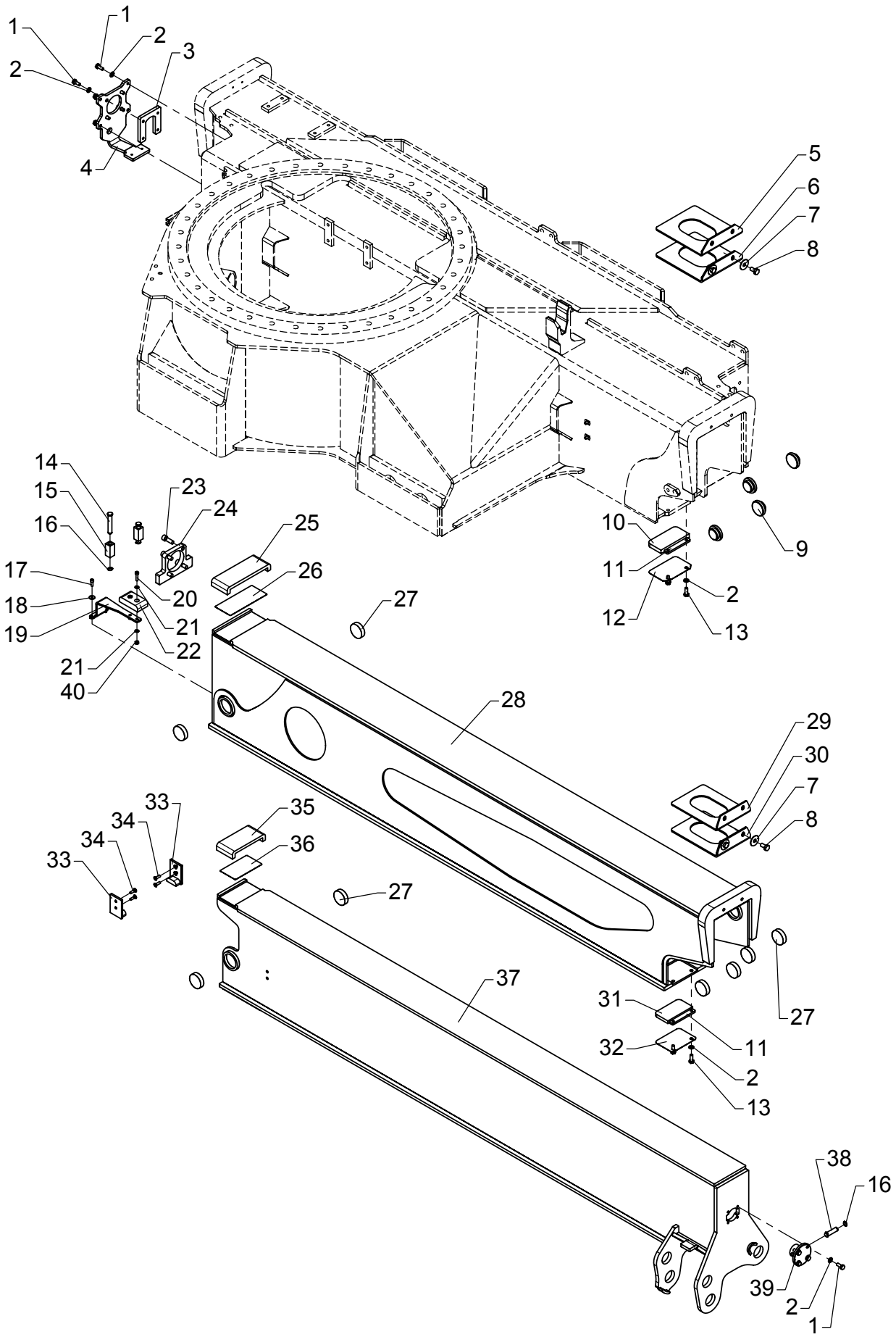

# Stabilizer beam, type DR - 8420

As from / To loader no.: 96 00 00 / 96 03 82
Created: 03.10.2003
Modified:

| Item no. | Qty. | Part no. | Description | Remarks |
|---|---|---|---|---|
| 1 | 12 | 30132 | Set screw, stainless | |
| 2 | 16 | 31147 | Face washer, 8 mm | |
| 3 | 1 | 6300086 | Bracket | |
| 4 | 1 | 6300085 | End plate | |
| 5 | 1 | 6300045 | Spacer | |
| 6 | 1 | 6300046 | Spacer | |
| 7 | 4 | 31141 | Washer | 10 mm |
| 8 | 4 | 31517 | Set screw, stainless | M10 x 20 |
| 9 | 4 | 63739 | Guide shoe | |
| 10 | 1 | 63741 | Slide block | |
| 11 | 2 | 6300087 | Spacer | |
| 12 | 1 | 6302041 | Division plate | |
| 13 | 4 | 30133 | Set screw, stainless | |
| 14 | 2 | 6300088 | Pin | |
| 15 | 2 | 6300089 | Block | |
| 16 | 4 | 33102 | Circlip | 12U |
| 17 | 2 | 31539 | Screw, stainless | MC6 x 16 |
| 18 | 2 | 31134 | Washer, stainless | |
| 19 | 1 | 6300081 | Bracket for slide block | |
| 20 | 2 | 30962 | Screw | MC6 x 25 |
| 21 | 4 | 32302 | Face washer, stainless | 6 mm |
| 22 | 1 | 63744 | Supporting block | |
| 23 | 4 | 31568 | Screw, stainless | MC10 x 30 |
| 24 | 1 | 6300207 | Lock plate | |
| 25 | 1 | 63745 | Slide block | |
| 26 | 1 | 6302045 | Division plate | |
| 27 | 8 | 63740 | Slide block | |
| 28 | 1 | 6300091 | Stabilizer beam I | |
| 29 | 1 | 6300048 | Spacer | |
| 30 | 1 | 6300049 | Spacer | |
| 31 | 1 | 63742 | Slide block | |
| 32 | 1 | 6302043 | Division plate | |
| 33 | 2 | 63743 | Guide | |
| 34 | 4 | 30579 | Countersunk screw | MK6 x 20 |
| 35 | 1 | 63746 | Slide block | |
| 36 | 1 | 6302044 | Division plate | |
| 37 | 1 | 6300111 | Stabilizer beam, swing-up leg | |
| 38 | 1 | 6194264 | Pin | |
| 39 | 1 | 6194244 | Bracket | |
| 40 | 2 | 30884 | Lock nut, stainless | M6 |

# 6020

6303080 / 6300091
Intern ref.: 6300111

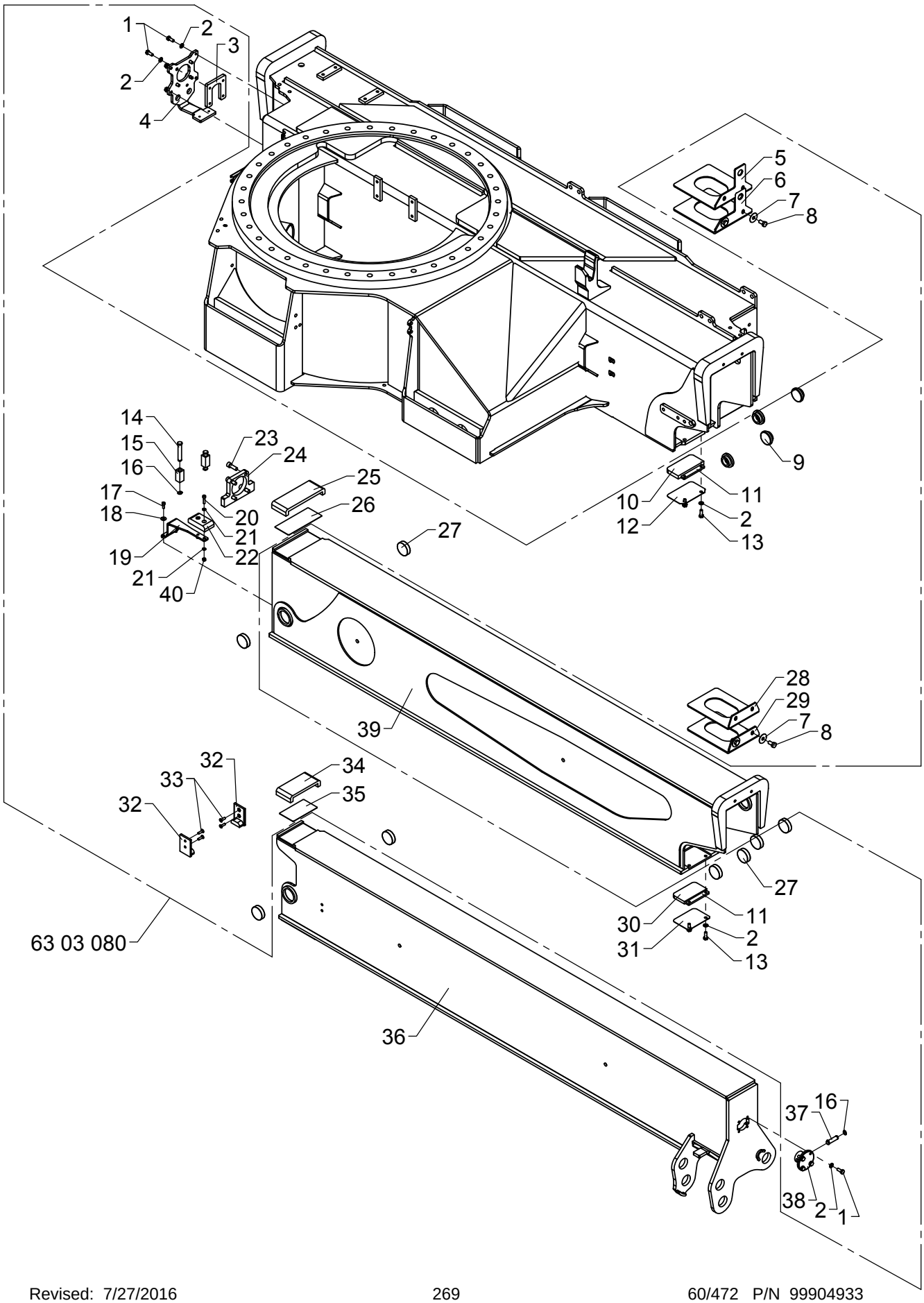

# Stabilizer beam, type DR - 8420

As from / To loader no.: 96 03 83
Created: 07.01.2015
Modified:

| Item no. | Qty. | Part no. | Description | Remarks |
|---|---|---|---|---|
| 1 | 12 | 30132 | Set screw, stainless | |
| 2 | 16 | 31147 | Face washer, 8 mm | |
| 3 | 1 | 6300086 | Bracket | |
| 4 | 1 | 6301394 | End plate | |
| 5 | 1 | 6300045 | Spacer | |
| 6 | 1 | 6300046 | Spacer | |
| 7 | 4 | 31141 | Washer | 10 mm |
| 8 | 4 | 31517 | Set screw, stainless | M10 x 20 |
| 9 | 4 | 63739 | Guide shoe | |
| 10 | 1 | 63741 | Slide block | |
| 11 | 2 | 6300087 | Spacer | |
| 12 | 1 | 6302041 | Division plate | |
| 13 | 4 | 30133 | Set screw, stainless | |
| 14 | 2 | 6300088 | Pin | |
| 15 | 2 | 6300089 | Block | |
| 16 | 4 | 33102 | Circlip | 12U |
| 17 | 2 | 31539 | Screw, stainless | MC6 x 16 |
| 18 | 2 | 31134 | Washer, stainless | |
| 19 | 1 | 6300081 | Bracket for slide block | |
| 20 | 2 | 30962 | Screw | MC6 x 25 |
| 21 | 4 | 32302 | Face washer, stainless | 6 mm |
| 22 | 1 | 63744 | Supporting block | |
| 23 | 4 | 31568 | Screw, stainless | MC10 x 30 |
| 24 | 1 | 6300207 | Lock plate | |
| 25 | 1 | 63745 | Slide block | |
| 26 | 1 | 6302045 | Division plate | |
| 27 | 8 | 63740 | Slide block | |
| 28 | 1 | 6300048 | Spacer | |
| 29 | 1 | 6300049 | Spacer | |
| 30 | 1 | 63742 | Slide block | |
| 31 | 1 | 6302043 | Division plate | |
| 32 | 2 | 63743 | Guide | |
| 33 | 4 | 30579 | Countersunk screw | MK6 x 20 |
| 34 | 1 | 63746 | Slide block | |
| 35 | 1 | 6302044 | Division plate | |
| 36 | 1 | 6300111 | Stabilizer beam, swing-up leg | |
| 37 | 1 | 6194264 | Pin | |
| 38 | 1 | 6194244 | Bracket | |
| 39 | 1 | 6300091 | Stabilizer beam I | |
| 40 | 2 | 30884 | Lock nut, stainless | M6 |

# ODIN

Intern ref.: 6300610

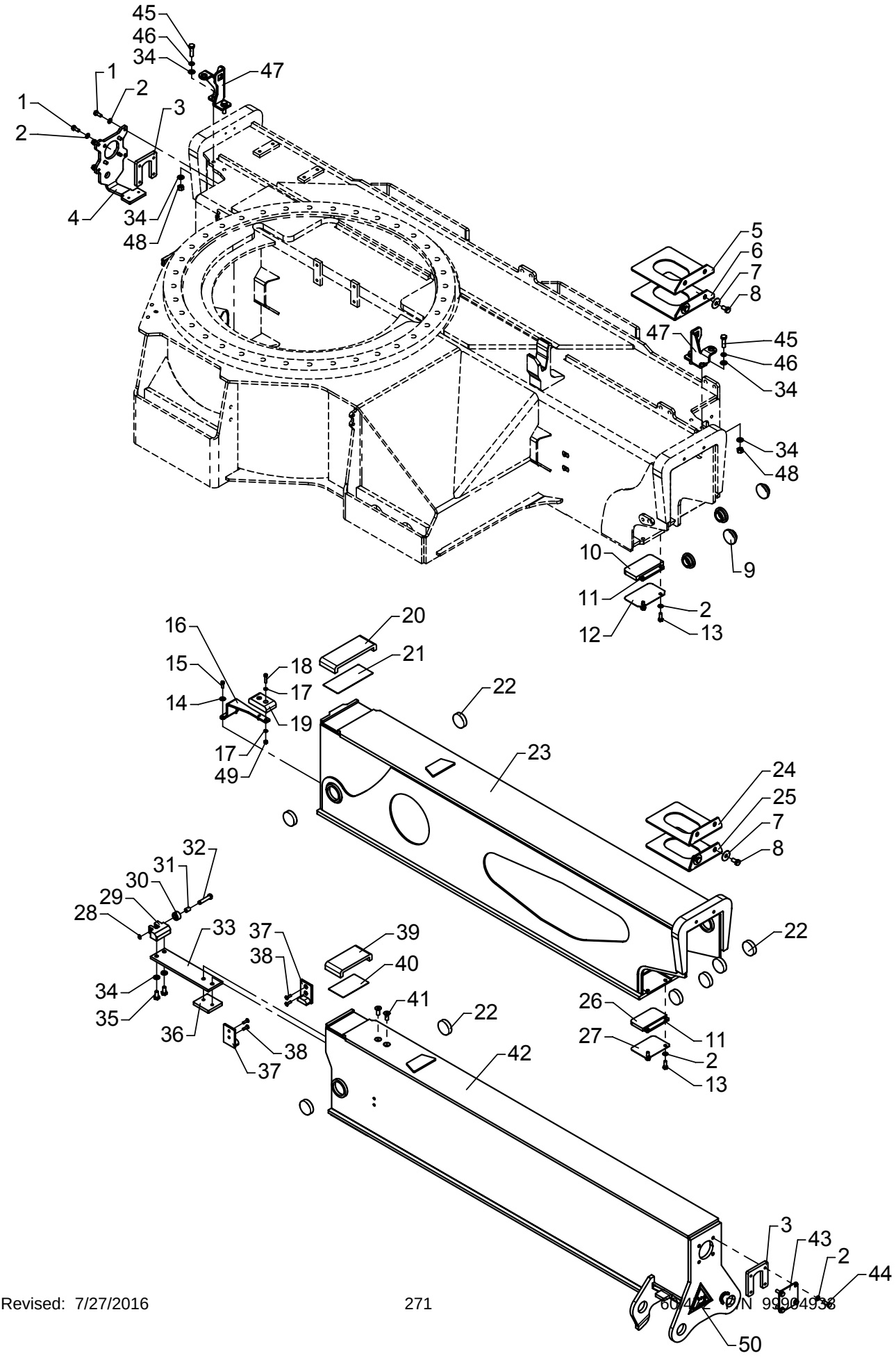

# Stabilizer beam - swing-up legs, type DHR - 6325

As from / To loader no.: 96 00 00 /96 03 82
Created: 03.10.2003
Modified: 26.02.2015

| Item no. | Qty. | Part no. | Description | Remarks |
|---|---|---|---|---|
| 1 | 8 | 30132 | Set screw, stainless | |
| 2 | 16 | 31147 | Face washer, 8 mm | |
| 3 | 2 | 6300086 | Bracket | |
| 4 | 1 | 6300085 | End plate | |
| 5 | 1 | 6300045 | Spacer | |
| 6 | 1 | 6300046 | Spacer | |
| 7 | 4 | 31141 | Washer | 10 mm |
| 8 | 4 | 31517 | Set screw, stainless | M10 x 20 |
| 9 | 4 | 63739 | Guide shoe | |
| 10 | 1 | 63741 | Slide block | |
| 11 | 2 | 6300087 | Spacer | |
| 12 | 1 | 6302041 | Division plate | |
| 13 | 4 | 30133 | Set screw, stainless | |
| 14 | 2 | 31134 | Washer, stainless | |
| 15 | 2 | 31539 | Screw, stainless | MC6 x 16 |
| 16 | 1 | 6300081 | Bracket for slide block | |
| 17 | 4 | 32302 | Face washer, stainless | 6 mm |
| 18 | 2 | 30962 | Screw | MC6 x 25 |
| 19 | 1 | 63744 | Supporting block | |
| 20 | 1 | 63745 | Slide block | |
| 21 | 1 | 6302045 | Division plate | |
| 22 | 8 | 63740 | Slide block | |
| 23 | 1 | 6300611 | Stabilizer beam I, short | |
| 24 | 1 | 6300048 | Spacer | |
| 25 | 1 | 6300049 | Spacer | |
| 26 | 1 | 63742 | Slide block | |
| 27 | 1 | 6302043 | Division plate | |
| 28 | 1 | 33101 | Circlip | 10U |
| 29 | 1 | 6300643 | Stop block | |
| 30 | 1 | 6300641 | Roller | |
| 31 | 1 | 23934 | Bushing | MB 1015 DU-B |
| 32 | 1 | 6300642 | Pin | |
| 33 | 1 | 6300644 | Spring leaf | |
| 34 | 10 | 31177 | Washer | 10 mm |
| 35 | 2 | 30154 | Set screw | M10 x 20 |
| 36 | 1 | 6300645 | Spacer | |
| 37 | 2 | 63743 | Guide | |
| 38 | 4 | 30579 | Countersunk screw | MK6 x 20 |
| 39 | 1 | 63746 | Slide block | |

# ODIN

Intern ref.: 6300610

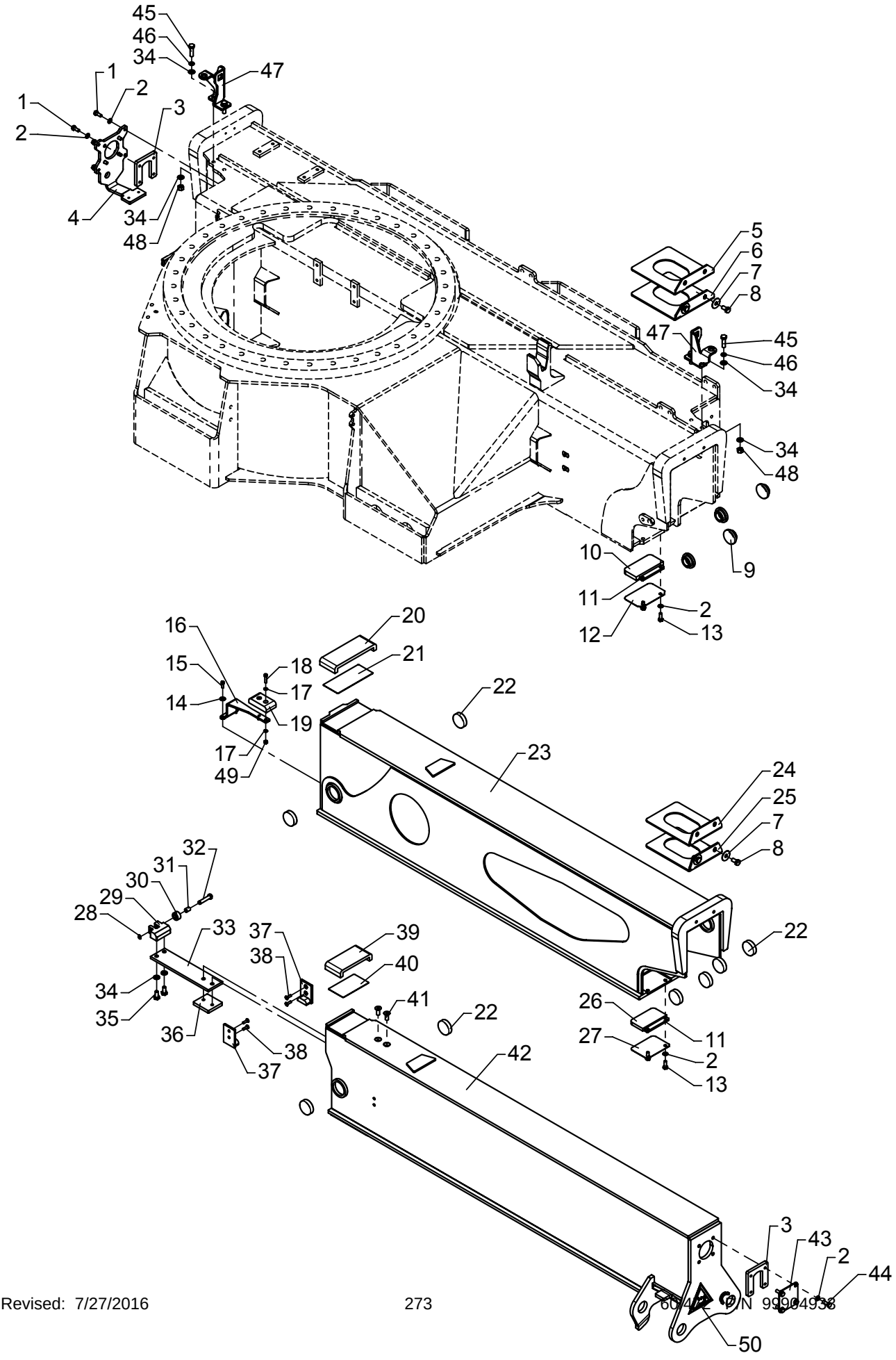

# Stabilizer beam - swing-up legs, type DHR - 6325

As from / To loader no.: 96 00 00 /96 03 82
Created: 03.10.2003
Modified: 26.02.2015

| Item no. | Qty. | Part no. | Description | Remarks |
|---|---|---|---|---|
| 40 | 1 | 6302044 | Division plate | |
| 41 | 2 | 30546 | Countersunk screw | MK10 x 25 |
| 42 | 1 | 6300991 | Stabilizer beam II, swing-up | |
| 43 | 1 | 6300639 | End plate | |
| 44 | 4 | 30134 | Set screw, stainless | M8 x 25 |
| 45 | 4 | 30157 | Set screw | M10 x 35 |
| 46 | 4 | 31156 | Spring washer | 10 mm |
| 47 | 2 | 6300104 | Bracket | |
| 48 | 4 | 30888 | Lock nut | |
| 49 | 2 | 30884 | Lock nut, stainless | M6 |
| 50 | 1 | 66463 | Label"SWING-UP STABILIZER LEG" | |

# 6020

6300610 / 6300660
Intern ref.: 6300991

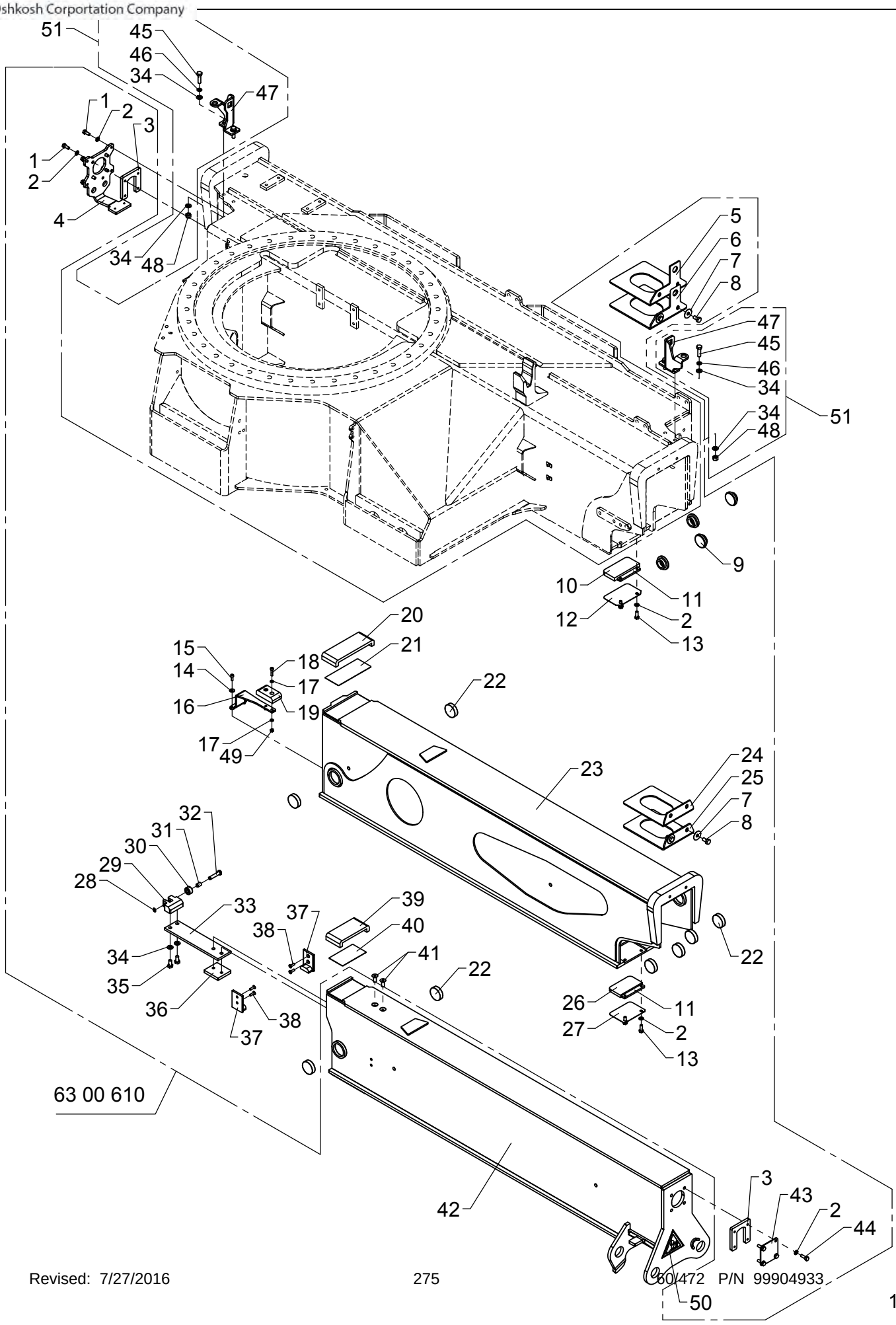

# Stabilizer beam - swing-up legs,

As from / To loader no.: 96 03 83
Created: 08.01.2015
Modified:

| Item no. | Qty. | Part no. | Description | Remarks |
|---|---|---|---|---|
| 1 | 8 | 30132 | Set screw, stainless | |
| 2 | 16 | 31147 | Face washer, 8 mm | |
| 3 | 2 | 6300086 | Bracket | |
| 4 | 1 | 6301394 | End plate | |
| 5 | 1 | 6300045 | Spacer | |
| 6 | 1 | 6300046 | Spacer | |
| 7 | 4 | 31141 | Washer | 10 mm |
| 8 | 4 | 31517 | Set screw, stainless | M10 x 20 |
| 9 | 4 | 63739 | Guide shoe | |
| 10 | 1 | 63741 | Slide block | |
| 11 | 2 | 6300087 | Spacer | |
| 12 | 1 | 6302041 | Division plate | |
| 13 | 4 | 30133 | Set screw, stainless | |
| 14 | 2 | 31134 | Washer, stainless | |
| 15 | 2 | 31539 | Screw, stainless | MC6 x 16 |
| 16 | 1 | 6300081 | Bracket for slide block | |
| 17 | 4 | 32302 | Face washer, stainless | 6 mm |
| 18 | 2 | 30962 | Screw | MC6 x 25 |
| 19 | 1 | 63744 | Supporting block | |
| 20 | 1 | 63745 | Slide block | |
| 21 | 1 | 6302045 | Division plate | |
| 22 | 8 | 63740 | Slide block | |
| 23 | 1 | 6300611 | Stabilizer beam I, short | |
| 24 | 1 | 6300048 | Spacer | |
| 25 | 1 | 6300049 | Spacer | |
| 26 | 1 | 63742 | Slide block | |
| 27 | 1 | 6302043 | Division plate | |
| 28 | 1 | 33101 | Circlip | 10U |
| 29 | 1 | 6300643 | Stop block | |
| 30 | 1 | 6300641 | Roller | |
| 31 | 1 | 23934 | Bushing | MB 1015 DU-B |
| 32 | 1 | 6300642 | Pin | |
| 33 | 1 | 6300644 | Spring leaf | |
| 34 | 10 | 31177 | Washer | 10 mm |
| 35 | 2 | 30154 | Set screw | M10 x 20 |
| 36 | 1 | 6300645 | Spacer | |
| 37 | 2 | 63743 | Guide | |
| 38 | 4 | 30579 | Countersunk screw | MK6 x 20 |
| 39 | 1 | 63746 | Slide block | |

# 6020

6300610 / 6300660
Intern ref.: 6300991

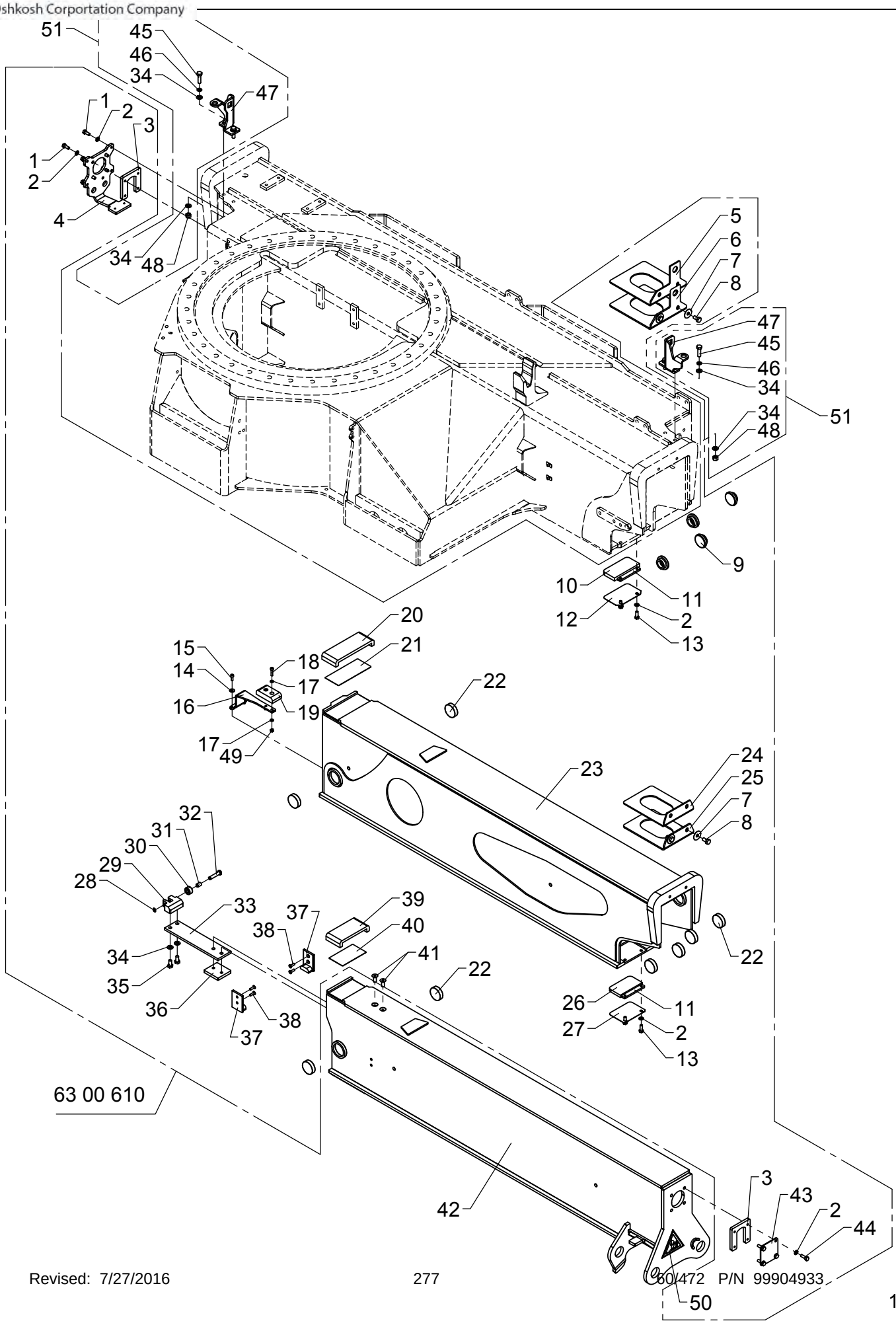

# Stabilizer beam - swing-up legs,

As from / To loader no.: 96 03 83
Created: 08.01.2015
Modified:

| Item no. | Qty. | Part no. | Description | Remarks |
|---|---|---|---|---|
| 40 | 1 | 6302044 | Division plate | |
| 41 | 2 | 30546 | Countersunk screw | MK10 x 25 |
| 42 | 1 | 6300991 | Stabilizer beam II, swing-up | |
| 43 | 1 | 6300639 | End plate | |
| 44 | 4 | 30134 | Set screw, stainless | M8 x 25 |
| 45 | 4 | 30157 | Set screw | M10 x 35 |
| 46 | 4 | 31156 | Spring washer | 10 mm |
| 47 | 2 | 6300104 | Bracket | |
| 48 | 4 | 30888 | Lock nut | |
| 49 | 2 | 30884 | Lock nut, stainless | M6 |
| 50 | 1 | 66463 | Label"SWING-UP STABILIZER LEG" | |
| 51 | | 6300660 | Stabilizer safety lock, swing-up leg | Pos. 34, 45, 46, 47, 48 |

# ODIN

Intern ref.: 6300950

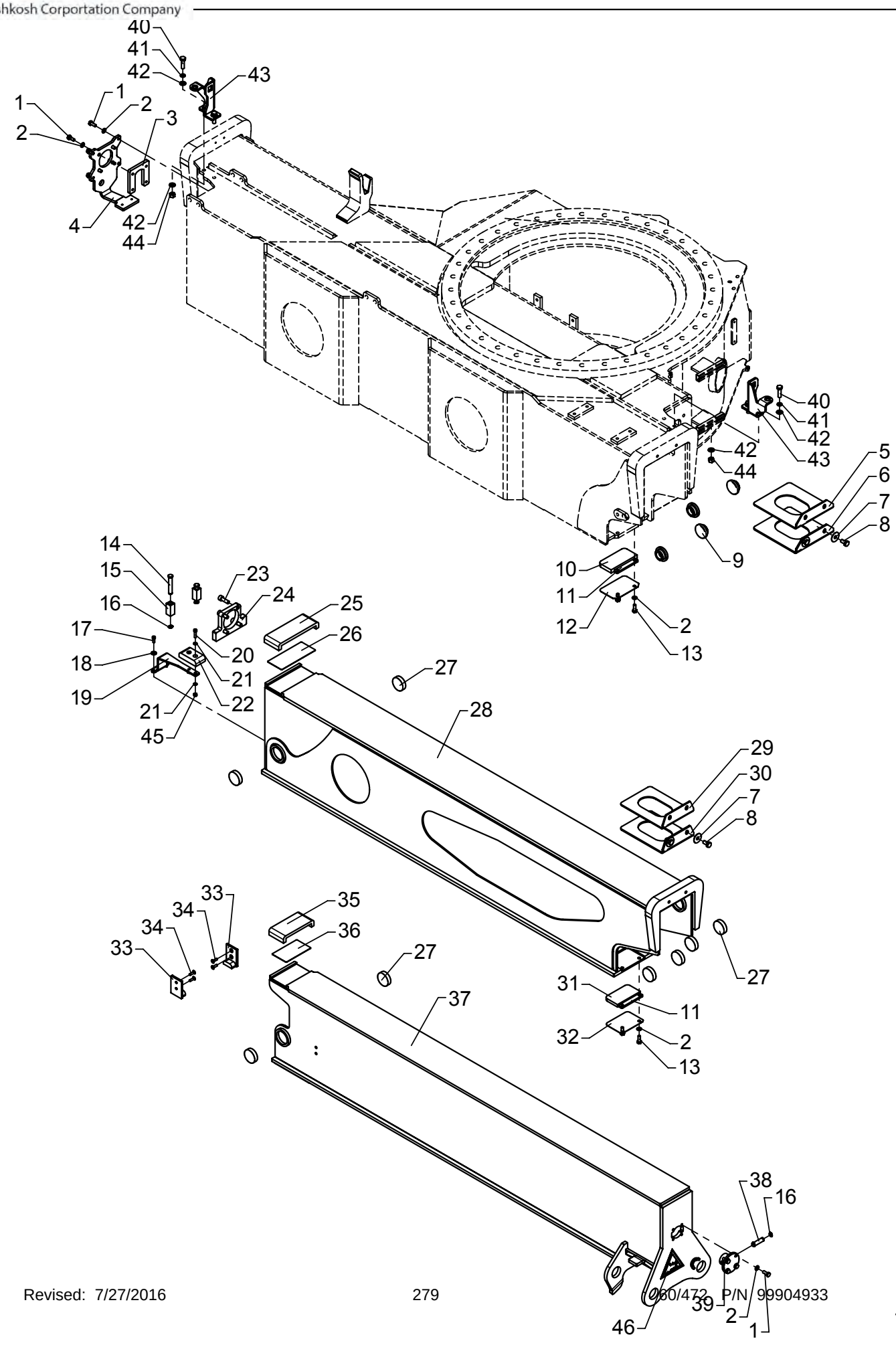

# Stabilizer beam - swing-up legs, type DHR - 6725

As from / To loader no.: 96 00 00 / 96 03 82
Created: 03.10.2003
Modified: 08.01.2015

| Item no. | Qty. | Part no. | Description | Remarks |
|---|---|---|---|---|
| 1 | 12 | 30132 | Set screw, stainless | |
| 2 | 16 | 31147 | Face washer, 8 mm | |
| 3 | 1 | 6300086 | Bracket | |
| 4 | 1 | 6300085 | End plate | |
| 5 | 1 | 6300045 | Spacer | |
| 6 | 1 | 6300046 | Spacer | |
| 7 | 4 | 31141 | Washer | 10 mm |
| 8 | 4 | 31517 | Set screw, stainless | M10 x 20 |
| 9 | 4 | 63739 | Guide shoe | |
| 10 | 1 | 63741 | Slide block | |
| 11 | 2 | 6300087 | Spacer | |
| 12 | 1 | 6302041 | Division plate | |
| 13 | 4 | 30133 | Set screw, stainless | |
| 14 | 2 | 6300088 | Pin | |
| 15 | 2 | 6300089 | Block | |
| 16 | 4 | 33102 | Circlip | 12U |
| 17 | 2 | 31539 | Screw, stainless | MC6 x 16 |
| 18 | 2 | 31134 | Washer, stainless | |
| 19 | 1 | 6300081 | Bracket for slide block | |
| 20 | 2 | 30962 | Screw | MC6 x 25 |
| 21 | 4 | 32302 | Face washer, stainless | 6 mm |
| 22 | 1 | 63744 | Supporting block | |
| 23 | 4 | 31568 | Screw, stainless | MC10 x 30 |
| 24 | 1 | 6300207 | Lock plate | |
| 25 | 1 | 63745 | Slide block | |
| 26 | 1 | 6302045 | Division plate | |
| 27 | 8 | 63740 | Slide block | |
| 28 | 1 | 6300951 | Stabilizer beam I | |
| 29 | 1 | 6300048 | Spacer | |
| 30 | 1 | 6300049 | Spacer | |
| 31 | 1 | 63742 | Slide block | |
| 32 | 1 | 6302043 | Division plate | |
| 33 | 2 | 63743 | Guide | |
| 34 | 4 | 30579 | Countersunk screw | MK6 x 20 |
| 35 | 1 | 63746 | Slide block | |
| 36 | 1 | 6302044 | Division plate | |
| 37 | 1 | 6300985 | Stabilizer beam II, swing-up | |
| 38 | 1 | 6194264 | Pin | |
| 39 | 1 | 6194244 | Bracket | |

# ODIN

Intern ref.: 6300950

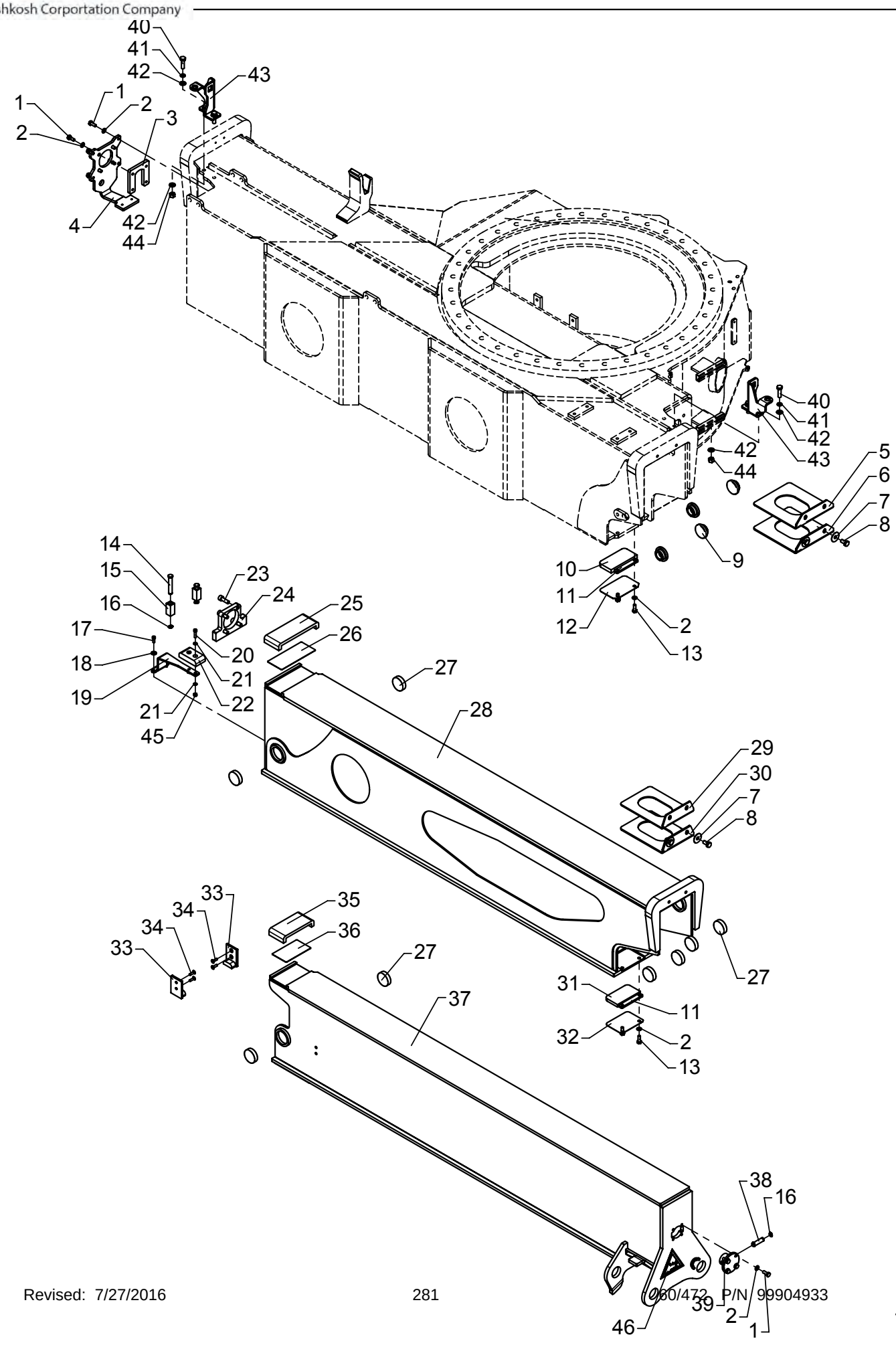

# Stabilizer beam - swing-up legs, type DHR - 6725

As from / To loader no.: 96 00 00 / 96 03 82
Created: 03.10.2003
Modified: 08.01.2015

| Item no. | Qty. | Part no. | Description | Remarks |
|---|---|---|---|---|
| 40 | 4 | 30157 | Set screw | M10 x 35 |
| 41 | 4 | 31156 | Spring washer | 10 mm |
| 42 | 8 | 31177 | Washer | 10 mm |
| 43 | 2 | 6300104 | Bracket | |
| 44 | 4 | 30888 | Lock nut | |
| 45 | 2 | 30884 | Lock nut, stainless | M6 |
| 46 | 1 | 66463 | Label"SWING-UP STABILIZER LEG" | |

# 6020

6300950 / 6300660
Intern ref.: 6300985

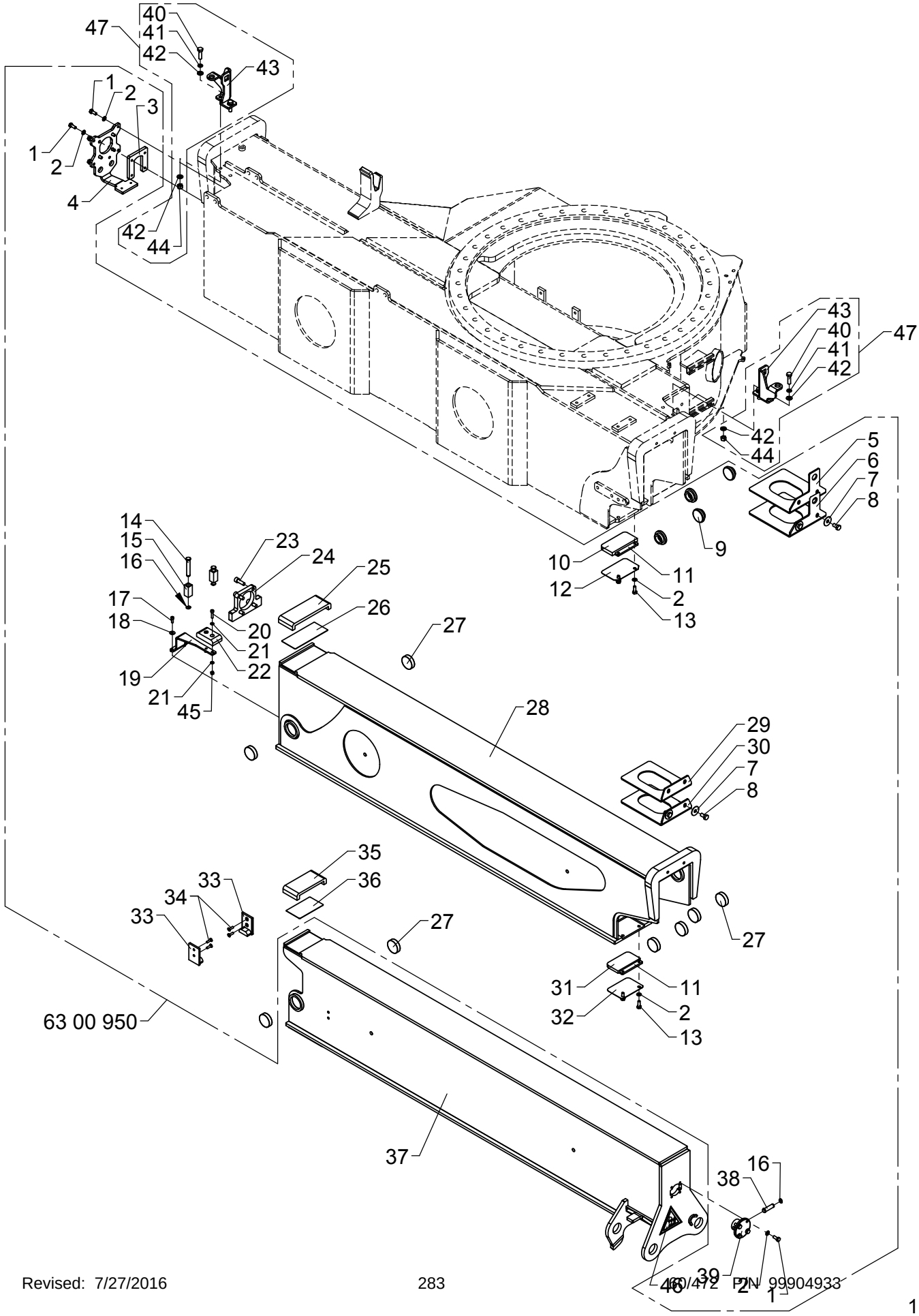

# Stabilizer beam - swing-up legs, type DHR - 6725

As from / To loader no.: 96 03 83
Created: 08.01.2015
Modified:

| Item no. | Qty. | Part no. | Description | Remarks |
|---|---|---|---|---|
| 1 | 12 | 30132 | Set screw, stainless | |
| 2 | 16 | 31147 | Face washer, 8 mm | |
| 3 | 1 | 6300086 | Bracket | |
| 4 | 1 | 6301394 | End plate | |
| 5 | 1 | 6300045 | Spacer | |
| 6 | 1 | 6300046 | Spacer | |
| 7 | 4 | 31141 | Washer | 10 mm |
| 8 | 4 | 31517 | Set screw, stainless | M10 x 20 |
| 9 | 4 | 63739 | Guide shoe | |
| 10 | 1 | 63741 | Slide block | |
| 11 | 2 | 6300087 | Spacer | |
| 12 | 1 | 6302041 | Division plate | |
| 13 | 4 | 30133 | Set screw, stainless | |
| 14 | 2 | 6300088 | Pin | |
| 15 | 2 | 6300089 | Block | |
| 16 | 4 | 33102 | Circlip | 12U |
| 17 | 2 | 31539 | Screw, stainless | MC6 x 16 |
| 18 | 2 | 31134 | Washer, stainless | |
| 19 | 1 | 6300081 | Bracket for slide block | |
| 20 | 2 | 30962 | Screw | MC6 x 25 |
| 21 | 4 | 32302 | Face washer, stainless | 6 mm |
| 22 | 1 | 63744 | Supporting block | |
| 23 | 4 | 31568 | Screw, stainless | MC10 x 30 |
| 24 | 1 | 6300207 | Lock plate | |
| 25 | 1 | 63745 | Slide block | |
| 26 | 1 | 6302045 | Division plate | |
| 27 | 8 | 63740 | Slide block | |
| 28 | 1 | 6300951 | Stabilizer beam I | |
| 29 | 1 | 6300048 | Spacer | |
| 30 | 1 | 6300049 | Spacer | |
| 31 | 1 | 63742 | Slide block | |
| 32 | 1 | 6302043 | Division plate | |
| 33 | 2 | 63743 | Guide | |
| 34 | 4 | 30579 | Countersunk screw | MK6 x 20 |
| 35 | 1 | 63746 | Slide block | |
| 36 | 1 | 6302044 | Division plate | |
| 37 | 1 | 6300985 | Stabilizer beam II, swing-up | |
| 38 | 1 | 6194264 | Pin | |
| 39 | 1 | 6194244 | Bracket | |

# 6020

6300950 / 6300660
Intern ref.: 6300985

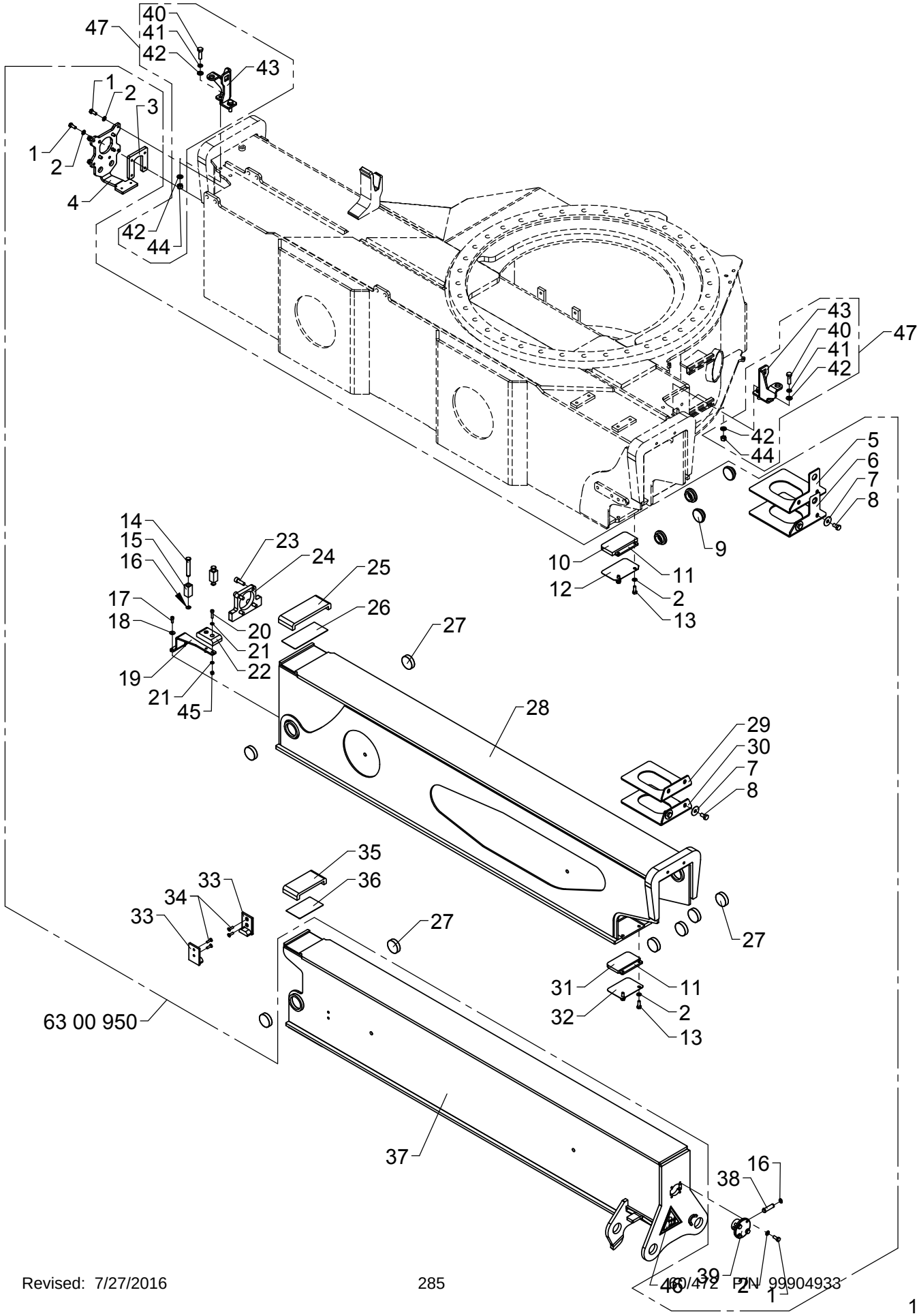

# Stabilizer beam - swing-up legs, type DHR - 6725

As from / To loader no.: 96 03 83
Created: 08.01.2015
Modified:

| Item no. | Qty. | Part no. | Description | Remarks |
|---|---|---|---|---|
| 40 | 4 | 30157 | Set screw | M10 x 35 |
| 41 | 4 | 31156 | Spring washer | 10 mm |
| 42 | 8 | 31177 | Washer | 10 mm |
| 43 | 2 | 6300104 | Bracket | |
| 44 | 4 | 30888 | Lock nut | |
| 45 | 2 | 30884 | Lock nut, stainless | M6 |
| 46 | 1 | 66463 | Label"SWING-UP STABILIZER LEG" | |
| 47 | | 6300660 | Stabilizer safety lock, swing-up leg | Pos. 40, 41, 42, 43, 44 |

# ODIN

Intern ref.: 6300090

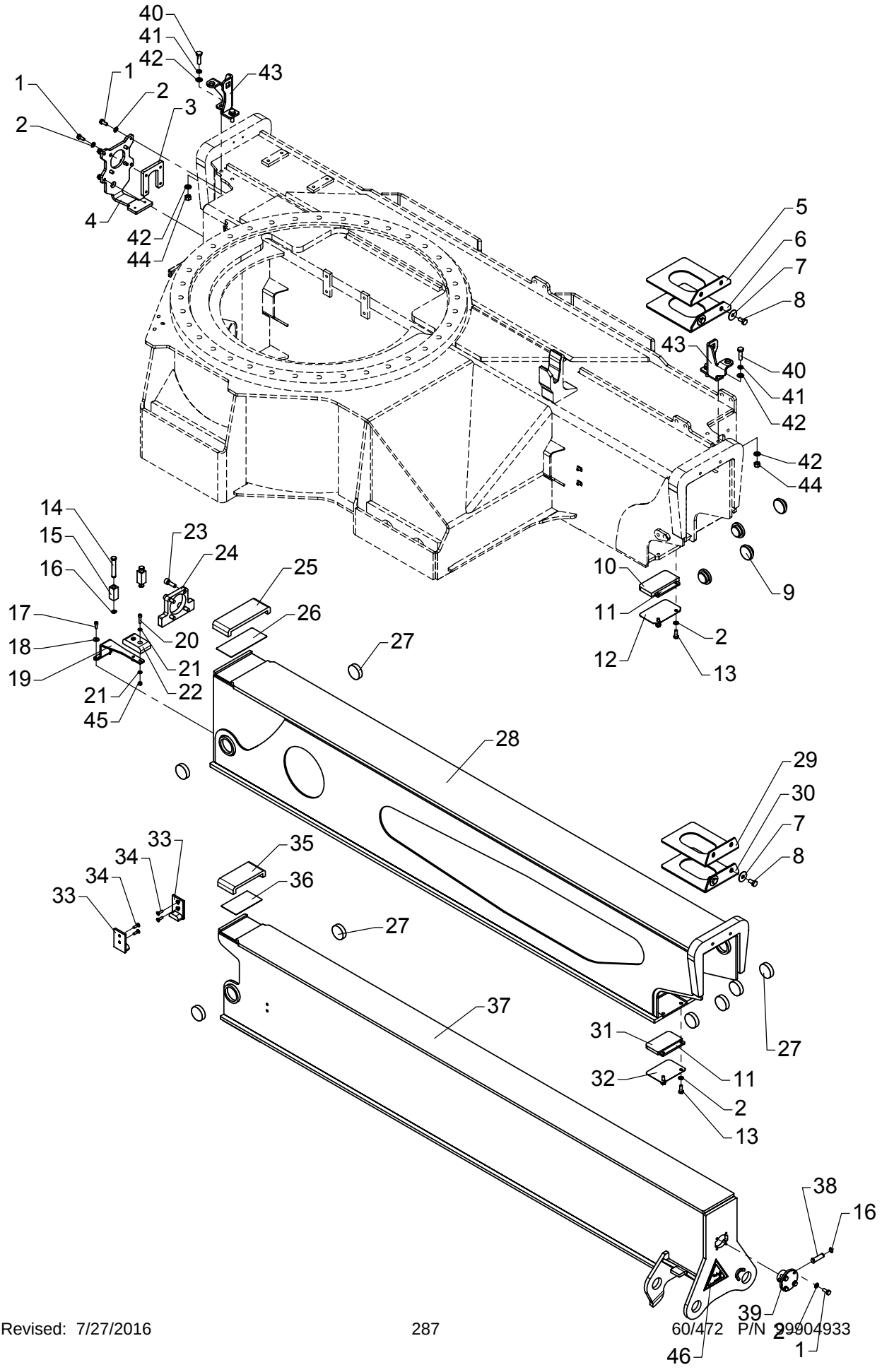

# Stabilizer beam - swing-up legs, type DHR - 8420

As from / To loader no.: 96 00 00 / 96 03 82
Created: 03.10.2003
Modified: 25.02.2015

| Item no. | Qty. | Part no. | Description | Remarks |
|---|---|---|---|---|
| 1 | 12 | 30132 | Set screw, stainless | |
| 2 | 16 | 31147 | Face washer, 8 mm | |
| 3 | 1 | 6300086 | Bracket | |
| 4 | 1 | 6300085 | End plate | |
| 5 | 1 | 6300045 | Spacer | |
| 6 | 1 | 6300046 | Spacer | |
| 7 | 4 | 31141 | Washer | 10 mm |
| 8 | 4 | 31517 | Set screw, stainless | M10 x 20 |
| 9 | 4 | 63739 | Guide shoe | |
| 10 | 1 | 63741 | Slide block | |
| 11 | 2 | 6300087 | Spacer | |
| 12 | 1 | 6302041 | Division plate | |
| 13 | 4 | 30133 | Set screw, stainless | |
| 14 | 2 | 6300088 | Pin | |
| 15 | 2 | 6300089 | Block | |
| 16 | 4 | 33102 | Circlip | 12U |
| 17 | 2 | 31539 | Screw, stainless | MC6 x 16 |
| 18 | 2 | 31134 | Washer, stainless | |
| 19 | 1 | 6300081 | Bracket for slide block | |
| 20 | 2 | 30962 | Screw | MC6 x 25 |
| 21 | 4 | 32302 | Face washer, stainless | 6 mm |
| 22 | 1 | 63744 | Supporting block | |
| 23 | 4 | 31568 | Screw, stainless | MC10 x 30 |
| 24 | 1 | 6300207 | Lock plate | |
| 25 | 1 | 63745 | Slide block | |
| 26 | 1 | 6302045 | Division plate | |
| 27 | 8 | 63740 | Slide block | |
| 28 | 1 | 6300091 | Stabilizer beam I | |
| 29 | 1 | 6300048 | Spacer | |
| 30 | 1 | 6300049 | Spacer | |
| 31 | 1 | 63742 | Slide block | |
| 32 | 1 | 6302043 | Division plate | |
| 33 | 2 | 63743 | Guide | |
| 34 | 4 | 30579 | Countersunk screw | MK6 x 20 |
| 35 | 1 | 63746 | Slide block | |
| 36 | 1 | 6302044 | Division plate | |
| 37 | 1 | 6300105 | Stabilizer beam II, swing-up | |
| 38 | 1 | 6194264 | Pin | |
| 39 | 1 | 6194244 | Bracket | |

# ODIN

Intern ref.: 6300090

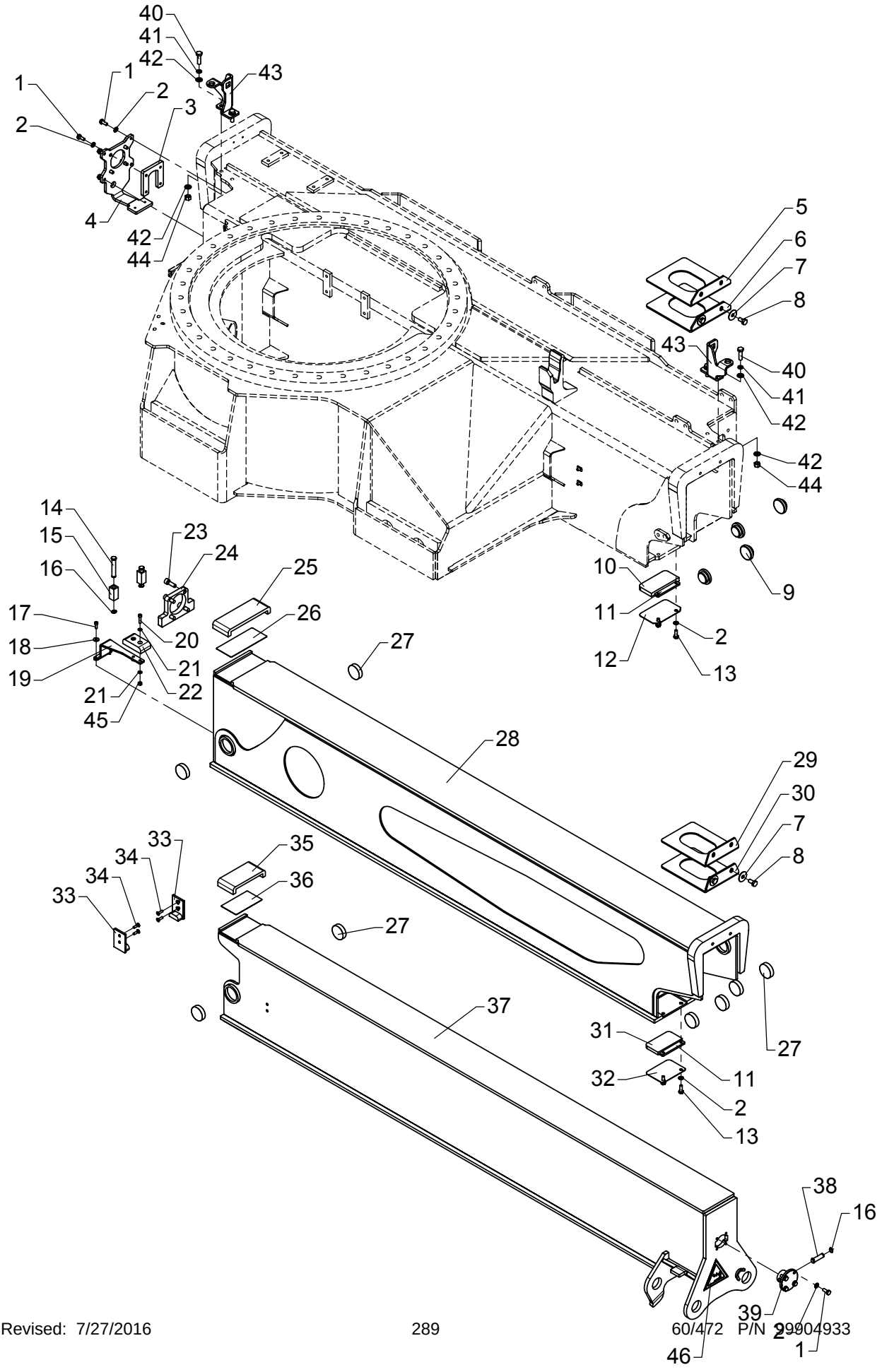

# Stabilizer beam - swing-up legs, type DHR - 8420

As from / To loader no.: 96 00 00 / 96 03 82
Created: 03.10.2003
Modified: 25.02.2015

| Item no. | Qty. | Part no. | Description | Remarks |
|---|---|---|---|---|
| 40 | 4 | 30157 | Set screw | M10 x 35 |
| 41 | 4 | 31156 | Spring washer | 10 mm |
| 42 | 8 | 31177 | Washer | 10 mm |
| 43 | 2 | 6300104 | Bracket | |
| 44 | 4 | 30888 | Lock nut | |
| 45 | 2 | 30884 | Lock nut, stainless | M6 |
| 46 | 1 | 66463 | Label"SWING-UP STABILIZER LEG" | |

# 6020

6303080 / 6300660
Intern ref.: 6300091 / 6300105

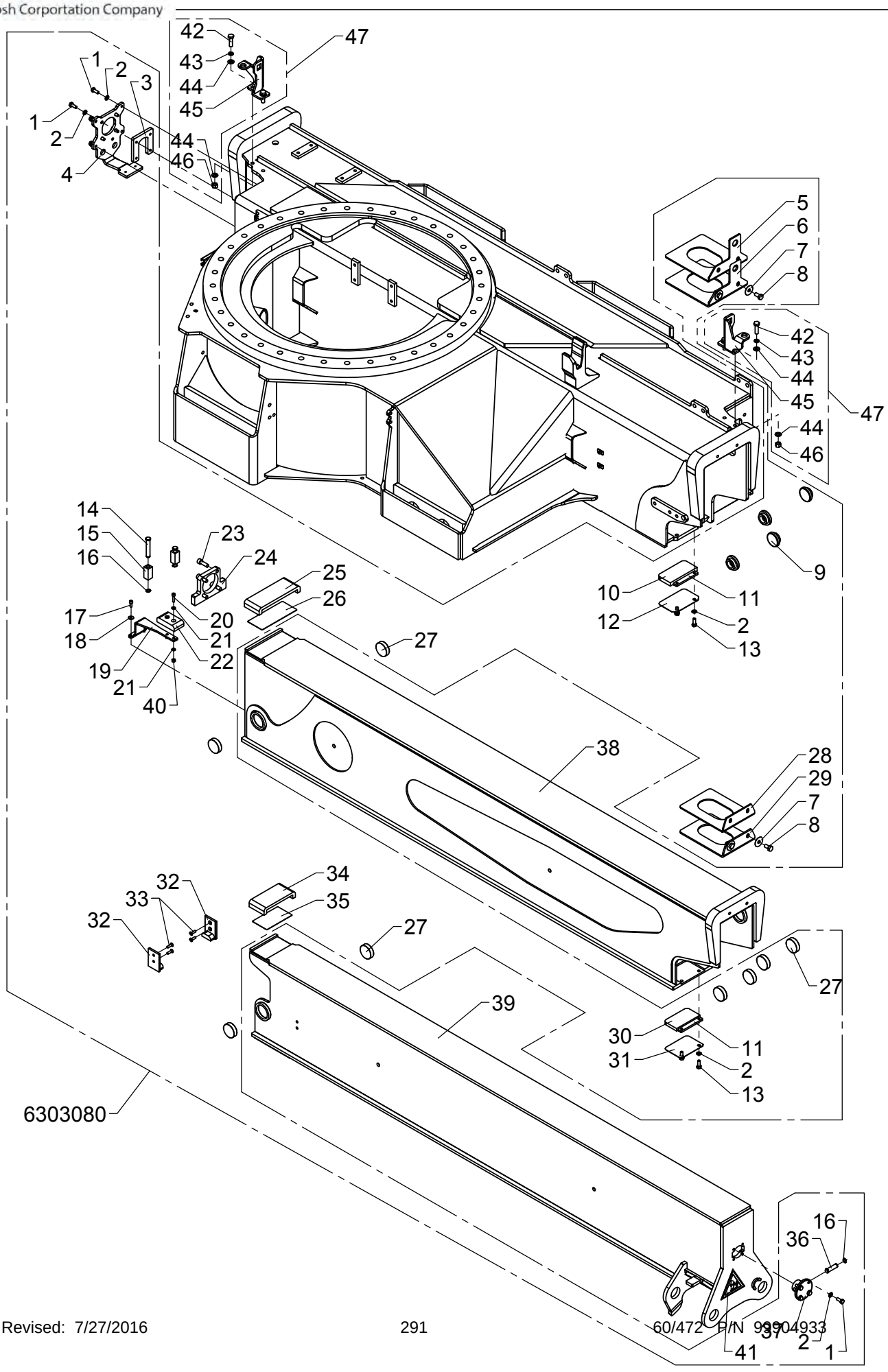

# Stabilizer beam - swing-up legs, type DHR - 8420

As from / To loader no.: 96 03 83
Created: 07.01.2015
Modified:

| Item no. | Qty. | Part no. | Description | Remarks |
|---|---|---|---|---|
| 1 | 12 | 30132 | Set screw, stainless | |
| 2 | 16 | 31147 | Face washer, 8 mm | |
| 3 | 1 | 6300086 | Bracket | |
| 4 | 1 | 6301394 | End plate | |
| 5 | 1 | 6300045 | Spacer | |
| 6 | 1 | 6300046 | Spacer | |
| 7 | 4 | 31141 | Washer | 10 mm |
| 8 | 4 | 31517 | Set screw, stainless | M10 x 20 |
| 9 | 4 | 63739 | Guide shoe | |
| 10 | 1 | 63741 | Slide block | |
| 11 | 2 | 6300087 | Spacer | |
| 12 | 1 | 6302041 | Division plate | |
| 13 | 4 | 30133 | Set screw, stainless | |
| 14 | 2 | 6300088 | Pin | |
| 15 | 2 | 6300089 | Block | |
| 16 | 4 | 33102 | Circlip | 12U |
| 17 | 2 | 31539 | Screw, stainless | MC6 x 16 |
| 18 | 2 | 31134 | Washer, stainless | |
| 19 | 1 | 6300081 | Bracket for slide block | |
| 20 | 2 | 30962 | Screw | MC6 x 25 |
| 21 | 4 | 32302 | Face washer, stainless | 6 mm |
| 22 | 1 | 63744 | Supporting block | |
| 23 | 4 | 31568 | Screw, stainless | MC10 x 30 |
| 24 | 1 | 6300207 | Lock plate | |
| 25 | 1 | 63745 | Slide block | |
| 26 | 1 | 6302045 | Division plate | |
| 27 | 8 | 63740 | Slide block | |
| 28 | 1 | 6300048 | Spacer | |
| 29 | 1 | 6300049 | Spacer | |
| 30 | 1 | 63742 | Slide block | |
| 31 | 1 | 6302043 | Division plate | |
| 32 | 2 | 63743 | Guide | |
| 33 | 4 | 30579 | Countersunk screw | MK6 x 20 |
| 34 | 1 | 63746 | Slide block | |
| 35 | 1 | 6302044 | Division plate | |
| 36 | 1 | 6194264 | Pin | |
| 37 | 1 | 6194244 | Bracket | |
| 38 | 1 | 6300091 | Stabilizer beam I | |
| 39 | 1 | 6300105 | Stabilizer beam II, swing-up | |

# 6020

6303080 / 6300660
Intern ref.: 6300091 / 6300105

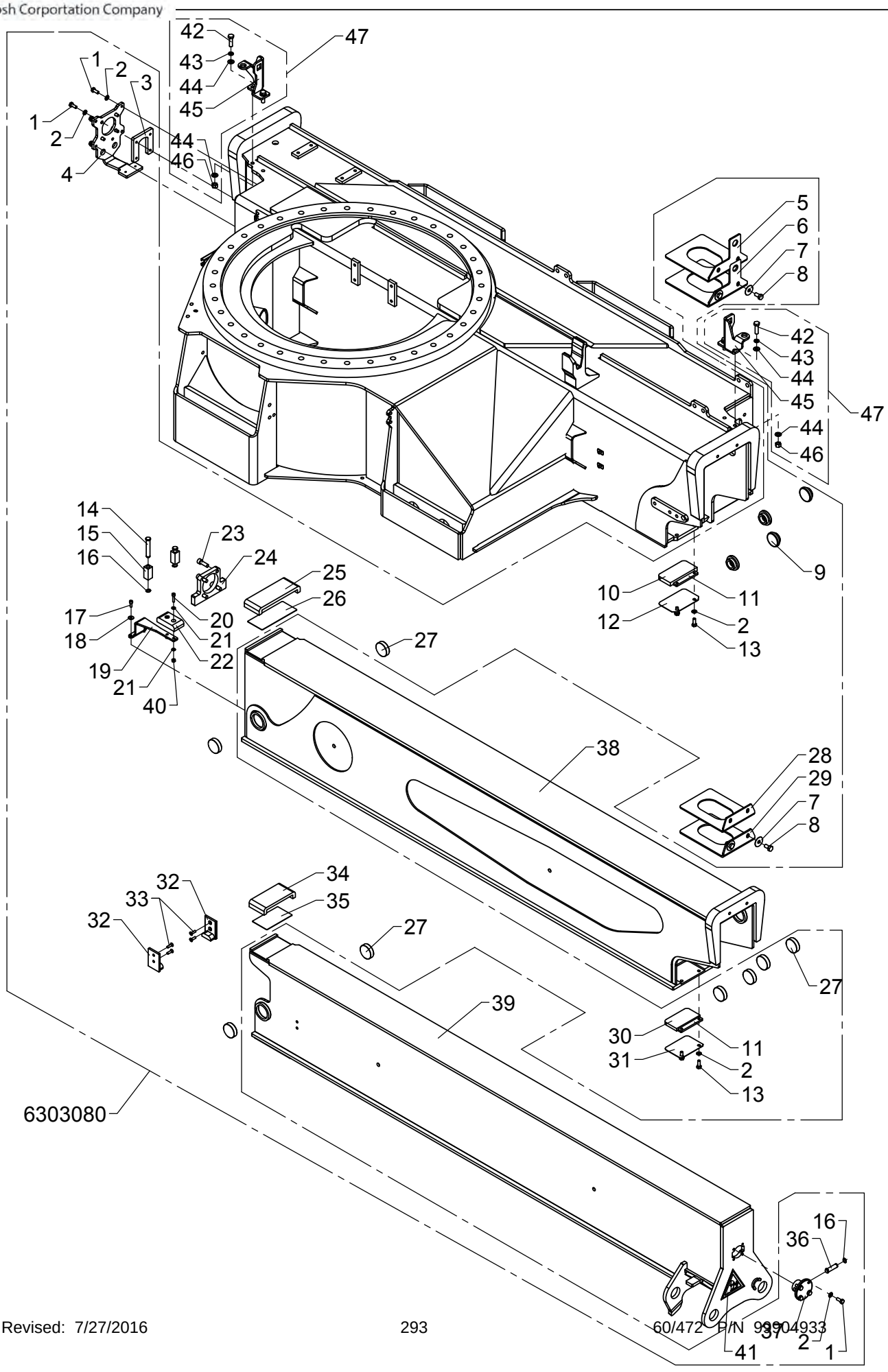

# Stabilizer beam - swing-up legs, type DHR - 8420

As from / To loader no.: 96 03 83
Created: 07.01.2015
Modified:

| Item no. | Qty. | Part no. | Description | Remarks |
|---|---|---|---|---|
| 40 | 4 | 30884 | Lock nut, stainless | M6 |
| 41 | 2 | 66463 | Label"SWING-UP STABILIZER LEG" | |
| 42 | 4 | 30157 | Set screw | M10 x 35 |
| 43 | 4 | 31156 | Spring washer | 10 mm |
| 44 | 8 | 31177 | Washer | 10 mm |
| 45 | 2 | 6300104 | Bracket | |
| 46 | 4 | 30888 | Lock nut | |
| 47 | | 6300660 | Stabilizer safety lock, swing-up leg | Pos. 42, 43, 44, 45, 46 |

# 6020K

Intern ref.: 6300110

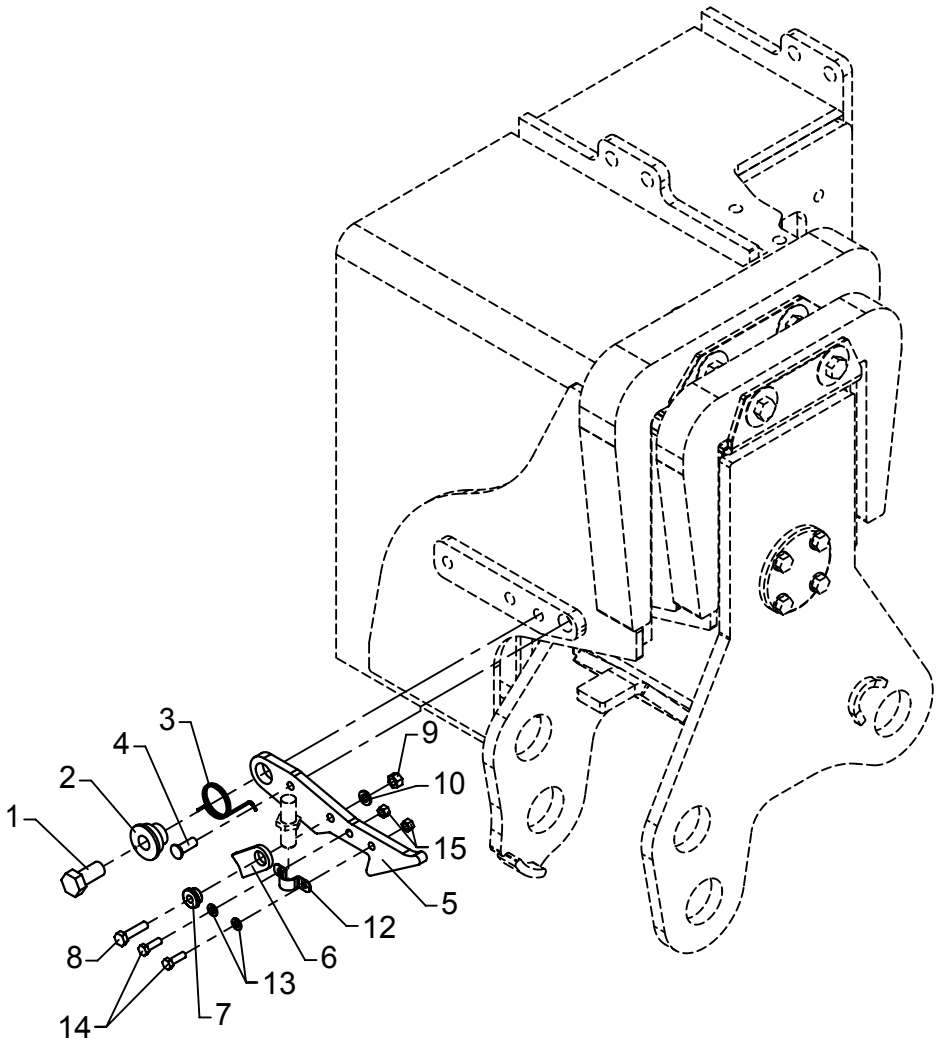

# Safety lock DV, DR, DHR

As from / To loader no.: 96 00 00 /
Created: 03.10.2003
Modified: 17.02.2012

| Item no. | Qty. | Part no. | Description | Remarks |
|---|---|---|---|---|
| 1 | 1 | 30176 | Set screw | M12 x 25 |
| 2 | 1 | 6245264 | Bushing | |
| 3 | 1 | 33473 | Spring | 6179044 |
| 4 | 1 | 31290 | Spike, galvanized | 7 x 20 |
| 5 | 1 | 6300078 | Lock pawl | |
| 6 | 1 | 6236054 | Click | |
| 7 | 1 | 63440 | Washer | |
| 8 | 1 | 30114 | Set screw, stainless | M6 x 25 |
| 9 | 1 | 30884 | Lock nut, stainless | M6 |
| 10 | 1 | 32302 | Face washer, stainless | 6 mm |
| 12 | 1 | 31443 | Cable clip | |
| 13 | 2 | 32308 | Washer | 5 mm |
| 14 | 2 | 30121 | Set screw | M5 x 16 |
| 15 | 2 | 30859 | Lock nut, stainless | |

# ODIN

Intern ref.: 6649790

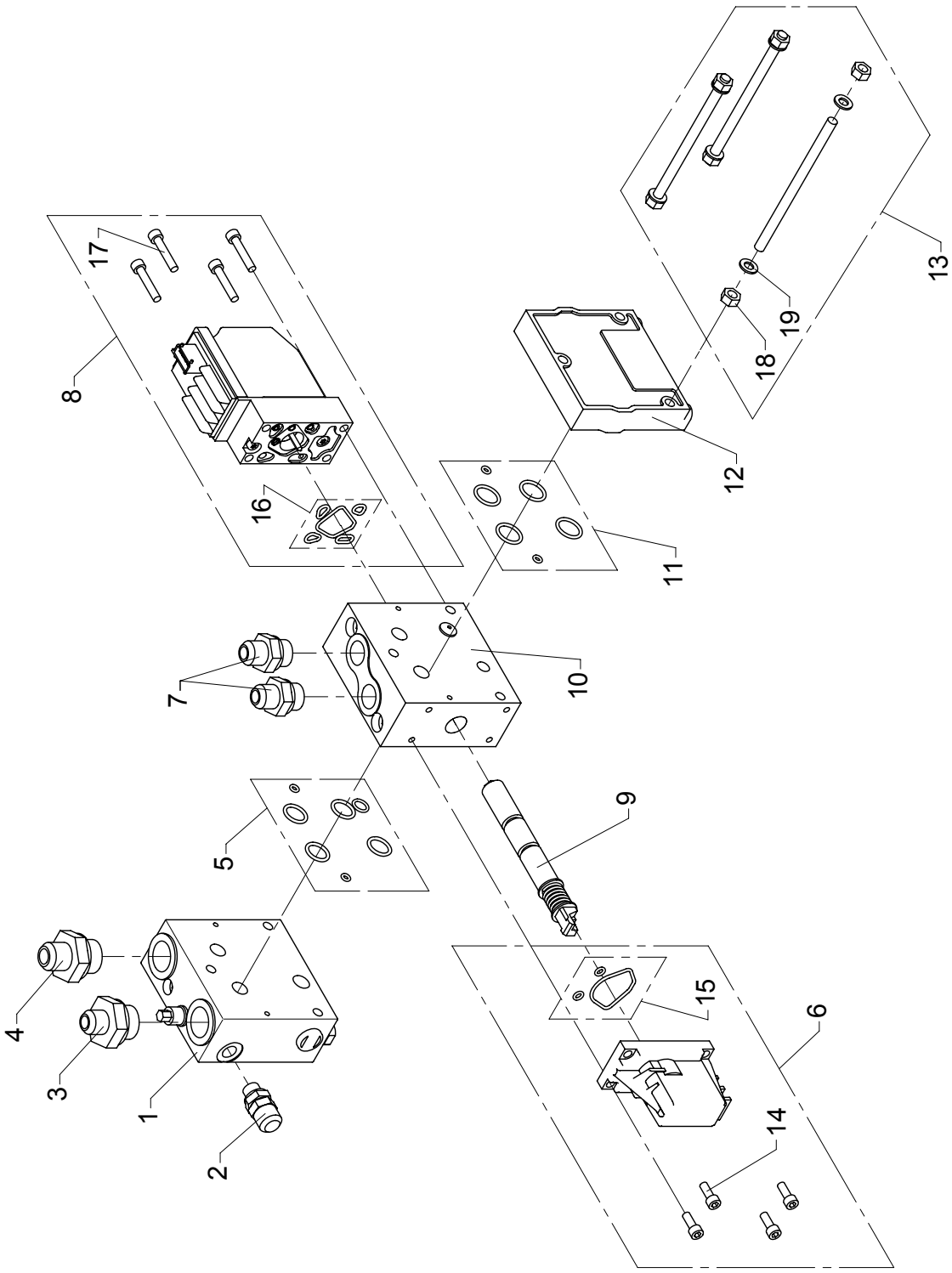

# Valve block, 1 section (extra RC function)

As from / To loader no.: 96 00 00 / 96 02 07
Created: 16.03.2004
Modified: 01.09.2008

| Item no. | Qty. | Part no. | Description | Remarks |
|---|---|---|---|---|
| | 1 | 63039 | Valve block | |
| 1 | 1 | 62037 | Inlet section | |
| 2 | 1 | 26103 | Pressure-gauge connect. | |
| 3 | 1 | 26283 | Connection | F40XS12 - 3/4 |
| 4 | 1 | 25866 | Connection | F40XS14/16 - 3/4 |
| 5 | 1 | 62237 | Seal kit | |
| 6 | 1 | 58919 | Lever module | |
| 7 | 2 | 25832 | Straight connection | F40XS12 - 1/2 |
| 8 | 1 | 58935 | Electric activation | |
| 9 | 1 | 62055 | Spool | |
| 10 | 1 | 62225 | Basic module | |
| 11 | 1 | 58925 | Seal kit | |
| 12 | 1 | 58921 | End cover | |
| 13 | 1 | 61990 | Connecting kit - 1 modul | |
| 14 | | 30424 | Screw | MC6 x 16 |
| 15 | | 62239 | Seal kit | |
| 16 | | 62240 | Seal kit | |
| 17 | | 62241 | Screw | |
| 18 | | 30856 | Nut, stainless | M8 |
| 19 | | 62044 | Washer | |

# ODIN

Intern ref.: 6651490

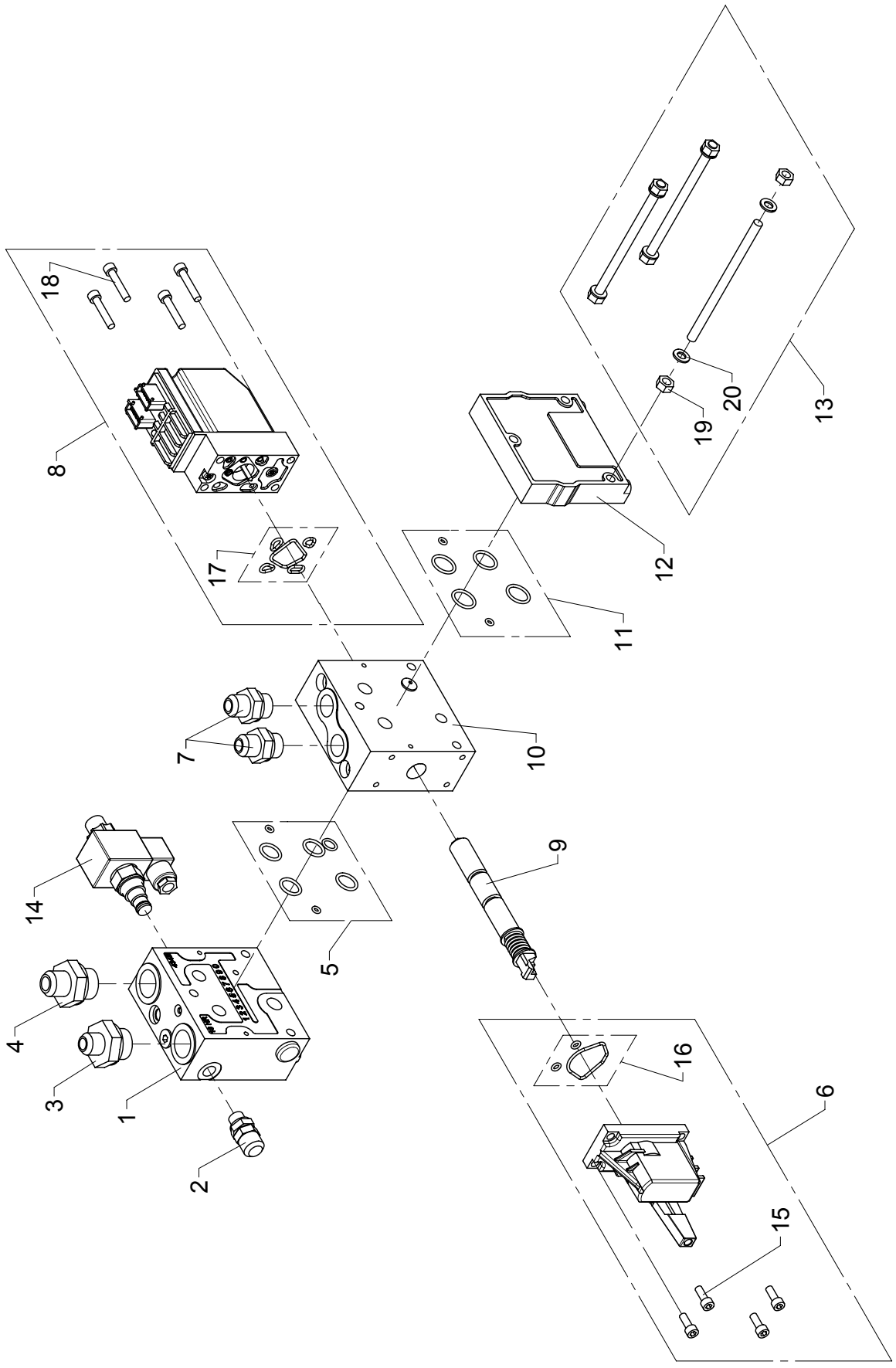

# Valve block, 1 section (extra RC function)

As from / To loader no.: 96 02 08
Created: 01.09.2008
Modified:

| Item no. | Qty. | Part no. | Description | Remarks |
|---|---|---|---|---|
| 1 | 1 | 58974 | Inlet section | |
| 2 | 1 | 26103 | Pressure-gauge connect. | |
| 3 | 1 | 26283 | Connection | F40XS12 - 3/4 |
| 4 | 1 | 25866 | Connection | F40XS14/16 - 3/4 |
| 5 | 1 | 62237 | Seal kit | |
| 6 | 1 | 58945 | Lever module incl. foot | |
| 7 | 2 | 25832 | Straight connection | F40XS12 - 1/2 |
| 8 | 1 | 62295 | Electric activation | |
| 9 | 1 | 62070 | Spool | |
| 10 | 1 | 62225 | Basic module | |
| 11 | 1 | 58925 | Seal kit | |
| 12 | 1 | 62235 | End plate | |
| 13 | 1 | 61990 | Connecting kit - 1 modul | |
| 14 | 1 | 59642 | Magnet coil | |
| 15 | 1 | 30424 | Screw | MC6 x 16 |
| 16 | 1 | 62239 | Seal kit | |
| 17 | 1 | 62240 | Seal kit | |
| 18 | 1 | 62241 | Screw | |
| 19 | 1 | 30856 | Nut, stainless | M8 |
| 20 | 1 | 62044 | Washer | |

# ODIN

Intern ref.: 6649690

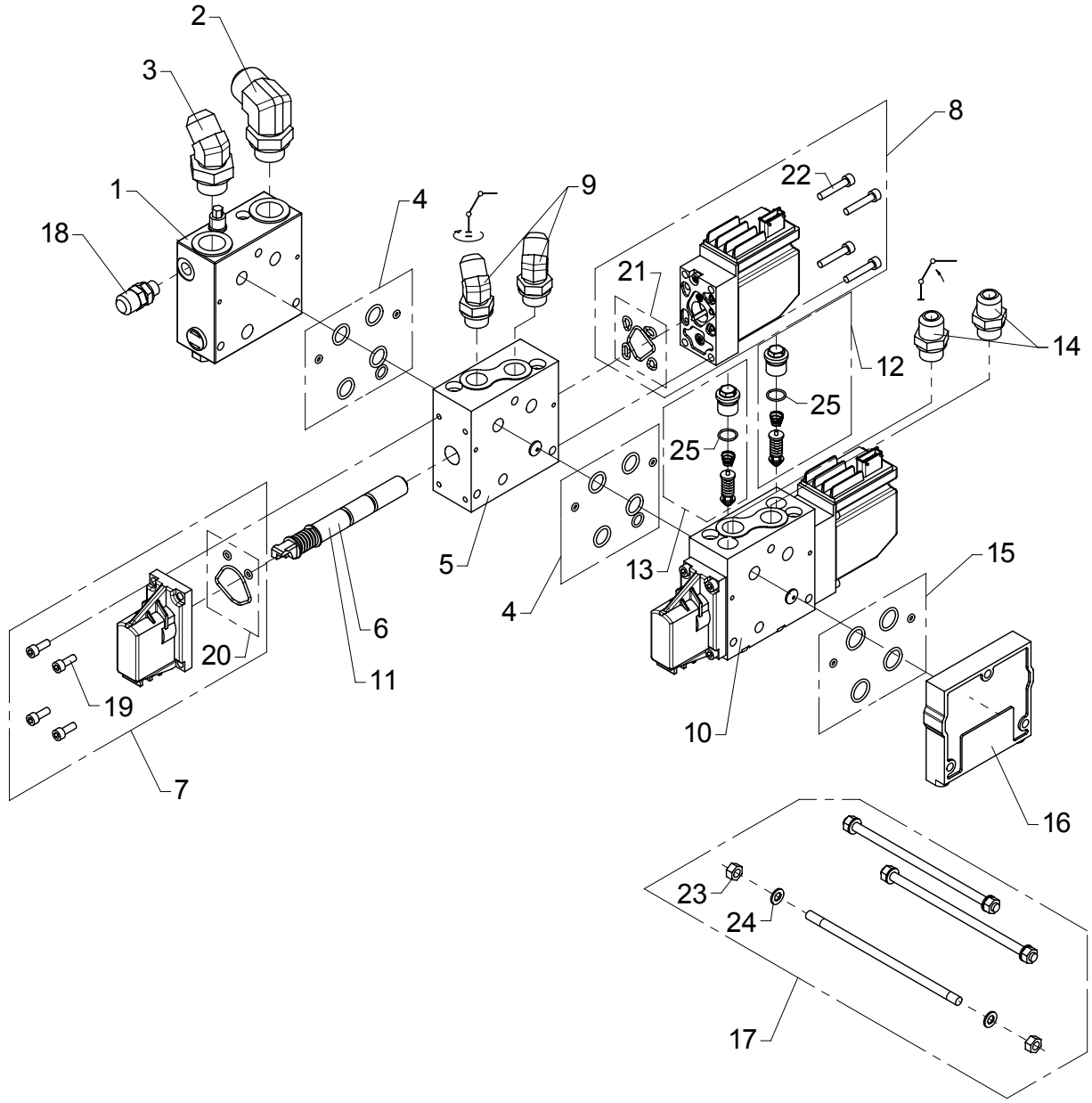

# Valve block, 2 sections P1

As from / To loader no.: 96 00 00 / 96 02 07
Created: 03.10.2003
Modified: 01.09.2008

| Item no. | Qty. | Part no. | Description | Remarks |
|---|---|---|---|---|
| | 1 | 63024 | Valve block | |
| 1 | 1 | 62037 | Inlet section | |
| 2 | 1 | 25840 | Elbow connection | C40XS25 - 3/4 |
| 3 | 1 | 26273 | Elbow connection 45° | V40XS18-20 - 3/4 |
| 4 | 2 | 62237 | Seal kit | |
| 5 | 1 | 62225 | Basic module | |
| 6 | 1 | 62055 | Spool | |
| 7 | 2 | 58919 | Lever module | |
| 8 | 2 | 58935 | Electric activation | |
| 9 | 2 | 25723 | Elbow connection 45° | V40XS14-16 - 1/2 |
| 10 | 1 | 62227 | Basic module | |
| 11 | 1 | 62029 | Spool | |
| 12 | 1 | 62271 | Port-relief valve | |
| 13 | 1 | 58931 | Port-relief valve | |
| 14 | 2 | 25833 | Straight connection | F40XS14/16 - 1/2 |
| 15 | 1 | 58925 | Seal kit | |
| 16 | 1 | 62235 | End plate | |
| 17 | 1 | 58913 | Connecting kit - 2 modules | |
| 18 | 1 | 26103 | Pressure-gauge connect. | |
| 19 | | 30424 | Screw | MC6 x 16 |
| 20 | | 62239 | Seal kit | |
| 21 | | 62240 | Seal kit | |
| 22 | | 62241 | Screw | |
| 23 | | 30856 | Nut, stainless | M8 |
| 24 | | 62044 | Washer | |
| 25 | | 62052 | O-ring | |

# ODIN

Intern ref.: 6649720

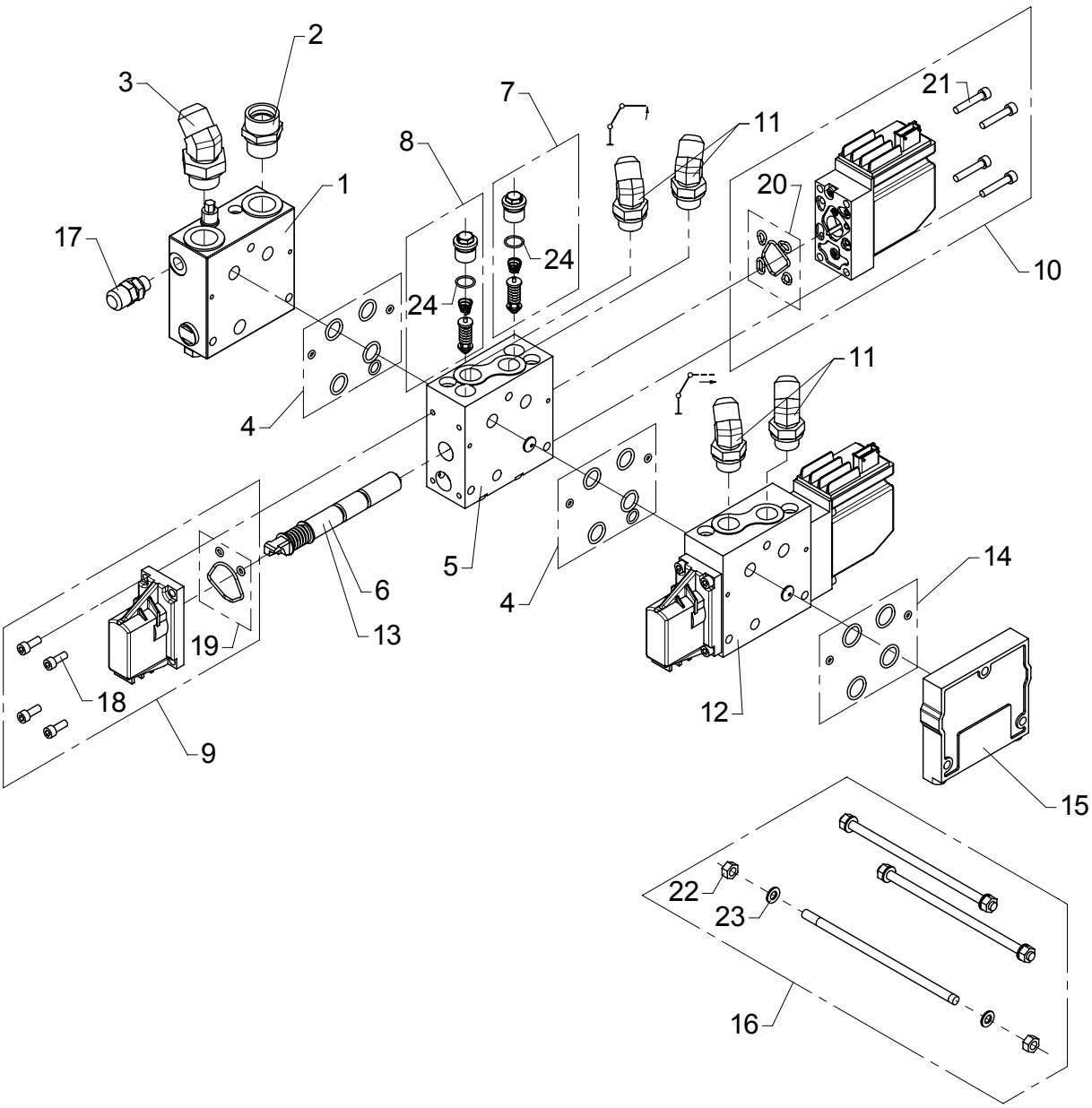

# Valve block, 2 sections P2

As from / To loader no.: 96 00 00 / 96 02 07
Created: 03.10.2003
Modified: 01.09.2008

| Item no. | Qty. | Part no. | Description | Remarks |
|---|---|---|---|---|
| | | 63025 | Valve block | |
| 1 | 1 | 62037 | Inlet section | |
| 2 | 1 | 25169 | Connection | P-GEV 22 LR-WD |
| 3 | 1 | 26273 | Elbow connection 45° | V40XS18-20 - 3/4 |
| 4 | 2 | 62237 | Seal kit | |
| 5 | 1 | 62227 | Basic module | |
| 6 | 1 | 62029 | Spool | |
| 7 | 1 | 62271 | Port-relief valve | |
| 8 | 1 | 62283 | Port-relief valve | |
| 9 | 2 | 58919 | Lever module | |
| 10 | 2 | 58935 | Electric activation | |
| 11 | 4 | 25723 | Elbow connection 45° | V40XS14-16 - 1/2 |
| 12 | 1 | 62225 | Basic module | |
| 13 | 1 | 62055 | Spool | |
| 14 | 1 | 58925 | Seal kit | |
| 15 | 1 | 58921 | End cover | |
| 16 | 1 | 58913 | Connecting kit - 2 modules | |
| 17 | 1 | 26103 | Pressure-gauge connect. | |
| 18 | | 30424 | Screw | MC6 x 16 |
| 19 | | 62239 | Seal kit | |
| 20 | | 62240 | Seal kit | |
| 21 | | 62241 | Screw | |
| 22 | | 30856 | Nut, stainless | M8 |
| 23 | | 62044 | Washer | |
| 24 | | 62052 | O-ring | |

# ODIN

Intern ref.: 6649700

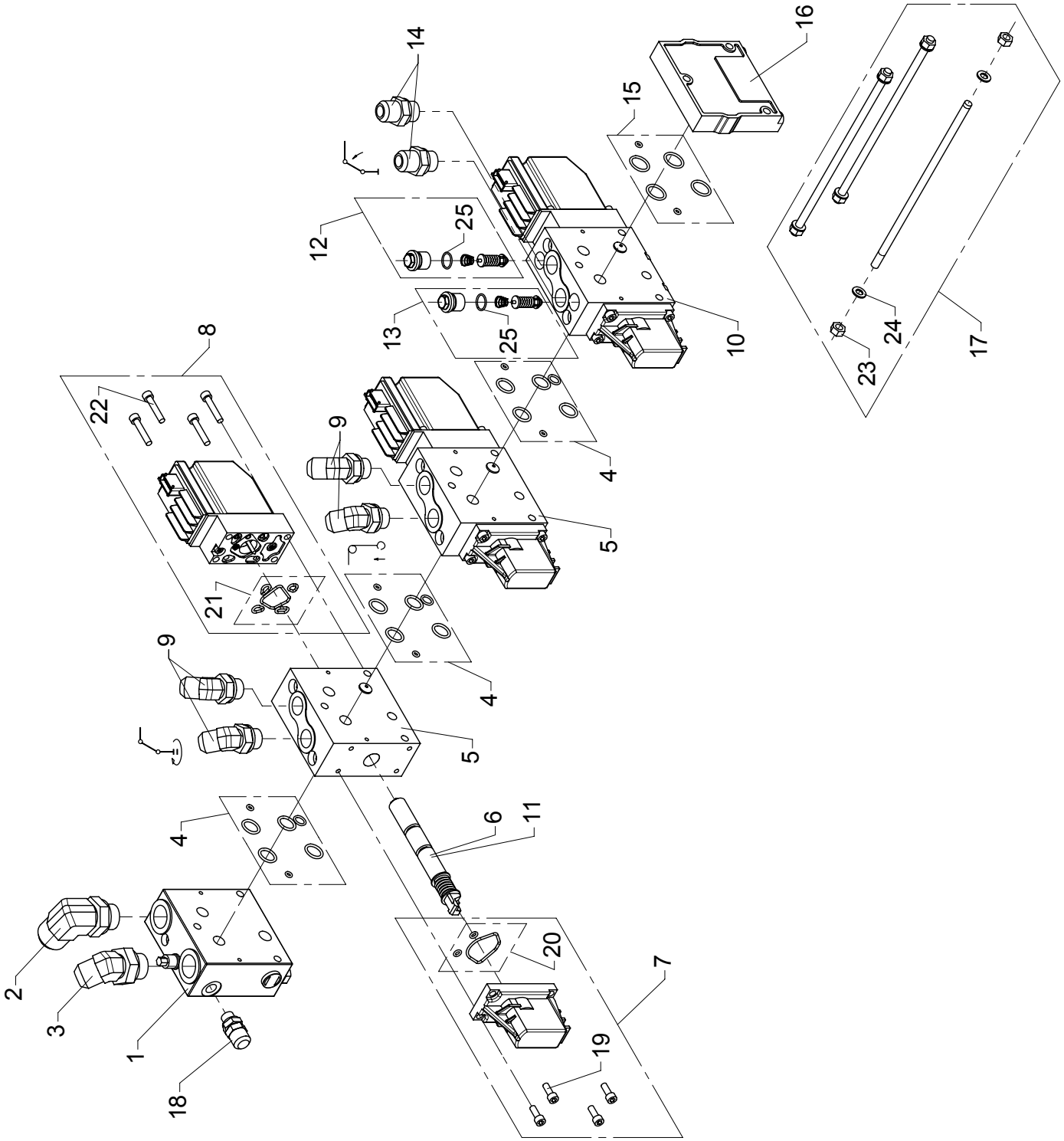

# Valve block, 3 sections P1

As from / To loader no.: 96 00 00 / 96 02 07
Created: 03.10.2003
Modified: 01.09.2008

| Item no. | Qty. | Part no. | Description | Remarks |
|---|---|---|---|---|
| | 1 | 63026 | Valve block | |
| 1 | 1 | 62037 | Inlet section | |
| 2 | 1 | 25840 | Elbow connection | C40XS25 - 3/4 |
| 3 | 1 | 26273 | Elbow connection 45° | V40XS18-20 - 3/4 |
| 4 | 3 | 62237 | Seal kit | |
| 5 | 2 | 62225 | Basic module | |
| 6 | 2 | 62055 | Spool | |
| 7 | 3 | 58919 | Lever module | |
| 8 | 3 | 58935 | Electric activation | |
| 9 | 4 | 25723 | Elbow connection 45° | V40XS14-16 - 1/2 |
| 10 | 1 | 62227 | Basic module | |
| 11 | 1 | 62029 | Spool | |
| 12 | 1 | 62271 | Port-relief valve | |
| 13 | 1 | 58931 | Port-relief valve | |
| 14 | 2 | 25833 | Straight connection | F40XS14/16 - 1/2 |
| 15 | 1 | 58925 | Seal kit | |
| 16 | 1 | 62235 | End plate | |
| 17 | 1 | 62018 | Connecting kit - 3 modules | |
| 18 | 1 | 26103 | Pressure-gauge connect. | |
| 19 | | 30424 | Screw | MC6 x 16 |
| 20 | | 62239 | Seal kit | |
| 21 | | 62240 | Seal kit | |
| 22 | | 62241 | Screw | |
| 23 | | 30856 | Nut, stainless | M8 |
| 24 | | 62044 | Washer | |
| 25 | | 62052 | O-ring | |

# ODIN

Intern ref.: 6649780

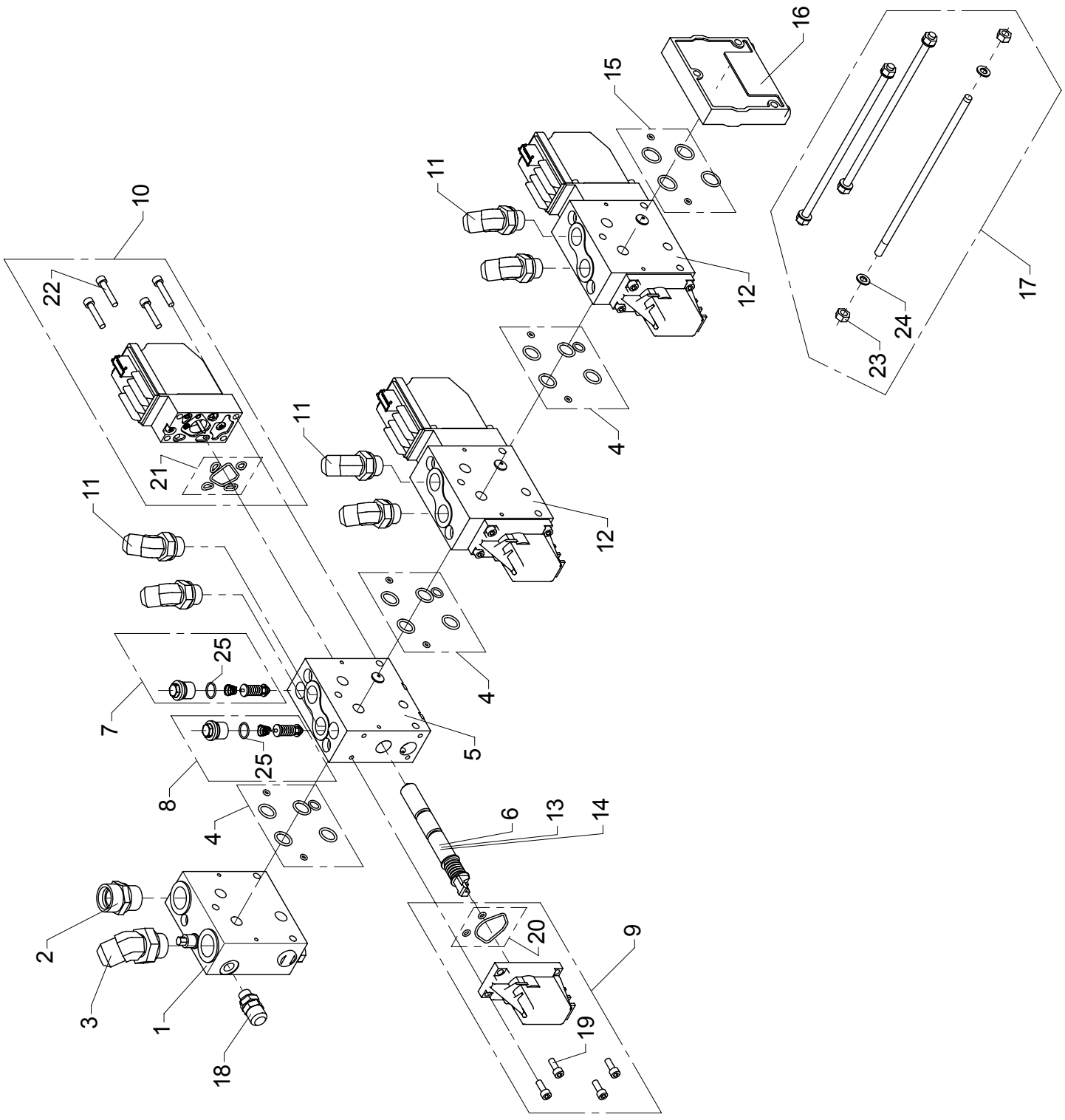

# Valve block, 3 sections P2

As from / To loader no.: 96 00 00 / 96 02 07
Created: 26.02.2004
Modified: 01.09.2008

| Item no. | Qty. | Part no. | Description | Remarks |
|---|---|---|---|---|
| | 1 | 63041 | Valve block | |
| 1 | 1 | 62037 | Inlet section | |
| 2 | 1 | 25169 | Connection | P-GEV 22 LR-WD |
| 3 | 1 | 26273 | Elbow connection 45° | V40XS18-20 - 3/4 |
| 4 | 3 | 62237 | Seal kit | |
| 5 | 1 | 62227 | Basic module | |
| 6 | 1 | 62029 | Spool | |
| 7 | 1 | 62271 | Port-relief valve | |
| 8 | 1 | 62283 | Port-relief valve | |
| 9 | 3 | 58919 | Lever module | |
| 10 | 3 | 58935 | Electric activation | |
| 11 | 6 | 25723 | Elbow connection 45° | V40XS14-16 - 1/2 |
| 12 | 2 | 62225 | Basic module | |
| 13 | 1 | 62055 | Spool | |
| 14 | 1 | 62034 | Spool | |
| 15 | 1 | 58925 | Seal kit | |
| 16 | 1 | 58921 | End cover | |
| 17 | 1 | 62018 | Connecting kit - 3 modules | |
| 18 | 1 | 26103 | Pressure-gauge connect. | |
| 19 | | 30424 | Screw | MC6 x 16 |
| 20 | | 62239 | Seal kit | |
| 21 | | 62240 | Seal kit | |
| 22 | | 62241 | Screw | |
| 23 | | 30856 | Nut, stainless | M8 |
| 24 | | 62044 | Washer | |
| 25 | | 62052 | O-ring | |

# ODIN

Intern ref.: 6649710

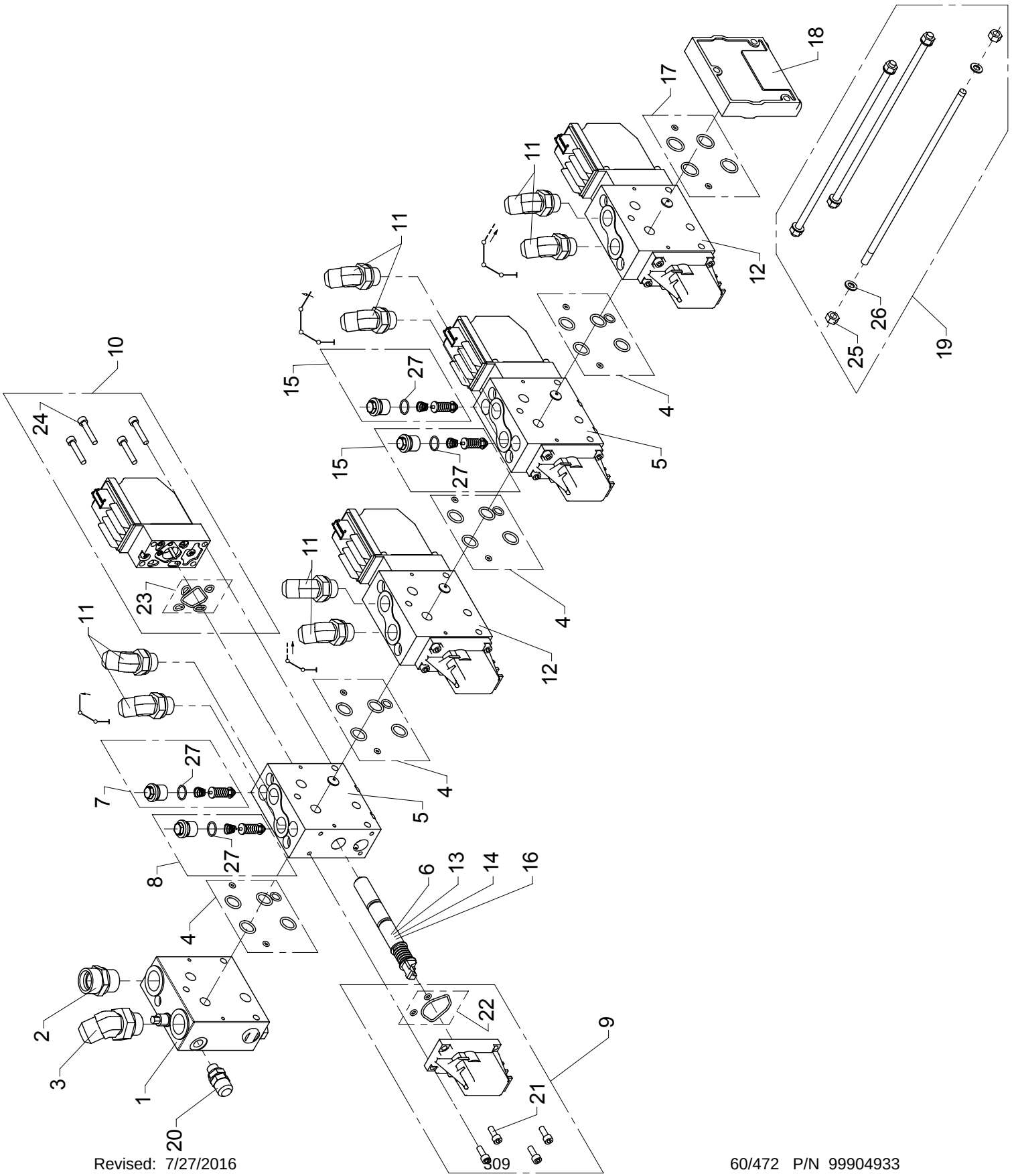

# Valve block, 4 sections P2

As from / To loader no.: 96 00 00 / 96 02 07
Created: 03.10.2003
Modified: 01.09.2008

| Item no. | Qty. | Part no. | Description | Remarks |
|---|---|---|---|---|
| | 1 | 63027 | Valve block | |
| 1 | 1 | 62037 | Inlet section | |
| 2 | 1 | 25169 | Connection | P-GEV 22 LR-WD |
| 3 | 1 | 26273 | Elbow connection 45° | V40XS18-20 - 3/4 |
| 4 | 4 | 62237 | Seal kit | |
| 5 | 2 | 62227 | Basic module | |
| 6 | 1 | 62029 | Spool | |
| 7 | 1 | 62271 | Port-relief valve | |
| 8 | 1 | 62283 | Port-relief valve | |
| 9 | 4 | 58919 | Lever module | |
| 10 | 4 | 58935 | Electric activation | |
| 11 | 8 | 25723 | Elbow connection 45° | V40XS14-16 - 1/2 |
| 12 | 2 | 62225 | Basic module | |
| 13 | 1 | 62055 | Spool | |
| 14 | 1 | 62070 | Spool | |
| 15 | 2 | 62282 | Port-relief valve | |
| 16 | 1 | 62034 | Spool | |
| 17 | 1 | 58925 | Seal kit | |
| 18 | 1 | 58921 | End cover | |
| 19 | 1 | 62032 | Connecting kit - 4 modules | |
| 20 | 1 | 26103 | Pressure-gauge connect. | |
| 21 | | 30424 | Screw | MC6 x 16 |
| 22 | | 62239 | Seal kit | |
| 23 | | 62240 | Seal kit | |
| 24 | | 62241 | Screw | |
| 25 | | 30856 | Nut, stainless | M8 |
| 26 | | 62044 | Washer | |
| 27 | | 62052 | O-ring | |

# ODIN

An Oshkosh Corportation Company

Intern ref.:

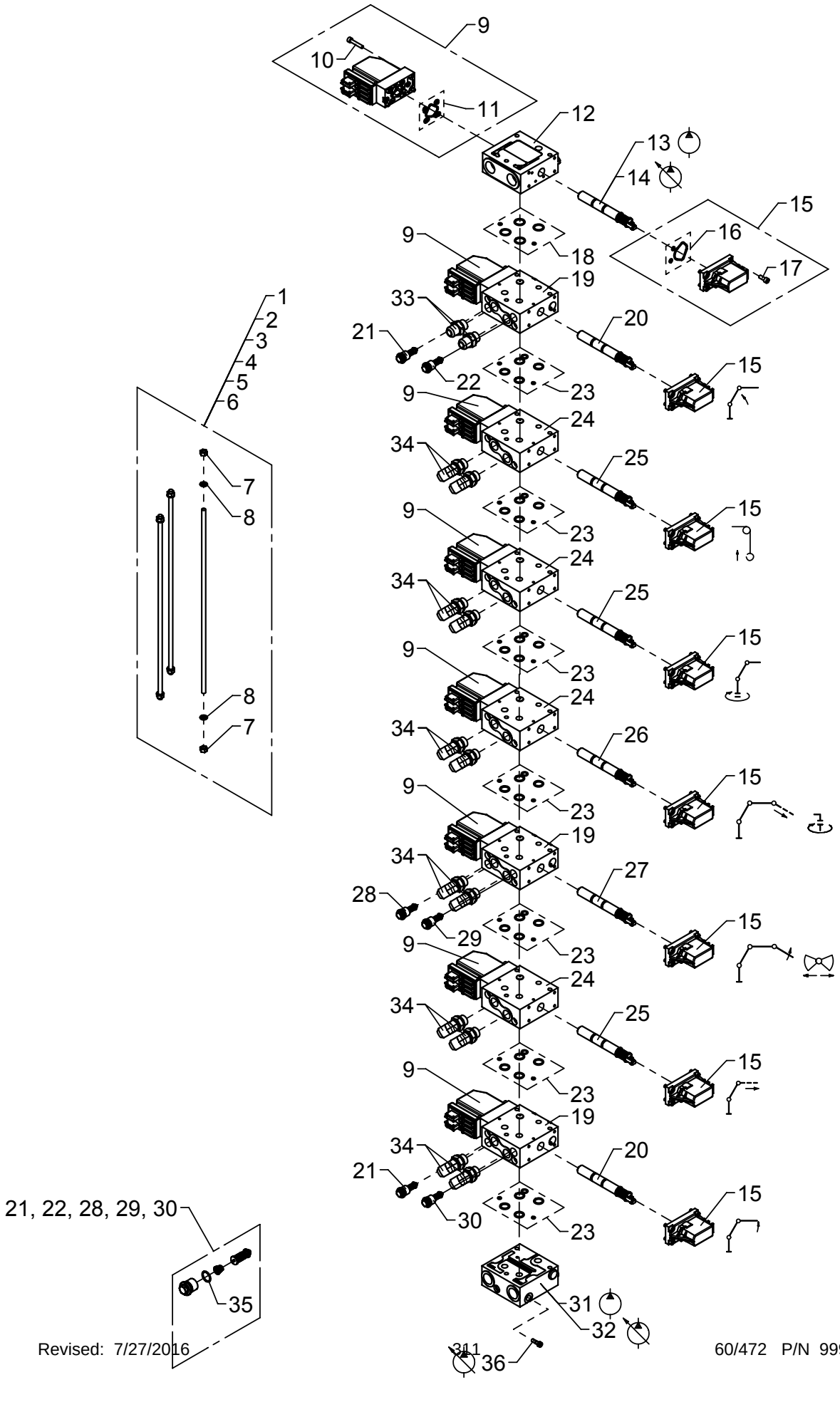

# Valve block, 2-7 sections

As from / To loader no.: 96 02 08 / 96 02 52
Created: 01.09.2008
Modified: 06.07.2010

| Item no. | Qty. | Part no. | Description | Remarks |
|---|---|---|---|---|
| 1 | | 58963 | Connecting kit 2 sections | Incl. pos. 7, 8, 18, 23 |
| 2 | | 58964 | Connecting kit, 3 sections | Incl. pos. 7, 8, 18, 23 |
| 3 | | 58965 | Connecting kit, 4 sections | Incl. pos. 7, 8, 18, 23 |
| 4 | | 58966 | Connecting kit, 5 sections | Incl. pos. 7, 8, 18, 23 |
| 5 | | 58967 | Connecting kit, 6 sections | Incl. pos. 7, 8, 18, 23 |
| 6 | | 58968 | Connecting kit, 7 sections | Incl. pos. 7, 8, 18, 23 |
| 7 | | 30856 | Nut, stainless | M8 |
| 8 | | 62044 | Washer | |
| 9 | | 62295 | Electric activation | |
| 10 | | 62241 | Screw | |
| 11 | | 62240 | Seal kit | |
| 12 | | 58958 | PVSK valve section | |
| 13 | | 58959 | Spool, OC | Fixed flow pump |
| 14 | | 58960 | Spool, CC | Variable flow pump |
| 15 | | 58919 | Lever module | |
| 16 | | 62239 | Seal kit | |
| 17 | | 30424 | Screw | MC6 x 16 |
| 18 | | 58925 | Seal kit | |
| 19 | | 62227 | Basic module | |
| 20 | | 62029 | Spool | |
| 21 | | 62271 | Port-relief valve | |
| 22 | | 58931 | Port-relief valve | 350 bar |
| 23 | | 62237 | Seal kit | |
| 24 | | 62225 | Basic module | |
| 25 | | 62055 | Spool | |
| 26 | | 62034 | Spool | |
| 27 | | 62070 | Spool | |
| 28 | | 62281 | Port-relief valve | 280 bar |
| 29 | | 62282 | Port-relief valve | 300 bar |
| 30 | | 62283 | Port-relief valve | 320 bar |
| 31 | | 58955 | Inlet section, OC | Fixed flow pump |
| 32 | | 58956 | Inlet section, CC | Variable flow pump |
| 33 | | 25833 | Straight connection | F40XS14/16 - 1/2 |
| 34 | | 25723 | Elbow connection 45° | V40XS14-16 - 1/2 |
| 35 | | 62052 | O-ring | |
| 36 | | 62065 | Closed center kit | |

# 6020K

An Oshkosh Corportation Company

Intern ref.:

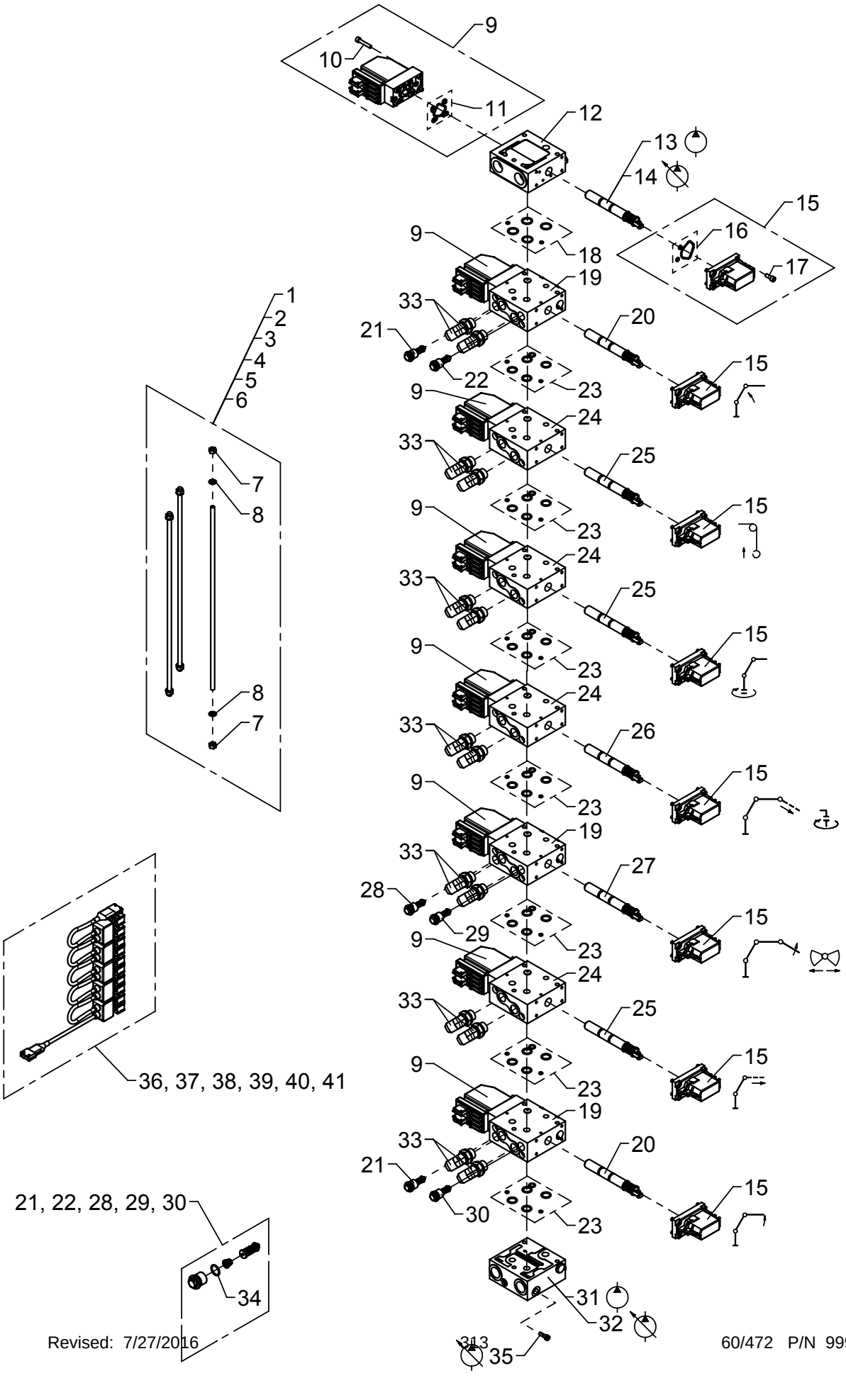

# Valve block, 2-7 sections

As from / To loader no.: 96 02 53 /
Created: 06.07.2010
Modified:

| Item no. | Qty. | Part no. | Description | Remarks |
|---|---|---|---|---|
| 1 | | 58963 | Connecting kit 2 sections | Incl. pos. 7, 8, 18, 23 |
| 2 | | 58964 | Connecting kit, 3 sections | Incl. pos. 7, 8, 18, 23 |
| 3 | | 58965 | Connecting kit, 4 sections | Incl. pos. 7, 8, 18, 23 |
| 4 | | 58966 | Connecting kit, 5 sections | Incl. pos. 7, 8, 18, 23 |
| 5 | | 58967 | Connecting kit, 6 sections | Incl. pos. 7, 8, 18, 23 |
| 6 | | 58968 | Connecting kit, 7 sections | Incl. pos. 7, 8, 18, 23 |
| 7 | | 30856 | Nut, stainless | M8 |
| 8 | | 62044 | Washer | |
| 9 | | 62295 | Electric activation | |
| 10 | | 62241 | Screw | |
| 11 | | 62240 | Seal kit | |
| 12 | | 58958 | PVSK valve section | |
| 13 | | 58959 | Spool, OC | Fixed flow pump |
| 14 | | 58960 | Spool, CC | Variable flow pump |
| 15 | | 58919 | Lever module | |
| 16 | | 62239 | Seal kit | |
| 17 | | 30424 | Screw | MC6 x 16 |
| 18 | | 58925 | Seal kit | |
| 19 | | 62227 | Basic module | |
| 20 | | 62029 | Spool | |
| 21 | | 62271 | Port-relief valve | |
| 22 | | 58931 | Port-relief valve | 350 bar |
| 23 | | 62237 | Seal kit | |
| 24 | | 62225 | Basic module | |
| 25 | | 62055 | Spool | |
| 26 | | 62034 | Spool | |
| 27 | | 62070 | Spool | |
| 28 | | 62281 | Port-relief valve | 280 bar |
| 29 | | 62282 | Port-relief valve | 300 bar |
| 30 | | 62283 | Port-relief valve | 320 bar |
| 31 | | 58955 | Inlet section, OC | Fixed flow pump |
| 32 | | 58956 | Inlet section, CC | Variable flow pump |
| 33 | | 25723 | Elbow connection 45° | V40XS14-16 - 1/2 |
| 34 | | 62052 | O-ring | |
| 35 | | 62065 | Closed center kit | |
| 36 | | 58984 | PVED cable kit, 3 modules | |
| 37 | | 58985 | PVED cable kit, 4 modules | |
| 38 | | 58986 | PVED cable kit, 5 modules | |

# 6020K

Intern ref.:

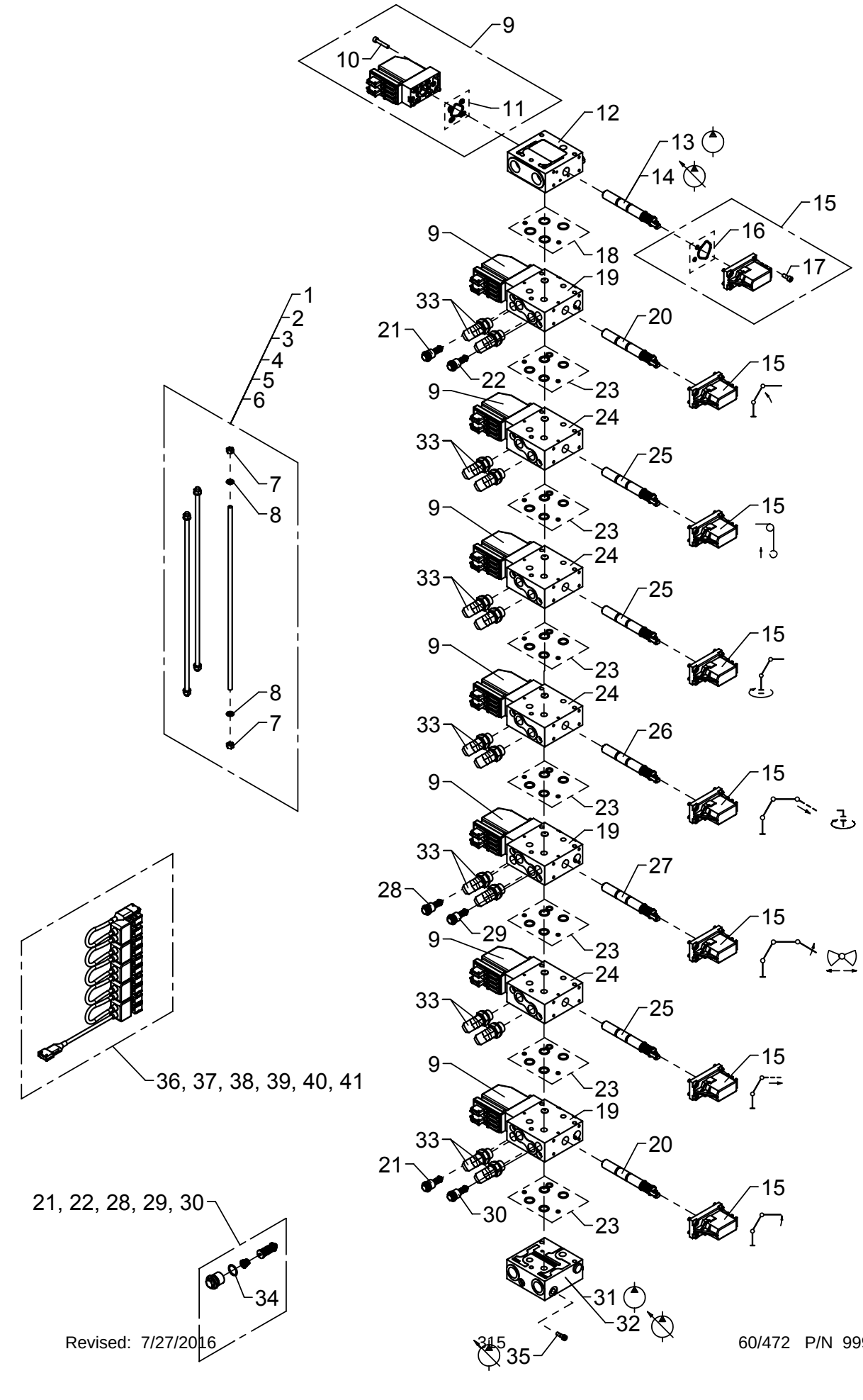

# Valve block, 2-7 sections

As from / To loader no.: 96 02 53 /
Created: 06.07.2010
Modified:

| Item no. | Qty. | Part no. | Description | Remarks |
|---|---|---|---|---|
| 39 | | 58987 | PVED cable kit, 6 modules | |
| 40 | | 58988 | PVED cable kit, 7 modules | |
| 41 | | 58989 | PVED cable kit, 8 modules | |

# ODIN

Intern ref.: 6649730

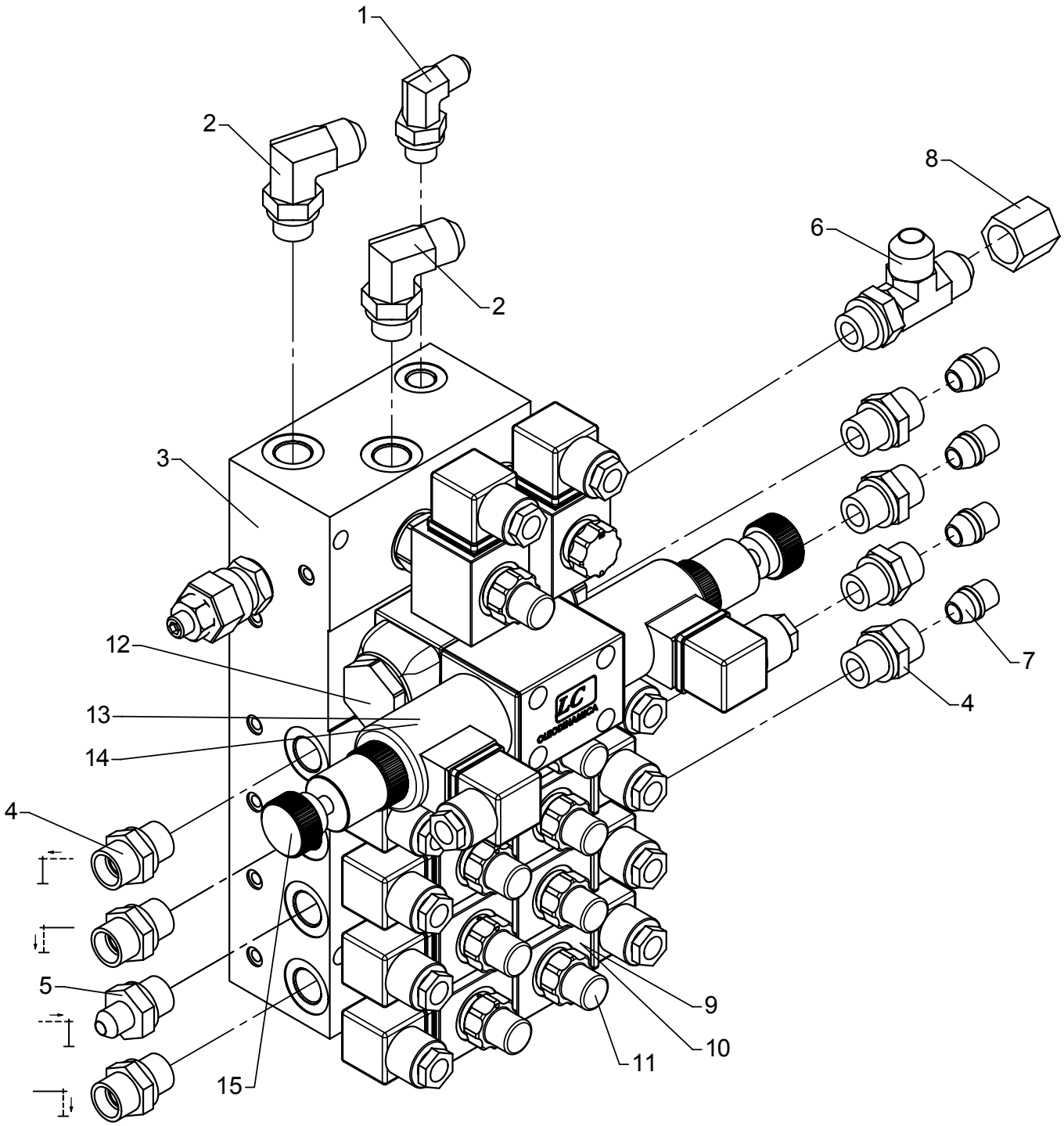

# Stabilizer valve block, 8 functions

As from / To loader no.: 96 00 00 /
Created: 03.10.2003
Modified: 04.07.2005

| Item no. | Qty. | Part no. | Description | Remarks |
|---|---|---|---|---|
| 1 | 1 | 25858 | Elbow connection | C40XS 12-3/8 JIC |
| 2 | 2 | 25838 | Elbow connection | C40XS 12-3/8 JIC |
| 3 | 1 | 59049 | Valve block | |
| 4 | 7 | 25127 | Connection | GES 12 LR-WD |
| 5 | 1 | 25830 | Straight connection | F40XS 8-3/8 JIC |
| 6 | 1 | 25813 | T-connection | R40XS 12-3/8 JIC |
| 7 | 4 | 26180 | Blanking plug | VSD 12L/S-O |
| 8 | 1 | 25876 | Screw cap | FNTXS 12 JIC |
| 9 | | 61778 | Solenoid | |
| 10 | | 61777 | Solenoid | |
| 11 | | 59057 | Solenoid valve | |
| 12 | | 59079 | Valve | |
| 13 | | 59073 | Solenoid 12V | |
| 14 | | 59082 | Solenoid 24V | |
| 15 | | 59095 | Emergency screw | |

# ODIN

Intern ref.: 6650390

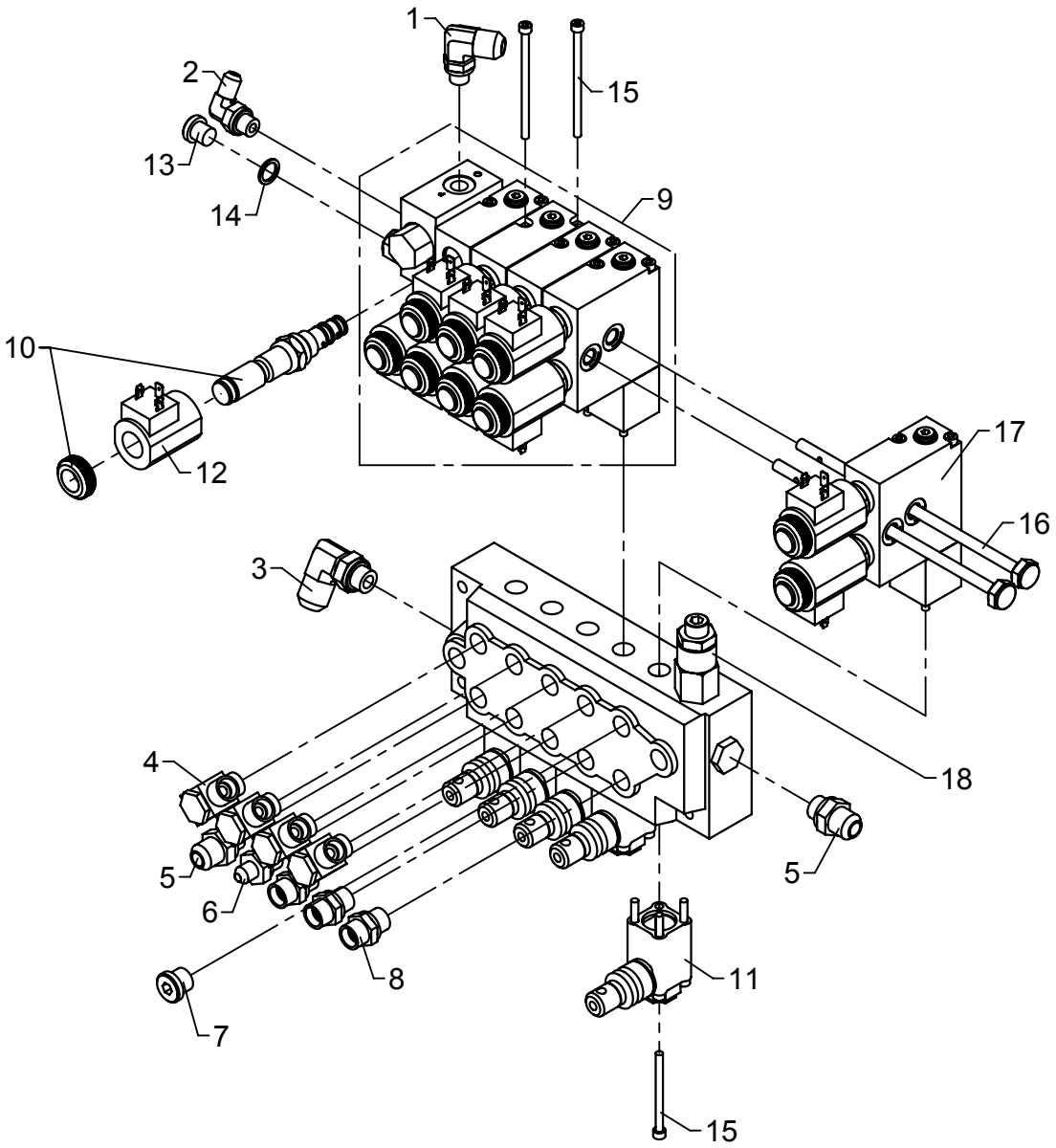

# Valve block, RC

As from / To loader no.: 96 02 08
Created: 23.06.2008
Modified:

| Item no. | Qty. | Part no. | Description | Remarks |
|---|---|---|---|---|
| 1 | 1 | 25812 | Elbow connection | C40XS12 - 1/4 |
| 2 | 1 | 25858 | Elbow connection | C40XS8 - 1/4 |
| 3 | 1 | 26787 | Elbow connection | C40XS14/16 - 3/8 |
| 4 | 4 | 25130 | Banjo connection | RSWV 12 LR |
| 5 | 2 | 25831 | Straight connection | F40XS12 - 3/8 |
| 6 | 1 | 25830 | Straight connection | F40XS8 - 3/8 |
| 7 | 1 | 25277 | Plug | VS-R-3/8 WD |
| 8 | 3 | 25127 | Connection | P-GEV 12 LR-WD |
| 9 | 1 | 55278 | Valve block, complete | |
| 10 | | 55504 | Cartridge | |
| 11 | | 55334 | Hand lever kit | |
| 12 | | 55345 | Solenoid, 26V | |
| 13 | | 25197 | Plug | VS-R-1/4 WD |
| 14 | | 21102 | Seal washer | ø14 x 18,7 x 1,5 |
| 15 | | 30970 | Screw | MC5 x 65 |
| 16 | | 55327 | Kit of stay bolts | |
| 17 | | 55322 | Electro-hydr. module 24V | |
| 18 | | 55343 | Main relief valve 190 bar | |
| 18 | | 30970 | Sockethead screw | MC5 x 65 |

# ODIN

Intern ref.: 6301200

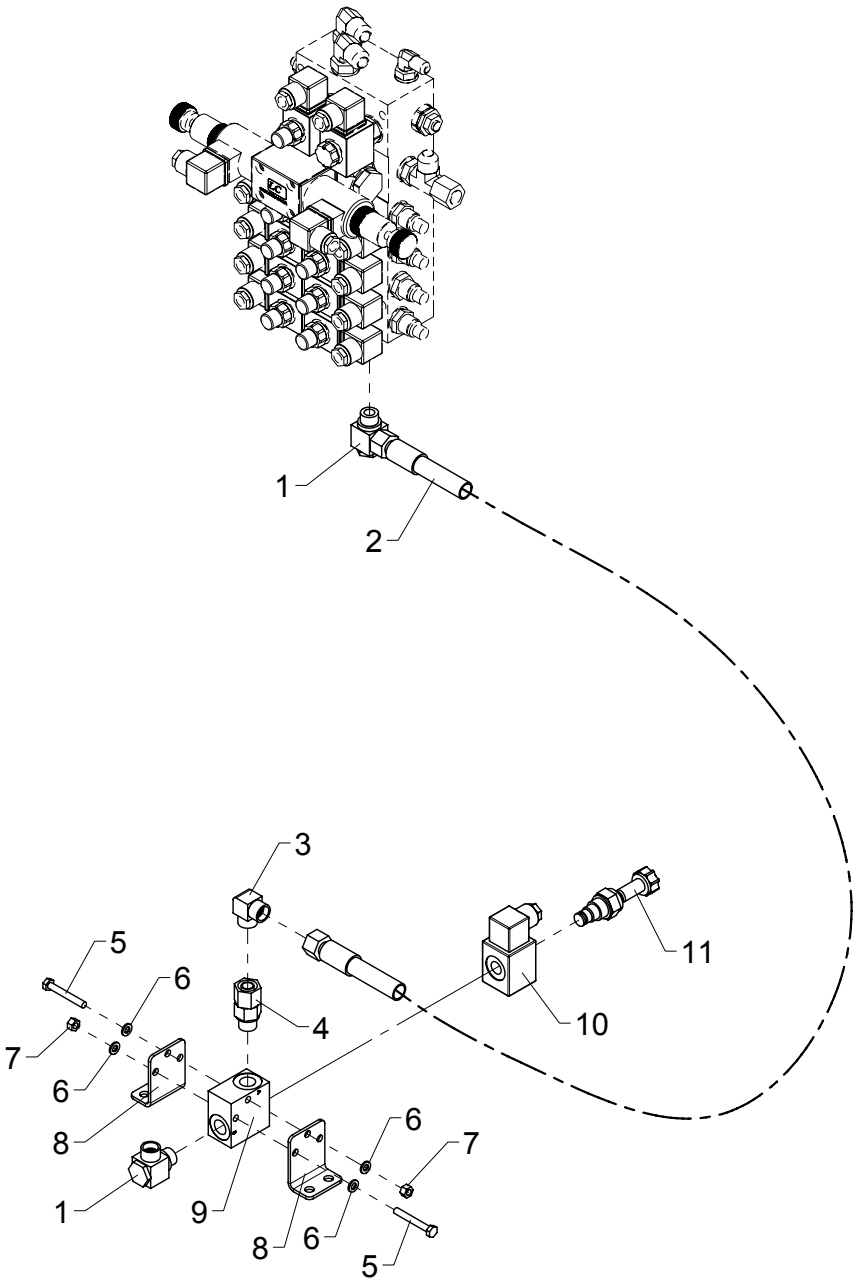

# Stabilizer valve block, 5 available func.

As from / To loader no.: 96 00 00 / 96 02 07
Created: 26.01.2004
Modified: 23.06.2008

| Item no. | Qty. | Part no. | Description | Remarks |
|---|---|---|---|---|
| 1 | 2 | 25130 | Banjo connection | RSWV 12 LR |
| 2 | 1 | 0017130 | Hose | 3/8" x 1600 O/O |
| 3 | 1 | 25129 | Elbow connection | WV 12 L |
| 4 | 1 | 25240 | Connection | EGESD 12 LR-WD |
| 5 | 2 | 30118 | Steel pin, stainless | M6 x 45 |
| 6 | 4 | 32302 | Face washer, stainless | 6 mm |
| 7 | 2 | 30884 | Lock nut, stainless | M6 |
| 8 | 2 | 6301202 | Bracket | |
| 9 | 1 | 59771 | Valve housing | |
| 10 | 1 | 61778 | Solenoid | |
| 11 | 1 | 59057 | Solenoid valve | |

# ODIN

Intern ref.: 6301200

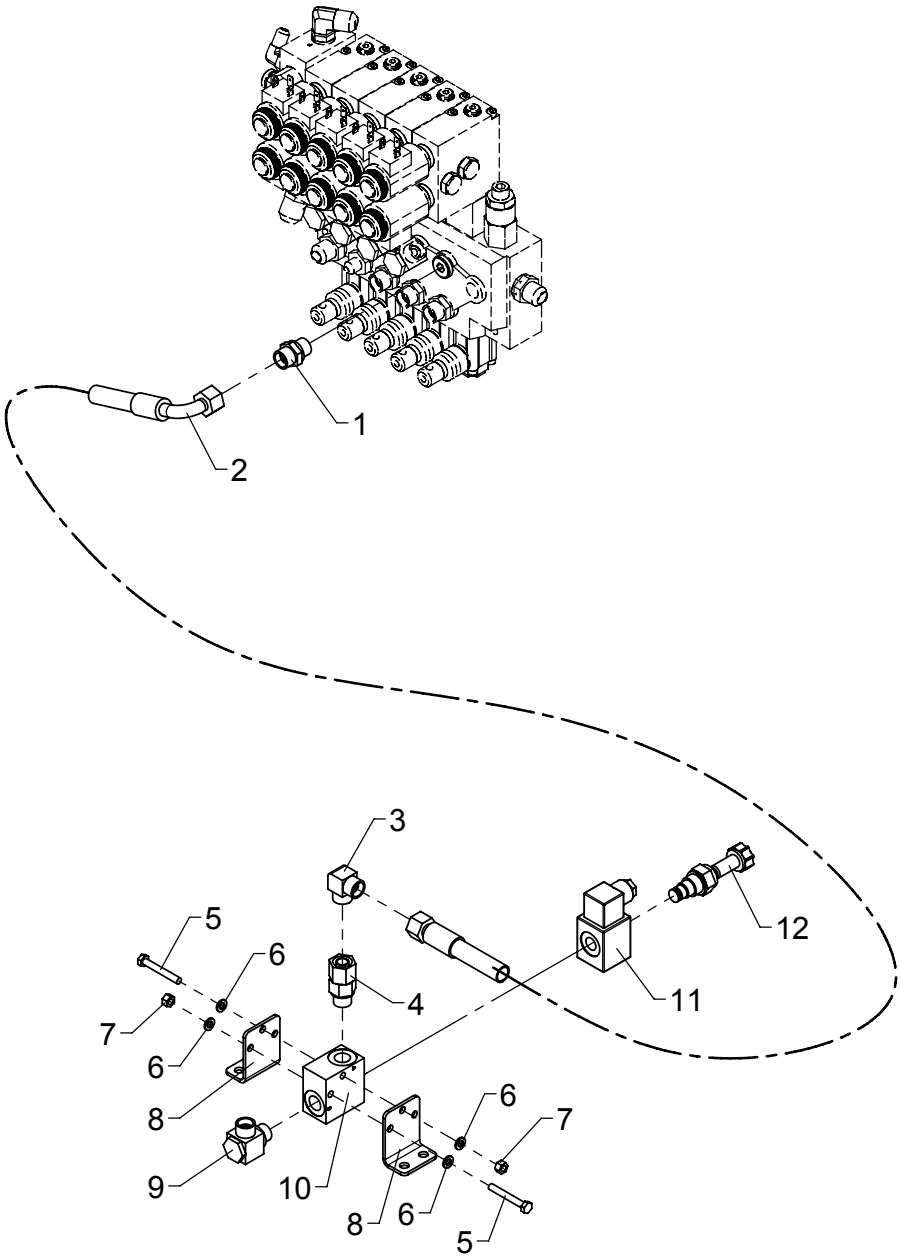

# Stabilizer valve block, 5 available func.

As from / To loader no.: 96 02 08 / 96 03 82
Created: 23.06.2008
Modified: 06.01.2015

| Item no. | Qty. | Part no. | Description | Remarks |
|---|---|---|---|---|
| 1 | 1 | 25127 | Connection | P-GEV 12 LR-WD |
| 2 | 1 | 0015020 | Hose | 3/8" x 1600 mm L/90° |
| 3 | 1 | 25129 | Elbow connection | WV 12 L |
| 4 | 1 | 25240 | Connection | EGESD 12 LR-WD |
| 5 | 2 | 30118 | Steel pin, stainless | M6 x 45 |
| 6 | 4 | 32302 | Face washer, stainless | 6 mm |
| 7 | 2 | 30884 | Lock nut, stainless | M6 |
| 8 | 2 | 6301202 | Bracket | |
| 9 | 1 | 25130 | Banjo connection | RSWV 12 LR |
| 10 | 1 | 59771 | Valve housing | |
| 11 | 1 | 61778 | Solenoid | |
| 12 | 1 | 59057 | Solenoid valve | |

# 6020

Intern ref.: 6391200

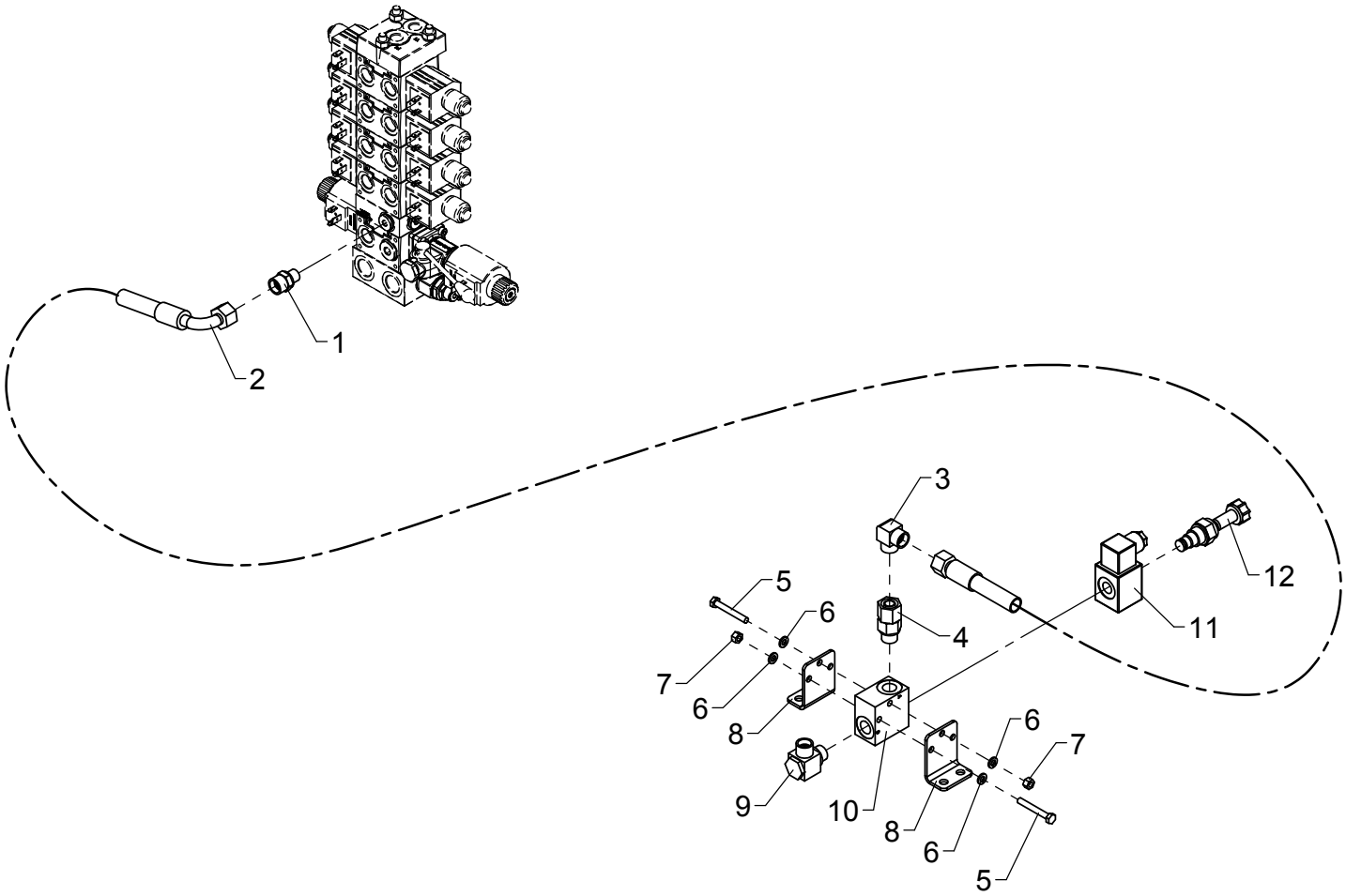

# Stabilizer valve block, 5 available func.

As from / To loader no.: 96 03 83
Created: 06.01.2015
Modified:

| Item no. | Qty. | Part no. | Description | Remarks |
|---|---|---|---|---|
| 1 | 1 | 25195 | Connection | P-GEV 12 LR 1/4-WD |
| 2 | 1 | 0015020 | Hose | 3/8" x 1600 mm L/90° |
| 3 | 1 | 25129 | Elbow connection | WV 12 L |
| 4 | 1 | 25240 | Connection | EGESD 12 LR-WD |
| 5 | 2 | 30118 | Steel pin, stainless | M6 x 45 |
| 6 | 4 | 32302 | Face washer, stainless | 6 mm |
| 7 | 2 | 30884 | Lock nut, stainless | M6 |
| 8 | 2 | 6301202 | Bracket | |
| 9 | 1 | 25130 | Banjo connection | RSWV 12 LR |
| 10 | 1 | 59771 | Valve housing | |
| 11 | 1 | 61778 | Solenoid | |
| 12 | 1 | 59057 | Solenoid valve | |

# ODIN

Intern ref.: 6301210

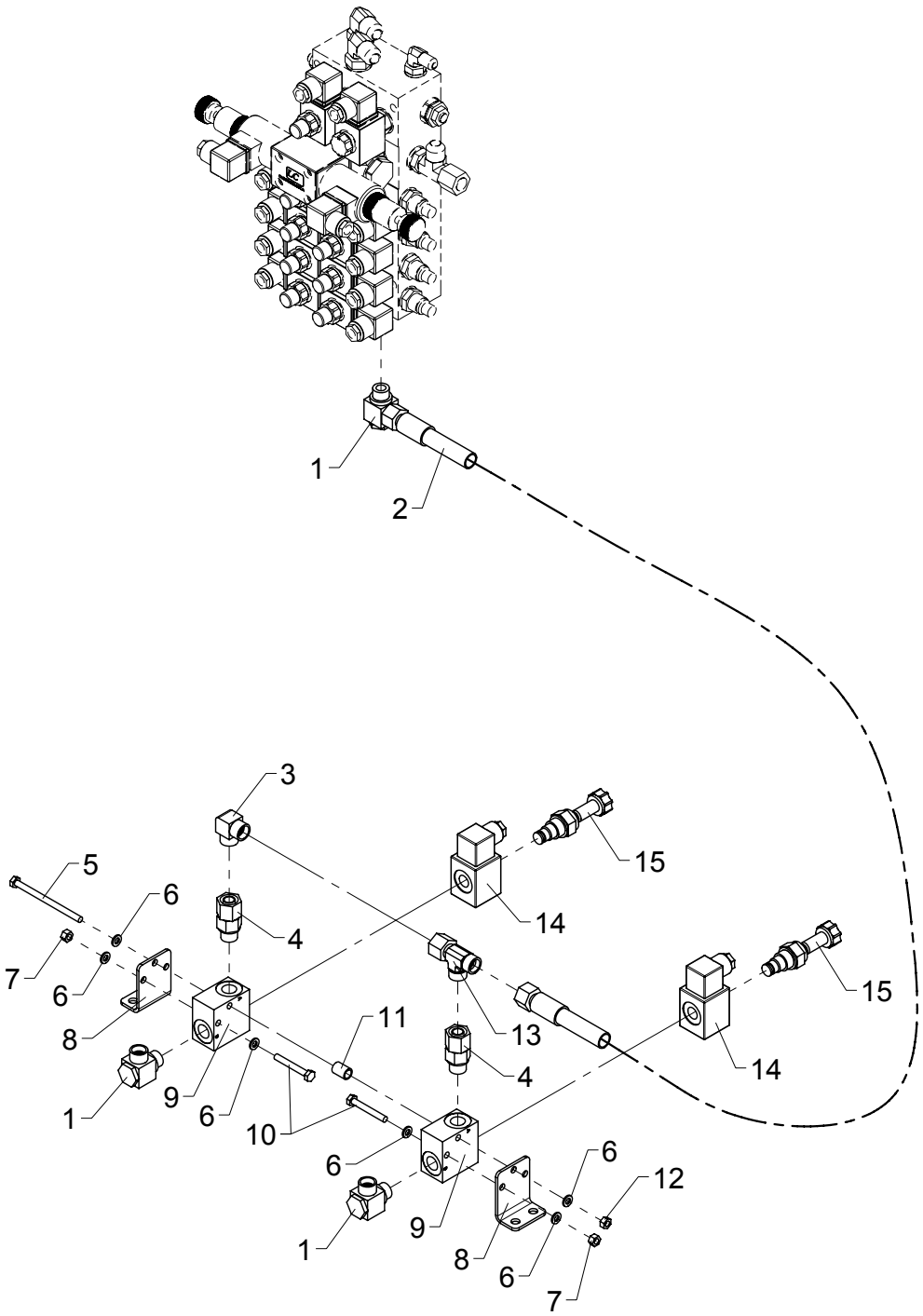

# Stabilizer valve block, 6 available func.

As from / To loader no.: 96 00 00 / 96 02 07
Created: 26.01.2004
Modified: 23.06.2008

| Item no. | Qty. | Part no. | Description | Remarks |
|---|---|---|---|---|
| 1 | 3 | 25130 | Banjo connection | RSWV 12 LR |
| 2 | 1 | 0017130 | Hose | 3/8" x 1600 O/O |
| 3 | 1 | 25129 | Elbow connection | WV 12 L |
| 4 | 2 | 25240 | Connection | EGESD 12 LR-WD |
| 5 | 1 | 30124 | Steel bolt, stainless | M6 x 90 |
| 6 | 6 | 32302 | Face washer, stainless | 6 mm |
| 7 | 2 | 30884 | Lock nut, stainless | M6 |
| 8 | 2 | 6301202 | Bracket | |
| 9 | 2 | 59771 | Valve housing | |
| 10 | 2 | 30118 | Steel pin, stainless | M6 x 45 |
| 11 | 1 | 6301203 | Pipe | |
| 12 | 1 | 30854 | Nut, stainless | M6 |
| 13 | 1 | 25270 | Connection | ELSD 12 L |
| 14 | 2 | 61778 | Solenoid | |
| 15 | 2 | 59057 | Solenoid valve | |

# ODIN

Intern ref.: 6301210

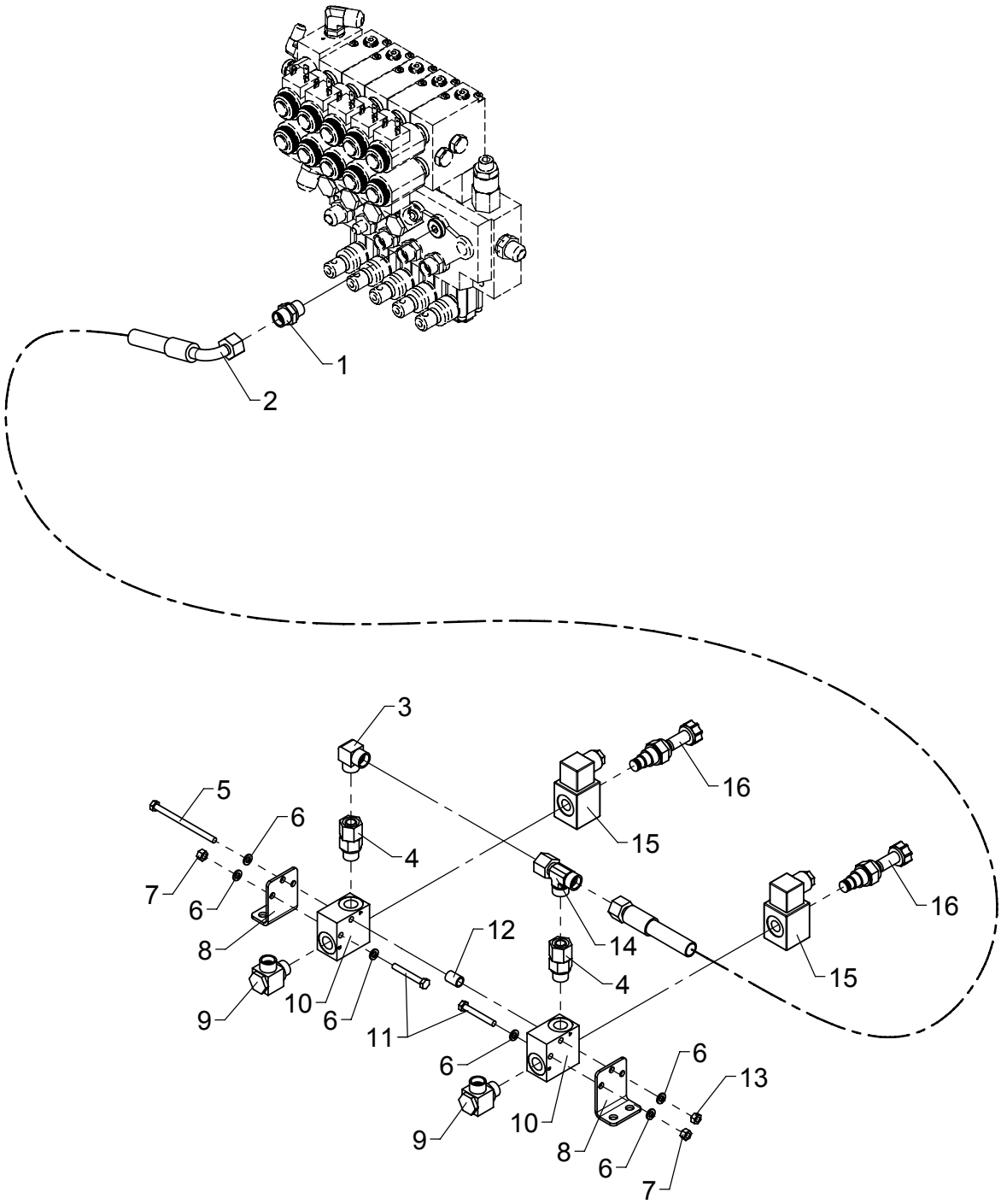

# Stabilizer valve block, 6 available func.

As from / To loader no.: 96 02 08 / 96 03 82
Created: 23.06.2008
Modified: 25.02.2015

| Item no. | Qty. | Part no. | Description | Remarks |
|---|---|---|---|---|
| 1 | 1 | 25127 | Connection | P-GEV 12 LR-WD |
| 2 | 1 | 0015020 | Hose | 3/8" x 1600 mm L/90° |
| 3 | 1 | 25129 | Elbow connection | WV 12 L |
| 4 | 2 | 25240 | Connection | EGESD 12 LR-WD |
| 5 | 1 | 30124 | Steel bolt, stainless | M6 x 90 |
| 6 | 6 | 32302 | Face washer, stainless | 6 mm |
| 7 | 2 | 30884 | Lock nut, stainless | M6 |
| 8 | 2 | 6301202 | Bracket | |
| 9 | 2 | 25130 | Banjo connection | RSWV 12 LR |
| 10 | 2 | 59771 | Valve housing | |
| 11 | 2 | 30118 | Steel pin, stainless | M6 x 45 |
| 12 | 1 | 6301203 | Pipe | |
| 13 | 1 | 30854 | Nut, stainless | M6 |
| 14 | 1 | 25270 | Connection | ELSD 12 L |
| 15 | 2 | 61778 | Solenoid | |
| 16 | 2 | 59057 | Solenoid valve | |

# 6020

Intern ref.: 6391210

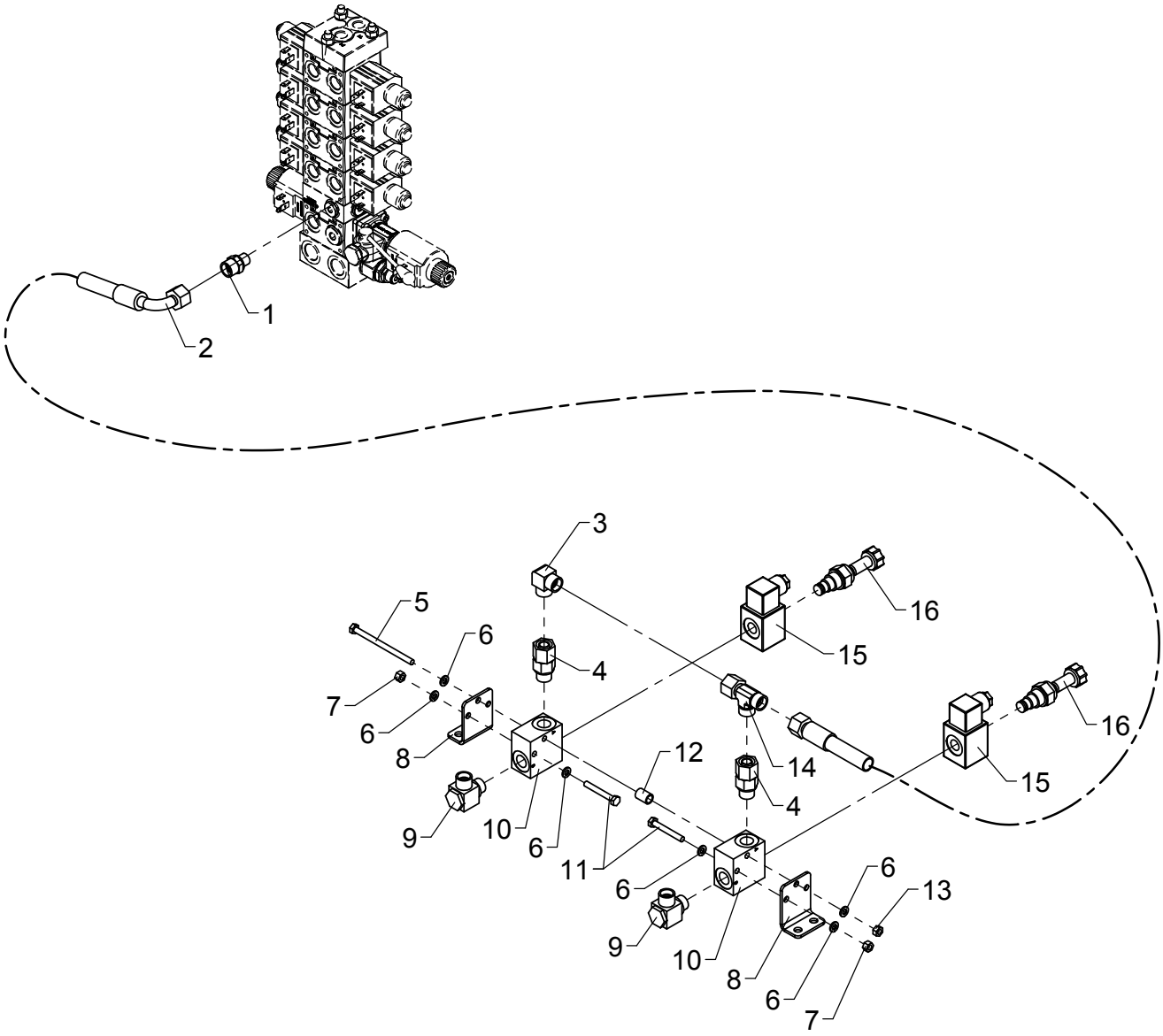

# Stabilizer valve block, 6 available func.

As from / To loader no.: 96 03 83
Created: 06.01.2015
Modified:

| Item no. | Qty. | Part no. | Description | Remarks |
|---|---|---|---|---|
| 1 | 1 | 25195 | Connection | P-GEV 12 LR 1/4-WD |
| 2 | 1 | 0015020 | Hose | 3/8" x 1600 mm L/90° |
| 3 | 1 | 25129 | Elbow connection | WV 12 L |
| 4 | 2 | 25240 | Connection | EGESD 12 LR-WD |
| 5 | 1 | 30124 | Steel bolt, stainless | M6 x 90 |
| 6 | 6 | 32302 | Face washer, stainless | 6 mm |
| 7 | 2 | 30884 | Lock nut, stainless | M6 |
| 8 | 2 | 6301202 | Bracket | |
| 9 | 2 | 25130 | Banjo connection | RSWV 12 LR |
| 10 | 2 | 59771 | Valve housing | |
| 11 | 2 | 30118 | Steel pin, stainless | M6 x 45 |
| 12 | 1 | 6301203 | Pipe | |
| 13 | 1 | 30854 | Nut, stainless | M6 |
| 14 | 1 | 25270 | Connection | ELSD 12 L |
| 15 | 2 | 61778 | Solenoid | |
| 16 | 2 | 59057 | Solenoid valve | |

# ODIN

Intern ref.: 6301220

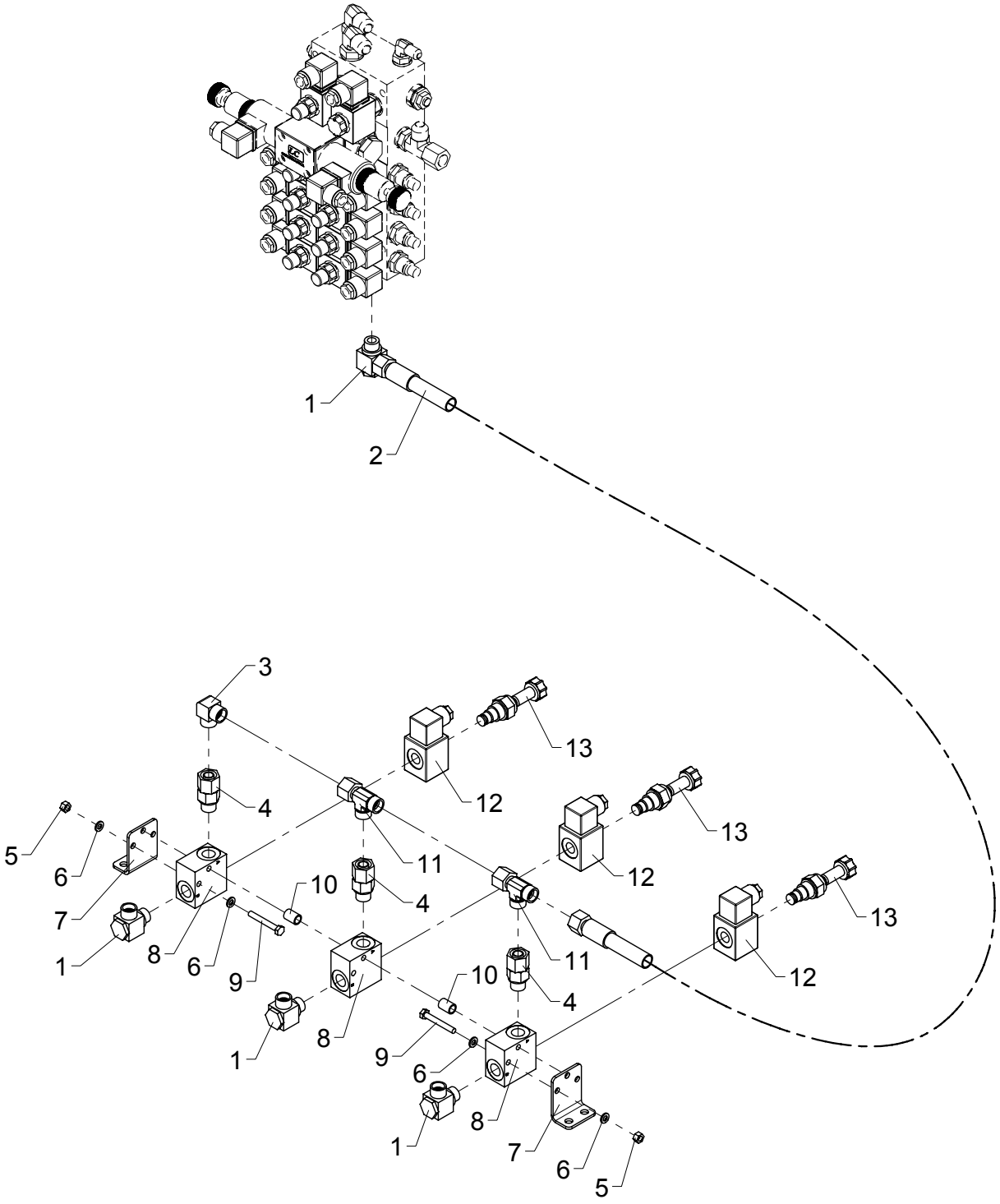

# Stabilizer valve Block, 7 available func.

As from / To loader no.: 96 00 00 / 96 02 07
Created: 26.01.2004
Modified: 23.06.2008

| Item no. | Qty. | Part no. | Description | Remarks |
|---|---|---|---|---|
| 1 | 4 | 25130 | Banjo connection | RSWV 12 LR |
| 2 | 1 | 0017130 | Hose | 3/8" x 1600 O/O |
| 3 | 1 | 25129 | Elbow connection | WV 12 L |
| 4 | 3 | 25240 | Connection | EGESD 12 LR-WD |
| 5 | 2 | 30884 | Lock nut, stainless | M6 |
| 6 | 4 | 32302 | Face washer, stainless | 6 mm |
| 7 | 2 | 6301202 | Bracket | |
| 8 | 3 | 59771 | Valve housing | |
| 9 | 2 | 30118 | Steel pin, stainless | M6 x 45 |
| 10 | 2 | 6301203 | Pipe | |
| 11 | 2 | 25270 | Connection | ELSD 12 L |
| 12 | 3 | 61778 | Solenoid | |
| 13 | 3 | 59057 | Solenoid valve | |

# ODIN

Intern ref.: 6301220

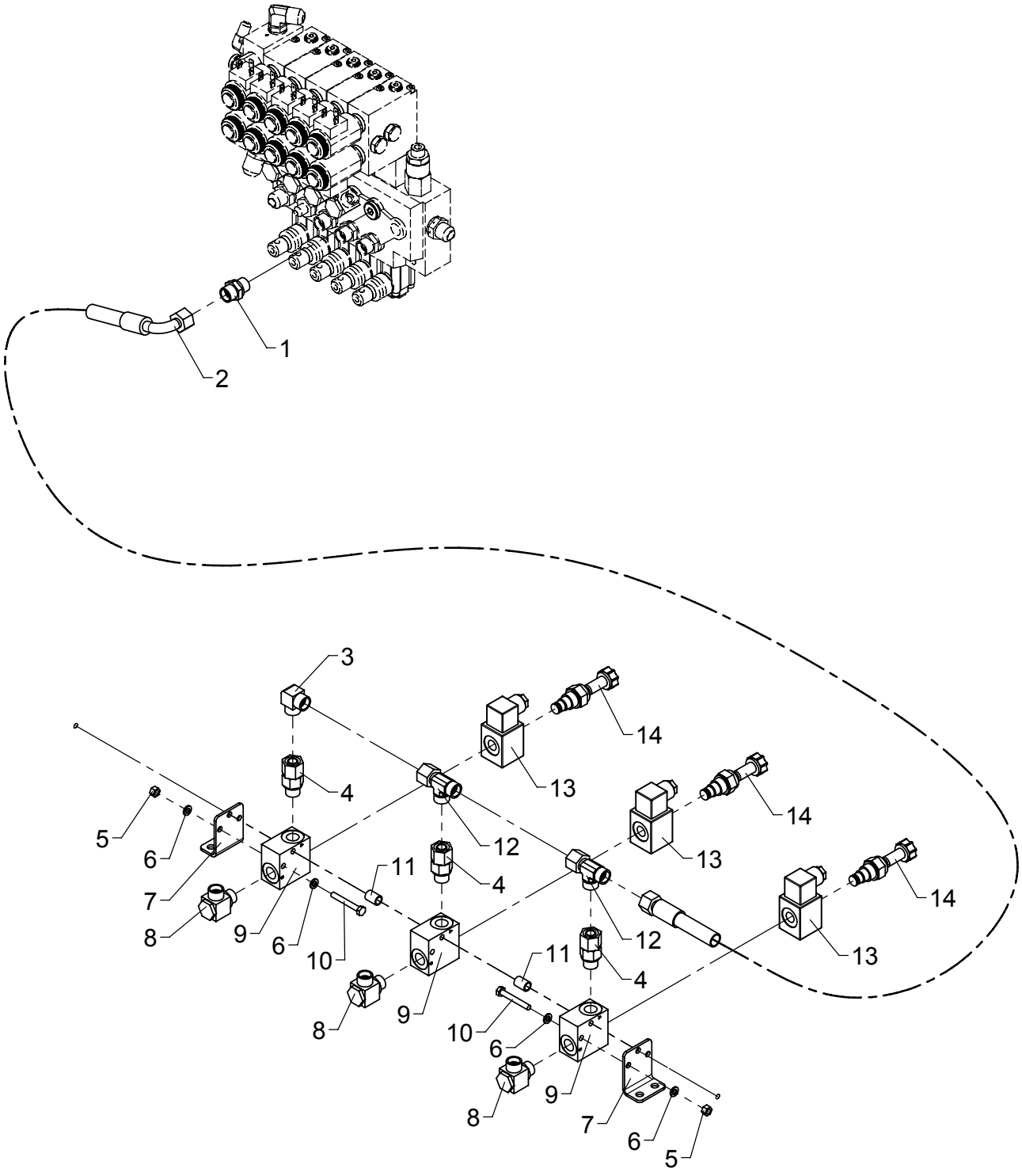

# Stabilizer valve Block, 7 available func.

As from / To loader no.: 96 02 08 / 96 03 82
Created: 23.06.2008
Modified: 25.02.2015

| Item no. | Qty. | Part no. | Description | Remarks |
|---|---|---|---|---|
| 1 | 1 | 25127 | Connection | P-GEV 12 LR-WD |
| 2 | 1 | 0015020 | Hose | 3/8" x 1600 mm L/90° |
| 3 | 1 | 25129 | Elbow connection | WV 12 L |
| 4 | 3 | 25240 | Connection | EGESD 12 LR-WD |
| 5 | 2 | 30884 | Lock nut, stainless | M6 |
| 6 | 4 | 32302 | Face washer, stainless | 6 mm |
| 7 | 2 | 6301202 | Bracket | |
| 8 | 3 | 25130 | Banjo connection | RSWV 12 LR |
| 9 | 3 | 59771 | Valve housing | |
| 10 | 2 | 30118 | Steel pin, stainless | M6 x 45 |
| 11 | 2 | 6301203 | Pipe | |
| 12 | 2 | 25270 | Connection | ELSD 12 L |
| 13 | 3 | 61778 | Solenoid | |
| 14 | 3 | 59057 | Solenoid valve | |

# 6020

Intern ref.: 6391220

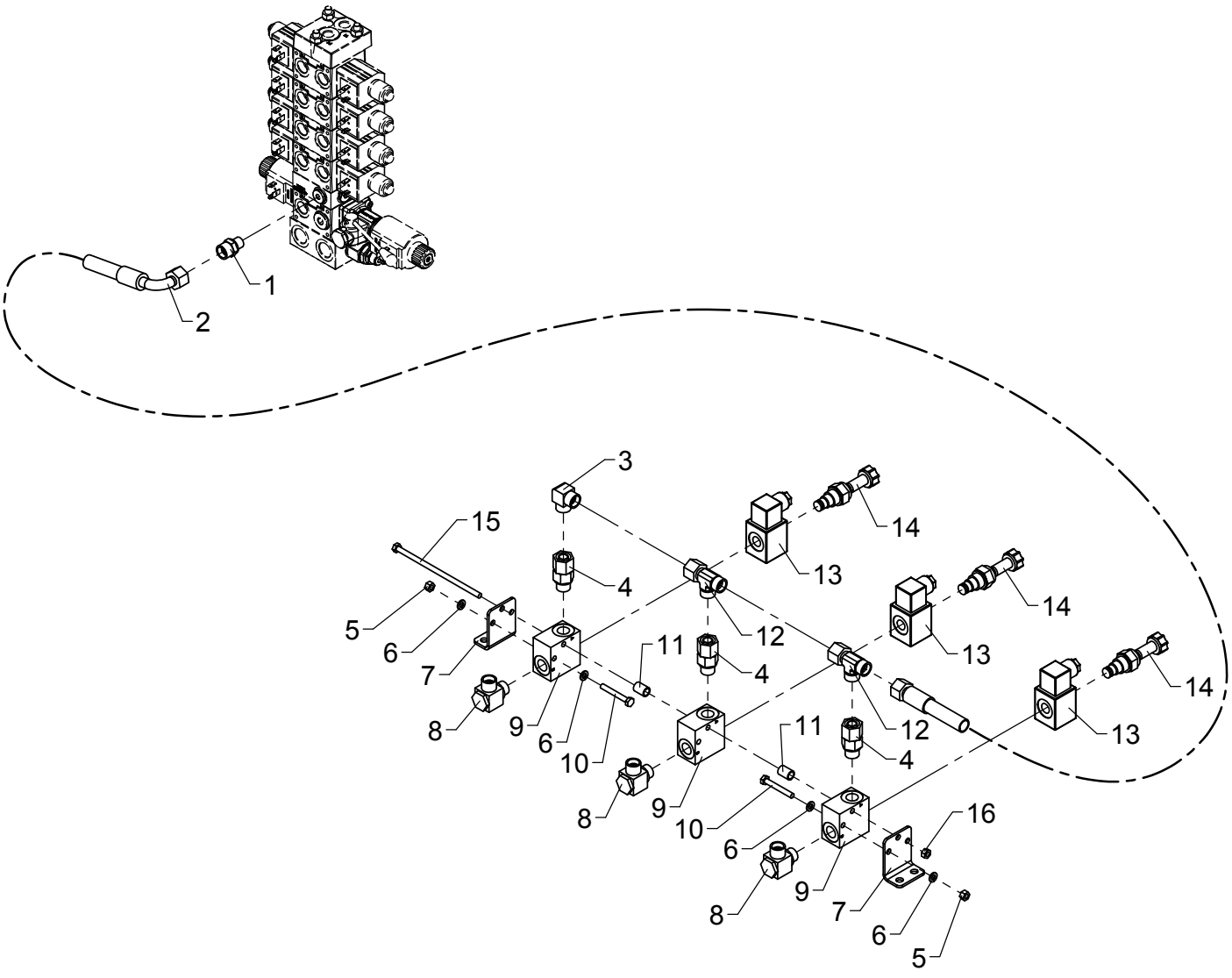

# Stabilizer valve Block, 7 available func.

As from / To loader no.: 96 03 83
Created: 06.01.2015
Modified:

| Item no. | Qty. | Part no. | Description | Remarks |
|---|---|---|---|---|
| 1 | 1 | 25195 | Connection | P-GEV 12 LR 1/4-WD |
| 2 | 1 | 0015020 | Hose | 3/8" x 1600 mm L/90° |
| 3 | 1 | 25129 | Elbow connection | WV 12 L |
| 4 | 3 | 25240 | Connection | EGESD 12 LR-WD |
| 5 | 2 | 30884 | Lock nut, stainless | M6 |
| 6 | 4 | 32302 | Face washer, stainless | 6 mm |
| 7 | 2 | 6301202 | Bracket | |
| 8 | 3 | 25130 | Banjo connection | RSWV 12 LR |
| 9 | 3 | 59771 | Valve housing | |
| 10 | 2 | 30118 | Steel pin, stainless | M6 x 45 |
| 11 | 2 | 6301203 | Pipe | |
| 12 | 2 | 25270 | Connection | ELSD 12 L |
| 13 | 3 | 61778 | Solenoid | |
| 14 | 3 | 59057 | Solenoid valve | |
| 15 | 1 | 32922 | Steel bolt | M6 x 140 |
| 16 | 1 | 30854 | Nut, stainless | M6 |

# ODIN

Intern ref.: 6301230

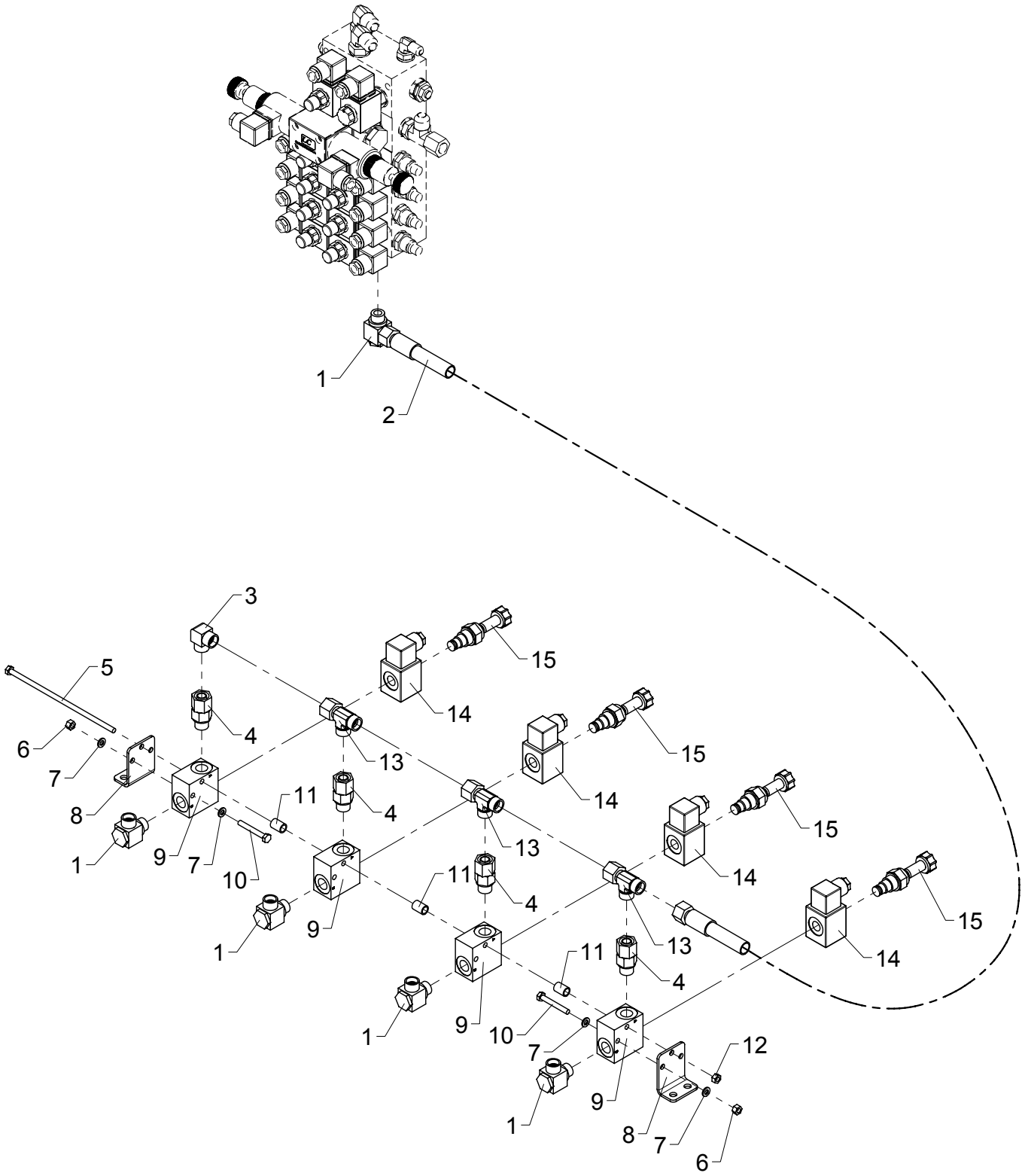

# Stabilezer valve Block, 8 available func.

As from / To loader no.: 96 00 00 / 96 02 07
Created: 26.01.2004
Modified: 23.06.2008

| Item no. | Qty. | Part no. | Description | Remarks |
|---|---|---|---|---|
| 1 | 5 | 25130 | Banjo connection | RSWV 12 LR |
| 2 | 1 | 0017130 | Hose | 3/8" x 1600 O/O |
| 3 | 1 | 25129 | Elbow connection | WV 12 L |
| 4 | 4 | 25240 | Connection | EGESD 12 LR-WD |
| 5 | 1 | 32257 | Steel bolt | M6 x 180 |
| 6 | 2 | 30884 | Lock nut, stainless | M6 |
| 7 | 4 | 32302 | Face washer, stainless | 6 mm |
| 8 | 2 | 6301202 | Bracket | |
| 9 | 4 | 59771 | Valve housing | |
| 10 | 2 | 30118 | Steel pin, stainless | M6 x 45 |
| 11 | 3 | 6301203 | Pipe | |
| 12 | 1 | 30854 | Nut, stainless | M6 |
| 13 | 3 | 25270 | Connection | ELSD 12 L |
| 14 | 4 | 61778 | Solenoid | |
| 15 | 4 | 59057 | Solenoid valve | |

# ODIN

Intern ref.: 6301230

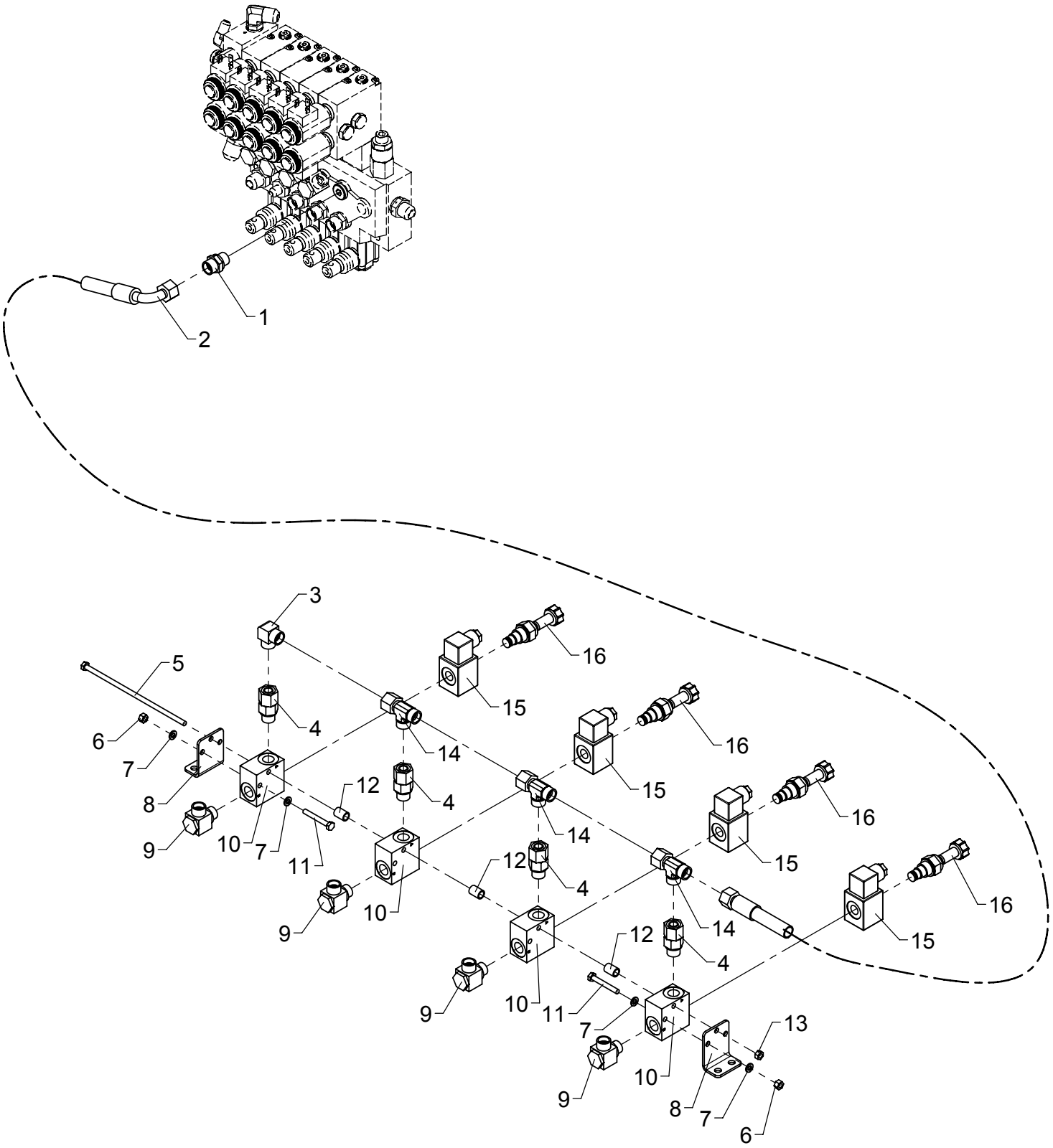

# Stabilezer valve Block, 8 available func.

As from / To loader no.: 96 02 08 / 96 03 82
Created: 23.06.2008
Modified: 25.02.2015

| Item no. | Qty. | Part no. | Description | Remarks |
|---|---|---|---|---|
| 1 | 1 | 25127 | Connection | P-GEV 12 LR-WD |
| 2 | 1 | 0015020 | Hose | 3/8" x 1600 mm L/90° |
| 3 | 1 | 25129 | Elbow connection | WV 12 L |
| 4 | 4 | 25240 | Connection | EGESD 12 LR-WD |
| 5 | 1 | 32257 | Steel bolt | M6 x 180 |
| 6 | 2 | 30884 | Lock nut, stainless | M6 |
| 7 | 4 | 32302 | Face washer, stainless | 6 mm |
| 8 | 2 | 6301202 | Bracket | |
| 9 | 4 | 25130 | Banjo connection | RSWV 12 LR |
| 10 | 4 | 59771 | Valve housing | |
| 11 | 2 | 30118 | Steel pin, stainless | M6 x 45 |
| 12 | 3 | 6301203 | Pipe | |
| 13 | 1 | 30854 | Nut, stainless | M6 |
| 14 | 3 | 25270 | Connection | ELSD 12 L |
| 15 | 4 | 61778 | Solenoid | |
| 16 | 4 | 59057 | Solenoid valve | |

# 6020

Intern ref.: 6391230

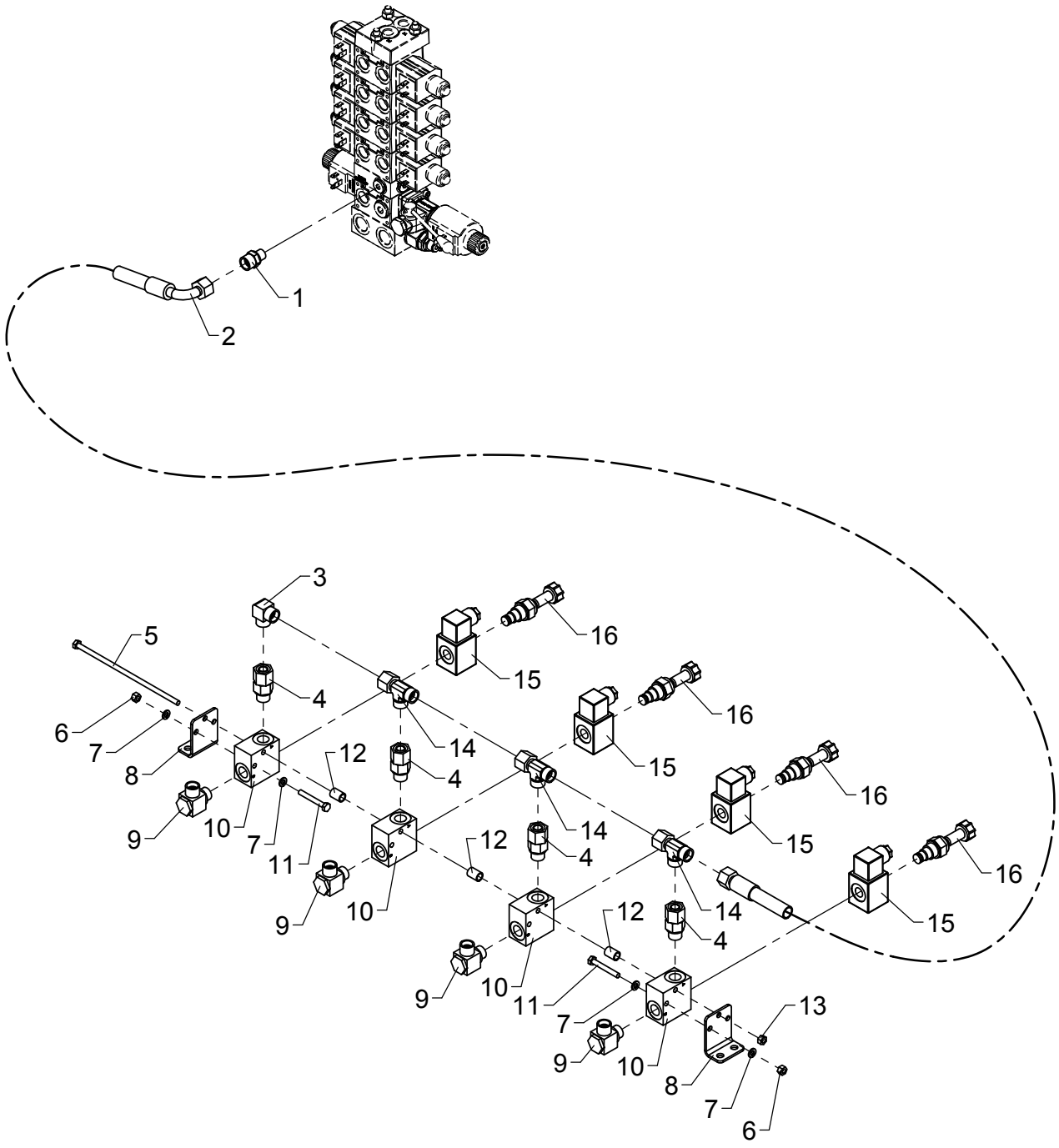

# Stabilezer valve Block, 8 available func.

As from / To loader no.: 96 03 83
Created: 06.01.2015
Modified:

| Item no. | Qty. | Part no. | Description | Remarks |
|---|---|---|---|---|
| 1 | 1 | 25195 | Connection | P-GEV 12 LR 1/4-WD |
| 2 | 1 | 0015020 | Hose | 3/8" x 1600 mm L/90° |
| 3 | 1 | 25129 | Elbow connection | WV 12 L |
| 4 | 4 | 25240 | Connection | EGESD 12 LR-WD |
| 5 | 1 | 32257 | Steel bolt | M6 x 180 |
| 6 | 2 | 30884 | Lock nut, stainless | M6 |
| 7 | 4 | 32302 | Face washer, stainless | 6 mm |
| 8 | 2 | 6301202 | Bracket | |
| 9 | 4 | 25130 | Banjo connection | RSWV 12 LR |
| 10 | 4 | 59771 | Valve housing | |
| 11 | 2 | 30118 | Steel pin, stainless | M6 x 45 |
| 12 | 3 | 6301203 | Pipe | |
| 13 | 1 | 30854 | Nut, stainless | M6 |
| 14 | 3 | 25270 | Connection | ELSD 12 L |
| 15 | 4 | 61778 | Solenoid | |
| 16 | 4 | 59057 | Solenoid valve | |

# ODIN

Intern ref.: 6302760

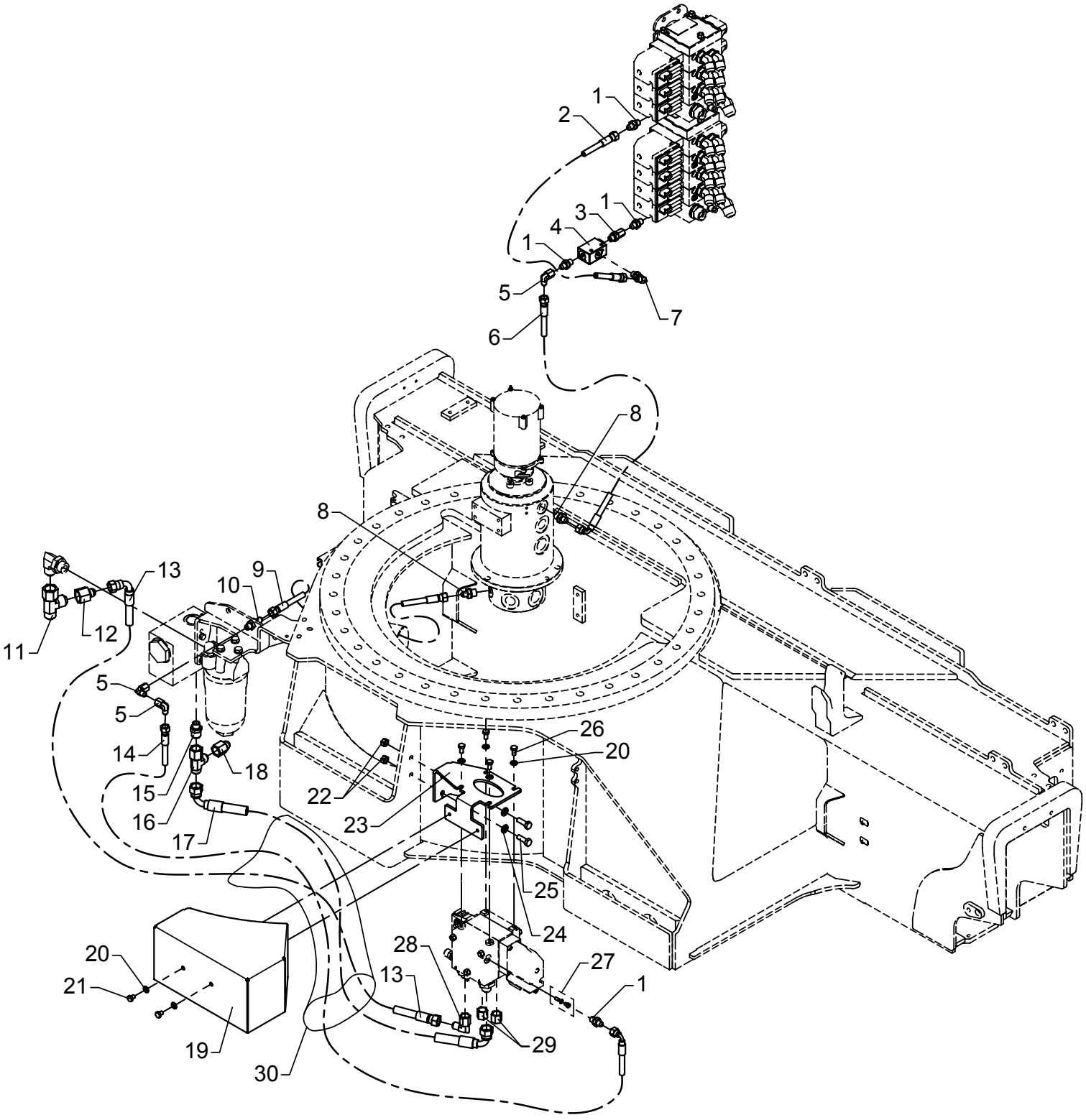

# Extra RC function on base

As from / To loader no.: 96 00 00/96 00 64
Created: 06.07.2004
Modified:

| Item no. | Qty. | Part no. | Description | Remarks |
|---|---|---|---|---|
| 1 | 4 | 25829 | Straight connection | F40XS 8-1/4 JIC |
| 2 | 1 | 62870 | Hose | 1/4" x 650 L/L JIC |
| 3 | 1 | 26272 | Straight connection | F64XS 14/16 - 3/8" JIC |
| 4 | 1 | 60338 | Shuttle valve | |
| 5 | 3 | 25826 | Elbow connection | C6XS 8 JIC |
| 6 | 1 | 62901 | Hose | 1/4" x 900 90/L JIC |
| 7 | 1 | 25858 | Elbow connection | C40XS 12-3/8 JIC |
| 8 | 2 | 25830 | Straight connection | F40XS8 - 3/8 JIC |
| 9 | 1 | 56130 | Hose | 1/4" x 1150 L/L JIC |
| 10 | 1 | 25823 | Bulkhead connection | WTX-WLNS 8 JIC |
| 11 | 1 | 25828 | Connection | R6XS 20 JIC |
| 12 | 1 | 25865 | Reducing connection | TRTXS 8/20-12 JIC |
| 13 | 1 | 62903 | Hose | 3/8" x 1100 90/L JIC |
| 14 | 1 | 62934 | Hose | 1/4" x 1330 90/L JIC |
| 15 | 1 | 25787 | Connection | F40XS 14/16-3/8 JIC |
| 16 | 1 | 25756 | Connection | R6XS 12 JIC |
| 17 | 1 | 62918 | Hose JIC | 1/2" x 1175 90/90 JIC |
| 18 | 1 | 25872 | Reduction | TRTXS 14/16-12 JIC |
| 19 | 1 | 6302979 | Valve protection | |
| 20 | 6 | 31147 | Washer, stainless | 8 mm |
| 21 | 2 | 30105 | Set screw, stainless | M8 x 10 |
| 22 | 2 | 30858 | Nut | |
| 23 | 1 | 6302978 | Valve bracket | |
| 24 | 2 | 31565 | Washer, stainless | 10 mm |
| 25 | 2 | 31515 | Set screw, stainless | M10 x 30 |
| 26 | 4 | 30131 | Set screw, stainless | M8 x 16 |
| 27 | 1 | 62065 | Closed center kit | |
| 28 | 1 | 25877 | Elbow connection | C6XS 12 JIC |
| 29 | 2 | 25876 | Screw cap | FNTXS 12 JIC |
| 30 | 1 | 62587 | Protective cover | 95 x 800 mm |

# ODIN

Intern ref.: 6302760

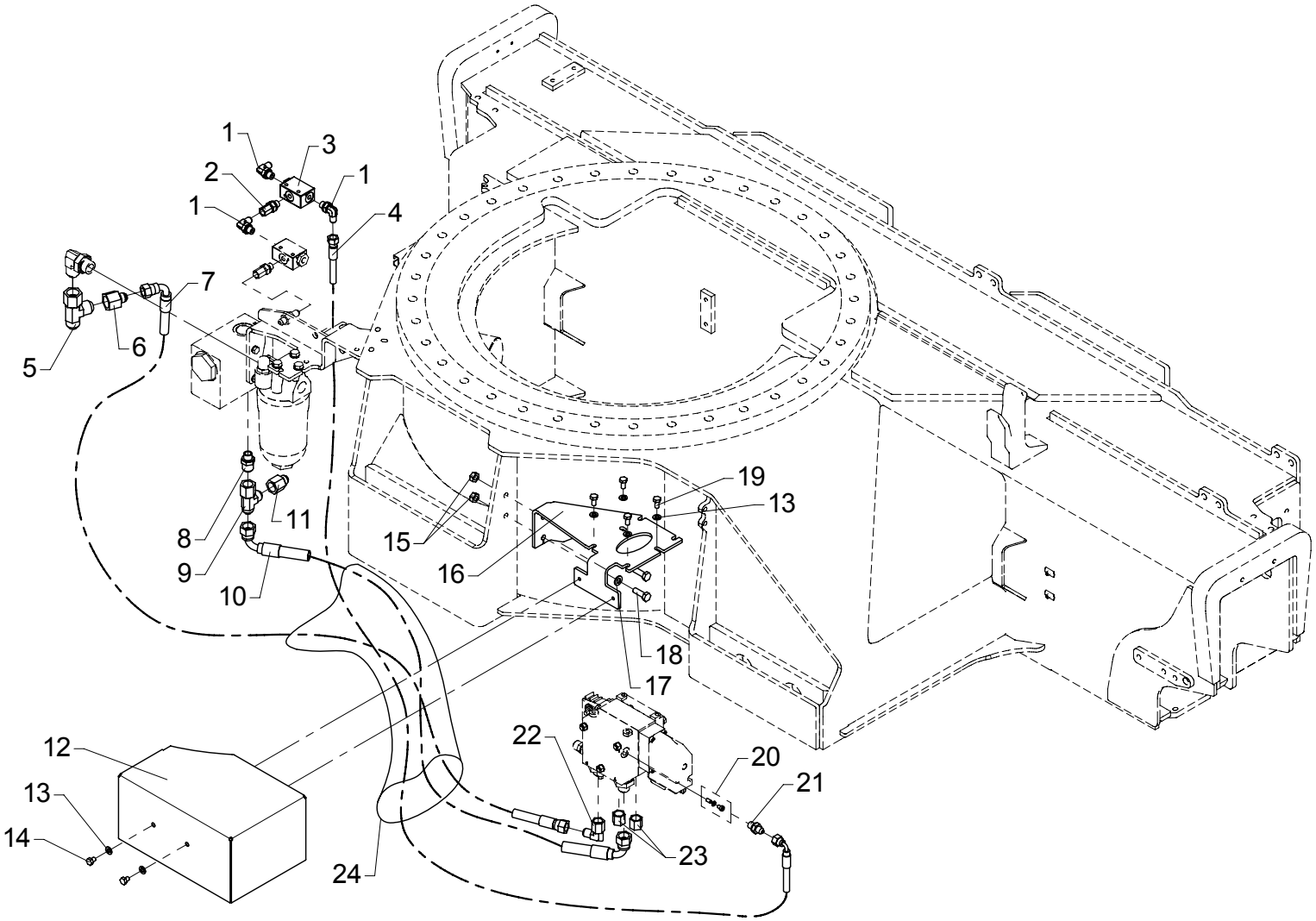

# Extra RC function on base

As from / To loader no.: 96 00 65 / 96 02 07
Created: 23.08.2004
Modified: 08.10.2008

| Item no. | Qty. | Part no. | Description | Remarks |
|---|---|---|---|---|
| 1 | 3 | 25858 | Elbow connection | C40XS8 - 1/4 |
| 2 | 1 | 26272 | Straight connection | F64XS 14/16 - 3/8" JIC |
| 3 | 1 | 60338 | Shuttle valve | |
| 4 | 1 | 62934 | Hose | 1/4" x 1330 90/L JIC |
| 5 | 1 | 25828 | Connection | R6XS 20 JIC |
| 6 | 1 | 25865 | Reducing connection | TRTXS8/20-12 |
| 7 | 1 | 62903 | Hose | 3/8" x 1100 90/L JIC |
| 8 | 1 | 25787 | Connection | F40XS14/16 - 3/8 |
| 9 | 1 | 25756 | Connection | R6XS 12 JIC |
| 10 | 1 | 62918 | Hose JIC | 1/2" x 1175 90/90 JIC |
| 11 | 1 | 25872 | Reduction | TRTXS14/16-12 |
| 12 | 1 | 6302979 | Valve protection | |
| 13 | 6 | 31147 | Washer, stainless | 8 mm |
| 14 | 2 | 30105 | Set screw, stainless | M8 x 10 |
| 15 | 2 | 30858 | Nut | M10 |
| 16 | 1 | 6302978 | Valve bracket | |
| 17 | 2 | 31565 | Washer, stainless | 10 mm |
| 18 | 2 | 30156 | Set screw, stainless | M10 x 30 |
| 19 | 4 | 30131 | Set screw, stainless | M8 x 16 |
| 20 | 1 | 62065 | Closed center kit | |
| 21 | 1 | 25829 | Straight connection | F40XS8 - 1/4 |
| 22 | 1 | 25877 | Elbow connection | C6XS 12 JIC |
| 23 | 2 | 25876 | Screw cap | FNTXS 12 JIC |
| 24 | 1 | 62587 | Protective cover | 95 x 800 mm |

# ODIN

Intern ref.: 6302760

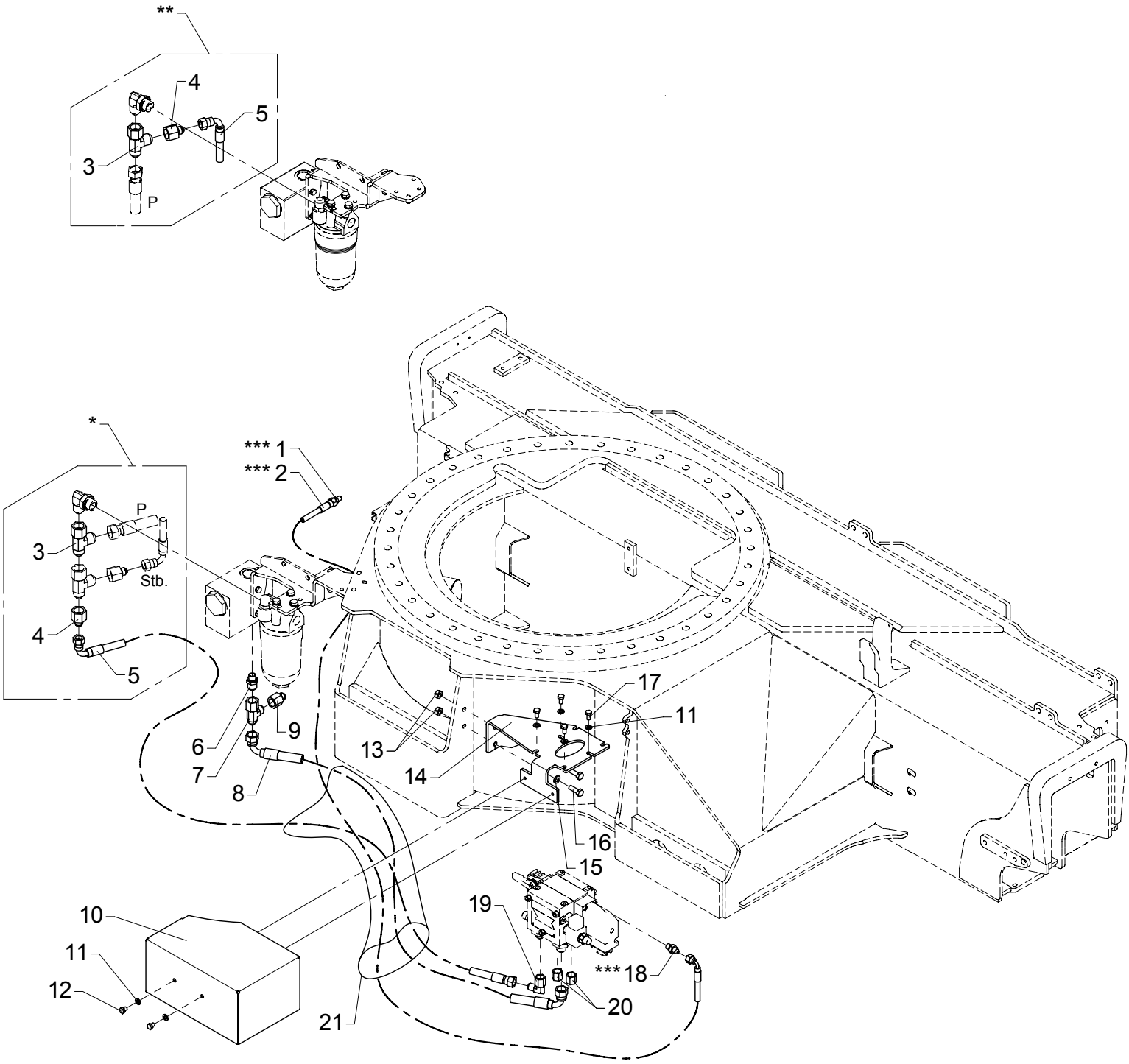

# Extra RC function on base

As from / To loader no.: 96 02 08 / 96 03 82
Created: 08.10.2008
Modified: 22.01.2015

| Item no. | Qty. | Part no. | Description | Remarks |
|---|---|---|---|---|
| 1 | 1 | 6302979 | Valve protection | |
| 2 | 6 | 31147 | Face washer, 8 mm | |
| 3 | 2 | 30105 | Set screw, stainless | M8 x 10 |
| 4 | 2 | 30858 | Nut | M10 |
| 5 | 1 | 6302978 | Valve bracket | |
| 6 | 2 | 31565 | Washer, stainless | 10 mm |
| 7 | 2 | 30156 | Set screw, stainless | M10 x 30 |
| 8 | 4 | 30131 | Set screw, stainless | M8 x 16 |
| 9 | 2 | 25876 | Screw cap | FNTXS 12 JIC |
| 10 | 1 | 62587 | Protective cover | |
| 11 | 1 | 25865 | Reducing connection | TRTXS8/20-12 |
| 12 | 1 | 62903 | Hose | 3/8" x 1100 90/L JIC |
| 13 | 1 | 25877 | Elbow connection | C6XS 12 JIC |
| 14 | 1 | 25787 | Connection | F40XS14/16 - 3/8 |
| 15 | 1 | 25756 | Connection | R6XS 12 JIC |
| 16 | 1 | 25872 | Reduction | TRTXS14/16-12 |
| 17 | 1 | 62918 | Hose JIC | 1/2" x 1175 90/90 JIC |
| 18 | 1 | 25828 | Connection | R6XS 20 JIC |
| 19 | 1 | 25829 | Straight connection | F40XS8 - 1/4 |
| 20 | 1 | 62934 | Hose | 1/4" x 1330 90/L JIC |
| 21 | 1 | 25857 | Connection | HTXS8 |

* 1 circuit ** 2 circuits *** Variable flow pump

# 6020

Intern ref.: 6302760

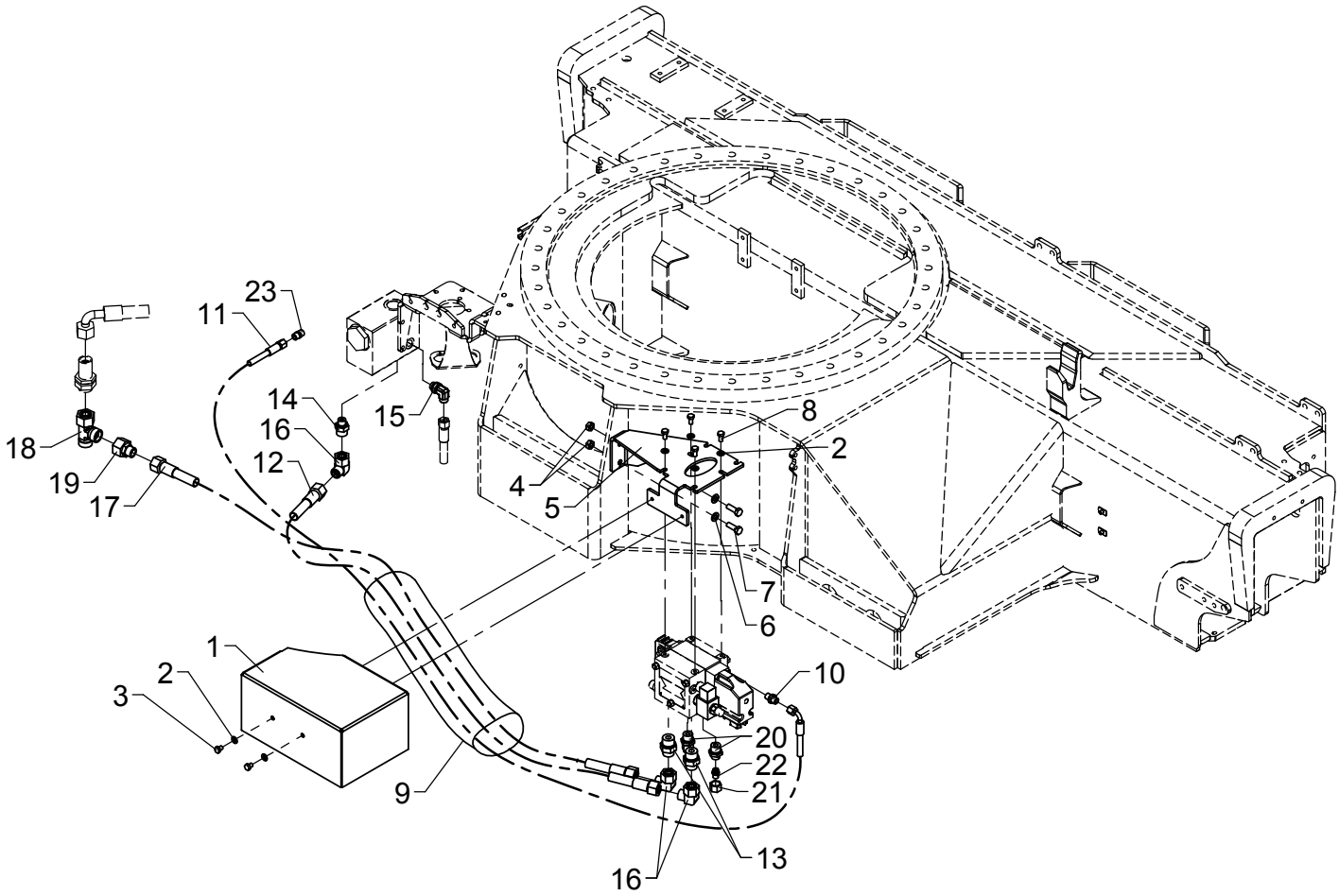

# Extra RC function on base

As from / To loader no.: 96 03 83
Created: 27.04.2015
Modified:

| Item no. | Qty. | Part no. | Description | Remarks |
|---|---|---|---|---|
| 1 | 1 | 6302979 | Valve protection | |
| 2 | 6 | 31147 | Face washer, 8 mm | |
| 3 | 2 | 30105 | Set screw, stainless | M8 x 10 |
| 4 | 2 | 30858 | Nut | M10 |
| 5 | 1 | 6302978 | Valve bracket | |
| 6 | 2 | 31565 | Washer, stainless | 10 mm |
| 7 | 2 | 30156 | Set screw, stainless | M10 x 30 |
| 8 | 4 | 30131 | Set screw, stainless | M8 x 16 |
| 9 | 1 | 62587 | Protective cover | |
| 10 | 1 | 25109 | Connection | GES 8 LR-WD |
| 11 | 1 | 62488 | Hose | |
| 12 | 1 | 56598 | Hose | 1/2 X 1150 mm L/L M22 |
| 13 | 2 | 26390 | Connection | P-GEV 16 SR 3/4-WD |
| 14 | 1 | 26368 | Straight connection | P-GEV 16 SR 3/8-WD |
| 15 | 1 | 26897 | Elbow connection | 12 mm - 3/8" |
| 16 | 3 | 26340 | Elbow connection | EWSD 16 S |
| 17 | 1 | 62679 | Hose | 1/2 x 1000mm L/L |
| 18 | 1 | 26362 | Connection | ELSD 20 S |
| 19 | 1 | 26306 | Reducing connection | REDSDN 20/16 S |
| 20 | 2 | 25108 | Connection | GES 12 LR 1/2-WD |
| 21 | 2 | 25183 | Coupling nut | M 12 L |
| 22 | 2 | 26180 | Blanking plug | VSD 12 L |
| 23 | 1 | 25246 | Double connection | GS 8 L |

# ODIN

Intern ref.: 6300260

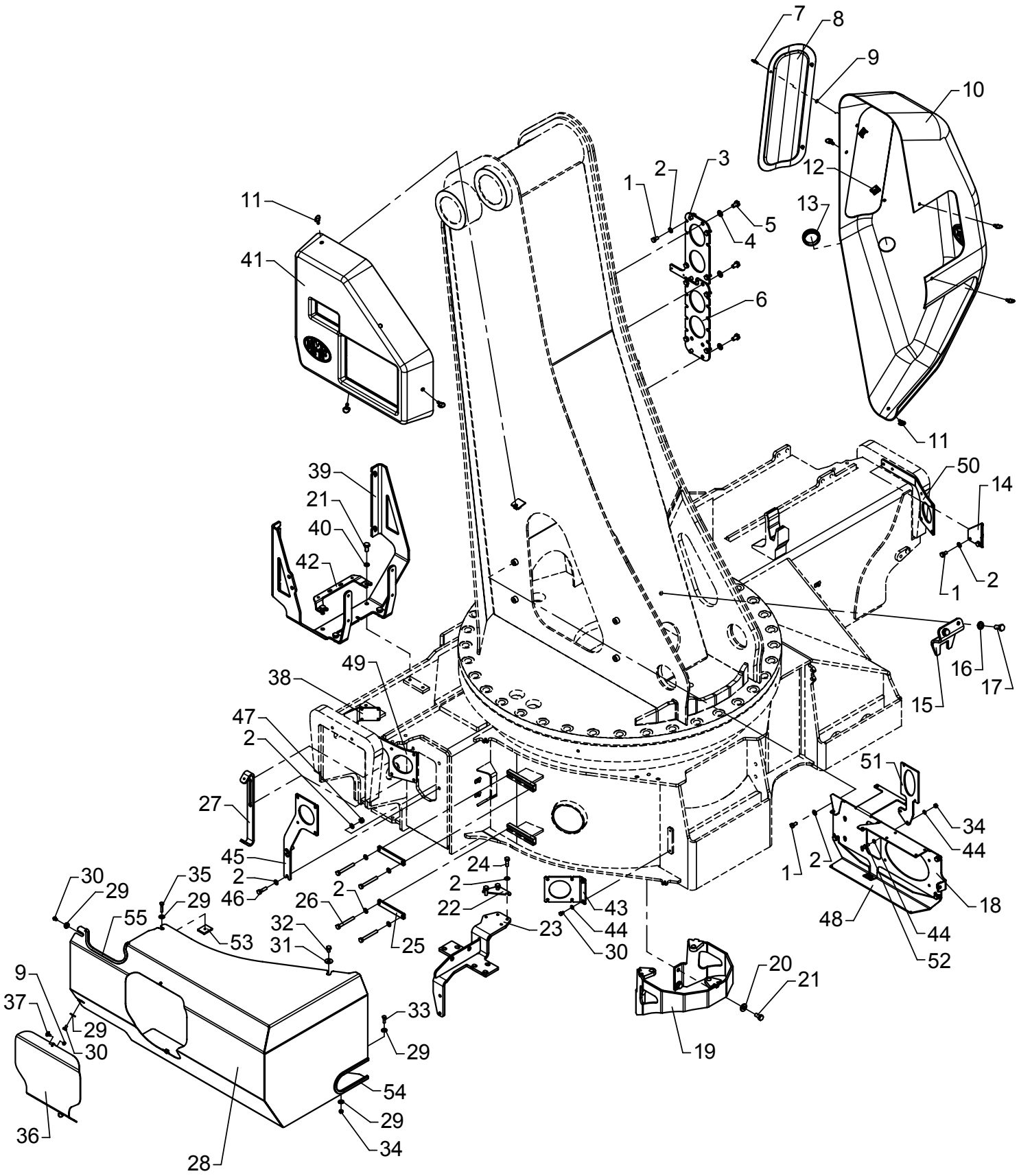

# Brackets and protection plates

As from / To loader no.: 96 00 00 / 96 00 49
Created: 03.10.2003
Modified: 10.01.2005

| Item no. | Qty. | Part no. | Description | Remarks |
|---|---|---|---|---|
| 1 | 16 | 30131 | Set screw, stainless | M8 x 16 |
| 2 | 27 | 31147 | Washer, stainless | 8 mm |
| 3 | 1 | 6300603 | Valve bracket, 2/3 distr. | |
| 4 | 6 | 31177 | Washer | 10 mm |
| 5 | 6 | 30153 | Set screw | M10 x 16 |
| 6 | 1 | 6300604 | Valve bracket, 2/4 distr. | |
| 7 | 3 | 45129 | Lock pin + ring | ø4 x 12 mm |
| 8 | 1 | 64403 | Cover | |
| 9 | 5 | 45132 | Washer | 4 mm |
| 10 | 1 | 64401 | Protection plate | |
| 11 | 7 | 45126 | Lock pin + ring | ø6 x 14 mm |
| 12 | 3 | 45131 | Fastener | 4 mm |
| 13 | 1 | 64344 | Plastic plug | |
| 14 | 1 | 6302047 | Fitting | STDRC |
| 15 | 1 | 6300315 | Carrier | |
| 16 | 2 | 31131 | Washer | 12 mm |
| 17 | 2 | 30176 | Set screw | M12 x 25 |
| 18 | 1 | 6300883 | Mounting bracket, Scanreco | |
| 19 | 1 | 6300316 | Adapter for swivel coupling | |
| 20 | 4 | 31756 | Washer | 10 mm |
| 21 | 8 | 30154 | Set screw | M10 x 20 |
| 22 | 1 | 6300788 | Division plate | |
| 23 | 1 | 6300781 | Bracket for filter | |
| 24 | 3 | 31009 | Set screw | M8 x 25 |
| 25 | 2 | 6300786 | Threaded plate | |
| 26 | 4 | 30142 | Steel bolt, stainless | M8 x 70 |
| 27 | 1 | 6300876 | Bracket | |
| 28 | 1 | 6300871 | Protection plate | |
| 29 | 5 | 31134 | Washer, stainless | 6 mm |
| 30 | 4 | 30110 | Set screw, stainless | M6 x 10 |
| 31 | 1 | 31136 | Washer, stainless | 24 x 8,4 x 2 |
| 32 | 1 | 30130 | Set screw, stainless | M8 x 12 |
| 33 | 1 | 30113 | Set screw, stainless | M6 x 20 |
| 34 | 3 | 30884 | Lock nut, stainless | M6 |
| 35 | 1 | 30115 | Steel bolt, stainless | M6 x 30 |
| 36 | 1 | 6300875 | Door | |
| 37 | 2 | 45128 | Lock pin + ring | ø4 x 10 mm |
| 38 | 1 | 6302046 | Fitting | STDRC |
| 39 | 1 | 6300787 | Cooler bracket | |
| 40 | 4 | 31156 | Spring washer | 10 mm |

# ODIN

Intern ref.: 6300260

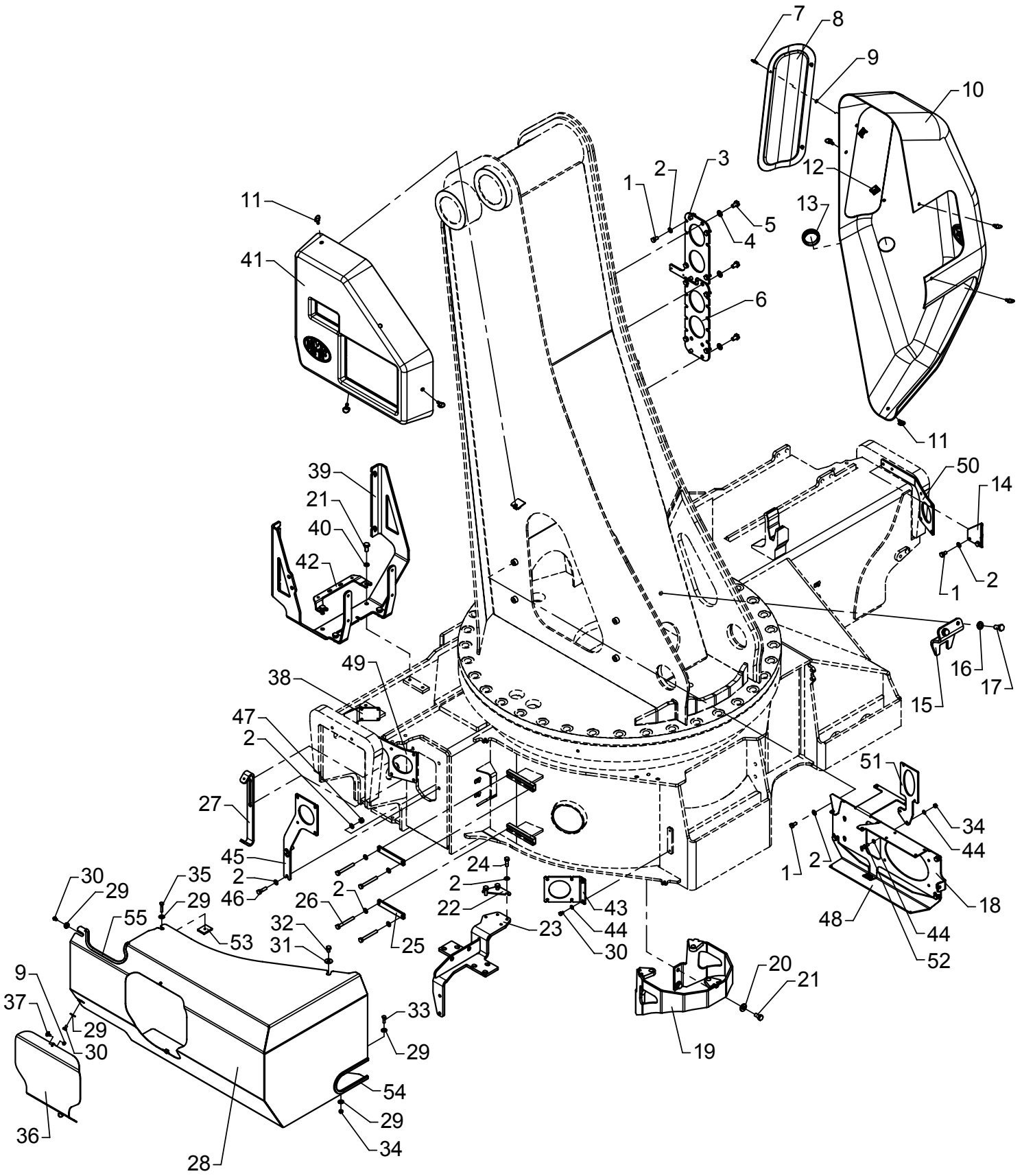

# Brackets and protection plates

As from / To loader no.: 96 00 00 / 96 00 49
Created: 03.10.2003
Modified: 10.01.2005

| Item no. | Qty. | Part no. | Description | Remarks |
|---|---|---|---|---|
| 41 | 1 | 64402 | Protection plate | |
| 42 | 1 | 6300734 | Bracket | EVS |
| 43 | 1 | 6300877 | Mounting plate | |
| 44 | 6 | 32302 | Face washer, stainless | 6 mm |
| 45 | 1 | 6300979 | Bracket for ECT 5075 | |
| 46 | 2 | 30135 | Set screw, stainless | M8 x 30 |
| 47 | 2 | 30886 | Lock nut, stainless | M8 |
| 48 | 1 | 6300946 | Guide rails for cables | |
| 49 | 1 | 6300968 | Bracket, left | TSPR |
| 50 | 1 | 6300967 | Bracket, right | TSPR |
| 51 | 1 | 6300969 | Bracket | |
| 52 | 2 | 30112 | Set screw, stainless | M6 x 16 |
| 53 | 1 | 31418 | Clamp, double | Only use bottom plate |
| 54 | 1 | 46586 | Rubber protection | 330 mm |
| 55 | 1 | 46586 | Rubber protection | 255 mm |

# ODIN

Intern ref.: 6300260

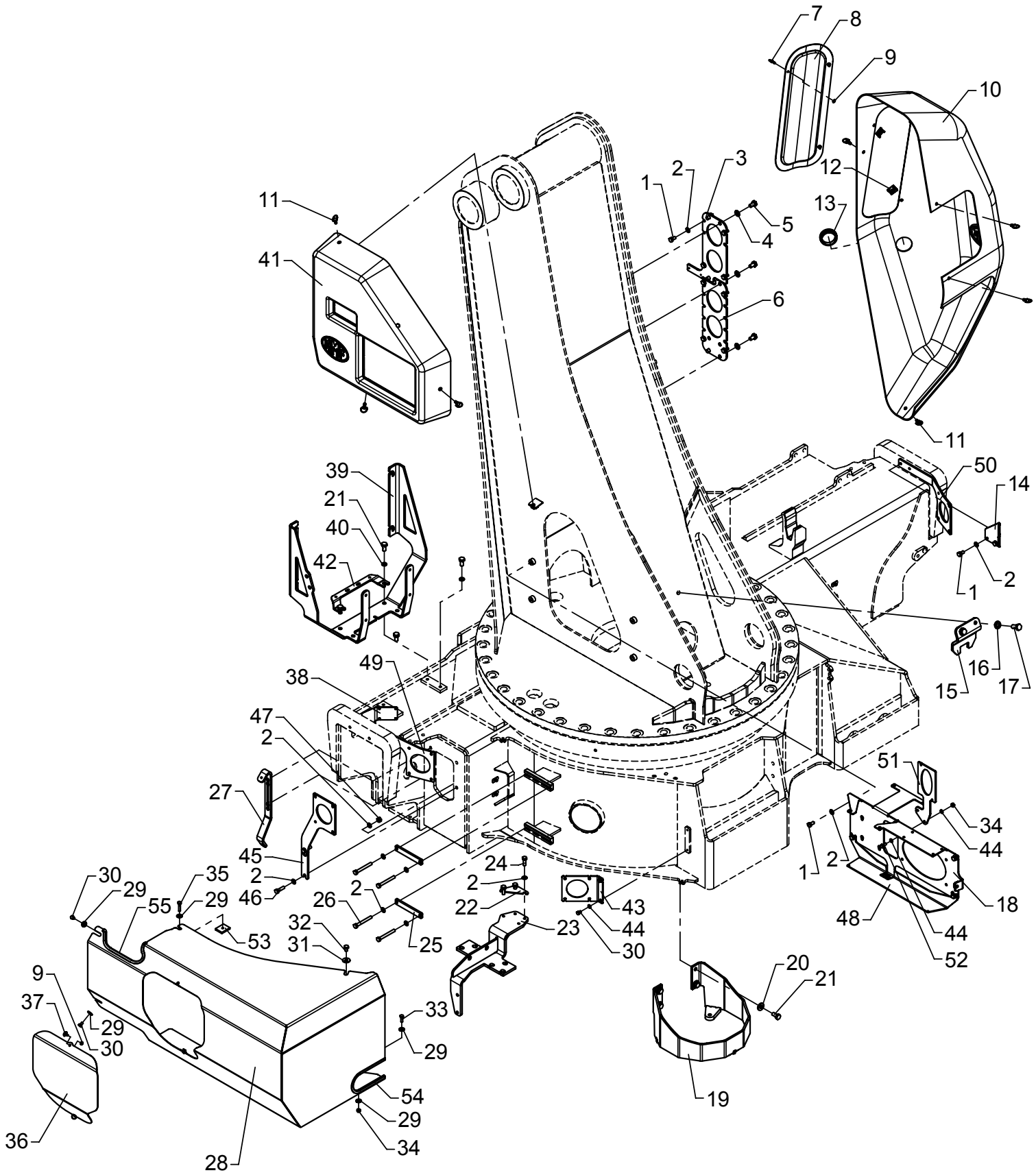

# Brackets and protection plates

As from / To loader no.: 96 00 50 / 96 00 53
Created: 10.01.2005
Modified:

| Item no. | Qty. | Part no. | Description | Remarks |
|---|---|---|---|---|
| 1 | 16 | 30131 | Set screw, stainless | M8 x 16 |
| 2 | 27 | 31147 | Washer, stainless | 8 mm |
| 3 | 1 | 6300603 | Valve bracket, 2/3 distr. | |
| 4 | 6 | 31177 | Washer | 10 mm |
| 5 | 6 | 30153 | Set screw | M10 x 16 |
| 6 | 1 | 6300604 | Valve bracket, 2/4 distr. | |
| 7 | 3 | 45129 | Lock pin + ring | ø4 x 12 mm |
| 8 | 1 | 64403 | Cover | |
| 9 | 5 | 45132 | Washer | 4 mm |
| 10 | 1 | 64401 | Protection plate | |
| 11 | 7 | 45126 | Lock pin + ring | ø6 x 14 mm |
| 12 | 3 | 45131 | Fastener | 4 mm |
| 13 | 1 | 64344 | Plastic plug | |
| 14 | 1 | 6302047 | Fitting | STDRC |
| 15 | 1 | 6300648 | Carrier | |
| 16 | 2 | 31131 | Washer | 12 mm |
| 17 | 2 | 30176 | Set screw | M12 x 25 |
| 18 | 1 | 6300883 | Mounting bracket, Scanreco | |
| 19 | 1 | 6300756 | Adapter for swivel coupling | |
| 20 | 4 | 31756 | Washer | 10 mm |
| 21 | 8 | 30154 | Set screw | M10 x 20 |
| 22 | 1 | 6300788 | Division plate | |
| 23 | 1 | 6300781 | Bracket for filter | |
| 24 | 3 | 31009 | Set screw | M8 x 25 |
| 25 | 2 | 6300786 | Threaded plate | |
| 26 | 4 | 30142 | Steel bolt, stainless | M8 x 70 |
| 27 | 1 | 6302876 | Bracket | |
| 28 | 1 | 6300871 | Protection plate | |
| 29 | 5 | 31134 | Washer, stainless | 6 mm |
| 30 | 4 | 30110 | Set screw, stainless | M6 x 10 |
| 31 | 1 | 31136 | Washer, stainless | 24 x 8,4 x 2 |
| 32 | 1 | 30130 | Set screw, stainless | M8 x 12 |
| 33 | 1 | 30113 | Set screw, stainless | M6 x 20 |
| 34 | 3 | 30884 | Lock nut, stainless | M6 |
| 35 | 1 | 30115 | Steel bolt, stainless | M6 x 30 |
| 36 | 1 | 6302875 | Door | |
| 37 | 2 | 45128 | Lock pin + ring | ø4 x 10 mm |
| 38 | 1 | 6302046 | Fitting | STDRC |
| 39 | 1 | 6300787 | Cooler bracket | |
| 40 | 4 | 31156 | Spring washer | 10 mm |

# ODIN

Intern ref.: 6300260

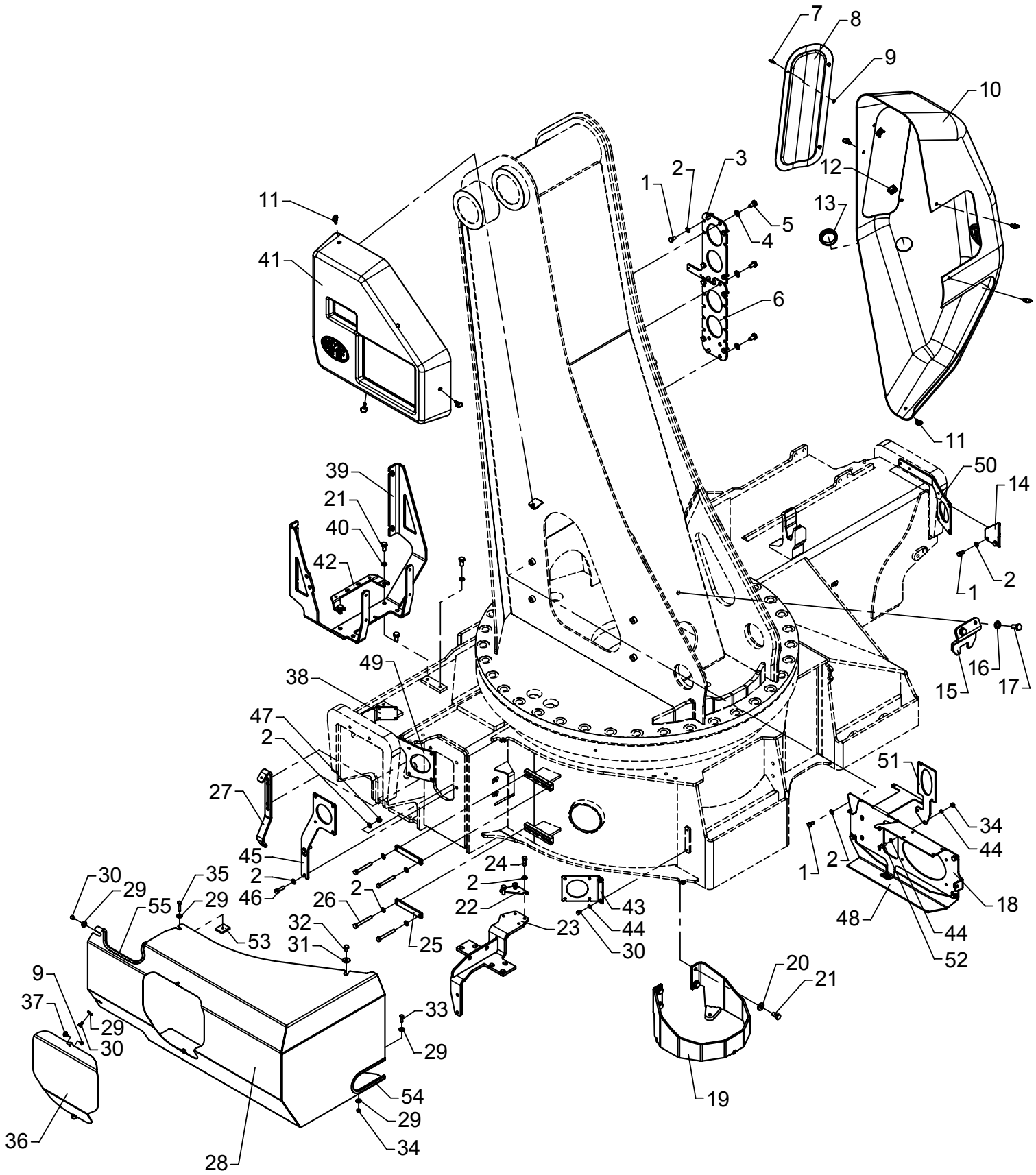

# Brackets and protection plates

As from / To loader no.: 96 00 50 / 96 00 53
Created: 10.01.2005
Modified:

| Item no. | Qty. | Part no. | Description | Remarks |
|---|---|---|---|---|
| 41 | 1 | 64402 | Protection plate | |
| 42 | 1 | 6300734 | Bracket | EVS |
| 43 | 1 | 6300877 | Mounting plate | |
| 44 | 6 | 32302 | Face washer, stainless | 6 mm |
| 45 | 1 | 6300979 | Bracket for ECT 5075 | |
| 46 | 2 | 30135 | Set screw, stainless | M8 x 30 |
| 47 | 2 | 30886 | Lock nut, stainless | M8 |
| 48 | 1 | 6300946 | Guide rails for cables | |
| 49 | 1 | 6300968 | Bracket, left | TSPR |
| 50 | 1 | 6300967 | Bracket, right | TSPR |
| 51 | 1 | 6300969 | Bracket | |
| 52 | 2 | 30112 | Set screw, stainless | M6 x 16 |
| 53 | 1 | 31418 | Clamp, double | Only use bottom plate |
| 54 | 1 | 46586 | Rubber protection | 330 mm |
| 55 | 1 | 46586 | Rubber protection | 255 mm |

# ODIN

An Oshkosh Corportation Company

Intern ref.: 6300260

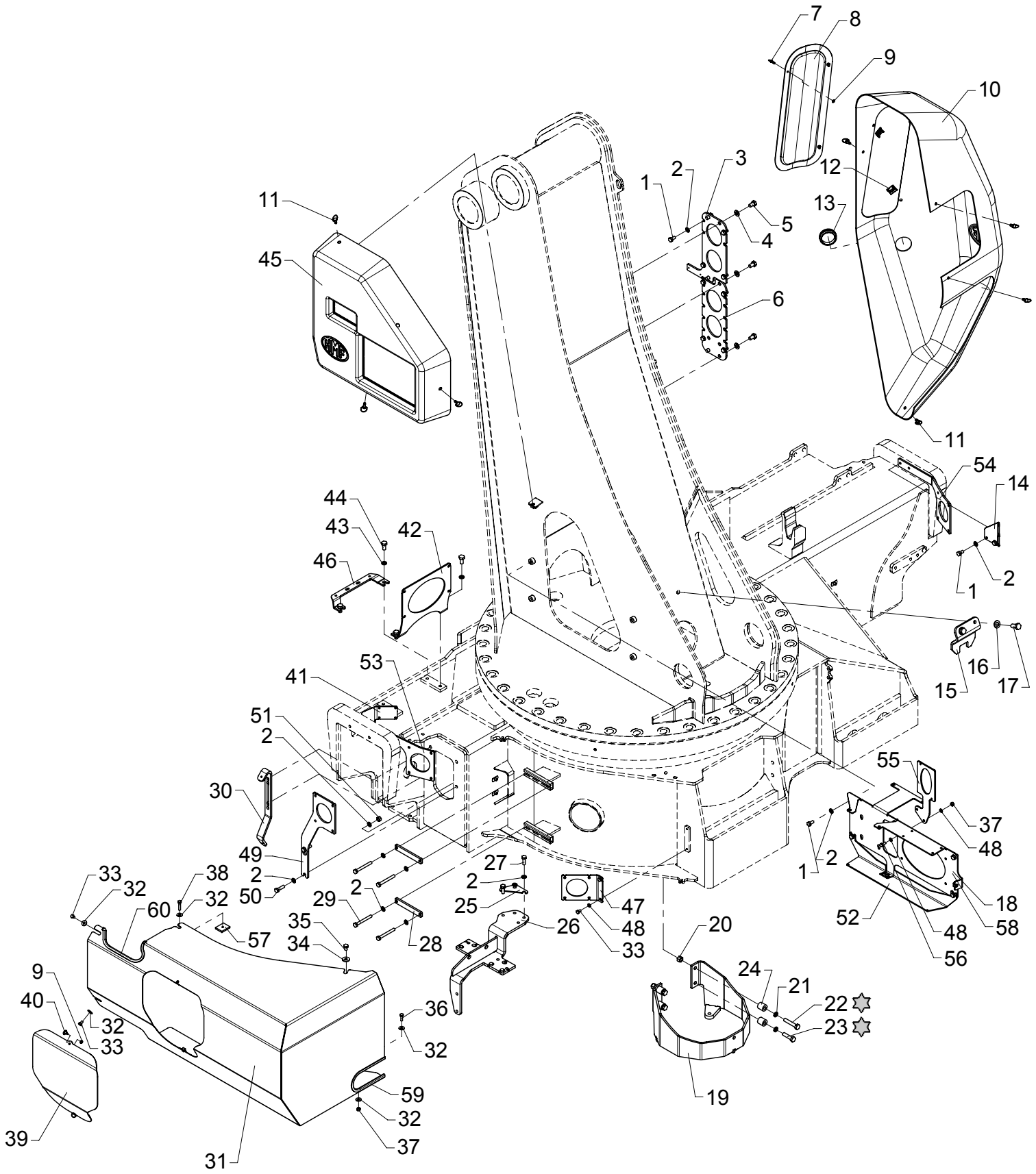

# Brackets and protection plates

As from / To loader no.: 96 00 54 / 96 02 07
Created: 10.01.2005
Modified: 02.06.2008

| Item no. | Qty. | Part no. | Description | Remarks |
|---|---|---|---|---|
| 1 | 16 | 30131 | Set screw, stainless | M8 x 16 |
| 2 | 27 | 31147 | Washer, stainless | 8 mm |
| 3 | 1 | 6300603 | Valve bracket, 2/3 distr. | |
| 4 | 6 | 31177 | Washer | 10 mm |
| 5 | 6 | 30153 | Set screw | M10 x 16 |
| 6 | 1 | 6300604 | Valve bracket, 2/4 distr. | |
| 7 | 3 | 45129 | Lock pin + ring | ø4 x 12 mm |
| 8 | 1 | 64403 | Cover | |
| 9 | 5 | 45132 | Washer | 4 mm |
| 10 | 1 | 64401 | Protection plate | |
| 11 | 7 | 45126 | Lock pin + ring | ø6 x 14 mm |
| 12 | 3 | 45131 | Fastener | 4 mm |
| 13 | 1 | 64344 | Plastic plug | |
| 14 | 1 | 6302047 | Fitting | STDRC |
| 15 | 1 | 6300648 | Carrier | |
| 16 | 2 | 31131 | Washer | 12 mm |
| 17 | 2 | 30176 | Set screw | M12 x 25 |
| 18 | 1 | 6300883 | Mounting bracket, Scanreco | |
| 19 | 1 | 6300756 | Adapter for swivel coupling | |
| 20 | 2 | 30888 | Lock nut | M10 |
| 21 | 4 | 30933 | Nordlock washer | 10 mm |
| 22 | 2 | 30160 | Steel bolt | M10 x 55 |
| 23 | 2 | 30158 | Steel bolt | M10 x 40 |
| 24 | 4 | 6301274 | Spacer | |
| 25 | 1 | 6300788 | Division plate | |
| 26 | 1 | 6300781 | Bracket for filter | |
| 27 | 2 | 31009 | Set screw | M8 x 25 |
| 28 | 2 | 6300786 | Threaded plate | |
| 29 | 4 | 30142 | Steel bolt, stainless | M8 x 70 |
| 30 | 1 | 6302876 | Bracket | |
| 31 | 1 | 6300871 | Protection plate | |
| 32 | 5 | 31134 | Washer, stainless | 6 mm |
| 33 | 4 | 30110 | Set screw, stainless | M6 x 10 |
| 34 | 1 | 31136 | Washer, stainless | 8 mm |
| 35 | 1 | 30130 | Set screw, stainless | M8 x 12 |
| 36 | 1 | 30113 | Set screw, stainless | M6 x 20 |
| 37 | 3 | 30884 | Lock nut, stainless | M6 |
| 38 | 1 | 30115 | Steel pin, stainless | M6 x 30 |
| 39 | 1 | 6302875 | Door | |
| 40 | 2 | 45128 | Lock pin + ring | ø4 x 10 mm |

# ODIN

Intern ref.: 6300260

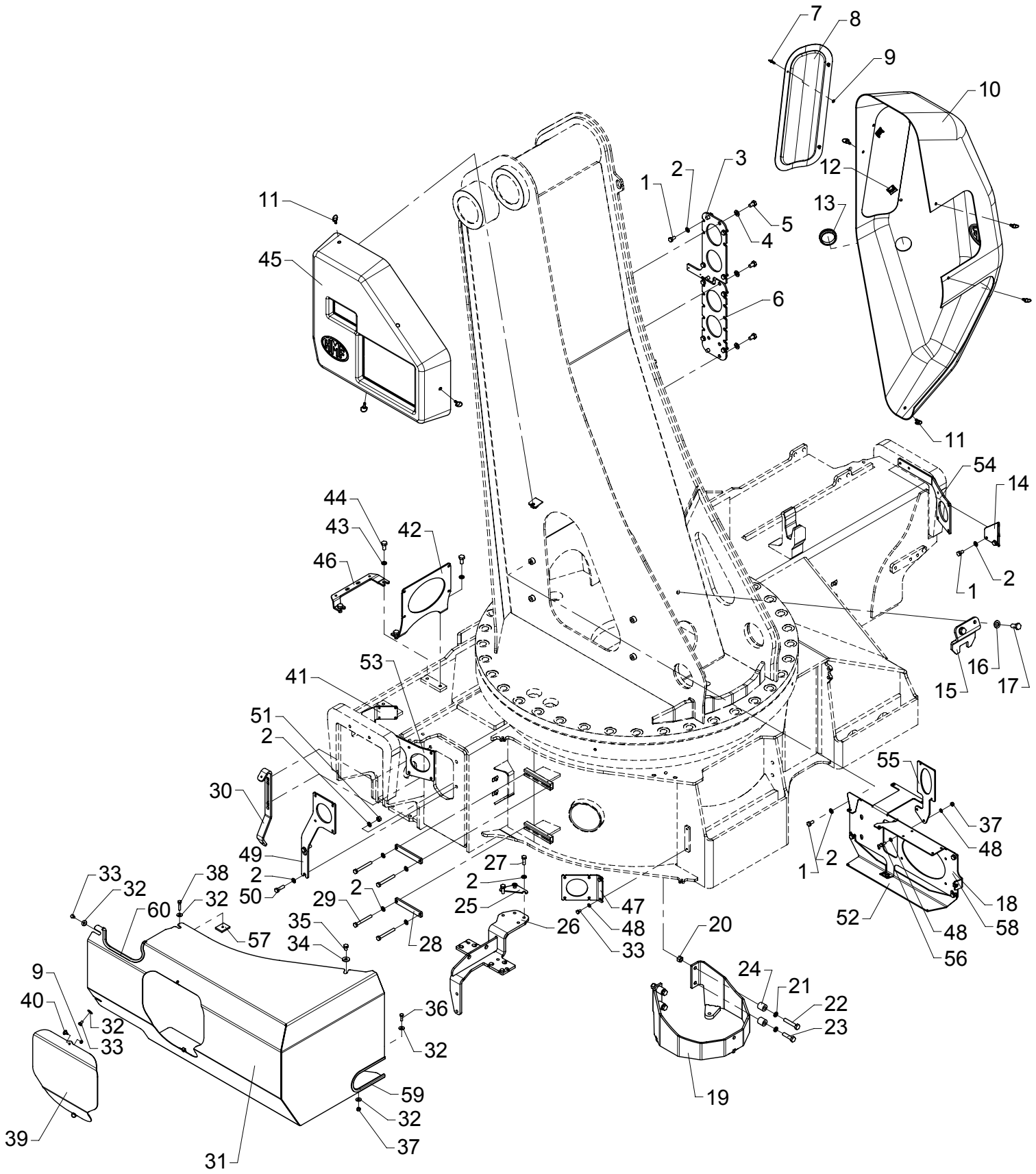

# Brackets and protection plates

As from / To loader no.: 96 00 54 / 96 02 07
Created: 10.01.2005
Modified: 02.06.2008

| Item no. | Qty. | Part no. | Description | Remarks |
|---|---|---|---|---|
| 41 | 1 | 6302046 | Fitting | STDRC |
| 42 | 1 | 6300881 | Bracket, electric box | |
| 43 | 4 | 31156 | Spring washer | 10 mm |
| 44 | 4 | 30154 | Set screw | M10 x 20 |
| 45 | 1 | 64402 | Protection plate | |
| 46 | 1 | 6300734 | Bracket | EVS |
| 47 | 1 | 6300877 | Mounting plate | |
| 48 | 6 | 32302 | Face washer, stainless | 6 mm |
| 49 | 1 | 6300979 | Bracket for ECT 5075 | |
| 50 | 2 | 30135 | Set screw, stainless | M8 x 30 |
| 51 | 2 | 30886 | Lock nut, stainless | M8 |
| 52 | 1 | 6300946 | Guide rails for cables | |
| 53 | 1 | 31418 | Clamp, double | Only use bottom plate |
| 53 | 1 | 6300968 | Bracket, left | TSPR |
| 54 | 1 | 6300967 | Bracket, right | TSPR |
| 55 | 1 | 6300969 | Bracket | |
| 56 | 2 | 30112 | Set screw, stainless | M6 x 16 |
| 57 | 1 | 31418 | Clamp, double | |
| 58 | 1 | 6300754 | Mounting bracket, Hetronic | |
| 59 | 1 | 46586 | Rubber protection | 330 mm |
| 60 | 1 | 46586 | Rubber protection | 255 mm |

# ODIN

Intern ref.: 6301700

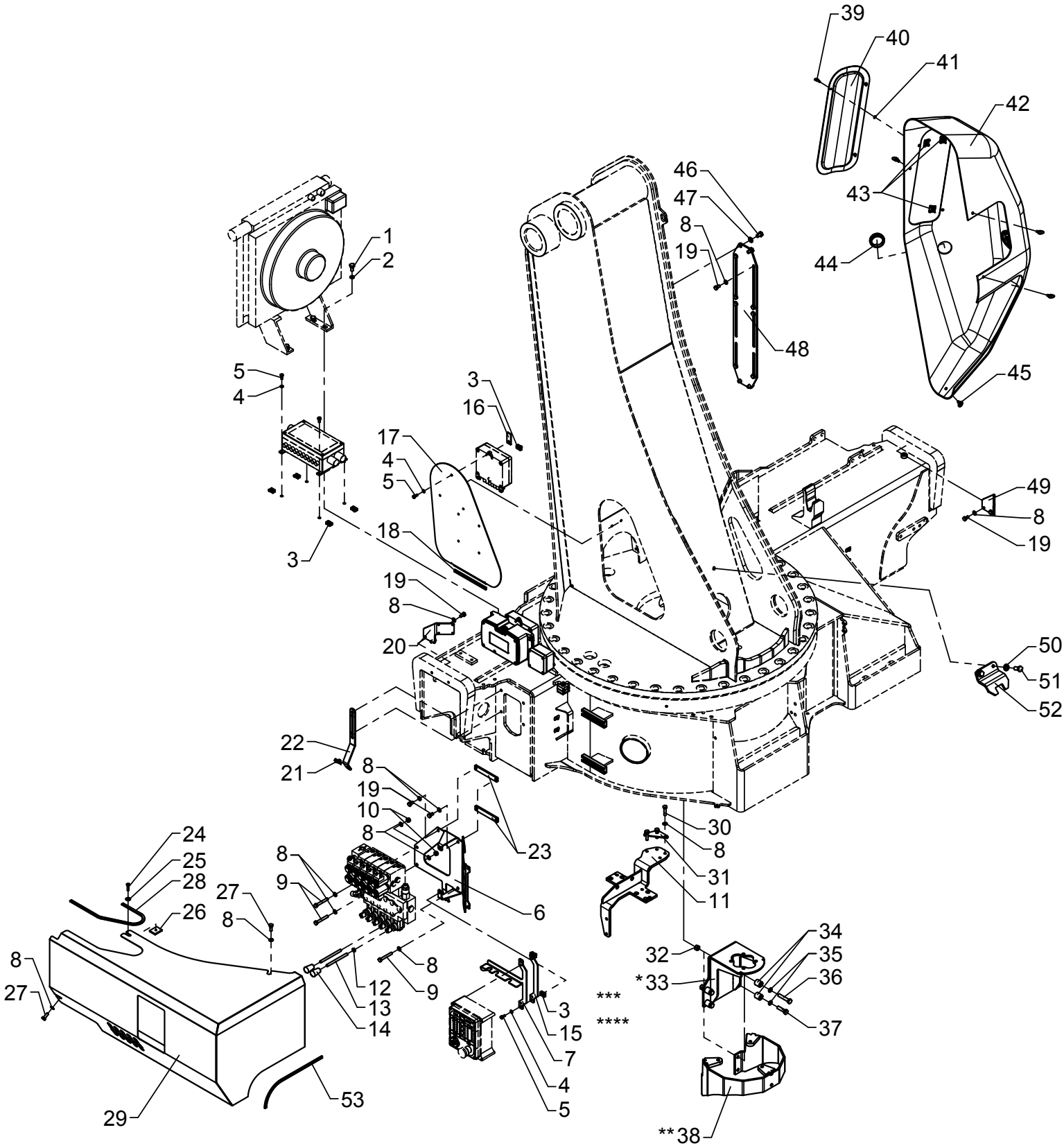

# Brackets and protection plates

As from / To loader no.: 96 02 08 / 96 03 82
Created: 02.06.2008
Modified: 05.01.2015

* 1 circuit ** 2 circuits
*** Stabilizer operation by RC **** Manual stabilizer operation

| Item no. | Qty. | Part no. | Description | Remarks |
|---|---|---|---|---|
| 1 | 4 | 31517 | Set screw, stainless | M10 x 20 |
| 2 | 4 | 31156 | Spring washer | 10 mm |
| 3 | 7 | 31068 | Clip | M6 0,5 - 4,0 mm. |
| 4 | 7 | 32302 | Face washer, stainless | 6 mm |
| 5 | 7 | 30112 | Set screw, stainless | M6 x 16 |
| 6 | 1 | 6301361 | Bracket for stabilizer valve | |
| 7 | 1 | 6301365 | Bracket for cables | |
| 8 | 24 | 31147 | Face washer, 8 mm | |
| 9 | 3 | 30141 | Set screw, stainless | M8 x 60 |
| 10 | 2 | 30886 | Lock nut, stainless | M8 |
| 11 | 1 | 6300781 | Bracket for filter | |
| 15 | 1 | 6301366 | Bracket for RCL 5300 | |
| 16 | 1 | 6301377 | Plate | |
| 17 | 1 | 6301378 | Protection plate, column | |
| 18 | 1 | 46586 | Rubber protection | 170 mm |
| 19 | 14 | 30131 | Set screw, stainless | M8 x 16 |
| 20 | 1 | 6302046 | Fitting | STDRC |
| 21 | 1 | 31069 | Clip | M8 1,5 - 5,5 mm. |
| 22 | 1 | 6301369 | Bracket | |
| 23 | 2 | 6300786 | Threaded plate | |
| 24 | 1 | 30114 | Set screw, stainless | M6 x 25 |
| 25 | 1 | 31134 | Washer, stainless | |
| 26 | 1 | 31418 | Clamp, double | |
| 27 | 1 | 30133 | Set screw, stainless | |
| 28 | 2 | 46586 | Rubber protection | 330 mm |
| 29 | 1 | 6301381 | Protection plate | |
| 30 | 3 | 30136 | Steel bolt, stainless | M8 x 35 |
| 31 | 1 | 6300788 | Division plate | |
| 32 | 2 | 30888 | Lock nut | |
| 33 | 1 | 6301326 | Adapter, swivel coupling | |
| 34 | 4 | 6301274 | Spacer | |
| 35 | 4 | 30933 | Nordlock washer | 10 mm |
| 36 | 2 | 30160 | Steel bolt | M10 x 55 |
| 37 | 2 | 30158 | Steel bolt | M10 x 40 |
| 38 | 1 | 6300756 | Adapter for swivel coupling | |
| 39 | 3 | 45129 | Lock pin + ring | ø4 x 12 mm |
| 40 | 1 | 64403 | Cover | |
| 49 | 1 | 6302047 | Fitting | STDRC |

# ODIN

Intern ref.: 6301700

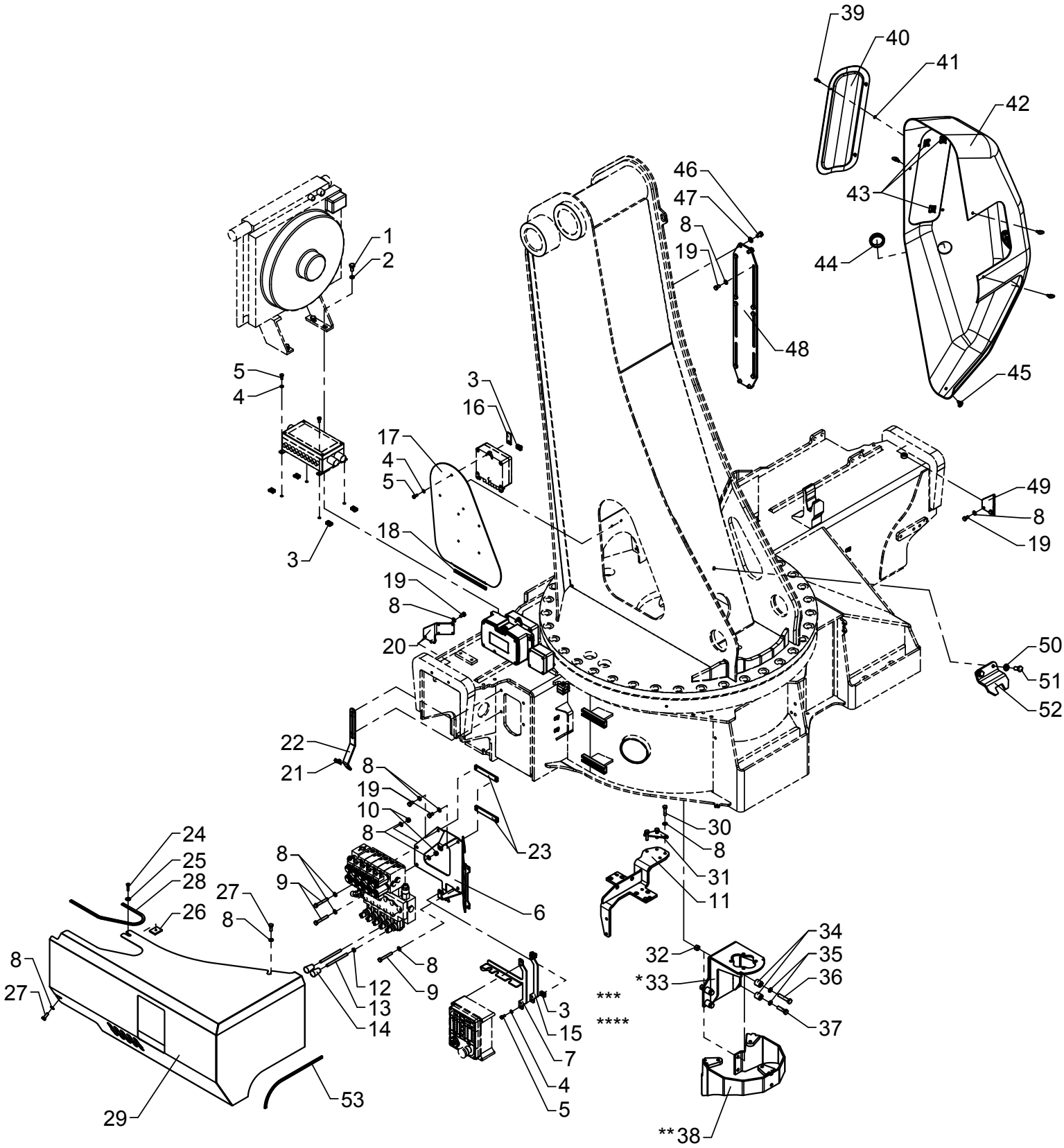

# Brackets and protection plates

As from / To loader no.: 96 02 08 / 96 03 82
Created: 02.06.2008
Modified: 05.01.2015

| Item no. | Qty. | Part no. | Description | Remarks |
|---|---|---|---|---|
| 1 | 4 | 31517 | Set screw, stainless | M10 x 20 |
| 12 | 1 | 30874 | Counter nut, stainless | M8 |
| 13 | 2 | 1330187 | Control lever, long, straight | |
| 14 | 2 | 59224 | Knob for lever | |
| 20 | 1 | 6302046 | Fitting | STDRC |
| 41 | 3 | 45132 | Washer | 4 mm |
| 42 | 1 | 64401 | Protection plate | |
| 43 | 3 | 45131 | Fastener | 4 mm |
| 44 | 1 | 64344 | Plastic plug | |
| 45 | 4 | 45126 | Lock pin + ring | ø6 x 14 mm |
| 46 | 4 | 30153 | Set screw | M10 x 16 |
| 47 | 4 | 31177 | Washer | 10 mm |
| 48 | 1 | 6301077 | Valve bracket | |
| 49 | 1 | 6302047 | Fitting | STDRC |
| 50 | 2 | 31131 | Washer | 12 mm |
| 51 | 2 | 30176 | Set screw | M12 x 25 |
| 52 | 1 | 6300648 | Carrier | |
| 53 | 1 | 46586 | Rubber protection | 330 mm |

* 1 circuit ** 2 circuits
*** Stabilizer operation by RC **** Manual stabilizer operation

# ODIN

Intern ref.: 6308100_1

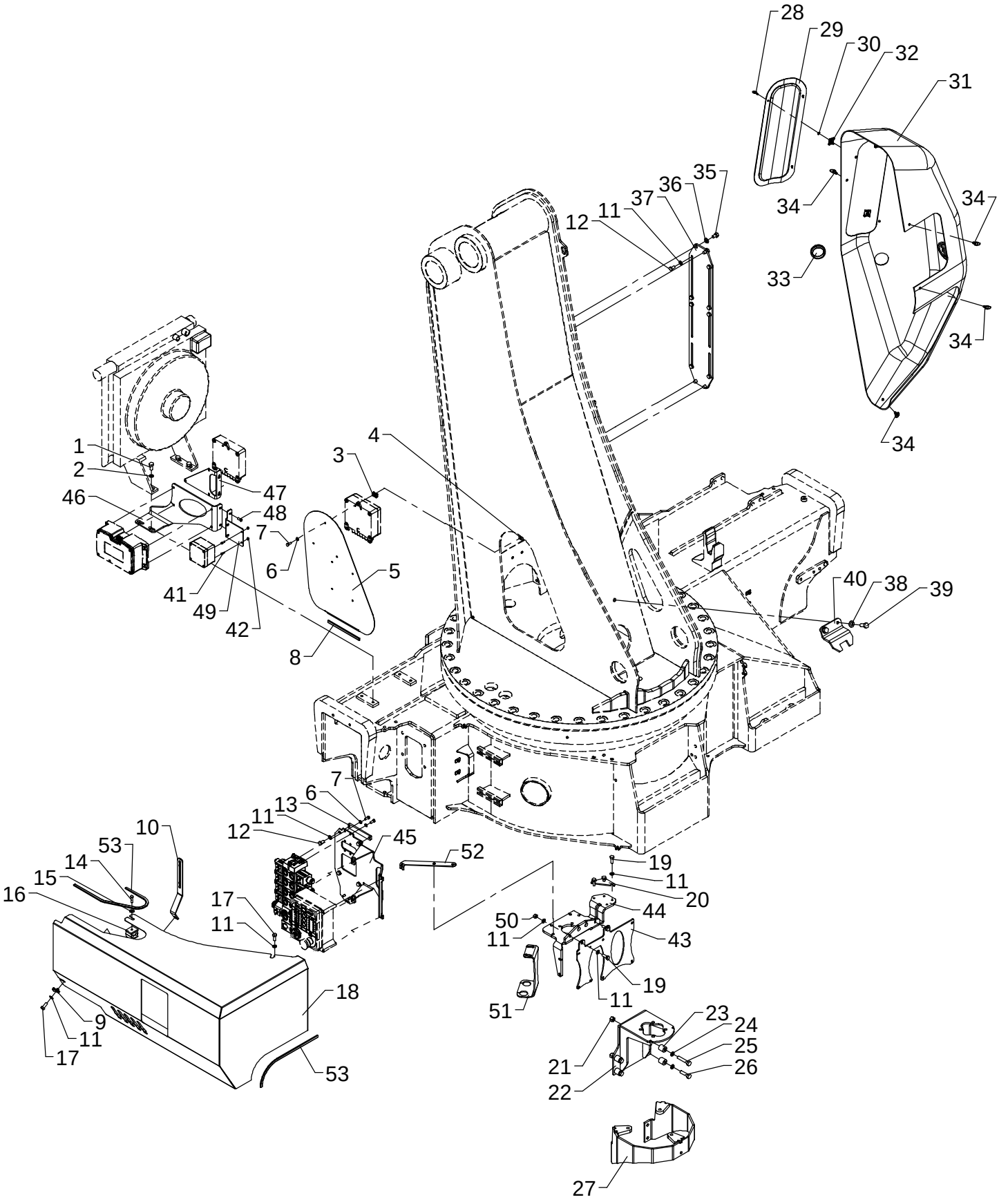

# Brackets and protection plates

As from / To loader no.: 96 03 83
Created: 05.01.2015
Modified:

| Item no. | Qty. | Part no. | Description | Remarks |
|---|---|---|---|---|
| 1 | 4 | 31517 | Set screw, stainless | M10 x 20 |
| 2 | 4 | 31156 | Spring washer | 10 mm |
| 3 | 1 | 31068 | Clip | M6 0,5 - 4,0 mm. |
| 4 | 1 | 6301377 | Plate | |
| 5 | 1 | 6301378 | Protection plate, column | |
| 6 | 5 | 32302 | Face washer, stainless | 6 mm |
| 7 | 5 | 30112 | Set screw, stainless | M6 x 16 |
| 8 | 1 | 46586 | Rubber protection | 170 mm |
| 9 | 1 | 31069 | Clip | M8 1,5 - 5,5 mm. |
| 10 | 1 | 6301369 | Bracket | |
| 11 | 21 | 31147 | Face washer, 8 mm | |
| 12 | 12 | 30131 | Set screw, stainless | M8 x 16 |
| 13 | 2 | 6300786 | Threaded plate | |
| 14 | 1 | 30114 | Set screw, stainless | M6 x 25 |
| 15 | 1 | 31134 | Washer, stainless | |
| 16 | 1 | 31418 | Clamp, double | |
| 17 | 2 | 30133 | Set screw, stainless | |
| 18 | 1 | 6301381 | Protection plate | |
| 19 | 5 | 30134 | Set screw, stainless | M8 x 25 |
| 20 | 1 | 6300788 | Division plate | |
| 21 | 2 | 30888 | Lock nut | |
| 22 | 1 | 6301326 | Adapter, swivel coupling | |
| 23 | 4 | 6301274 | Spacer | |
| 24 | 4 | 30933 | Nordlock washer | 10 mm |
| 25 | 2 | 30160 | Steel bolt | M10 x 55 |
| 26 | 2 | 30158 | Steel bolt | M10 x 40 |
| 27 | 1 | 6300756 | Adapter for swivel coupling | |
| 28 | 3 | 45129 | Lock pin + ring | ø4 x 12 mm |
| 29 | 1 | 64403 | Cover | |
| 30 | 3 | 45132 | Washer | 4 mm |
| 31 | 1 | 64401 | Protection plate | |
| 32 | 3 | 45131 | Fastener | 4 mm |
| 33 | 1 | 64344 | Plastic plug | |
| 34 | 4 | 45126 | Lock pin + ring | ø6 x 14 mm |
| 35 | 4 | 30153 | Set screw | M10 x 16 |
| 36 | 4 | 31177 | Washer | 10 mm |
| 37 | 1 | 6301077 | Valve bracket | |
| 38 | 2 | 31131 | Washer | 12 mm |
| 39 | 2 | 30176 | Set screw | M12 x 25 |

# ODIN

Intern ref.: 6308100_1

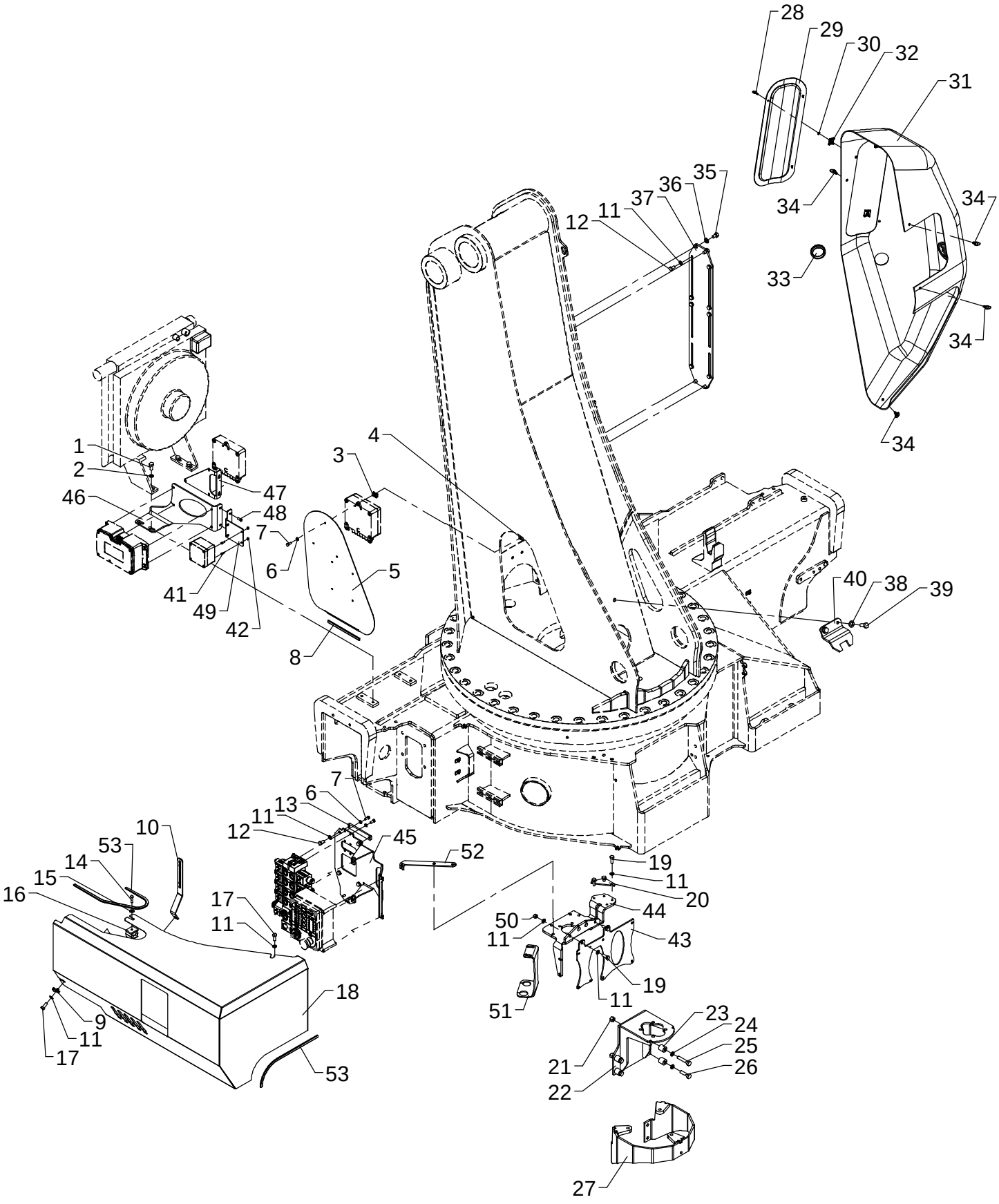

# Brackets and protection plates

As from / To loader no.: 96 03 83
Created: 05.01.2015
Modified:

| Item no. | Qty. | Part no. | Description | Remarks |
|---|---|---|---|---|
| 40 | 1 | 6300648 | Carrier | |
| 41 | 4 | 32406 | Sockethead screw | MC4 x 12 |
| 42 | 4 | 30857 | Lock nut | M4 |
| 43 | 1 | 6301392 | Bracket for converter | |
| 44 | 1 | 6301391 | Bracket for high-pressure filter | |
| 45 | 1 | 6301393 | Bracket for stabilizer valve | |
| 46 | 1 | 6301207 | Bracket | |
| 47 | 1 | 6301208 | Bracket for Electronic box, Fly-Jib | |
| 48 | 2 | 32490 | Screw | MC6 x 16 |
| 49 | 1 | 6301209 | Bracket for key switch | |
| 50 | 2 | 30886 | Lock nut, stainless | M8 |
| 51 | 1 | 6301395 | Bracket | |
| 52 | 1 | 6301396 | Reinforcement plate for RCL | |
| 53 | 2 | 46586 | Rubber protection | 330 mm |

# ODIN

Intern ref.: 6300900

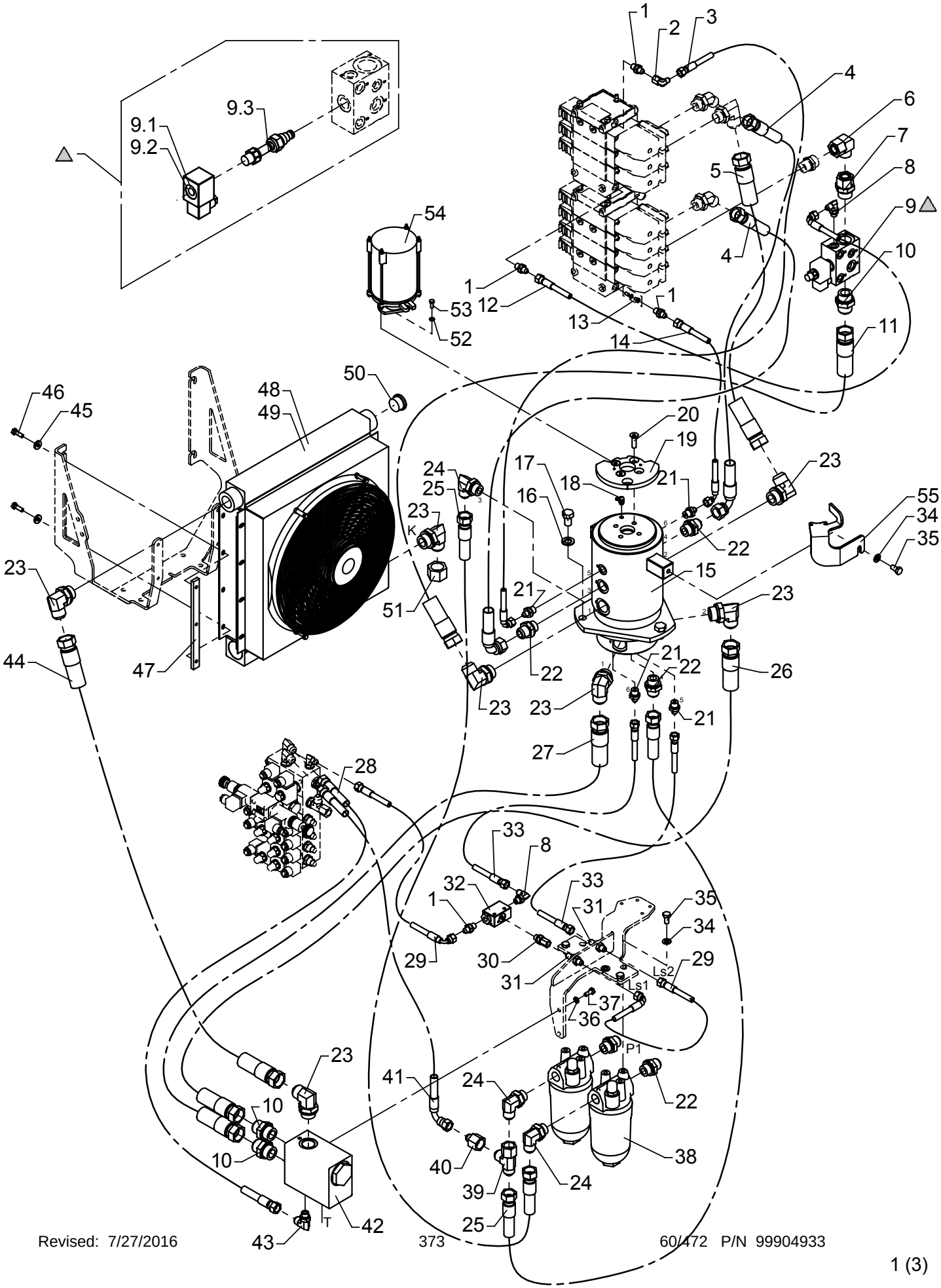

# Hydraulic system, pump and return hoses, 1 circuit + fixed pump

As from / To loader no.: 96 00 00 / 96 00 49
Created: 03.10.2003
Modified: 17.06.2005

| Item no. | Qty. | Part no. | Description | Remarks |
|---|---|---|---|---|
| 1 | 4 | 25829 | Straight connection | F40XS 8-1/4 JIC |
| 2 | 1 | 25826 | Elbow connection | C6XS 8 JIC |
| 3 | 1 | 62934 | Hose | 1/4" x 1330 mm V/O JIC |
| 4 | 2 | 62977 | Hose | 5/8" x 1100 mm V/O JIC |
| 5 | 1 | 56046 | Hose | 1" x 1000 mm O/O JIC |
| 6 | 1 | 25209 | Elbow connection | EWSD 22 L |
| 7 | 1 | 26391 | Straight connection | EGESD 22 LR 1-WD |
| 8 | 2 | 25858 | Elbow connection | C40XS 12-3/8 JIC |
| 9 | 1 | 59061 | Dump valve | |
| | | 61777 | Solenoid | 12V |
| | | 61778 | Solenoid | 26V |
| | | 59642 | Magnet coil | |
| 10 | 3 | 25863 | Straight connection | F40XS 25-1 JIC |
| 11 | 1 | 56048 | Hose | 1" x 900 mm O/O JIC |
| 12 | 1 | 62887 | Hose | 1/4" x 550 mm V/O JIC |
| 13 | 1 | 62065 | Closed center kit | |
| 14 | 1 | 62901 | Hose | 1/4" x 900 mm V/O JIC |
| 15 | 1 | 58727 | Swivel coupling, hydraulic | |
| 16 | 3 | 31135 | Washer | 16 mm |
| 17 | 3 | 30266 | Set screw | M16 x 25 |
| 18 | 1 | 31322 | Lubricator | 1/8 RG - 90 |
| 19 | 1 | 6301196 | Cam disc, 2-stage LMB | |
| 20 | 4 | 30955 | Countersunk screw | MK10 x 35 |
| 21 | 4 | 25830 | Straight connection | F40XS 8-3/8 JIC |
| 22 | 5 | 25834 | Straight connection | F40XS 18/20-3/4 JIC |
| 23 | 7 | 26267 | Elbow connection | C40XS 25-1 JIC |
| 24 | 3 | 26693 | Elbow connection | C40XS 18/20-3/4 JIC |
| 25 | 2 | 56045 | Hose | 5/8" x 1450 mm O/O JIC |
| 26 | 1 | 56050 | Hose | 1" x 1300 mm O/O JIC |
| 27 | 1 | 56049 | Hose | 1" x 1050 mm O/O JIC |
| 28 | 1 | 62884 | Hose | 3/8" x 500 mm O/O JIC |
| 29 | 2 | 62974 | Hose | 1/4" x 350 mm V/O JIC |
| 30 | 1 | 26272 | Straight connection | F64XS 14/16 - 3/8" JIC |
| 31 | 2 | 25823 | Bulkhead connection | WTX-WLNS 8 JIC |
| 32 | 1 | 60338 | Shuttle valve | |
| 33 | 2 | 56130 | Hose | 1/4" x 1150 mm O/O JIC |
| 34 | 7 | 31177 | Washer | 10 mm |
| 35 | 7 | 30154 | Set screw | M10 x 20 |
| 36 | 2 | 31155 | Spring washer | 8 mm |
| 37 | 2 | 30132 | Set screw, stainless | M8 x 20 |

# ODIN

Intern ref.: 6300900

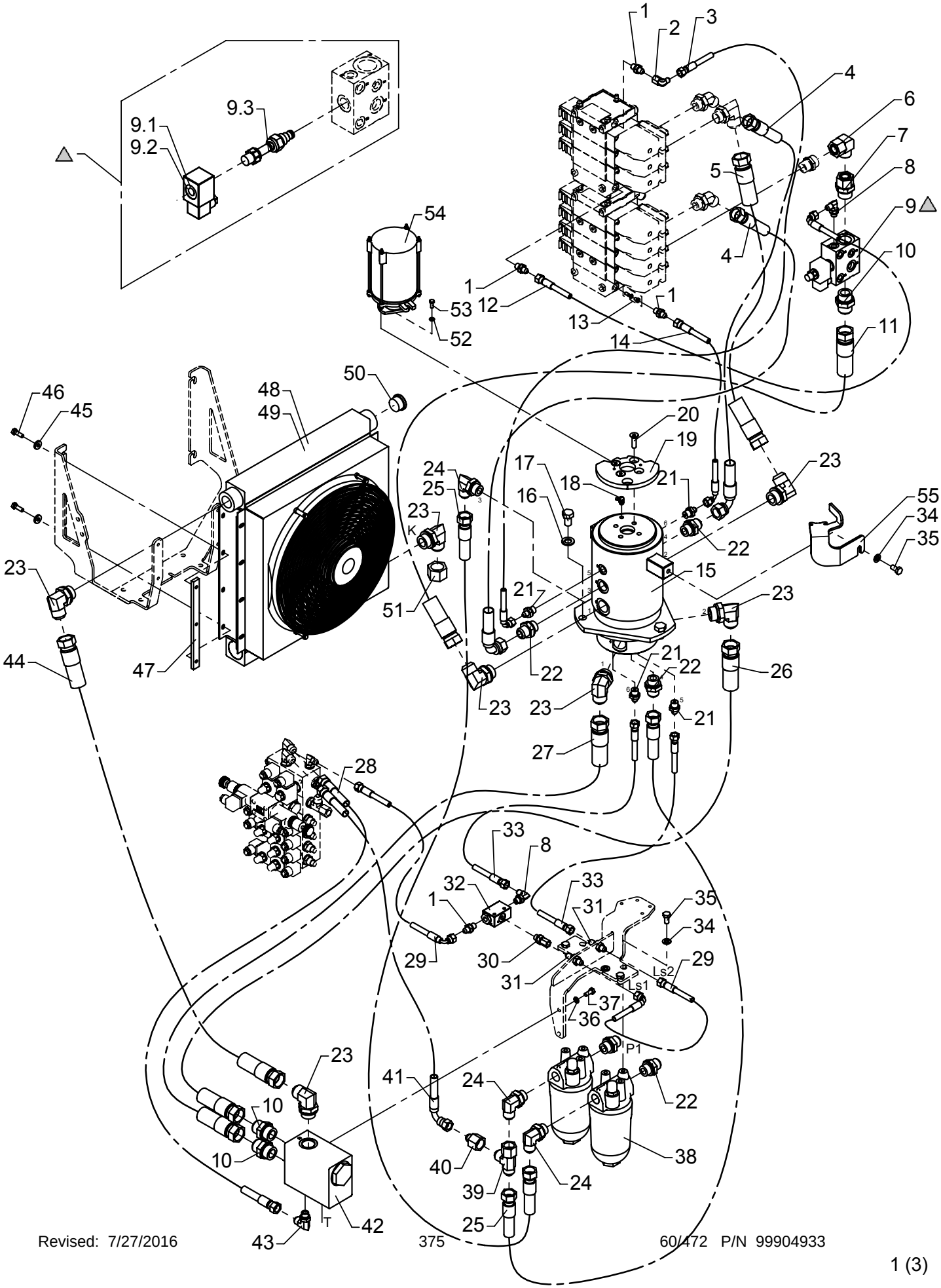

# Hydraulic system, pump and return hoses, 1 circuit + fixed pump

As from / To loader no.: 96 00 00 / 96 00 49
Created: 03.10.2003
Modified: 17.06.2005

| Item no. | Qty. | Part no. | Description | Remarks |
|---|---|---|---|---|
| 38 | 2 | 60201 | High pressure filter | |
| 39 | 1 | 25828 | Connection | R6XS 20 JIC |
| 40 | 1 | 25865 | Reducing connection | TRTXS 8/20-12 JIC |
| 41 | 1 | 56091 | Hose | 3/8" x 350 mm V/O JIC |
| 42 | 1 | 59056 | Cooler valve | |
| 43 | 1 | 25838 | Elbow connection | C40XS 12-3/8 JIC |
| 44 | 1 | 56047 | Hose | 3/4" x 1400 mm O/O JIC |
| 45 | 4 | 31755 | Washer | 8 mm |
| 46 | 4 | 30134 | Set screw, stainless | M8 x 25 |
| 47 | 2 | 6381974 | Threaded disc | |
| 48 | 1 | 59310 | Oil cooler 24 V | |
| 49 | 1 | 59312 | Oil cooler 12 V | |
| 50 | 1 | 26321 | Plug | VS-R 1" WD |
| 51 | 1 | 25848 | Screw cap JIC | FNTXS 25 JIC |
| 52 | 2 | 31154 | Spring washer, stainless | 6 mm |
| 53 | 2 | 30112 | Set screw, stainless | M6 x 16 |
| 54 | 1 | 28549 | Swivel coupling, electric | |
| 55 | 1 | 6301197 | Carrier | |

# ODIN

Intern ref.: 6300900

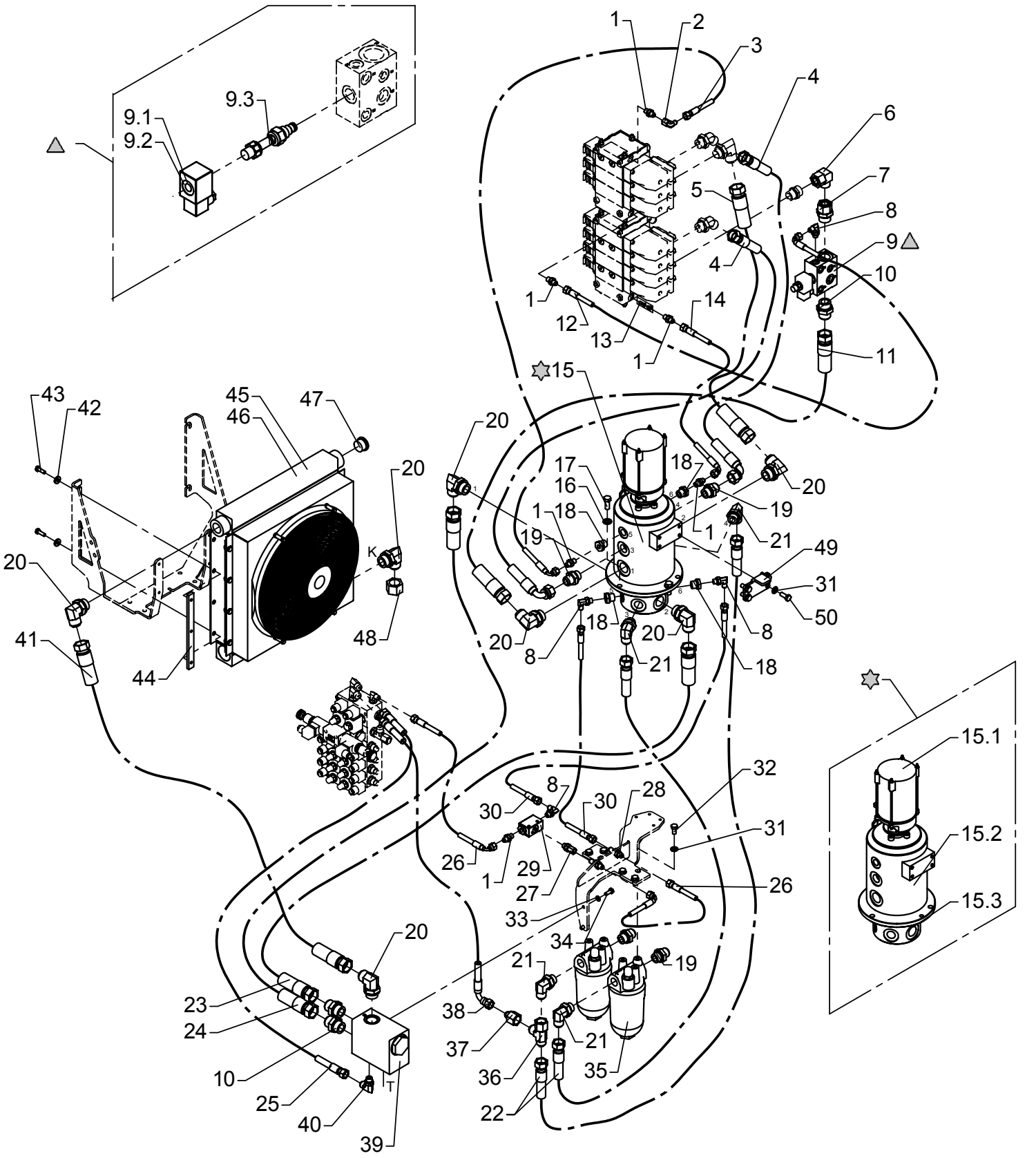

# Hydraulic system, pump and return hoses, 1 circuit + fixed pump

As from / To loader no.: 96 00 50 / 96 00 53
Created: 17.06.2005
Modified: 05.10.2005

| Item no. | Qty. | Part no. | Description | Remarks |
|---|---|---|---|---|
| 1 | 6 | 25829 | Straight connection | F40XS 8-1/4 JIC |
| 2 | 1 | 25826 | Elbow connection | C6XS 8 JIC |
| 3 | 1 | 62934 | Hose | 1/4" x 1330 mm V/O JIC |
| 4 | 2 | 62977 | Hose | 5/8" x 1100 mm V/O JIC |
| 5 | 1 | 56046 | Hose | 1" x 1000 mm O/O JIC |
| 6 | 1 | 25209 | Elbow connection | EWSD 22 L |
| 7 | 1 | 26391 | Straight connection | EGESD 22 LR 1-WD |
| 8 | 4 | 25858 | Elbow connection | C40XS 12-3/8 JIC |
| 9 | 1 | 59061 | Dump valve | |
| | | 61777 | Solenoid | 12V |
| | | 61778 | Solenoid | 26V |
| | | 59642 | Magnet coil | |
| 10 | 3 | 25863 | Straight connection | F40XS 25-1 JIC |
| 11 | 1 | 56048 | Hose | 1" x 900 mm O/O JIC |
| 12 | 1 | 62887 | Hose | 1/4" x 550 mm V/O JIC |
| 13 | 1 | 62065 | Closed center kit | |
| 14 | 1 | 62901 | Hose | 1/4" x 900 mm V/O JIC |
| 15 | 1 | 49105 | Swivel coupling | |
| | | 28549 | Swivel coupling, electric | |
| | | 49106 | Unit hydraulic | |
| | | 49115 | Seal kit | |
| 16 | 3 | 31131 | Washer | 12 mm |
| 17 | 3 | 30177 | Set screw | M12 x 30 |
| 18 | 4 | 25180 | Connection | RED-R 1/2-WD/R 1/4 |
| 19 | 4 | 25834 | Straight connection | F40XS 18/20-3/4 JIC |
| 20 | 7 | 26267 | Elbow connection | C40XS 25-1 JIC |
| 21 | 4 | 26693 | Elbow connection | C40XS 18/20-3/4 JIC |
| 22 | 2 | 56045 | Hose | 5/8" x 1450 mm O/O JIC |
| 23 | 1 | 56050 | Hose | 1" x 1300 mm O/O JIC |
| 24 | 1 | 56049 | Hose | 1" x 1050 mm O/O JIC |
| 25 | 1 | 62884 | Hose | 3/8" x 500 mm O/O JIC |
| 26 | 2 | 62974 | Hose | 1/4" x 350 mm V/O JIC |
| 27 | 1 | 26272 | Straight connection | F64XS 14/16 - 3/8" JIC |
| 28 | 2 | 25823 | Bulkhead connection | WTX-WLNS 8 JIC |
| 29 | 1 | 60338 | Shuttle valve | |
| 30 | 2 | 56130 | Hose | 1/4" x 1150 mm O/O JIC |
| 31 | 10 | 31177 | Washer | 10 mm |
| 32 | 6 | 30154 | Set screw | M10 x 20 |
| 33 | 2 | 31155 | Spring washer | 8 mm |
| 34 | 2 | 30132 | Set screw, stainless | M8 x 20 |

# ODIN

Intern ref.: 6300900

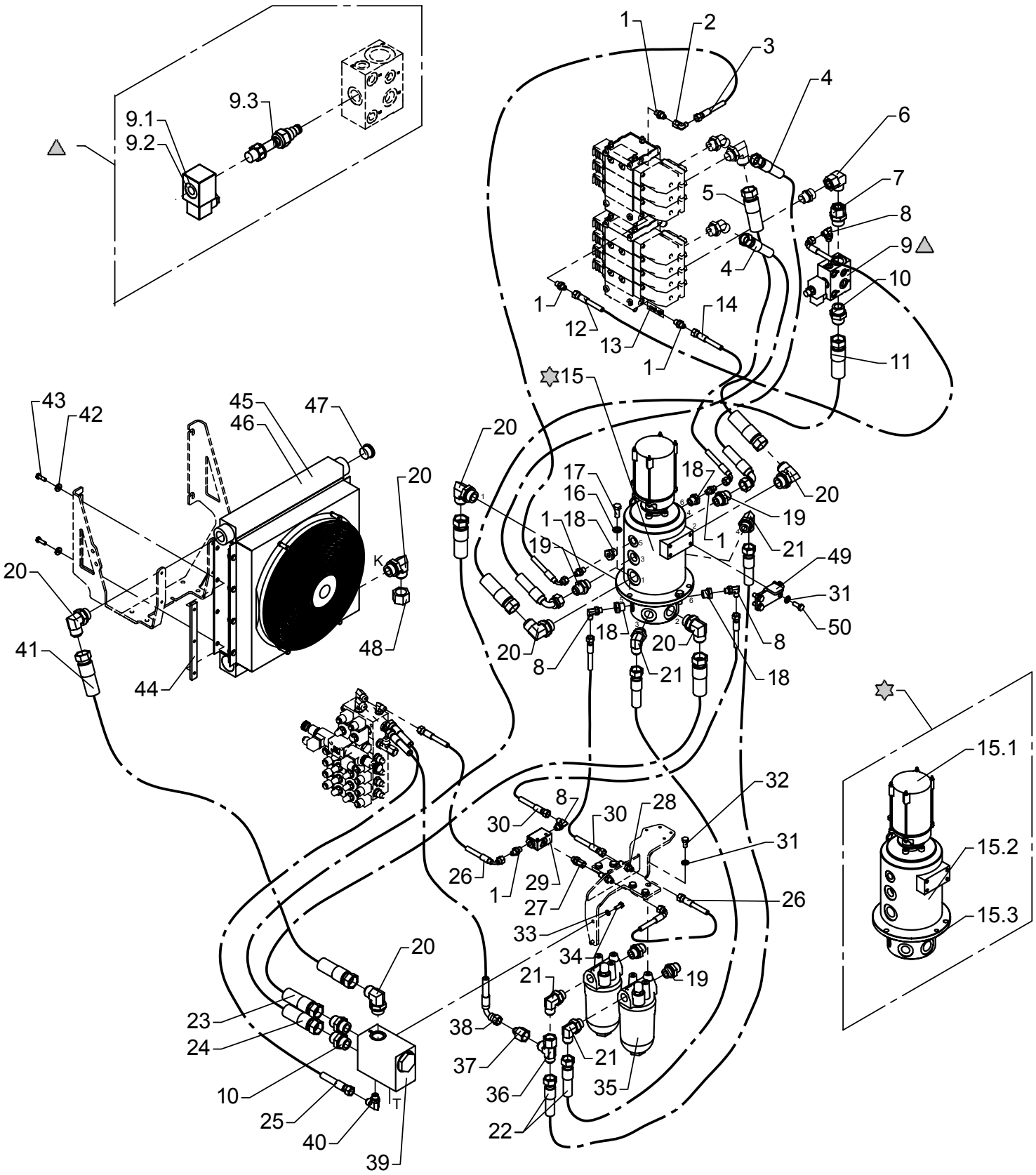

# Hydraulic system, pump and return hoses, 1 circuit + fixed pump

As from / To loader no.: 96 00 50 / 96 00 53
Created: 17.06.2005
Modified: 05.10.2005

| Item no. | Qty. | Part no. | Description | Remarks |
|---|---|---|---|---|
| 35 | 2 | 60201 | High pressure filter | |
| 36 | 1 | 25828 | Connection | R6XS 20 JIC |
| 37 | 1 | 25865 | Reducing connection | TRTXS 8/20-12 JIC |
| 38 | 1 | 56091 | Hose | 3/8" x 350 mm V/O JIC |
| 39 | 1 | 59056 | Cooler valve | |
| 40 | 1 | 25838 | Elbow connection | C40XS 12-3/8 JIC |
| 41 | 1 | 56047 | Hose | 3/4" x 1400 mm O/O JIC |
| 42 | 4 | 31755 | Washer | 8 mm |
| 43 | 4 | 30134 | Set screw, stainless | M8 x 25 |
| 44 | 2 | 6381974 | Threaded disc | |
| 45 | 1 | 59310 | Oil cooler 24 V | |
| 46 | 1 | 59312 | Oil cooler 12 V | |
| 47 | 1 | 26321 | Plug | VS-R 1" WD |
| 48 | 1 | 25848 | Screw cap JIC | FNTXS 25 JIC |
| 49 | 1 | 6302621 | Carrier fitting | |
| 50 | 4 | 30155 | Set screw | M10 x 25 |

# ODIN

An Oshkosh Corportation Company

Intern ref.: 6300900

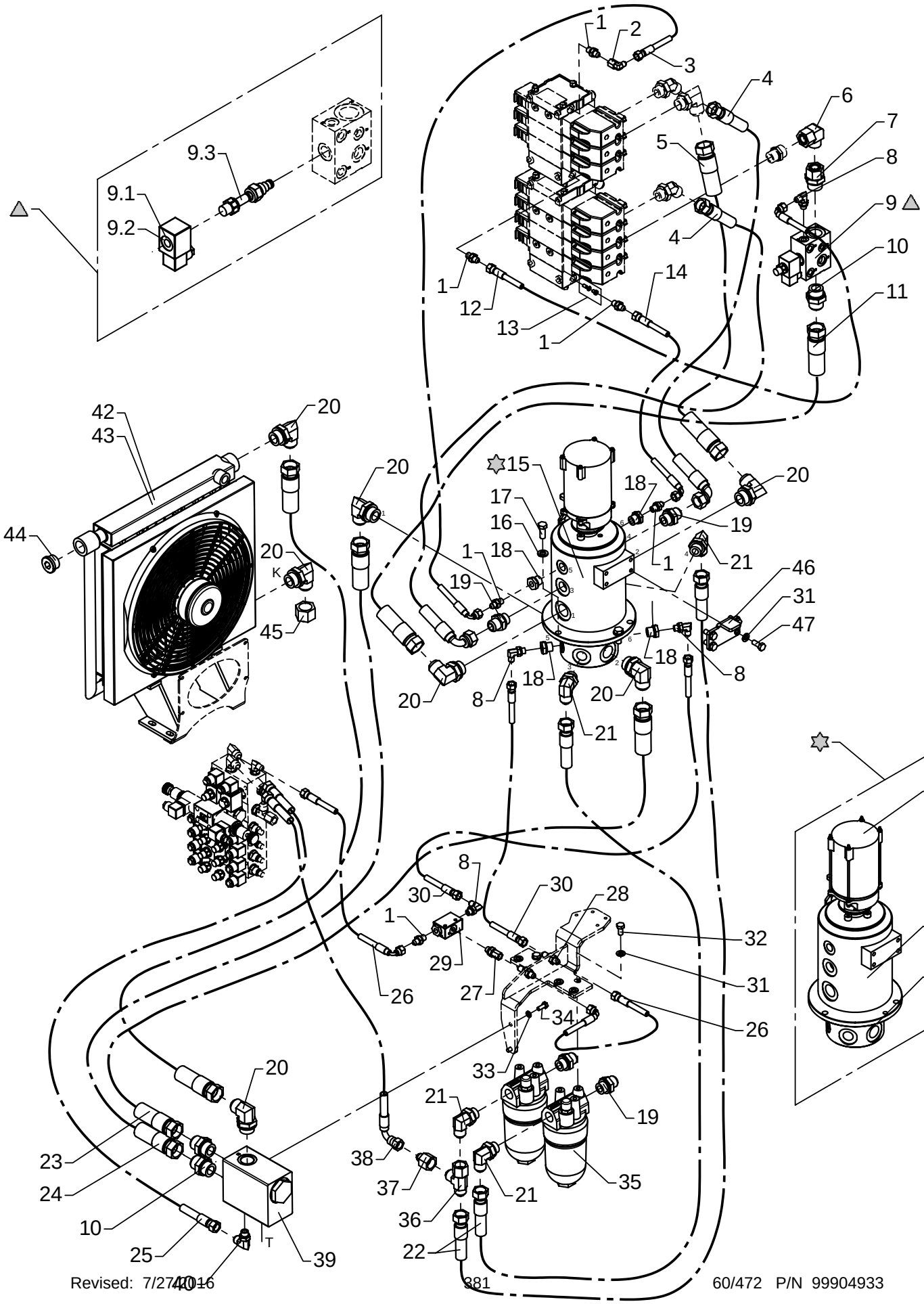

# Hydraulic system, pump and return hoses, 1 circuit + fixed pump

As from / To loader no.: 96 00 54 / 96 01 49
Created: 17.06.2005
Modified: 30.10.2006

| Item no. | Qty. | Part no. | Description | Remarks |
|---|---|---|---|---|
| 1 | 6 | 25829 | Straight connection | F40XS 8-1/4 JIC |
| 2 | 1 | 25826 | Elbow connection | C6XS 8 JIC |
| 3 | 1 | 62934 | Hose | 1/4" x 1330 mm V/O JIC |
| 4 | 2 | 62977 | Hose | 5/8" x 1100 mm V/O JIC |
| 5 | 1 | 56046 | Hose | 1" x 1000 mm O/O JIC |
| 6 | 1 | 25209 | Elbow connection | EWSD 22 L |
| 7 | 1 | 26391 | Straight connection | EGESD 22 LR 1-WD |
| 8 | 4 | 25858 | Elbow connection | C40XS 12-3/8 JIC |
| 9 | 1 | 59061 | Dump valve | |
| | | 61777 | Solenoid | 12V |
| | | 61778 | Solenoid | 26V |
| | | 59642 | Magnet coil | |
| 10 | 3 | 25863 | Straight connection | F40XS 25-1 JIC |
| 11 | 1 | 56048 | Hose | 1" x 900 mm O/O JIC |
| 12 | 1 | 62887 | Hose | 1/4" x 550 mm V/O JIC |
| 13 | 1 | 62065 | Closed center kit | |
| 14 | 1 | 62901 | Hose | 1/4" x 900 mm V/O JIC |
| 15 | 1 | 49105 | Swivel coupling | |
| | | 28549 | Swivel coupling, electric | |
| | | 49106 | Unit hydraulic | |
| | | 49115 | Seal kit | |
| 16 | 3 | 31131 | Washer | 12 mm |
| 17 | 3 | 30177 | Set screw | M12 x 30 |
| 18 | 4 | 25180 | Reducing connection | RED-R 1/2-WD/R 1/4 |
| 19 | 4 | 25834 | Straight connection | F40XS 18/20-3/4 JIC |
| 20 | 7 | 26267 | Elbow connection | C40XS 25-1 JIC |
| 21 | 4 | 26693 | Elbow connection | C40XS 18/20-3/4 JIC |
| 22 | 2 | 56045 | Hose | 5/8" x 1450 mm O/O JIC |
| 23 | 1 | 56050 | Hose | 1" x 1300 mm O/O JIC |
| 24 | 1 | 56049 | Hose | 1" x 1050 mm O/O JIC |
| 25 | 1 | 62884 | Hose | 3/8" x 500 mm O/O JIC |
| 26 | 2 | 62974 | Hose | 1/4" x 350 mm V/O JIC |
| 27 | 1 | 26272 | Straight connection | F64XS 14/16 - 3/8" JIC |
| 28 | 2 | 25823 | Bulkhead connection | WTX-WLNS 8 JIC |
| 29 | 1 | 60338 | Shuttle valve | |
| 30 | 2 | 56130 | Hose | 1/4" x 1150 mm O/O JIC |
| 31 | 10 | 31177 | Washer | 10 mm |
| 32 | 6 | 30154 | Set screw | M10 x 20 |
| 33 | 2 | 31155 | Spring washer | 8 mm |
| 34 | 2 | 30132 | Set screw, stainless | M8 x 20 |

# ODIN

An Oshkosh Corportation Company

Intern ref.: 6300900

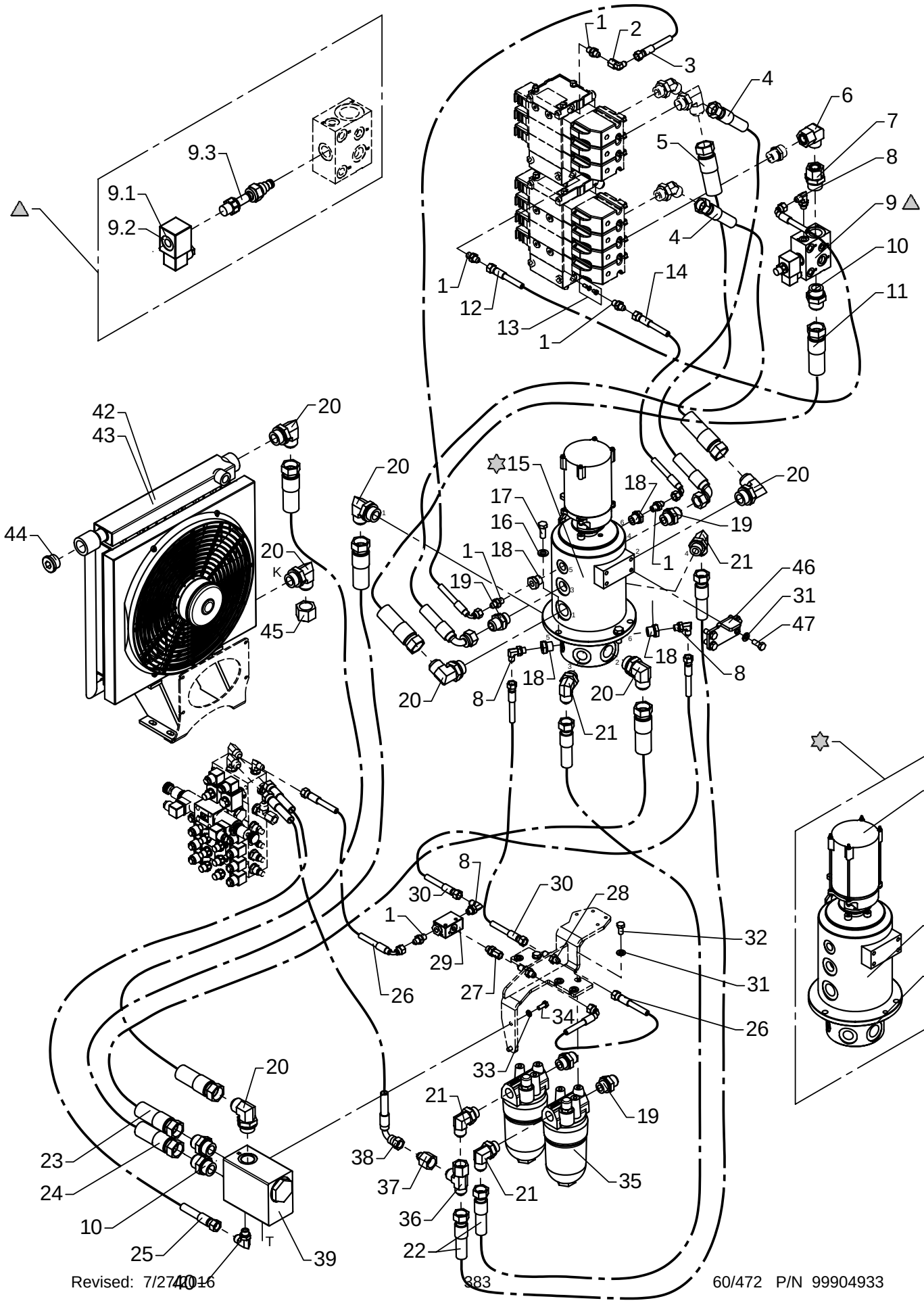

# Hydraulic system, pump and return hoses, 1 circuit + fixed pump

As from / To loader no.: 96 00 54 / 96 01 49
Created: 17.06.2005
Modified: 30.10.2006

| Item no. | Qty. | Part no. | Description | Remarks |
|---|---|---|---|---|
| 35 | 2 | 60201 | High pressure filter | |
| 36 | 1 | 25828 | Connection | R6XS 20 JIC |
| 37 | 1 | 25865 | Reducing connection | TRTXS 8/20-12 JIC |
| 38 | 1 | 56091 | Hose | 3/8" x 350 mm V/O JIC |
| 39 | 1 | 59056 | Cooler valve | |
| 40 | 1 | 25838 | Elbow connection | C40XS 12-3/8 JIC |
| 41 | 1 | 56262 | Hose | 3/4" x 2000 mm O/O JIC |
| 42 | 1 | 59310 | Oil cooler 24 V | |
| 43 | 1 | 59312 | Oil cooler 12 V | |
| 44 | 1 | 26321 | Plug | VS-R 1" WD |
| 45 | 1 | 25848 | Screw cap JIC | FNTXS 25 JIC |
| 46 | 1 | 6302621 | Carrier fitting | |
| 47 | 4 | 30155 | Set screw | M10 x 25 |

# ODIN

An Oshkosh Corportation Company

Intern ref.: 6300900

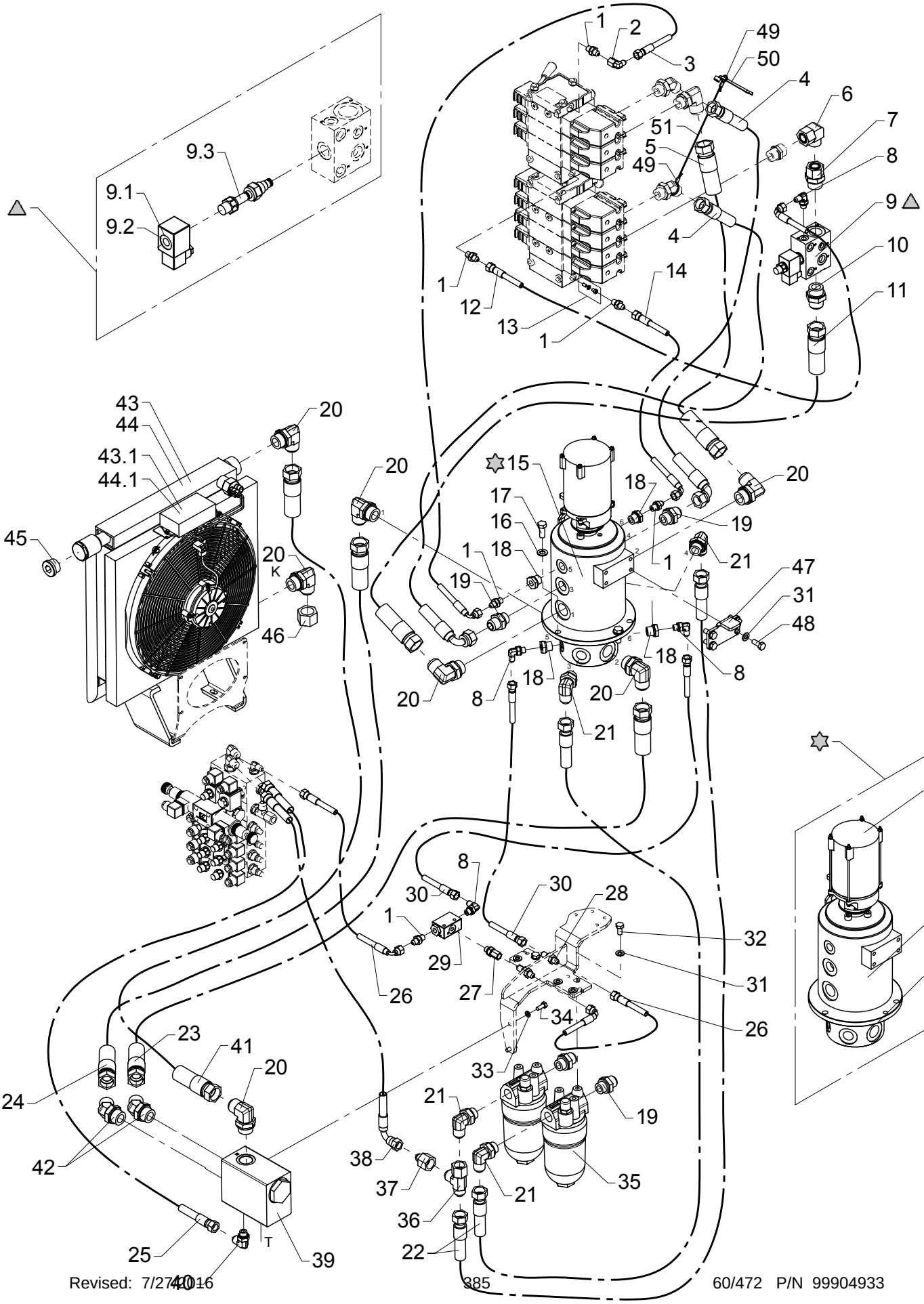

# Hydraulic system, pump and return hoses, 1 circuit + fixed pump

As from / To loader no.: 96 01 50 / 96 02 07
Created: 30.10.2006
Modified: 02.06.2008

| Item no. | Qty. | Part no. | Description | Remarks |
|---|---|---|---|---|
| 1 | 6 | 25829 | Straight connection | F40XS8 - 1/4 |
| 2 | 1 | 25826 | Elbow connection | C6XS 8 JIC |
| 3 | 1 | 62934 | Hose | 1/4" x 1330 mm V/O JIC |
| 4 | 2 | 62977 | Hose | 5/8" x 1100 mm V/O JIC |
| 5 | 1 | 56046 | Hose | 1" x 1000 mm O/O JIC |
| 6 | 1 | 25209 | Elbow connection | EWSD 22 L |
| 7 | 1 | 26391 | Straight connection | EGESD 22 LR 1-WD |
| 8 | 4 | 25858 | Elbow connection | C40XS8 - 1/4 |
| 9 | 1 | 59061 | Dump valve | |
| | | 61777 | Solenoid | 12V |
| | | 61778 | Solenoid | 26V |
| | | 59642 | Magnet coil | |
| 10 | 1 | 25863 | Straight connection | F40XS25 - 1 |
| 11 | 1 | 56048 | Hose | 1" x 900 mm O/O JIC |
| 12 | 1 | 62887 | Hose | 1/4" x 550 mm V/O JIC |
| 13 | 1 | 62065 | Closed center kit | |
| 14 | 1 | 62901 | Hose | 1/4" x 900 mm V/O JIC |
| 15 | 1 | 49105 | Swivel coupling | |
| | | 28549 | Swivel coupling, electric | |
| | | 49106 | Unit hydraulic | |
| | | 49115 | Seal kit | |
| 16 | 3 | 31131 | Washer | 12 mm |
| 17 | 3 | 30177 | Set screw | M12 x 30 |
| 18 | 4 | 25180 | Reducing connection | RED-R 1/2-WD/R 1/4 |
| 19 | 4 | 25834 | Straight connection | F40XS18/20 - 3/4 |
| 20 | 7 | 26267 | Elbow connection | C40XS25 - 1 |
| 21 | 4 | 26693 | Elbow connection | C40XS18/20 - 3/4 |
| 22 | 2 | 56045 | Hose | 5/8" x 1450 mm O/O JIC |
| 23 | 1 | 56050 | Hose | 1" x 1300 mm O/O JIC |
| 24 | 1 | 56049 | Hose | 1" x 1050 mm O/O JIC |
| 25 | 1 | 62884 | Hose | 3/8" x 500 mm O/O JIC |
| 26 | 2 | 62974 | Hose | 1/4" x 350 mm V/O JIC |
| 27 | 1 | 26272 | Straight connection | F64XS 14/16 - 3/8" JIC |
| 28 | 2 | 25823 | Bulkhead connection | WTX-WLNS 8 JIC |
| 29 | 1 | 60338 | Shuttle valve | |
| 30 | 2 | 56130 | Hose | 1/4" x 1150 mm O/O JIC |
| 31 | 10 | 31177 | Washer | 10 mm |
| 32 | 6 | 30154 | Set screw | M10 x 20 |
| 33 | 2 | 31155 | Spring washer | 8 mm |
| 34 | 2 | 30132 | Set screw, stainless | M8 x 20 |

# ODIN

Intern ref.: 6300900

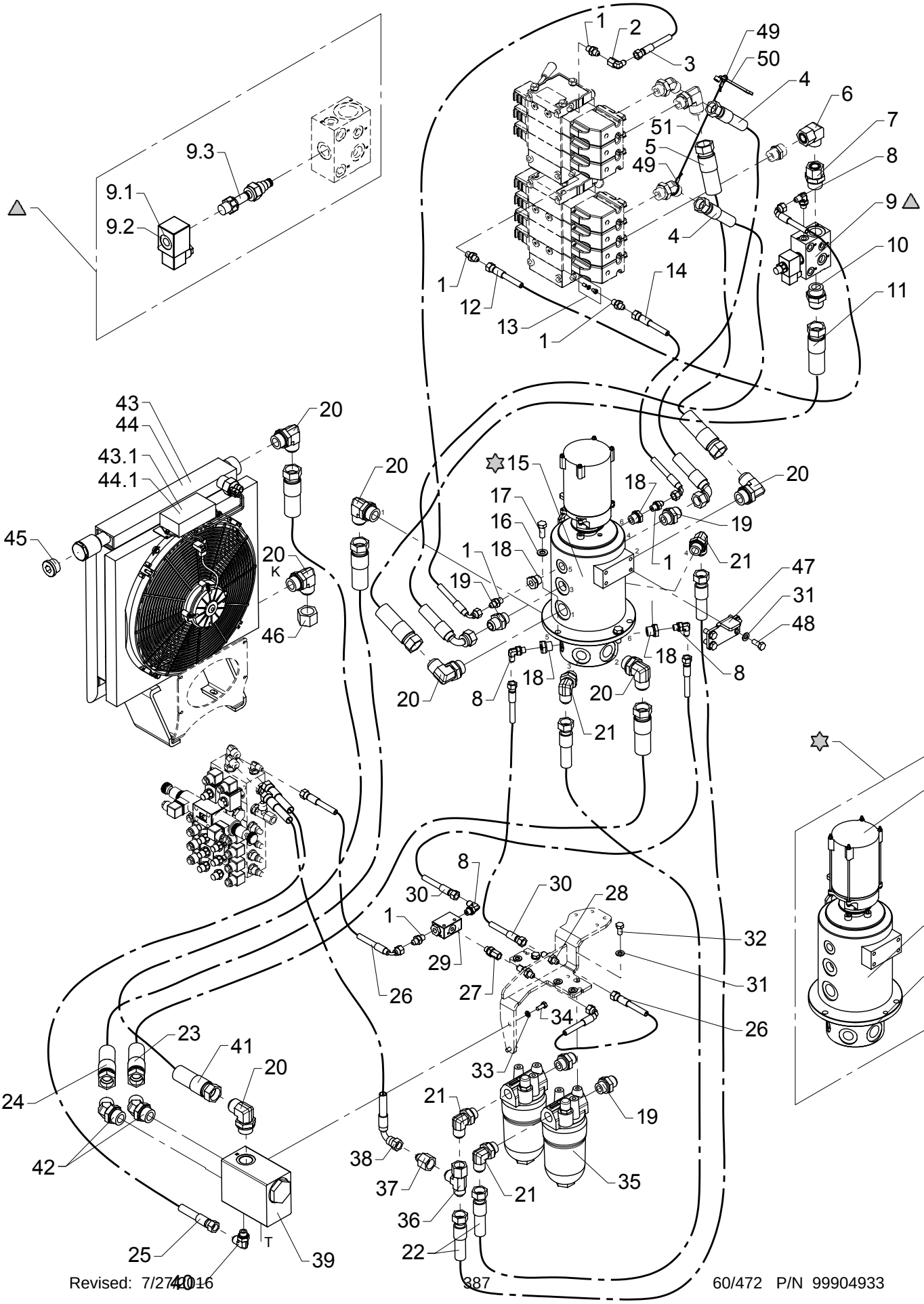

# Hydraulic system, pump and return hoses, 1 circuit + fixed pump

As from / To loader no.: 96 01 50 / 96 02 07
Created: 30.10.2006
Modified: 02.06.2008

| Item no. | Qty. | Part no. | Description | Remarks |
|---|---|---|---|---|
| 35 | 2 | 60201 | High pressure filter | |
| 36 | 1 | 25828 | Connection | R6XS 20 JIC |
| 37 | 1 | 25865 | Reducing connection | TRTXS8/20-12 |
| 38 | 1 | 56091 | Hose | 3/8" x 350 mm V/O JIC |
| 39 | 1 | 59056 | Cooler valve | |
| 40 | 1 | 25838 | Elbow connection | C40XS12 - 3/8 |
| 41 | 1 | 56262 | Hose | 3/4" x 2000 mm O/O JIC |
| 42 | 2 | 25734 | Elbow connection 45° | V40XS25 - 1 |
| 43 | 1 | 50282 | Oil cooler, 24 V + Smartdrive | |
| | | 50284 | Smartdrive kit for oil cooler | |
| 44 | 1 | 50283 | Oil cooler, 12 V + Smartdrive | |
| | | 50284 | Smartdrive kit for oil cooler | |
| 45 | 1 | 26321 | Plug | VS-R 1" WD |
| 46 | 1 | 25848 | Screw cap JIC | FNTXS 25 JIC |
| 47 | 1 | 6302621 | Carrier fitting | |
| 48 | 4 | 30155 | Set screw | M10 x 25 |
| 49 | 2 | 62161 | Wire lock | |
| 50 | 1 | 42953 | Adjustable spanner | |
| 51 | 1 | 62160 | Wire rope, nylon | 400 mm |

# ODIN

An Oshkosh Corportation Company

Intern ref.: 6301710

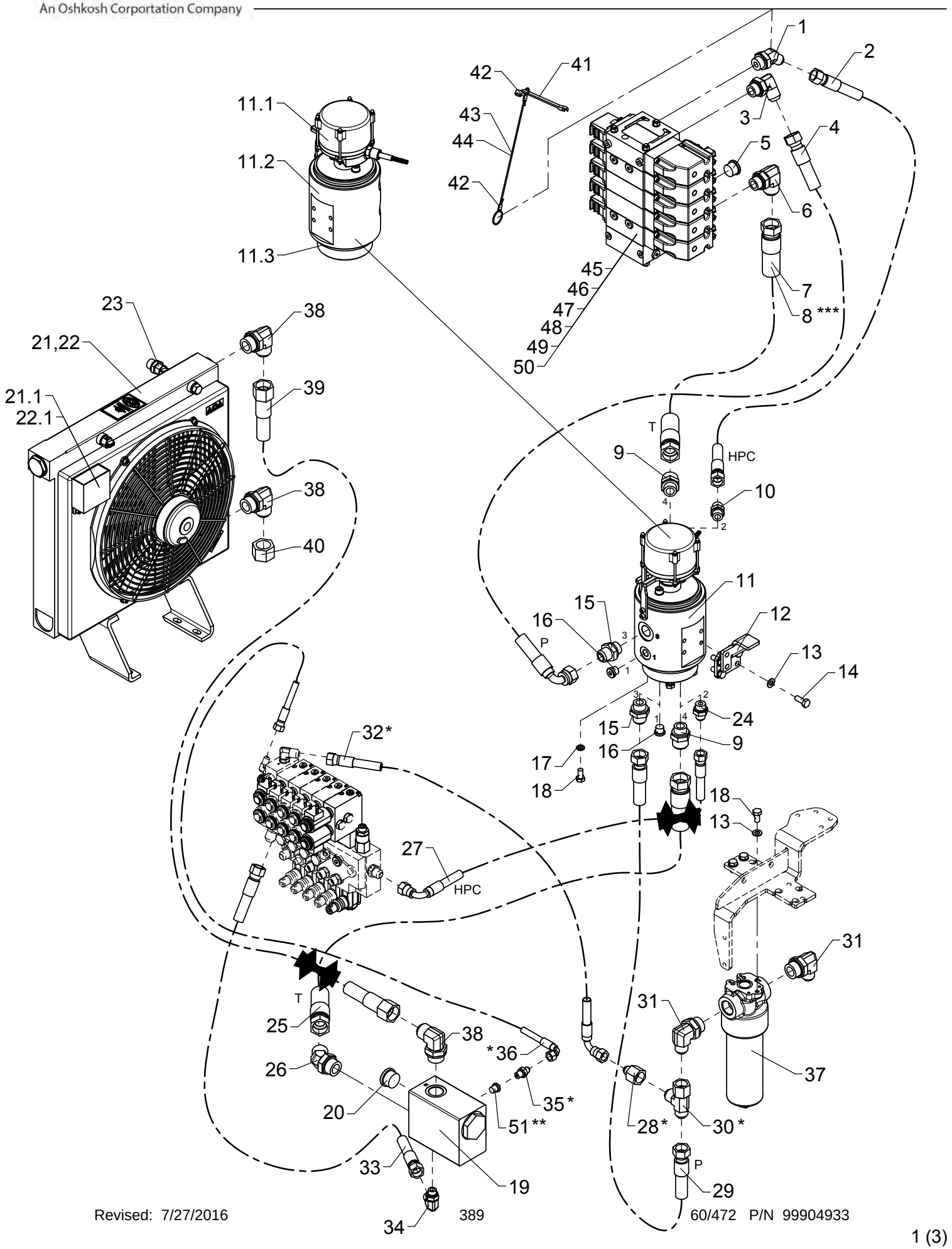

# Hydraulic system, pump and return hoses, 1 circuit + fixed pump

As from / To loader no.: 96 02 08 / 96 03 82
Created: 02.06.2008
Modified: 14.04.2015

* Stabilizer operation by RC ** Manual stabilizer operation *** Winch

| Item no. | Qty. | Part no. | Description | Remarks |
|---|---|---|---|---|
| 1 | 1 | 26291 | Elbow connection 45° | V40XS14-16 - 3/4 |
| 2 | 1 | 62922 | Hose JIC | 1/2" x 1400 L/L JIC |
| 3 | 1 | 26693 | Elbow connection | C40XS18/20 - 3/4 |
| 4 | 1 | 56080 | Hose | 5/8" x 1400 90/L JIC |
| 5 | 1 | 26355 | Plug | VS-R-3/4 WD |
| 6 | 1 | 25840 | Elbow connection | C40XS25 - 3/4 |
| 7 | 1 | 56048 | Hose | 1" x 900 L/L JIC |
| 8 | 1 | 56461 | Hose | 1" x 700 L/L JIC |
| 9 | 2 | 25836 | Straight connection | F40XS25 - 3/4 |
| 10 | 1 | 25833 | Straight connection | F40XS14/16 - 1/2 |
| 11 | 1 | 49216 | Swivel coupling | |
| | | 49237 | Electric part, swivel coupling | |
| | | 49235 | Hydraulic part,swivel coupling | |
| | | 49247 | Seal kit | |
| 12 | 1 | 6301329 | Carrier fitting | |
| 13 | 7 | 31177 | Washer | 10 mm |
| 14 | 4 | 30155 | Set screw | M10 x 25 |
| 15 | 2 | 25834 | Straight connection | F40XS18/20 - 3/4 |
| 16 | 2 | 25277 | Plug | VS-R-3/8 WD |
| 17 | 4 | 30933 | Nordlock washer | 10 mm |
| 18 | 7 | 30154 | Set screw | M10 x 20 |
| 19 | 1 | 59056 | Cooler valve | |
| 20 | 1 | 26321 | Plug | VS-R 1" WD |
| 21 | 1 | 50262 | Oil cooler, 24 V + Smartdrive | |
| | | 50292 | Electronic box, kit 12 + 24V | |
| 22 | 1 | 50263 | Oil cooler, 12 V + Smartdrive | |
| | | 50292 | Electronic box, kit 12 + 24V | |
| 23 | 1 | 50290 | Temperature sensor, oil cooler | |
| 24 | 1 | 25832 | Straight connection | F40XS12 - 1/2 |
| 25 | 1 | 56050 | Hose | 1" x 1300 L/L JIC |
| 26 | 1 | 25734 | Elbow connection 45° | V40XS25 - 1 |
| 27 | 1 | 56110 | Hose | 3/8" x 1130 90/L JIC |
| 28 | 1 | 25865 | Reducing connection | TRTXS8/20-12 |
| 29 | 1 | 56045 | Hose | 5/8" x 1450 L/L JIC |
| 30 | 1 | 25828 | Connection | R6XS 20 JIC |
| 31 | 2 | 26785 | Elbow connection | C40XS18/20 - 1 |
| 32 | 1 | 62956 | Hose | 3/8" x 550 90/L JIC |
| 33 | 1 | 62866 | Hose, JIC | 1/2" x 850 L/L JIC |
| 34 | 1 | 26787 | Elbow connection | C40XS14/16 - 3/8 |

# ODIN

An Oshkosh Corportation Company

Intern ref.: 6301710

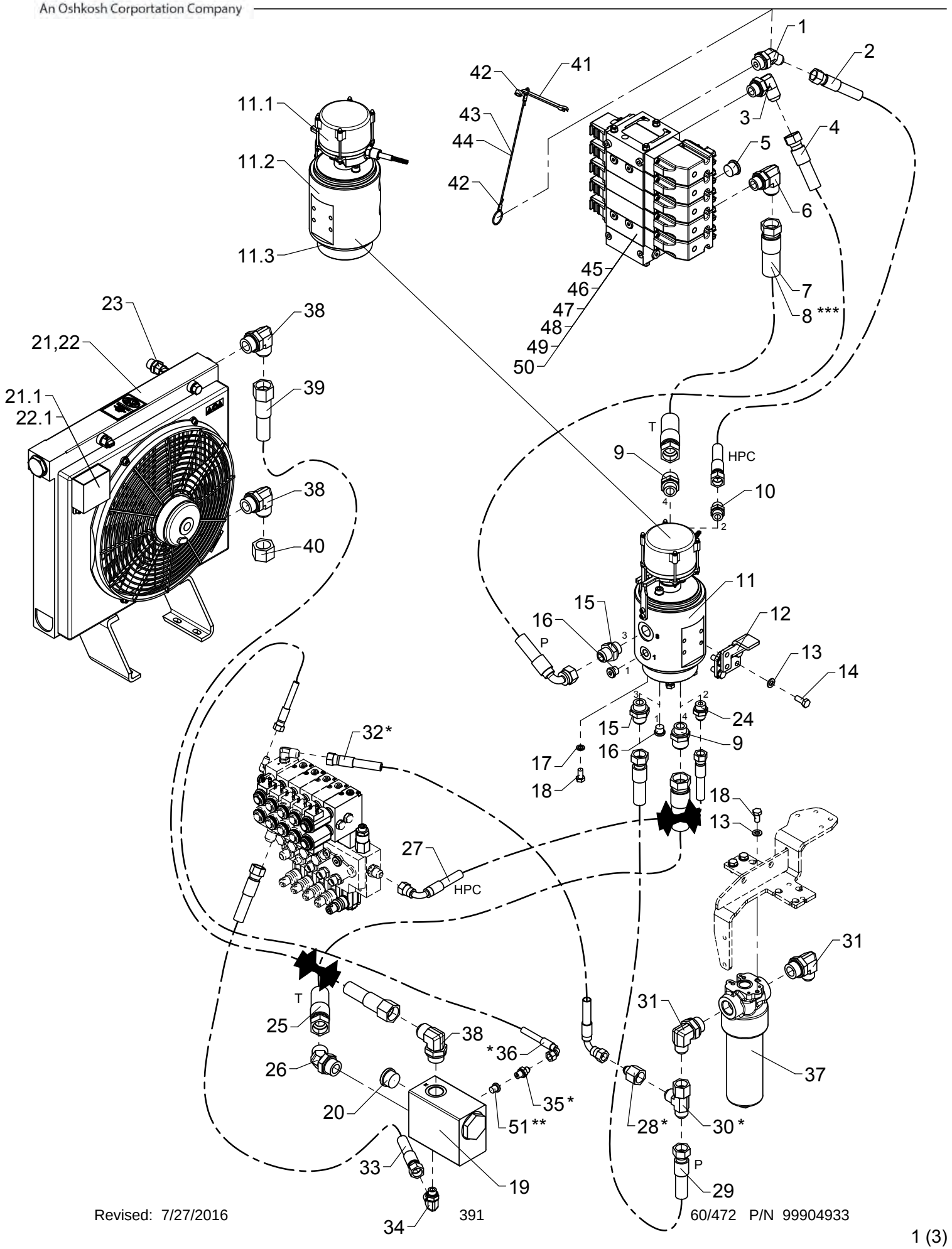

# Hydraulic system, pump and return hoses, 1 circuit + fixed pump

As from / To loader no.: 96 02 08 / 96 03 82
Created: 02.06.2008
Modified: 14.04.2015

| Item no. | Qty. | Part no. | Description | Remarks |
|---|---|---|---|---|
| 35 | 1 | 25829 | Straight connection | F40XS8 - 1/4 |
| 36 | 1 | 62901 | Hose | 1/4" x 900 90/L JIC |
| 37 | 1 | 49401 | High pressure filter | |
| 38 | 3 | 26267 | Elbow connection | C40XS25 - 1 |
| 39 | 1 | 56262 | Hose | 3/4" x 2000 L/L JIC |
| 40 | 1 | 25848 | Screw cap JIC | FNTXS 25 JIC |
| 41 | 2 | 42953 | Adjustable spanner | |
| 42 | 4 | 62161 | Wire lock | |
| 43 | 1 | 62160 | Wire rope, nylon | 450 mm |
| 44 | 1 | 62160 | Wire rope, nylon | 600 mm |
| 45 | 1 | 55602 | Control valve | 4 sekt. F |
| 46 | 1 | 55604 | Control valve | 5 sekt. Winch / F |
| 47 | 1 | 55606 | Control valve | 5 sekt. 1 EXV |
| 48 | 1 | 55608 | Control valve | 6 sekt. Winch+1 EXV |
| 49 | 1 | 55610 | Control valve | 6 sekt. FJ / F |
| 50 | 1 | 55612 | Control valve | 7 sekt. FJ/Wi/F |
| 51 | 1 | 25197 | Plug | VS-R-1/4 WD |

* Stabilizer operation by RC  ** Manual stabilizer operation  *** Winch

# 6020

Intern ref.: 6308100_2

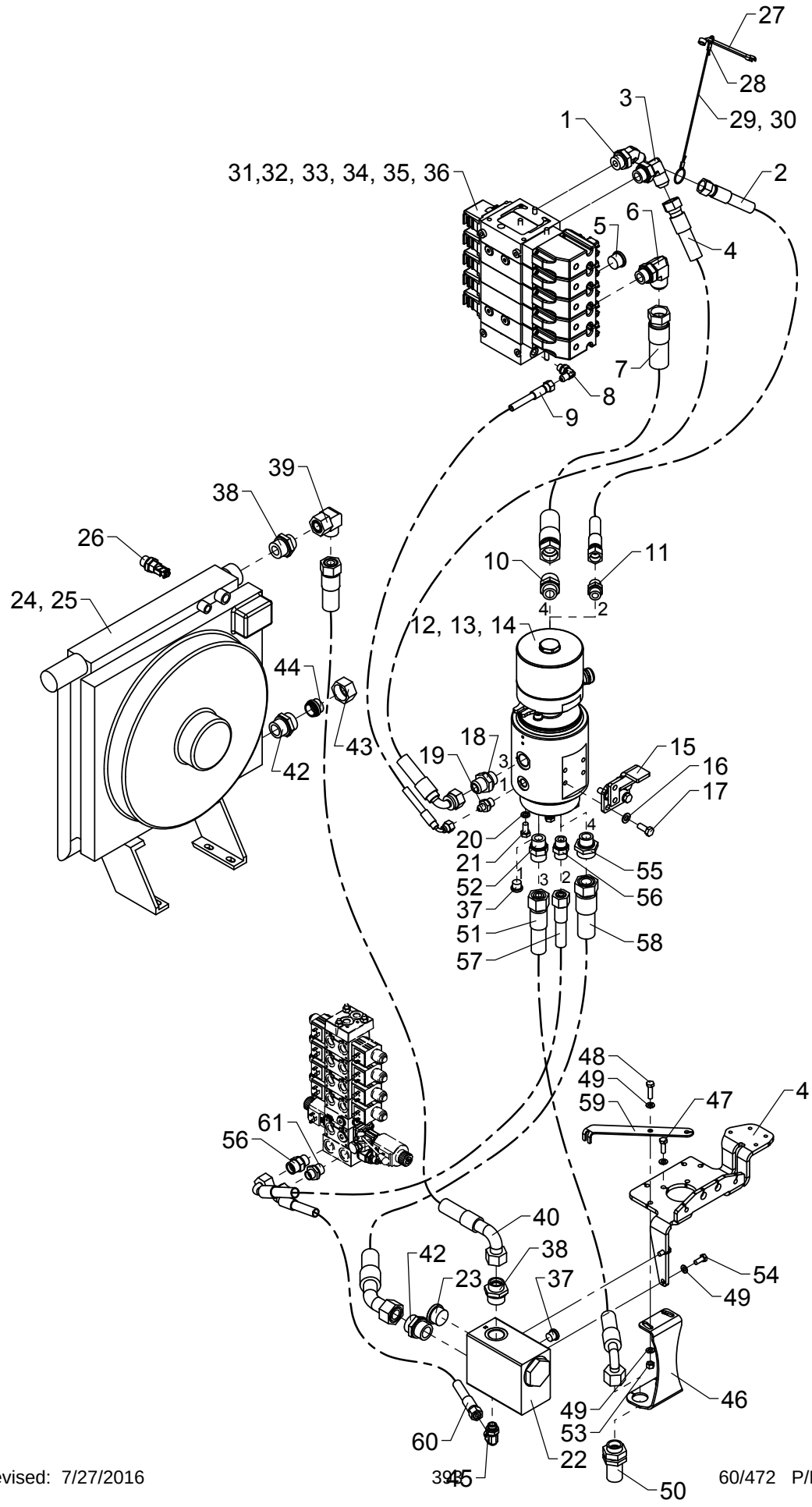

# Hydraulic system, pump and return hoses, 1 circuit + fixed pump

As from / To loader no.: 96 03 83
Created: 14.04.2015
Modified:

| Item no. | Qty. | Part no. | Description | Remarks |
|---|---|---|---|---|
| 1 | 1 | 26291 | Elbow connection 45° | V40XS14-16 - 3/4 |
| 2 | 1 | 62922 | Hose JIC | 1/2" x 1400 L/L JIC |
| 3 | 1 | 26693 | Elbow connection | C40XS18/20 - 3/4 |
| 4 | 1 | 56080 | Hose | 5/8" x 1400 90/L JIC |
| 5 | 1 | 26355 | Plug | VS-R-3/4 WD |
| 6 | 1 | 25840 | Elbow connection | C40XS25 - 3/4 |
| 7 | 1 | 56048 | Hose | 1" x 900 L/L JIC |
| 8 | 1 | 25858 | Elbow connection | C40XS8 - 1/4 |
| 9 | 1 | 62934 | Hose | 1/4" x 1330 90/L JIC |
| 10 | 1 | 25836 | Straight connection | F40XS25 - 3/4 |
| 11 | 1 | 25833 | Straight connection | F40XS14/16 - 1/2 |
| 12 | 1 | 49621 | Swivel coupling | |
| 13 | 1 | 49623 | Hydr. part, swivel coupling | |
| 14 | 1 | 49624 | Electr. part, swivel coupling | |
| 15 | 1 | 6301329 | Carrier fitting | |
| 16 | 4 | 31177 | Washer | 10 mm |
| 17 | 4 | 30155 | Set screw | M10 x 25 |
| 18 | 1 | 25834 | Straight connection | F40XS18/20 - 3/4 |
| 19 | 1 | 25830 | Straight connection | F40XS8 - 3/8 |
| 20 | 4 | 30933 | Nordlock washer | 10 mm |
| 21 | 4 | 31517 | Set screw, stainless | M10 x 20 |
| 22 | 1 | 59056 | Cooler valve | |
| 23 | 1 | 26321 | Plug | VS-R 1" WD |
| 24 | 1 | 50274 | Oil Cooler, 24V | |
| 25 | 1 | 50275 | Oil Cooler, 12V | |
| 26 | 1 | 50290 | Temperature sensor, oil cooler | |
| 27 | 2 | 42953 | Adjustable spanner | |
| 28 | 4 | 62161 | Wire lock | |
| 29 | 1 | 62160 | Wire rope, nylon | 450 mm |
| 30 | 1 | 62160 | Wire rope, nylon | 600 mm |
| 31 | 1 | 55601 | Control valve | 4 sekt. V |
| 32 | 1 | 55603 | Control valve | 5 sekt. Winch / V |
| 33 | 1 | 55605 | Control valve | 5 sekt. 1 EXV |
| 34 | 1 | 55607 | Control valve | 6 sekt. Winch+1 EXV |
| 35 | 1 | 55609 | Control valve | 6 sekt. FJ / V |
| 36 | 1 | 55611 | Control valve | 7 sekt. FJ/Wi/V |
| 37 | 2 | 25277 | Plug | VS-R-3/8 WD |
| 38 | 2 | 26122 | Connection | P-GEV 22 LR 1-WD |
| 39 | 1 | 25209 | Elbow connection | EWSD 22 L |

# 6020

Intern ref.: 6308100_2

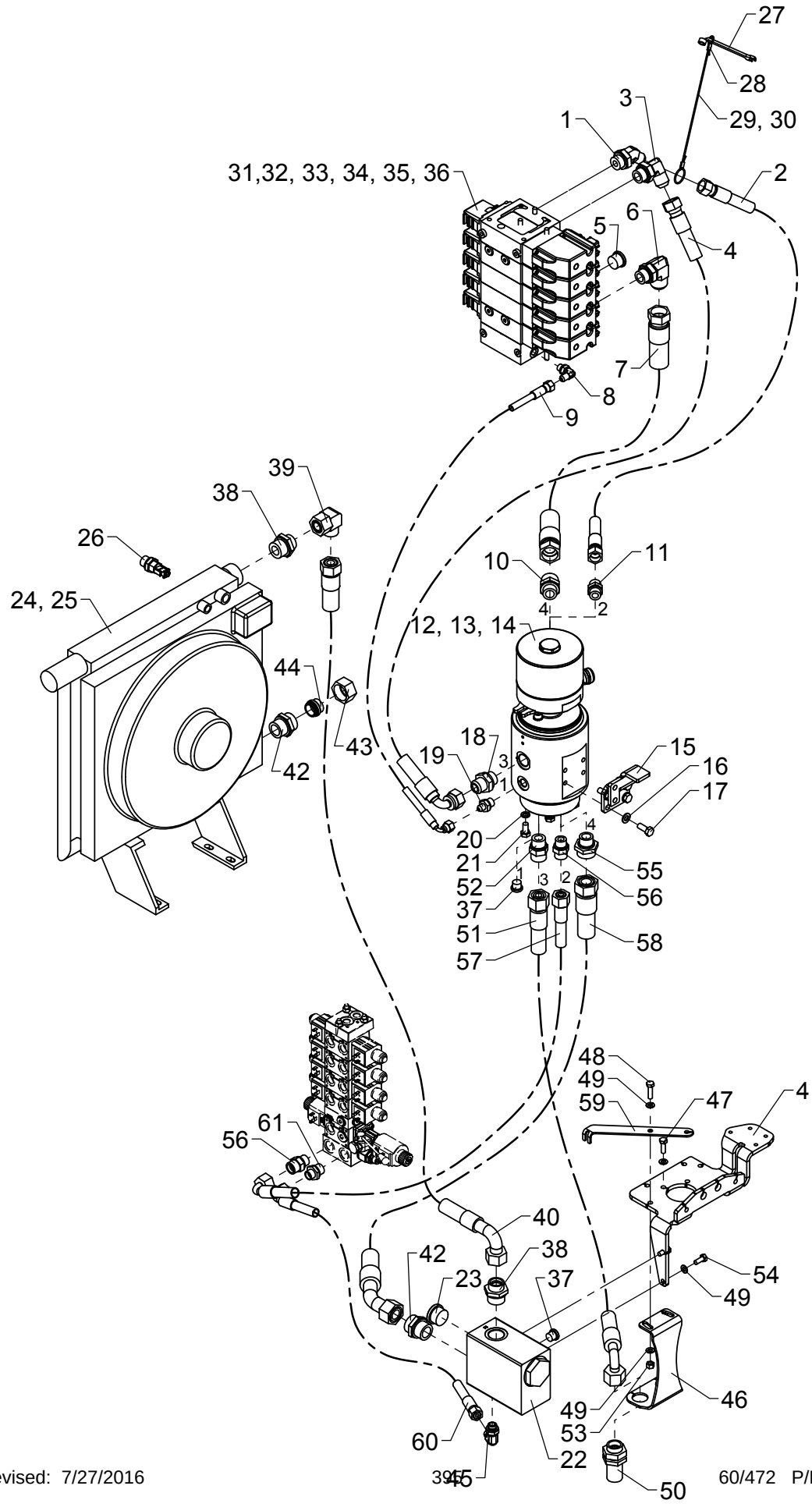

# Hydraulic system, pump and return hoses, 1 circuit + fixed pump

As from / To loader no.: 96 03 83
Created: 14.04.2015
Modified:

| Item no. | Qty. | Part no. | Description | Remarks |
|---|---|---|---|---|
| 40 | 1 | 56502 | Hose | Til køler |
| 41 | 1 | 6301391 | Bracket for high-pressure filter | |
| 42 | 2 | 26163 | Connection | P-GEV 28 LR-WD |
| 43 | 1 | 26108 | Coupling nut | M 28 L |
| 44 | 1 | 26347 | Blanking plug | VSD 28 L |
| 45 | 1 | 26897 | Elbow connection | 12 mm - 3/8" |
| 46 | 1 | 6301395 | Bracket | |
| 47 | 1 | 30134 | Set screw, stainless | M8 x 25 |
| 48 | 1 | 30135 | Set screw, stainless | M8 x 30 |
| 49 | 6 | 31147 | Face washer, 8 mm | |
| 50 | 1 | 26369 | Bulkhead connection | GSS 20 S |
| 51 | 1 | 62624 | Hose | 5/8 x 1000mm L/90 |
| 52 | 1 | 26197 | Connection | P-GEV 20 SR-WD |
| 53 | 2 | 30886 | Lock nut, stainless | M8 |
| 54 | 2 | 30132 | Set screw, stainless | |
| 55 | 1 | 26845 | Connection | GES 28 LR 3/4-WD |
| 56 | 2 | 26334 | Connection | P-GEV 16 SR-WD |
| 57 | 1 | 56385 | Hose | |
| 58 | 1 | 56979 | Hose | 1"x1500 L/45° |
| 59 | 1 | 6301396 | Reinforcement plate for RCL | |
| 60 | 1 | 0017870 | Hose | 3/8" x 450 V/O |
| 61 | 1 | 25108 | Connection | GES 12 LR 1/2-WD |

# ODIN

An Oshkosh Corportation Company

Intern ref.: 6300920

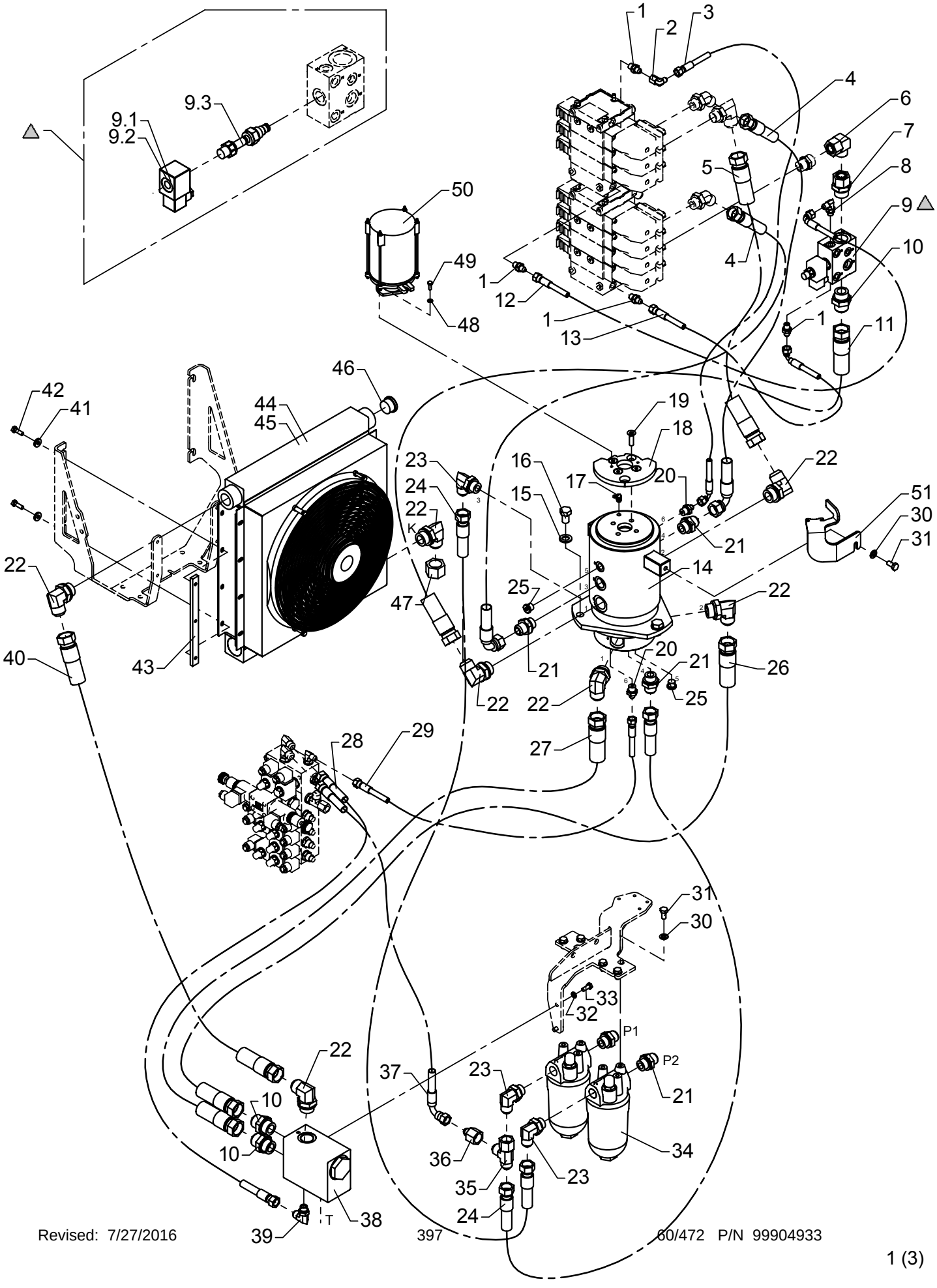

# Hydraulic system, pump and return hoses, 2 circuits + fixed pump

As from / To loader no.: 96 00 00 / 96 00 49
Created: 03.10.2003
Modified: 17.06.2005

| Item no. | Qty. | Part no. | Description | Remarks |
|---|---|---|---|---|
| 1 | 4 | 25829 | Straight connection | F40XS 8-1/4 JIC |
| 2 | 1 | 25826 | Elbow connection | C6XS 8 JIC |
| 3 | 1 | 62934 | Hose | 1/4" x 1330 mm V/O JIC |
| 4 | 2 | 62977 | Hose | 5/8" x 1100 mm V/O JIC |
| 5 | 1 | 56046 | Hose | 1" x 1000 mm O/O JIC |
| 6 | 1 | 25209 | Elbow connection | EWSD 22 L |
| 7 | 1 | 26391 | Straight connection | EGESD 22 LR 1-WD |
| 8 | 1 | 25858 | Elbow connection | C40XS 12-3/8 JIC |
| 9 | 1 | 59061 | Dump valve | |
| | | 61777 | Solenoid | 12V |
| | | 61778 | Solenoid | 26V |
| | | 59642 | Magnet coil | |
| 10 | 3 | 25863 | Straight connection | F40XS 25-1 JIC |
| 11 | 1 | 56048 | Hose | 1" x 900 mm O/O JIC |
| 12 | 1 | 62887 | Hose | 1/4" x 550 mm V/O JIC |
| 13 | 1 | 62974 | Hose | 1/4" x 350 mm V/O JIC |
| 14 | 1 | 58727 | Swivel coupling, hydraulic | |
| 15 | 3 | 31135 | Washer | 16 mm |
| 16 | 3 | 30266 | Set screw | M16 x 25 |
| 17 | 1 | 31322 | Lubricator | 1/8 RG - 90 |
| 18 | 1 | 6301196 | Cam disc, 2-stage LMB | |
| 19 | 4 | 30955 | Countersunk screw | MK10 x 35 |
| 20 | 2 | 25830 | Straight connection | F40XS8 - 3/8 JIC |
| 21 | 5 | 25834 | Straight connection | F40XS 18/20-3/4 JIC |
| 22 | 7 | 26267 | Elbow connection | C40XS 25-1 JIC |
| 23 | 3 | 26693 | Elbow connection | C40XS 18/20-3/4 JIC |
| 24 | 2 | 56045 | Hose | 5/8" x 1450 mm O/O JIC |
| 25 | 2 | 25277 | Plug | VS-R-3/8 WD |
| 26 | 1 | 56050 | Hose | 1" x 1300 mm O/O JIC |
| 27 | 1 | 56049 | Hose | 1" x 1050 mm O/O JIC |
| 28 | 1 | 62884 | Hose | 3/8" x 500 mm O/O JIC |
| 29 | 1 | 56130 | Hose | 1/4" x 1150 mm O/O JIC |
| 30 | 7 | 31177 | Washer | 10 mm |
| 31 | 7 | 30154 | Set screw | M10 x 20 |
| 32 | 2 | 31155 | Spring washer | 8 mm |
| 33 | 2 | 30132 | Set screw, stainless | M8 x 20 |
| 34 | 2 | 60201 | High pressure filter | |
| 35 | 1 | 25828 | Connection | R6XS 20 JIC |
| 36 | 1 | 25865 | Reducing connection | TRTXS 8/20-12 JIC |
| 37 | 1 | 56091 | Hose | 3/8" x 350 mm V/O JIC |

# ODIN

An Oshkosh Corportation Company

Intern ref.: 6300920

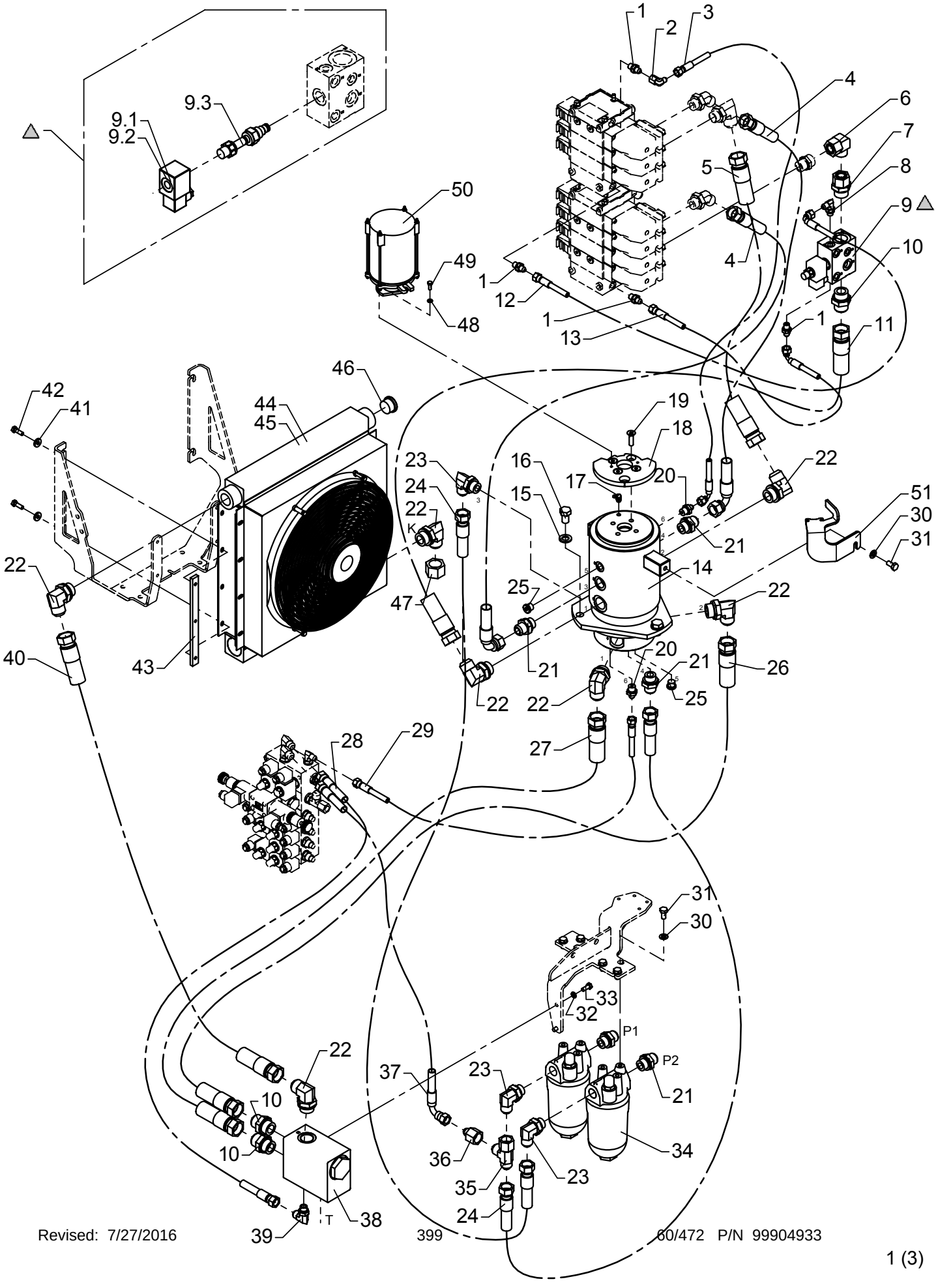

# Hydraulic system, pump and return hoses, 2 circuits + fixed pump

As from / To loader no.: 96 00 00 / 96 00 49
Created: 03.10.2003
Modified: 17.06.2005

| Item no. | Qty. | Part no. | Description | Remarks |
|---|---|---|---|---|
| 38 | 1 | 59056 | Cooler valve | |
| 39 | 1 | 25838 | Elbow connection | C40XS 12-3/8 JIC |
| 40 | 1 | 56047 | Hose | 3/4" x 1400 mm O/O JIC |
| 41 | 4 | 31755 | Washer | 8 mm |
| 42 | 4 | 30134 | Set screw, stainless | M8 x 25 |
| 43 | 2 | 6381974 | Threaded disc | |
| 44 | 1 | 59310 | Oil cooler 24 V | |
| 45 | 1 | 59312 | Oil cooler 12 V | |
| 46 | 1 | 26321 | Plug | VS-R 1" WD |
| 47 | 1 | 25848 | Screw cap JIC | FNTXS 25 JIC |
| 48 | 2 | 31154 | Spring washer, stainless | 6 mm |
| 49 | 2 | 30112 | Set screw, stainless | M6 x 16 |
| 50 | 1 | 28549 | Swivel coupling, electric | |
| 51 | 1 | 6301197 | Carrier | |

# ODIN

An Oshkosh Corportation Company

Intern ref.: 6300920

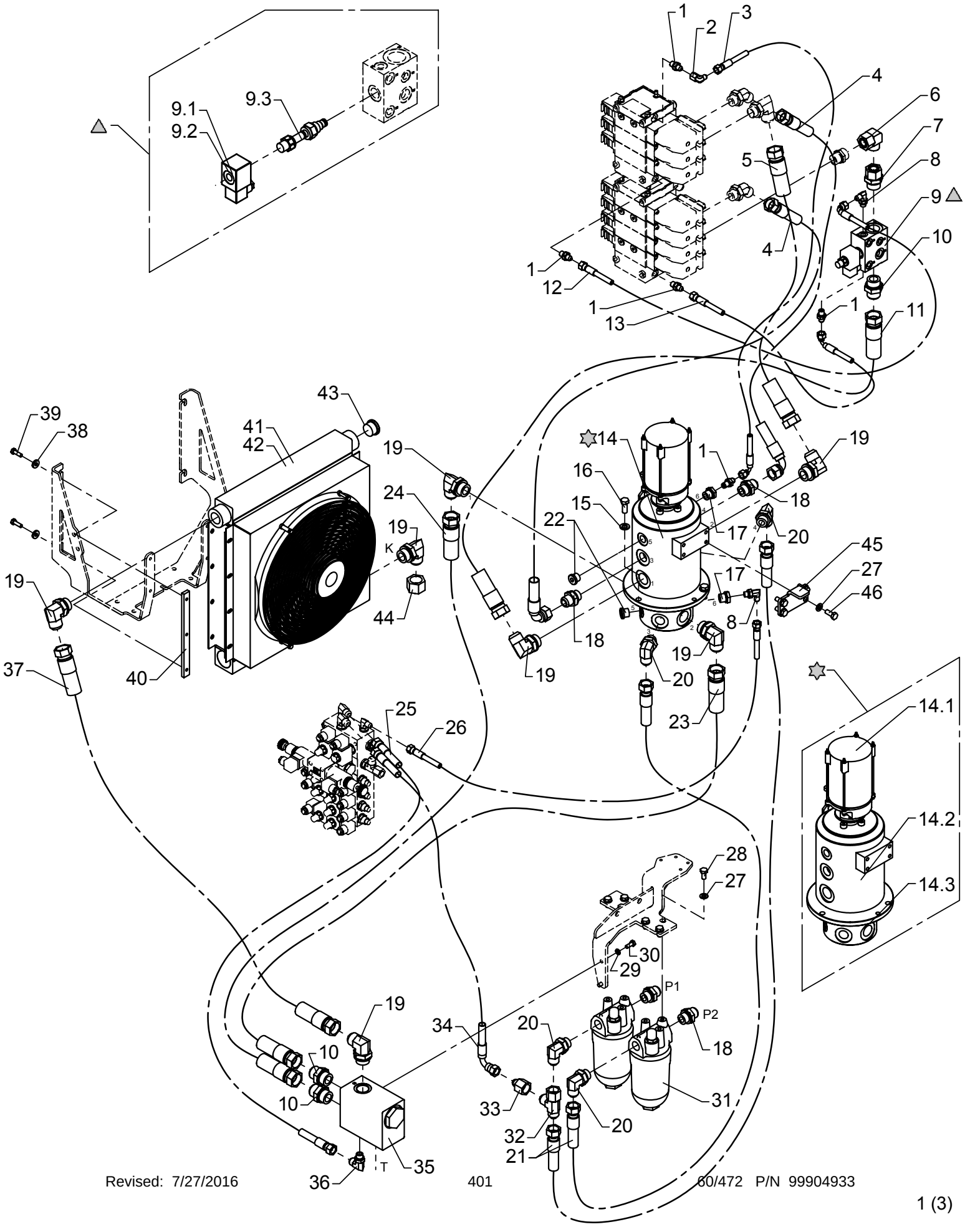

# Hydraulic system, pump and return hoses, 2 circuits + fixed pump

As from / To loader no.: 96 00 50 / 96 00 53
Created: 17.06.2005
Modified: 05.10.2005

| Item no. | Qty. | Part no. | Description | Remarks |
|---|---|---|---|---|
| 1 | 5 | 25829 | Straight connection | F40XS 8-1/4 JIC |
| 2 | 1 | 25826 | Elbow connection | C6XS 8 JIC |
| 3 | 1 | 62934 | Hose | 1/4" x 1330 mm V/O JIC |
| 4 | 2 | 62977 | Hose | 5/8" x 1100 mm V/O JIC |
| 5 | 1 | 56046 | Hose | 1" x 1000 mm O/O JIC |
| 6 | 1 | 25209 | Elbow connection | EWSD 22 L |
| 7 | 1 | 26391 | Straight connection | EGESD 22 LR 1-WD |
| 8 | 2 | 25858 | Elbow connection | C40XS 12-3/8 JIC |
| 9 | 1 | 59061 | Dump valve | |
| | | 61777 | Solenoid | 12V |
| | | 61778 | Solenoid | 26V |
| | | 59642 | Magnet coil | |
| 10 | 3 | 25863 | Straight connection | F40XS 25-1 JIC |
| 11 | 1 | 56048 | Hose | 1" x 900 mm O/O JIC |
| 12 | 1 | 62887 | Hose | 1/4" x 550 mm V/O JIC |
| 13 | 1 | 62974 | Hose | 1/4" x 350 mm V/O JIC |
| 14 | 1 | 49105 | Swivel coupling | |
| | | 28549 | Swivel coupling, electric | |
| | | 49106 | Swivel coupling | |
| | | 49115 | Seal kit | |
| 15 | 3 | 31131 | Washer | 12 mm |
| 16 | 3 | 30177 | Set screw | M12 x 30 |
| 17 | 2 | 25180 | Connection | RED-R 1/2-WD/R 1/4 |
| 18 | 4 | 25834 | Straight connection | F40XS 18/20-3/4 JIC |
| 19 | 7 | 26267 | Elbow connection | C40XS 25-1 JIC |
| 20 | 4 | 26693 | Elbow connection | C40XS 18/20-3/4 JIC |
| 21 | 2 | 56045 | Hose | 5/8" x 1450 mm O/O JIC |
| 22 | 2 | 25103 | Plug | VS-R-1/2 WD |
| 23 | 1 | 56050 | Hose | 1" x 1300 mm O/O JIC |
| 24 | 1 | 56049 | Hose | 1" x 1050 mm O/O JIC |
| 25 | 1 | 62884 | Hose | 3/8" x 500 mm O/O JIC |
| 26 | 1 | 56130 | Hose | 1/4" x 1150 mm O/O JIC |
| 27 | 10 | 31177 | Washer | 10 mm |
| 28 | 6 | 30154 | Set screw | M10 x 20 |
| 29 | 2 | 31155 | Spring washer | 8 mm |
| 30 | 2 | 30132 | Set screw, stainless | M8 x 20 |
| 31 | 2 | 60201 | High pressure filter | |
| 32 | 1 | 25828 | Connection | R6XS 20 JIC |
| 33 | 1 | 25865 | Reducing connection | TRTXS 8/20-12 JIC |
| 34 | 1 | 56091 | Hose | 3/8" x 350 mm V/O JIC |

# ODIN

An Oshkosh Corportation Company

Intern ref.: 6300920

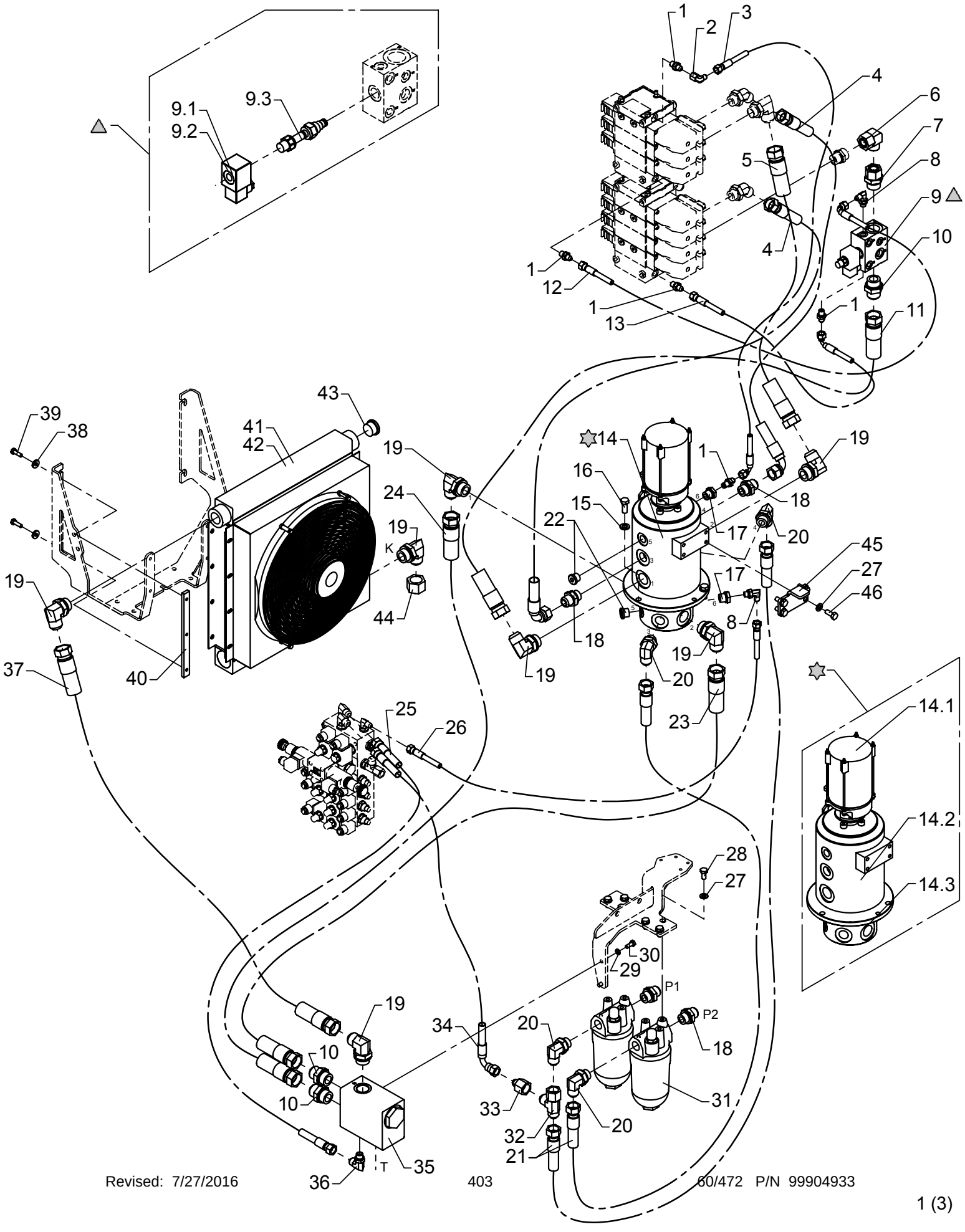

# Hydraulic system, pump and return hoses, 2 circuits + fixed pump

As from / To loader no.: 96 00 50 / 96 00 53
Created: 17.06.2005
Modified: 05.10.2005

| Item no. | Qty. | Part no. | Description | Remarks |
|---|---|---|---|---|
| 35 | 1 | 59056 | Cooler valve | |
| 36 | 1 | 25838 | Elbow connection | C40XS 12-3/8 JIC |
| 37 | 1 | 56047 | Hose | 3/4" x 1400 mm O/O JIC |
| 38 | 4 | 31755 | Washer | 8 mm |
| 39 | 4 | 30134 | Set screw, stainless | M8 x 25 |
| 40 | 2 | 6381974 | Threaded disc | |
| 41 | 1 | 59310 | Oil cooler 24 V | |
| 42 | 1 | 59312 | Oil cooler 12 V | |
| 43 | 1 | 26321 | Plug | VS-R 1" WD |
| 44 | 1 | 25848 | Screw cap JIC | FNTXS 25 JIC |
| 45 | 1 | 6302621 | Carrier fitting | |
| 46 | 4 | 30155 | Set screw | M10 x 25 |

# ODIN

Intern ref.: 6300920

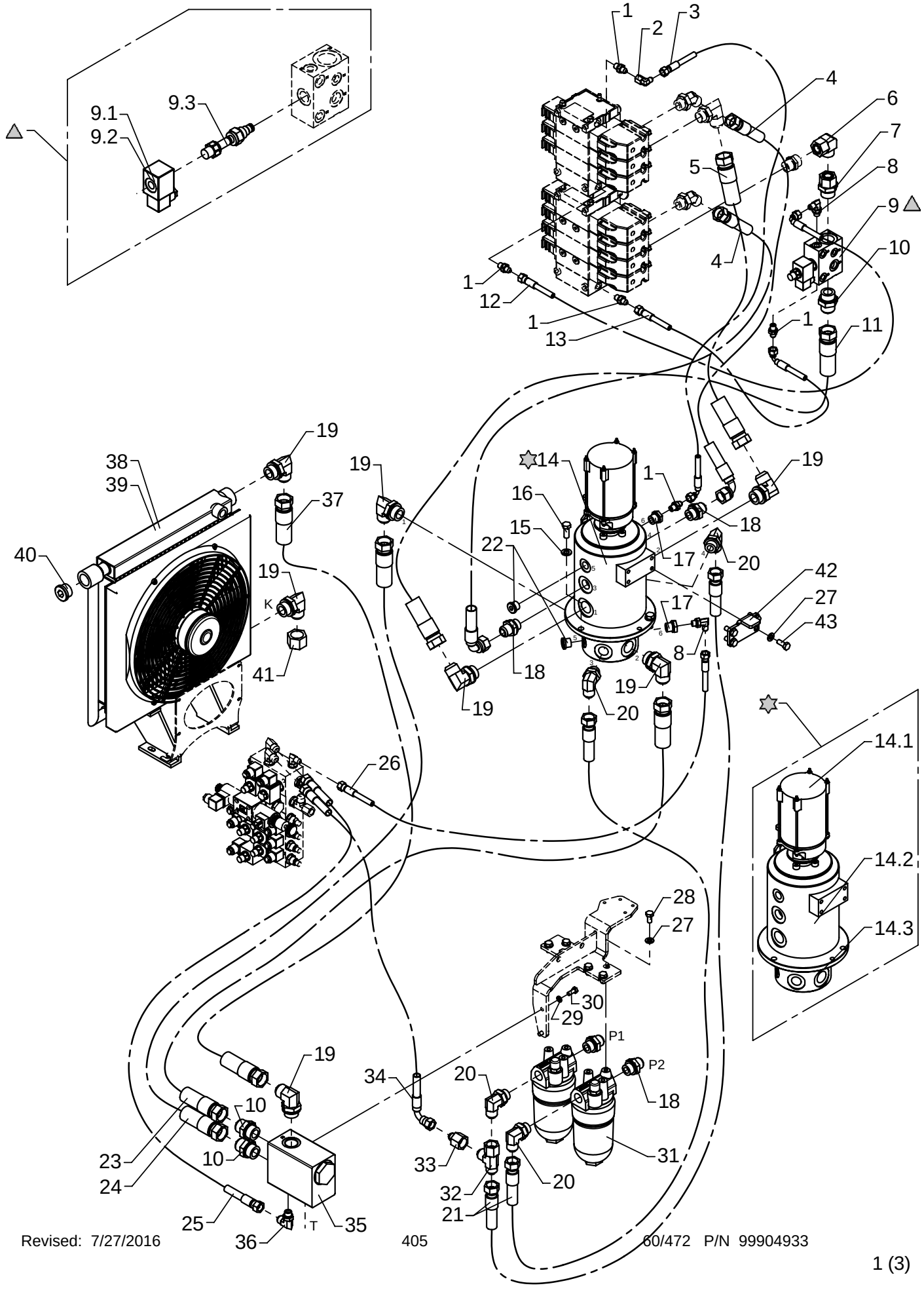

# Hydraulic system, pump and return hoses, 2 circuits + fixed pump

As from / To loader no.: 96 00 54 / 96 01 49
Created: 17.06.2005
Modified: 30.10.2006

| Item no. | Qty. | Part no. | Description | Remarks |
|---|---|---|---|---|
| 1 | 5 | 25829 | Straight connection | F40XS 8-1/4 JIC |
| 2 | 1 | 25826 | Elbow connection | C6XS 8 JIC |
| 3 | 1 | 62934 | Hose | 1/4" x 1330 mm V/O JIC |
| 4 | 2 | 62977 | Hose | 5/8" x 1100 mm V/O JIC |
| 5 | 1 | 56046 | Hose | 1" x 1000 mm O/O JIC |
| 6 | 1 | 25209 | Elbow connection | EWSD 22 L |
| 7 | 1 | 26391 | Straight connection | EGESD 22 LR 1-WD |
| 8 | 2 | 25858 | Elbow connection | C40XS 12-3/8 JIC |
| 9 | 1 | 59061 | Dump valve | |
| | | 61777 | Solenoid | 12V |
| | | 61778 | Solenoid | 26V |
| | | 59642 | Magnet coil | |
| 10 | 3 | 25863 | Straight connection | F40XS 25-1 JIC |
| 11 | 1 | 56048 | Hose | 1" x 900 mm O/O JIC |
| 12 | 1 | 62887 | Hose | 1/4" x 550 mm V/O JIC |
| 13 | 1 | 62974 | Hose | 1/4" x 350 mm V/O JIC |
| 14 | 1 | 49105 | Swivel coupling | |
| | | 28549 | Swivel coupling, electric | |
| | | 49106 | Swivel coupling | |
| | | 49115 | Seal kit | |
| 15 | 3 | 31131 | Washer | 12 mm |
| 16 | 3 | 30177 | Set screw | M12 x 30 |
| 17 | 2 | 25180 | Reducing connection | RED-R 1/2-WD/R 1/4 |
| 18 | 4 | 25834 | Straight connection | F40XS 18/20-3/4 JIC |
| 19 | 7 | 26267 | Elbow connection | C40XS 25-1 JIC |
| 20 | 4 | 26693 | Elbow connection | C40XS 18/20-3/4 JIC |
| 21 | 2 | 56045 | Hose | 5/8" x 1450 mm O/O JIC |
| 22 | 2 | 25103 | Plug | VS-R-1/2 WD |
| 23 | 1 | 56050 | Hose | 1" x 1300 mm O/O JIC |
| 24 | 1 | 56049 | Hose | 1" x 1050 mm O/O JIC |
| 25 | 1 | 62884 | Hose | 3/8" x 500 mm O/O JIC |
| 26 | 1 | 56130 | Hose | 1/4" x 1150 mm O/O JIC |
| 27 | 10 | 31177 | Washer | 10 mm |
| 28 | 6 | 30154 | Set screw | M10 x 20 |
| 29 | 2 | 31155 | Spring washer | 8 mm |
| 30 | 2 | 30132 | Set screw, stainless | M8 x 20 |
| 31 | 2 | 60201 | High pressure filter | |
| 32 | 1 | 25828 | Connection | R6XS 20 JIC |
| 33 | 1 | 25865 | Reducing connection | TRTXS 8/20-12 JIC |
| 34 | 1 | 56091 | Hose | 3/8" x 350 mm V/O JIC |

# ODIN

An Oshkosh Corportation Company

Intern ref.: 6300920

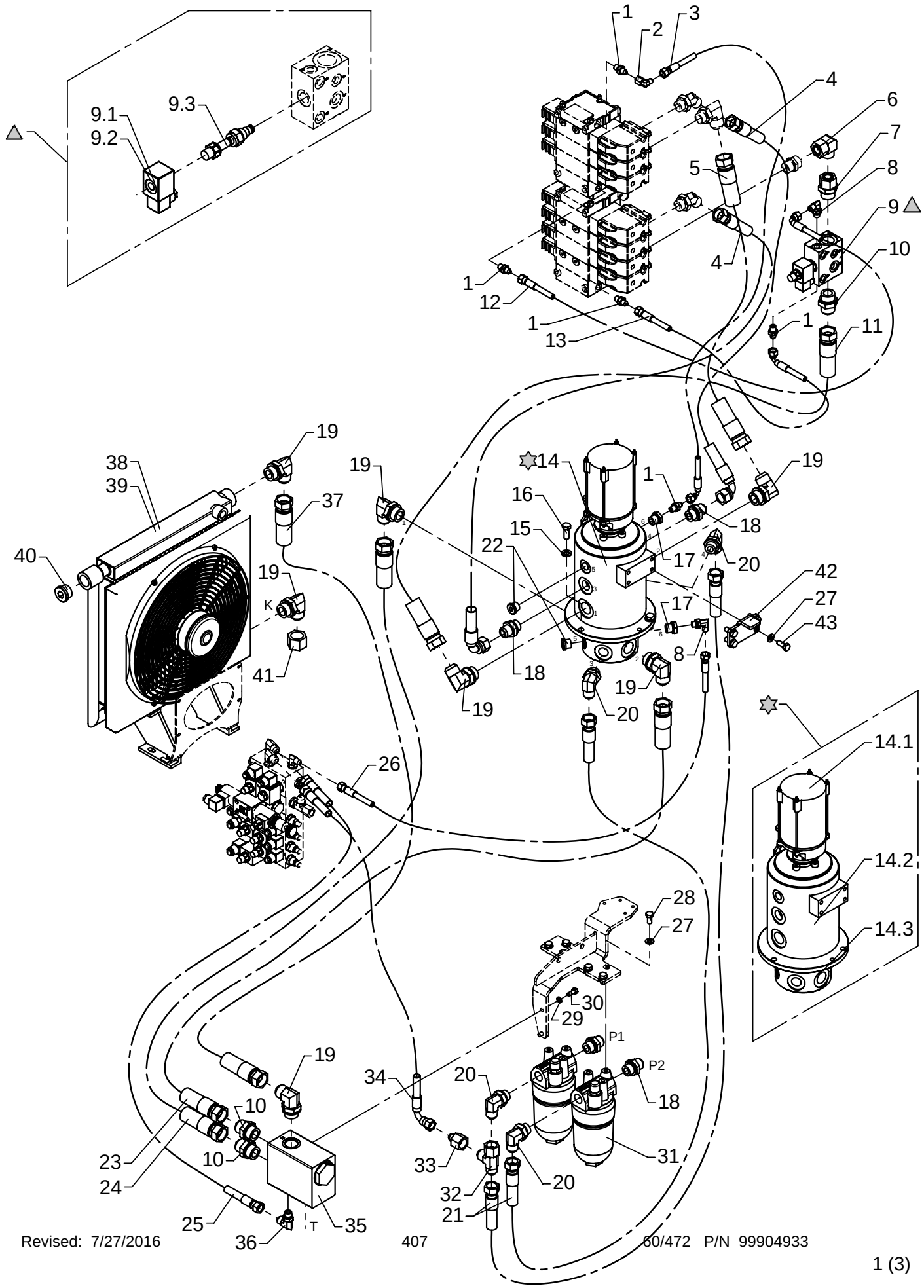

# Hydraulic system, pump and return hoses, 2 circuits + fixed pump

As from / To loader no.: 96 00 54 / 96 01 49
Created: 17.06.2005
Modified: 30.10.2006

| Item no. | Qty. | Part no. | Description | Remarks |
|---|---|---|---|---|
| 35 | 1 | 59056 | Cooler valve | |
| 36 | 1 | 25838 | Elbow connection | C40XS 12-3/8 JIC |
| 37 | 1 | 56262 | Hose | 3/4" x 2000 mm O/O JIC |
| 38 | 1 | 59310 | Oil cooler 24 V | |
| 39 | 1 | 59312 | Oil cooler 12 V | |
| 40 | 1 | 26321 | Plug | VS-R 1" WD |
| 41 | 1 | 25848 | Screw cap JIC | FNTXS 25 JIC |
| 42 | 1 | 6302621 | Carrier fitting | |
| 43 | 4 | 30155 | Set screw | M10 x 25 |

# ODIN

An Oshkosh Corportation Company

Intern ref.: 6300920

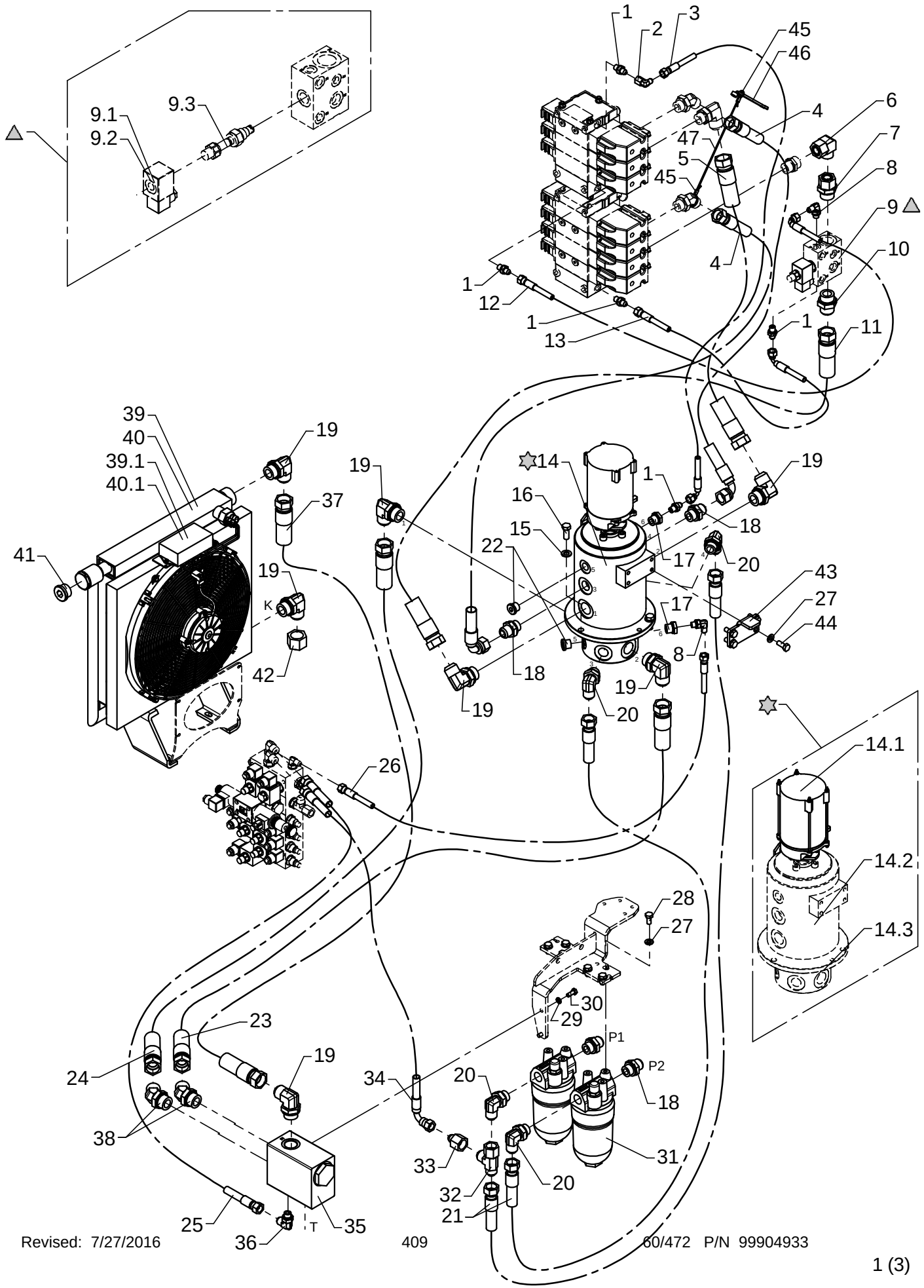

# Hydraulic system, pump and return hoses, 2 circuits + fixed pump

As from / To loader no.: 96 01 50 / 96 02 69
Created: 30.10.2006
Modified: 23.05.2011

| Item no. | Qty. | Part no. | Description | Remarks |
|---|---|---|---|---|
| 1 | 5 | 25829 | Straight connection | F40XS8 - 1/4 |
| 2 | 1 | 25826 | Elbow connection | C6XS 8 JIC |
| 3 | 1 | 62934 | Hose | 1/4" x 1330 mm V/O JIC |
| 4 | 2 | 62977 | Hose | 5/8" x 1100 mm V/O JIC |
| 5 | 1 | 56046 | Hose | 1" x 1000 mm O/O JIC |
| 6 | 1 | 25209 | Elbow connection | EWSD 22 L |
| 7 | 1 | 26391 | Straight connection | EGESD 22 LR 1-WD |
| 8 | 2 | 25858 | Elbow connection | C40XS8 - 1/4 |
| 9 | 1 | 59061 | Dump valve | |
| | | 61777 | Solenoid | 12V |
| | | 61778 | Solenoid | 26V |
| | | 59642 | Magnet coil | |
| 10 | 1 | 25863 | Straight connection | F40XS25 - 1 |
| 11 | 1 | 56048 | Hose | 1" x 900 mm O/O JIC |
| 12 | 1 | 62887 | Hose | 1/4" x 550 mm V/O JIC |
| 13 | 1 | 62974 | Hose | 1/4" x 350 mm V/O JIC |
| 14 | 1 | 49105 | Swivel coupling | |
| | | 28549 | Swivel coupling, electric | |
| | | 49106 | Swivel coupling | |
| | | 49115 | Seal kit | |
| 15 | 3 | 31131 | Washer | 12 mm |
| 16 | 3 | 30177 | Set screw | M12 x 30 |
| 17 | 2 | 25180 | Reducing connection | RED-R 1/2-WD/R 1/4 |
| 18 | 4 | 25834 | Straight connection | F40XS18/20 - 3/4 |
| 19 | 7 | 26267 | Elbow connection | C40XS25 - 1 |
| 20 | 4 | 26693 | Elbow connection | C40XS18/20 - 3/4 |
| 21 | 2 | 56045 | Hose | 5/8" x 1450 mm O/O JIC |
| 22 | 2 | 25103 | Plug | VS-R-1/2 WD |
| 23 | 1 | 56050 | Hose | 1" x 1300 mm O/O JIC |
| 24 | 1 | 56049 | Hose | 1" x 1050 mm O/O JIC |
| 25 | 1 | 62884 | Hose | 3/8" x 500 mm O/O JIC |
| 26 | 1 | 56130 | Hose | 1/4" x 1150 mm O/O JIC |
| 27 | 10 | 31177 | Washer | 10 mm |
| 28 | 6 | 30154 | Set screw | M10 x 20 |
| 29 | 2 | 31155 | Spring washer | 8 mm |
| 30 | 2 | 30132 | Set screw, stainless | |
| 31 | 2 | 60201 | High pressure filter | |
| 32 | 1 | 25828 | Connection | R6XS 20 JIC |
| 33 | 1 | 25865 | Reducing connection | TRTXS8/20-12 |
| 34 | 1 | 56091 | Hose | 3/8" x 350 mm V/O JIC |

# ODIN

An Oshkosh Corportation Company

Intern ref.: 6300920

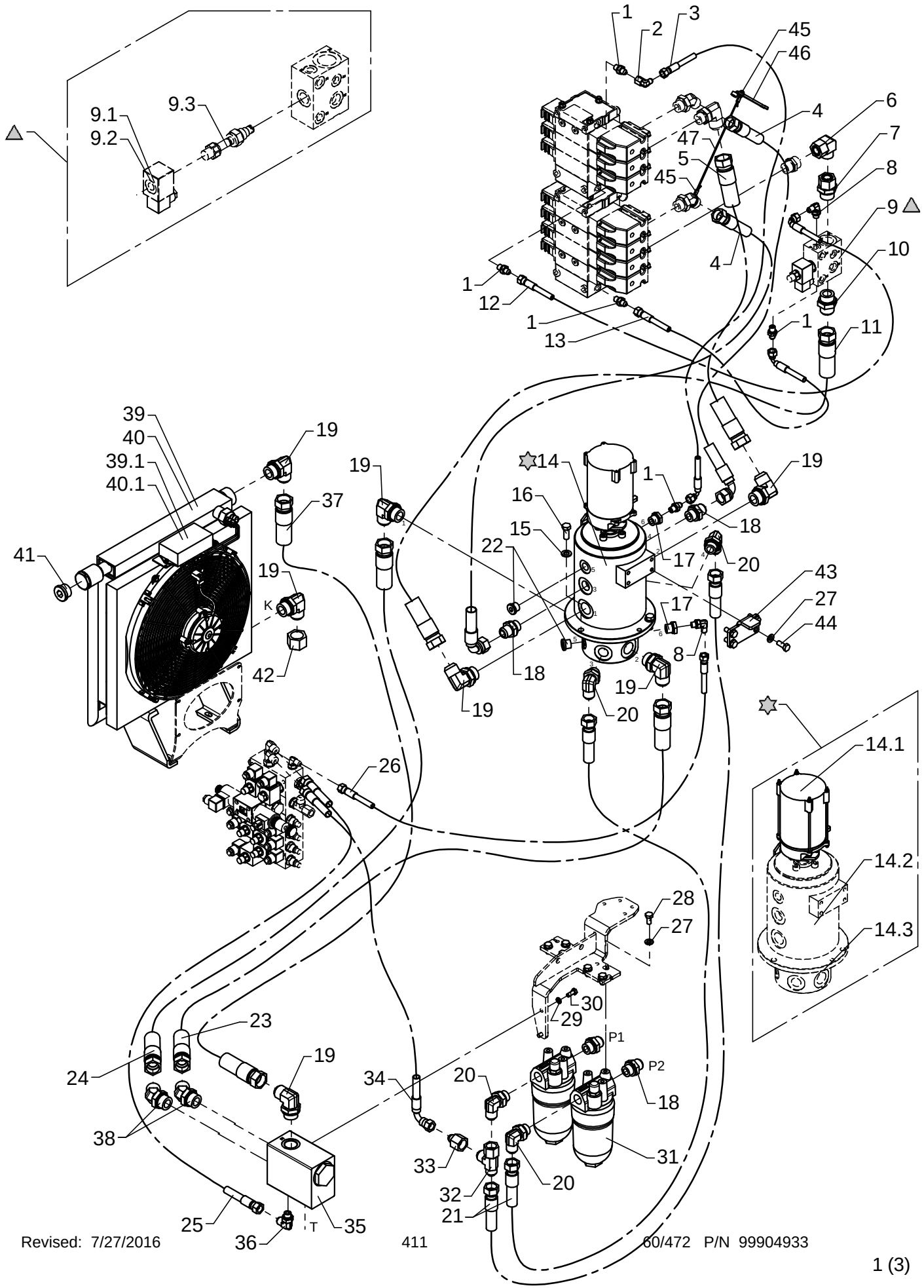

# Hydraulic system, pump and return hoses, 2 circuits + fixed pump

As from / To loader no.: 96 01 50 / 96 02 69
Created: 30.10.2006
Modified: 23.05.2011

| Item no. | Qty. | Part no. | Description | Remarks |
|---|---|---|---|---|
| 35 | 1 | 59056 | Cooler valve | |
| 36 | 1 | 25838 | Elbow connection | C40XS12 - 3/8 |
| 37 | 1 | 56262 | Hose | 3/4" x 2000 mm O/O JIC |
| 38 | 2 | 25734 | Elbow connection 45° | V40XS25 - 1 |
| 39 | 1 | 50282 | Oil cooler, 24 V + Smartdrive | |
| | | 50284 | Smartdrive kit for oil cooler | |
| 40 | 1 | 50283 | Oil cooler, 12 V + Smartdrive | |
| | | 50284 | Smartdrive kit for oil cooler | |
| 41 | 1 | 26321 | Plug | VS-R 1" WD |
| 42 | 1 | 25848 | Screw cap JIC | FNTXS 25 JIC |
| 43 | 1 | 6302621 | Carrier fitting | |
| 44 | 4 | 30155 | Set screw | M10 x 25 |
| 45 | 2 | 62161 | Wire lock | |
| 46 | 1 | 42953 | Adjustable spanner | |
| 47 | 1 | 62160 | Wire rope, nylon | 400 mm |

# ODIN

An Oshkosh Corportation Company

Intern ref.: 6301720

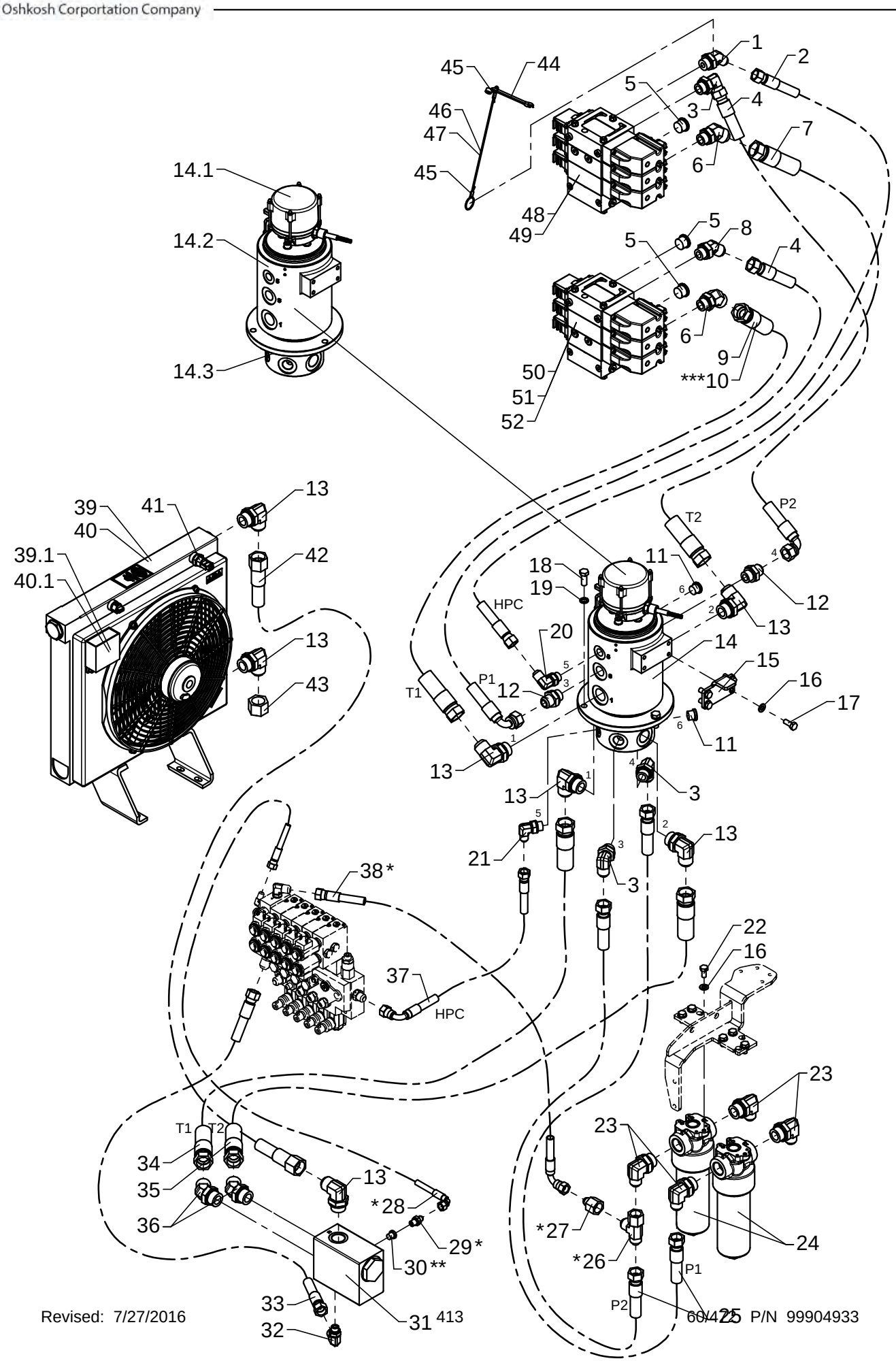

# Hydraulic system, pump and return hoses, 2 circuits + fixed pump

As from / To loader no.: 96 02 70
Created: 02.06.2008
Modified: 23.05.2011

* Stabilizer operation by RC ** Manual stabilizer operation ***Winch

| Item no. | Qty. | Part no. | Description | Remarks |
|---|---|---|---|---|
| 1 | 1 | 26291 | Elbow connection 45° | V40XS14-16 - 3 /4 |
| 2 | 1 | 62919 | Hose | 1/2" x 1550 L/L JIC |
| 3 | 3 | 26693 | Elbow connection | C40XS18/20 - 3/4 |
| 4 | 2 | 56080 | Hose | 5/8" x 1400 90/L JIC |
| 5 | 3 | 26355 | Plug | VS-R-3/4 WD |
| 6 | 2 | 25786 | Elbow connection 45° | V40XS25 - 3/4 |
| 7 | 1 | 56046 | Hose | 1" x 1050 L/L JIC |
| 8 | 1 | 26273 | Elbow connection 45° | V40XS18-20 - 3 /4 |
| 9 | 1 | 56048 | Hose | 1" x 900 L/L JIC |
| 10 | 1 | 56461 | Hose | 1" x 700 L/L JIC |
| 11 | 2 | 25103 | Plug | VS-R-1/2 WD |
| 12 | 2 | 25834 | Straight connection | F40XS18/20 - 3/4 |
| 13 | 7 | 26267 | Elbow connection | C40XS25 - 1 |
| 14 | 1 | 49217 | Swivel coupling | |
| | | 49237 | Electric part, swivel coupling | |
| | | 49106 | Hydraulic part,swivel coupling | |
| | | 49115 | Seal kit | |
| 15 | 1 | 6302621 | Carrier fitting | |
| 16 | 10 | 31177 | Washer | 10 mm |
| 17 | 4 | 30155 | Set screw | M10 x 25 |
| 18 | 3 | 30177 | Set screw | M12 x 30 |
| 19 | 3 | 30935 | Nordlock washer | 12 mm |
| 20 | 1 | 25839 | Elbow connection | C40XS14/16 - 1/2 |
| 21 | 1 | 25806 | Elbow connection | C40XS12 - 1/2 |
| 22 | 6 | 30154 | Set screw | M10 x 20 |
| 23 | 4 | 26785 | Elbow connection | C40XS18/20 - 1 |
| 24 | 2 | 49401 | High pressure filter | |
| 25 | 2 | 56045 | Hose | 5/8" x 1450 L/L JIC |
| 26 | 1 | 25828 | Connection | R6XS 20 JIC |
| 27 | 1 | 25865 | Reducing connection | TRTXS8/20-12 |
| 28 | 1 | 62901 | Hose | 1/4" x 900 90/L JIC |
| 29 | 1 | 25829 | Straight connection | F40XS8 - 1/4 |
| 30 | 1 | 25197 | Plug | VS-R-1/4 WD |
| 31 | 1 | 59056 | Cooler valve | |
| 32 | 1 | 26787 | Elbow connection | C40XS14/16 - 3/8 |
| 33 | 1 | 62866 | Hose, JIC | 1/2" x 850 L/L JIC |
| 34 | 1 | 56049 | Hose | 1" x 1050 L/L JIC |
| 35 | 1 | 56050 | Hose | 1" x 1300 L/L JIC |
| 36 | 2 | 25734 | Elbow connection 45° | V40XS25 - 1 |
| 37 | 1 | 56110 | Hose | 3/8" x 1130 90/L JIC |

# ODIN

Intern ref.: 6301720

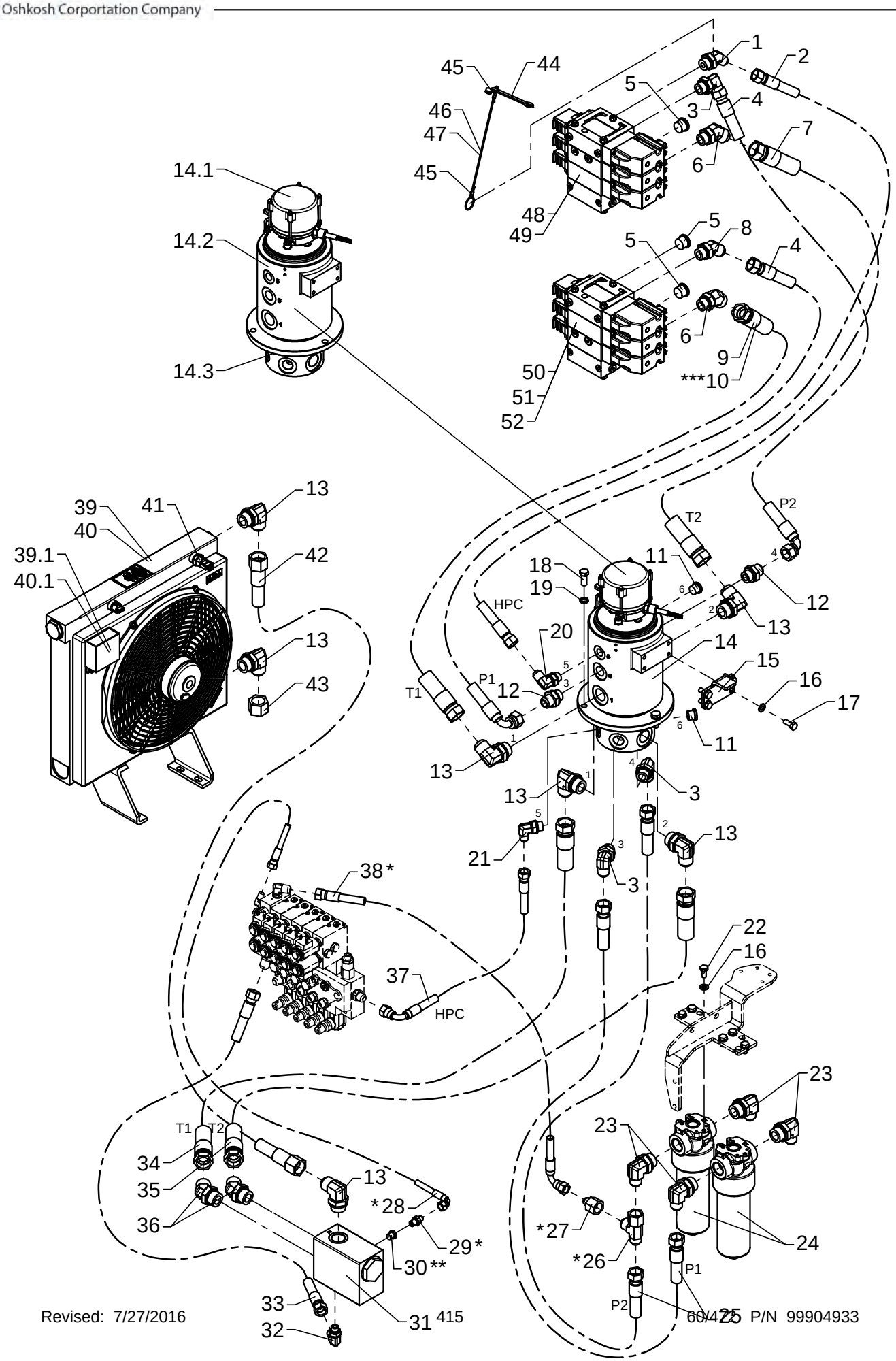

# Hydraulic system, pump and return hoses, 2 circuits + fixed pump

As from / To loader no.: 96 02 70
Created: 02.06.2008
Modified: 23.05.2011

| Item no. | Qty. | Part no. | Description | Remarks |
|---|---|---|---|---|
| 38 | 1 | 62956 | Hose | 3/8" x 550 90/L JIC |
| 39 | 1 | 50262 | Oil cooler, 24 V + Smartdrive | |
| | | 50292 | Electronic box, kit 12+24 V | |
| 40 | 1 | 50263 | Oil cooler, 12 V + Smartdrive | |
| | | 50292 | Electronic box, kit 12+24 V | |
| 41 | 1 | 50290 | Temperature sensor, oil cooler | |
| 42 | 1 | 56262 | Hose | 3/4" x 2000 L/L JIC |
| 43 | 1 | 25848 | Screw cap JIC | FNTXS 25 JIC |
| 44 | 2 | 42953 | Adjustable spanner | |
| 45 | 4 | 62161 | Wire lock | |
| 46 | 1 | 62160 | Wire rope, nylon | 450 mm |
| 47 | 1 | 62160 | Wire rope, nylon | 600 mm |
| 48 | 1 | 55614 | Control valve | 2 sekt. |
| 49 | 1 | 55616 | Control valve | 3 sekt. Winch |
| 50 | 1 | 55618 | Control valve | 2 sekt. |
| 51 | 1 | 55620 | Control valve | 3 sekt. 1 EXV |
| 52 | 1 | 55622 | Control valve | 4 sekt. 2 EXV/FJ |

* Stabilizer operation by RC  ** Manual stabilizer operation  ***Winch

# 6020

Intern ref.: 6308110

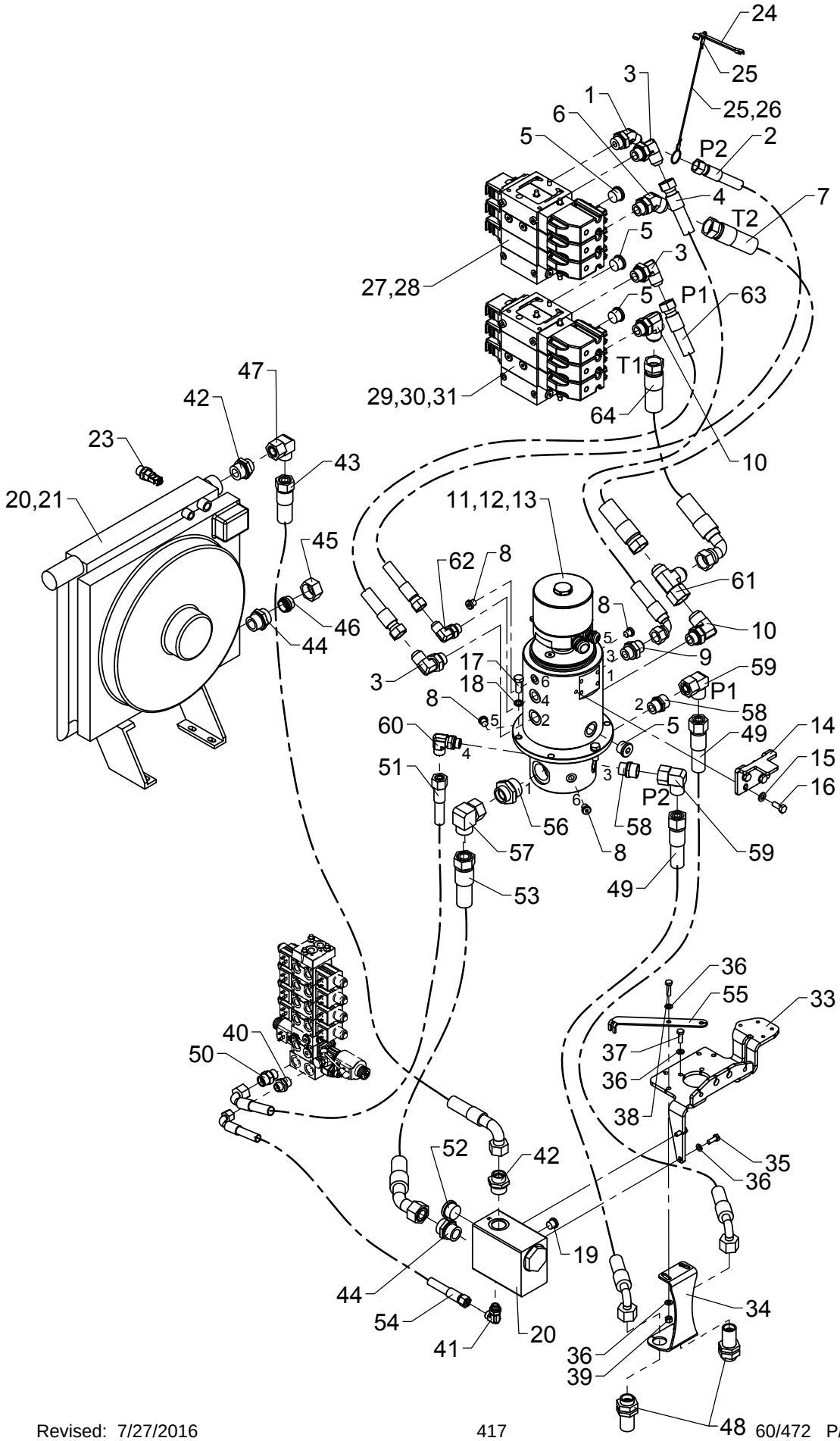

# Hydraulic system, pump and return hoses, 2 circuits + fixed pump

As from / To loader no.: 96 03 83
Created: 21.04.2015
Modified:

| Item no. | Qty. | Part no. | Description | Remarks |
|---|---|---|---|---|
| 1 | 1 | 26291 | Elbow connection 45° | V40XS14-16 - 3/4 |
| 2 | 1 | 62919 | Hose | 1/2" x 1550 L/L JIC |
| 3 | 3 | 26693 | Elbow connection | C40XS18/20 - 3/4 |
| 4 | 1 | 56080 | Hose | 5/8" x 1400 90/L JIC |
| 5 | 4 | 26355 | Plug | VS-R-3/4 WD |
| 6 | 1 | 26786 | Elbow connection 45° | V40XS25 - 3/4 |
| 7 | 1 | 56046 | Hose | 1" x 1050 L/L JIC |
| 8 | 4 | 25197 | Plug | VS-R-1/4 WD |
| 9 | 1 | 25834 | Straight connection | F40XS18/20 - 3/4 |
| 10 | 2 | 25840 | Elbow connection | C40XS25 - 3/4 |
| 11 | 1 | 49626 | Swivel coupling | |
| 12 | 1 | 49628 | Hydraulic part | |
| 13 | 1 | 49624 | Electr. part, swivel coupling | |
| 14 | 1 | 6302631 | Carrier fitting | |
| 15 | 4 | 31177 | Washer | 10 mm |
| 16 | 4 | 30155 | Set screw | M10 x 25 |
| 17 | 3 | 30177 | Set screw | M12 x 30 |
| 18 | 3 | 30935 | Nordlock washer | 12 mm |
| 19 | 1 | 25277 | Plug | VS-R-3/8 WD |
| 20 | 1 | 59056 | Cooler valve | |
| 21 | 1 | 50274 | Oil Cooler, 24V | |
| 22 | 1 | 50275 | Oil Cooler, 12V | |
| 23 | 1 | 50290 | Temperature sensor, oil cooler | |
| 24 | 2 | 42953 | Adjustable spanner | |
| 25 | 4 | 62161 | Wire lock | |
| 26 | 1 | 62160 | Wire rope, nylon | 450 mm |
| 27 | 1 | 62160 | Wire rope, nylon | 600 mm |
| 28 | 1 | 55614 | Control valve | 2 sekt. |
| 29 | 1 | 55616 | Control valve | 3 sekt. Winch |
| 30 | 1 | 55618 | Control valve | 2 sekt. |
| 31 | 1 | 55620 | Control valve | 3 sekt. 1 EXV |
| 32 | 1 | 55622 | Control valve | 4 sekt. 2 EXV/FJ |
| 33 | 1 | 6301391 | Bracket for high-pressure filter | |
| 34 | 1 | 6301395 | Bracket | |
| 35 | 2 | 30133 | Set screw, stainless | |
| 36 | 6 | 31147 | Face washer, 8 mm | |
| 37 | 1 | 30134 | Set screw, stainless | M8 x 25 |
| 38 | 1 | 30135 | Set screw, stainless | M8 x 30 |
| 39 | 2 | 30886 | Lock nut, stainless | M8 |

# 6020

Intern ref.: 6308110

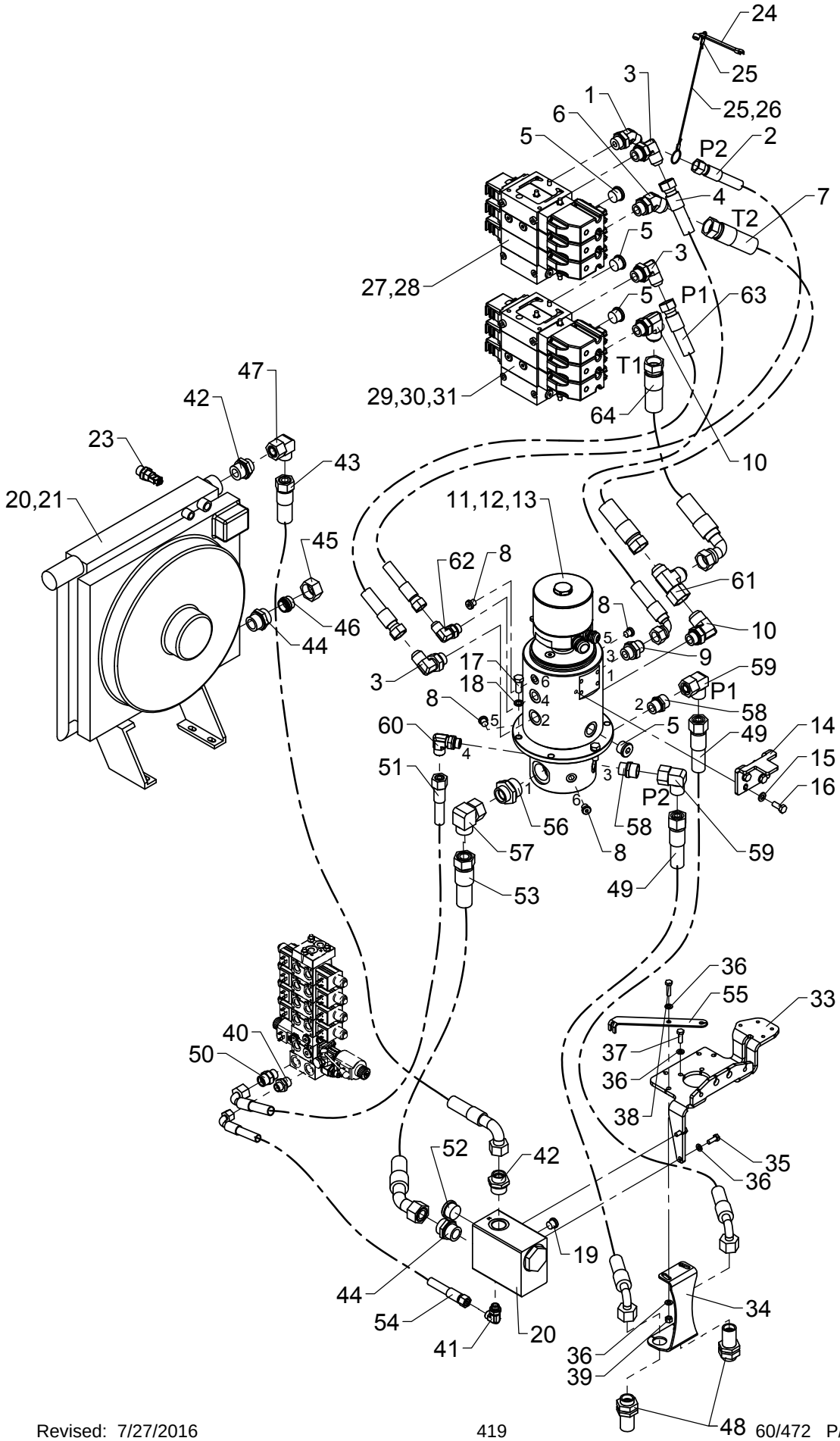

# Hydraulic system, pump and return hoses, 2 circuits + fixed pump

As from / To loader no.: 96 03 83
Created: 21.04.2015
Modified:

| Item no. | Qty. | Part no. | Description | Remarks |
|---|---|---|---|---|
| 40 | 1 | 25108 | Connection | GES 12 LR 1/2-WD |
| 41 | 1 | 26897 | Elbow connection | 12 mm - 3/8" |
| 42 | 2 | 26122 | Connection | P-GEV 22 LR 1-WD |
| 43 | 1 | 56502 | Hose | Til køler |
| 44 | 2 | 26163 | Connection | P-GEV 28 LR-WD |
| 45 | 1 | 26108 | Coupling nut | M 28 L |
| 46 | 1 | 26347 | Blanking plug | VSD 28 L |
| 47 | 1 | 25209 | Elbow connection | EWSD 22 L |
| 48 | 2 | 26369 | Bulkhead connection | GSS 20 S |
| 49 | 2 | 62624 | Hose | 5/8 x 1000mm L/90 |
| 50 | 1 | 26334 | Connection | P-GEV 16 SR-WD |
| 51 | 1 | 62686 | Hose | 1/2 x 1100mm L/90 |
| 52 | 1 | 26321 | Plug | VS-R 1" WD |
| 53 | 1 | 56979 | Hose | 1"x1500 L/45° |
| 54 | 1 | 0017870 | Hose | 3/8" x 450 V/O |
| 55 | 1 | 6301396 | Reinforcement plate for RCL | |
| 56 | 1 | 25892 | Straight connection | GA 28 LR 1.1/4 |
| 57 | 1 | 26817 | Elbow connection | P-EWV 28 L-SV |
| 58 | 2 | 25637 | Connection | P-GEV 20 SR-WD - short spe |
| 59 | 2 | 26198 | Elbow connection | EWVD 20 S-SV |
| 60 | 1 | 26893 | Elbow connection | 16 mm - 1/2" |
| 61 | 1 | 25855 | T-connection | R6XS 25 JIC |
| 62 | 1 | 25839 | Elbow connection | C40XS14/16 - 1/2 |
| 63 | 1 | 56045 | Hose | 5/8" x 1450 L/L JIC |
| 64 | 1 | 62968 | Hose | 1" x 900 90/L JIC |

# ODIN

Intern ref.: 6300910

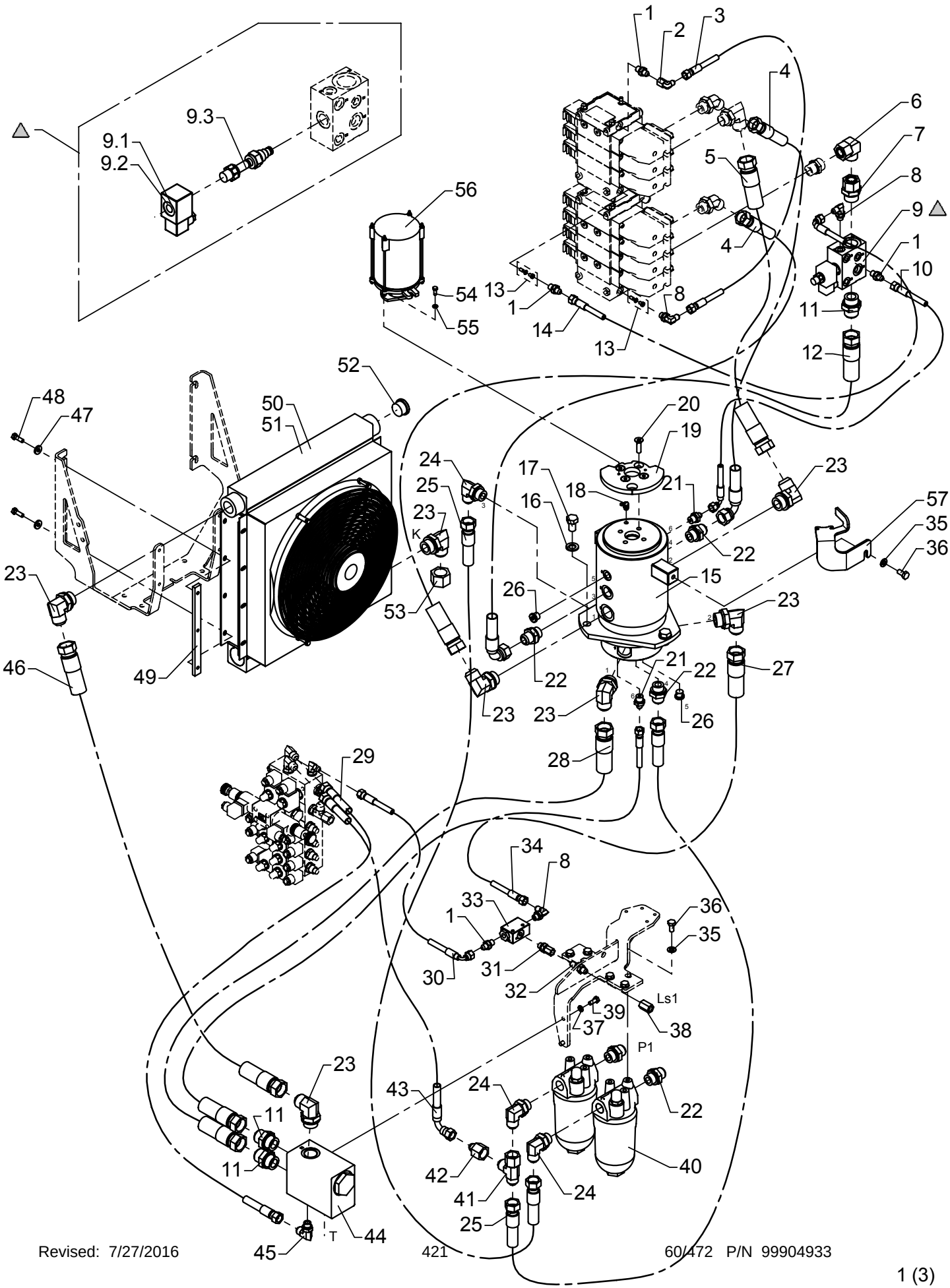

# Hydraulic system, pump and return hoses, 1 circuit + variable pump

As from / To loader no.: 96 00 00 / 96 00 49
Created: 03.10.2003
Modified: 17.06.2005

| Item no. | Qty. | Part no. | Description | Remarks |
|---|---|---|---|---|
| 1 | 4 | 25829 | Straight connection | F40XS 8-1/4 JIC |
| 2 | 1 | 25826 | Elbow connection | C6XS 8 JIC |
| 3 | 1 | 62870 | Hose | 1/4" x 650 mm O/O JIC |
| 4 | 2 | 62977 | Hose | 5/8" x 1100 mm V/O JIC |
| 5 | 1 | 56046 | Hose | 1" x 1000 mm O/O JIC |
| 6 | 1 | 25209 | Elbow connection | EWSD 22 L |
| 7 | 1 | 26391 | Straight connection | EGESD 22 LR 1-WD |
| 8 | 3 | 25858 | Elbow connection | C40XS 12-3/8 JIC |
| 9 | 1 | 59061 | Dump valve | |
| | | 61777 | Solenoid | 12V |
| | | 61778 | Solenoid | 24V |
| | | 59642 | Magnet coil | |
| 10 | 1 | 62901 | Hose | 1/4" x 900 mm V/O JIC |
| 11 | 3 | 25863 | Straight connection | F40XS 25-1 JIC |
| 12 | 1 | 56048 | Hose | 1" x 900 mm O/O JIC |
| 13 | 2 | 62065 | Closed center kit | |
| 14 | 1 | 62887 | Hose | 1/4" x 550 mm V/O JIC |
| 15 | 1 | 58727 | Swivel coupling, hydraulic | |
| 16 | 3 | 31135 | Washer | 16 mm |
| 17 | 3 | 30266 | Set screw | M16 x 25 |
| 18 | 1 | 31322 | Lubricator | 1/8 RG - 90 |
| 19 | 1 | 6301196 | Cam disc, 2-stage LMB | |
| 20 | 4 | 30955 | Countersunk screw | MK10 x 35 |
| 21 | 2 | 25830 | Straight connection | F40XS 8-3/8 JIC |
| 22 | 5 | 25834 | Straight connection | F40XS 18/20-3/4 JIC |
| 23 | 7 | 26267 | Elbow connection | C40XS 25-1 JIC |
| 24 | 3 | 26693 | Elbow connection | C40XS 18/20-3/4 JIC |
| 25 | 2 | 56045 | Hose | 5/8" x 1450 mm O/O JIC |
| 26 | 2 | 25277 | Plug | VS-R-3/8 WD |
| 27 | 1 | 56050 | Hose | 1" x 1300 mm O/O JIC |
| 28 | 1 | 56049 | Hose | 1" x 1050 mm O/O JIC |
| 29 | 1 | 62884 | Hose | 3/8" x 500 mm O/O JIC |
| 30 | 1 | 62974 | Hose | 1/4" x 350 mm V/O JIC |
| 31 | 1 | 26272 | Straight connection | F64XS 14/16 - 3/8" JIC |
| 32 | 1 | 25823 | Bulkhead connection | WTX-WLNS 8 JIC |
| 33 | 1 | 60338 | Shuttle valve | |
| 34 | 1 | 56130 | Hose | 1/4" x 1150 mm O/O JIC |
| 35 | 7 | 31177 | Washer | 10 mm |
| 36 | 7 | 30154 | Set screw | M10 x 20 |
| 37 | 2 | 31155 | Spring washer | 8 mm |

# ODIN

Intern ref.: 6300910

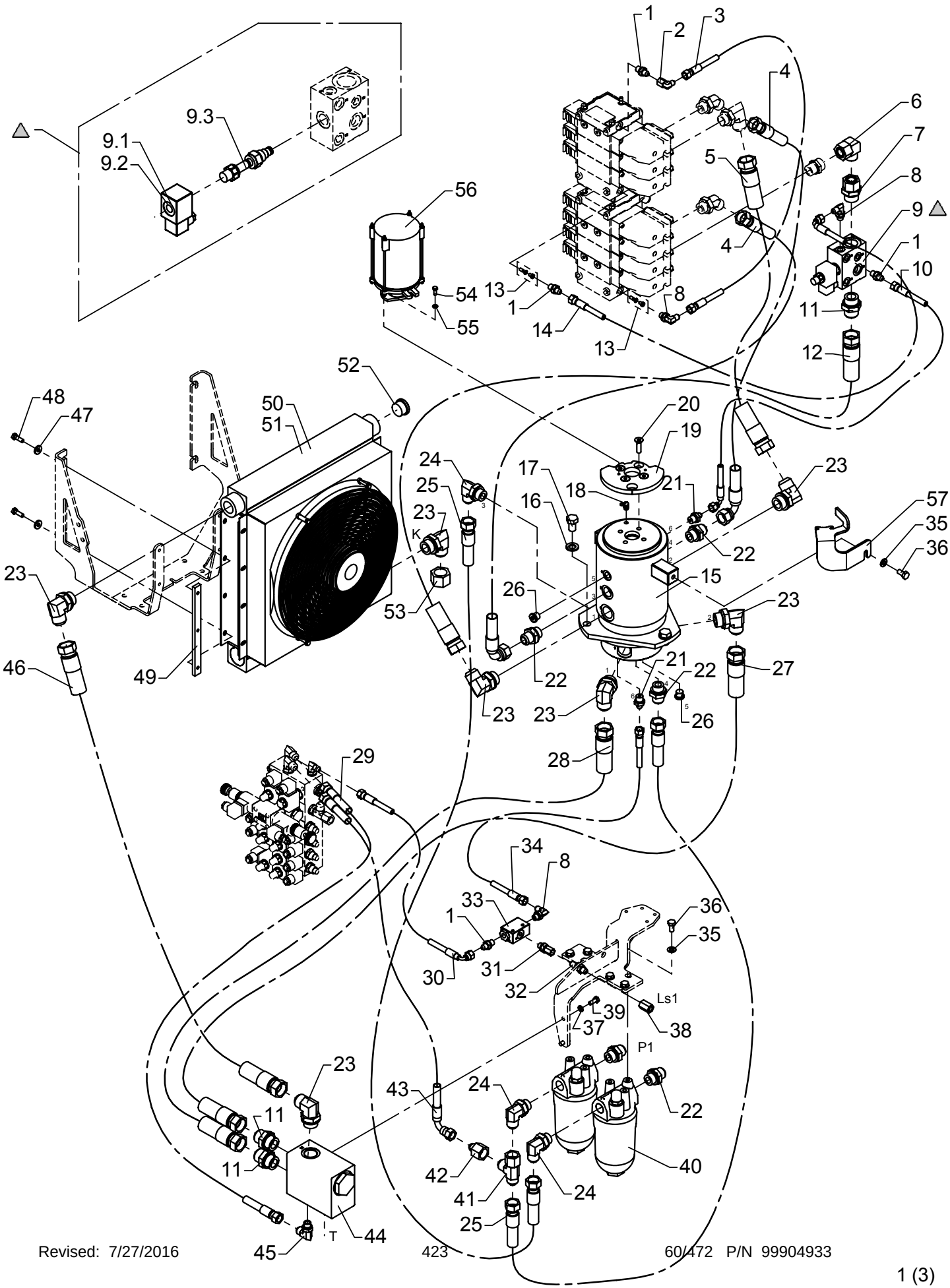

# Hydraulic system, pump and return hoses, 1 circuit + variable pump

As from / To loader no.: 96 00 00 / 96 00 49
Created: 03.10.2003
Modified: 17.06.2005

| Item no. | Qty. | Part no. | Description | Remarks |
|---|---|---|---|---|
| 38 | 1 | 26270 | Fitting | TTX4S 8-1/4 JIC |
| 39 | 2 | 30132 | Set screw, stainless | M8 x 20 |
| 40 | 2 | 60201 | High pressure filter | |
| 41 | 1 | 25828 | Connection | R6XS 20 JIC |
| 42 | 1 | 25865 | Reducing connection | TRTXS 8/20-12 JIC |
| 43 | 1 | 56091 | Hose | 3/8" x 350 mm V/O JIC |
| 44 | 1 | 59056 | Cooler valve | |
| 45 | 1 | 25838 | Elbow connection | C40XS 12-3/8 JIC |
| 46 | 1 | 56047 | Hose | 3/4" x 1400 mm O/O JIC |
| 47 | 4 | 31755 | Washer | 8 mm |
| 48 | 4 | 30134 | Set screw, stainless | M8 x 25 |
| 49 | 2 | 6381974 | Threaded disc | |
| 50 | 1 | 59310 | Oil cooler 24 V | |
| 51 | 1 | 59312 | Oil cooler 12 V | |
| 52 | 1 | 26321 | Plug | VS-R 1" WD |
| 53 | 1 | 25848 | Screw cap JIC | FNTXS 25 JIC |
| 54 | 2 | 30112 | Set screw, stainless | M6 x 16 |
| 55 | 2 | 31154 | Spring washer, stainless | 6 mm |
| 56 | 1 | 28549 | Swivel coupling, electric | |
| 57 | 1 | 6301197 | Carrier | |

# ODIN

Intern ref.: 6300910

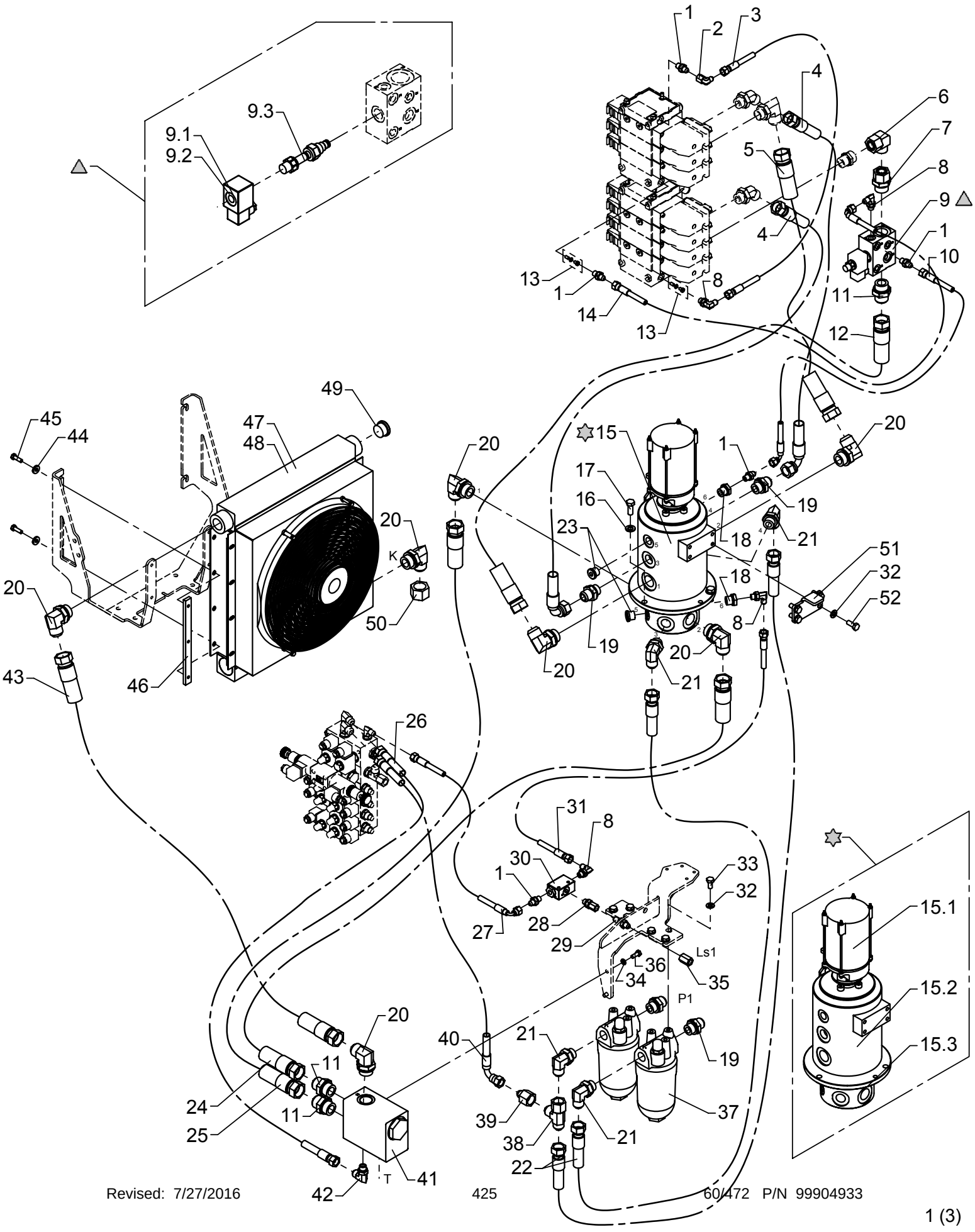

# Hydraulic system, pump and return hoses, 1 circuit + variable pump

As from / To loader no.: 96 00 50 / 96 00 53
Created: 17.06.2005
Modified: 05.10.2005

| Pos. | Antal | Vare nr. | Beskrivelse | Bemærkning |
|---|---|---|---|---|
| 1 | 5 | 25829 | Lige forskruning | F40XS 8-1/4 JIC |
| 2 | 1 | 25826 | Vinkelforskruning | C6XS 8 JIC |
| 3 | 1 | 62870 | Slange | 1/4" x 650 mm O/O JIC |
| 4 | 2 | 62977 | Slange | 5/8" x 1100 mm V/O JIC |
| 5 | 1 | 56046 | Slange | 1" x 1000 mm O/O JIC |
| 6 | 1 | 25209 | Vinkelforskruning | EWSD 22 L |
| 7 | 1 | 26391 | Lige Forskruning | EGESD 22 LR 1-WD |
| 8 | 4 | 25858 | Vinkelforskruning | C40XS 12-3/8 JIC |
| 9 | 1 | 59061 | Dumpventil | |
| | | 61777 | Solenoid | 12V |
| | | 61778 | Solenoid | 26V |
| | | 59642 | Magnet coil | |
| 10 | 1 | 62901 | Slange | 1/4" x 900 mm V/O JIC |
| 11 | 3 | 25863 | Lige forskruning | F40XS 25-1 JIC |
| 12 | 1 | 56048 | Slange | 1" x 900 mm O/O JIC |
| 13 | 2 | 62065 | Lukket Center Kit | |
| 14 | 1 | 62887 | Slange | 1/4" x 550 mm V/O JIC |
| 15 | 1 | 49105 | Slæbering/rotorled | |
| | | 28549 | Swivel coupling, electric | |
| | | 49106 | Swivel coupling | |
| | | 49115 | Seal kit | |
| 16 | 3 | 31131 | Facetskive, galv. | 12 mm |
| 17 | 3 | 30177 | Sætskrue galv. | M12 x 30 |
| 18 | 2 | 25180 | Reduktionsnippel | RED-R 1/2-WD/R 1/4 |
| 19 | 4 | 25834 | Lige forskruning | F40XS 18/20-3/4 JIC |
| 20 | 7 | 26267 | Vinkel indskruning | C40XS 25-1 JIC |
| 21 | 4 | 26693 | Vinkelforskruning | C40XS 18/20-3/4 JIC |
| 22 | 2 | 56045 | Slange | 5/8" x 1450 mm O/O JIC |
| 23 | 2 | 25103 | Prop | VS-R-1/2 WD |
| 24 | 1 | 56050 | Slange | 1" x 1300 mm O/O JIC |
| 25 | 1 | 56049 | Slange | 1" x 1050 mm O/O JIC |
| 26 | 1 | 62884 | Slange | 3/8" x 500 mm O/O JIC |
| 27 | 1 | 62974 | Slange | 1/4" x 350 mm V/O JIC |
| 28 | 1 | 26272 | Lige indskruning | F64XS 14/16 - 3/8" JIC |
| 29 | 1 | 25823 | Skotforskruning | WTX-WLNS 8 JIC |
| 30 | 1 | 60338 | Vekselventil | |
| 31 | 1 | 56130 | Slange | 1/4" x 1150 mm O/O JIC |
| 32 | 10 | 31177 | Facetskive galv. 10mm | 10 mm |
| 33 | 6 | 30154 | Sætskrue, galv. | M10 x 20 |
| 34 | 2 | 31155 | Fjederskive rustfri 8mm | 8 mm |

# ODIN

Intern ref.: 6300910

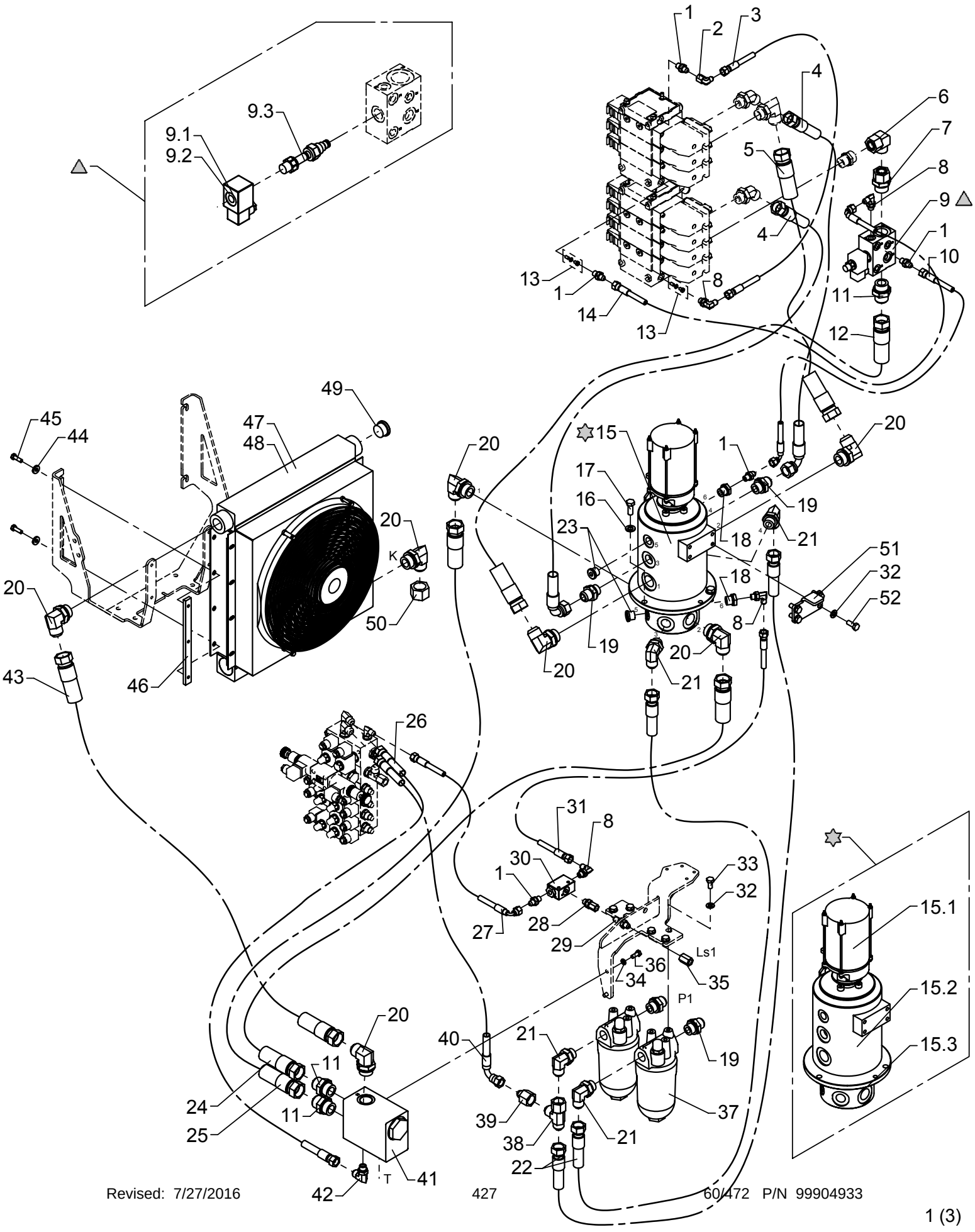

# Hydraulic system, pump and return hoses, 1 circuit + variable pump

As from / To loader no.: 96 00 50 / 96 00 53
Created: 17.06.2005
Modified: 05.10.2005

| Item no. | Qty. | Part no. | Description | Remarks |
|---|---|---|---|---|
| 35 | 1 | 26270 | Fitting | TTX4S 8-1/4 JIC |
| 36 | 2 | 30132 | Set screw, stainless | M8 x 20 |
| 37 | 2 | 60201 | High pressure filter | |
| 38 | 1 | 25828 | Connection | R6XS 20 JIC |
| 39 | 1 | 25865 | Reducing connection | TRTXS 8/20-12 JIC |
| 40 | 1 | 56091 | Hose | 3/8" x 350 mm V/O JIC |
| 41 | 1 | 59056 | Cooler valve | |
| 42 | 1 | 25838 | Elbow connection | C40XS 12-3/8 JIC |
| 43 | 1 | 56047 | Hose | 3/4" x 1400 mm O/O JIC |
| 44 | 4 | 31755 | Washer | 8 mm |
| 45 | 4 | 30134 | Set screw, stainless | M8 x 25 |
| 46 | 2 | 6381974 | Threaded disc | |
| 47 | 1 | 59310 | Oil cooler 24 V | |
| 48 | 1 | 59312 | Oil cooler 12 V | |
| 49 | 1 | 26321 | Plug | VS-R 1" WD |
| 50 | 1 | 25848 | Screw cap JIC | FNTXS 25 JIC |
| 51 | 1 | 6302621 | Carrier fitting | |
| 52 | 4 | 30155 | Set screw | M10 x 25 |

# ODIN

Intern ref.: 6300910

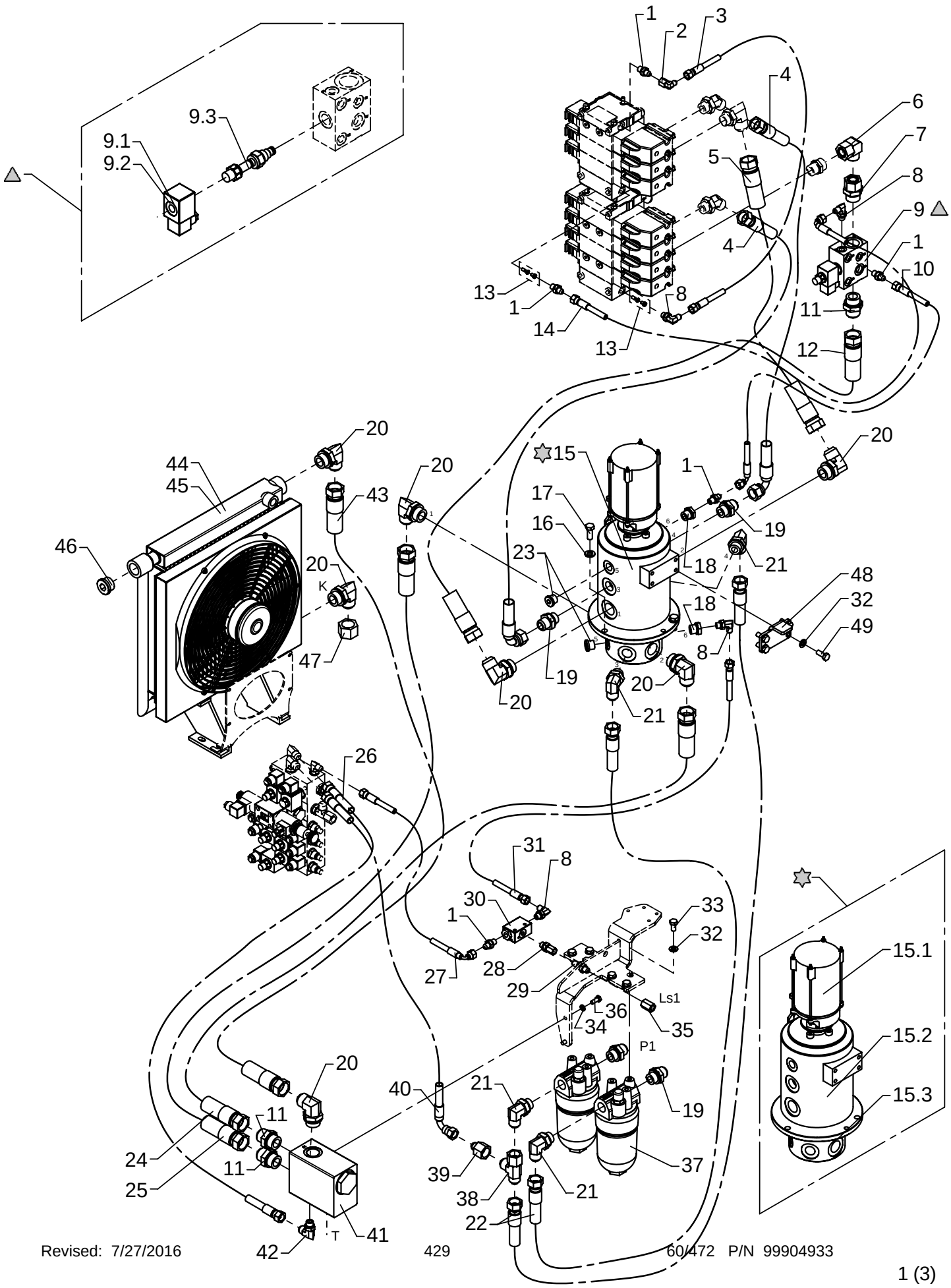

# Hydraulic system, pump and return hoses, 1 circuit + variable pump

As from / To loader no.: 96 00 54 / 96 01 49
Created: 17.06.2005
Modified: 30.10.2006

| Pos. | Antal | Vare nr. | Beskrivelse | Bemærkning |
|---|---|---|---|---|
| 1 | 5 | 25829 | Lige forskruning | F40XS 8-1/4 JIC |
| 2 | 1 | 25826 | Vinkelforskruning | C6XS 8 JIC |
| 3 | 1 | 62870 | Slange | 1/4" x 650 mm O/O JIC |
| 4 | 2 | 62977 | Slange | 5/8" x 1100 mm V/O JIC |
| 5 | 1 | 56046 | Slange | 1" x 1000 mm O/O JIC |
| 6 | 1 | 25209 | Vinkelforskruning | EWSD 22 L |
| 7 | 1 | 26391 | Lige Forskruning | EGESD 22 LR 1-WD |
| 8 | 4 | 25858 | Vinkelforskruning | C40XS 12-3/8 JIC |
| 9 | 1 | 59061 | Dumpventil | |
| | | 61777 | Solenoid | 12V |
| | | 61778 | Solenoid | 26V |
| | | 59642 | Magnet coil | |
| 10 | 1 | 62901 | Slange | 1/4" x 900 mm V/O JIC |
| 11 | 3 | 25863 | Lige forskruning | F40XS 25-1 JIC |
| 12 | 1 | 56048 | Slange | 1" x 900 mm O/O JIC |
| 13 | 2 | 62065 | Lukket Center Kit | |
| 14 | 1 | 62887 | Slange | 1/4" x 550 mm V/O JIC |
| 15 | 1 | 49105 | Slæbering/rotorled | |
| | | 28549 | Swivel coupling, electric | |
| | | 49106 | Swivel coupling | |
| | | 49115 | Seal kit | |
| 16 | 3 | 31131 | Facetskive galv. 12 mm. | 12 mm |
| 17 | 3 | 30177 | Sætskrue galv. M12 x 30 | M12 x 30 |
| 18 | 2 | 25180 | Reduktionsforskruning | RED-R 1/2-WD/R 1/4 |
| 19 | 4 | 25834 | Lige forskruning | F40XS 18/20-3/4 JIC |
| 20 | 7 | 26267 | Vinkel indskruning | C40XS 25-1 JIC |
| 21 | 4 | 26693 | Vinkelforskruning | C40XS 18/20-3/4 JIC |
| 22 | 2 | 56045 | Slange | 5/8" x 1450 mm O/O JIC |
| 23 | 2 | 25103 | Prop | VS-R-1/2 WD |
| 24 | 1 | 56050 | Slange | 1" x 1300 mm O/O JIC |
| 25 | 1 | 56049 | Slange | 1" x 1050 mm O/O JIC |
| 26 | 1 | 62884 | Slange | 3/8" x 500 mm O/O JIC |
| 27 | 1 | 62974 | Slange | 1/4" x 350 mm V/O JIC |
| 28 | 1 | 26272 | Lige indskruning | F64XS 14/16 - 3/8" JIC |
| 29 | 1 | 25823 | Skotforskruning | WTX-WLNS 8 JIC |
| 30 | 1 | 60338 | Vekselventil | |
| 31 | 1 | 56130 | Slange | 1/4" x 1150 mm O/O JIC |
| 32 | 10 | 31177 | Facetskive galv. 10mm | 10 mm |
| 33 | 6 | 30154 | Sætskrue galv. M10 x 20 | M10 x 20 |
| 34 | 2 | 31155 | Fjederskive rustfri 8mm | 8 mm |

# ODIN

Intern ref.: 6300910

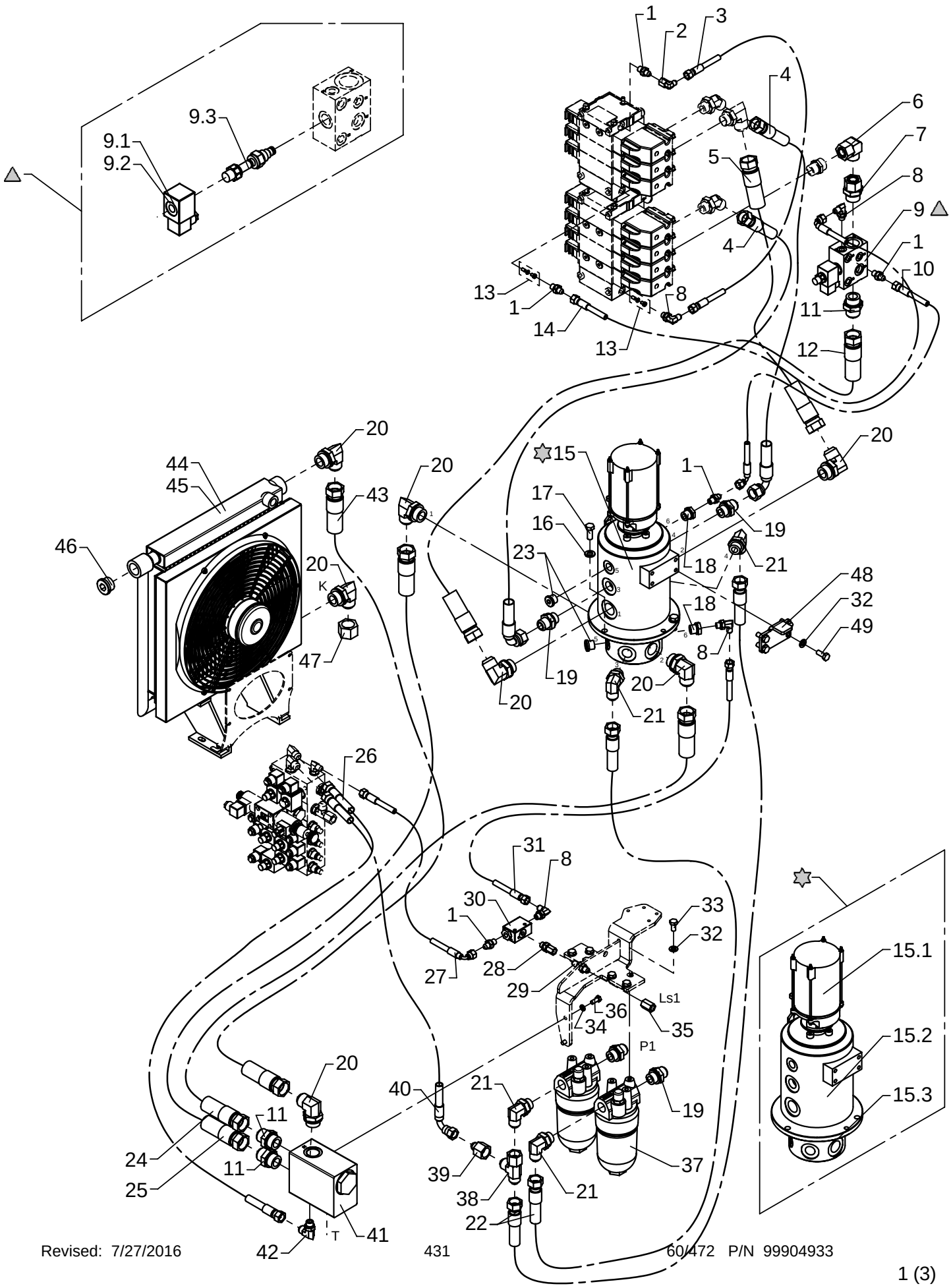

# Hydraulic system, pump and return hoses, 1 circuit + variable pump

As from / To loader no.: 96 00 54 / 96 01 49
Created: 17.06.2005
Modified: 30.10.2006

| Item no. | Qty. | Part no. | Description | Remarks |
|---|---|---|---|---|
| 35 | 1 | 26270 | Fitting | TTX4S 8-1/4 JIC |
| 36 | 2 | 30132 | Set screw, stainless | M8 x 20 |
| 37 | 2 | 60201 | High pressure filter | |
| 38 | 1 | 25828 | Connection | R6XS 20 JIC |
| 39 | 1 | 25865 | Reducing connection | TRTXS 8/20-12 JIC |
| 40 | 1 | 56091 | Hose | 3/8" x 350 mm V/O JIC |
| 41 | 1 | 59056 | Cooler valve | |
| 42 | 1 | 25838 | Elbow connection | C40XS 12-3/8 JIC |
| 43 | 1 | 56262 | Hose | 3/4" x 2000 mm O/O JIC |
| 44 | 1 | 59310 | Oil cooler 24 V | |
| 45 | 1 | 59312 | Oil cooler 12 V | |
| 46 | 1 | 26321 | Plug | VS-R 1" WD |
| 47 | 1 | 25848 | Screw cap JIC | FNTXS 25 JIC |
| 48 | 1 | 6302621 | Carrier fitting | |
| 49 | 4 | 30155 | Set screw | M10 x 25 |

# ODIN

Intern ref.: 6300910

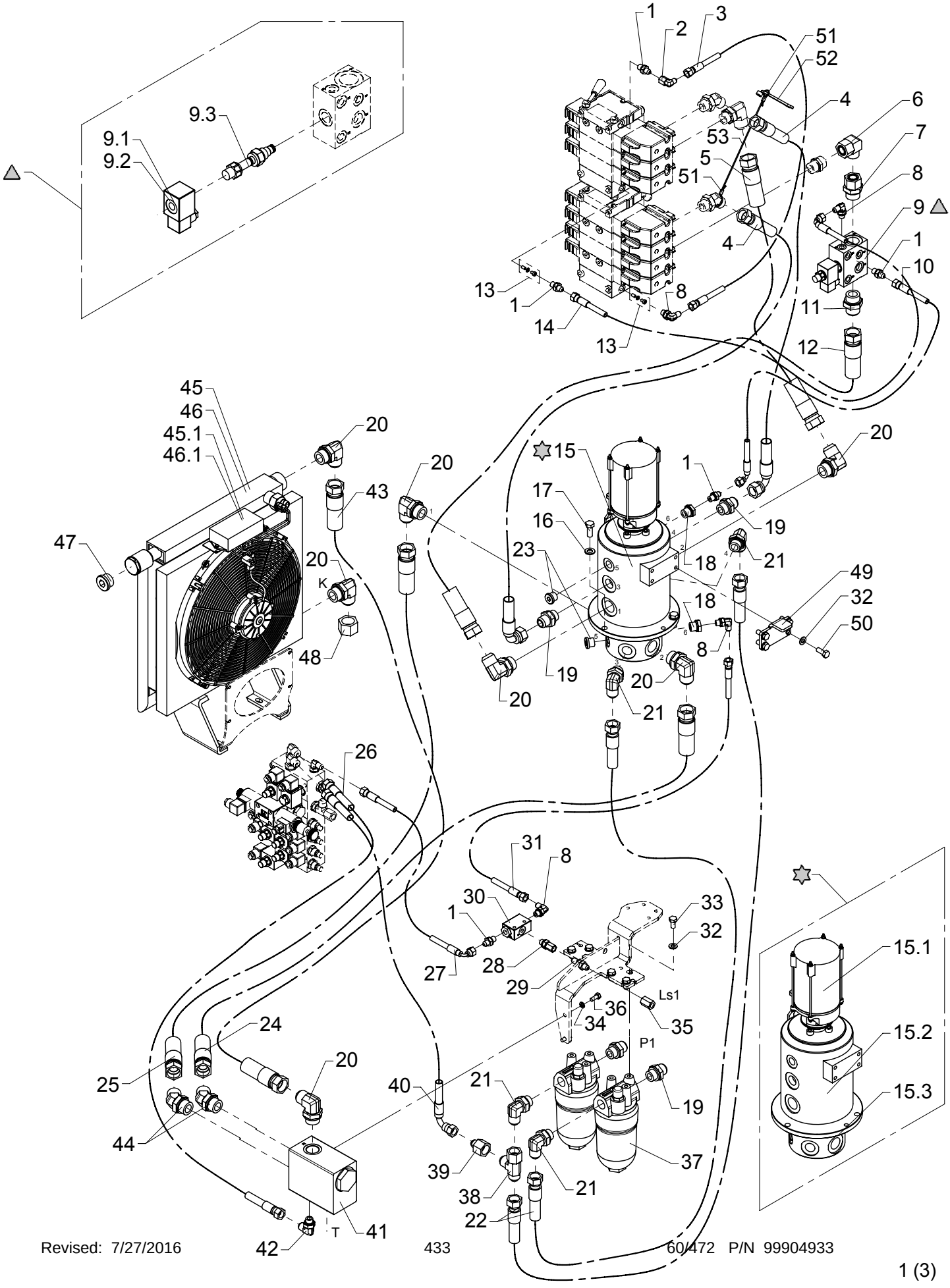

# Hydraulic system, pump and return hoses, 1 circuit + variable pump

As from / To loader no.: 96 01 50 / 96 02 07
Created: 30.10.2006
Modified: 02.06.2008

| Item no. | Qty. | Part no. | Description | Remarks |
|---|---|---|---|---|
| 1 | 5 | 25829 | Straight connection | F40XS8 - 1/4 |
| 2 | 1 | 25826 | Elbow connection | C6XS 8 JIC |
| 3 | 1 | 62870 | Hose | 1/4" x 650 mm O/O JIC |
| 4 | 2 | 62977 | Hose | 5/8" x 1100 mm V/O JIC |
| 5 | 1 | 56046 | Hose | 1" x 1000 mm O/O JIC |
| 6 | 1 | 25209 | Elbow connection | EWSD 22 L |
| 7 | 1 | 26391 | Straight connection | EGESD 22 LR 1-WD |
| 8 | 4 | 25858 | Elbow connection | C40XS8 - 1/4 |
| 9 | 1 | 59061 | Dump valve | |
| | | 61777 | Solenoid | |
| | | 61778 | Solenoid | |
| | | 59642 | Magnet coil | |
| 10 | 1 | 62901 | Hose | 1/4" x 900 mm V/O JIC |
| 11 | 1 | 25863 | Straight connection | F40XS25 - 1 |
| 12 | 1 | 56048 | Hose | 1" x 900 mm O/O JIC |
| 13 | 2 | 62065 | Closed center kit | |
| 14 | 1 | 62887 | Hose | 1/4" x 550 mm V/O JIC |
| 15 | 1 | 49105 | Swivel coupling | |
| | | 28549 | Swivel coupling, electric | |
| | | 49106 | Swivel coupling | |
| | | 49115 | Seal kit | |
| 16 | 3 | 31131 | Washer | 12 mm |
| 17 | 3 | 30177 | Set screw | M12 x 30 |
| 18 | 2 | 25180 | Reducing connection | RED-R 1/2-WD/R 1/4 |
| 19 | 4 | 25834 | Straight connection | F40XS18/20 - 3/4 |
| 20 | 7 | 26267 | Elbow connection | C40XS25 - 1 |
| 21 | 4 | 26693 | Elbow connection | C40XS18/20 - 3/4 |
| 22 | 2 | 56045 | Hose | 5/8" x 1450 mm O/O JIC |
| 23 | 2 | 25103 | Plug | VS-R-1/2 WD |
| 24 | 1 | 56050 | Hose | 1" x 1300 mm O/O JIC |
| 25 | 1 | 56049 | Hose | 1" x 1050 mm O/O JIC |
| 26 | 1 | 62884 | Hose | 3/8" x 500 mm O/O JIC |
| 27 | 1 | 62974 | Hose | 1/4" x 350 mm V/O JIC |
| 28 | 1 | 26272 | Straight connection | F64XS 14/16 - 3/8" JIC |
| 29 | 1 | 25823 | Bulkhead connection | WTX-WLNS 8 JIC |
| 30 | 1 | 60338 | Shuttle valve | |
| 31 | 1 | 56130 | Hose | 1/4" x 1150 mm O/O JIC |
| 32 | 10 | 31177 | Washer | 10 mm |
| 33 | 6 | 30154 | Set screw | M10 x 20 |
| 34 | 2 | 31155 | Spring washer | 8 mm |

# ODIN

Intern ref.: 6300910

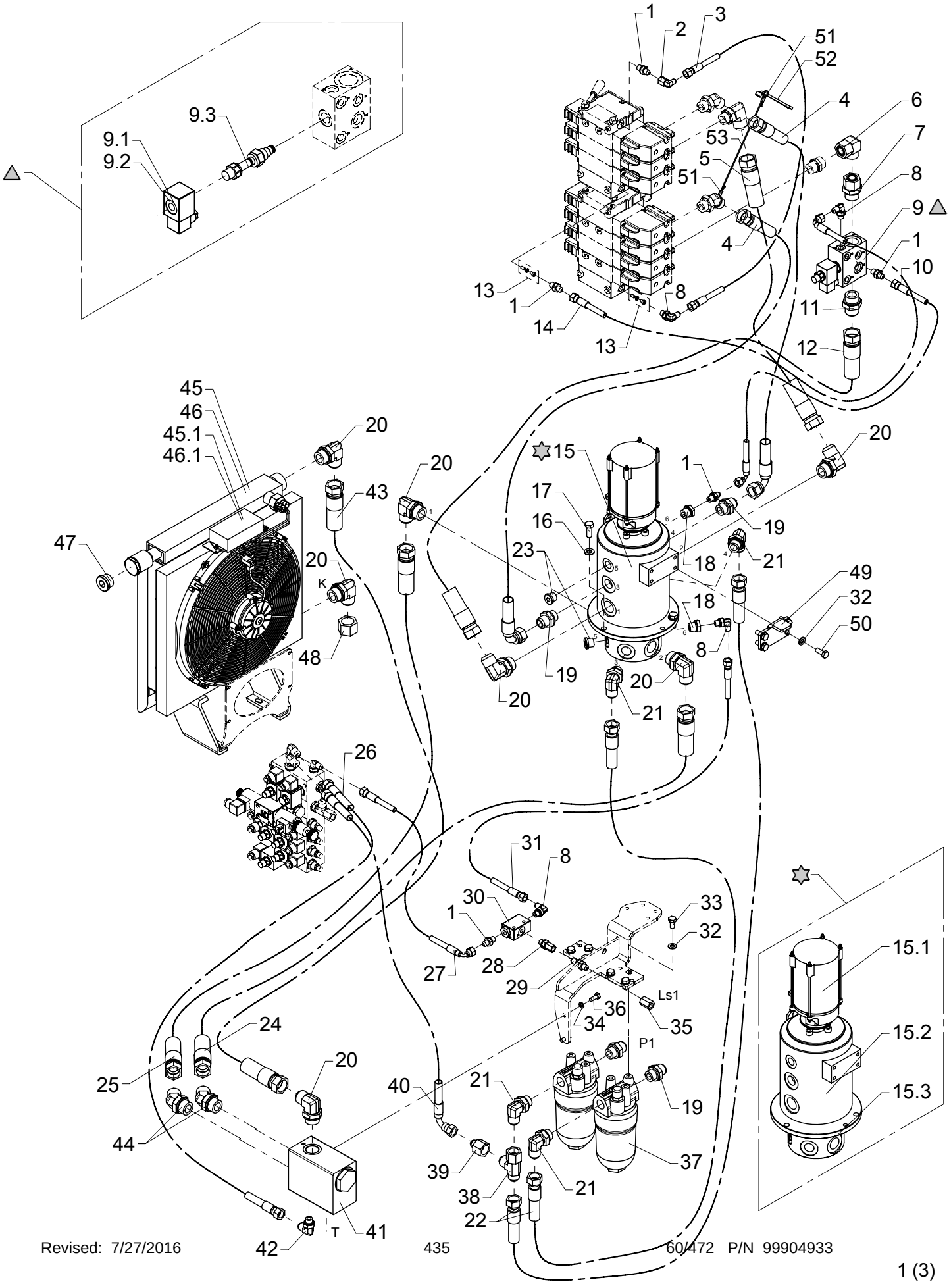

# Hydraulic system, pump and return hoses, 1 circuit + variable pump

As from / To loader no.: 96 01 50 / 96 02 07
Created: 30.10.2006
Modified: 02.06.2008

| Item no. | Qty. | Part no. | Description | Remarks |
|---|---|---|---|---|
| 35 | 1 | 26270 | Fitting | TTX4S 8-1/4 JIC |
| 36 | 2 | 30132 | Set screw, stainless | M8 x 20 |
| 37 | 2 | 60201 | High pressure filter | |
| 38 | 1 | 25828 | Connection | R6XS 20 JIC |
| 39 | 1 | 25865 | Reducing connection | TRTXS8/20-12 |
| 40 | 1 | 56091 | Hose | 3/8" x 350 mm V/O JIC |
| 41 | 1 | 59056 | Cooler valve | |
| 42 | 1 | 25838 | Elbow connection | C40XS12 - 3/8 |
| 43 | 1 | 56262 | Hose | 3/4" x 2000 mm O/O JIC |
| 44 | 2 | 25734 | Elbow connection 45° | V40XS25 - 1 |
| 45 | 1 | 50282 | Oil cooler, 24 V + Smartdrive | |
| | | 50284 | Smartdrive kit for oil cooler | |
| 46 | 1 | 50283 | Oil cooler, 12 V + Smartdrive | |
| | | 50284 | Smartdrive kit for oil cooler | |
| 47 | 1 | 26321 | Plug | VS-R 1" WD |
| 48 | 1 | 25848 | Screw cap JIC | FNTXS 25 JIC |
| 49 | 1 | 6302621 | Carrier fitting | |
| 50 | 4 | 30155 | Set screw | M10 x 25 |
| 51 | 2 | 62161 | Wire lock | |
| 52 | 1 | 42953 | Adjustable spanner | |
| 53 | 1 | 62160 | Wire rope, nylon | 400 mm |

# ODIN

An Oshkosh Corportation Company

Intern ref.: 6301710

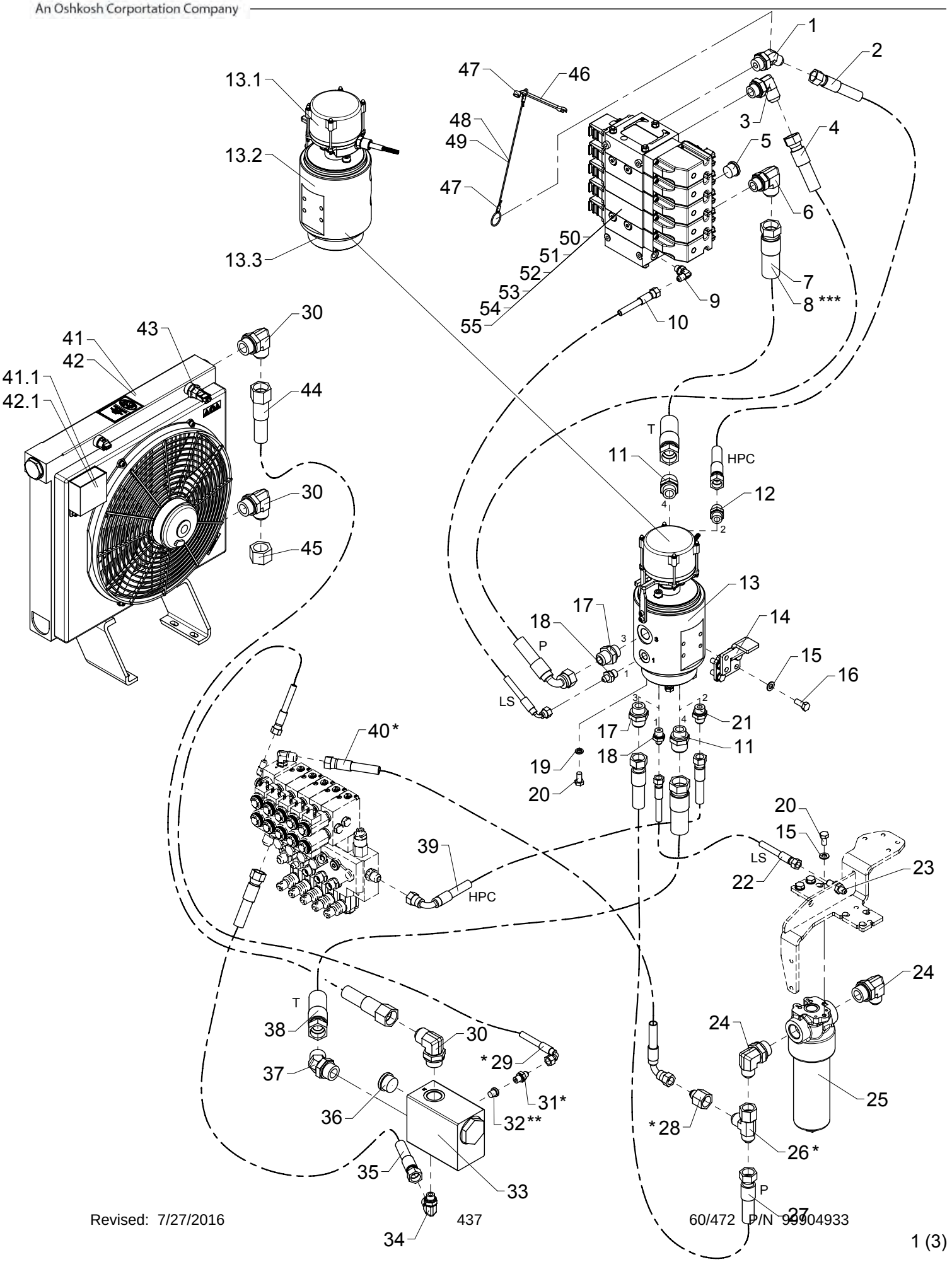

# Hydraulic system, pump and return hoses, 1 circuit + variable pump

As from / To loader no.: 96 02 08
Created: 02.06.2008
Modified: 26.08.2008

* Stabilizer operation by RC  ** Manual stabilizer operation  *** Winch

| Item no. | Qty. | Part no. | Description | Remarks |
|---|---|---|---|---|
| 1 | 1 | 26291 | Elbow connection 45° | V40XS14-16 - 3/4 |
| 2 | 1 | 62922 | Hose JIC | 1/2" x 1400 L/L JIC |
| 3 | 1 | 26693 | Elbow connection | C40XS18/20 - 3/4 |
| 4 | 1 | 56080 | Hose | 5/8" x 1400 90/L JIC |
| 5 | 1 | 26355 | Plug | VS-R-3/4 WD |
| 6 | 1 | 25840 | Elbow connection | C40XS25 - 3/4 |
| 7 | 1 | 56048 | Hose | 1" x 900 L/L JIC |
| 8 | 1 | 56461 | Hose | 1" x 700 L/L JIC |
| 9 | 1 | 25858 | Elbow connection | C40XS8 - 1/4 |
| 10 | 1 | 62934 | Hose | 1/4" x 1330 90/L JIC |
| 11 | 2 | 25836 | Straight connection | F40XS25 - 3/4 |
| 12 | 1 | 25833 | Straight connection | F40XS14/16 - 1/2 |
| 13 | 1 | 49216 | Swivel coupling | |
| | | 49237 | Electric part, swivel coupling | |
| | | 49235 | Hydraulic part,swivel coupling | |
| | | 49247 | Seal kit | |
| 14 | 1 | 6301329 | Carrier fitting | |
| 15 | 7 | 31177 | Washer | 10 mm |
| 16 | 4 | 30155 | Set screw | M10 x 25 |
| 17 | 2 | 25834 | Straight connection | F40XS18/20 - 3/4 |
| 18 | 2 | 25830 | Straight connection | F40XS8 - 3/8 |
| 19 | 4 | 30933 | Nordlock washer | 10 mm |
| 20 | 7 | 30154 | Set screw | M10 x 20 |
| 21 | 1 | 25832 | Straight connection | F40XS12 - 1/2 |
| 22 | 1 | 56130 | Hose | 1/4" x 1150 L/L JIC |
| 23 | 1 | 25823 | Bulkhead connection | WTX-WLNS 8 JIC |
| 24 | 2 | 26785 | Elbow connection | C40XS18/20 - 1 |
| 25 | 1 | 49401 | High pressure filter | |
| 26 | 1 | 25828 | Connection | R6XS 20 JIC |
| 27 | 1 | 56045 | Hose | 5/8" x 1450 L/L JIC |
| 28 | 1 | 25865 | Reducing connection | TRTXS8/20-12 |
| 29 | 1 | 62901 | Hose | 1/4" x 900 90/L JIC |
| 30 | 3 | 26267 | Elbow connection | C40XS25 - 1 |
| 31 | 1 | 25829 | Straight connection | F40XS8 - 1/4 |
| 32 | 1 | 25197 | Plug | VS-R-1/4 WD |
| 33 | 1 | 59056 | Cooler valve | |
| 34 | 1 | 26787 | Elbow connection | C40XS14/16 - 3/8 |
| 35 | 1 | 62866 | Hose, JIC | 1/2" x 850 L/L JIC |
| 36 | 1 | 26321 | Plug | VS-R 1" WD |
| 37 | 1 | 25734 | Elbow connection 45° | V40XS25 - 1 |

# ODIN

An Oshkosh Corportation Company

Intern ref.: 6301710

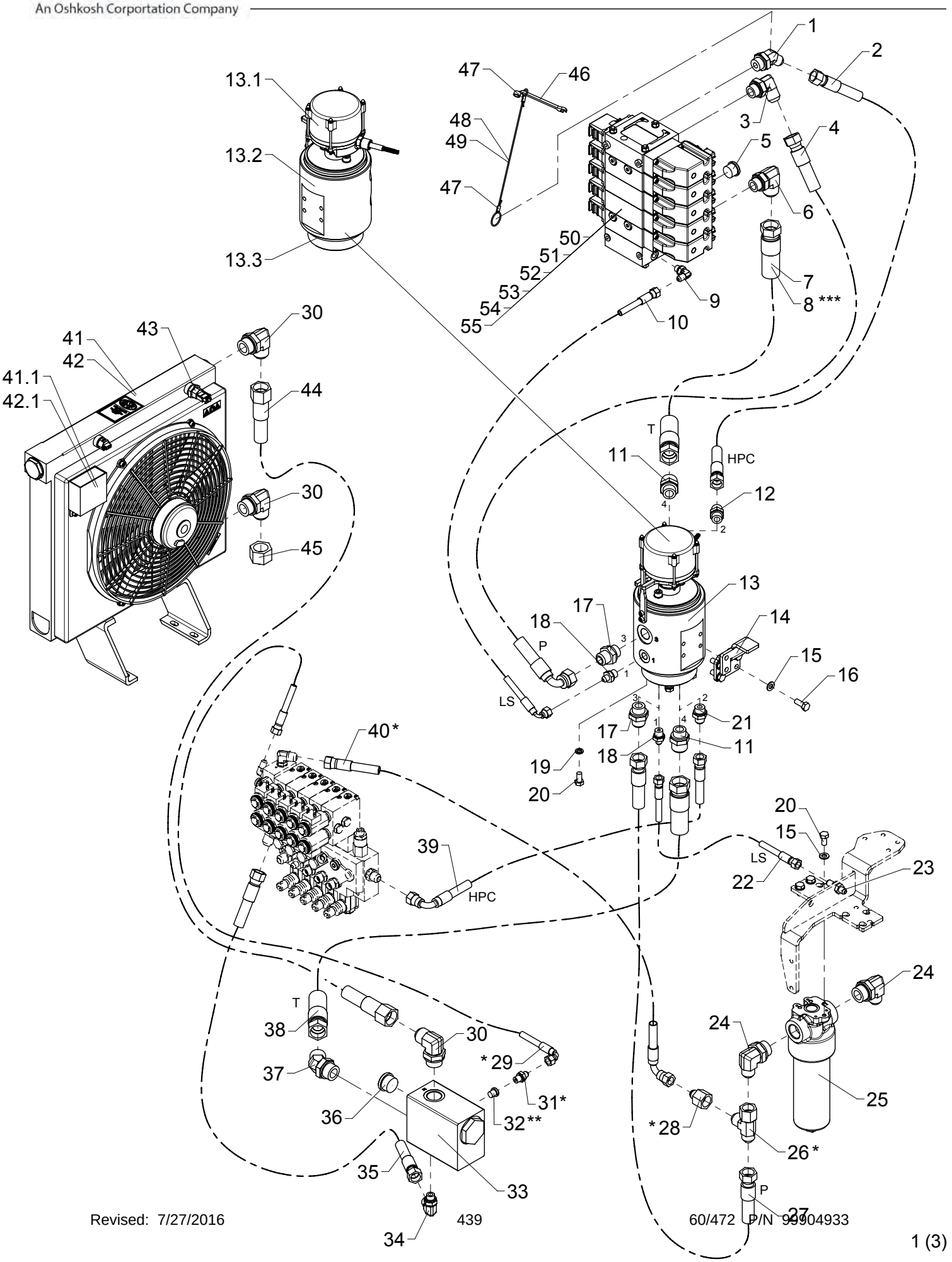

# Hydraulic system, pump and return hoses, 1 circuit + variable pump

As from / To loader no.: 96 02 08
Created: 02.06.2008
Modified: 26.08.2008

| Item no. | Qty. | Part no. | Description | Remarks |
|---|---|---|---|---|
| 38 | 1 | 56050 | Hose | 1" x 1300 L/L JIC |
| 39 | 1 | 56110 | Hose | 3/8" x 1130 90/L JIC |
| 40 | 1 | 62956 | Hose | 3/8" x 550 90/L JIC |
| 41 | 1 | 50262 | Oil cooler, 24 V + Smartdrive | |
| | | 50292 | Electronic box, kit 12+24 V | |
| 42 | 1 | 50263 | Oil cooler, 12 V + Smartdrive | |
| | | 50292 | Electronic box, kit 12+24 V | |
| 43 | 1 | 50290 | Temperature sensor, oil cooler | |
| 44 | 1 | 56262 | Hose | 3/4" x 2000 L/L JIC |
| 45 | 1 | 25848 | Screw cap JIC | FNTXS 25 JIC |
| 46 | 2 | 42953 | Adjustable spanner | |
| 47 | 4 | 62161 | Wire lock | |
| 48 | 1 | 62160 | Wire rope, nylon | 450 mm |
| 49 | 1 | 62160 | Wire rope, nylon | 600 mm |
| 50 | 1 | 55601 | Control valve | 4 sekt. |
| 51 | 1 | 55603 | Control valve | 5 sekt. Winch |
| 52 | 1 | 55605 | Control valve | 5 sekt. 1 EXV |
| 53 | 1 | 55607 | Control valve | 6 sekt. Winch+1 EXV |
| 54 | 1 | 55609 | Control valve | 6 sekt. 2 EXV/FJ |
| 55 | 1 | 55611 | Control valve | 7 sekt. Winch+2 EXV/FJ |

* Stabilizer operation by RC  ** Manual stabilizer operation  *** Winch

# 6020

6308100_2
Intern ref.: 6308090

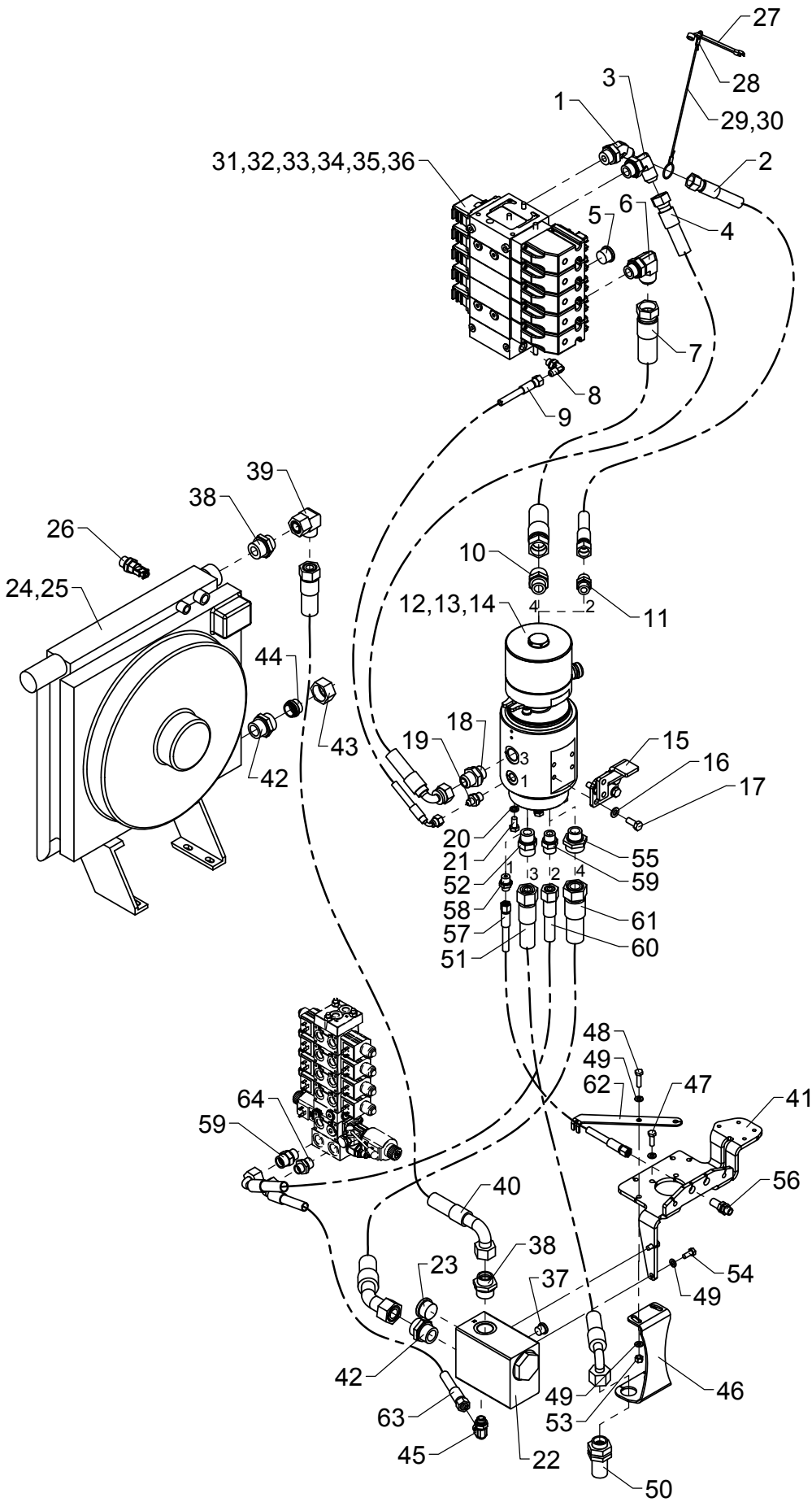

# Hydraulic system, pump and return hoses, 1 circuit + variable pump

As from / To loader no.: 96 03 83
Created: 14.04.2015
Modified:

| Item no. | Qty. | Part no. | Description | Remarks |
|---|---|---|---|---|
| 1 | 1 | 26291 | Elbow connection 45° | V40XS14-16 - 3/4 |
| 2 | 1 | 62922 | Hose JIC | 1/2" x 1400 L/L JIC |
| 3 | 1 | 26693 | Elbow connection | C40XS18/20 - 3/4 |
| 4 | 1 | 56080 | Hose | 5/8" x 1400 90/L JIC |
| 5 | 1 | 26355 | Plug | VS-R-3/4 WD |
| 6 | 1 | 25840 | Elbow connection | C40XS25 - 3/4 |
| 7 | 1 | 56048 | Hose | 1" x 900 L/L JIC |
| 8 | 1 | 25858 | Elbow connection | C40XS8 - 1/4 |
| 9 | 1 | 62934 | Hose | 1/4" x 1330 90/L JIC |
| 10 | 1 | 25836 | Straight connection | F40XS25 - 3/4 |
| 11 | 1 | 25833 | Straight connection | F40XS14/16 - 1/2 |
| 12 | 1 | 49621 | Swivel coupling | |
| 13 | 1 | 49623 | Hydr. part, swivel coupling | |
| 14 | 1 | 49624 | Electr. part, swivel coupling | |
| 15 | 1 | 6301329 | Carrier fitting | |
| 16 | 4 | 31177 | Washer | 10 mm |
| 17 | 4 | 30155 | Set screw | M10 x 25 |
| 18 | 1 | 25834 | Straight connection | F40XS18/20 - 3/4 |
| 19 | 1 | 25830 | Straight connection | F40XS8 - 3/8 |
| 20 | 4 | 30933 | Nordlock washer | 10 mm |
| 21 | 4 | 31517 | Set screw, stainless | M10 x 20 |
| 22 | 1 | 59056 | Cooler valve | |
| 23 | 1 | 26321 | Plug | VS-R 1" WD |
| 24 | 1 | 50274 | Oil Cooler, 24V | |
| 25 | 1 | 50275 | Oil Cooler, 12V | |
| 26 | 1 | 50290 | Temperature sensor, oil cooler | |
| 27 | 2 | 42953 | Adjustable spanner | |
| 28 | 4 | 62161 | Wire lock | |
| 29 | 1 | 62160 | Wire rope, nylon | 450 mm |
| 30 | 1 | 62160 | Wire rope, nylon | 600 mm |
| 31 | 1 | 55601 | Control valve | 4 sekt. V |
| 32 | 1 | 55603 | Control valve | 5 sekt. Winch / V |
| 33 | 1 | 55605 | Control valve | 5 sekt. 1 EXV |
| 34 | 1 | 55607 | Control valve | 6 sekt. Winch+1 EXV |
| 35 | 1 | 55609 | Control valve | 6 sekt. FJ / V |
| 36 | 1 | 55611 | Control valve | 7 sekt. FJ/Wi/V |
| 37 | 1 | 25277 | Plug | VS-R-3/8 WD |
| 38 | 2 | 26122 | Connection | P-GEV 22 LR 1-WD |
| 39 | 1 | 25209 | Elbow connection | EWSD 22 L |

# 6020

6308100_2
Intern ref.: 6308090

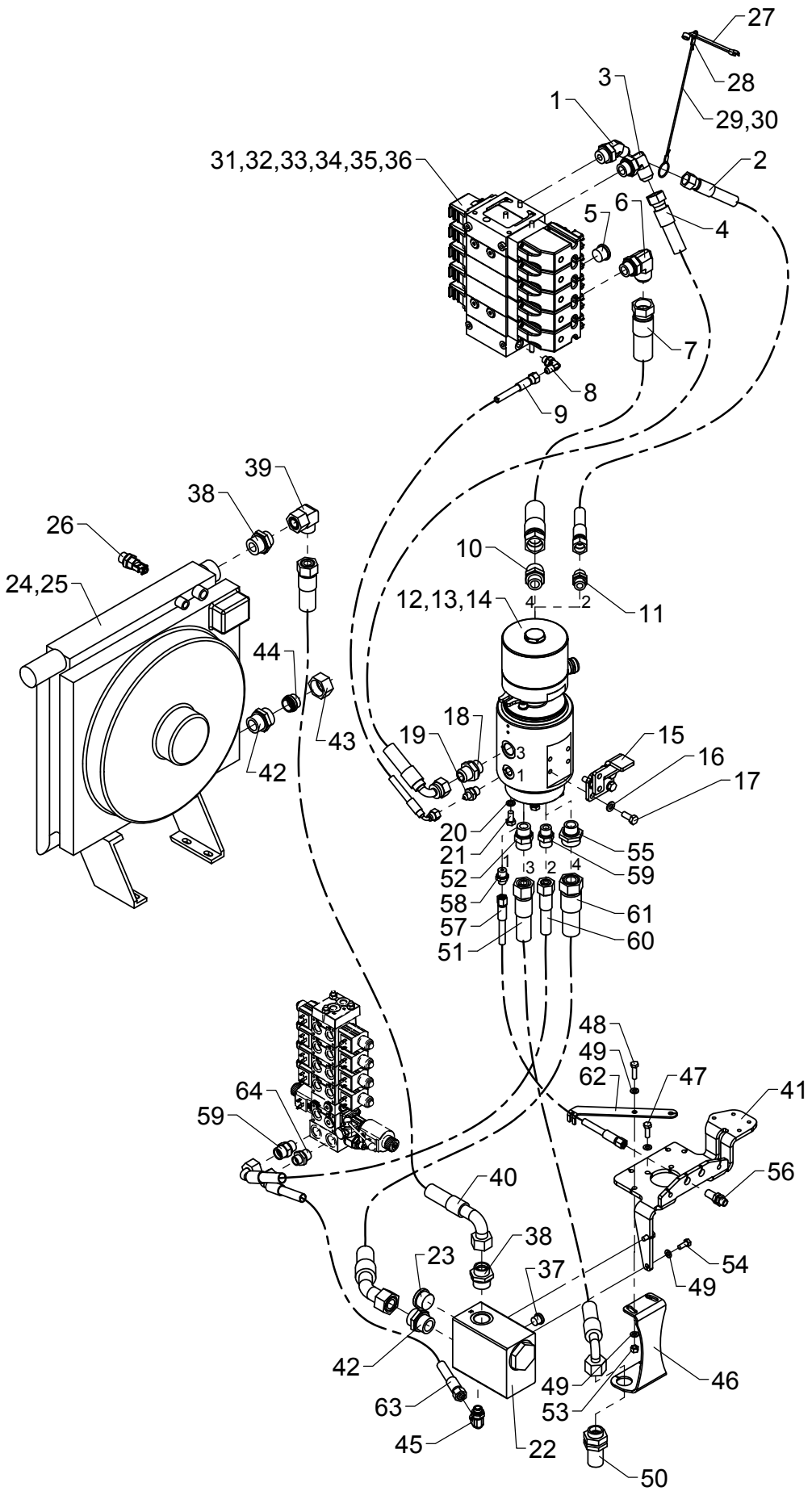

# Hydraulic system, pump and return hoses, 1 circuit + variable pump

As from / To loader no.: 96 03 83
Created: 14.04.2015
Modified:

| Item no. | Qty. | Part no. | Description | Remarks |
|---|---|---|---|---|
| 40 | 1 | 56502 | Hose | Til køler |
| 41 | 1 | 6301391 | Bracket for high-pressure filter | |
| 42 | 2 | 26163 | Connection | P-GEV 28 LR-WD |
| 43 | 1 | 26108 | Coupling nut | M 28 L |
| 44 | 1 | 26347 | Blanking plug | VSD 28 L |
| 45 | 1 | 26897 | Elbow connection | 12 mm - 3/8" |
| 46 | 1 | 6301395 | Bracket | |
| 47 | 1 | 30134 | Set screw, stainless | M8 x 25 |
| 48 | 1 | 30135 | Set screw, stainless | M8 x 30 |
| 49 | 6 | 31147 | Face washer, 8 mm | |
| 50 | 1 | 26369 | Bulkhead connection | GSS 20 S |
| 51 | 1 | 62624 | Hose | 5/8 x 1000mm L/90 |
| 52 | 1 | 26197 | Connection | P-GEV 20 SR-WD |
| 53 | 2 | 30886 | Lock nut, stainless | M8 |
| 54 | 2 | 30132 | Set screw, stainless | |
| 55 | 1 | 26845 | Connection | GES 28 LR 3/4-WD |
| 56 | 1 | 25261 | Bulkhead connection | P-GSV 8 L |
| 57 | 1 | 62586 | Hose | |
| 58 | 1 | 25244 | Connection | GES 8 LR 3/8-WD |
| 59 | 2 | 26334 | Connection | P-GEV 16 SR-WD |
| 60 | 1 | 56385 | Hose | |
| 61 | 1 | 56979 | Hose | 1"x1500 L/45° |
| 62 | 1 | 6301396 | Reinforcement plate for RCL | |
| 63 | 1 | 0017870 | Hose | 3/8" x 450 V/O |
| 64 | 1 | 25108 | Connection | GES 12 LR 1/2-WD |

# ODIN

An Oshkosh Corportation Company

Intern ref.: 6300930

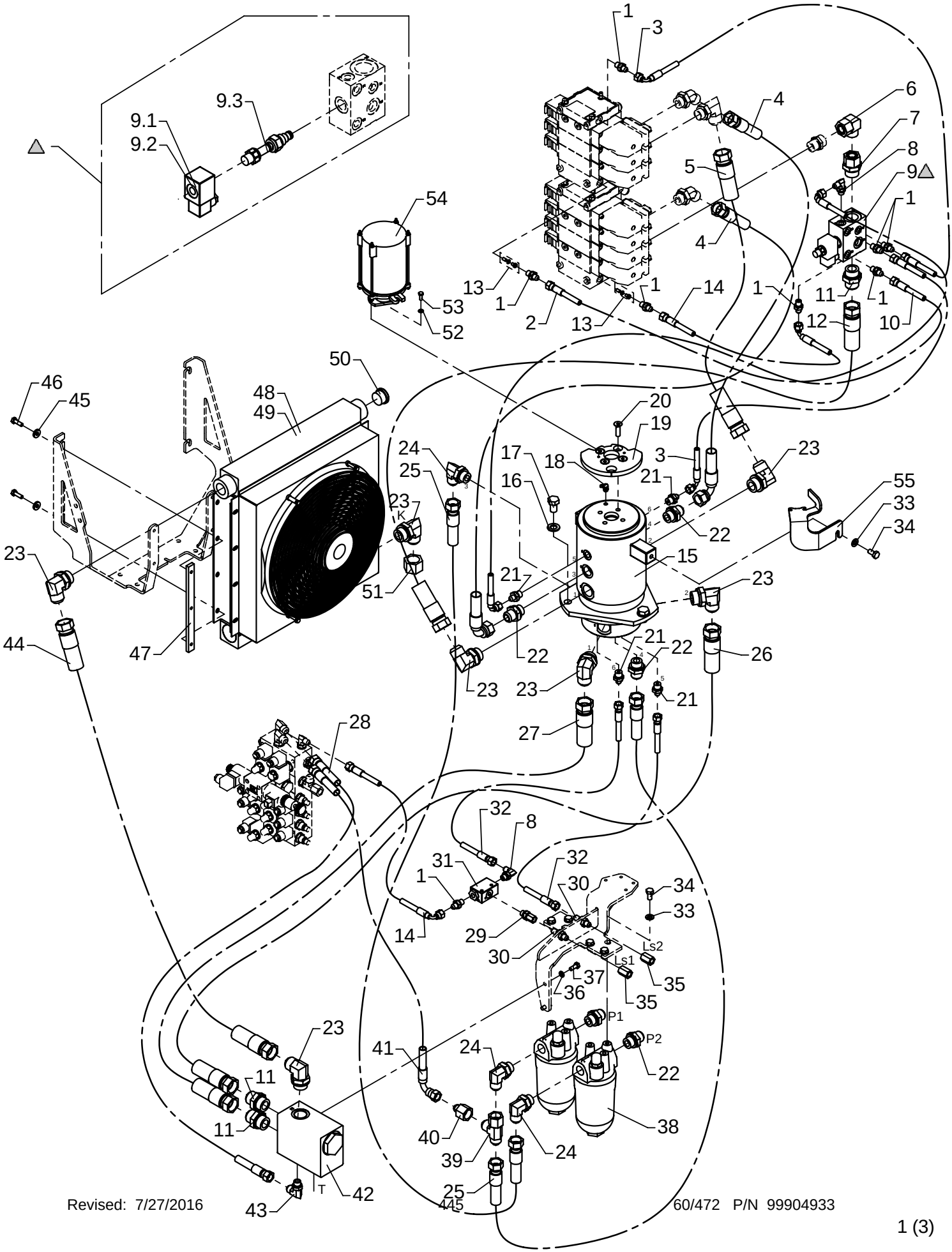

# Hydraulic system, pump and return hoses, 2 circuits + variable pump

As from / To loader no.: 96 00 00 / 96 00 49
Created: 03.10.2003
Modified: 30.10.2006

| Item no. | Qty. | Part no. | Description | Remarks |
|---|---|---|---|---|
| 1 | 8 | 25829 | Straight connection | F40XS 8-1/4 JIC |
| 2 | 1 | 62887 | Hose | 1/4" x 550 mm V/O JIC |
| 3 | 2 | 62901 | Hose | 1/4" x 900 mm V/O JIC |
| 4 | 2 | 62977 | Hose | 5/8" x 1100 mm V/O JIC |
| 5 | 1 | 56046 | Hose | 1" x 1000 mm O/O JIC |
| 6 | 1 | 25209 | Elbow connection | EWSD 22 L |
| 7 | 1 | 26391 | Straight connection | EGESD 22 LR 1-WD |
| 8 | 2 | 25858 | Elbow connection | C40XS 12-3/8 JIC |
| 9 | 1 | 59061 | Dump valve | |
| | | 61777 | Solenoid | 12V |
| | | 61778 | Solenoid | 26V |
| | | 59642 | Magnet coil | |
| 10 | 1 | 62934 | Hose | 1/4" x 1330 mm V/O JIC |
| 11 | 3 | 25863 | Straight connection | F40XS 25-1 JIC |
| 12 | 1 | 56048 | Hose | 1" x 900 mm O/O JIC |
| 13 | 2 | 62065 | Closed center kit | |
| 14 | 2 | 62974 | Hose | 1/4" x 350 mm V/O JIC |
| 15 | 1 | 58727 | Swivel coupling, hydraulic | |
| 16 | 3 | 31135 | Washer | 16 mm |
| 17 | 3 | 30266 | Set screw | M16 x 25 |
| 18 | 1 | 31322 | Lubricator | 1/8 RG - 90 |
| 19 | 1 | 6301196 | Cam disc, 2-stage LMB | |
| 20 | 4 | 30955 | Countersunk screw | MK10 x 35 |
| 21 | 4 | 25830 | Straight connection | F40XS8 - 3/8 JIC |
| 22 | 5 | 25834 | Straight connection | F40XS 18/20-3/4 JIC |
| 23 | 7 | 26267 | Elbow connection | C40XS 25-1 JIC |
| 24 | 3 | 26693 | Elbow connection | C40XS 18/20-3/4 JIC |
| 25 | 2 | 56045 | Hose | 5/8" x 1450 mm O/O JIC |
| 26 | 1 | 56050 | Hose | 1" x 1300 mm O/O JIC |
| 27 | 1 | 56049 | Hose | 1" x 1050 mm O/O JIC |
| 28 | 1 | 62884 | Hose | 3/8" x 500 mm O/O JIC |
| 29 | 1 | 26272 | Straight connection | F64XS 14/16 - 3/8" JIC |
| 30 | 2 | 25823 | Bulkhead connection | WTX-WLNS 8 JIC |
| 31 | 1 | 60338 | Shuttle valve | |
| 32 | 2 | 56130 | Hose | 1/4" x 1150 mm O/O JIC |
| 33 | 7 | 31177 | Washer | 10 mm |
| 34 | 7 | 30154 | Set screw | M10 x 20 |
| 35 | 2 | 26270 | Fitting | TTX4S 8-1/4 JIC |
| 36 | 2 | 31155 | Spring washer | 8 mm |
| 37 | 2 | 30132 | Set screw, stainless | M8 x 20 |

# ODIN

An Oshkosh Corportation Company

Intern ref.: 6300930

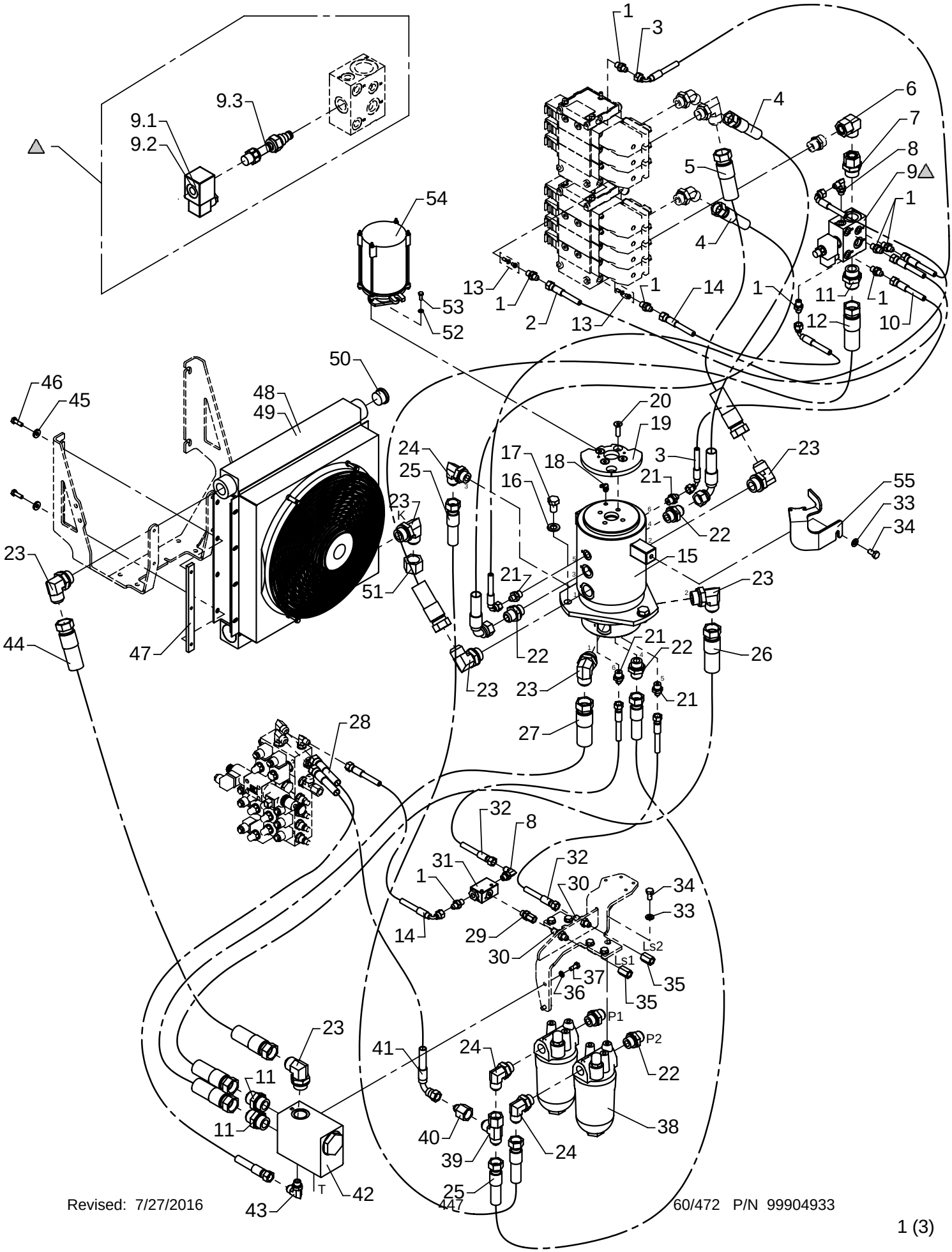

# Hydraulic system, pump and return hoses, 2 circuits + variable pump

As from / To loader no.: 96 00 00 / 96 00 49
Created: 03.10.2003
Modified: 30.10.2006

| Item no. | Qty. | Part no. | Description | Remarks |
|---|---|---|---|---|
| 38 | 2 | 60201 | High pressure filter | |
| 39 | 1 | 25828 | Connection | R6XS 20 JIC |
| 40 | 1 | 25865 | Reducing connection | TRTXS 8/20-12 JIC |
| 41 | 1 | 56091 | Hose | 3/8" x 350 mm V/O JIC |
| 42 | 1 | 59056 | Cooler valve | |
| 43 | 1 | 25838 | Elbow connection | C40XS 12-3/8 JIC |
| 44 | 1 | 56047 | Hose | 3/4" x 1400 mm O/O JIC |
| 45 | 4 | 31755 | Washer | 8 mm |
| 46 | 4 | 30134 | Set screw, stainless | M8 x 25 |
| 47 | 2 | 6381974 | Threaded disc | |
| 48 | 1 | 59310 | Oil cooler 24 V | |
| 49 | 1 | 59312 | Oil cooler 12 V | |
| 50 | 1 | 26321 | Plug | VS-R 1" WD |
| 51 | 1 | 25848 | Screw cap JIC | FNTXS 25 JIC |
| 52 | 2 | 31154 | Spring washer, stainless | 6 mm |
| 53 | 2 | 30112 | Set screw, stainless | M6 x 16 |
| 54 | 1 | 28549 | Swivel coupling, electric | |
| 55 | 1 | 6301197 | Carrier | |

# ODIN

Intern ref.: 6300930

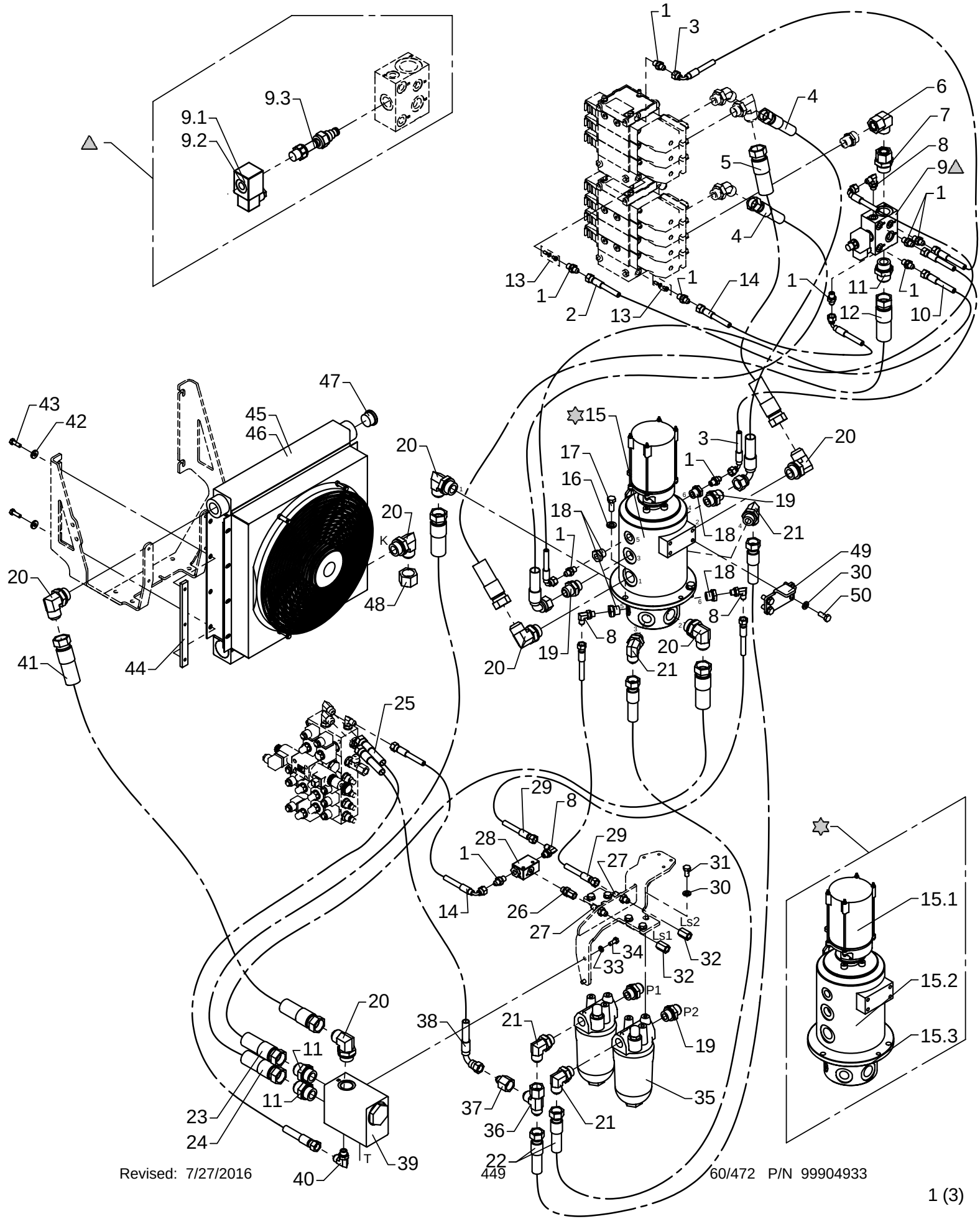

# Hydraulic system, pump and return hoses, 2 circuits + variable pump

As from / To loader no.: 96 00 50 / 96 00 53
Created: 17.06.2005
Modified: 30.10.2006

| Item no. | Qty. | Part no. | Description | Remarks |
|---|---|---|---|---|
| 1 | 10 | 25829 | Straight connection | F40XS 8-1/4 JIC |
| 2 | 1 | 62887 | Hose | 1/4" x 550 mm V/O JIC |
| 3 | 2 | 62901 | Hose | 1/4" x 900 mm V/O JIC |
| 4 | 2 | 62977 | Hose | 5/8" x 1100 mm V/O JIC |
| 5 | 1 | 56046 | Hose | 1" x 1000 mm O/O JIC |
| 6 | 1 | 25209 | Elbow connection | EWSD 22 L |
| 7 | 1 | 26391 | Straight connection | EGESD 22 LR 1-WD |
| 8 | 4 | 25858 | Elbow connection | C40XS 12-3/8 JIC |
| 9 | 1 | 59061 | Dump valve | |
| | | 61777 | Solenoid | 12V |
| | | 61778 | Solenoid | 26V |
| | | 59642 | Magnet coil | |
| 10 | 1 | 62934 | Hose | 1/4" x 1330 mm V/O JIC |
| 11 | 3 | 25863 | Straight connection | F40XS 25-1 JIC |
| 12 | 1 | 56048 | Hose | 1" x 900 mm O/O JIC |
| 13 | 2 | 62065 | Closed center kit | |
| 14 | 2 | 62974 | Hose | 1/4" x 350 mm V/O JIC |
| 15 | 1 | 49105 | Swivel coupling | |
| | | 28549 | Swivel coupling, electric | |
| | | 49106 | Swivel coupling | |
| | | 49115 | Seal kit | |
| 16 | 3 | 31131 | Washer | 12 mm |
| 17 | 3 | 30177 | Set screw | M12 x 30 |
| 18 | 4 | 25180 | Reducing connection | RED-R 1/2-WD/R 1/4 |
| 19 | 4 | 25834 | Straight connection | F40XS 18/20-3/4 JIC |
| 20 | 7 | 26267 | Elbow connection | C40XS 25-1 JIC |
| 21 | 4 | 26693 | Elbow connection | C40XS 18/20-3/4 JIC |
| 22 | 2 | 56045 | Hose | 5/8" x 1450 mm O/O JIC |
| 23 | 1 | 56050 | Hose | 1" x 1300 mm O/O JIC |
| 24 | 1 | 56049 | Hose | 1" x 1050 mm O/O JIC |
| 25 | 1 | 62884 | Hose | 3/8" x 500 mm O/O JIC |
| 26 | 1 | 26272 | Straight connection | F64XS 14/16 - 3/8" JIC |
| 27 | 2 | 25823 | Bulkhead connection | WTX-WLNS 8 JIC |
| 28 | 1 | 60338 | Shuttle valve | |
| 29 | 2 | 56130 | Hose | 1/4" x 1150 mm O/O JIC |
| 30 | 10 | 31177 | Washer | 10 mm |
| 31 | 6 | 30154 | Set screw | M10 x 20 |
| 32 | 2 | 26270 | Fitting | TTX4S 8-1/4 JIC |
| 33 | 2 | 31155 | Spring washer | 8 mm |
| 34 | 2 | 30132 | Set screw, stainless | M8 x 20 |

# ODIN

An Oshkosh Corportation Company

Intern ref.: 6300930

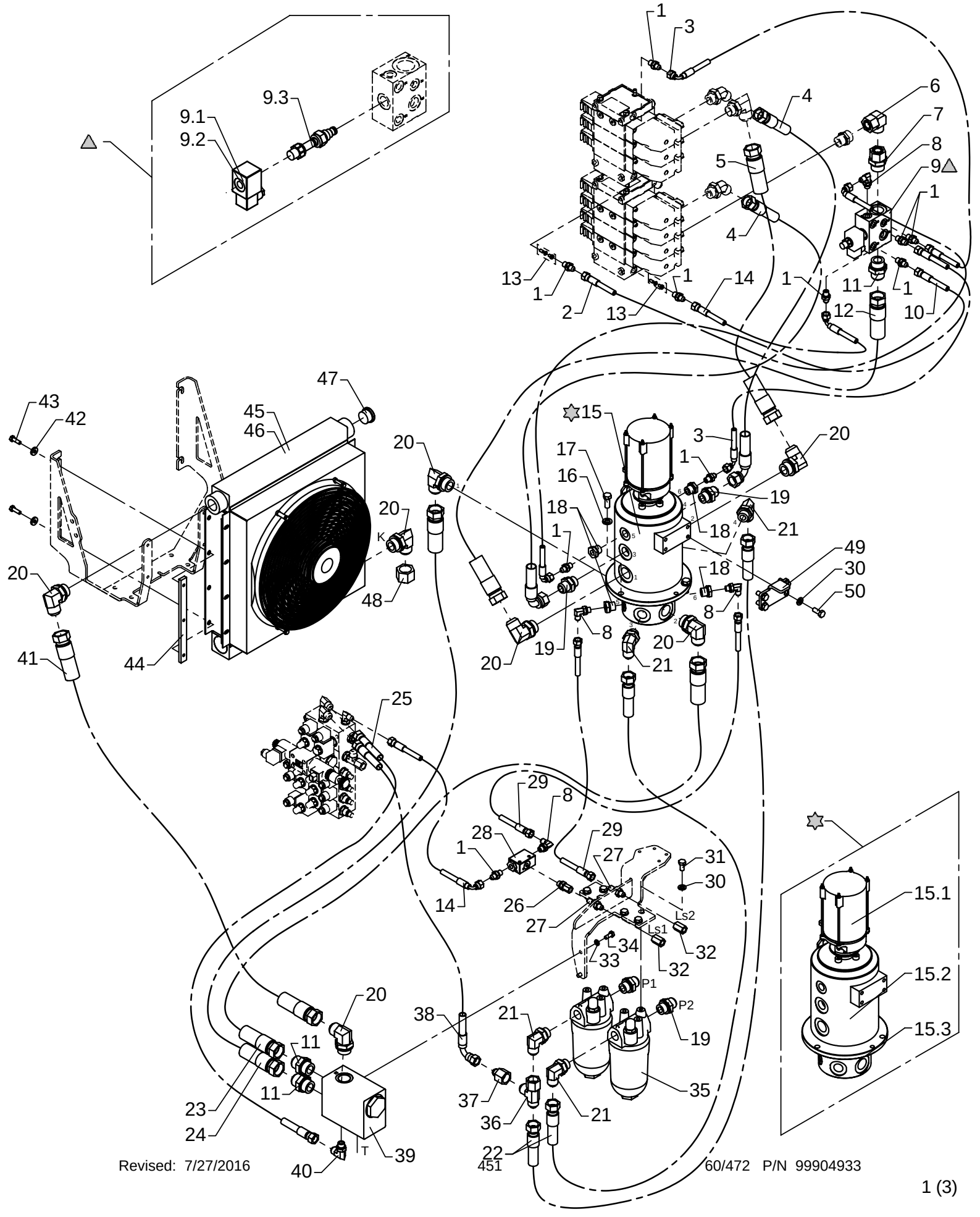

# Hydraulic system, pump and return hoses, 2 circuits + variable pump

As from / To loader no.: 96 00 50 / 96 00 53
Created: 17.06.2005
Modified: 30.10.2006

| Item no. | Qty. | Part no. | Description | Remarks |
|---|---|---|---|---|
| 35 | 2 | 60201 | High pressure filter | |
| 36 | 1 | 25828 | Connection | R6XS 20 JIC |
| 37 | 1 | 25865 | Reducing connection | TRTXS 8/20-12 JIC |
| 38 | 1 | 56091 | Hose | 3/8" x 350 mm V/O JIC |
| 39 | 1 | 59056 | Cooler valve | |
| 40 | 1 | 25838 | Elbow connection | C40XS 12-3/8 JIC |
| 41 | 1 | 56047 | Hose | 3/4" x 1400 mm O/O JIC |
| 42 | 4 | 31755 | Washer | 8 mm |
| 43 | 4 | 30134 | Set screw, stainless | M8 x 25 |
| 44 | 2 | 6381974 | Threaded disc | |
| 45 | 1 | 59310 | Oil cooler 24 V | |
| 46 | 1 | 59312 | Oil cooler 12 V | |
| 47 | 1 | 26321 | Plug | VS-R 1" WD |
| 48 | 1 | 25848 | Screw cap JIC | FNTXS 25 JIC |
| 49 | 1 | 6302621 | Carrier fitting | |
| 50 | 4 | 30155 | Set screw | M10 x 25 |

# ODIN

Intern ref.: 6300930

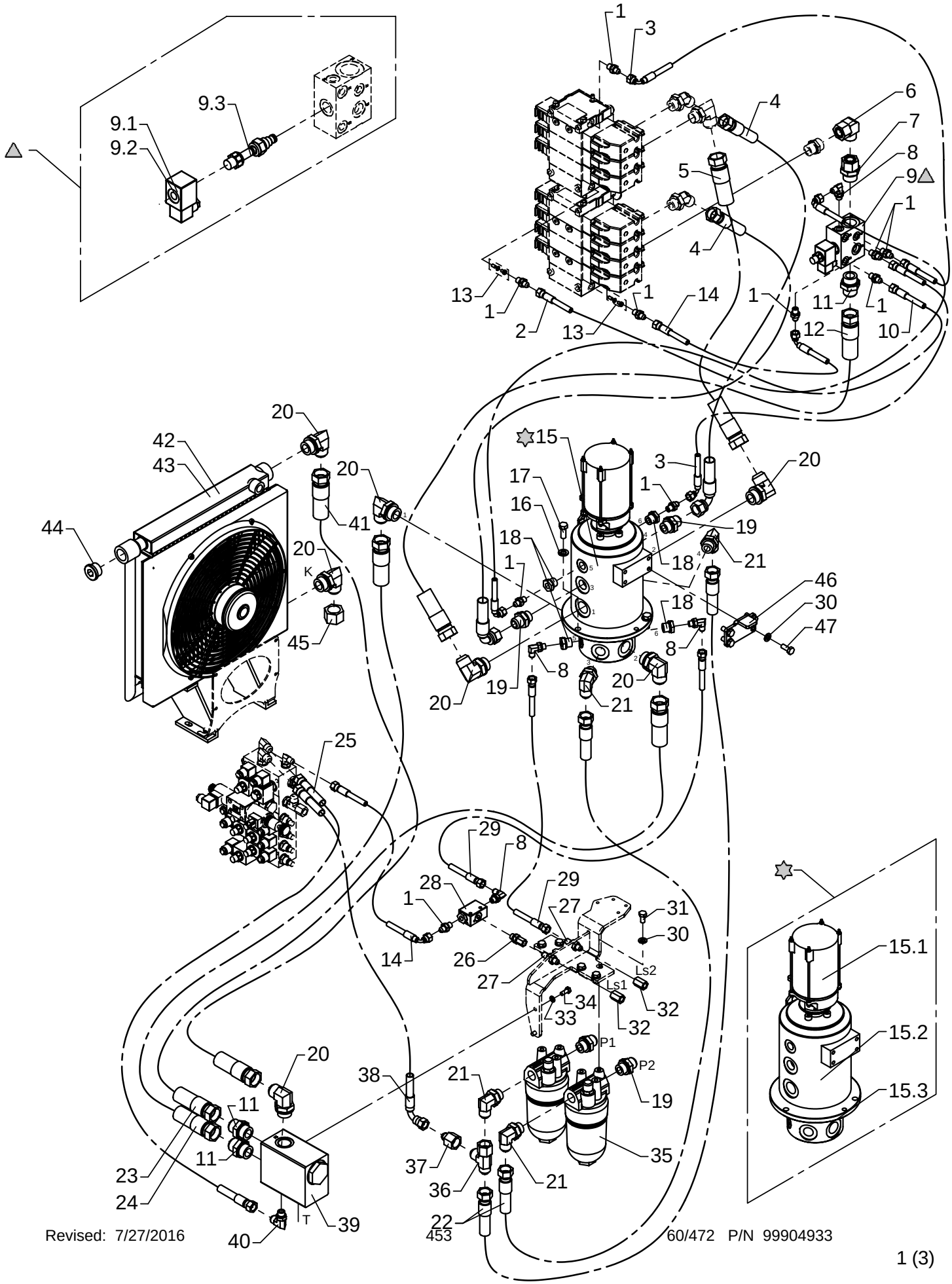

# Hydraulic system, pump and return hoses, 2 circuits + variable pump

As from / To loader no.: 96 00 54 / 96 01 49
Created: 17.06.2005
Modified: 30.10.2006

| Item no. | Qty. | Part no. | Description | Remarks |
|---|---|---|---|---|
| 1 | 10 | 25829 | Straight connection | F40XS 8-1/4 JIC |
| 2 | 1 | 62887 | Hose | 1/4" x 550 mm V/O JIC |
| 3 | 2 | 62901 | Hose | 1/4" x 900 mm V/O JIC |
| 4 | 2 | 62977 | Hose | 5/8" x 1100 mm V/O JIC |
| 5 | 1 | 56046 | Hose | 1" x 1000 mm O/O JIC |
| 6 | 1 | 25209 | Elbow connection | EWSD 22 L |
| 7 | 1 | 26391 | Straight connection | EGESD 22 LR 1-WD |
| 8 | 4 | 25858 | Elbow connection | C40XS 12-3/8 JIC |
| 9 | 1 | 59061 | Dump valve | |
| | | 61777 | Solenoid | 12V |
| | | 61778 | Solenoid | 26V |
| | | 59642 | Magnet coil | |
| 10 | 1 | 62934 | Hose | 1/4" x 1330 mm V/O JIC |
| 11 | 3 | 25863 | Straight connection | F40XS 25-1 JIC |
| 12 | 1 | 56048 | Hose | 1" x 900 mm O/O JIC |
| 13 | 2 | 62065 | Closed center kit | |
| 14 | 2 | 62974 | Hose | 1/4" x 350 mm V/O JIC |
| 15 | 1 | 49105 | Swivel coupling | |
| | | 28549 | Swivel coupling, electric | |
| | | 49106 | Swivel coupling | |
| | | 49115 | Seal kit | |
| 16 | 3 | 31131 | Washer | 12 mm |
| 17 | 3 | 30177 | Set screw | M12 x 30 |
| 18 | 4 | 25180 | Reducing connection | RED-R 1/2-WD/R 1/4 |
| 19 | 4 | 25834 | Straight connection | F40XS 18/20-3/4 JIC |
| 20 | 7 | 26267 | Elbow connection | C40XS 25-1 JIC |
| 21 | 4 | 26693 | Elbow connection | C40XS 18/20-3/4 JIC |
| 22 | 2 | 56045 | Hose | 5/8" x 1450 mm O/O JIC |
| 23 | 1 | 56050 | Hose | 1" x 1300 mm O/O JIC |
| 24 | 1 | 56049 | Hose | 1" x 1050 mm O/O JIC |
| 25 | 1 | 62884 | Hose | 3/8" x 500 mm O/O JIC |
| 26 | 1 | 26272 | Straight connection | F64XS 14/16 - 3/8" JIC |
| 27 | 2 | 25823 | Bulkhead connection | WTX-WLNS 8 JIC |
| 28 | 1 | 60338 | Shuttle valve | |
| 29 | 2 | 56130 | Hose | 1/4" x 1150 mm O/O JIC |
| 30 | 10 | 31177 | Washer | 10 mm |
| 31 | 6 | 30154 | Set screw | M10 x 20 |
| 32 | 2 | 26270 | Fitting | TTX4S 8-1/4 JIC |
| 33 | 2 | 31155 | Spring washer | 8 mm |
| 34 | 2 | 30132 | Set screw, stainless | M8 x 20 |

# ODIN

Intern ref.: 6300930

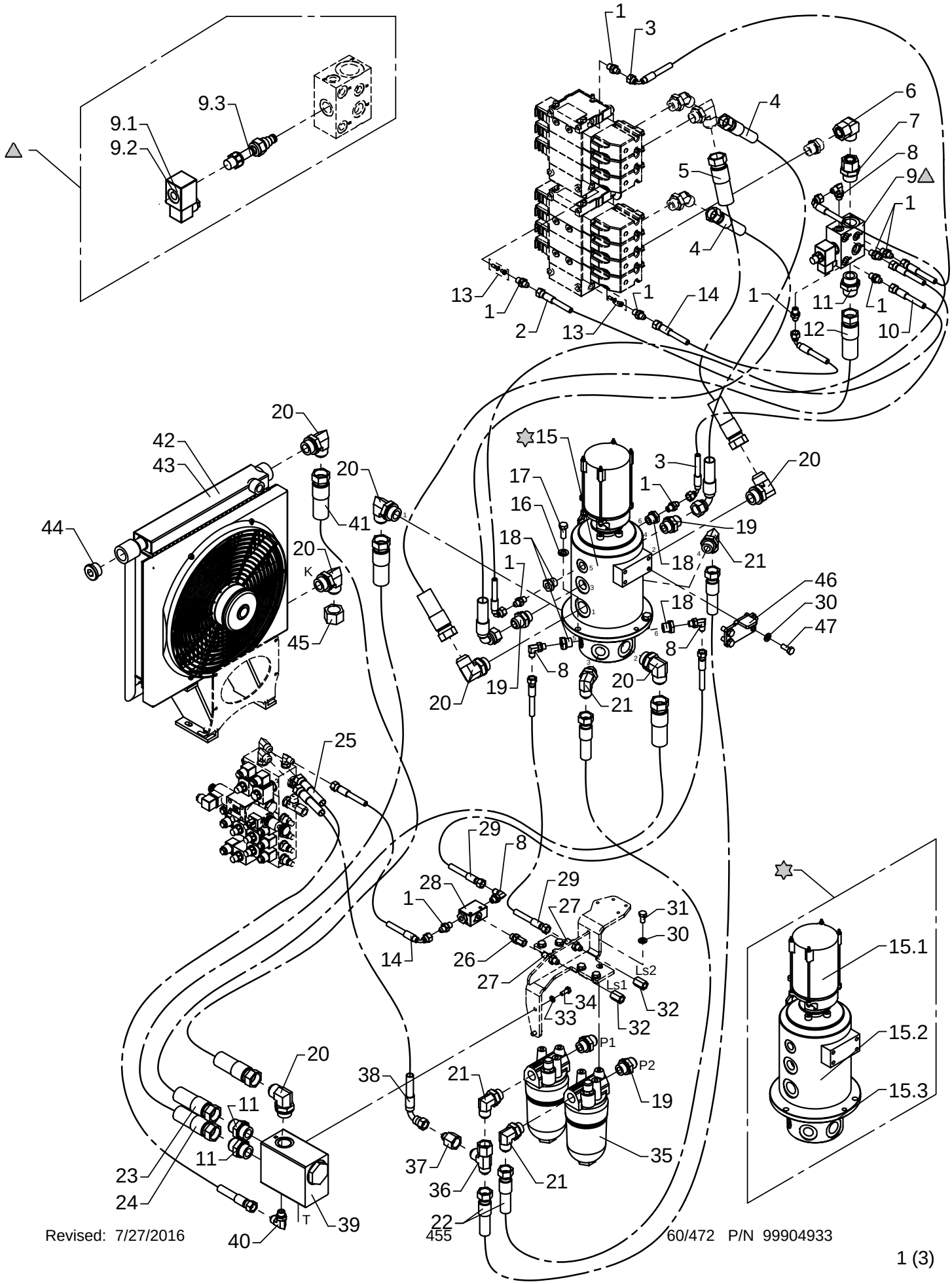

# Hydraulic system, pump and return hoses, 2 circuits + variable pump

As from / To loader no.: 96 00 54 / 96 01 49
Created: 17.06.2005
Modified: 30.10.2006

| Item no. | Qty. | Part no. | Description | Remarks |
|---|---|---|---|---|
| 35 | 2 | 60201 | High pressure filter | |
| 36 | 1 | 25828 | Connection | R6XS 20 JIC |
| 37 | 1 | 25865 | Reducing connection | TRTXS 8/20-12 JIC |
| 38 | 1 | 56091 | Hose | 3/8" x 350 mm V/O JIC |
| 39 | 1 | 59056 | Cooler valve | |
| 40 | 1 | 25838 | Elbow connection | C40XS 12-3/8 JIC |
| 41 | 1 | 56262 | Hose | 3/4" x 2000 mm O/O JIC |
| 42 | 1 | 59310 | Oil cooler 24 V | |
| 43 | 1 | 59312 | Oil cooler 12 V | |
| 44 | 1 | 26321 | Plug | VS-R 1" WD |
| 45 | 1 | 25848 | Screw cap JIC | FNTXS 25 JIC |
| 46 | 1 | 6302621 | Carrier fitting | |
| 47 | 4 | 30155 | Set screw | M10 x 25 |

# ODIN

An Oshkosh Corportation Company

Intern ref.: 6300930

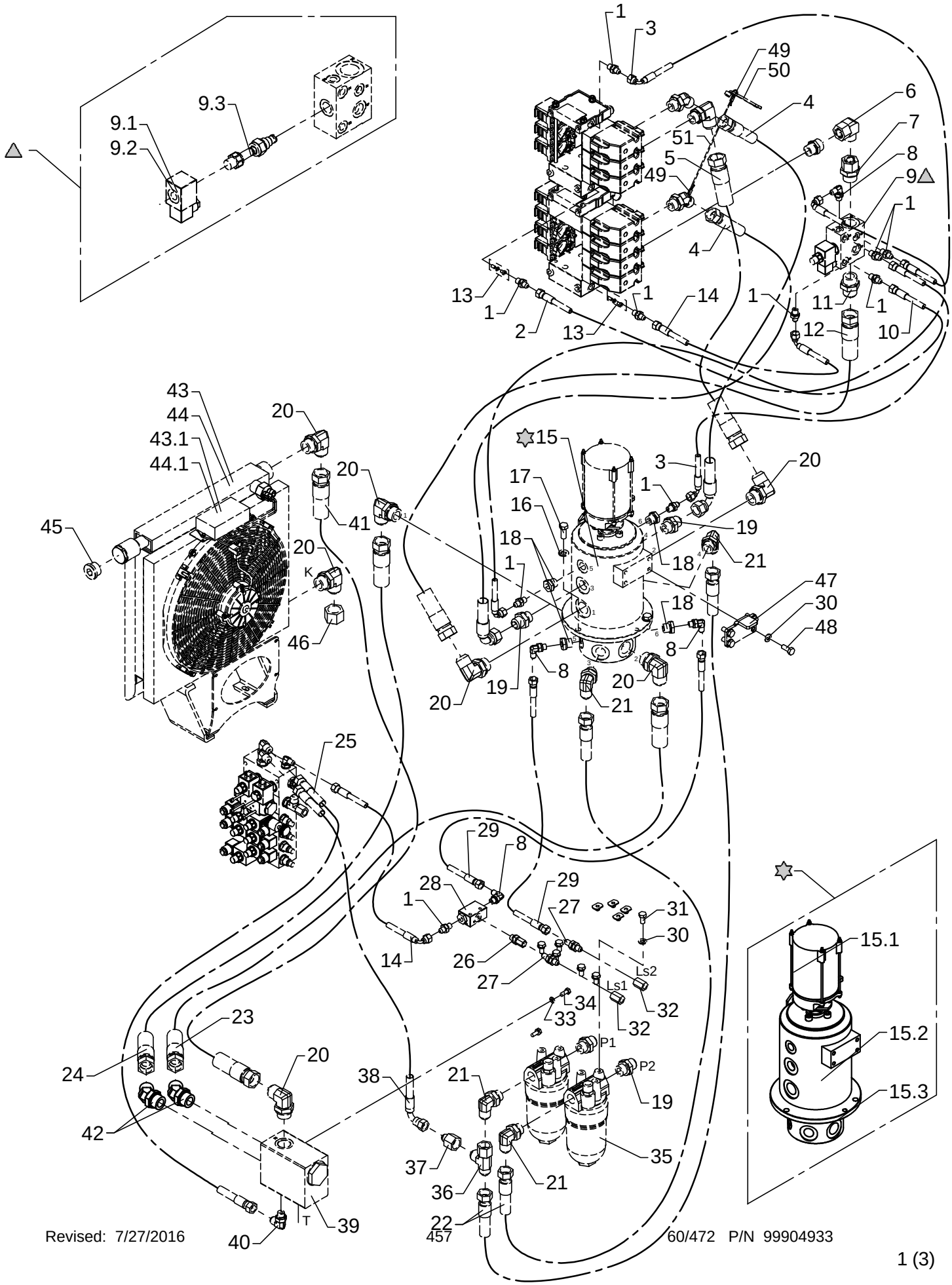

# Hydraulic system, pump and return hoses, 2 circuits + variable pump

As from / To loader no.: 96 01 50 / 96 02 69
Created: 30.10.2006
Modified: 23.05.2011

| Item no. | Qty. | Part no. | Description | Remarks |
|---|---|---|---|---|
| 1 | 10 | 25829 | Straight connection | F40XS8 - 1/4 |
| 2 | 1 | 62887 | Hose | 1/4" x 550 mm V/O JIC |
| 3 | 2 | 62901 | Hose | 1/4" x 900 mm V/O JIC |
| 4 | 2 | 62977 | Hose | 5/8" x 1100 mm V/O JIC |
| 5 | 1 | 56046 | Hose | 1" x 1000 mm O/O JIC |
| 6 | 1 | 25209 | Elbow connection | EWSD 22 L |
| 7 | 1 | 26391 | Straight connection | EGESD 22 LR 1-WD |
| 8 | 4 | 25858 | Elbow connection | C40XS8 - 1/4 |
| 9 | 1 | 59061 | Dump valve | |
| | | 61777 | Solenoid | 12V |
| | | 61778 | Solenoid | 26V |
| | | 59642 | Magnet coil | |
| 10 | 1 | 62934 | Hose | 1/4" x 1330 mm V/O JIC |
| 11 | 1 | 25863 | Straight connection | F40XS25 - 1 |
| 12 | 1 | 56048 | Hose | 1" x 900 mm O/O JIC |
| 13 | 2 | 62065 | Closed center kit | |
| 14 | 2 | 62974 | Hose | 1/4" x 350 mm V/O JIC |
| 15 | 1 | 49105 | Swivel coupling | |
| | | 28549 | Swivel coupling, electric | |
| | | 49106 | Swivel coupling | |
| | | 49115 | Seal kit | |
| 16 | 3 | 31131 | Washer | 12 mm |
| 17 | 3 | 30177 | Set screw | M12 x 30 |
| 18 | 4 | 25180 | Reducing connection | RED-R 1/2-WD/R 1/4 |
| 19 | 4 | 25834 | Straight connection | F40XS18/20 - 3/4 |
| 20 | 7 | 26267 | Elbow connection | C40XS25 - 1 |
| 21 | 4 | 26693 | Elbow connection | C40XS18/20 - 3/4 |
| 22 | 2 | 56045 | Hose | 5/8" x 1450 mm O/O JIC |
| 23 | 1 | 56050 | Hose | 1" x 1300 mm O/O JIC |
| 24 | 1 | 56049 | Hose | 1" x 1050 mm O/O JIC |
| 25 | 1 | 62884 | Hose | 3/8" x 500 mm O/O JIC |
| 26 | 1 | 26272 | Straight connection | F64XS 14/16 - 3/8" JIC |
| 27 | 2 | 25823 | Bulkhead connection | WTX-WLNS 8 JIC |
| 28 | 1 | 60338 | Shuttle valve | |
| 29 | 2 | 56130 | Hose | 1/4" x 1150 mm O/O JIC |
| 30 | 10 | 31177 | Washer | 10 mm |
| 31 | 6 | 30154 | Set screw | M10 x 20 |
| 32 | 2 | 26270 | Fitting | TTX4S 8-1/4 JIC |
| 33 | 2 | 31155 | Spring washer | 8 mm |
| 34 | 2 | 30132 | Set screw, stainless | |

# ODIN

An Oshkosh Corportation Company

Intern ref.: 6300930

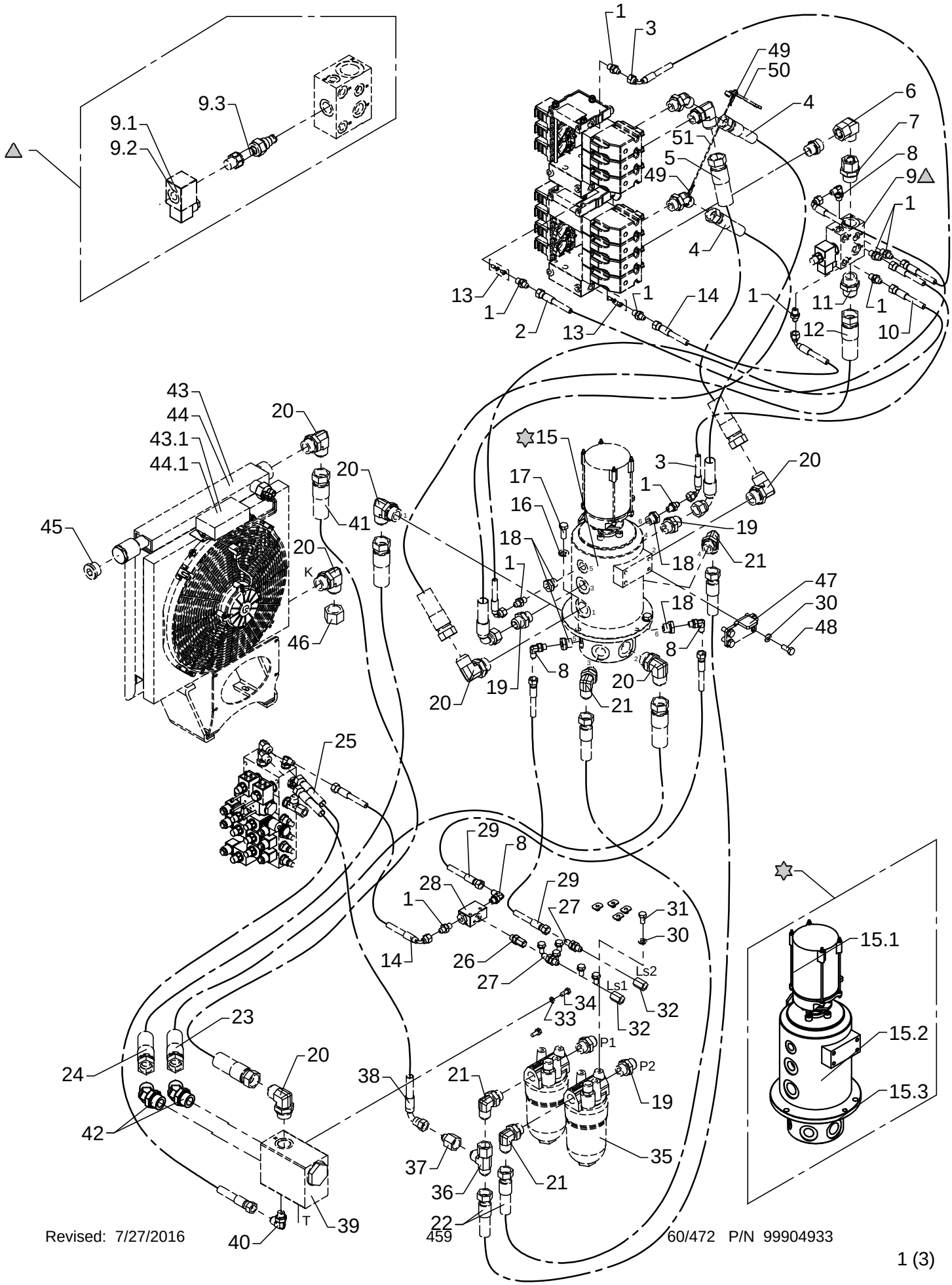

# Hydraulic system, pump and return hoses, 2 circuits + variable pump

As from / To loader no.: 96 01 50 / 96 02 69
Created: 30.10.2006
Modified: 23.05.2011

| Item no. | Qty. | Part no. | Description | Remarks |
|---|---|---|---|---|
| 35 | 2 | 60201 | High pressure filter | |
| 36 | 1 | 25828 | Connection | R6XS 20 JIC |
| 37 | 1 | 25865 | Reducing connection | TRTXS8/20-12 |
| 38 | 1 | 56091 | Hose | 3/8" x 350 mm V/O JIC |
| 39 | 1 | 59056 | Cooler valve | |
| 40 | 1 | 25838 | Elbow connection | C40XS12 - 3/8 |
| 41 | 1 | 56262 | Hose | 3/4" x 2000 mm O/O JIC |
| 42 | 2 | 25734 | Elbow connection 45° | V40XS25 - 1 |
| 43 | 1 | 50282 | Oil cooler, 24 V + Smartdrive | |
| | | 50284 | Smartdrive kit for oil cooler | |
| | | 50284 | Smartdrive kit for oil cooler | |
| 44 | 1 | 50283 | Oil cooler, 12 V + Smartdrive | |
| 45 | 1 | 26321 | Plug | VS-R 1" WD |
| 46 | 1 | 25848 | Screw cap JIC | FNTXS 25 JIC |
| 47 | 1 | 6302621 | Carrier fitting | |
| 48 | 4 | 30155 | Set screw | M10 x 25 |
| 49 | 2 | 62161 | Wire lock | |
| 50 | 1 | 42953 | Adjustable spanner | |
| 51 | 1 | 62160 | Wire rope, nylon | 400 mm |

# ODIN

Intern ref.: 6301730

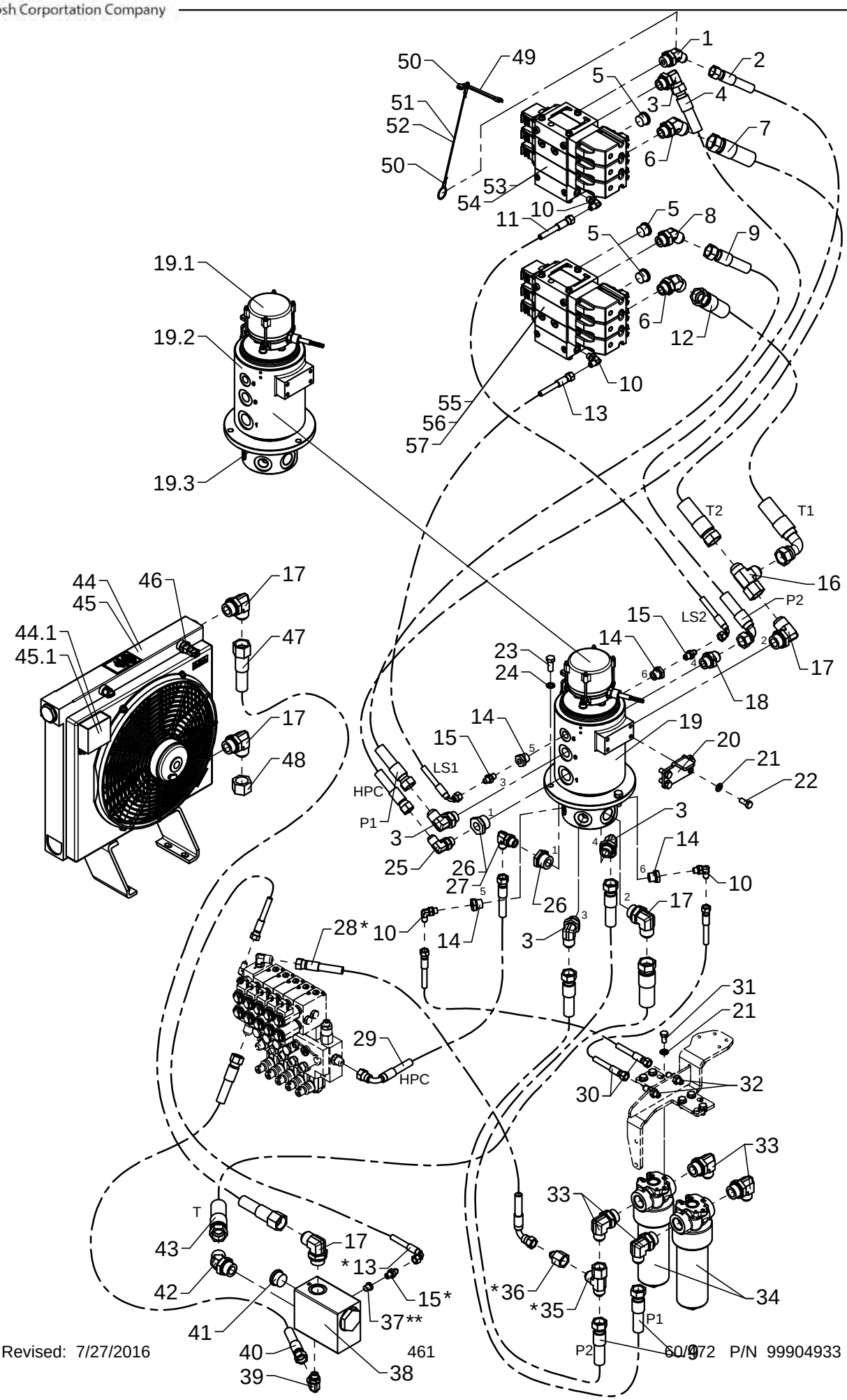

# Hydraulic system, pump and return hoses, 2 circuits + variable pump

As from / To loader no.: 96 02 70
Created: 02.06.2008
Modified: 23.05.2011

* Stabilizer operation by RC ** Manual stabilizer operation

| Item no. | Qty. | Part no. | Description | Remarks |
|---|---|---|---|---|
| 1 | 1 | 26291 | Elbow connection 45° | V40XS14-16 - 3 /4 |
| 2 | 1 | 62919 | Hose | 1/2" x 1550 L/L JIC |
| 3 | 4 | 26693 | Elbow connection | C40XS18/20 - 3/4 |
| 4 | 1 | 56025 | Hose | 5/8" x 1150 90/L JIC |
| 5 | 3 | 26355 | Plug | VS-R-3/4 WD |
| 6 | 2 | 25786 | Elbow connection 45° | V40XS25 - 3/4 |
| 7 | 1 | 56046 | Hose | 1" x 1050 L/L JIC |
| 8 | 1 | 26273 | Elbow connection 45° | V40XS18-20 - 3 /4 |
| 9 | 3 | 56045 | Hose | 5/8" x 1450 L/L JIC |
| 10 | 4 | 25858 | Elbow connection | C40XS8 - 1/4 |
| 11 | 1 | 62934 | Hose | 1/4" x 1330 90/L JIC |
| 12 | 1 | 62968 | Hose | 1" x 900 90/L JIC |
| 13 | 2 | 62901 | Hose | 1/4" x 900 90/L JIC |
| 14 | 4 | 25180 | Reducing connection | RED-R 1/2-WD/R 1/4 |
| 15 | 3 | 25829 | Straight connection | F40XS8 - 1/4 |
| 16 | 1 | 25855 | T-connection | R6XS 25 JIC |
| 17 | 5 | 26267 | Elbow connection | C40XS25 - 1 |
| 18 | 1 | 25834 | Straight connection | F40XS18/20 - 3/4 |
| 19 | 1 | 49217 | Swivel coupling | |
| | | 49237 | Electric part, swivel coupling | |
| | | 49106 | Hydraulic part,swivel coupling | |
| | | 49115 | Seal kit | |
| 20 | 1 | 6302621 | Carrier fitting | |
| 21 | 10 | 31177 | Washer | 10 mm |
| 22 | 4 | 30155 | Set screw | M10 x 25 |
| 23 | 3 | 30177 | Set screw | M12 x 30 |
| 24 | 3 | 30935 | Nordlock washer | 12 mm |
| 25 | 1 | 25839 | Elbow connection | C40XS14/16 - 1/2 |
| 26 | 2 | 25227 | Reducing connection | RED-R 1-WD/R 1/2 |
| 27 | 1 | 25806 | Elbow connection | C40XS12 - 1/2 |
| 28 | 1 | 62956 | Hose | 3/8" x 550 90/L JIC |
| 29 | 1 | 56110 | Hose | 3/8" x 1130 90/L JIC |
| 30 | 2 | 56130 | Hose | 1/4" x 1150 L/L JIC |
| 31 | 6 | 30154 | Set screw | M10 x 20 |
| 32 | 2 | 25823 | Bulkhead connection | WTX-WLNS 8 JIC |
| 33 | 4 | 26785 | Elbow connection | C40XS18/20 - 1 |
| 34 | 2 | 49401 | High pressure filter | |
| 35 | 1 | 25828 | Connection | R6XS 20 JIC |
| 36 | 1 | 25865 | Reducing connection | TRTXS8/20-12 |
| 37 | 1 | 25197 | Plug | VS-R-1/4 WD |

# ODIN

Intern ref.: 6301730

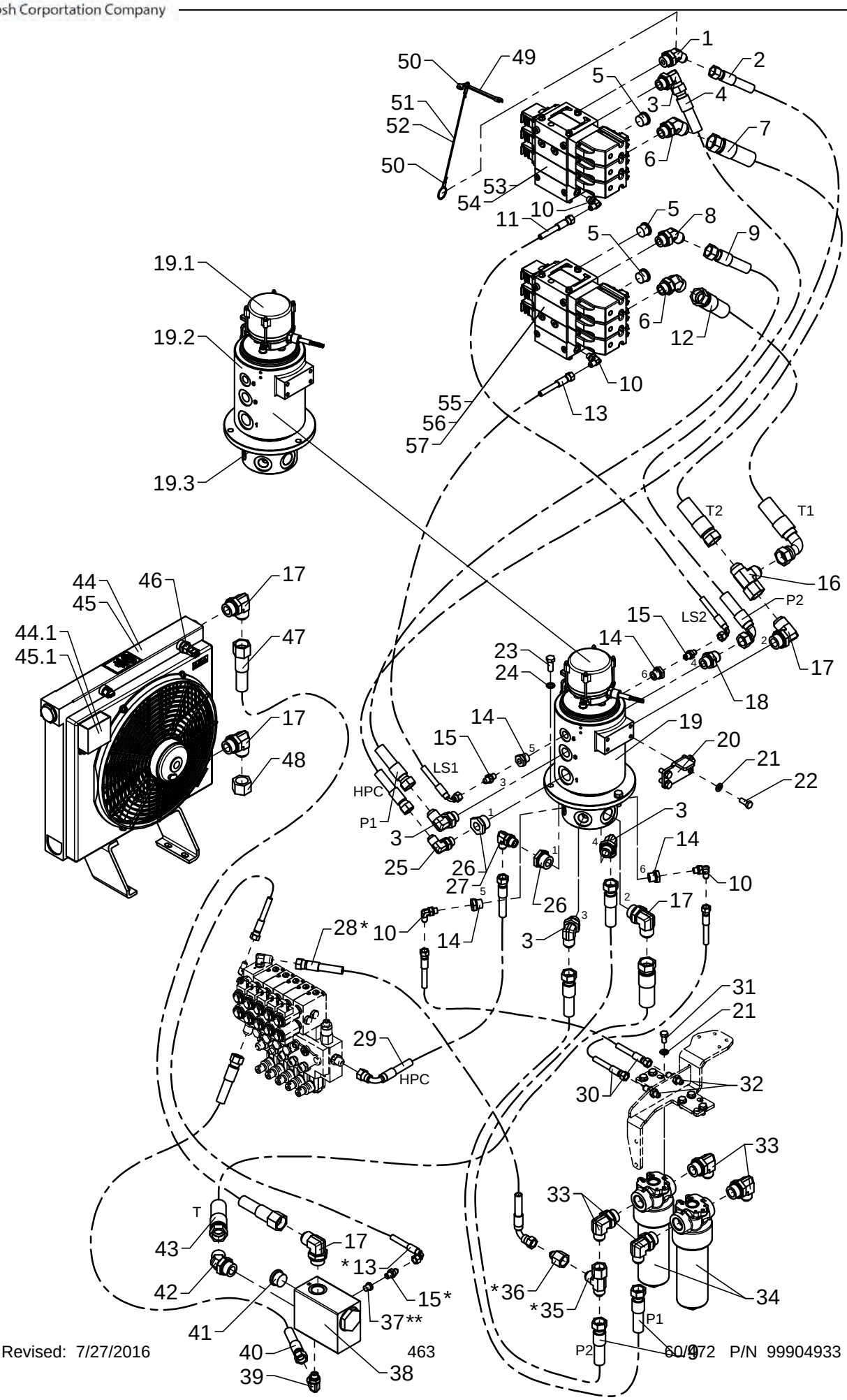

# Hydraulic system, pump and return hoses, 2 circuits + variable pump

As from / To loader no.: 96 02 70
Created: 02.06.2008
Modified: 23.05.2011

| Item no. | Qty. | Part no. | Description | Remarks |
|---|---|---|---|---|
| 38 | 1 | 59056 | Cooler valve | |
| 39 | 1 | 26787 | Elbow connection | C40XS14/16 - 3/8 |
| 40 | 1 | 62866 | Hose, JIC | 1/2" x 850 L/L JIC |
| 41 | 1 | 26321 | Plug | VS-R 1" WD |
| 42 | 1 | 25734 | Elbow connection 45° | V40XS25 - 1 |
| 43 | 1 | 56050 | Hose | 1" x 1300 L/L JIC |
| 44 | 1 | 50262 | Oil cooler, 24 V + Smartdrive | |
| | | 50292 | Electronic box, kit 12+24 V | |
| 45 | 1 | 50263 | Oil cooler, 12 V + Smartdrive | |
| | | 50292 | Electronic box, kit 12+24 V | |
| 46 | 1 | 50290 | Temperature sensor, oil cooler | |
| 47 | 1 | 56262 | Hose | 3/4" x 2000 L/L JIC |
| 48 | 1 | 25848 | Screw cap JIC | FNTXS 25 JIC |
| 49 | 2 | 42953 | Adjustable spanner | |
| 50 | 4 | 62161 | Wire lock | |
| 51 | 1 | 62160 | Wire rope, nylon | 450 mm |
| 52 | 1 | 62160 | Wire rope, nylon | 600 mm |
| 53 | 1 | 55613 | Control valve | 2 sekt. |
| 54 | 1 | 55615 | Control valve | 3 sekt. Winch |
| 55 | 1 | 55617 | Control valve | 2 sekt. |
| 56 | 1 | 55619 | Control valve | 3 sekt. 1 EXV |
| 57 | 1 | 55621 | Control valve | 4 sekt. 2 EXV/FJ |

* Stabilizer operation by RC  ** Manual stabilizer operation

# 6020

Intern ref.: 6308120

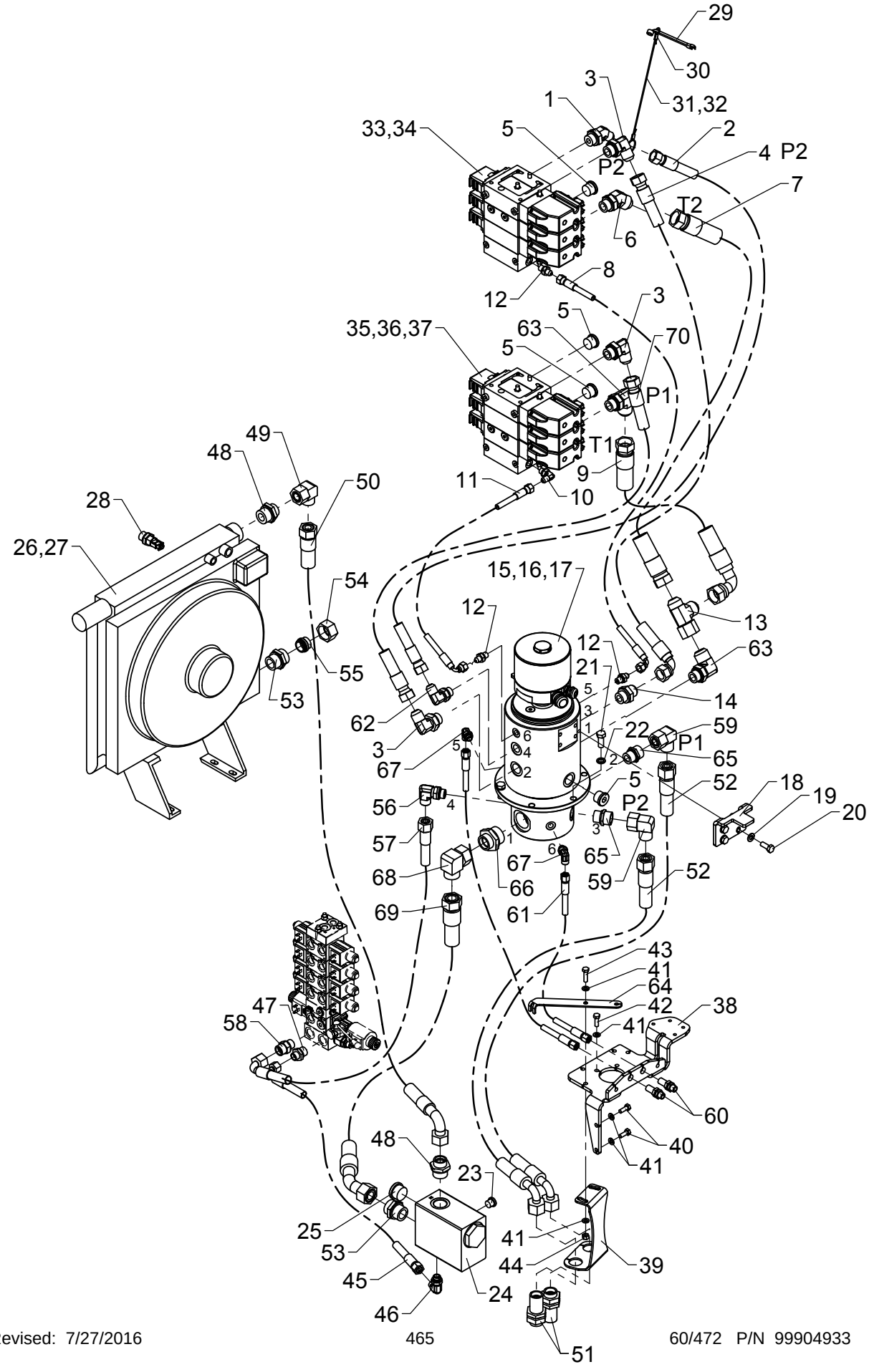

# Hydraulic system, pump and return hoses, 2 circuits + variable pump

As from / To loader no.: 96 03 83
Created: 28.04.2015
Modified:

| Item no. | Qty. | Part no. | Description | Remarks |
|---|---|---|---|---|
| 1 | 1 | 26291 | Elbow connection 45° | V40XS14-16 - 3/4 |
| 2 | 1 | 62919 | Hose | 1/2" x 1550 L/L JIC |
| 3 | 3 | 26693 | Elbow connection | C40XS18/20 - 3/4 |
| 4 | 1 | 56080 | Hose | 5/8" x 1400 90/L JIC |
| 5 | 4 | 26355 | Plug | VS-R-3/4 WD |
| 6 | 1 | 26786 | Elbow connection 45° | V40XS25 - 3/4 |
| 7 | 1 | 56046 | Hose | 1" x 1050 L/L JIC |
| 8 | 1 | 62934 | Hose | 1/4" x 1330 90/L JIC |
| 9 | 1 | 62968 | Hose | 1" x 900 90/L JIC |
| 10 | 1 | 25858 | Elbow connection | C40XS8 - 1/4 |
| 11 | 1 | 62901 | Hose | 1/4" x 900 90/L JIC |
| 12 | 3 | 25829 | Straight connection | F40XS8 - 1/4 |
| 13 | 1 | 25855 | T-connection | R6XS 25 JIC |
| 14 | 1 | 25834 | Straight connection | F40XS18/20 - 3/4 |
| 15 | 1 | 49626 | Swivel coupling | |
| 16 | 1 | 49628 | Hydraulic part | |
| 17 | 1 | 49624 | Electr. part, swivel coupling | |
| 18 | 1 | 6302631 | Carrier fitting | |
| 19 | 4 | 31177 | Washer | 10 mm |
| 20 | 4 | 30155 | Set screw | M10 x 25 |
| 21 | 3 | 30177 | Set screw | M12 x 30 |
| 22 | 3 | 30935 | Nordlock washer | 12 mm |
| 23 | 1 | 25277 | Plug | VS-R-3/8 WD |
| 24 | 1 | 59056 | Cooler valve | |
| 25 | 1 | 26321 | Plug | VS-R 1" WD |
| 26 | 1 | 50274 | Oil Cooler, 24V | |
| 27 | 1 | 50275 | Oil Cooler, 12V | |
| 28 | 1 | 50290 | Temperature sensor, oil cooler | |
| 29 | 2 | 42953 | Adjustable spanner | |
| 30 | 4 | 62161 | Wire lock | |
| 31 | 1 | 62160 | Wire rope, nylon | 450 mm |
| 32 | 1 | 62160 | Wire rope, nylon | 600 mm |
| 33 | 1 | 55613 | Control valve | 2 sekt. |
| 34 | 1 | 55615 | Control valve | 3 sekt. Winch |
| 35 | 1 | 55617 | Control valve | 2 sekt. |
| 36 | 1 | 55619 | Control valve | 3 sekt. 1 EXV |
| 37 | 1 | 55621 | Control valve | 4 sekt. 2 EXV/FJ |
| 38 | 1 | 6301391 | Bracket for high-pressure filter | |
| 39 | 1 | 6301395 | Bracket | |

# 6020

Intern ref.: 6308120

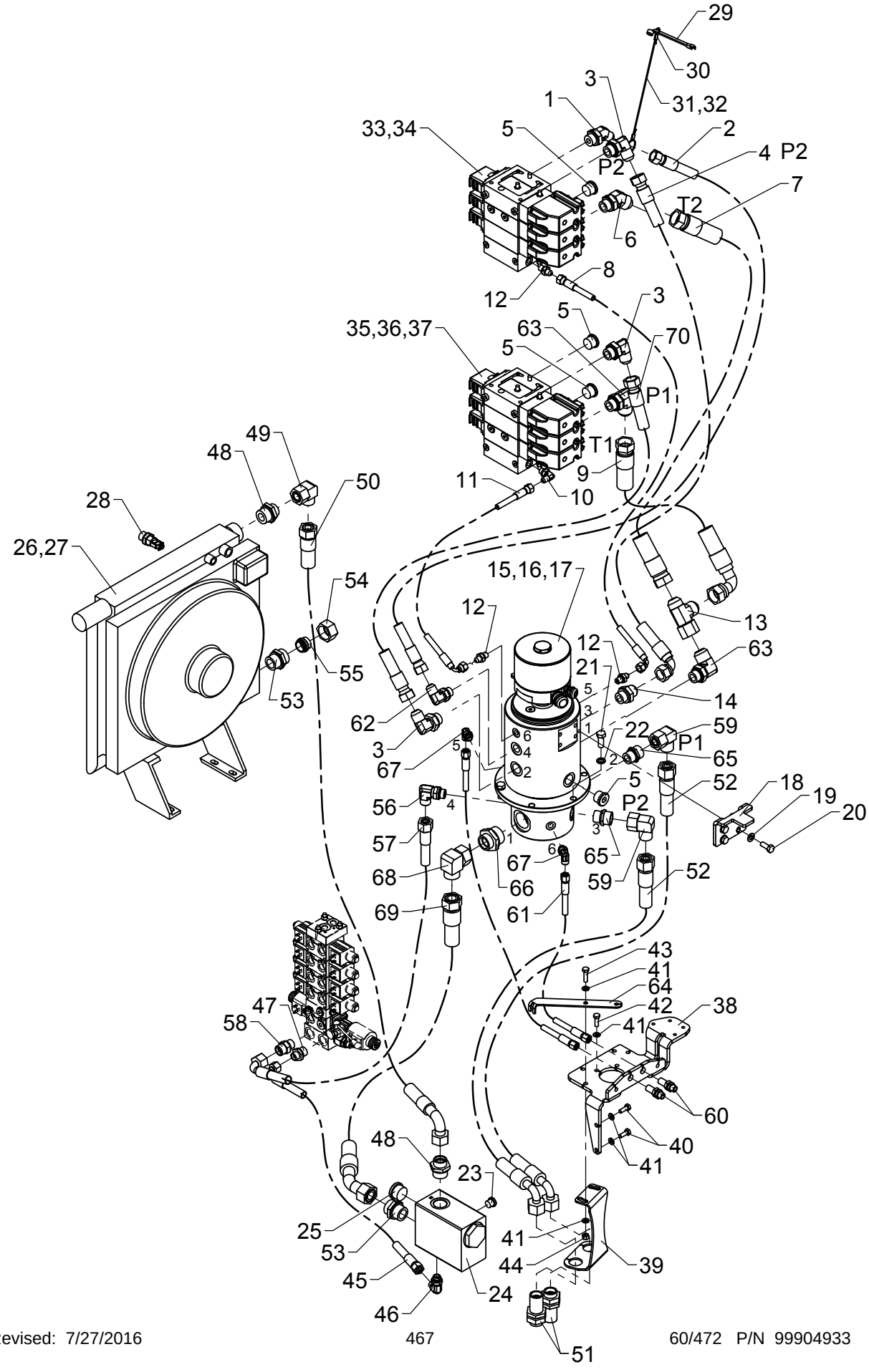

# Hydraulic system, pump and return hoses, 2 circuits + variable pump

As from / To loader no.: 96 03 83
Created: 28.04.2015
Modified:

| Item no. | Qty. | Part no. | Description | Remarks |
|---|---|---|---|---|
| 40 | 2 | 30133 | Set screw, stainless | |
| 41 | 6 | 31147 | Face washer, 8 mm | |
| 42 | 1 | 30134 | Set screw, stainless | M8 x 25 |
| 43 | 1 | 30135 | Set screw, stainless | M8 x 30 |
| 44 | 2 | 30886 | Lock nut, stainless | M8 |
| 45 | 1 | 0017870 | Hose | 3/8" x 450 V/O |
| 46 | 1 | 26897 | Elbow connection | 12 mm - 3/8" |
| 47 | 1 | 25108 | Connection | GES 12 LR 1/2-WD |
| 48 | 2 | 26122 | Connection | P-GEV 22 LR 1-WD |
| 49 | 1 | 25209 | Elbow connection | EWSD 22 L |
| 50 | 1 | 56502 | Hose | Til køler |
| 51 | 2 | 26369 | Bulkhead connection | GSS 20 S |
| 52 | 2 | 62624 | Hose | 5/8 x 1000mm L/90 |
| 53 | 2 | 26163 | Connection | P-GEV 28 LR-WD |
| 54 | 1 | 26108 | Coupling nut | M 28 L |
| 55 | 1 | 26347 | Blanking plug | VSD 28 L |
| 56 | 1 | 26893 | Elbow connection | 16 mm - 1/2" |
| 57 | 1 | 62686 | Hose | 1/2 x 1100mm L/90 |
| 58 | 1 | 26334 | Connection | P-GEV 16 SR-WD |
| 59 | 2 | 26198 | Elbow connection | EWVD 20 S-SV |
| 60 | 2 | 25261 | Bulkhead connection | P-GSV 8 L |
| 61 | 2 | 62586 | Hose | |
| 62 | 1 | 25839 | Elbow connection | C40XS14/16 - 1/2 |
| 63 | 2 | 25840 | Elbow connection | C40XS25 - 3/4 |
| 64 | 1 | 6301396 | Reinforcement plate for RCL | |
| 65 | 2 | 25637 | Connection | P-GEV 20 SR-WD - short spe |
| 66 | 1 | 25892 | Straight connection | GA 28 LR 1.1/4 |
| 67 | 2 | 26896 | Elbow connection | 10 mm - 1/4" |
| 68 | 1 | 26817 | Elbow connection | P-EWV 28 L-SV |
| 69 | 1 | 56979 | Hose | 1"x1500 L/45° |
| 70 | 1 | 56045 | Hose | 5/8" x 1450 L/L JIC |

# ODIN

Intern ref.: 6301090 6301490 6303090 6303490

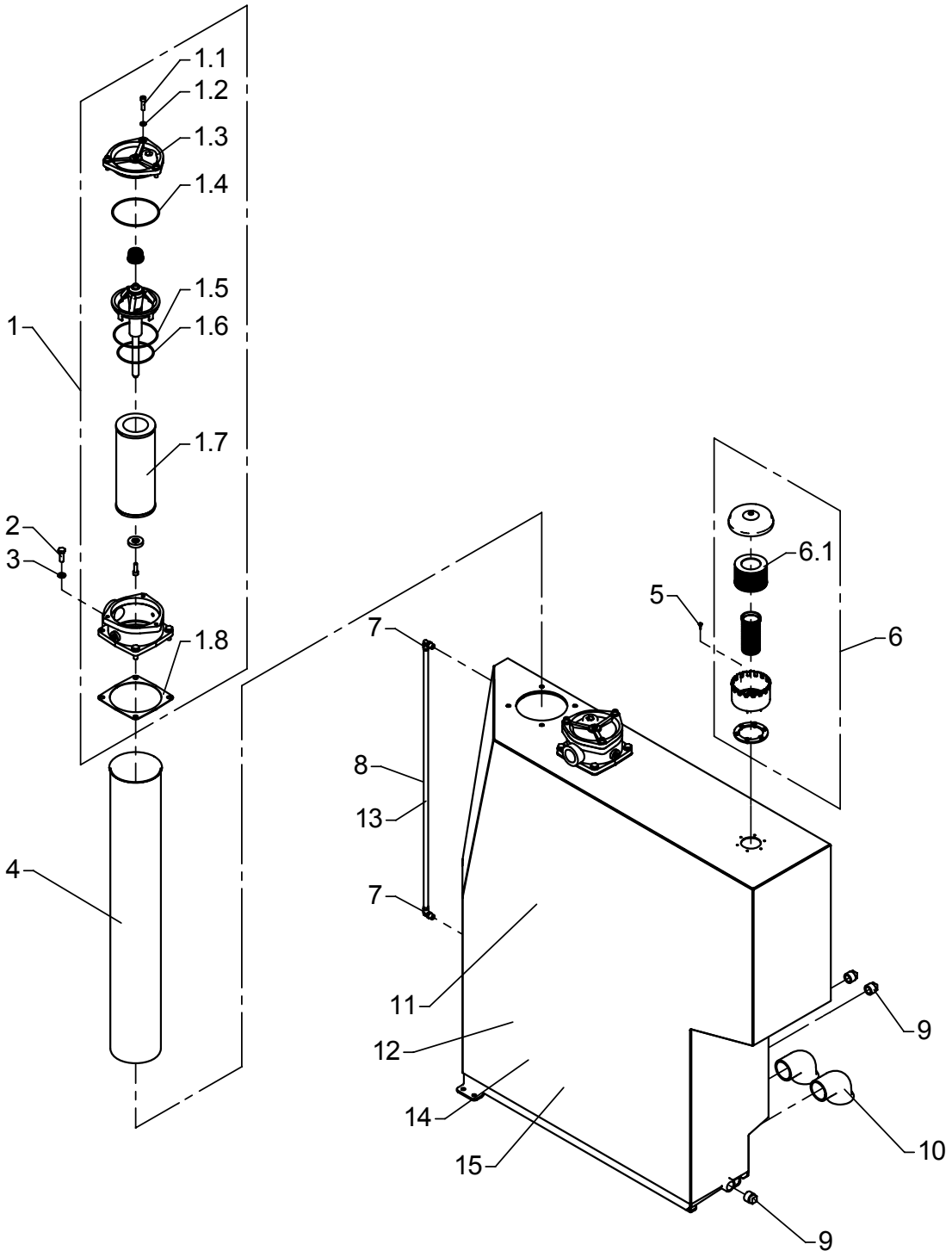

# Tank, complete

As from / To loader no.: 96 00 00 / 96 01 68
Created: 15.09.2003
Modified: 11.08.2010

| Item no. | Qty. | Part no. | Description | Remarks |
|---|---|---|---|---|
| 1 | 2 | 60249 | Return filter | |
| 1.1 | 3 | 30442 | Screw | MC8 x 30 |
| 1.2 | 3 | 31155 | Spring washer | 8 mm |
| 1.3 | 1 | 60282 | Cover | |
| 1.4 | 1 | 20197 | O-ring | OR 118 x 3 |
| 1.5 | 1 | 20196 | O-ring | OR 109,5 x 3 |
| 1.6 | 1 | 20191 | O-ring | OR 89,5 x 3 |
| 1.7 | 1 | 60250 | Filter cartridge | |
| 1.8 | 1 | 60283 | Seal | |
| 2 | 8 | 30156 | Set screw, stainless | M10 x 30 |
| 3 | 8 | 31565 | Washer, stainless | 10 mm |
| 4 | 2 | 58409 | Pipe | |
| 5 | 6 | 30737 | Sheet metal screw | UH4,8 x 16 |
| 6 | 1 | 60275 | Air filter | |
| 6.1 | 1 | 60276 | Filter | |
| 7 | 2 | 25535 | Elbow connection | |
| 8 | 1 | 62472 | Nylon pipe | 850 mm |
| 9 | 3 | 26914 | Plug 3/4" | |
| 10 | 2 | 25430 | Elbow | |
| 11 | 1 | 49152 | Oil tank, 320 l, black | |
| 12 | 1 | 49151 | Oil tank 390 l, black | |
| 13 | 1 | 62472 | Nylon pipe | 1040 mm |
| 14 | 1 | 49154 | Oil tank 390 l | |
| 15 | 1 | 49155 | Oil tank 320 l | |

# 6020K

Intern ref.: 6301090 6301490 6303090 6303490

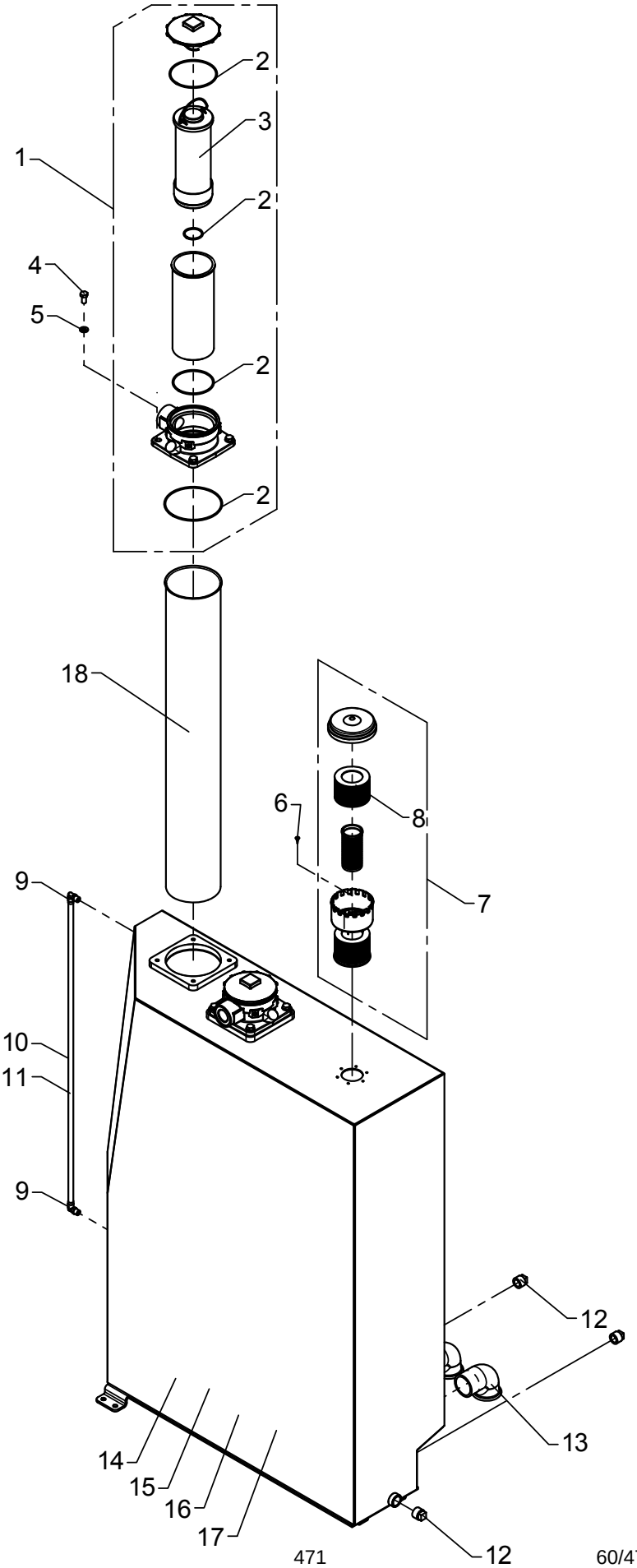

# Tank, complete

As from / To loader no.: 96 01 69 /
Created: 11.08.2010
Modified: 11.12.2012

| Item no. | Qty. | Part no. | Description | Remarks |
|---|---|---|---|---|
| 1 | 2 | 49408 | Return filter | |
| 2 | 2 | 49419 | Seal kit | |
| 3 | 2 | 49409 | Filter | |
| 4 | 8 | 31517 | Set screw, stainless | M10 x 20 |
| 5 | 8 | 31565 | Washer, stainless | 10 mm |
| 6 | 6 | 30737 | Sheet metal screw | UH4,8 x 16 |
| 7 | 1 | 60275 | Air filter | |
| 8 | 1 | 60276 | Filter | |
| 9 | 2 | 25535 | Elbow connection | |
| 10 | 1 | 62472 | Nylon pipe | 900 mm |
| 11 | 1 | 62472 | Nylon pipe | 1090 mm |
| 12 | 3 | 26914 | Plug 3/4" | |
| 13 | 2 | 25430 | Elbow | |
| 14 | 1 | 49152 | Oil tank, 320 l, black | |
| 15 | 1 | 49151 | Oil tank 390 l, black | |
| 16 | 1 | 49154 | Oil tank 390 l | |
| 17 | 1 | 49155 | Oil tank 320 l | |
| 18 | 2 | 58409 | Pipe | |

# ODIN

Intern ref.: 6301390

UDGÅET!

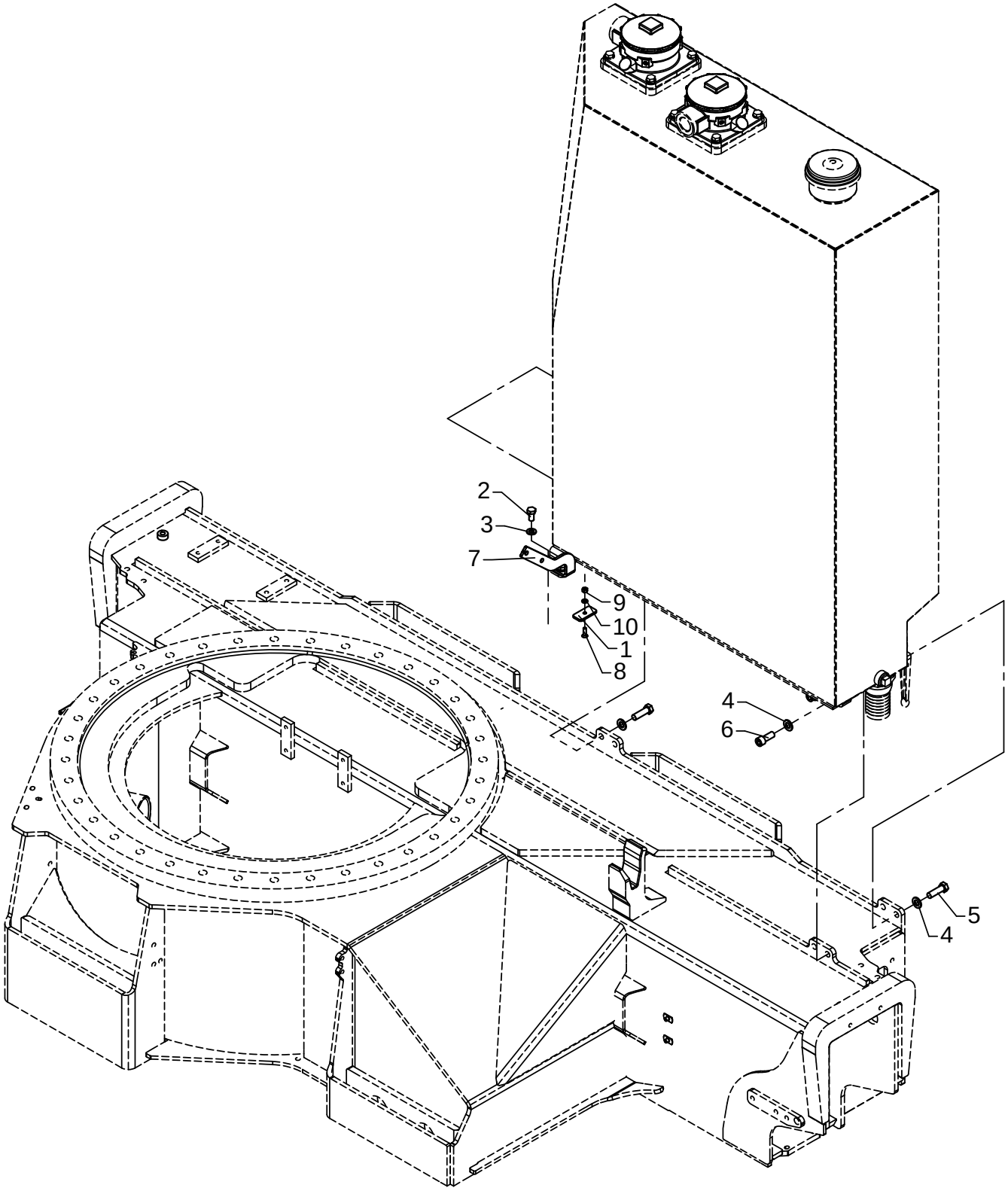

# Fittings for tank

As from / To loader no.: 96 00 00 / 96 03 82
Created: 15.09.2003
Modified: 24.04.2015

| Item no. | Qty. | Part no. | Description | Remarks |
|---|---|---|---|---|
| 1 | 1 | 6301129 | Division plate, 4mm | |
| 2 | 2 | 31517 | Set screw, stainless | M10 x 20 |
| 3 | 2 | 31177 | Washer | 10 mm |
| 4 | 6 | 31131 | Washer | 12 mm |
| 5 | 4 | 31533 | Set screw, stainless | M12 x 40 |
| 6 | 2 | 31542 | Sockethead screw, stainless | MC12 x 30 |
| 7 | 1 | 6301069 | Fitting | |
| 8 | 1 | 30579 | Countersunk screw | MK6 x 20 |
| 9 | 1 | 30884 | Lock nut, stainless | M6 |
| 10 | 1 | 32302 | Face washer, stainless | 6 mm |

# ODIN

Intern ref.: 6301420

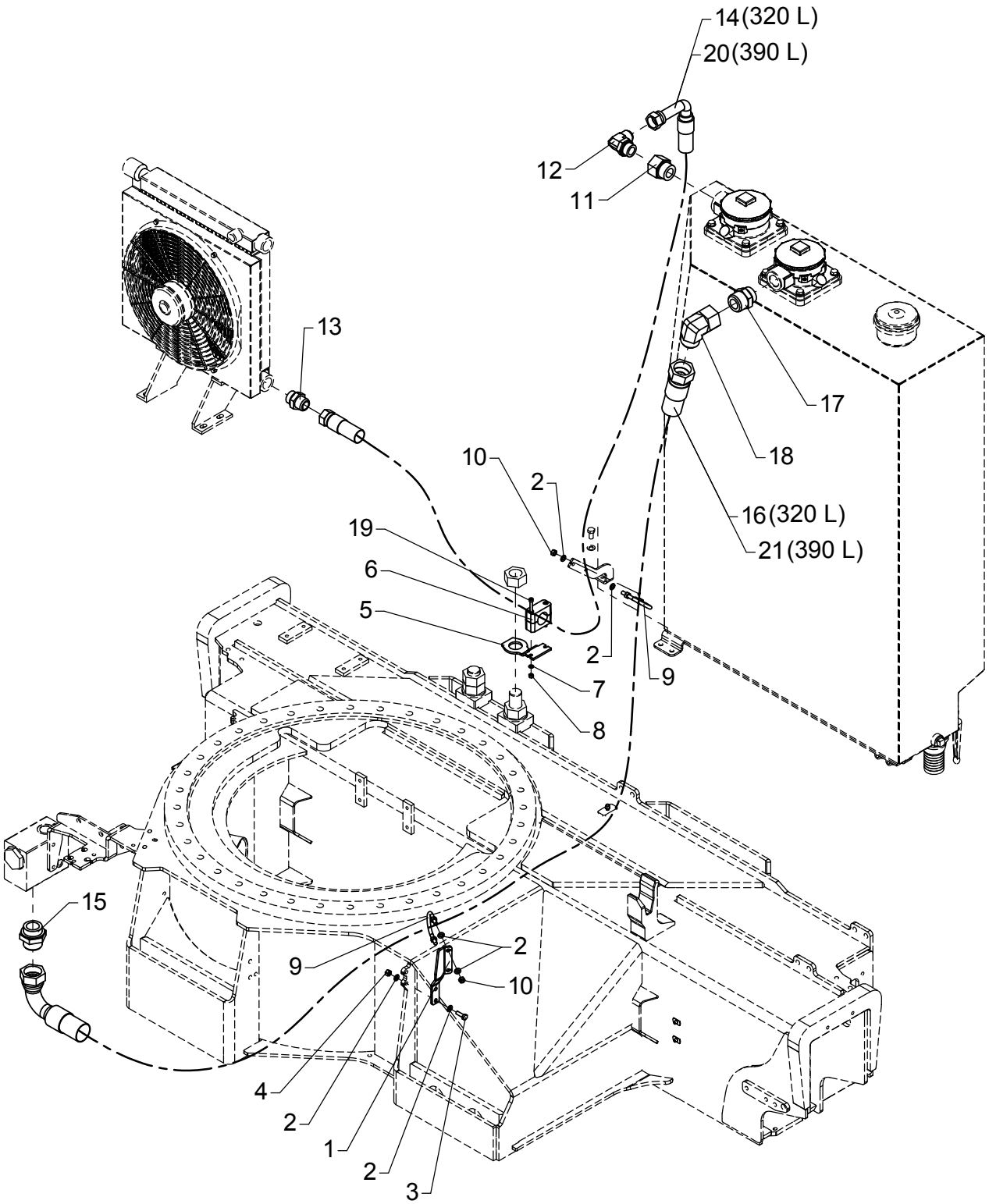

# Hose kit for tank

As from / To loader no.: 96 00 00 / 96 03 82
Created: 20.11.2003
Modified: 25.02.2015

| Item no. | Qty. | Part no. | Description | Remarks |
|---|---|---|---|---|
| 1 | 1 | 6301068 | Fitting | |
| 2 | 12 | 31147 | Face washer, 8 mm | |
| 3 | 2 | 31009 | Set screw | M8 x 25 |
| 4 | 2 | 30886 | Lock nut, stainless | M8 |
| 5 | 1 | 6301067 | Fitting | |
| 6 | 1 | 31468 | Clamp | |
| 7 | 2 | 32302 | Face washer, stainless | 6 mm |
| 8 | 2 | 30884 | Lock nut, stainless | M6 |
| 9 | 2 | 31828 | Hose clip | |
| 10 | 4 | 30856 | Nut, stainless | M8 |
| 11 | 1 | 26818 | Reducing connection | RED-R 1 1/4-WD/R 1 |
| 12 | 1 | 26267 | Elbow connection | C40XS25 - 1 |
| 13 | 1 | 25863 | Straight connection | F40XS25 - 1 |
| 14 | 1 | 56135 | Hose | 1" x 1650 mm V/O JIC |
| 15 | 1 | 26742 | Straight connection | F40XS38 - 1,1/2 |
| 16 | 1 | 56136 | Hose | 1.1/2" x 3200 mm V/O JIC |
| 17 | 1 | 26735 | Straight connection | F40XS38 - 1,1/4 |
| 18 | 1 | 26741 | Elbow | C6XS 38 JIC |
| 19 | 2 | 30966 | Screw | MC6 x 65 |
| 20 | 1 | 56140 | Hose | 1" x 1840 mm V/O JIC |
| 21 | 1 | 56141 | Hose | 1.1/2" x 3390 mm V/O JIC |

# 6020

6303210 / 6303220
Intern ref.: 6303230 / 6303240

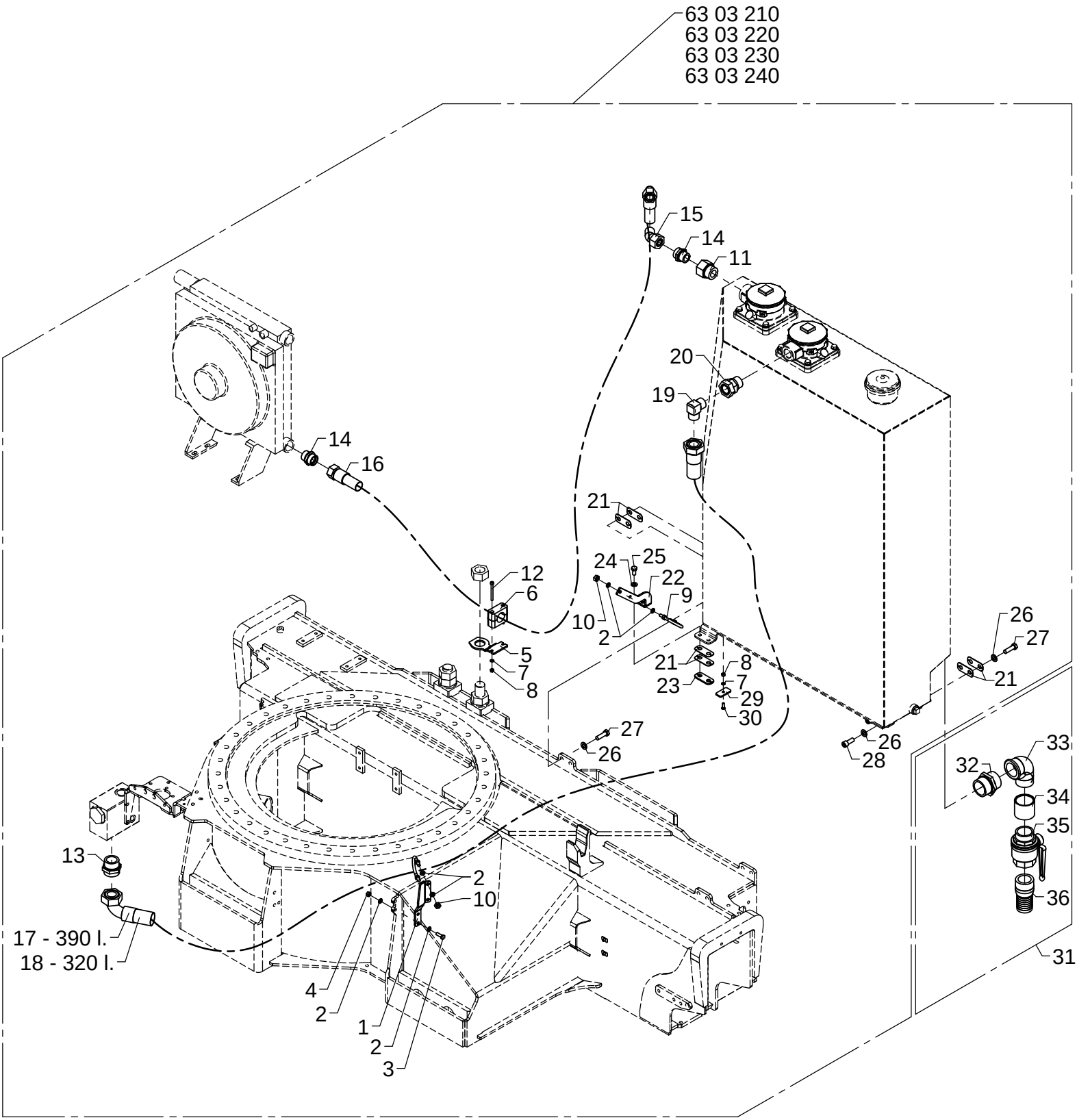

# Hose kit for tank

As from / To loader no.: 96 03 83
Created: 24.04.2015
Modified:

| Item no. | Qty. | Part no. | Description | Remarks |
|---|---|---|---|---|
| | 1 | 6303210 | Oil tank, black | 320 l. |
| | 1 | 6303220 | Oil tank, stainless | 320 l. |
| | 1 | 6303230 | Oil tank, black | 390 l. |
| | 1 | 6303240 | Oil tank, stainless | 390 l. |
| 1 | 1 | 6301068 | Fitting | |
| 2 | 12 | 31147 | Face washer, 8 mm | |
| 3 | 2 | 31009 | Set screw | M8 x 25 |
| 4 | 2 | 30886 | Lock nut, stainless | M8 |
| 5 | 1 | 6301067 | Fitting | |
| 6 | 1 | 31468 | Clamp | |
| 7 | 3 | 32302 | Face washer, stainless | 6 mm |
| 8 | 3 | 30884 | Lock nut, stainless | M6 |
| 9 | 2 | 31828 | Hose clip | |
| 10 | 4 | 31551 | Nut, stainless | M10 |
| 11 | 1 | 26818 | Reducing connection | RED-R 1 1/4-WD/R 1 |
| 12 | 2 | 30966 | Screw | MC6 x 65 |
| 13 | 1 | 26930 | Connection | P-GEV 42 LR-1 1-2 |
| 14 | 2 | 26163 | Connection | P-GEV 28 LR-WD |
| 15 | 1 | 26932 | Elbow connection 45° | EV 28 L |
| 16 | 1 | 56539 | Hose | 1" X 1900 mm L/90 28 Let |
| 17 | 1 | 56980 | Hose | 1 1/2" X 3390 mm L/90 42 Let |
| 18 | 1 | 56972 | Hose | 1 1/2" X 3200 mm L/90 42 Let |
| 19 | 1 | 26938 | Elbow connection | WS 42 L |
| 20 | 1 | 26937 | Connection | EGESD 42 LR-1 1-4 |
| 21 | 6 | 6301084 | Division plate | |
| 22 | 1 | 6301069 | Fitting | |
| 23 | 1 | 6301085 | Division plate | |
| 24 | 2 | 31177 | Washer | 10 mm |
| 25 | 2 | 31517 | Set screw, stainless | M10 x 20 |
| 26 | 6 | 31131 | Washer | 12 mm |
| 27 | 4 | 30179 | Set screw | M12 x 40 |
| 28 | 2 | 31542 | Sockethead screw, stainless | MC12 x 30 |
| 29 | 1 | 6301129 | Division plate, 4mm | |
| 30 | 1 | 30579 | Countersunk screw | MK6 x 20 |
| 31 | 1 | 6395290 | | |
| 32 | 1 | 25342 | Nipple | 2" |
| 33 | 1 | 25430 | Elbow | |
| 34 | 1 | 25490 | | 2" |
| 35 | 1 | 58787 | 3-way ball valve | 2" |
| 36 | 1 | 60991 | Nipple | CN 200 / HMF |

# ODIN

Intern ref.: 6300640

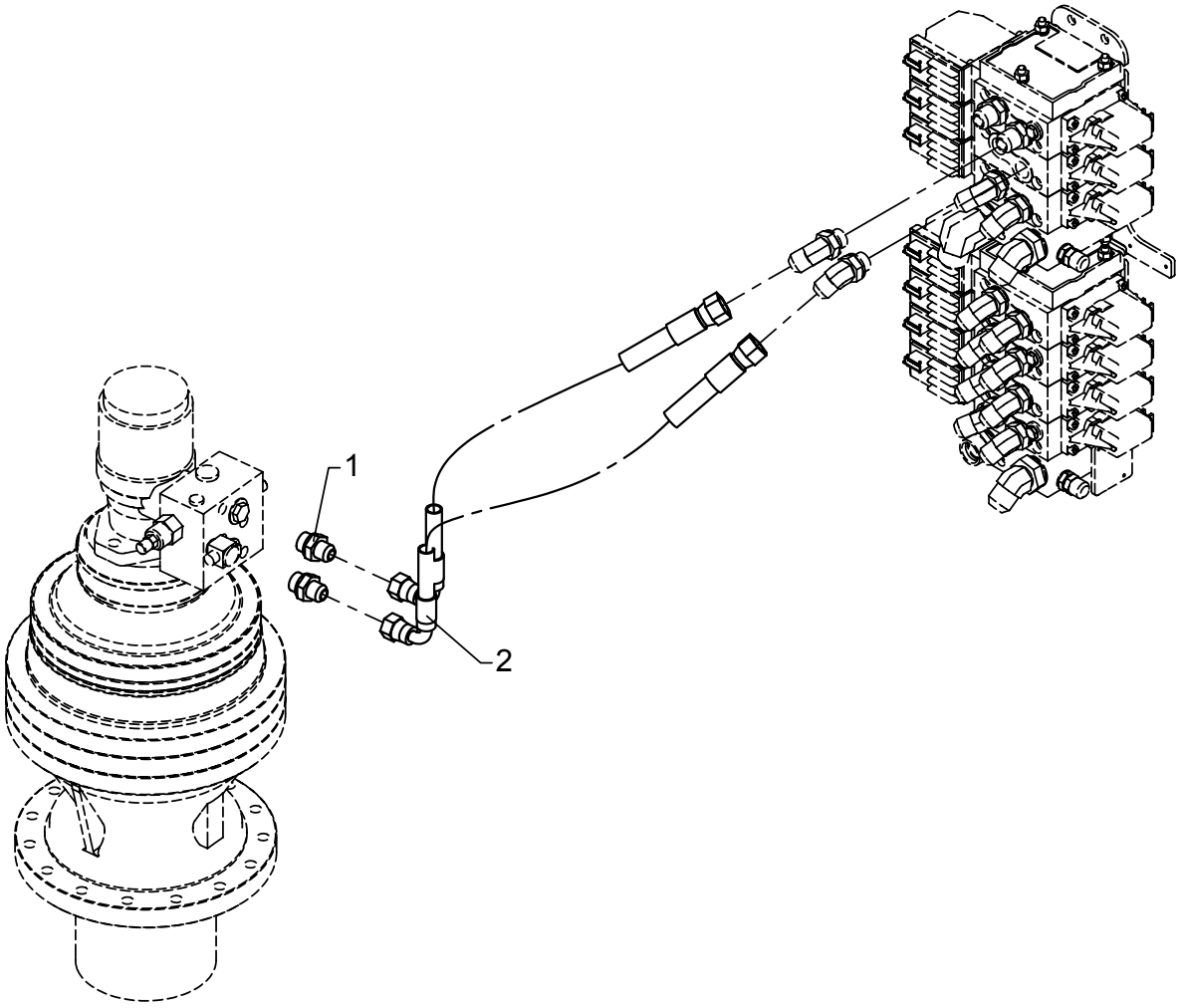

# Hydraulic system, planetary gear

As from / To loader no.: 96 00 00 /
Created: 03.10.2003
Modified:

| Item no. | Qty. | Part no. | Description | Remarks |
|---|---|---|---|---|
| 1 | 2 | 25832 | Straight connection | F40XS 12-1/2 JIC |
| 2 | 2 | 56057 | Hose | 3/8" x 675 mm V/O JIC |

# ODIN

Intern ref.: 6300120

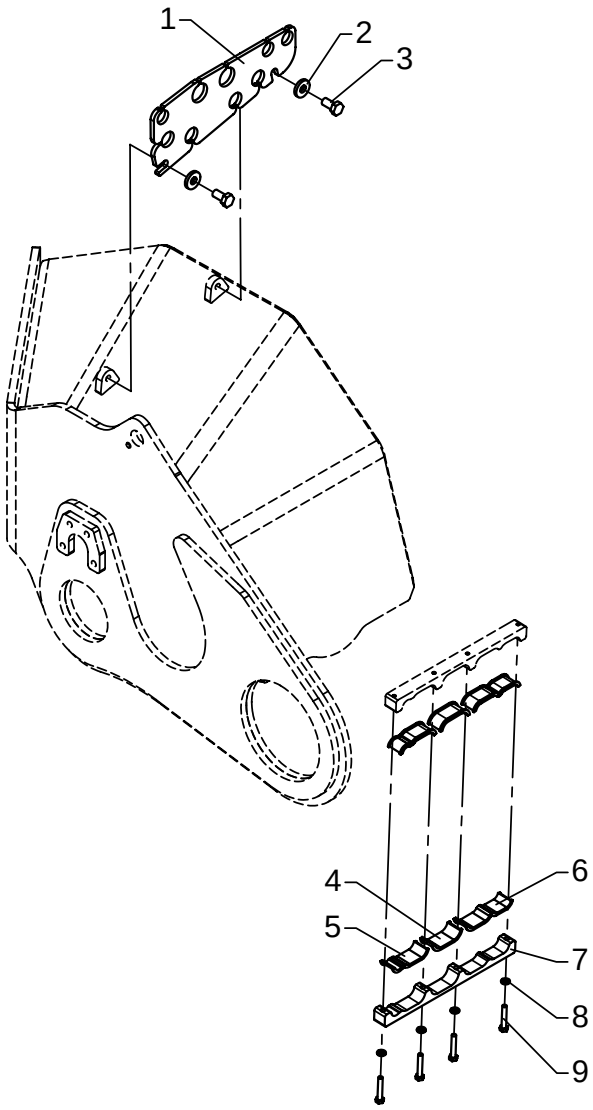


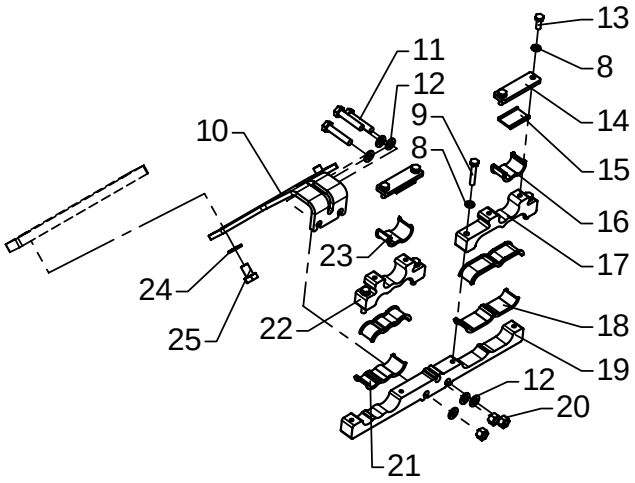


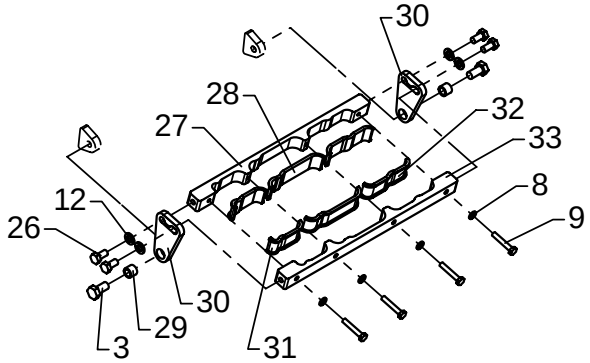

# Hose clamp

As from / To loader no.: 96 00 00 / 96 01 57
Created: 03.10.2003
Modified: 02.04.2007

| Item no. | Qty. | Part no. | Description | Remarks |
|---|---|---|---|---|
| 1 | 1 | 6300667 | Bracket, bulkhead connection K | |
| 2 | 2 | 31756 | Washer | 10 mm |
| 3 | 4 | 30154 | Set screw | M10 x 20 |
| 4 | 2 | 64310 | Rubber section | 63 mm |
| 5 | 2 | 64310 | Rubber section | 73 mm |
| 6 | 2 | 64310 | Rubber section | 95 mm |
| 7 | 1 | 6300665 | Clamp - K | |
| 8 | 16 | 31154 | Spring washer, stainless | 6 mm |
| 9 | 12 | 30116 | Steel bolt, stainless | M6 x 35 |
| 10 | 1 | 6300664 | Bracket for clamp - N | |
| 11 | 3 | 30137 | Set screw, stainless | M8 x 40 |
| 12 | 10 | 31147 | Washer, stainless | 8 mm |
| 13 | 4 | 30112 | Set screw, stainless | M6 x 16 |
| 14 | 2 | 6300668 | Fitting | |
| 15 | 2 | 64310 | Rubber section | 35 mm |
| 16 | 1 | 64310 | Rubber section | 62 mm |
| 17 | 1 | 6300663 | Clamp N - H | |
| 18 | 2 | 64310 | Rubber section | 108 mm |
| 19 | 1 | 6300661 | Clamp N - 1 | |
| 20 | 3 | 30886 | Lock nut, stainless | M8 |
| 21 | 2 | 64310 | Rubber section | 83 mm |
| 22 | 1 | 6300662 | Clamp N - V | |
| 23 | 1 | 64310 | Rubber section | 67 mm |
| 24 | 2 | 31177 | Washer | 10 mm |
| 25 | 2 | 30153 | Set screw | M10 x 16 |
| 26 | 4 | 30131 | Set screw, stainless | M8 x 16 |
| 27 | 1 | 6300652 | Hose bracket | |
| 28 | 2 | 64310 | Rubber section | 109 mm |
| 29 | 2 | 6302369 | Spacer | |
| 30 | 2 | 6300653 | Clamp | |
| 31 | 2 | 64310 | Rubber section | 68 mm |
| 32 | 2 | 64310 | Rubber section | 90 mm |
| 33 | 1 | 6300651 | Hose bracket | |

# ODIN

Intern ref.: 6300120

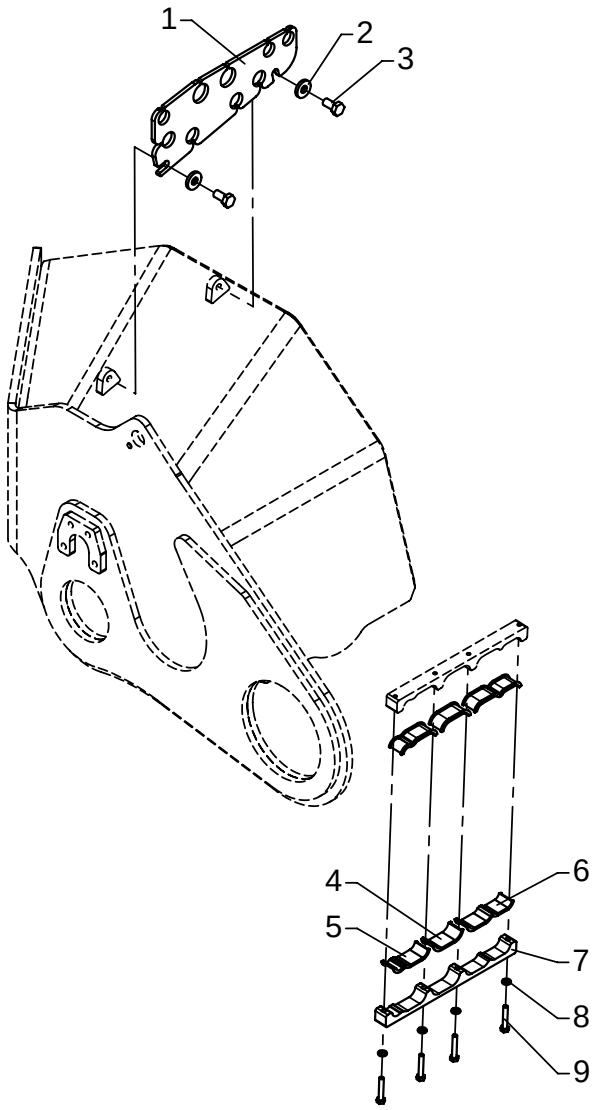


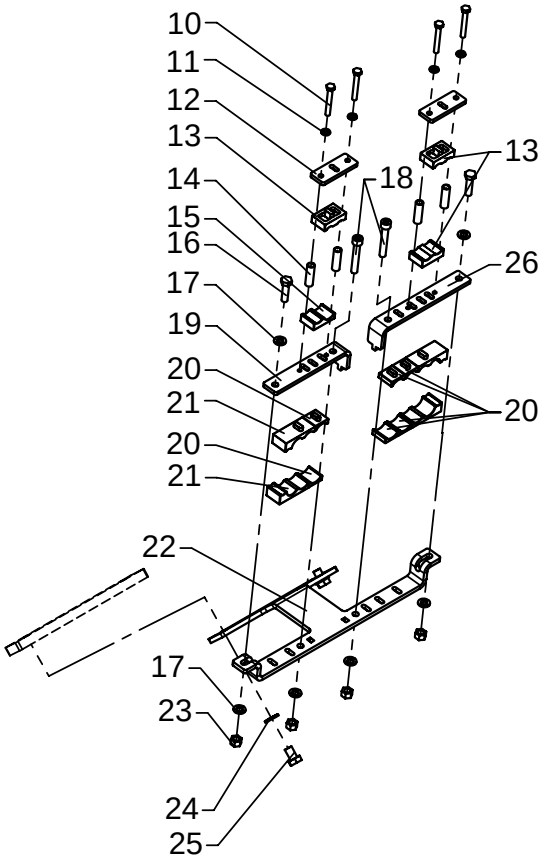


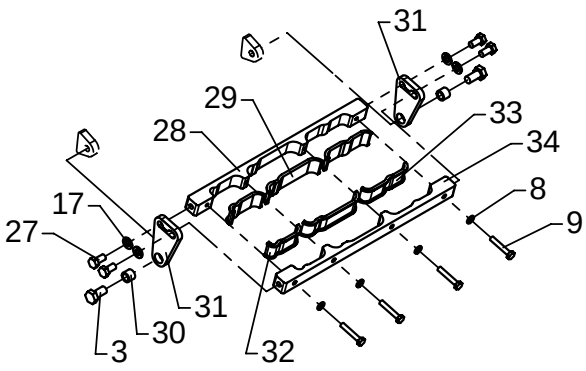

# Hose clamp

As from / To loader no.: 96 01 58 /
Created: 03.10.2003
Modified:

| Item no. | Qty. | Part no. | Description | Remarks |
|---|---|---|---|---|
| 1 | 1 | 6300667 | Bracket, bulkhead connection K | |
| 2 | 2 | 31756 | Washer | 10 mm |
| 3 | 4 | 30154 | Set screw | M10 x 20 |
| 4 | 2 | 64310 | Rubber section | 63 mm |
| 5 | 2 | 64310 | Rubber section | 73 mm |
| 6 | 2 | 64310 | Rubber section | 95 mm |
| 7 | 1 | 6300665 | Clamp - K | |
| 8 | 8 | 31154 | Spring washer, stainless | 6 mm |
| 9 | 8 | 30116 | Steel bolt, stainless | M6 x 35 |
| 10 | 4 | 30118 | Steel bolt, stainless | M6 x 45 |
| 11 | 4 | 32302 | Face washer, stainless | 6 mm |
| 12 | 2 | 6301155 | Plate | |
| 13 | 3 | 63561 | Clamp | |
| 14 | 4 | 6301157 | Spacer | |
| 15 | 1 | 63562 | Clamp | |
| 16 | 2 | 30135 | Set screw, stainless | M8 x 30 |
| 17 | 10 | 31147 | Washer, stainless | 8 mm |
| 18 | 2 | 30468 | Screw | MC8 x 50 |
| 19 | 1 | 6301154 | Plate | |
| 20 | 6 | 63477 | Clamp | |
| 21 | 4 | 63563 | Clamp | |
| 22 | 1 | 6301153 | Clamp | |
| 23 | 4 | 30886 | Lock nut, stainless | M8 |
| 24 | 2 | 31177 | Washer | 10 mm |
| 25 | 2 | 30153 | Set screw | M10 x 16 |
| 26 | 1 | 6301156 | Plate | |
| 27 | 4 | 30131 | Set screw, stainless | M8 x 16 |
| 28 | 1 | 6300652 | Hose bracket | |
| 29 | 2 | 64310 | Rubber section | 109 mm |
| 30 | 2 | 6302369 | Spacer | |
| 31 | 2 | 6300653 | Clamp | |
| 32 | 2 | 64310 | Rubber section | 68 mm |
| 33 | 2 | 64310 | Rubber section | 90 mm |
| 34 | 1 | 6300651 | Hose bracket | |

# ODIN

Intern ref.: 6300880

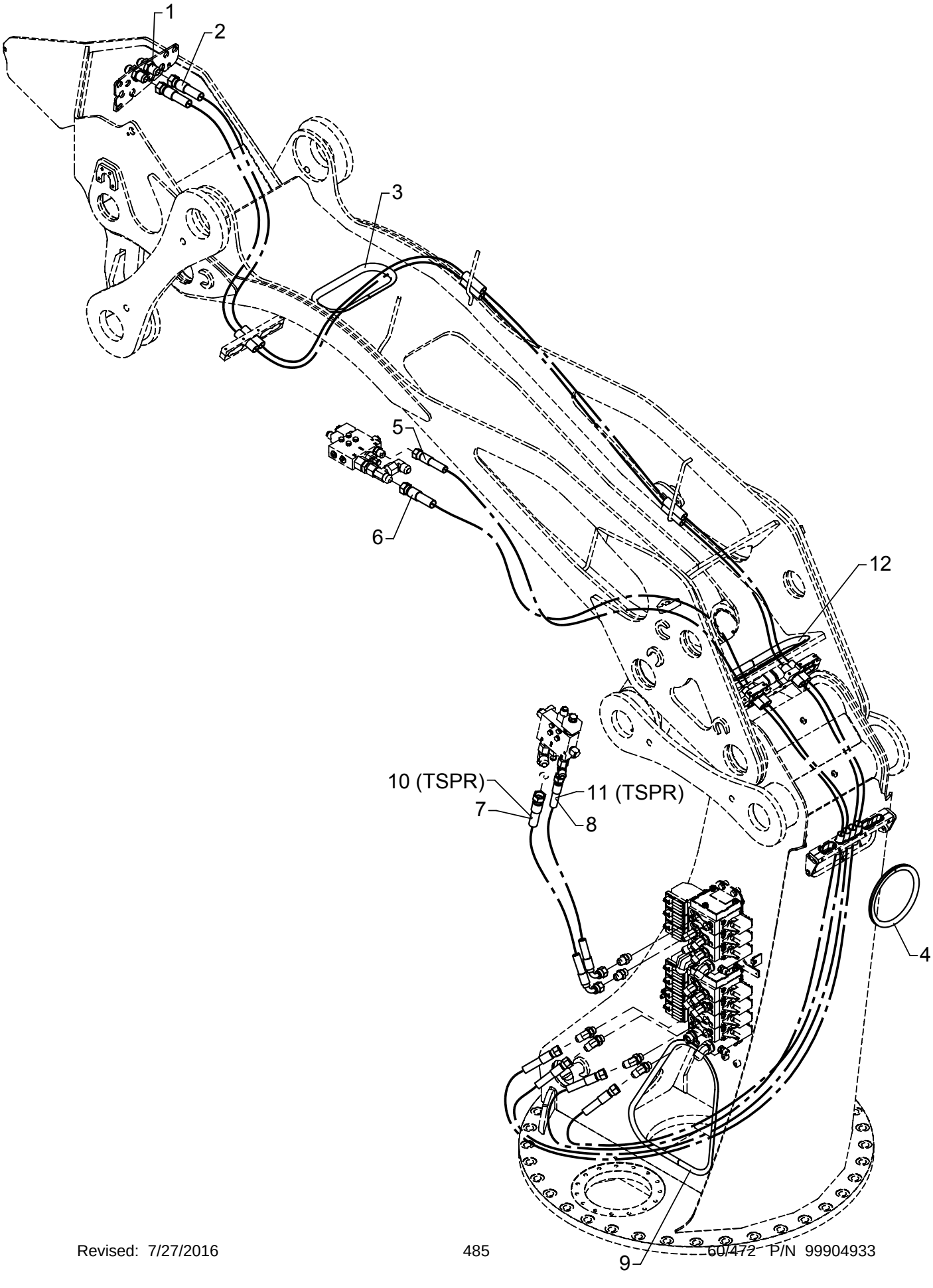

# Hydraulic system, boom, jib and ext.

As from / To loader no.: 96 00 00 / 96 02 52
Created: 03.10.2003
Modified: 05.07.2010

| Item no. | Qty. | Part no. | Description | Remarks |
|---|---|---|---|---|
| 1 | 2 | 25862 | Bulkhead connection | WTX-WLNS 20 JIC |
| 2 | 2 | 56053 | Hose | 5/8" x 5900 mm O/O JIC |
| 3 | 1 | 64300 | PVC protection | 684 mm |
| 4 | 1 | 46587 | Rubber protection | 565 mm |
| 5 | 1 | 62868 | Hose, JIC | 1/2" x 3900 mm O/O JIC |
| 6 | 1 | 56054 | Hose | 5/8" x 3800 mm O/O JIC |
| 7 | 1 | 56051 | Hose | 5/8" x 875 mm V/O JIC |
| 8 | 1 | 56052 | Hose | 1/2" x 850 mm V/O JIC |
| 9 | 1 | 46587 | Rubber protection | 1321 mm |
| 10 | 1 | 56137 | Hose | 5/8" x 950 L/L JIC 20/16 |
| 11 | 1 | 62892 | Hose | 1/2 X 1000 L/L JIC |
| 12 | 1 | 64300 | PVC protection | 820 mm |

# 6020K

Intern ref.: 6300880

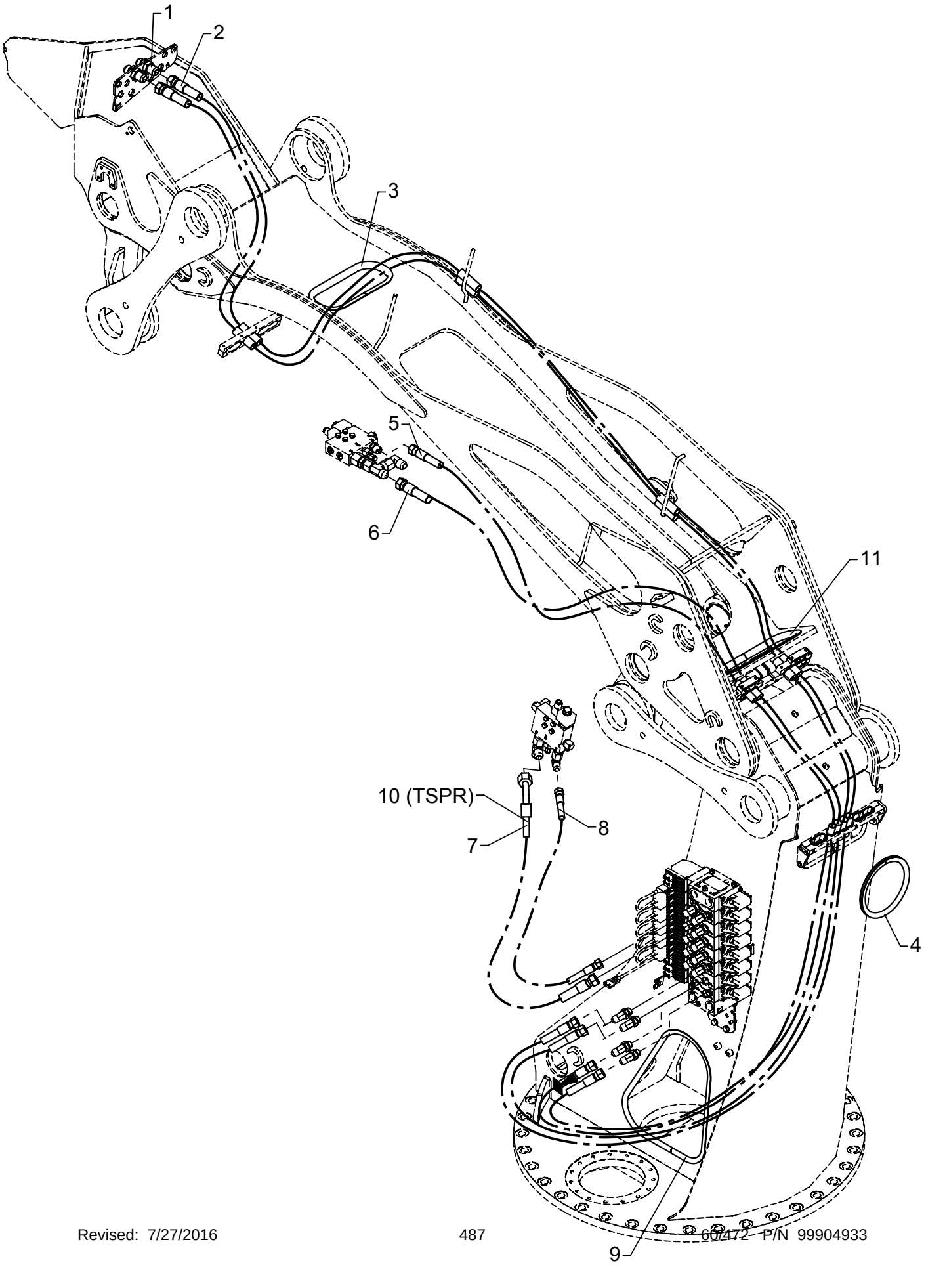

# Hydraulic system, boom, jib and ext.

As from / To loader no.: 96 02 53 /
Created: 05.07.2010
Modified:

| Item no. | Qty. | Part no. | Description | Remarks |
|---|---|---|---|---|
| 1 | 2 | 25862 | Bulkhead connection | WTX-WLNS 20 JIC |
| 2 | 2 | 56053 | Hose | 5/8" x 5900 mm O/O JIC |
| 3 | 1 | 64300 | PVC protection | 684 mm |
| 4 | 1 | 46587 | Rubber protection | 565 mm |
| 5 | 1 | 62868 | Hose, JIC | 1/2" x 3900 mm O/O JIC |
| 6 | 1 | 56054 | Hose | 5/8" x 3800 mm O/O JIC |
| 7 | 1 | 56588 | Hose | 5/8" X 1000 45° 20JIC/ L-16JIC |
| 8 | 2 | 62892 | Hose | 1/2 X 1000 L/L JIC |
| 9 | 1 | 46587 | Rubber protection | 1321 mm |
| 10 | 1 | 56137 | Hose | 5/8" x 950 L/L JIC 20/16 |
| 11 | 1 | 64300 | PVC protection | 820 mm |

# ODIN

Intern ref.: 6300680

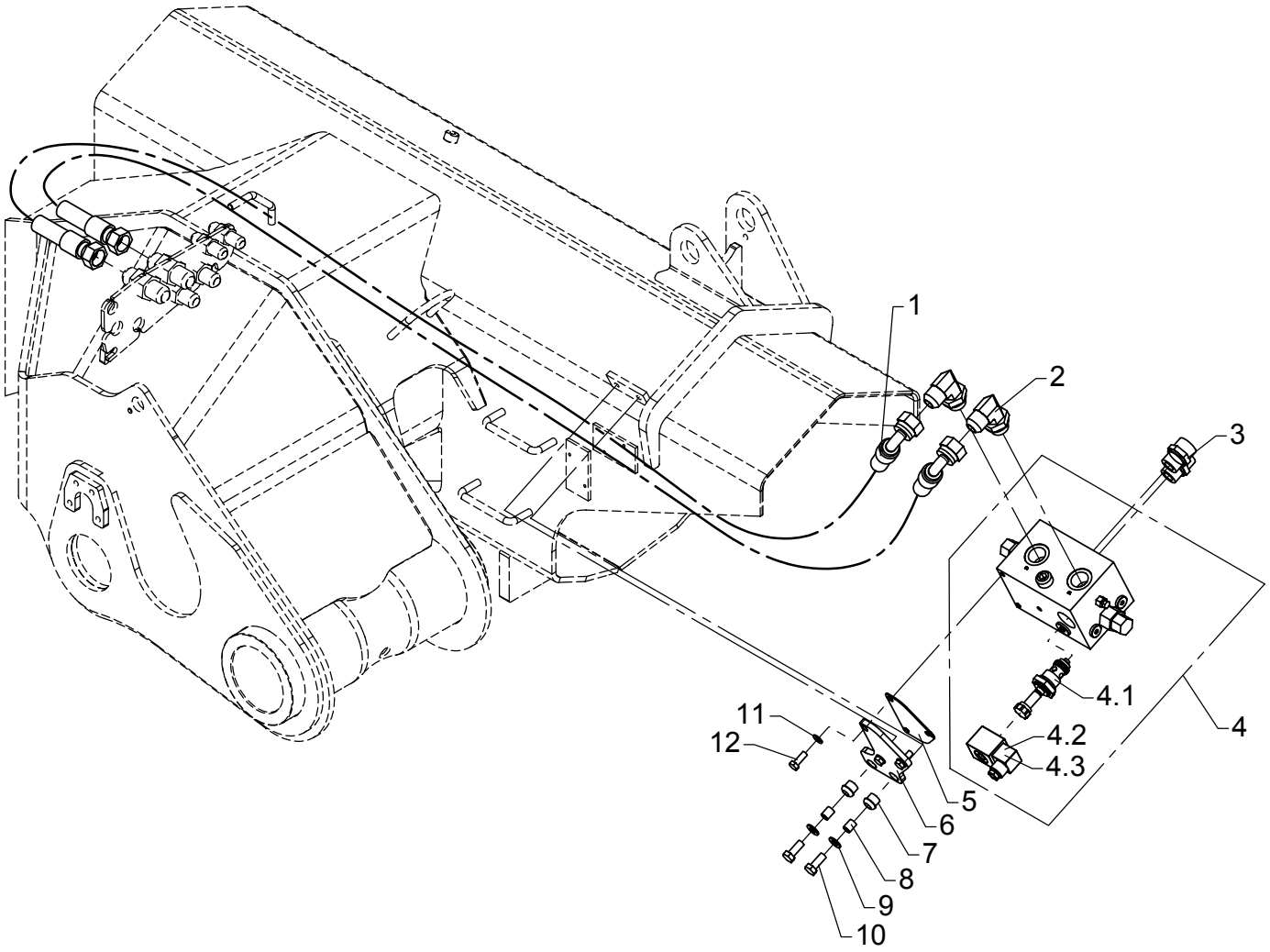

# Hydraulic system, regeneration

As from / To loader no.: 96 00 00 /
Created: 03.10.2003
Modified:

| Item no. | Qty. | Part no. | Description | Remarks |
|---|---|---|---|---|
| 1 | 2 | 56080 | Hose | 5/8" x 1400 mm V/O JIC |
| 2 | 2 | 26693 | Elbow connection | C40XS 18/20-3/4 JIC |
| 3 | 2 | 26197 | Connection | GEV 20 SR-WD |
| 4 | 1 | 59065 | Regeneration valve | |
| | | 59071 | Magnet coil | |
| | | 61777 | Solenoid | 12V |
| | | 61778 | Solenoid | 26V |
| 5 | 1 | 6300608 | Division plate | |
| 6 | 1 | 6300605 | Bracket | |
| 7 | 2 | 27088 | Rubber bushing | |
| 8 | 2 | 6300607 | Spacer | |
| 9 | 2 | 31177 | Washer | 10 mm |
| 10 | 2 | 30155 | Set screw | M10 x 25 |
| 11 | 3 | 31147 | Washer, stainless | 8 mm |
| 12 | 3 | 30133 | Set screw, stainless | M8 x 22 |

# ODIN

Intern ref.: 6300700

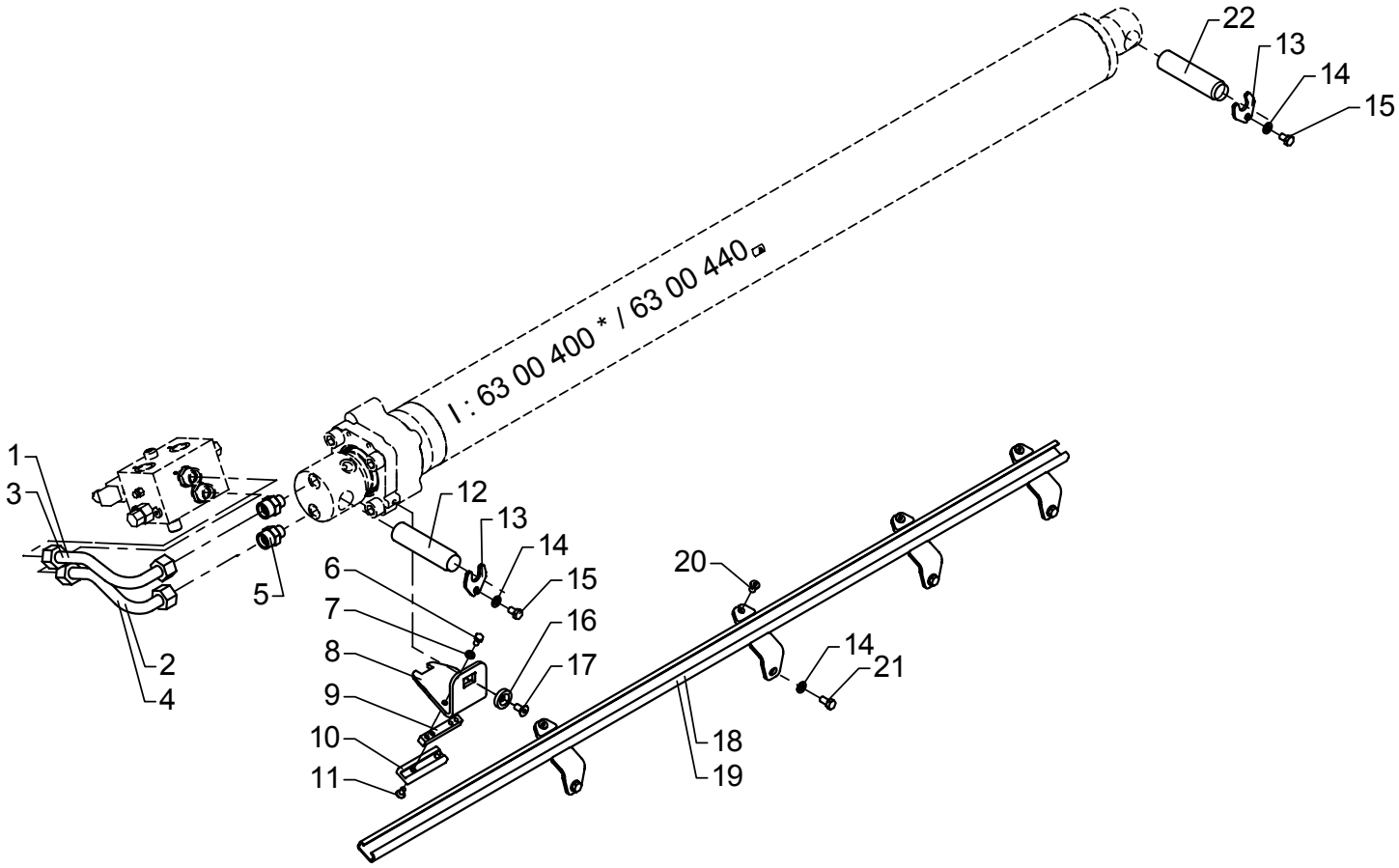

# Hydraulic system, extension cylinder, I

As from / To loader no.: 96 00 00 /
Created: 03.10.2003
Modified: 13.03.2006

| Item no. | Qty. | Part no. | Description | Remarks |
|---|---|---|---|---|
| 1 | 1 | 6300701 | Pipe | |
| 2 | 1 | 6300702 | Pipe | |
| 3 | 1 | 6301701 | Pipe | # |
| 4 | 1 | 6301702 | Pipe | # |
| 5 | 2 | 26221 | Connection | GEV 20 S/R 1/2-WD |
| 6 | 2 | 30131 | Set screw, stainless | M8 x 16 |
| 7 | 2 | 31147 | Washer, stainless | 8 mm |
| 8 | 1 | 6300337 | Bracket, C-I | |
| 9 | 1 | 6300338 | Spacer | |
| 10 | 1 | 63686 | Guide shoe | |
| 11 | 2 | 30543 | Countersunk screw | MK8 x 16 |
| 12 | 1 | 6302276 | Pin | |
| 13 | 2 | 6302277 | Lock plate | |
| 14 | 6 | 31177 | Washer | 10 mm |
| 15 | 2 | 31510 | Set screw, stainless | M10 x 16 |
| 16 | 1 | 6300339 | Disc | |
| 17 | 1 | 30545 | Countersunk screw | MK10 x 20 |
| 18 | 1 | 6300354 | Guide rail, I-K5 | * |
| 19 | 1 | 6300355 | Guide rail, I-K8 | |
| 20 | 4 | 32423 | Sockethead screw | MC10 x 16 |
| 21 | 4 | 30154 | Set screw | M10 x 20 |
| 22 | 1 | 6302274 | Pin | |

* Optimised boom system

# Personnel basket

# ODIN

Intern ref.: 6300710

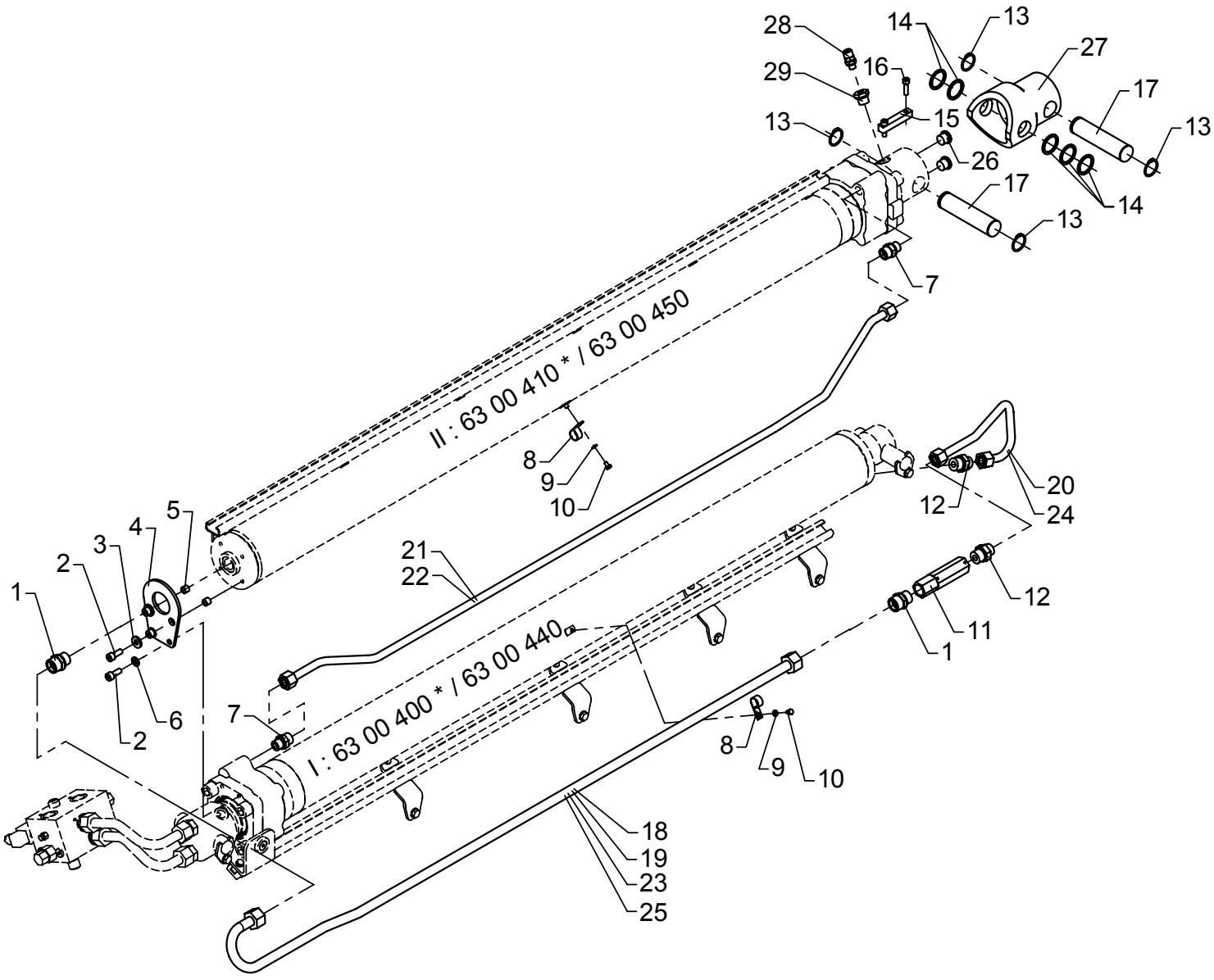

# Hydraulic system, extension cylinder, II

As from / To loader no.: 96 00 00 /
Created: 03.10.2003
Modified: 13.03.2006

| Item no. | Qty. | Part no. | Description | Remarks |
|---|---|---|---|---|
| 1 | 2 | 26197 | Connection | GEV 20 SR-WD |
| 2 | 4 | 30453 | Screw | MC10 x 25 |
| 3 | 2 | 31756 | Washer | 10 mm |
| 4 | 1 | 6300348 | Bracket, C-II | |
| 5 | 2 | 6302369 | Spacer | |
| 6 | 2 | 31177 | Washer | 10 mm |
| 7 | 2 | 26334 | Connection | GEV 16 SR-WD |
| 8 | 2 | 31449 | Clamp | |
| 9 | 2 | 32302 | Face washer, stainless | 6 mm |
| 10 | 2 | 30110 | Set screw, stainless | M6 x 10 |
| 11 | 1 | 59076 | Counter-balance valve | |
| 12 | 2 | 26390 | Connection | GEV 16 S/R 3/4-WD |
| 13 | 4 | 33119 | Circlip | 36U |
| 14 | 5 | 33257 | Supporting washer | SS 36 x 45 x 2,5 |
| 15 | 2 | 6302279 | Lock plate | |
| 16 | 4 | 30442 | Screw | MC8 x 30 |
| 17 | 2 | 6193254 | Pin | |
| 18 | 1 | 6300711 | Pipe | * |
| 19 | 1 | 6302711 | Pipe | |
| 20 | 1 | 6300712 | Pipe | |
| 21 | 1 | 6300713 | Pipe | * |
| 22 | 1 | 6302713 | Pipe | |
| 23 | 1 | 6301711 | Pipe | *# |
| 24 | 1 | 6301712 | Pipe | # |
| 25 | 1 | 6303711 | Pipe | # |
| 26 | 2 | 25103 | Plug | VS-R-1/2 WD |
| 27 | 1 | 6300377 | Adapter | K2 + K3 |
| 28 | 1 | 26103 | Pressure-gauge connect. | |
| 29 | 1 | 25180 | Connection | RED-R 1/2-WD/R 1/4 |

* Optimised boom system

# Personnel basket

# ODIN

Intern ref.: 6300720

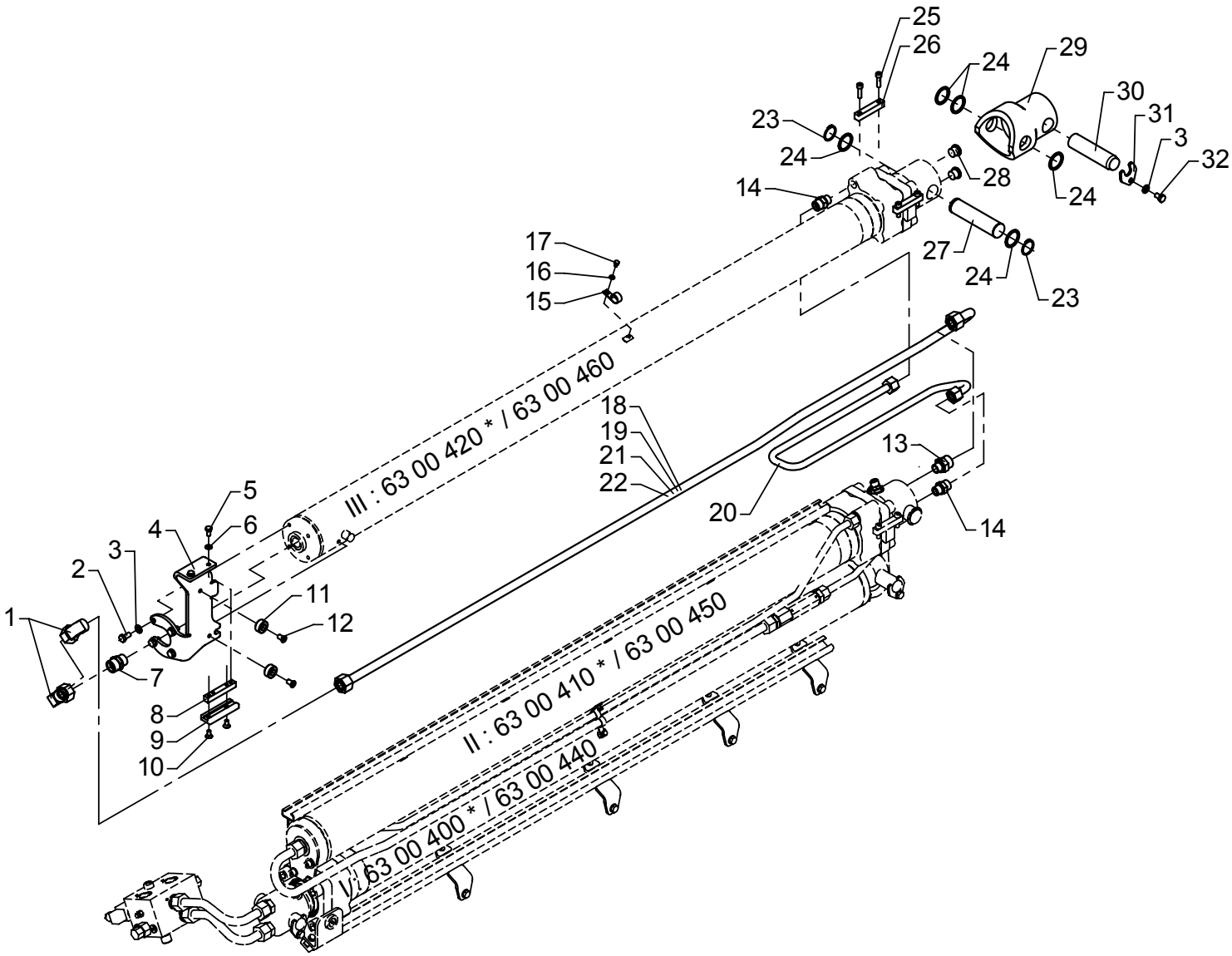

# Hydraulic system, extension cylinder, III

As from / To loader no.: 96 00 00 /
Created: 03.10.2003
Modified: 13.03.2006

| Item no. | Qty. | Part no. | Description | Remarks |
|---|---|---|---|---|
| 1 | 2 | 26198 | Elbow connection | EWVD 20 S-SV |
| 2 | 4 | 30154 | Set screw | M10 x 20 |
| 3 | 5 | 31177 | Washer | 10 mm |
| 4 | 1 | 6300349 | Bracket for guide shoe, C-III | |
| 5 | 2 | 30131 | Set screw, stainless | M8 x 16 |
| 6 | 2 | 31147 | Washer, stainless | 8 mm |
| 7 | 1 | 26197 | Connection | GEV 20 SR-WD |
| 8 | 1 | 6300338 | Spacer | |
| 9 | 1 | 63686 | Guide shoe | |
| 10 | 2 | 30543 | Countersunk screw | MK8 x 16 |
| 11 | 2 | 63503 | Bushing | |
| 12 | 2 | 32423 | Sockethead screw | MC10 x 16 |
| 13 | 1 | 26221 | Connection | GEV 20 S/R 1/2-WD |
| 14 | 2 | 26334 | Connection | GEV 16 SR-WD |
| 15 | 1 | 31449 | Clamp | |
| 16 | 1 | 32302 | Face washer, stainless | 6 mm |
| 17 | 1 | 30110 | Set screw, stainless | M6 x 10 |
| 18 | 1 | 6300721 | Pipe | * |
| 19 | 1 | 6302721 | Pipe | |
| 20 | 1 | 6300722 | Pipe | |
| 21 | 1 | 6301721 | Pipe | *# |
| 22 | 1 | 6303721 | Pipe | # |
| 23 | 2 | 33119 | Circlip | 36U |
| 24 | 5 | 33257 | Supporting washer | SS 36 x 45 x 2,5 |
| 25 | 4 | 30442 | Screw | MC8 x 30 |
| 26 | 2 | 6302279 | Lock plate | |
| 27 | 1 | 6193254 | Pin | |
| 28 | 2 | 25103 | Plug | VS-R-1/2 WD |
| 29 | 1 | 6300377 | Adapter | K2 + K3 |
| 30 | 1 | 6302276 | Pin | |
| 31 | 1 | 6302277 | Lock plate | |
| 32 | 1 | 31510 | Set screw, stainless | M10 x 16 |

* Optimised boom system

# Personnel basket

# ODIN

Intern ref.: 6300730

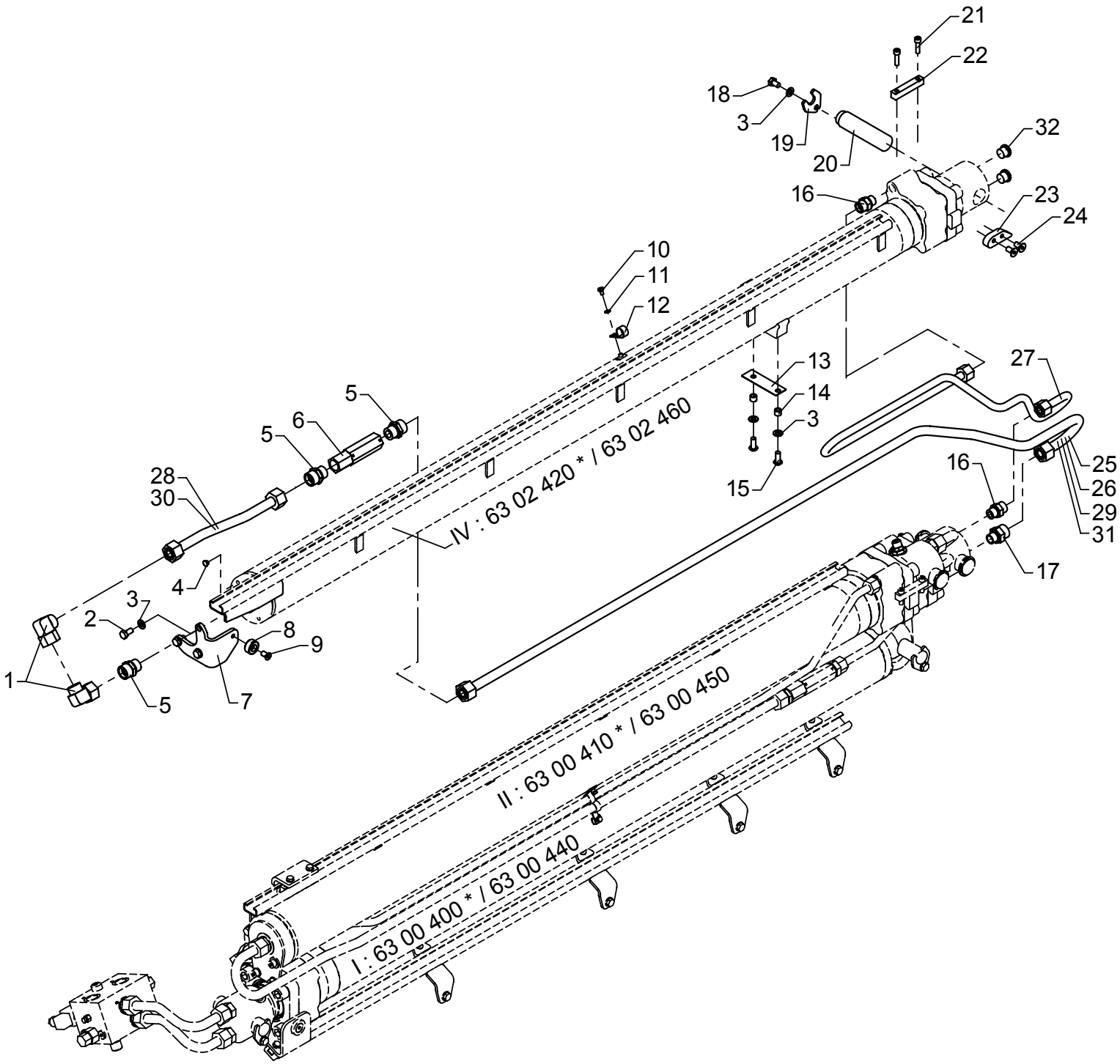

# Hydraulic system, extension cylinder, IV

As from / To loader no.: 96 00 00 /
Created: 03.10.2003
Modified: 13.03.2006

| Item no. | Qty. | Part no. | Description | Remarks |
|---|---|---|---|---|
| 1 | 2 | 26198 | Elbow connection | EWVD 20 S-SV |
| 2 | 3 | 30154 | Set screw | M10 x 20 |
| 3 | 6 | 31177 | Washer | 10 mm |
| 4 | 1 | 64366 | Plug | |
| 5 | 3 | 26197 | Connection | GEV 20 SR-WD |
| 6 | 1 | 59076 | Counter-balance valve | |
| 7 | 1 | 6300457 | Guide | |
| 8 | 1 | 63503 | Bushing | |
| 9 | 1 | 32423 | Sockethead screw | MC10 x 16 |
| 10 | 1 | 30110 | Set screw, stainless | M6 x 10 |
| 11 | 1 | 32302 | Face washer, stainless | 6 mm |
| 12 | 1 | 31449 | Clamp | |
| 13 | 1 | 6302389 | Shim | |
| 14 | 2 | 6302369 | Spacer | |
| 15 | 2 | 30652 | Screw | M10 x 25 |
| 16 | 2 | 26334 | Connection | GEV 16 SR-WD |
| 17 | 1 | 26221 | Connection | GEV 20 S/R 1/2-WD |
| 18 | 1 | 31510 | Set screw, stainless | M10 x 16 |
| 19 | 1 | 6302277 | Lock plate | |
| 20 | 1 | 6302276 | Pin | |
| 21 | 2 | 30442 | Screw | MC8 x 30 |
| 22 | 1 | 6302279 | Lock plate | |
| 23 | 1 | 6302275 | Lock plate | |
| 24 | 2 | 30545 | Countersunk screw | MK10 x 20 |
| 25 | 1 | 6300731 | Pipe | * |
| 26 | 1 | 6302731 | Pipe | |
| 27 | 1 | 6300732 | Pipe | |
| 28 | 1 | 6300733 | Pipe | |
| 29 | 1 | 6301731 | Pipe | *# |
| 30 | 1 | 6301733 | Pipe | # |
| 31 | 1 | 6303731 | Pipe | # |
| 32 | 2 | 25103 | Plug | VS-R-1/2 WD |

* Optimised boom system

# Personnel basket

# ODIN

Intern ref.: 6300740

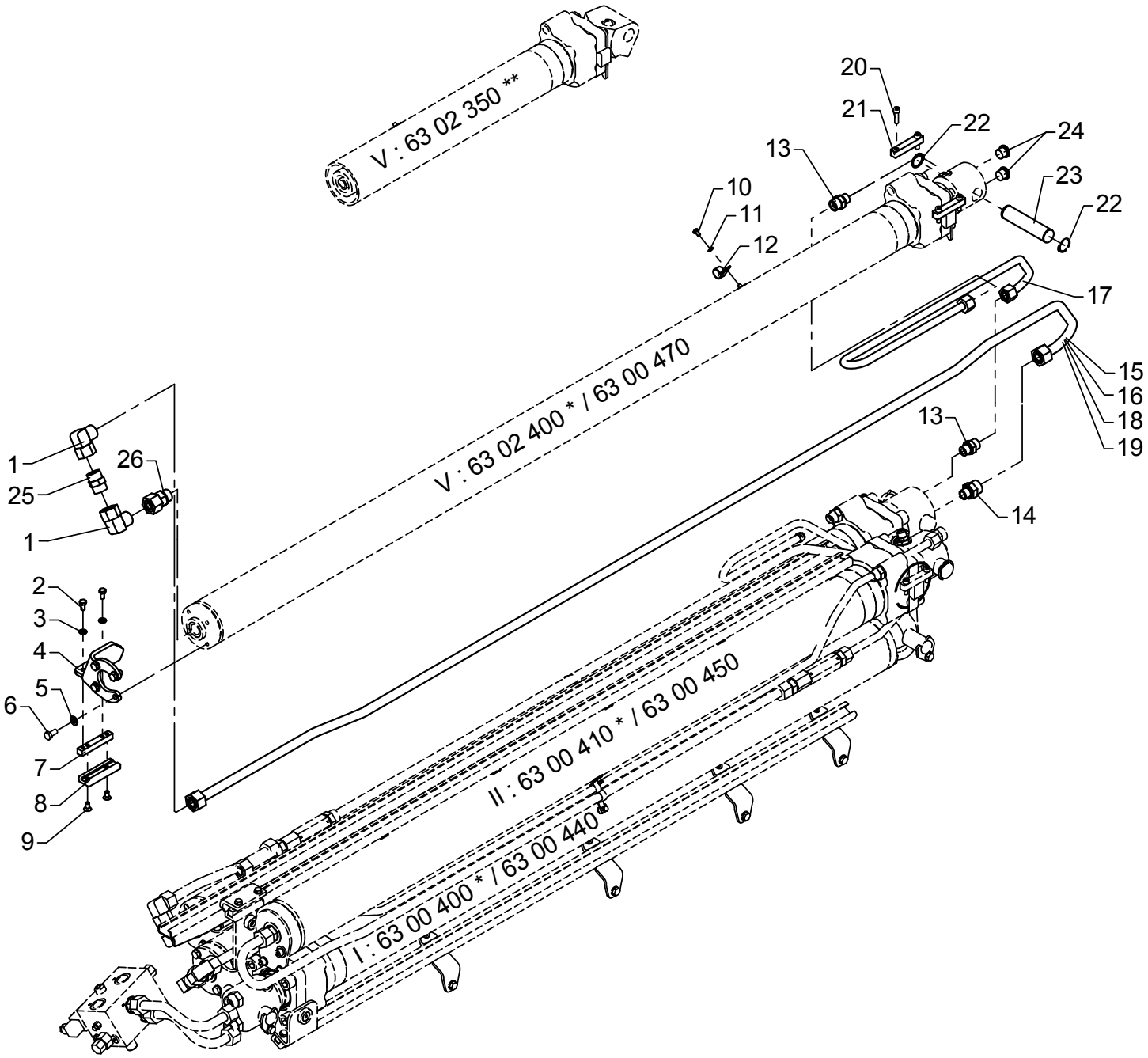

# Hydraulic system, extension cylinder, V

As from / To loader no.: 96 00 00 /
Created: 03.10.2003
Modified: 22.08.2013

| Item no. | Qty. | Part no. | Description | Remarks |
|---|---|---|---|---|
| 1 | 2 | 26198 | Elbow connection | EWVD 20 S-SV |
| 2 | 2 | 30131 | Set screw, stainless | M8 x 16 |
| 3 | 2 | 31147 | Face washer, 8 mm | |
| 4 | 1 | 6300456 | Bracket for guide shoe, C-V | |
| 5 | 4 | 31177 | Washer | 10 mm |
| 6 | 4 | 30154 | Set screw | M10 x 20 |
| 7 | 1 | 6300338 | Spacer | |
| 8 | 1 | 63686 | Guide shoe | |
| 9 | 2 | 30543 | Countersunk screw | MK8 x 16 |
| 10 | 1 | 30110 | Set screw, stainless | M6 x 10 |
| 11 | 1 | 32302 | Face washer, stainless | 6 mm |
| 12 | 1 | 31449 | Clamp | |
| 13 | 2 | 26334 | Connection | P-GEV 16 SR-WD |
| 14 | 1 | 26221 | Connection | P-GEV 20 SR 1/2-WD |
| 15 | 1 | 6300745 | Pipe | * |
| 16 | 1 | 6302745 | Pipe | |
| 17 | 1 | 6302746 | Pipe | |
| 18 | 1 | 6301745 | Pipe | *# |
| 19 | 1 | 6303745 | Pipe | # |
| 20 | 4 | 30442 | Screw | MC8 x 30 |
| 21 | 2 | 6302279 | Lock plate | |
| 22 | 2 | 33115 | Circlip | 30U |
| 23 | 1 | 6302278 | Pin | |
| 24 | 2 | 25103 | Plug | VS-R-1/2 WD |
| 25 | 1 | 26140 | Double connection | GS 20 S |
| 26 | 1 | 26358 | Connection | EGESD 20 SR-WD |

* Optimised boom system OK5
** Optimised boom system OK6

# Personnel basket

# ODIN

Intern ref.: 6301530

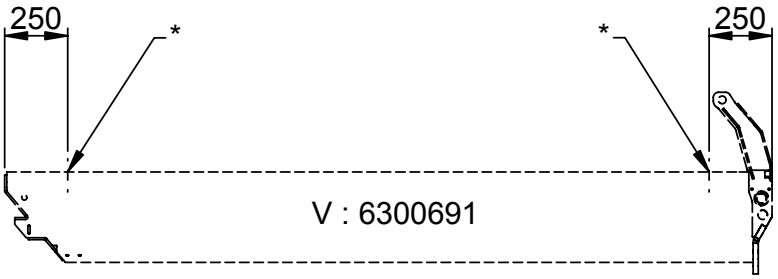


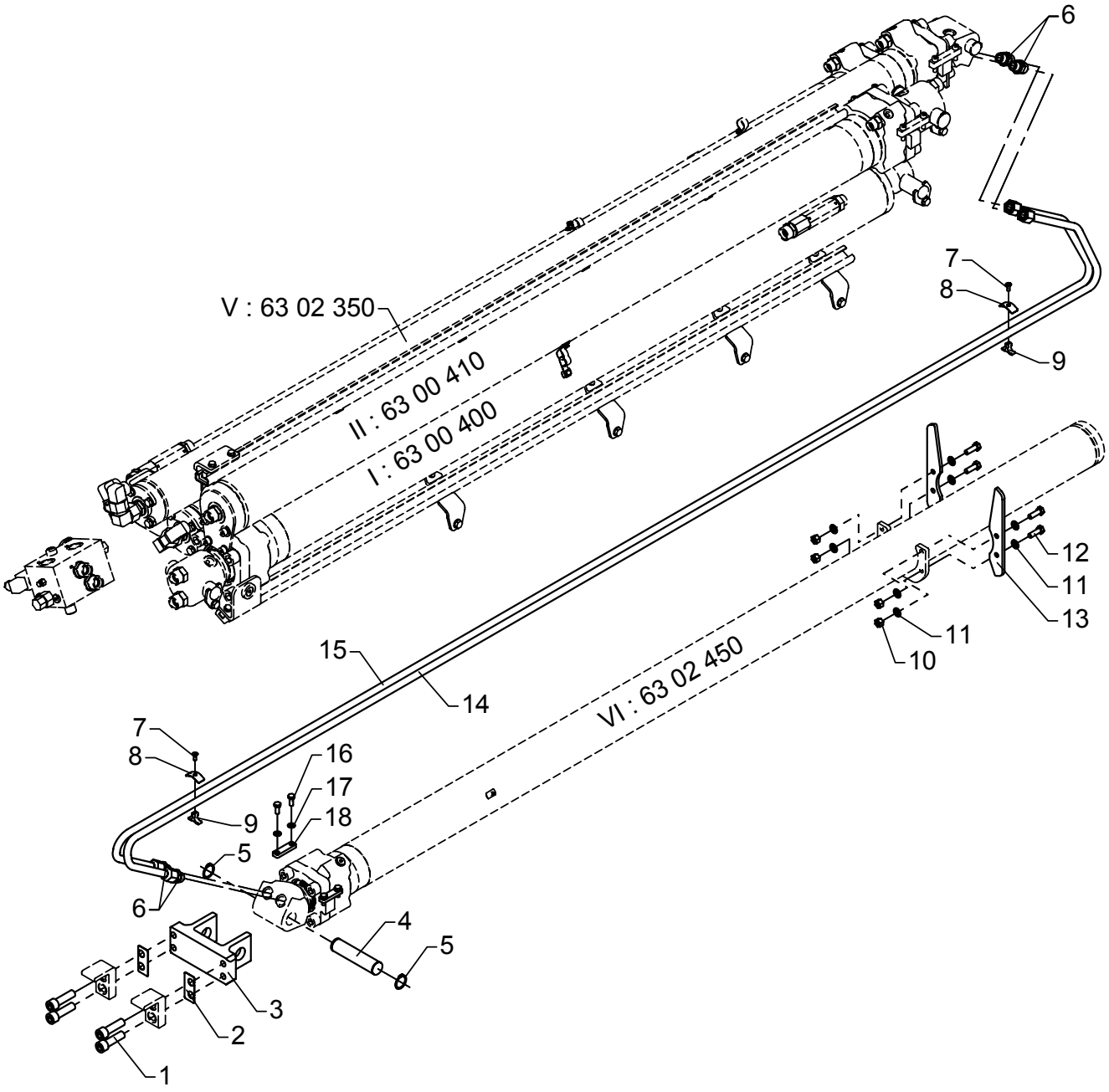

# Hydraulic system, extension cylinder, VI
# Optimised boom system OK6

As from / To loader no.: 96 00 00 /
Created: 27.05.2004
Modified: 23.08.2004

| Item no. | Qty. | Part no. | Description | Remarks |
|---|---|---|---|---|
| 1 | 4 | 32420 | Sockethead screw | MC16 x 55 |
| 2 | 2 | 6302638 | Base plate | |
| 3 | 1 | 6302637 | Adapter | |
| 4 | 1 | 6302278 | Pin | |
| 5 | 2 | 33115 | Circlip | 24U |
| 6 | 4 | 26334 | Connection | GEV 16 SR-WD |
| 7 | 2 | 32201 | Countersunk screw | MK6 x 16 |
| 8 | 2 | 6302639 | Base plate | |
| 9 | 2 | 6300928 | Clamp | |
| 10 | 4 | 30888 | Lock nut | M10 |
| 11 | 8 | 31177 | Washer | 10 mm |
| 12 | 4 | 30156 | Set screw, stainless | M10 x 30 |
| 13 | 2 | 6300459 | Support plate | |
| 14 | 1 | 6300748 | Pipe | |
| 15 | 1 | 6300749 | Pipe | |
| 16 | 4 | 30132 | Set screw, stainless | M8 x 20 |
| 17 | 4 | 31147 | Washer, stainless | 8 mm |
| 18 | 2 | 6232964 | Stowing pin | |

* Drill a ø6 mm countersunk hole before fitting.

# ODIN

Intern ref.: 6301530

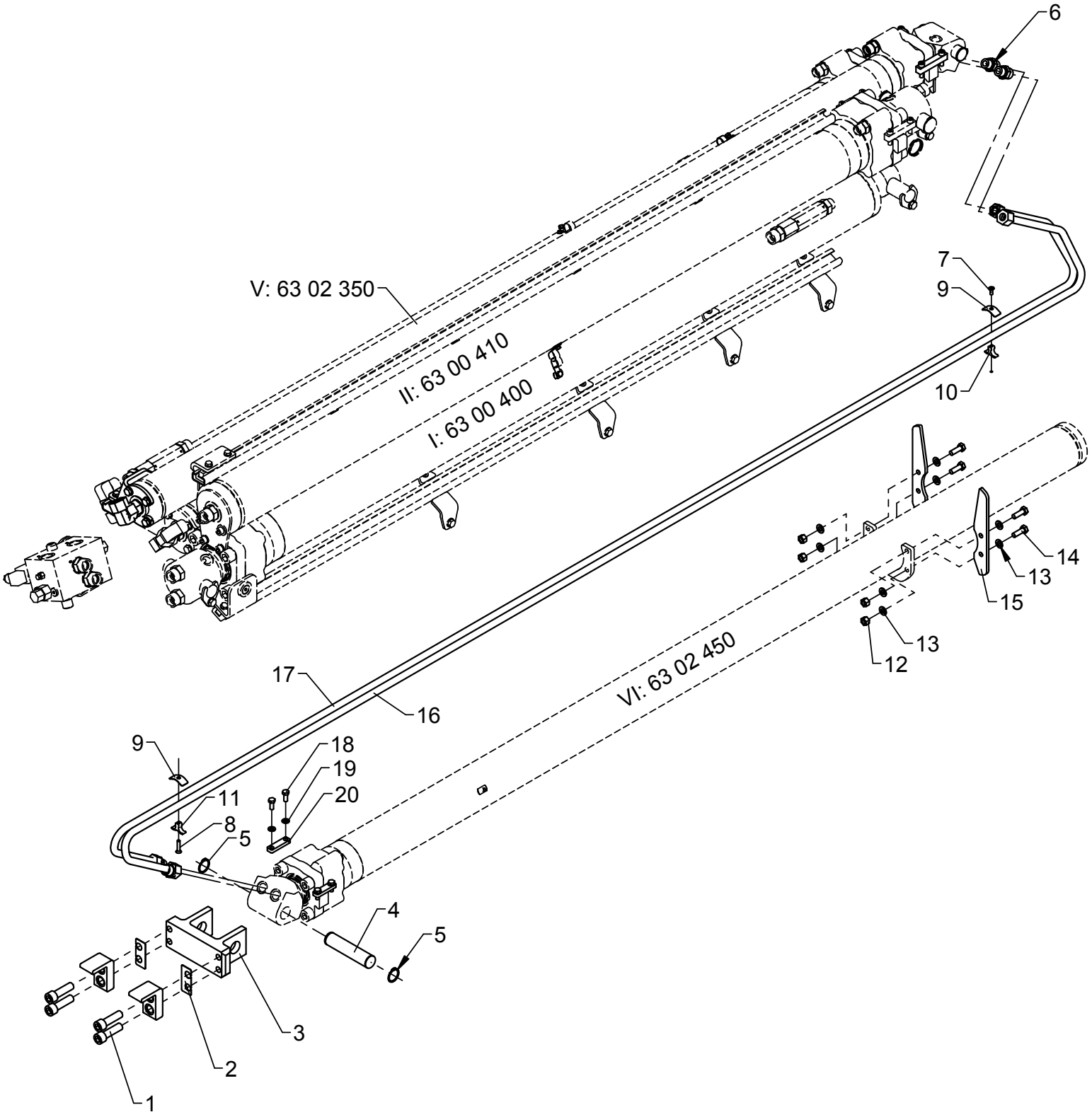

# Hydraulic system, extension cylinder, VI

As from / To loader no.: 96 xx xx /
Created: 04.11.2014
Modified:

| Item no. | Qty. | Part no. | Description | Remarks |
|---|---|---|---|---|
| 1 | 4 | 32420 | Sockethead screw | MC16 x 55 |
| 2 | 2 | 6302638 | Base plate | |
| 3 | 1 | 6302637 | Adapter | |
| 4 | 1 | 6302278 | Pin | |
| 5 | 2 | 33115 | Circlip | 30U |
| 6 | 4 | 26334 | Connection | P-GEV 16 SR-WD |
| 7 | 1 | 32201 | Countersunk screw | MK6 x 16 |
| 8 | 1 | 30585 | Countersunk screw | MK6 x 30 |
| 9 | 2 | 6302639 | Base plate | |
| 10 | 1 | 6300928 | Clamp | |
| 11 | 1 | 6300704 | Clamp | |
| 12 | 4 | 30888 | Lock nut | |
| 13 | 8 | 31177 | Washer | 10 mm |
| 14 | 4 | 30156 | Set screw, stainless | M10 x 30 |
| 15 | 2 | 6300459 | Support plate | |
| 16 | 1 | 6300748 | Pipe | |
| 17 | 1 | 6300749 | Pipe | |
| 18 | 4 | 30132 | Set screw, stainless | |
| 19 | 4 | 31147 | Face washer, 8 mm | |
| 20 | 2 | 6232964 | Stowing pin | |

# ODIN

Intern ref.: 6300750

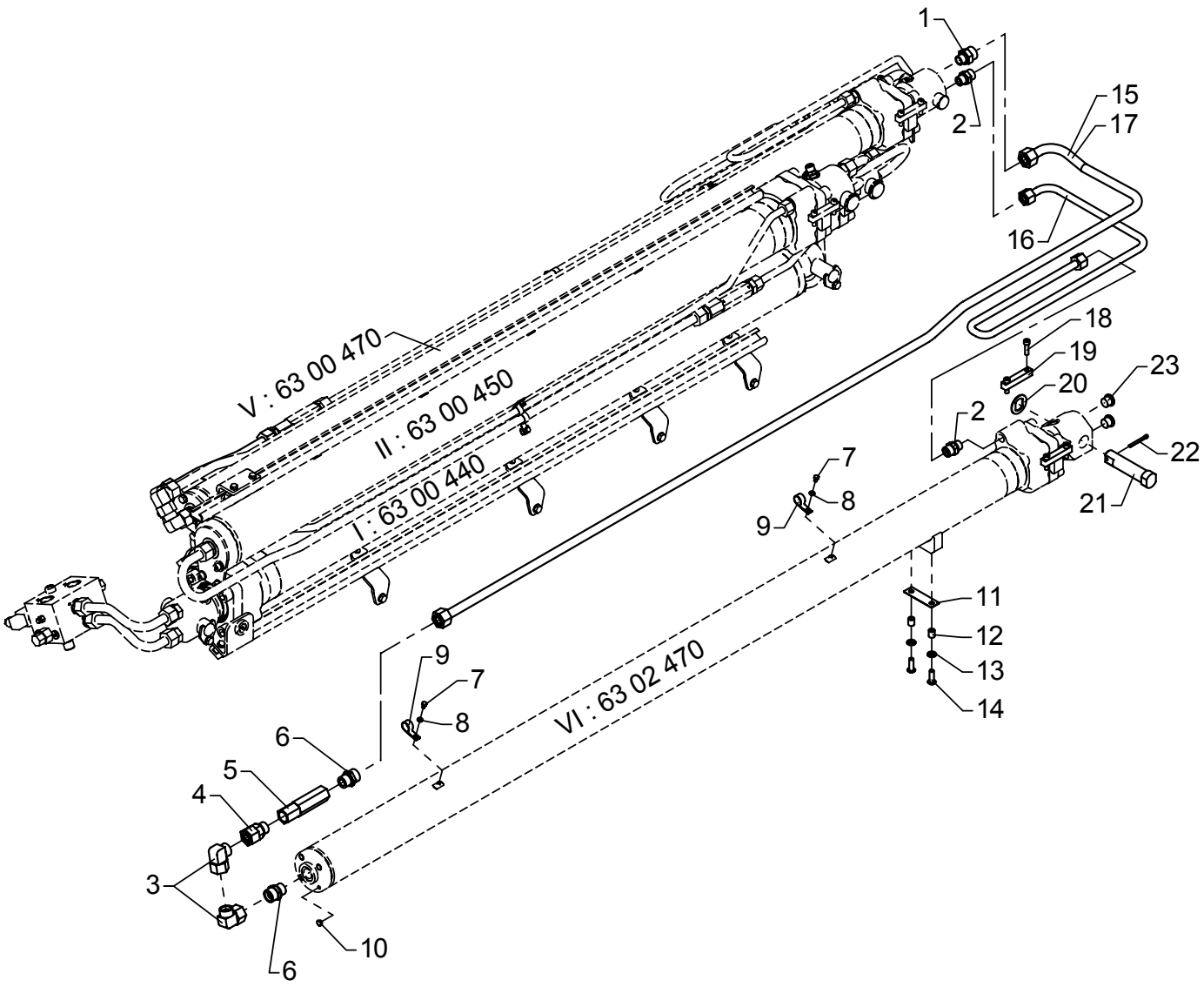

# Hydraulic system, extension cylinder, VI Boom system K6-K8

As from / To loader no.: 96 00 00 /
Created: 03.10.2003
Modified: 13.03.2006

| Item no. | Qty. | Part no. | Description | Remarks |
|---|---|---|---|---|
| 1 | 1 | 26221 | Connection | GEV 20 S/R 1/2-WD |
| 2 | 2 | 26334 | Connection | GEV 16 SR-WD |
| 3 | 2 | 26198 | Elbow connection | EWVD 20 S-SV |
| 4 | 1 | 26358 | Connection | EGESD 20 SR-WD |
| 5 | 1 | 59076 | Counter-balance valve | |
| 6 | 2 | 26197 | Connection | GEV 20 SR-WD |
| 7 | 2 | 30110 | Set screw, stainless | M6 x 10 |
| 8 | 2 | 32302 | Face washer, stainless | 6 mm |
| 9 | 2 | 31449 | Clamp | |
| 10 | 4 | 64366 | Plug | |
| 11 | 1 | 6302478 | Shim | |
| 12 | 2 | 6302048 | Spacer | |
| 13 | 2 | 31177 | Washer | 10 mm |
| 14 | 2 | 30649 | Screw | M10 x 30 |
| 15 | 1 | 6302751 | Pipe | |
| 16 | 1 | 6302752 | Pipe | |
| 17 | 1 | 6303751 | Pipe | # |
| 18 | 4 | 30442 | Screw | MC8 x 30 |
| 19 | 2 | 6302279 | Lock plate | |
| 20 | 1 | 6300493 | Washer | |
| 21 | 1 | 6300481 | Pin | |
| 22 | 1 | 31635 | Split pin | ø5 x 50 |
| 23 | 2 | 25103 | Plug | VS-R-1/2 WD |

# Personnel basket

# ODIN

Intern ref.: 6300760

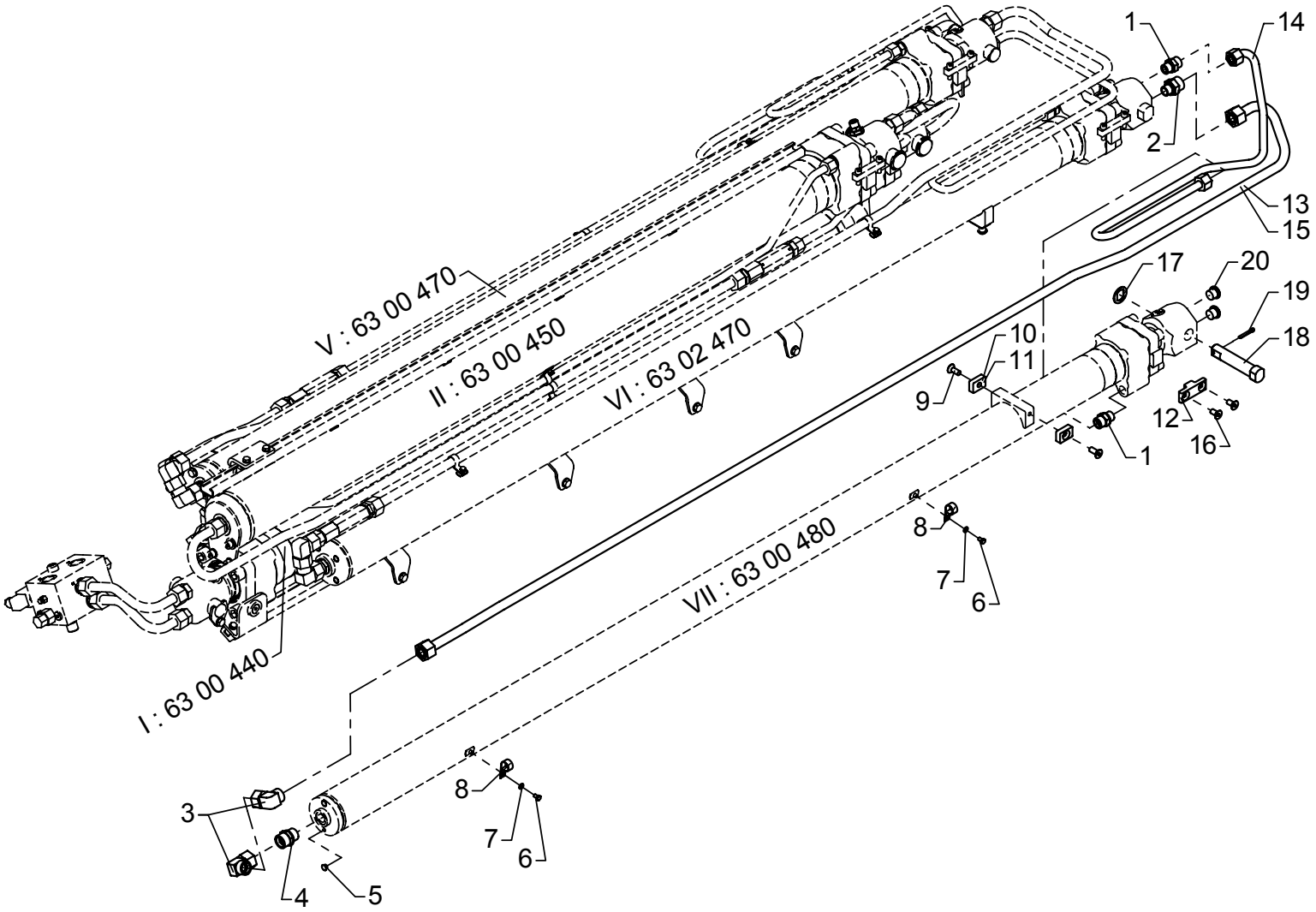

# Hydraulic system, extension cylinder, VII

As from / To loader no.: 96 00 00 /
Created: 03.10.2003
Modified: 13.03.2006

| Item no. | Qty. | Part no. | Description | Remarks |
|---|---|---|---|---|
| 1 | 2 | 26334 | Connection | GEV 16 SR-WD |
| 2 | 1 | 26221 | Connection | GEV 20 S/R 1/2-WD |
| 3 | 2 | 26198 | Elbow connection | EWVD 20 S-SV |
| 4 | 1 | 26197 | Connection | GEV 20 SR-WD |
| 5 | 2 | 64366 | Plug | |
| 6 | 2 | 30110 | Set screw, stainless | M6 x 10 |
| 7 | 2 | 32302 | Face washer, stainless | 6 mm |
| 8 | 2 | 31449 | Clamp | |
| 9 | 2 | 30546 | Countersunk screw | MK10 x 25 |
| 10 | 2 | 6302267 | Washer | |
| 11 | 2 | 6302268 | Washer | |
| 12 | 2 | 6302273 | Lock plate | |
| 13 | 1 | 6302761 | Pipe | |
| 14 | 1 | 6302762 | Pipe | |
| 15 | 1 | 6303761 | Pipe | # |
| 16 | 4 | 30545 | Countersunk screw | MK10 x 20 |
| 17 | 1 | 6300494 | Washer | |
| 18 | 1 | 6300482 | Pin | |
| 19 | 1 | 31617 | Split pin | ø5 x 35 |
| 20 | 2 | 25103 | Plug | VS-R-1/2 WD |

# Personnel basket

# ODIN

Intern ref.: 6300770

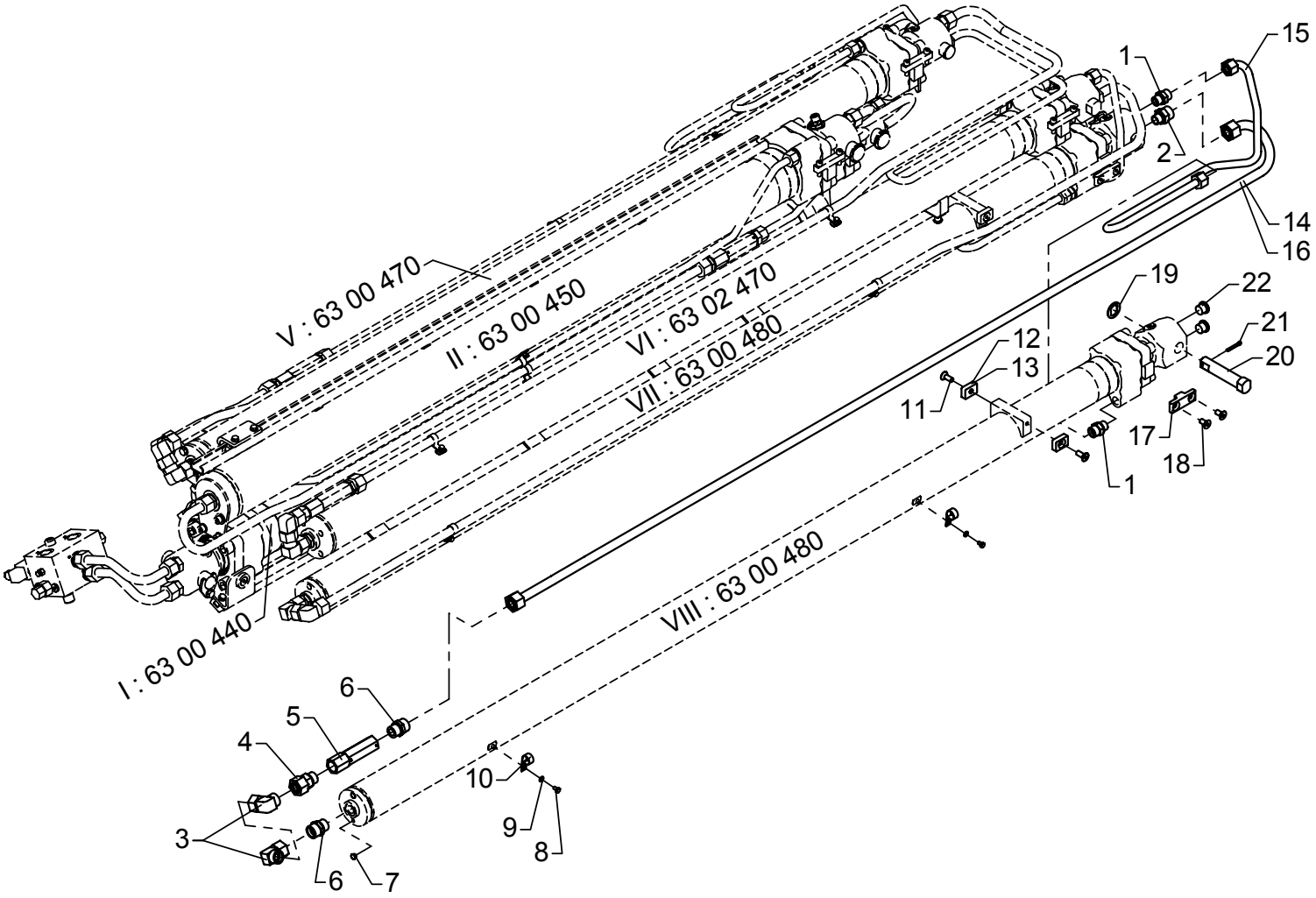

# Hydraulic system, extension cylinder, VIII

As from / To loader no.: 96 00 00 /
Created: 03.10.2003
Modified: 13.03.2006

| Item no. | Qty. | Part no. | Description | Remarks |
|---|---|---|---|---|
| 1 | 2 | 26334 | Connection | GEV 16 SR-WD |
| 2 | 1 | 26221 | Connection | GEV 20 S/R 1/2-WD |
| 3 | 2 | 26198 | Elbow connection | EWVD 20 S-SV |
| 4 | 1 | 26358 | Connection | EGESD 20 SR-WD |
| 5 | 1 | 59076 | Counter-balance valve | |
| 6 | 2 | 26197 | Connection | GEV 20 SR-WD |
| 7 | 2 | 64366 | Plug | |
| 8 | 2 | 30110 | Set screw, stainless | M6 x 10 |
| 9 | 2 | 32302 | Face washer, stainless | 6 mm |
| 10 | 2 | 31449 | Clamp | |
| 11 | 2 | 30546 | Countersunk screw | MK10 x 25 |
| 12 | 2 | 6302267 | Washer | |
| 13 | 2 | 6302268 | Washer | |
| 14 | 1 | 6302771 | Pipe | |
| 15 | 1 | 6302772 | Pipe | |
| 16 | 1 | 6303771 | Pipe | # |
| 17 | 2 | 6302273 | Lock plate | |
| 18 | 4 | 30545 | Countersunk screw | MK10 x 20 |
| 19 | 1 | 6300494 | Washer | |
| 20 | 1 | 6300482 | Pin | |
| 21 | 1 | 31617 | Split pin | ø5 x 35 |
| 22 | 2 | 25103 | Plug | VS-R-1/2 WD |

# Personnel basket

# ODIN

Intern ref.: 6300620

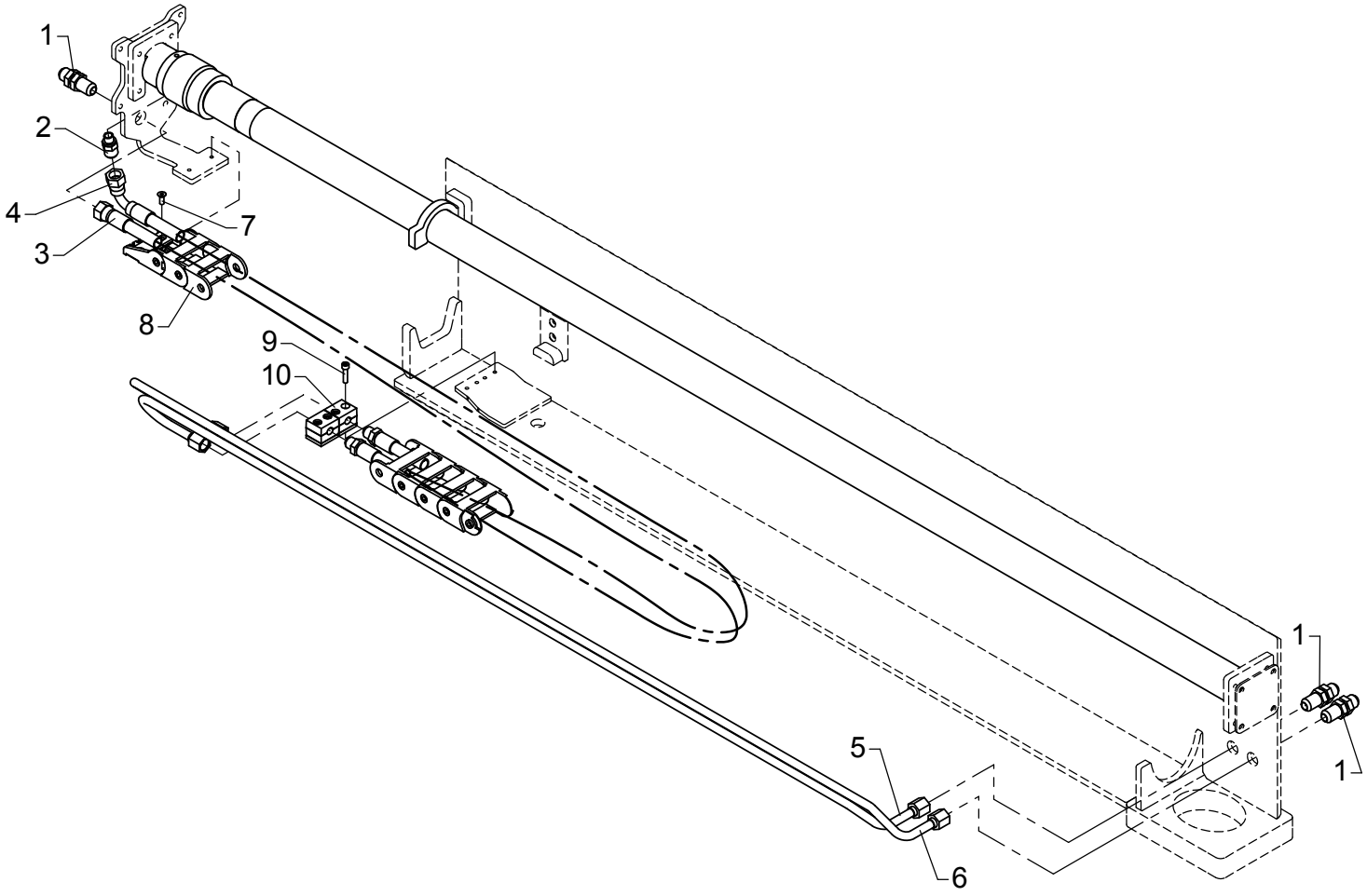

# Hydraulic system, stabilizer beam, type DV+DR+DHR - 6325

As from / To loader no.: 96 00 00 / 96 03 82
Created: 03.10.2003
Modified: 25.02.2015

| Item no. | Qty. | Part no. | Description | Remarks |
|---|---|---|---|---|
| 1 | 3 | 25824 | Bulkhead connection | WTX-WLNS 12 JIC |
| 2 | 1 | 25867 | Straight connection | F40XS12 - 1/4 |
| 3 | 1 | 56079 | Hose | 3/8" x 3535 mm o/s JIC |
| 4 | 1 | 56078 | Hose | 3/8" x 3535 mm v/s JIC |
| 5 | 1 | 6300647 | Pipe | |
| 6 | 1 | 6300646 | Pipe | |
| 7 | 2 | 32201 | Countersunk screw | MK6 x 16 |
| 8 | 1 | 27890 | Nylon drag chain | |
| 9 | 4 | 30962 | Screw | MC6 x 25 |
| 10 | 2 | 31425 | Clamp | |

# 6020

Intern ref.: 6300620

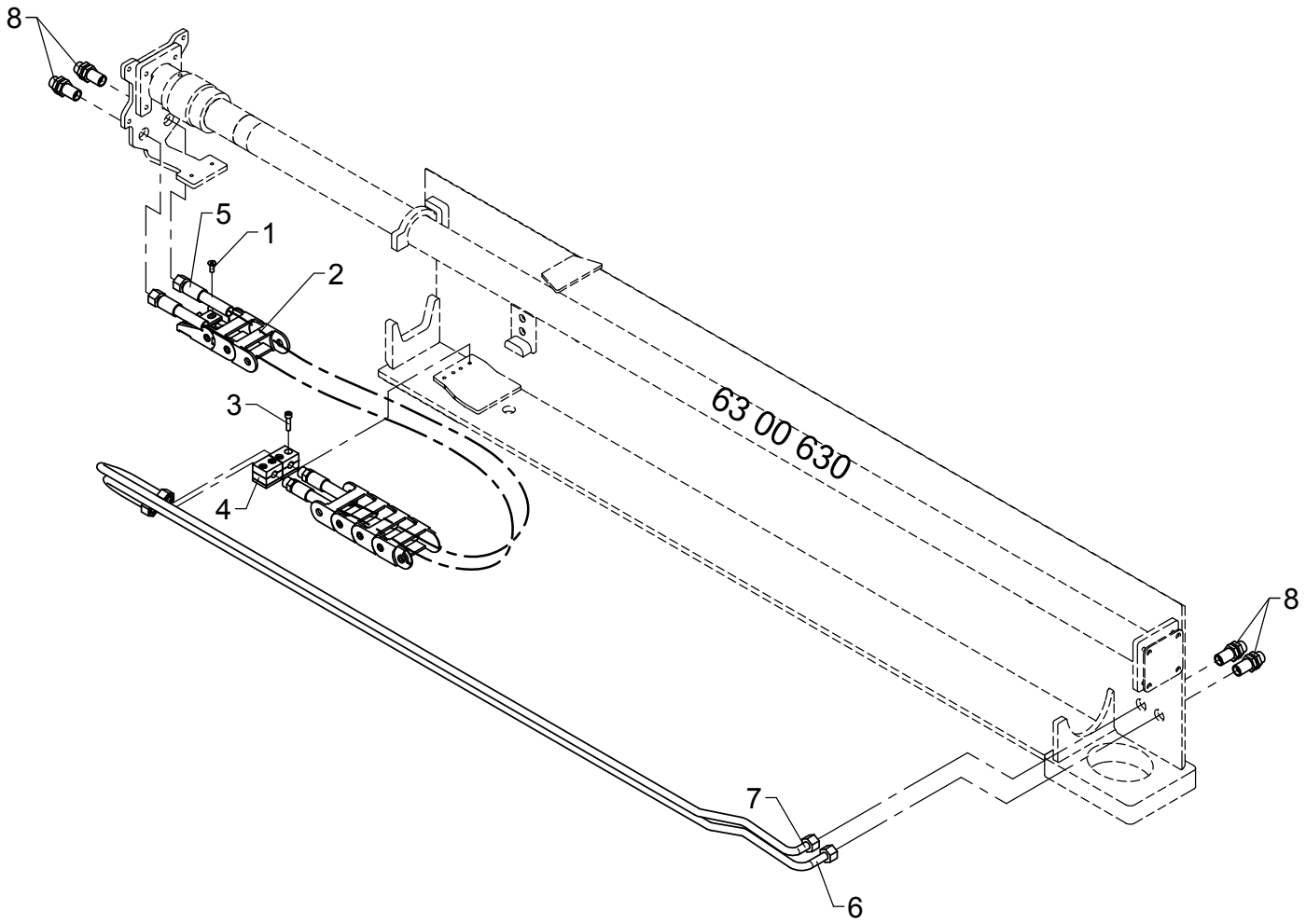

# Hydraulic system, stabilizer beam, type DV+DR+DHR - 6325

As from / To loader no.: 96 03 83
Created: 21.01.2015
Modified:

| Item no. | Qty. | Part no. | Description | Remarks |
|---|---|---|---|---|
| 1 | 2 | 32201 | Countersunk screw | MK6 x 16 |
| 2 | 1 | 27890 | Nylon drag chain | |
| 3 | 4 | 30962 | Screw | MC6 x 25 |
| 4 | 2 | 31425 | Clamp | |
| 5 | 2 | 56459 | Hose | |
| 6 | 1 | 6301444 | Pipe | |
| 7 | 1 | 6301445 | Pipe | |
| 8 | 4 | 25201 | Bulkhead connection | |

# ODIN

Intern ref.: 6300980

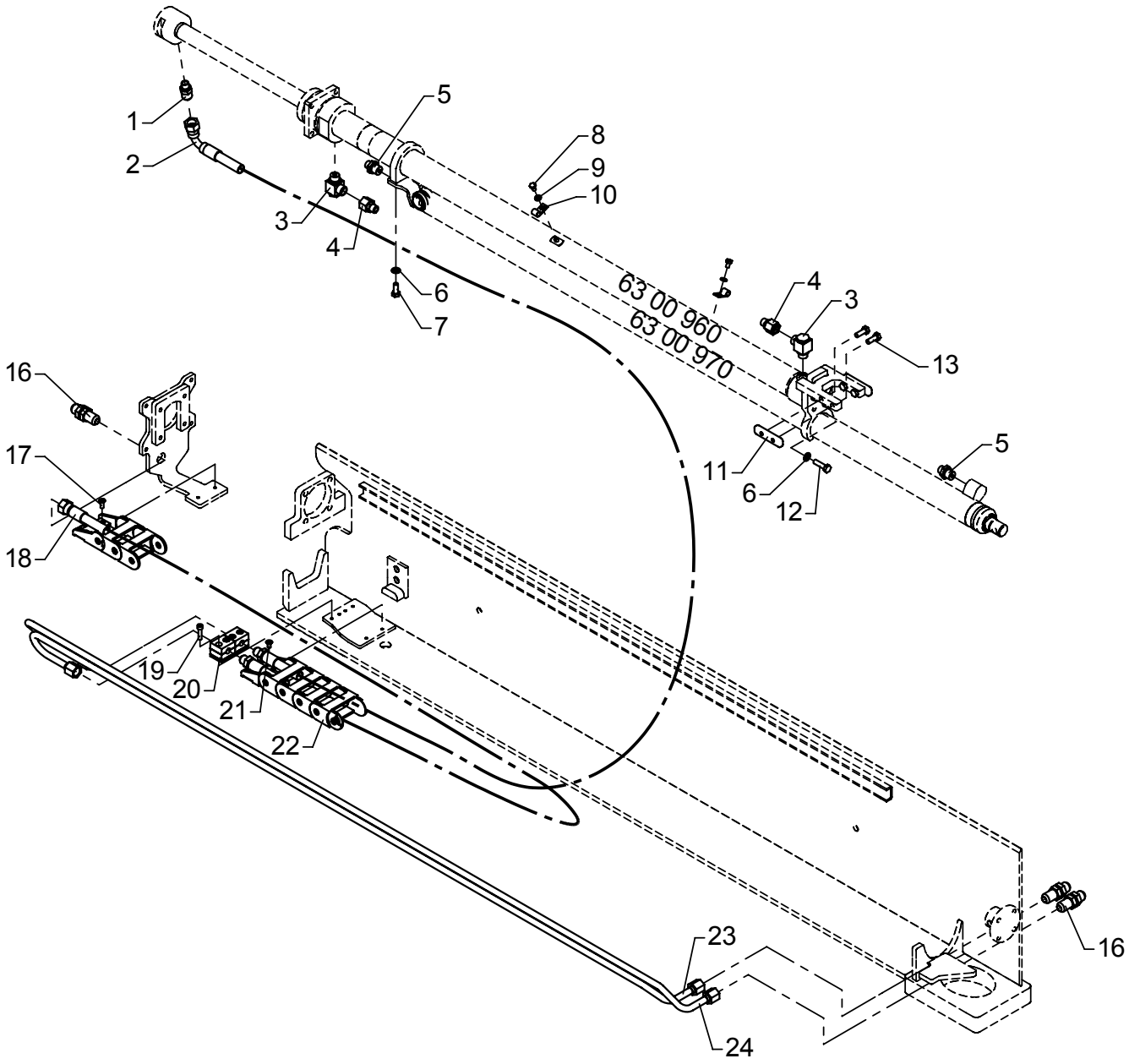


Loctite 243

# Hydraulic system, stabilizer beam, type DV+DR+DHR - 6725

As from / To loader no.: 96 00 00 / 96 02 56
Created: 03.10.2003
Modified:

| Item no. | Qty. | Part no. | Description | Remarks |
|---|---|---|---|---|
| 1 | 1 | 25867 | Straight connection | F40XS12 - 1/4 |
| 2 | 1 | 56081 | Hose | 3/8" x 3535 mm v/s JIC |
| 3 | 2 | 25130 | Banjo connection | RSWV 12 LR |
| 4 | 2 | 26101 | Reducing connection | REDSDN 12/8 L |
| 5 | 2 | 25244 | Connection | GES 8 LR 3/8-WD |
| 6 | 6 | 31147 | Washer, stainless | |
| 7 | 2 | 30132 | Set screw, stainless | |
| 8 | 2 | 30110 | Set screw, stainless | M6 x 10 |
| 9 | 2 | 32302 | Face washer, stainless | 6 mm |
| 10 | 2 | 31445 | Suspension | 6-8 mm |
| 11 | 2 | 6300208 | Slide block | |
| 12 | 4 | 30135 | Set screw, stainless | M8 x 30 |
| 13 | 4 | 30133 | Set screw, stainless | |
| 14 | 1 | 6300983 | Pipe | |
| 15 | 1 | 6300984 | Pipe | |
| 16 | 3 | 25824 | Bulkhead connection | WTX-WLNS 12 JIC |
| 17 | 2 | 32201 | Countersunk screw | MK6 x 16 |
| 18 | 1 | 56082 | Hose | 3/8" x 3535 mm o/s JIC |
| 19 | 4 | 30962 | Screw, stainless | MC6 x 25 |
| 20 | 2 | 31425 | Clamp | |
| 21 | 2 | 30542 | Counter-sunk screw | MK6 x 12 |
| 22 | 1 | 27894 | Nylon drag chain | |
| 23 | 1 | 6300982 | Pipe | |
| 24 | 1 | 6300981 | Pipe | |

# 6020K

Intern ref.: 6300980

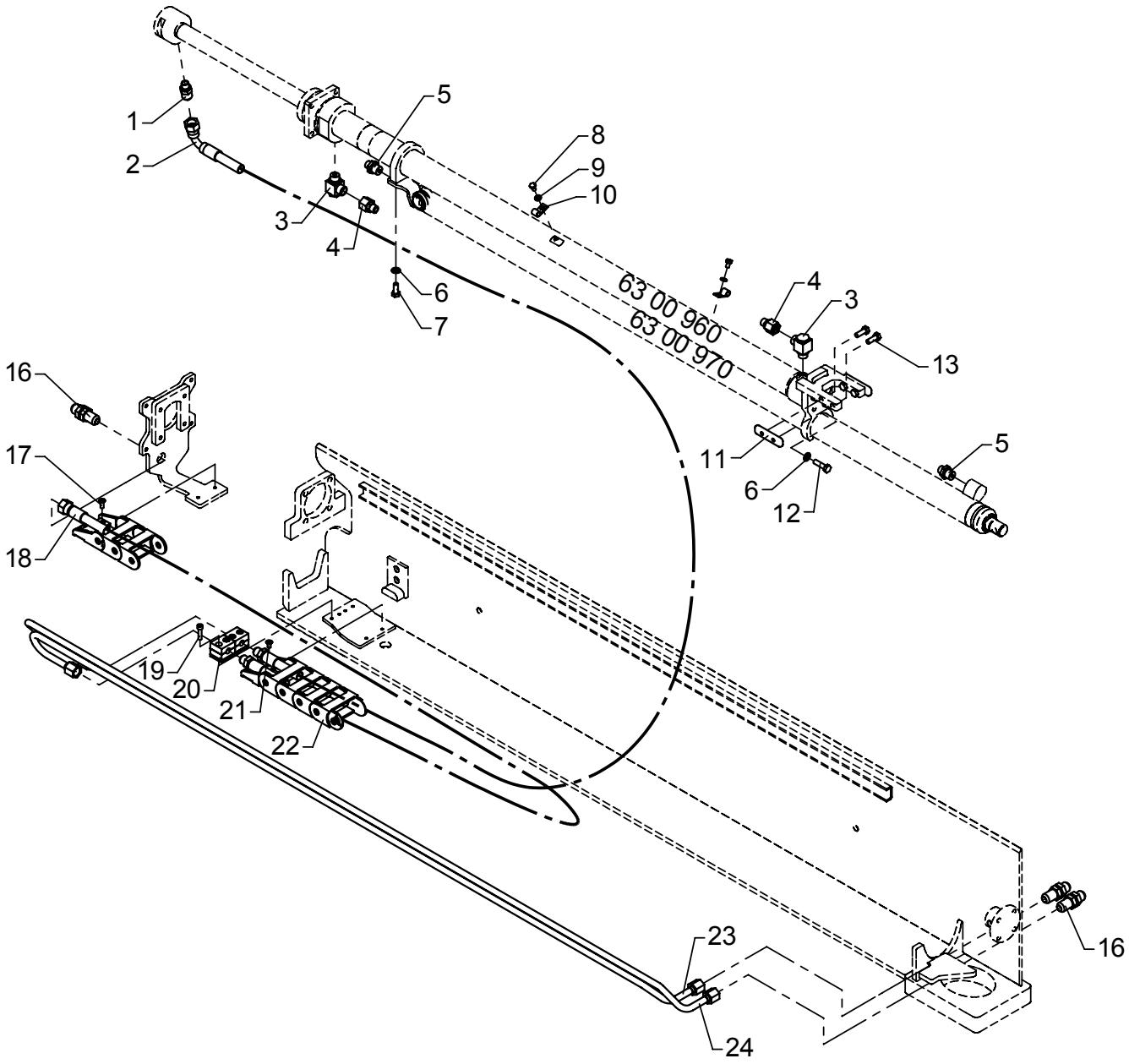


Loctite 243

# Hydraulic system, stabilizer beam, type DV+DR+DHR - 6725

As from / To loader no.: 96 02 57 / 96 03 82
Created: 03.10.2003
Modified:

| Item no. | Qty. | Part no. | Description | Remarks |
|---|---|---|---|---|
| 1 | 2 | 25130 | Banjo connection | RSWV 12 LR |
| 2 | 2 | 26101 | Reducing connection | REDSDN 12/8 L |
| 3 | 2 | 25244 | Connection | GES 8 LR 3/8-WD |
| 4 | 6 | 31147 | Face washer, 8 mm | |
| 5 | 2 | 30132 | Set screw, stainless | |
| 6 | 2 | 30110 | Set screw, stainless | M6 x 10 |
| 7 | 2 | 32302 | Face washer, stainless | 6 mm |
| 8 | 2 | 31445 | Suspension | 6-8 mm |
| 9 | 2 | 6302208 | Slide block | |
| 10 | 4 | 30135 | Set screw, stainless | M8 x 30 |
| 11 | 4 | 30133 | Set screw, stainless | |
| 12 | 1 | 6300983 | Pipe | |
| 13 | 1 | 6300984 | Pipe | |
| 14 | 1 | 25867 | Straight connection | F40XS12 - 1/4 |
| 15 | 1 | 56081 | Hose | 3/8" x 3535 mm v/s JIC |
| 16 | 3 | 25824 | Bulkhead connection | WTX-WLNS 12 JIC |
| 17 | 1 | 6300982 | Pipe | |
| 18 | 1 | 6300981 | Pipe | |
| 19 | 1 | 56082 | Hose | 3/8" x 3535 mm o/s JIC |
| 20 | 2 | 32201 | Countersunk screw | MK6 x 16 |
| 21 | 4 | 30962 | Screw | MC6 x 25 |
| 22 | 2 | 31425 | Clamp | |
| 23 | 1 | 27894 | Nylon drag chain | |

# 6020

Intern ref.: 6300980

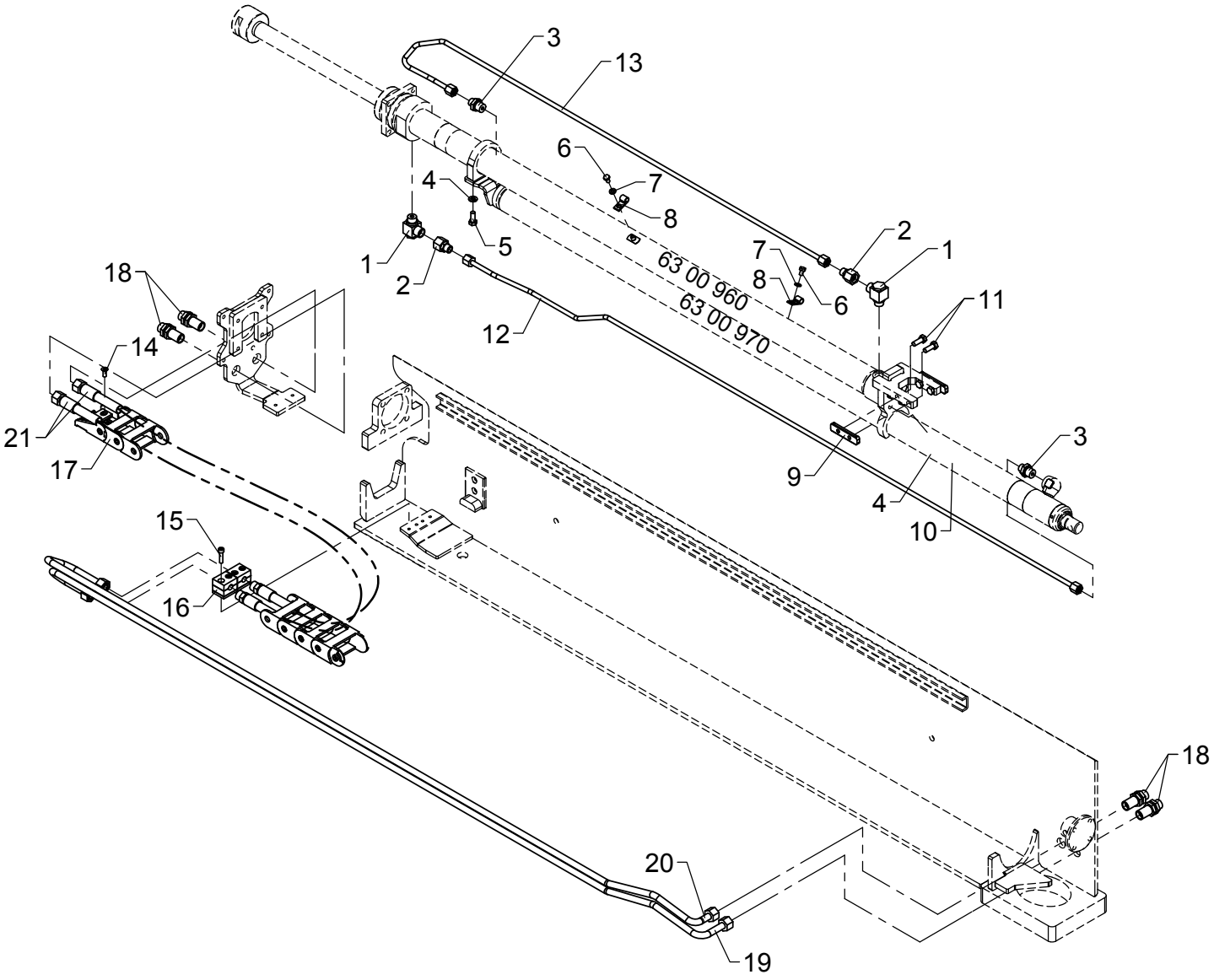


Loctite 243

# Hydraulic system, stabilizer beam,

As from / To loader no.: 96 03 83
Created: 22.01.2015
Modified:

| Item no. | Qty. | Part no. | Description | Remarks |
|---|---|---|---|---|
| 1 | 2 | 25130 | Banjo connection | RSWV 12 LR |
| 2 | 2 | 26101 | Reducing connection | REDSDN 12/8 L |
| 3 | 2 | 25244 | Connection | GES 8 LR 3/8-WD |
| 4 | 6 | 31147 | Face washer, 8 mm | |
| 5 | 2 | 30132 | Set screw, stainless | |
| 6 | 2 | 30110 | Set screw, stainless | M6 x 10 |
| 7 | 2 | 32302 | Face washer, stainless | 6 mm |
| 8 | 2 | 31445 | Suspension | 6-8 mm |
| 9 | 2 | 6302208 | Slide block | |
| 10 | 4 | 30135 | Set screw, stainless | M8 x 30 |
| 11 | 4 | 30133 | Set screw, stainless | |
| 12 | 1 | 6300983 | Pipe | |
| 13 | 1 | 6300984 | Pipe | |
| 14 | 2 | 32201 | Countersunk screw | MK6 x 16 |
| 15 | 4 | 30962 | Screw | MC6 x 25 |
| 16 | 2 | 31425 | Clamp | |
| 17 | 1 | 27894 | Nylon drag chain | |
| 18 | 4 | 25201 | Bulkhead connection | |
| 19 | 1 | 6301446 | Pipe | |
| 20 | 1 | 6301447 | Pipe | |
| 21 | 2 | 56971 | Hose | 3/8" x 3535 mm L/S 12L |

# ODIN

Intern ref.: 6300100

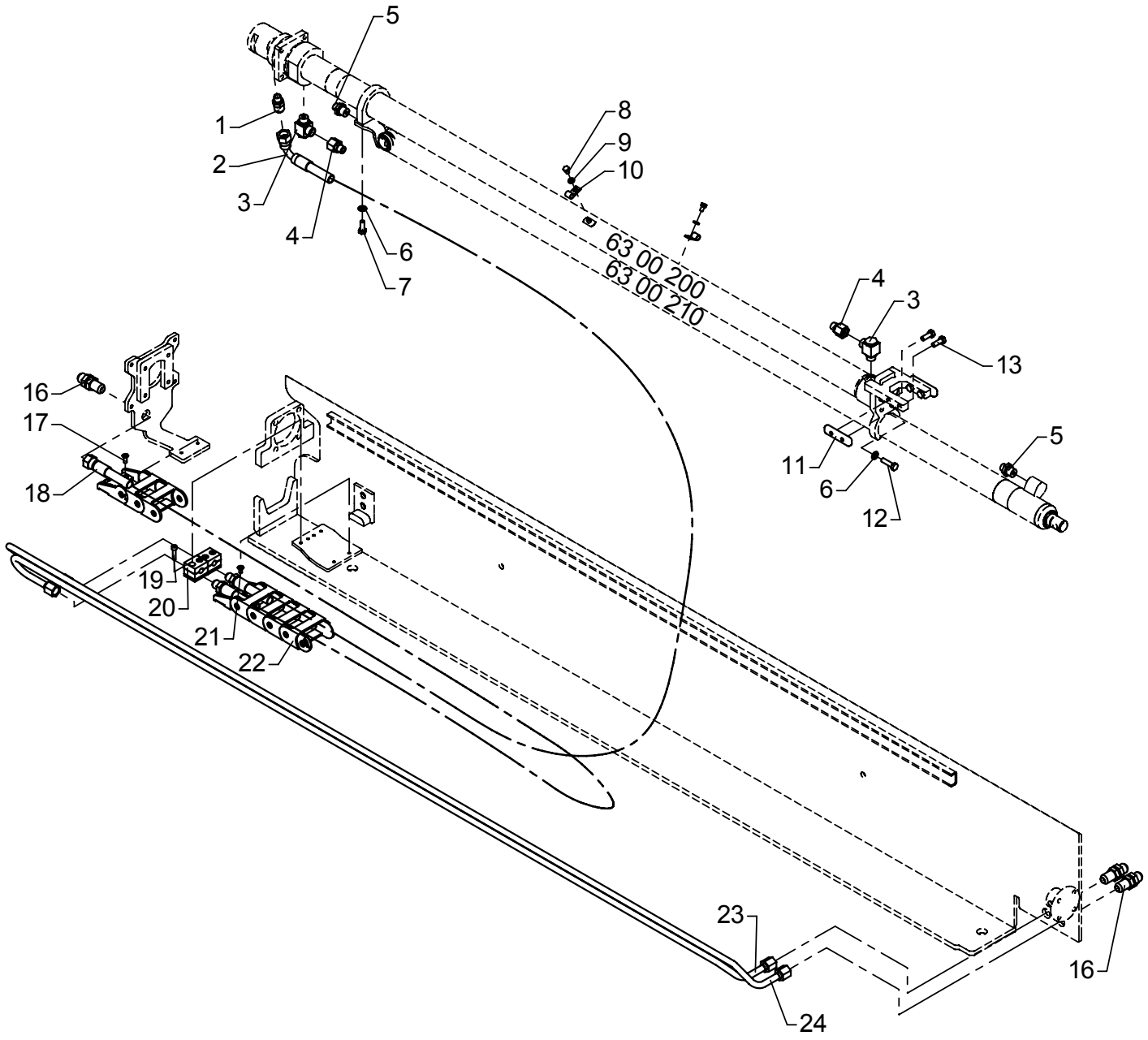


Loctite 243

# Hydraulic system, stabilizer beam, type DV+DR+DHR - 8420

As from / To loader no.: 96 00 00 / 96 02 56
Created: 03.10.2003
Modified: 13.09.2010

| Item no. | Qty. | Part no. | Description | Remarks |
|---|---|---|---|---|
| 1 | 1 | 25867 | Straight connection | F40XS12 - 1/4 |
| 2 | 1 | 56026 | Hose | 3/8" x 3850 mm v/s JIC |
| 3 | 2 | 25130 | Banjo connection | RSWV 12 LR |
| 4 | 2 | 26101 | Reducing connection | REDSDN 12/8 L |
| 5 | 2 | 25244 | Connection | GES 8 LR 3/8-WD |
| 6 | 6 | 31147 | Washer, stainless | |
| 7 | 2 | 30132 | Set screw, stainless | |
| 8 | 2 | 30110 | Set screw, stainless | M6 x 10 |
| 9 | 2 | 32302 | Face washer, stainless | 6 mm |
| 10 | 2 | 31445 | Suspension | 6-8 mm |
| 11 | 2 | 6300208 | Slide block | |
| 12 | 4 | 30135 | Set screw, stainless | M8 x 30 |
| 13 | 4 | 30133 | Set screw, stainless | |
| 14 | 1 | 6300218 | Pipe | |
| 15 | 1 | 6300219 | Pipe | |
| 16 | 3 | 25824 | Bulkhead connection | WTX-WLNS 12 JIC |
| 17 | 2 | 32201 | Countersunk screw | MK6 x 16 |
| 18 | 1 | 56027 | Hose | 3/8" x 3850 mm o/s JIC |
| 19 | 4 | 30962 | Screw, stainless | MC6 x 25 |
| 20 | 2 | 31425 | Clamp | |
| 21 | 2 | 30542 | Counter-sunk screw | MK6 x 12 |
| 22 | 1 | 27887 | Nylon drag chain | |
| 23 | 1 | 6300249 | Pipe | |
| 24 | 1 | 6300248 | Pipe | |

# 6020K

Intern ref.: 6300100

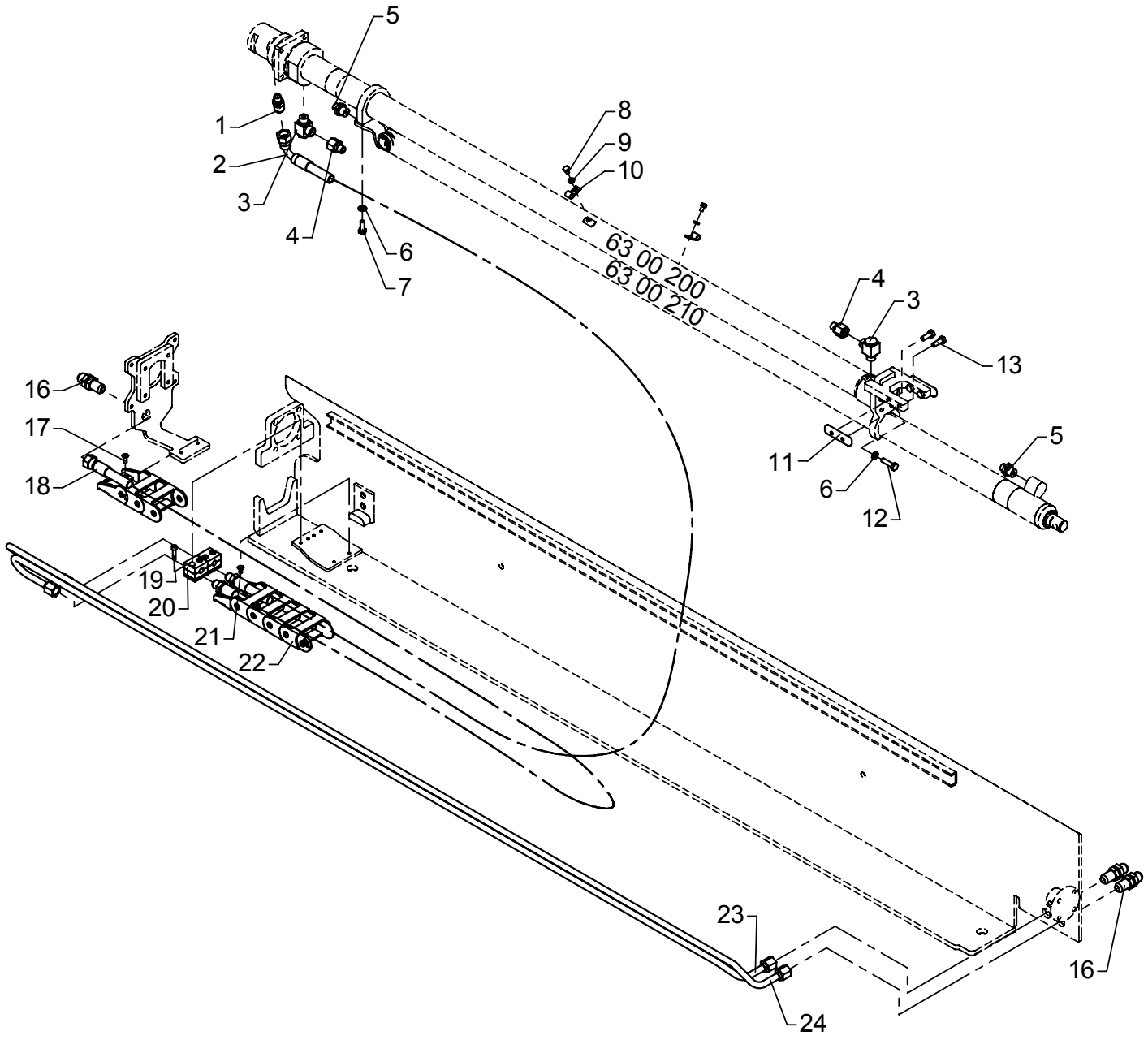


Loctite 243

# Hydraulic system, stabilizer beam, type DV+DR+DHR - 8420

As from / To loader no.: 96 02 57 / 96 03 82
Created: 03.10.2003
Modified: 25.02.2015

| Item no. | Qty. | Part no. | Description | Remarks |
|---|---|---|---|---|
| 1 | 1 | 6300219 | Pipe | |
| 2 | 1 | 6300218 | Pipe | |
| 3 | 2 | 25130 | Banjo connection | RSWV 12 LR |
| 4 | 2 | 26101 | Reducing connection | REDSDN 12/8 L |
| 5 | 2 | 25244 | Connection | GES 8 LR 3/8-WD |
| 6 | 6 | 31147 | Face washer, 8 mm | |
| 7 | 2 | 30132 | Set screw, stainless | |
| 8 | 2 | 30110 | Set screw, stainless | M6 x 10 |
| 9 | 2 | 32302 | Face washer, stainless | 6 mm |
| 10 | 2 | 31445 | Suspension | 6-8 mm |
| 11 | 2 | 6302208 | Slide block | |
| 12 | 4 | 30135 | Set screw, stainless | M8 x 30 |
| 13 | 4 | 30133 | Set screw, stainless | |
| 14 | 1 | 25867 | Straight connection | F40XS12 - 1/4 |
| 15 | 1 | 56026 | Hose | 3/8" x 3850 mm v/s JIC |
| 16 | 3 | 25824 | Bulkhead connection | WTX-WLNS 12 JIC |
| 17 | 1 | 6300249 | Pipe | |
| 18 | 1 | 6300248 | Pipe | |
| 19 | 1 | 56027 | Hose | 3/8" x 3850 mm o/s JIC |
| 20 | 2 | 32201 | Countersunk screw | MK6 x 16 |
| 21 | 4 | 30962 | Screw | MC6 x 25 |
| 22 | 2 | 31425 | Clamp | |
| 23 | 1 | 27887 | Nylon drag chain | |

# 6020K

Intern ref.: 6300100

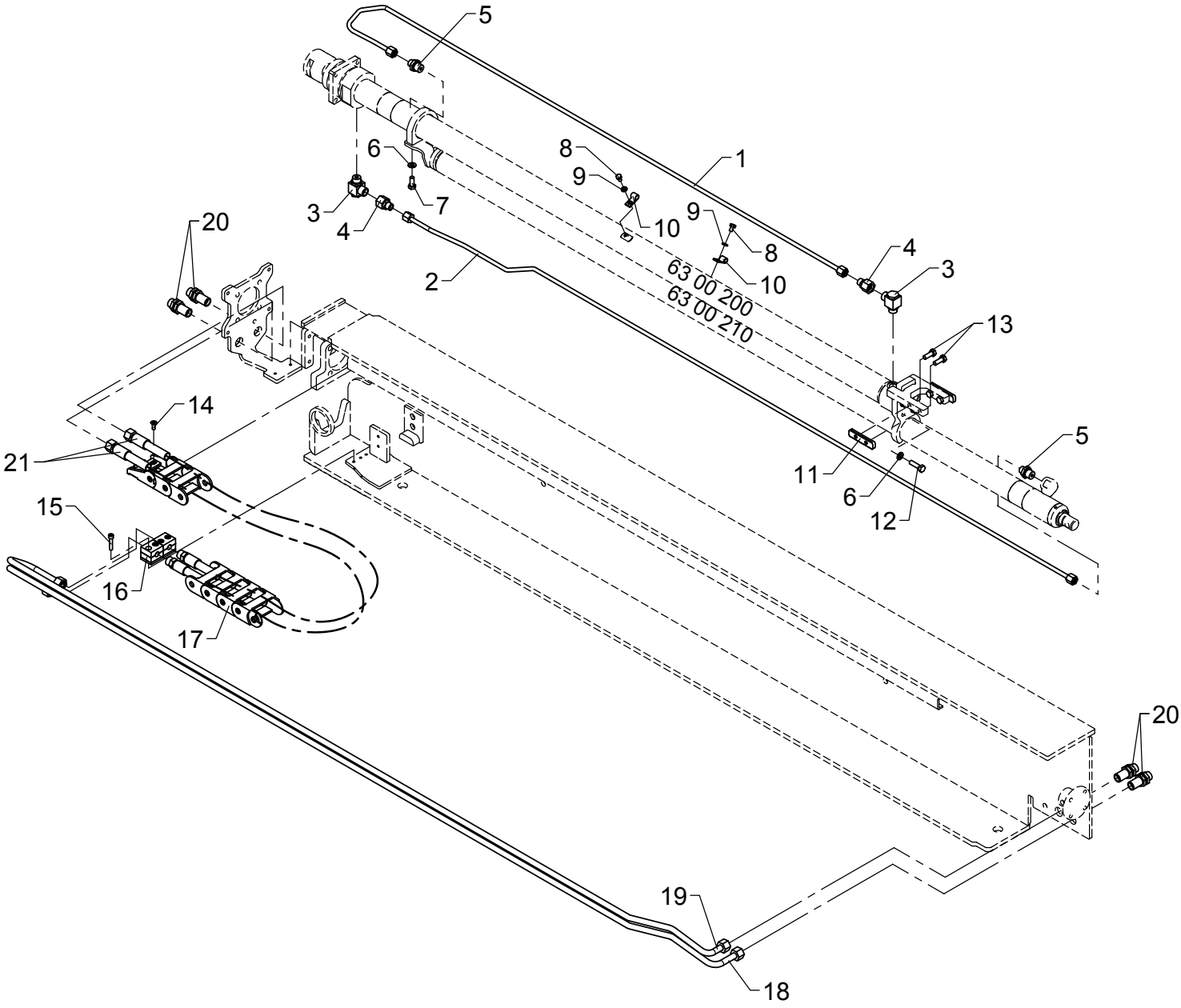


Loctite 243

# Hydraulic system, stabilizer beam, type DV+DR+DHR - 8420

As from / To loader no.: 96 03 83
Created: 21.01.2015
Modified:

| Item no. | Qty. | Part no. | Description | Remarks |
|---|---|---|---|---|
| 1 | 1 | 6300219 | Pipe | |
| 2 | 1 | 6300218 | Pipe | |
| 3 | 2 | 25130 | Banjo connection | RSWV 12 LR |
| 4 | 2 | 26101 | Reducing connection | REDSDN 12/8 L |
| 5 | 2 | 25244 | Connection | GES 8 LR 3/8-WD |
| 6 | 6 | 31147 | Face washer, 8 mm | |
| 7 | 2 | 30132 | Set screw, stainless | |
| 8 | 2 | 30110 | Set screw, stainless | M6 x 10 |
| 9 | 2 | 32302 | Face washer, stainless | 6 mm |
| 10 | 2 | 31445 | Suspension | 6-8 mm |
| 11 | 2 | 6302208 | Slide block | |
| 12 | 4 | 30135 | Set screw, stainless | M8 x 30 |
| 13 | 4 | 30133 | Set screw, stainless | |
| 14 | 2 | 32201 | Countersunk screw | MK6 x 16 |
| 15 | 4 | 30961 | Screw | MC6 x 30 |
| 16 | 2 | 31425 | Clamp | |
| 17 | 1 | 27887 | Nylon drag chain | |
| 18 | 1 | 6301441 | Pipe | |
| 19 | 1 | 6301442 | Pipe | |
| 20 | 4 | 25201 | Bulkhead connection | |
| 21 | 2 | 56900 | Hose | 3/8" x 3850 mm L/S 12L |

# ODIN

Intern ref.: 6300600

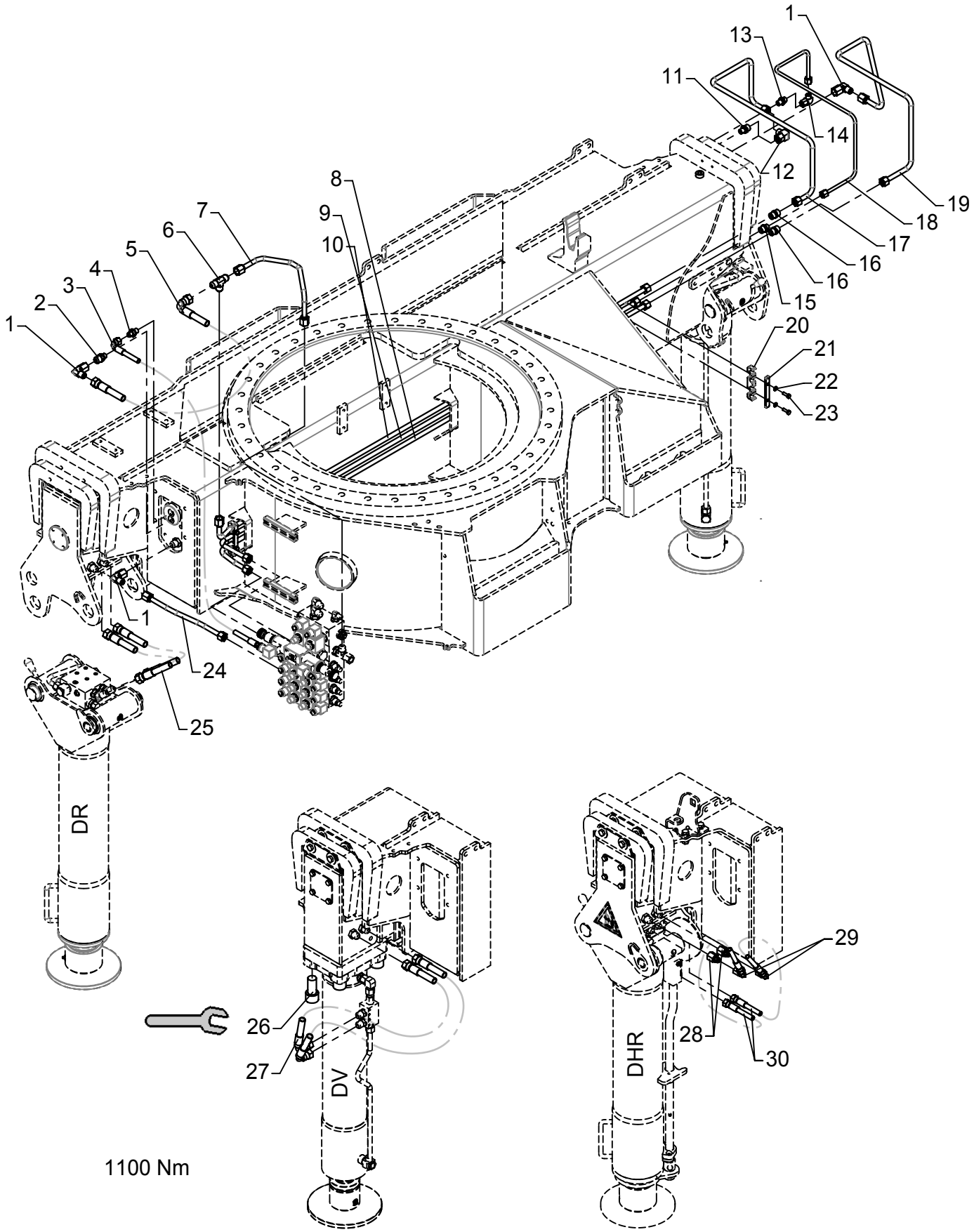

# Hydraulic system, stabilizers, type DV + DR + DHR

As from / To loader no.: 96 00 00 / 96 02 07
Created: 03.10.2003
Modified: 17.03.2011

| Item no. | Qty. | Part no. | Description | Remarks |
|---|---|---|---|---|
| 1 | 3 | 25877 | Elbow connection | C6XS 12 JIC |
| 2 | 1 | 25867 | Straight connection | F40XS12 - 1/4 |
| 3 | 1 | 62886 | Hose | 1/4" x 400 mm V/O JIC |
| 4 | 1 | 25829 | Straight connection | F40XS8 - 1/4 |
| 5 | 1 | 56091 | Hose | 3/8" x 350 mm V/O JIC |
| 6 | 1 | 26269 | T-connection | JTXS 12 JIC |
| 7 | 1 | 6300901 | Pipe | |
| 8 | 1 | 6300907 | Pipe | |
| 9 | 1 | 6300905 | Pipe | |
| 10 | 1 | 6300903 | Pipe | |
| 11 | 1 | 25195 | Connection | P-GEV 12 LR 1/4-WD |
| 12 | 1 | 25242 | Elbow connection | EWSD 12 L |
| 13 | 1 | 25109 | Connection | GES 8 LR-WD |
| 14 | 1 | 26170 | Elbow connection | EWSD 8 L |
| 15 | 1 | 25931 | Straight connection | GS 12/8 L |
| 16 | 2 | 25204 | Double connection | GS 12 L |
| 17 | 1 | 6300904 | Pipe | |
| 18 | 1 | 6300906 | Pipe | |
| 19 | 1 | 6300908 | Pipe | |
| 20 | 2 | 6300044 | Clamp | |
| 21 | 2 | 6300047 | Plate | |
| 22 | 4 | 32302 | Face washer, stainless | 6 mm |
| 23 | 4 | 30113 | Set screw, stainless | M6 x 20 |
| 24 | 1 | 6300902 | Pipe | |
| 25 | 4 | 62883 | Hose | 3/8" x 400 mm O/O JIC |
| 26 | 8 | 30494 | Screw | MC24 x 50 |
| 27 | 4 | 62956 | Hose | 3/8" x 550 mm V/O JIC |
| 28 | 4 | 25846 | Reducing connection | TRTXS12-10 |
| 29 | 4 | 25737 | Elbow connection | C6XS 10 JIC |
| 30 | 4 | 56108 | Hose | 1/4 X 470 L/L JIC |

# 6020K

Intern ref.: 6301740

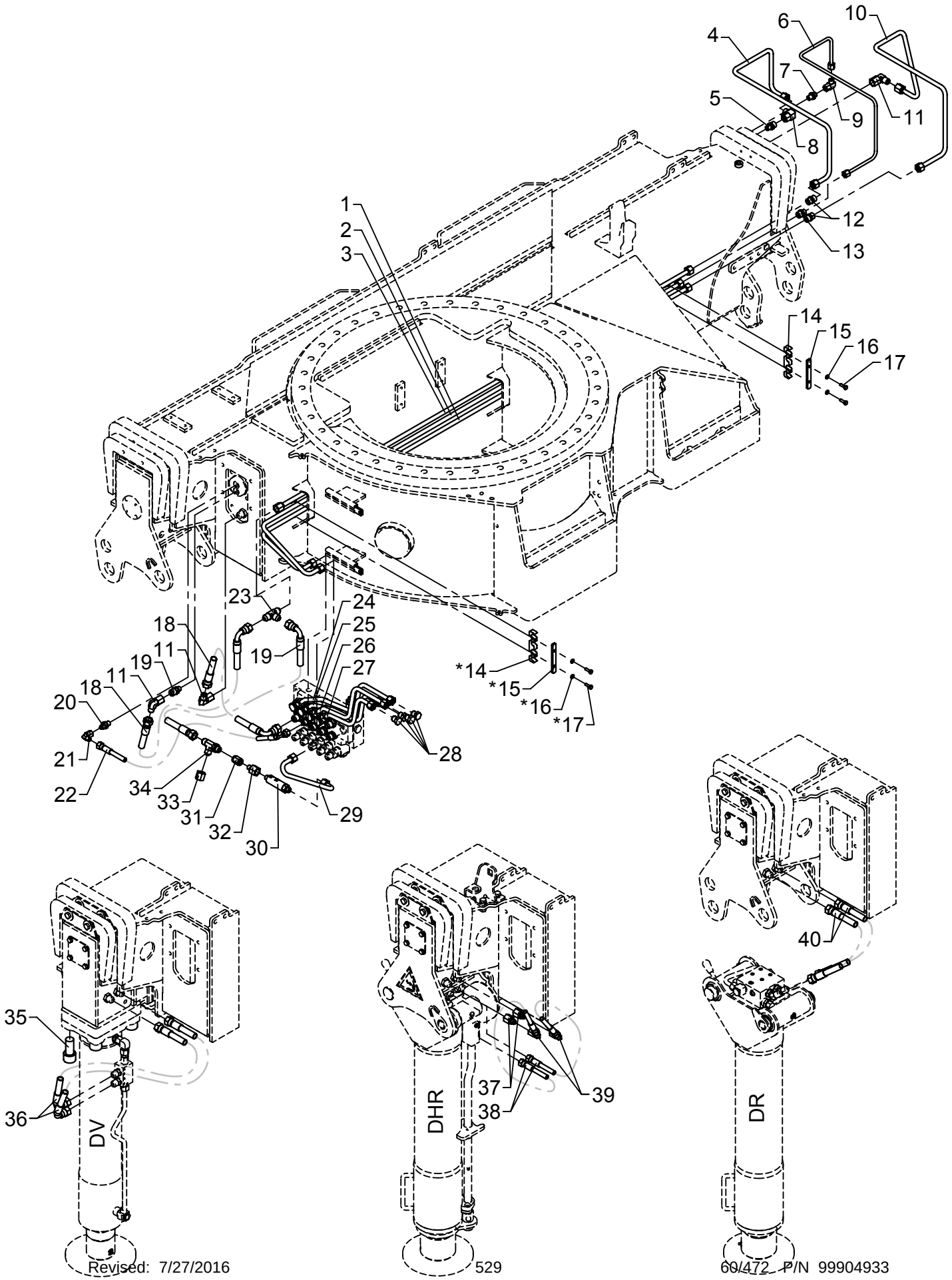

# Hydraulic system, stabilizers, Type DV, DR and DHR

As from / To loader no.: 96 02 08/96 02 47
Created: 02.06.2008
Modified: 17.03.2011

* Stabilizer operation by RC

| Item no. | Qty. | Part no. | Description | Remarks |
|---|---|---|---|---|
| 1 | 1 | 6301375 | Pipe | |
| 2 | 1 | 6301376 | Pipe, stabilizer 6 | |
| 3 | 1 | 6302903 | Pipe | |
| 4 | 1 | 6300904 | Pipe | |
| 5 | 1 | 25195 | Connection | P-GEV 12 LR 1/4-WD |
| 6 | 1 | 6300906 | Pipe | |
| 7 | 1 | 25109 | Connection | GES 8 LR-WD |
| 8 | 1 | 25242 | Elbow connection | EWSD 12 L |
| 9 | 1 | 26170 | Elbow connection | EWSD 8 L |
| 10 | 1 | 6300908 | Pipe | |
| 11 | 3 | 25877 | Elbow connection | C6XS 12 JIC |
| 12 | 2 | 25204 | Double connection | GS 12 L |
| 13 | 1 | 25931 | Straight connection | GS 12/8 L |
| 14 | 2 | 6300044 | Clamp | |
| 15 | 2 | 6300047 | Plate | |
| 16 | 4 | 32302 | Face washer, stainless | 6 mm |
| 17 | 4 | 30113 | Set screw, stainless | M6 x 20 |
| 18 | 3 | 56091 | Hose | 3/8" x 350 90/L JIC |
| 19 | 1 | 25867 | Straight connection | F40XS12 - 1/4 |
| 20 | 1 | 25829 | Straight connection | F40XS8 - 1/4 |
| 21 | 1 | 25826 | Elbow connection | C6XS 8 JIC |
| 22 | 1 | 62886 | Hose | 1/4" x 400 90/L JIC |
| 23 | 1 | 26269 | T-connection | JTXS 12 JIC |
| 24 | 1 | 6301371 | Pipe, stabilizer 1 | |
| 25 | 1 | 6301372 | Pipe, stabilizer 2 | |
| 26 | 1 | 6301373 | Pipe, stabilizer 3 | |
| 27 | 1 | 6301374 | Pipe, stabilizer 4 | |
| 28 | 4 | 25849 | Plug | |
| 29 | 1 | 6301362 | Pipe | |
| 30 | 1 | 55239 | Counter-balance valve | |
| 31 | 1 | 25904 | Socket | |
| 32 | 1 | 25229 | Reducing connection | RED-R 1/4-WD/R 3/8 |
| 33 | 1 | 25876 | Screw cap | FNTXS 12 JIC |
| 34 | 1 | 25813 | T-connection | R40XS 12-3/8 JIC |
| 35 | 8 | 30494 | Screw | MC24 x 50 |
| 36 | 4 | 62956 | Hose | 3/8" x 550 90/L JIC |
| 37 | 4 | 25846 | Reducing connection | TRTXS12-10 |
| 38 | 4 | 56108 | Hose | 1/4" x 470 L/L JIC |
| 39 | 4 | 25737 | Elbow connection | C6XS 10 JIC |
| 40 | 4 | 62883 | Hose | 3/8" x 400 L/L JIC |

# 6020K

Intern ref.: 6301740

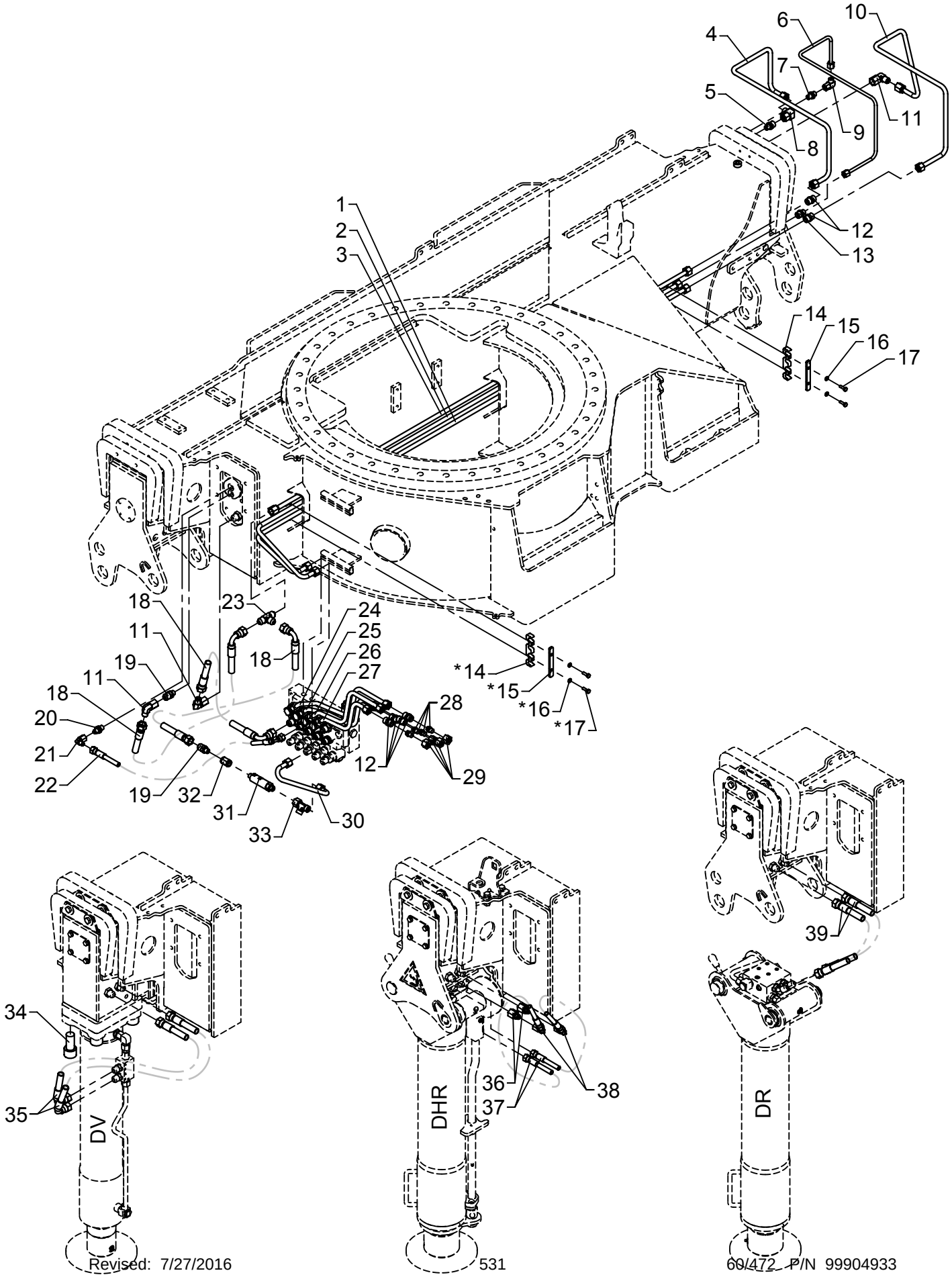

# Hydraulic system, stabilizers, Type DV, DR and DHR

As from / To loader no.: 96 02 48 / 96 03 82
Created: 19.03.2010
Modified: 27.04.2015

* Stabilizer operation by RC

| Item no. | Qty. | Part no. | Description | Remarks |
|---|---|---|---|---|
| 1 | 1 | 6301375 | Pipe | |
| 2 | 1 | 6301376 | Pipe, stabilizer 6 | |
| 3 | 1 | 6302903 | Pipe | |
| 4 | 1 | 25195 | Connection | P-GEV 12 LR 1/4-WD |
| 5 | 1 | 25109 | Connection | GES 8 LR-WD |
| 6 | 1 | 6300904 | Pipe | |
| 7 | 1 | 6300906 | Pipe | |
| 8 | 1 | 6300908 | Pipe | |
| 9 | 1 | 25242 | Elbow connection | EWSD 12 L |
| 10 | 1 | 26170 | Elbow connection | EWSD 8 L |
| 11 | 3 | 25877 | Elbow connection | C6XS 12 JIC |
| 12 | 6 | 25204 | Double connection | GS 12 L |
| 13 | 1 | 25931 | Straight connection | GS 12/8 L |
| 14 | 4 | 26180 | Blanking plug | VSD 12 L |
| 15 | 4 | 25183 | Coupling nut | M 12 L |
| 16 | 1 | 6301371 | Pipe, stabilizer 1 | |
| 17 | 1 | 6301372 | Pipe, stabilizer 2 | |
| 18 | 1 | 6301373 | Pipe, stabilizer 3 | |
| 19 | 1 | 6301374 | Pipe, stabilizer 4 | |
| 20 | 1 | 55239 | Counter-balance valve | |
| 21 | 1 | 25270 | Connection | ELSD 12 L |
| 22 | 1 | 6301362 | Pipe | |
| 23 | 2 | 25867 | Straight connection | F40XS12 - 1/4 |
| 24 | 1 | 25829 | Straight connection | F40XS8 - 1/4 |
| 25 | 1 | 25826 | Elbow connection | C6XS 8 JIC |
| 26 | 3 | 56091 | Hose | 3/8" x 350 90/L JIC |
| 27 | 1 | 62886 | Hose | 1/4" x 400 90/L JIC |
| 28 | 1 | 26269 | T-connection | JTXS 12 JIC |
| 29 | 1 | 25904 | Socket | |
| 30 | 2 | 6300044 | Clamp | |
| 31 | 2 | 6300047 | Plate | |
| 32 | 4 | 32302 | Face washer, stainless | 6 mm |
| 33 | 4 | 30113 | Set screw, stainless | M6 x 20 |
| 34 | 8 | 30494 | Screw | MC24 x 50 |
| 35 | 4 | 62956 | Hose | 3/8" x 550 90/L JIC |
| 36 | 4 | 25846 | Reducing connection | TRTXS12-10 |
| 37 | 4 | 56108 | Hose | 1/4" x 470 L/L JIC |
| 38 | 4 | 25737 | Elbow connection | C6XS 10 JIC |
| 39 | 4 | 62883 | Hose | 3/8" x 400 L/L JIC |

# 6020K

Intern ref.: 6308490

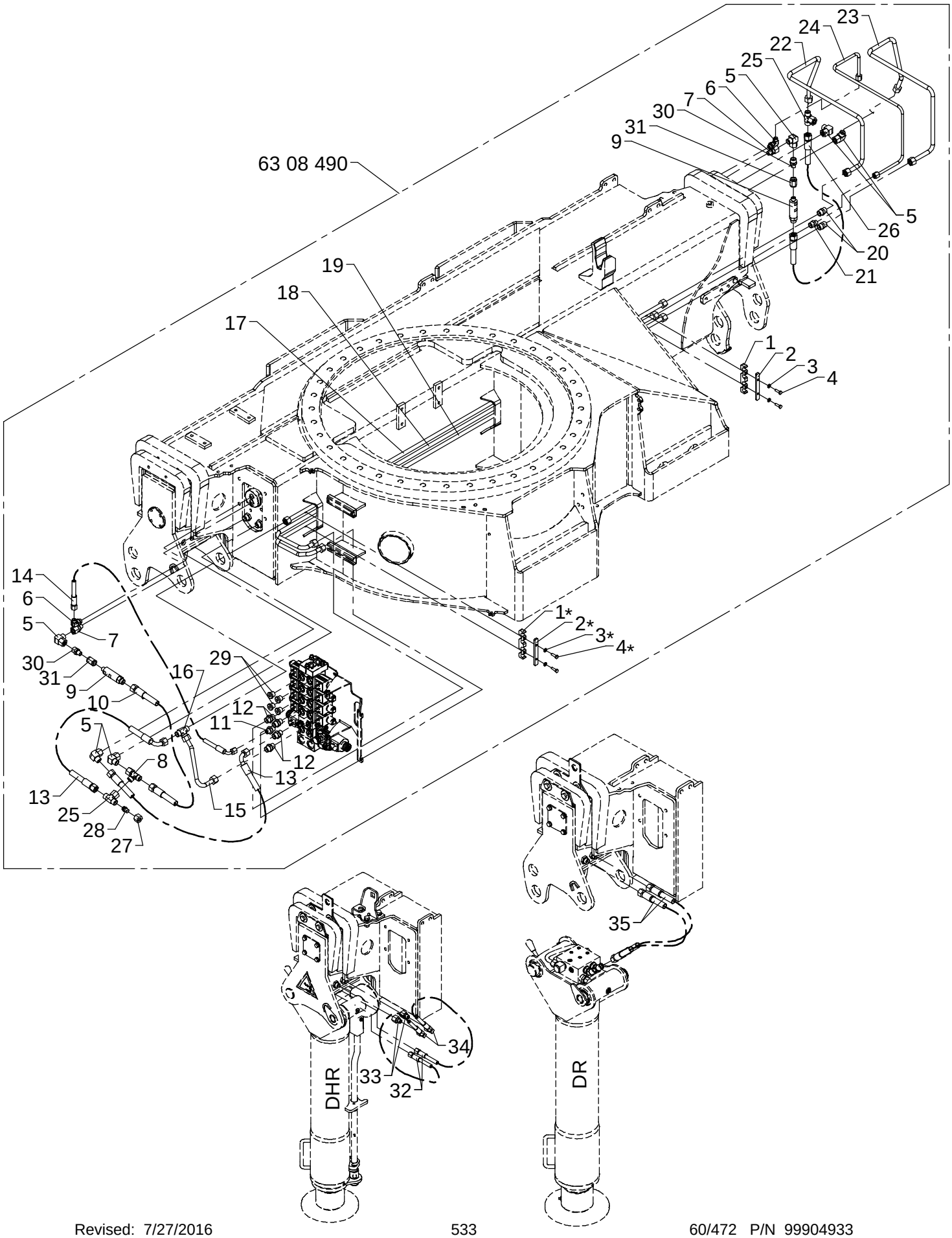

# Hydraulic system, stabilizers, Type DR and DHR

As from / To loader no.: 96 03 83
Created: 27.04.2015
Modified:

| Item no. | Qty. | Part no. | Description | Remarks |
|---|---|---|---|---|
| 1 | 2 | 6300044 | Clamp | |
| 2 | 2 | 6300047 | Plate | |
| 3 | 4 | 32302 | Face washer, stainless | 6 mm |
| 4 | 4 | 30113 | Set screw, stainless | M6 x 20 |
| 5 | 6 | 25242 | Elbow connection | EWSD 12 L |
| 6 | 2 | 26898 | Elbow connection | 8 mm - 1/4" |
| 7 | 2 | 25241 | Connection | EGESD 12 LR 1/4-WD |
| 8 | 1 | 25270 | Connection | ELSD 12 L |
| 9 | 2 | 55239 | Counter-balance valve | |
| 10 | 1 | 56981 | Hose | 3/8" x 500 L/L 12L |
| 11 | 1 | 25244 | Connection | GES 8 LR 3/8-WD |
| 12 | 4 | 25127 | Connection | P-GEV 12 LR-WD |
| 13 | 2 | 0017710 | Hose | 3/8" x 350 V/O |
| 14 | 1 | 62525 | Hose | |
| 15 | 1 | 6301427 | | |
| 16 | 1 | 25137 | T-connection | TV 12 L |
| 17 | 1 | 6301424 | Pipe | |
| 18 | 1 | 6301425 | Pipe, stabilizer 6 | |
| 19 | 1 | 6301426 | Pipe | |
| 20 | 2 | 25204 | Double connection | GS 12 L |
| 21 | 1 | 25931 | Straight connection | GS 12/8 L |
| 22 | 1 | 6301421 | Pipe | |
| 23 | 1 | 6301423 | Pipe | |
| 24 | 1 | 6301422 | Pipe | |
| 25 | 2 | 25212 | T-connection | ETVD 12 L |
| 26 | 1 | 0015680 | Hose | 3/8" x260 O/O |
| 27 | 1 | 25183 | Coupling nut | M 12 L |
| 28 | 1 | 26180 | Blanking plug | VSD 12 L |
| 29 | 4 | 25277 | Plug | VS-R-3/8 WD |
| 30 | 2 | 25195 | Connection | P-GEV 12 LR 1/4-WD |
| 31 | 2 | 25904 | Socket | |
| 32 | 2 | 56904 | Hose | 1/4" x 500 - L/8-L/10 |
| 33 | 2 | 26101 | Reducing connection | REDSDN 12-8 L |
| 34 | 2 | 26170 | Elbow connection | EWSD 8 L |
| 35 | 2 | 0015510 | Hose | 3/8" x 400 O/O |

# ODIN

Intern ref.: 6301750

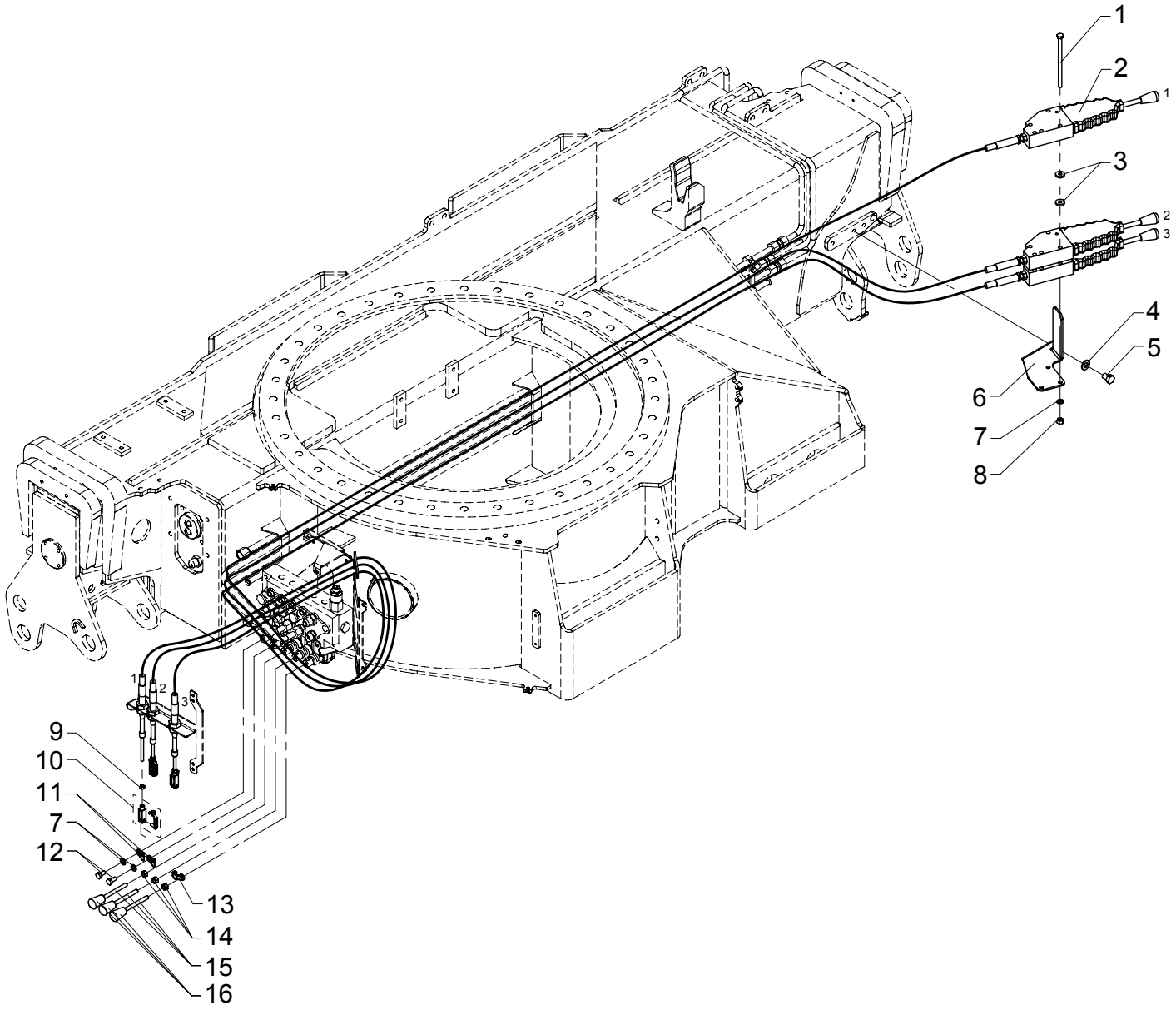

# Manual stabilizer operation

As from / To loader no.: 96 02 08
Created: 02.06.2008
Modified:

| Item no. | Qty. | Part no. | Description | Remarks |
|---|---|---|---|---|
| 1 | 3 | 30149 | Steel bolt | M8 x 140 |
| 2 | 3 | 48470 | Push-pull cable incl. lever | 3300 mm |
| 3 | 12 | 31755 | Washer | 8 mm |
| 4 | 2 | 31131 | Washer | 12 mm |
| 5 | 2 | 31960 | Set screw | M12 x 16 |
| 6 | 1 | 6301367 | Bracket for lever | |
| 7 | 5 | 31147 | Washer, stainless | 8 mm |
| 8 | 3 | 30886 | Lock nut, stainless | M8 |
| 9 | 3 | 30854 | Nut, stainless | M6 |
| 10 | 3 | 48414 | Clevis | |
| 11 | 2 | 6301364 | Fittings for cables, right | |
| 12 | 2 | 30131 | Set screw, stainless | M8 x 16 |
| 13 | 1 | 6301363 | Fittings for cables, right | |
| 14 | 3 | 30856 | Nut, stainless | M8 |
| 15 | 3 | 1330187 | Control lever, long, straight | |
| 16 | 3 | 59224 | Knob for lever | |

# ODIN

An Oshkosh Corportation Company

Intern ref.: 6301500

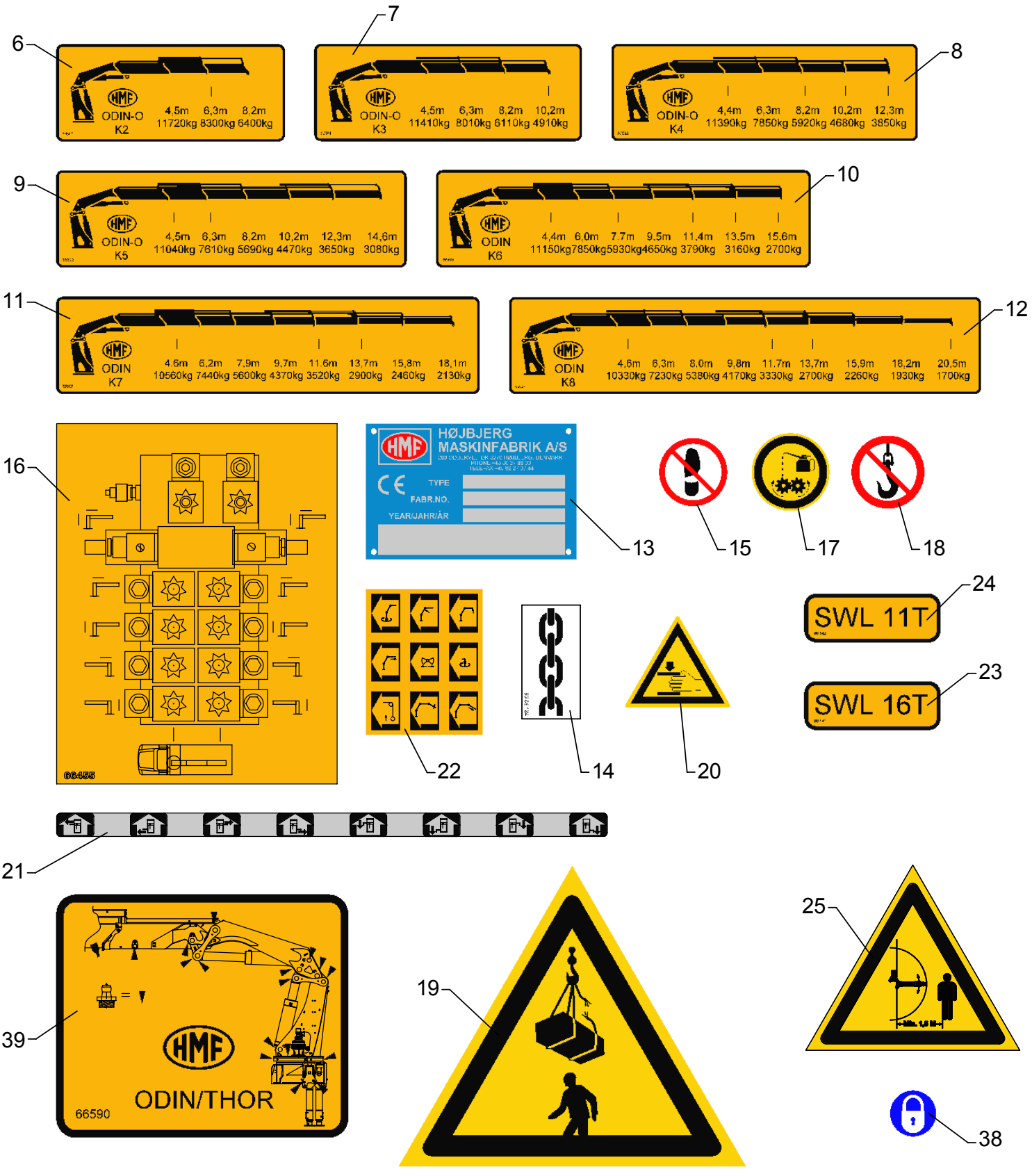

# Labels

As from / To loader no.: 96 00 00 / 96 00 xx
Created: 19.02.2004
Modified: 01.07.2008

| Item no. | Qty. | Part no. | Description | Remarks |
|---|---|---|---|---|
| 1 | 3 | 64989 | Label, Odin - white | |
| 2 | 3 | 64986 | Label, Odin - blue | |
| 3 | 2 | 64991 | Label, EVS - white | |
| 4 | 2 | 64988 | Label, EVS - blue | |
| 5 | 3 | 64604 | HMF label | |
| 6 | 1 | 66500 | Lifting cap. diagr. ODIN-O K2 | |
| 7 | 1 | 66501 | Lifting cap. diagr. ODIN-O K3 | |
| 8 | 1 | 66502 | Lifting cap. diagr. ODIN-O K4 | |
| 9 | 1 | 66503 | Lifting cap. diagr. ODIN-O K5 | |
| 10 | 1 | 66505 | Lifting cap. diagr. ODIN K6 | |
| 11 | 1 | 66506 | Lifting cap. diagr. ODIN K7 | |
| 12 | 1 | 66507 | Lifting cap. diagr. ODIN K8 | |
| 13 | 1 | 64803 | Type plate, CE | |
| 14 | 2 | 65507 | Label | 6689124 |
| 15 | 1 | 66464 | Label "NO STEP" | |
| 16 | 1 | 66455 | Operating label | |
| 17 | 1 | 66465 | Label, "LUBRICATION,TURNTABLE" | |
| 18 | 1 | 66466 | Label, "HOOK FORBIDDEN" | |
| 19 | 2 | 66462 | "NEVER WALK UNDER LOAD" | |
| 20 | 2 | 66469 | Label - "Danger - squeezing" | |
| 21 | 1 | 66454 | Operating label | |
| 22 | 1 | 66456 | Operating labels | |
| 23 | 1 | 66541 | Plate SWL 16 t | |
| 24 | 1 | 66542 | Plate SWL 11 t | |
| 25 | 2 | 66463 | Label"SWING-UP STABILIZER LEG" | |
| 26 | 1 | 66520 | Lift. diagr. ODIN K6+FJ1200 K3 | |
| 27 | 1 | 66521 | Lift. diagr. ODIN K6+FJ1200 K4 | |
| 28 | 1 | 66522 | Lift. diagr. ODIN K6+FJ1200 K5 | |
| 29 | 1 | 66523 | Lift. diagr. ODIN K6+FJ1200 K6 | |
| 30 | 1 | 66551 | Lift. diagr. ODIN-OK5+FJ1200K3 | |
| 31 | 1 | 66552 | Lift. diagr. ODIN-OK5+FJ1200K4 | MAX. 400 kg |
| 32 | 1 | 66553 | Lift. diagr. ODIN-OK5+FJ1200K5 | |
| 33 | 1 | 66554 | Lift. diagr. ODIN-OK5+FJ1200K6 | |
| 34 | 1 | 66543 | Lift. diagr. ODIN-OK4+FJ2000K3 | |
| 35 | 1 | 66544 | Lift. diagr. ODIN-OK4+FJ2000K4 | |
| 36 | 1 | 66545 | Lift. diagr. ODIN-OK4+FJ2000K5 | |
| 37 | 1 | 66546 | Lift. diagr. ODIN-OK4+FJ2000K6 | |
| 38 | 2 | 66459 | Label "LOCKING DEVICE CLOSED" | |
| 39 | 1 | 66590 | Lubrication label | |

# ODIN

An Oshkosh Corportation Company

Intern ref.: 6301500

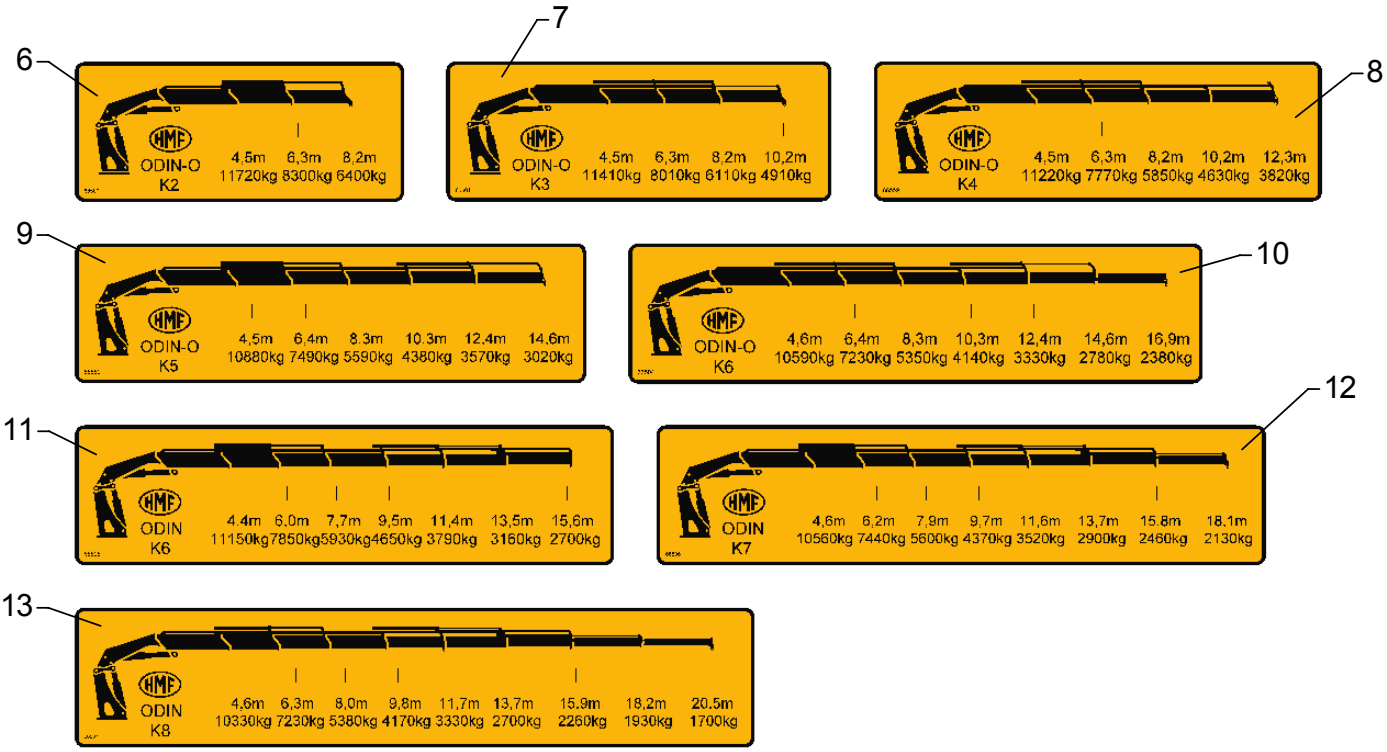


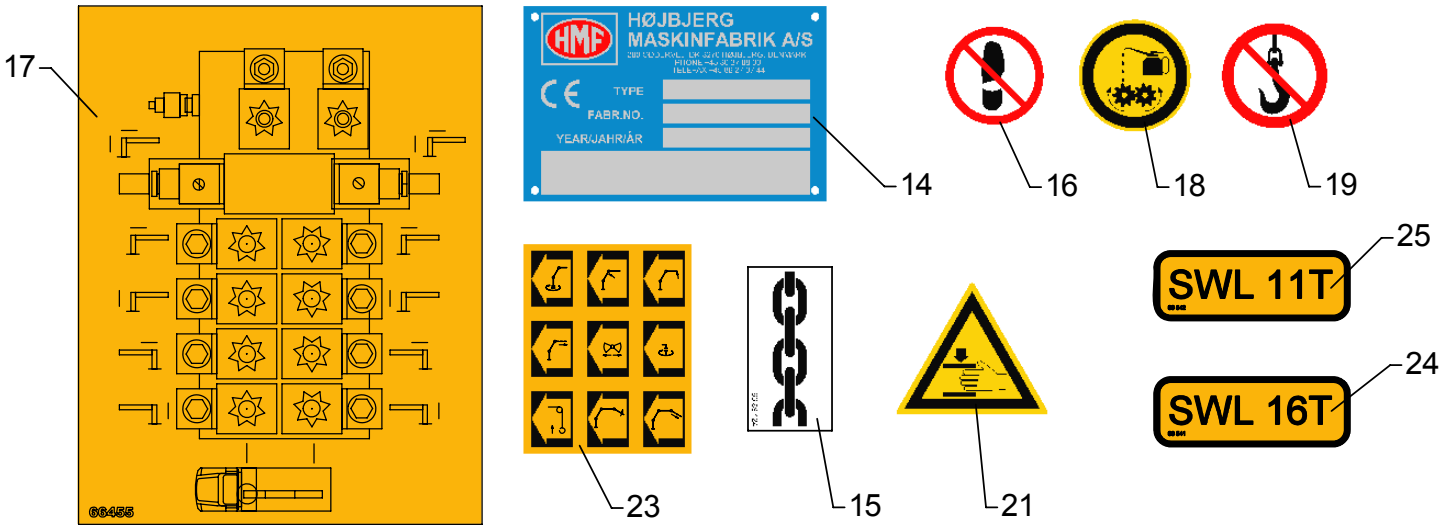





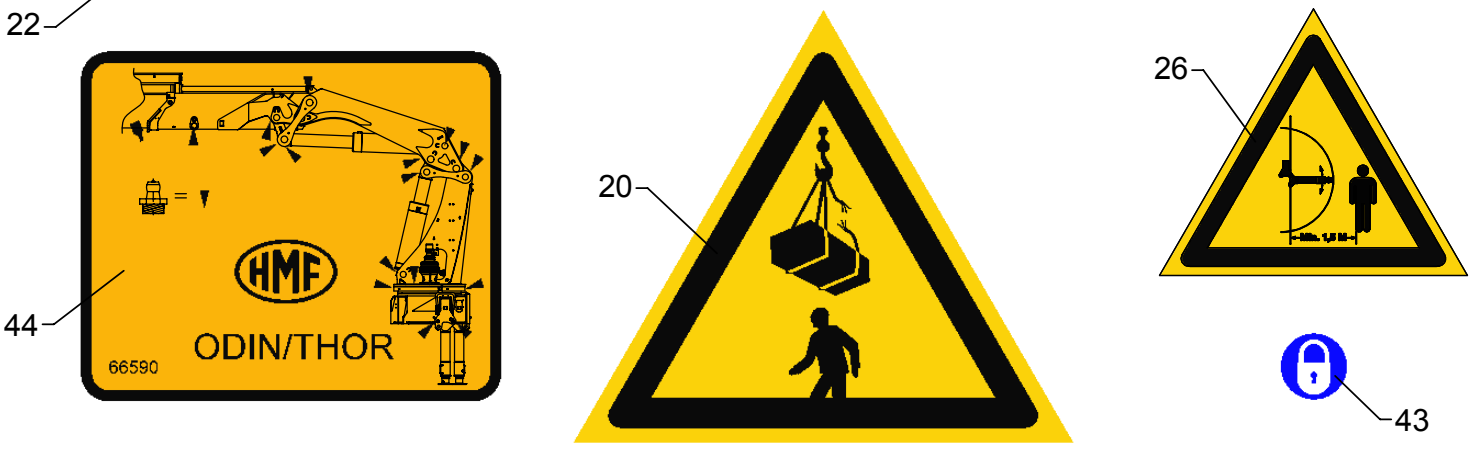

# Labels

As from / To loader no.: 96 00 xx / 96 02 07
Created: 19.02.2004
Modified: 01.07.2008

| Item no. | Qty. | Part no. | Description | Remarks |
|---|---|---|---|---|
| 1 | 3 | 64989 | Label, Odin - white | |
| 2 | 3 | 64986 | Label, Odin - blue | |
| 3 | 2 | 64991 | Label, EVS - white | |
| 4 | 2 | 64988 | Label, EVS - blue | |
| 5 | 3 | 64604 | HMF label | |
| 6 | 1 | 66500 | Lifting cap. diagr. ODIN-O K2 | |
| 7 | 1 | 66501 | Lifting cap. diagr. ODIN-O K3 | |
| 8 | 1 | 66559 | Lifting cap. diagr. ODIN-O K4 | |
| 9 | 1 | 66560 | Lifting cap. diagr. ODIN-O K5 | |
| 10 | 1 | 66504 | Lifting cap. diagr. ODIN-O K6 | |
| 11 | 1 | 66505 | Lifting cap. diagr. ODIN K6 | |
| 12 | 1 | 66506 | Lifting cap. diagr. ODIN K7 | |
| 13 | 1 | 66507 | Lifting cap. diagr. ODIN K8 | |
| 14 | 1 | 64803 | Type plate, CE | |
| 15 | 2 | 65507 | Label | 6689124 |
| 16 | 1 | 66464 | Label "NO STEP" | |
| 17 | 1 | 66455 | Operating label | |
| 18 | 1 | 66465 | Label, "LUBRICATION,TURNTABLE" | |
| 19 | 1 | 66466 | Label, "HOOK FORBIDDEN" | |
| 20 | 2 | 66462 | "NEVER WALK UNDER LOAD" | |
| 21 | 2 | 66469 | Label - "Danger - squeezing" | |
| 22 | 1 | 66454 | Operating label | |
| 23 | 1 | 66456 | Operating labels | |
| 24 | 1 | 66541 | Plate SWL 16 t | |
| 25 | 1 | 66542 | Plate SWL 11 t | |
| 26 | 2 | 66463 | Label"SWING-UP STABILIZER LEG" | |
| 27 | 1 | 66520 | Lift. diagr. ODIN K6+FJ1200 K3 | |
| 28 | 1 | 66521 | Lift. diagr. ODIN K6+FJ1200 K4 | |
| 29 | 1 | 66522 | Lift. diagr. ODIN K6+FJ1200 K5 | |
| 30 | 1 | 66523 | Lift. diagr. ODIN K6+FJ1200 K6 | |
| 31 | 1 | 66551 | Lift. diagr. ODIN-OK5+FJ1200K3 | |
| 32 | 1 | 66552 | Lift. diagr. ODIN-OK5+FJ1200K4 | MAX. 400 kg |
| 33 | 1 | 66553 | Lift. diagr. ODIN-OK5+FJ1200K5 | |
| 34 | 1 | 66554 | Lift. diagr. ODIN-OK5+FJ1200K6 | |
| 35 | 1 | 66543 | Lift. diagr. ODIN-OK4+FJ2000K3 | |
| 36 | 1 | 66544 | Lift. diagr. ODIN-OK4+FJ2000K4 | |
| 37 | 1 | 66545 | Lift. diagr. ODIN-OK4+FJ2000K5 | |
| 38 | 1 | 66546 | Lift. diagr. ODIN-OK4+FJ2000K6 | |
| 39 | 1 | 66555 | Lift. diagr. ODIN-OK6+FJ1200K3 | |
| 40 | 1 | 66556 | Lift. diagr. ODIN-OK6+FJ1200K4 | |

# ODIN

An Oshkosh Corportation Company

Intern ref.: 6301500

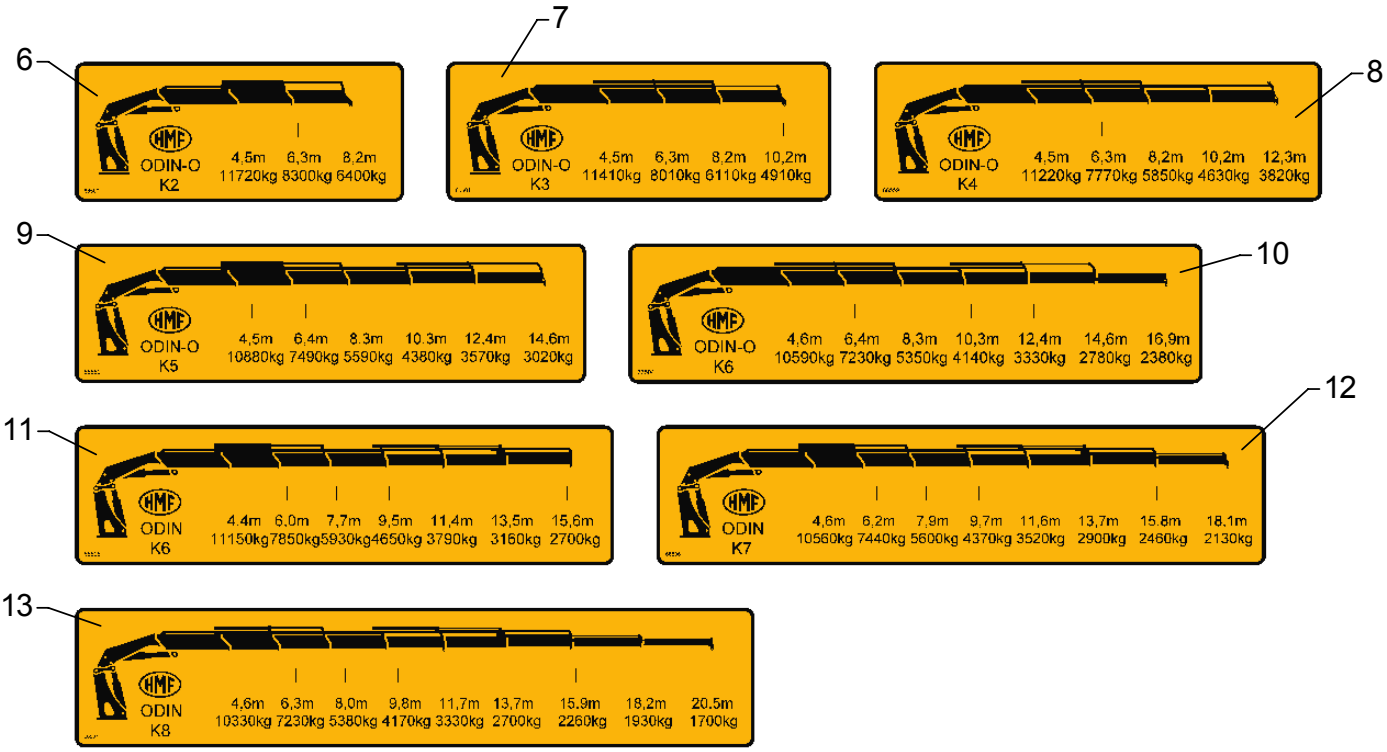


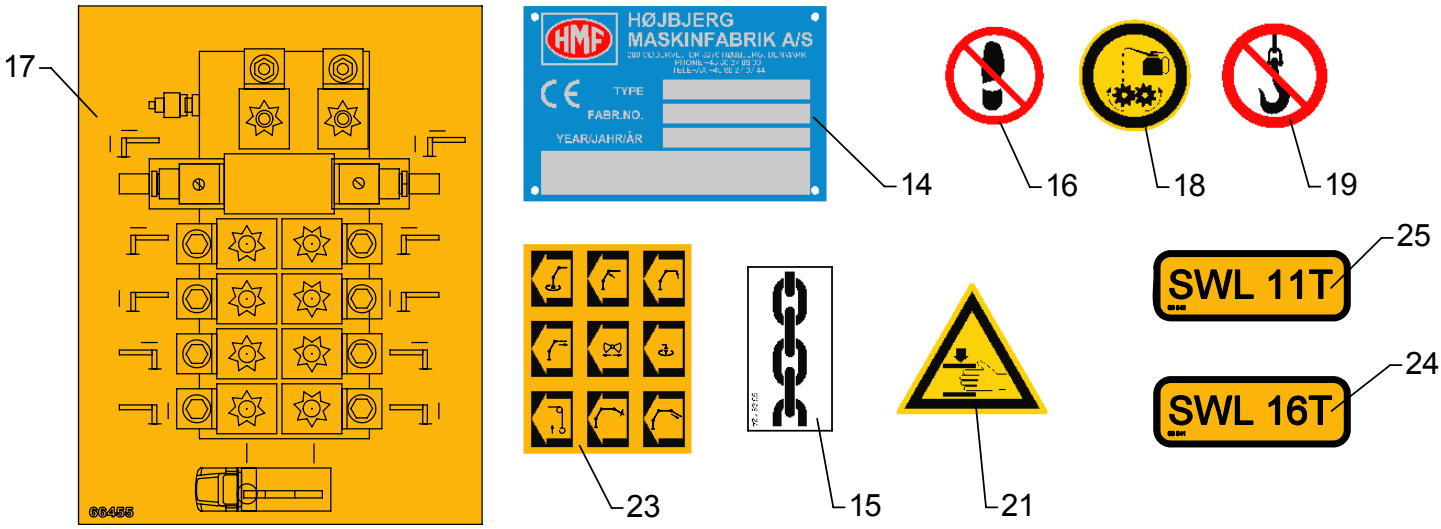





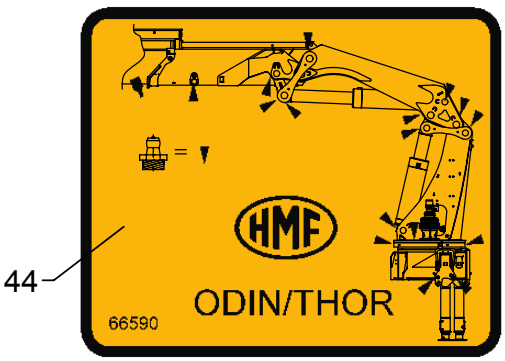





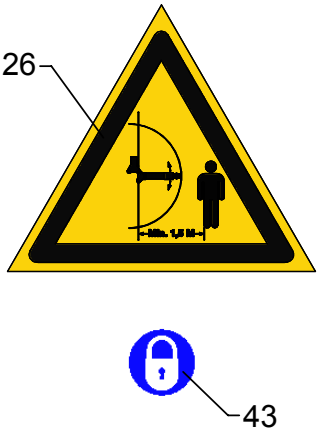

# Labels

As from / To loader no.: 96 00 xx / 96 02 07
Created: 19.02.2004
Modified: 01.07.2008

| Item no. | Qty. | Part no. | Description | Remarks |
|---|---|---|---|---|
| 41 | 1 | 66557 | Lift. diagr. ODIN-OK6+FJ1200K5 | |
| 42 | 1 | 66558 | Lift. diagr. ODIN-OK6+FJ1200K6 | |
| 43 | 2 | 66459 | Label "LOCKING DEVICE CLOSED" | |
| 44 | 1 | 66590 | Lubrication label | |

# ODIN

An Oshkosh Corportation Company

Intern ref.: 6301500

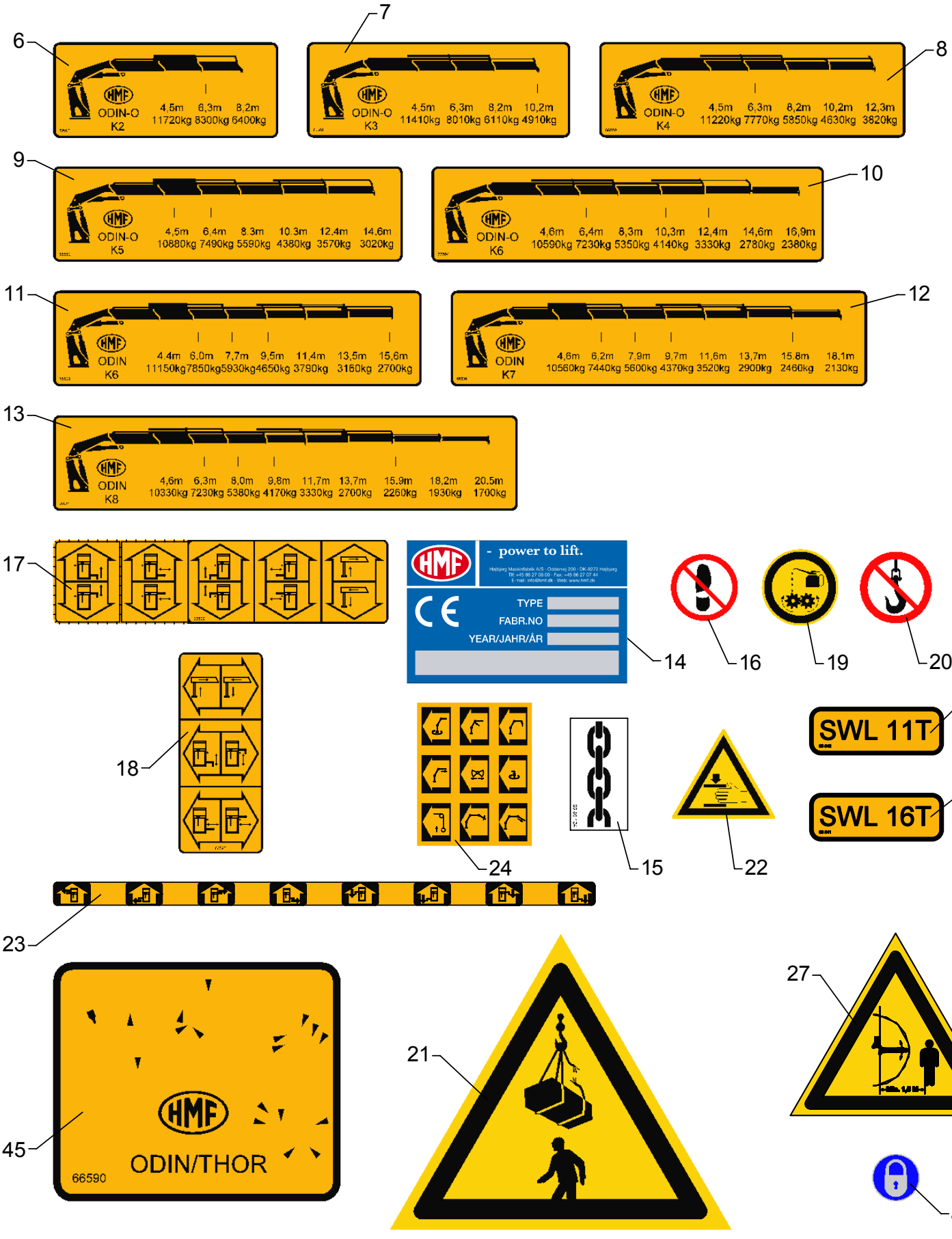

# Labels

As from / To loader no.: 96 02 08 / 96 02 40
Created: 01.07.2008
Modified: 16.07.2009

| Item no. | Qty. | Part no. | Description | Remarks |
|---|---|---|---|---|
| 1 | 3 | 64989 | Label, Odin - white | |
| 2 | 3 | 64986 | Label, Odin - blue | |
| 3 | 2 | 64991 | Label, EVS - white | |
| 4 | 2 | 64988 | Label, EVS - blue | |
| 5 | 3 | 64604 | HMF label 180X300 | |
| 6 | 1 | 66500 | Lifting cap. diagr. ODIN-O K2 | |
| 7 | 1 | 66501 | Lifting cap. diagr. ODIN-O K3 | |
| 8 | 1 | 66559 | Lifting cap. diagr. ODIN-O K4 | |
| 9 | 1 | 66560 | Lifting cap. diagr. ODIN-O K5 | |
| 10 | 1 | 66504 | Lifting cap. diagr. ODIN-O K6 | |
| 11 | 1 | 66505 | Lifting cap. diagr. ODIN K6 | |
| 12 | 1 | 66506 | Lifting cap. diagr. ODIN K7 | |
| 13 | 1 | 66507 | Lifting cap. diagr. ODIN K8 | |
| 14 | 1 | 64797 | Type plate, incl. CE | |
| 15 | 2 | 65507 | Label | 6689124 |
| 16 | 1 | 66464 | Label "NO STEP" | |
| 17 | 1 | 66592 | Operating label, stabilizers | |
| 18 | 1 | 66593 | Operating label, stabilizers | |
| 19 | 1 | 66465 | Label, "LUBRICATION,TURNTABLE" | |
| 20 | 1 | 66466 | Label, "HOOK FORBIDDEN" | |
| 21 | 2 | 66462 | "NEVER WALK UNDER LOAD" | |
| 22 | 2 | 66469 | Label - "Danger - squeezing" | |
| 23 | 1 | 66454 | Operating label | |
| 24 | 1 | 66456 | Operating labels | |
| 25 | 1 | 66541 | Plate SWL 16 t | |
| 26 | 1 | 66542 | Plate SWL 11 t | |
| 27 | 2 | 66463 | Label"SWING-UP STABILIZER LEG" | |
| 28 | 1 | 66520 | Lift. diagr. ODIN K6+FJ1200 K3 | |
| 29 | 1 | 66521 | Lift. diagr. ODIN K6+FJ1200 K4 | |
| 30 | 1 | 66522 | Lift. diagr. ODIN K6+FJ1200 K5 | |
| 31 | 1 | 66523 | Lift. diagr. ODIN K6+FJ1200 K6 | |
| 32 | 1 | 66551 | Lift. diagr. ODIN-OK5+FJ1200K3 | |
| 33 | 1 | 66552 | Lift. diagr. ODIN-OK5+FJ1200K4 | MAX. 400 kg |
| 34 | 1 | 66553 | Lift. diagr. ODIN-OK5+FJ1200K5 | |
| 35 | 1 | 66554 | Lift. diagr. ODIN-OK5+FJ1200K6 | |
| 36 | 1 | 66543 | Lift. diagr. ODIN-OK4+FJ2000K3 | |
| 37 | 1 | 66544 | Lift. diagr. ODIN-OK4+FJ2000K4 | |
| 38 | 1 | 66545 | Lift. diagr. ODIN-OK4+FJ2000K5 | |
| 39 | 1 | 66546 | Lift. diagr. ODIN-OK4+FJ2000K6 | |
| 40 | 1 | 66555 | Lift. diagr. ODIN-OK6+FJ1200K3 | |

# ODIN

An Oshkosh Corportation Company

Intern ref.: 6301500

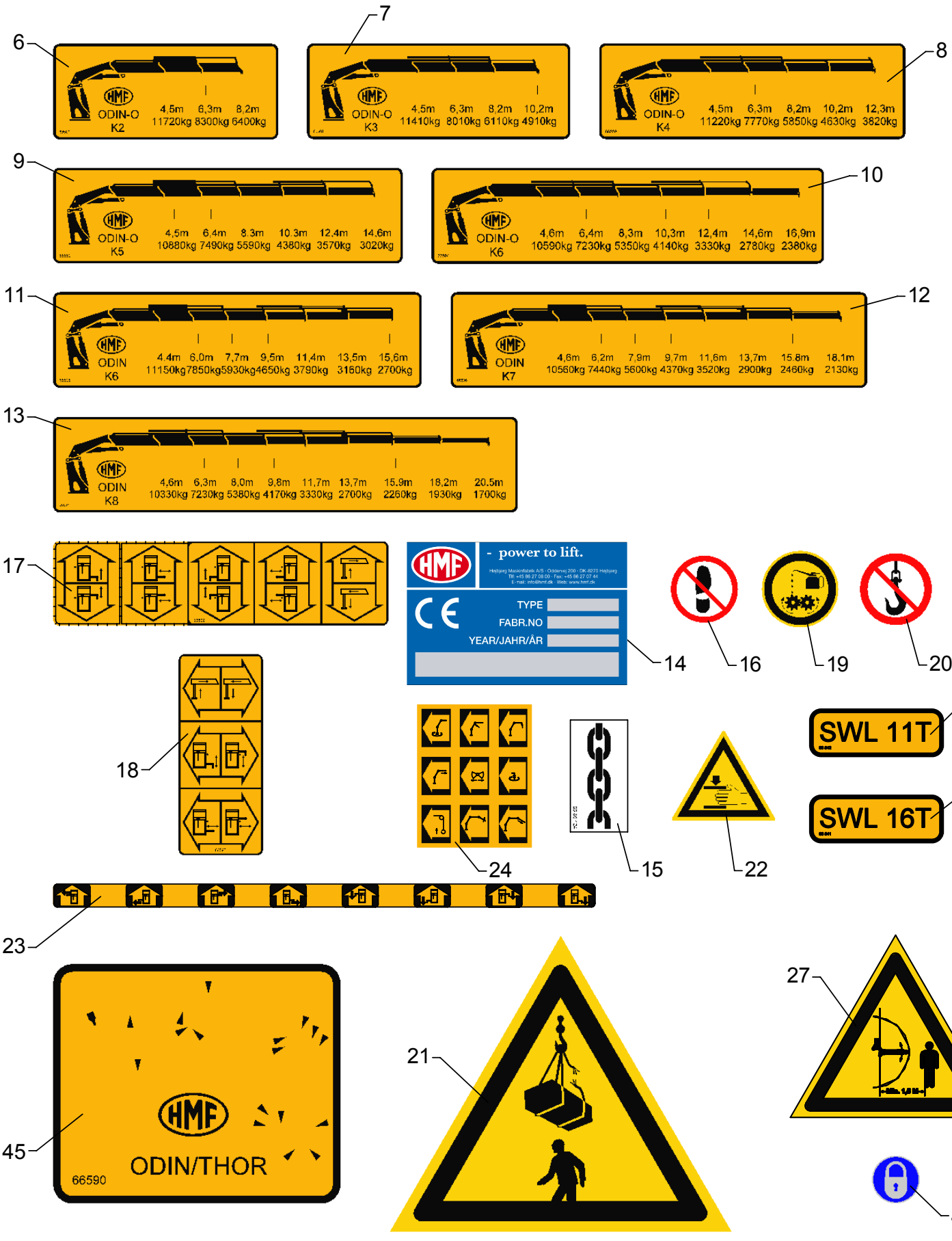

# Labels

As from / To loader no.: 96 02 08 / 96 02 40
Created: 01.07.2008
Modified: 16.07.2009

| Item no. | Qty. | Part no. | Description | Remarks |
|---|---|---|---|---|
| 41 | 1 | 66556 | Lift. diagr. ODIN-OK6+FJ1200K4 | |
| 42 | 1 | 66557 | Lift. diagr. ODIN-OK6+FJ1200K5 | |
| 43 | 1 | 66558 | Lift. diagr. ODIN-OK6+FJ1200K6 | |
| 44 | 2 | 66459 | Label "LOCKING DEVICE CLOSED" | |
| 45 | 1 | 66590 | Lubrication label | |

# 6020

An Oshkosh Corportation Company

Intern ref.: 6301800

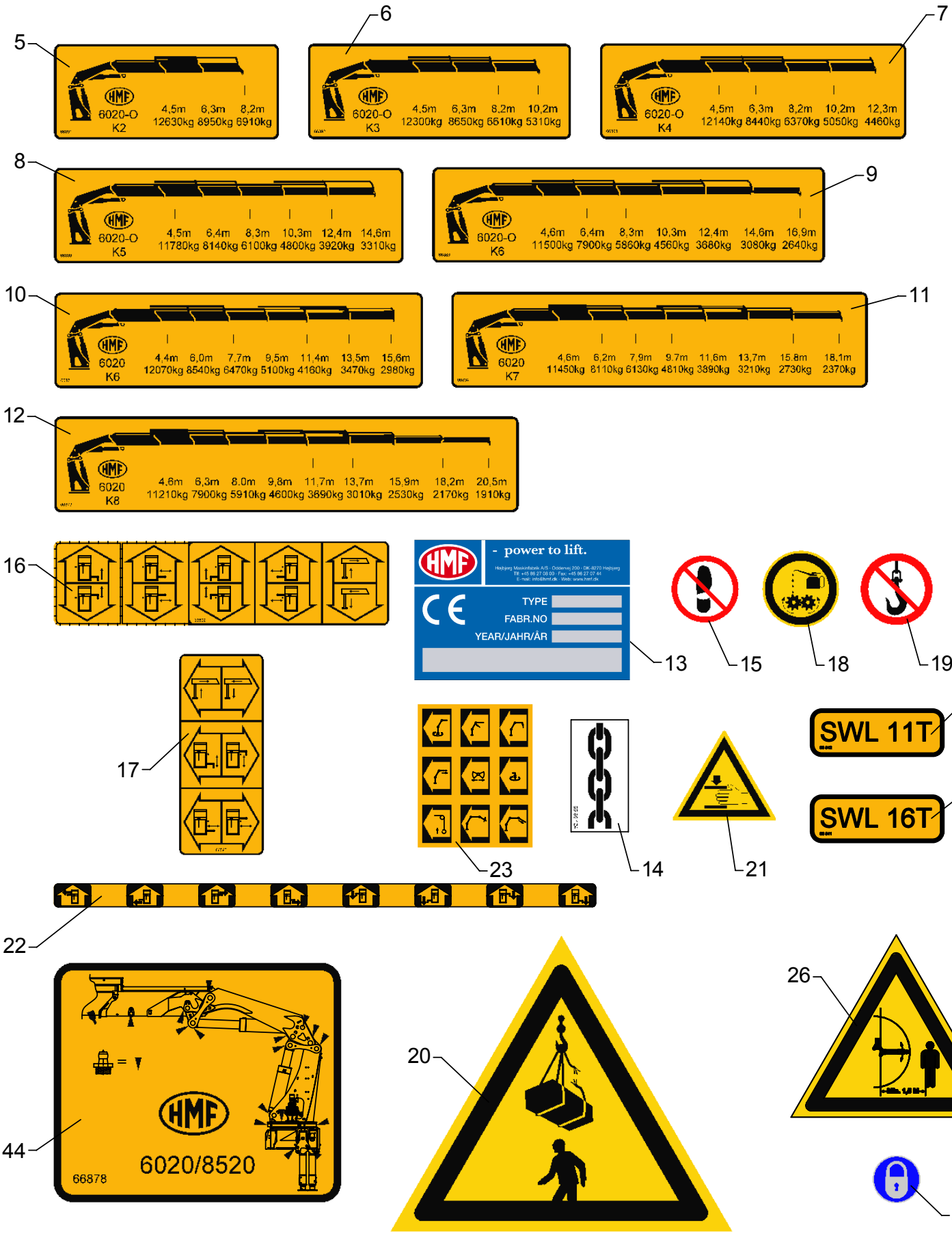

# Labels

As from / To loader no.: 96 02 41
Created: 16.07.2009
Modified:

| Item no. | Qty. | Part no. | Description | Remarks |
|---|---|---|---|---|
| 1 | 3 | 66846 | Label, 6020-K | |
| 2 | 2 | 64991 | Label, EVS - white | |
| 3 | 2 | 64988 | Label, EVS - blue | |
| 4 | 3 | 64604 | HMF label 180X300 | |
| 5 | 1 | 66891 | Lifting cap. diagr. 6020-O K2 | |
| 6 | 1 | 66892 | Lifting cap. diagr. 6020-O K3 | |
| 7 | 1 | 66893 | Lifting cap. diagr. 6020-O K4 | |
| 8 | 1 | 66880 | Lifting cap. diagr. 6020-O K5 | |
| 9 | 1 | 66869 | Lifting cap. diagr. 6020-O K6 | |
| 10 | 1 | 66871 | Lifting cap. diagr. 6020 K6 | |
| 11 | 1 | 66894 | Lifting cap. diagr. 6020 K7 | |
| 12 | 1 | 66873 | Lifting cap. diagr. 6020 K8 | |
| 13 | 1 | 64797 | Type plate, incl. CE | |
| 14 | 2 | 65507 | Label | 6689124 |
| 15 | 1 | 66464 | Label "NO STEP" | |
| 16 | 1 | 66592 | Operating label, stabilizers | |
| 17 | 1 | 66593 | Operating label, stabilizers | |
| 18 | 1 | 66465 | Label, "LUBRICATION,TURNTABLE" | |
| 19 | 1 | 66466 | Label, "HOOK FORBIDDEN" | |
| 20 | 2 | 66462 | "NEVER WALK UNDER LOAD" | |
| 21 | 2 | 66469 | Label - "Danger - squeezing" | |
| 22 | 1 | 66454 | Operating label | |
| 23 | 1 | 66456 | Operating labels | |
| 24 | 1 | 66541 | Plate SWL 16 t | |
| 25 | 1 | 66542 | Plate SWL 11 t | |
| 26 | 2 | 66463 | Label"SWING-UP STABILIZER LEG" | |
| 27 | 1 | 68578 | Lift. diagr. 6020 K6+FJ1200 K3 | |
| 28 | 1 | 68579 | Lift. diagr. 6020 K6+FJ1200 K4 | |
| 29 | 1 | 68580 | Lift. diagr. 6020 K6+FJ1200 K5 | |
| 30 | 1 | 68581 | Lift. diagr. 6020 K6+FJ1200 K6 | |
| 31 | 1 | 68574 | Lift. diagr. 6020-OK5+FJ1200K3 | |
| 32 | 1 | 68575 | Lift. diagr. 6020-OK5+FJ1200K4 | MAX. 400 kg |
| 33 | 1 | 68576 | Lift. diagr. 6020-OK5+FJ1200K5 | |
| 34 | 1 | 68577 | Lift. diagr. 6020-OK5+FJ1200K6 | |
| 35 | 1 | 68570 | Lift. diagr. 6020-OK4+FJ2000K3 | |
| 36 | 1 | 68571 | Lift. diagr. 6020-OK4+FJ2000K4 | |
| 37 | 1 | 68572 | Lift. diagr. 6020-OK4+FJ2000K5 | |
| 38 | 1 | 68573 | Lift. diagr. 6020-OK4+FJ2000K6 | |
| 39 | 1 | 66881 | Lift. diagr. 6020-OK6+FJ1200K3 | |

# 6020

An Oshkosh Corportation Company

Intern ref.: 6301800

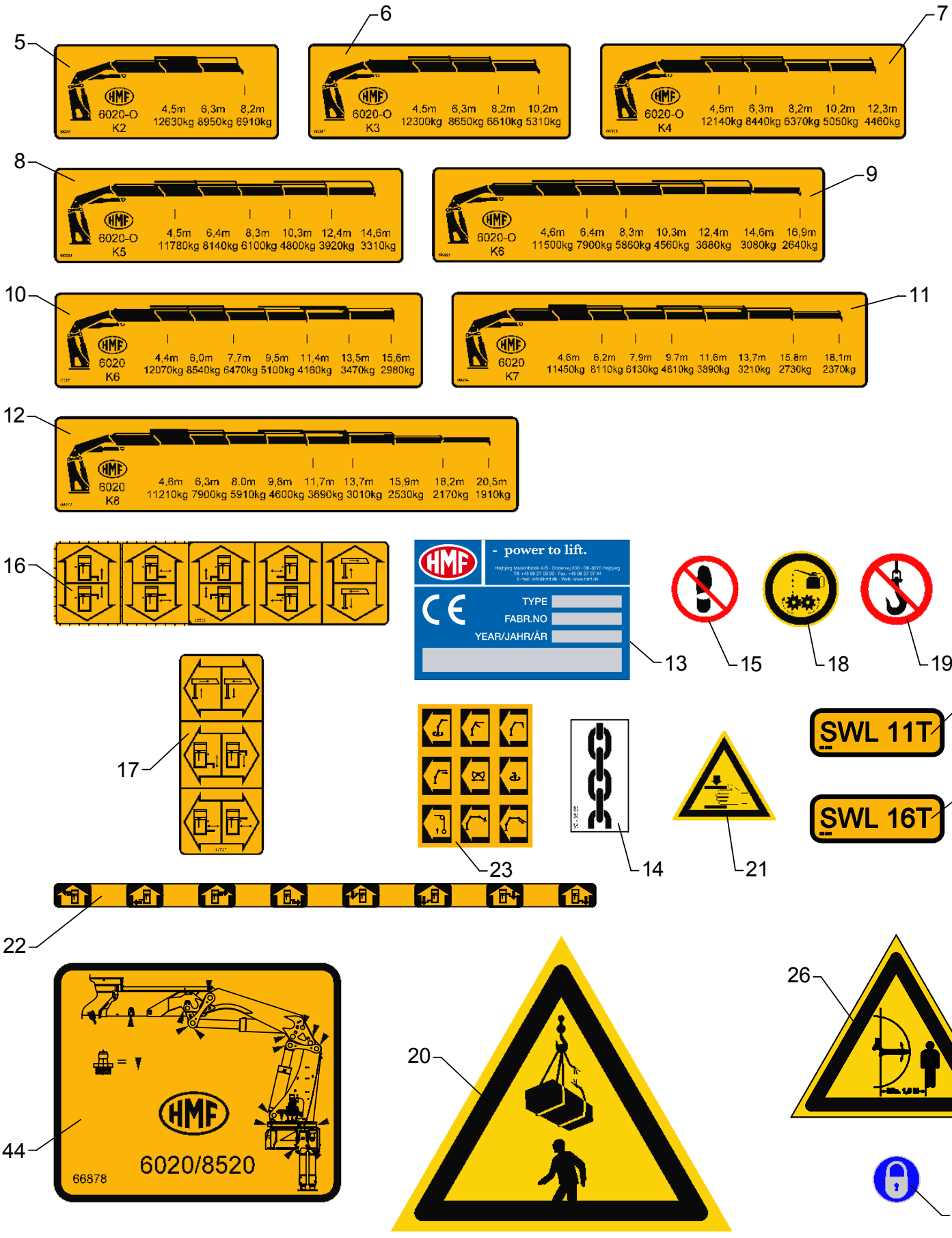

# Labels

As from / To loader no.: 96 02 41
Created: 16.07.2009
Modified:

| Item no. | Qty. | Part no. | Description | Remarks |
|---|---|---|---|---|
| 40 | 1 | 66882 | Lift. diagr. 6020-OK6+FJ1200K4 | |
| 41 | 1 | 66883 | Lift. diagr. 6020-OK6+FJ1200K5 | |
| 42 | 1 | 66875 | Lift. diagr. 6020-OK6+FJ1200K6 | |
| 43 | 2 | 66459 | Label "LOCKING DEVICE CLOSED" | |
| 44 | 1 | 66878 | Lubrication label | |

# ODIN

Intern ref.: 6668300

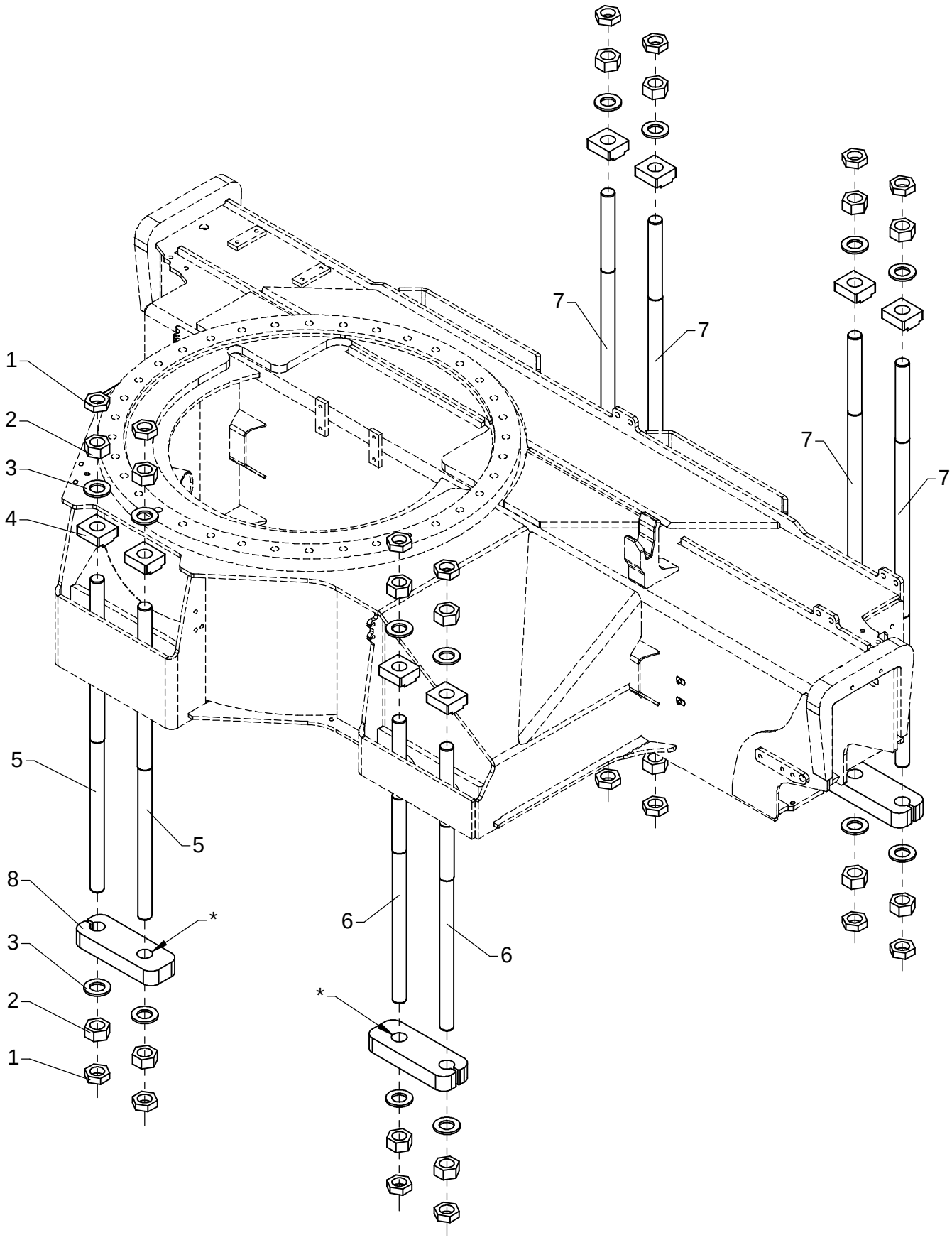

# Mounting kit, standard
# Chassis height: 230 - 490 mm.

As from / To loader no.: 96 00 00 / 96 03 46
Created: 03.10.2003
Modified:

| Item no. | Qty. | Part no. | Description | Remarks |
|---|---|---|---|---|
| 1 | 16 | 31056 | Counter nut | M33 x 2 |
| 2 | 16 | 32342 | Nut | M33 x 2 |
| 3 | 16 | 31058 | Washer | 34 mm |
| 4 | 8 | 6300496 | Mounting plate | |
| 5 | 2 | 32902 | Mounting bolt | 850 mm |
| 6 | 2 | 32903 | Mounting bolt | 770 mm |
| 7 | 4 | 32901 | Mounting bolt | 1175 mm |
| 8 | 4 | 6300999 | Clamp | |

* Drill a ø35 mm hole before fitting.

# ODIN

Intern ref.: 6668310

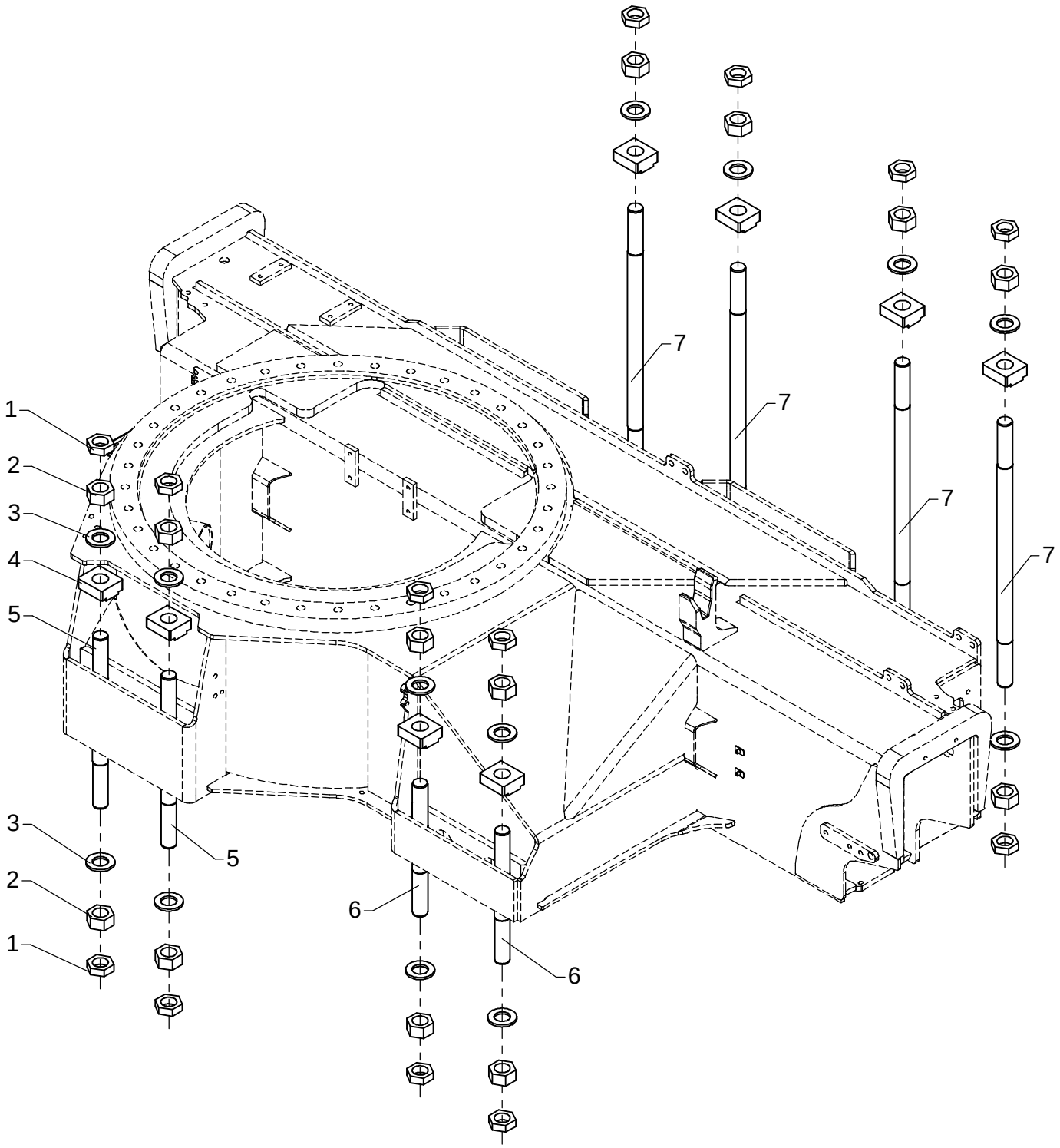

# Mounting kit, HMF-subframe

As from / To loader no.: 96 00 00 / 96 03 46
Created: 03.10.2003
Modified:

| Item no. | Qty. | Part no. | Description | Remarks |
|---|---|---|---|---|
| 1 | 16 | 31056 | Counter nut | M33 x 2 |
| 2 | 16 | 32342 | Nut | M33 x 2 |
| 3 | 16 | 31058 | Washer | 34 mm |
| 4 | 8 | 6300496 | Mounting plate | |
| 5 | 2 | 32905 | Mounting bolt | 430 mm |
| 6 | 2 | 32906 | Mounting bolt | 330 mm |
| 7 | 4 | 32904 | Mounting bolt | 665 mm |

# ODIN

Intern ref.: 6668350

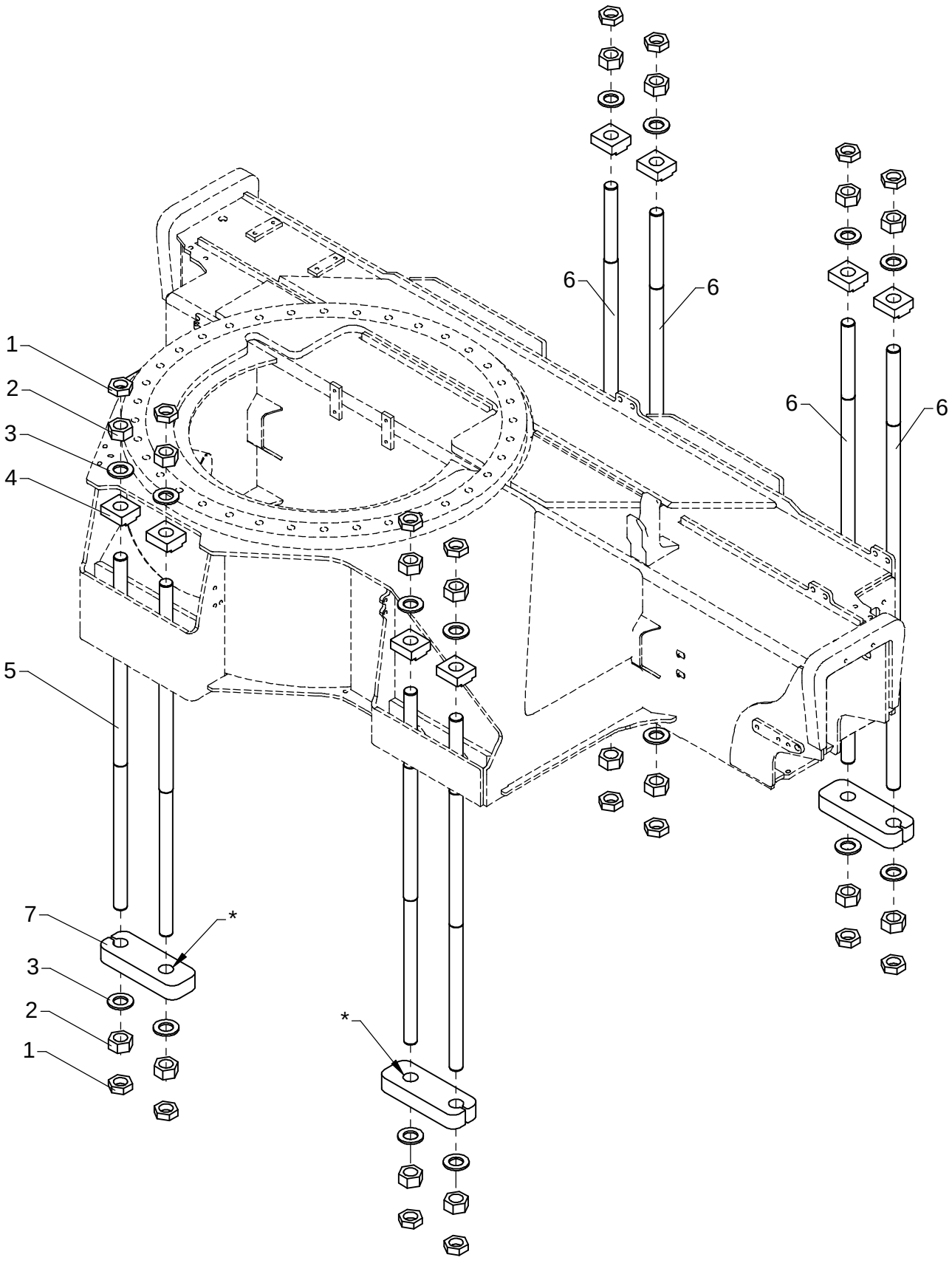

# Mounting kit, long
# Chassis height: 390 - 590 mm.

As from / To loader no.: 96 00 00 / 96 03 46
Created: 03.10.2003
Modified: 14.05.2014

| Item no. | Qty. | Part no. | Description | Remarks |
|---|---|---|---|---|
| 1 | 16 | 31056 | Counter nut | M33 x 2 |
| 2 | 16 | 32342 | Nut | M33 x 2 |
| 3 | 16 | 31058 | Washer | 34 mm |
| 4 | 8 | 6300496 | Mounting plate | |
| 5 | 4 | 32912 | Mounting bolt, Delta | 1000 mm |
| 6 | 4 | 32913 | Mounting bolt, Delta | 1250 mm |
| 7 | 4 | 6300999 | Clamp | |

* Drill a ø35 mm hole before fitting.

# ODIN

Intern ref.: 6888270

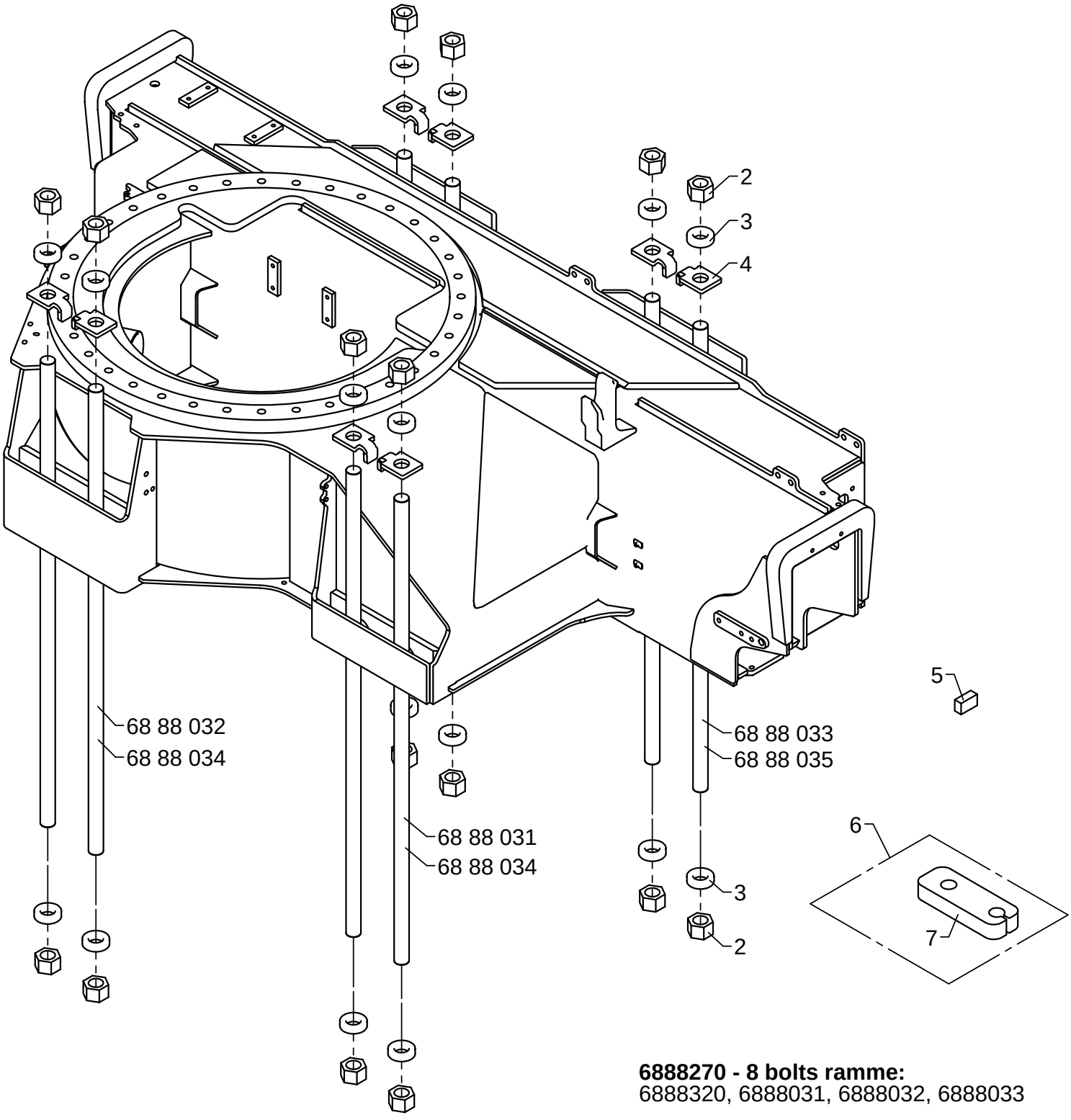


**6888270 - 8 bolts ramme:**
6888320, 6888031, 6888032, 6888033

**6888410 - 8 bolts chassis:**
6888320, 6888850, 6888034, 6888035

# Mounting kit, long

As from / To loader no.: 96 03 47 /
Created: 14.05.2014
Modified:

| Item no. | Qty. | Part no. | Description | Remarks |
|---|---|---|---|---|
| 1 | 1 | 6888320 | Nut/washer/stop - kit | Pos. 2, 3, 4, 5 |
| 2 | 16 | 31087 | Lock nut M33 x 2 hexagonal | M33 x 2 |
| 3 | 16 | 6394709 | Mounting plate 33 mm | |
| 4 | 8 | 6394705 | Mounting plate 33 mm | |
| 5 | 6 | 6644084 | Stop block | |
| 6 | 1 | 6668850 | Mounting fittings (mount. kit) | |
| 7 | 4 | 6300999 | Clamp | |
| 8 | 2 | 6888031 | Mounting bolt, M33 x 2 x 330 | |
| 9 | 2 | 6888032 | Mounting bolt, M33 x 2 x 430 | |
| 10 | 4 | 6888033 | Mounting bolt, M33 x 2 x 665 | |
| 11 | 4 | 6888034 | Mounting bolt, M33 x 2 x 850 | |
| 12 | 4 | 6888035 | Mounting bolt, M33 x 2 x 1250 | |

# ODIN

Intern ref.: 6302890

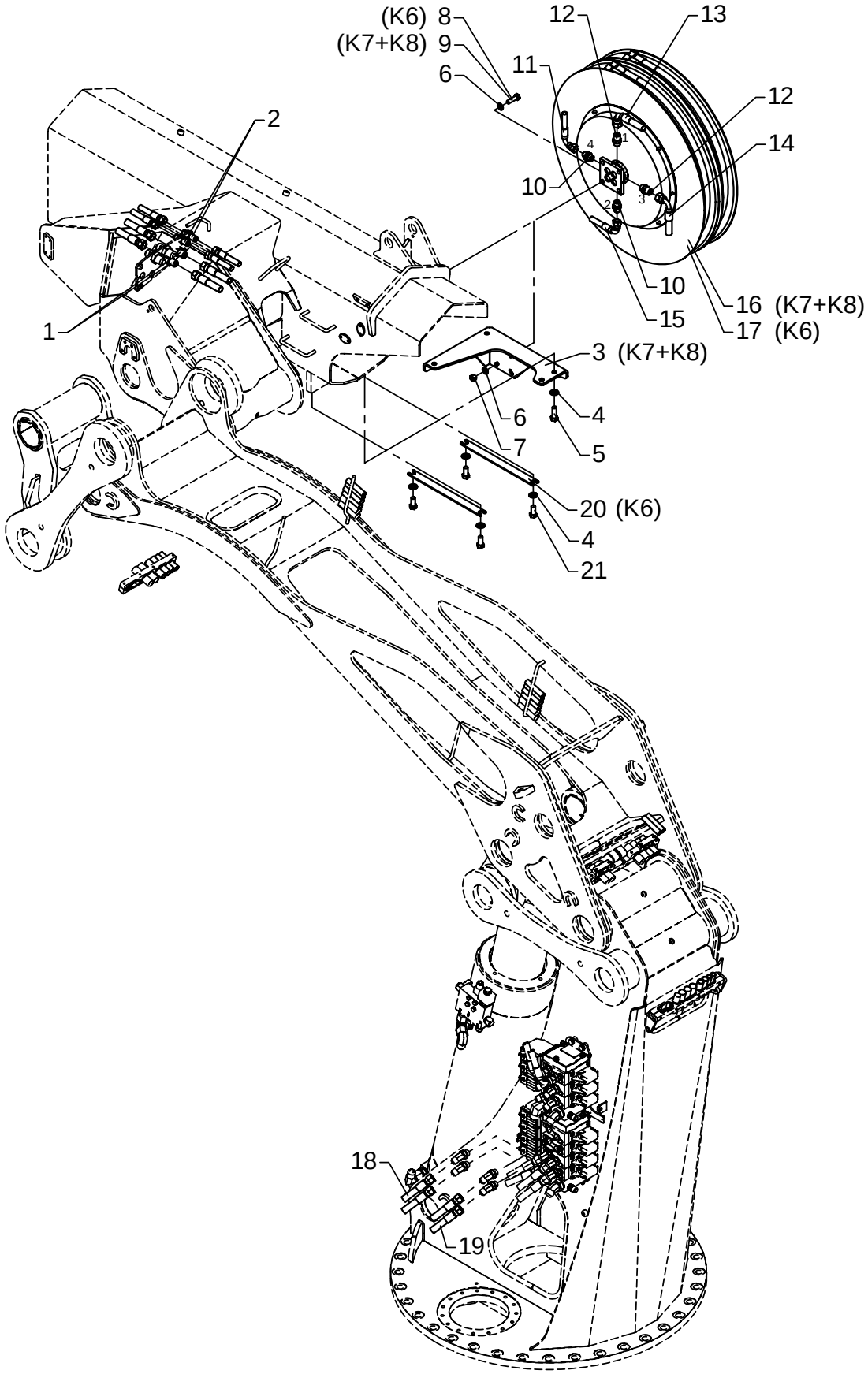

# Hydraulic system, extra valves, without FJ and winch

As from / To loader no.: 96 00 00 / 96 00 86
Created: 03.10.2003
Modified: 28.03.2007

| Item no. | Qty. | Part no. | Description | Remarks |
|---|---|---|---|---|
| 1 | 2 | 25825 | Bulkhead connection | WTX-WLNS 14/16 JIC |
| 2 | 2 | 25824 | Bulkhead connection | WTX-WLNS 12 JIC |
| 3 | 1 | 6300929 | Bracket for hose reel | |
| 4 | 8 | 31178 | Washer | 14 mm |
| 5 | 4 | 30207 | Set screw | M14 x 40 |
| 6 | 8 | 31131 | Washer | 12 mm |
| 7 | 4 | 30890 | Lock nut | M12 |
| 8 | 4 | 30176 | Set screw | M12 x 25 |
| 9 | 4 | 31533 | Set screw, stainless | M12 x 40 |
| 10 | 2 | 25832 | Straight connection | F40XS 12-1/2 JIC |
| 11 | 1 | 56060 | Hose | 3/8" x 1950 mm V/O JIC (KN) |
| 12 | 2 | 25833 | Straight connection | F40XS 14/16-1/2 JIC |
| 13 | 1 | 56059 | Hose | 1/2" x 1950 mm V/O JIC (UU) |
| 14 | 1 | 56059 | Hose | 1/2" x 1950 mm V/O JIC (KO) |
| 15 | 1 | 56060 | Hose | 3/8" x 1950 mm V/O JIC (UI) |
| 16 | 1 | 56016 | Hose reel, double | 1/2" x 18500 mm |
| | | 56070 | Double hose | 1/2" x 18500 mm |
| | | 56067 | Seal kit | |
| | | 56068 | Spring for hose reel | |
| | | 56073 | Cover | |
| 17 | 1 | 56017 | Hose reel, double | 1/2" x 14200 mm |
| | | 56069 | Double hose | 1/2" x 14200 mm |
| | | 56067 | Seal kit | |
| | | 56068 | Spring for hose reel | |
| | | 56073 | Cover | |
| 18 | 2 | 56055 | Hose | 3/8" x 5900 mm O/O JIC |
| 19 | 2 | 56056 | Hose | 1/2" x 5900 mm O/O JIC |
| 20 | 2 | 6300444 | Hose bracket | |
| 21 | 4 | 30206 | Set screw | M14 x 30 |

# ODIN

Intern ref.: 6302890

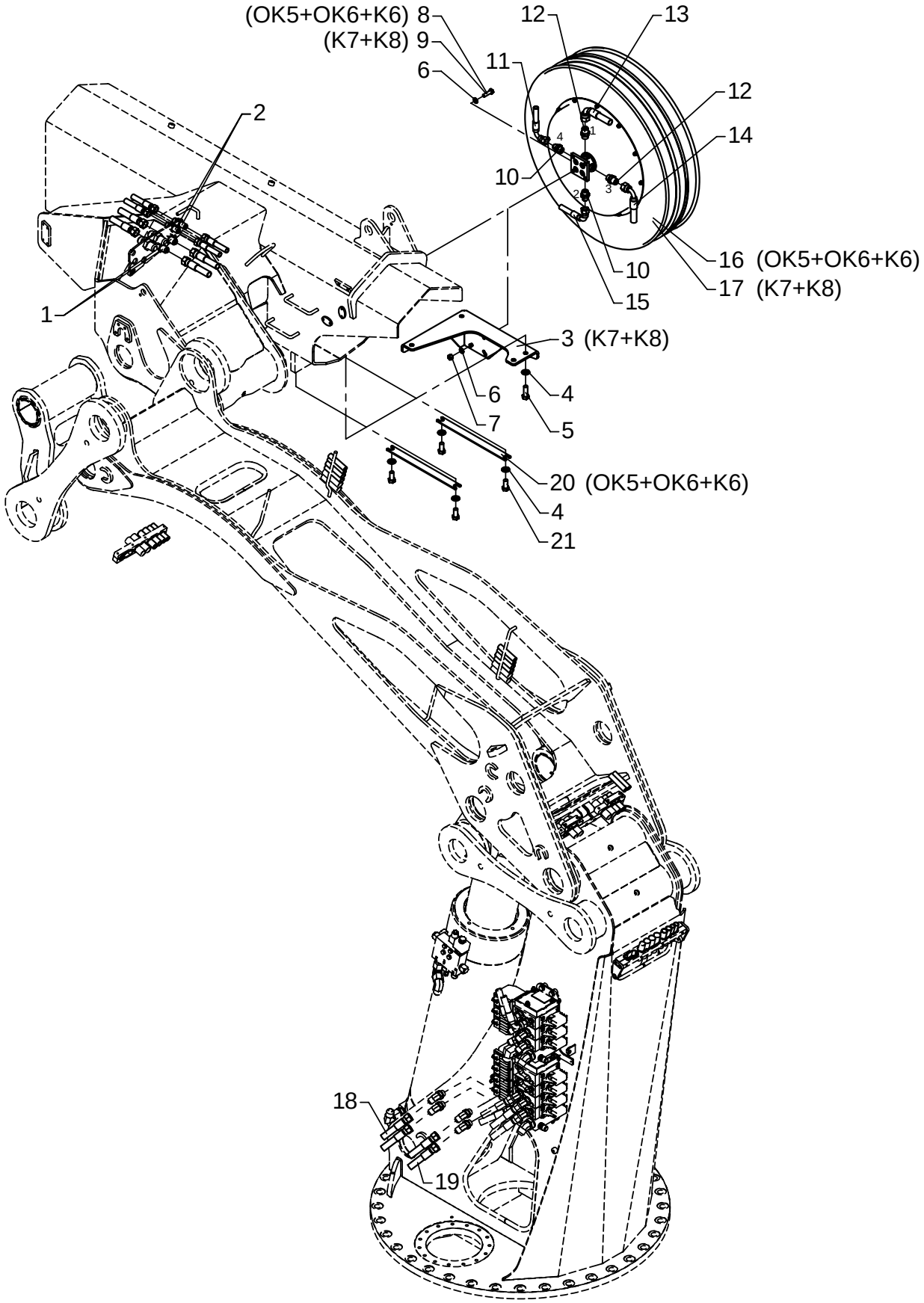

# Hydraulic system, extra valves, without FJ and winch

As from / To loader no.: 96 00 87 /
Created: 30.06.2005
Modified: 28.03.2007

| Item no. | Qty. | Part no. | Description | Remarks |
|---|---|---|---|---|
| 1 | 2 | 25825 | Bulkhead connection | WTX-WLNS 14/16 JIC |
| 2 | 2 | 25824 | Bulkhead connection | WTX-WLNS 12 JIC |
| 3 | 1 | 6300929 | Bracket for hose reel | |
| 4 | 8 | 31178 | Washer | 14 mm |
| 5 | 4 | 30207 | Set screw | M14 x 40 |
| 6 | 8 | 31177 | Washer | 10 mm |
| 7 | 4 | 31564 | Lock nut, stainless | M10 |
| 8 | 4 | 31513 | Set screw, stainless | M10 x 25 |
| 9 | 4 | 31519 | Set screw | M10 x 35 |
| 10 | 2 | 25832 | Straight connection | F40XS 12-1/2 JIC |
| 11 | 1 | 56060 | Hose | 3/8" x 1950 mm V/O JIC (KN) |
| 12 | 2 | 25833 | Straight connection | F40XS 14/16-1/2 JIC |
| 13 | 1 | 56059 | Hose | 1/2" x 1950 mm V/O JIC (UU) |
| 14 | 1 | 56059 | Hose | 1/2" x 1950 mm V/O JIC (KO) |
| 15 | 1 | 56060 | Hose | 3/8" x 1950 mm V/O JIC (UI) |
| 16 | 1 | 56317 | Hose reel, double | 1/2" x 18500 mm |
| | | 56318 | Hose | 1/2" x 18500 mm |
| | | 56344 | Spring | |
| | | 56346 | Spring container | |
| | | 56347 | Seal kit | |
| 17 | 1 | 56315 | Hose reel, double | 1/2" x 15500 mm |
| | | 56316 | Hose | 1/2" x 15500 mm |
| | | 56344 | Spring | |
| | | 56346 | Spring container | |
| | | 56347 | Seal kit | |
| 18 | 2 | 56055 | Hose | 3/8" x 5900 mm O/O JIC |
| 19 | 2 | 56056 | Hose | 1/2" x 5900 mm O/O JIC |
| 20 | 2 | 6300444 | Hose bracket | |
| 21 | 4 | 30206 | Set screw | M14 x 30 |

# ODIN

Intern ref.: 6302890

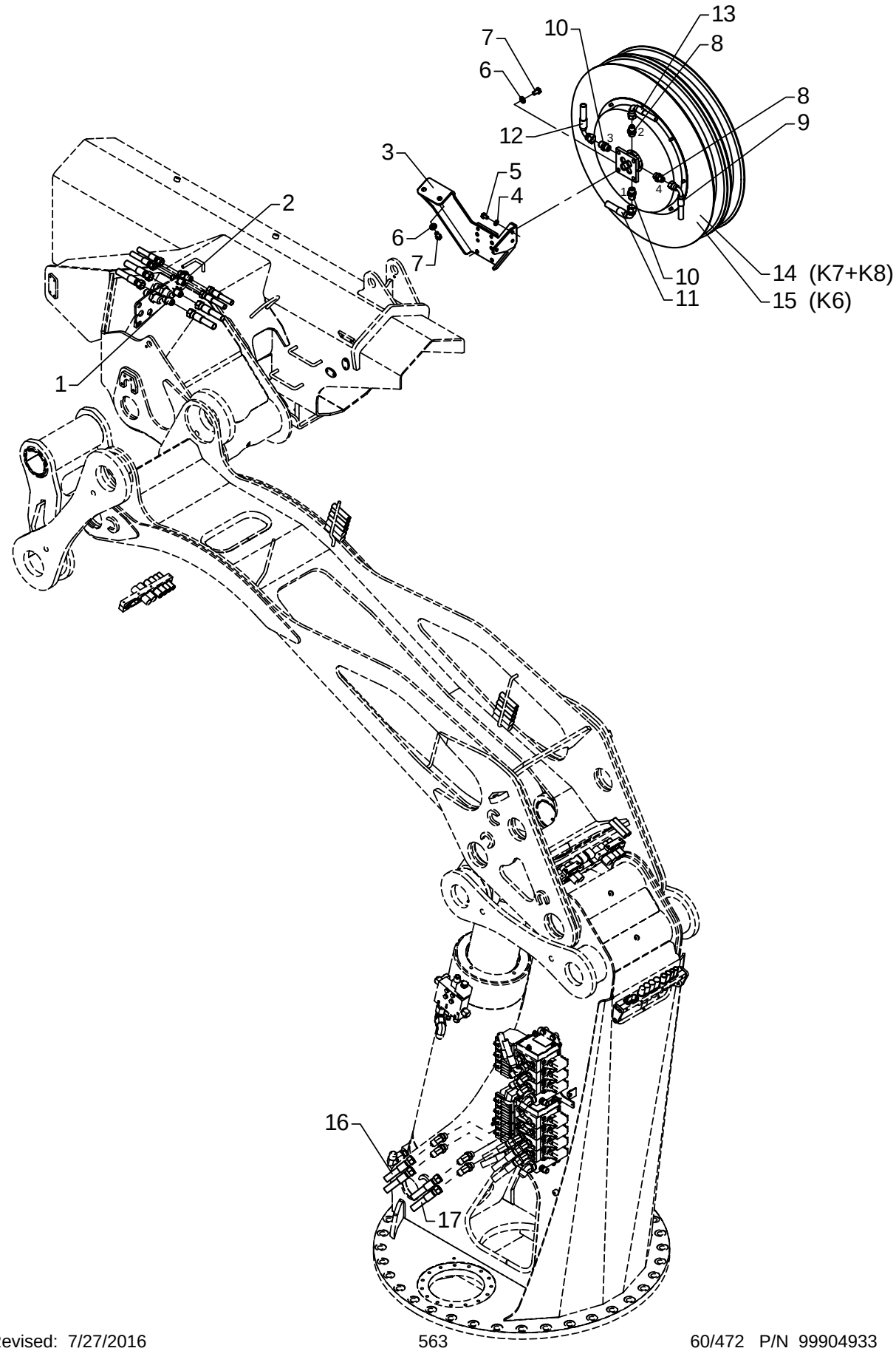

# Hydraulic system, extra valves, without FJ, with winch

As from / To loader no.: 96 00 00 / 96 00 86
Created: 03.10.2003
Modified: 28.03.2007

| Item no. | Qty. | Part no. | Description | Remarks |
|---|---|---|---|---|
| 1 | 2 | 25825 | Bulkhead connection | WTX-WLNS 14/16 JIC |
| 2 | 2 | 25824 | Bulkhead connection | WTX-WLNS 12 JIC |
| 3 | 1 | 6300684 | Bracket for hose reel | |
| 4 | 3 | 31177 | Washer | 10 mm |
| 5 | 3 | 31510 | Set screw, stainless | M10 x 16 |
| 6 | 6 | 31131 | Washer | 12 mm |
| 7 | 6 | 30175 | Set screw | M12 x 20 |
| 8 | 2 | 25832 | Straight connection | F40XS 12-1/2 JIC |
| 9 | 1 | 62944 | Hose, JIC | 3/8" x 2200 mm V/O JIC (KN) |
| 10 | 2 | 25833 | Straight connection | F40XS 14/16-1/2 JIC |
| 11 | 1 | 56074 | Hose | 1/2" x 2250 mm V/O JIC (UU) |
| 12 | 1 | 56074 | Hose | 1/2" x 2250 mm V/O JIC (KO) |
| 13 | 1 | 62907 | Hose | 3/8" x 2000 mm V/O JIC (UI) |
| 14 | 1 | 56016 | Hose reel, double | 1/2" x 18500 mm |
| | | 56070 | Double hose | 1/2" x 18500 mm |
| | | 56067 | Seal kit | |
| | | 56068 | Spring for hose reel | |
| | | 56073 | Cover | |
| 15 | 1 | 56017 | Hose reel, double | 1/2" x 14200 mm |
| | | 56069 | Double hose | 1/2" x 14200 mm |
| | | 56067 | Seal kit | |
| | | 56068 | Spring for hose reel | |
| | | 56073 | Cover | |
| 16 | 2 | 56055 | Hose | 3/8" x 5900 mm O/O JIC |
| 17 | 2 | 56056 | Hose | 1/2" x 5900 mm O/O JIC |

# ODIN

Intern ref.: 6302890

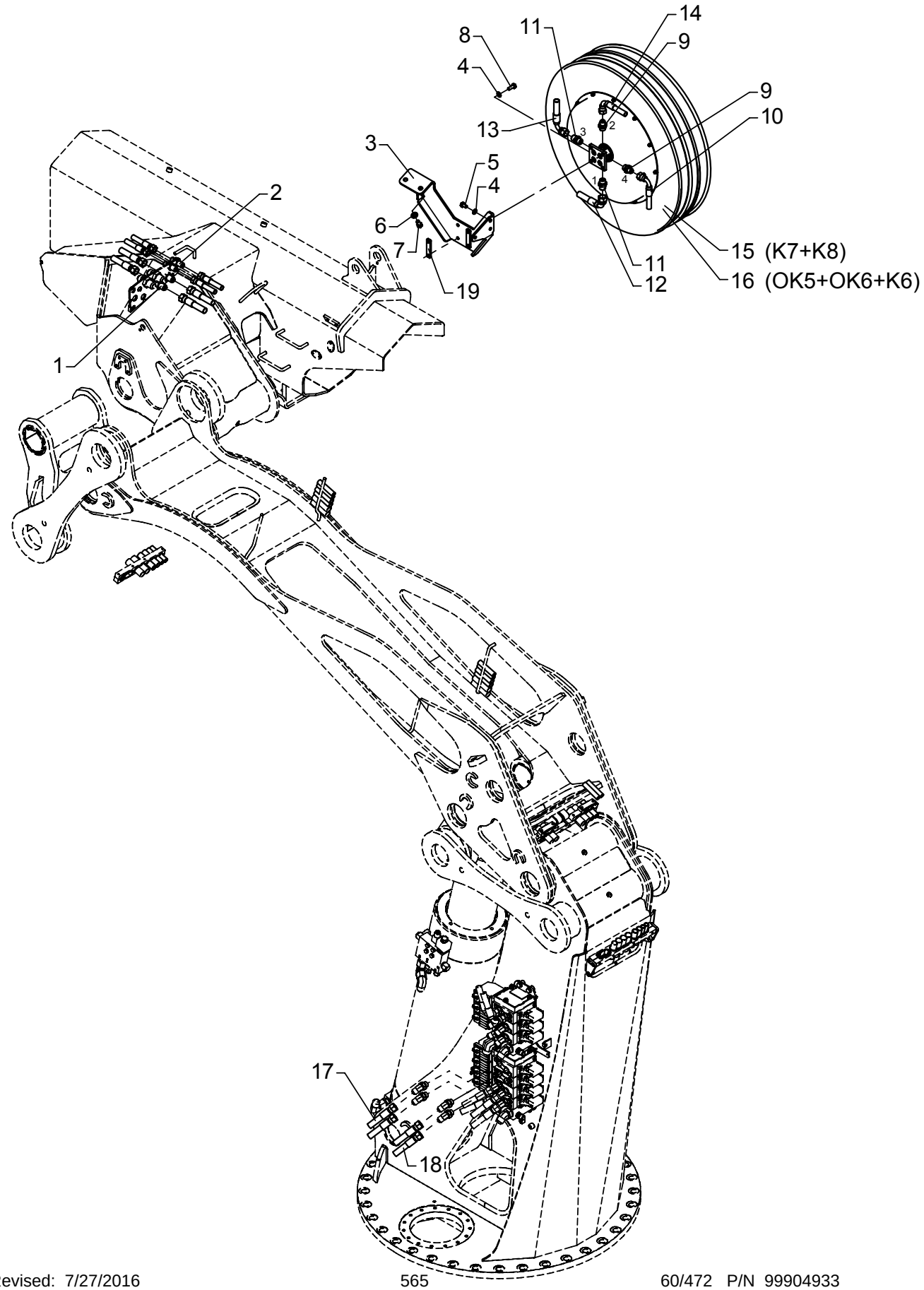

# Hydraulic system, extra valves, without FJ, with winch

As from / To loader no.: 96 00 87 / 96 01 94
Created: 30.06.2005
Modified: 03.12.2008

| Item no. | Qty. | Part no. | Description | Remarks |
|---|---|---|---|---|
| 1 | 2 | 25825 | Bulkhead connection | WTX-WLNS 14/16 JIC |
| 2 | 2 | 25824 | Bulkhead connection | WTX-WLNS 12 JIC |
| 3 | 1 | 6300767 | Bracket for hose reel | |
| 4 | 7 | 31177 | Washer | 10 mm |
| 5 | 3 | 31510 | Set screw, stainless | M10 x 16 |
| 6 | 2 | 31131 | Washer | 12 mm |
| 7 | 2 | 30175 | Set screw | M12 x 20 |
| 8 | 4 | 31513 | Set screw, stainless | M10 x 25 |
| 9 | 2 | 25832 | Straight connection | F40XS12 - 1/2 |
| 10 | 1 | 62944 | Hose, JIC | 3/8" x 2200 mm V/O JIC (KN) |
| 11 | 2 | 25833 | Straight connection | F40XS14/16 - 1/2 |
| 12 | 1 | 56074 | Hose | 1/2" x 2250 mm V/O JIC (UU) |
| 13 | 1 | 56074 | Hose | 1/2" x 2250 mm V/O JIC (KO) |
| 14 | 1 | 62907 | Hose | 3/8" x 2000 mm V/O JIC (UI) |
| 15 | 1 | 56317 | Hose reel, double | 1/2" x 18500 mm |
| | | 56318 | Hose | 1/2" x 18500 mm |
| | | 56344 | Spring | |
| | | 56346 | Spring container | |
| | | 56347 | Seal kit | |
| 16 | 1 | 56315 | Hose reel, double | 1/2" x 15500 mm |
| | | 56316 | Hose | 1/2" x 15500 mm |
| | | 56344 | Spring | |
| | | 56346 | Spring container | |
| | | 56347 | Seal kit | |
| 17 | 2 | 56055 | Hose | 3/8" x 5900 mm O/O JIC |
| 18 | 2 | 56056 | Hose | 1/2" x 5900 mm O/O JIC |
| 19 | 2 | 6304397 | Spacer | |

# ODIN

Intern ref.: 6302890

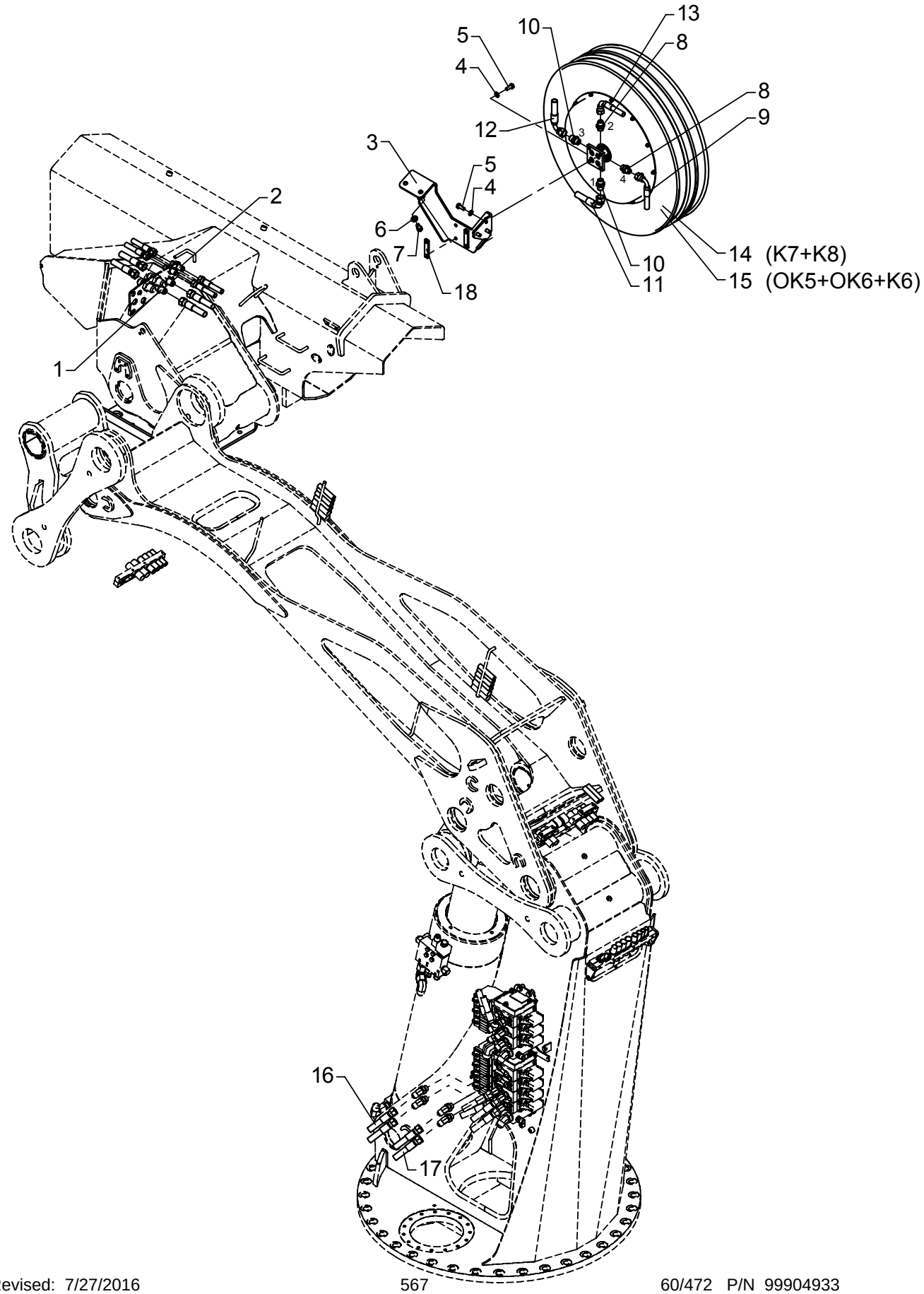

# Hydraulic system, extra valves, without FJ, with winch

As from / To loader no.: 96 01 95
Created: 03.12.2008
Modified:

| Item no. | Qty. | Part no. | Description | Remarks |
|---|---|---|---|---|
| 1 | 2 | 25825 | Bulkhead connection | WTX-WLNS 14/16 JIC |
| 2 | 2 | 25824 | Bulkhead connection | WTX-WLNS 12 JIC |
| 3 | 1 | 6301296 | Bracket for hose reel | |
| 4 | 7 | 31177 | Washer | 10 mm |
| 5 | 7 | 31513 | Set screw, stainless | M10 x 25 |
| 6 | 2 | 31131 | Washer | 12 mm |
| 7 | 2 | 30175 | Set screw | M12 x 20 |
| 8 | 2 | 25832 | Straight connection | F40XS12 - 1/2 |
| 9 | 1 | 62944 | Hose, JIC | 3/8" x 2200 mm V/O JIC (KN) |
| 10 | 2 | 25833 | Straight connection | F40XS14/16 - 1/2 |
| 11 | 1 | 56074 | Hose | 1/2" x 2250 mm V/O JIC (UU) |
| 12 | 1 | 56074 | Hose | 1/2" x 2250 mm V/O JIC (KO) |
| 13 | 1 | 62907 | Hose | 3/8" x 2000 mm V/O JIC (UI) |
| 14 | 1 | 56317 | Hose reel, double | 1/2" x 18500 mm |
| | | 56318 | Hose | 1/2" x 18500 mm |
| | | 56344 | Spring | |
| | | 56346 | Spring container | |
| | | 56347 | Seal kit | |
| 15 | 1 | 56315 | Hose reel, double | 1/2" x 15500 mm |
| | | 56316 | Hose | 1/2" x 15500 mm |
| | | 56344 | Spring | |
| | | 56346 | Spring container | |
| | | 56347 | Seal kit | |
| 16 | 2 | 56055 | Hose | 3/8" x 5900 mm O/O JIC |
| 17 | 2 | 56056 | Hose | 1/2" x 5900 mm O/O JIC |
| 18 | 2 | 6304397 | Spacer | |

# ODIN

Intern ref.: 6302890

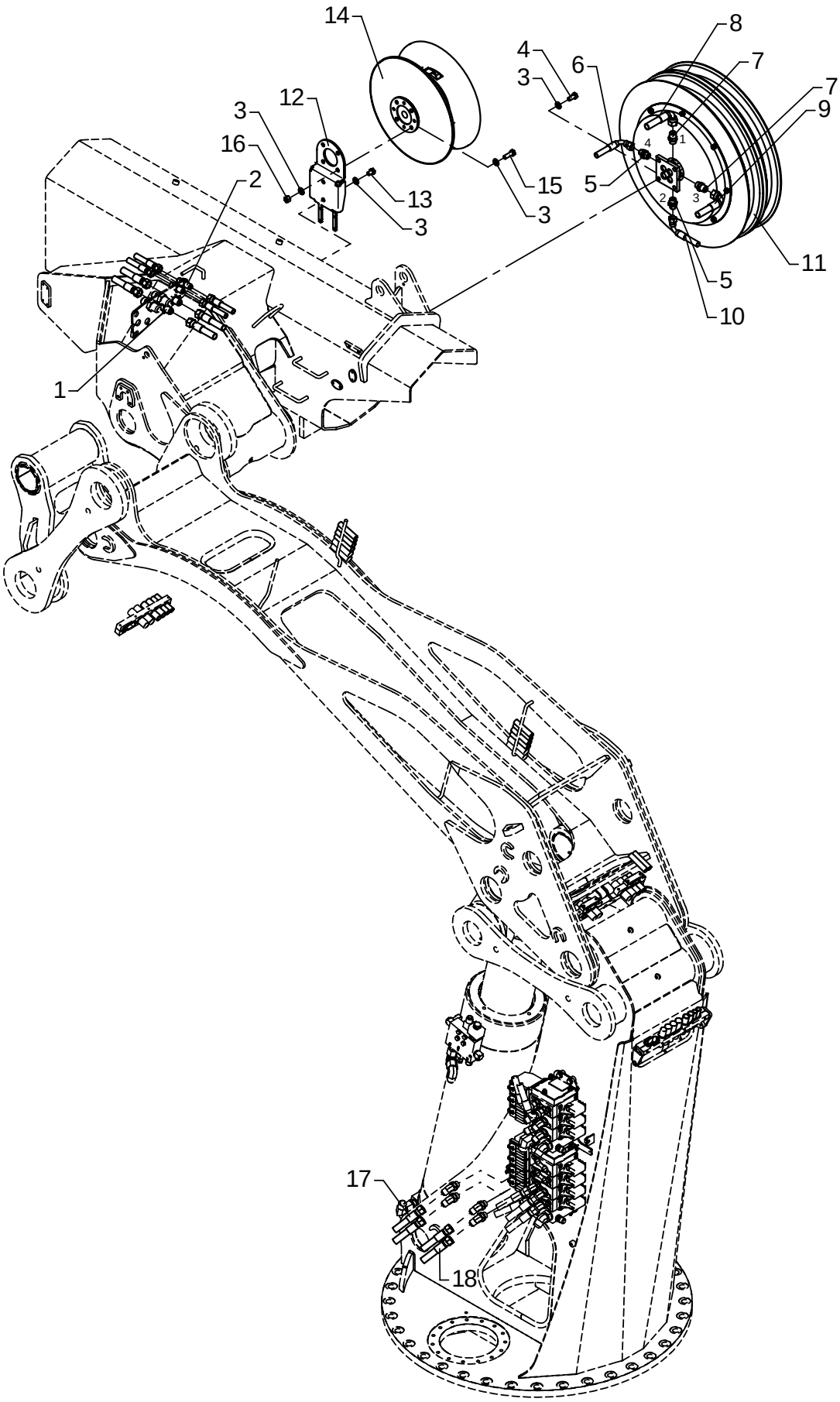

# Hydraulic system, extra valves, with FJ

As from / To loader no.: 96 00 00 / 96 00 86
Created: 03.10.2003
Modified: 28.03.2007

| Item no. | Qty. | Part no. | Description | Remarks |
|---|---|---|---|---|
| 1 | 2 | 25825 | Bulkhead connection | WTX-WLNS 14/16 JIC |
| 2 | 2 | 25824 | Bulkhead connection | WTX-WLNS 12 JIC |
| 3 | 14 | 31131 | Washer | 12 mm |
| 4 | 4 | 30176 | Set screw | M12 x 25 |
| 5 | 2 | 25832 | Straight connection | F40XS 12-1/2 JIC |
| 6 | 1 | 56060 | Hose | 3/8" x 1950 mm V/O JIC (KN) |
| 7 | 2 | 25833 | Straight connection | F40XS 14/16-1/2 JIC |
| 8 | 1 | 56059 | Hose | 1/2" x 1950 mm V/O JIC (UU) |
| 9 | 1 | 56059 | Hose | 1/2" x 1950 mm V/O JIC (KO) |
| 10 | 1 | 56060 | Hose | 3/8" x 1950 mm V/O JIC (UI) |
| 11 | 1 | 56017 | Hose reel, double | 1/2" x 14200 mm |
| | | 56069 | Double hose | 1/2" x 14200 mm |
| | | 56067 | Seal kit | |
| | | 56068 | Spring for hose reel | |
| | | 56073 | Cover | |
| 12 | 1 | 6302879 | Bracket for cable drum | |
| 13 | 2 | 31960 | Set screw | M12 x 16 |
| 14 | 1 | 28547 | Cable drum | |
| 15 | 4 | 30178 | Set screw | M12 x 35 |
| 16 | 4 | 30890 | Lock nut | M12 |
| 17 | 2 | 56055 | Hose | 3/8" x 5900 mm O/O JIC |
| 18 | 2 | 56056 | Hose | 1/2" x 5900 mm O/O JIC |

# ODIN

Intern ref.: 6302890

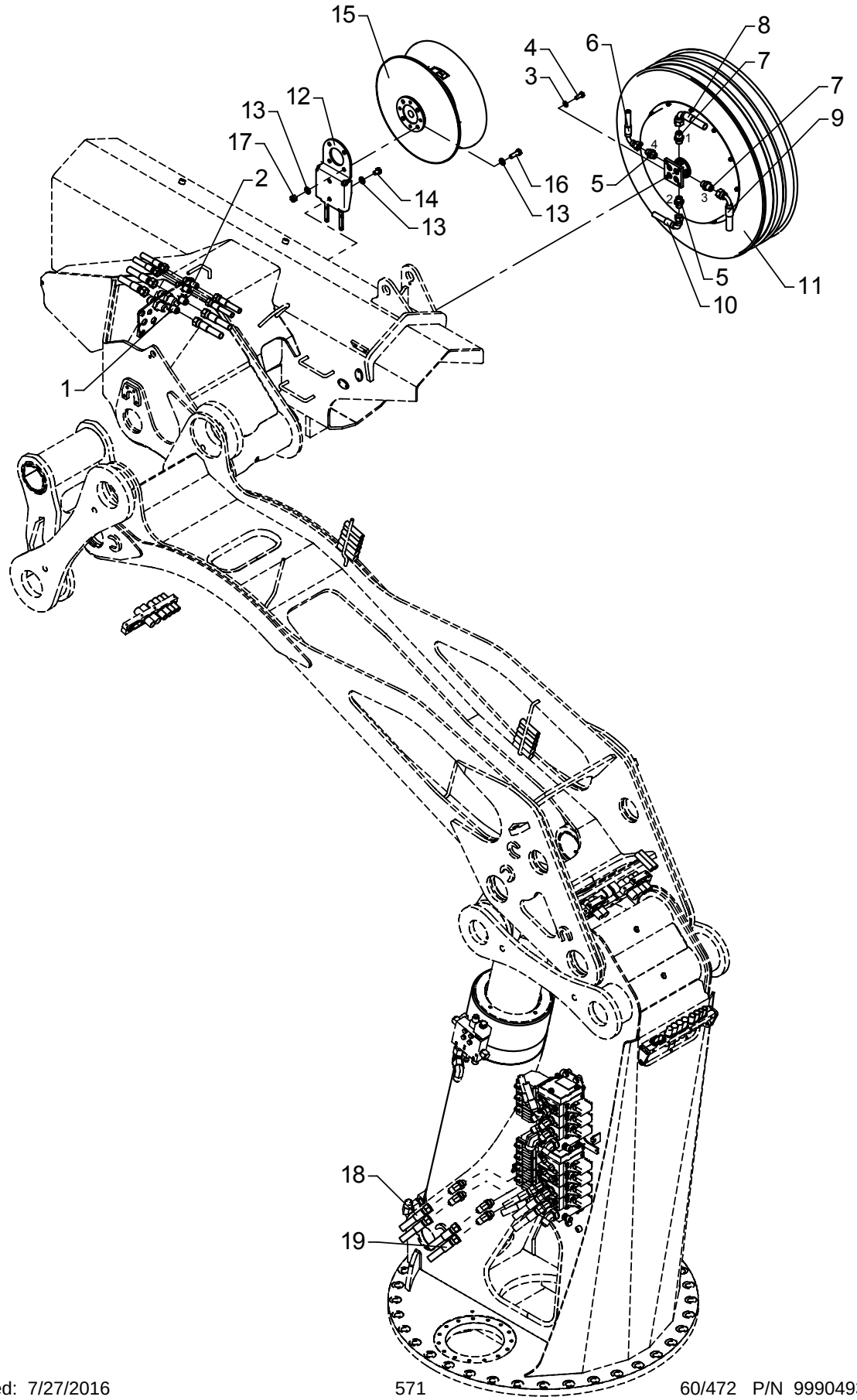

# Hydraulic system, extra valves, with FJ

As from / To loader no.: 96 00 87 / 96 02 51
Created: 30.06.2005
Modified: 05.05.2010

| Item no. | Qty. | Part no. | Description | Remarks |
|---|---|---|---|---|
| 1 | 2 | 25825 | Bulkhead connection | WTX-WLNS 14/16 JIC |
| 2 | 2 | 25824 | Bulkhead connection | WTX-WLNS 12 JIC |
| 3 | 4 | 31177 | Washer | 10 mm |
| 4 | 4 | 31513 | Set screw, stainless | M10 x 25 |
| 5 | 2 | 25832 | Straight connection | F40XS12 - 1/2 |
| 6 | 1 | 56060 | Hose | 3/8" x 1950 mm V/O JIC (KN) |
| 7 | 2 | 25833 | Straight connection | F40XS14/16 - 1/2 |
| 8 | 1 | 56059 | Hose | 1/2" x 1950 mm V/O JIC (UU) |
| 9 | 1 | 56059 | Hose | 1/2" x 1950 mm V/O JIC (KO) |
| 10 | 1 | 56060 | Hose | 3/8" x 1950 mm V/O JIC (UI) |
| 11 | 1 | 56315 | Hose reel, double | 1/2" x 15500 mm |
| | | 56316 | Hose | 1/2" x 15500 mm |
| | | 56344 | Spring | |
| | | 56346 | Spring container | |
| | | 56347 | Seal kit | |
| 12 | 1 | 6302879 | Bracket for cable drum | |
| 13 | 10 | 31131 | Washer | 12 mm |
| 14 | 2 | 31960 | Set screw | M12 x 16 |
| 15 | 1 | 28547 | Cable drum | |
| 16 | 4 | 30178 | Set screw | M12 x 35 |
| 17 | 4 | 30890 | Lock nut | M12 |
| 18 | 2 | 56055 | Hose | 3/8" x 5900 mm O/O JIC |
| 19 | 2 | 56056 | Hose | 1/2" x 5900 mm O/O JIC |

# ODIN

Intern ref.: 6302890

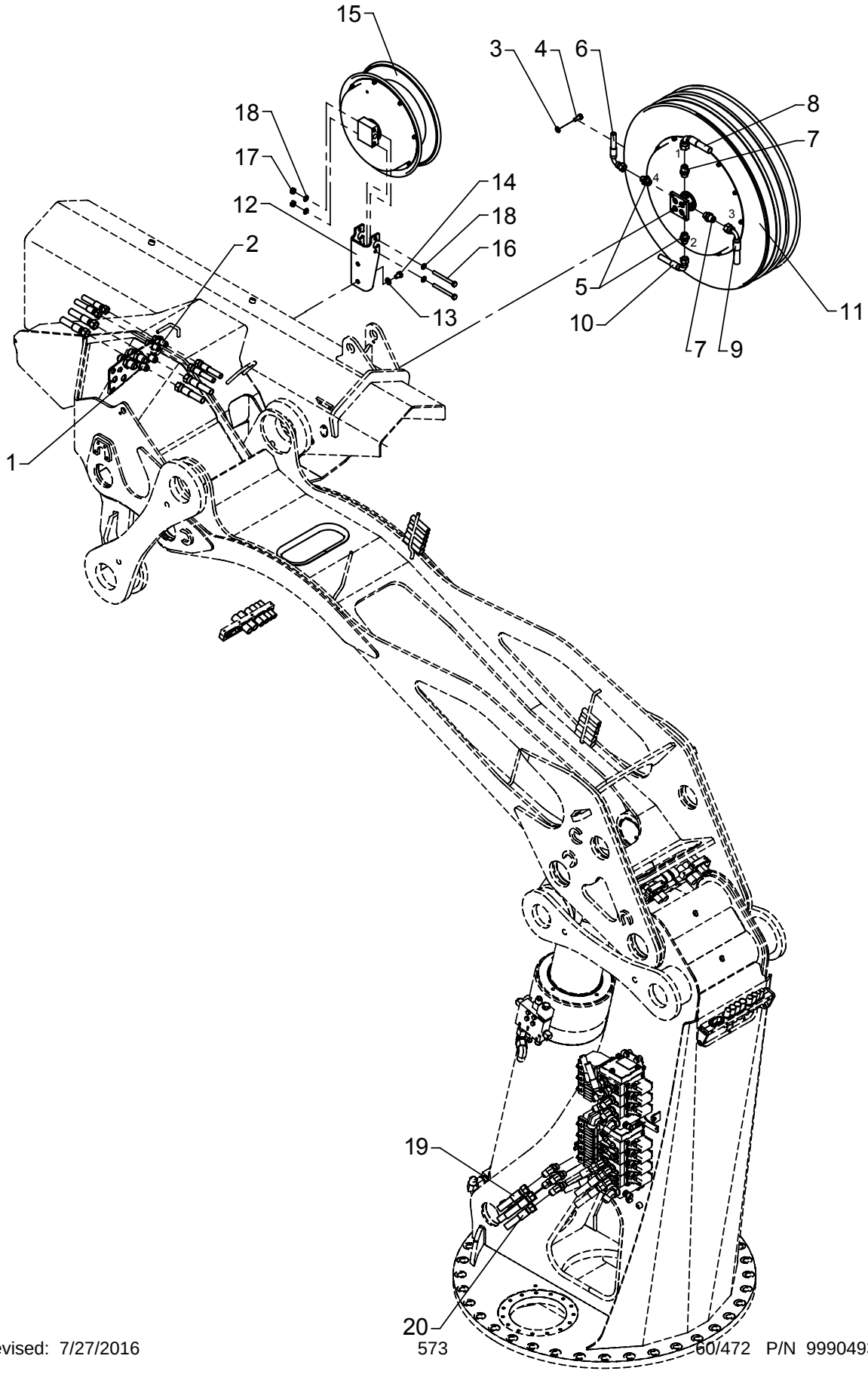

# Hydraulic system, extra valves, with FJ

As from / To loader no.: 96 02 52/
Created: 05.05.2010
Modified:

| Item no. | Qty. | Part no. | Description | Remarks |
|---|---|---|---|---|
| 1 | 2 | 25825 | Bulkhead connection | WTX-WLNS 14/16 JIC |
| 2 | 2 | 25824 | Bulkhead connection | WTX-WLNS 12 JIC |
| 3 | 4 | 31177 | Washer | 10 mm |
| 4 | 4 | 31513 | Set screw, stainless | M10 x 25 |
| 5 | 2 | 25832 | Straight connection | F40XS12 - 1/2 |
| 6 | 1 | 56060 | Hose | 3/8" x 1950 mm V/O JIC (KN) |
| 7 | 2 | 25833 | Straight connection | F40XS14/16 - 1/2 |
| 8 | 1 | 56059 | Hose | 1/2" x 1950 mm V/O JIC (UU) |
| 9 | 1 | 56059 | Hose | 1/2" x 1950 mm V/O JIC (KO) |
| 10 | 1 | 56060 | Hose | 3/8" x 1950 mm V/O JIC (UI) |
| 11 | 1 | 56315 | Hose reel, double | 1/2" x 15500 mm |
| | | 56316 | Hose | 1/2" x 15500 mm |
| | | 56344 | Spring | |
| | | 56346 | Spring container | |
| | | 56347 | Seal kit | |
| 12 | 1 | 6303058 | Bracket for cable drum | |
| 13 | 2 | 31131 | Washer | 12 mm |
| 14 | 2 | 30174 | Set screw | M12 x 16 |
| 15 | 1 | 29216 | Cable drum | |
| 16 | 2 | 30106 | Steel bolt | M10 x 100 |
| 17 | 2 | 30858 | Nut | M10 |
| 18 | 4 | 31565 | Washer, stainless | 10 mm |
| 19 | 2 | 56055 | Hose | 3/8" x 5900 mm O/O JIC |
| 20 | 2 | 56056 | Hose | 1/2" x 5900 mm O/O JIC |

# ODIN

Intern ref.: 6302860

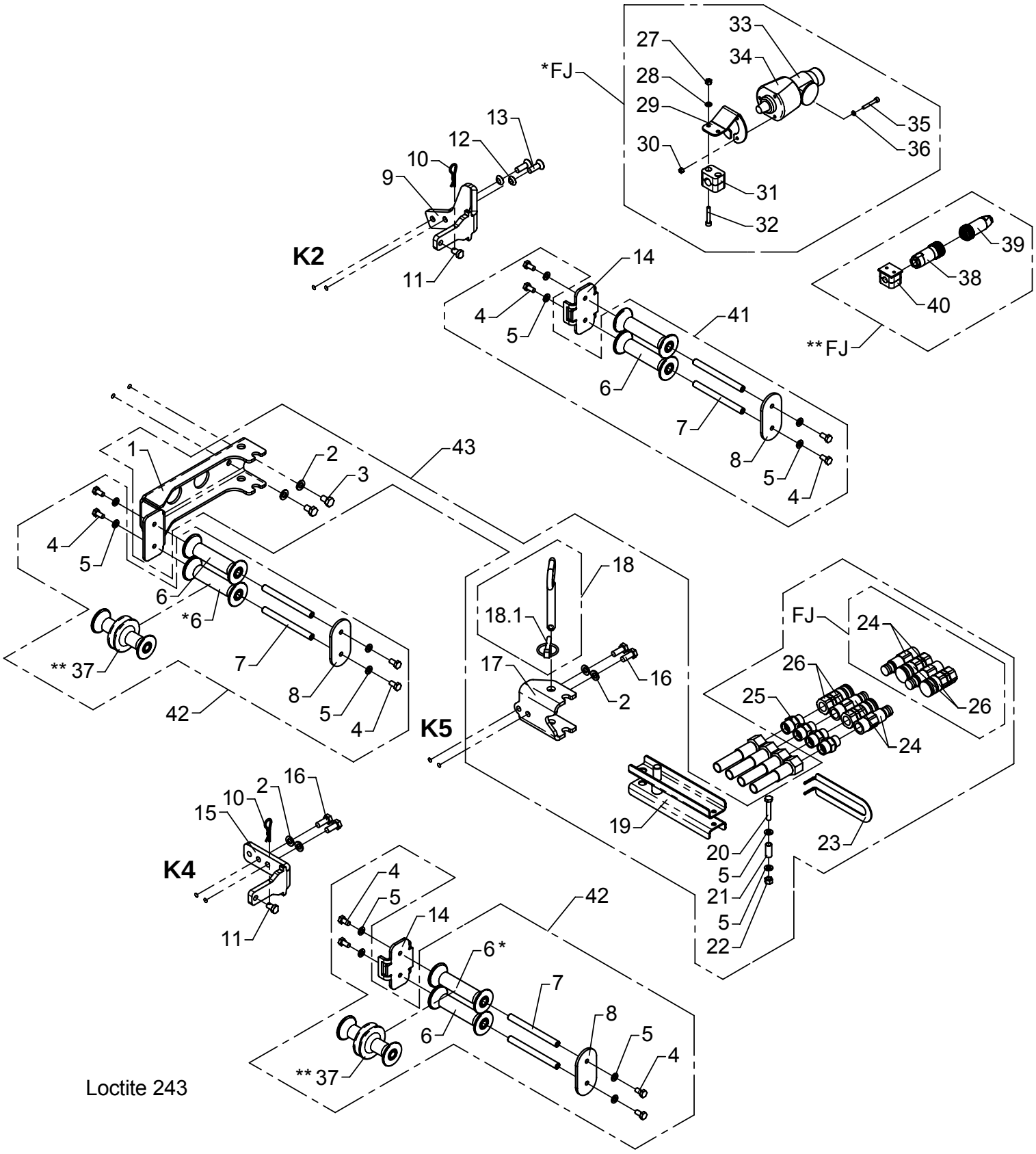

# Extra valves, OK5-2
# Hose reels and quick-release couplings

As from / To loader no.: 96 00 00 /
Created: 09.08.2006
Modified: 25.02.2009

* Used together with cable drum 28547
** Used together with cable drum 29216

| Item no. | Qty. | Part no. | Description | Remarks |
|---|---|---|---|---|
| 1 | 1 | 6302899 | Attachment, jib | |
| 2 | 6 | 31177 | Washer | 10 mm |
| 3 | 2 | 30153 | Set screw | M10 x 16 |
| 4 | 12 | 30131 | Set screw, stainless | M8 x 16 |
| 5 | 14 | 31147 | Washer, stainless | 8 mm |
| 6 | 6 | 63510 | Guide roller | |
| 7 | 6 | 6302883 | Pin | |
| 8 | 3 | 6302882 | End plate | |
| 9 | 1 | 6302626 | Attachment - 2nd extension | |
| 10 | 2 | 33379 | Spring | |
| 11 | 2 | 6302896 | Lock pin | |
| 12 | 2 | 31171 | Washer | 10 mm |
| 13 | 2 | 30581 | Counter-sunk screw | MK10 x 30 |
| 14 | 2 | 6302881 | Plate | |
| 15 | 1 | 6302598 | Attachment - 4/6th extension | |
| 16 | 4 | 30155 | Set screw | M10 x 25 |
| 17 | 1 | 6302869 | Adapter - 5th extension | |
| 18 | 1 | 1261144 | Lock pin with chain | |
| 18,1 | 1 | 33387 | Ring split | ø8 |
| 19 | 1 | 6302897 | Clamp | |
| 20 | 1 | 30138 | Steel bolt, stainless | M8 x 45 |
| 21 | 1 | 6302888 | Pipe | |
| 22 | 1 | 30886 | Lock nut, stainless | M8 |
| 23 | 1 | 6302878 | Bracket | |
| 24 | 4 | 58447 | Coupling | 1/2" |
| 25 | 4 | 26334 | Connection | P-GEV 16 SR-WD |
| 26 | 4 | 58448 | Coupling | 1/2" |
| 27 | 2 | 30884 | Lock nut, stainless | M6 |
| 28 | 2 | 32302 | Face washer, stainless | 6 mm |
| 29 | 1 | 6301049 | Bracket for 13 poles plug box | |
| 30 | 3 | 30859 | Lock nut, stainless | M5 |
| 31 | 1 | 31434 | Clamp | |
| 32 | 2 | 30959 | Screw | MC6 x 35 |
| 33 | 1 | 27109 | Plug | |
| 34 | 1 | 27108 | Plug box | |
| 35 | 3 | 30422 | Screw, stainless | MC5 x 35 |
| 36 | 3 | 31153 | Spring washer, stainless | 5 mm |

# ODIN

Intern ref.: 6302860

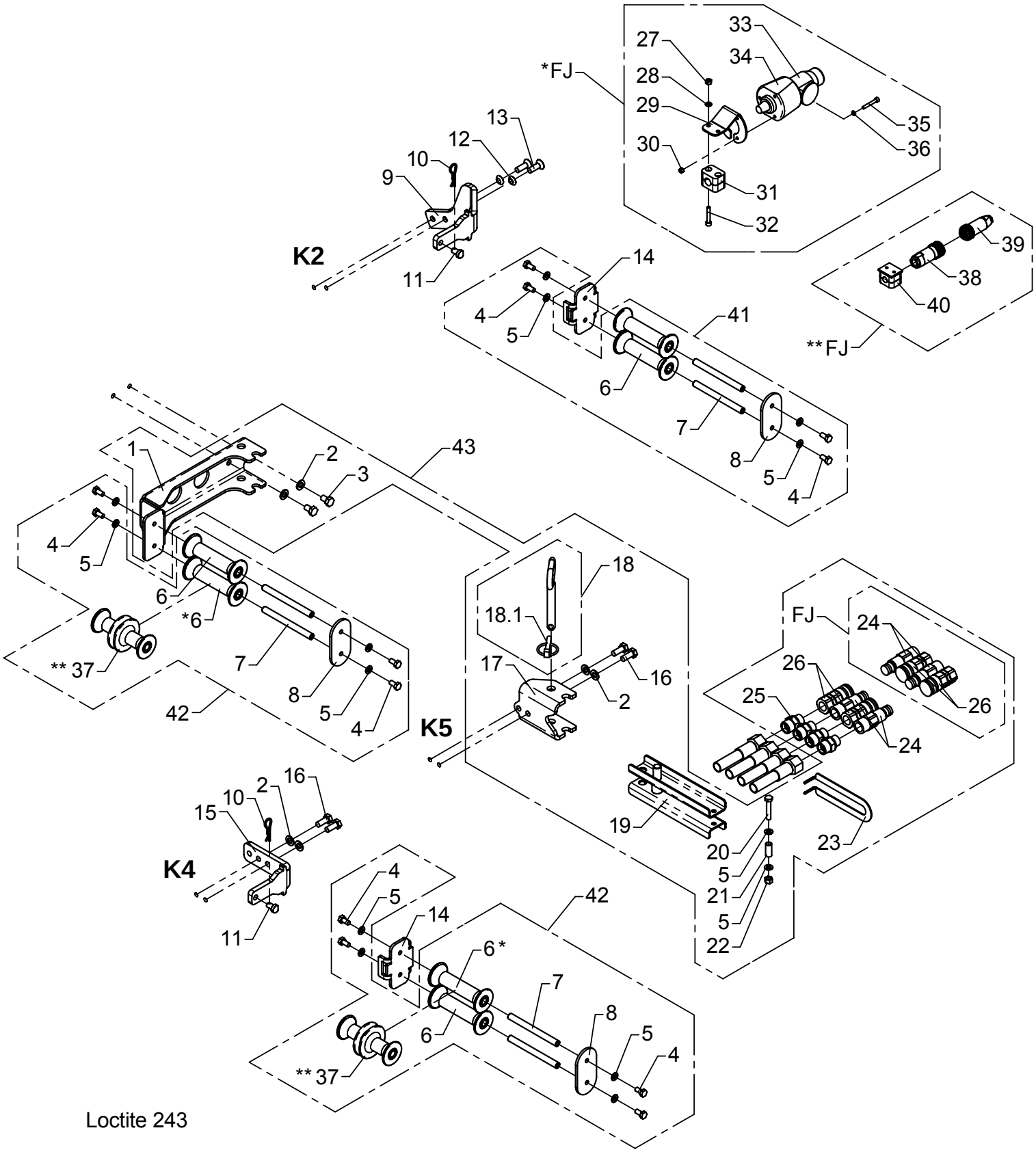

# Extra valves, OK5-2
# Hose reels and quick-release couplings

As from / To loader no.: 96 00 00 /
Created: 09.08.2006
Modified: 25.02.2009

| Item no. | Qty. | Part no. | Description | Remarks |
|---|---|---|---|---|
| 37 | 2 | 63600 | Guide roller | |
| 38 | 1 | 29237 | Cable socket | |
| 39 | 1 | 29230 | Plug | |
| 40 | 1 | 31425 | Clamp | |
| 41 | 1 | 6302900 | Guide rollers and pins | |
| 42 | 2 | 6302030 | Guide rollers and pins | |
| 43 | 1 | 6302910 | Quick-release couplings | |

* Used together with cable drum 28547
** Used together with cable drum 29216

# ODIN

Intern ref.: 6302860

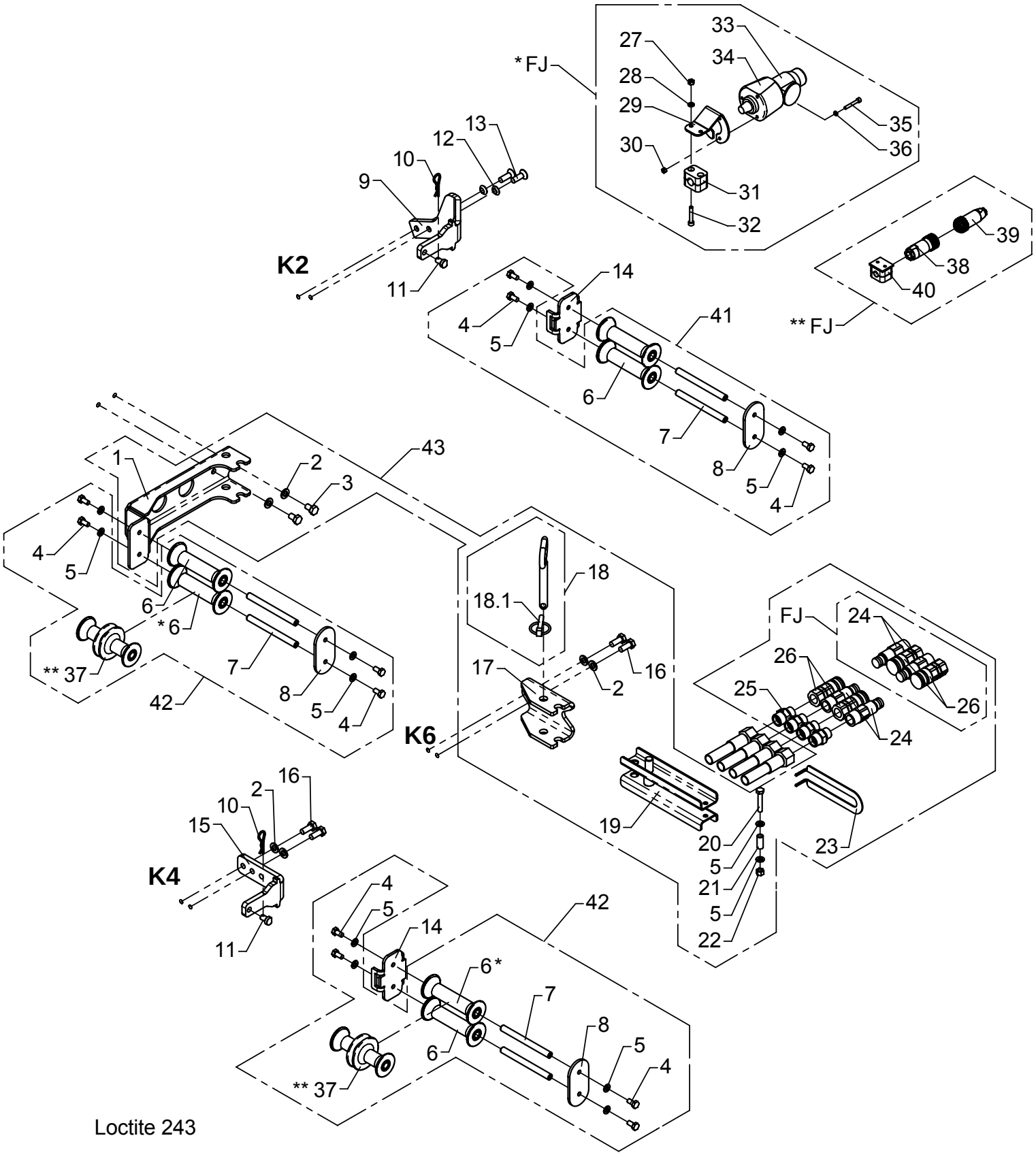

# Extra valves, OK6-2
# Hose reels and quick-release couplings

As from / To loader no.: 96 00 00 /
Created: 09.08.2006
Modified: 25.02.2009

* Used together with cable drum 28547
** Used together with cable drum 29216

| Item no. | Qty. | Part no. | Description | Remarks |
|---|---|---|---|---|
| 1 | 1 | 6302899 | Attachment, jib | |
| 2 | 6 | 31177 | Washer | 10 mm |
| 3 | 2 | 30153 | Set screw | M10 x 16 |
| 4 | 12 | 30131 | Set screw, stainless | M8 x 16 |
| 5 | 14 | 31147 | Washer, stainless | 8 mm |
| 6 | 6 | 63510 | Guide roller | |
| 7 | 6 | 6302883 | Pin | |
| 8 | 3 | 6302882 | End plate | |
| 9 | 1 | 6302626 | Attachment - 2nd extension | |
| 10 | 2 | 33379 | Spring | |
| 11 | 2 | 6302896 | Lock pin | |
| 12 | 2 | 31171 | Washer | 10 mm |
| 13 | 2 | 30581 | Counter-sunk screw | MK10 x 30 |
| 14 | 2 | 6302881 | Plate | |
| 15 | 1 | 6302598 | Attachment - 4/6th extension | |
| 16 | 4 | 30155 | Set screw | M10 x 25 |
| 17 | 1 | 6302891 | Adapter - 6/8th extension | |
| 18 | 1 | 1261144 | Lock pin with chain | |
| 18.1 | 1 | 33387 | Ring split | ø8 |
| 19 | 1 | 6302897 | Clamp | |
| 20 | 1 | 30138 | Steel bolt, stainless | M8 x 45 |
| 21 | 1 | 6302888 | Pipe | |
| 22 | 1 | 30886 | Lock nut, stainless | M8 |
| 23 | 1 | 6302878 | Bracket | |
| 24 | 4 | 58447 | Coupling | 1/2" |
| 25 | 4 | 26334 | Connection | P-GEV 16 SR-WD |
| 26 | 4 | 58448 | Coupling | 1/2" |
| 27 | 2 | 30884 | Lock nut, stainless | M6 |
| 28 | 2 | 32302 | Face washer, stainless | 6 mm |
| 29 | 1 | 6301049 | Bracket for 13 poles plug box | |
| 30 | 3 | 30859 | Lock nut, stainless | M5 |
| 31 | 1 | 31434 | Clamp | |
| 32 | 2 | 30959 | Screw | MC6 x 35 |
| 33 | 1 | 27109 | Plug | |
| 34 | 1 | 27108 | Plug box | |
| 35 | 3 | 30422 | Screw, stainless | MC5 x 35 |
| 36 | 3 | 31153 | Spring washer, stainless | 5 mm |

# ODIN

Intern ref.: 6302860

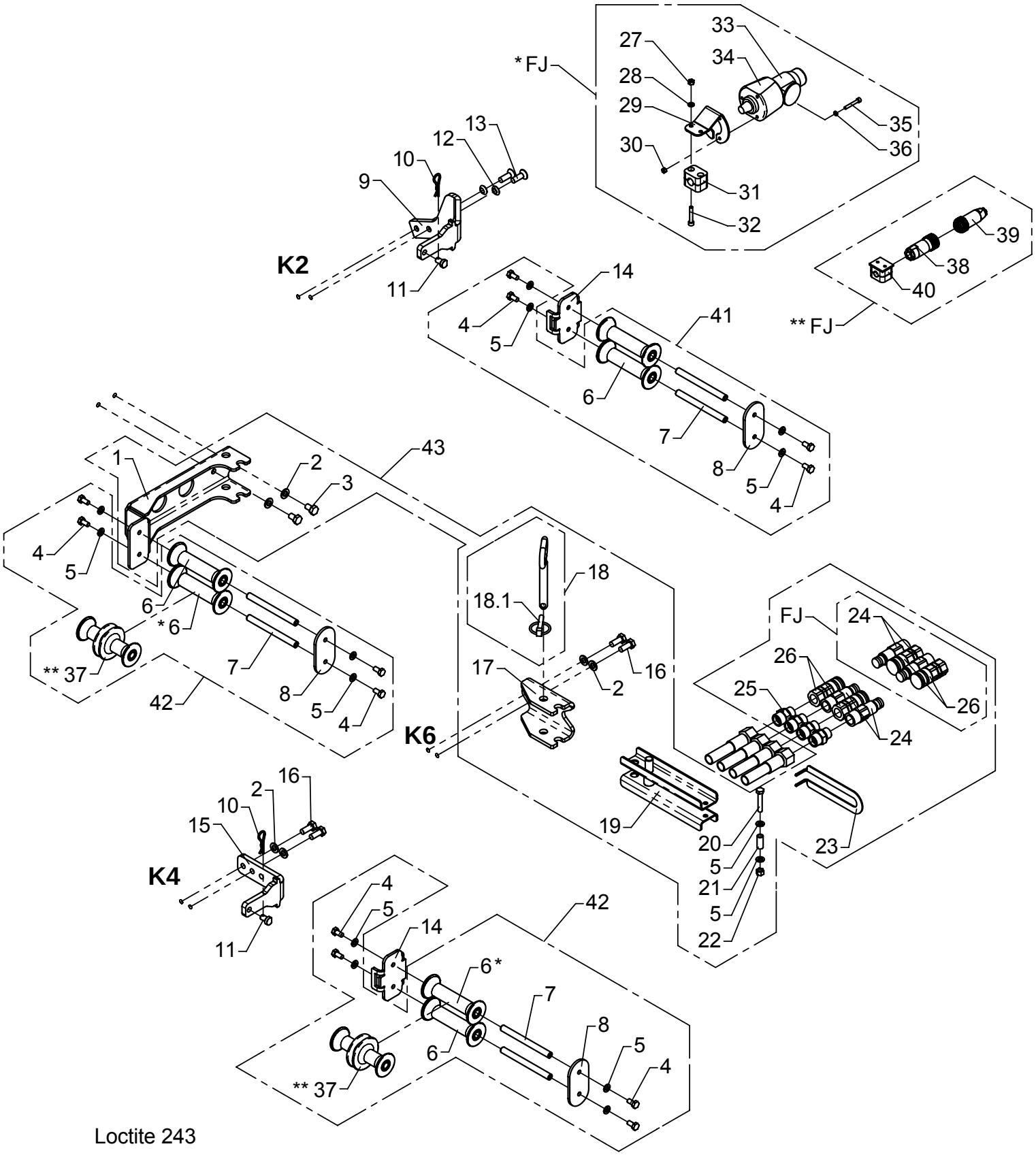

# Extra valves, OK6-2
# Hose reels and quick-release couplings

As from / To loader no.: 96 00 00 /
Created: 09.08.2006
Modified: 25.02.2009

| Item no. | Qty. | Part no. | Description | Remarks |
|---|---|---|---|---|
| 37 | 2 | 63600 | Guide roller | |
| 38 | 1 | 29237 | Cable socket | |
| 39 | 1 | 29230 | Plug | |
| 40 | 1 | 31425 | Clamp | |
| 41 | 1 | 6302900 | Guide rollers and pins | |
| 42 | 2 | 6302030 | Guide rollers and pins | |
| 43 | 1 | 6302910 | Quick-release couplings | |

* Used together with cable drum 28547
** Used together with cable drum 29216

# ODIN

Intern ref.: 6302860

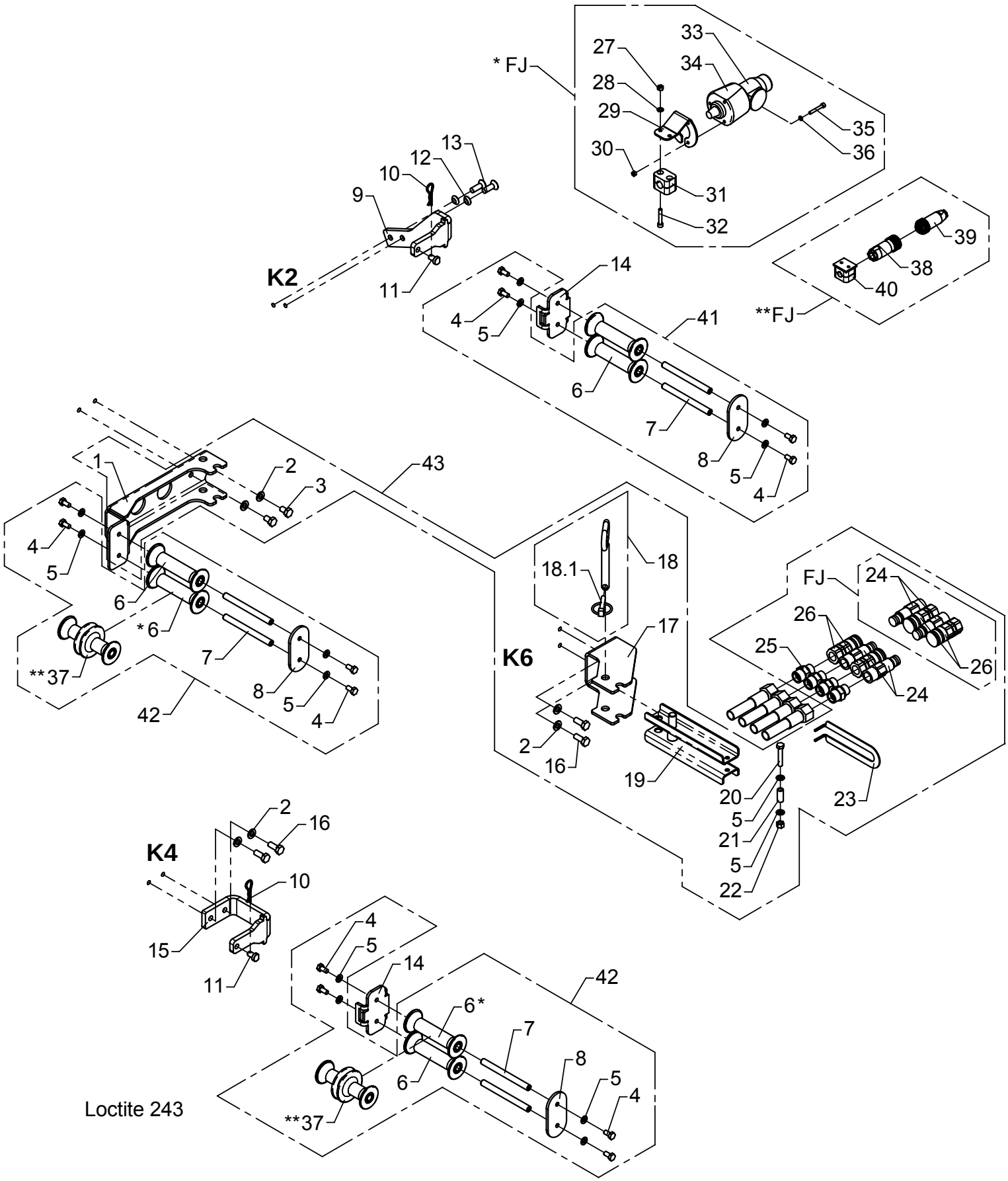

# Extra valves, K6-2
# Hose reels and quick-release couplings

As from / To loader no.: 96 00 00 /
Created: 03.10.2003
Modified: 25.02.2009

* Used together with cable drum 28547
** Used together with cable drum 29216

| Item no. | Qty. | Part no. | Description | Remarks |
|---|---|---|---|---|
| 1 | 1 | 6302899 | Attachment, jib | |
| 2 | 6 | 31177 | Washer | 10 mm |
| 3 | 2 | 30153 | Set screw | M10 x 16 |
| 4 | 12 | 30131 | Set screw, stainless | M8 x 16 |
| 5 | 14 | 31147 | Washer, stainless | 8 mm |
| 6 | 6 | 63510 | Guide roller | |
| 7 | 6 | 6302883 | Pin | |
| 8 | 3 | 6302882 | End plate | |
| 9 | 1 | 6302884 | Attachment - 2nd extension | |
| 10 | 2 | 33379 | Spring | |
| 11 | 2 | 6302896 | Lock pin | |
| 12 | 2 | 31171 | Washer | 10 mm |
| 13 | 2 | 30581 | Counter-sunk screw | MK10 x 30 |
| 14 | 2 | 6302881 | Plate | |
| 15 | 1 | 6302885 | Attachement - 4th extension | |
| 16 | 4 | 30155 | Set screw | M10 x 25 |
| 17 | 1 | 6300599 | Adapter - 6th extension | |
| 18 | 1 | 1261144 | Lock pin with chain | |
| 18.1 | 1 | 33387 | Ring split | ø8 |
| 19 | 1 | 6302897 | Clamp | |
| 20 | 1 | 30138 | Steel bolt, stainless | M8 x 45 |
| 21 | 1 | 6302888 | Pipe | |
| 22 | 1 | 30886 | Lock nut, stainless | M8 |
| 23 | 1 | 6302878 | Bracket | |
| 24 | 4 | 58447 | Coupling | 1/2" |
| 25 | 4 | 26334 | Connection | P-GEV 16 SR-WD |
| 26 | 4 | 58448 | Coupling | 1/2" |
| 27 | 2 | 30884 | Lock nut, stainless | M6 |
| 28 | 2 | 32302 | Face washer, stainless | 6 mm |
| 29 | 1 | 6301049 | Bracket for 13 poles plug box | |
| 30 | 3 | 30859 | Lock nut, stainless | M5 |
| 31 | 1 | 31434 | Clamp | |
| 32 | 2 | 30959 | Screw | MC6 x 35 |
| 33 | 1 | 27109 | Plug | |
| 34 | 1 | 27108 | Plug box | |
| 35 | 3 | 30422 | Screw, stainless | MC5 x 35 |
| 36 | 3 | 31153 | Spring washer, stainless | 5 mm |

# ODIN

Intern ref.: 6302860

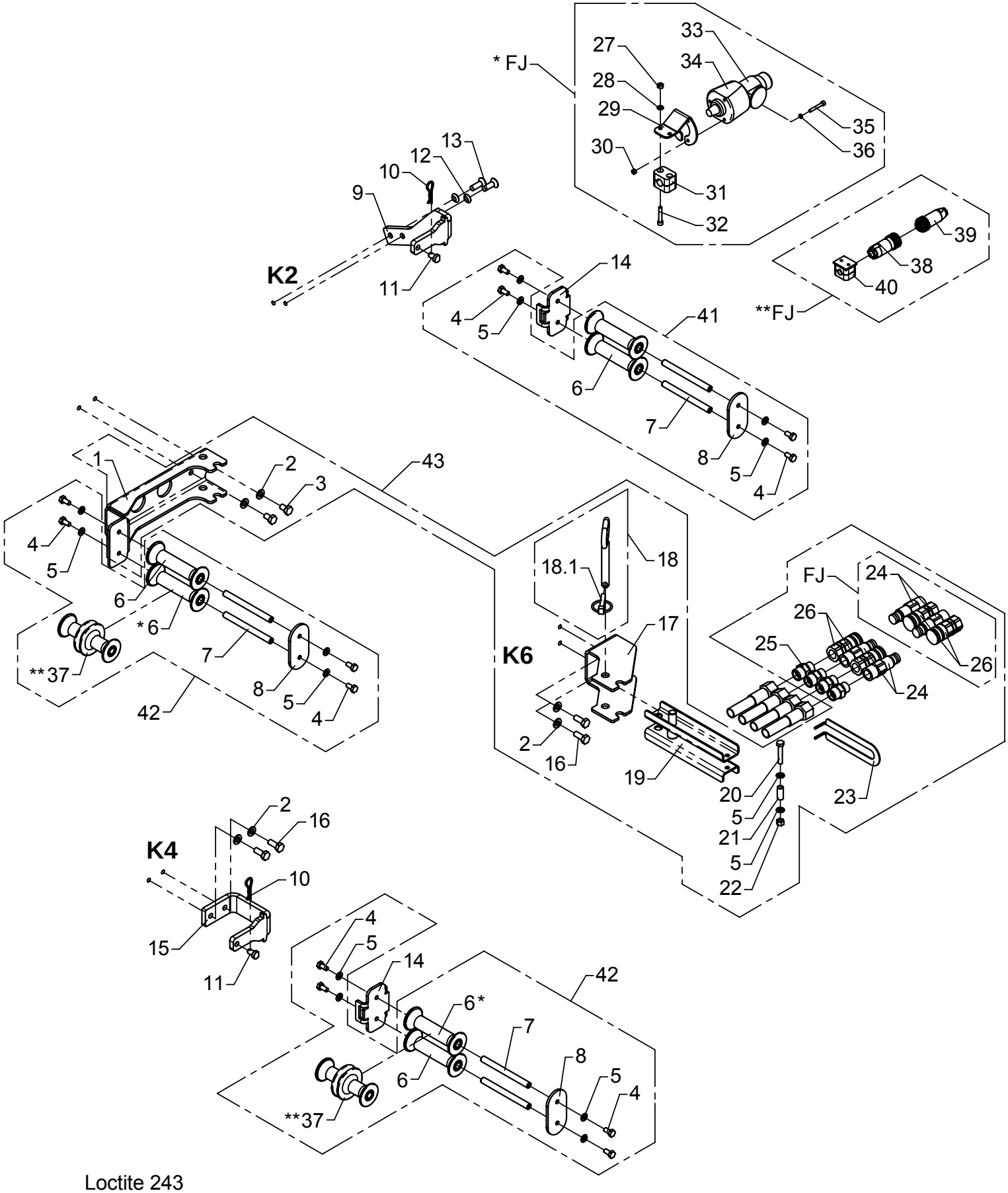


Loctite 243

# Extra valves, K6-2
# Hose reels and quick-release couplings

As from / To loader no.: 96 00 00 /
Created: 03.10.2003
Modified: 25.02.2009

| Item no. | Qty. | Part no. | Description | Remarks |
|---|---|---|---|---|
| 37 | 2 | 63600 | Guide roller | |
| 38 | 1 | 29237 | Cable socket | |
| 39 | 1 | 29230 | Plug | |
| 40 | 1 | 31425 | Clamp | |
| 41 | 1 | 6302900 | Guide rollers and pins | |
| 42 | 2 | 6302030 | Guide rollers and pins | |
| 43 | 1 | 6302910 | Quick-release couplings | |

* Used together with cable drum 28547
** Used together with cable drum 29216

# ODIN

Intern ref.: 6302860 / 6302880

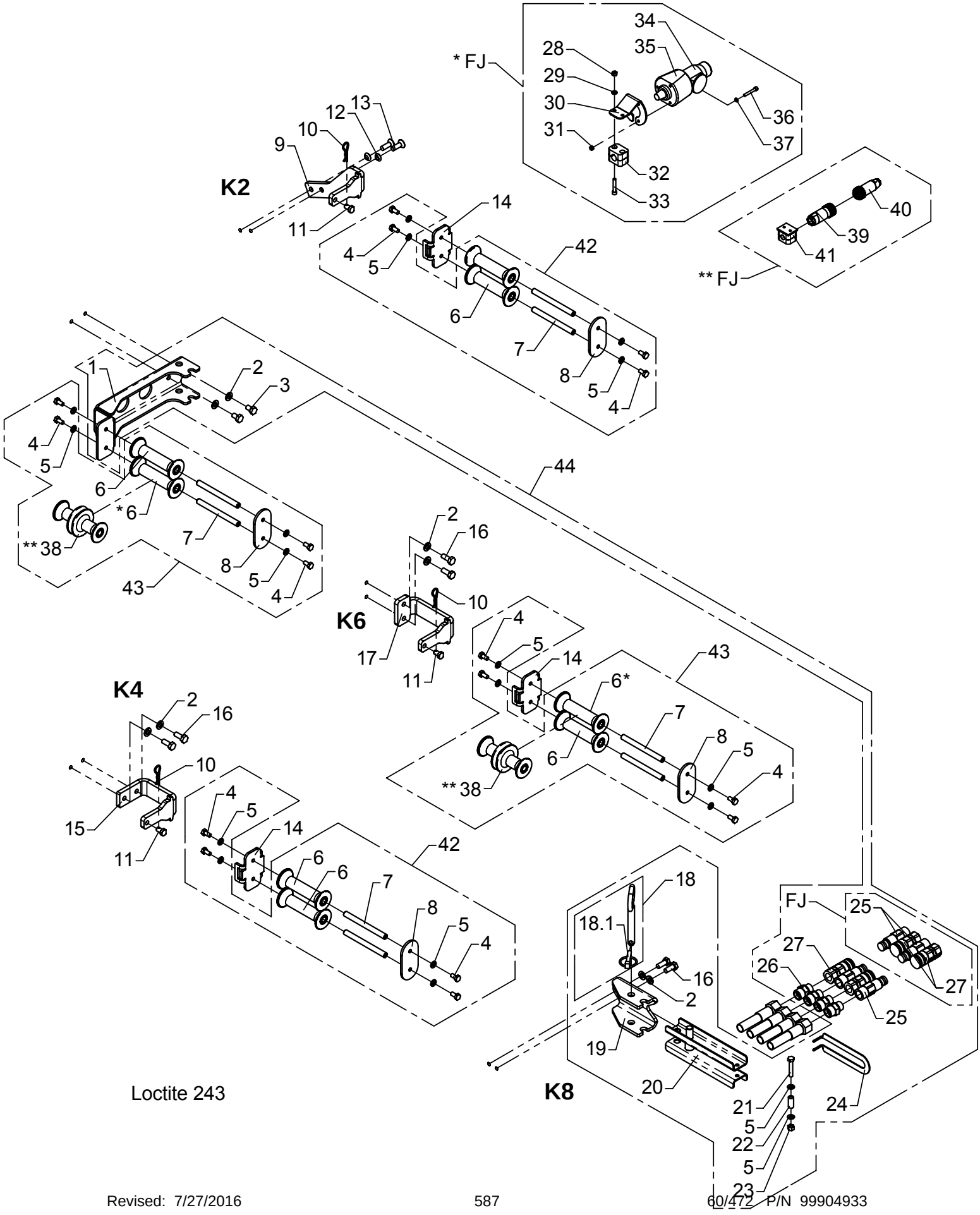

# Extra valves, K8-2
# Hose reels and quick-release coupling

As from / To loader no.: 96 00 00 /
Created: 03.10.2003
Modified: 25.02.2009

* Used together with cable drum 28546
** Used together with cable drum 29216

| Item no. | Qty. | Part no. | Description | Remarks |
|---|---|---|---|---|
| 1 | 1 | 6302899 | Attachment, jib | |
| 2 | 8 | 31177 | Washer | 10 mm |
| 3 | 2 | 30153 | Set screw | M10 x 16 |
| 4 | 16 | 30131 | Set screw, stainless | M8 x 16 |
| 5 | 18 | 31147 | Washer, stainless | 8 mm |
| 6 | 8 | 63510 | Guide roller | |
| 7 | 8 | 6302883 | Pin | |
| 8 | 4 | 6302882 | End plate | |
| 9 | 1 | 6302884 | Attachment - 2nd extension | |
| 10 | 3 | 33379 | Spring | |
| 11 | 3 | 6302896 | Lock pin | |
| 12 | 2 | 31171 | Washer | 10 mm |
| 13 | 2 | 30581 | Counter-sunk screw | MK10 x 30 |
| 14 | 3 | 6302881 | Plate | |
| 15 | 1 | 6302885 | Attachement - 4th extension | |
| 16 | 6 | 30155 | Set screw | M10 x 25 |
| 17 | 1 | 6300598 | Attachement - 6th extension | |
| 18 | 1 | 1261144 | Lock pin with chain | |
| 18.1 | 1 | 33387 | Ring split | ø8 |
| 19 | 1 | 6302891 | Adapter - 6/8th extension | |
| 20 | 1 | 6302897 | Clamp | |
| 21 | 1 | 30138 | Steel bolt, stainless | M8 x 45 |
| 22 | 1 | 6302888 | Pipe | |
| 23 | 1 | 30886 | Lock nut, stainless | M8 |
| 24 | 1 | 6302878 | Bracket | |
| 25 | 4 | 58447 | Coupling | 1/2" |
| 26 | 4 | 26334 | Connection | P-GEV 16 SR-WD |
| 27 | 4 | 58448 | Coupling | 1/2" |
| 28 | 2 | 30884 | Lock nut, stainless | M6 |
| 29 | 2 | 32302 | Face washer, stainless | 6 mm |
| 30 | 1 | 6301049 | Bracket for 13 poles plug box | |
| 31 | 3 | 30859 | Lock nut, stainless | M5 |
| 32 | 1 | 31434 | Clamp | |
| 33 | 2 | 30959 | Screw | MC6 x 35 |
| 34 | 1 | 27109 | Plug | |
| 35 | 1 | 27108 | Plug box | |
| 36 | 3 | 30422 | Screw, stainless | MC5 x 35 |

# ODIN

Intern ref.: 6302860 / 6302880

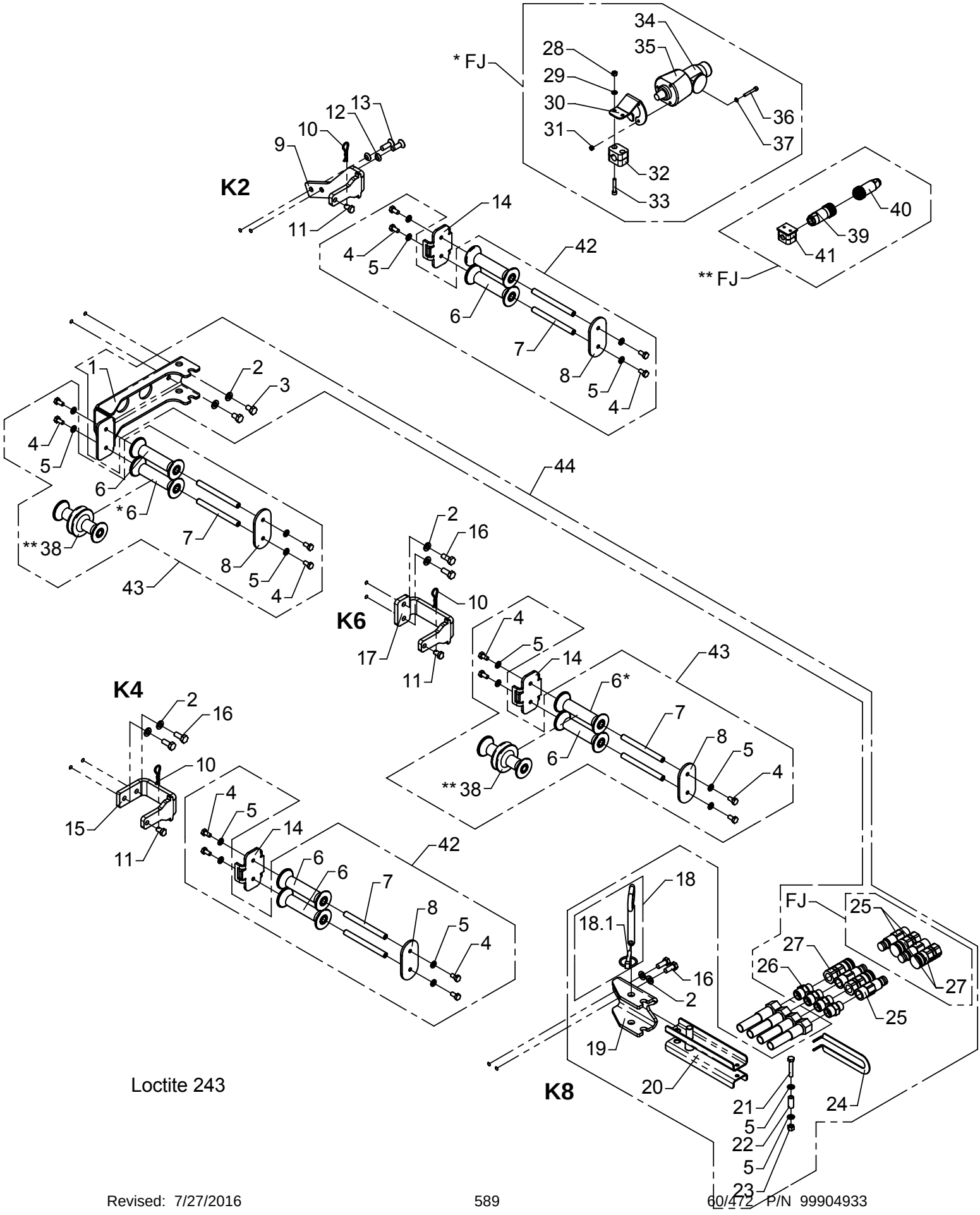

# Extra valves, K8-2
# Hose reels and quick-release coupling

As from / To loader no.: 96 00 00 /
Created: 03.10.2003
Modified: 25.02.2009

| Item no. | Qty. | Part no. | Description | Remarks |
|---|---|---|---|---|
| 37 | 3 | 31153 | Spring washer, stainless | 5 mm |
| 38 | 2 | 63600 | Guide roller | |
| 39 | 1 | 29237 | Cable socket | |
| 40 | 1 | 29230 | Plug | |
| 41 | 1 | 31425 | Clamp | |
| 42 | 2 | 6302900 | Guide rollers and pins | |
| 43 | 2 | 6302030 | Guide rollers and pins | |
| 44 | 1 | 6302910 | Quick-release couplings | |

* Used together with cable drum 28546
** Used together with cable drum 29216

# ODIN

Intern ref.: 6302860

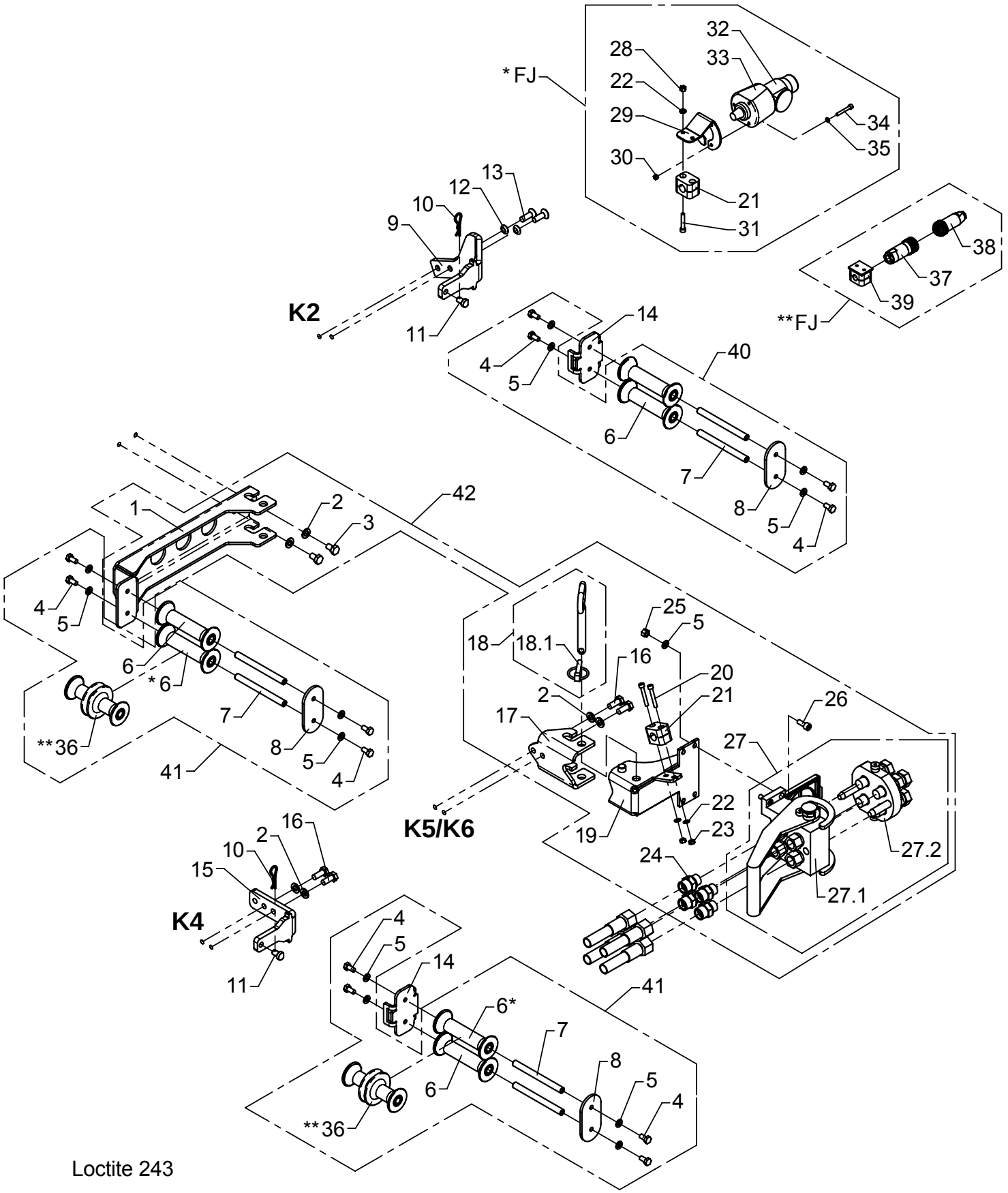

# Extra valves, OK5/OK6-2
# Hose reels and multi-coupling

As from / To loader no.: 96 00 00 /
Created: 09.08.2006
Modified: 27.02.2009

* Used together with cable drum 28547
** Used together with cable drum 29216

| Item no. | Qty. | Part no. | Description | Remarks |
|---|---|---|---|---|
| 1 | 1 | 6302877 | Attachment - jib | |
| 2 | 6 | 31177 | Washer | 10 mm |
| 3 | 2 | 30153 | Set screw | M10 x 16 |
| 4 | 12 | 30131 | Set screw, stainless | M8 x 16 |
| 5 | 16 | 31147 | Washer, stainless | 8 mm |
| 6 | 6 | 63510 | Guide roller | |
| 7 | 6 | 6302883 | Pin | |
| 8 | 3 | 6302882 | End plate | |
| 9 | 1 | 6302626 | Attachment - 2nd extension | |
| 10 | 2 | 33379 | Spring | |
| 11 | 2 | 6302896 | Lock pin | |
| 12 | 2 | 31171 | Washer | 10 mm |
| 13 | 2 | 30581 | Counter-sunk screw | MK10 x 30 |
| 14 | 2 | 6302881 | Plate | |
| 15 | 1 | 6302598 | Attachment - 4/6th extension | |
| 16 | 4 | 30155 | Set screw | M10 x 25 |
| 17 | 1 | 6302926 | Adapter - 5/6/8th extension | |
| 18 | 1 | 1261144 | Lock pin with chain | |
| 18.1 | 1 | 33387 | Ring split | ø8 |
| 19 | 1 | 6302927 | Bracket | |
| 20 | 2 | 32410 | Screw | MC6 x 40 |
| 21 | 2 | 31434 | Clamp | |
| 22 | 4 | 32302 | Face washer, stainless | 6 mm |
| 23 | 2 | 30854 | Nut, stainless | M6 |
| 24 | 4 | 26334 | Connection | P-GEV 16 SR-WD |
| 25 | 4 | 30886 | Lock nut, stainless | M8 |
| 26 | 4 | 30438 | Screw | MC8 x 20 |
| 27 | 1 | 58430 | Multifaster coupling | 1/2" |
| 27.1 | 1 | 58432 | Multifaster coupling | |
| 27.2 | 1 | 58431 | Multifaster coupling | |
| 28 | 2 | 30884 | Lock nut, stainless | M6 |
| 29 | 1 | 6301049 | Bracket for 13 poles plug box | |
| 30 | 3 | 30859 | Lock nut, stainless | M5 |
| 31 | 2 | 30959 | Screw | MC6 x 35 |
| 32 | 1 | 27109 | Plug | |
| 33 | 1 | 27108 | Plug box | |
| 34 | 3 | 30422 | Screw, stainless | MC5 x 35 |

# ODIN

Intern ref.: 6302860

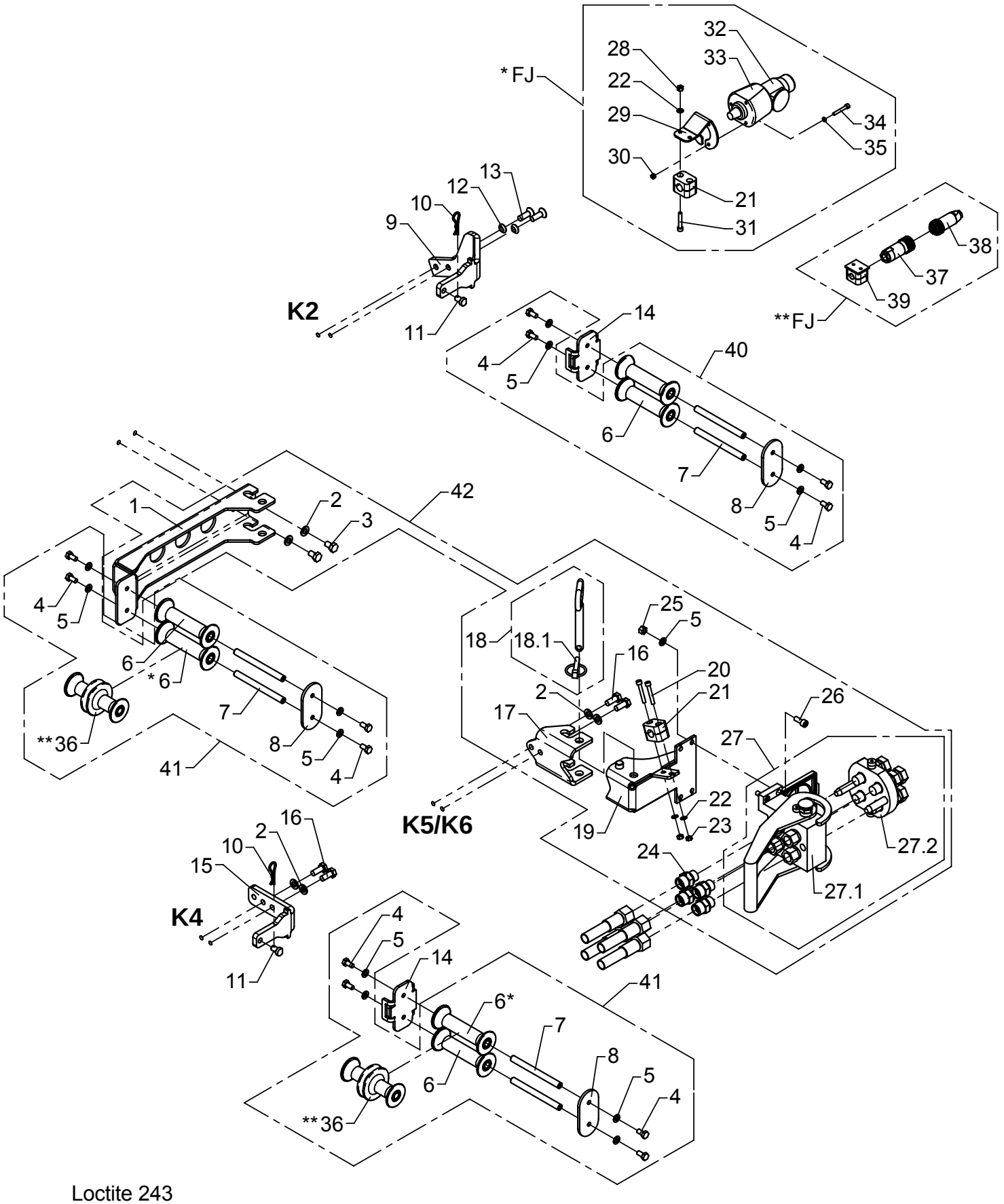


Loctite 243

# Extra valves, OK5/OK6-2
# Hose reels and multi-coupling

As from / To loader no.: 96 00 00 /
Created: 09.08.2006
Modified: 27.02.2009

| Item no. | Qty. | Part no. | Description | Remarks |
|---|---|---|---|---|
| 35 | 3 | 31153 | Spring washer, stainless | 5 mm |
| 36 | 2 | 63600 | Guide roller | |
| 37 | 1 | 29237 | Cable socket | |
| 38 | 1 | 29230 | Plug | |
| 39 | 1 | 31425 | Clamp | |
| 40 | 1 | 6302900 | Guide rollers and pins | |
| 41 | 2 | 6302030 | Guide rollers and pins | |
| 42 | 1 | 6302920 | Multifaster K6 - K8 | |

* Used together with cable drum 28547
** Used together with cable drum 29216

# ODIN

Intern ref.: 6302860

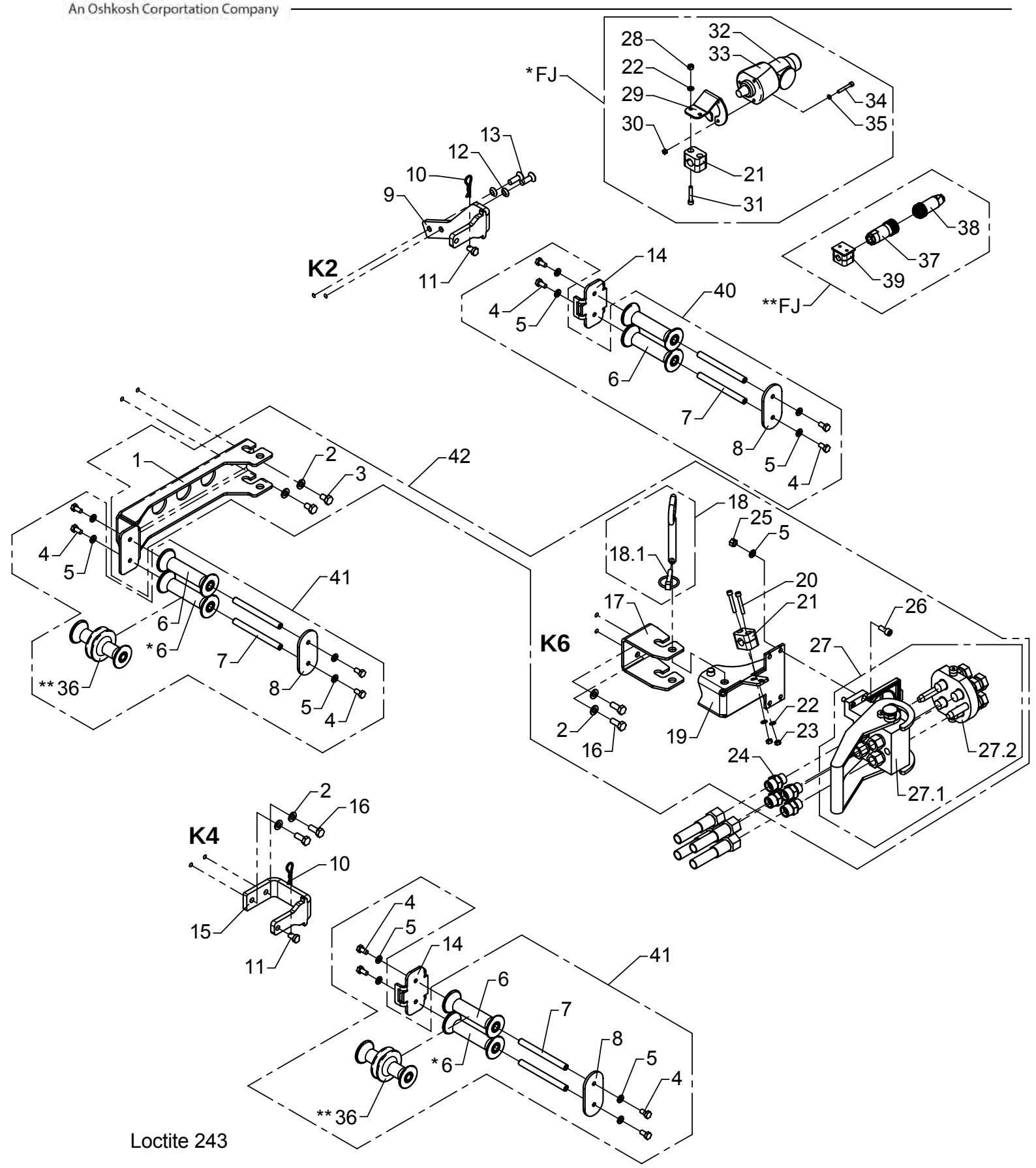

# Extra valves, K6-2
# Hose reels and multi-coupling

As from / To loader no.: 96 00 00 /
Created: 17.11.2003
Modified: 27.02.2009

* Used together with cable drum 28547
** Used together with cable drum 29216

| Item no. | Qty. | Part no. | Description | Remarks |
|---|---|---|---|---|
| 1 | 1 | 6302877 | Attachment - jib | |
| 2 | 6 | 31177 | Washer | 10 mm |
| 3 | 2 | 30153 | Set screw | M10 x 16 |
| 4 | 12 | 30131 | Set screw, stainless | M8 x 16 |
| 5 | 16 | 31147 | Washer, stainless | 8 mm |
| 6 | 6 | 63510 | Guide roller | |
| 7 | 6 | 6302883 | Pin | |
| 8 | 3 | 6302882 | End plate | |
| 9 | 1 | 6302884 | Attachment - 2nd extension | |
| 10 | 2 | 33379 | Spring | |
| 11 | 2 | 6302896 | Lock pin | |
| 12 | 2 | 31171 | Washer | 10 mm |
| 13 | 2 | 30581 | Counter-sunk screw | MK10 x 30 |
| 14 | 2 | 6302881 | Plate | |
| 15 | 1 | 6302885 | Attachement - 4th extension | |
| 16 | 4 | 30155 | Set screw | M10 x 25 |
| 17 | 1 | 6300925 | Adapter - 6th extension | |
| 18 | 1 | 1261144 | Lock pin with chain | |
| 18.1 | 1 | 33387 | Ring split | ø8 |
| 19 | 1 | 6302927 | Bracket | |
| 20 | 2 | 32410 | Screw | MC6 x 40 |
| 21 | 2 | 31434 | Clamp | |
| 22 | 4 | 32302 | Face washer, stainless | 6 mm |
| 23 | 2 | 30854 | Nut, stainless | M6 |
| 24 | 4 | 26334 | Connection | P-GEV 16 SR-WD |
| 25 | 4 | 30886 | Lock nut, stainless | M8 |
| 26 | 4 | 30438 | Screw | MC8 x 20 |
| 27 | 1 | 58430 | Multifaster coupling | 1/2" |
| 27.1 | 1 | 58432 | Multifaster coupling | |
| 27.2 | 1 | 58431 | Multifaster coupling | |
| 28 | 2 | 30884 | Lock nut, stainless | M6 |
| 29 | 1 | 6301049 | Bracket for 13 poles plug box | |
| 30 | 3 | 30859 | Lock nut, stainless | M5 |
| 31 | 2 | 30959 | Screw | MC6 x 35 |
| 32 | 1 | 27109 | Plug | |
| 33 | 1 | 27108 | Plug box | |
| 34 | 3 | 30422 | Screw, stainless | MC5 x 35 |

# ODIN

Intern ref.: 6302860

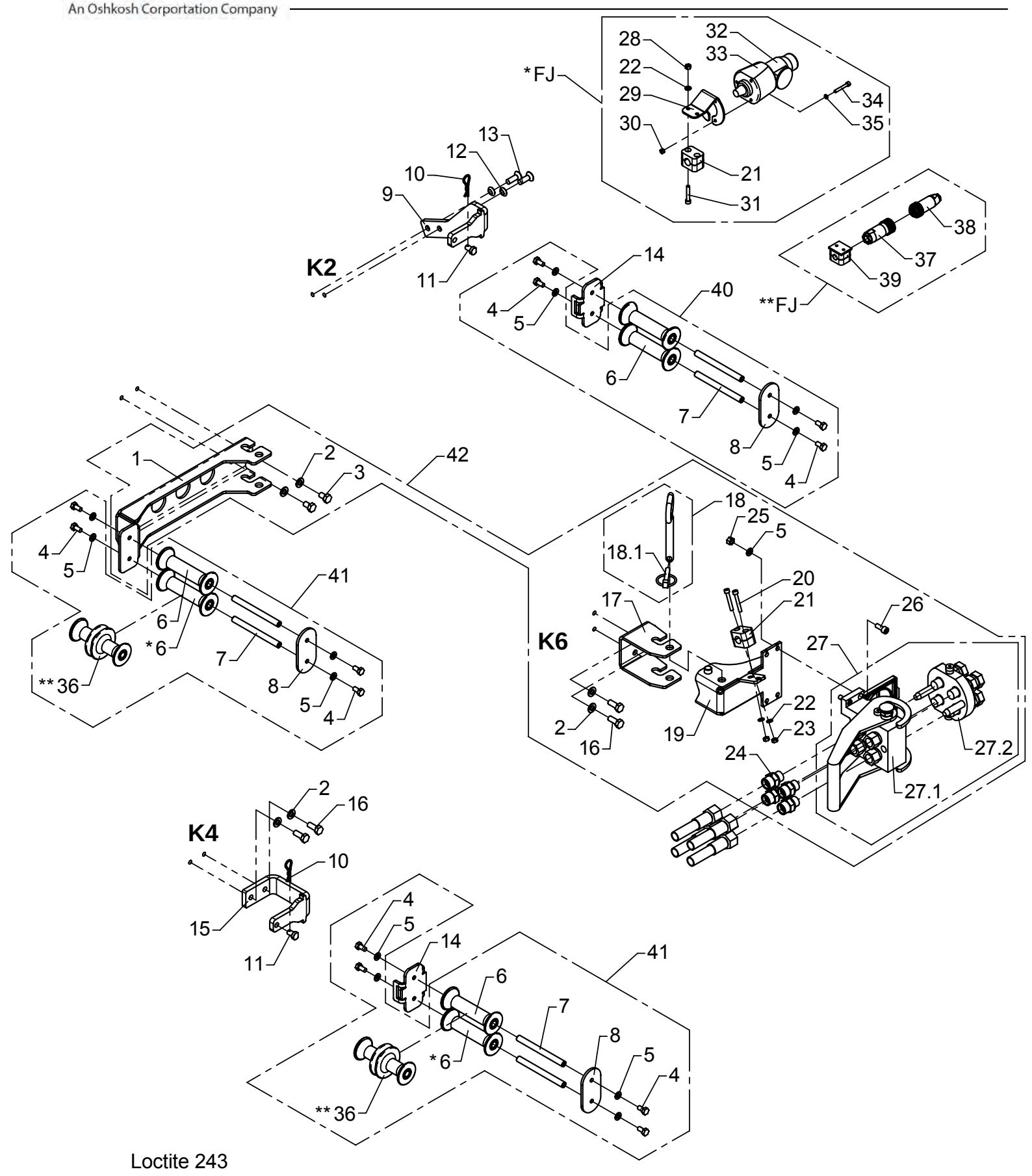


Loctite 243

# Extra valves, K6-2
# Hose reels and multi-coupling

As from / To loader no.: 96 00 00 /
Created: 17.11.2003
Modified: 27.02.2009

| Item no. | Qty. | Part no. | Description | Remarks |
|---|---|---|---|---|
| 35 | 3 | 31153 | Spring washer, stainless | 5 mm |
| 36 | 2 | 63600 | Guide roller | |
| 37 | 1 | 29237 | Cable socket | |
| 38 | 1 | 29230 | Plug | |
| 39 | 1 | 31425 | Clamp | |
| 40 | 1 | 6302900 | Guide rollers and pins | |
| 41 | 2 | 6302030 | Guide rollers and pins | |
| 42 | 1 | 6302920 | Multifaster K6 - K8 | |

* Used together with cable drum 28547
** Used together with cable drum 29216

# ODIN

An Oshkosh Corportation Company

Intern ref.: 6302860 / 6302880

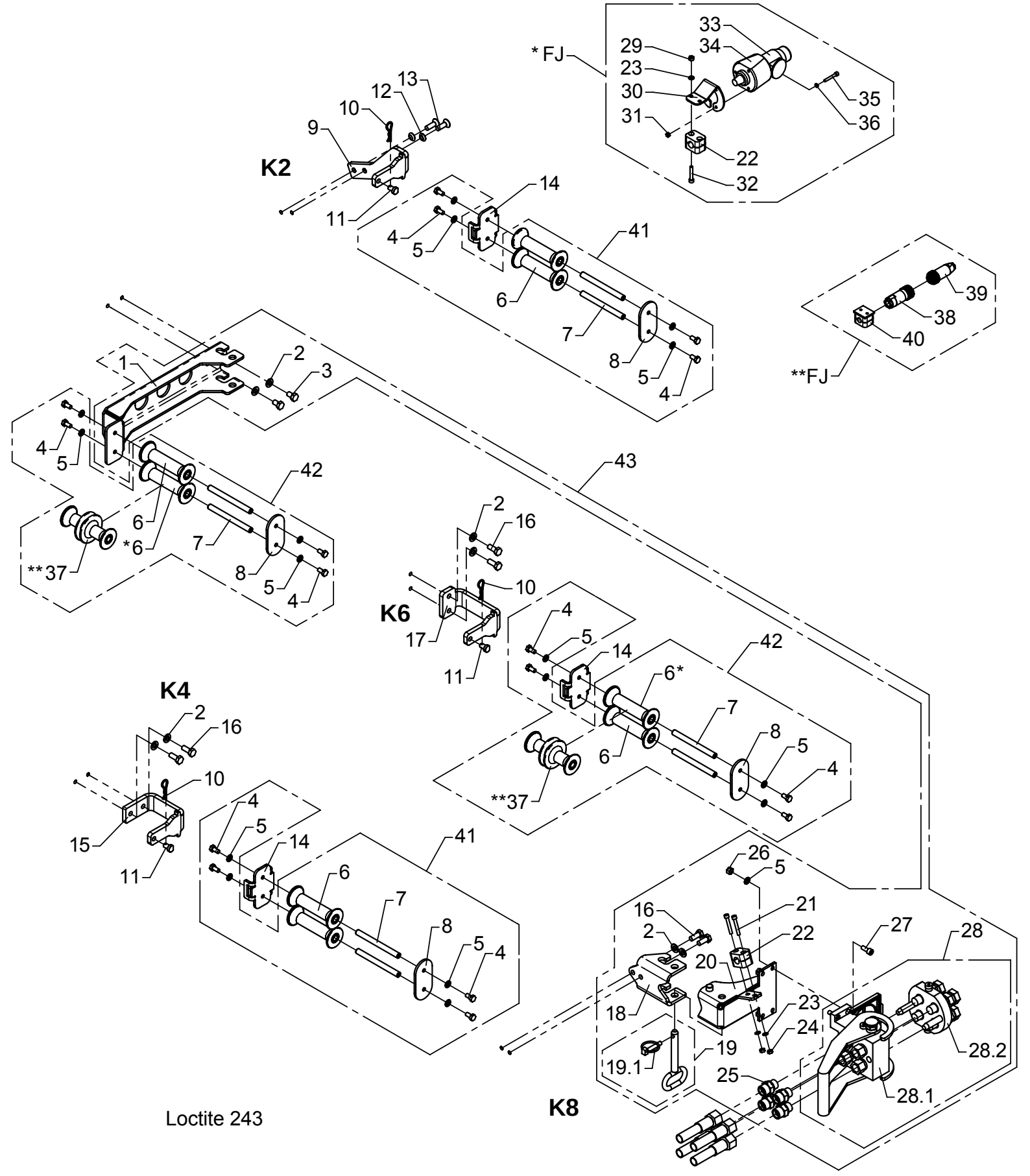

# Extra valves, K8-2
# Hose reels and multi-coupling

As from / To loader no.: 96 00 00 /
Created: 17.11.2003
Modified: 27.02.2009

* Used together with cable drum 28546
** Used together with cable drum 29216

| Item no. | Qty. | Part no. | Description | Remarks |
|---|---|---|---|---|
| 1 | 1 | 6302877 | Attachment - jib | |
| 2 | 8 | 31177 | Washer | 10 mm |
| 3 | 2 | 30153 | Set screw | M10 x 16 |
| 4 | 16 | 30131 | Set screw, stainless | M8 x 16 |
| 5 | 20 | 31147 | Washer, stainless | 8 mm |
| 6 | 8 | 63510 | Guide roller | |
| 7 | 8 | 6302883 | Pin | |
| 8 | 4 | 6302882 | End plate | |
| 9 | 1 | 6302884 | Attachment - 2nd extension | |
| 10 | 3 | 33379 | Spring | |
| 11 | 3 | 6302896 | Lock pin | |
| 12 | 2 | 31171 | Washer | 10 mm |
| 13 | 2 | 30581 | Counter-sunk screw | MK10 x 30 |
| 14 | 3 | 6302881 | Plate | |
| 15 | 1 | 6302885 | Attachement - 4th extension | |
| 16 | 6 | 30155 | Set screw | M10 x 25 |
| 17 | 1 | 6300598 | Attachement - 6th extension | |
| 18 | 1 | 6302926 | Adapter - 5/6/8th extension | |
| 19 | 1 | 1261144 | Lock pin with chain | |
| 19.1 | 1 | 33387 | Ring split | ø8 |
| 20 | 1 | 6302927 | Bracket | |
| 21 | 2 | 32410 | Screw | MC6 x 40 |
| 22 | 2 | 31434 | Clamp | |
| 23 | 4 | 32302 | Face washer, stainless | 6 mm |
| 24 | 2 | 30854 | Nut, stainless | M6 |
| 25 | 4 | 26334 | Connection | P-GEV 16 SR-WD |
| 26 | 4 | 30886 | Lock nut, stainless | M8 |
| 27 | 4 | 30438 | Screw | MC8 x 20 |
| 28 | 1 | 58430 | Multifaster coupling | 1/2" |
| 28.1 | 1 | 58432 | Multifaster coupling | |
| 28.2 | 1 | 58431 | Multifaster coupling | |
| 29 | 2 | 30884 | Lock nut, stainless | M6 |
| 30 | 1 | 6301049 | Bracket for 13 poles plug box | |
| 31 | 3 | 30859 | Lock nut, stainless | M5 |
| 32 | 2 | 30959 | Screw | MC6 x 35 |
| 33 | 1 | 27109 | Plug | |
| 34 | 1 | 27108 | Plug box | |

# ODIN

An Oshkosh Corportation Company

Intern ref.: 6302860 / 6302880

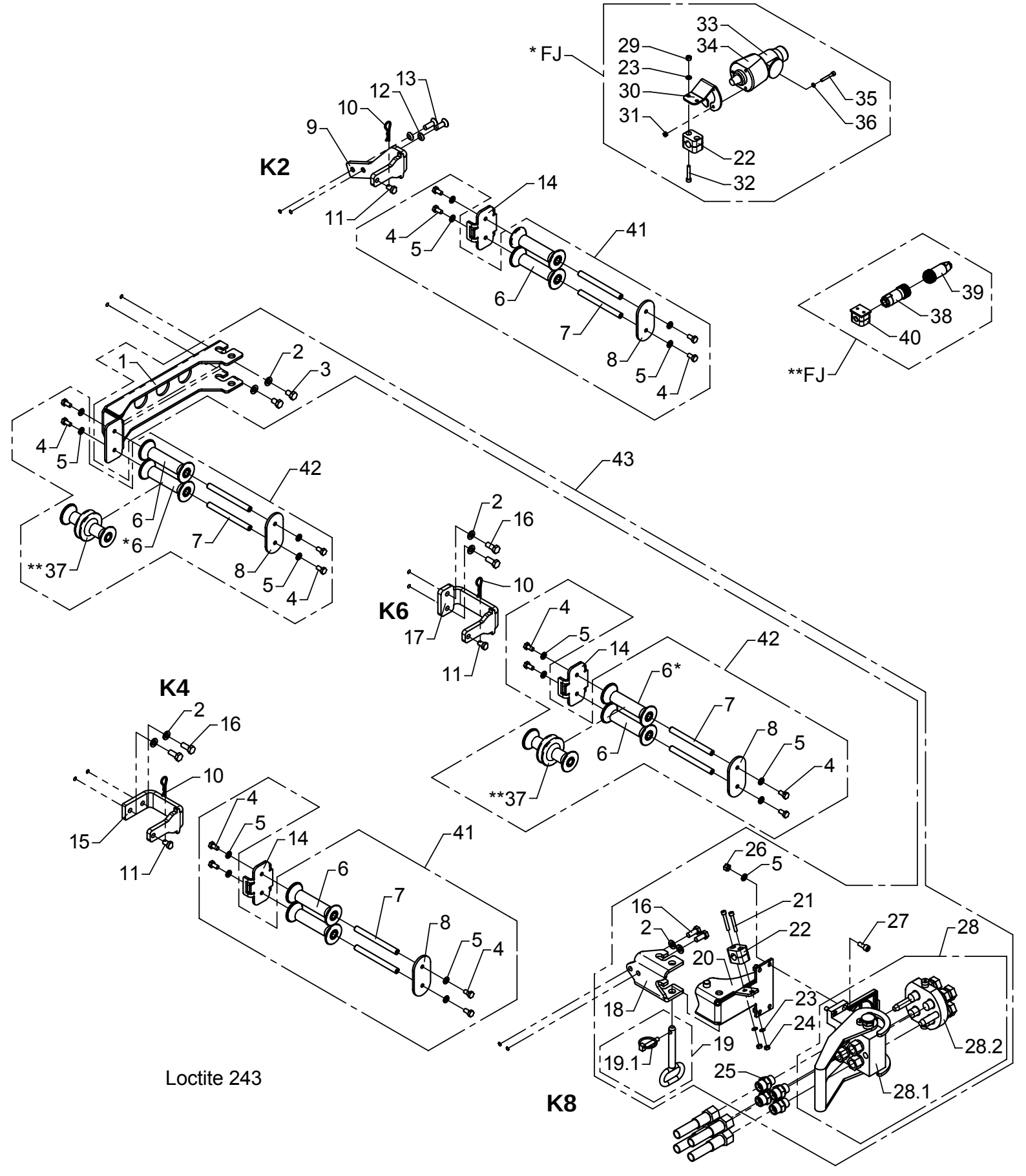

# Extra valves, K8-2
# Hose reels and multi-coupling

As from / To loader no.: 96 00 00 /
Created: 17.11.2003
Modified: 27.02.2009

| Item no. | Qty. | Part no. | Description | Remarks |
|---|---|---|---|---|
| 35 | 3 | 30422 | Screw, stainless | MC5 x 35 |
| 36 | 3 | 31153 | Spring washer, stainless | 5 mm |
| 37 | 2 | 63600 | Guide roller | |
| 38 | 1 | 29237 | Cable socket | |
| 39 | 1 | 29230 | Plug | |
| 40 | 1 | 31425 | Clamp | |
| 41 | 2 | 6302900 | Guide rollers and pins | |
| 42 | 2 | 6302030 | Guide rollers and pins | |
| 43 | 1 | 6302920 | Multifaster K6 - K8 | |

* Used together with cable drum 28546
** Used together with cable drum 29216

# ODIN

Intern ref.: 6302630

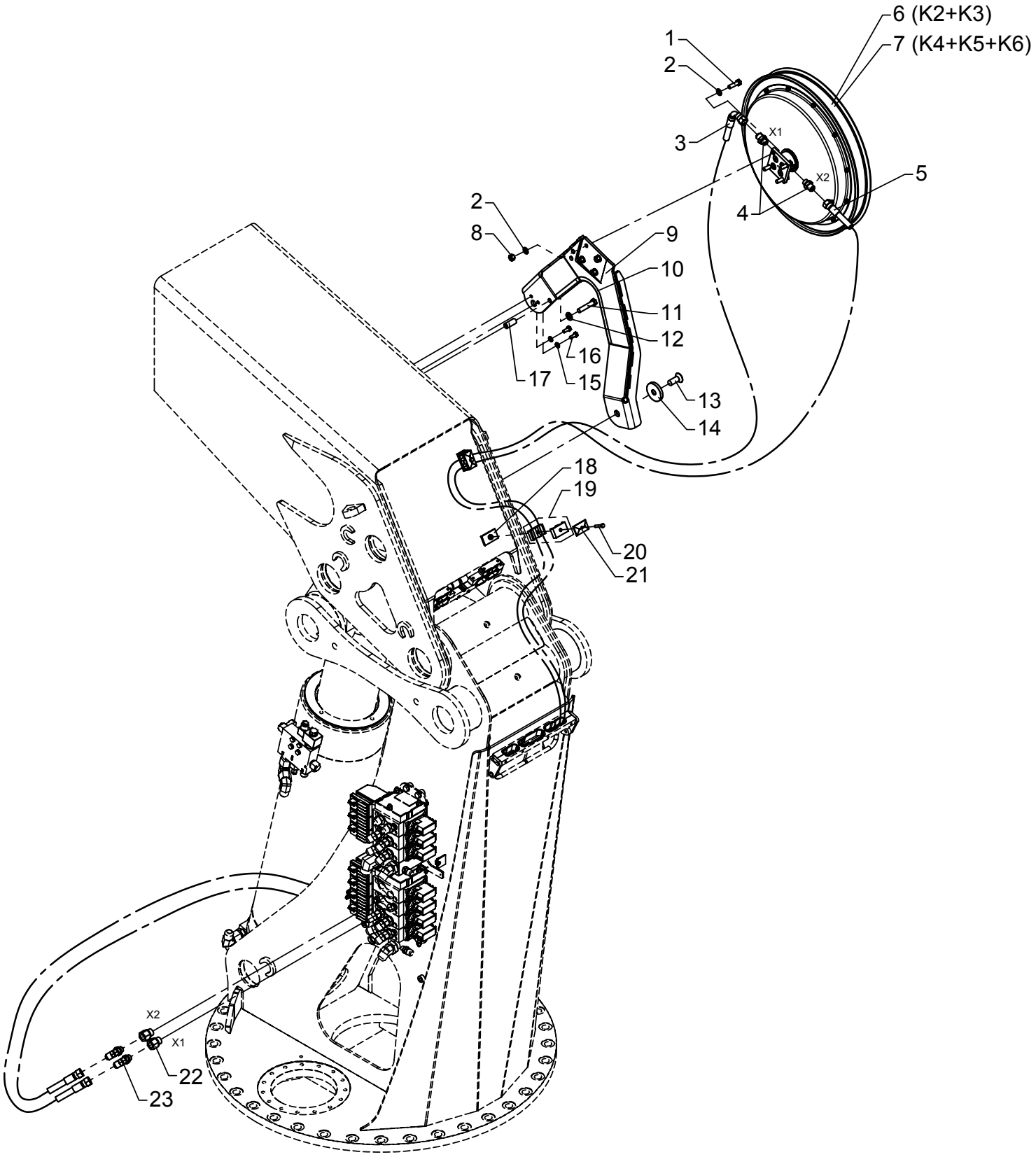

# Hydraulic system, internal hose routing - 1 EXV

As from / To loader no.: 96 00 00 / 96 02 74
Created: 14.06.2006
Modified: 17.08.2010

| Item no. | Qty. | Part no. | Description | Remarks |
|---|---|---|---|---|
| 1 | 4 | 31519 | Set screw | |
| 2 | 8 | 31177 | Washer | 10 mm |
| 3 | 1 | 62880 | Hose | 3/8" x 3700 V/O JIC |
| 4 | 2 | 25831 | Straight connection | F40XS12 - 3/8 |
| 5 | 1 | 62948 | Hose | 3/8" x 3700 O/O JIC |
| 6 | 1 | 56307 | Hose reel | 3/8" x 12400 mm |
| | | 56308 | Hose | 3/8" x 12400 mm |
| | | 56336 | Seal kit | |
| | | 56345 | Spring | |
| | | 56348 | Cover | |
| 7 | 1 | 56311 | Hose reel | 3/8" x 17000 mm |
| | | 56312 | Hose | 3/8" x 17000 mm |
| | | 56336 | Seal kit | |
| | | 56345 | Spring | |
| | | 56348 | Cover | |
| 8 | 4 | 31564 | Lock nut, stainless | M10 |
| 9 | 1 | 6300958 | Bracket for hose reel | |
| 10 | 1 | 46587 | Rubber protection | 300 mm |
| 11 | 1 | 30183 | Steel bolt | M12 x 60 |
| 12 | 1 | 31131 | Washer | 12 mm |
| 13 | 1 | 32360 | Countersunk screw | MK16 x 40 |
| 14 | 1 | 6301024 | Washer | |
| 15 | 2 | 31147 | Washer, stainless | |
| 16 | 2 | 30132 | Set screw, stainless | |
| 17 | 1 | 6301023 | Distance pipe | |
| 18 | 2 | 31999 | Plate | |
| 19 | 2 | 31833 | Clamp | 2 x 18 mm |
| 20 | 2 | 30116 | Steel bolt, stainless | M6 x 35 |
| 21 | 2 | 31834 | Cover plate | |
| 22 | 2 | 25243 | Reducing connection | RED-R 1/2-WD/R 3/8 |
| 23 | 2 | 26695 | Elbow connection 45° | V40XS12 - 3/8 |

# 6020K

Intern ref.: 6302630

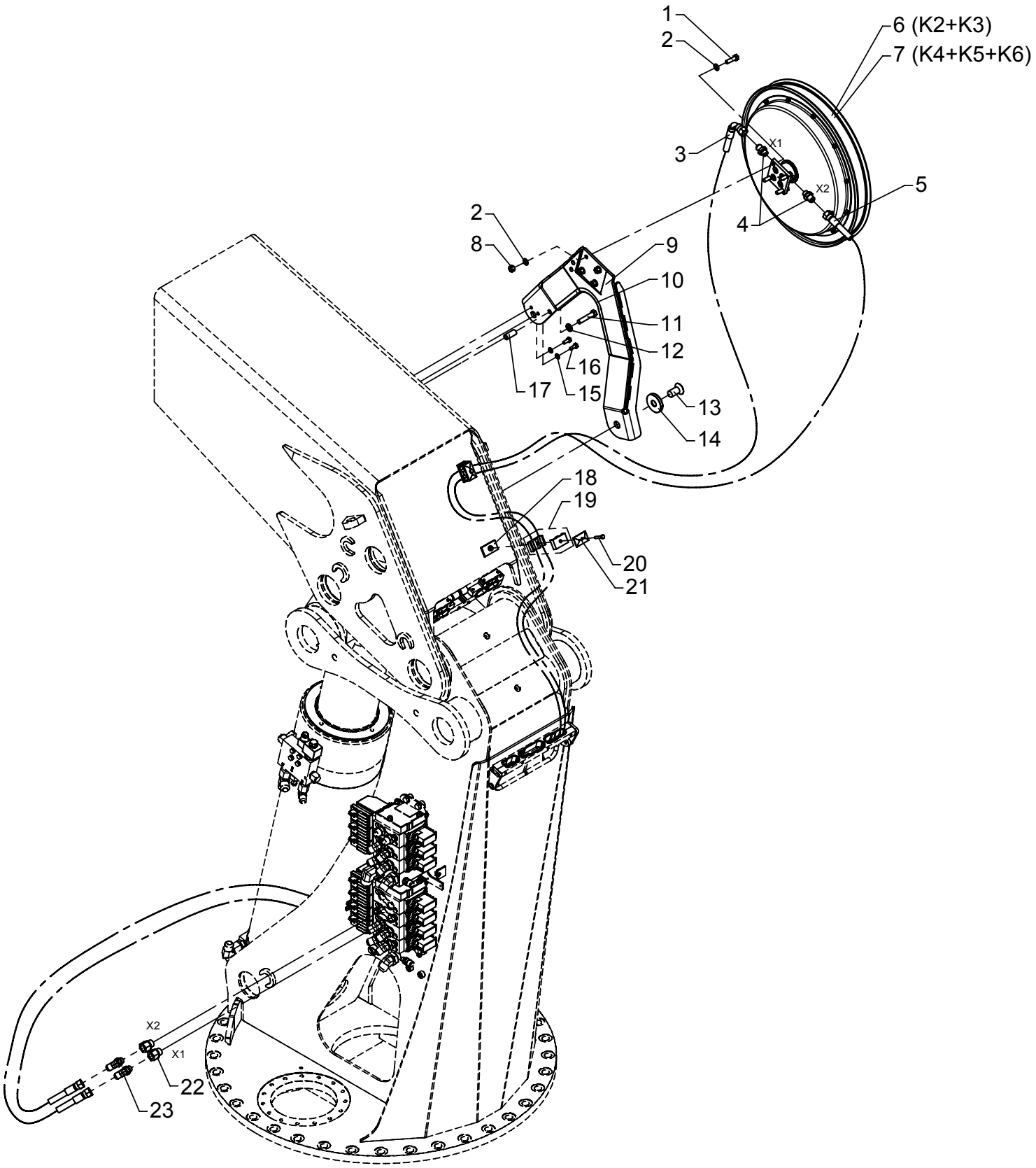

# Hydraulic system, internal hose routing - 1 EXV

As from / To loader no.: 96 02 75 /
Created: 17.08.2010
Modified:

| Item no. | Qty. | Part no. | Description | Remarks |
|---|---|---|---|---|
| 1 | 4 | 31519 | Set screw | |
| 2 | 8 | 31177 | Washer | 10 mm |
| 3 | 1 | 62880 | Hose | 3/8" x 3700 V/O JIC |
| 4 | 2 | 25831 | Straight connection | F40XS12 - 3/8 |
| 5 | 1 | 62948 | Hose | 3/8" x 3700 O/O JIC |
| 6 | 1 | 56307 | Hose reel | 3/8" x 12400 mm |
| | | 56308 | Hose | 3/8" x 12400 mm |
| | | 56336 | Seal kit | |
| | | 56345 | Spring | |
| | | 56348 | Cover | |
| 7 | 1 | 56311 | Hose reel | 3/8" x 17000 mm |
| | | 56312 | Hose | 3/8" x 17000 mm |
| | | 56336 | Seal kit | |
| | | 56345 | Spring | |
| | | 56348 | Cover | |
| 8 | 4 | 31564 | Lock nut, stainless | M10 |
| 9 | 1 | 6300958 | Bracket for hose reel | |
| 10 | 1 | 46587 | Rubber protection | 300 mm |
| 11 | 1 | 30183 | Steel bolt | M12 x 60 |
| 12 | 1 | 31131 | Washer | 12 mm |
| 13 | 1 | 32381 | Countersunk screw | MK20 x 40 |
| 14 | 1 | 6301024 | Washer | |
| 15 | 2 | 31147 | Washer, stainless | |
| 16 | 2 | 30132 | Set screw, stainless | |
| 17 | 1 | 6301023 | Distance pipe | |
| 18 | 2 | 31999 | Plate | |
| 19 | 2 | 31833 | Clamp | 2 x 18 mm |
| 20 | 2 | 30116 | Steel bolt, stainless | M6 x 35 |
| 21 | 2 | 31834 | Cover plate | |
| 22 | 2 | 25243 | Reducing connection | RED-R 1/2-WD/R 3/8 |
| 23 | 2 | 26695 | Elbow connection 45° | V40XS12 - 3/8 |

# ODIN

Intern ref.: 6302640

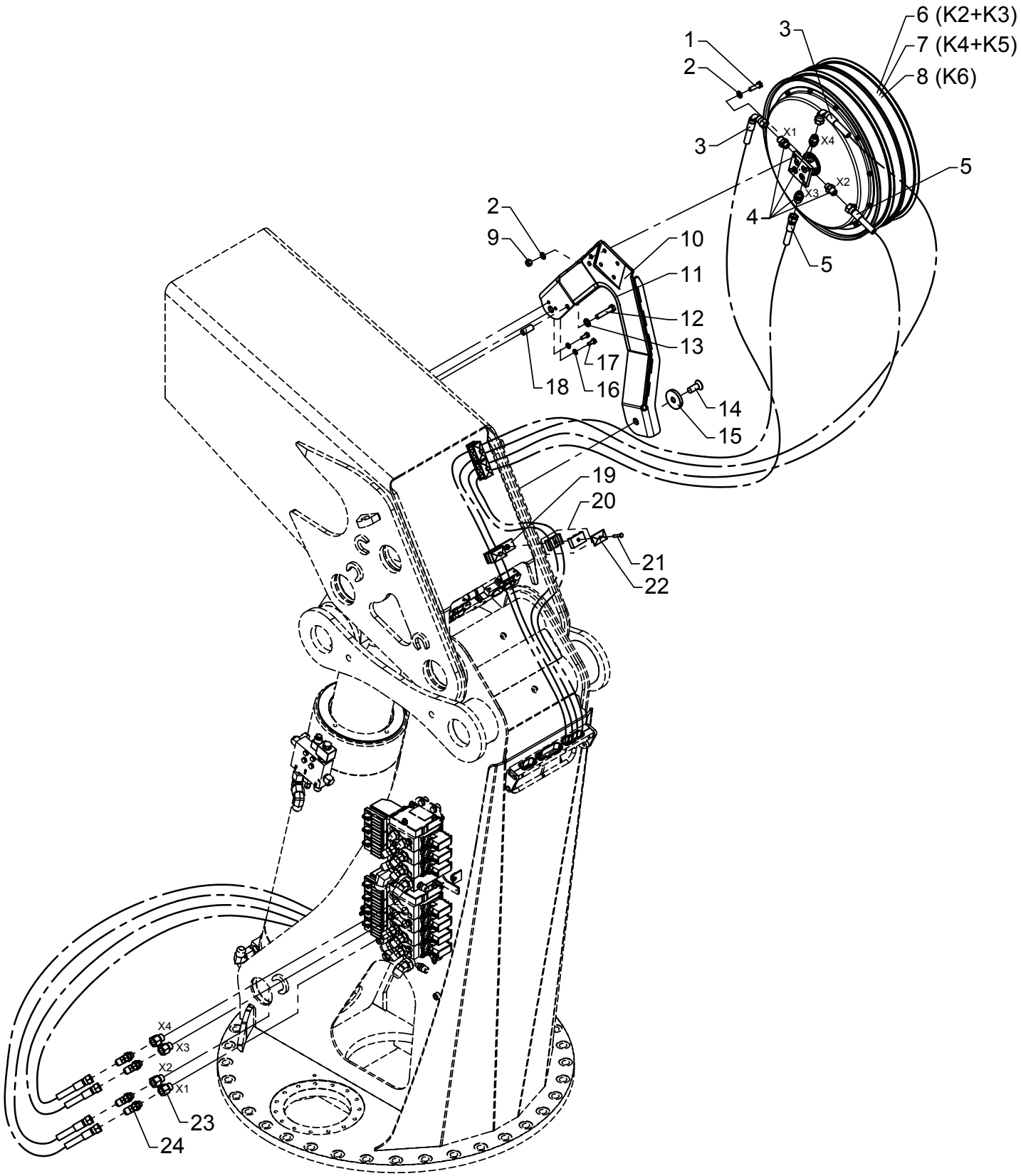

# Hydraulic system, internal hose routing - 2 EXV

As from / To loader no.: 96 00 00 / 96 02 74
Created: 14.06.2006
Modified: 17.08.2010

| Item no. | Qty. | Part no. | Description | Remarks |
|---|---|---|---|---|
| 1 | 4 | 31519 | Set screw | |
| 2 | 8 | 31177 | Washer | 10 mm |
| 3 | 2 | 62880 | Hose, JIC | 3/8" x 3700 V/O JIC |
| 4 | 4 | 25831 | Straight connection | F40XS12 - 3/8 |
| 5 | 2 | 62948 | Hose, JIC | 3/8" x 3700 O/O JIC |
| 6 | 1 | 56294 | Hose reel, double | 3/8" x 12400 mm |
| | | 56308 | Hose | 3/8" x 12400 mm |
| | | 56334 | Spring container | |
| | | 56340 | Seal kit | |
| | | 56345 | Spring | |
| 7 | 1 | 56319 | Hose reel, double | 3/8" x 15000 mm |
| | | 56310 | Hose | 3/8" x 15000 mm |
| | | 56345 | Spring | |
| | | 56346 | Spring container | |
| | | 56347 | Seal kit | |
| 8 | 1 | 56295 | Hose reel, double | 3/8" x 17000 mm |
| | | 56312 | Hose | 3/8" x 17000 mm |
| | | 56345 | Spring | |
| | | 56346 | Spring container | |
| | | 56347 | Seal kit | |
| 9 | 4 | 31564 | Lock nut, stainless | M10 |
| 10 | 1 | 6300958 | Bracket for hose reel | |
| 11 | 1 | 46587 | Rubber protection | 300 mm |
| 12 | 1 | 30183 | Steel bolt | M12 x 60 |
| 13 | 1 | 31131 | Washer | 12 mm |
| 14 | 1 | 32360 | Countersunk screw | MK16 x 40 |
| 15 | 1 | 6301024 | Washer | |
| 16 | 2 | 31147 | Washer, stainless | |
| 17 | 2 | 30132 | Set screw, stainless | |
| 18 | 1 | 6301023 | Distance pipe | |
| 19 | 4 | 31999 | Plate | |
| 20 | 4 | 31833 | Clamp | 2 x 18 mm |
| 21 | 4 | 30116 | Steel bolt, stainless | M6 x 35 |
| 22 | 4 | 31834 | Cover plate | |
| 23 | 4 | 25243 | Reducing connection | RED-R 1/2-WD/R 3/8 |
| 24 | 4 | 26695 | Elbow connection 45° | V40XS12 - 3/8 |

# 6020K

Intern ref.: 6302640

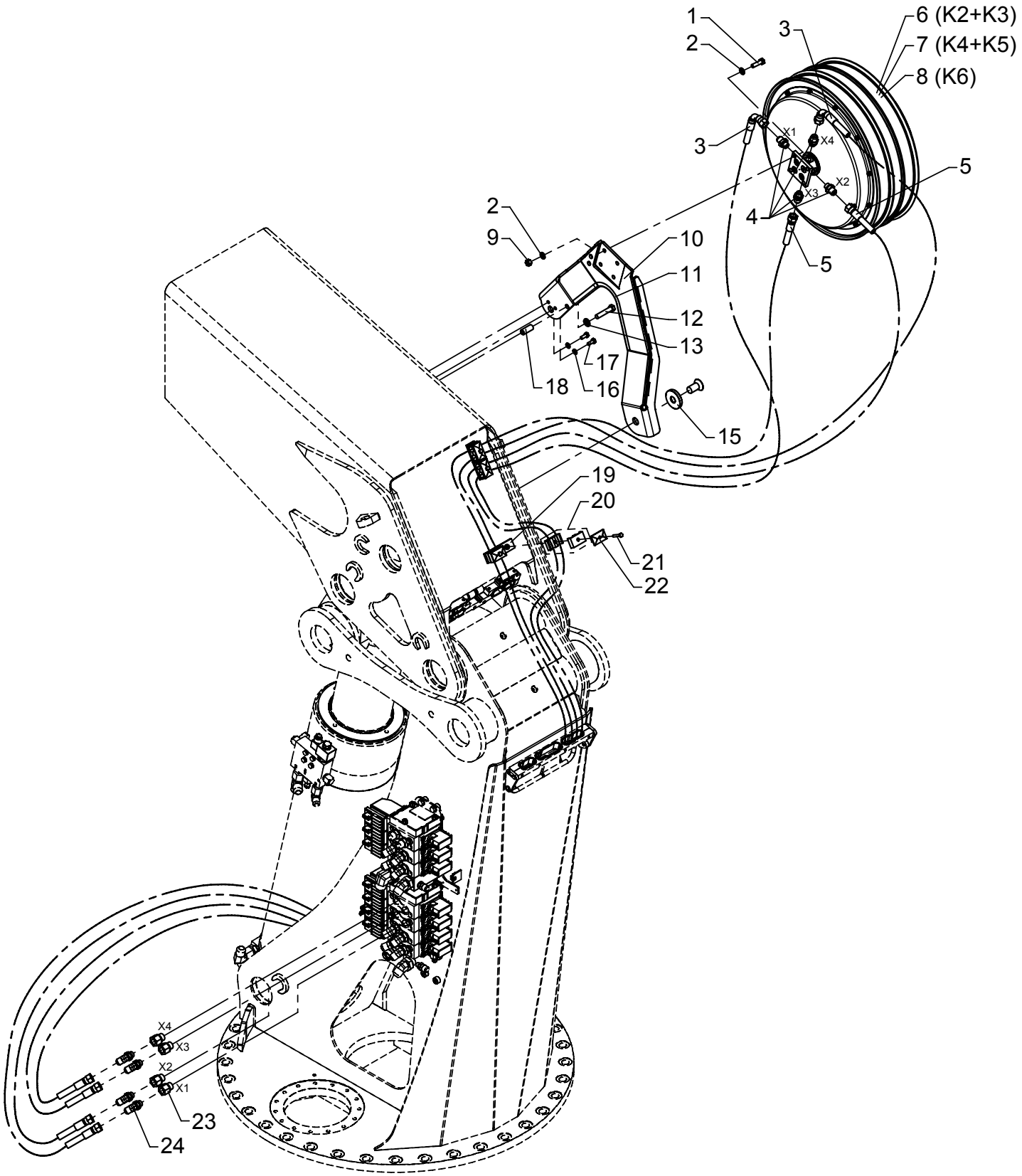

# Hydraulic system, internal hose routing - 2 EXV

As from / To loader no.: 96 02 75 /
Created: 17.08.2010
Modified:

| Item no. | Qty. | Part no. | Description | Remarks |
|---|---|---|---|---|
| 1 | 4 | 31519 | Set screw | |
| 2 | 8 | 31177 | Washer | 10 mm |
| 3 | 2 | 62880 | Hose, JIC | 3/8" x 3700 V/O JIC |
| 4 | 4 | 25831 | Straight connection | F40XS12 - 3/8 |
| 5 | 2 | 62948 | Hose, JIC | 3/8" x 3700 O/O JIC |
| 6 | 1 | 56294 | Hose reel, double | 3/8" x 12400 mm |
| | | 56308 | Hose | 3/8" x 12400 mm |
| | | 56334 | Spring container | |
| | | 56340 | Seal kit | |
| | | 56345 | Spring | |
| 7 | 1 | 56319 | Hose reel, double | 3/8" x 15000 mm |
| | | 56310 | Hose | 3/8" x 15000 mm |
| | | 56345 | Spring | |
| | | 56346 | Spring container | |
| | | 56347 | Seal kit | |
| 8 | 1 | 56295 | Hose reel, double | 3/8" x 17000 mm |
| | | 56312 | Hose | 3/8" x 17000 mm |
| | | 56345 | Spring | |
| | | 56346 | Spring container | |
| | | 56347 | Seal kit | |
| 9 | 4 | 31564 | Lock nut, stainless | M10 |
| 10 | 1 | 6300958 | Bracket for hose reel | |
| 11 | 1 | 46587 | Rubber protection | 300 mm |
| 12 | 1 | 30183 | Steel bolt | M12 x 60 |
| 13 | 1 | 31131 | Washer | 12 mm |
| 14 | 1 | 32381 | Countersunk screw | MK20 x 40 |
| 15 | 1 | 6301024 | Washer | |
| 16 | 2 | 31147 | Washer, stainless | |
| 17 | 2 | 30132 | Set screw, stainless | |
| 18 | 1 | 6301023 | Distance pipe | |
| 19 | 4 | 31999 | Plate | |
| 20 | 4 | 31833 | Clamp | 2 x 18 mm |
| 21 | 4 | 30116 | Steel bolt, stainless | M6 x 35 |
| 22 | 4 | 31834 | Cover plate | |
| 23 | 4 | 25243 | Reducing connection | RED-R 1/2-WD/R 3/8 |
| 24 | 4 | 26695 | Elbow connection 45° | V40XS12 - 3/8 |

# ODIN

Intern ref.:

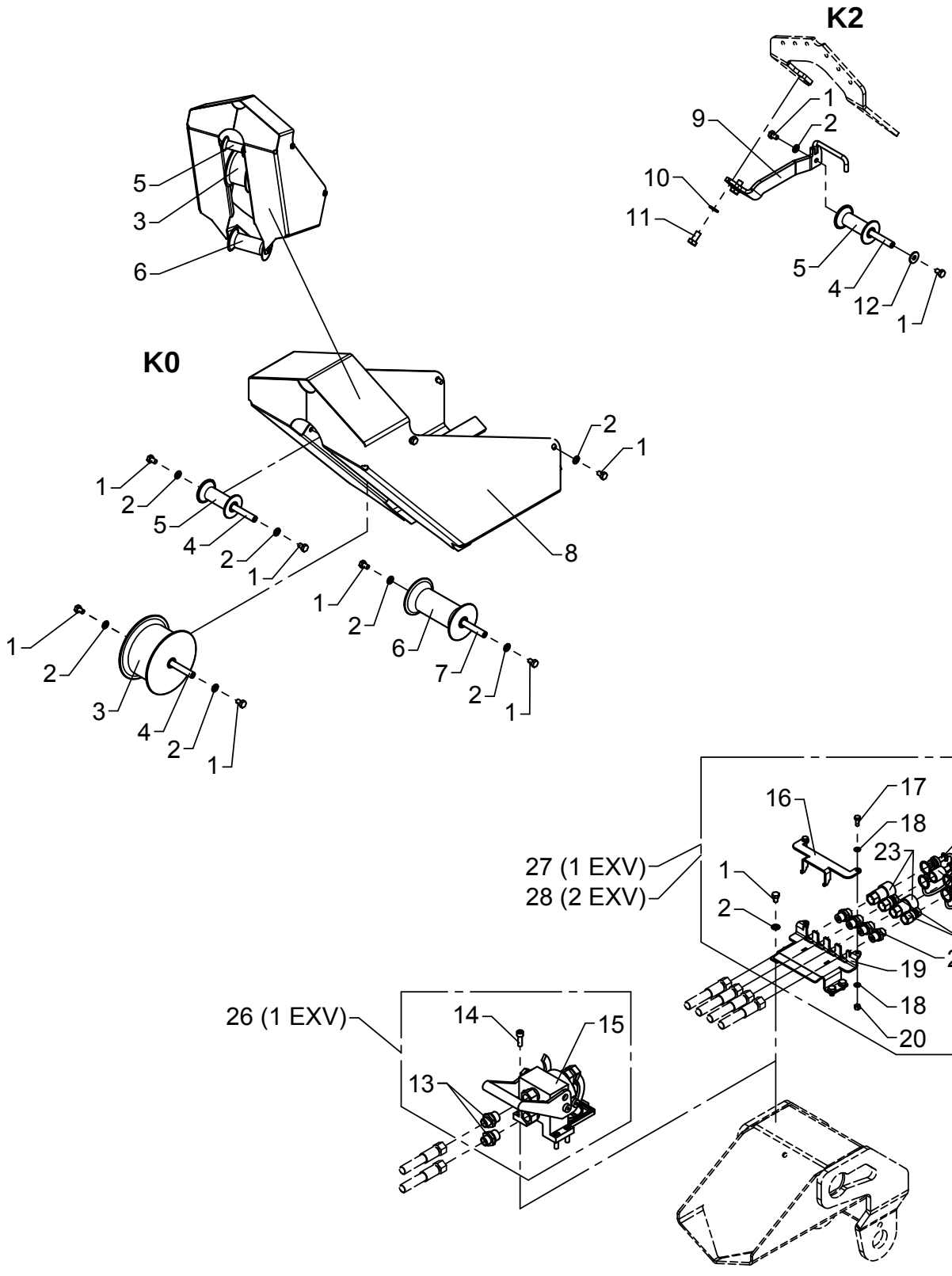

# Extra valves, OK2
# Internal hose routing

As from / To loader no.: 96 00 00 / 96 02 93
Created: 14.06.2006
Modified: 17.02.2012

| Item no. | Qty. | Part no. | Description | Remarks |
|---|---|---|---|---|
| 1 | 16 | 30130 | Set screw, stainless | M8 x 12 |
| 2 | 15 | 31147 | Washer, stainless | |
| 3 | 1 | 63404 | Roller | |
| 4 | 3 | 6301042 | Pin | |
| 5 | 2 | 63546 | Guide roller | |
| 6 | 1 | 63544 | Guide roller | |
| 7 | 1 | 6302883 | Pin | |
| 8 | 1 | 6301041 | Protection plate, jib | |
| 9 | 1 | 6301143 | Roller bracket, K2 | |
| 10 | 2 | 31177 | Washer | 10 mm |
| 11 | 2 | 30154 | Set screw | M10 x 20 |
| 12 | 1 | 31136 | Washer, stainless | 8 mm |
| 13 | 2 | 25108 | Connection | GES 12 LR 1/2-WD |
| 14 | 4 | 30440 | Screw | MC8 x 25 |
| 15 | 1 | 58433 | Multi-coupling | |
| 16 | 1 | 6301075 | Lock plate | |
| 17 | 2 | 30112 | Set screw, stainless | M6 x 16 |
| 18 | 4 | 32302 | Face washer, stainless | 6 mm |
| 19 | 1 | 6301071 | Bracket | |
| 20 | 2 | 30884 | Lock nut, stainless | M6 |
| 21 | 4 | 25253 | Connection | P-GEV 10 LR 3/8-WD |
| 22 | 2 | 60620 | Quick-release coupling,M | 3/8" |
| 23 | 2 | 60619 | Quick-release coupling,F | 3/8" |
| 24 | 2 | 60621 | Dust cap, M | 3/8" |
| 25 | 2 | 60622 | Dust cap, F | 3/8" |
| 26 | 1 | 6302750 | Kit for multi-coupling, 1 EXV | |
| 27 | 1 | 6302730 | Kit, quick-release coupl.,1EXV | |
| 28 | 1 | 6302740 | Kit, quick-release coupl.,2EXV | |

# ODIN

An Oshkosh Corportation Company

Intern ref.:

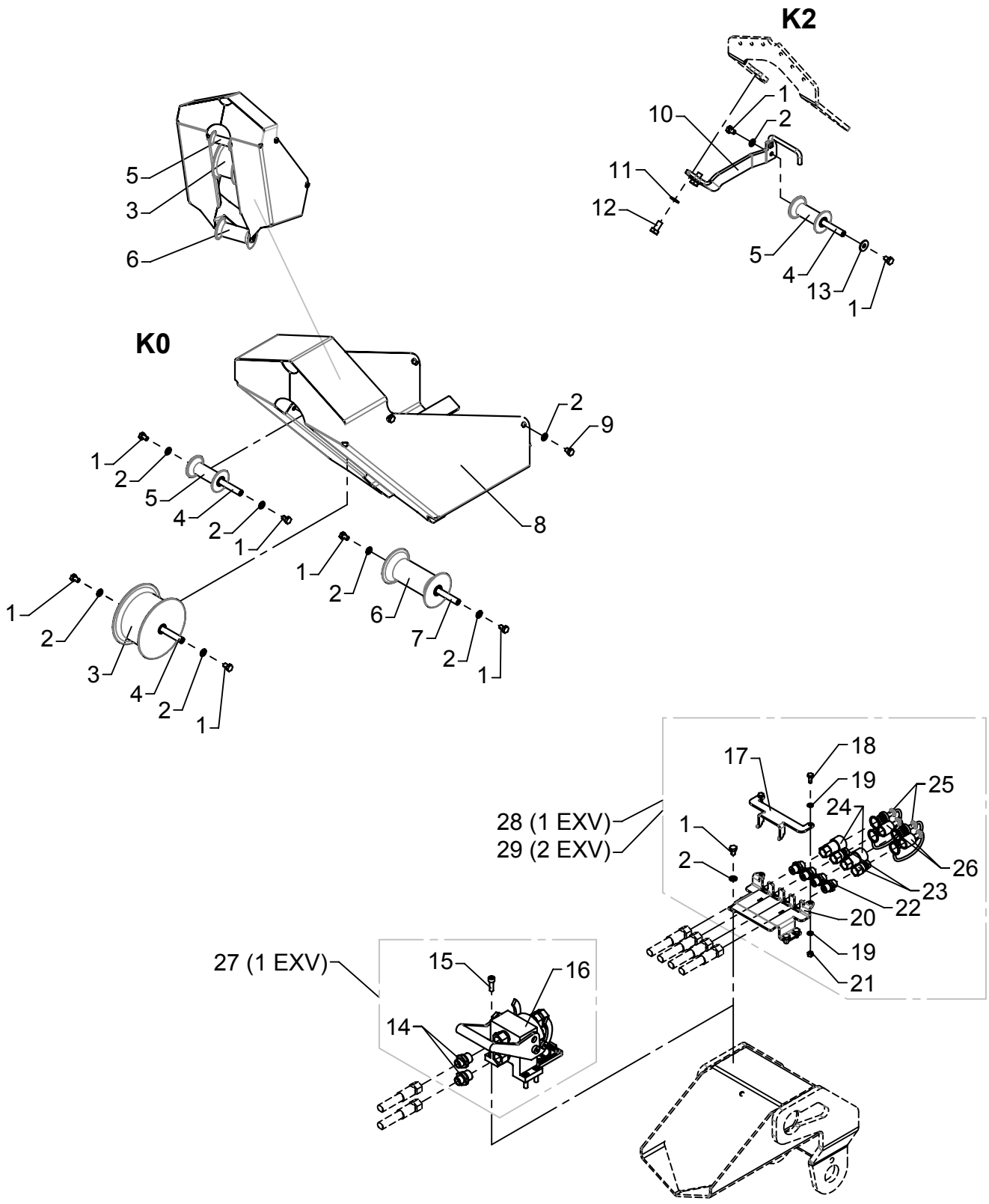

# Extra valves, OK2
# Internal hose routing

As from / To loader no.: 96 02 94 /
Created: 17.02.2012
Modified: 08.08.2012

| Item no. | Qty. | Part no. | Description | Remarks |
|---|---|---|---|---|
| 1 | 12 | 30130 | Set screw, stainless | M8 x 12 |
| 2 | 15 | 31147 | Face washer, 8 mm | |
| 3 | 1 | 63404 | Roller | |
| 4 | 3 | 6301042 | Pin | |
| 5 | 2 | 63546 | Guide roller | |
| 6 | 1 | 63544 | Guide roller | |
| 7 | 1 | 6302883 | Pin | |
| 8 | 1 | 6301041 | Protection plate, jib | |
| 9 | 4 | 30105 | Set screw, stainless | M8 x 10 |
| 10 | 1 | 6301143 | Roller bracket, K2 | |
| 11 | 2 | 31177 | Washer | 10 mm |
| 12 | 2 | 30154 | Set screw | M10 x 20 |
| 13 | 1 | 31136 | Washer, stainless | 8 mm |
| 14 | 2 | 25108 | Connection | GES 12 LR 1/2-WD |
| 15 | 4 | 30440 | Screw | MC8 x 25 |
| 16 | 1 | 58433 | Multi-coupling | |
| 17 | 1 | 6301075 | Lock plate | |
| 18 | 2 | 30112 | Set screw, stainless | M6 x 16 |
| 19 | 4 | 32302 | Face washer, stainless | 6 mm |
| 20 | 1 | 6301071 | Bracket | |
| 21 | 2 | 30884 | Lock nut, stainless | M6 |
| 22 | 4 | 25253 | Connection | P-GEV 10 LR 3/8-WD |
| 23 | 2 | 60620 | Quick-release coupling,M | 3/8" |
| 24 | 2 | 60619 | Quick-release coupling,F | 3/8" |
| 25 | 2 | 60621 | Dust cap, M | 3/8" |
| 26 | 2 | 60622 | Dust cap, F | 3/8" |
| 27 | 1 | 6302750 | Kit for multi-coupling, 1 EXV | |
| 28 | 1 | 6302730 | Kit, quick-release coupl., 1 EXV | |
| 29 | 1 | 6302740 | Kit, quick-release coupl., 2 EXV | |

# ODIN

Intern ref.:

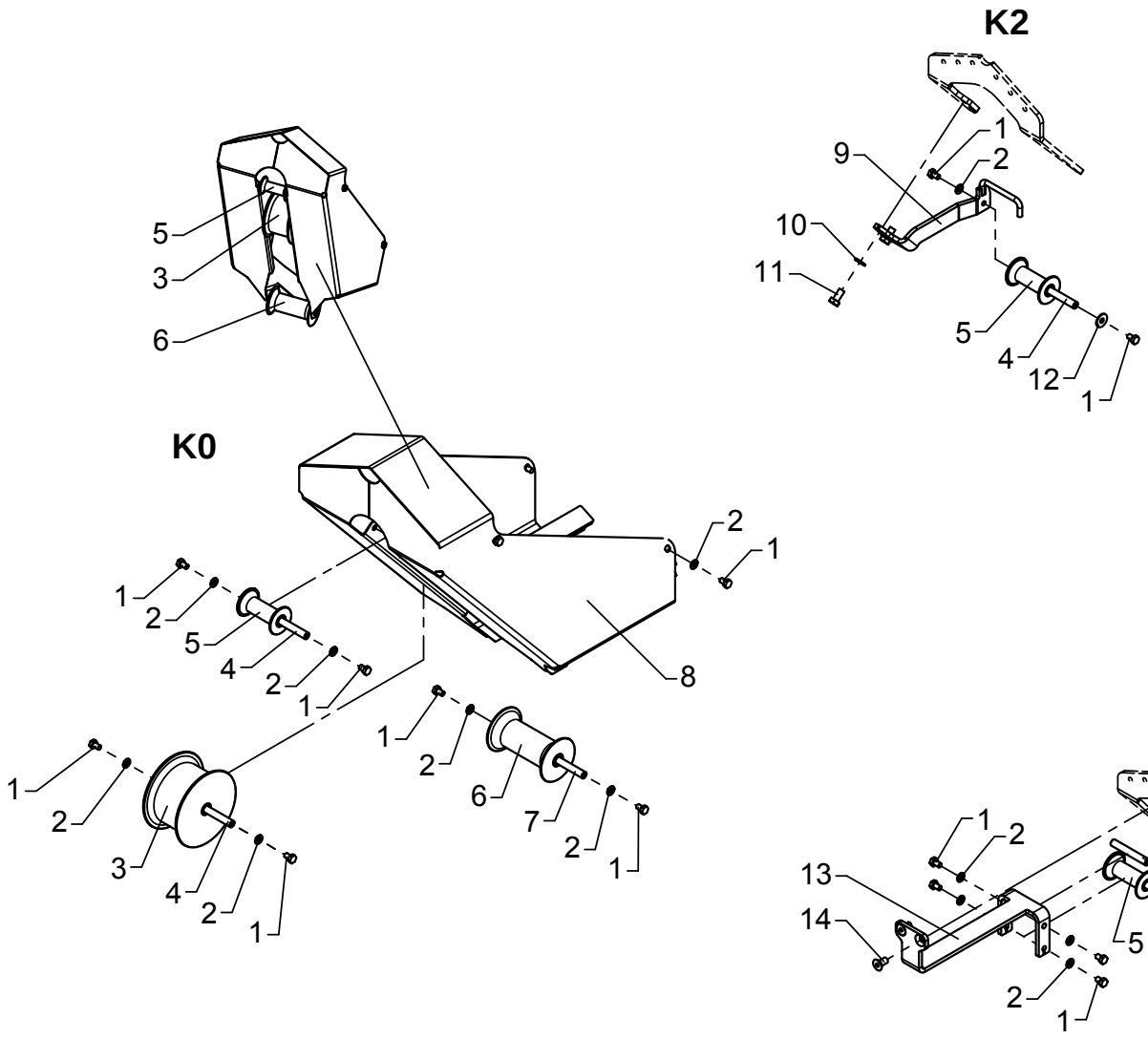


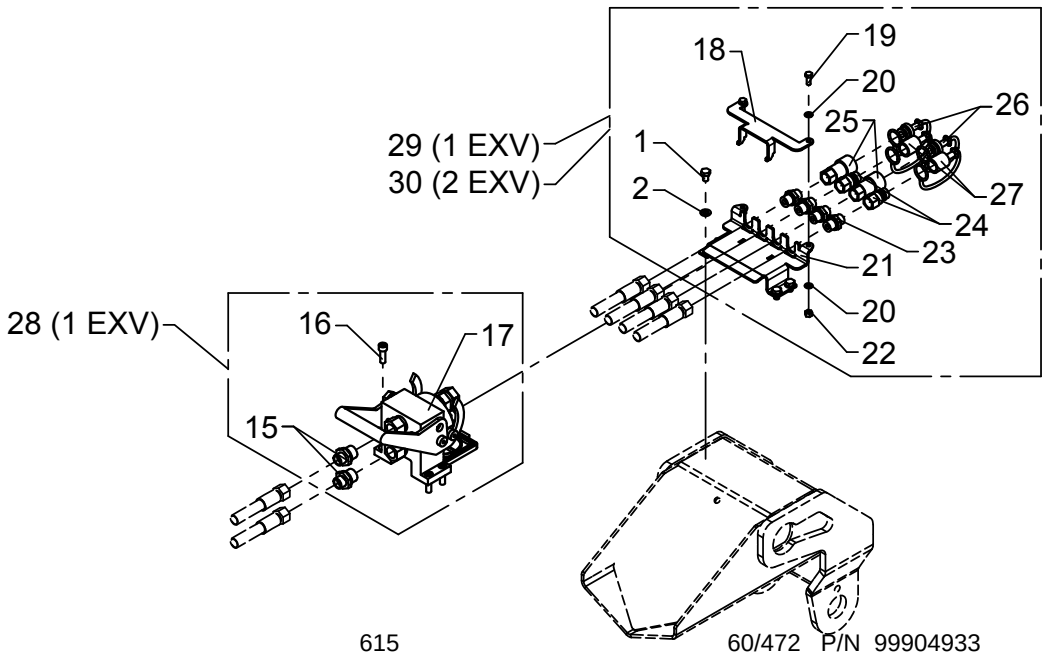

# Extra valves, OK3
# Internal hose routing

As from / To loader no.: 96 00 00 / 96 02 93
Created: 14.06.2006
Modified: 17.02.2012

| Item no. | Qty. | Part no. | Description | Remarks |
|---|---|---|---|---|
| 1 | 20 | 30130 | Set screw, stainless | M8 x 12 |
| 2 | 19 | 31147 | Washer, stainless | |
| 3 | 1 | 63404 | Roller | |
| 4 | 5 | 6301042 | Pin | |
| 5 | 3 | 63546 | Guide roller | |
| 6 | 1 | 63544 | Guide roller | |
| 7 | 1 | 6302883 | Pin | |
| 8 | 1 | 6301041 | Protection plate, jib | |
| 9 | 1 | 6301143 | Roller bracket, K2 | |
| 10 | 2 | 31177 | Washer | 10 mm |
| 11 | 2 | 30154 | Set screw | M10 x 20 |
| 12 | 1 | 31136 | Washer, stainless | 8 mm |
| 13 | 1 | 6301044 | Roller bracket - K3 | |
| 14 | 2 | 30545 | Countersunk screw | MK10 x 20 |
| 15 | 2 | 25108 | Connection | GES 12 LR 1/2-WD |
| 16 | 4 | 30440 | Screw | MC8 x 25 |
| 17 | 1 | 58433 | Multi-coupling | |
| 18 | 1 | 6301075 | Lock plate | |
| 19 | 2 | 30112 | Set screw, stainless | M6 x 16 |
| 20 | 4 | 32302 | Face washer, stainless | 6 mm |
| 21 | 1 | 6301071 | Bracket | |
| 22 | 2 | 30884 | Lock nut, stainless | M6 |
| 23 | 4 | 25253 | Connection | P-GEV 10 LR 3/8-WD |
| 24 | 2 | 60620 | Quick-release coupling,M | 3/8" |
| 25 | 2 | 60619 | Quick-release coupling,F | 3/8" |
| 26 | 2 | 60621 | Dust cap, M | 3/8" |
| 27 | 2 | 60622 | Dust cap, F | 3/8" |
| 28 | 1 | 6302750 | Kit for multi-coupling, 1 EXV | |
| 29 | 1 | 6302730 | Kit, quick-release coupl.,1EXV | |
| 30 | 1 | 6302740 | Kit, quick-release coupl.,2EXV | |

# ODIN

An Oshkosh Corportation Company

Intern ref.:

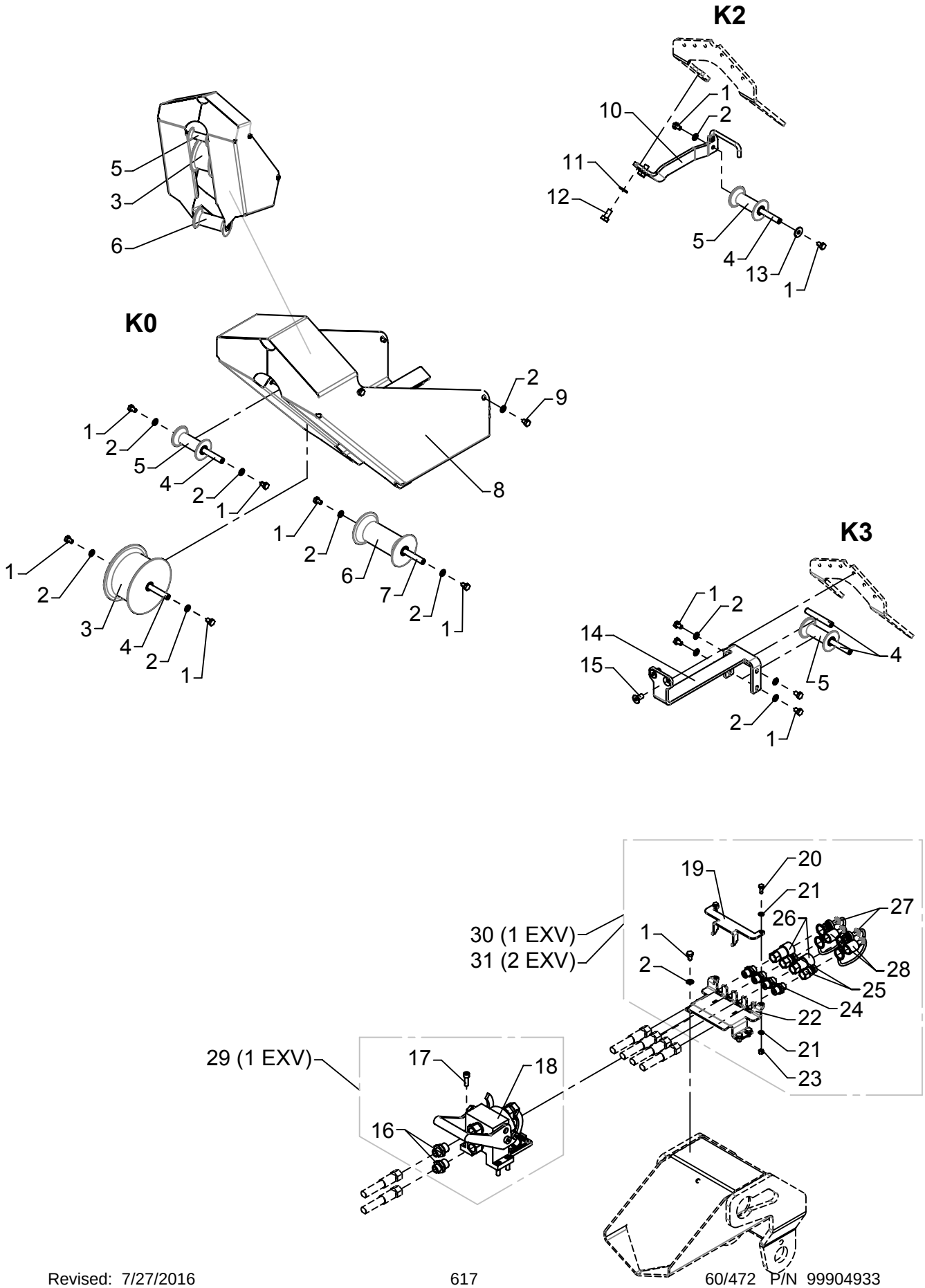

# Extra valves, OK3
# Internal hose routing

As from / To loader no.: 96 02 94 /
Created: 17.02.2012
Modified: 08.08.2012

| Item no. | Qty. | Part no. | Description | Remarks |
|---|---|---|---|---|
| 1 | 16 | 30130 | Set screw, stainless | M8 x 12 |
| 2 | 19 | 31147 | Face washer, 8 mm | |
| 3 | 1 | 63404 | Roller | |
| 4 | 5 | 6301042 | Pin | |
| 5 | 3 | 63546 | Guide roller | |
| 6 | 1 | 63544 | Guide roller | |
| 7 | 1 | 6302883 | Pin | |
| 8 | 1 | 6301041 | Protection plate, jib | |
| 9 | 4 | 30105 | Set screw, stainless | M8 x 10 |
| 10 | 1 | 6301143 | Roller bracket, K2 | |
| 11 | 2 | 31177 | Washer | 10 mm |
| 12 | 2 | 30154 | Set screw | M10 x 20 |
| 13 | 1 | 31136 | Washer, stainless | 8 mm |
| 14 | 1 | 6301044 | Roller bracket - K3 | |
| 15 | 2 | 30545 | Countersunk screw | MK10 x 20 |
| 16 | 2 | 25108 | Connection | GES 12 LR 1/2-WD |
| 17 | 4 | 30440 | Screw | MC8 x 25 |
| 18 | 1 | 58433 | Multi-coupling | |
| 19 | 1 | 6301075 | Lock plate | |
| 20 | 2 | 30112 | Set screw, stainless | M6 x 16 |
| 21 | 4 | 32302 | Face washer, stainless | 6 mm |
| 22 | 1 | 6301071 | Bracket | |
| 23 | 2 | 30884 | Lock nut, stainless | M6 |
| 24 | 4 | 25253 | Connection | P-GEV 10 LR 3/8-WD |
| 25 | 2 | 60620 | Quick-release coupling,M | 3/8" |
| 26 | 2 | 60619 | Quick-release coupling,F | 3/8" |
| 27 | 2 | 60621 | Dust cap, M | 3/8" |
| 28 | 2 | 60622 | Dust cap, F | 3/8" |
| 29 | 1 | 6302750 | Kit for multi-coupling, 1 EXV | |
| 30 | 1 | 6302730 | Kit, quick-release coupl., 1 EXV | |
| 31 | 1 | 6302740 | Kit, quick-release coupl., 2 EXV | |

# ODIN

An Oshkosh Corportation Company

Intern ref.:

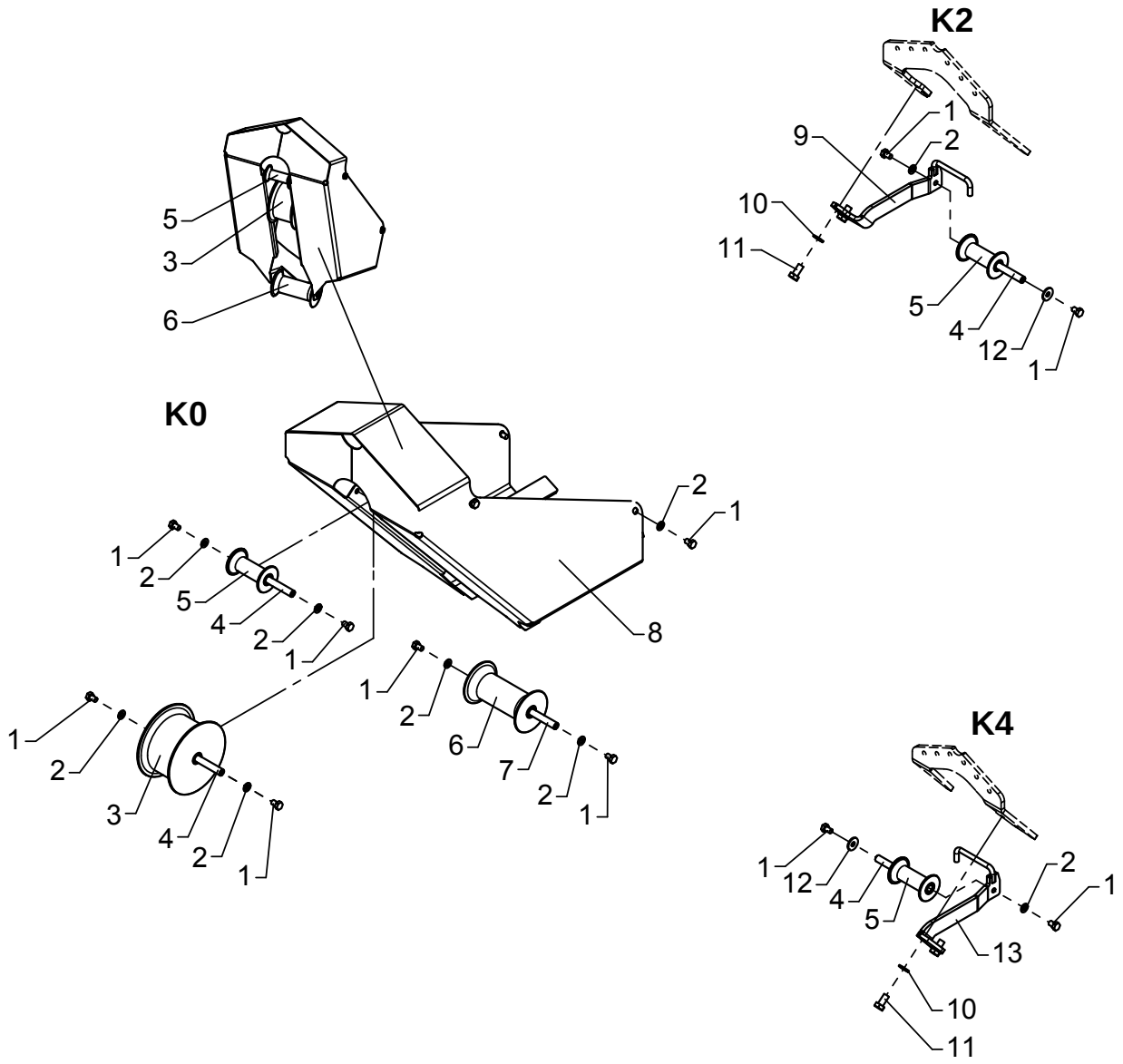


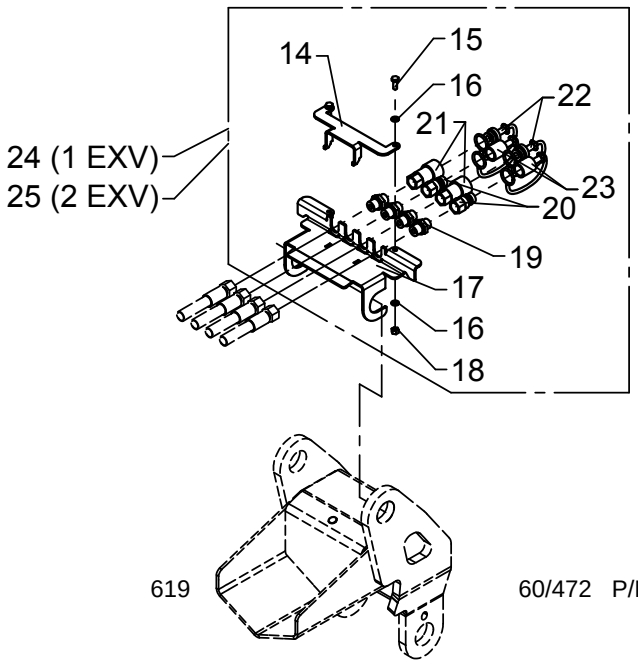

# Extra valves, OK4
# Internal hose routing

As from / To loader no.: 96 00 00 / 96 02 93
Created: 14.06.2006
Modified: 17.02.2012

| Item no. | Qty. | Part no. | Description | Remarks |
|---|---|---|---|---|
| 1 | 14 | 30130 | Set screw, stainless | M8 x 12 |
| 2 | 12 | 31147 | Washer, stainless | |
| 3 | 1 | 63404 | Roller | |
| 4 | 4 | 6301042 | Pin | |
| 5 | 3 | 63546 | Guide roller | |
| 6 | 1 | 63544 | Guide roller | |
| 7 | 1 | 6302883 | Pin | |
| 8 | 1 | 6301041 | Protection plate, jib | |
| 9 | 1 | 6301143 | Roller bracket, K2 | |
| 10 | 4 | 31177 | Washer | 10 mm |
| 11 | 4 | 30154 | Set screw | M10 x 20 |
| 12 | 2 | 31136 | Washer, stainless | 8 mm |
| 13 | 1 | 6301145 | Roller bracket - K4 | |
| 14 | 1 | 6301075 | Lock plate | |
| 15 | 2 | 30112 | Set screw, stainless | M6 x 16 |
| 16 | 4 | 32302 | Face washer, stainless | 6 mm |
| 17 | 1 | 6301072 | Bracket | |
| 18 | 2 | 30884 | Lock nut, stainless | M6 |
| 19 | 4 | 25253 | Connection | P-GEV 10 LR 3/8-WD |
| 20 | 2 | 60620 | Quick-release coupling,M | 3/8" |
| 21 | 2 | 60619 | Quick-release coupling,F | 3/8" |
| 22 | 2 | 60621 | Dust cap, M | 3/8" |
| 23 | 2 | 60622 | Dust cap, F | 3/8" |
| 24 | 1 | 6302730 | Kit, quick-release coupl.,1EXV | |
| 25 | 1 | 6302740 | Kit, quick-release coupl.,2EXV | |

# ODIN

An Oshkosh Corportation Company

Intern ref.:

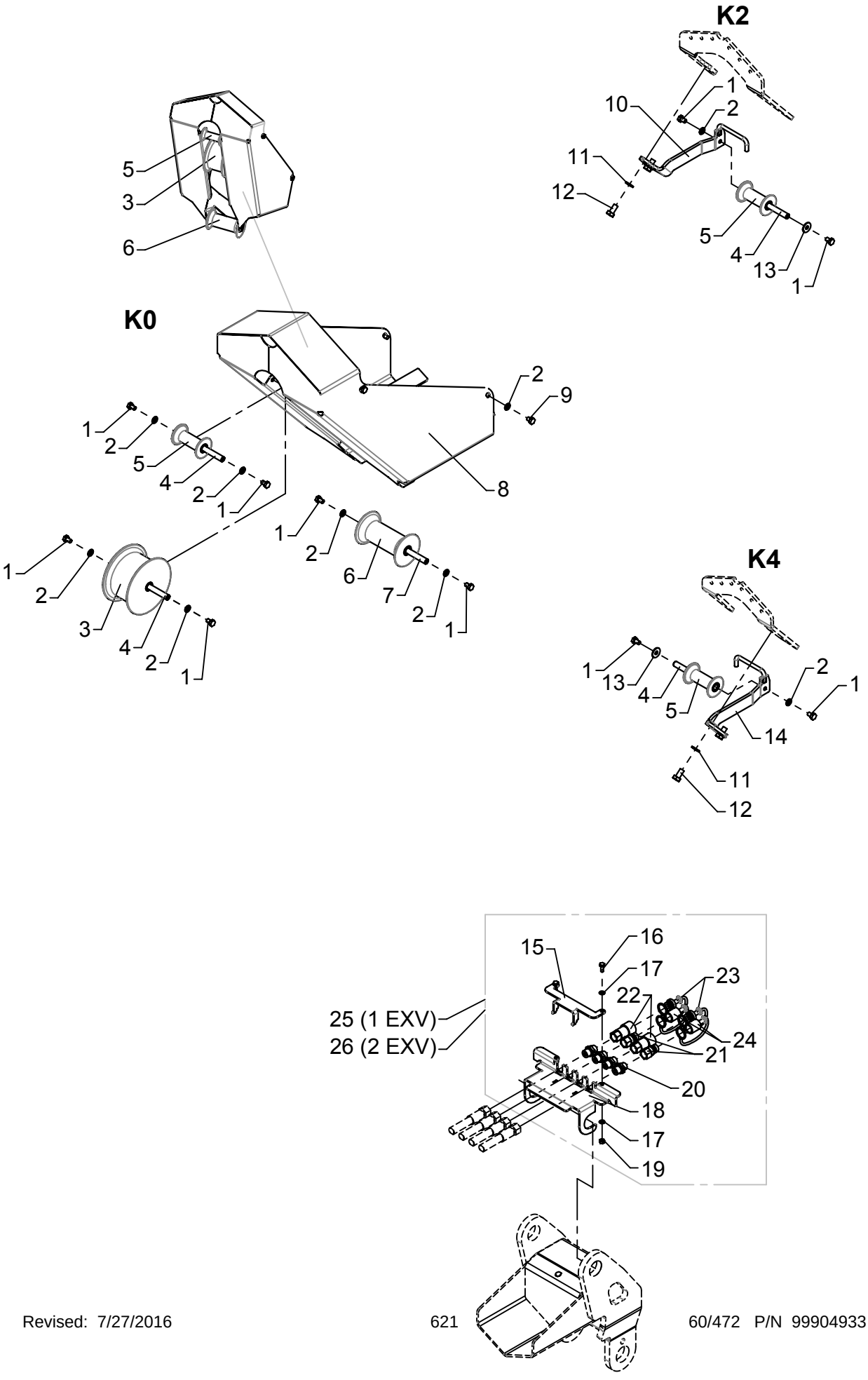

# Extra valves, OK4
# Internal hose routing

As from / To loader no.: 96 02 94 /
Created: 17.02.2012
Modified: 08.08.2012

| Item no. | Qty. | Part no. | Description | Remarks |
|---|---|---|---|---|
| 1 | 10 | 30130 | Set screw, stainless | M8 x 12 |
| 2 | 12 | 31147 | Face washer, 8 mm | |
| 3 | 1 | 63404 | Roller | |
| 4 | 4 | 6301042 | Pin | |
| 5 | 3 | 63546 | Guide roller | |
| 6 | 1 | 63544 | Guide roller | |
| 7 | 1 | 6302883 | Pin | |
| 8 | 1 | 6301041 | Protection plate, jib | |
| 9 | 4 | 30105 | Set screw, stainless | M8 x 10 |
| 10 | 1 | 6301143 | Roller bracket, K2 | |
| 11 | 4 | 31177 | Washer | 10 mm |
| 12 | 4 | 30154 | Set screw | M10 x 20 |
| 13 | 2 | 31136 | Washer, stainless | 8 mm |
| 14 | 1 | 6301145 | Roller bracket - K4 | |
| 15 | 1 | 6301075 | Lock plate | |
| 16 | 2 | 30112 | Set screw, stainless | M6 x 16 |
| 17 | 4 | 32302 | Face washer, stainless | 6 mm |
| 18 | 1 | 6301072 | Bracket | |
| 19 | 2 | 30884 | Lock nut, stainless | M6 |
| 20 | 4 | 25253 | Connection | P-GEV 10 LR 3/8-WD |
| 21 | 2 | 60620 | Quick-release coupling,M | 3/8" |
| 22 | 2 | 60619 | Quick-release coupling,F | 3/8" |
| 23 | 2 | 60621 | Dust cap, M | 3/8" |
| 24 | 2 | 60622 | Dust cap, F | 3/8" |
| 25 | 1 | 6302730 | Kit, quick-release coupl., 1 EXV | |
| 26 | 1 | 6302740 | Kit, quick-release coupl., 2 EXV | |

# ODIN

An Oshkosh Corportation Company

Intern ref.:

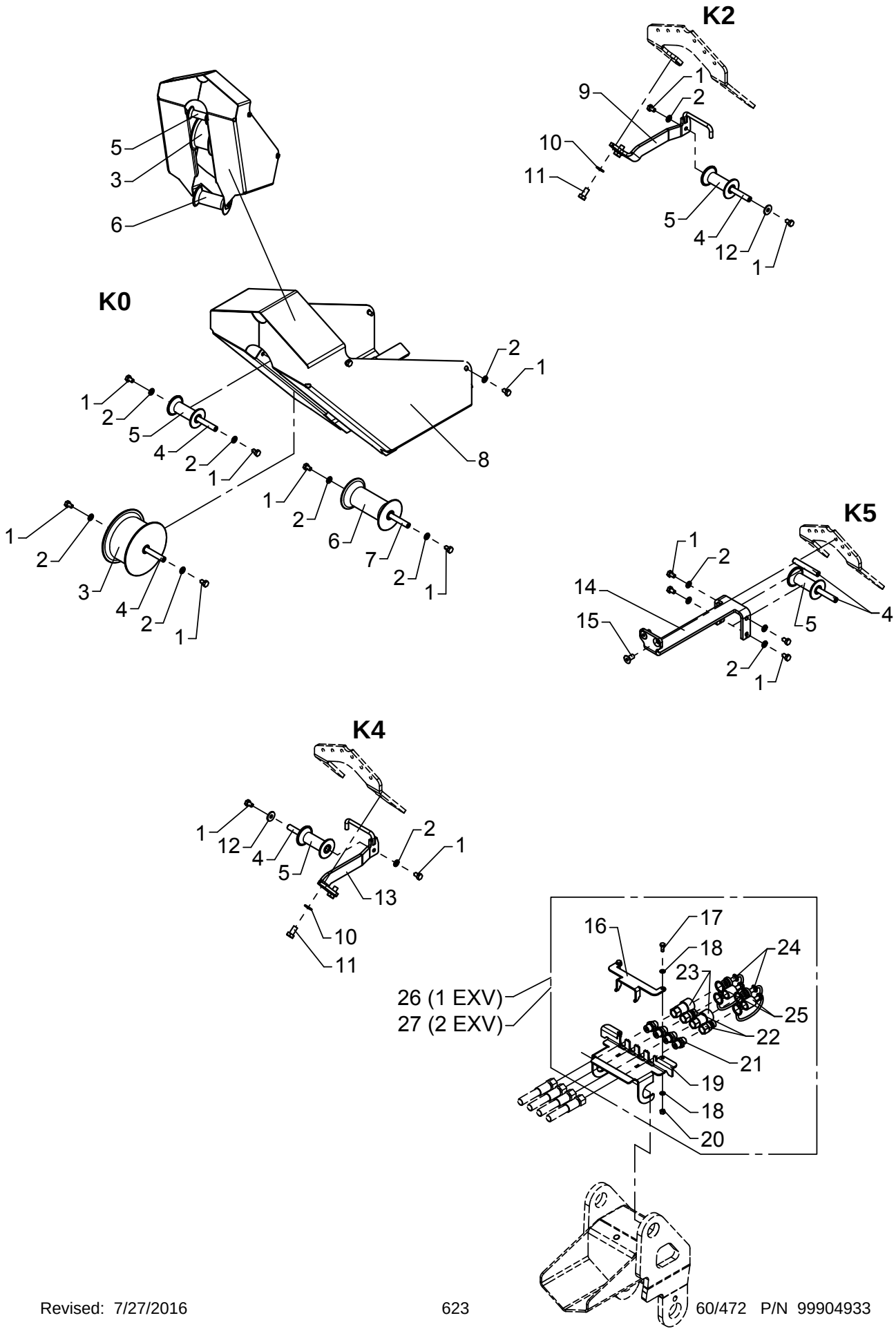

# Extra valves, OK5
# Internal hose routing

As from / To loader no.: 96 00 00 / 96 02 93
Created: 14.06.2006
Modified: 17.02.2012

| Item no. | Qty. | Part no. | Description | Remarks |
|---|---|---|---|---|
| 1 | 18 | 30130 | Set screw, stainless | M8 x 12 |
| 2 | 16 | 31147 | Washer, stainless | |
| 3 | 1 | 63404 | Roller | |
| 4 | 6 | 6301042 | Pin | |
| 5 | 4 | 63546 | Guide roller | |
| 6 | 1 | 63544 | Guide roller | |
| 7 | 1 | 6302883 | Pin | |
| 8 | 1 | 6301041 | Protection plate, jib | |
| 9 | 1 | 6301143 | Roller bracket, K2 | |
| 10 | 4 | 31177 | Washer | 10 mm |
| 11 | 4 | 30154 | Set screw | M10 x 20 |
| 12 | 2 | 31136 | Washer, stainless | 8 mm |
| 13 | 1 | 6301145 | Roller bracket - K4 | |
| 14 | 1 | 6301046 | Roller bracket - K5 | |
| 15 | 2 | 30545 | Countersunk screw | MK10 x 20 |
| 16 | 1 | 6301075 | Lock plate | |
| 17 | 2 | 30112 | Set screw, stainless | M6 x 16 |
| 18 | 4 | 32302 | Face washer, stainless | 6 mm |
| 19 | 1 | 6301073 | Bracket | |
| 20 | 2 | 30884 | Lock nut, stainless | M6 |
| 21 | 4 | 25253 | Connection | P-GEV 10 LR 3/8-WD |
| 22 | 2 | 60620 | Quick-release coupling,M | 3/8" |
| 23 | 2 | 60619 | Quick-release coupling,F | 3/8" |
| 24 | 2 | 60621 | Dust cap, M | 3/8" |
| 25 | 2 | 60622 | Dust cap, F | 3/8" |
| 26 | 1 | 6302730 | Kit, quick-release coupl.,1EXV | |
| 27 | 1 | 6302740 | Kit, quick-release coupl.,2EXV | |

# ODIN

An Oshkosh Corportation Company

Intern ref.:

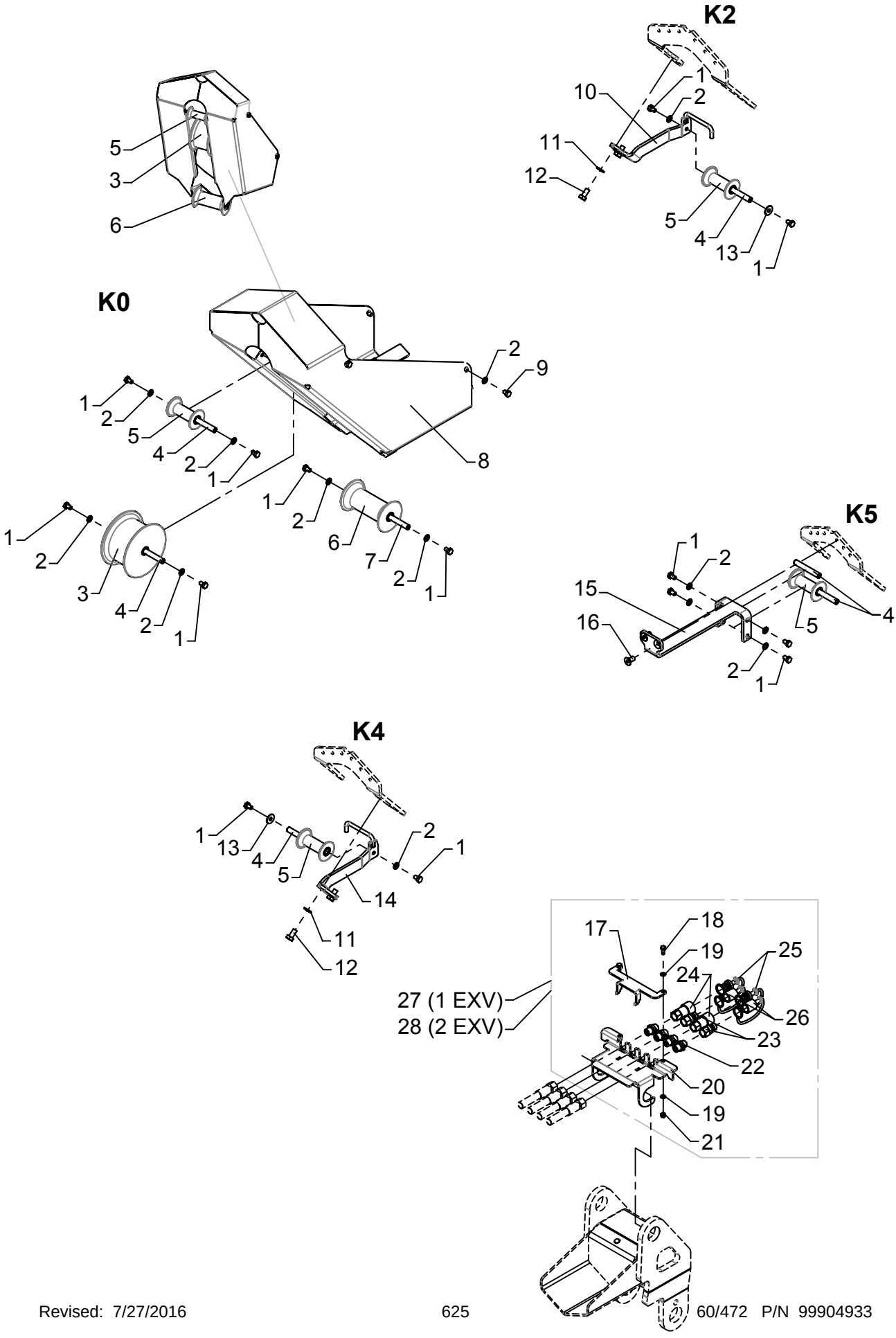

# Extra valves, OK5
# Internal hose routing

As from / To loader no.: 96 02 94 /
Created: 17.02.2012
Modified: 08.08.2012

| Item no. | Qty. | Part no. | Description | Remarks |
|---|---|---|---|---|
| 1 | 14 | 30130 | Set screw, stainless | M8 x 12 |
| 2 | 16 | 31147 | Face washer, 8 mm | |
| 3 | 1 | 63404 | Roller | |
| 4 | 6 | 6301042 | Pin | |
| 5 | 4 | 63546 | Guide roller | |
| 6 | 1 | 63544 | Guide roller | |
| 7 | 1 | 6302883 | Pin | |
| 8 | 1 | 6301041 | Protection plate, jib | |
| 9 | 4 | 30105 | Set screw, stainless | M8 x 10 |
| 10 | 1 | 6301143 | Roller bracket, K2 | |
| 11 | 4 | 31177 | Washer | 10 mm |
| 12 | 4 | 30154 | Set screw | M10 x 20 |
| 13 | 2 | 31136 | Washer, stainless | 8 mm |
| 14 | 1 | 6301145 | Roller bracket - K4 | |
| 15 | 1 | 6301046 | Roller bracket - K5 | |
| 16 | 2 | 30545 | Countersunk screw | MK10 x 20 |
| 17 | 1 | 6301075 | Lock plate | |
| 18 | 2 | 30112 | Set screw, stainless | M6 x 16 |
| 19 | 4 | 32302 | Face washer, stainless | 6 mm |
| 20 | 1 | 6301073 | Bracket | |
| 21 | 2 | 30884 | Lock nut, stainless | M6 |
| 22 | 4 | 25253 | Connection | P-GEV 10 LR 3/8-WD |
| 23 | 2 | 60620 | Quick-release coupling,M | 3/8" |
| 24 | 2 | 60619 | Quick-release coupling,F | 3/8" |
| 25 | 2 | 60621 | Dust cap, M | 3/8" |
| 26 | 2 | 60622 | Dust cap, F | 3/8" |
| 27 | 1 | 6302730 | Kit, quick-release coupl., 1 EXV | |
| 28 | 1 | 6302740 | Kit, quick-release coupl., 2 EXV | |

# ODIN

An Oshkosh Corportation Company

Intern ref.:

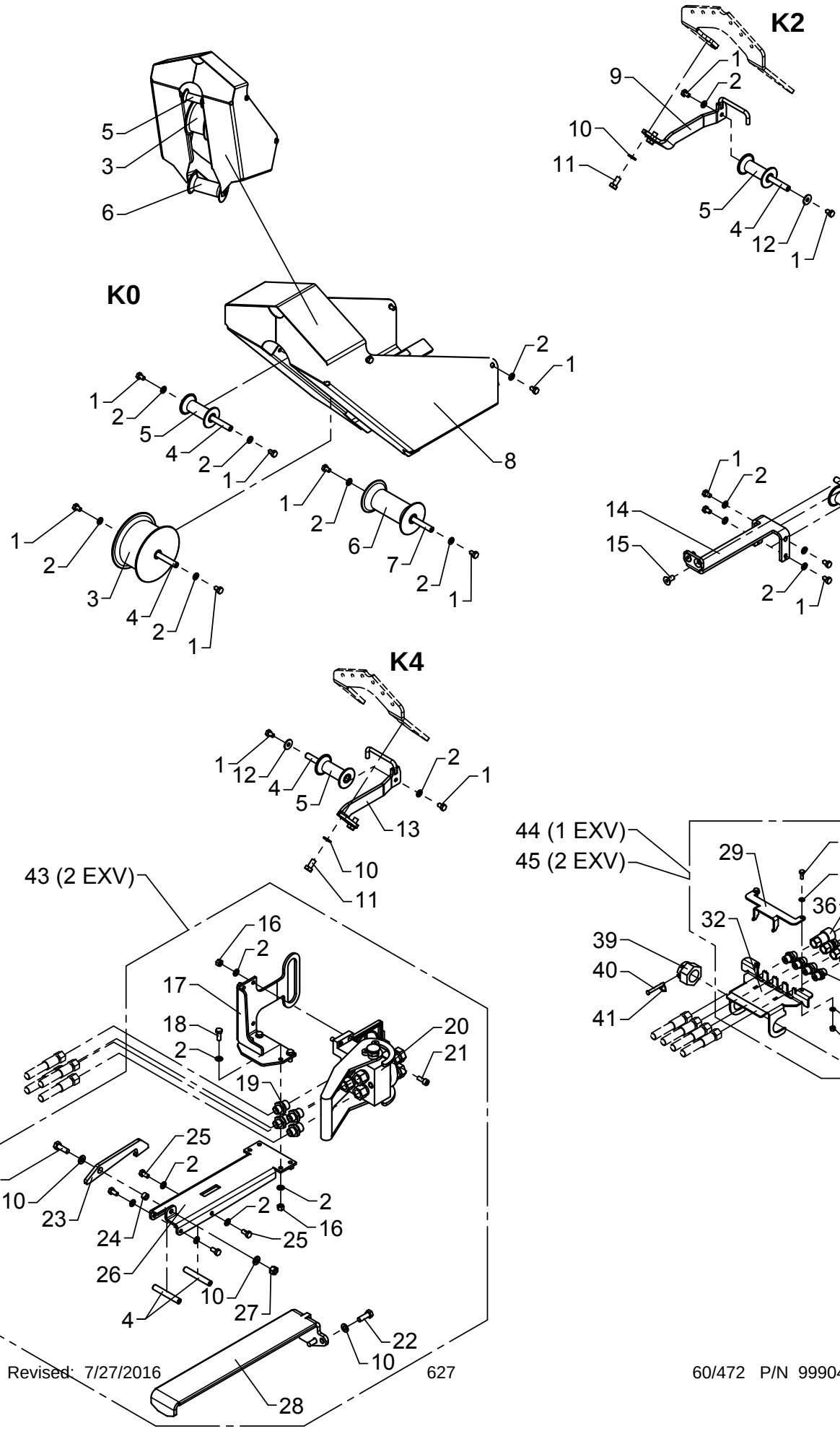

# Extra valves, K6
# Internal hose routing

As from / To loader no.: 96 00 00 / 96 02 93
Created: 14.06.2006
Modified: 17.02.2012

| Item no. | Qty. | Part no. | Description | Remarks |
|---|---|---|---|---|
| 1 | 18 | 30130 | Set screw, stainless | M8 x 12 |
| 2 | 32 | 31147 | Washer, stainless | |
| 3 | 1 | 63404 | Roller | |
| 4 | 8 | 6301042 | Pin | |
| 5 | 4 | 63546 | Guide roller | |
| 6 | 1 | 63544 | Guide roller | |
| 7 | 1 | 6302883 | Pin | |
| 8 | 1 | 6301041 | Protection plate, jib | |
| 9 | 1 | 6301143 | Roller bracket, K2 | |
| 10 | 10 | 31177 | Washer | 10 mm |
| 11 | 4 | 30154 | Set screw | M10 x 20 |
| 12 | 2 | 31136 | Washer, stainless | 8 mm |
| 13 | 1 | 6301145 | Roller bracket - K4 | |
| 14 | 1 | 6301047 | Roller bracket - K6 | |
| 15 | 2 | 30545 | Countersunk screw | MK10 x 20 |
| 16 | 8 | 30886 | Lock nut, stainless | M8 |
| 17 | 1 | 6301053 | Bracket for multi-coupling | |
| 18 | 4 | 30133 | Set screw, stainless | |
| 19 | 4 | 25108 | Connection | GES 12 LR 1/2-WD |
| 20 | 1 | 58430 | Multifaster coupling | 1/2" |
| 21 | 4 | 30438 | Screw | MC8 x 20 |
| 22 | 5 | 30156 | Set screw, stainless | M10 x 30 |
| 23 | 1 | 6301054 | Lock pawl | |
| 24 | 1 | 6300799 | Spacer | |
| 25 | 4 | 30131 | Set screw, stainless | M8 x 16 |
| 26 | 1 | 6301052 | Plate | |
| 27 | 1 | 30888 | Lock nut | |
| 28 | 1 | 6301051 | Guide | |
| 29 | 1 | 6301075 | Lock plate | |
| 30 | 2 | 30112 | Set screw, stainless | M6 x 16 |
| 31 | 4 | 32302 | Face washer, stainless | 6 mm |
| 32 | 1 | 6301074 | Bracket | |
| 33 | 2 | 30884 | Lock nut, stainless | M6 |
| 34 | 4 | 25253 | Connection | P-GEV 10 LR 3/8-WD |
| 35 | 2 | 60620 | Quick-release coupling,M | 3/8" |
| 36 | 2 | 60619 | Quick-release coupling,F | 3/8" |
| 37 | 2 | 60621 | Dust cap, M | 3/8" |
| 38 | 2 | 60622 | Dust cap, F | 3/8" |
| 39 | 1 | 30839 | Nut | M30 |
| 40 | 1 | 31279 | Cotter bolt | ø6 x 50 |

# ODIN

An Oshkosh Corportation Company

Intern ref.:

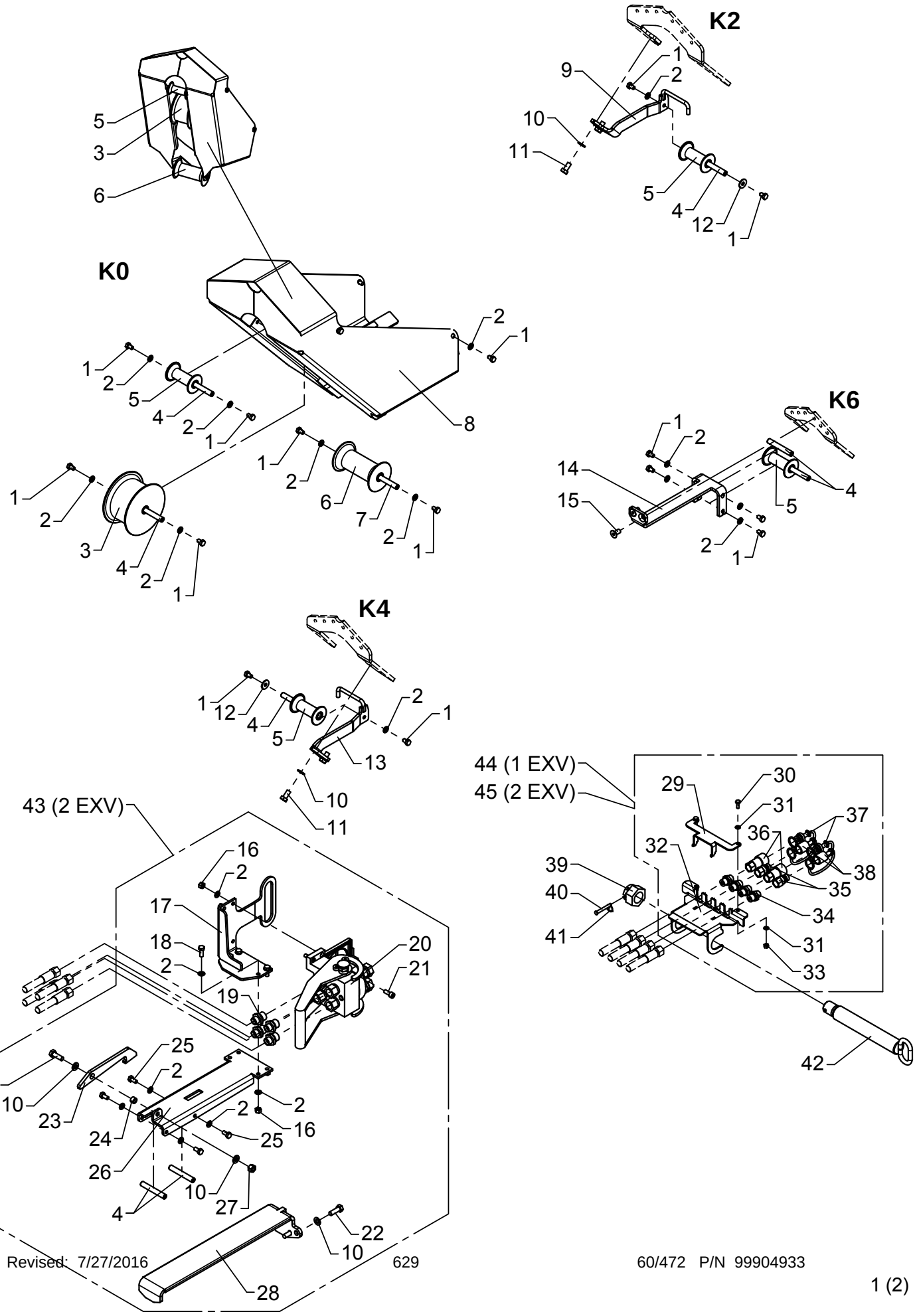

# Extra valves, K6
# Internal hose routing

As from / To loader no.: 96 00 00 / 96 02 93
Created: 14.06.2006
Modified: 17.02.2012

| Item no. | Qty. | Part no. | Description | Remarks |
|---|---|---|---|---|
| 41 | 1 | 33458 | Lock ring | |
| 42 | 1 | 6302748 | Pin for hook suspension | |
| 43 | 1 | 6300820 | Kit for multi-coupling, 2 EXV | |
| 44 | 1 | 6302730 | Kit, quick-release coupl.,1EXV | |
| 45 | 1 | 6302740 | Kit, quick-release coupl.,2EXV | |

# ODIN

An Oshkosh Corportation Company

Intern ref.:

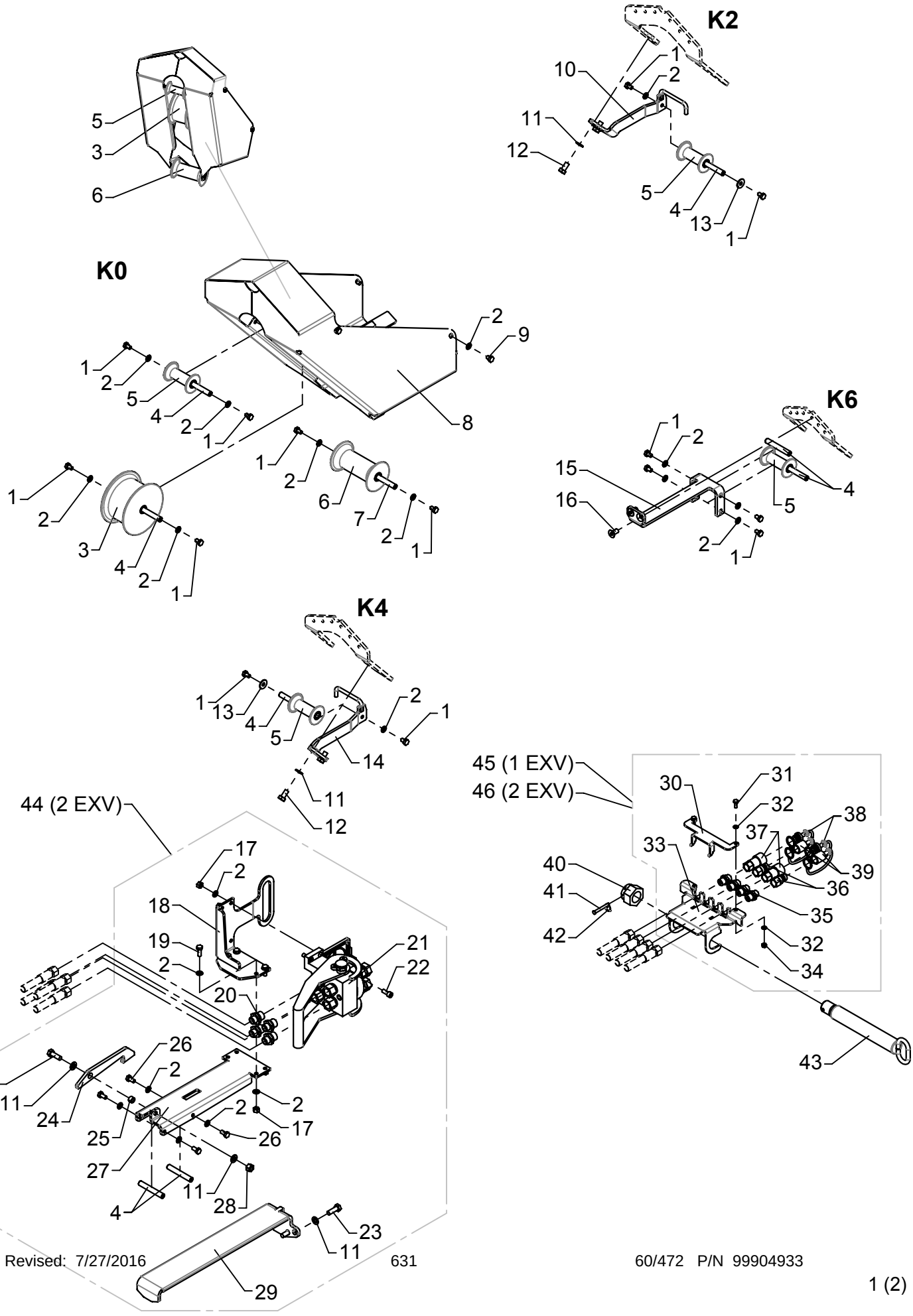

# Extra valves, K6
# Internal hose routing

As from / To loader no.: 96 02 94 /
Created: 17.02.2012
Modified: 08.08.2012

| Item no. | Qty. | Part no. | Description | Remarks |
|---|---|---|---|---|
| 1 | 14 | 30130 | Set screw, stainless | M8 x 12 |
| 2 | 32 | 31147 | Face washer, 8 mm | |
| 3 | 1 | 63404 | Roller | |
| 4 | 8 | 6301042 | Pin | |
| 5 | 4 | 63546 | Guide roller | |
| 6 | 1 | 63544 | Guide roller | |
| 7 | 1 | 6302883 | Pin | |
| 8 | 1 | 6301041 | Protection plate, jib | |
| 9 | 4 | 30105 | Set screw, stainless | M8 x 10 |
| 10 | 1 | 6301143 | Roller bracket, K2 | |
| 11 | 10 | 31177 | Washer | 10 mm |
| 12 | 4 | 30154 | Set screw | M10 x 20 |
| 13 | 2 | 31136 | Washer, stainless | 8 mm |
| 14 | 1 | 6301145 | Roller bracket - K4 | |
| 15 | 1 | 6301047 | Roller bracket - K6 | |
| 16 | 2 | 30545 | Countersunk screw | MK10 x 20 |
| 17 | 8 | 30886 | Lock nut, stainless | M8 |
| 18 | 1 | 6301053 | Bracket for multi-coupling | |
| 19 | 4 | 30133 | Set screw, stainless | |
| 20 | 4 | 25108 | Connection | GES 12 LR 1/2-WD |
| 21 | 1 | 58430 | Multifaster coupling | 1/2" |
| 22 | 4 | 30438 | Screw | MC8 x 20 |
| 23 | 5 | 30156 | Set screw, stainless | M10 x 30 |
| 24 | 1 | 6301054 | Lock pawl | |
| 25 | 1 | 6300799 | Spacer | |
| 26 | 4 | 30131 | Set screw, stainless | M8 x 16 |
| 27 | 1 | 6301052 | Plate | |
| 28 | 1 | 30888 | Lock nut | |
| 29 | 1 | 6301051 | Guide | |
| 30 | 1 | 6301075 | Lock plate | |
| 31 | 2 | 30112 | Set screw, stainless | M6 x 16 |
| 32 | 4 | 32302 | Face washer, stainless | 6 mm |
| 33 | 1 | 6301074 | Bracket | |
| 34 | 2 | 30884 | Lock nut, stainless | M6 |
| 35 | 4 | 25253 | Connection | P-GEV 10 LR 3/8-WD |
| 36 | 2 | 60620 | Quick-release coupling,M | 3/8" |
| 37 | 2 | 60619 | Quick-release coupling,F | 3/8" |
| 38 | 2 | 60621 | Dust cap, M | 3/8" |
| 39 | 2 | 60622 | Dust cap, F | 3/8" |

# ODIN

An Oshkosh Corportation Company

Intern ref.:

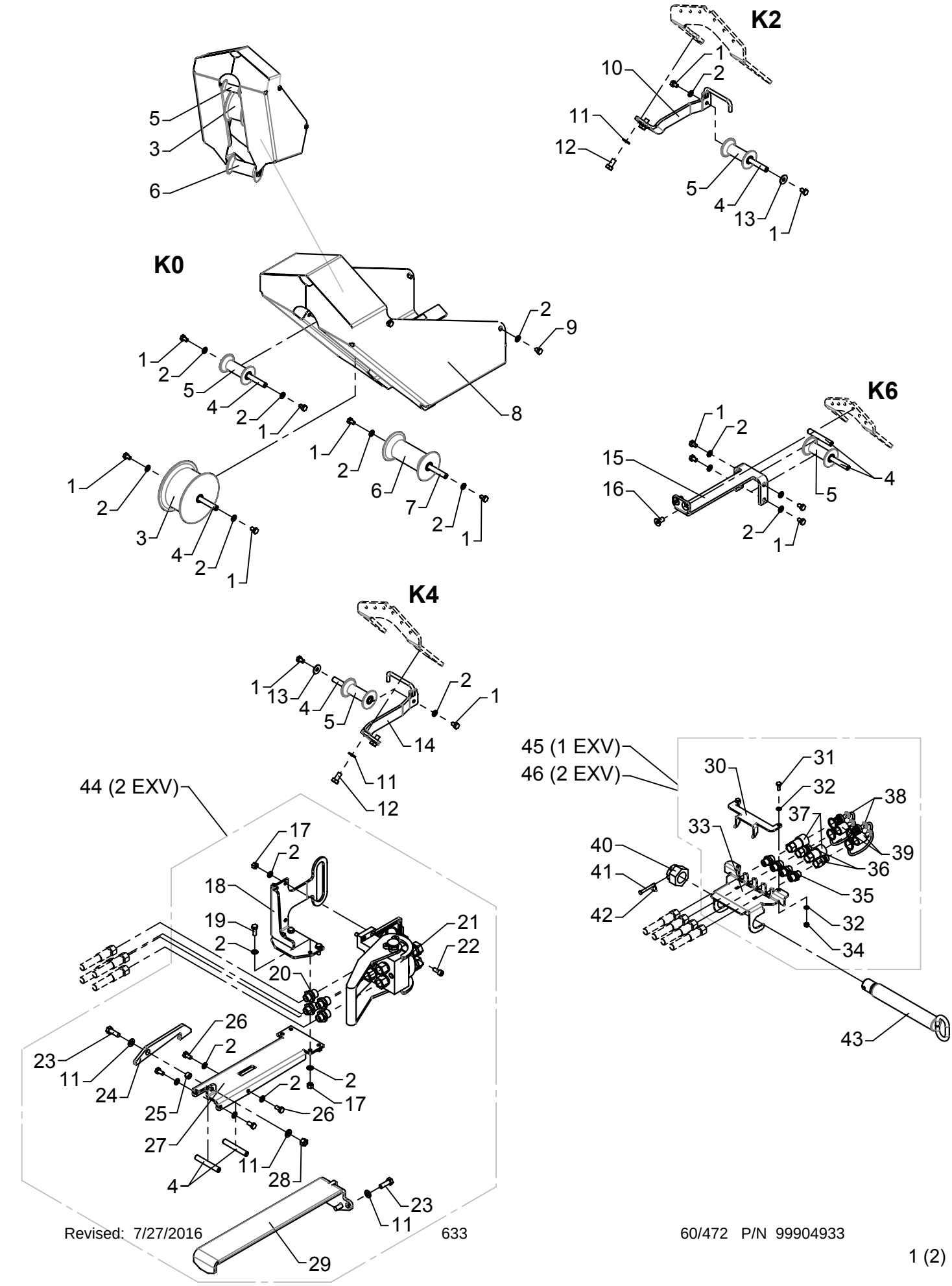

# Extra valves, K6
# Internal hose routing

As from / To loader no.: 96 02 94 /
Created: 17.02.2012
Modified: 08.08.2012

| Item no. | Qty. | Part no. | Description | Remarks |
|---|---|---|---|---|
| 40 | 1 | 30839 | Nut | M30 |
| 41 | 1 | 31279 | Cotter bolt | ø6 x 50 |
| 42 | 1 | 33458 | Lock ring | |
| 43 | 1 | 6302748 | Pin for hook suspension | |
| 44 | 1 | 6300820 | Kit for multi-coupling, 2 EXV | |
| 45 | 1 | 6302730 | Kit, quick-release coupl., 1 EXV | |
| 46 | 1 | 6302740 | Kit, quick-release coupl., 2 EXV | |

# ODIN

Intern ref.: 6301430

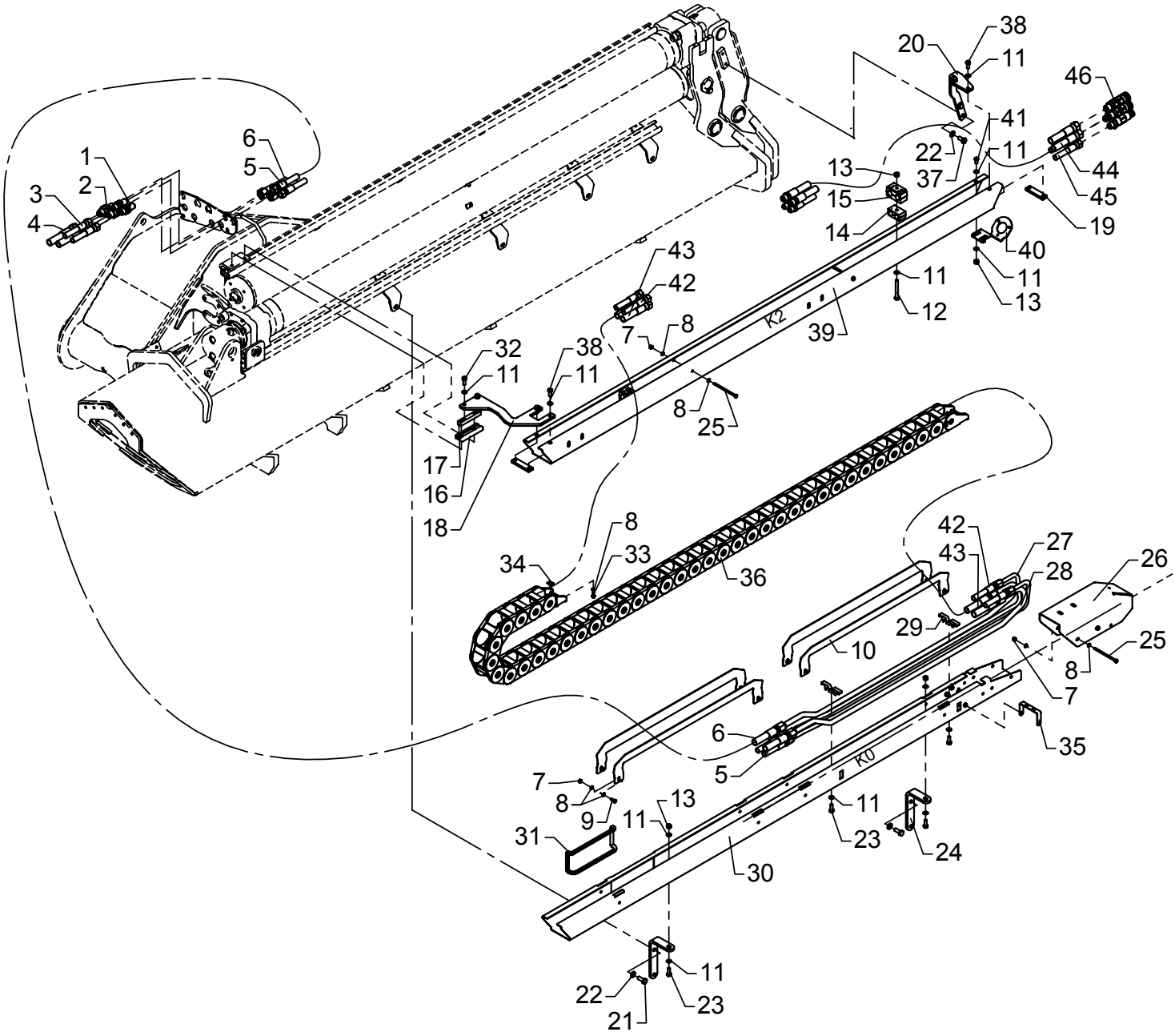

# Extra valves, OK2-2
# Hose guides

As from / To loader no.: 96 00 00 /
Created: 08.10.2004
Modified: 06.06.2006

| Item no. | Qty. | Part no. | Description | Remarks |
|---|---|---|---|---|
| 1 | 2 | 25824 | Bulkhead connection | WTX-WLNS 12 JIC |
| 2 | 2 | 25825 | Bulkhead connection | WTX-WLNS 14/16 JIC |
| 3 | 2 | 56055 | Hose | 3/8 x 5900mm L/L 16-12 JIC |
| 4 | 2 | 56056 | Hose | 1/2 x 5900mm L/L 16-16 JIC |
| 5 | 2 | 56116 | Hose | 3/8 x 2500 S/O JIC |
| 6 | 2 | 56267 | Hose | 1/2 x 2700 S/O JIC |
| 7 | 14 | 30884 | Lock nut, stainless | M6 |
| 8 | 32 | 32302 | Face washer, stainless | 6 mm |
| 9 | 10 | 30112 | Set screw, stainless | M6 x 16 |
| 10 | 4 | 6301253 | Guide plate | |
| 11 | 18 | 31147 | Washer, stainless | 8 mm |
| 12 | 2 | 30142 | Steel bolt, stainless | M8 x 70 |
| 13 | 6 | 30886 | Lock nut, stainless | M8 |
| 14 | 2 | 31833 | Clamp | 2 x 18 mm |
| 15 | 2 | 31845 | Clamp, rubber | |
| 16 | 1 | 63686 | Guide shoe | |
| 17 | 1 | 6300338 | Spacer | |
| 18 | 1 | 6301258 | Susp. K2-hose guide, rear | |
| 19 | 2 | 6301239 | Threaded disc 20x 8x80, 2xM8 | |
| 20 | 1 | 6301222 | Susp. K2-hose guide, front | |
| 21 | 2 | 30155 | Set screw | M10 x 25 |
| 22 | 4 | 31177 | Washer | 10 mm |
| 23 | 4 | 30133 | Set screw, stainless | M8 x 22 |
| 24 | 2 | 6301243 | Susp. K0-hose guide, K2-K4 | |
| 25 | 4 | 32112 | Steel bolt stainless | M6 x 100 |
| 26 | 1 | 6301219 | End protection plate | |
| 27 | 2 | 6301242 | Pipe JIC ø12 short exv. | |
| 28 | 2 | 6301241 | Pipe JIC ø16 short exv. | |
| 29 | 2 | 6301218 | Clamp | |
| 30 | 1 | 6301213 | Hose guide, K0 | |
| 31 | 1 | 46586 | Rubber protection | |
| 32 | 2 | 30438 | Screw | MC8 x 20 |
| 33 | 4 | 30111 | Set screw, stainless | M6 x 12 |
| 34 | 4 | 32122 | Nut, stainless | |
| 35 | 1 | 6301217 | Chain fittings | |
| 36 | 1 | 27893 | Nylon drag chain | |
| 37 | 2 | 31517 | Set screw, stainless | M10 x 20 |
| 38 | 4 | 30132 | Set screw, stainless | M8 x 20 |
| 39 | 1 | 6301214 | Hose guide, K2 | |
| 40 | 1 | 6301048 | Bracket for 13 poles plug box | |

# ODIN

Intern ref.: 6301430

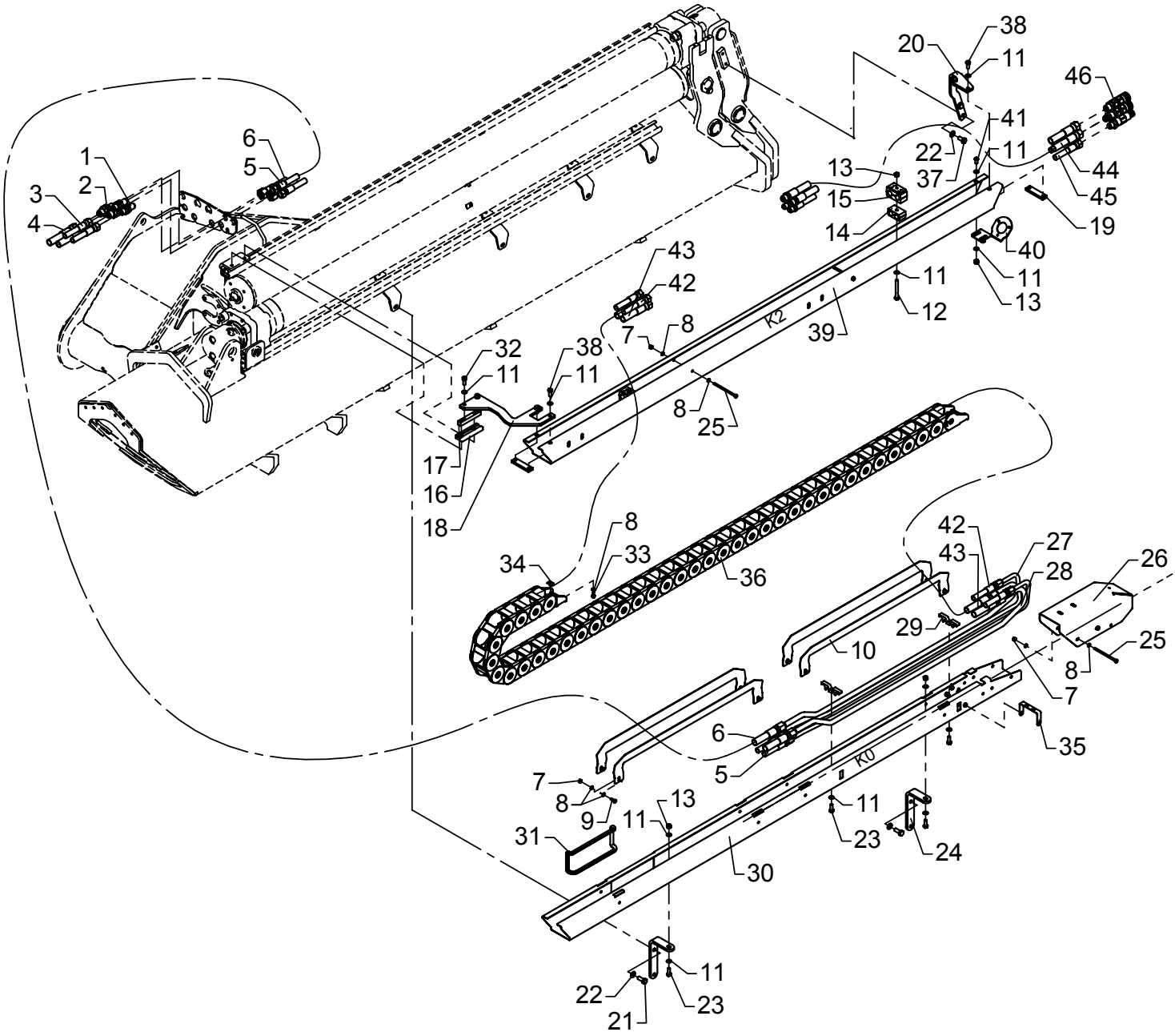

# Extra valves, OK2-2
# Hose guides

As from / To loader no.: 96 00 00 /
Created: 08.10.2004
Modified: 06.06.2006

| Item no. | Qty. | Part no. | Description | Remarks |
|---|---|---|---|---|
| 41 | 2 | 30925 | Round-head screw | M8 x 16 |
| 42 | 2 | 56113 | Hose | 3/8 x 3750 S/O JIC |
| 43 | 2 | 56112 | Hose | 1/2 x 3760 S/O JIC |
| 44 | 2 | 56123 | Hose | 1/2 x 1150 S/O JIC |
| 45 | 2 | 56124 | Hose | 3/8 x 1150 S/O JIC |
| 46 | 1 | 6301240 | Quick-release kit, O&T | |

# ODIN

Intern ref.: 6301440

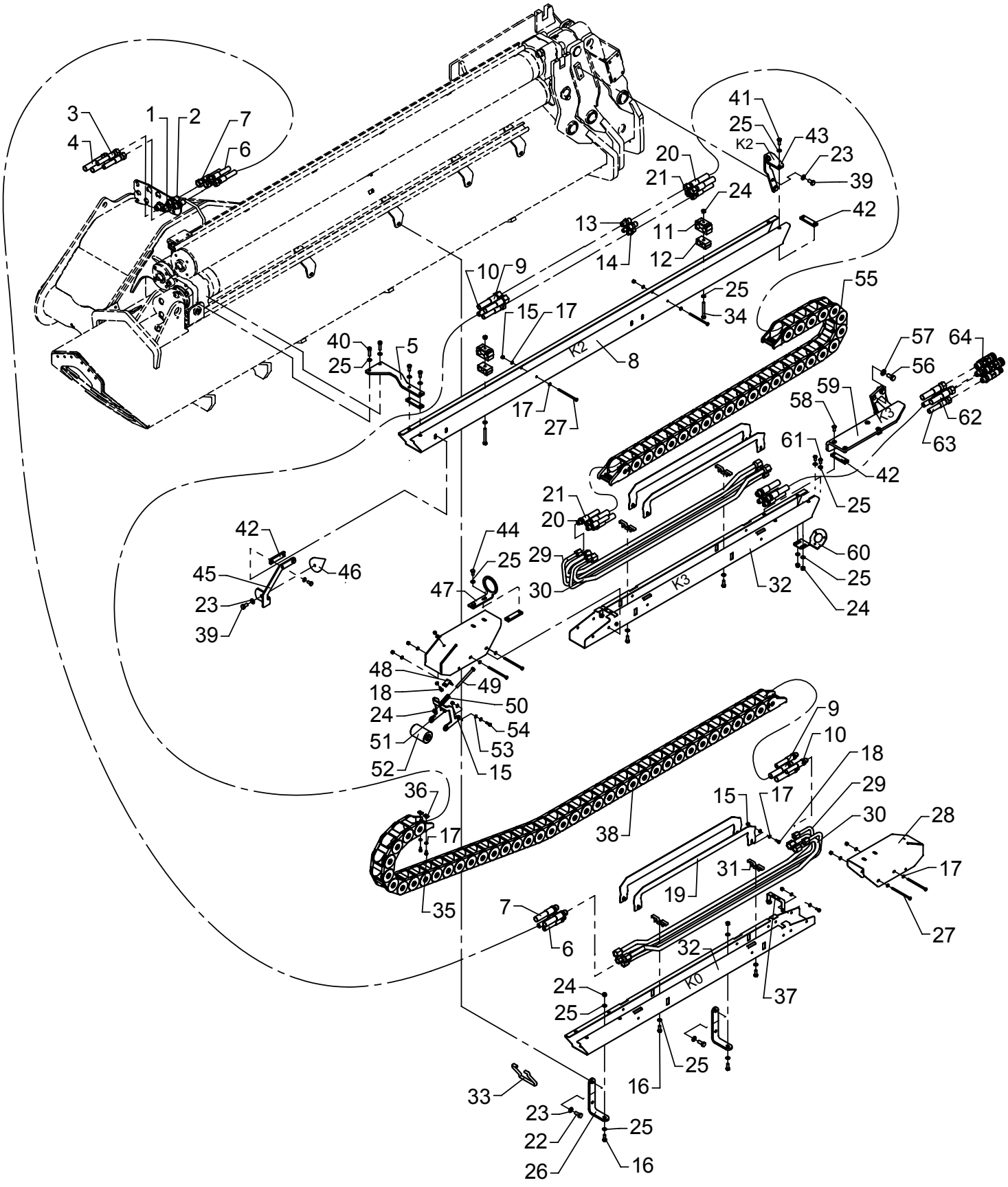

# Extra valves, OK3-2
# Hose guides

As from / To loader no.: 96 00 00 /
Created: 11.10.2004
Modified: 06.06.2006

| Item no. | Qty. | Part no. | Description | Remarks |
|---|---|---|---|---|
| 1 | 2 | 25825 | Bulkhead connection | WTX-WLNS 14/16 JIC |
| 2 | 2 | 25824 | Bulkhead connection | WTX-WLNS 12 JIC |
| 3 | 2 | 56055 | Hose | 3/8 x 5900mm L/L 16-12 JIC |
| 4 | 2 | 56056 | Hose | 1/2 x 5900mm L/L 16-16 JIC |
| 5 | 1 | 6301223 | Suspension K2 hose guide, rear | |
| 6 | 2 | 56116 | Hose | 3/8 x 2500mm S/O JIC |
| 7 | 2 | 56267 | Hose | 1/2 x 2700 S/O JIC |
| 8 | 1 | 6301214 | Hose guide, K2 | |
| 9 | 2 | 56112 | Hose | 1/2 x 3760 S/O JIC |
| 10 | 2 | 56113 | Hose | 3/8 x 3750 S/O JIC |
| 11 | 2 | 31845 | Clamp, rubber | |
| 12 | 2 | 31833 | Clamp | 2 x 18 mm |
| 13 | 2 | 26281 | Union nut | HTXS14 |
| 14 | 2 | 25843 | Double connection | HTXS12 |
| 15 | 19 | 30884 | Lock nut, stainless | M6 |
| 16 | 6 | 30133 | Set screw, stainless | M8 x 22 |
| 17 | 42 | 32302 | Face washer, stainless | 6 mm |
| 18 | 11 | 30112 | Set screw, stainless | M6 x 16 |
| 19 | 4 | 6301253 | Guide plate | |
| 20 | 2 | 56106 | Hose | 1/2 x 2900 S/O JIC |
| 21 | 2 | 56107 | Hose | 3/8 x 2890 S/O JIC |
| 22 | 2 | 30155 | Set screw | M10 x 25 |
| 23 | 5 | 31177 | Washer | 10 mm |
| 24 | 7 | 30886 | Lock nut, stainless | M8 |
| 25 | 24 | 31147 | Washer, stainless | 8 mm |
| 26 | 2 | 6301243 | Susp. K0-hose guide, K2-K4 | |
| 27 | 6 | 32112 | Steel bolt stainless | M6 x 100 |
| 28 | 2 | 6301219 | End protection plate | |
| 29 | 4 | 6301242 | Pipe JIC ø12 short exv. | |
| 30 | 4 | 6301241 | Pipe JIC ø16 short exv. | |
| 31 | 4 | 6301218 | Clamp | |
| 32 | 2 | 6301215 | Hose guide, K3+K5 | |
| 33 | 1 | 46586 | Rubber protection | |
| 34 | 2 | 30142 | Steel bolt, stainless | M8 x 70 |
| 35 | 4 | 30111 | Set screw, stainless | M6 x 12 |
| 36 | 4 | 32122 | Nut, stainless | |
| 37 | 2 | 6301217 | Chain fittings | |
| 38 | 1 | 27893 | Nylon drag chain | |
| 39 | 3 | 31517 | Set screw, stainless | M10 x 20 |
| 40 | 2 | 30442 | Screw | MC8 x 30 |

# ODIN

Intern ref.: 6301440

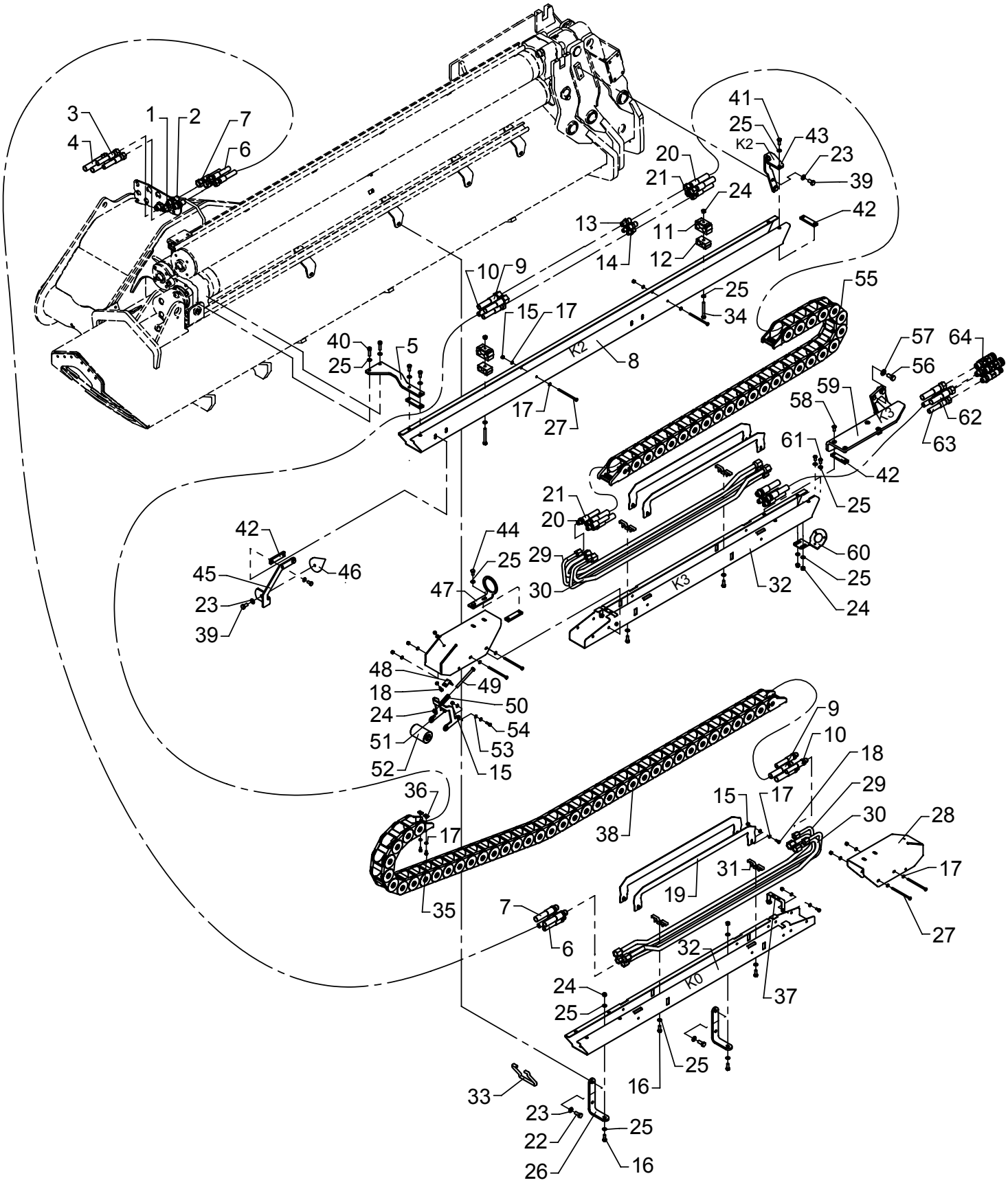

# Extra valves, OK3-2
# Hose guides

As from / To loader no.: 96 00 00 /
Created: 11.10.2004
Modified: 06.06.2006

| Item no. | Qty. | Part no. | Description | Remarks |
|---|---|---|---|---|
| 41 | 4 | 30132 | Set screw, stainless | M8 x 20 |
| 42 | 6 | 6301239 | Threaded disc 20x 8x80, 2xM8 | |
| 43 | 1 | 6301222 | Susp. K2-hose guide, front | |
| 44 | 4 | 30131 | Set screw, stainless | M8 x 16 |
| 45 | 1 | 6301251 | Guide, upper part | |
| 46 | 1 | 63540 | Cone | |
| 47 | 1 | 6301252 | Guide, lower part | |
| 48 | 1 | 6232984 | Elbow | |
| 49 | 1 | 30145 | Steel bolt, stainless | M8 x 100 |
| 50 | 1 | 33377 | Compression spring | 6884924 |
| 51 | 1 | 6301225 | Roller bracket | |
| 52 | 1 | 63537 | Guide roller | |
| 53 | 2 | 64286 | Washer | 6 mm |
| 54 | 2 | 30113 | Set screw, stainless | M6 x 20 |
| 55 | 1 | 27892 | Nylon drag chain | |
| 56 | 4 | 30176 | Set screw | M12 x 25 |
| 57 | 4 | 31131 | Washer | 12 mm |
| 58 | 4 | 30957 | Countersunk screw | MK8 x 20 |
| 59 | 1 | 6301238 | Bracket K4, sl | |
| 60 | 1 | 6301048 | Bracket for 13 poles plug box | |
| 61 | 2 | 30925 | Round-head screw | M8 x 16 |
| 62 | 2 | 56121 | Hose | 1/2 x 405 S/O JIC |
| 63 | 2 | 56122 | Hose | 3/8 x 380 S/O JIC |
| 64 | 1 | 6301240 | Quick-release kit, O&T | |

# ODIN

Intern ref.: 6301450

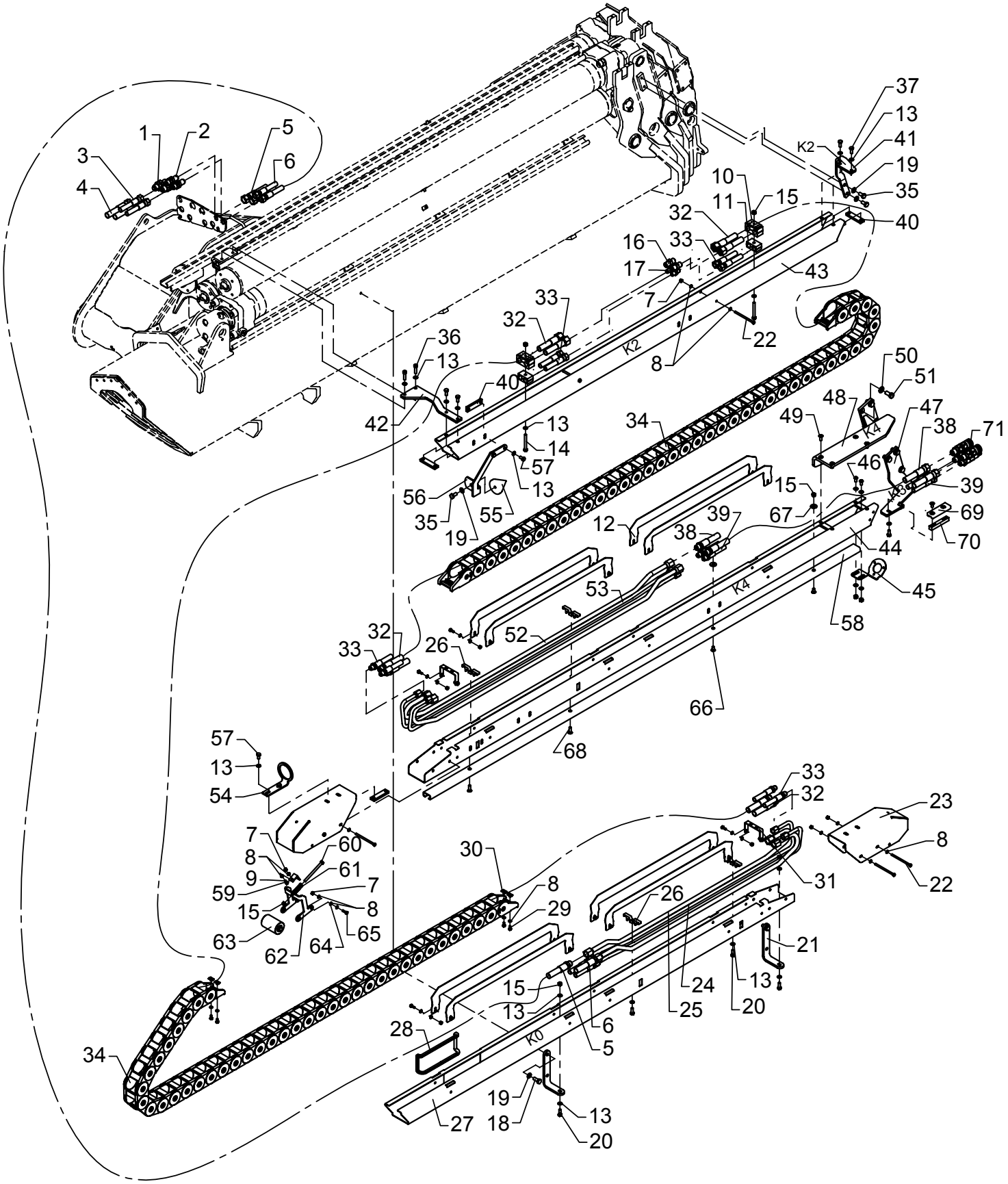

# Extra valves, OK4-2
# Hose guides

As from / To loader no.: 96 00 00 /
Created: 12.10.2004
Modified: 06.06.2006

| Item no. | Qty. | Part no. | Description | Remarks |
|---|---|---|---|---|
| 1 | 2 | 25825 | Bulkhead connection | WTX-WLNS 14/16 JIC |
| 2 | 2 | 25824 | Bulkhead connection | WTX-WLNS 12 JIC |
| 3 | 2 | 56055 | Hose | 3/8 x 5900mm L/L 16-12 JIC |
| 4 | 2 | 56056 | Hose | 1/2 x 5900mm L/L 16-16 JIC |
| 5 | 2 | 56267 | Hose | 1/2 x 2700 S/O JIC |
| 6 | 2 | 56116 | Hose | 3/8 x 2500 S/O JIC |
| 7 | 25 | 30884 | Lock nut, stainless | M6 |
| 8 | 54 | 32302 | Face washer, stainless | 6 mm |
| 9 | 17 | 30112 | Set screw, stainless | M6 x 16 |
| 10 | 2 | 31845 | Clamp, rubber | |
| 11 | 2 | 31833 | Clamp | 2 x 18 mm |
| 12 | 8 | 6301253 | Guide plate | |
| 13 | 24 | 31147 | Washer, stainless | 8 mm |
| 14 | 2 | 30142 | Steel bolt, stainless | M8 x 70 |
| 15 | 9 | 30886 | Lock nut, stainless | M8 |
| 16 | 2 | 26281 | Union nut | HTXS14 |
| 17 | 2 | 25843 | Double connection | HTXS12 |
| 18 | 2 | 30155 | Set screw | M10 x 25 |
| 19 | 5 | 31177 | Washer | 10 mm |
| 20 | 4 | 30133 | Set screw, stainless | M8 x 22 |
| 21 | 2 | 6301243 | Susp. K0-hose guide, K2-K4 | |
| 22 | 6 | 32112 | Steel bolt stainless | M6 x 100 |
| 23 | 2 | 6301219 | End protection plate | |
| 24 | 2 | 6301242 | Pipe JIC ø12 short exv. | |
| 25 | 2 | 6301241 | Pipe JIC ø16 short exv. | |
| 26 | 4 | 6301218 | Clamp | |
| 27 | 1 | 6301213 | Hose guide, K0 | |
| 28 | 1 | 46586 | Rubber protection | |
| 29 | 4 | 30111 | Set screw, stainless | M6 x 12 |
| 30 | 4 | 32122 | Nut, stainless | |
| 31 | 2 | 6301217 | Chain fittings | |
| 32 | 4 | 56112 | Hose | 1/2 x 3760 S/O JIC |
| 33 | 4 | 56113 | Hose | 3/8 x 3750 S/O JIC |
| 34 | 2 | 27893 | Nylon drag chain | |
| 35 | 3 | 31517 | Set screw, stainless | M10 x 20 |
| 36 | 2 | 30442 | Screw | MC8 x 30 |
| 37 | 6 | 30132 | Set screw, stainless | M8 x 20 |
| 38 | 2 | 56123 | Hose | 1/2 x 1150 S/O JIC |
| 39 | 2 | 56124 | Hose | 3/8 x 1150 S/O JIC |
| 40 | 6 | 6301239 | Threaded disc 20x 8x80, 2xM8 | |

# ODIN

Intern ref.: 6301450

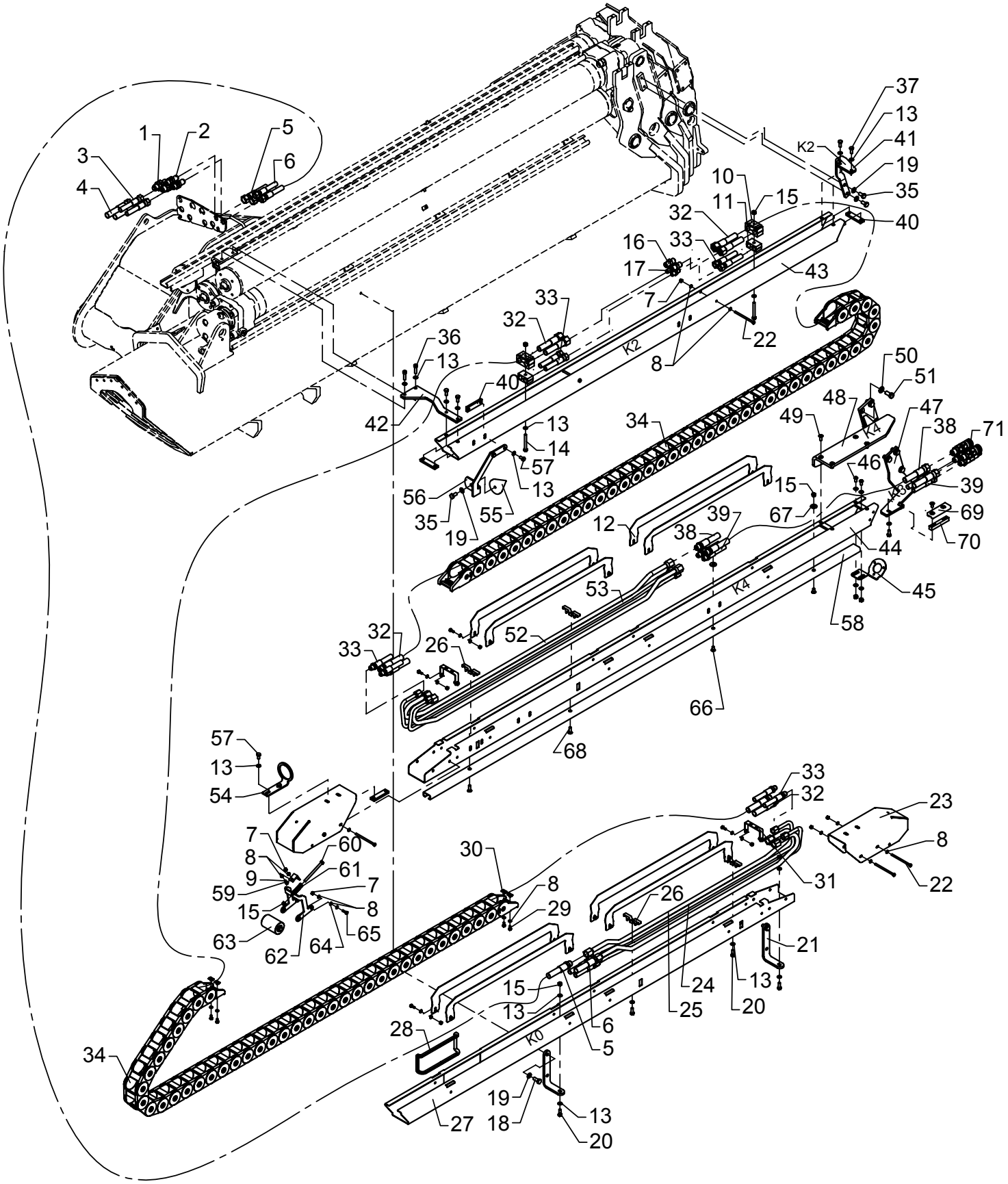

# Extra valves, OK4-2
# Hose guides

As from / To loader no.: 96 00 00 /
Created: 12.10.2004
Modified: 06.06.2006

| Item no. | Qty. | Part no. | Description | Remarks |
|---|---|---|---|---|
| 41 | 1 | 6301222 | Susp. K2-hose guide, front | |
| 42 | 1 | 6301223 | Suspension K2 hose guide, rear | |
| 43 | 1 | 6301214 | Hose guide, K2 | |
| 44 | 1 | 6301216 | Hose guide, K4+K6 | |
| 45 | 1 | 6301048 | Bracket for 13 poles plug box | |
| 46 | 2 | 30925 | Round-head screw | M8 x 16 |
| 47 | 1 | 6301233 | Bracket for slide block - K3 | |
| 48 | 1 | 6301238 | Bracket K4, sl | |
| 49 | 4 | 30957 | Countersunk screw | MK8 x 20 |
| 50 | 7 | 31131 | Washer | 12 mm |
| 51 | 7 | 30176 | Set screw | M12 x 25 |
| 52 | 2 | 6301211 | Pipe JIC ø16 long exv. | |
| 53 | 2 | 6301212 | Pipe JIC ø12 long exv | |
| 54 | 1 | 6301252 | Guide, lower part | |
| 55 | 1 | 63540 | Cone | |
| 56 | 1 | 6301251 | Guide, upper part | |
| 57 | 4 | 30131 | Set screw, stainless | M8 x 16 |
| 58 | 1 | 6301224 | C-profile 20x40, L=2350 | |
| 59 | 1 | 6232984 | Elbow | |
| 60 | 1 | 30145 | Steel bolt, stainless | M8 x 100 |
| 61 | 1 | 33377 | Compression spring | 6884924 |
| 62 | 1 | 6301225 | Roller bracket | |
| 63 | 1 | 63537 | Guide roller | |
| 64 | 2 | 64286 | Washer | 6 mm |
| 65 | 2 | 30113 | Set screw, stainless | M6 x 20 |
| 66 | 4 | 30543 | Countersunk screw | MK8 x 16 |
| 67 | 2 | 31136 | Washer, stainless | 24 x 8,4 x 2 |
| 68 | 2 | 31964 | Counter sunk screw, stainless | MK8 x 25 |
| 69 | 1 | 63686 | Guide shoe | |
| 70 | 1 | 6300338 | Spacer | |
| 71 | 1 | 6301240 | Quick-release kit, O&T | |

# ODIN

Intern ref.: 6301460

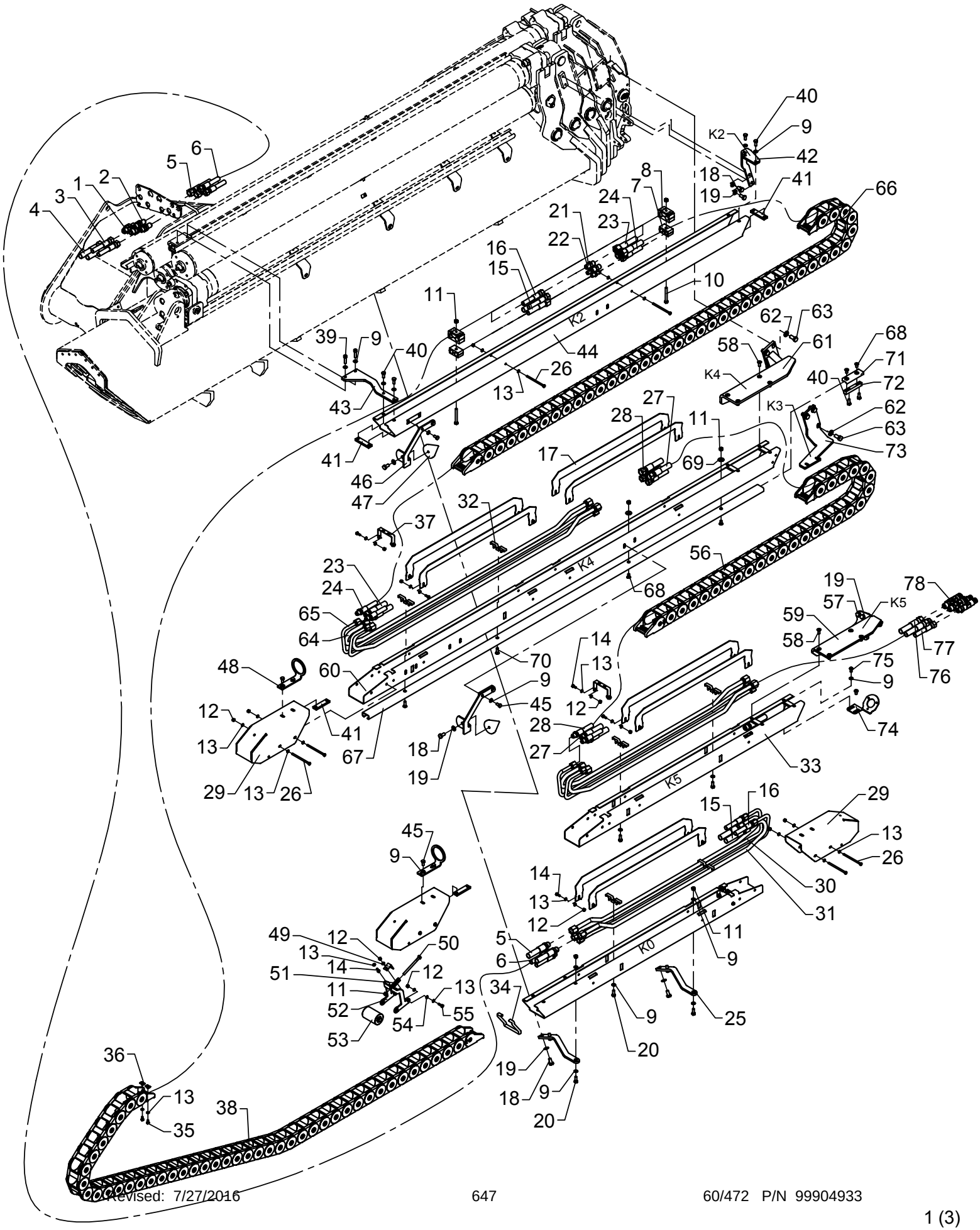

# Extra valves. OK5-2
# Hose guides

As from / To loader no.: 96 00 00
Created: 18.10.2004
Modified: 06.06.2006

| Item no. | Qty. | Part no. | Description | Remarks |
|---|---|---|---|---|
| 1 | 2 | 25825 | Bulkhead connection | WTX-WLNS 14/16 JIC |
| 2 | 2 | 25824 | Bulkhead connection | WTX-WLNS 12 JIC |
| 3 | 2 | 56055 | Hose | 3/8 x 5900 mm L/L 16-12 JIC |
| 4 | 2 | 56056 | Hose | 1/2 x 5900 mm L/L 16-16 JIC |
| 5 | 2 | 56267 | Hose | 1/2 x 2500 S/L JIC |
| 6 | 2 | 56116 | Hose | 3/8 x 2350 S/L JIC |
| 7 | 2 | 31833 | Clamp | 2 x 18 mm |
| 8 | 2 | 31845 | Clamp, rubber | |
| 9 | 30 | 31147 | Washer, stainless | 8 mm |
| 10 | 2 | 30142 | Steel bolt, stainless | M8 x 70 |
| 11 | 9 | 30886 | Lock nut, stainless | M8 |
| 12 | 27 | 30884 | Lock nut, stainless | M6 |
| 13 | 58 | 32302 | Face washer, stainless | 6 mm |
| 14 | 17 | 30112 | Set screw, stainless | M6 x 16 |
| 15 | 2 | 56114 | Hose | 1/2 x 4095 S/O JIC |
| 16 | 2 | 56115 | Hose | 3/8 x 4085 S/O JIC |
| 17 | 8 | 6301253 | Guide plate | |
| 18 | 8 | 31517 | Set screw, stainless | M10 x 20 |
| 19 | 12 | 31177 | Washer | 10 mm |
| 20 | 6 | 30133 | Set screw, stainless | M8 x 22 |
| 21 | 2 | 26281 | Union nut | HTXS14 |
| 22 | 2 | 25843 | Double connection | HTXS12 |
| 23 | 2 | 56112 | Hose | 1/2 x 3760 S/O JIC |
| 24 | 2 | 56113 | Hose | 3/8 x 3750 S/O JIC |
| 25 | 2 | 6301244 | Susp. K0 hose guide, ODIN K5-6 | |
| 26 | 8 | 32112 | Steel bolt stainless | M6 x 100 |
| 27 | 2 | 56106 | Hose | 1/2 x 2900 S/O JIC |
| 28 | 2 | 56107 | Hose | 3/8 x 2890 S/O JIC |
| 29 | 3 | 6301219 | End protection plate | |
| 30 | 4 | 6301242 | Pipe JIC ø12 short exv. | |
| 31 | 4 | 6301241 | Pipe JIC ø16 short exv. | |
| 32 | 6 | 6301218 | Clamp | |
| 33 | 2 | 6301215 | Hose guide, K3+K5 | |
| 34 | 1 | 46586 | Rubber protection | |
| 35 | 4 | 30111 | Set screw, stainless | M6 x 12 |
| 36 | 4 | 32122 | Nut, stainless | |
| 37 | 3 | 6301217 | Chain fittings | |
| 38 | 1 | 28587 | Nylon drag chain (43 elts) | |
| 39 | 2 | 30442 | Screw | MC8 x 30 |
| 40 | 6 | 30132 | Set screw, stainless | M8 x 20 |

# ODIN

Intern ref.: 6301460

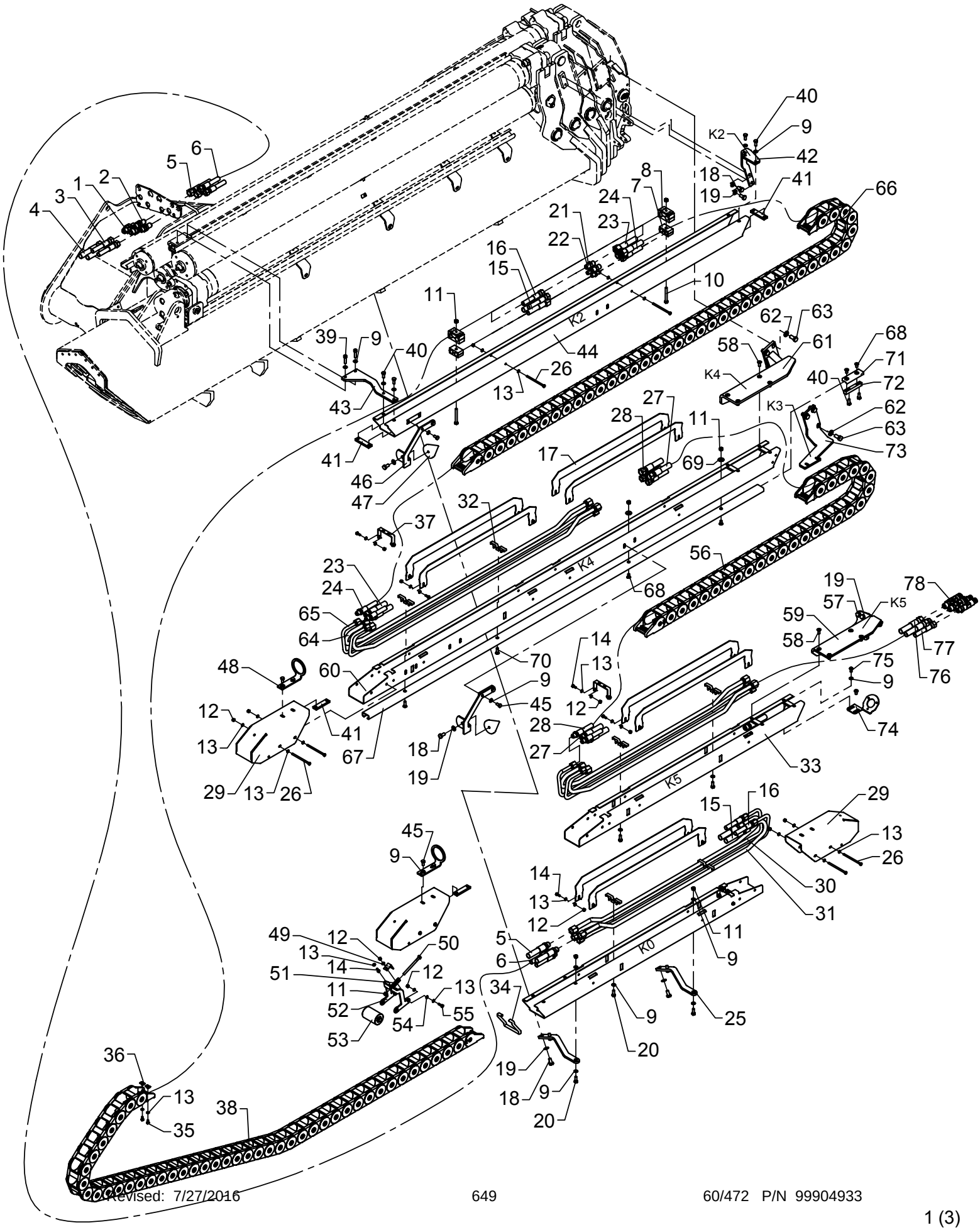

# Extra valves. OK5-2
# Hose guides

As from / To loader no.: 96 00 00
Created: 18.10.2004
Modified: 06.06.2006

| Item no. | Qty. | Part no. | Description | Remarks |
|---|---|---|---|---|
| 41 | 10 | 6301239 | Threaded disc 20x 8x80, 2xM8 | |
| 42 | 1 | 6301222 | Susp. K2-hose guide, front | |
| 43 | 1 | 6301223 | Suspension K2 hose guide, rear | |
| 44 | 1 | 6301214 | Hose guide, K2 | |
| 45 | 8 | 30131 | Set screw, stainless | M8 x 16 |
| 46 | 2 | 6301251 | Guide, upper part | |
| 47 | 2 | 63540 | Cone | |
| 48 | 2 | 6301252 | Guide, lower part | |
| 49 | 1 | 6232984 | Elbow | |
| 50 | 1 | 30145 | Steel bolt, stainless | M8 x 100 |
| 51 | 1 | 33377 | Compression spring | 6884924 |
| 52 | 1 | 6301225 | Roller bracket | |
| 53 | 1 | 63537 | Guide roller | |
| 54 | 2 | 64286 | Washer | 6 mm |
| 55 | 2 | 30113 | Set screw, stainless | M6 x 20 |
| 56 | 1 | 27892 | Nylon drag chain | |
| 57 | 4 | 30155 | Set screw | M10 x 25 |
| 58 | 8 | 30957 | Countersunk screw | MK8 x 20 |
| 59 | 1 | 6301245 | Bracket K5 | |
| 60 | 1 | 6301216 | Hose guide, K4+K6 | |
| 61 | 1 | 6301238 | Bracket K4, sl | |
| 62 | 7 | 31131 | Washer | 12 mm |
| 63 | 7 | 30176 | Set screw | M12 x 25 |
| 64 | 2 | 6301211 | Pipe JIC ø16 long exv. | |
| 65 | 2 | 6301212 | Pipe JIC ø12 long exv | |
| 66 | 1 | 27893 | Nylon drag chain | |
| 67 | 1 | 6301224 | C-profile 20x40, L=2350 | |
| 68 | 4 | 30543 | Countersunk screw | MK8 x 16 |
| 69 | 2 | 31136 | Washer, stainless | 24 x 8,4 x 2 |
| 70 | 2 | 31964 | Counter sunk screw, stainless | MK8 x 25 |
| 71 | 1 | 63686 | Guide shoe | |
| 72 | 1 | 6300338 | Spacer | |
| 73 | 1 | 6301233 | Bracket for slide block - K3 | |
| 74 | 1 | 6301048 | Bracket for 13 poles plug box | |
| 75 | 2 | 30925 | Round-head screw | M8 x 16 |
| 76 | 2 | 56121 | Hose | 1/2 x 405 S/O JIC |
| 77 | 2 | 56122 | Hose | 3/8 x 380 S/O JIC |
| 78 | 1 | 6301240 | Quick-release kit, O&T | |

# ODIN

An Oshkosh Corportation Company

Intern ref.: 6301470

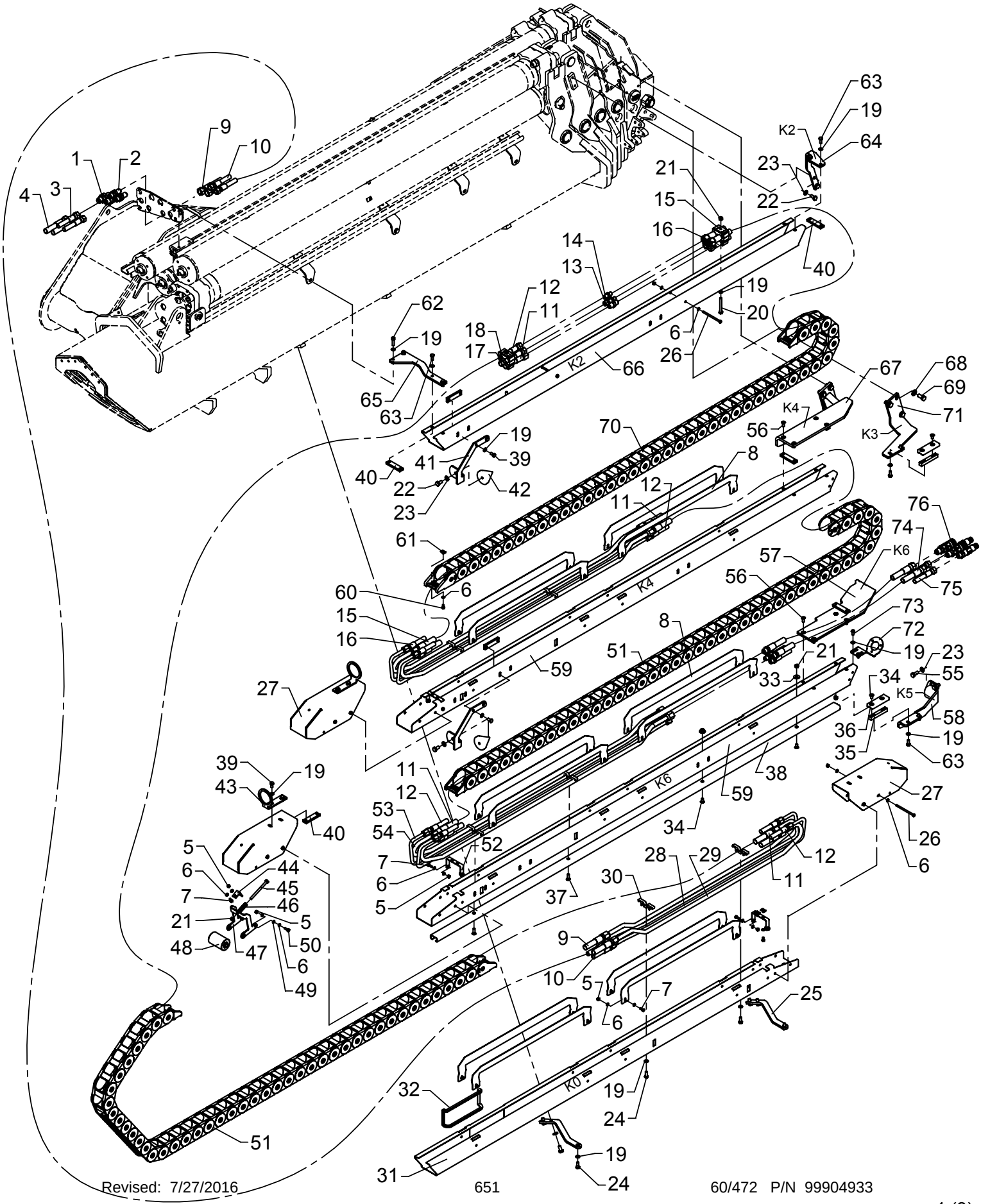

# Extra valves, OK6-2
# Hose guides

As from / To loader no.: 96 00 00
Created: 20.10.2004
Modified: 06.06.2006

| Item no. | Qty. | Part no. | Description | Remarks |
|---|---|---|---|---|
| 1 | 2 | 25825 | Bulkhead connection | WTX-WLNS 14/16 JIC |
| 2 | 2 | 25824 | Bulkhead connection | WTX-WLNS 12 JIC |
| 3 | 2 | 56055 | Hose | 3/8 x 5900 L/L 16-12 JIC |
| 4 | 2 | 56056 | Hose | 1/2 x 5900 L/L 16-16 JIC |
| 5 | 33 | 30884 | Lock nut, stainless | M6 |
| 6 | 70 | 32302 | Face washer, stainless | 6 mm |
| 7 | 23 | 30112 | Set screw, stainless | M6 x 16 |
| 8 | 12 | 6301253 | Guide plate | |
| 9 | 2 | 56267 | Hose | 1/2 x 2700 S/O JIC |
| 10 | 2 | 56116 | Hose | 3/8 x 2500 S/O JIC |
| 11 | 4 | 56114 | Hose | 1/2 x 4095 S/O JIC |
| 12 | 4 | 56115 | Hose | 3/8 x 4085 S/O JIC |
| 13 | 2 | 26281 | Union nut | HTXS14 |
| 14 | 2 | 25843 | Double connection | HTXS12 |
| 15 | 2 | 56112 | Hose | 1/2 x 3760 S/O JIC |
| 16 | 2 | 56113 | Hose | 3/8 x 3750 S/O JIC |
| 17 | 2 | 31833 | Clamp | 2 x 18 mm |
| 18 | 2 | 31845 | Clamp, rubber | |
| 19 | 28 | 31147 | Washer, stainless | 8 mm |
| 20 | 2 | 30142 | Steel bolt, stainless | M8 x 70 |
| 21 | 11 | 30886 | Lock nut, stainless | M8 |
| 22 | 8 | 31517 | Set screw, stainless | M10 x 20 |
| 23 | 12 | 31177 | Washer | 10 mm |
| 24 | 4 | 30133 | Set screw, stainless | M8 x 22 |
| 25 | 2 | 6301244 | Susp. K0 hose guide, ODIN K5-6 | |
| 26 | 8 | 32112 | Steel bolt stainless | M6 x 100 |
| 27 | 3 | 6301219 | End protection plate | |
| 28 | 2 | 6301242 | Pipe JIC ø12 short exv. | |
| 29 | 2 | 6301241 | Pipe JIC ø16 short exv. | |
| 30 | 6 | 6301218 | Clamp | |
| 31 | 1 | 6301213 | Hose guide, K0 | |
| 32 | 1 | 46586 | Rubber protection | |
| 33 | 4 | 31136 | Washer, stainless | 24 x 8,4 x 2 |
| 34 | 8 | 30543 | Countersunk screw | MK8 x 16 |
| 35 | 2 | 6300338 | Spacer | |
| 36 | 2 | 63686 | Guide shoe | |
| 37 | 4 | 31964 | Counter sunk screw, stainless | MK8 x 25 |
| 38 | 2 | 6301224 | C-profile 20x40, L=2350 | |
| 39 | 8 | 30131 | Set screw, stainless | M8 x 16 |
| 40 | 10 | 6301239 | Threaded disc 20x 8x80, 2xM8 | |

# ODIN

Intern ref.: 6301470

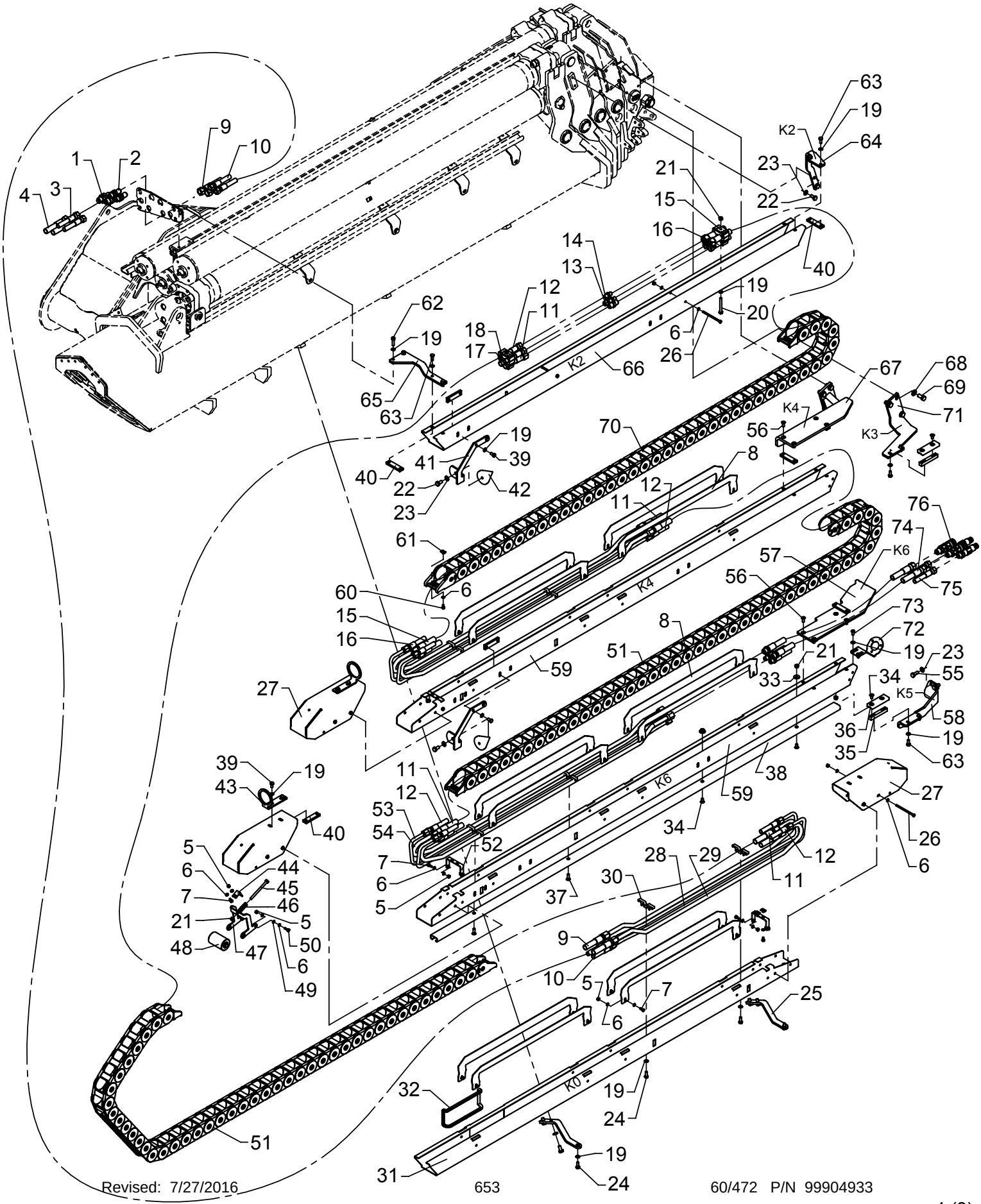

# Extra valves, OK6-2
# Hose guides

As from / To loader no.: 96 00 00
Created: 20.10.2004
Modified: 06.06.2006

| Item no. | Qty. | Part no. | Description | Remarks |
|---|---|---|---|---|
| 41 | 2 | 6301251 | Guide, upper part | |
| 42 | 2 | 63540 | Cone | |
| 43 | 2 | 6301252 | Guide, lower part | |
| 44 | 1 | 6232984 | Elbow | |
| 45 | 1 | 30145 | Steel bolt, stainless | M8 x 100 |
| 46 | 1 | 33377 | Compression spring | 6884924 |
| 47 | 1 | 6301225 | Roller bracket | |
| 48 | 1 | 63537 | Guide roller | |
| 49 | 2 | 64286 | Washer | 6 mm |
| 50 | 2 | 30113 | Set screw, stainless | M6 x 20 |
| 51 | 2 | 28587 | Nylon drag chain (43 elts) | |
| 52 | 3 | 6301217 | Chain fittings | |
| 53 | 4 | 6301212 | Pipe JIC ø12 long exv | |
| 54 | 4 | 6301211 | Pipe JIC ø16 long exv. | |
| 55 | 4 | 30155 | Set screw | M10 x 25 |
| 56 | 8 | 30957 | Countersunk screw | MK8 x 20 |
| 57 | 1 | 6301275 | Bracket, sl | |
| 58 | 1 | 6301279 | Bracket for slide block | |
| 59 | 2 | 6301216 | Hose guide, K4+K6 | |
| 60 | 4 | 30111 | Set screw, stainless | M6 x 12 |
| 61 | 4 | 32122 | Nut, stainless | |
| 62 | 2 | 30442 | Screw | MC8 x 30 |
| 63 | 8 | 30132 | Set screw, stainless | M8 x 20 |
| 64 | 1 | 6301222 | Susp. K2-hose guide, front | |
| 65 | 1 | 6301223 | Suspension K2 hose guide, rear | |
| 66 | 1 | 6301214 | Hose guide, K2 | |
| 67 | 1 | 6301238 | Bracket K4, sl | |
| 68 | 7 | 31131 | Washer | 12 mm |
| 69 | 7 | 30176 | Set screw | M12 x 25 |
| 70 | 1 | 27893 | Nylon drag chain | |
| 71 | 1 | 6301233 | Bracket for slide block - K3 | |
| 72 | 1 | 6301048 | Bracket for 13 poles plug box | |
| 73 | 2 | 30925 | Round-head screw | M8 x 16 |
| 74 | 2 | 56123 | Hose | 1/2 x 1150 S/O JIC |
| 75 | 2 | 56124 | Hose | 3/8 x 1150 S/O JIC |
| 76 | 1 | 6301240 | Quick-release kit, O&T | |

# ODIN

Intern ref.: 6301480

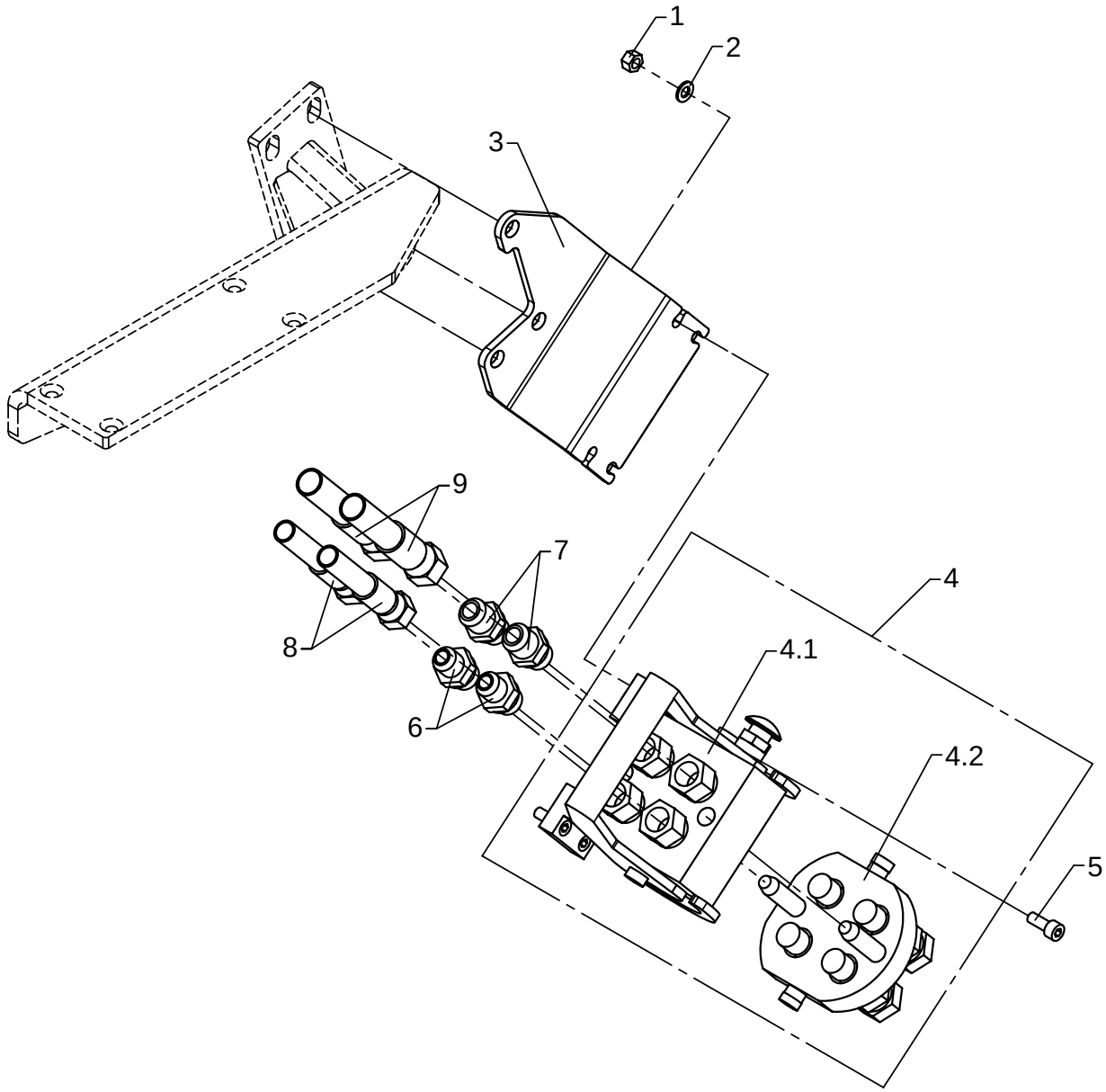

# Multi-coupling OK4, hose guides

As from / To loader no.: 96 00 00 /
Created: 06.07.2006
Modified:

| Item no. | Qty. | Part no. | Description | Remarks |
|---|---|---|---|---|
| 1 | 4 | 30886 | Lock nut, stainless | M8 |
| 2 | 4 | 31147 | Washer, stainless | 8 mm |
| 3 | 1 | 6301271 | Bracket | |
| 4 | 1 | 58430 | Multifaster coupling | 1/2" |
| 4.1 | 1 | 58432 | Multifaster coupling | |
| 4.2 | 1 | 58431 | Multifaster coupling | |
| 5 | 4 | 30438 | Screw | MC8 x 20 |
| 6 | 2 | 25832 | Straight connection | F40XS 12-1/2 JIC |
| 7 | 2 | 25833 | Straight connection | F40XS 14/16-1/2 JIC |
| 8 | 2 | 56263 | Hose | 3/8" x 1260 S/O JIC |
| 9 | 2 | 62891 | Hose | 1/2" x 1300 L/L JIC |

# ODIN

Intern ref.: 6301480

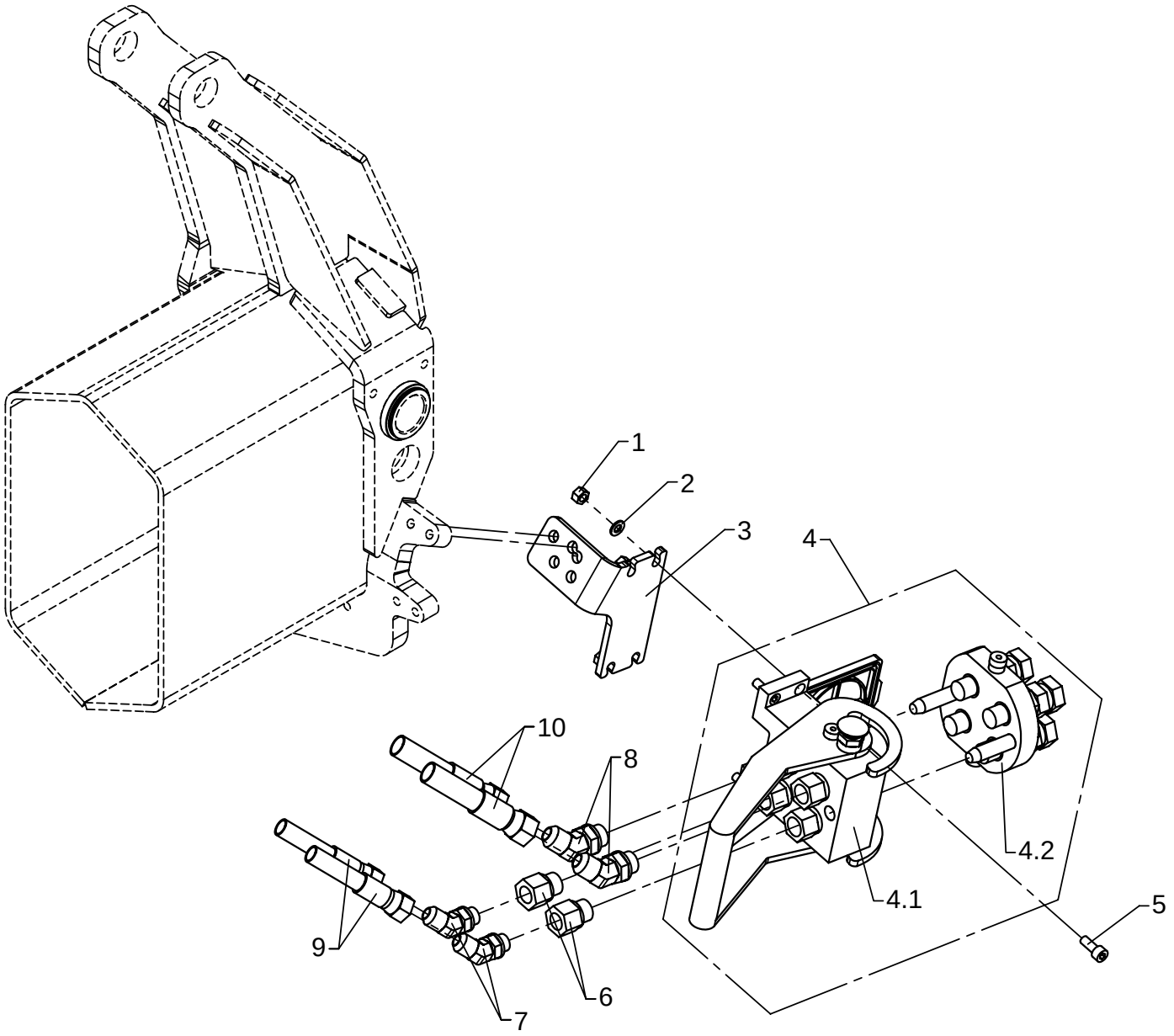

# Multi-coupling OK5, hose guides

As from / To loader no.: 96 00 00 /
Created: 06.07.2006
Modified:

| Item no. | Qty. | Part no. | Description | Remarks |
|---|---|---|---|---|
| 1 | 4 | 30886 | Lock nut, stainless | M8 |
| 2 | 4 | 31147 | Washer, stainless | 8 mm |
| 3 | 1 | 6301273 | Bracket | |
| 4 | 1 | 58430 | Multifaster coupling | 1/2" |
| 4.1 | 1 | 58432 | Multifaster coupling | |
| 4.2 | 1 | 58431 | Multifaster coupling | |
| 5 | 4 | 30438 | Screw | MC8 x 20 |
| 6 | 2 | 25243 | Reducing connection | RED-R 1/2-WD/R 3/8 |
| 7 | 2 | 26695 | Elbow connection 45° | V40XS12 - 3/8 |
| 8 | 2 | 25723 | Elbow connection 45° | V40XS14/16 - 1/2 |
| 9 | 2 | 56121 | Hose | 1/2" x 405 S/O JIC |
| 10 | 2 | 56122 | Hose | 3/8" x 380 S/O JIC |

# ODIN

Intern ref.: 6301480

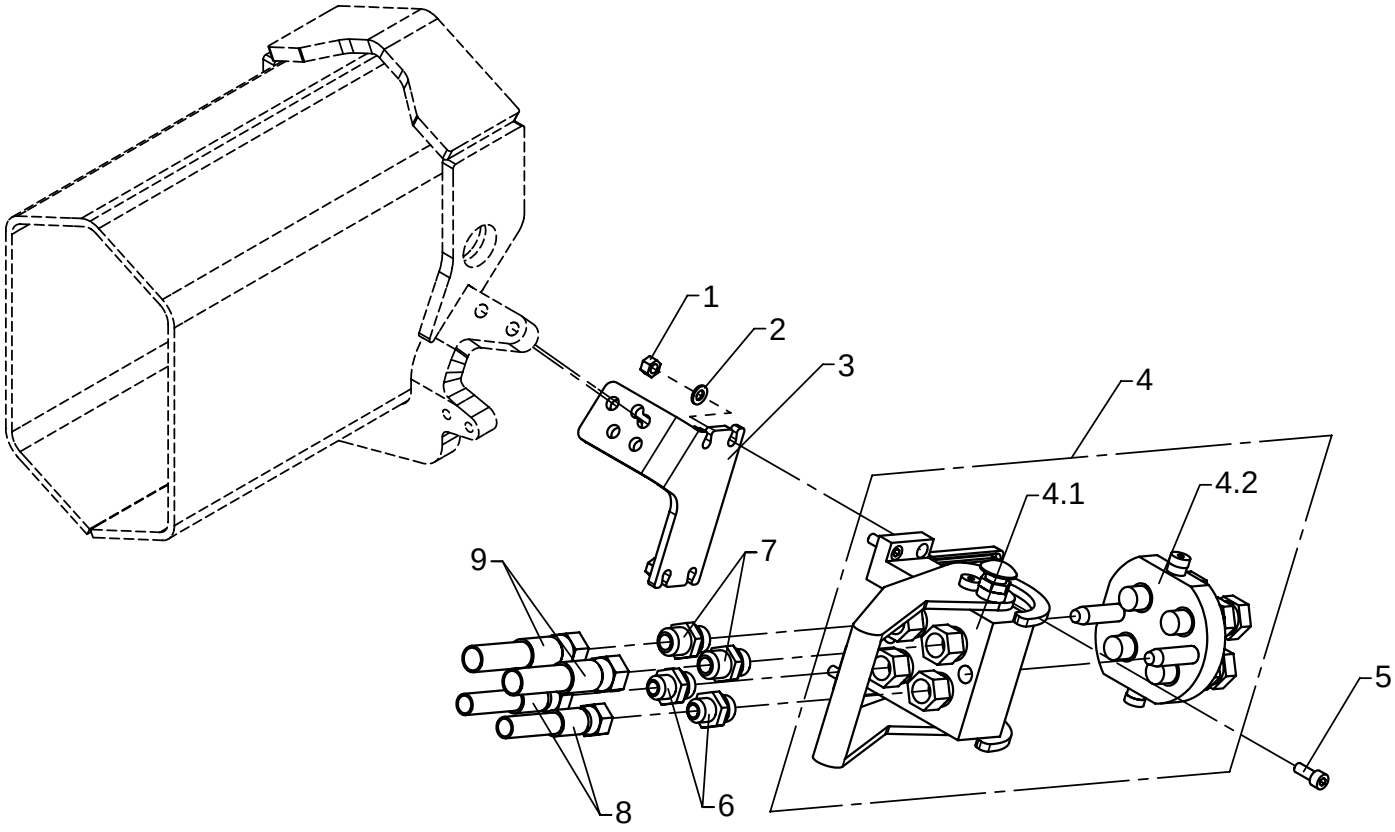

# Multi-coupling OK6, hose guides

As from / To loader no.: 96 00 00 /
Created: 06.07.2006
Modified:

| Item no. | Qty. | Part no. | Description | Remarks |
|---|---|---|---|---|
| 1 | 4 | 30886 | Lock nut, stainless | M8 |
| 2 | 4 | 31147 | Washer, stainless | 8 mm |
| 3 | 1 | 6301273 | Bracket | |
| 4 | 1 | 58430 | Multifaster coupling | 1/2" |
| 4.1 | 1 | 58432 | Multifaster coupling | |
| 4.2 | 1 | 58431 | Multifaster coupling | |
| 5 | 4 | 30438 | Screw | MC8 x 20 |
| 6 | 2 | 25832 | Straight connection | F40XS 12-1/2 JIC |
| 7 | 2 | 25833 | Straight connection | F40XS 14/16-1/2 JIC |
| 8 | 2 | 56263 | Hose | 3/8" x 1260 S/O JIC |
| 9 | 2 | 56264 | Hose | 1/2" x 1260 S/O JIC |

# ODIN

Intern ref.: 1014330

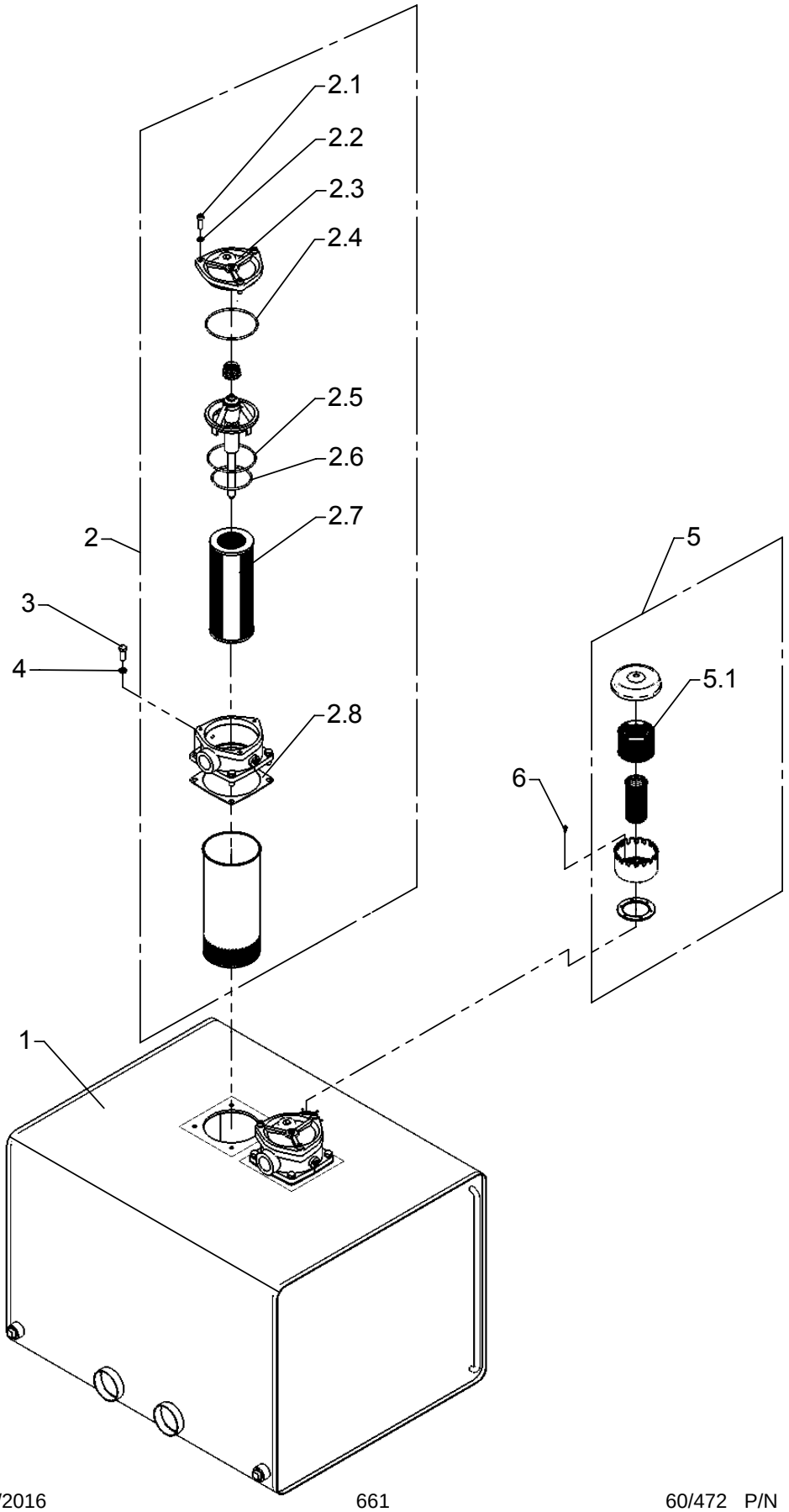

# External hydraulic tank, 320 l

As from / To loader no.: 96 00 00 / 96 01 68
Created: 05.01.2004
Modified: 11.08.2010

| Item no. | Qty. | Part no. | Description | Remarks |
|---|---|---|---|---|
| 1 | 1 | 58708 | | |
| 2 | 2 | 60249 | Return filter | |
| 2,1 | 3 | 30442 | Screw | MC8 x 30 |
| 2,2 | 3 | 31155 | Spring washer, stainless | 8 mm |
| 2,3 | 1 | 60282 | Cover | |
| 2,4 | 1 | 20197 | O-Ring | OR 118 x 3 |
| 2,5 | 1 | 20196 | O-Ring | OR 109,5 x 3 |
| 2,6 | 1 | 20191 | O-Ring | OR 89,5 x 3 |
| 2,7 | 1 | 60250 | Filter cartridge | |
| 2,8 | 1 | 60283 | Seal | |
| 3 | 8 | 30156 | Set screw, stainless | M10 x 30 |
| 4 | 8 | 31571 | Spring washer, stainless | 10 mm |
| 5 | 1 | 60275 | Air filter | |
| 5,1 | 1 | 60276 | Filter | |
| 6 | 3 | 25348 | Plug | |

# 6020K

Intern ref.: 1014330

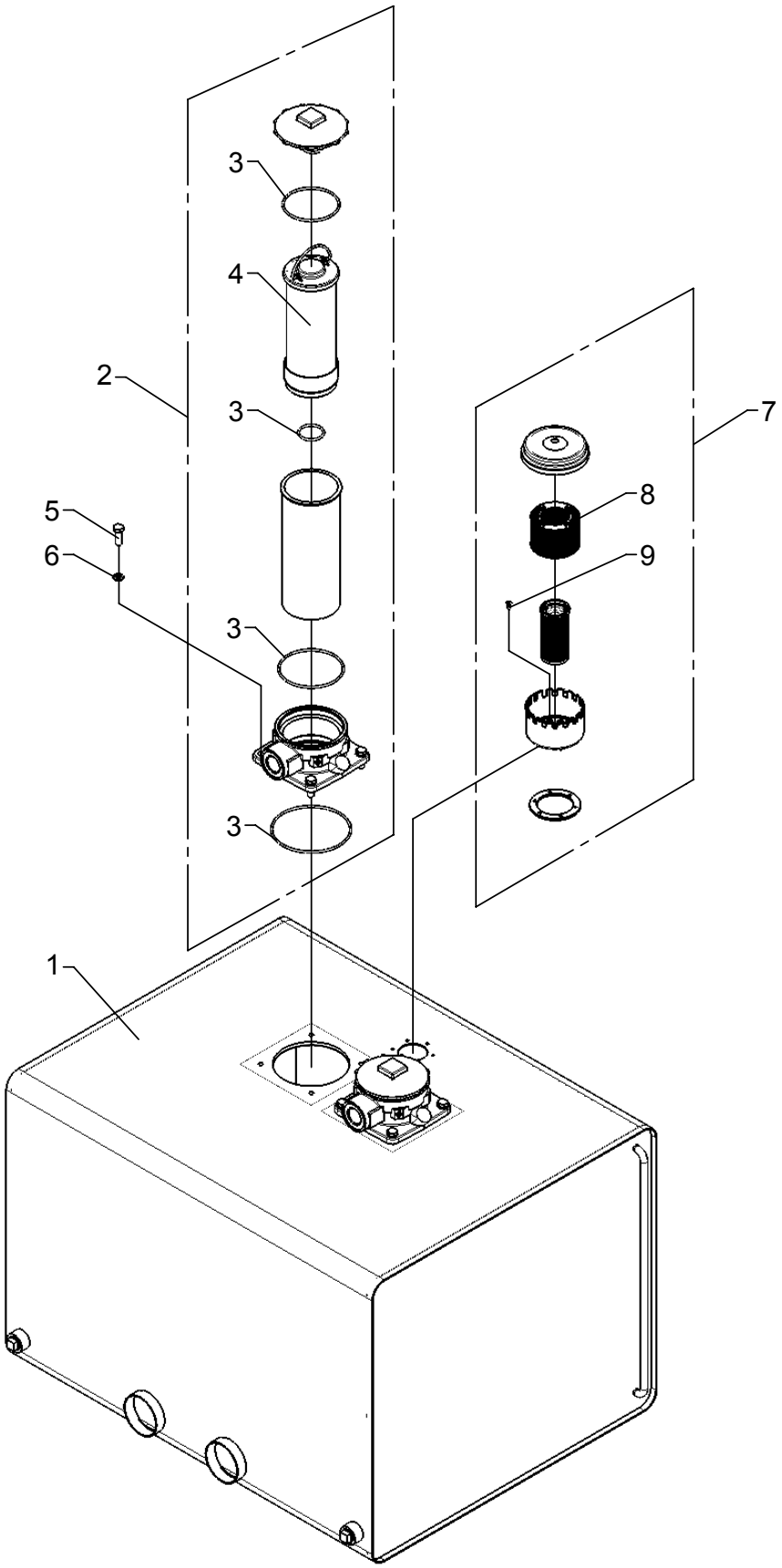

# External hydraulic tank, 320 l

As from / To loader no.: 96 01 69 /
Created: 11.08.2010
Modified:

| Item no. | Qty. | Part no. | Description | Remarks |
|---|---|---|---|---|
| 1 | 1 | 58708 | Oil tank 320 l | |
| 2 | 2 | 49408 | Return filter | |
| 3 | 2 | 49419 | | |
| 4 | 2 | 49409 | Filter | |
| 5 | 8 | 30156 | Set screw, stainless | M10 x 30 |
| 6 | 8 | 31571 | Spring washer, stainless | 10 mm |
| 7 | 1 | 60275 | Air filter | |
| 8 | 1 | 60276 | Filter | |
| 9 | 6 | 32405 | Sockethead screw | MK5 x 12 |

# ODIN

Intern ref.: 1014340

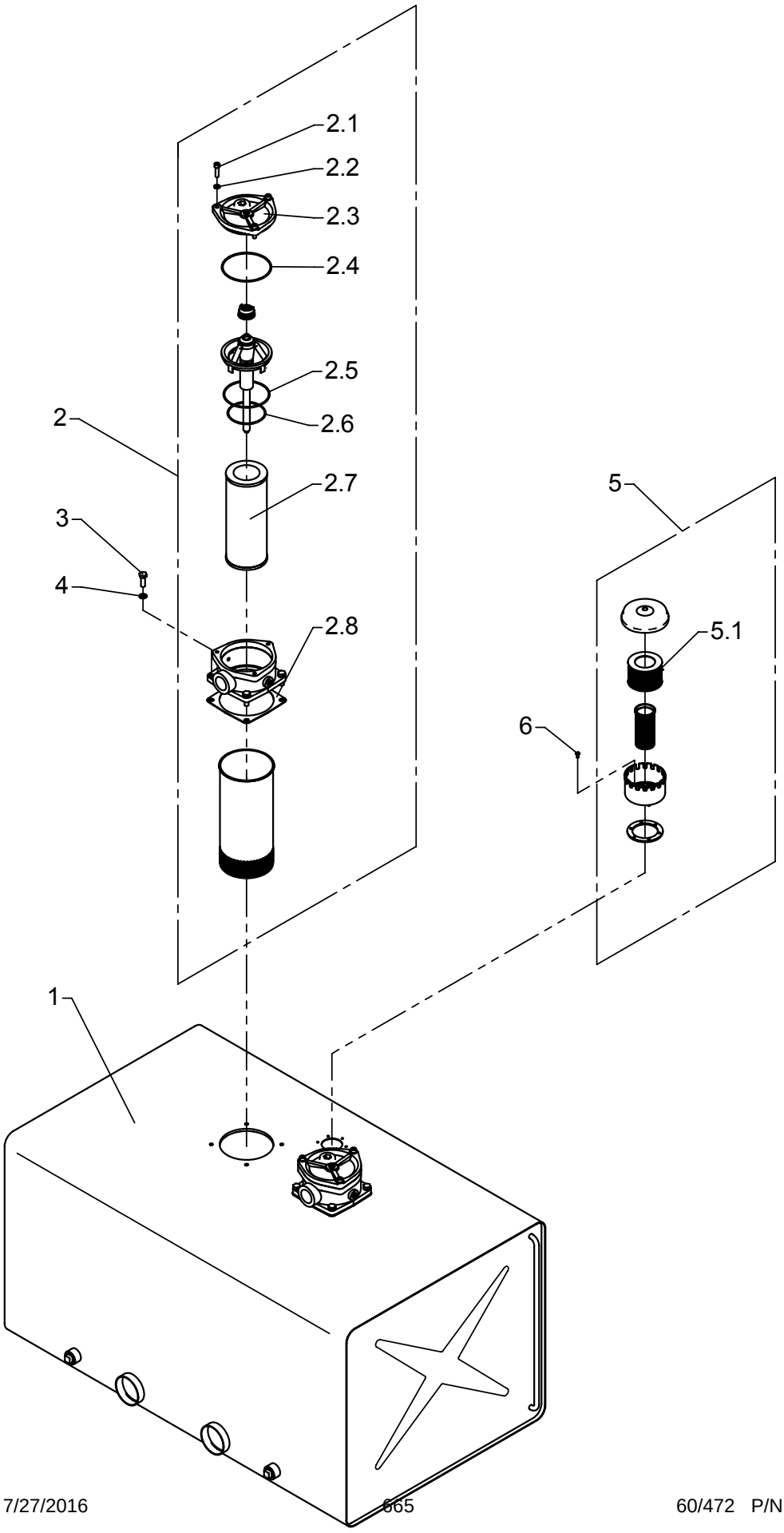

# External hydraulic tank, 420 l

As from / To loader no.: 96 00 00 / 96 01 68
Created: 05.01.2004
Modified: 11.08.2010

| Item no. | Qty. | Part no. | Description | Remarks |
|---|---|---|---|---|
| 1 | 1 | 58709 | Oil tank, 420 l | |
| 2 | 2 | 60249 | Return filter | |
| 2,1 | 3 | 30442 | Screw | MC8 x 30 |
| 2,2 | 3 | 31155 | Spring washer, stainless | 8 mm |
| 2,3 | 1 | 60282 | Cover | |
| 2,4 | 1 | 20197 | O-Ring | OR 118 x 3 |
| 2,5 | 1 | 20196 | O-Ring | OR 109,5 x 3 |
| 2,6 | 1 | 20191 | O-Ring | OR 89,5 x 3 |
| 2,7 | 1 | 60250 | Filter cartridge | |
| 2,8 | 1 | 60283 | Seal | |
| 3 | 8 | 30156 | Set screw, stainless | M10 x 30 |
| 4 | 8 | 31571 | Spring washer, stainless | 10 mm |
| 5 | 1 | 60275 | Air filter | |
| 5,1 | 1 | 60276 | Filter | |
| 6 | 3 | 25348 | Plug | |

# 6020K

Intern ref.: 1014340

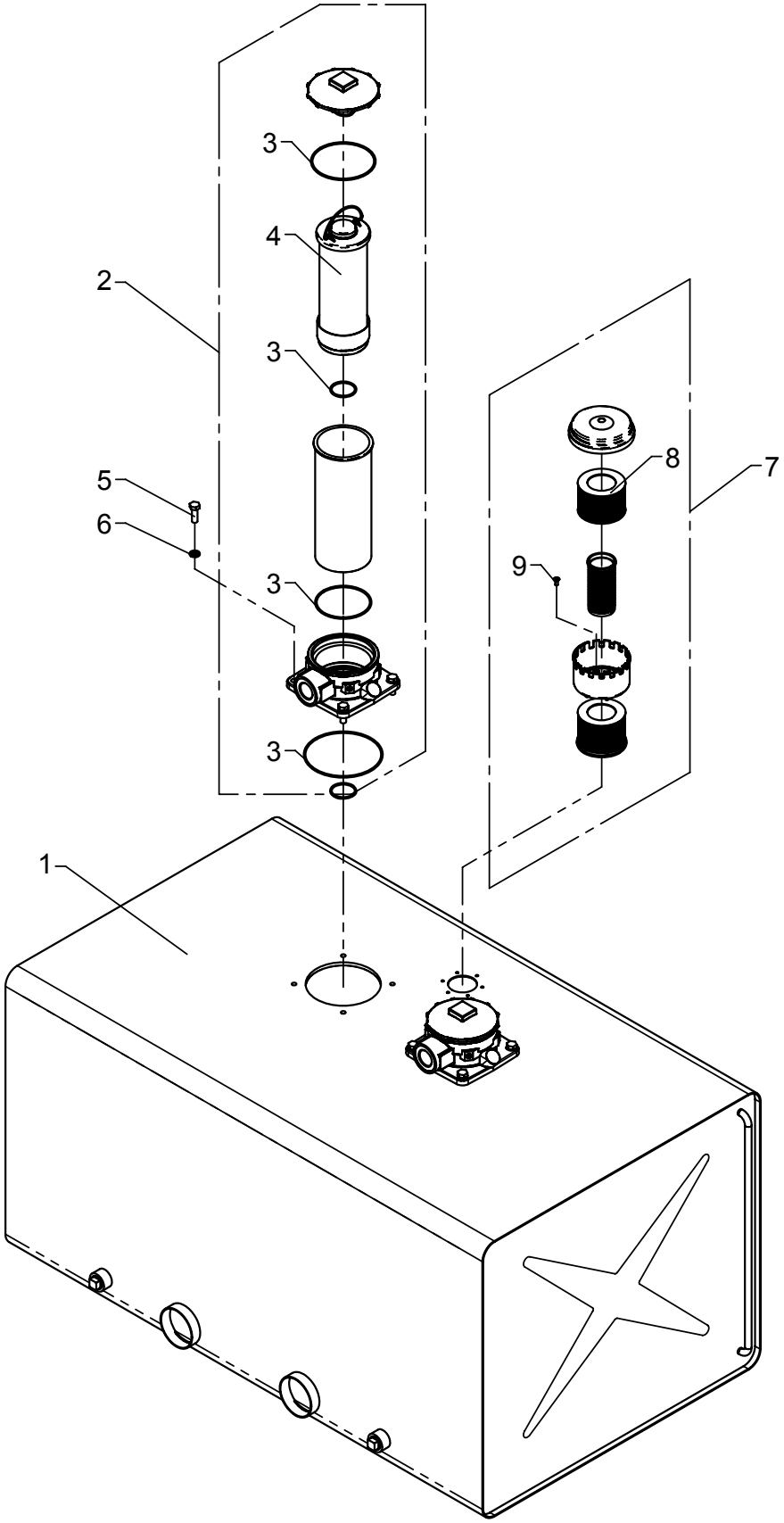

# External hydraulic tank, 420 l

As from / To loader no.: 96 01 69 /
Created: 11.08.2010
Modified:

| Item no. | Qty. | Part no. | Description | Remarks |
|---|---|---|---|---|
| 1 | 1 | 58709 | Oil tank, 420 l | |
| 2 | 2 | 49408 | Return filter | |
| 3 | 2 | 49419 | | |
| 4 | 2 | 49409 | Filter | |
| 5 | 8 | 30156 | Set screw, stainless | M10 x 30 |
| 6 | 8 | 31571 | Spring washer, stainless | 10 mm |
| 7 | 1 | 60275 | Air filter | |
| 8 | 1 | 60276 | Filter | |
| 9 | 6 | 32405 | Sockethead screw | MK5 x 12 |

# ODIN

Intern ref.: 6300780

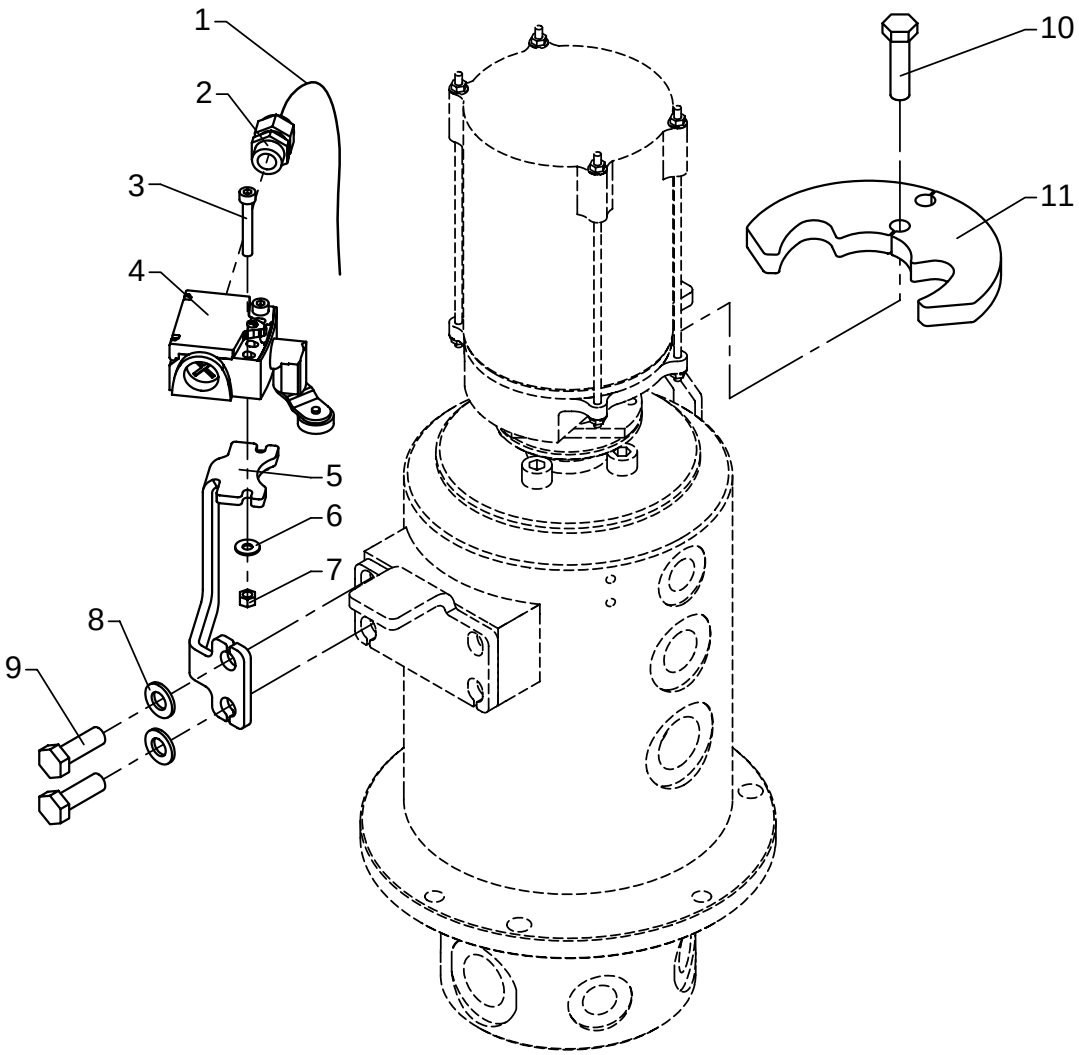

# 2-stage LMB

As from / To loader no.: 96 00 50 / 96 02 57
Created: 02.02.2007
Modified: 21.10.2010

| Item no. | Qty. | Part no. | Description | Remarks |
|---|---|---|---|---|
| 1 | 1 | 28249 | Cable | 2 m. |
| 2 | 1 | 28460 | Connection | M16 x 1,5 |
| 3 | 2 | 30422 | Screw, stainless | MC5 x 35 |
| 4 | 1 | 27600 | Stop | |
| 5 | 1 | 6302623 | Bracket | |
| 6 | 2 | 32308 | Washer | 5 mm |
| 7 | 2 | 30859 | Lock nut, stainless | |
| 8 | 2 | 31177 | Washer | 10 mm |
| 9 | 2 | 30156 | Set screw, stainless | M10 x 30 |
| 10 | 1 | 30158 | Steel bolt | M10 x 40 |
| 11 | 1 | 6302622 | Cam disc | |

# 6020K

Intern ref.: 6300780

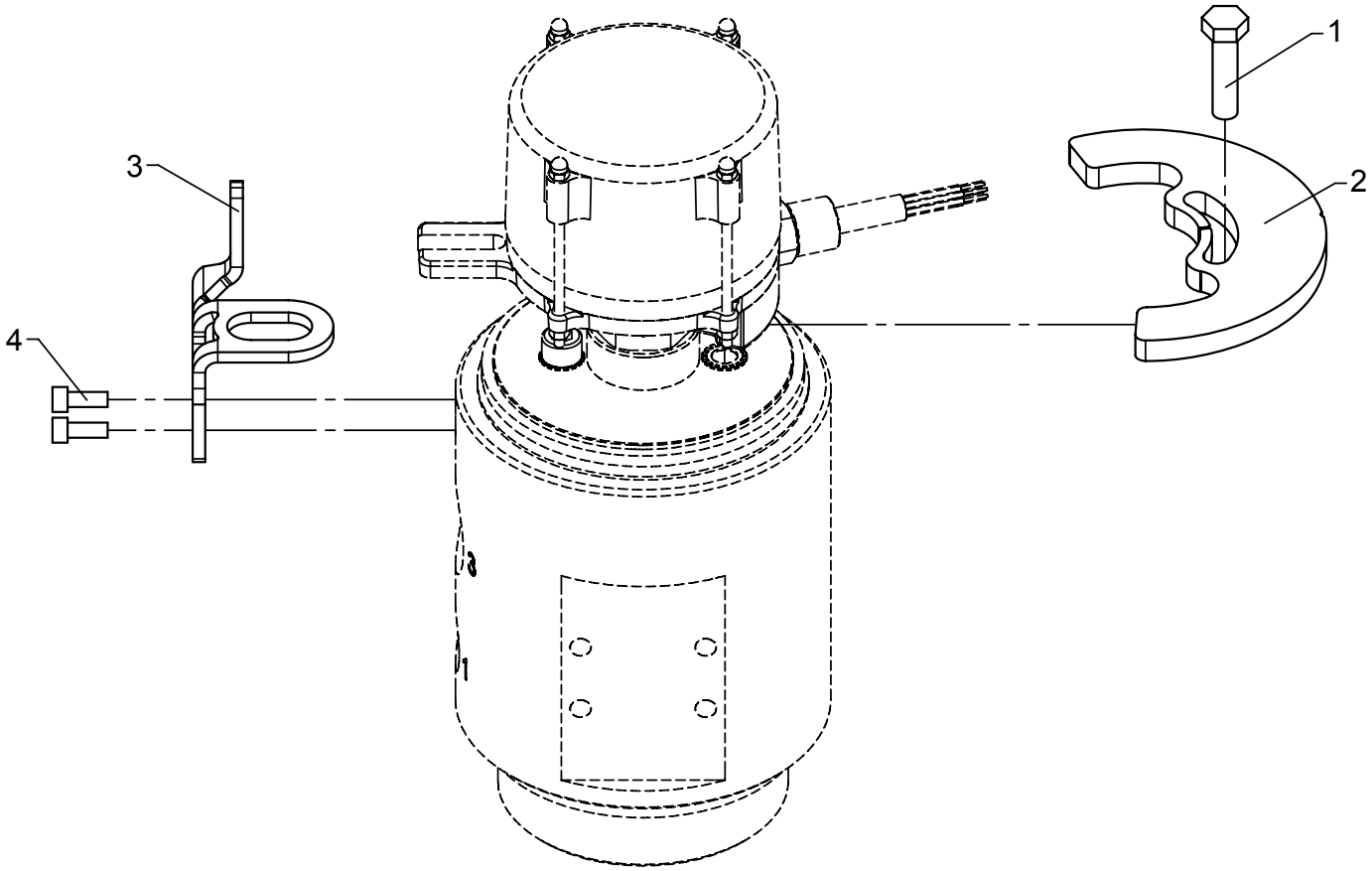

# 2-stage LMB

As from / To loader no.: 96 02 58 /
Created: 21.10.2010
Modified:

| Item no. | Qty. | Part no. | Description | Remarks |
|---|---|---|---|---|
| 1 | 1 | 30158 | Steel bolt | M10 x 40 |
| 2 | 1 | 6302622 | Cam disc | |
| 3 | 1 | 6302624 | Sensor fitting | |
| 4 | 2 | 30424 | Screw | MC6 x 16 |

# 6020K

Intern ref.: 6300670

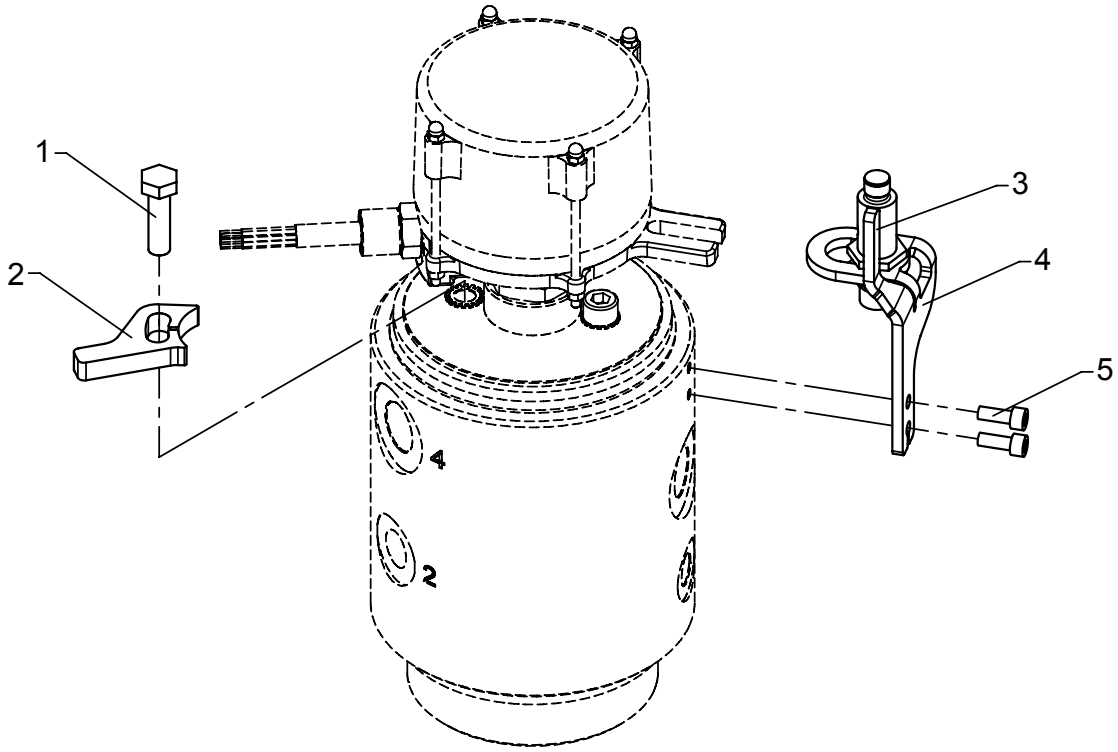

# Calibrate Bypass Sensor System

As from / To loader no.: 96 00 50 /
Created: 05.10.2010
Modified:

| Item no. | Qty. | Part no. | Description | Remarks |
|---|---|---|---|---|
| 1 | 1 | 30157 | Set screw | M10 x 35 |
| 2 | 1 | 6302625 | Sensor | |
| 3 | 1 | 28210 | Proximity switch | |
| 4 | 1 | 6302624 | Sensor fitting | |
| 5 | 2 | 30424 | Screw | MC6 x 16 |

# ODIN

Intern ref.: 6301190

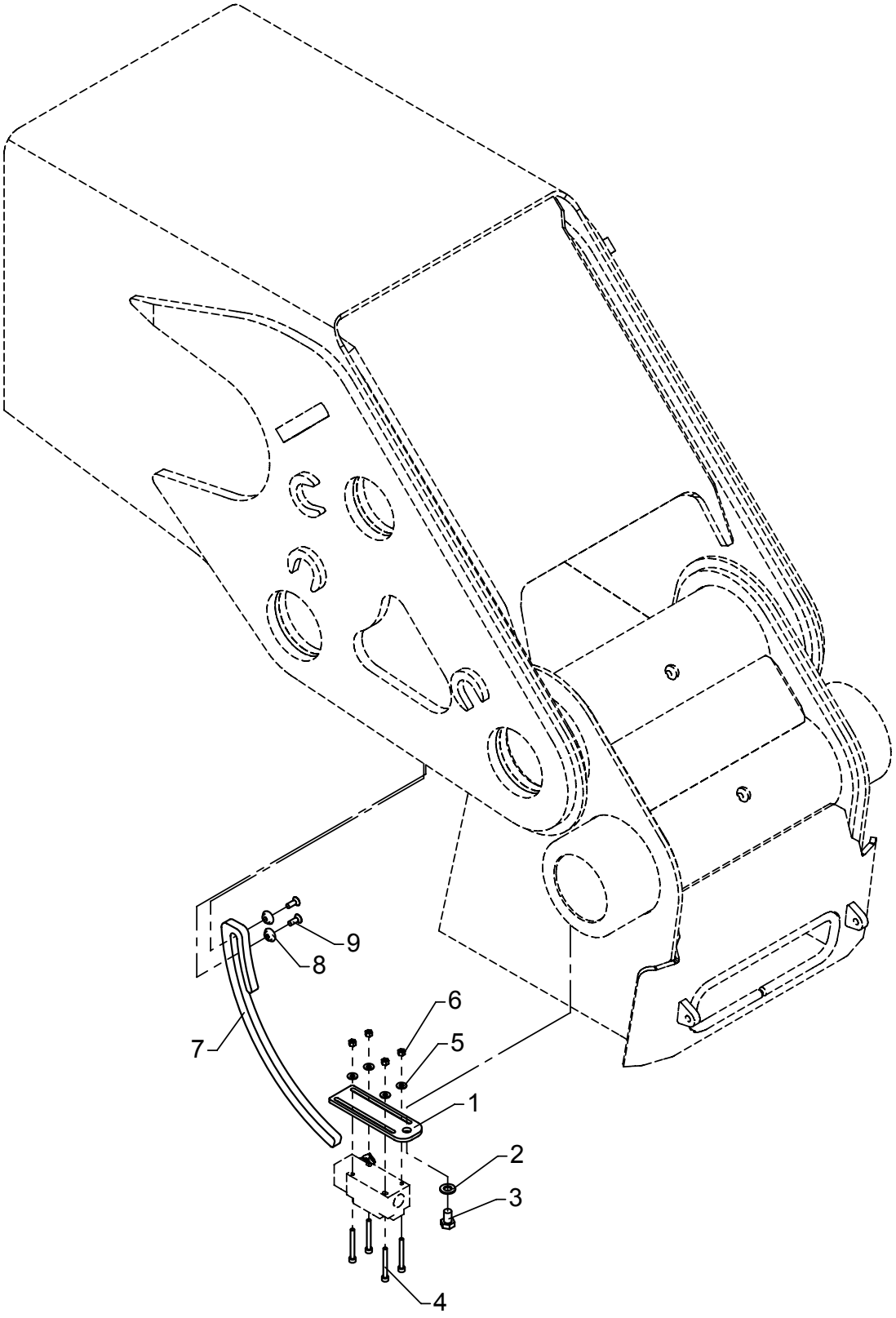

# Height Indicator

As from / To loader no.: 96 00 00 / 96 02 13
Created: 16.02.2004
Modified: 15.10.2008

| Item no. | Qty. | Part no. | Description | Remarks |
|---|---|---|---|---|
| 1 | 1 | 6301191 | Clamp | |
| 2 | 1 | 31565 | Washer, stainless | 10 mm |
| 3 | 1 | 30153 | Set screw | M10 x 16 |
| 4 | 4 | 30400 | Screw, stainless | MC5 x 45 |
| 5 | 4 | 31189 | Washer | 5 mm |
| 6 | 4 | 30859 | Lock nut, stainless | M5 |
| 7 | 1 | 6301192 | Cam disc | |
| 8 | 2 | 6301193 | Washer | |
| 9 | 2 | 32201 | Countersunk screw | MK6 x 16 |

# ODIN

Intern ref.: 6306620

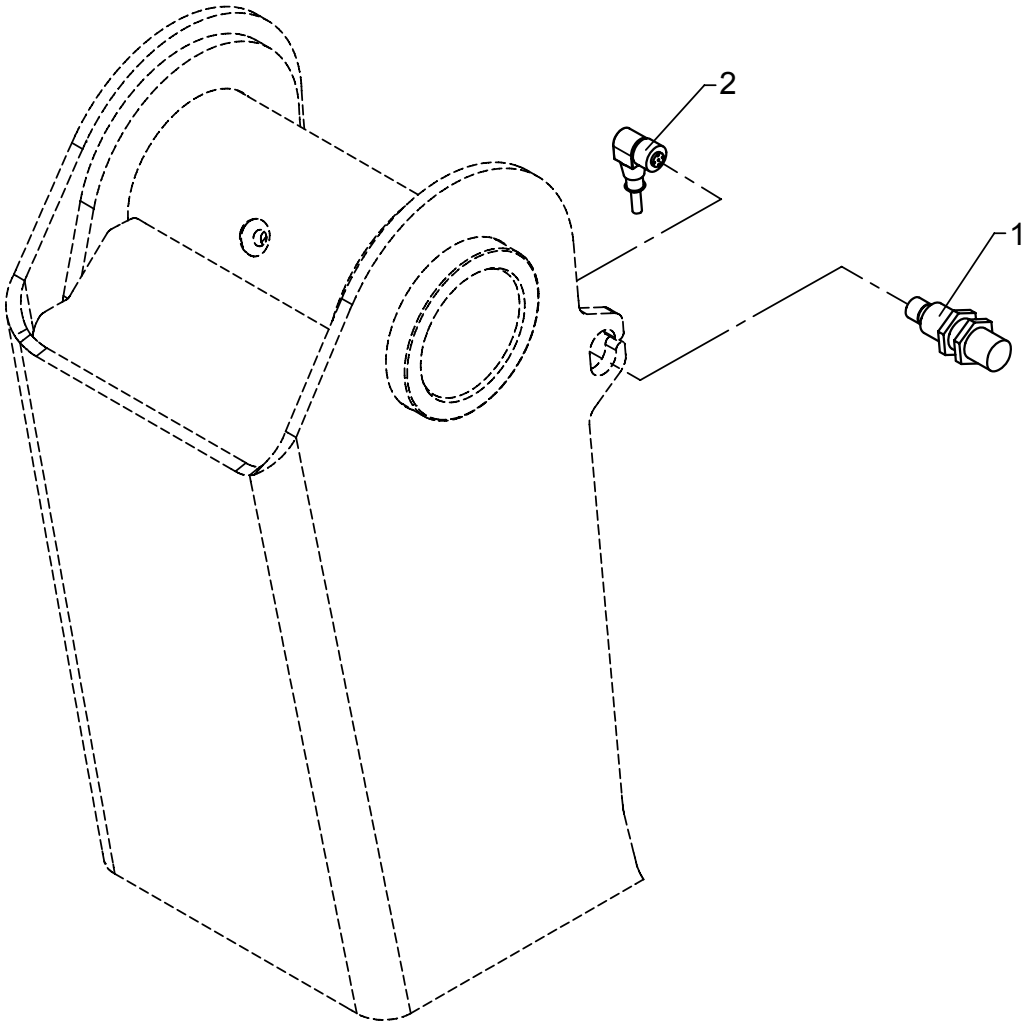

# Height indicator

As from / To loader no.: 96 02 14
Created: 15.10.2008
Modified:

| Item no. | Qty. | Part no. | Description | Remarks |
|---|---|---|---|---|
| 1 | 1 | 29124 | Proximity switch | |
| 2 | 1 | 28902 | Cable with plug, 10 m. | |

# ODIN

Intern ref.: 6300510

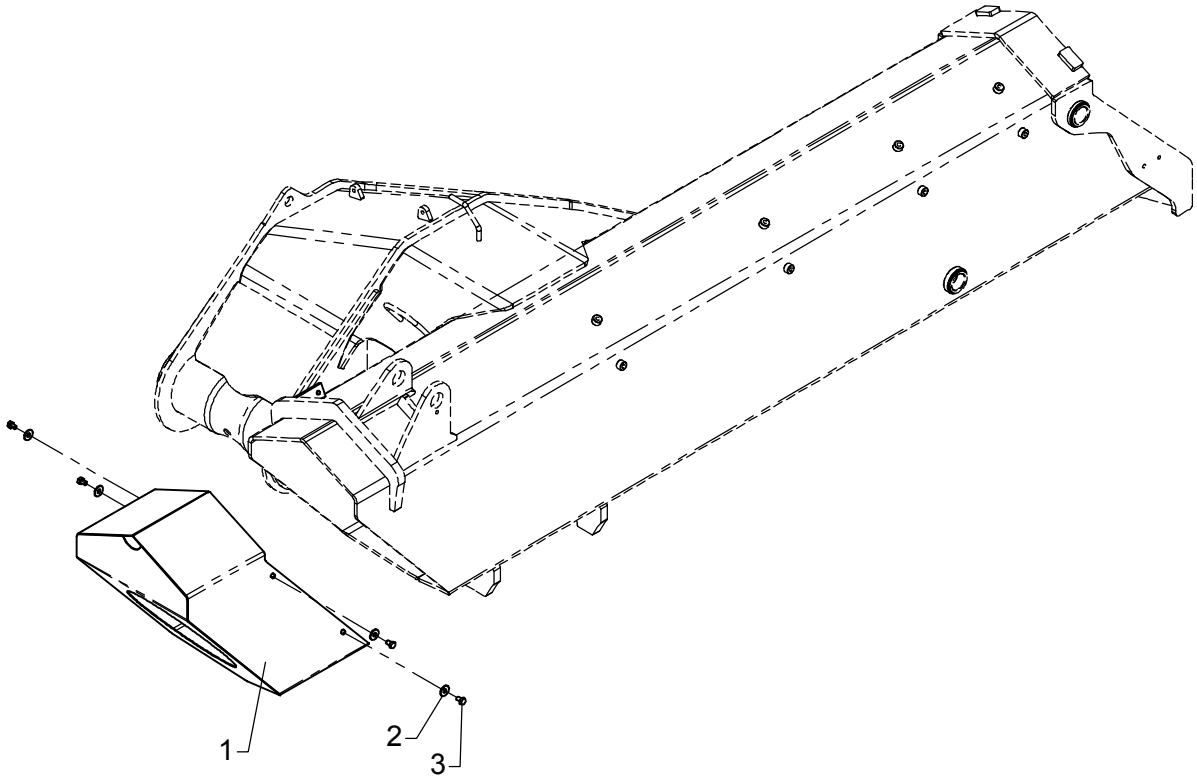

# Shield at the end of the jib

As from / To loader no.: 96 00 00 / 96 00 xx
Created: 03.10.2003
Modified:

| Item no. | Qty. | Part no. | Description | Remarks |
|---|---|---|---|---|
| 1 | 1 | 6300507 | Protection plate, jib | |
| 2 | 4 | 31136 | Washer, stainless | 24 x 8,4 x 2 |
| 3 | 4 | 30130 | Set screw, stainless | M8 x 12 |

# ODIN

Intern ref.: 6300510

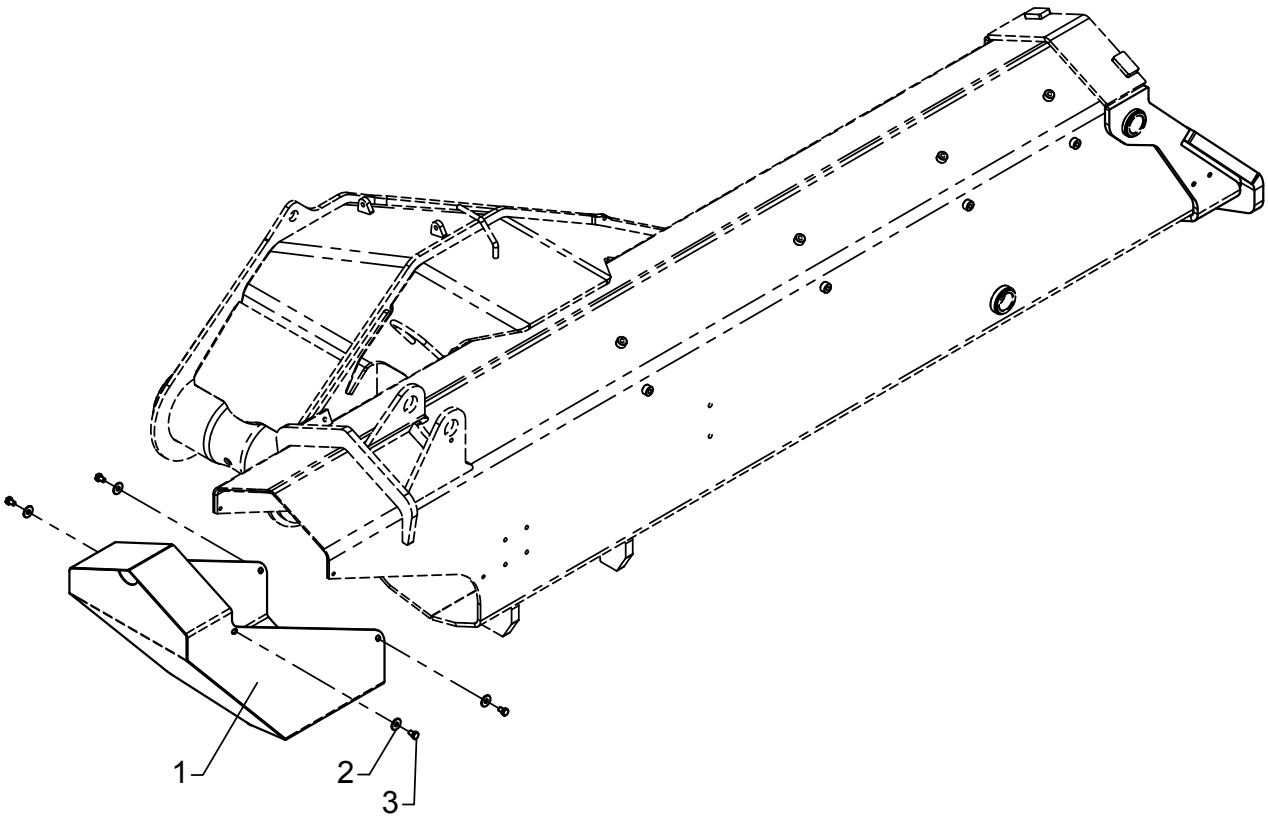

# Shield at the end of the jib

As from / To loader no.: 96 00 xx / 96 02 93
Created: 03.10.2003
Modified: 17.02.2012

| Item no. | Qty. | Part no. | Description | Remarks |
|---|---|---|---|---|
| 1 | 1 | 6301107 | Protection plate, jib | |
| 2 | 4 | 31136 | Washer, stainless | 8 mm |
| 3 | 4 | 30130 | Set screw, stainless | M8 x 12 |

# ODIN

Intern ref.: 6300510

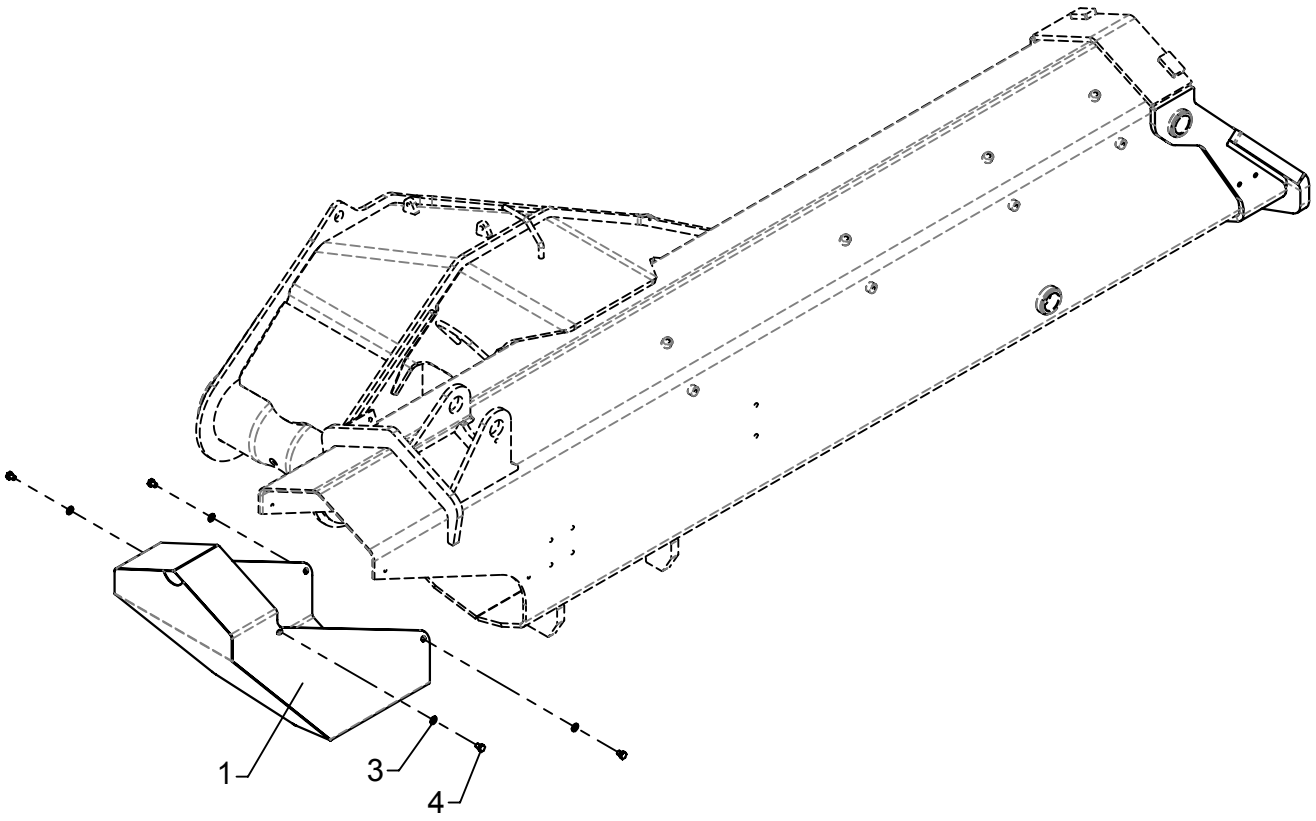

# Shield at the end of the jib

As from / To loader no.: 96 02 94 /
Created: 17.02.2012
Modified: 08.08.2012

| Item no. | Qty. | Part no. | Description | Remarks |
|---|---|---|---|---|
| 1 | 1 | 6301107 | Protection plate, jib | |
| 3 | 4 | 31147 | Face washer, 8 mm | |
| 4 | 4 | 30105 | Set screw, stainless | M8 x 10 |

# ODIN

An Oshkosh Corportation Company

Intern ref.:

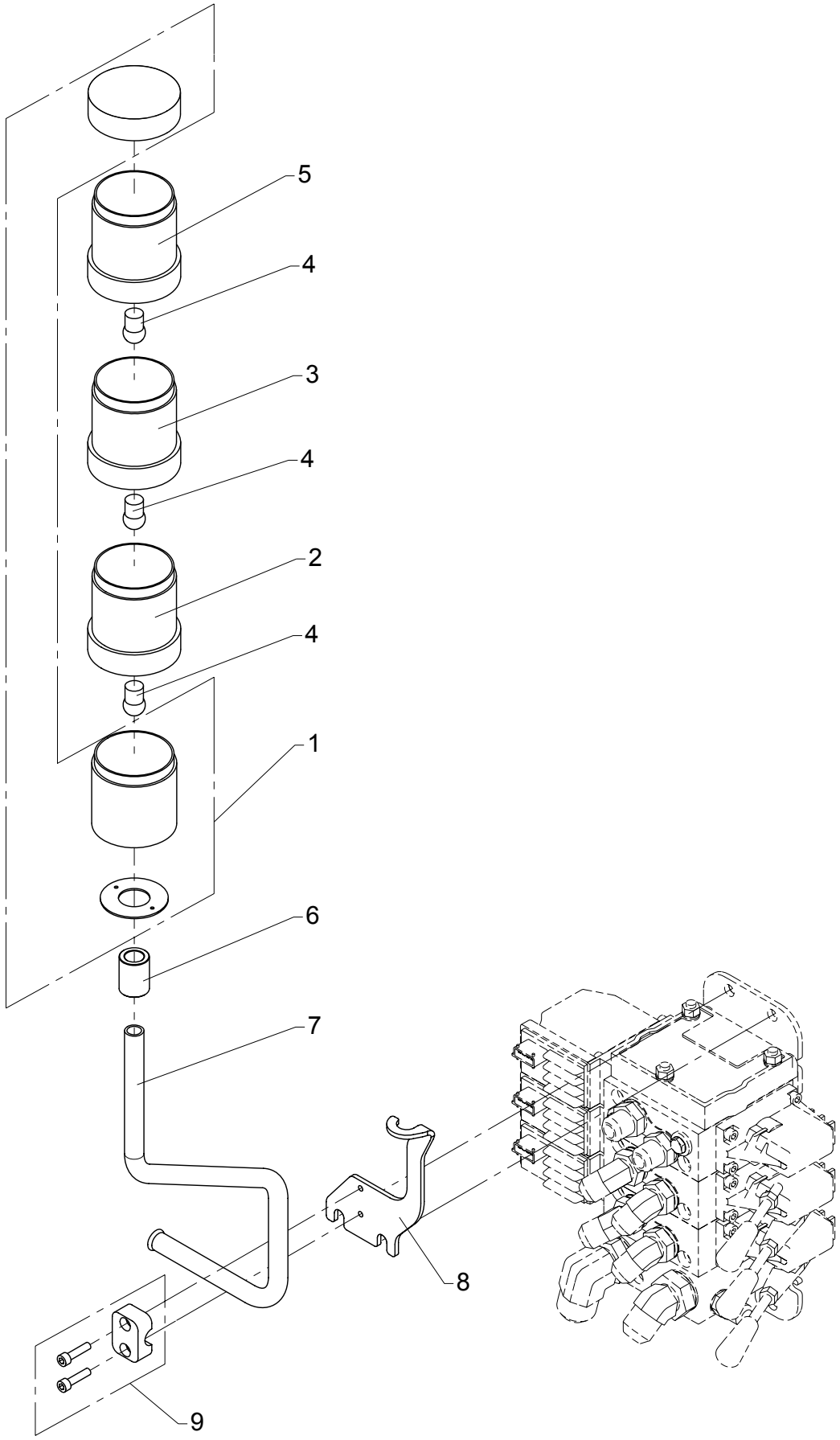

# Light tower

As from / To loader no.: 96 00 00 / 96 02 07
Created: 26.11.2003
Modified: 23.06.2008

| Item no. | Qty. | Part no. | Description | Remarks |
|---|---|---|---|---|
| 1 | 3 | 27773 | Bottom + cover | |
| 2 | 1 | 27771 | Diode, red | |
| 3 | 1 | 27772 | Diode, yellow | |
| 4 | 3 | 27835 | Bulb 24V, 5W | |
| 5 | 1 | 27770 | Diode, green | |
| 6 | 1 | 63545 | Spacer | |
| 7 | 1 | 6301015 | Pipe | |
| 8 | 1 | 6301009 | Bracket for light tower | |
| 9 | 1 | 31434 | Clamp | |

# ODIN

7004010
Intern ref.: 7003910

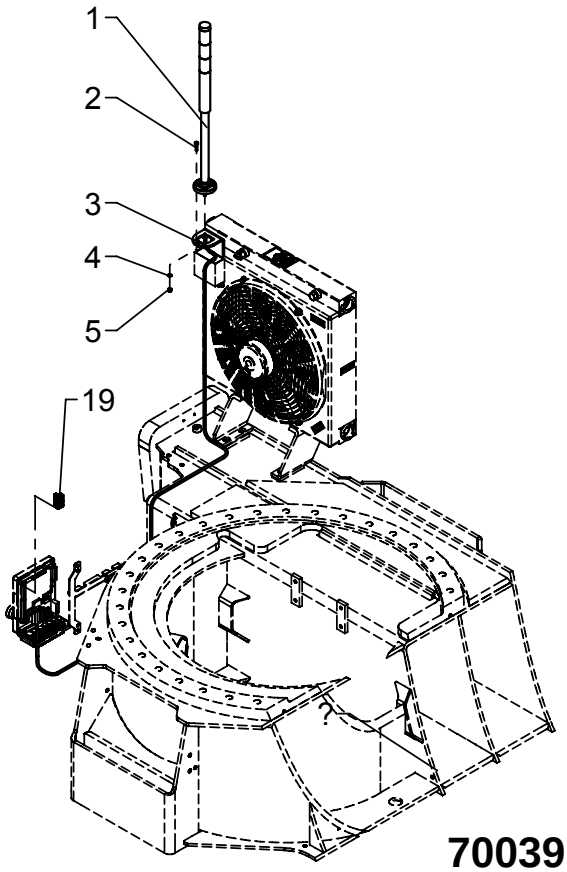


**7003910**

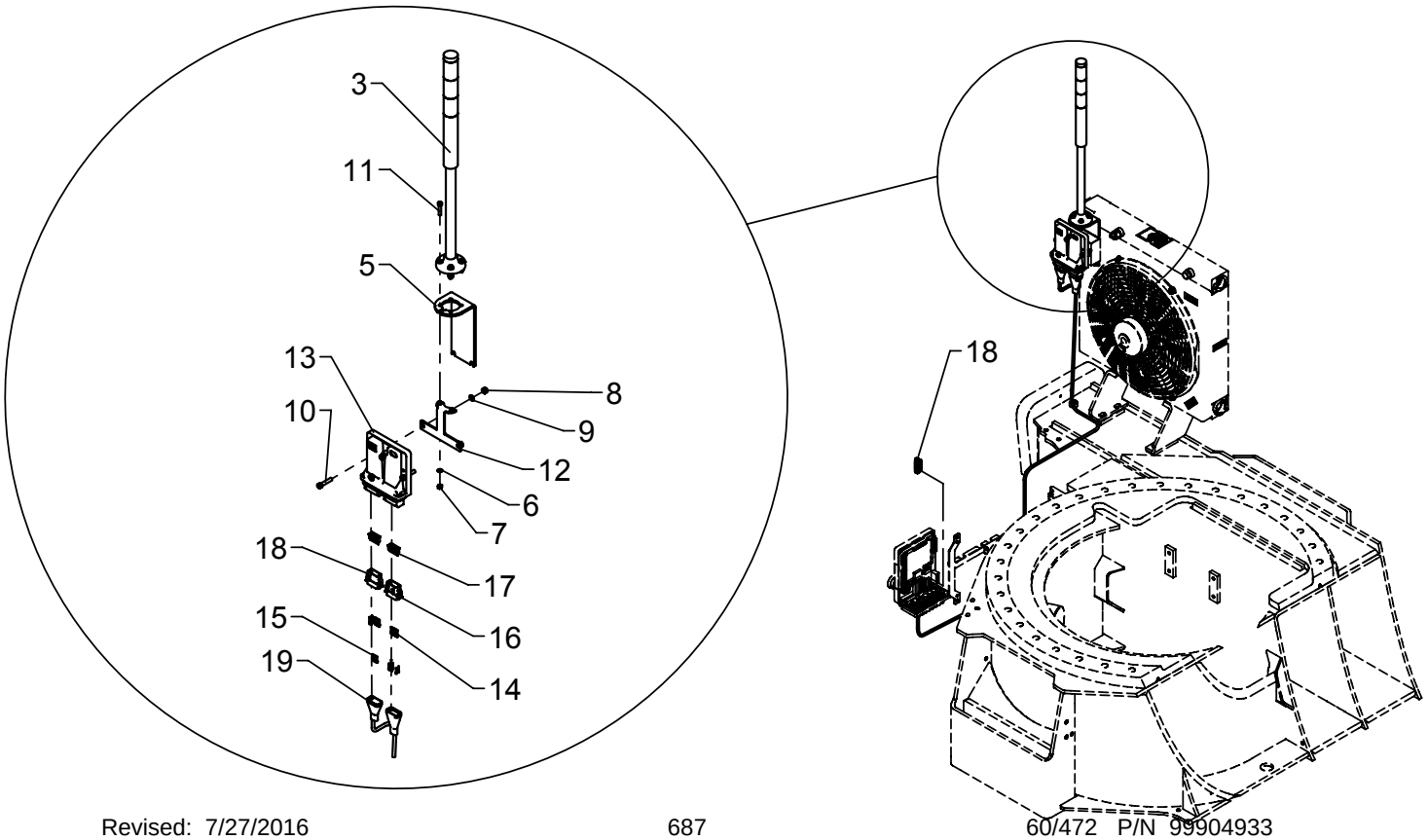


**7004010**

# Ligth tower

As from / To loader no.: 96 02 08
Created: 23.06.2008
Modified: 25.11.2010

| Item no. | Qty. | Part no. | Description | Remarks |
|---|---|---|---|---|
| | | 7003910 | Light tower | |
| | | 7004010 | Light tower + CIO5374 | |
| 1 | 1 | 29195 | Light tower incl. foot + cable | |
| 2 | 4 | 31590 | Sockethead screw | MC5 x 20 |
| 3 | 1 | 6301382 | Bracket for light tower | |
| 4 | 4 | 32308 | Washer | 5 mm |
| 5 | 4 | 30859 | Lock nut, stainless | |
| 6 | 2 | 30884 | Lock nut, stainless | M6 |
| 7 | 2 | 32302 | Face washer, stainless | 6 mm |
| 8 | 2 | 30961 | Screw | MC6 x 30 |
| 9 | 4 | 30481 | Screw | |
| 10 | 1 | 6301387 | Bracket for CIO5374 controller | |
| 11 | 1 | 29345 | CIO5374 controller excl. cable | |
| 12 | 13 | 29329 | Pin for plug fro ECT5310 | |
| 13 | 11 | 29339 | Sealing for plug for ECT5310 | |
| 14 | 1 | 29327 | Plug, type B for ECT5310 | |
| 15 | 2 | 29328 | Lock for plug for ECT5310 | |
| 16 | 1 | 29326 | Plug, type A for ECT5310 | |
| 17 | 2 | 28566 | Insulation, black | 10 cm |
| 18 | 1 | 29318 | Plug, 7-polar for RCL 53XX | |
| 19 | 1 | 29319 | Plug, 8-polar for RCL 53XX | |
| 20 | 1 | 28263 | CAN BUS cable | 2,2 m |

# ODIN

Intern ref.: 8512840

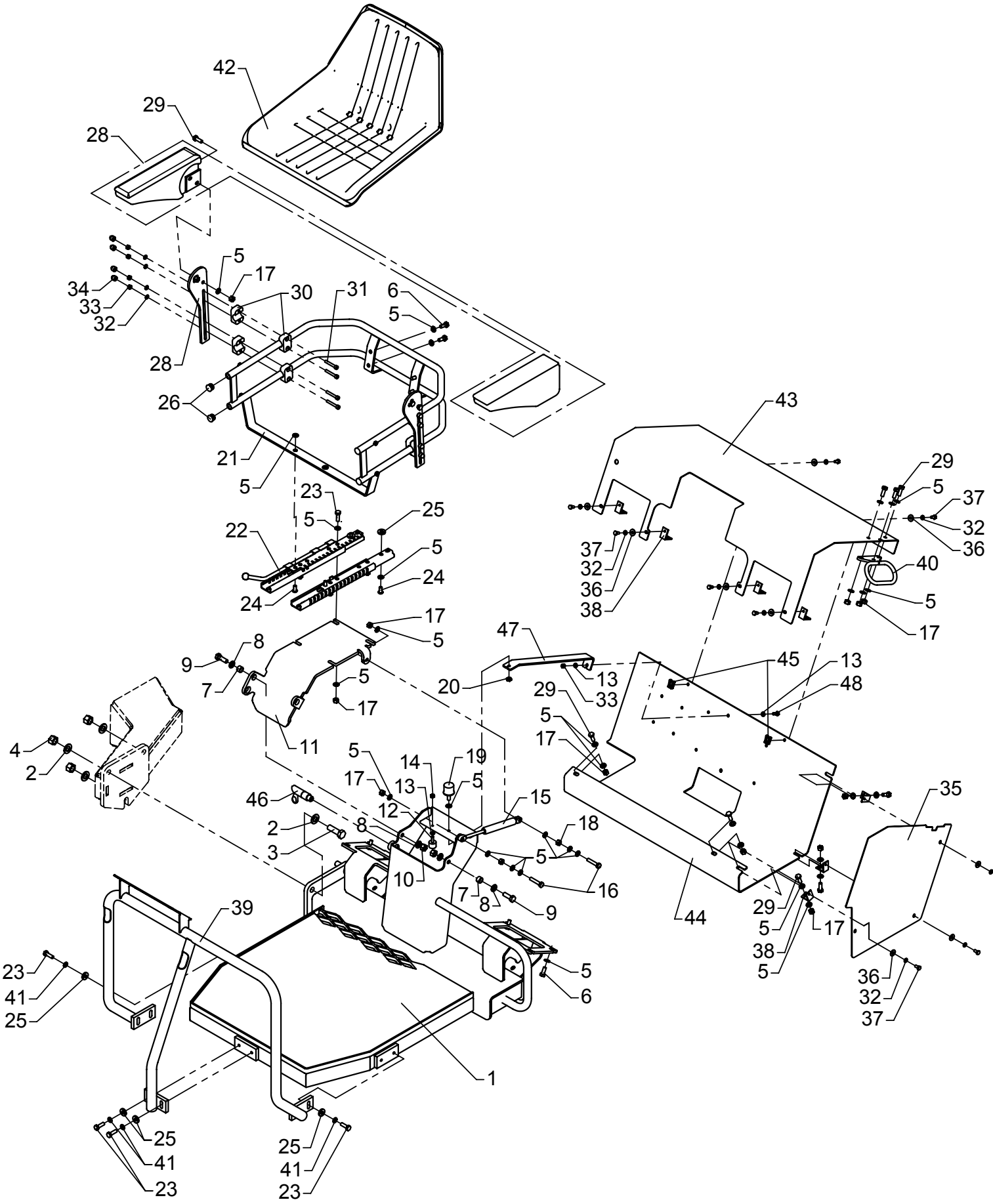

# Top seat, TS

As from / To loader no.: 96 00 00 /
Created: 19.01.2004
Modified: 18.01.2005

| Item no. | Qty. | Part no. | Description | Remarks |
|---|---|---|---|---|
| 1 | 1 | 8512832 | Top seat | |
| 2 | 6 | 31178 | Washer | 14 mm |
| 3 | 3 | 30208 | Set screw | M14 x 45 |
| 4 | 3 | 30891 | Lock nut | M14 |
| 5 | 53 | 31147 | Washer, stainless | 8 mm |
| 6 | 12 | 30132 | Set screw, stainless | M8 x 20 |
| 7 | 2 | 6383894 | Spacer | |
| 8 | 4 | 31565 | Washer, stainless | 10 mm |
| 9 | 2 | 30156 | Set screw, stainless | M10 x 30 |
| 10 | 2 | 31564 | Lock nut, stainless | M10 |
| 11 | 1 | 6383883 | Bracket for seat | |
| 12 | 2 | 61916 | Torsion balancer | |
| 13 | 4 | 32302 | Face washer, stainless | 6 mm |
| 14 | 2 | 30854 | Nut, stainless | M6 |
| 15 | 1 | 48460 | Gas spring | |
| 16 | 2 | 30137 | Set screw, stainless | M8 x 40 |
| 17 | 18 | 30886 | Lock nut, stainless | M8 |
| 18 | 2 | 30856 | Nut, stainless | |
| 19 | 1 | 24115 | Rubber buffer | |
| 20 | 1 | 30874 | Counter nut, stainless | M8 |
| 21 | 1 | 6382732 | Armrest | |
| 22 | 1 | 24101 | Slide bar | |
| 23 | 8 | 30134 | Set screw, stainless | M8 x 25 |
| 24 | 4 | 30925 | Round-head screw | M8 x 16 |
| 25 | 6 | 31755 | Washer | |
| 26 | 4 | 64518 | Plastic plug | |
| 27 | 1 | 24129 | Armrest for seat | |
| 28 | 2 | 6301308 | Bracket for armrest | |
| 29 | 12 | 30133 | Set screw, stainless | M8 x 22 |
| 30 | 8 | 31805 | Clamp sing. | |
| 31 | 8 | 32410 | Screw | MC6 x 40 |
| 32 | 17 | 31154 | Spring washer, stainless | 6 mm |
| 33 | 9 | 30884 | Lock nut, stainless | M6 |
| 34 | 8 | 64514 | Cover for nut | |
| 35 | 1 | 8513854 | Plate | |
| 36 | 9 | 31134 | Washer, stainless | 6 mm |
| 37 | 9 | 30111 | Set screw, stainless | M6 x 12 |
| 38 | 7 | 6232984 | Elbow | |
| 39 | 1 | 8514443 | Safety guard | |
| 40 | 1 | 6233533 | Lock plate | |

# ODIN

Intern ref.: 8512840

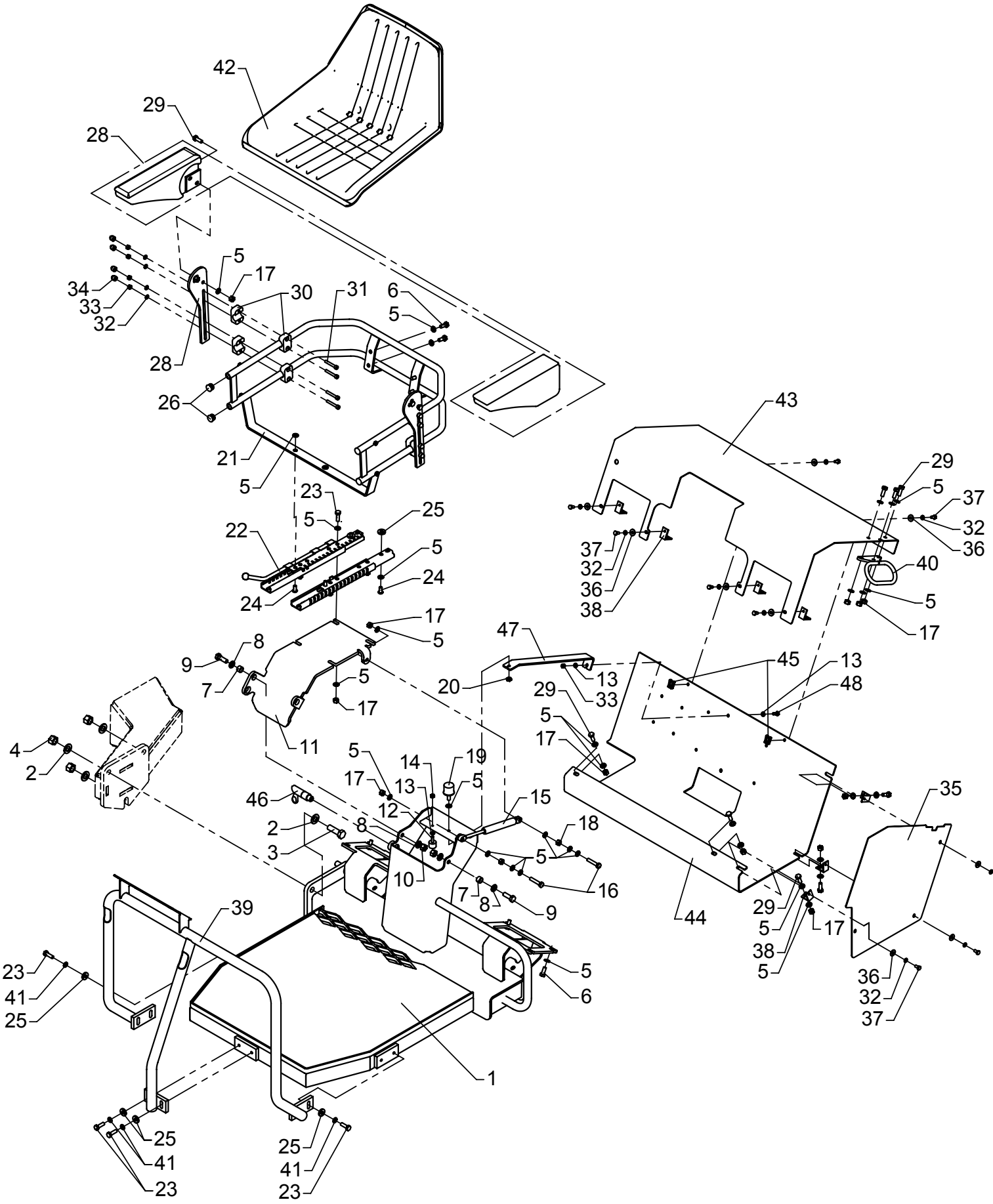

# Top seat, TS

As from / To loader no.: 96 00 00 /
Created: 19.01.2004
Modified: 18.01.2005

| Item no. | Qty. | Part no. | Description | Remarks |
|---|---|---|---|---|
| 41 | 4 | 31155 | Spring washer | 8 mm |
| 42 | 1 | 24102 | Seat compl. | |
| 43 | 1 | 8513472 | Protective plate | |
| 44 | 1 | 8513363 | Protective plate, top seat | |
| 45 | 2 | 31068 | Clip | M6 0,5 - 4,0 mm. |
| 46 | 1 | 46503 | Snap lock, black | |
| 47 | 1 | 6300557 | Reinforcement plate | |
| 48 | 1 | 30112 | Set screw, stainless | M6 x 16 |

# ODIN

Intern ref.: 6383480

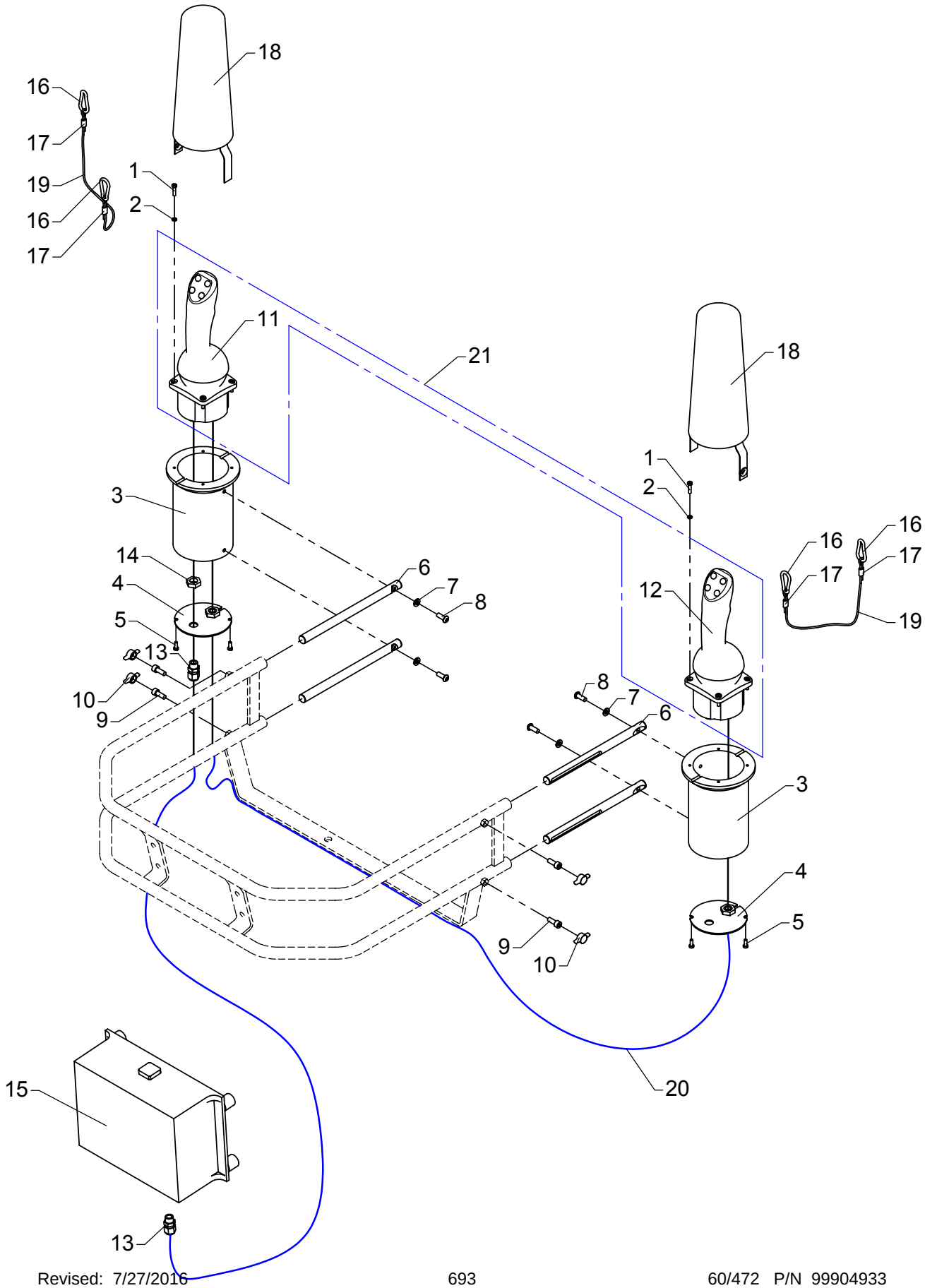

# CAN-Joysticks incl. brackets

As from / To loader no.: 96 00 00 /
Created: 06.01.20004
Modified:

| Item no. | Qty. | Part no. | Description | Remarks |
|---|---|---|---|---|
| 1 | 8 | 30794 | Screw | M4 x 16 |
| 2 | 8 | 31152 | Spring washer, stainless | 4 mm |
| 3 | 2 | 63675 | Joy stick bracket | |
| 4 | 2 | 6383464 | Cover | |
| 5 | 4 | 30768 | Screw, stainless | M4 x 10 |
| 6 | 4 | 6383434 | Insert | |
| 7 | 4 | 31154 | Spring washer, stainless | 6 mm |
| 8 | 4 | 32222 | Button head screw | M6 x 16 |
| 9 | 4 | 31539 | Screw, stainless | MC6 x 16 |
| 10 | 4 | 64353 | Thumb screw | M6 |
| 11 | | 58928 | CAN-Joystick, master excl.wire | |
| 12 | | 58927 | CAN-Joystick, slave excl. wire | |
| 13 | 2 | 28924 | Cable lead-in | M12 x 1,5 |
| 14 | 1 | 28925 | Counter nut | M12 x 1,5 |
| 15 | 1 | 57309 | Electronic box for joystick | |
| 16 | 4 | 62188 | Snap hook | |
| 17 | 4 | 62161 | Wire lock | |
| 18 | 2 | 49120 | Cover for joystick | |
| 19 | 2 | 62160 | Wire rope, nylon | |
| 20 | | 58929 | Cable for CAN-Joysticks | |
| 21 | 1 | 58926 | CAN-Joysticks, cpl. incl. wire | |

# ODIN

Intern ref.: 6649740

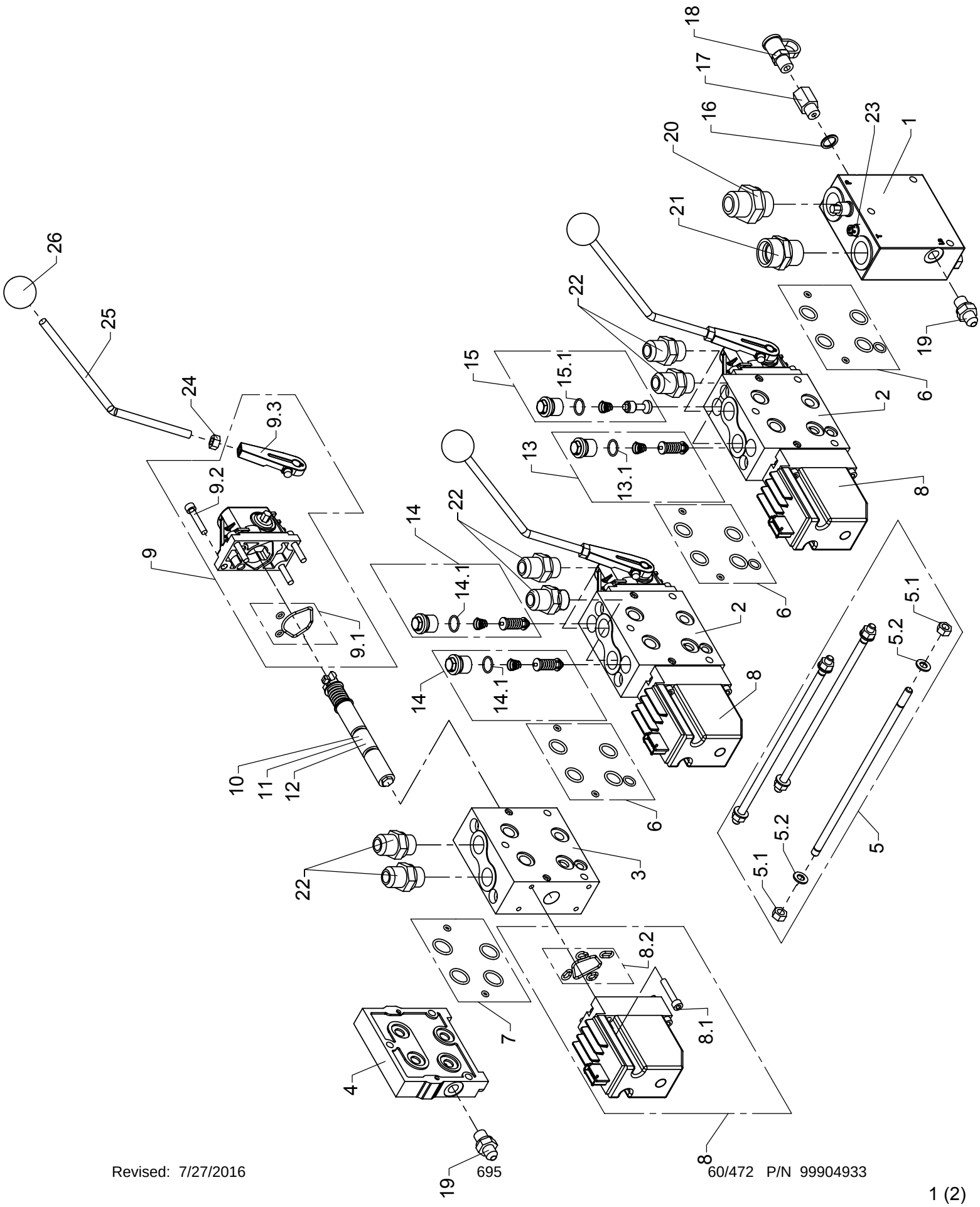

# 1st valve block, dual circuit, TS

As from / To loader no.: 96 00 00 /
Created: 03.12.2003
Modified:

| Item no. | Qty. | Part no. | Description | Remarks |
|---|---|---|---|---|
| | | 62293 | Valve block | |
| 1 | 1 | 62037 | Inlet section | |
| 2 | 2 | 62227 | Control valve | |
| 3 | 1 | 62225 | Control valve | |
| 4 | 1 | 62235 | End plate | |
| 5 | 1 | 62018 | Connecting kit - 3 modules | |
| | 2 | 30856 | Nut, stainless | M8 |
| | 2 | 31147 | Washer, stainless | 8,4x16x1,6 DIN125 A2 |
| 6 | 3 | 62237 | Seal kit | |
| 7 | 1 | 58925 | Seal kit | |
| 8 | 3 | 58935 | Electric module | |
| | 4 | 30420 | Screw | MC5 X 14 DIN 912 KV 12.9 |
| | 1 | 62240 | Seal kit | |
| 9 | 3 | 58907 | Lever module | |
| | 1 | 62239 | Seal kit | |
| | 4 | 30420 | Screw | MC5 X 14 DIN 912 KV 12.9 |
| | 1 | 59682 | Foot for lever | |
| 10 | 1 | 62029 | Spool | |
| 11 | 1 | 62287 | Spool | |
| 12 | 1 | 62034 | Spool | |
| 13 | 1 | 62277 | Port-relief valve | |
| | 1 | 62052 | O-ring | |
| 14 | 2 | 62276 | Port-relief valve | |
| | 1 | 62052 | O-ring | |
| 15 | 1 | 62271 | Port-relief valve | |
| | 1 | 62052 | O-ring | |
| 16 | 1 | 21102 | Seal washer | ø14 x 18,7 x 1,5 |
| 17 | 1 | 25859 | Adaptor | 1/4 BSP x 1/4 NPT JIC |
| 18 | 1 | 59840 | Connection, male | 1/8" NPTF |
| 19 | 2 | 25829 | Straight connection | F40XS 8-1/4 JIC |
| 20 | 1 | 25834 | Straight connection | F40XS 18/20-3/4 JIC |
| 21 | 1 | 25169 | Connection | GEV 22 LR-WD |
| 22 | 6 | 25833 | Straight connection | F40XS 14/16-1/2 JIC |
| 23 | 1 | 61958 | Plug | |
| 24 | 3 | 30856 | Nut, stainless | M8 |
| 25 | 3 | 6882914 | Lever | |
| 26 | 3 | 64535 | Ball. black | |

# ODIN

Intern ref.: 6649750

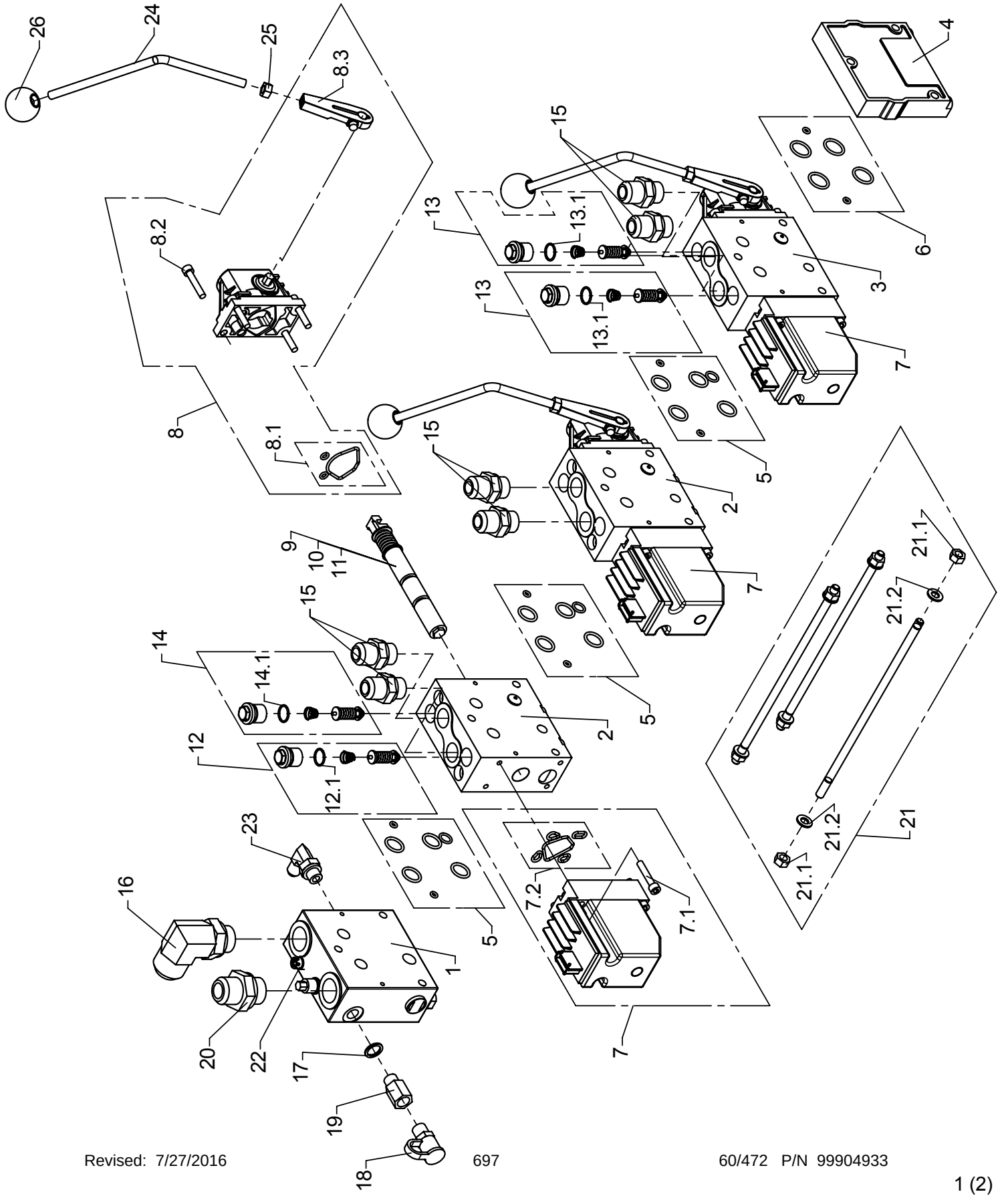

# 2nd valve block, dual circuit, TS

As from / To loader no.: 96 00 00 /
Created: 01.12.2003
Modified: 05.07.2005

| Item no. | Qty. | Part no. | Description | Remarks |
|---|---|---|---|---|
| | | 62292 | Valve block | |
| 1 | 1 | 62037 | Inlet section | |
| 2 | 2 | 62227 | Control valve | |
| 3 | 1 | 62222 | Basic module | |
| 4 | 1 | 58921 | End cover | |
| 5 | 3 | 62237 | Seal kit | |
| 6 | 1 | 58925 | Seal kit | |
| 7 | 3 | 58935 | Electric module | |
| | 2 | 30420 | Screw | MC5 X 14 DIN 912 KV 12.9 |
| | 2 | 62240 | Seal kit | |
| 8 | 3 | 58907 | Lever module | |
| | 1 | 62239 | Seal kit | |
| | 4 | 30420 | Screw | MC5 X 14 DIN 912 KV 12.9 |
| | 1 | 59682 | Foot for lever | |
| 9 | 1 | 61960 | Spool | |
| 10 | 1 | 58923 | Spool | |
| 11 | 1 | 62041 | Spool | |
| 12 | 1 | 62277 | Port-relief valve | |
| | 1 | 62052 | O-ring | |
| 13 | 2 | 62276 | Port-relief valve | |
| | 1 | 62052 | O-ring | |
| 14 | 1 | 62282 | Port-relief valve | |
| | 1 | 62052 | O-ring | |
| 15 | 6 | 25833 | Straight connection | F40XS 14/16-1/2 JIC |
| 16 | 1 | 25840 | Elbow connection | C40XS 25-3/4 JIC |
| 17 | 1 | 21102 | Seal washer | ø14 x 18,7 x 1,5 |
| 18 | 1 | 59840 | Connection, male | 1/8" NPTF |
| 19 | 1 | 25859 | Adaptor | 1/4 BSP x 1/4 NPT JIC |
| 20 | 1 | 25834 | Straight connection | F40XS 18/20-3/4 JIC |
| 21 | 1 | 62018 | Connecting kit - 3 modules | |
| | 2 | 30856 | Nut, stainless | |
| | 2 | 31147 | Washer, stainless | 8,4x16x1,6 DIN125 A2 |
| 22 | 1 | 61958 | Plug | |
| 23 | 1 | 25858 | Elbow connection | C40XS 12-3/8 JIC |
| 24 | 3 | 6882914 | Lever | |
| 25 | 3 | 30856 | Nut, stainless | M8 |
| 26 | 3 | 64535 | Ball. black | |

# ODIN

Intern ref.: 8514370

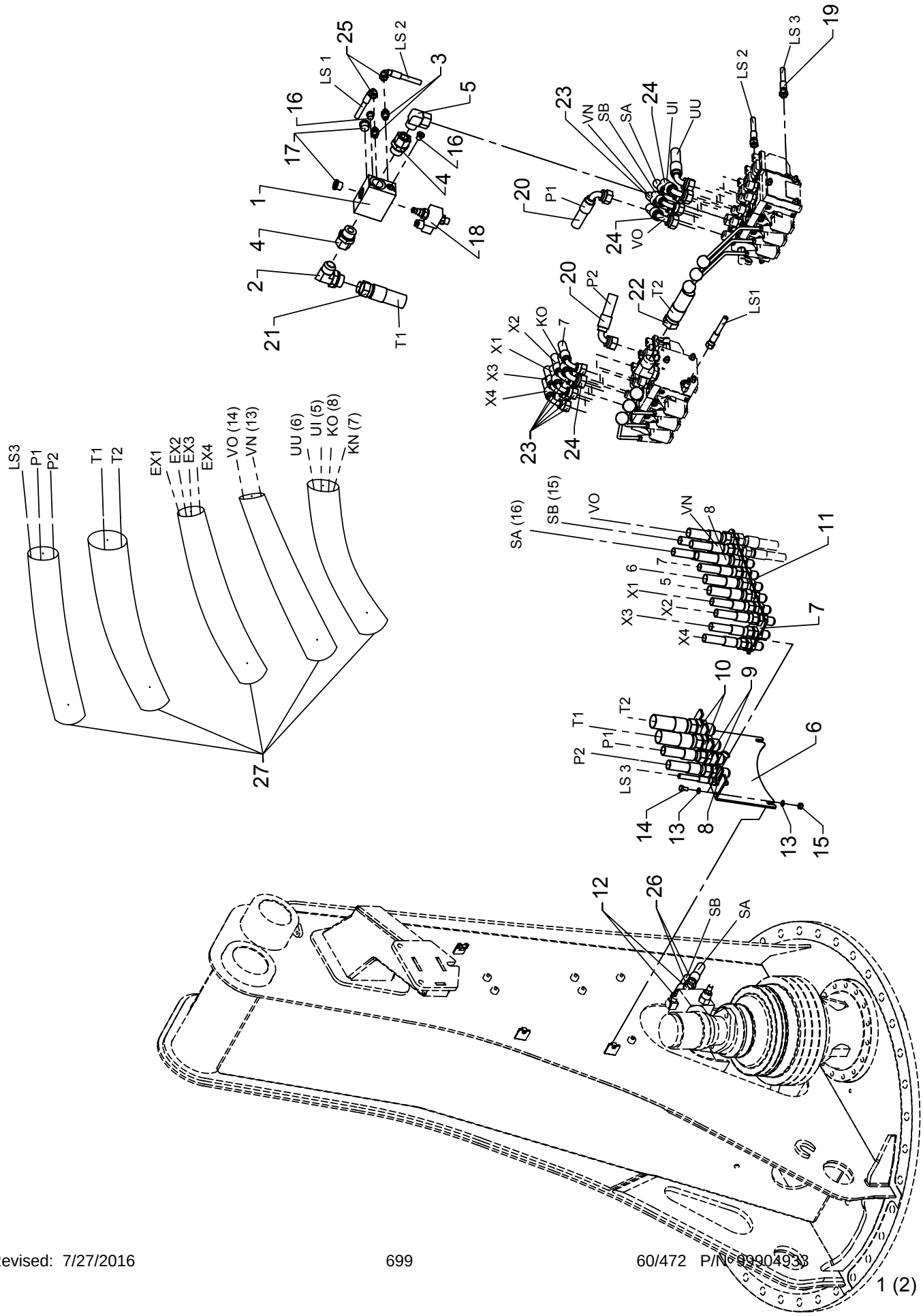

# Hose kit, TS

As from / To loader no.: 96 00 00 /
Created: 26.11.2003
Modified: 09.09.2004

| Item no. | Qty. | Part no. | Description | Remarks |
|---|---|---|---|---|
| 1 | 1 | 59061 | Dump valve | |
| 2 | 1 | 26267 | Elbow connection | C40XS 25-1 JIC |
| 3 | 2 | 25829 | Straight connection | F40XS 8-1/4 JIC |
| 4 | 2 | 26391 | Straight connection | EGESD 22 LR 1-WD |
| 5 | 1 | 25209 | Elbow connection | EWSD 22 L |
| 6 | 1 | 8514394 | Hose bracket (1), TS | |
| 7 | 1 | 8514384 | Hose bracket (2), TS | |
| 8 | 1 | 25823 | Bulkhead connection | WTX-WLNS 8 JIC |
| 9 | 2 | 25862 | Bulkhead connection | WTX-WLNS 20 JIC |
| 10 | 2 | 25894 | Bulkhead connection | WTX-WLNS 25 JIC |
| 11 | 12 | 25825 | Bulkhead connection | WTX-WLNS 14/16 JIC |
| 12 | 2 | 25723 | Elbow connection 45° | V40XS14/16 - 1/2 |
| 13 | 4 | 31155 | Spring washer | 8 mm |
| 14 | 2 | 30131 | Set screw, stainless | M8 x 16 |
| 15 | 2 | 30886 | Lock nut, stainless | M8 |
| 16 | 3 | 25197 | Plug | VS-R-1/4 WD |
| 17 | 2 | 25103 | Plug | VS-R-1/2 WD |
| 18 | 1 | 59642 | Magnet coil | |
| 19 | 1 | 62855 | Hose | 1/4 X 1800 L/L JIC |
| 20 | 2 | 56077 | Hose | 5/8 x 1500 L/90 JIC |
| 21 | 1 | 56050 | Hose | 1 x 1200 L/L JIC 25/25 |
| 22 | 1 | 56058 | Hose | 3/4" x 1550 mm L/L JIC 25-25 |
| 23 | 8 | 56059 | Hose | 1/2 x 1950 L/90 16-16 JIC |
| 24 | 4 | 56138 | Hose | 5/8 x 1950 L/V JIC 16/16 |
| 25 | 2 | 62886 | Hose | 1/4 X 400 L/90 JIC |
| 26 | 2 | 62917 | Hose, JIC | 1/2 X 600 L/L JIC |
| 27 | 5 | 62601 | Protective cover | 170 x 1530 mm |

# ODIN

Intern ref.: 6301680

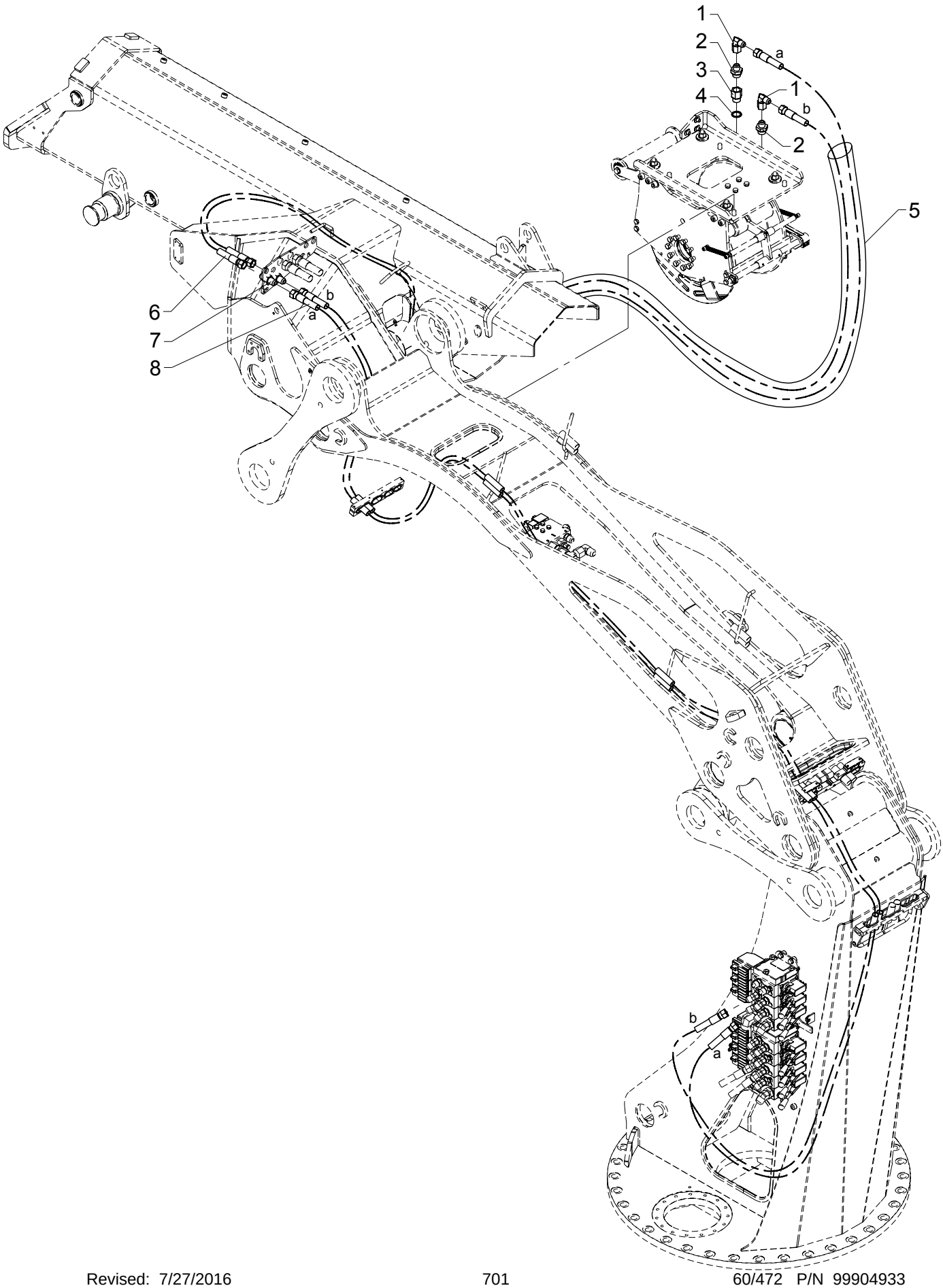

# Hydraulic system, winch

As from / To loader no.: 96 01 95
Created: 02.11.2007
Modified:

| Item no. | Qty. | Part no. | Description | Remarks |
|---|---|---|---|---|
| 1 | 2 | 25741 | Elbow connection | C6XS 14/16 JIC |
| 2 | 2 | 25866 | Connection | F40XS14/16 - 3/4 |
| 3 | 1 | 25949 | Reducing nipple | 3/4 BSP x 3/8 BSP |
| 4 | 1 | 21108 | Seal washer | ø27,05 x 34,93 x 2,34 |
| 5 | 1 | 62587 | Protective cover | 95 x 800 mm |
| 6 | 2 | 56128 | Hose | 1/2" x 2000 L/L JIC |
| 7 | 2 | 25825 | Bulkhead connection | WTX-WLNS 14/16 JIC |
| 8 | 2 | 56056 | Hose | 1/2" x 5900 L/L JIC |

# ODIN

Intern ref.: 6301080

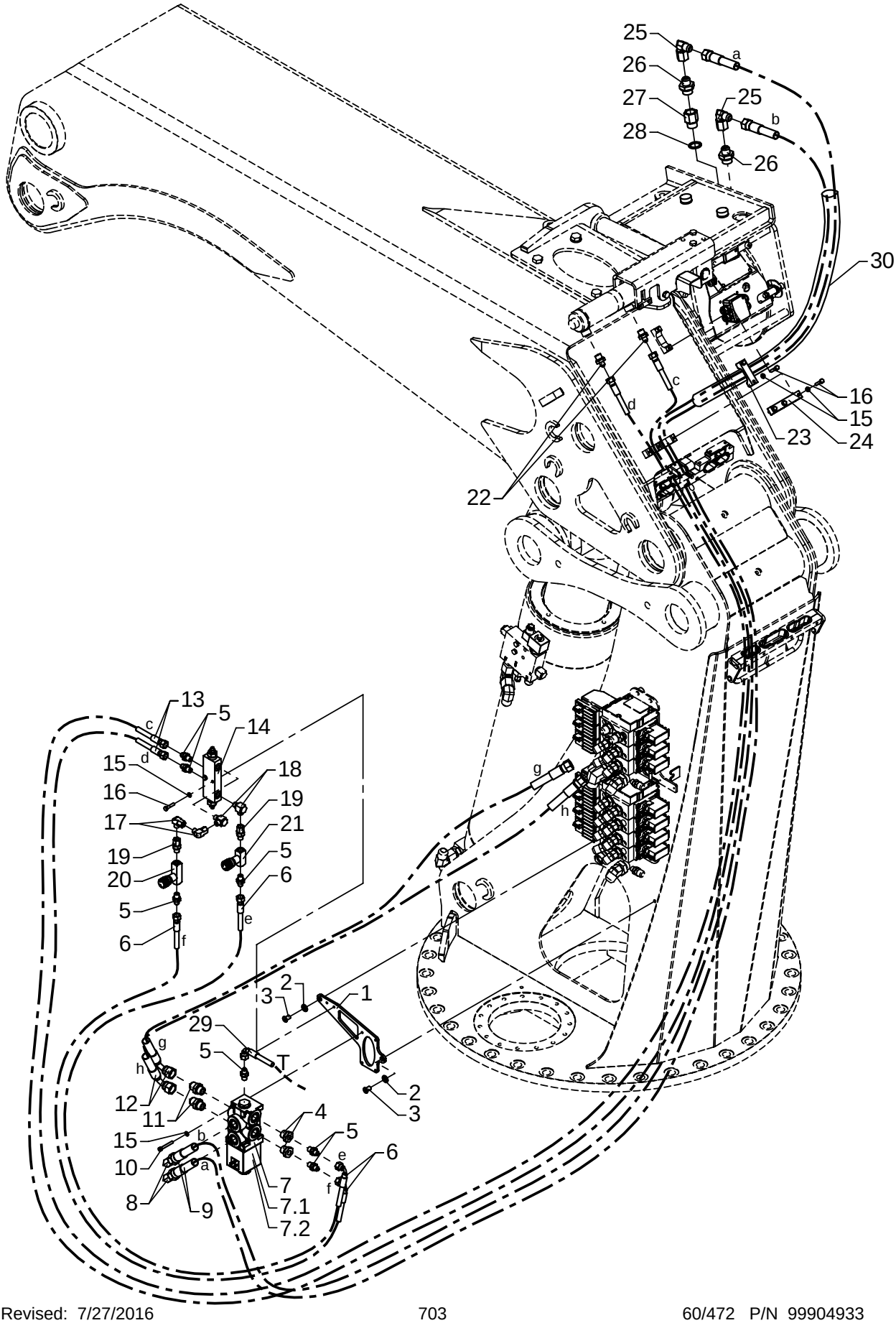

# Hydraulic system, winch with FJ

As from / To loader no.: 96 00 00 / 96 01 94
Created: 04.05.2004
Modified: 02.11.2007

| Item no. | Qty. | Part no. | Description | Remarks |
|---|---|---|---|---|
| 1 | 1 | 6300606 | Bracket | |
| 2 | 2 | 31177 | Washer | 10 mm |
| 3 | 2 | 32423 | Sockethead screw | MC10 x 16 |
| 4 | 2 | 25180 | Reducing connection | RED-R 1/2-WD/R 1/4 |
| 5 | 7 | 25829 | Straight connection | F40XS 8-1/4 JIC |
| 6 | 2 | 62887 | Hose | 1/4" x 550 mm V/O JIC |
| 7 | 1 | 58476 | Change-over valve | |
| | | 59067 | Solenoid 24 V | |
| | | 59066 | Solenoid 12 V | |
| 8 | 2 | 25839 | Elbow connection | C40XS 14/16-1/2 JIC |
| 9 | 2 | 62868 | Hose | 1/2 X 3900 L/L JIC |
| 10 | 3 | 30435 | Screw | MC6 x 45 |
| 11 | 2 | 25833 | Straight connection | F40XS 14/16-1/2 JIC |
| 12 | 2 | 56105 | Hose | 1/2 X 750 V/O JIC |
| 13 | 2 | 62874 | Hose | 1/4 X 3700 V/O JIC |
| 14 | 1 | 59059 | Load-holding valve | |
| 15 | 10 | 32302 | Face washer, stainless | 6 mm |
| 16 | 7 | 30115 | Steel bolt, stainless | M6 x 30 |
| 17 | 2 | 26170 | Elbow connection | EWSD 8 L |
| 18 | 2 | 25113 | Banjo connection | RSWV 8 LR |
| 19 | 2 | 26104 | Connection | EGESD 8 LR-WD |
| 20 | 1 | 60286 | One way restrictor valve | |
| 21 | 1 | 60354 | Restrictor valve | |
| 22 | 2 | 25830 | Straight connection | F40XS8 - 3/8 JIC |
| 23 | 1 | 6300945 | Clamp | |
| 24 | 1 | 6300943 | Clamp | |
| 25 | 2 | 25741 | Elbow connection | C6XS 14/16 JIC |
| 26 | 2 | 25866 | Connection | F40XS 14-3/4 JIC |
| 27 | 1 | 25949 | Reducing nipple | 3/4 BSP x 3/8 BSP |
| 28 | 1 | 21108 | Seal washer | ø27,05 x 34,93 x 2,34 |
| 30 | 1 | 62587 | Protective cover | 95 x 800 mm |
| 29 | 1 | 62974 | Hose | 1/4 x 350 90/L JIC |

# ODIN

Intern ref.: 6301690

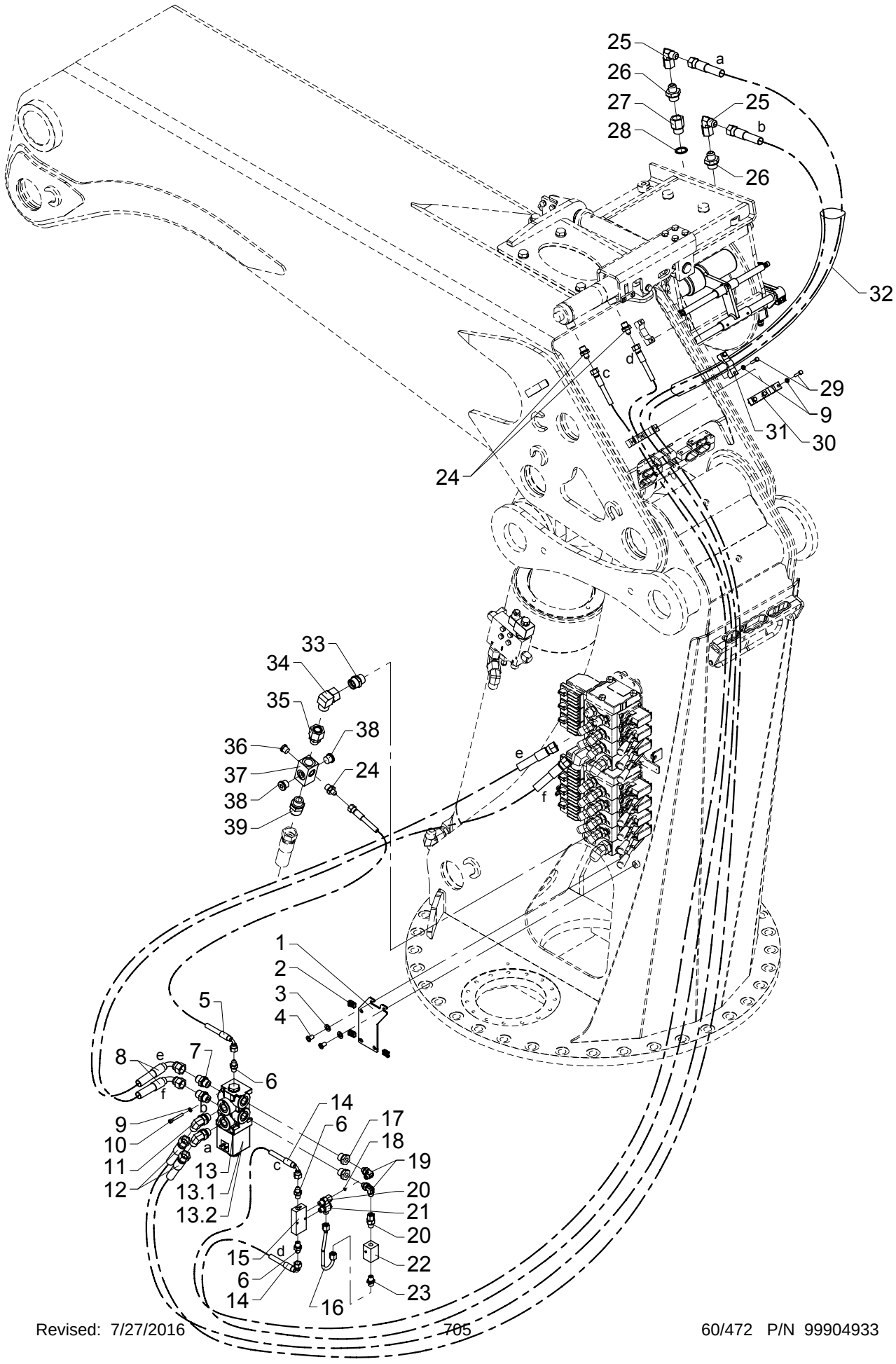

# Hydraulic system, winch with FJ

As from / To loader no.: 96 01 95
Created: 02.11.2007
Modified: 14.02.2008

| Item no. | Qty. | Part no. | Description | Remarks |
|---|---|---|---|---|
| 1 | 1 | 6301116 | Bracket for change-over valve | |
| 2 | 3 | 31068 | Clip | M6 0,5 - 4,0 mm. |
| 3 | 2 | 31177 | Washer | 10 mm |
| 4 | 2 | 32423 | Sockethead screw | MC10 x 16 |
| 5 | 1 | 62974 | Hose | 1/4 x 350 90/L JIC |
| 6 | 3 | 25829 | Straight connection | F40XS8 - 1/4 |
| 7 | 2 | 25833 | Straight connection | F40XS14/16 - 1/2 |
| 8 | 2 | 56105 | Hose | 1/2 X 750 V/O JIC |
| 9 | 8 | 32302 | Face washer, stainless | 6 mm |
| 10 | 3 | 30435 | Screw | MC6 x 45 |
| 11 | 2 | 25839 | Elbow connection | C40XS14/16 - 1/2 |
| 12 | 2 | 62868 | Hose | 1/2 X 3900 L/L JIC |
| 13 | 1 | 58476 | Change-over valve | |
| | | 59066 | Solenoid 12 V | |
| | | 59067 | Solenoid 24 V | |
| 14 | 2 | 62874 | Hose | 1/4 X 3700 V/O JIC |
| 15 | 1 | 49223 | Piloted check-valve, double | |
| 16 | 1 | 6301317 | Pipe, winch system | |
| 17 | 2 | 25180 | Reducing connection | RED-R 1/2-WD/R 1/4 |
| 18 | 1 | 60960 | Washer | |
| 19 | 2 | 26898 | Elbow connection | 8 mm - 1/4" |
| 20 | 2 | 26104 | Connection | EGESD 8 LR-WD |
| 21 | 1 | 25113 | Banjo connection | RSWV 8 LR |
| 22 | 1 | 49224 | Throttle valve 1/4" | |
| 23 | 1 | 25109 | Connection | GES 8 LR-WD |
| 24 | 3 | 25830 | Straight connection | F40XS8 - 3/8 |
| 25 | 2 | 25741 | Elbow connection | C6XS 14/16 JIC |
| 26 | 2 | 25866 | Connection | F40XS14/16 - 3/4 |
| 27 | 1 | 25949 | Reducing nipple | 3/4 BSP x 3/8 BSP |
| 28 | 1 | 21108 | Seal washer | ø27,05 x 34,93 x 2,34 |
| 29 | 5 | 30115 | Steel pin, stainless | M6 x 30 |
| 30 | 1 | 6300943 | Clamp | |
| 31 | 1 | 6300945 | Clamp | |
| 32 | 1 | 62587 | Protective cover | 95 x 800 mm |
| 33 | 1 | 25169 | Connection | P-GEV 22 LR-WD |
| 34 | 1 | 25209 | Elbow connection | EWSD 22 L |
| 35 | 1 | 25279 | Connection | EGESD 22 LR-WD |
| 36 | 1 | 25277 | Plug | VS-R-3/8 WD |
| 37 | 1 | 59355 | Return block | |
| 38 | 2 | 25103 | Plug | VS-R-1/2 WD |
| 39 | 1 | 25836 | Straight connection | F40XS25 - 3/4 |

# ODIN

Intern ref.: 6301050

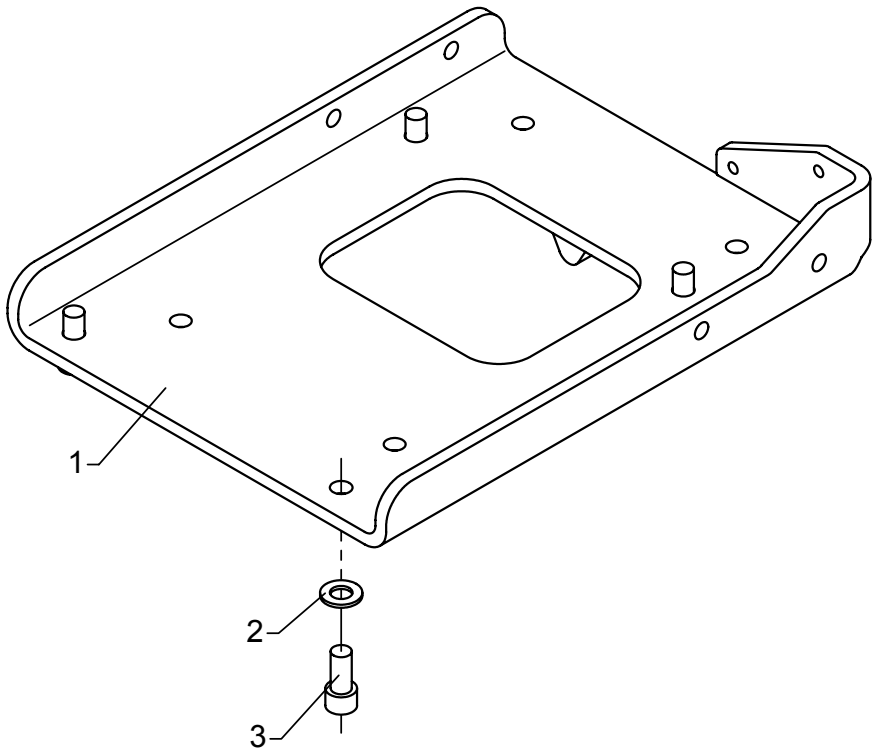

# Stowing bracket

As from / To loader no.: 96 00 00 / 96 00 74
Created: 03.10.2003
Modified: 08.04.2005

| Item no. | Qty. | Part no. | Description | Remarks |
|---|---|---|---|---|
| 1 | 1 | 6300891 | Winch bracket | |
| 2 | 4 | 31178 | Washer | 14 mm |
| 3 | 4 | 30480 | Screw | MC14 x 30 |

# ODIN

Intern ref.: 6301050

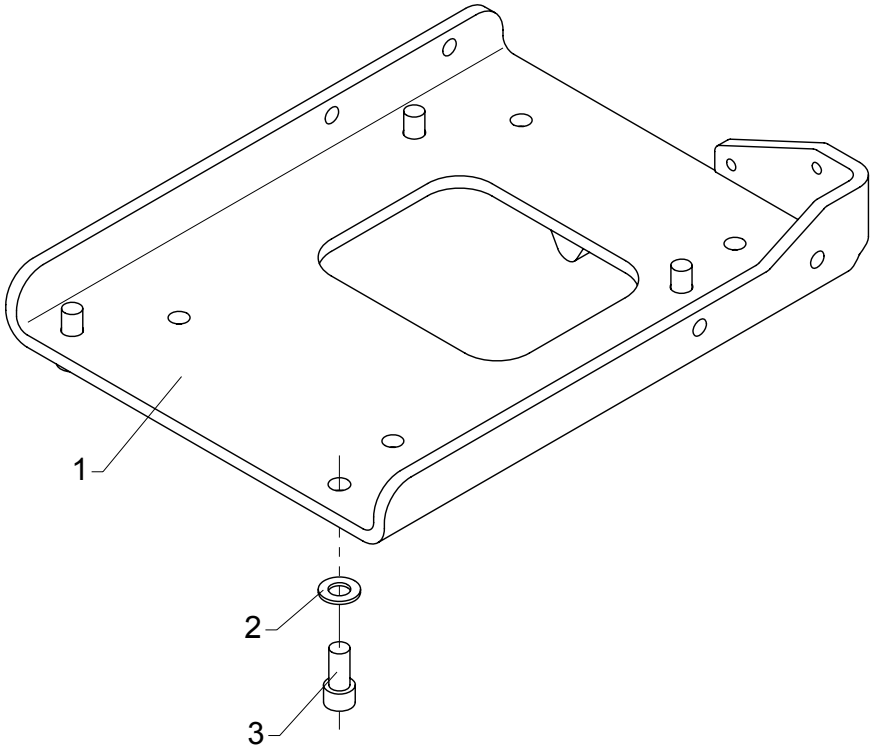

# Stowing bracket

As from / To loader no.: 96 00 75 / 96 01 94
Created: 08.04.2005
Modified: 02.11.2007

| Item no. | Qty. | Part no. | Description | Remarks |
|---|---|---|---|---|
| 1 | 1 | 6301205 | Winch bracket | |
| 2 | 4 | 31178 | Washer | 14 mm |
| 3 | 4 | 30480 | Screw | MC14 x 30 |

# ODIN

Intern ref.: 6301540

*

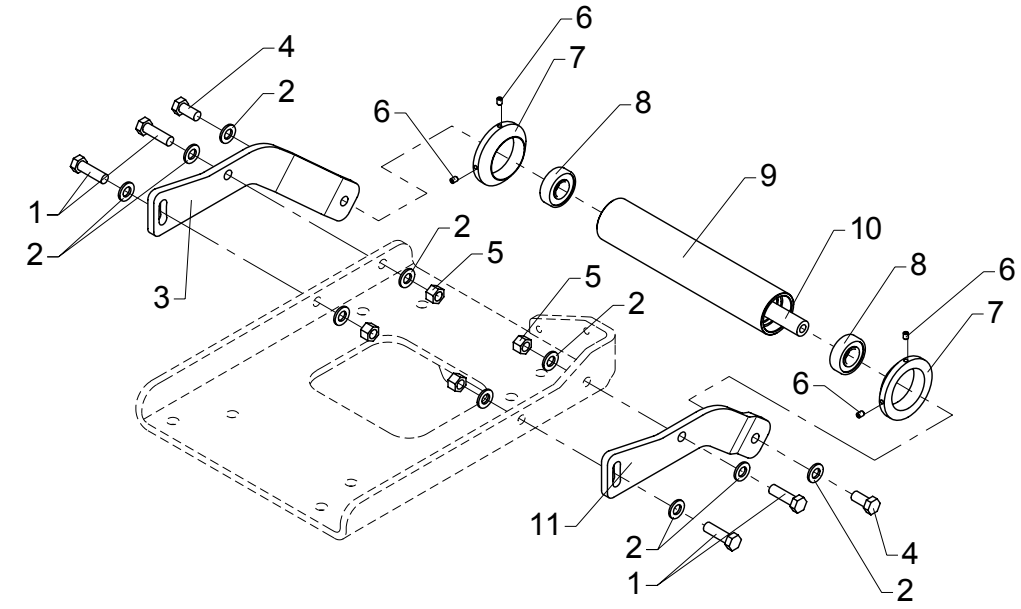


**

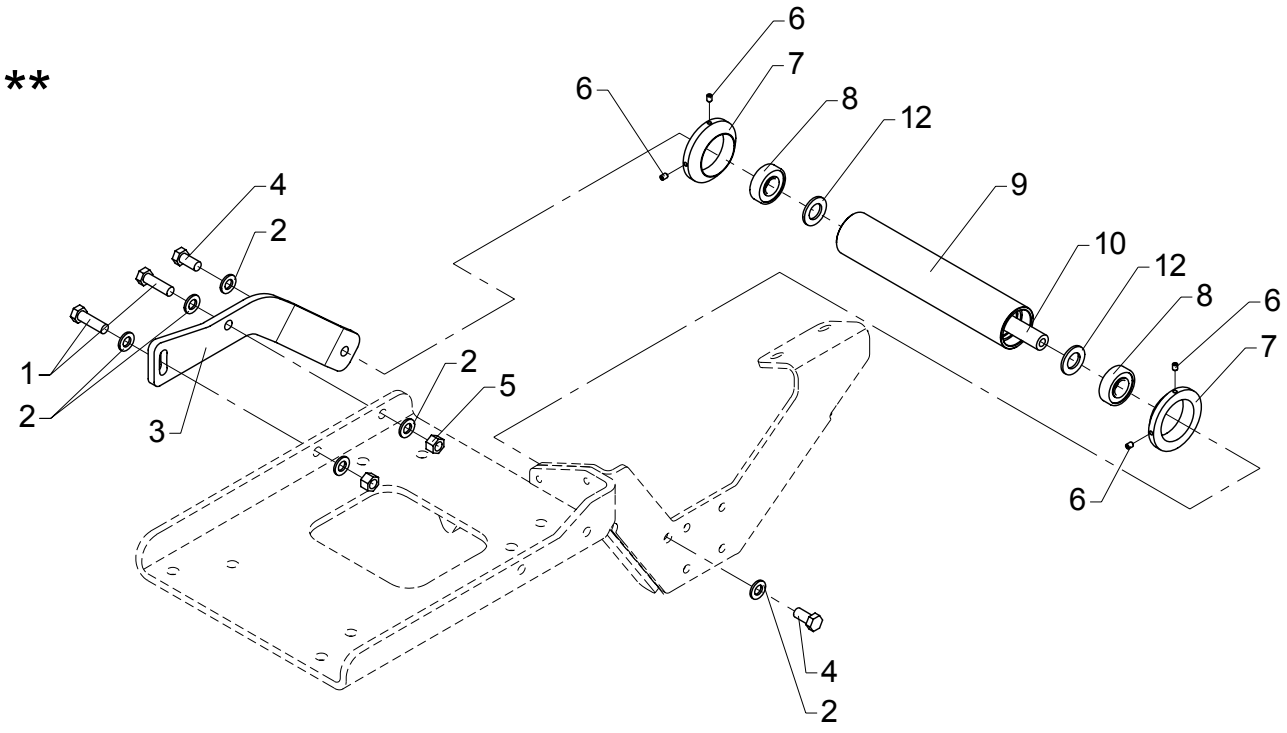

# Guide Roller

As from / To loader no.: 96 00 00 / 96 01 94
Created: 10.08.2004
Modified: 02.11.2007

| Item no. | Qty. | Part no. | Description | Remarks |
|---|---|---|---|---|
| 1 | | 31533 | Set screw, stainless | M12 x 40 |
| 2 | | 31131 | Washer | 12 mm |
| 3 | 1 | 6300566 | Side plate for guide roller, R | |
| 4 | 2 | 31504 | Set screw, stainless | M12 x 25 |
| 5 | | 32216 | Lock nut, stainless | M12 |
| 6 | 4 | 31577 | Pointed screw, stainless | MSP6 x 8 |
| 7 | 2 | 6886764 | Guide roller | |
| 8 | 2 | 23178 | Ball bearing | |
| 9 | 1 | 6300571 | Roller | |
| 10 | 1 | 6300649 | Pin | |
| 11 | | 6300567 | Side plate for guide roller, L | |
| 12 | | 31179 | Washer | 20 mm |

* Without hose reels
** With hose reels

# ODIN

Intern ref.: 6301070

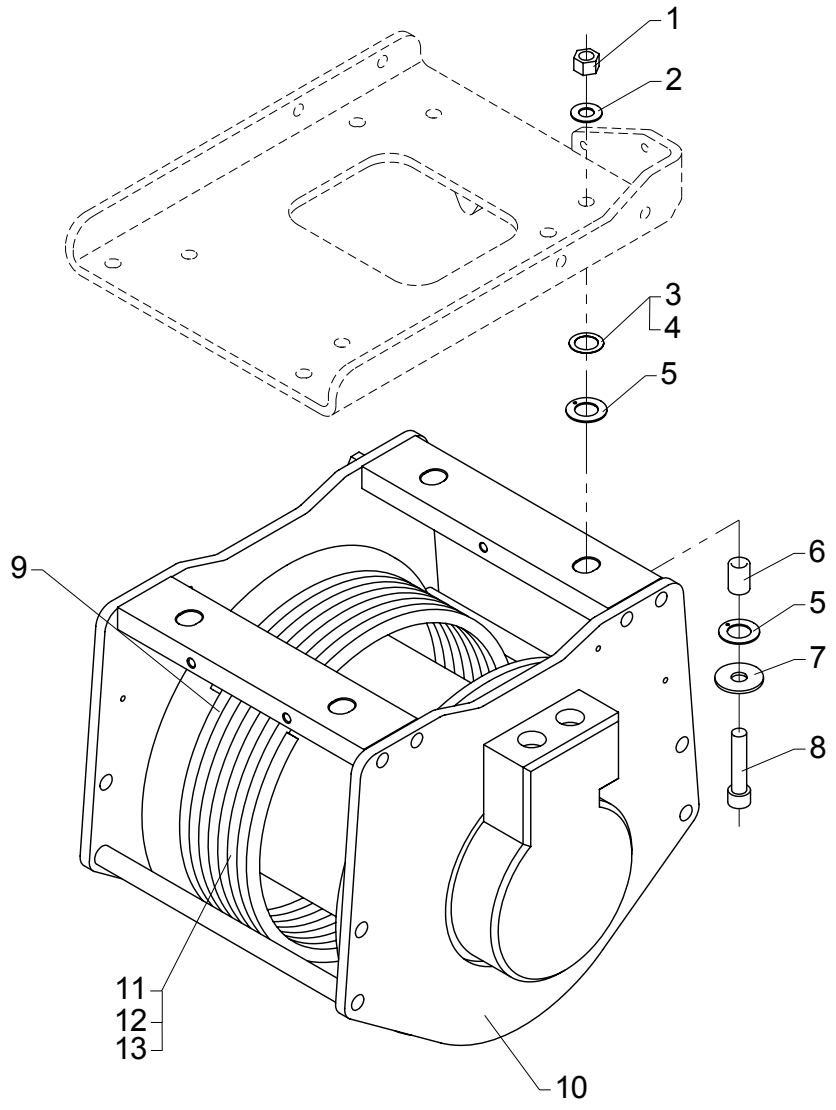


80 Nm

PBC 492

# Winch, Brevini 2500

As from / To loader no.: 96 00 00 / 96 01 94
Created: 03.10.2003
Modified: 02.11.2007

| Item no. | Qty. | Part no. | Description | Remarks |
|---|---|---|---|---|
| 1 | 4 | 30891 | Lock nut | M14 |
| 2 | 4 | 31195 | Washer | 14 mm |
| 3 | 4 | 31770 | Washer | ø22 x 32 x 0,5 |
| 4 | 4 | 31769 | Washer | ø22 x 32 x 0,3 |
| 5 | 8 | 23900 | Washer | WC 20 DU |
| 6 | 4 | 6300894 | Bushing | |
| 7 | 4 | 31763 | Washer | 45 x 15 x 3 |
| 8 | 4 | 31903 | Cylinder screw | MC14 x 65 |
| 9 | 1 | 6300524 | Guide | |
| 10 | 1 | 58245 | Winch, left | |
| | | 58263 | Seal kit | |
| 11 | | 63203 | Wire rope | K2-K8 without FJ |
| 12 | | 63202 | Wire rope | K2-K7 with FJ |
| 13 | | 63205 | Wire rope | K8 with FJ |

# 6020K

Intern ref.: 6301660

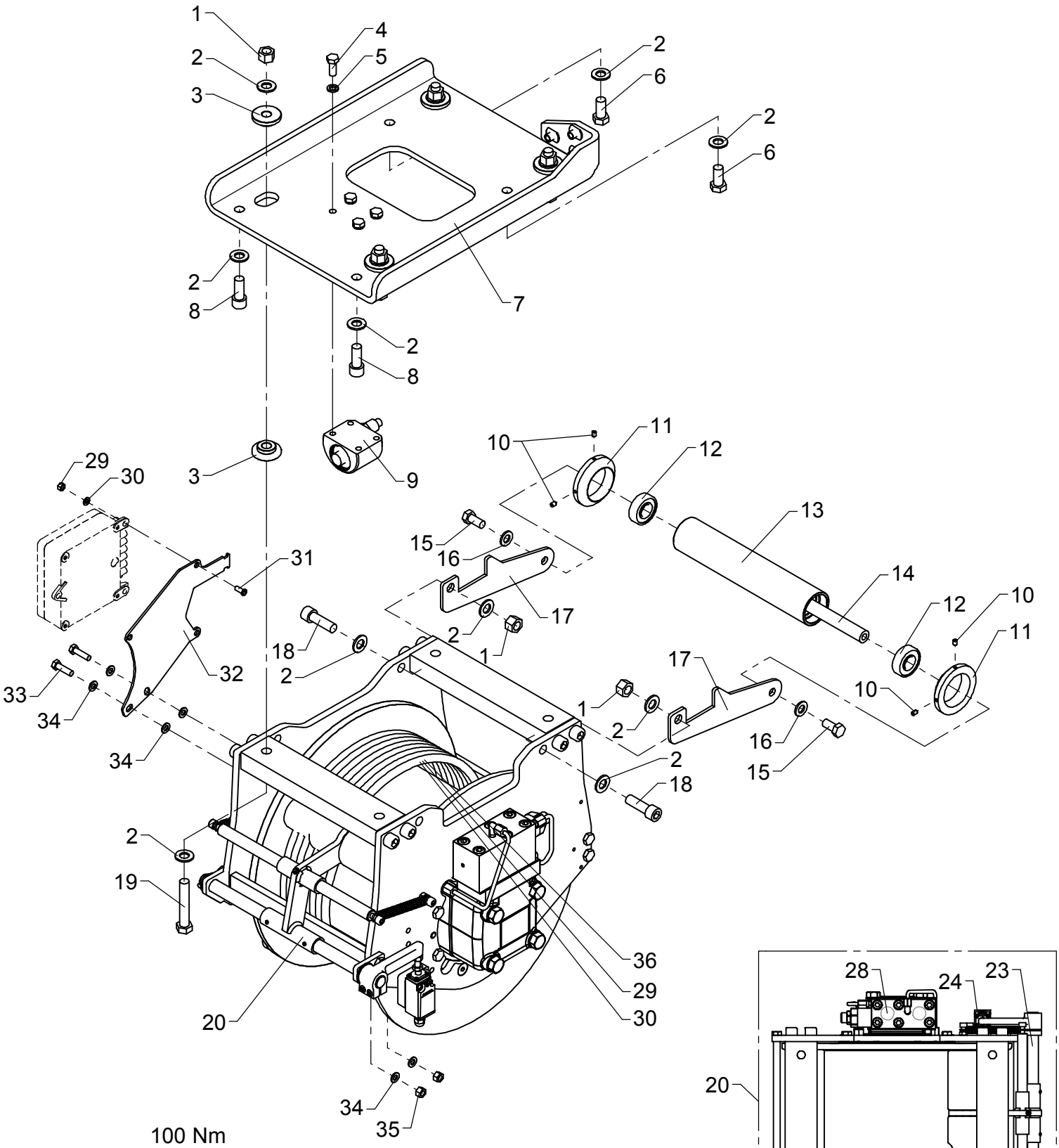

# Winch, cpl.

As from / To loader no.: 96 01 95
Created: 02.11.2007
Modified: 29.08.2012

| Item no. | Qty. | Part no. | Description | Remarks |
|---|---|---|---|---|
| 1 | 6 | 30891 | Lock nut | M14 |
| 2 | 16 | 31178 | Washer | 14 mm |
| 3 | 8 | 6301337 | Washer | |
| 4 | 4 | 30155 | Set screw | M10 x 25 |
| 5 | 4 | 30933 | Nordlock washer | 10 mm |
| 6 | 2 | 30206 | Set screw | M14 x 30 |
| 7 | 1 | 6301331 | Winch bracket | |
| 8 | 2 | 30482 | Screw | MC14 x 35 |
| 9 | 1 | 6887210 | Weighing cell, hydraul. | |
| 10 | 4 | 31577 | Pointed screw, stainless | MSP6 x 8 |
| 11 | 2 | 6886764 | Guide roller | |
| 12 | 2 | 23178 | Ball bearing | |
| 13 | 1 | 6300571 | Roller | |
| 14 | 1 | 6300649 | Pin | |
| 15 | 2 | 30176 | Set screw | M12 x 25 |
| 16 | 2 | 31131 | Washer | 12 mm |
| 17 | 2 | 6301335 | Guide roller bracket | |
| 18 | 2 | 32487 | Screw | MC14 x 45 |
| 19 | 4 | 30214 | Steel bolt | M14 x 80 |
| 20 | 1 | 58281 | Winch | |
| 21 | 1 | 69260 | Seal kit winch + brake | 600140101 |
| 22 | 1 | 69262 | Discs and springs brake kit | 6x415030800 + 5x415040400 + 2x416203700 |
| 23 | 1 | 69255 | Wire guide | 905146800 |
| 24 | 1 | 29532 | Switch, winch | 905000102 |
| 25 | 1 | 69257 | Thimble | 02410204 |
| 26 | 1 | 69258 | Motor | 425020300 |
| 27 | 1 | 69261 | Seal kit for motor | 600008800 |
| 28 | 1 | 69259 | Valve | 438014600 |
| 29 | 3 | 30854 | Nut, stainless | M6 |
| 30 | 3 | 32302 | Face washer, stainless | 6 mm |
| 31 | 3 | 32490 | Screw | MC6 x 16 |
| 32 | 1 | 6301127 | Plate for CIO | |
| 33 | 2 | 30135 | Set screw, stainless | M8 x 30 |
| 34 | 6 | 31147 | Face washer, 8 mm | |
| 35 | 2 | 30886 | Lock nut, stainless | M8 |
| 36 | 1 | 63203 | Wire rope | ø12 x 61 mtr. |
| 37 | 1 | 63202 | Wire rope | ø12 x 71 mtr. |
| 38 | 1 | 63205 | Wire rope | ø12 x 78 mtr. |

# ODIN

Intern ref.: 6301020

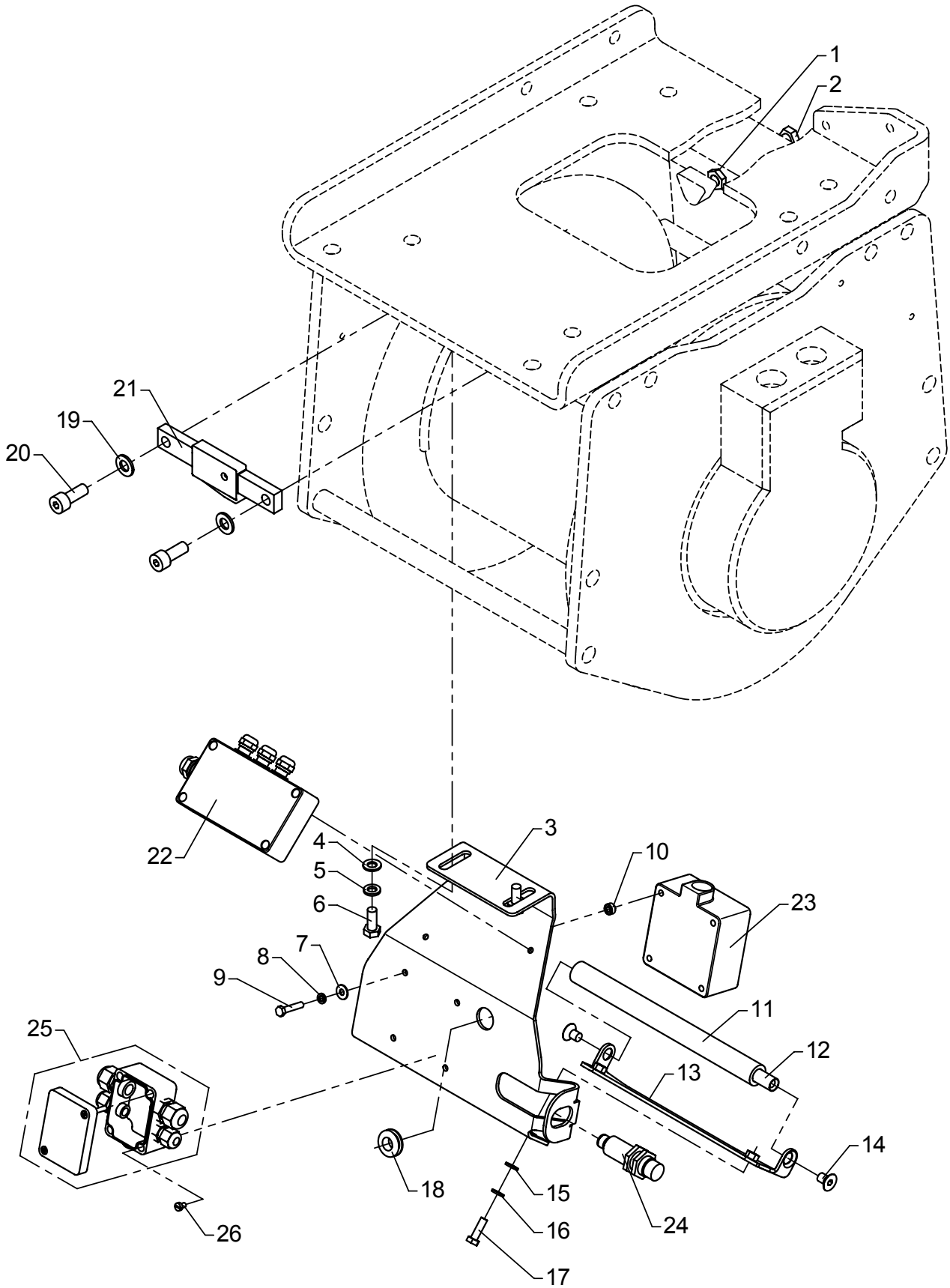

# Safety system

As from / To loader no.: 96 00 00 / 96 00 74
Created: 03.10.2003
Modified: 08.04.2005

| Item no. | Qty. | Part no. | Description | Remarks |
|---|---|---|---|---|
| 1 | 1 | 32111 | Counter nut | M10 |
| 2 | 1 | 30164 | Steel bolt | M10 x 90 |
| 3 | 1 | 6300777 | Protection plate | |
| 4 | 2 | 31147 | Washer, stainless | 8 mm |
| 5 | 2 | 31155 | Spring washer | 8 mm |
| 6 | 2 | 30132 | Set screw, stainless | M8 x 20 |
| 7 | 4 | 31189 | Washer | 5 mm |
| 8 | 4 | 31153 | Spring washer, stainless | 5 mm |
| 9 | 4 | 30102 | Steel bolt, stainless | M5 x 25 |
| 10 | 4 | 42921 | Bushing | |
| 11 | 1 | 63519 | Guard roller | |
| 12 | 1 | 6300774 | Pin for guide roller | |
| 13 | 1 | 6300772 | Bracket | |
| 14 | 2 | 30597 | Counter-sunk screw | MK8 x 12 |
| 15 | 2 | 32302 | Face washer, stainless | 6 mm |
| 16 | 2 | 31154 | Spring washer, stainless | 6 mm |
| 17 | 2 | 30113 | Set screw, stainless | M6 x 20 |
| 18 | 1 | 27956 | Cable lead-in | |
| 19 | 2 | 31177 | Washer | 10 mm |
| 20 | 2 | 30453 | Screw | MC10 x 25 |
| 21 | 1 | 58251 | Load cell | |
| 22 | 1 | 28381 | Weighing cell amplifier | |
| 23 | 1 | 28320 | Proximity switch | |
| 24 | 1 | 28210 | Proximity switch | |
| 25 | 1 | 28371 | Connecting box | |
| 26 | 2 | 30734 | Screw | M4 x 10 |

# ODIN

Intern ref.: 6301020

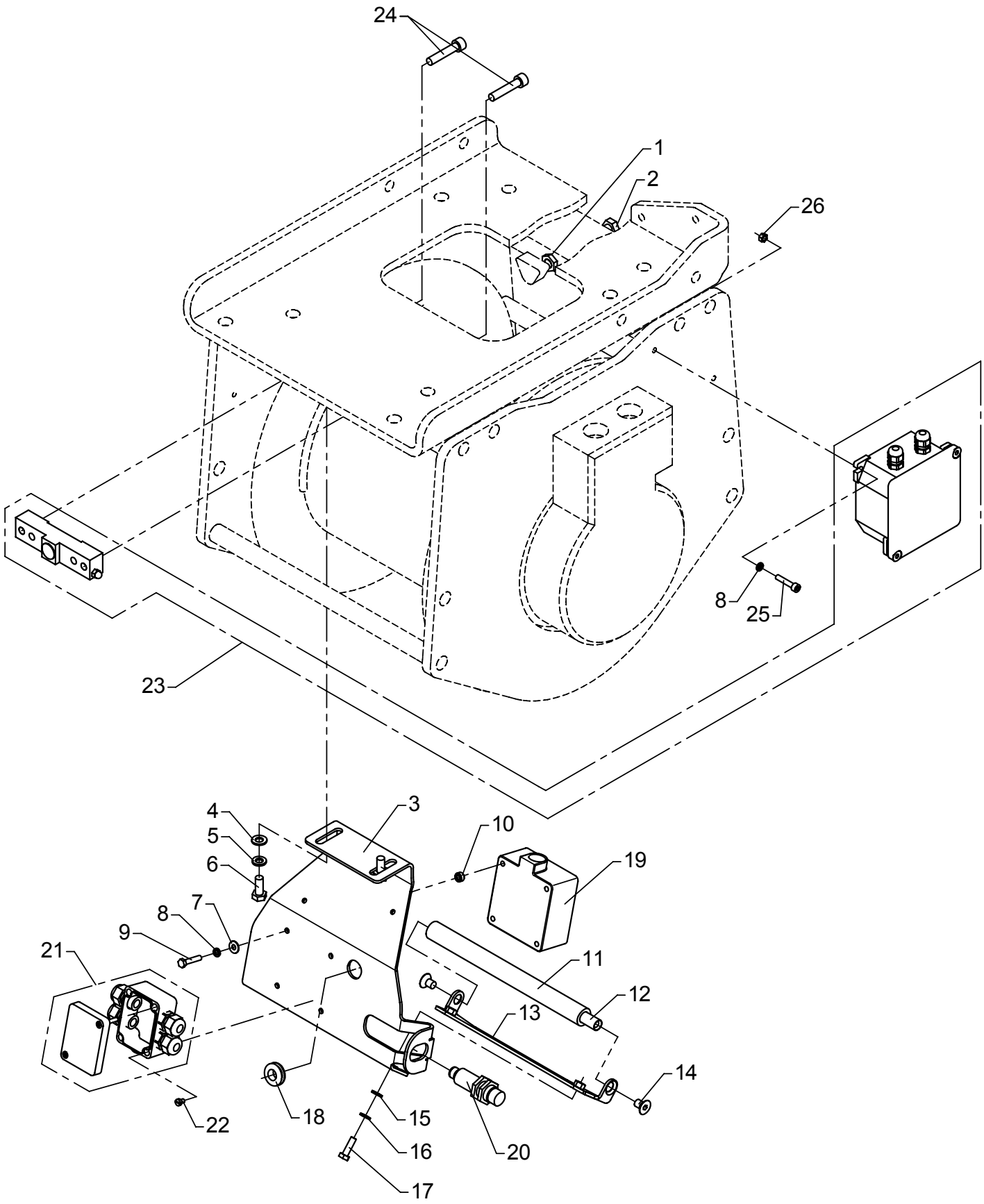

# Safety system

As from / To loader no.: 96 00 75 / 96 01 94
Created: 08.04.2005
Modified: 02.11.2007

| Item no. | Qty. | Part no. | Description | Remarks |
|---|---|---|---|---|
| 1 | 1 | 32111 | Counter nut | M10 |
| 2 | 1 | 30164 | Steel bolt | M10 x 90 |
| 3 | 1 | 6300777 | Protection plate | |
| 4 | 2 | 31147 | Washer, stainless | 8 mm |
| 5 | 2 | 31155 | Spring washer | 8 mm |
| 6 | 2 | 30132 | Set screw, stainless | M8 x 20 |
| 7 | 4 | 31189 | Washer | 5 mm |
| 8 | 6 | 31153 | Spring washer, stainless | 5 mm |
| 9 | 4 | 30102 | Steel bolt, stainless | M5 x 25 |
| 10 | 4 | 42921 | Bushing | |
| 11 | 1 | 63519 | Guard roller | |
| 12 | 1 | 6300774 | Pin for guide roller | |
| 13 | 1 | 6300772 | Bracket | |
| 14 | 2 | 30597 | Counter-sunk screw | MK8 x 12 |
| 15 | 2 | 32302 | Face washer, stainless | 6 mm |
| 16 | 2 | 31154 | Spring washer, stainless | 6 mm |
| 17 | 2 | 30113 | Set screw, stainless | M6 x 20 |
| 18 | 1 | 27956 | Cable lead-in | |
| 19 | 1 | 28320 | Proximity switch | |
| 20 | 1 | 28210 | Proximity switch | |
| 21 | 1 | 28371 | Connecting box | |
| 22 | 2 | 30734 | Screw | M4 x 6 |
| 23 | 1 | 58265 | Load cell, 5000 kg capacity | |
| 24 | 2 | 30445 | Sockethead screw | MC8 x 40 |
| 25 | 2 | 30481 | Screw | MC5 x 25 |
| 26 | 2 | 30853 | Nut, stainless | M5 |

# ODIN

Intern ref.: 6887210

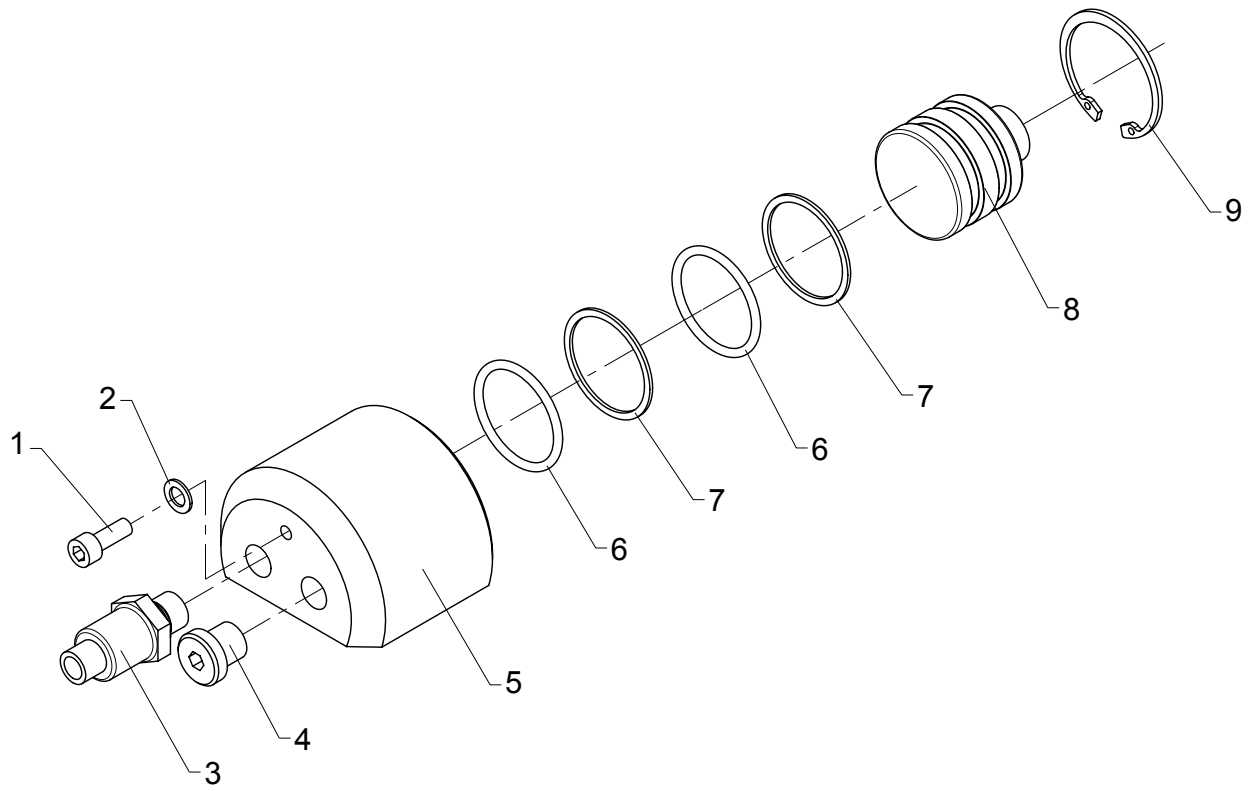

# Weighing cell

As from / To loader no.: 96 01 95
Created: 02.11.2007
Modified:

| Item no. | Qty. | Part no. | Description | Remarks |
|---|---|---|---|---|
| 1 | 1 | 30424 | Screw | MC6 x 16 |
| 2 | 1 | 21109 | Seal washer | ø7,1 x 12 x 1 |
| 3 | 1 | 28850 | Pressure transducer | |
| 4 | 1 | 25197 | Plug | VS-R-1/4 WD |
| 5 | 1 | 6300741 | Housing | |
| 6 | 2 | 20177 | O-ring | OR 34,2 x 3 |
| 7 | 2 | 20705 | Back ring | STR 35 x 40 x 1,3 |
| 8 | 1 | 6300742 | Piston | |
| 9 | 1 | 33178 | Circlip | 42 I |

# ODIN

Intern ref.: 6886500

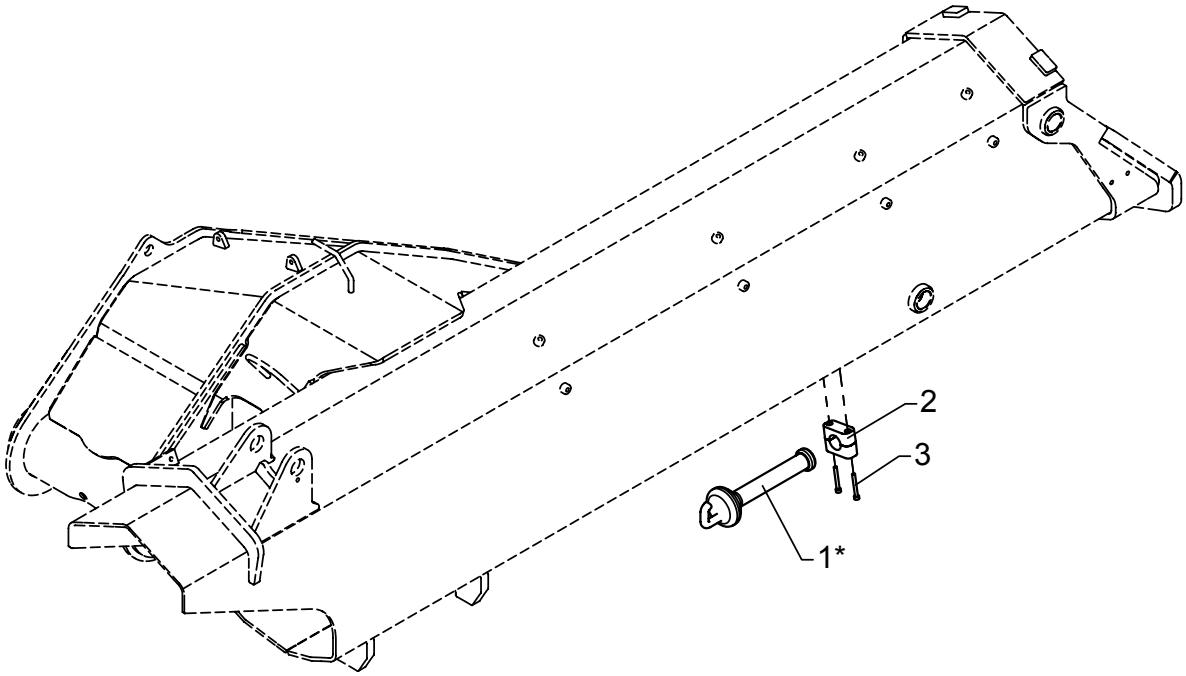


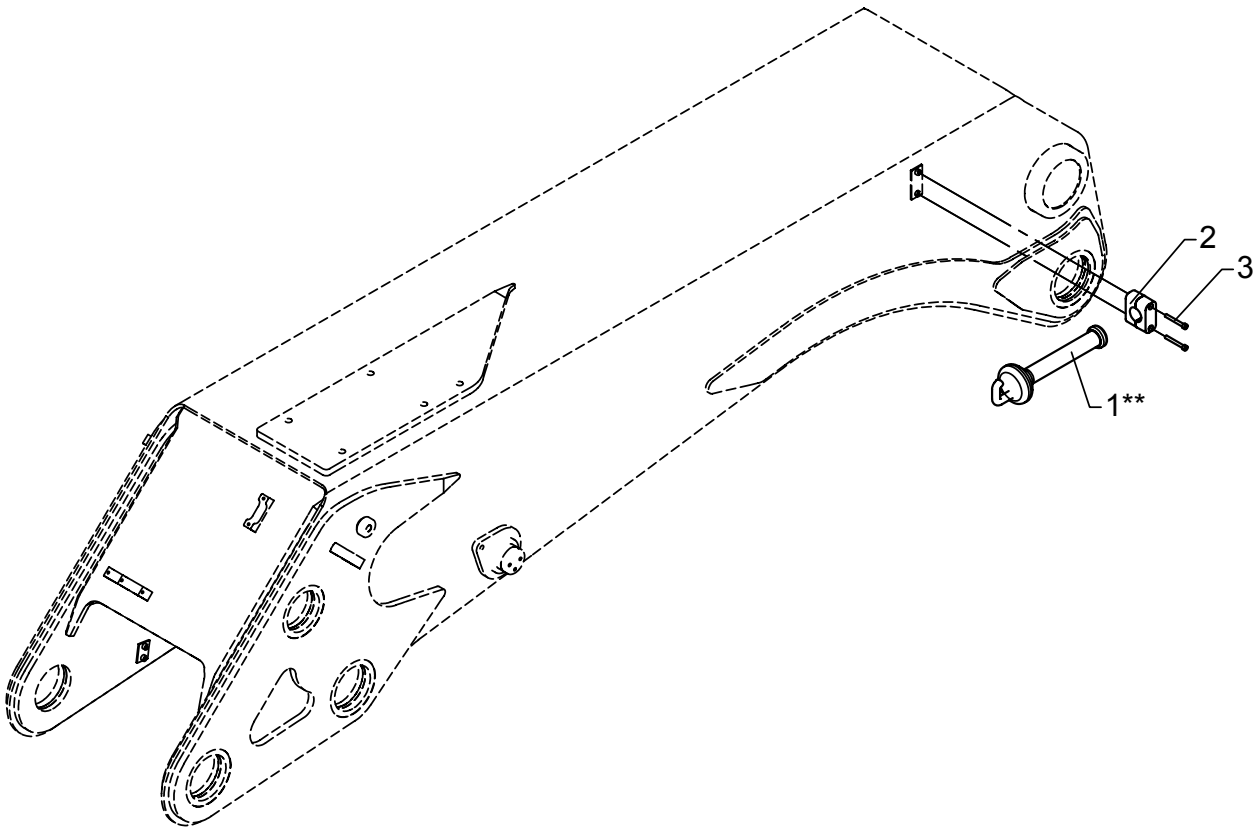

# Cable stop

As from / To loader no.: 96 00 00 /
Created: 03.05.2004
Modified: 09.08.2004

| Item no. | Qty. | Part no. | Description | Remarks |
|---|---|---|---|---|
| 1 | 1 | 64404 | Wire bracket with hook, cpl. | |
| 2 | 1 | 31800 | Clamp | 32 mm |
| 3 | 2 | 30457 | Screw | MC6 x 50 |

* Without FJ
** With FJ

# ODIN

Intern ref.: 6300830

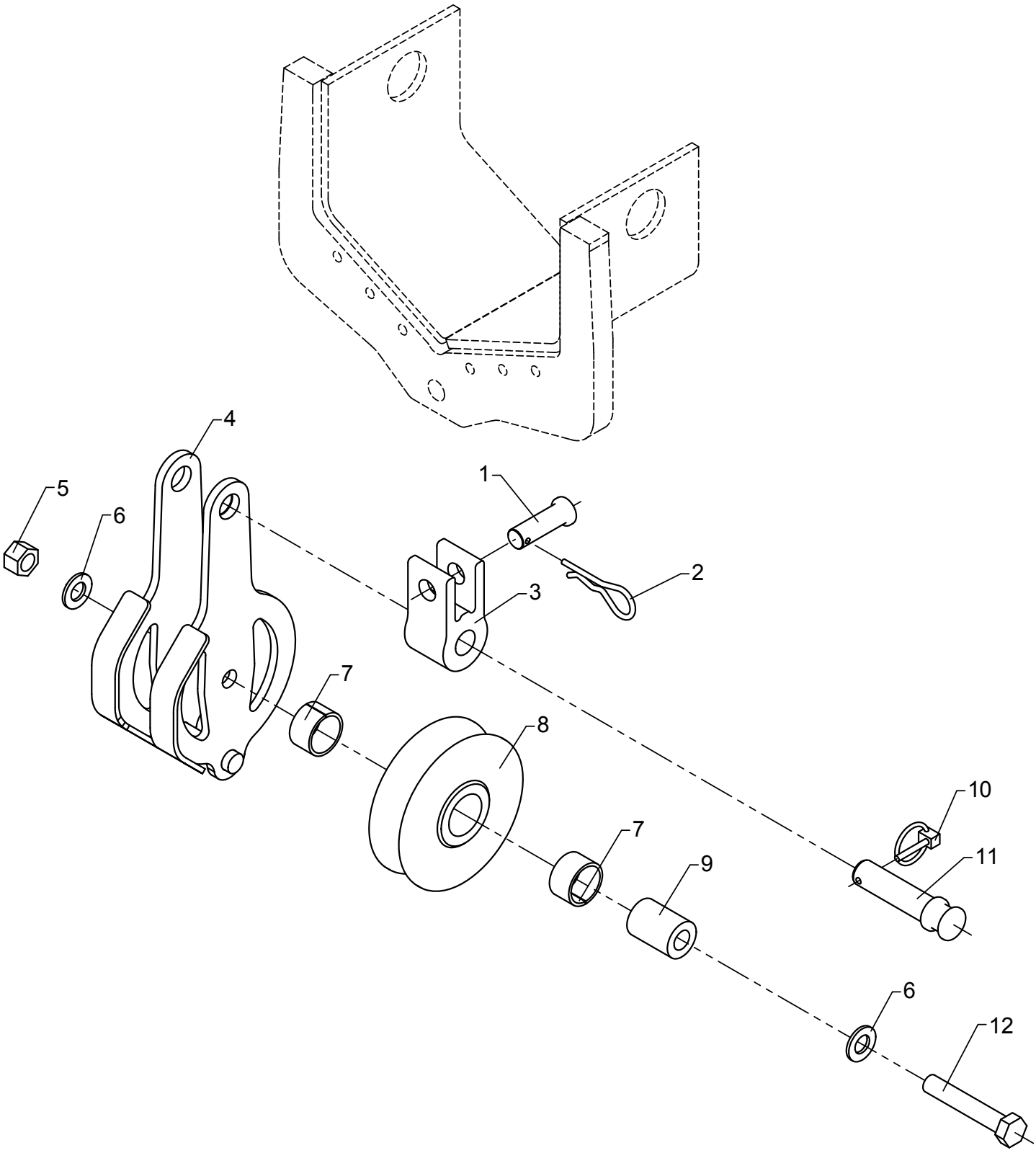

# Wire roller guide, on extension K3 for K5, K6 versions

As from / To loader no.: 96 00 00 /
Created: 03.10.2003
Modified: 12.12.2012

| Item no. | Qty. | Part no. | Description | Remarks |
|---|---|---|---|---|
| 1 | 1 | 6300858 | Pin | |
| 2 | 1 | 33399 | Lock spring | |
| 3 | 1 | 6300828 | Suspension for roller guide | |
| 4 | 1 | 6300792 | Wire pulley | |
| 5 | 1 | 30891 | Lock nut | M14 |
| 6 | 2 | 31178 | Washer | 14 mm |
| 7 | 2 | 23302 | Bushing | MB 3020 DU |
| 8 | 1 | 63513 | Wire roller guide | |
| 9 | 1 | 6885504 | Distance pipe | |
| 10 | 1 | 33385 | Ring split | ø4,5 x 27 |
| 11 | 1 | 6300859 | Pin | |
| 12 | 1 | 30214 | Steel bolt | M14 x 80 |

# ODIN

Intern ref.: 6300840

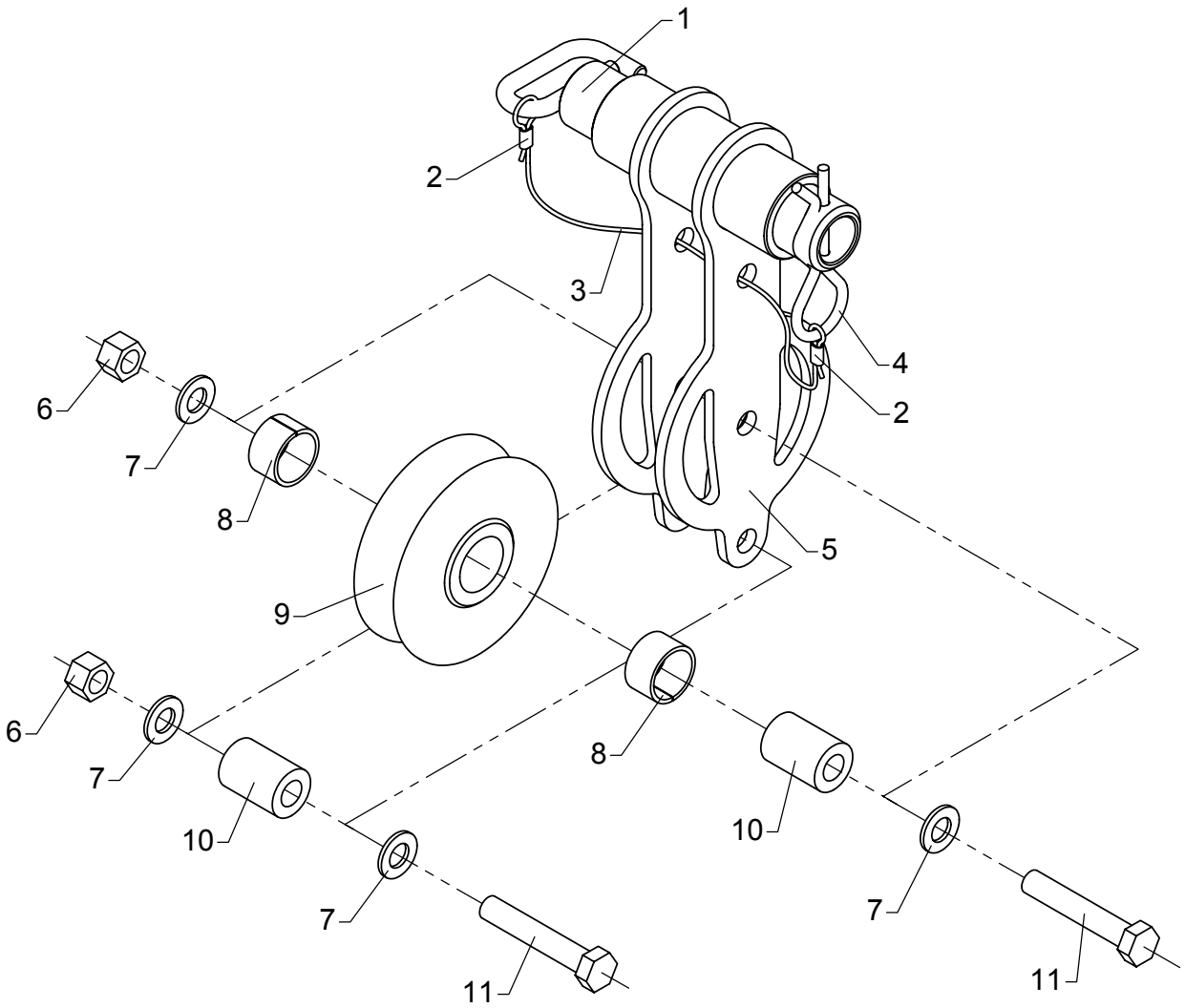

# Wire roller guide, on extension K4 for K7, K8 versions

As from / To loader no.: 96 00 00 /
Created: 03.10.2003
Modified:

| Item no. | Qty. | Part no. | Description | Remarks |
|---|---|---|---|---|
| 1 | 1 | 6300555 | Lock pin | |
| 2 | 2 | 62161 | Wire lock | |
| 3 | 1 | 62160 | Wire rope, nylon | 0,3 m |
| 4 | 1 | 33383 | Lock spring | |
| 5 | 1 | 6300848 | Suspension for roller guide | |
| 6 | 2 | 30891 | Lock nut | M14 |
| 7 | 4 | 31178 | Washer | 14 mm |
| 8 | 2 | 23302 | Bushing | MB 3020 DU |
| 9 | 1 | 63513 | Wire roller guide | |
| 10 | 2 | 6885504 | Distance pipe | |
| 11 | 2 | 30214 | Steel bolt | M14 x 80 |

# ODIN

Intern ref.: 6301008

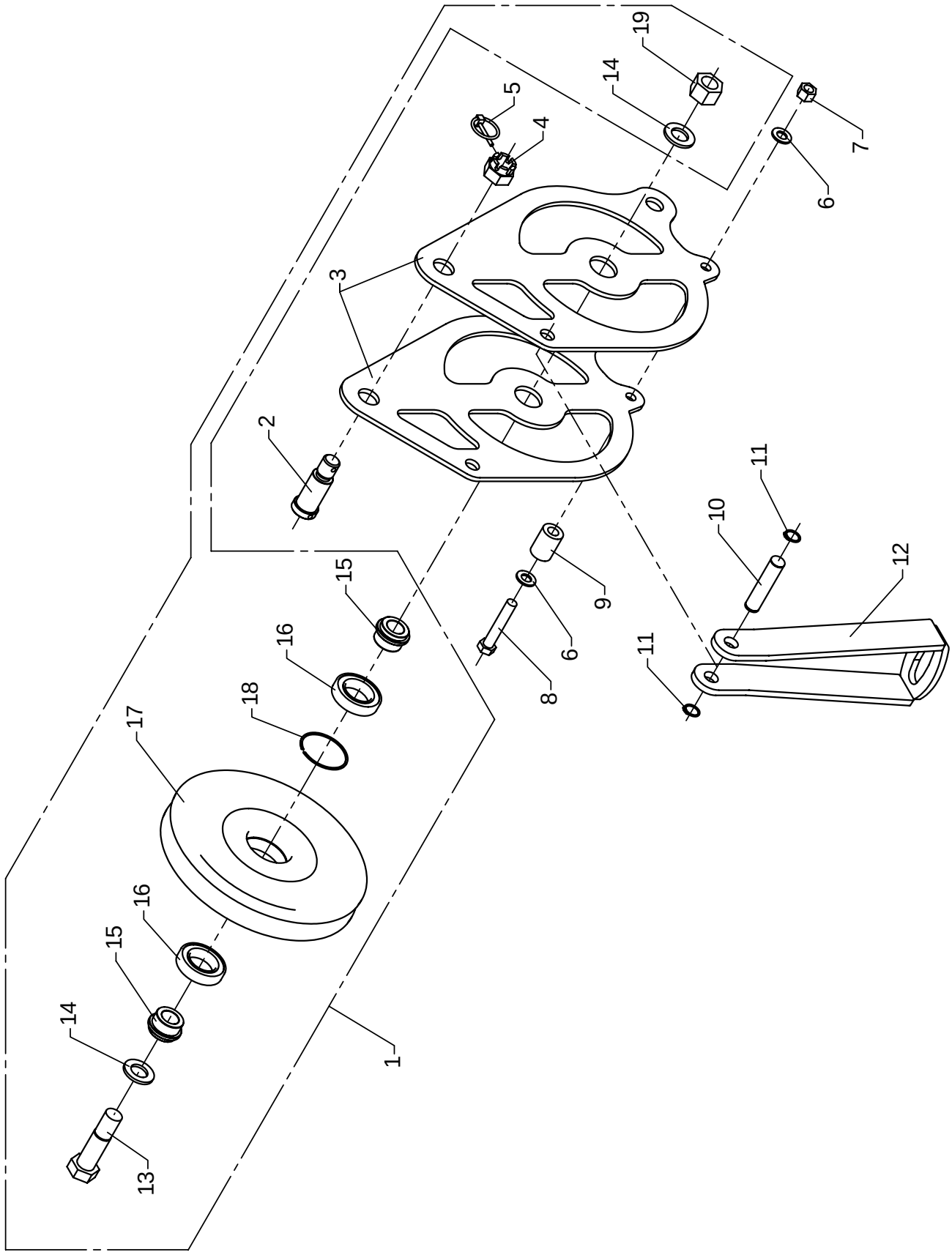

# Wire sheave

As from / To loader no.: 96 00 00 / 96 00 71
Created: 03.10.2003
Modified: 16.02.2007

| Item no. | Qty. | Part no. | Description | Remarks |
|---|---|---|---|---|
| 1 | 1 | 6873490 | Wire sheave incl. bearing | |
| 2 | 1 | 6256324 | Pin | |
| 3 | 2 | 6300559 | Side plate | |
| 4 | 1 | 30837 | Nut | M24 |
| 5 | 1 | 31967 | Ring split | ø4,5 x 40 |
| 6 | 2 | 31178 | Washer | 14 mm |
| 7 | 1 | 30891 | Lock nut | M14 |
| 8 | 1 | 30214 | Steel bolt | M14 x 80 |
| 9 | 1 | 6885504 | Distance pipe | |
| 10 | 1 | 6300543 | Pin | |
| 11 | 2 | 33108 | Circlip | 20U |
| 12 | 1 | 6300548 | Stop | |
| 13 | | 32476 | Steel bolt | M24 x 95 |
| 14 | | 31133 | Washer | 24 mm |
| 15 | | 6887334 | Distance ring | |
| 16 | | 23150 | Ball bearing | 6008-2RS1 |
| 17 | | 64136 | Wire sheave | 6873433 |
| 18 | | 23904 | Spring ring | BR 68 |
| 19 | | 30897 | Lock nut | M24 |

# ODIN

Intern ref.: 6301037

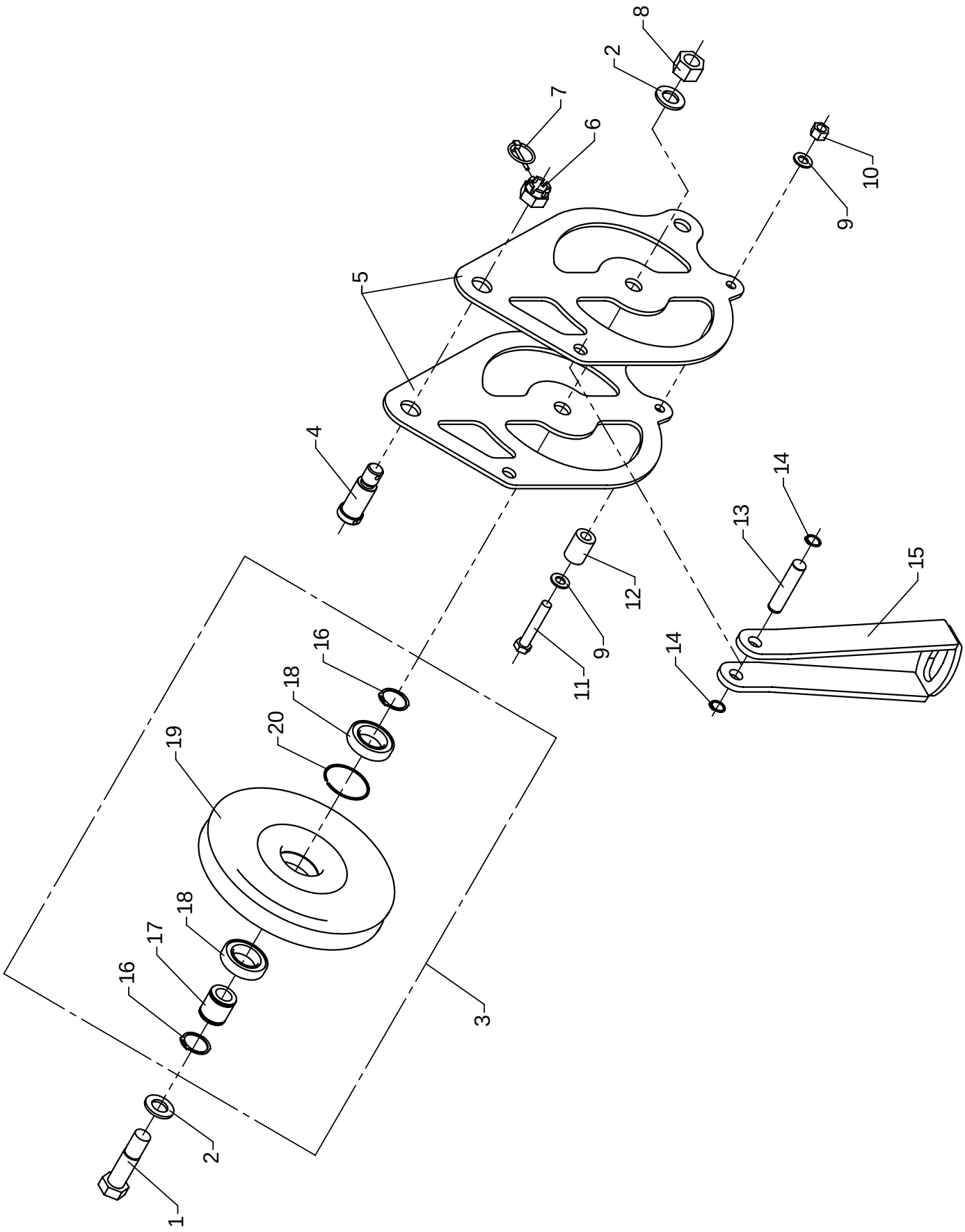

# Wire sheave

As from / To loader no.: 96 00 72 /
Created: 20.10.2004
Modified: 16.02.2007

| Item no. | Qty. | Part no. | Description | Remarks |
|---|---|---|---|---|
| 1 | 1 | 32476 | Steel bolt | M24 x 95 |
| 2 | 2 | 31133 | Washer | 24 mm |
| 3 | 1 | 6887290 | Wire sheave incl. bearing | |
| 4 | 1 | 6256324 | Pin | |
| 5 | 2 | 6301038 | Side plate | |
| 6 | 1 | 30837 | Nut | M24 |
| 7 | 1 | 31967 | Ring split | ø4,5 x 40 |
| 8 | 1 | 30897 | Lock nut | M24 |
| 9 | 2 | 31178 | Washer | 14 mm |
| 10 | 1 | 30891 | Lock nut | M14 |
| 11 | 1 | 30214 | Steel bolt | M14 x 80 |
| 12 | 1 | 6885504 | Distance pipe | |
| 13 | 1 | 6300543 | Pin | |
| 14 | 2 | 33108 | Circlip | 20U |
| 15 | 1 | 6300548 | Stop | |
| 16 | | 33121 | Circlip | 40U |
| 17 | | 6887304 | Hub | |
| 18 | | 23150 | Ball bearing | 6008-2RS1 |
| 19 | | 64136 | Wire sheave | 6873433 |
| 20 | | 23904 | Spring ring | BR 68 |

# ODIN

Intern ref.:

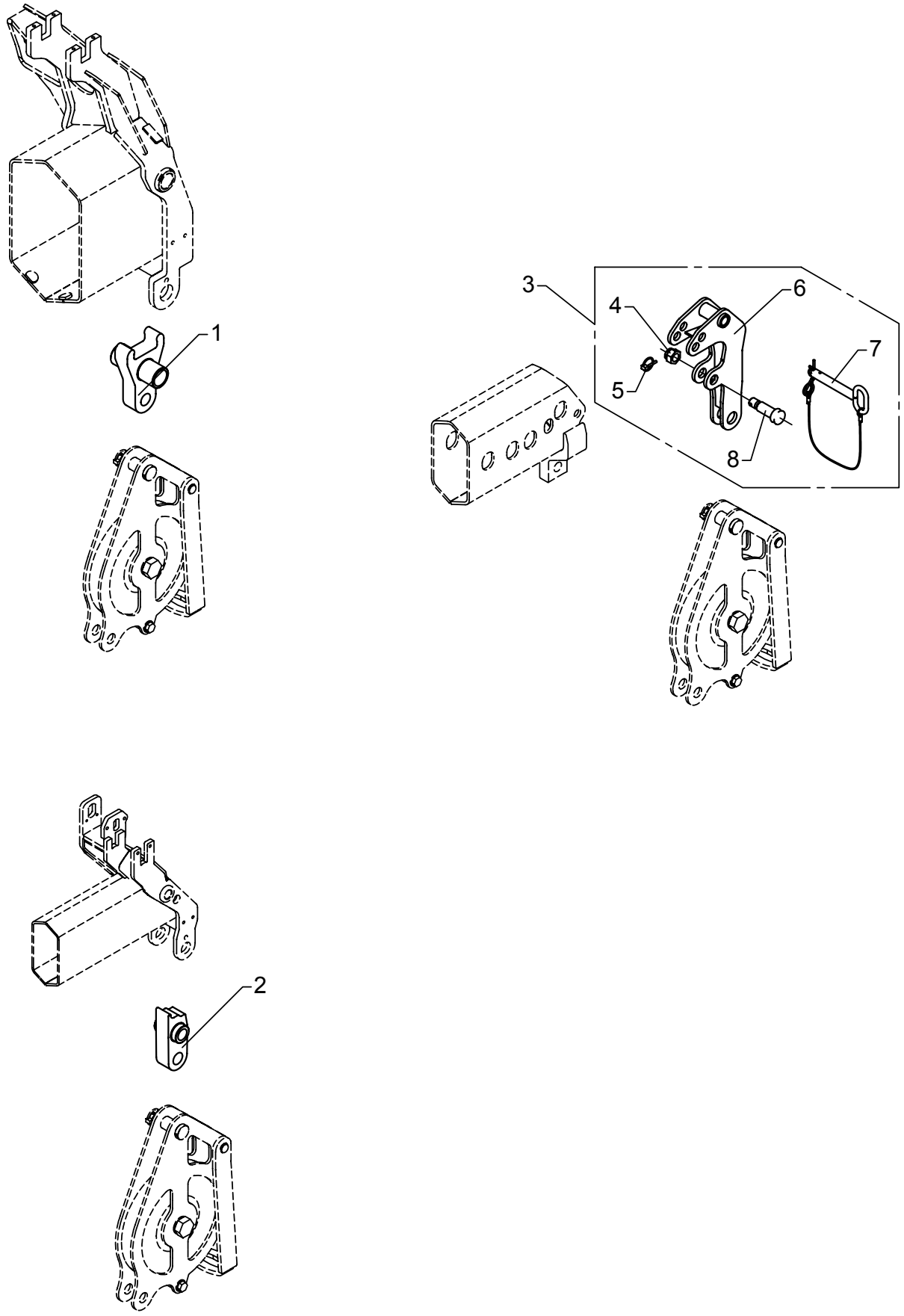

# Wire pulley

As from / To loader no.: 96 00 00 /
Created: 03.10.2003
Modified:

| Item no. | Qty. | Part no. | Description | Remarks |
|---|---|---|---|---|
| 1 | 1 | 6302615 | Wire pulley | ODIN/THOR |
| 2 | 1 | 6304414 | Wire pulley | FJ1200/FJ1800 |
| 3 | 1 | 6301280 | Wire pulley | Manual extension |
| 4 | | 30878 | Nut | M20 |
| 5 | | 33385 | Ring split | ø4,5 x 27 |
| 6 | | 6301061 | Wire pulley | |
| 7 | | 6301166 | Lock pin with split pin | |
| 8 | | 6301014 | Pin | |

# ODIN

Intern ref.: 6873580

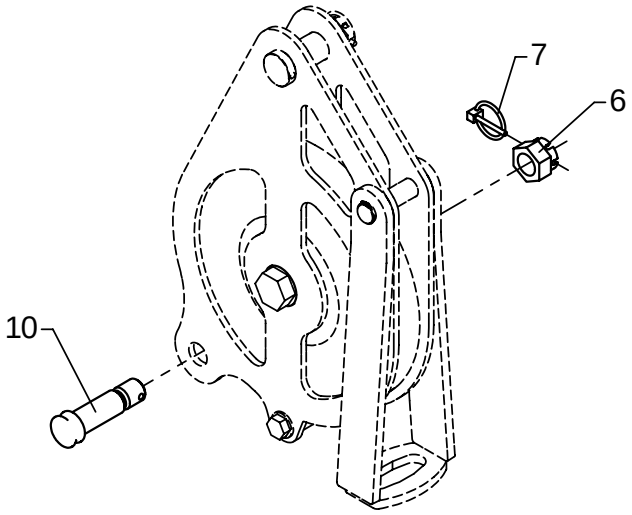


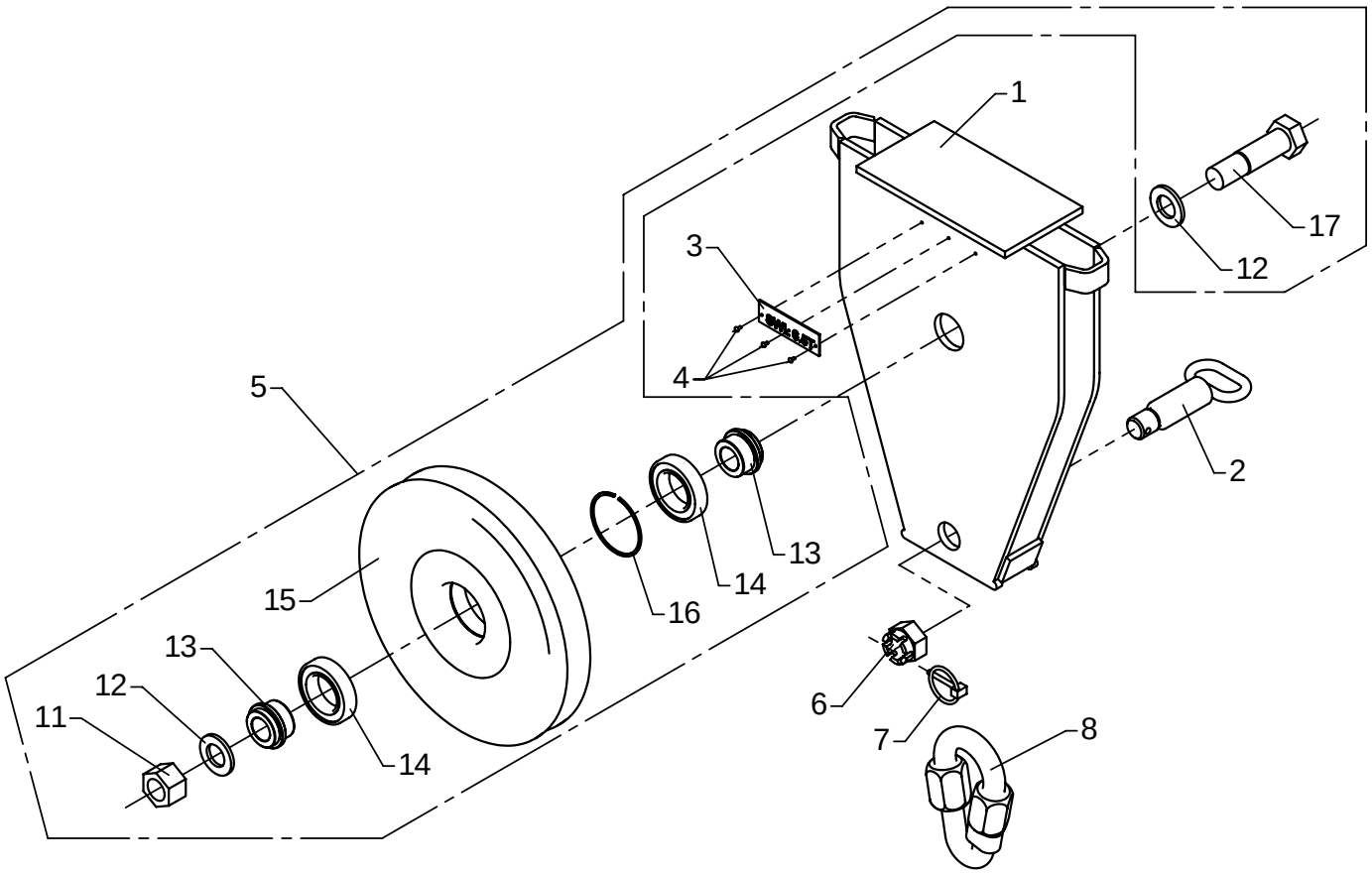


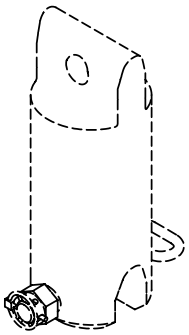

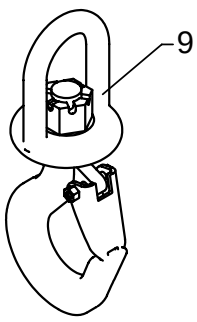

# Snatch block

As from / To loader no.: 96 00 00 / 96 00 71
Created: 03.10.2003
Modified: 16.02.2007

| Item no. | Qty. | Part no. | Description | Remarks |
|---|---|---|---|---|
| 1 | 1 | 6873563 | Snatch block | |
| 2 | 1 | 6301004 | Lock pin | |
| 3 | 1 | 65699 | Brass label | |
| 4 | 3 | 31340 | Rivet | |
| 5 | 1 | 6873490 | Wire sheave incl. bearing | |
| 6 | 2 | 30837 | Nut | M24 |
| 7 | 2 | 31967 | Ring split | ø4,5 x 40 |
| 8 | 1 | 62111 | Handy link | |
| 9 | 1 | 62102 | Hook | |
| 10 | 1 | 6300558 | Pin | |
| 11 | | 30897 | Lock nut | M24 |
| 12 | | 31133 | Washer | 24 mm |
| 13 | | 6887334 | Distance ring | |
| 14 | | 23150 | Ball bearing | 6008-2RS1 |
| 15 | | 64136 | Wire sheave | 6873433 |
| 16 | | 23904 | Spring ring | BR 68 |
| 17 | | 32476 | Steel bolt | M24 x 95 |

# 6020K

Intern ref.: 6887280

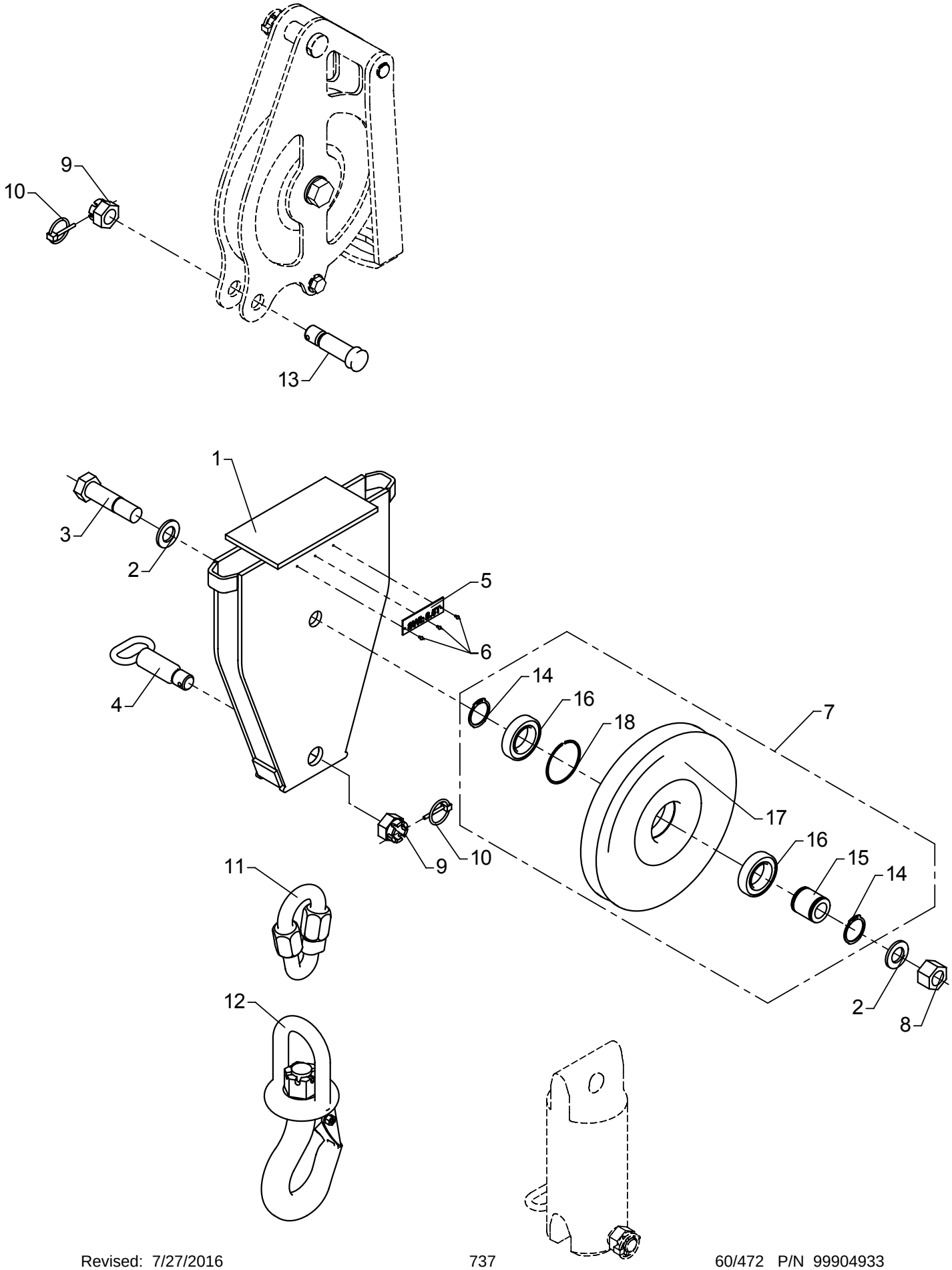

# Snatch block

As from / To loader no.: 96 00 72 /
Created: 20.10.2004
Modified: 16.02.2007

| Item no. | Qty. | Part no. | Description | Remarks |
|---|---|---|---|---|
| 1 | 1 | 6887313 | Snatch block | |
| 2 | 2 | 31133 | Washer | 24 mm |
| 3 | 1 | 32476 | Steel bolt | M24 x 95 |
| 4 | 1 | 6301004 | Lock pin | |
| 5 | 1 | 65699 | Brass label | |
| 6 | 3 | 31340 | Rivet | |
| 7 | 1 | 6887290 | Wire sheave incl. bearing | |
| 8 | 1 | 30897 | Lock nut | M24 |
| 9 | 2 | 30837 | Nut | M24 |
| 10 | 2 | 31967 | Ring split | ø4,5 x 40 |
| 11 | 1 | 62111 | Handy link | |
| 12 | 1 | 63282 | Hook | |
| 13 | 1 | 6300558 | Pin | |
| 14 | | 33121 | Circlip | 40U |
| 15 | | 6887304 | Hub | |
| 16 | | 23150 | Ball bearing | 6008-2RS1 |
| 17 | | 64136 | Wire sheave | 6873433 |
| 18 | | 23904 | Spring ring | BR 68 |

# ODIN

Intern ref.: 6256440+6301060

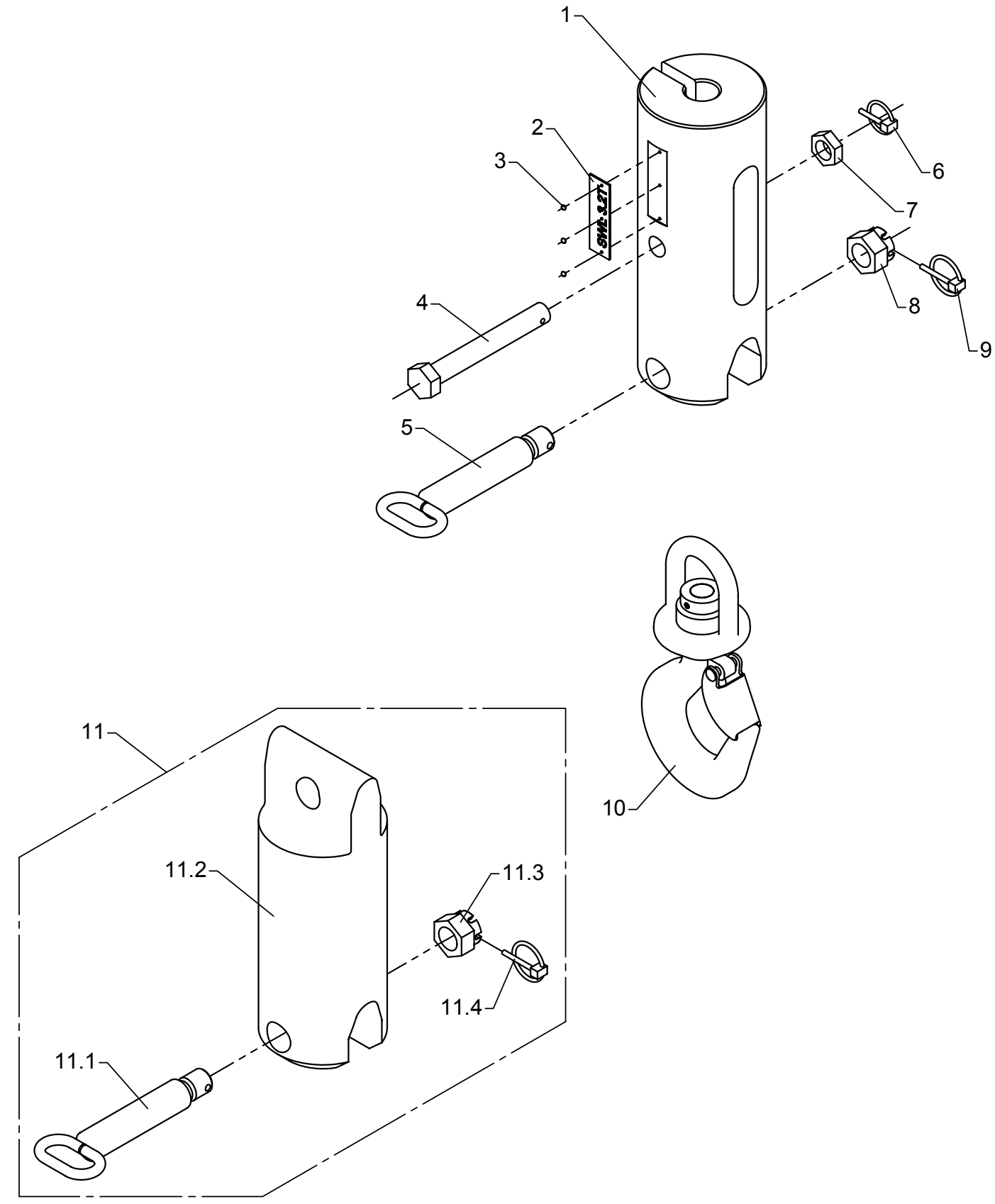

# Swivel hook, 3,2 tonnes

As from / To loader no.: 96 00 00 /
Created: 03.10.2003
Modified: 03.05.2004

| Item no. | Qty. | Part no. | Description | Remarks |
|---|---|---|---|---|
| 1 | 1 | 6256452 | Swivel hook | |
| 2 | 1 | 64807 | Brass label | |
| 3 | 3 | 31340 | Rivet | |
| 4 | 1 | 6256464 | Pin | |
| 5 | 1 | 6301005 | Lock pin | |
| 6 | 1 | 33385 | Ring split | ø4,5 x 27 |
| 7 | 1 | 30810 | Counter nut | M20 |
| 8 | 1 | 30837 | Nut | M24 |
| 9 | 1 | 31967 | Ring split | ø4,5 x 40 |
| 10 | 1 | 62169 | Hook with ball bearing | |
| 11 | 1 | 6301060 | Counter weight | |
| 11.1 | | 6301005 | Lock pin | |
| 11.2 | | 6300839 | Counter weight | |
| 11.3 | | 30837 | Nut | M24 |
| 11.4 | | 31967 | Ring split | ø4,5 x 40 |

# ODIN

Intern ref.: 6301000

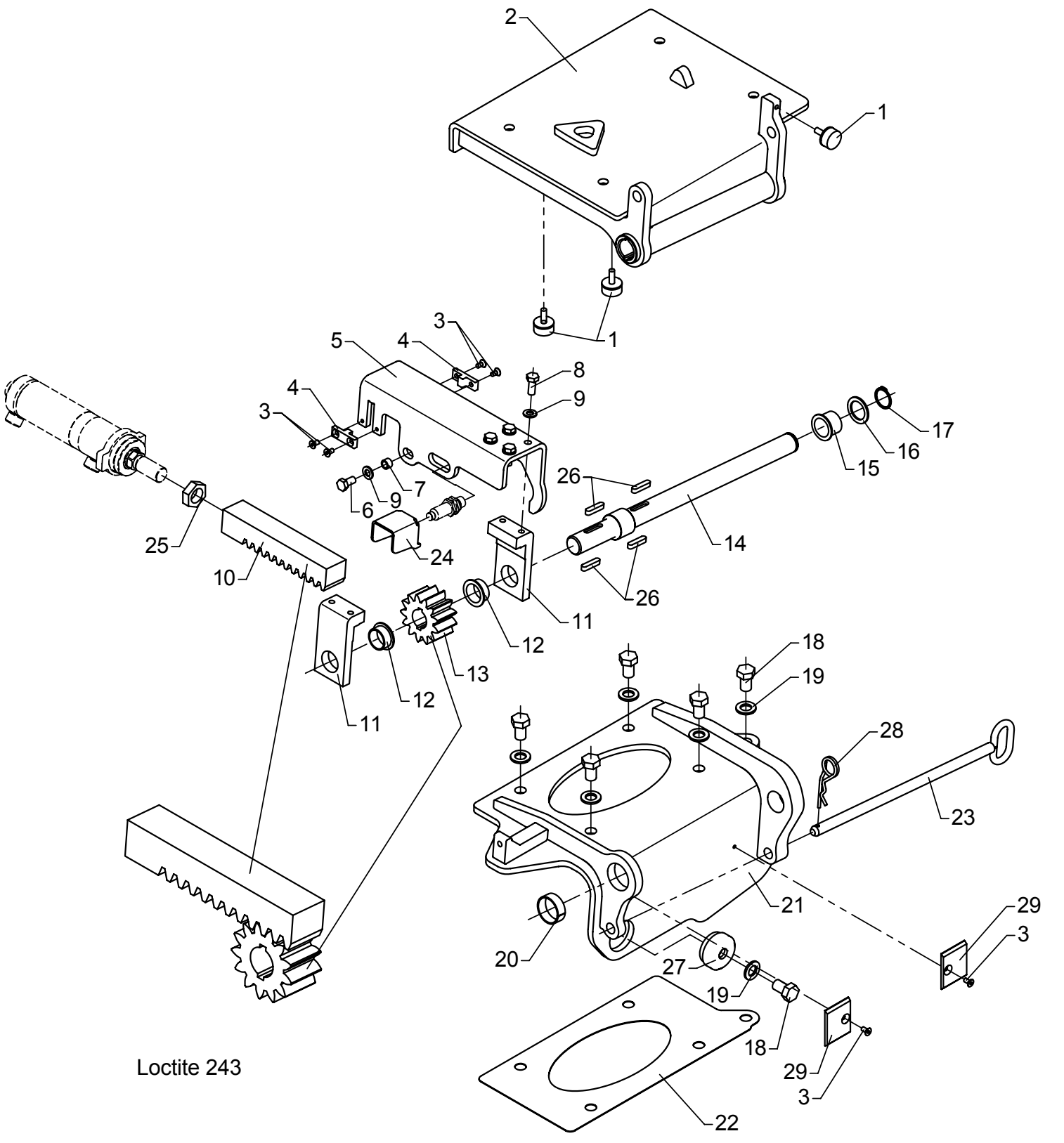

# Swing-up stowing bracket

As from / To loader no.: 96 00 00 / 96 00 74
Created: 03.10.2003
Modified: 08.04.2005

| Item no. | Qty. | Part no. | Description | Remarks |
|---|---|---|---|---|
| 1 | 3 | 61910 | Rubber buffer | |
| 2 | 1 | 6300811 | Stowing bracket | |
| 3 | 6 | 30542 | Counter-sunk screw | MK6 x 12 |
| 4 | 2 | 6300789 | Lock plate | |
| 5 | 1 | 6300798 | Cylinder bracket | |
| 6 | 1 | 31517 | Set screw, stainless | M10 x 20 |
| 7 | 1 | 6300799 | Spacer | |
| 8 | 4 | 30155 | Set screw | M10 x 25 |
| 9 | 5 | 31177 | Washer | 10 mm |
| 10 | 1 | 6300794 | Rack | |
| 11 | 2 | 6300797 | Rack guide | |
| 12 | 2 | 23931 | Bushing | BB 3016 DU-B |
| 13 | 1 | 6300795 | Pinion | |
| 14 | 1 | 6300796 | Pin | |
| 15 | 1 | 23938 | Bushing | BB 3026 DU-B |
| 16 | 1 | 33220 | Back ring | SS 30 x 42 x 2,5 |
| 17 | 1 | 33115 | Circlip | 24U |
| 18 | 6 | 30266 | Set screw | M16 x 25 |
| 19 | 6 | 31135 | Washer | 16 mm |
| 20 | 1 | 23937 | Bushing | MB 4015 DU-B |
| 21 | 1 | 6300801 | Mounting bracket | ODIN |
| 22 | 1 | 6300809 | Adjusting plate | ODIN |
| 23 | 1 | 6300821 | Pin | |
| 24 | 1 | 6300819 | Protective guard | |
| 25 | 1 | 31053 | Counter nut | M24 x 1,5 |
| 26 | 4 | 31054 | Spring | |
| 27 | 1 | 6300823 | Washer | |
| 28 | 1 | 33382 | Lock spring | |
| 29 | 2 | 63724 | Slide block | 1210624 |

# ODIN

Intern ref.: 6301000

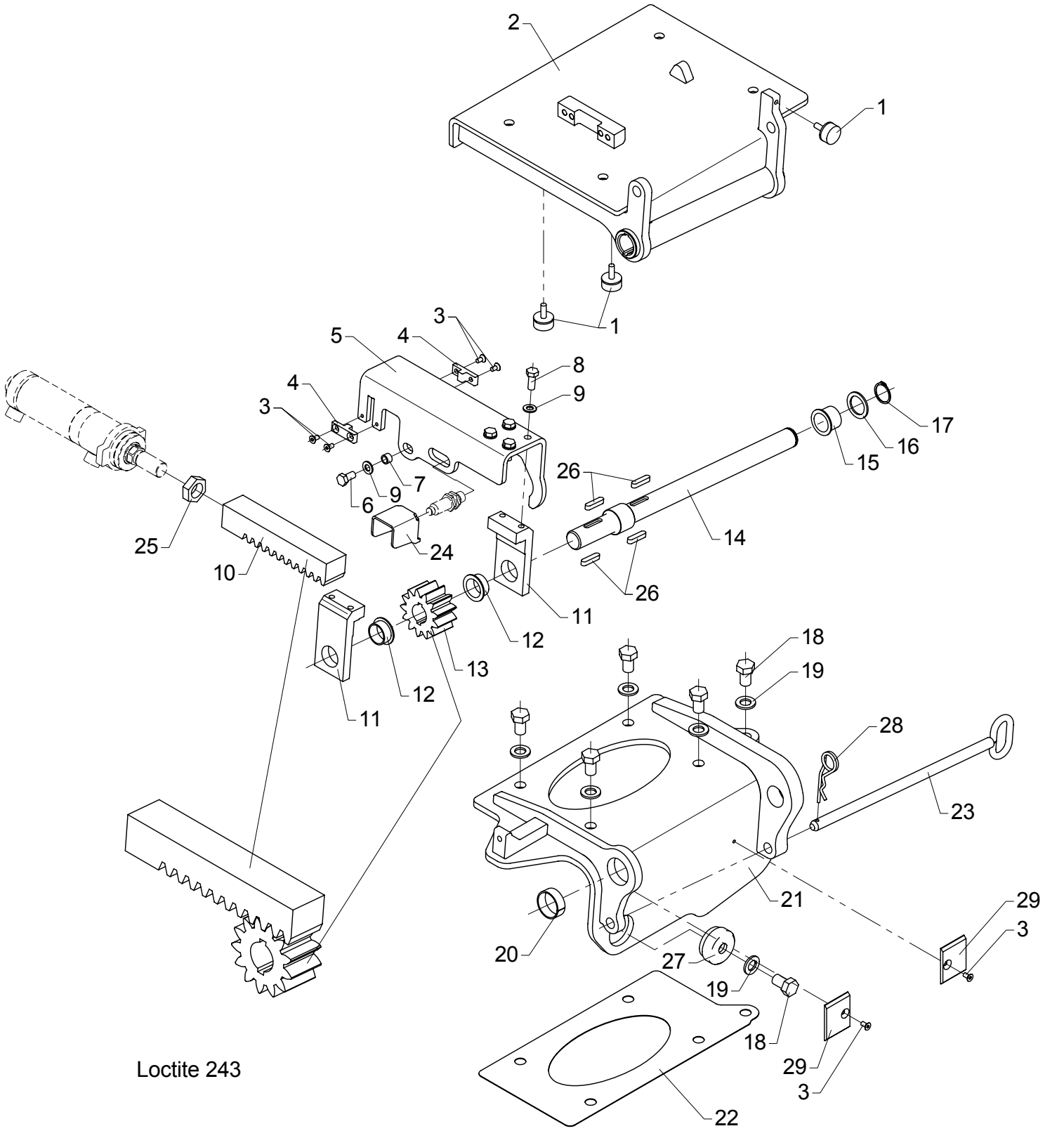

# Swing-up stowing bracket

As from / To loader no.: 96 00 75 / 96 01 94
Created: 08.04.2005
Modified: 02.11.2007

| Item no. | Qty. | Part no. | Description | Remarks |
|---|---|---|---|---|
| 1 | 3 | 61910 | Rubber buffer | |
| 2 | 1 | 6301206 | Stowing bracket | |
| 3 | 6 | 30542 | Counter-sunk screw | MK6 x 12 |
| 4 | 2 | 6300789 | Lock plate | |
| 5 | 1 | 6300798 | Cylinder bracket | |
| 6 | 1 | 31517 | Set screw, stainless | M10 x 20 |
| 7 | 1 | 6300799 | Spacer | |
| 8 | 4 | 30155 | Set screw | M10 x 25 |
| 9 | 5 | 31177 | Washer | 10 mm |
| 10 | 1 | 6300794 | Rack | |
| 11 | 2 | 6300797 | Rack guide | |
| 12 | 2 | 23931 | Bushing | BB 3016 DU-B |
| 13 | 1 | 6300795 | Pinion | |
| 14 | 1 | 6300796 | Pin | |
| 15 | 1 | 23938 | Bushing | BB 3026 DU-B |
| 16 | 1 | 33220 | Back ring | SS 30 x 42 x 2,5 |
| 17 | 1 | 33115 | Circlip | 24U |
| 18 | 6 | 30266 | Set screw | M16 x 25 |
| 19 | 6 | 31135 | Washer | 16 mm |
| 20 | 1 | 23937 | Bushing | MB 4015 DU-B |
| 21 | 1 | 6300801 | Mounting bracket | |
| 22 | 1 | 6300809 | Adjusting plate | |
| 23 | 1 | 6300821 | Pin | |
| 24 | 1 | 6300819 | Protective guard | |
| 25 | 1 | 31053 | Counter nut | M24 x 1,5 |
| 26 | 4 | 31054 | Spring | |
| 27 | 1 | 6300823 | Washer | |
| 28 | 1 | 33382 | Lock spring | |
| 29 | 2 | 63724 | Slide block | 1210624 |

# ODIN

Intern ref.: 6301670

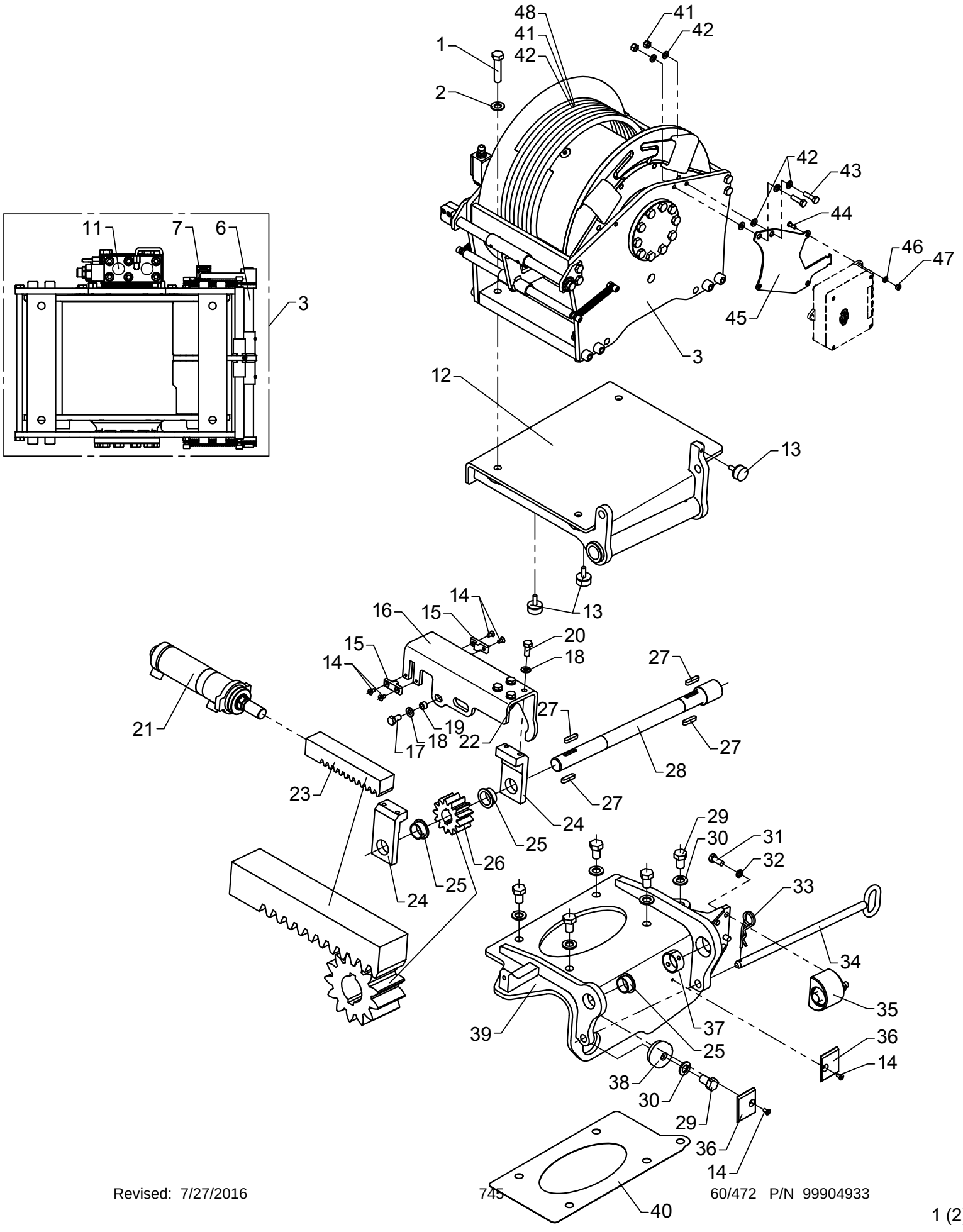

# Swing-up winch, cpl.

As from / To loader no.: 96 01 95
Created: 02.11.2007
Modified: 13.02.2008

| Item no. | Qty. | Part no. | Description | Remarks |
|---|---|---|---|---|
| 1 | 4 | 30212 | Steel bolt | M14 x 60 |
| 2 | 4 | 31178 | Washer | 14 mm |
| 3 | 1 | 58281 | Winch | |
| 4 | 1 | 69260 | Seal kit winch + brake | 600140101 |
| 5 | 1 | 69262 | Discs and springs brake kit | 6x415030800 + 5x415040400 + 2x416203700 |
| 6 | 1 | 69255 | Wire guide | 905146800 |
| 7 | 1 | 69256 | End stroke | 905000102 |
| 8 | 1 | 69257 | Thimble | 02410204 |
| 9 | 1 | 69258 | Motor | 425020300 |
| 10 | 1 | 69261 | Seal kit for motor | 600008800 |
| 11 | 1 | 69259 | Valve | 438014600 |
| 12 | 1 | 6301341 | Stowing bracket | |
| 13 | 3 | 61910 | Rubber buffer | |
| 14 | 6 | 30542 | Counter-sunk screw | MK6 x 12 |
| 15 | 2 | 6300789 | Lock plate | |
| 16 | 1 | 6300798 | Cylinder bracket | |
| 17 | 1 | 31517 | Set screw, stainless | M10 x 20 |
| 18 | 5 | 31177 | Washer | 10 mm |
| 19 | 1 | 6300799 | Spacer | |
| 20 | 4 | 30155 | Set screw | M10 x 25 |
| 21 | 1 | 6300790 | Slewing cylinder C50 - 102 | |
| 22 | 1 | 31053 | Counter nut | M24 x 1,5 |
| 23 | 1 | 6300794 | Rack | |
| 24 | 2 | 6300797 | Rack guide | |
| 25 | 3 | 23931 | Bushing | BB 3016 DU-B |
| 26 | 1 | 6300795 | Pinion | |
| 27 | 4 | 31054 | Spring | |
| 28 | 1 | 6301342 | Pin | |
| 29 | 6 | 30266 | Set screw | M16 x 25 |
| 30 | 6 | 31135 | Washer | 16 mm |
| 31 | 4 | 31513 | Set screw, stainless | M10 x 25 |
| 32 | 4 | 30933 | Nordlock washer | 10 mm |
| 33 | 1 | 33382 | Lock spring | |
| 34 | 1 | 6300821 | Pin | |
| 35 | 1 | 6887210 | Weighing cell, hydraul. | |
| 36 | 2 | 63724 | Slide block | 1210624 |
| 37 | 1 | 23311 | Bushing | PM 4030 DX |
| 38 | 1 | 6300823 | Washer | |
| 39 | 1 | 6301351 | Mounting bracket | ODIN |

# ODIN

Intern ref.: 6301670

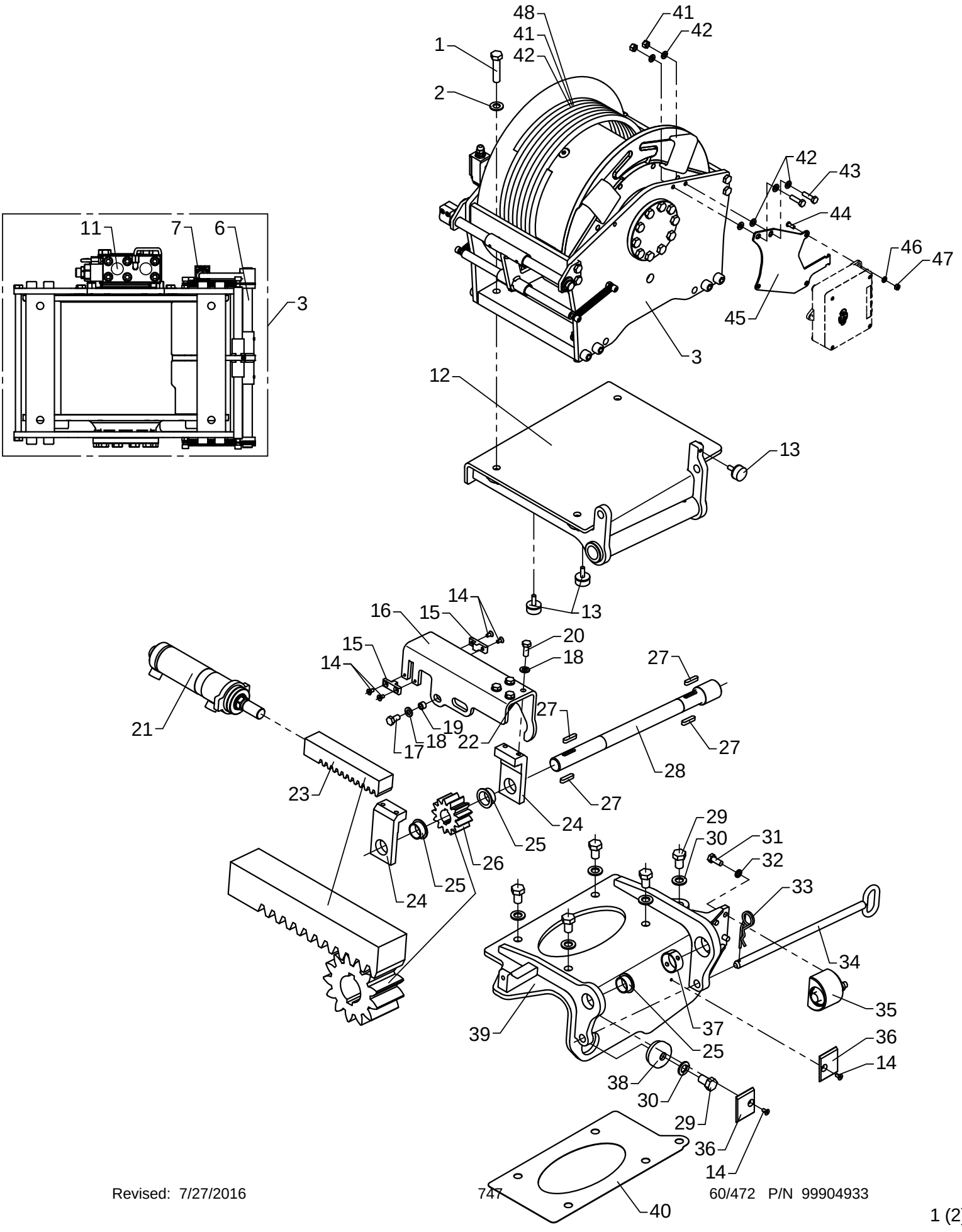

# Swing-up winch, cpl.

As from / To loader no.: 96 01 95
Created: 02.11.2007
Modified: 13.02.2008

| Item no. | Qty. | Part no. | Description | Remarks |
|---|---|---|---|---|
| 40 | 1 | 6300809 | Adjusting plate | |
| 41 | 2 | 30886 | Lock nut, stainless | M8 |
| 42 | 6 | 31147 | Face washer, 8 mm | |
| 43 | 2 | 30135 | Set screw, stainless | M8 x 30 |
| 44 | 3 | 32490 | Screw | MC6 x 16 |
| 45 | 1 | 6301127 | Plate for CIO | |
| 46 | 3 | 32302 | Face washer, stainless | 6 mm |
| 47 | 3 | 30854 | Nut, stainless | M6 |
| 48 | 1 | 63203 | Wire rope | ø12 x 61 mtr. |
| 49 | 1 | 63202 | Wire rope | ø12 x 71 mtr. |
| 50 | 1 | 63205 | Wire rope | ø12 x 78 mtr. |

# ODIN

Intern ref.: 6300790

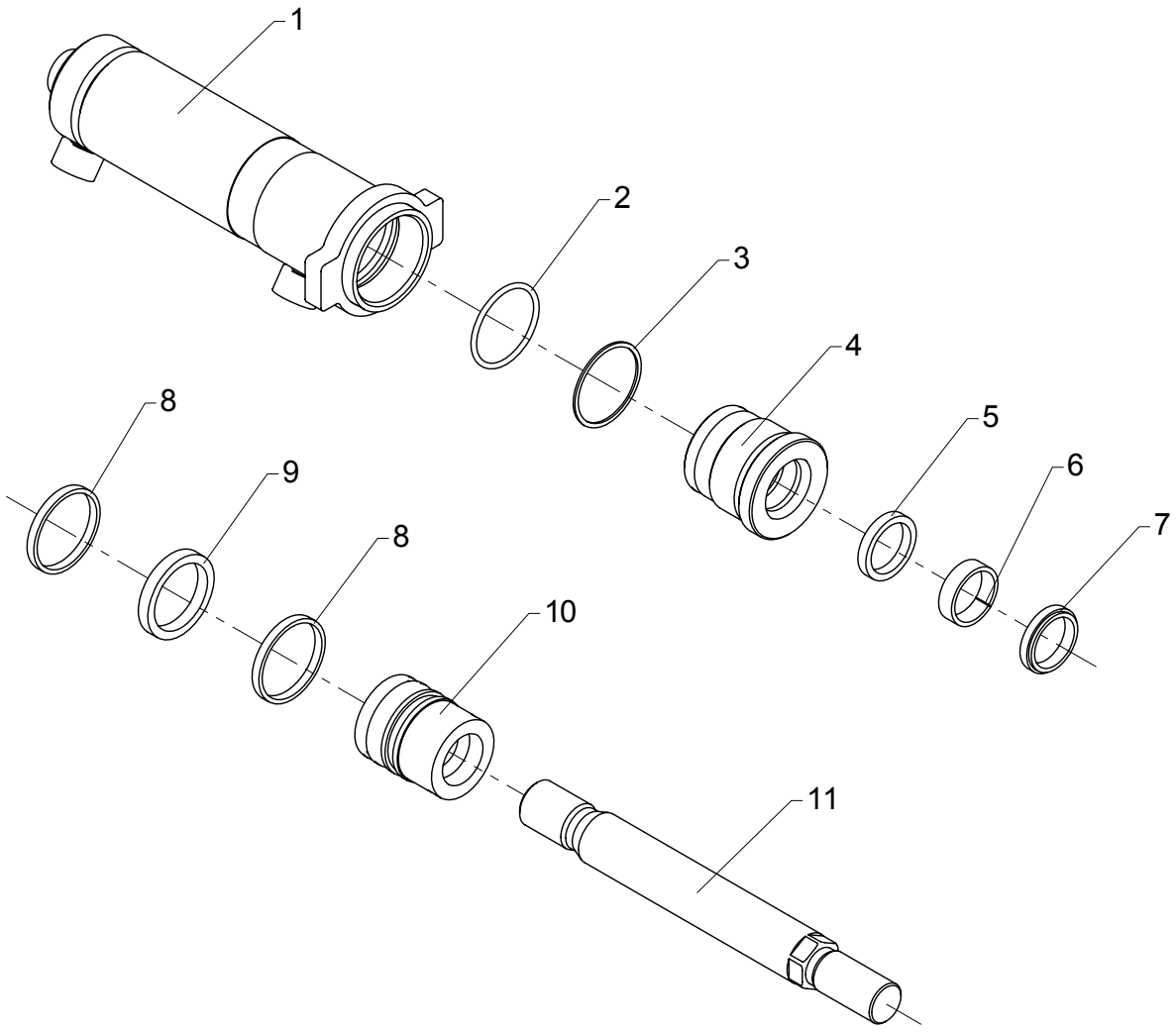


Loctite 243

# Slewing cylinder, C50-102

As from / To loader no.: 96 00 00 / 96 01 94
Created: 03.10.2003
Modified: 02.11.2007

| Item no. | Qty. | Part no. | Description | Remarks |
|---|---|---|---|---|
| | 1 | 6893380 | Seal kit | Pos. 2, 3, 5, 6, 7, 8, 9 |
| 1 | 1 | 6300791 | Cylinder pipe | |
| 2 | 1 | 20181 | O-ring | OR 44,2 x 3 |
| 3 | 1 | 20709 | Back ring | 44,2 x 3 |
| 4 | 1 | 6321413 | Guide | |
| 5 | 1 | 20944 | Seal | HH610 30 x 38 x 6/7 |
| 6 | 1 | 20933 | Bearing | HH506 30 x 35 x 9,7 |
| 7 | 1 | 20925 | Scraper | HH38 30 x 38 x 5 |
| 8 | 2 | 20928 | Guide ring | PWR 50/45 x 5,6 - PF |
| 9 | 1 | 20927 | Piston seal | GHT 50/40 x 8 - PU/N/A |
| 10 | 1 | 6324303 | Piston | |
| 11 | 1 | 6300793 | Piston rod | |

# ODIN

Intern ref.: 6300790

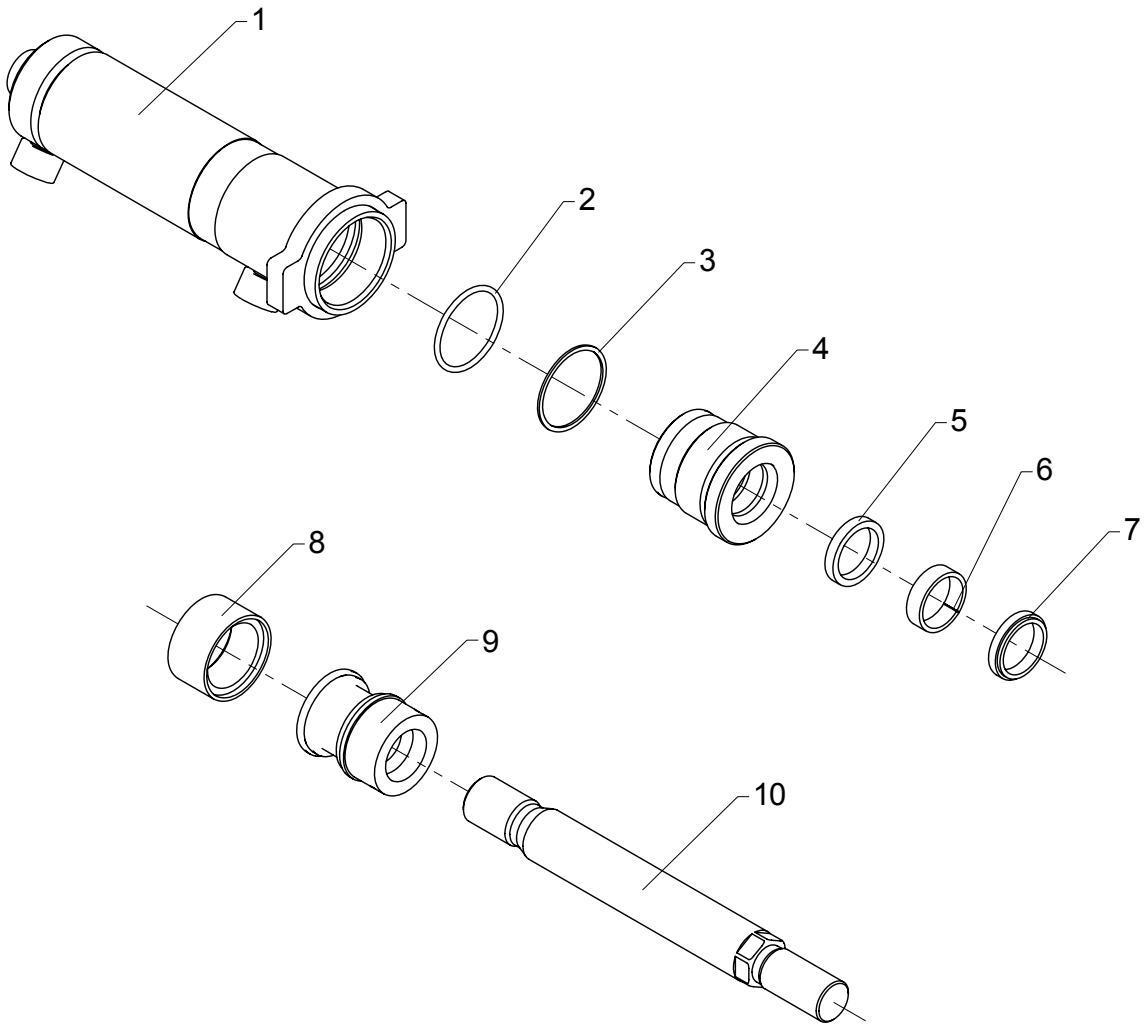


Loctite 243

# Slewing cylinder, C50-102

As from / To loader no.: 96 01 95
Created: 02.11.2007
Modified:

| Item no. | Qty. | Part no. | Description | Remarks |
|---|---|---|---|---|
| | 1 | 6893890 | Seal kit | Pos. 2, 3, 5, 6, 7, 8 |
| 1 | 1 | 6300791 | Cylinder pipe | |
| 2 | 1 | 20181 | O-ring | OR 44,2 x 3 |
| 3 | 1 | 20709 | Back ring | 44,2 x 3 |
| 4 | 1 | 6321413 | Guide | |
| 5 | 1 | 20944 | Seal | HH610 30 x 38 x 6/7 |
| 6 | 1 | 20933 | Bearing | HH506 30 x 35 x 9,7 |
| 7 | 1 | 20925 | Scraper | HH38 30 x 38 x 5 |
| 8 | 1 | 20780 | Double acting seal | SKM 50 x 38 x 20 |
| 9 | 1 | 6325273 | Piston | |
| 10 | 1 | 6300793 | Piston rod | |

# ODIN

Intern ref.: 6301030

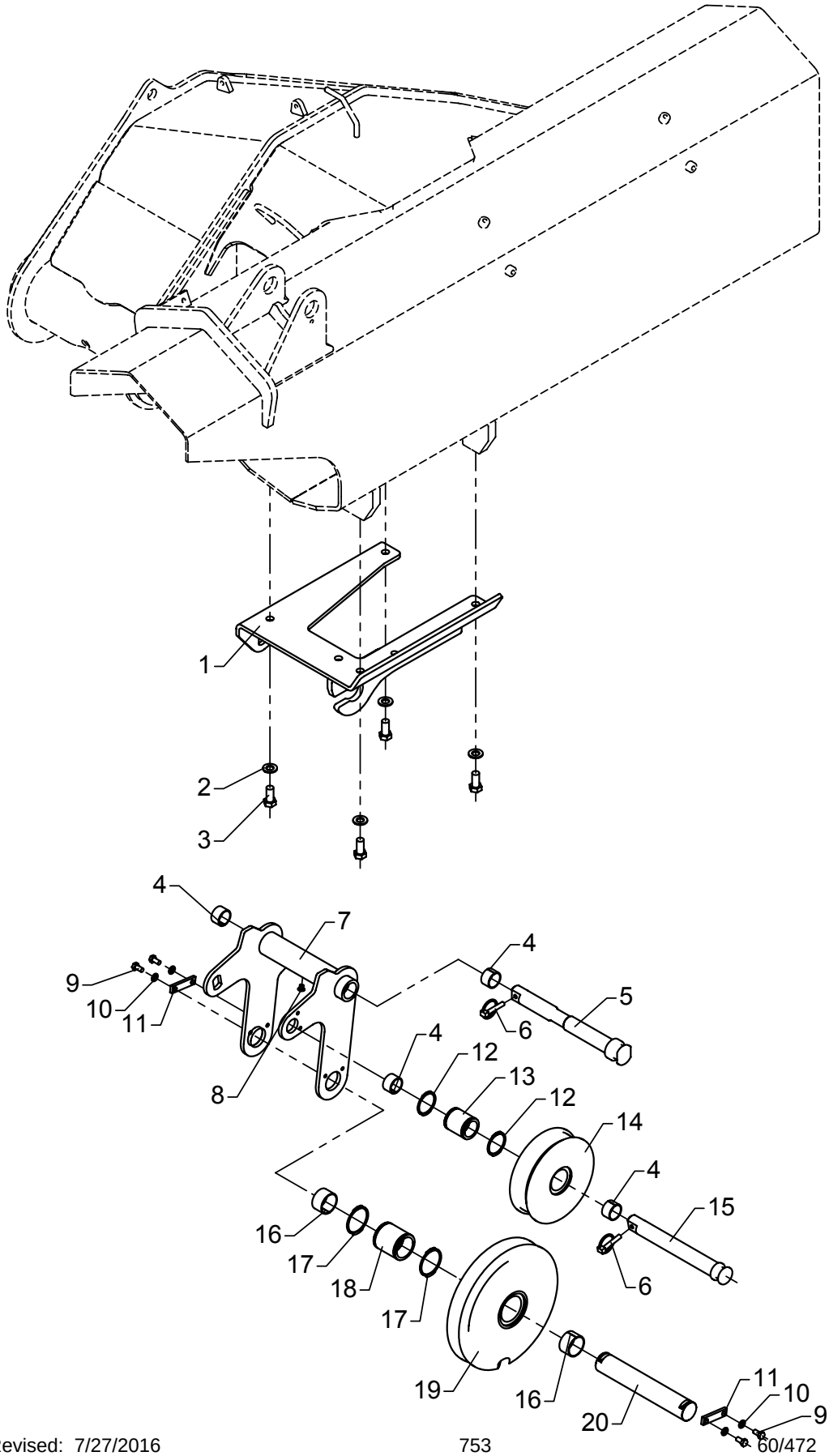

# Movable wire guide

As from / To loader no.: 96 00 00 / 96 00 25
Created: 03.10.2003
Modified:

| Item no. | Qty. | Part no. | Description | Remarks |
|---|---|---|---|---|
| 1 | 1 | 6300835 | Bracket for wire guide | |
| 2 | 4 | 31178 | Washer | 14 mm |
| 3 | 4 | 30206 | Set screw | M14 x 30 |
| 4 | 4 | 23933 | Bushing | MB 3020 DU-B |
| 5 | 1 | 6300825 | Mounting bolt for wire guide | |
| 6 | 2 | 33387 | Ring split | ø8 x 45 |
| 7 | 1 | 6300831 | Wire guide | |
| 8 | 1 | 32433 | Sockethead screw | MC8 x 8 |
| 9 | 4 | 30131 | Set screw, stainless | M8 x 16 |
| 10 | 4 | 31147 | Washer, stainless | 8 mm |
| 11 | 2 | 6182444 | Lock plate | |
| 12 | 2 | 33125 | Circlip | 45U |
| 13 | 1 | 6300278 | Bushing for wire roller | |
| 14 | 1 | 63507 | Wire roller | |
| 15 | 1 | 6300827 | Pin for wire roller | |
| 16 | 2 | 23932 | Bushing | MB 4025 DU-B |
| 17 | 2 | 33132 | Circlip Din 471 | 55U |
| 18 | 1 | 6300277 | Bushing for wire sheave | |
| 19 | 1 | 63508 | Sheave | |
| 20 | 1 | 6300826 | Pin for wire sheave | |

# ODIN

Intern ref.: 6301010+6304490

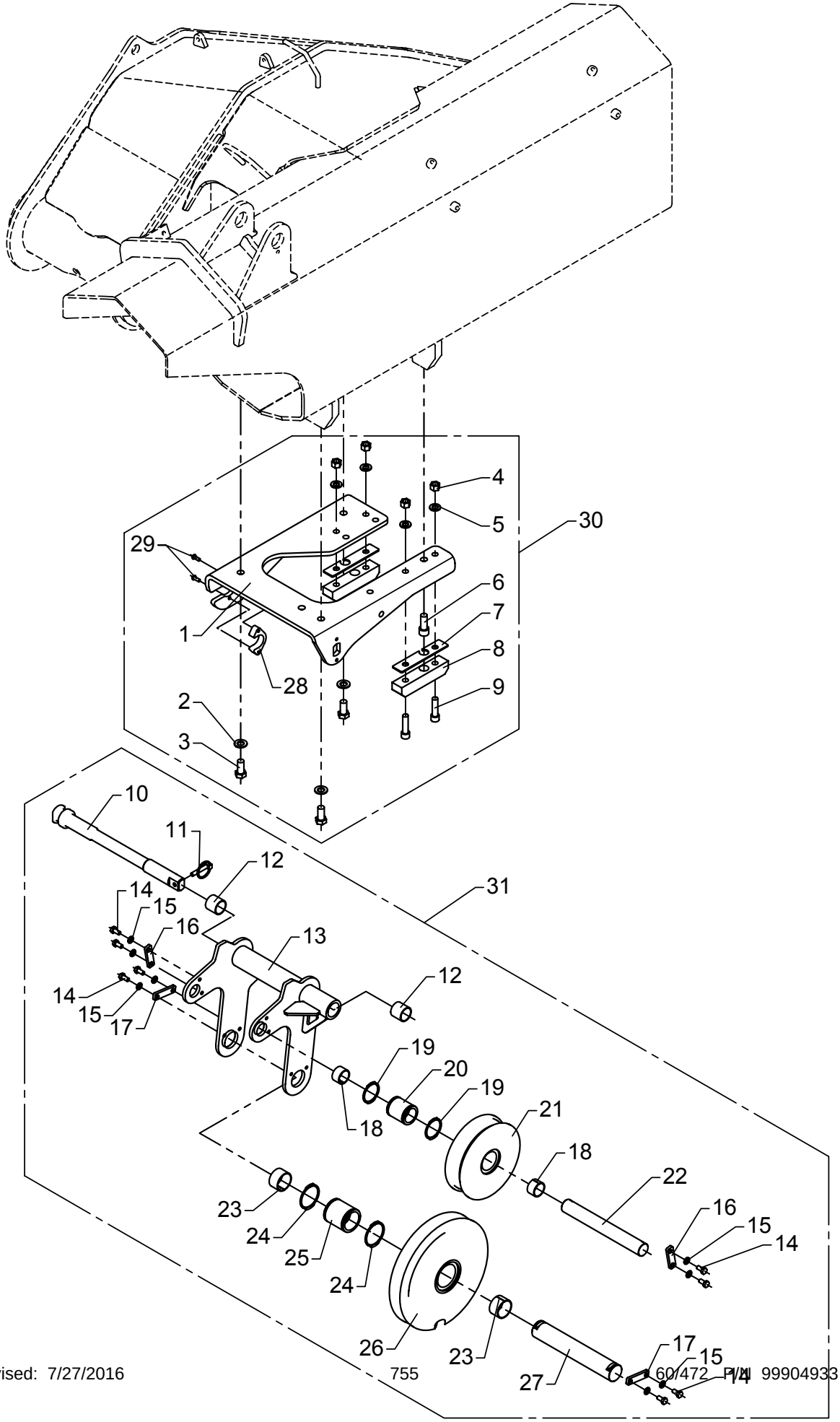

# Movable wire guide

As from / To loader no.: 96 00 26 /
Created: 03.10.2003
Modified: 06.07.2004

| Item no. | Qty. | Part no. | Description | Remarks |
|---|---|---|---|---|
| 1 | 1 | 6300931 | Bracket for wire pulley | |
| 2 | 3 | 31178 | Washer | 14 mm |
| 3 | 3 | 30206 | Set screw | M14 x 30 |
| 4 | 4 | 30890 | Lock nut | M12 |
| 5 | 4 | 31131 | Washer | 12 mm |
| 6 | 1 | 30482 | Screw | MC14 x 35 |
| 7 | 2 | 6300898 | Spacer | |
| 8 | 2 | 63538 | Stop block | |
| 9 | 4 | 30428 | Sockethead screw | MC12 x 45 |
| 10 | 1 | 6300938 | Mounting bolt for wire pulley | |
| 11 | 1 | 33387 | Ring split | ø8 x 45 |
| 12 | 2 | 23946 | Composite bearing | ø30/34 x 30 |
| 13 | 1 | 6300932 | Wire pulley | |
| 14 | 8 | 30131 | Set screw, stainless | M8 x 16 |
| 15 | 8 | 31147 | Washer, stainless | 8 mm |
| 16 | 2 | 6300934 | Lock plate | |
| 17 | 2 | 6182444 | Lock plate | |
| 18 | 2 | 23933 | Bushing | MB 3020 DU-B |
| 19 | 2 | 33125 | Circlip | 45U |
| 20 | 1 | 6300278 | Bushing for wire roller | |
| 21 | 1 | 63507 | Wire roller | |
| 22 | 1 | 6300937 | Pin for wire sheave | |
| 23 | 2 | 23932 | Bushing | MB 4025 DU-B |
| 24 | 2 | 33132 | Circlip Din 471 | 55U |
| 25 | 1 | 6300277 | Bushing for wire sheave | |
| 26 | 1 | 63508 | Sheave | |
| 27 | 1 | 6300826 | Pin for wire sheave | |
| 28 | 1 | 6300939 | Spacer | |
| 29 | 2 | 32222 | Button head screw | M6 x 16 |
| 30 | 1 | 6304490 | Stowing bracket for FJ | |
| 31 | 1 | 6301010 | Movable wire pulley | |

# ODIN

Intern ref.: 6302600 / 6305600

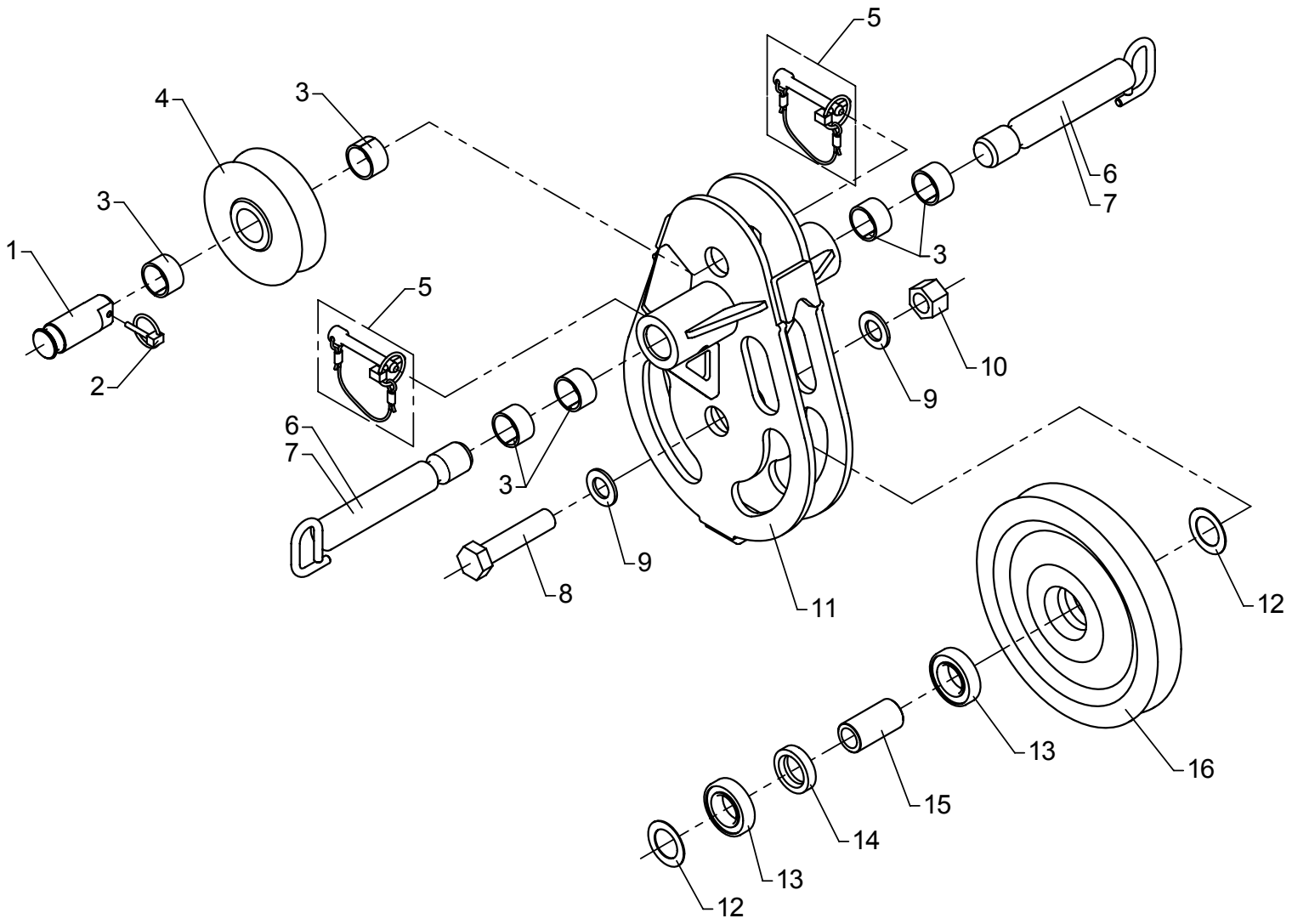

# Wire sheave, WS12, complete

As from / To loader no.: 96 00 00
Created: 03.10.2003
Modified: 24.11.2008

| Item no. | Qty. | Part no. | Description | Remarks |
|---|---|---|---|---|
| 1 | 1 | 6302607 | Pin | |
| 2 | 1 | 33385 | Ring split | ø4,5 x 27 |
| 3 | 6 | 23302 | Bushing | MB 3020 DU |
| 4 | 1 | 63513 | Wire roller guide | |
| 5 | 2 | 6302613 | Cotter bolt incl. ring split | |
| 6 | 2 | 6302605 | Lock bolt | FJ1200 |
| 7 | 2 | 6305241 | Lock bolt | FJ2000 |
| 8 | 1 | 30250 | Steel bolt | M20 x 90 |
| 9 | 2 | 31179 | Washer | 20 mm |
| 10 | 1 | 30894 | Lock nut | M20 |
| 11 | 1 | 6302601 | Wire pulley | |
| 12 | 2 | 23188 | Spacer | |
| 13 | 2 | 23187 | Ball bearing | |
| 14 | 1 | 6886034 | Distance ring | |
| 15 | 1 | 6302618 | Bushing | |
| 16 | 1 | 63511 | Wire sheave | |

# ODIN

Intern ref.: 6304410

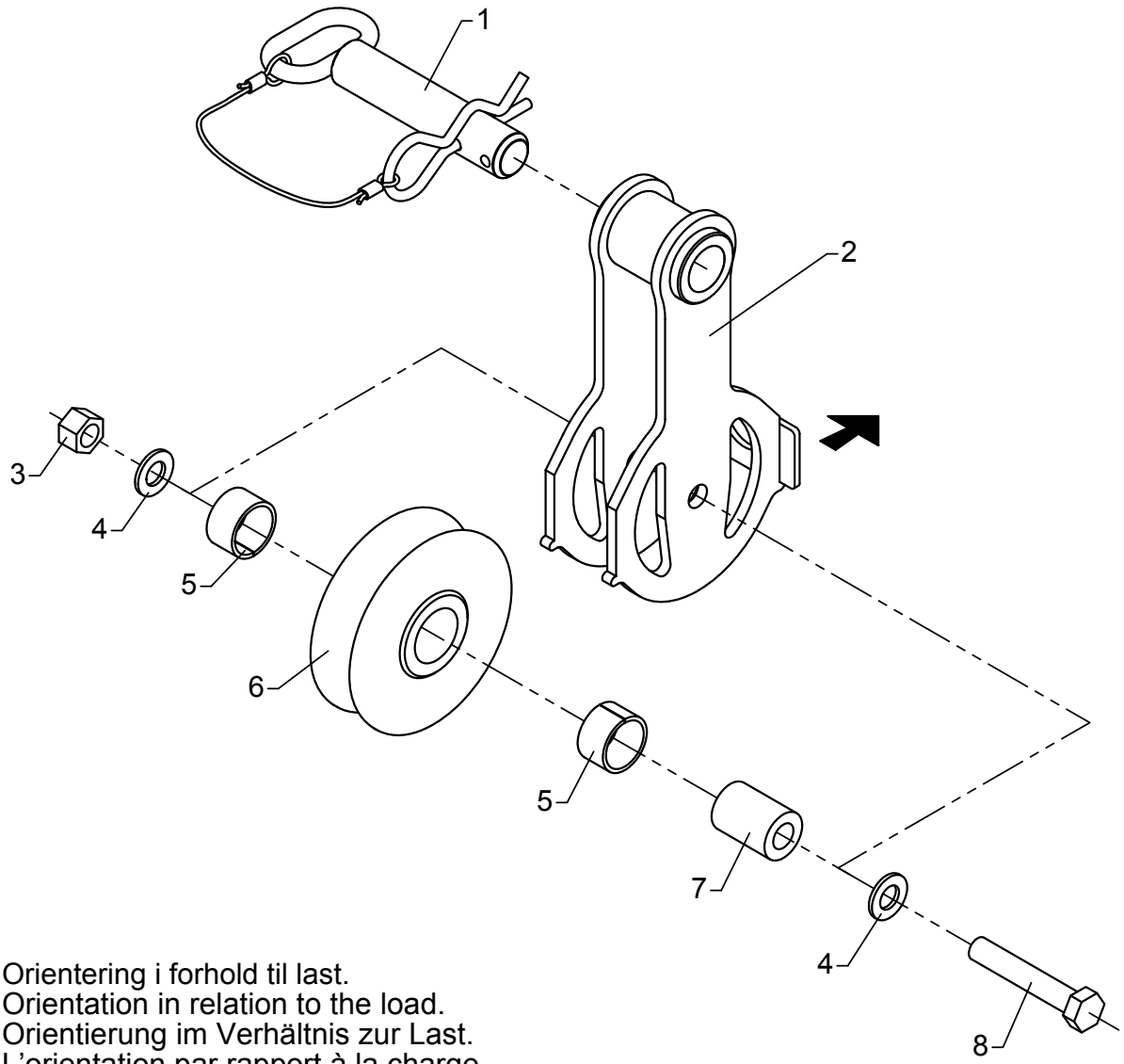


Orientering i forhold til last.
Orientation in relation to the load.
Orientierung im Verhältnis zur Last.
L'orientation par rapport à la charge.
Orientación en relación con la carga.

# Wire roller guide, FJ

As from / To loader no.: 96 00 00 /
Created: 03.10.2003
Modified: 06.12.2012

| Item no. | Qty. | Part no. | Description | Remarks |
|---|---|---|---|---|
| 1 | 1 | 6304266 | Lock pin with split pin | |
| 2 | 1 | 6304411 | Suspension for roller guide | |
| 3 | 1 | 30891 | Lock nut | M14 |
| 4 | 2 | 31178 | Washer | 14 mm |
| 5 | 2 | 23302 | Bushing | MB 3020 DU |
| 6 | 1 | 63513 | Wire roller guide | |
| 7 | 1 | 6885504 | Distance pipe | |
| 8 | 1 | 30214 | Steel bolt | M14 x 80 |

# ODIN

Intern ref.: 6887100

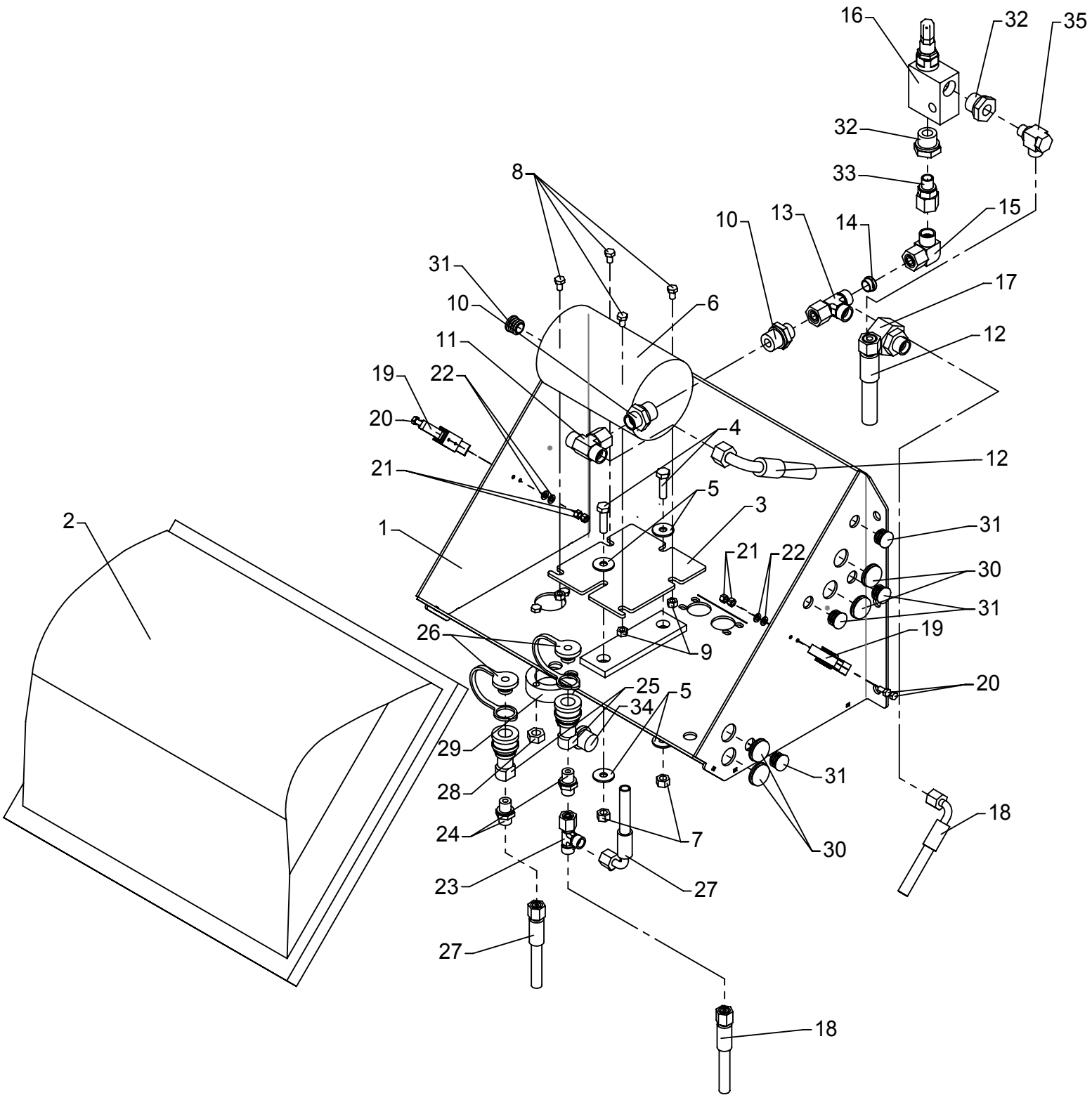

# Emergency pump

As from / To loader no.: 96 00 xx
Created: 17.11.2003
Modified:

| Item no. | Qty. | Part no. | Description | Remarks |
|---|---|---|---|---|
| 1 | 1 | 1954703 | Power pack | |
| 2 | 1 | 61931 | Cover | |
| 3 | 1 | 6887114 | Bracket for pump | |
| 4 | 2 | 30135 | Set screw, stainless | M8 x 30 |
| 5 | 4 | 31136 | Washer, stainless | |
| 6 | 1 | 1230470 | Power pack. complete | |
| 7 | 2 | 30886 | Lock nut, stainless | M8 |
| 8 | 4 | 30110 | Set screw, stainless | M6 x 10 |
| 9 | 4 | 30884 | Lock nut, stainless | M6 |
| 10 | 2 | 25108 | Connection | GES 12 LR 1/2-WD |
| 11 | 1 | 25212 | T-connection | ETVD 12 L |
| 12 | 1 | 0017710 | Hose | |
| 13 | 1 | 25270 | Connection | ELSD 12 L |
| 14 | 1 | 26117 | Profile ring | R 12 L/S |
| 15 | 1 | 25242 | Elbow connection | EWSD 12 L |
| 16 | 1 | 59969 | Relief valve | |
| 17 | 1 | 25208 | Reducing connection | REDSDN 22/12 L |
| 18 | 1 | 62509 | Hose | 1/4 x 6700 L/90 |
| 19 | 2 | 44973 | Eccentric lock | |
| 20 | 4 | 30151 | Set screw, stainless | |
| 21 | 4 | 30859 | Lock nut, stainless | |
| 22 | 4 | 31189 | Washer | 5 mm |
| 23 | 1 | 25249 | Connection | ELSD 8 L |
| 24 | 2 | 25109 | Connection | GES 8 LR-WD |
| 25 | 2 | 60696 | Quick-release coupling F | 1/4" |
| 26 | 2 | 60698 | Dust cap. M. | 1/4" |
| 27 | 1 | 62525 | Hose | |
| 28 | 2 | 30858 | Nut | M10 |
| 29 | 1 | 50047 | Plug for power pack | |
| 30 | 4 | 27969 | Lead-in | |
| 31 | 5 | 64518 | Plastic plug | |
| 32 | 2 | 25180 | Reducing connection | RED-R 1/2-WD/R 1/4 |
| 33 | 1 | 25241 | Connection | EGESD 12 LR 1/4-WD |
| 34 | 1 | 25103 | Plug | VS-R-1/2 WD |
| 35 | 1 | 25123 | Banjo connection | P-RSWV 10 LR |

# ODIN

Intern ref.: 6887120

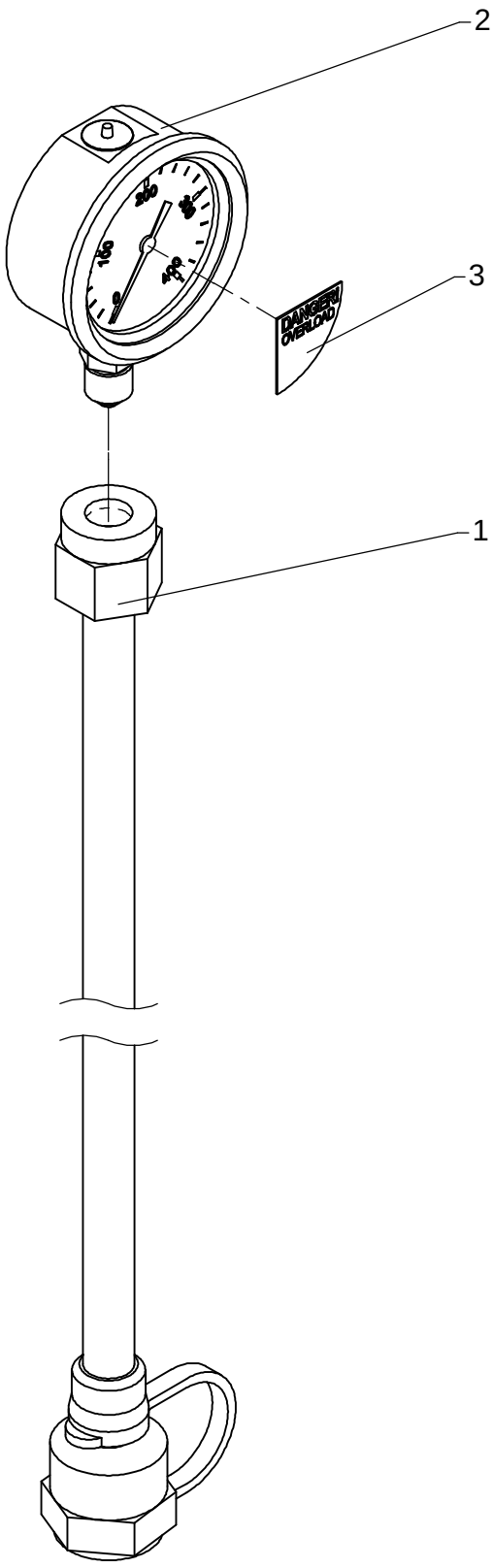

# Pressure gauge with hose

As from / To loader no.: 96 00 00
Created: 01.12.2003
Modified:

| Item no. | Qty. | Part no. | Description | Remarks |
|---|---|---|---|---|
| 1 | 1 | 26144 | Hose | |
| 2 | 1 | 60924 | Pressure gauge | |
| 3 | 1 | 64618 | Label for pressure gauge | 6685054 |

# 6020

Intern ref.: 8518770

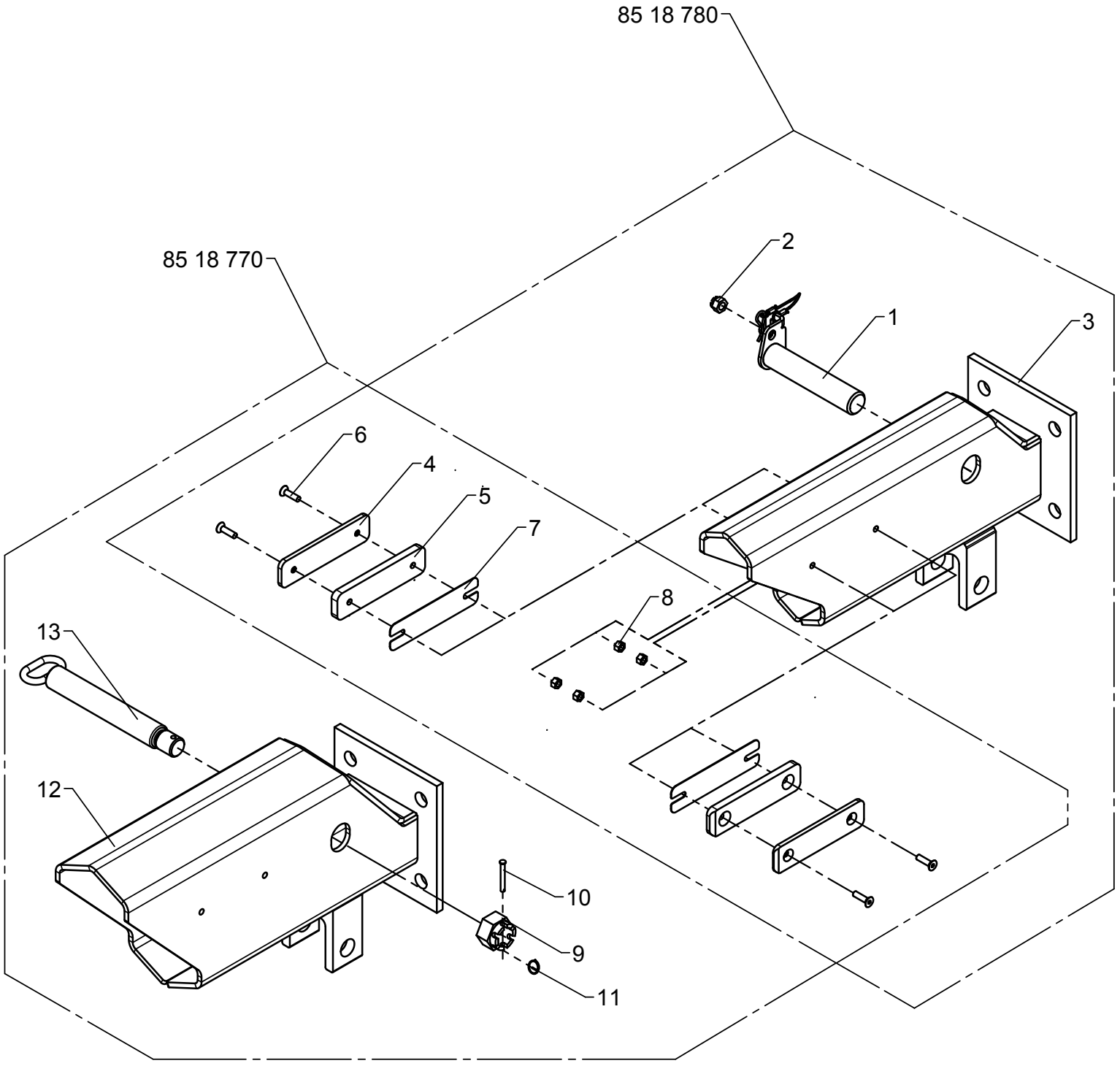

# Fittings, Insert, OK6, K8

As from / To loader no.: 96 00 00
Created: 30.05.2013
Modified:

| Item no. | Qty. | Part no. | Description | Remarks |
|---|---|---|---|---|
| 1 | 1 | 6300593 | Lock pin with lock spring | |
| 2 | 1 | 32127 | Nut | M12 |
| 3 | 1 | 8518629 | Insert, K8 | |
| 4 | 2 | 6348211 | Spacer | |
| 5 | 2 | 6304359 | Spacer | |
| 6 | 4 | 30995 | Countersunk screw | MK8 x 30 |
| 7 | 2 | 6305108 | Adjusting plate | |
| 8 | 4 | 30886 | Lock nut, stainless | M8 |
| 9 | 1 | 30839 | Nut | M30 |
| 10 | 1 | 31279 | Cotter bolt | ø6 x 50 |
| 11 | 1 | 33458 | Lock ring | |
| 12 | 1 | 8518771 | Insert, OK6 | |
| 13 | 1 | 6302748 | Pin for hook suspension | |

# ODIN

Intern ref.: 6301510

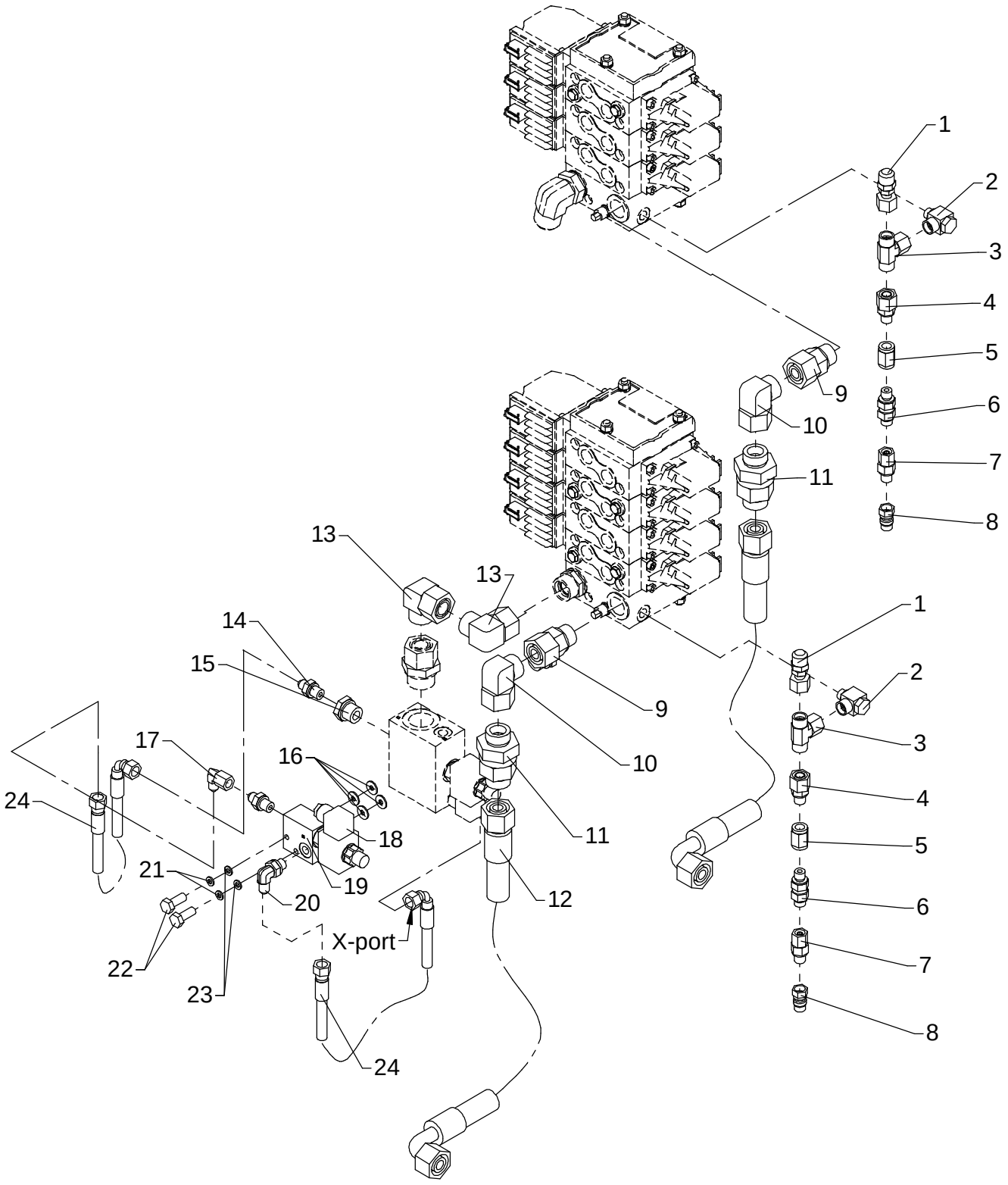

# Hydr. parts personnel basket

As from / To loader no.: 96 00 00
Created: 12.03.2004
Modified:

| Item no. | Qty. | Part no. | Description | Remarks |
|---|---|---|---|---|
| 1 | 2 | 26147 | Pressure-gauge connect. | 12L 18 x 1,5 |
| 2 | 2 | 25131 | Banjo connection | RSWV 12 LR - 1/4 |
| 3 | 2 | 25212 | T-connection | ETVD 12 L |
| 4 | 2 | 25241 | Connection | EGESD 12 LR 1/4-WD |
| 5 | 2 | 25904 | Socket | |
| 6 | 2 | 60425 | Check valve | RVZ 8 LR-WD |
| 7 | 2 | 26104 | Connection | EGESD 8 LR-WD |
| 8 | 2 | 60697 | Quick-release coupling M | 1/4" |
| 9 | 2 | 26358 | Connection | EGESD 20 SR-WD |
| 10 | 2 | 26198 | Elbow connection | EWVD 20 S-SV |
| 11 | 2 | 26844 | Check valve | P-RW 20 S |
| 12 | 2 | 62625 | Hose | 5/8 x 1000mm L/90 |
| 13 | 2 | 25209 | Elbow connection | EWSD 22 L |
| 14 | 3 | 25829 | Straight connection | F40XS8 - 1/4 |
| 15 | 2 | 25180 | Reducing connection | RED-R 1/2-WD/R 1/4 |
| 16 | 4 | 31134 | Washer, stainless | |
| 17 | 1 | 25826 | Elbow connection | C6XS 8 JIC |
| 18 | 1 | 59642 | Magnet coil | |
| 19 | 1 | 59903 | Valve housing | |
| 20 | 1 | 25858 | Elbow connection | C40XS8 - 1/4 |
| 21 | 2 | 31154 | Spring washer, stainless | 6 mm |
| 22 | 2 | 31513 | Set screw, stainless | M10 x 25 |
| 23 | 2 | 32302 | Face washer, stainless | 6 mm |
| 24 | 2 | 62974 | Hose | 1/4" x 350 mm V/O JIC |

# ODIN

Intern ref.: 6301520

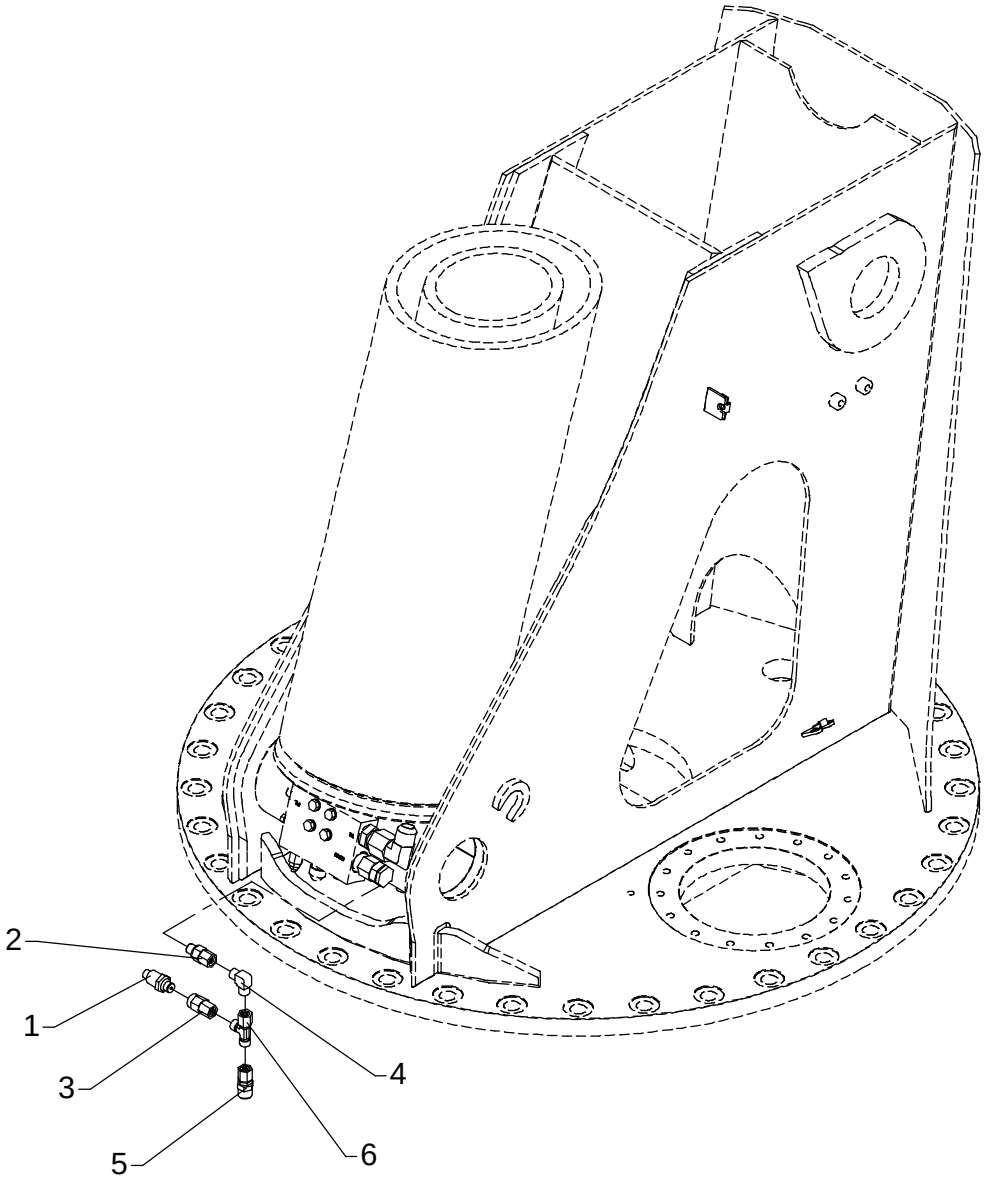

# Pres. transducer kit, basket

As from / To loader no.: 96 00 00
Created: 15.03.2004
Modified:

| Item no. | Qty. | Part no. | Description | Remarks |
|---|---|---|---|---|
| 1 | 1 | 28850 | Pressure transducer | |
| 2 | 1 | 26104 | Connection | EGESD 8 LR-WD |
| 3 | 1 | 26370 | Pressure gauge connection | EMASD 8 LR |
| 4 | 1 | 25247 | Elbow connection | WV 8 L |
| 5 | 1 | 26148 | Connection | |
| 6 | 1 | 25249 | Connection | ELSD 8 L |

# 6020

Intern ref.: 6304520

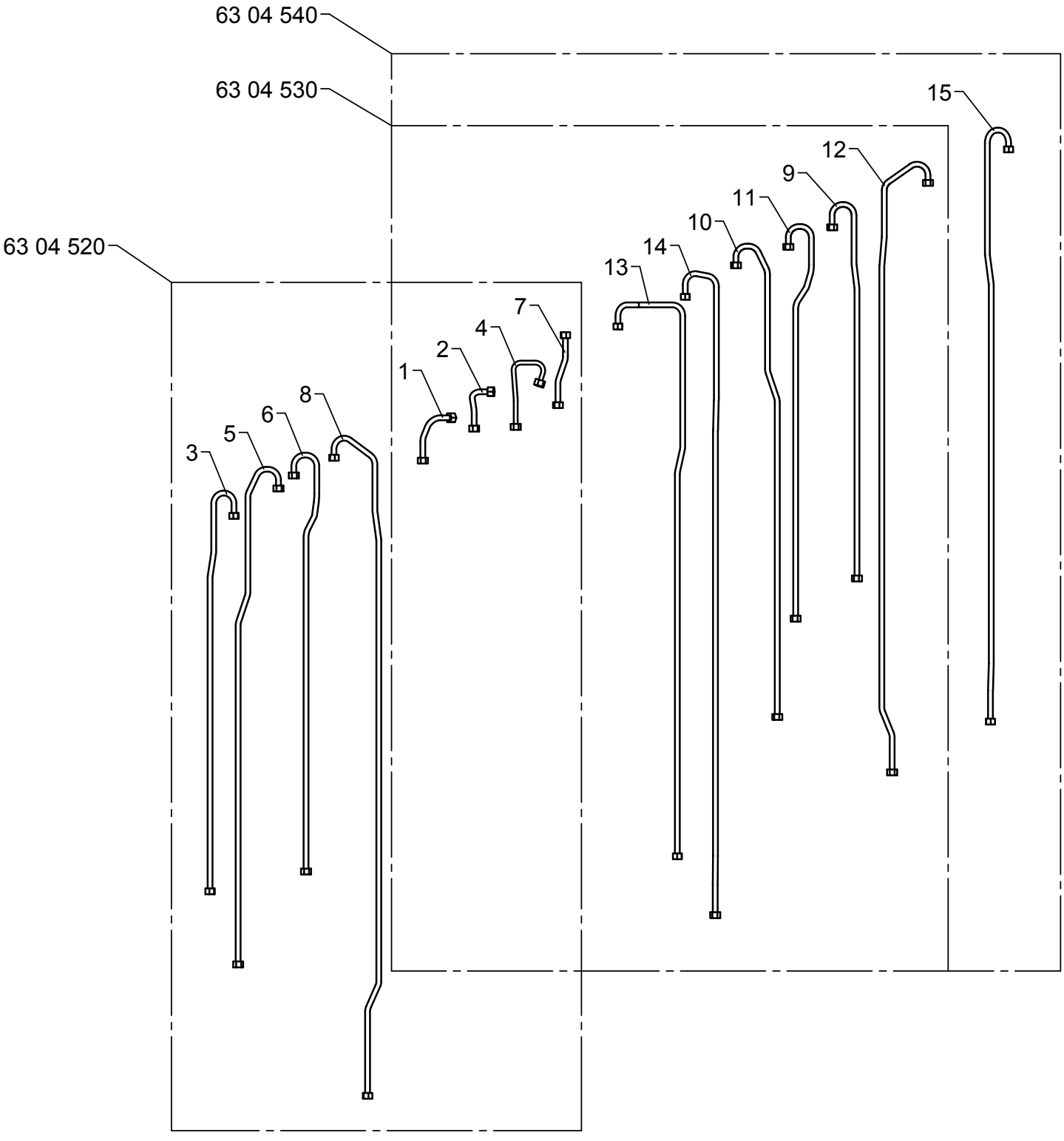

# Pipe, walform, OK5-K8

As from / To loader no.: 96 00 00
Created: 16.05.2013
Modified:

| Item no. | Qty. | Part no. | Description | Remarks |
|---|---|---|---|---|
| | | 6304520 | For OK5 + OK6 | |
| | | 6304530 | For K7 | |
| | | 6304540 | For K8 | |
| 1 | 1 | 6301701 | Pipe | # |
| 2 | 1 | 6301702 | Pipe | # |
| 3 | 1 | 6301711 | Pipe | *# |
| 4 | 1 | 6301712 | Pipe | # |
| 5 | 1 | 6301721 | Pipe | *# |
| 6 | 1 | 6301731 | Pipe | *# |
| 7 | 1 | 6301733 | Pipe | # |
| 8 | 1 | 6301745 | Pipe | *# |
| 9 | 1 | 6303711 | Pipe | # |
| 10 | 1 | 6303721 | Pipe | # |
| 11 | 1 | 6303731 | Pipe | # |
| 12 | 1 | 6303745 | Pipe | # |
| 13 | 1 | 6303751 | Pipe | # |
| 14 | 1 | 6303761 | Pipe | # |
| 15 | 1 | 6303771 | Pipe | # |

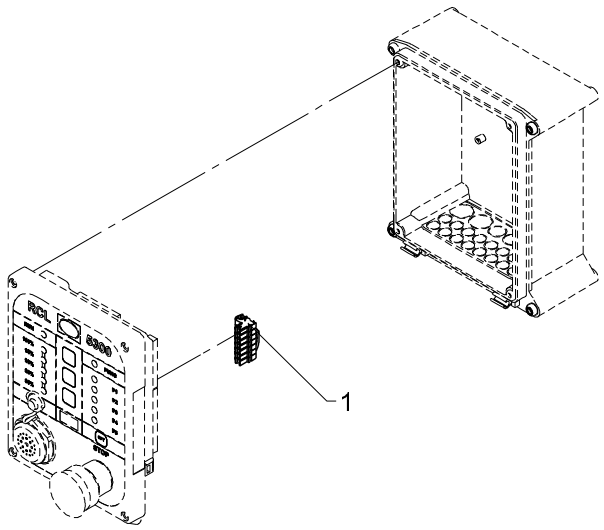
1

# 522 20 150

## CAN termination, RCL53xx

From loader 960001
To loader

Created 15-01-2013
Modified

| Pos | Qty. | Part no. | Description | Remarks |
|---|---|---|---|---|
| 1 | 1 | 29340 | CAN termination/RCL53xx | |

# 6020K

Internal ref. 70 08 040

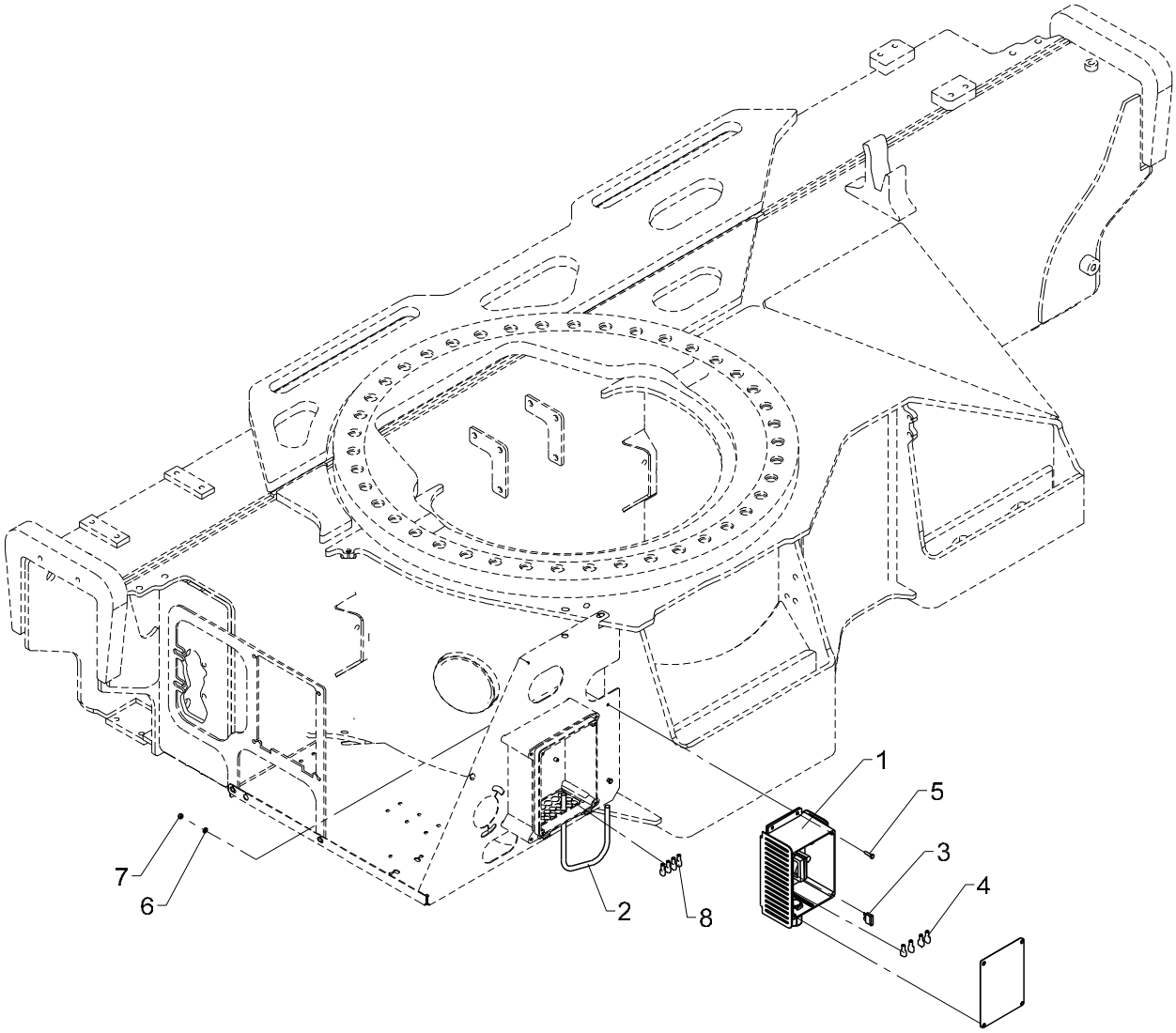

# 12 V converter

**522 20 160**

From loader 960001
To loader

Created 29-05-2013
Modified

| Pos | Qty. | Part no. | Description | Remarks |
|---|---|---|---|---|
| 1 | 1 | 29478 | Converter, 12-24 V, complete | |
| 2 | 1 | 28278 | Cable 4 x 2.5 | |
| 3 | 1 | 27378 | Fuse 25 Amp | |
| 4 | 4 | 27428 | Clip | |
| 5 | 4 | 30125 | Set screw | M4 x 16 |
| 6 | 4 | 31188 | Washer, stainless | 4 mm |
| 7 | 4 | 30857 | Lock nut | M4 |
| 8 | 4 | 27428 | Clip | |

# 6020K

Internal ref. 70 08 010

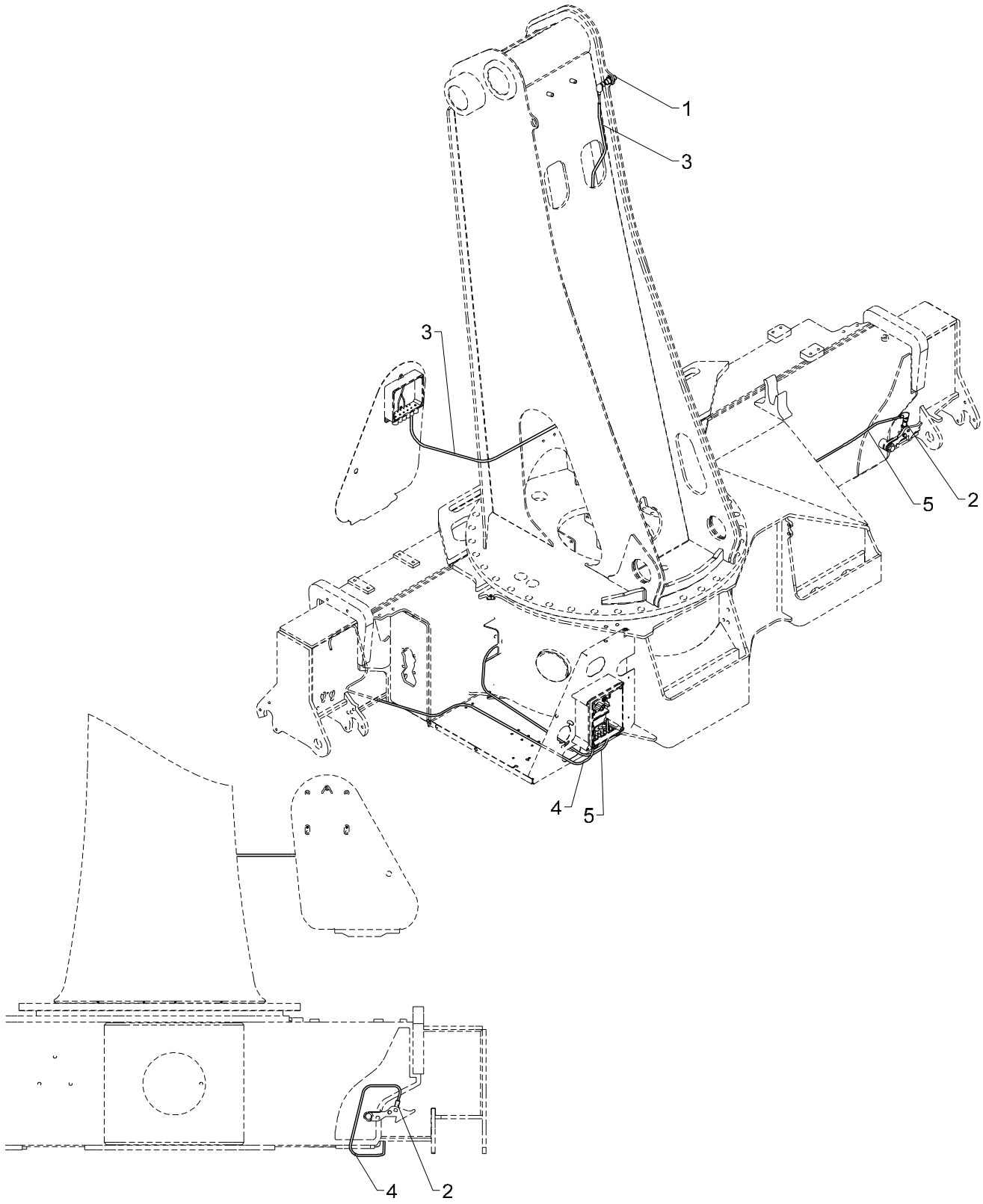

# BEHEW

| Pos | Qty. | Part no. | Description | Remarks |
|---|---|---|---|---|
| 1 | 1 | 28980 | Proximity switch | |
| 2 | 2 | 29257 | Proximity switch M12x44, 4mm | |
| 3 | 1 | 28077 | Cable with plug | |
| 4 | 1 | 28117 | Cable with plug | |
| 5 | 1 | 28077 | Cable with plug | |

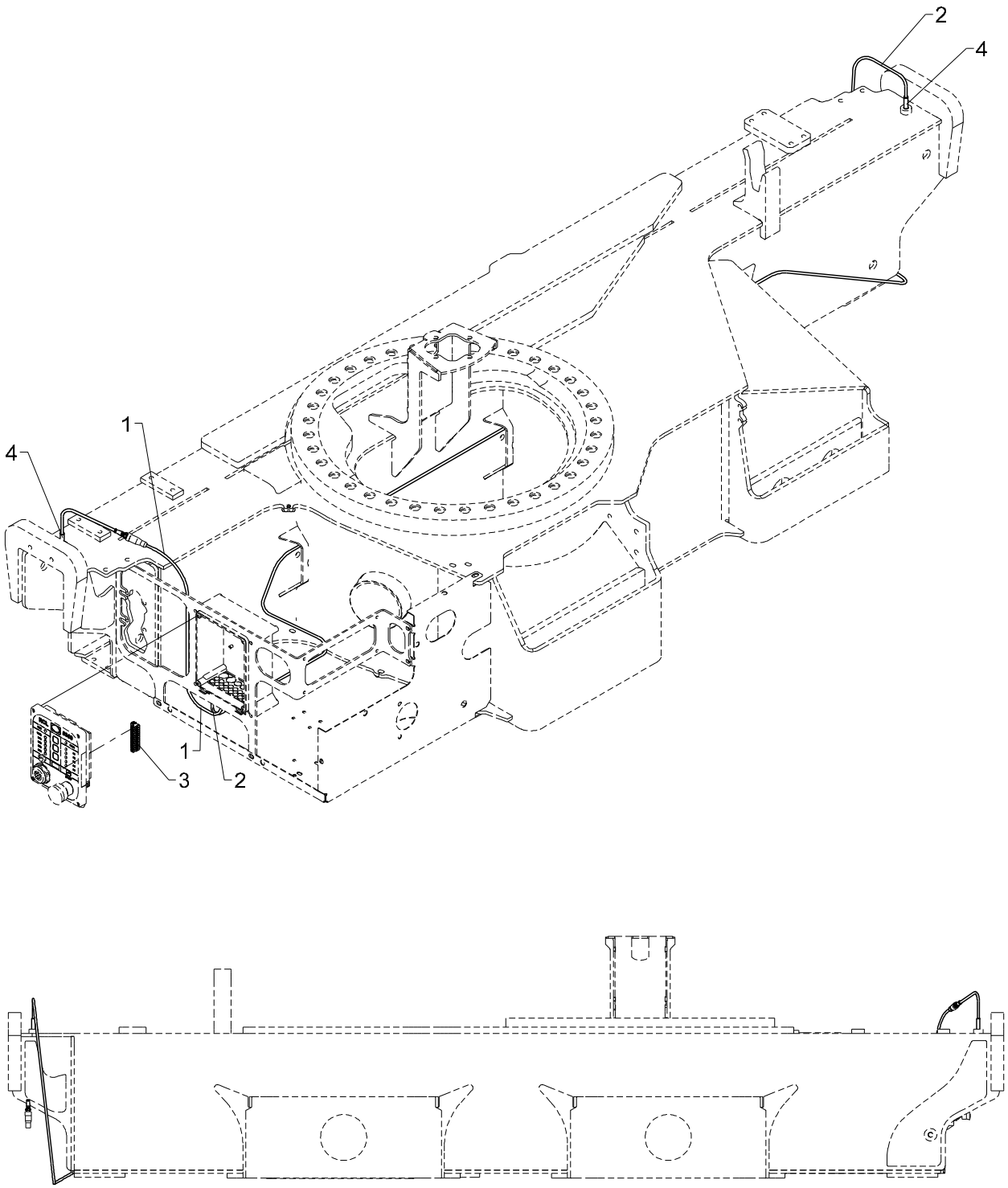
2
4
1
4
1
3
2

# CYL

| Pos | Qty. | Part no. | Description | Remarks |
|---|---|---|---|---|
| 1 | 1 | 29223 | Cable with socket, 2 m | |
| 2 | 1 | 29224 | Cable with socket, 5 m | |
| 3 | 1 | 29322 | Plug, 12-polar for RCL 53XX | |
| 4 | 2 | 29282 | Proximity switch M12-4mm NO | |

# 6020K

Internal ref. 70 05 620

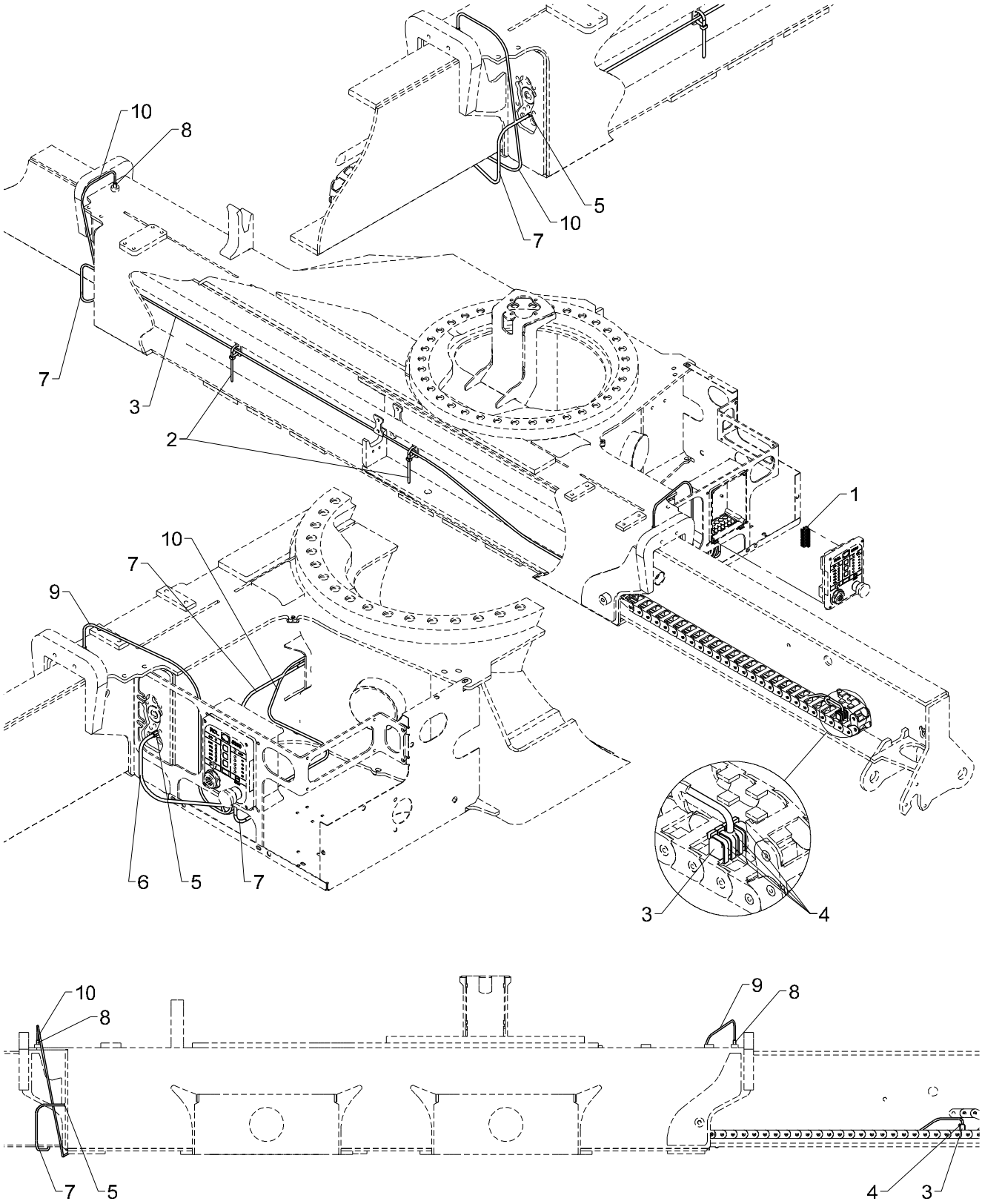

## CYBEL

| Pos | Qty. | Part no. | Description | Remarks |
|---|---|---|---|---|
| 1 | 1 | 29322 | Plug, 12-polar for RCL 53XX | |
| 2 | 4 | 27275 | Cable tie, black, 7.6x385mm | |
| 3 | 2 | 29253 | Tilt sensor, nylon drag chain | |
| 4 | 8 | 27274 | Clip | |
| 5 | 2 | 29443 | Panel lead-in M8 - 3-polar | |
| 6 | 1 | 29265 | Cable 2 m, M8 socket | |
| 7 | 1 | 29264 | Cable 5 m, M8 socket | |
| 8 | 2 | 29282 | Proximity switch M12-4mm NO | |
| 9 | 1 | 29223 | Cable with socket, 2 m | |
| 10 | 1 | 29224 | Cable with socket, 5 m | |

# 6020K

Internal ref. 70 07 990

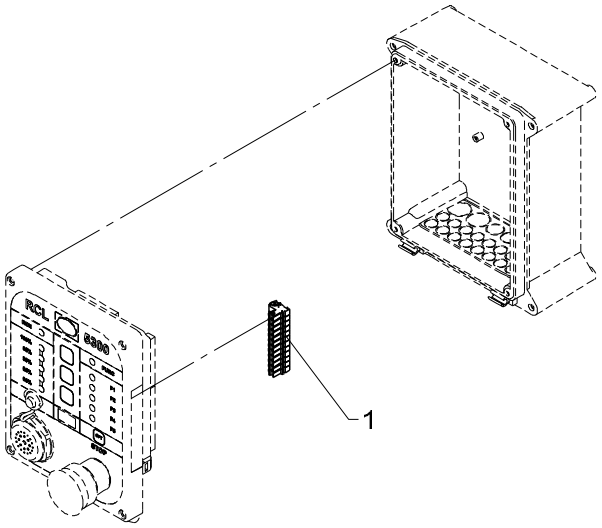

## PAS

| Pos | Qty. | Part no. | Description | Remarks |
|---|---|---|---|---|
| 1 | 1 | 29322 | Plug, 12-polar for RCL 53XX | |

# 6020K

Internal ref. 70 06 330

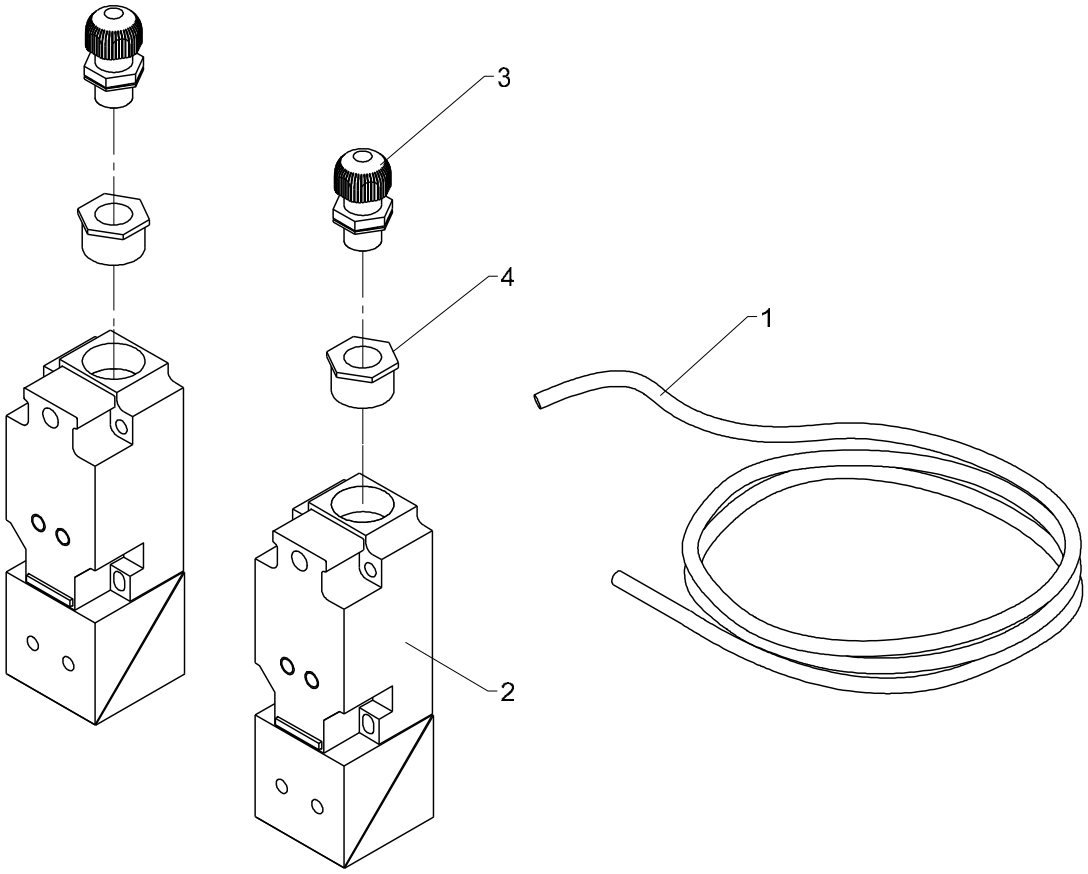

## CYW

| Pos | Qty. | Part no. | Description | Remarks |
|---|---|---|---|---|
| 1 | 1 | 28262 | Cable 4 x 0.75 | 8 m |
| 2 | 2 | 27598 | Proximity switch | |
| 3 | 2 | 28459 | Connection | |
| 4 | 2 | 29200 | Socket M12/M20 | |

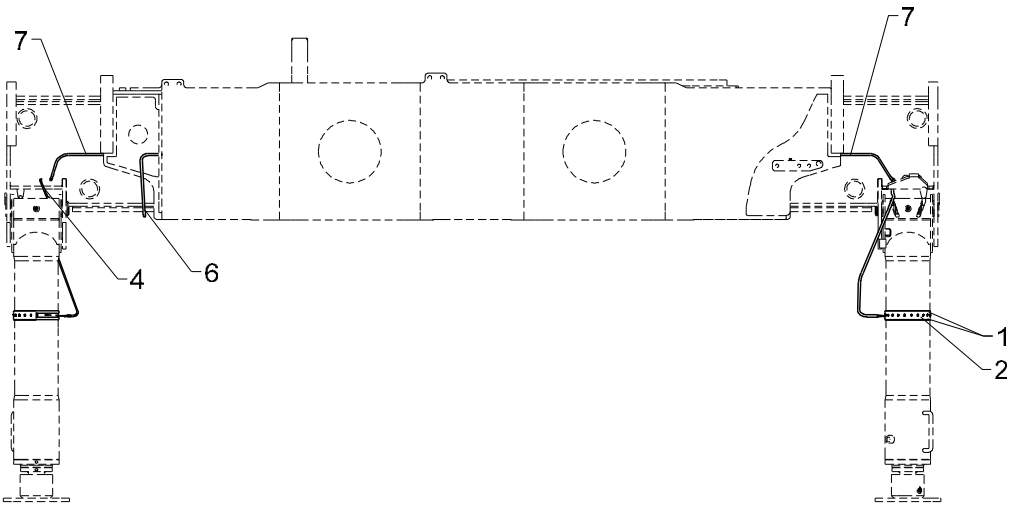
7
7
4
6
1
2

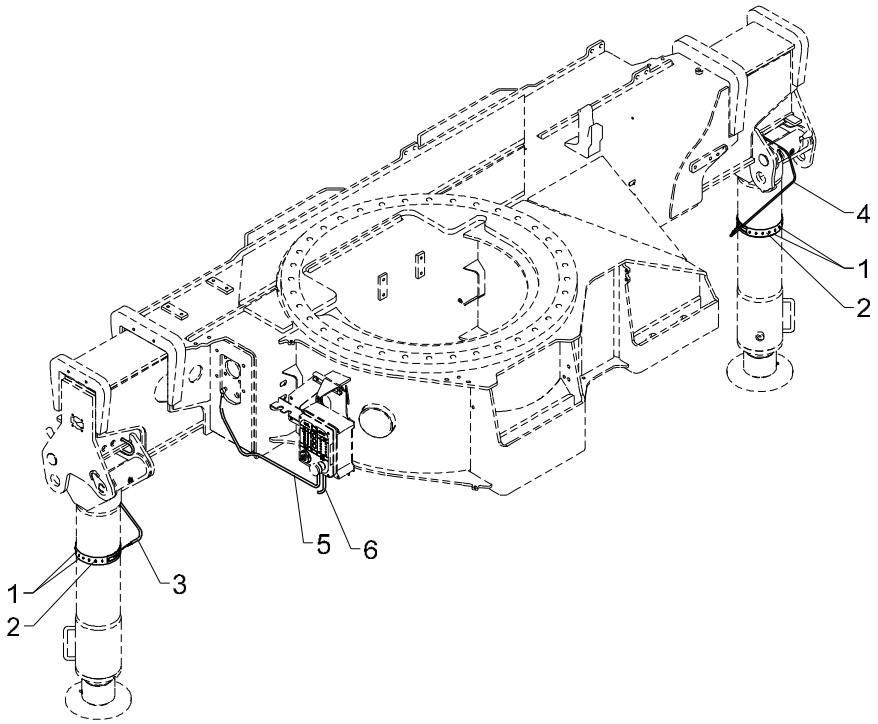
4
1
2
5
6
1
2
3

# 522 20 350

From loader 960001
To loader

Created 11-03-2014
Modified 21-04-2015

## Alarm flash

| Pos | Qty. | Part no. | Description | Remarks |
|---|---|---|---|---|
| 1 | 4 | 29299 | Cable tie, black 7.6x760mm | |
| 2 | 2 | 29431 | Alarm flash, yellow 24V, 34 cm | |
| 3 | 1 | 29445 | Cable, M8 - PUR 3-polar | |
| 4 | 1 | 29444 | Cable M8 - 3-polar | |
| 5 | 1 | 29482 | Cable M8, 2 m, female, 3 polar | |
| 6 | 1 | 29483 | Cable M8, 5 m, female, 3 polar | |
| 7 | 2 | 29436 | Cable M8, socket and plug 6.3m | |

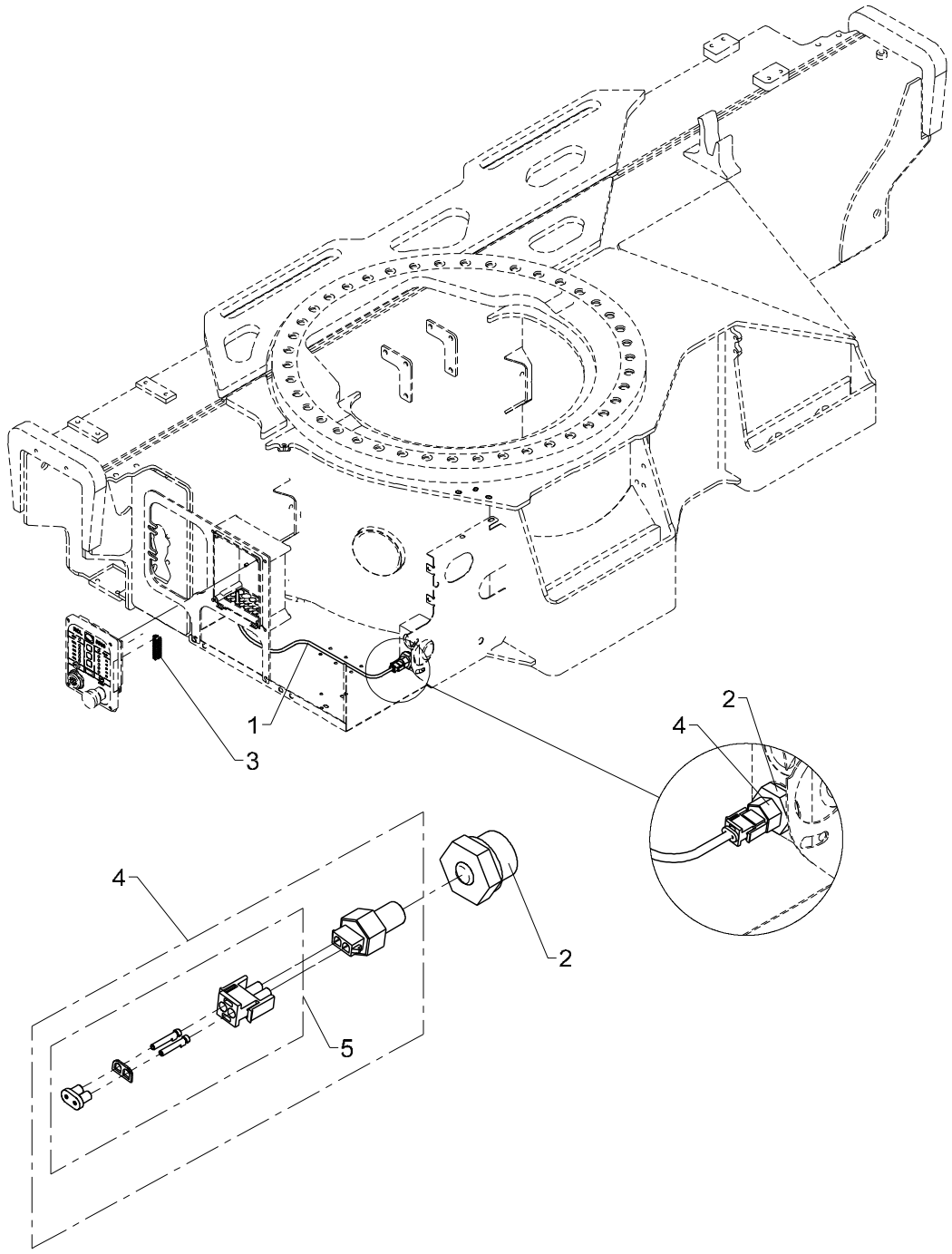
1
3
2
4
4
2
5

From loader 960001
To loader

# Temperature monitoring without oil cooler

Created 16-11-2012
Modified 09-12-2013

| Pos | Qty. | Part no. | Description | Remarks |
|---|---|---|---|---|
| 1 | 1 | 28249 | Cable 2 x 0.75 | 1.5 m |
| 2 | 1 | 25029 | Reducing connection | RED-R 3/4-WD/R 1/4 |
| 3 | 1 | 29321 | Plug, 10-polar for RCL 53XX | |
| 4 | 1 | 50290 | Temperature sensor, oil cooler | |
| 5 | 1 | 50293 | Plug for oil cooler | |

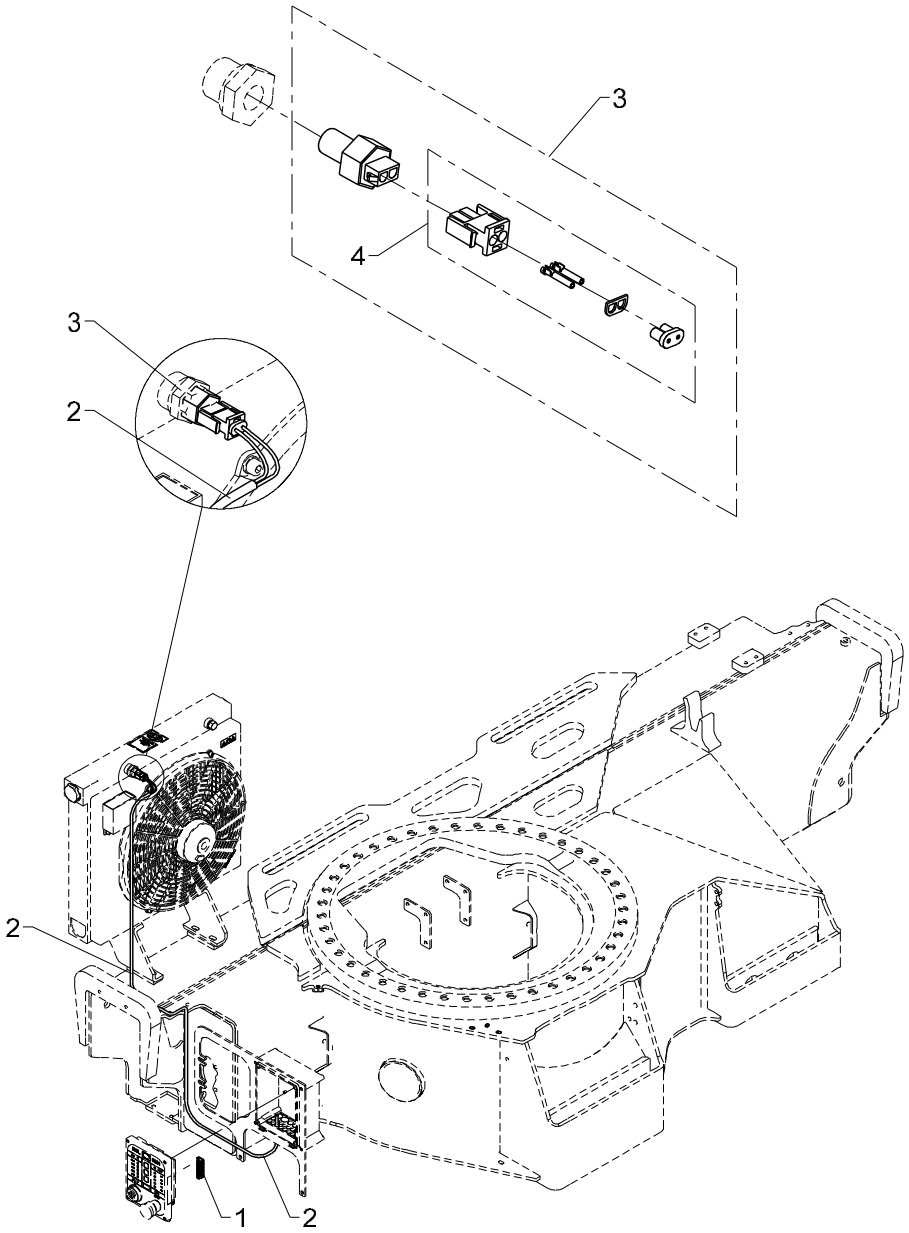
3
4
3
2
2
1
2

# 522 20 420

From loader 960001
To loader

Created 17-02-2011
Modified

## Temperature monitoring for oil cooler

| Pos | Qty. | Part no. | Description | Remarks |
|---|---|---|---|---|
| 1 | 1 | 29321 | Plug, 10-polar for RCL 53XX | |
| 2 | 1 | 28249 | Cable 2 x 0.75 | 2,3 m |
| 3 | 1 | 50290 | Temperature sensor, oil cooler | |
| 4 | 1 | 50293 | Plug for oil cooler | |

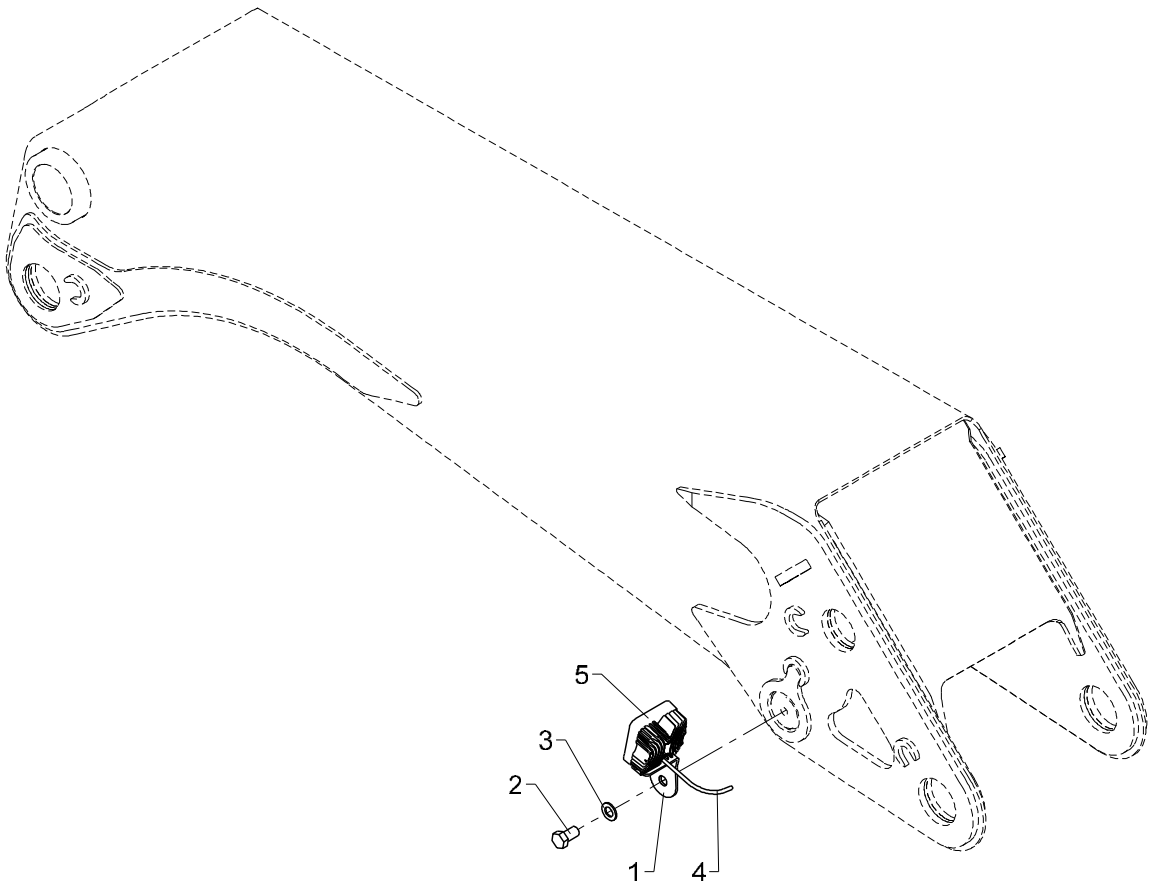
5
3
2
1
4

# Spotlight, boom

**522 20 430**

From loader 960001
To loader

Created 27-03-2014
Modified

| Pos | Qty. | Part no. | Description | Remarks |
|---|---|---|---|---|
| 1 | 1 | 7004024 | Bracket for spotlight, boom | |
| 2 | 1 | 30242 | Set screw | M20 x 35 |
| 3 | 1 | 31179 | Washer | 20 mm |
| 4 | 1 | 29462 | Cable, LED spotlight, 9.0m | |
| 5 | 1 | 29400 | Spotlight LED 27 W | |

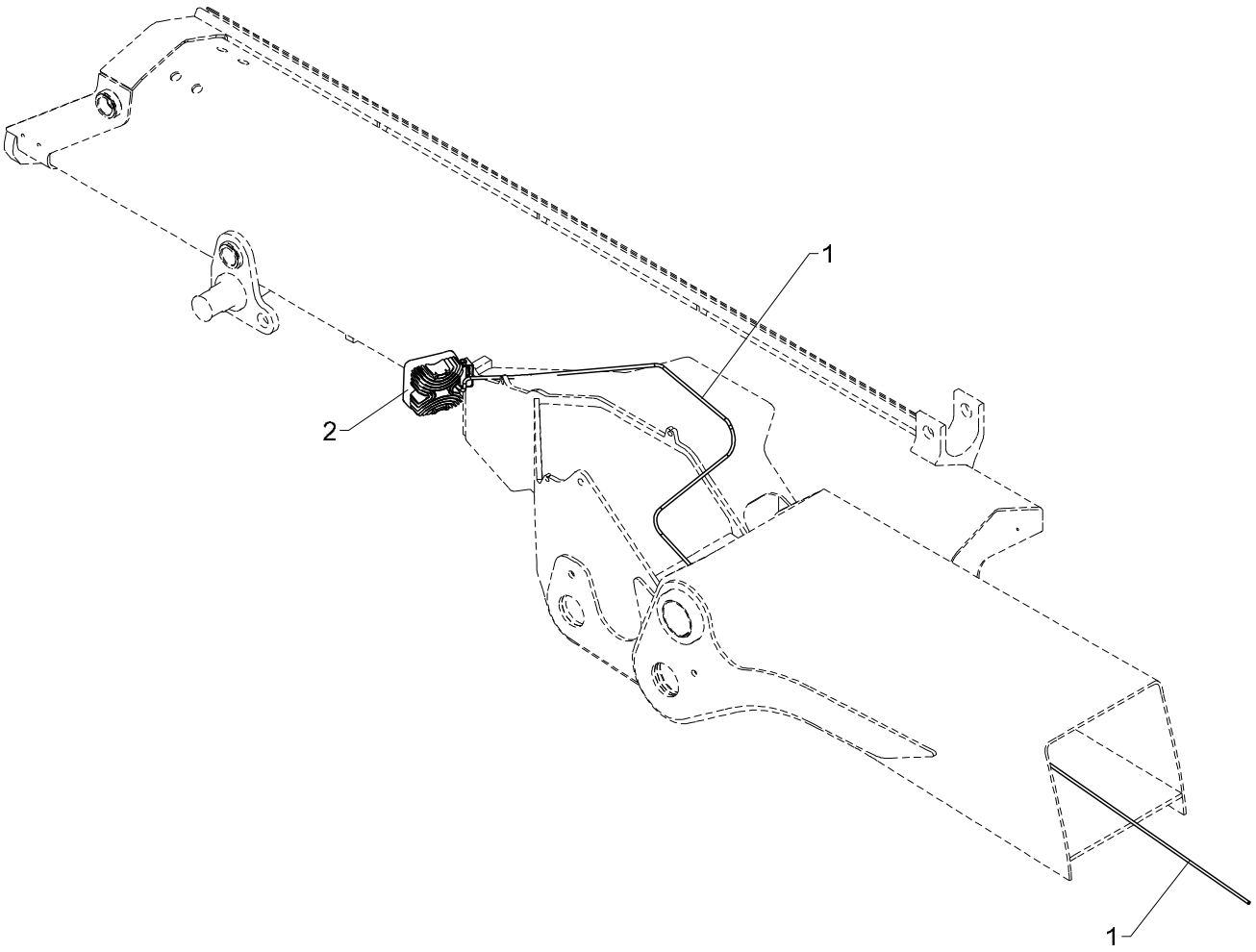
1
2
1

# 522 20 440 A

From loader 960001
To loader

Created 17-12-2012
Modified

## Spotlight, jib

| Pos | Qty. | Part no. | Description | Remarks |
|---|---|---|---|---|
| 1 | 1 | 29462 | Cable, LED spotlight, 9.0m | |
| 2 | 1 | 29400 | Spotlight LED 27 W | |

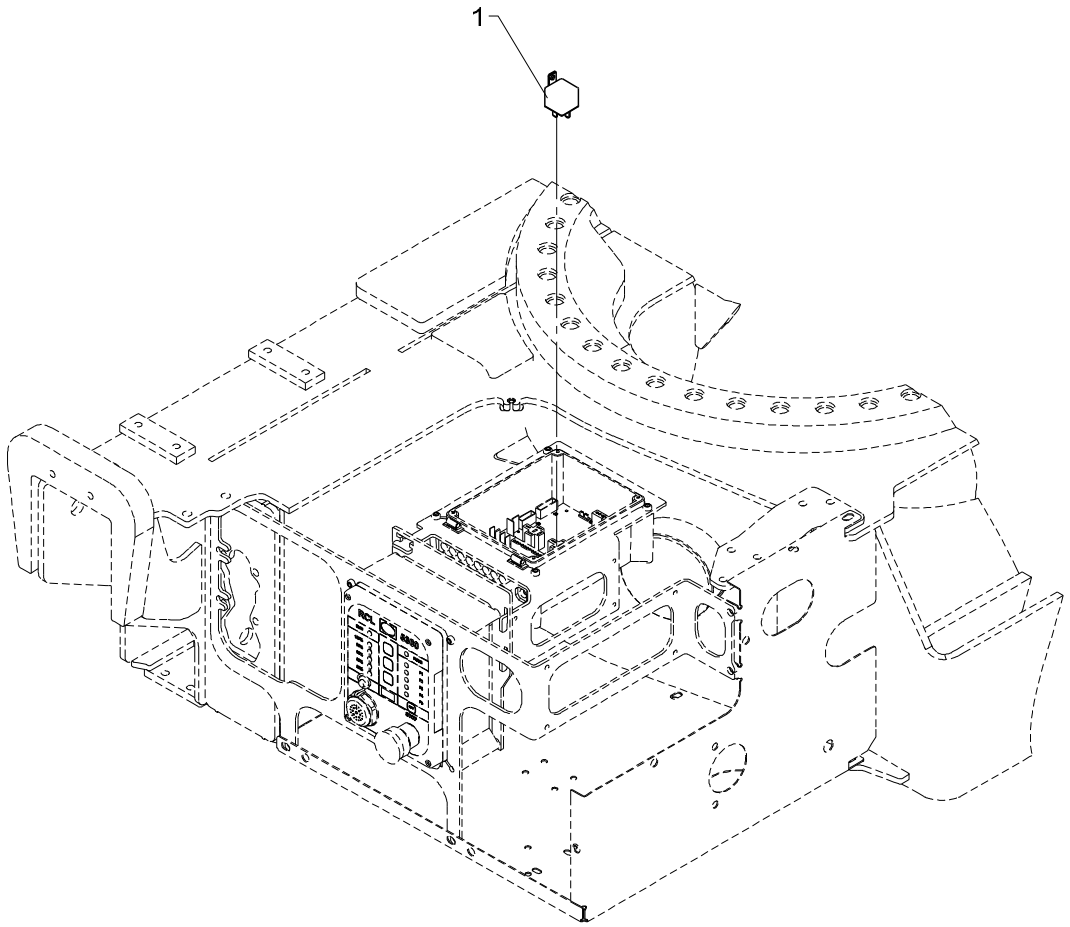
1

# 522 20 450

From loader 960001
To loader

Created 01-02-2013
Modified

## Spotlight, radio remote controlled.

| Pos | Qty. | Part no. | Description | Remarks |
|---|---|---|---|---|
| 1 | 1 | 27342 | Relay, 24V | |

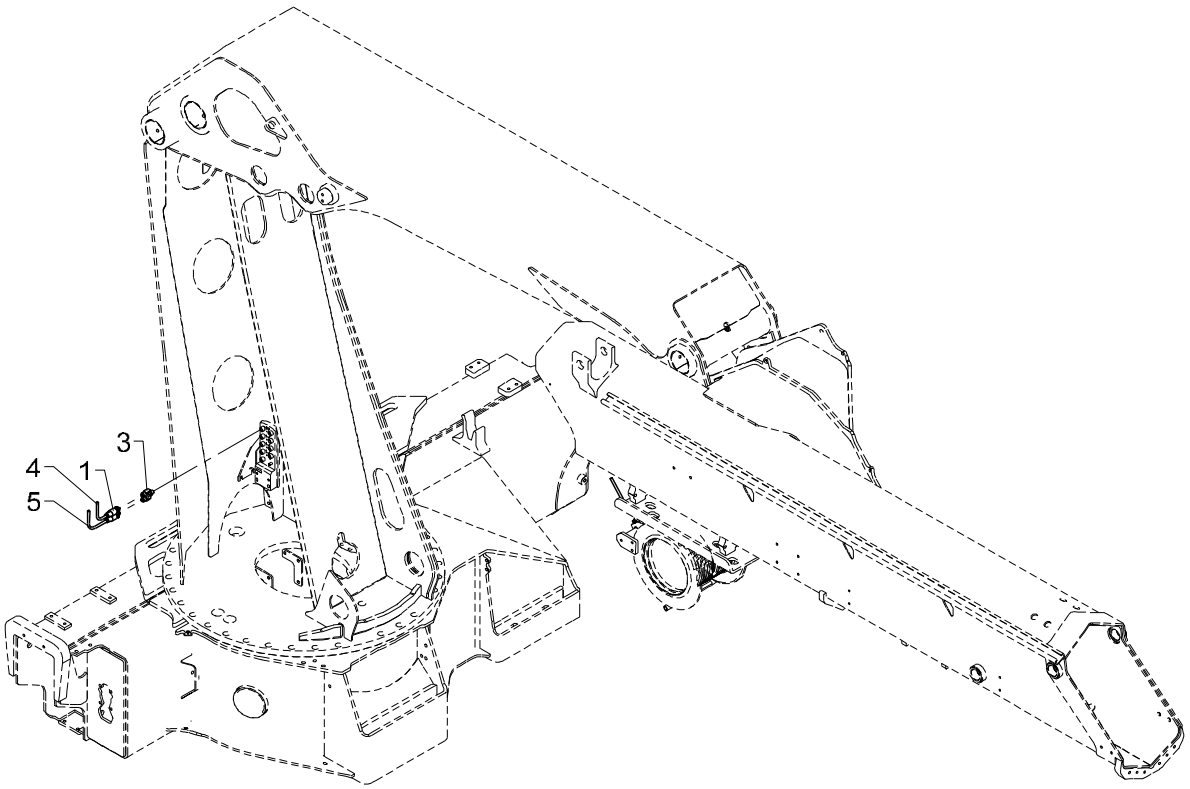
3
4
1
5

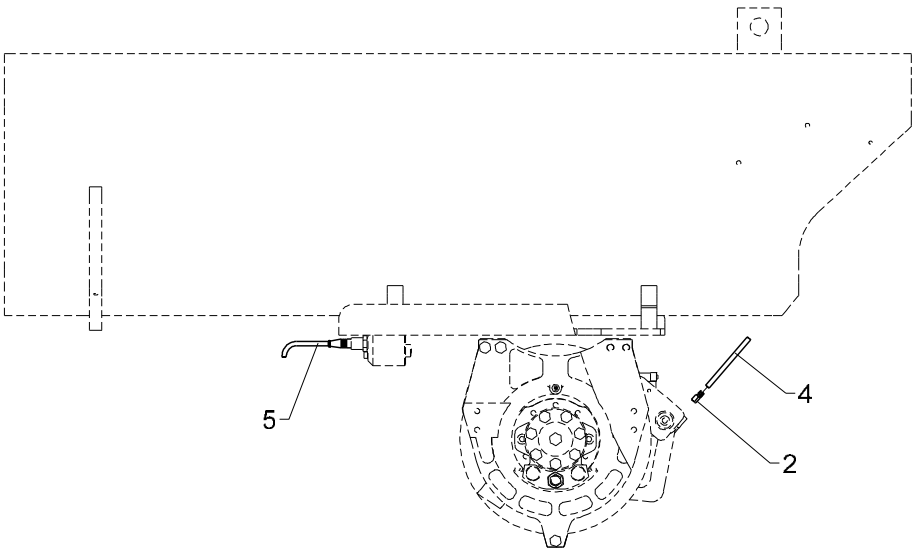
5
4
2

# Winch

| Pos | Qty. | Part no. | Description | Remarks |
|---|---|---|---|---|
| 1 | 2 | 29268 | Plug, M12, straight 4-polar | |
| 2 | 2 | 28700 | Cable shoe, red clevis Ø3 | |
| 3 | 1 | 29477 | Y-splitter 3xM12 - Parallel | |
| 4 | 1 | 28249 | Cable 2 x 0.75 | 5 m |
| 5 | 1 | 29224 | Cable with socket, 5 m | |

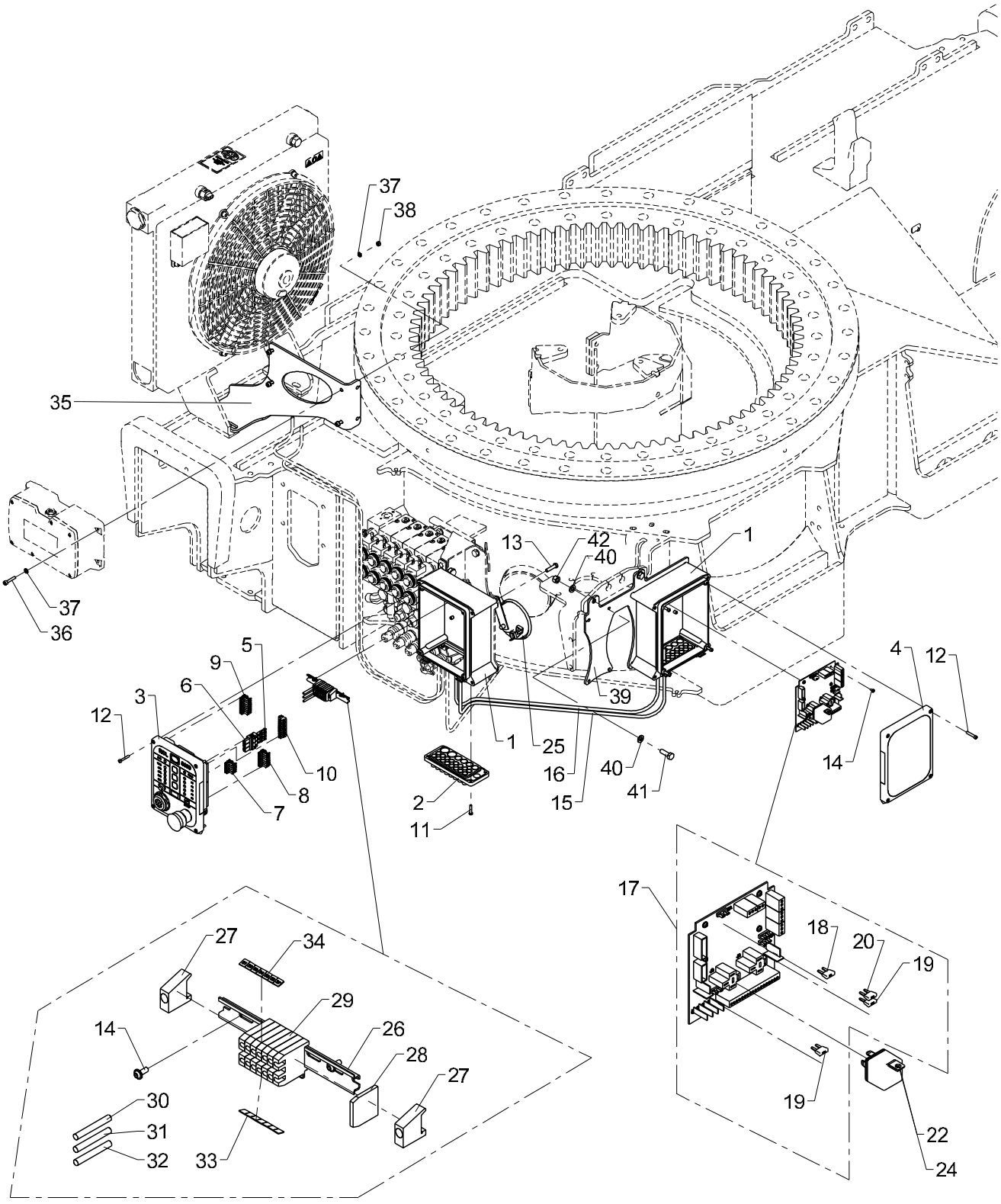
37
38
35
37
36
5
9
6
3
12
10
8
7
13
42
40
1
39
1
25
16
15
40
41
2
11
4
12
14
27
34
29
14
26
28
27
30
31
32
33
17
18
20
19
19
22
24

# Basic electronic parts, base

| Pos | Qty. | Part no. | Description | Remarks |
|---|---|---|---|---|
| | | 7008310 | | |
| | | 7008020 | Relay, 24 V | |
| | | 7008030 | Relay, 12 V | |
| 1 | 2 | 29304 | Bottom f. RCL-box incl. hinge | |
| 2 | 2 | 29307 | Cable lead-in | |
| 3 | 1 | 29301 | Front complete, RCL 5300 | |
| 4 | 1 | 29347 | RCL 5300 indicator panel | |
| 5 | 3 | 29316 | Pin | |
| 6 | 1 | 29315 | Plug, 3-polar for RCL 53XX | |
| 7 | 1 | 29317 | Plug, 5-polar for RCL 53XX | |
| 8 | 1 | 29318 | Plug, 7-polar for RCL 53XX | |
| 9 | 1 | 29319 | Plug, 8-polar for RCL 53XX | |
| 10 | 1 | 29320 | Plug, 9-polar for RCL 53XX | |
| 11 | 8 | 30346 | Screw, stainless | 4,0 x 20 |
| 12 | 8 | 30347 | Screw, stainless | 4,0 x 25 |
| 13 | 8 | 30340 | Screw, stainless | 6,0 x 25 |
| 14 | 8 | 30361 | Screw, stainless | 3,0 x 8 |
| 15 | 1 | 27221 | Wire 5 x 1.5 | 1,5 m |
| 16 | 1 | 28278 | Cable 4 x 2.5 | 1,5 m |
| 17 | 1 | 29473 | EJB5380 | |
| 18 | 1 | 29369 | Fuse 2A MINI | |
| 19 | 2 | 27822 | Fuse 10A MINI | |
| 20 | 1 | 29370 | Fuse 15A MINI | |
| 21 | 1 | 7008020 | Relay, 24 V | |
| 22 | 1 | 27342 | Relay, 24V | |
| 23 | 1 | 7008030 | Relay, 12 V | |
| 24 | 1 | 27340 | Relay, 12 V | |
| 25 | 1 | 28971 | Horn, 24 V, 2.5 Amp. | |
| 26 | 1 | 28013 | Guide rail | 120 mm. |
| 27 | 2 | 28012 | End angle | |
| 28 | 1 | 28011 | End plate | |
| 29 | 7 | 28010 | Terminal | |
| 30 | 1 | 27202 | Cable | 0,3 m |
| 31 | 1 | 27204 | Wire, 1 x1.5mm2 | 0,3 m |
| 32 | 1 | 27120 | Cable | 0,3 m |
| 33 | 1 | 28019 | Labels nos. 1-10 | |
| 34 | 1 | 28965 | Dekafix labels 21-30 | |
| 35 | 1 | 6301207 | Bracket for G2 | |
| 36 | 4 | 30481 | Screw | |
| 37 | 8 | 32308 | Washer | 5 mm |
| 38 | 4 | 30859 | Lock nut, stainless | |

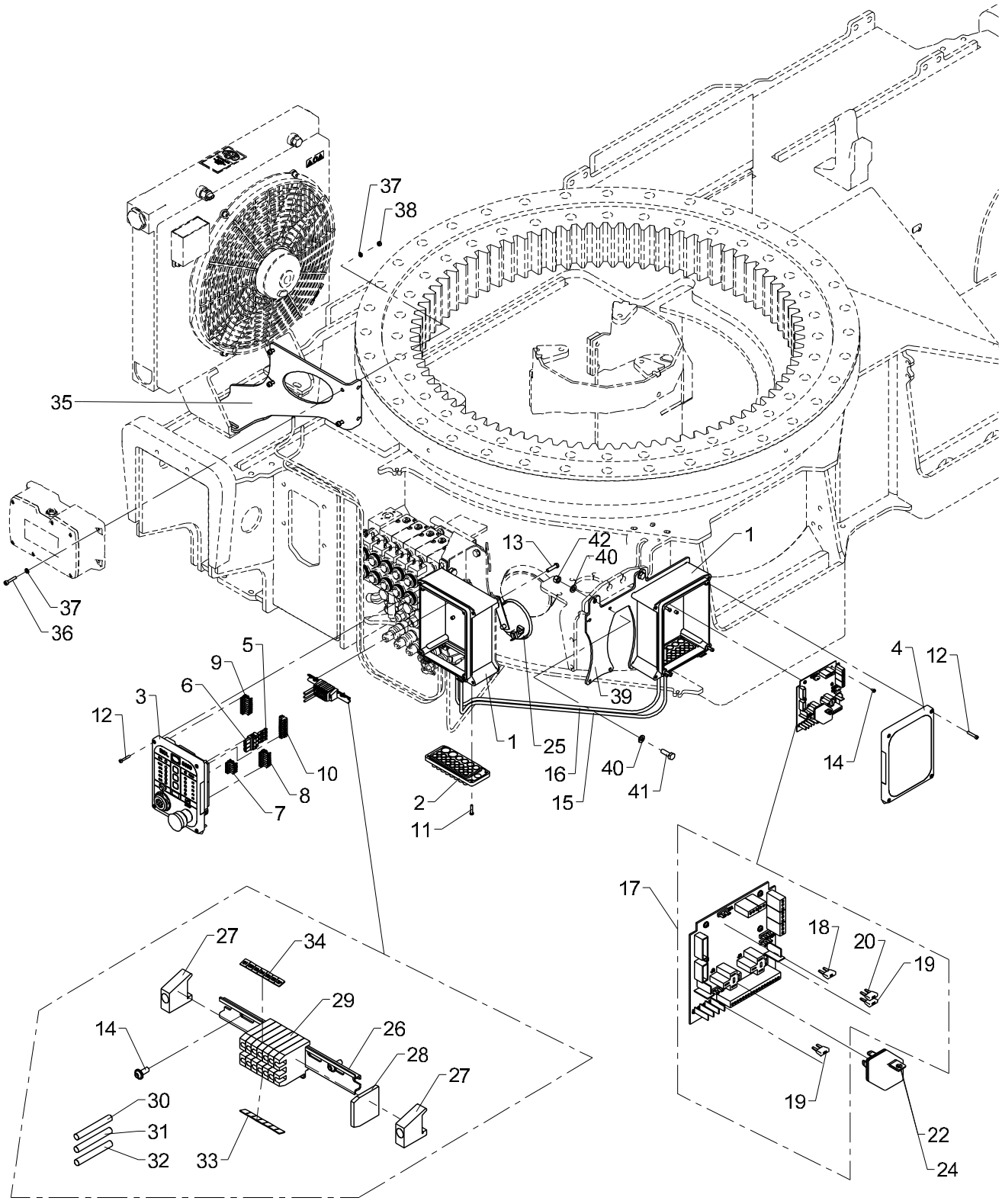
37
38
35
37
36
5
9
6
3
12
10
8
7
13
42
40
1
39
1
25
16
15
40
41
2
11
4
12
14
27
34
29
14
26
28
27
30
31
32
33
17
18
20
19
19
22
24

# Basic electronic parts, base

| Pos | Qty. | Part no. | Description | Remarks |
|---|---|---|---|---|
| 39 | 1 | 6301392 | Fittings for converter | |
| 40 | 4 | 31147 | Face washer, 8 mm | |
| 41 | 2 | 30134 | Set screw, stainless | M8 x 25 |
| 42 | 2 | 30886 | Lock nut, stainless | M8 |

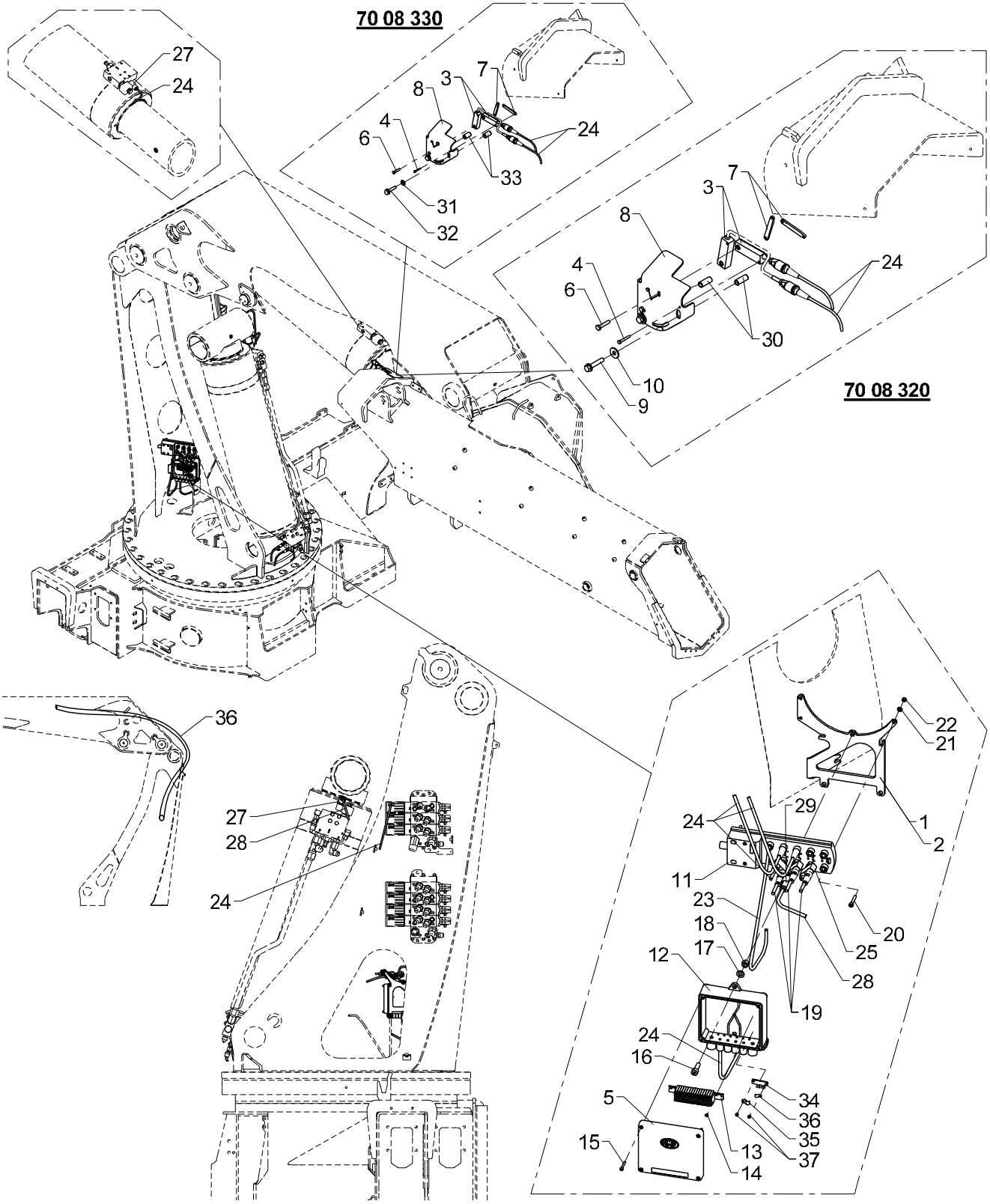
70 08 330
27
24
8
3
7
4
6
24
33
31
32
70 08 320
7
3
8
4
6
24
30
10
9
36
27
28
24
22
21
29
24
1
2
11
23
18
17
20
25
12
28
19
24
16
5
34
36
35
15
13
37
14

# Basic electronic parts, column

| Pos | Qty. | Part no. | Description | Remarks |
|---|---|---|---|---|
| | | 7008320 | | |
| | | 7008330 | | |
| 1 | 1 | 7004019 | | Serie 6020K |
| 2 | 1 | 7004021 | | Serie 8520K |
| 3 | 2 | 29295 | Tilt sensor + 0.25 m cable | |
| 4 | 2 | 31790 | Set screw, stainless | M4 x 30 |
| 5 | 1 | 29314 | Cover for Fly-Jib box | |
| 6 | 2 | 30115 | Steel pin, stainless | M6 x 30 |
| 7 | 2 | 6390169 | Plate | |
| 8 | 1 | 6390168 | Sensor fittings | |
| 9 | 2 | 31092 | Screw | M8 x 40 |
| 10 | 2 | 31136 | Washer, stainless | |
| 11 | 1 | 29470 | IO module CR2033 | |
| 12 | 1 | 29313 | Bottom f. Fly-Jib box | |
| 13 | 1 | 7006305 | | |
| 14 | 2 | 28693 | Screw | Ø2.9 x 6.5 |
| 15 | 4 | 30347 | Screw, stainless | 4,0 x 25 |
| 16 | 3 | 30440 | Screw | MC8 x 25 |
| 17 | 3 | 31147 | Face washer, 8 mm | |
| 18 | 3 | 30886 | Lock nut, stainless | M8 |
| 19 | 3 | 29668 | Cable extension M12, 2,0m | |
| 20 | 3 | 30425 | Screw | MC5 x 30 |
| 21 | 3 | 32308 | Washer | 5 mm |
| 22 | 3 | 30853 | Nut, stainless | M5 |
| 23 | 1 | 29456 | CAN cable, M12, 2 m, female | |
| 24 | 1 | 58978 | Cable, CAN-bus 2,5 m, AMP grey | |
| 25 | 3 | 29477 | | |
| 26 | 1 | 29383 | | |
| 27 | 2 | 28258 | Plug, solenoid valve | |
| 28 | 1 | 28249 | Cable 2 x 0.75 | 2,5 m |
| 29 | 1 | 29268 | Plug, M12, straight 4-polar | |
| 30 | 2 | 6394514 | Distance pipe ø12 x32 | |
| 31 | 2 | 31565 | Washer, stainless | 10 mm |
| 32 | 2 | 31093 | Screw | M10 x 40 |
| 33 | 2 | 6302514 | Distance pipe Ø16 | |
| 34 | 1 | 7004027 | | |
| 35 | 1 | 29612 | Clamp 7.0 mm | |
| 36 | 1 | 29611 | Clamp 5.0 mm | |
| 37 | 2 | 30782 | Screw M 3x4 | M3 x 4 |
| 38 | 1 | 62487 | Spiral | |

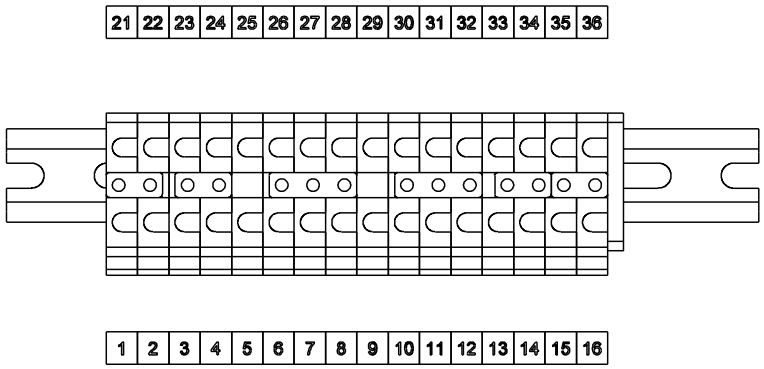
21 22 23 24 25 26 27 28 29 30 31 32 33 34 35 36
1 2 3 4 5 6 7 8 9 10 11 12 13 14 15 16

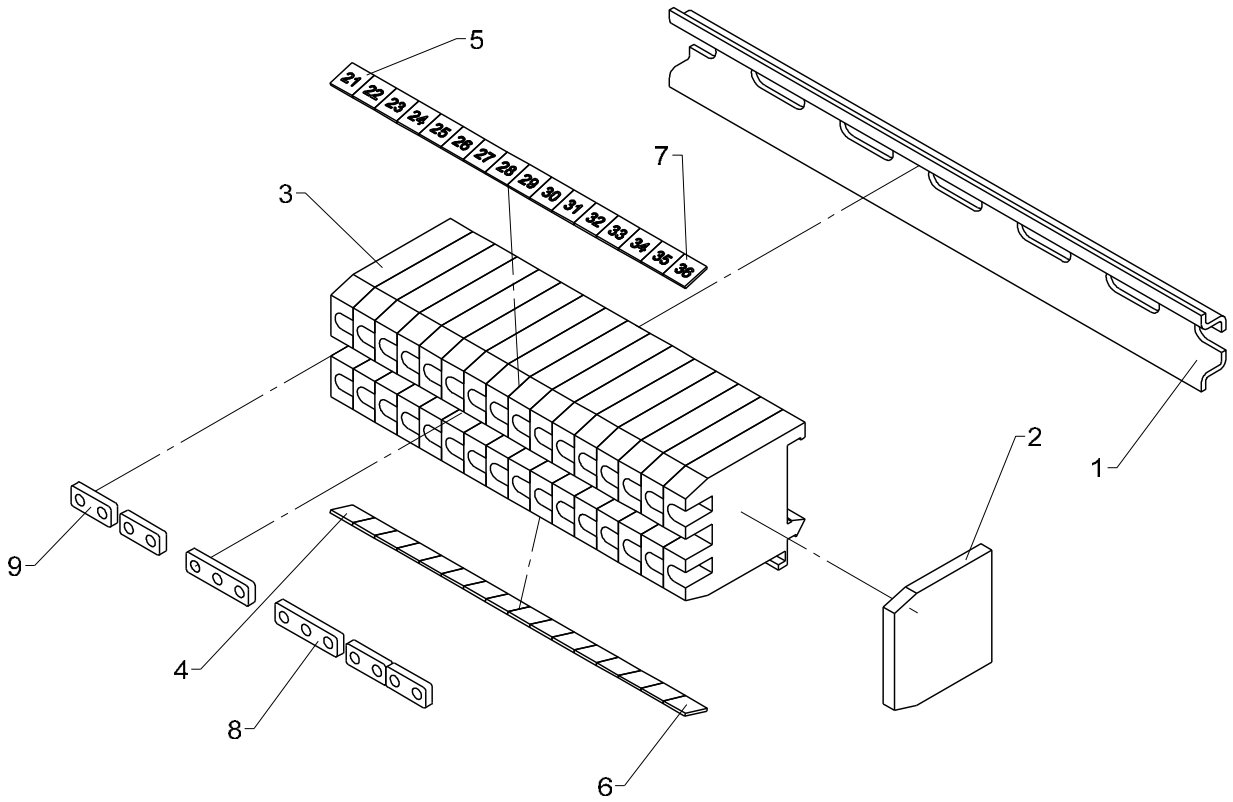
5
7
3
2
1
9
4
8
6

# 522 22 220

## Terminal block, Box2, column

From loader 960001
To loader

Created 17-12-2012
Modified

| Pos | Qty. | Part no. | Description | Remarks |
|---|---|---|---|---|
| 1 | 1 | 28013 | Guide rail | 120 mm. |
| 2 | 1 | 28011 | End plate | |
| 3 | 16 | 28010 | Terminal | |
| 4 | 1 | 28019 | Labels nos. 1-10 | |
| 5 | 1 | 28965 | Dekafix labels 21-30 | |
| 6 | 1 | 28020 | Labels nos. 11-20 | |
| 7 | 1 | 29427 | Dekafix marker 31-40 | |
| 8 | 2 | 28014 | Fish plate | |
| 9 | 4 | 28208 | Fish plate | |

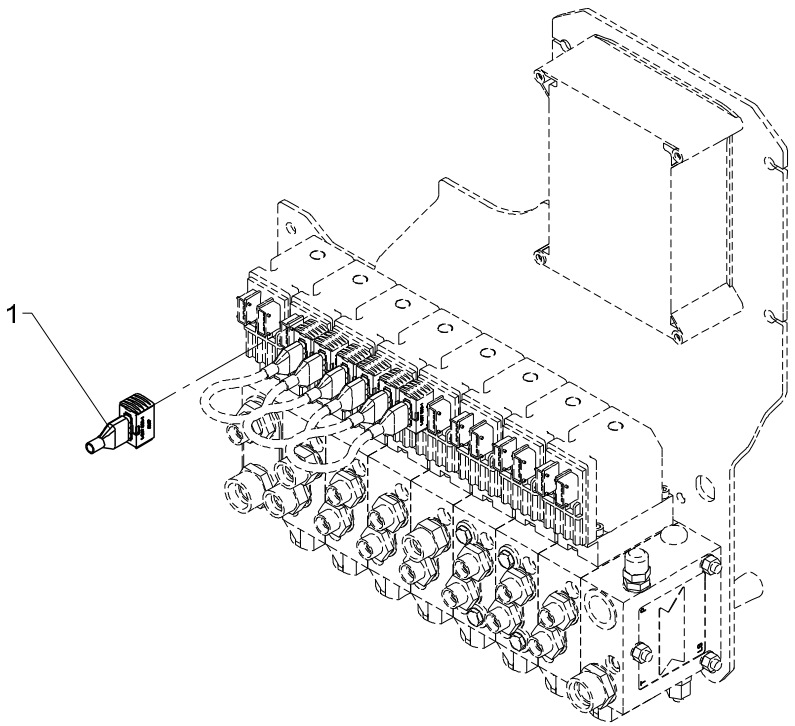
1

# Termination, PVED

**522 22 230**

From loader 960001
To loader

Created 04-09-2012
Modified

| Pos | Qty. | Part no. | Description | Remarks |
|---|---|---|---|---|
| 1 | 1 | 62297 | Termination | |

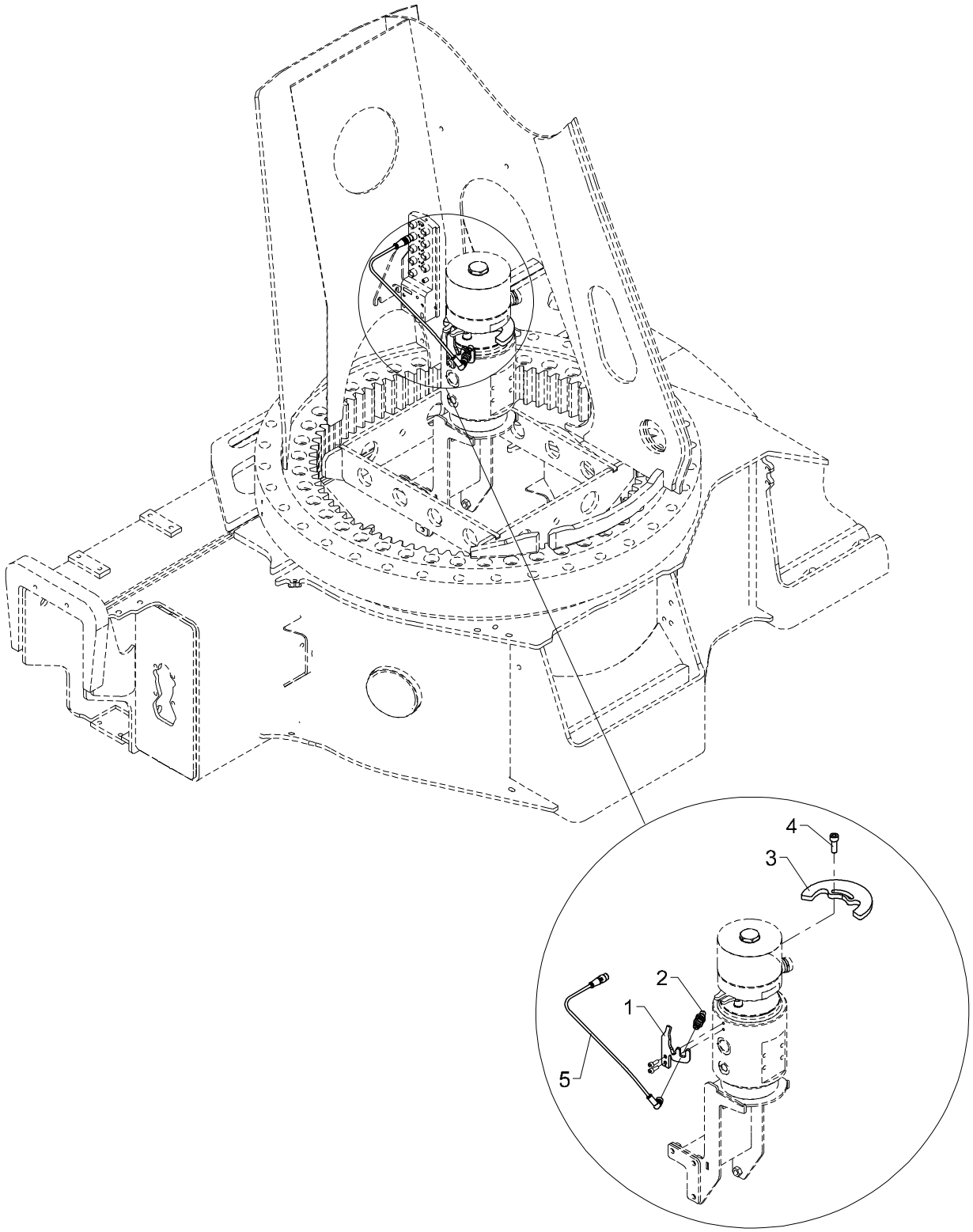
4
3
2
1
5

# 2-stage LMB

| Pos | Qty. | Part no. | Description | Remarks |
|---|---|---|---|---|
| 1 | 1 | 6392627 | Fittings for M12 sensor | |
| 2 | 1 | 29447 | Proximity switchM12 8mm PNP-NO | |
| 3 | 1 | 6302629 | Cam disc for M12 sensor | |
| 4 | 1 | 30455 | Screw | MC10 x 30 |
| 5 | 1 | 29277 | Cable, extension M12-M12, 2 m | |

# 6020K

Internal ref. 70 09 020

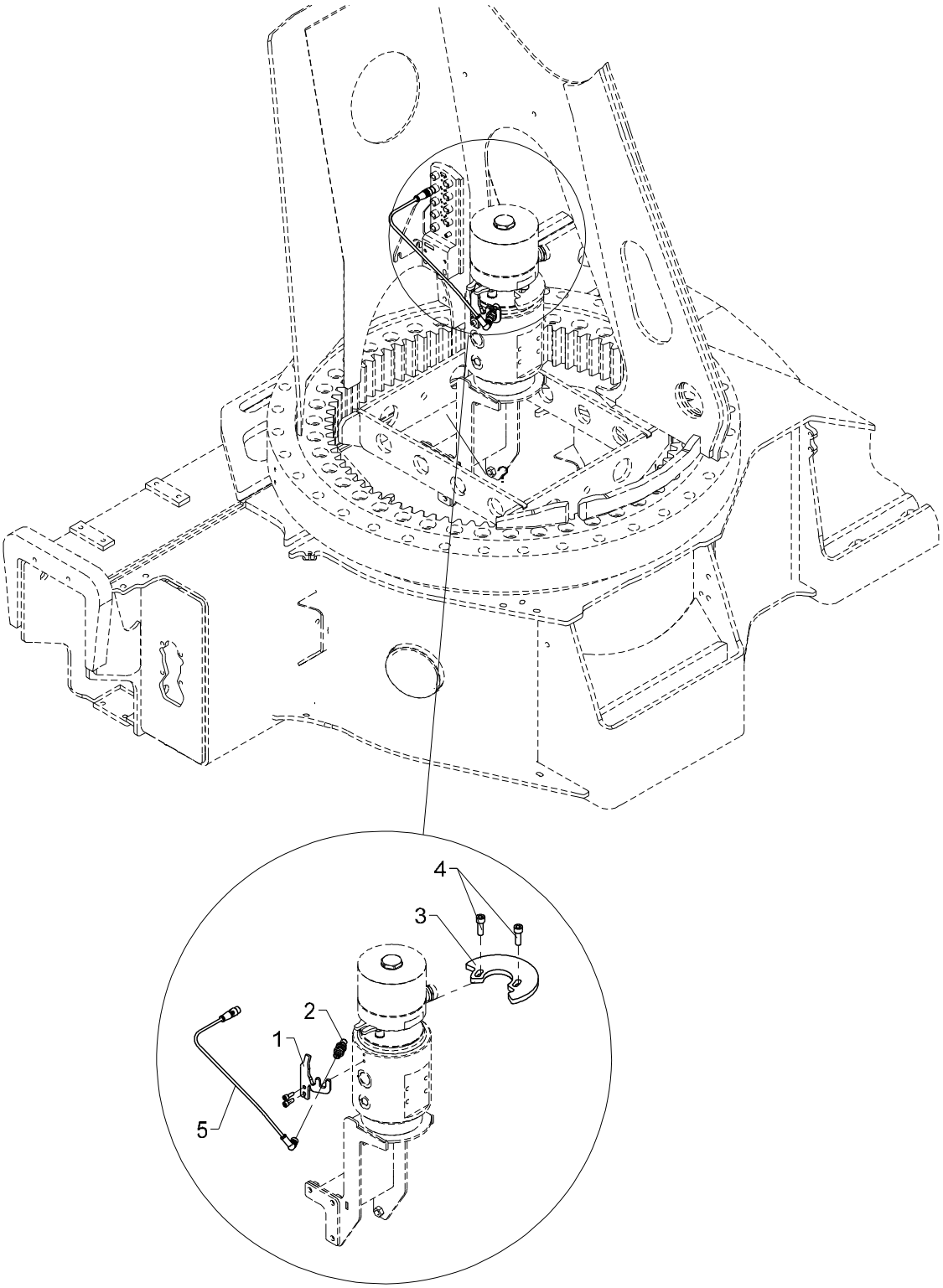

| Pos | Qty. | Part no. | Description | Remarks |
|---|---|---|---|---|
| 1 | 1 | 6392627 | Fittings for M12 sensor | |
| 2 | 1 | 29447 | Proximity switchM12 8mm PNP-NO | |
| 3 | 1 | 6302632 | Cam disc for M12 sensor | |
| 4 | 2 | 30455 | Screw | MC10 x 30 |
| 5 | 1 | 29277 | Cable, extension M12-M12, 2 m | |

# 6020K

Internal ref. 70 08 000

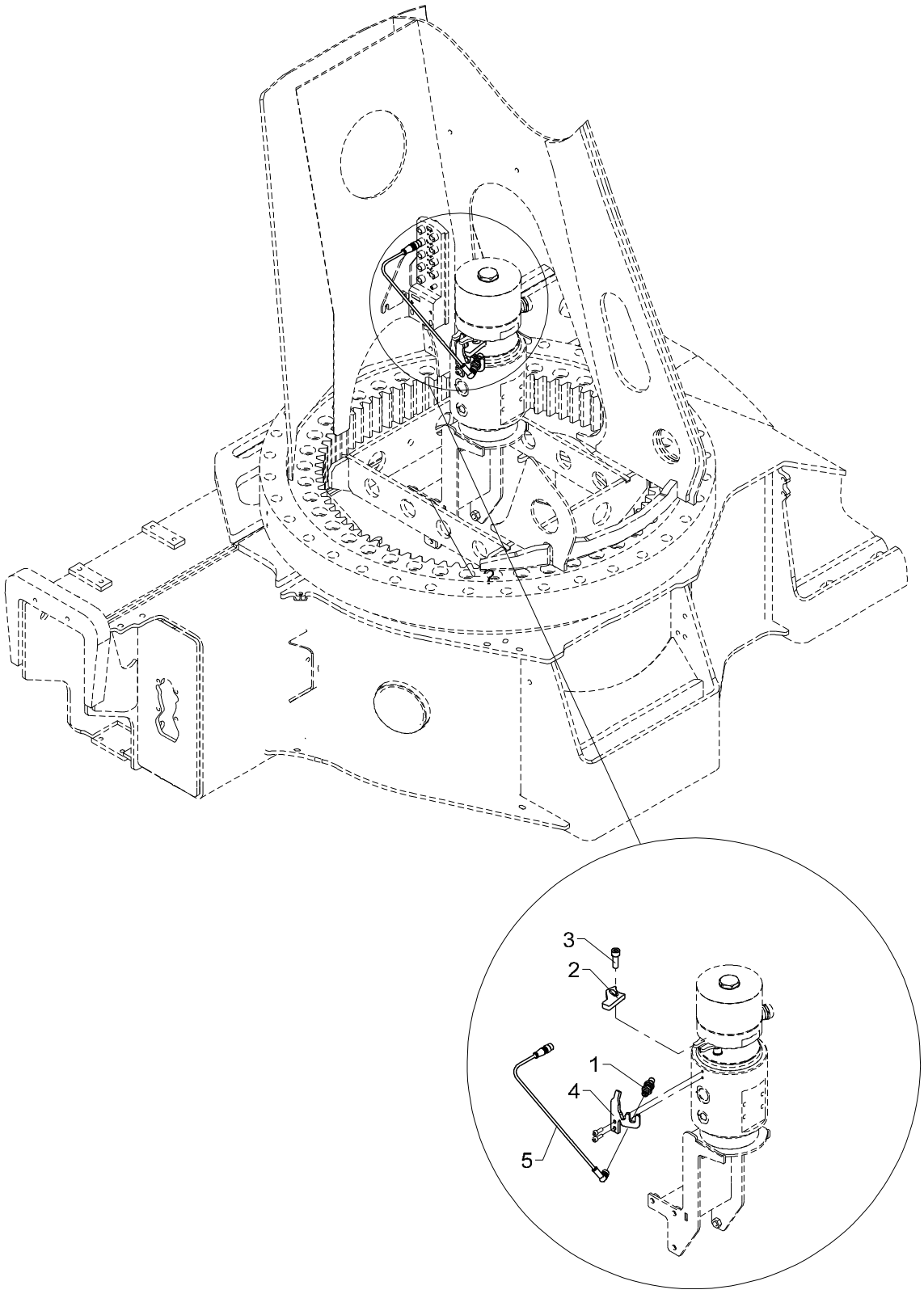

## CBS

| Pos | Qty. | Part no. | Description | Remarks |
|---|---|---|---|---|
| 1 | 1 | 29447 | Proximity switchM12 8mm PNP-NO | |
| 2 | 1 | 6302628 | Sensor | |
| 3 | 1 | 30455 | Screw | MC10 x 30 |
| 4 | 1 | 6392627 | Fittings for M12 sensor | |
| 5 | 1 | 29277 | Cable, extension M12-M12, 2 m | |

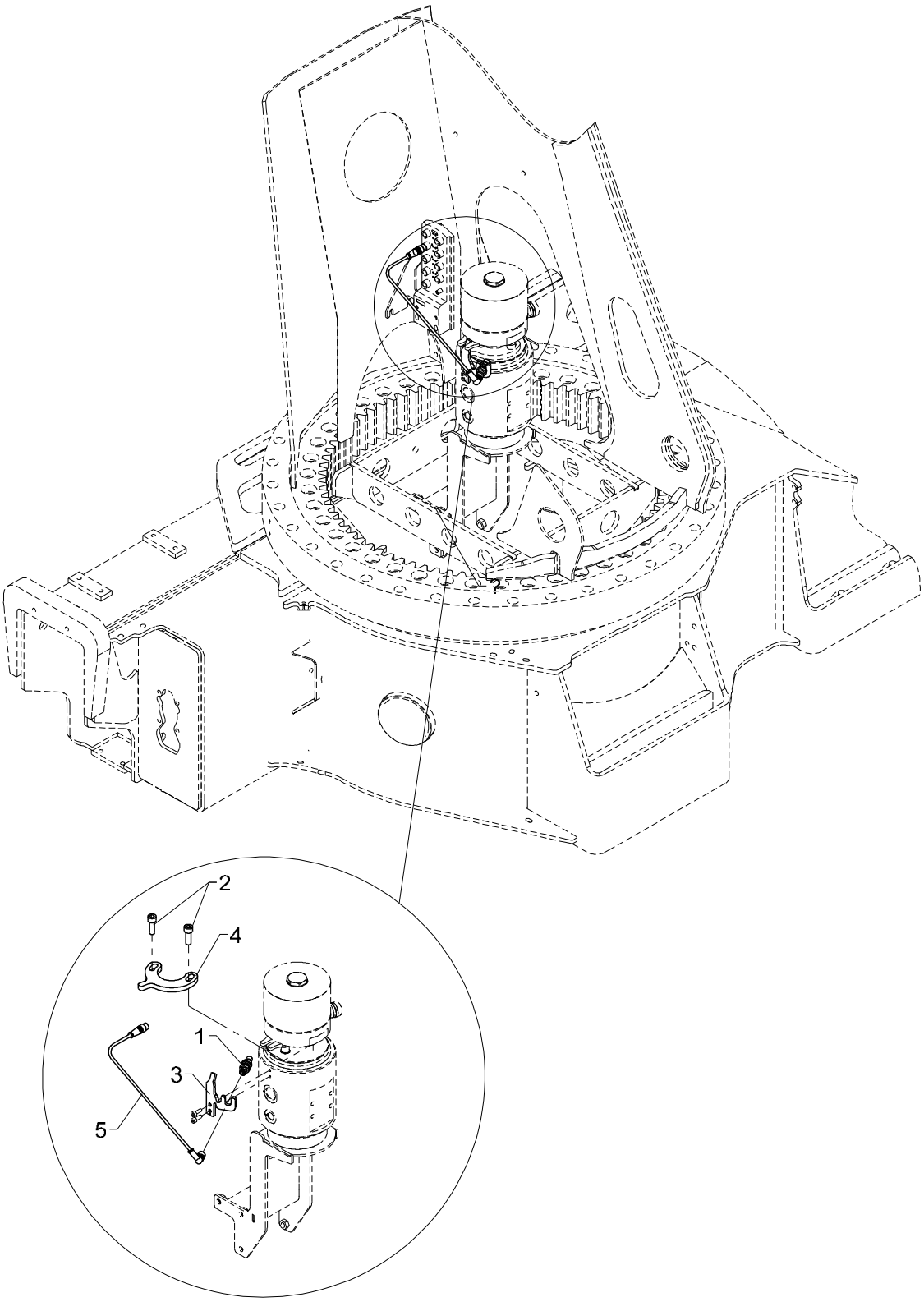
2
4
1
3
5

# CBS

| Pos | Qty. | Part no. | Description | Remarks |
|---|---|---|---|---|
| 1 | 1 | 29447 | Proximity switchM12 8mm PNP-NO | |
| 2 | 2 | 30455 | Screw | MC10 x 30 |
| 3 | 1 | 6392627 | Fittings for M12 sensor | |
| 4 | 1 | 6302633 | Sensor, HBS | |
| 5 | 1 | 29277 | Cable, extension M12-M12, 2 m | |

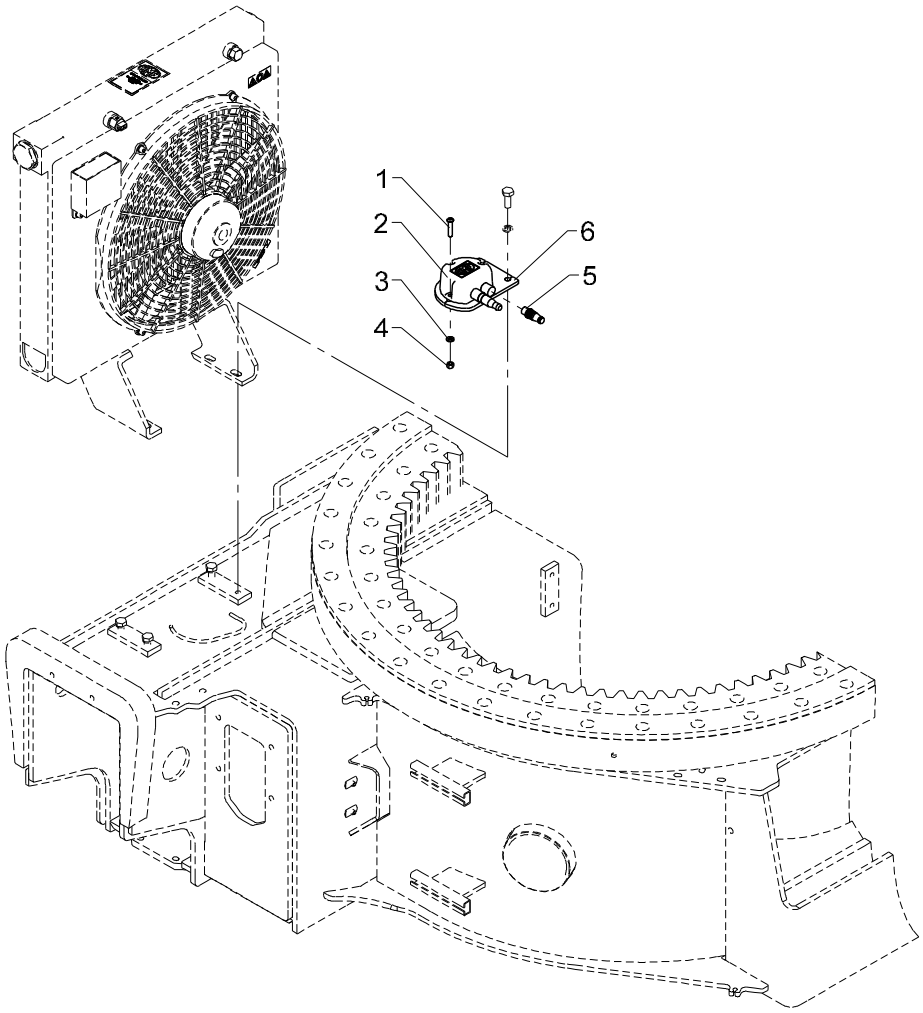
1
2
3
4
5
6

# EVS

| Pos | Qty. | Part no. | Description | Remarks |
|---|---|---|---|---|
| 1 | 3 | 32458 | Screw | M6 x 30 |
| 2 | 1 | 29426 | Electronic inclinometer,single | |
| 3 | 3 | 32302 | Face washer, stainless | 6 mm |
| 4 | 3 | 30884 | Lock nut, stainless | M6 |
| 5 | 1 | 29486 | Plug M12, termination | |
| 6 | 1 | 7004013 | Bracket for AIC | |

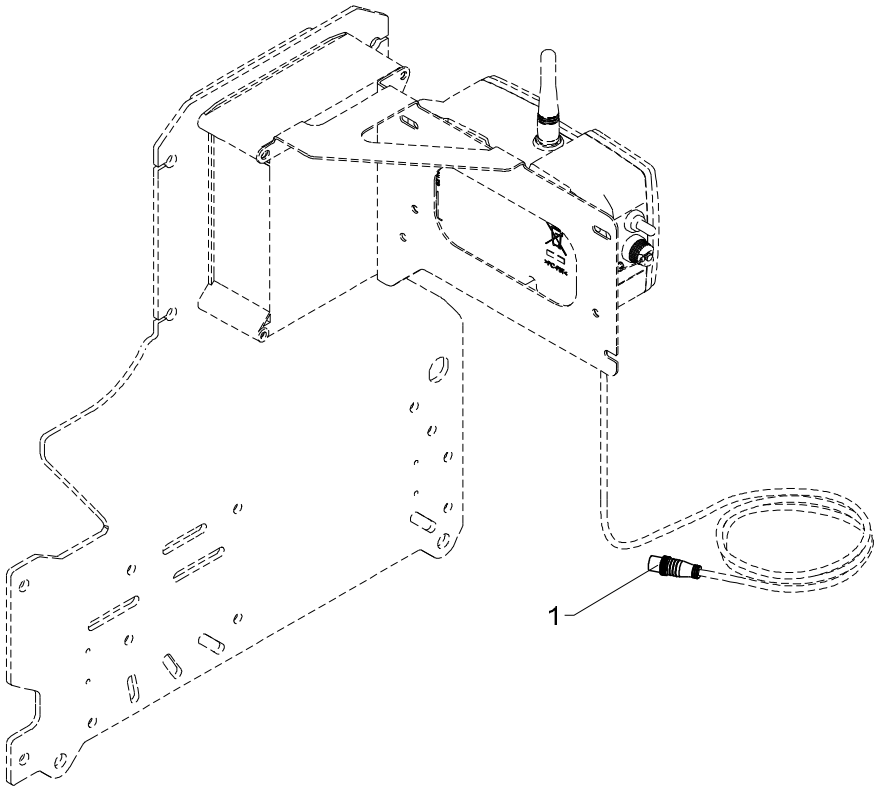
1

# Termination, G2

**522 22 320**

From loader 960001
To loader

Created 03-09-2012
Modified

| Pos | Qty. | Part no. | Description | Remarks |
|---|---|---|---|---|
| 1 | 1 | 29486 | Plug M12, termination | |

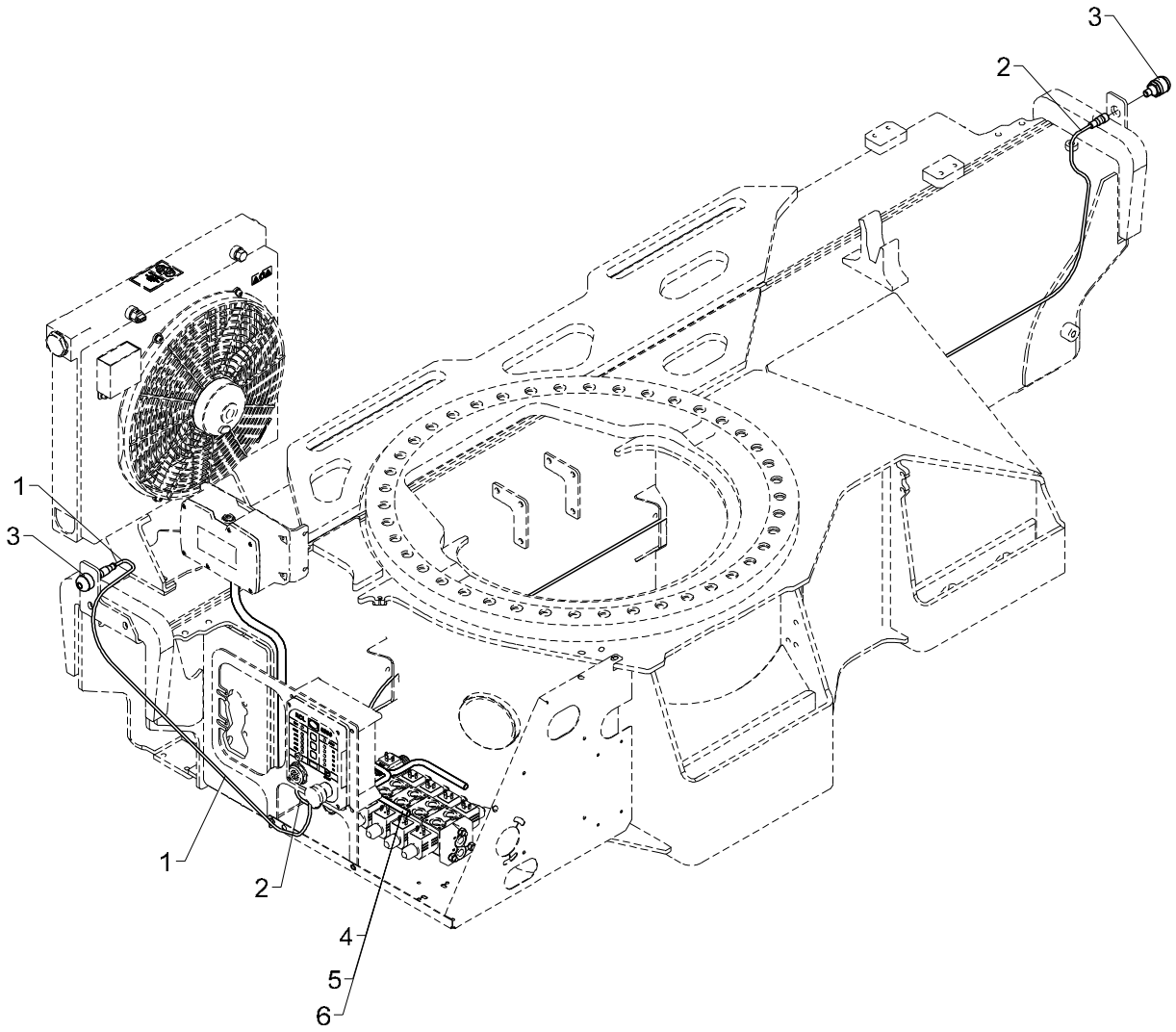
3
2
1
3
1
2
4
5
6

# Stabilizer operation via RC, 16 plugs

From loader 960001
To loader

Created 01-01-2014
Modified

| Pos | Qty. | Part no. | Description | Remarks |
|---|---|---|---|---|
| | | 7008080 | | |
| | | 7008070 | | |
| | | 7008060 | | |
| 1 | 1 | 29223 | Cable with socket, 2 m | |
| 2 | 1 | 29224 | Cable with socket, 5 m | |
| 3 | 2 | 29498 | Touch button with light | |
| 4 | 1 | 56721 | Cable, Scanreco 47925 G2 | 70 08 060 |
| 5 | 1 | 56722 | Cable Scanreco 47924 G2 | 70 08 070 |
| 6 | 1 | 56723 | Cable, Scanreco 47903 G2 | 70 08 080 |

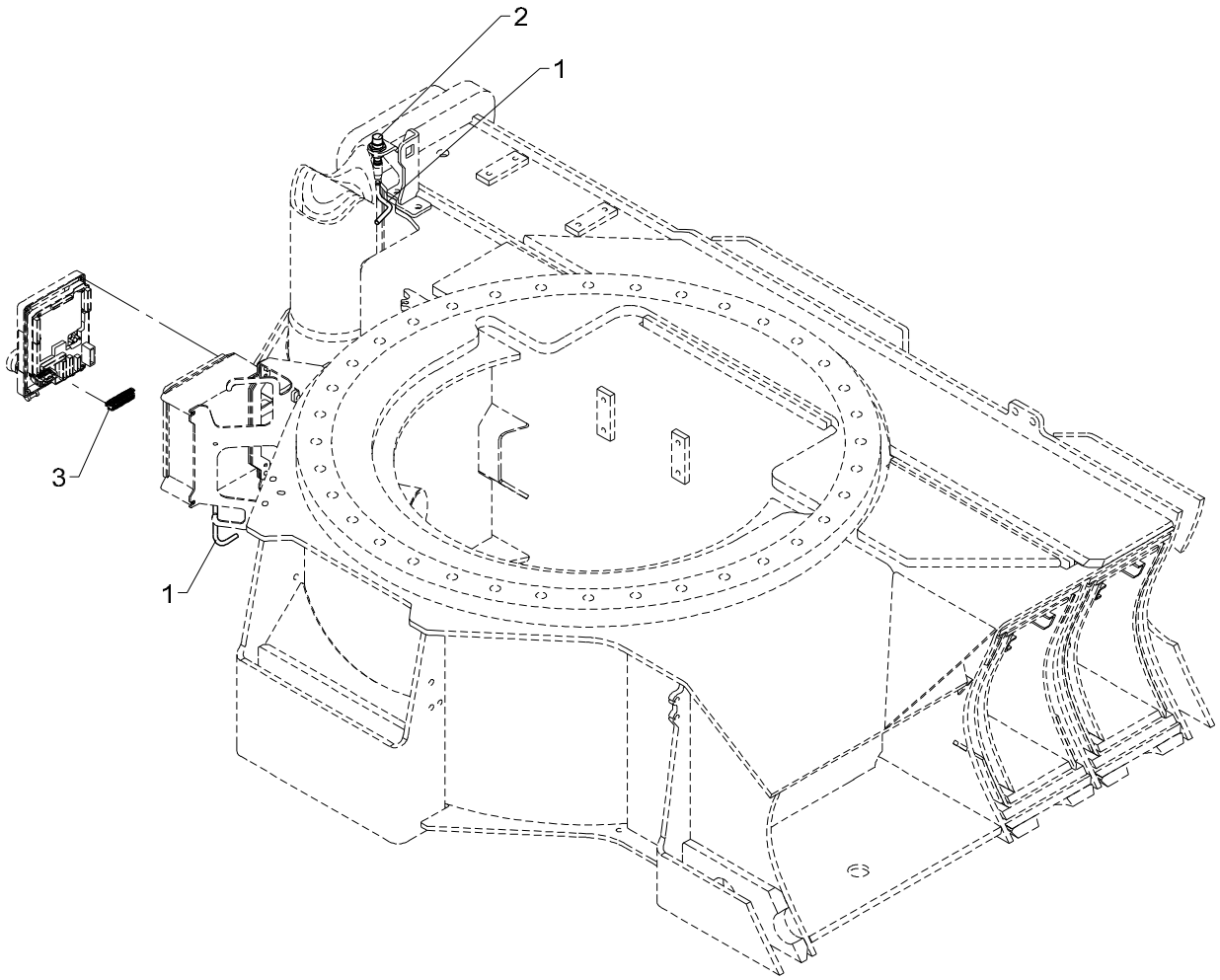
2
1
3
1

# Electronic parts, swing-up stabilizer leg 3 o'clock

| Pos | Qty. | Part no. | Description | Remarks |
|---|---|---|---|---|
| 1 | 1 | 29223 | Cable with socket, 2 m | |
| 2 | 1 | 28980 | Proximity switch | |
| 3 | 1 | 29321 | Plug, 10-polar for RCL 53XX | |

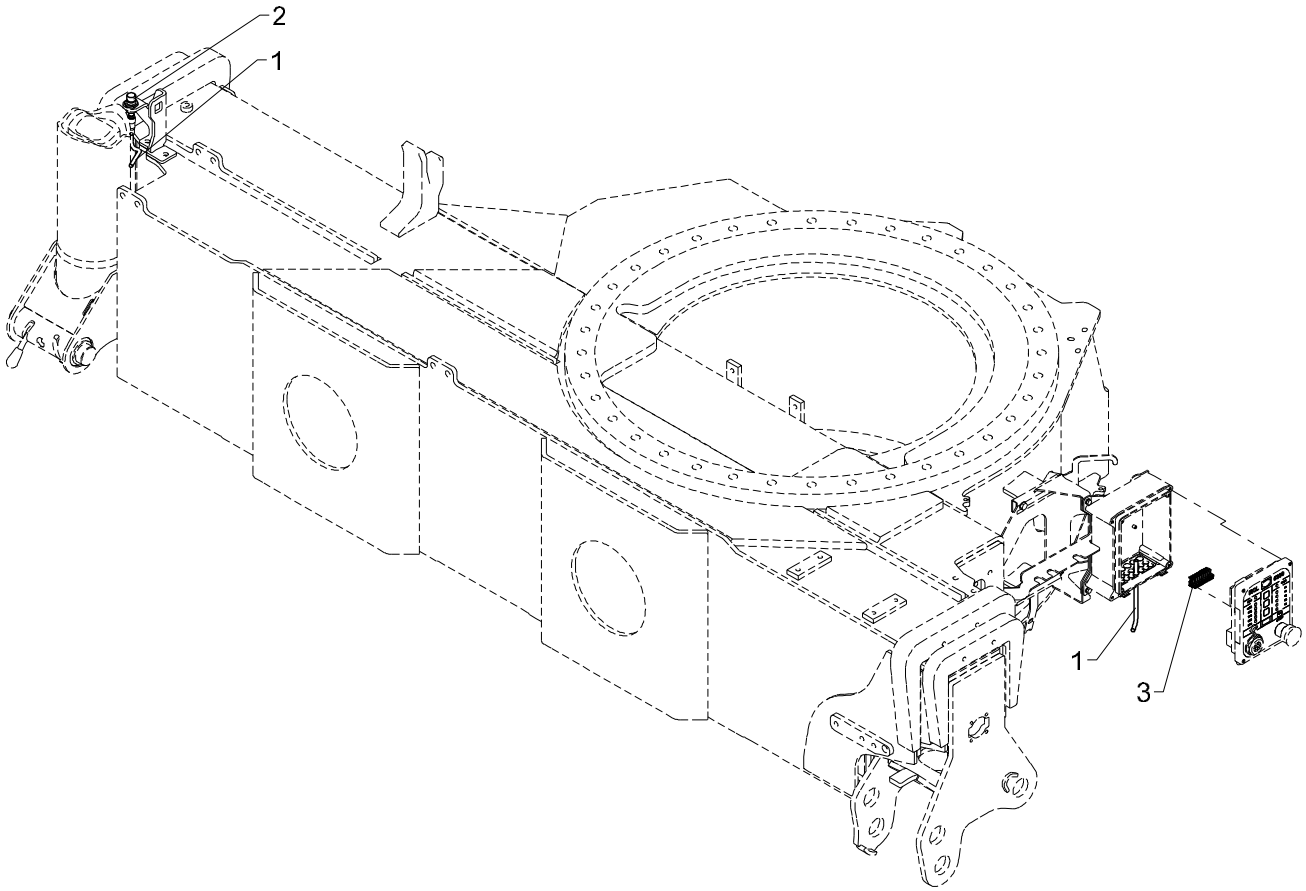
2
1
1
3

# Electronic parts, swing-up stabilizer leg 9 o'clock

| Pos | Qty. | Part no. | Description | Remarks |
|---|---|---|---|---|
| 1 | 1 | 29224 | Cable with socket, 5 m | |
| 2 | 1 | 28980 | Proximity switch | |
| 3 | 1 | 29321 | Plug, 10-polar for RCL 53XX | |

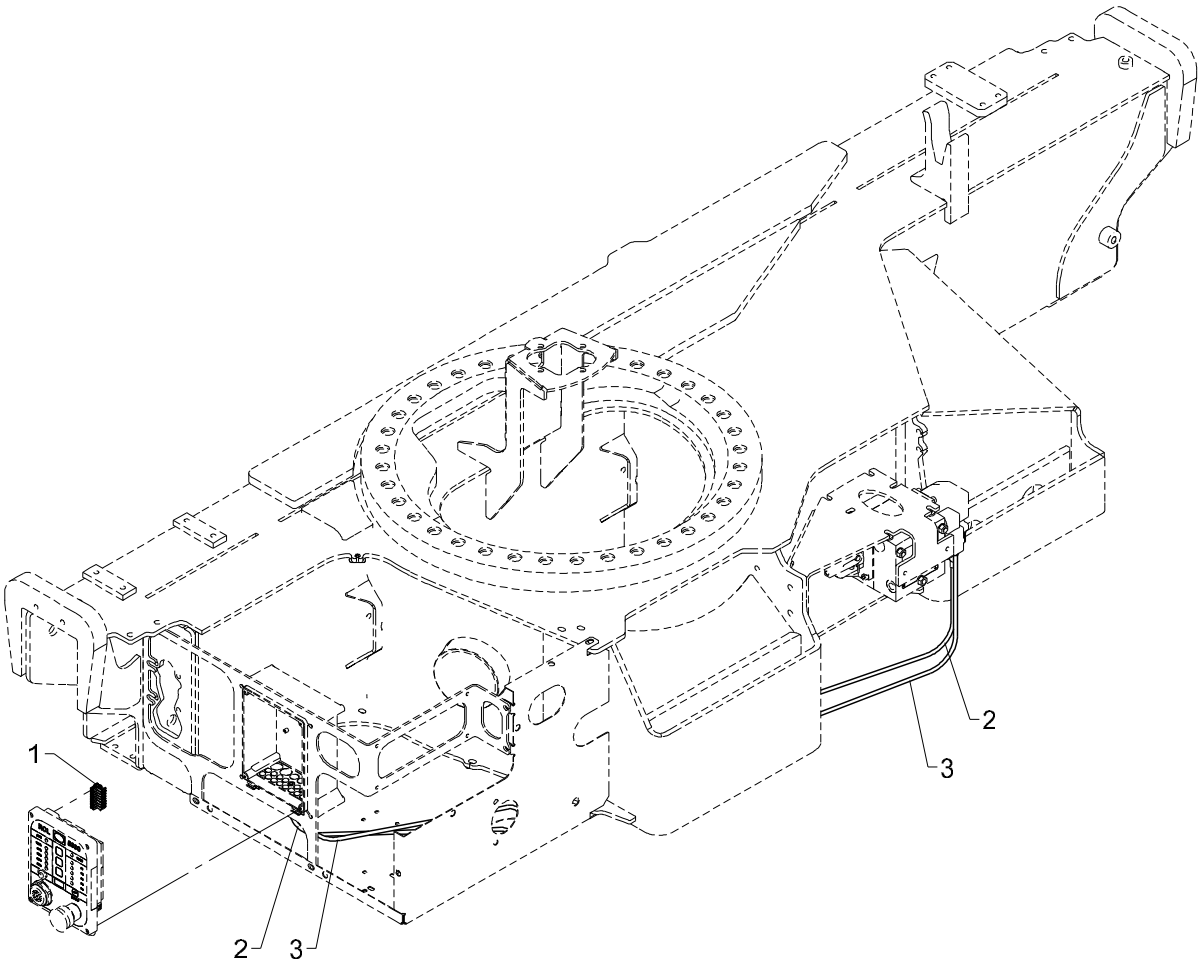
1
2
3
2
3

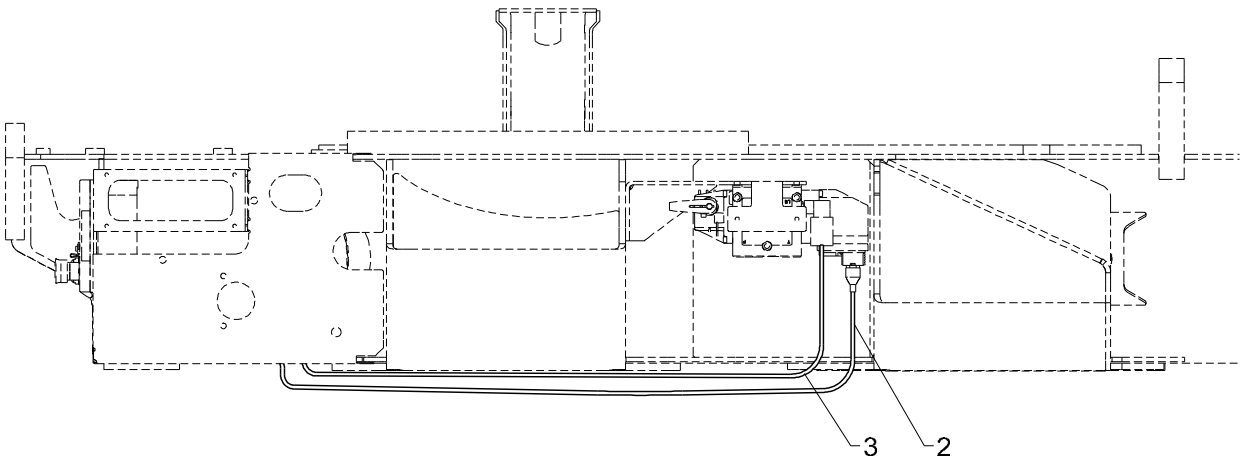
3
2

# 522 22 440

From loader 960001
To loader

Created 07-12-2012
Modified

## Extra RC-function on the base

| Pos | Qty. | Part no. | Description | Remarks |
|---|---|---|---|---|
| 1 | 1 | 29319 | Plug, 8-polar for RCL 53XX | |
| 2 | 1 | 58978 | Cable, CAN-bus 2,5 m, AMP grey | |
| 3 | 1 | 28286 | Cable, dump valve | |

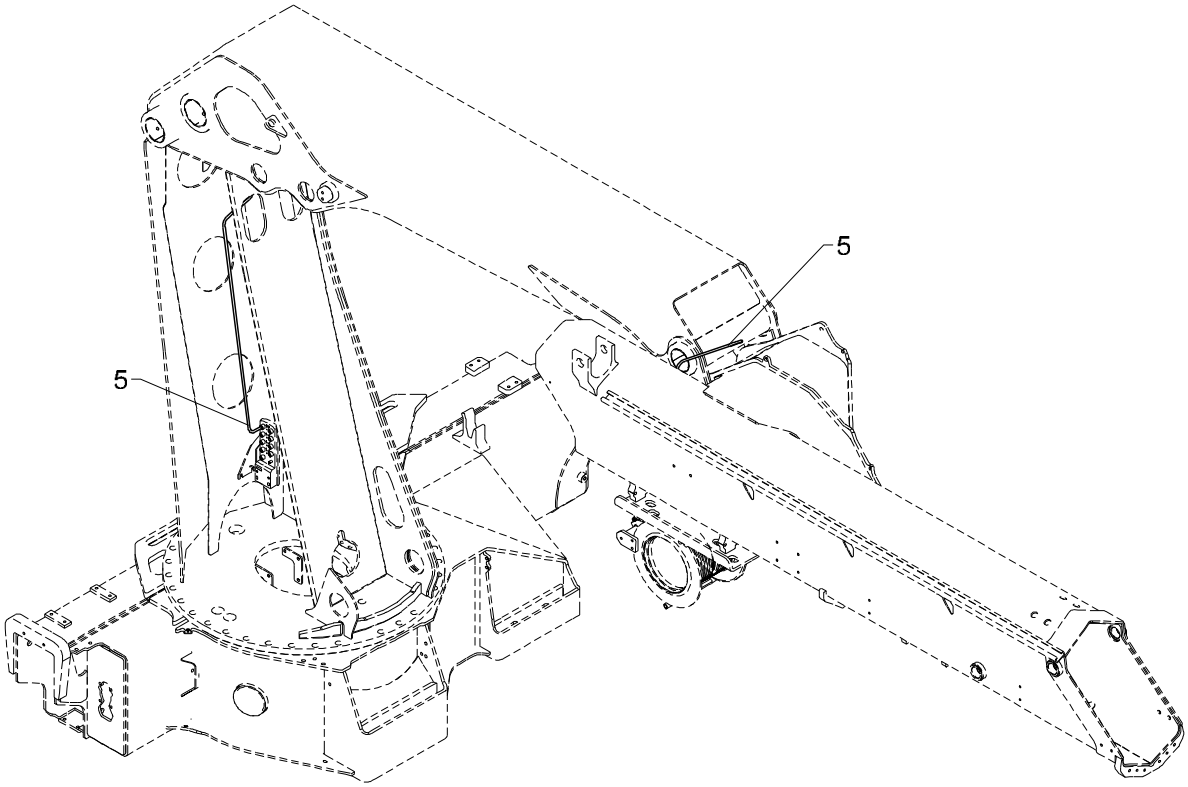
5
5

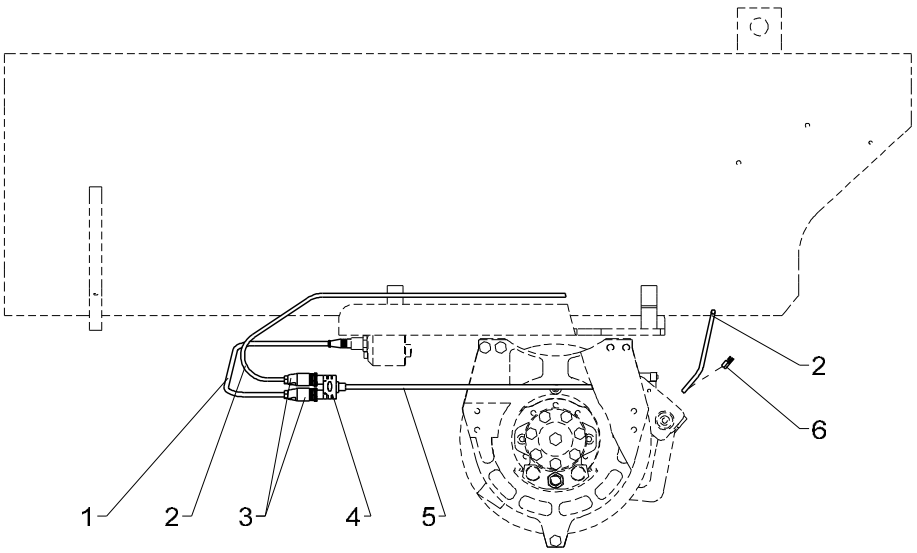
2
6
1
2
3
4
5

Obsolete

# 522 22 450 A

From loader 960001
To loader

Created 24-04-2013
Modified 27-06-2014

## Winch, electric parts

| Pos | Qty. | Part no. | Description | Remarks |
|---|---|---|---|---|
| 1 | 1 | 29223 | Cable with socket, 2 m | |
| 2 | 1 | 28249 | Cable 2 x 0.75 | 1,0 m |
| 3 | 2 | 29268 | Plug, M12, straight 4-polar | |
| 4 | 1 | 29477 | Y-splitter 3xM12 - Parallel | |
| 5 | 1 | 29459 | Cable extension 10m M12 | |
| 6 | 2 | 28700 | Cable shoe, red clevis Ø3 | |

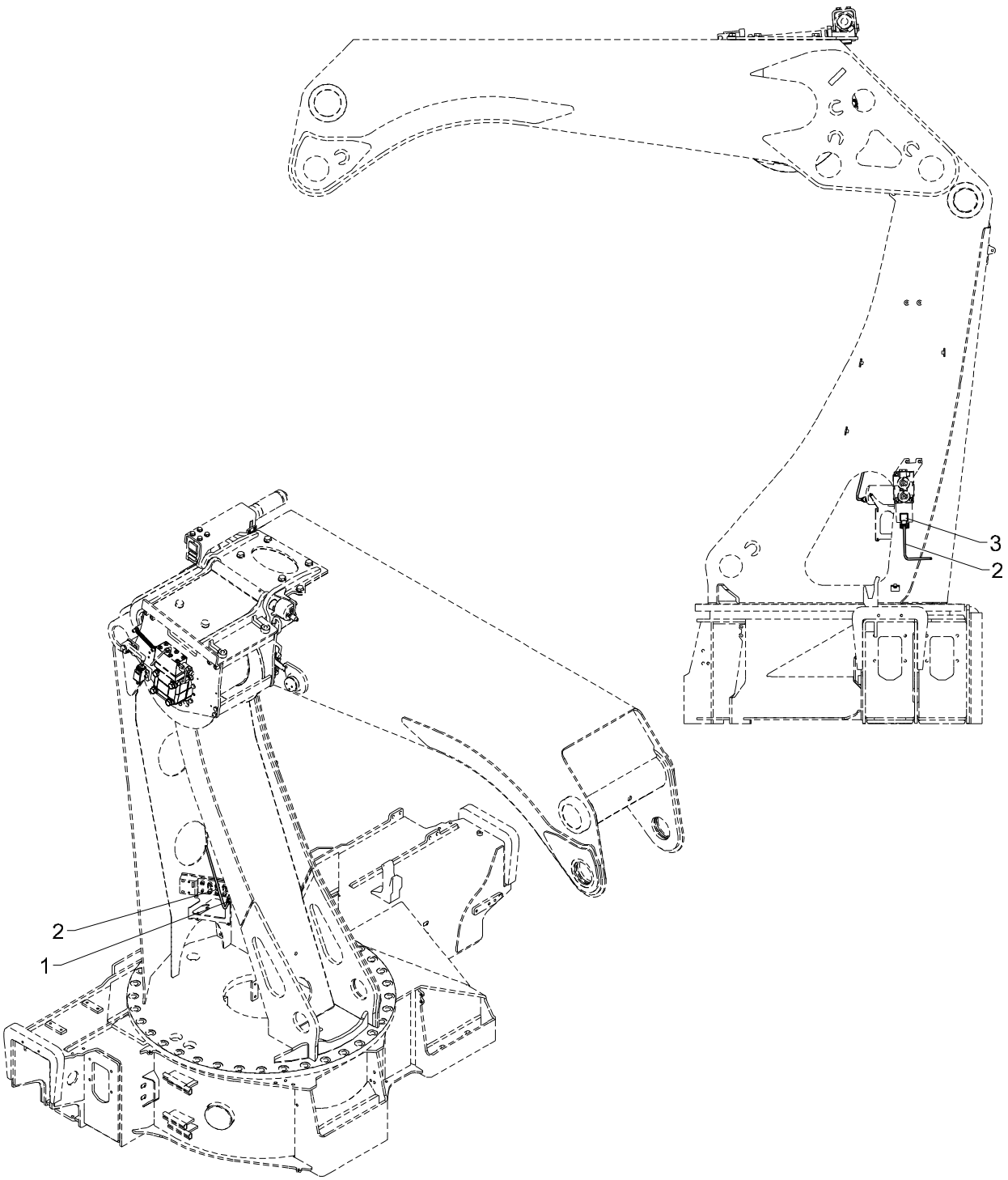
3
2
2
1

# Electronic parts, swing-up winch

| Pos | Qty. | Part no. | Description | Remarks |
|---|---|---|---|---|
| 1 | 1 | 29268 | Plug, M12, straight 4-polar | |
| 2 | 1 | 28249 | Cable 2 x 0.75 | 2m |
| 3 | 1 | 28258 | Plug, solenoid valve | |

# 6020K

Internal ref. 70 08 100

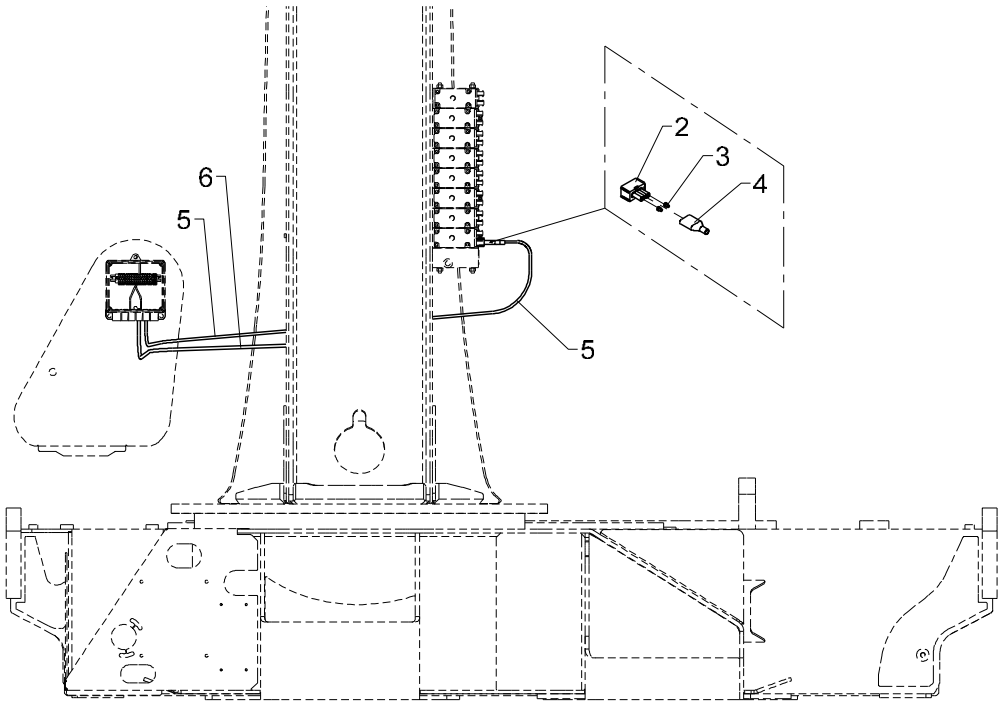


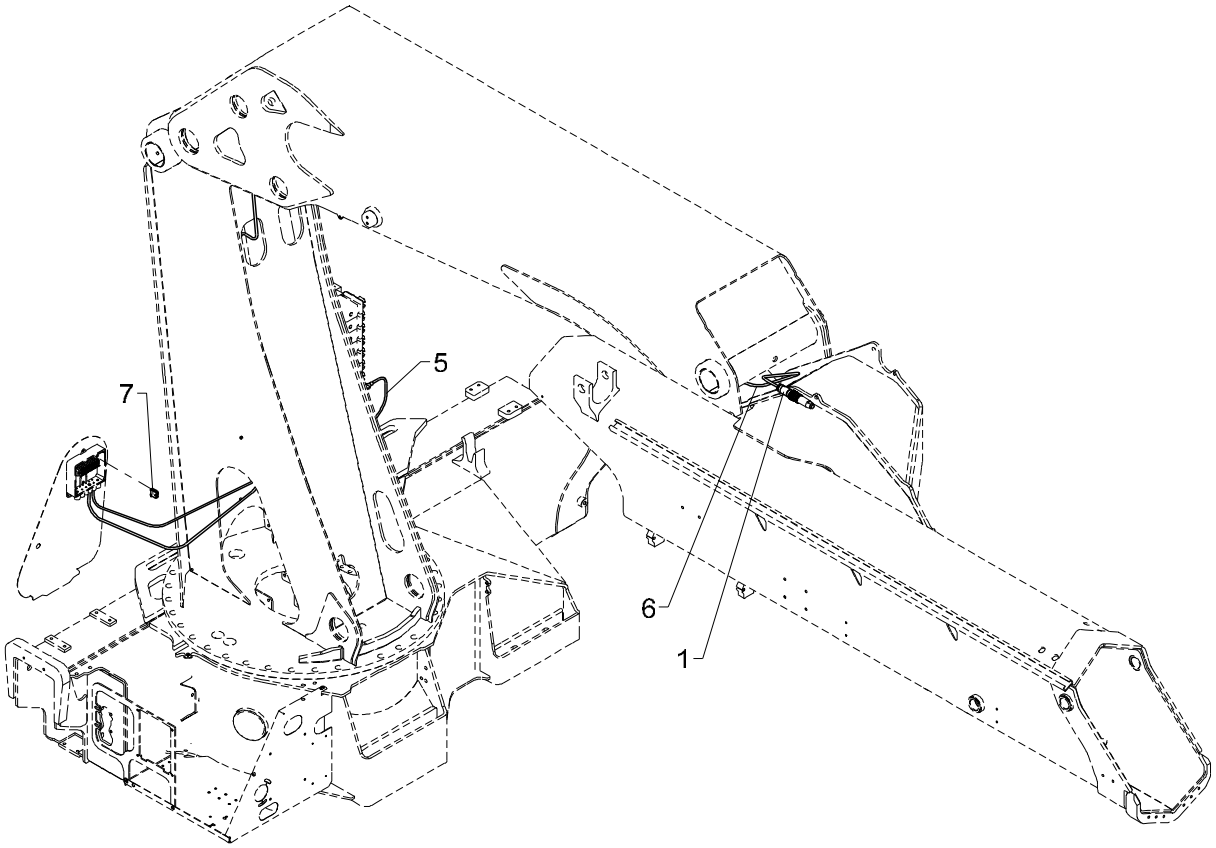

# 522 22 470 A

From loader 960001
To loader

Created 19-02-2014
Modified

## Fly-Jib supply Column

| Pos | Qty. | Part no. | Description | Remarks |
|---|---|---|---|---|
| 1 | 1 | 29275 | Cable socket 7-polar 10 A | |
| 2 | 1 | 58954 | Plug, AMP black | |
| 3 | 2 | 29461 | Cable lead-in, safety plug AMP | |
| 4 | 1 | 29457 | Insulation NSA 18-6 | 60 mm |
| 5 | 1 | 29399 | Cable CAN Bus | 2 m |
| 6 | 1 | 28263 | CAN BUS cable | 6 m |
| 7 | 2 | 28010 | Terminal | |

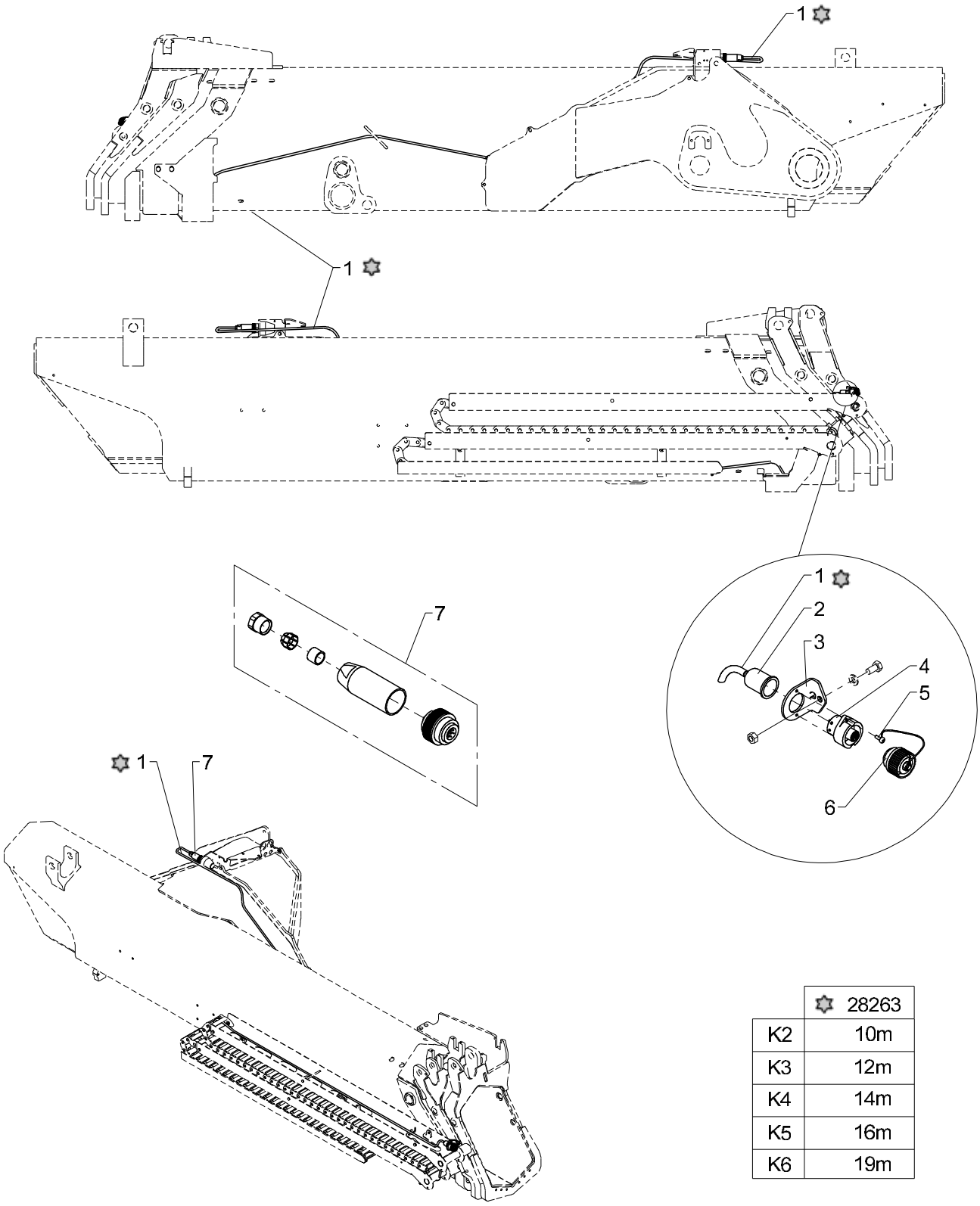


| | ✡ 28263 |
|---|---|
| K2 | 10m |
| K3 | 12m |
| K4 | 14m |
| K5 | 16m |
| K6 | 19m |

# FJ supply, hose guides

From loader 960001
To loader
Created
Modified 01-02-2013

| Pos | Qty. | Part no. | Description | Remarks |
|---|---|---|---|---|
| | | 7005780 | FJ supply, hose guide, K2 | |
| | | 7006100 | Electric cable, FJ K3 | |
| | | 7006110 | Electric cable, FJ K4 | |
| | | 7006120 | Electric cable, FJ K5 | |
| | | 7006130 | Electric cable, FJ K6 | |
| 1 | 1 | 28263 | CAN BUS cable | |
| 2 | 1 | 29233 | Protection | |
| 3 | 1 | 6340779 | Adapter | |
| 4 | 1 | 29232 | Socket, 7-polar, 10 A | |
| 5 | 2 | 31030 | Screw | M3 x 8 |
| 6 | 1 | 58103 | Cover | |
| 7 | 1 | 29285 | Cable plug, 7-polar, 10 A | |

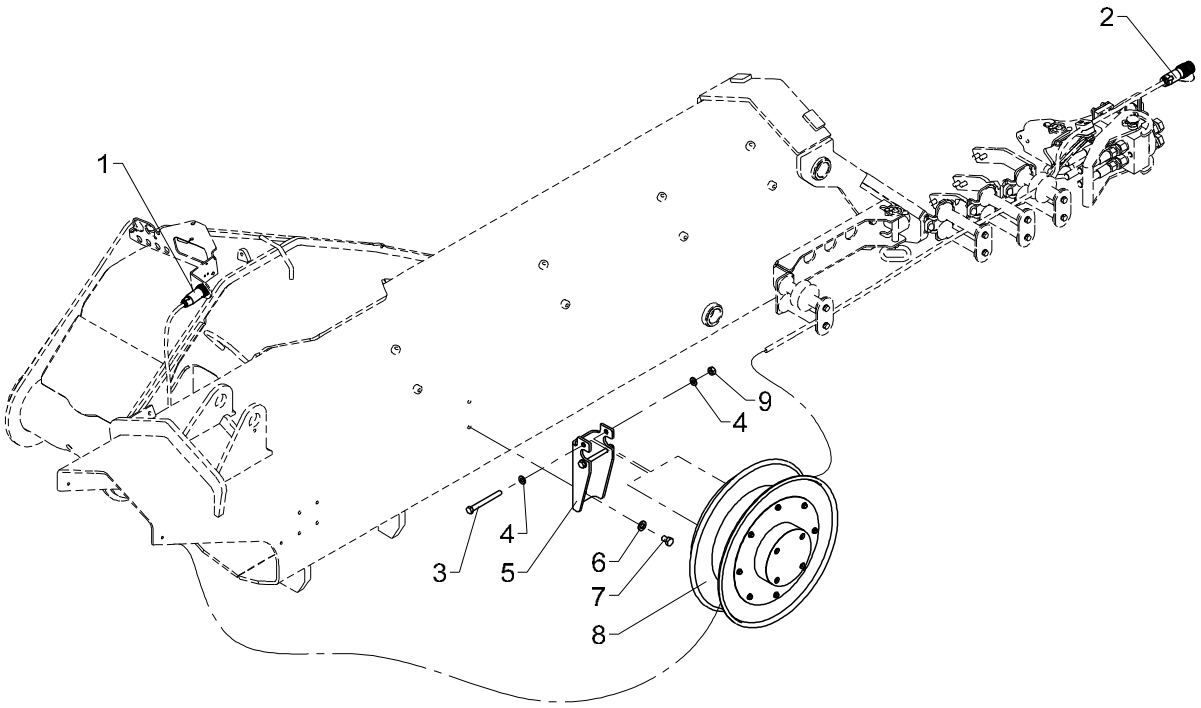
2
1
9
4
4
3
5
6
7
8

# 522 22 500

From loader 960001
To loader

Created 07-04-2014
Modified

## Cable drum, Fly-Jib power supply

| Pos | Qty. | Part no. | Description | Remarks |
|---|---|---|---|---|
| 1 | 1 | 29285 | Cable plug, 7-polar, 10 A | |
| 2 | 1 | 29275 | Cable socket 7-polar 10 A | |
| 3 | 2 | 30106 | Steel bolt | M10 x 100 |
| 4 | 4 | 31565 | Washer, stainless | 10 mm |
| 5 | 1 | 6303058 | Bracket for cable drum | |
| 6 | 2 | 31131 | Washer | 12 mm |
| 7 | 2 | 30174 | Set screw | M12 x 16 |
| 8 | 1 | 29216 | Cable drum | |
| 9 | 2 | 30858 | Nut | M10 |

# 6020K

Internal ref. 70 07 500

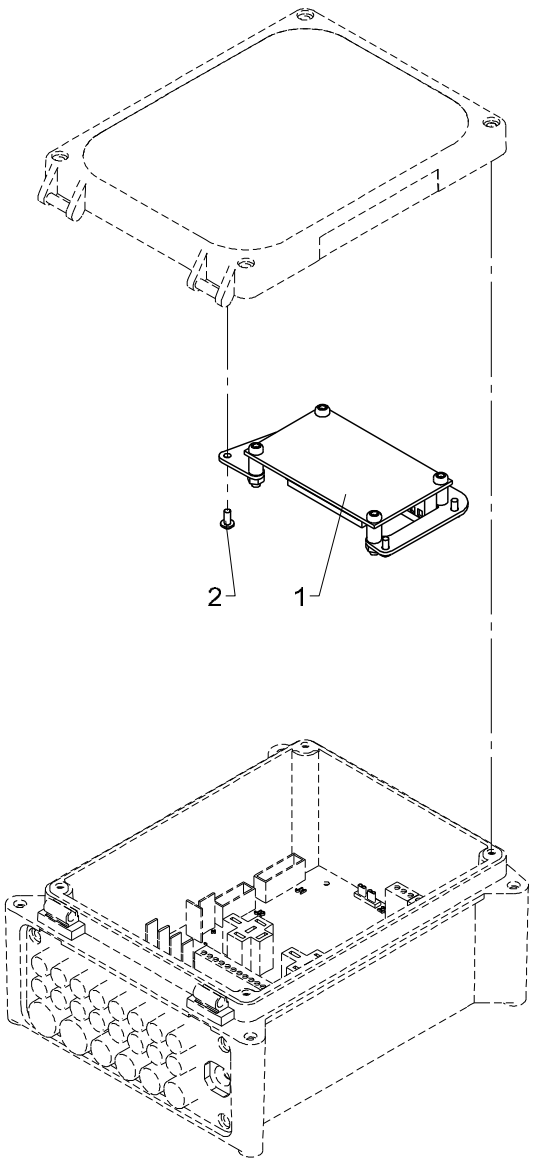

# EJB5385, installation

| Pos | Qty. | Part no. | Description | Remarks |
|---|---|---|---|---|
| 1 | 1 | 29474 | EJB5385 | |
| 2 | 4 | 30361 | Screw, stainless | 3,0 x 8 |

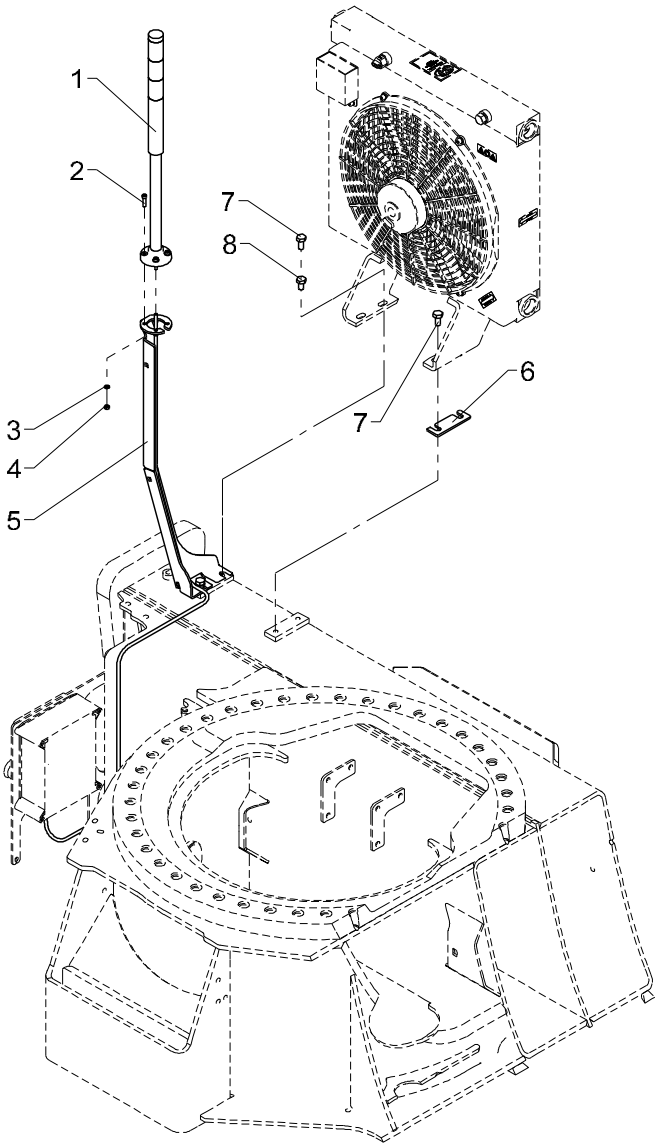
1
2
7
8
3
4
5
7
6

Obsolete

# 522 22 530 B

From loader 960001
To loader

Created 08-05-2013
Modified 01-09-2014

## Light tower

| Pos | Qty. | Part no. | Description | Remarks |
|---|---|---|---|---|
| | | 7006050 | Light tower | |
| | | 7003910 | Light tower | |
| 1 | 1 | 29195 | Light tower incl. foot + cable | |
| 2 | 4 | 31590 | Sockethead screw | MC5 x 20 |
| 3 | 4 | 32308 | Washer | 5 mm |
| 4 | 4 | 30859 | Lock nut, stainless | |
| 5 | 1 | 7004016 | Support for light tower | |
| 6 | 1 | 7004017 | Support for oil cooler | 70 03 910 |
| 7 | 4 | 31517 | Set screw, stainless | 70 03 910 |
| 8 | 2 | 31510 | Set screw, stainless | 70 06 050 |

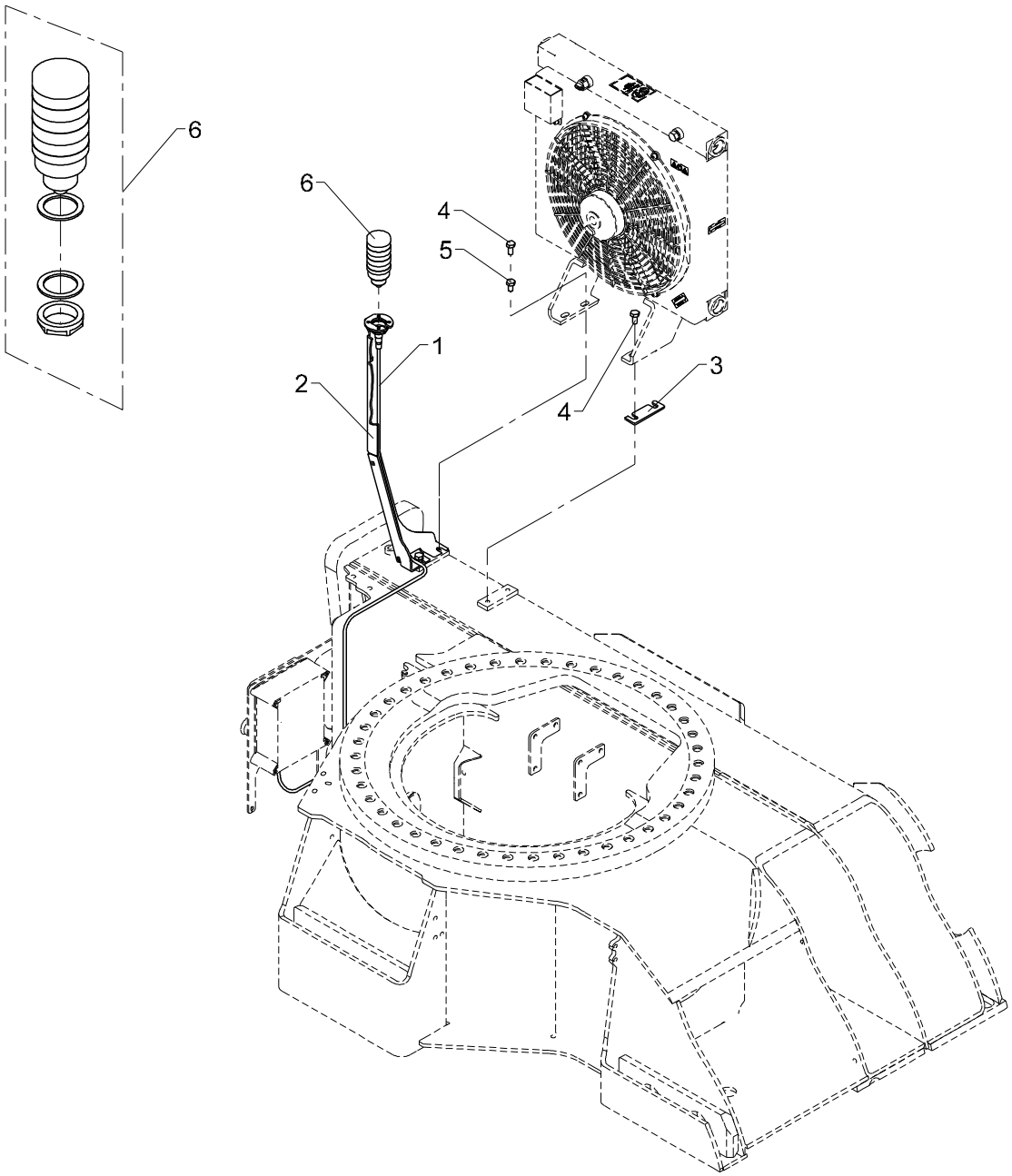
6
6
4
5
1
2
4
3

# Light tower

| Pos | Qty. | Part no. | Description | Remarks |
|---|---|---|---|---|
| | | 7006050 | Light tower | |
| | | 7003910 | Light tower | |
| 1 | 1 | 29224 | Cable with socket, 5 m | |
| 2 | 1 | 7004016 | Support for light tower | |
| 3 | 1 | 7004017 | Support for oil cooler | 70 03 910 |
| 4 | 4 | 31517 | Set screw, stainless | 70 03 910 |
| 5 | 2 | 31510 | Set screw, stainless | 70 06 050 |
| 6 | 1 | 29542 | Light tower | |