IOWA MOLD TOOLING CO., INC.

P.O. Box 189
Garner, IA 50438
Tel: 641.923.3711
Fax: 641.923.2424
www.imt.com

Manual # 99904952

50/345 Spare Parts Manual

99905499 Technical Specifications

Revised 04-15-2021

Copyright © 2021 Iowa Mold Tooling Co., Inc.
All rights reserved

No part of this publication may be reproduced, stored in a retrieval system, or transmitted in any form or by any means, electronic, mechanical, photocopying, recording or otherwise without the prior written permission of Iowa Mold Tooling Co., Inc.

Iowa Mold Tooling Co., Inc. is an Oshkosh Corporation Company

WARNING

Operating, servicing and maintaining this vehicle or equipment can expose you to chemicals including engine exhaust, carbon monoxide, phthalates, and lead, which are known to the State of California to cause cancer and birth defects or other reproductive harm. To minimize exposure, avoid breathing exhaust, do not idle the engine except as necessary, service your vehicle or equipment in a well-ventilated area and wear gloves or wash your hands frequently when servicing. For more information go to **www.P65Warnings.ca.gov**.

70490167

Description	Page no.	From loader	To loader
Basic loader			
Base and column, complete incl. link arm system, boom	542 01 010	1150001	1150086
Base and column, complete incl. link arm system, boom	542 01 010 A	1150087	1150117
Base and column, complete incl. link arm system, boom	542 01 010 B	1150118	
Main boom, complete incl. link arm system, jib	542 01 400	1150001	
Main boom, complete incl. link arm system, jib	542 01 400 B	1150001	
Boom cylinder, C220-849, with LHV	542 01 500	1150001	1150043
Boom cylinder, C220-849, with LHV	542 01 500 A	1150044	
Jib cylinder C200-1167 with LHV	542 01 600	1150001	1150043
Jib cylinder C200-1167 with LHV	542 01 600 A	1150044	1150192
Jib cylinder C200-1167 with LHV	542 01 600 B	1150193	
Stabilizers			
Stabilizer beam type S 1625	542 02 010	1150001	
Stabilizer beam type S 1625	542 02 010 A		
Stabilizer beam type D 2065	542 02 040	1150001	
Stabilizer beam type D 2065	542 02 040 A		
Stabilizer beam type D 2735	542 02 050	1150001	
Stabilizer beam type D 2735	542 02 050 A		
Stabilizer safety lock	542 02 140	1150001	
Safety lock (CE)	542 02 160	1150001	
Stabilizer cylinder, C110-550	542 02 200	1150001	1150112
Stabilizer cylinder, C110-550, type HR	542 02 240	1150001	1150111
Stabilizer cylinder C110-550, type HR	542 02 250	1150112	
Stabilizer cylinder C110-550	542 02 260	1150113	
Foot plate with ball joint, cpl. (ø210)	542 02 280	1150112	
Beam cylinder C32 - 1625	542 02 300	1150001	
Beam cylinder C32 - 2065	542 02 310	1150001	
Extension cylinder assembly, 2735, type D	542 02 320	1150001	1150173

Description	Page no.	From loader	To loader
Extension cylinder assembly, 2735, type D	542 02 320 A	1150174	
Boom System			
Jib and K1 extension, complete	542 03 100	1150001	1150050
Jib and K1 extension, complete	542 03 100 A	1150051	
K2 extension, complete	542 03 110	1150001	
K3 extension, complete	542 03 120	1150001	
K4 extension, complete	542 03 130	1150001	
K5 extension, complete	542 03 140	1150001	
K6 extension, complete	542 03 150	1150001	
K7 extension, complete	542 03 160	1150001	
K8 extension, complete	542 03 170	1150001	
Separate hook suspension, K2	542 03 200	1150001	
Separate hook suspension, K3	542 03 210	1150001	
Separate hook suspension, K4	542 03 220	1150001	
Separate hook suspension, K5	542 03 230	1150001	
Separate hook suspension, K6	542 03 240	1150001	
Separate hook suspension, K7	542 03 250	1150001	
Separate hook suspension, K8	542 03 260	1150001	
	542 03 270	1150001	
	542 03 280	1150001	
Hook suspension incl. hook	542 03 290	1150001	
Extension cylinder I (C90/70 x 1750)	542 03 300	1150001	
Extension cylinder II (C90/70 x 1875)	542 03 310	1150001	
Extension cylinder III (C85/63 x 2000)	542 03 320	1150001	
Extension cylinder IV (C85/63 x 2000)	542 03 330	1150001	
Extension cylinder V (C80/55 x 2150)	542 03 340	1150001	
Extension cylinder VI (C80/55 x 2225)	542 03 350	1150001	

Description	Page no.	From loader	To loader
Extension cylinder VII (C70/45 x 2275)	542 03 360	1150001	
Extension cylinder VIII (C70/45S x 2325)	542 03 370	1150001	
Manual extension, F5	542 03 410	1150001	
Manual extension, F6	542 03 420	1150001	
Manual extension, F7	542 03 430	1150001	
Manual extension, F8	542 03 440	1150001	
Manual extension, F9	542 03 450	1150001	
Manual extension, F10 cpl.	542 03 460	1150001	
Hydraulic systems, valve brackets and dual controls			
Stabilizer valve block, 5 available functions	542 05 010	1150001	
Stabilizer valve block, 6 available functions	542 05 020	1150001	
Stabilizer valve block, 7 available functions	542 05 030	1150001	
Stabilizer valve block, 8 available functions	542 05 040	1150001	
Hydraulic systems, loader functions			
Hose kit, winch and extra valves	542 05 660	1150001	
Hose kit, loader functions	542 05 670	1150001	1150117
Hose kit, loader functions	542 05 670 A	1150118	
Hydraulic systems, stabilizer beams			
Hydraulic system, stabilizers	542 05 700	1150001	
Hydraulic systems, pump and tank			
Tank incl. fittings (250L)	542 06 010	1150001	
Tank, cpl.	542 06 020	1150001	
Tank, cpl. (160L)	542 06 030	1150001	
Tank incl. fittings (160L)	542 06 040	1150001	
Hydraulic system, pump and return hoses, 1 circuit	542 06 060	1150001	1150030
Hydraulic system, pump and return hoses, 1 circuit	542 06 060 A	1150031	
Oil cooler	542 06 070	1150001	
Hydraulic systems, valve blocks			

Description	Page no.	From loader	To loader
Valve block, 4 sects. fixed/variable	542 06 200	1150001	1150012
Valve block, 4 sects. fixed/variable	542 06 200 A	1150001	1150013
Valve block, 5 sects. fixed/variable	542 06 210	1150001	1150012
Valve block, 5 sects. fixed/variable	542 06 210 A	1150001	1150013
Valve block, 6 sects. fixed/variable	542 06 220	1150001	1150012
Valve block, 6 sects. fixed/variable	542 06 220 A	1150001	1150013
Valve block, 6 sects. EXV, fixed/variable	542 06 230	1150001	1150012
Valve block, 6 sects. EXV, fixed/variable	542 06 230 A	1150001	1150013
Valve block, 7 sects. fixed/variable	542 06 240	1150001	1150012
Valve block, 7 sects. fixed/variable	542 06 240 A		1150013
Valve block, 7 sects. EXV, fixed/variable	542 06 250	1150001	1150012
Valve block, 7 sects. EXV, fixed/variable	542 06 250 A	1150001	1150013
Danfoss control valve PVG32, 4-7 sections	542 06 360	1150001	
Valve block (stabilizer control valve)	542 06 400	1150001	
Hydraulic systems, miscellaneous			
Extra RC-function on the base	542 06 540	1150001	
Labels and mounting kits			
Mounting kit	542 07 030	1150151	
Mounting kit	542 07 050	1150001	1150150
Mounting kit, HMF-subframe	542 07 060	1150001	1150150
Label	542 07 070	1150001	
Common labels	542 07 080	1150001	
Lifting capacity diagram and various labels (type)	542 07 090	1150001	
Max. labels	542 07 100	1150001	
Lifting capacity diagrams	542 07 110	1150001	
Accessories, extra valves			
2 extra valves, hose reel K4, K5 & K6	542 09 490	1150001	
2 extra valves, hose reel K7	542 09 500	1150001	

Description	Page no.	From loader	To loader
2 extra valves, hose reel K8	542 09 505	1150001	
Multi- and quick-release couplings, hose reels	542 09 510	1150001	
Internal hose routing, cpl. 2 EXV	542 09 520	1150001	
Multi-coupling, internal hose routing	542 09 535	1150001	
Hose guides, K2-K6, cpl.	542 09 880	1150001	
Hose guides, K2-K6, cpl.	542 09 880 A		
Quick-release couplings, 2 EXV, guides with bracket	542 09 900	1150001	
Multi-couplings, 2 EXV, guides K2-K6	542 09 910	1150001	
Kit, 3 EXV	542 09 920	1150001	
Accessories, top seat, TS			
Parts for top seat (TS-RC)	542 11 010	1150001	
Accessories, winch			
Swivel hook, 2.5 t and 3.2 t	542 13 010	1150001	
Wire roller guide	542 13 040	1150001	
Wire roller guide	542 13 040 A	1150001	
Wire roller guide (with FJ)	542 13 050	1150001	
Wire pulley, double snatch block	542 13 060	1150001	
Wire pulley 3.2 t	542 13 070	1150001	
Winch 2.5 T + mounting fittings and weighing cell	542 13 100	1150001	
Winch 3.2 T + mounting fittings and weighing cell	542 13 110	1150001	
Wire roller guide	542 13 190	1150001	
Accessories, personnel basket			
Parts for emergency pump (1 circuit)	542 15 040	1150001	
Parts for emergency pump (2 circuits)	542 15 050	1150001	
Mounting fittings for MEWP, K6, K7 & K8	542 15 090	1150001	
Hydraulic pipes, Walform for 5020/4020, K5-K8	542 15 600		
Accessories, miscellaneous			
Brackets and protection plates	542 16 000	1150001	

Description	Page no.	From loader	To loader
Shield at the end of the jib	542 16 020	1150001	
Protective guard, jib cylinder, cpl.	542 16 030	1150001	
Protective guard (LHV boom), cpl.	542 16 100	1150001	
Electronic parts, in general			
CAN termination, RCL53xx	542 20 340	1150001	
BEHEW	542 20 350	1150001	
BEHEW	542 20 350 A	1150001	
CYL	542 20 380	1150001	
CYBEL	542 20 390	1150001	
PAS	542 20 392	1150001	
12 V converter	542 20 395	1150001	
Alarm flash	542 20 400	1150001	
Temperature monitoring without oil cooler	542 20 410	1150001	
Temperature monitoring for oil cooler	542 20 420	1150001	
Spotlight, boom	542 20 430	1150001	
Spotlight, boom	542 20 430 A	1150001	
Spotlight, jib	542 20 440	1150001	
Spotlight, jib	542 20 440 A	1150001	
Spotlight, radio remote controlled.	542 20 450	1150001	
Electronic parts, RC crane			
FJ supply, hose reel, multi- and quick-release coupling	542 22 110	1150001	1150234
FJ supply, hose reel, multi- and quick-release coupling	542 22 110 A	1150235	
FJ supply K7, hose reel, multi- and quick-release coupling	542 22 115	1150001	
EVS	542 22 130	1150001	1150061
EVS	542 22 130 A	1150062	
EVS	542 22 130 B	1150062	
EVS	542 22 130 C	1150062	
Termination, PVED	542 22 140	1150001	

Description	Page no.	From loader	To loader
Basic parts	542 22 290	1150001	
Basic electronic parts, base	542 22 290 A	1150001	
Basic electronic parts, column	542 22 300	1150001	
Terminal block, Box2, column	542 22 310	1150001	
Termination, G2	542 22 320	1150001	
2-stage LMB	542 22 340	1150001	1150090
2-stage LMB	542 22 340 A	1150091	
CBS - Calibrate Bypass Sensor	542 22 360	1150001	
CBS	542 22 360 A	1150001	
Stabilizer operation via RC, 16 plugs	542 22 390	1150001	
Stabilizer operation via RC, 16 plugs	542 22 390 A	1150001	
Extra RC-function on the base	542 22 400	1150001	
Winch, (electric parts)	542 22 410	1150001	
Winch, electric parts	542 22 410 A	1150001	
Winch, electric parts	542 22 410 B	1150001	
Fly-Jib supply Column	542 22 420	1150001	
Fly-Jib supply Column	542 22 420 A	1150001	
Fly-Jib supply Column	542 22 420 B	1150001	
FJ supply, hose guides	542 22 430	1150001	1150238
FJ supply	542 22 430 A	1150239	
3rd extra valve	542 22 450	1150001	
EJB5385, installation	542 22 460	1150001	
Light tower	542 22 890	1150001	1150078
Light tower	542 22 890 A	1150001	1150078
Light tower	542 22 890 B	1150079	1150156
Light tower	542 22 890 C	1150157	

50/345

Internal ref. 63 90 000

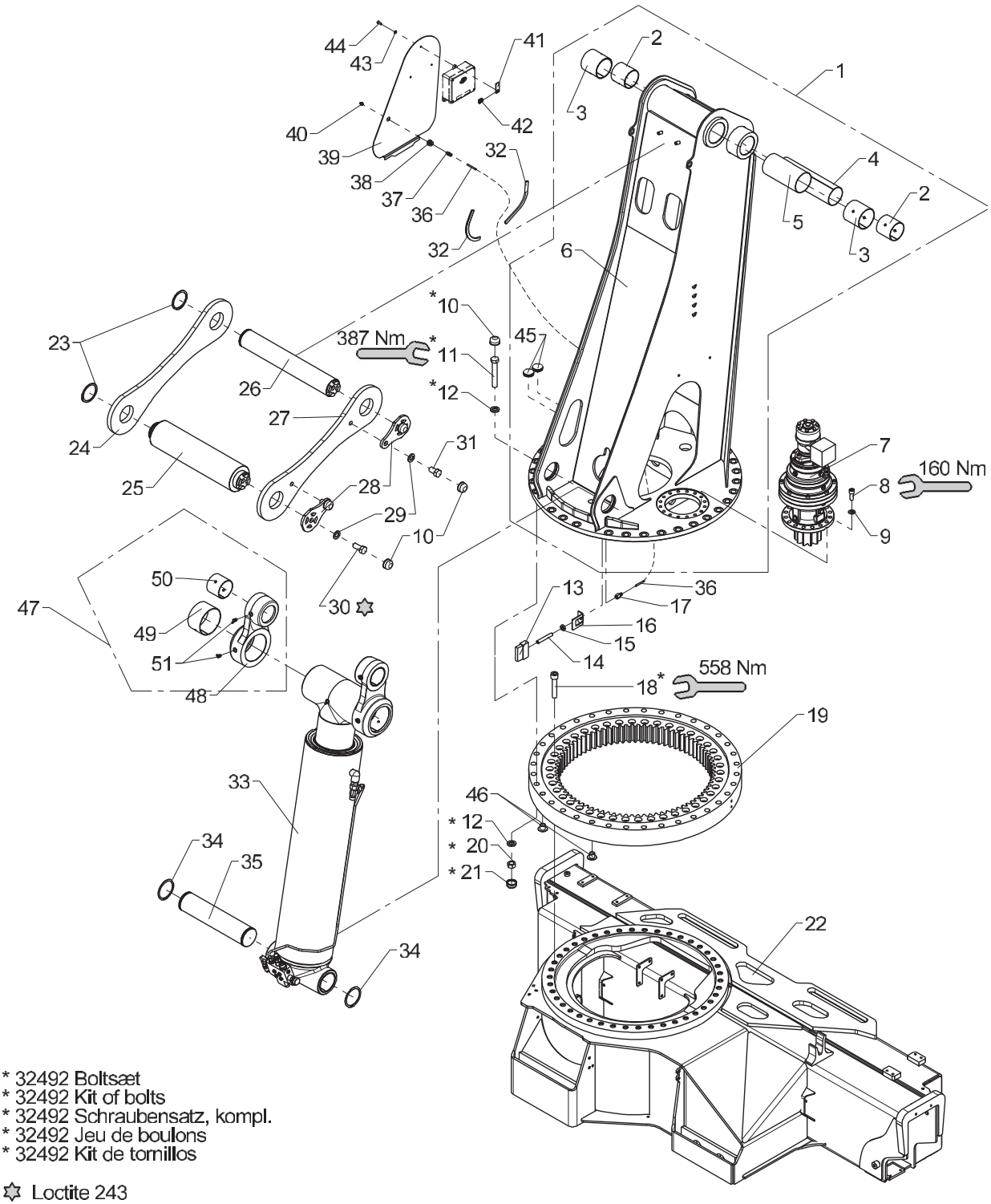

* 32492 Boltsæt
* 32492 Kit of bolts
* 32492 Schraubensatz, kompl.
* 32492 Jeu de boulons
* 32492 Kit de tornillos

✡ Loctite 243

Obsolete

542 01 010

From loader 1150001
To loader 1150086

Created 16-08-2010
Modified 01-03-2011

Base and column, complete incl. link arm system, boom

Pos	Qty.	Part no.	Description	Remarks
1	1	6390020	Column with bushings	
2	2	23329	Bushing	PM 8080 DX
3	2	23922	Bushing	PM 9090 DX
4	1	68040	Plate for spacer	
5	1	68039	Plate for spacer	
6	1	6390030	Column, painted	63 90 051
7	1	49172	Planetary gear, painted	
8	16	30482	Screw	MC14 x 35
9	16	31178	Washer	14 mm
10	38	63413	Cover for nut	
11	34	32374	Steel bolt	M20 x 130
12	68	31761	Washer	20 mm
13	1	31395	Brush	
14	1	6306048	Threaded pipe	
15	1	25354	Counter nut	1/4"
16	1	6306047	Safety device, lubrica. brush	
17	1	25580	Union nut	
18	42	30474	Sockethead screw	MC20 x 100
19	1	50403	Pinion, painted	
20	34	32333	Nut	M20
21	34	64431	Plastic plug	
22	1	6390010	Base, painted	63 90 001
23	2	33143	Circlip	80U
24	1	6390403	Link arm N, left	
25	1	6390405	Pin	
26	1	6390404	Pin	
27	1	6390402	Link arm N, right	
28	2	6390401	Lock plate	
29	4	31179	Washer	20 mm
30	2	30244	Set screw	M20 x 45
31	2	30242	Set screw	M20 x 35
32	2	46596	Rubber protection	0,5 m.
33	1	6390210	Boom cylinder with LHV	
34	2	33145	Circlip	80U
35	1	6390406	Pin	
36	1	62821	Nylon pipe	6 x 1,5 x 500 mm
37	1	25523	Connection	
38	1	25586	Lead-in	
39	1	6390046	Protection plate, column	
40	1	31318	Lubricator	1/8" RG
41	1	6301377	Plate	

50/345

Internal ref. 63 90 000

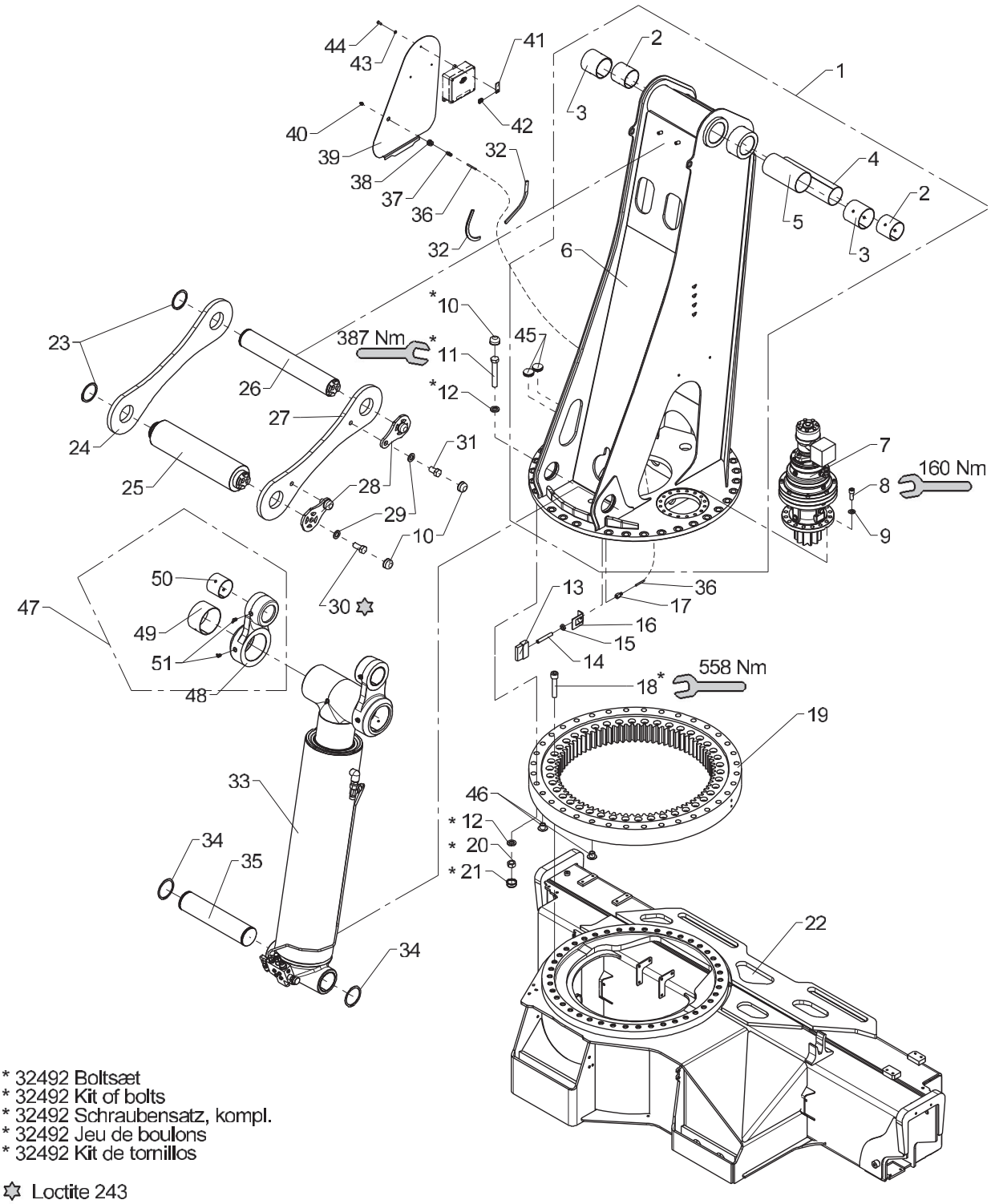

* 32492 Boltsæt
* 32492 Kit of bolts
* 32492 Schraubensatz, kompl.
* 32492 Jeu de boulons
* 32492 Kit de tornillos

✡ Loctite 243

Obsolete

542 01 010

From loader 1150001
To loader 1150086

Created 16-08-2010
Modified 01-03-2011

Base and column, complete incl. link arm system, boom

Pos	Qty.	Part no.	Description	Remarks
42	1	31068	Clip	M6 0,5 - 4,0 mm.
43	1	32302	Face washer, stainless	6 mm
44	1	30112	Set screw, stainless	M6 x 16
45	2	64381	Ferrule	
46	2	64350	Plug	
47	2	6390050	Push rod, left, cpl.	63 90 246
48	1	6390246	Push rod	
49	2	23956	Bushing	PM 12070 DX
50	2	23942	Bushing	PM 8070 DX
51	4	31319	Lubricator	1/8 RG - 90

50/345

Internal ref. 63 90 000

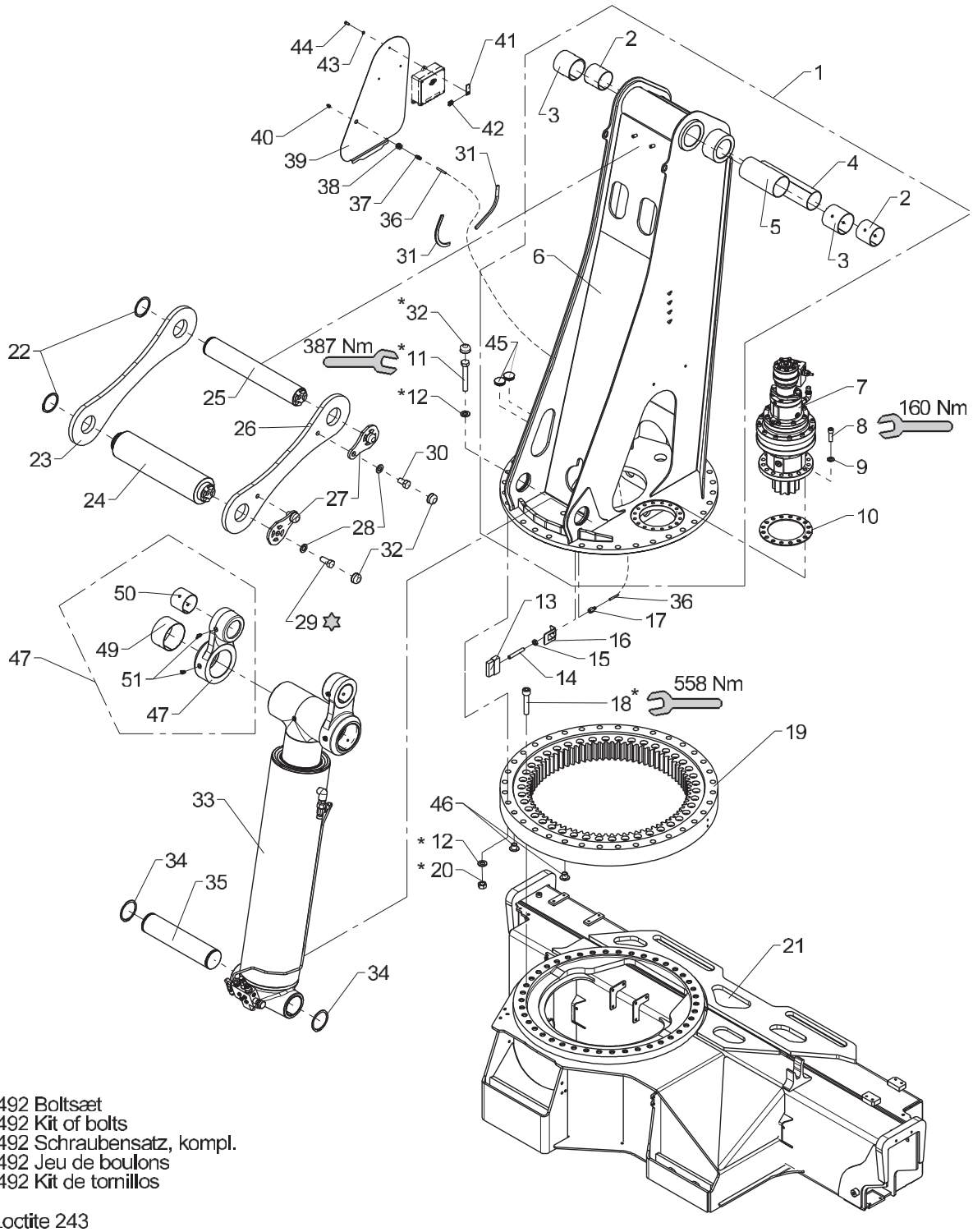

* 32492 Boltsæt
* 32492 Kit of bolts
* 32492 Schraubensatz, kompl.
* 32492 Jeu de boulons
* 32492 Kit de tornillos

✡ Loctite 243

Obsolete

542 01 010 A

From loader 1150087
To loader 1150117

Created 03-04-2013
Modified

Base and column, complete incl. link arm system, boom

Pos	Qty.	Part no.	Description	Remarks
1	1	6390020	Column with bushings	
2	2	23329	Bushing	PM 8080 DX
3	2	23922	Bushing	PM 9090 DX
4	1	68040	Plate for spacer	
5	1	68039	Plate for spacer	
6	1	6390030	Column, painted	63 90 051
7	1	49188	Slewing gear painted RE 512	
8	16	32487	Screw	MC14 x 45
9	16	31178	Washer	14 mm
10	1	6390069	Division plate	
11	34	32374	Steel bolt	M20 x 130
12	68	31761	Washer	20 mm
13	1	31395	Brush	
14	1	6306048	Threaded pipe	
15	1	25354	Counter nut	1/4"
16	1	6306047	Safety device, lubrica. brush	
17	1	25580	Union nut	
18	42	30474	Sockethead screw	MC20 x 100
19	1	50403	Pinion, painted	
20	34	32333	Nut	M20
21	1	6390010	Base, painted	63 90 001
22	2	33143	Circlip	80U
23	1	6390403	Link arm N, left	
24	1	6390405	Pin	
25	1	6390404	Pin	
26	1	6390402	Link arm N, right	
27	2	6390401	Lock plate	
28	4	31179	Washer	20 mm
29	2	30244	Set screw	M20 x 45
30	2	30242	Set screw	M20 x 35
31	2	46596	Rubber protection	0,5 m.
32	38	63413	Cover for nut	
33	1	6391110	Boom cylinder with LHV	
34	2	33145	Circlip	80U
35	1	6390406	Pin	
36	1	62821	Nylon pipe	6 x 1,5 x 500 mm
37	1	25523	Connection	
38	1	25586	Lead-in	
39	1	6390046	Protection plate, column	
40	1	31318	Lubricator	1/8" RG
41	1	6301377	Plate	

50/345

Internal ref. 63 90 000

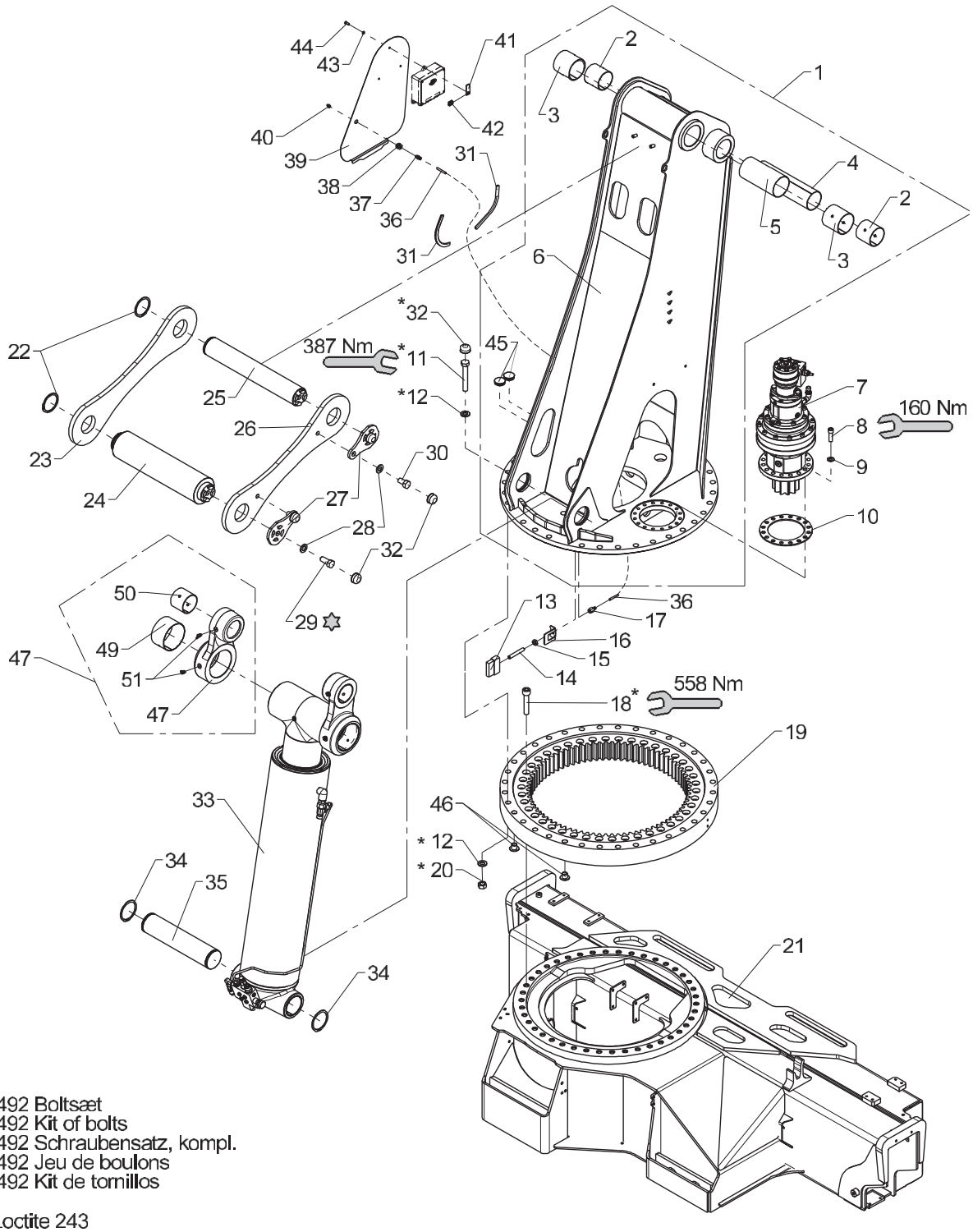

* 32492 Boltsæt
* 32492 Kit of bolts
* 32492 Schraubensatz, kompl.
* 32492 Jeu de boulons
* 32492 Kit de tornillos

✡ Loctite 243

Obsolete

542 01 010 A

From loader 1150087
To loader 1150117

Created 03-04-2013
Modified

Base and column, complete incl. link arm system, boom

Pos	Qty.	Part no.	Description	Remarks
42	1	31068	Clip	M6 0,5 - 4,0 mm.
43	1	32302	Face washer, stainless	6 mm
44	1	30112	Set screw, stainless	M6 x 16
45	2	64381	Ferrule	
46	2	64350	Plug	
47	2	6390050	Push rod, left, cpl.	63 90 246
48	1	6390246	Push rod	
49	2	23956	Bushing	PM 12070 DX
50	2	23942	Bushing	PM 8070 DX
51	4	31319	Lubricator	1/8 RG - 90

50/345

Internal ref. 63 90 000

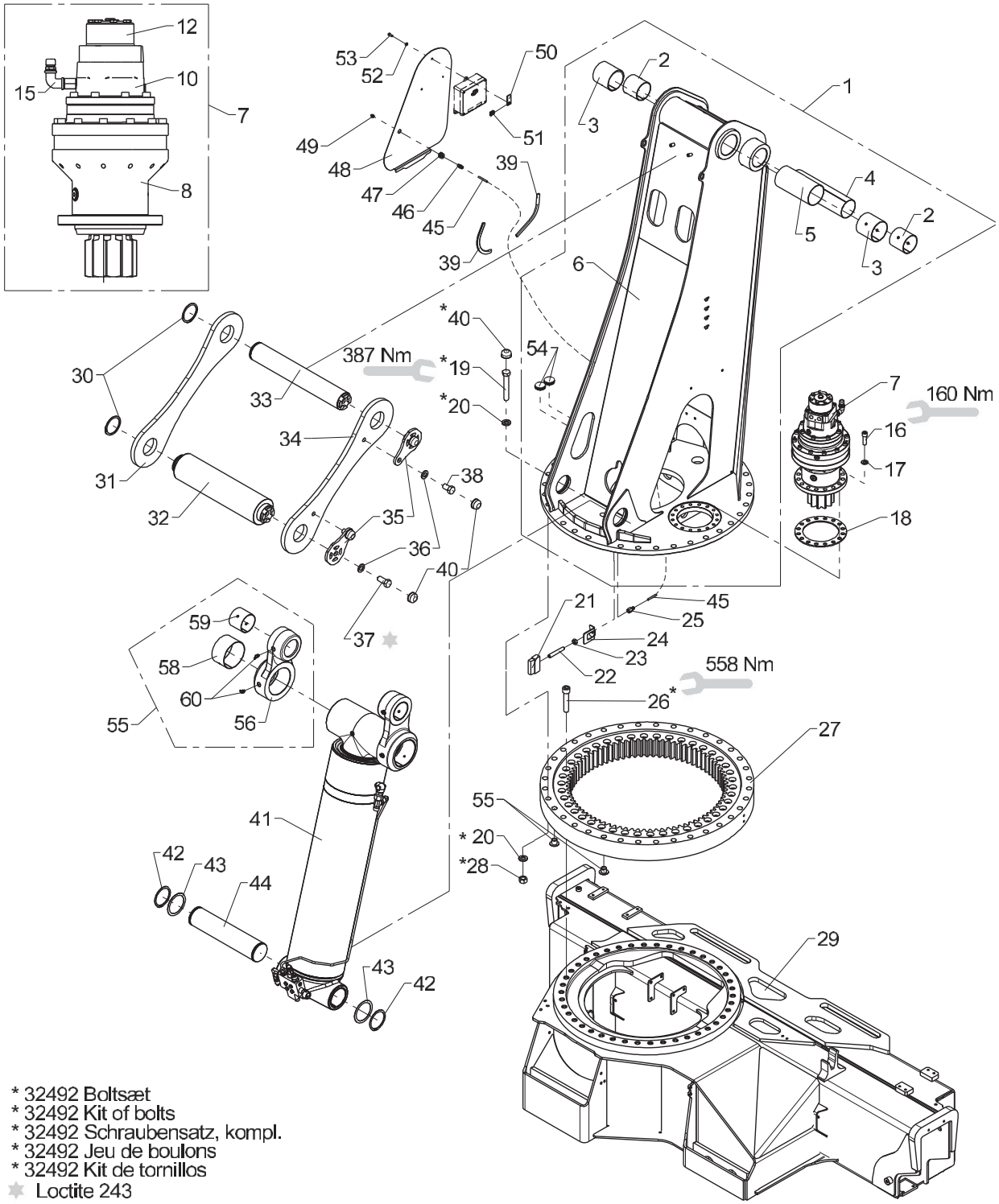

* 32492 Boltsæt
* 32492 Kit of bolts
* 32492 Schraubensatz, kompl.
* 32492 Jeu de boulons
* 32492 Kit de tornillos
✱ Loctite 243

Base and column, complete incl. link arm system, boom

Pos	Qty.	Part no.	Description	Remarks
1	1	6390020	Column with bushings	
2	2	23329	Bushing	PM 8080 DX
3	2	23922	Bushing	PM 9090 DX
4	1	68040	Plate for spacer	
5	1	68039	Plate for spacer	
6	1	6390030	Column, painted	63 90 051
7	1	49601	Planetary gear	
8	1	58572	Parts for gear	VK0200EMP03
9	1	58578	Seal kit	
10	1	58573	Brake	VK0700AUD01
11	1	58579	Kit for brake	9x294182100 + 9x294181900 + 2x
12	1	58574	Motor	425045500
13	1	58577	Seal kit	600021900
14	1	58575	Valve	438035800
15	1	58576	Vent plug	40200616600
16	16	32487	Screw	MC14 x 45
17	16	31178	Washer	14 mm
18	1	6390069	Division plate	
19	34	32374	Steel bolt	M20 x 130
20	68	31761	Washer	20 mm
21	1	31395	Brush	
22	1	6306048	Threaded pipe	
23	1	25354	Counter nut	1/4"
24	1	6306047	Safety device, lubrica. brush	
25	1	25580	Union nut	
26	42	30474	Sockethead screw	MC20 x 100
27	1	50194	Turntable, painted	
28	34	32333	Nut	M20
29	1	6390010	Base, painted	63 90 001
30	2	33143	Circlip	80U
31	1	6390403	Link arm N, left	
32	1	6390405	Pin	
33	1	6390404	Pin	
34	1	6390402	Link arm N, right	
35	2	6390401	Lock plate	
36	4	31179	Washer	20 mm
37	2	30244	Set screw	M20 x 45
38	2	30242	Set screw	M20 x 35
39	2	46596	Rubber protection	0,5 m.
40	38	63413	Cover for nut	
41	1	6391110	Boom cylinder with LHV	

50/345

Internal ref. 63 90 000

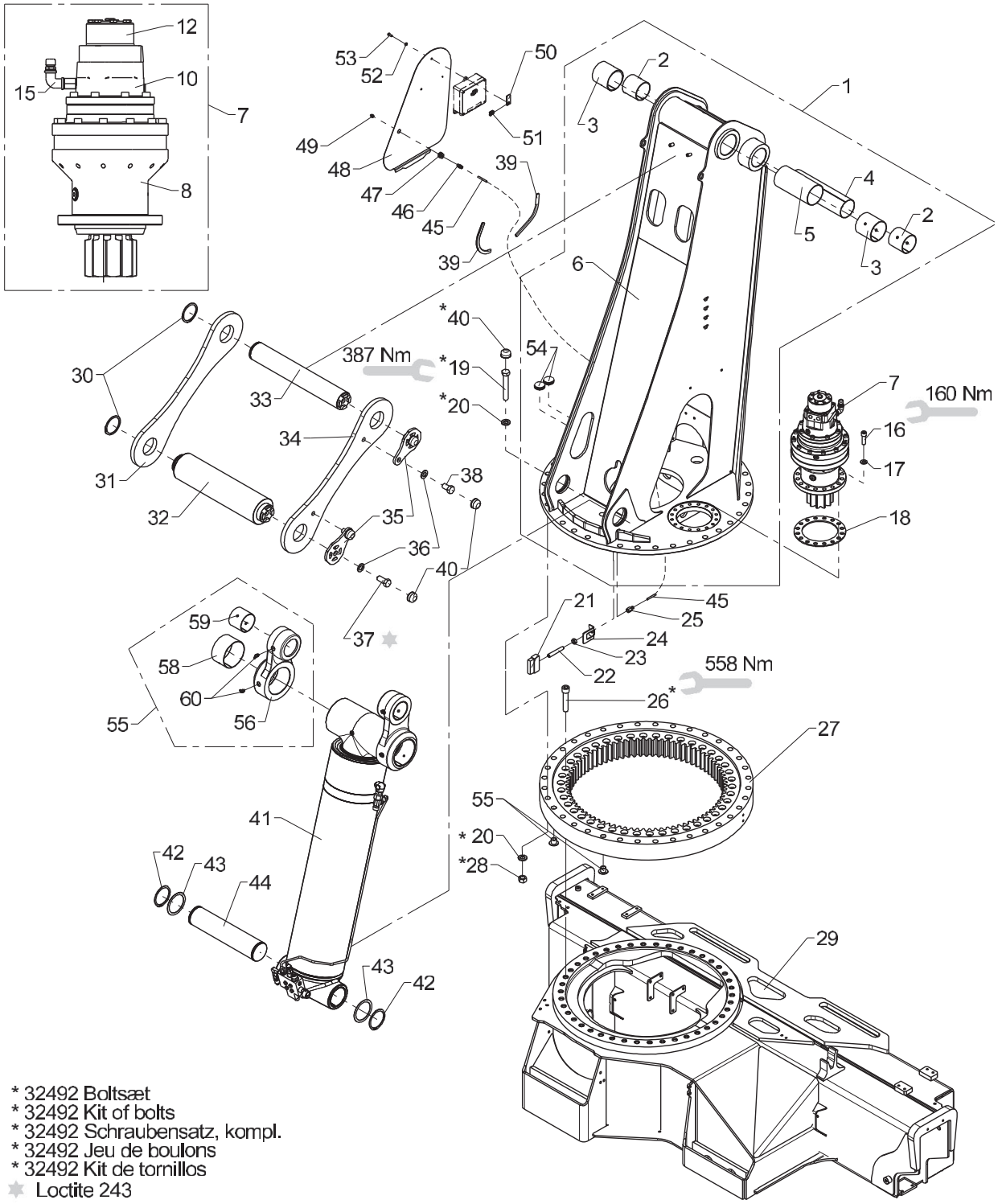

* 32492 Boltsæt
* 32492 Kit of bolts
* 32492 Schraubensatz, kompl.
* 32492 Jeu de boulons
* 32492 Kit de tornillos
✱ Loctite 243

Base and column, complete incl. link arm system, boom

Pos	Qty.	Part no.	Description	Remarks
42	2	33145	Circlip	80U
43	2	33251	Washer DIN988	PS 85 x 105 x 1,0
44	1	6390406	Pin	
45	1	62821	Nylon pipe	6 x 1,5 x 500 mm
46	1	25523	Connection	
47	1	25586	Lead-in	
48	1	6390046	Protection plate, column	
49	1	31318	Lubricator	1/8" RG
50	1	6301377	Plate	
51	1	31068	Clip	M6 0,5 - 4,0 mm.
52	1	32302	Face washer, stainless	6 mm
53	1	30112	Set screw, stainless	M6 x 16
54	2	64381	Ferrule	
55	2	64350	Plug	
56	2	6390050	Push rod, left, cpl.	63 90 246
57	1	6390246	Push rod	
58	2	23956	Bushing	PM 12070 DX
59	2	23942	Bushing	PM 8070 DX
60	4	31319	Lubricator	1/8 RG - 90

50/345

Internal ref. 63 90 060

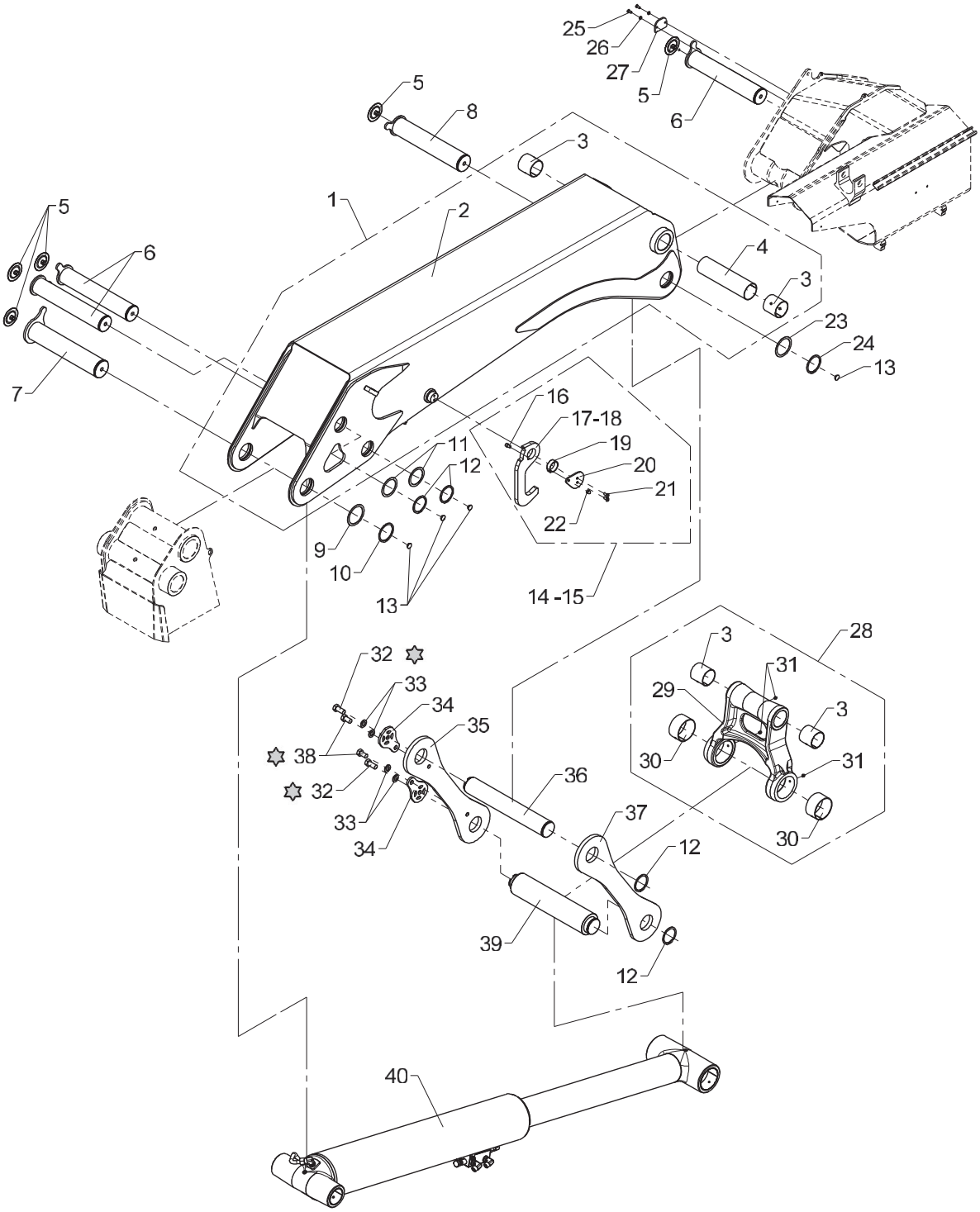

Loctite 243

Obsolete

542 01 400

From loader 1150001
To loader

Created 16-08-2010
Modified 01-11-2010

Main boom, complete incl. link arm system, jib

Pos	Qty.	Part no.	Description	Remarks
1	1	6390070	Main boom with bushings	
2	1	6390080	Main boom, painted	63 90 181
3	4	23329	Bushing	PM 8080 DX
4	1	68040	Plate for spacer	
5	5	68030	Plug	
6	3	6390411	Pin	
7	1	6390407	Pin	
8	1	6390416	Pin	
9	1	33245	Washer	PS 90 x 110 x 1,0
10	1	33241	Circlip	90U
11	2	33247	Washer	PS 80 x 100 x 1,0
12	4	33143	Circlip	80U
13	4	68034	Plug	
14	1	6391090	Stowing hook f. FJ	
15	1	6391080	Stowing hook	
16	1	30964	Screw	MC10 x 16
17	1	6390199	Stowing hook	
18	1	6390216	Stowing hook	
19	1	64423	Bearing	
20	1	6390198	End plate	
21	2	30926	Steel bolt	M10 x 20
22	1	30902	Nut	M10
23	1	33251	Washer DIN988	PS 85 x 105 x 1,0
24	1	33145	Circlip	80U
25	2	30131	Set screw, stainless	M8 x 16
26	2	31155	Spring washer	8 mm
27	1	6340318	Lock plate	
28	1	6390090	Push rod, cpl.	63 90 171
29	1	6390171	Push rod	
30	2	23384	Bushing	PM 11060 DX
31	3	31318	Lubricator	1/8" RG
32	2	30244	Set screw	M20 x 45
33	4	31179	Washer	20 mm
34	2	6390401	Lock plate	
35	1	6390414	Link arm K, right	
36	1	6390404	Pin	
37	1	6390415	Link arm K, left	
38	2	30242	Set screw	M20 x 35
39	1	6390413	Pin	
40	1	6390230	Jib cylinder with LHV	

63 91 180
63 91 090
63 91 080
Internal ref. 63 90 060

50/345

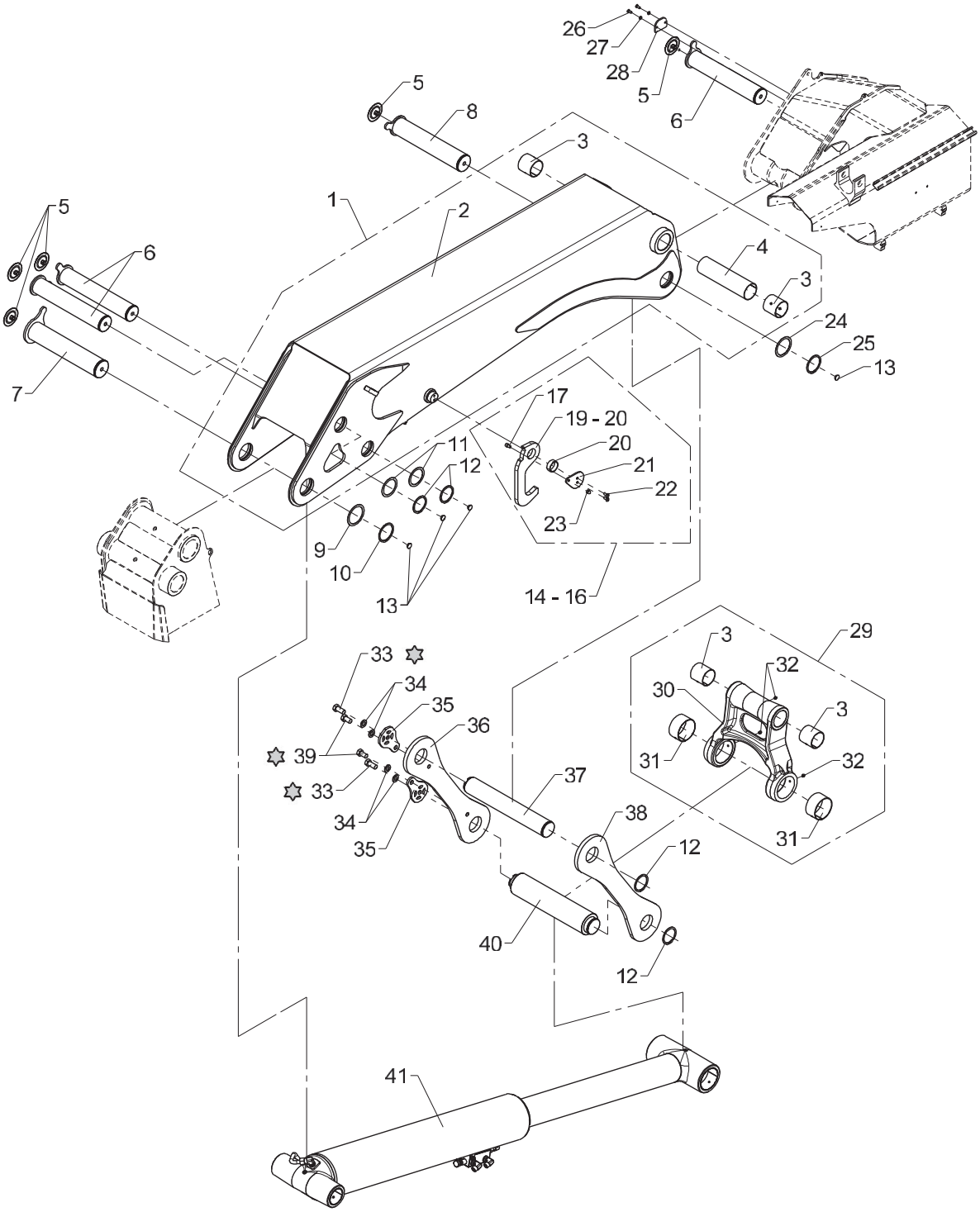

Loctite 243

Main boom, complete incl. link arm system, jib

Pos	Qty.	Part no.	Description	Remarks
1	1	6390070	Main boom with bushings	
2	1	6390080	Main boom, painted	63 90 181
3	4	23329	Bushing	PM 8080 DX
4	1	68040	Plate for spacer	
5	5	68030	Plug	
6	3	6390411	Pin	
7	1	6390407	Pin	
8	1	6390416	Pin	
9	1	33245	Washer	PS 90 x 110 x 1,0
10	1	33241	Circlip	90U
11	2	33247	Washer	PS 80 x 100 x 1,0
12	4	33143	Circlip	80U
13	4	68034	Plug	
14	1	6391180	Stowing hook, internal hoses	Ved indv. slangeføring
15	1	6391090	Stowing hook f. FJ	Til FJ
16	1	6391080	Stowing hook	
17	1	30964	Screw	MC10 x 16
18	1	6390199	Stowing hook	
19	1	6390216	Stowing hook	Til FJ
20	1	23964	Bushing	MB 5020 DU
21	1	6390198	End plate	
22	2	30926	Steel bolt	M10 x 20
23	1	30902	Nut	M10
24	1	33251	Washer DIN988	PS 85 x 105 x 1,0
25	1	33145	Circlip	80U
26	2	30131	Set screw, stainless	M8 x 16
27	2	31155	Spring washer	8 mm
28	1	6340318	Lock plate	
29	1	6390090	Push rod, cpl.	63 90 171
30	1	6390171	Push rod	
31	2	23384	Bushing	PM 11060 DX
32	3	31318	Lubricator	1/8" RG
33	2	30244	Set screw	M20 x 45
34	4	31179	Washer	20 mm
35	2	6390401	Lock plate	
36	1	6390414	Link arm K, right	
37	1	6390404	Pin	
38	1	6390415	Link arm K, left	
39	2	30242	Set screw	M20 x 35
40	1	6390413	Pin	
41	1	6391130	Jib cyl. with LHV	

50/345

Internal ref. 63 90 210

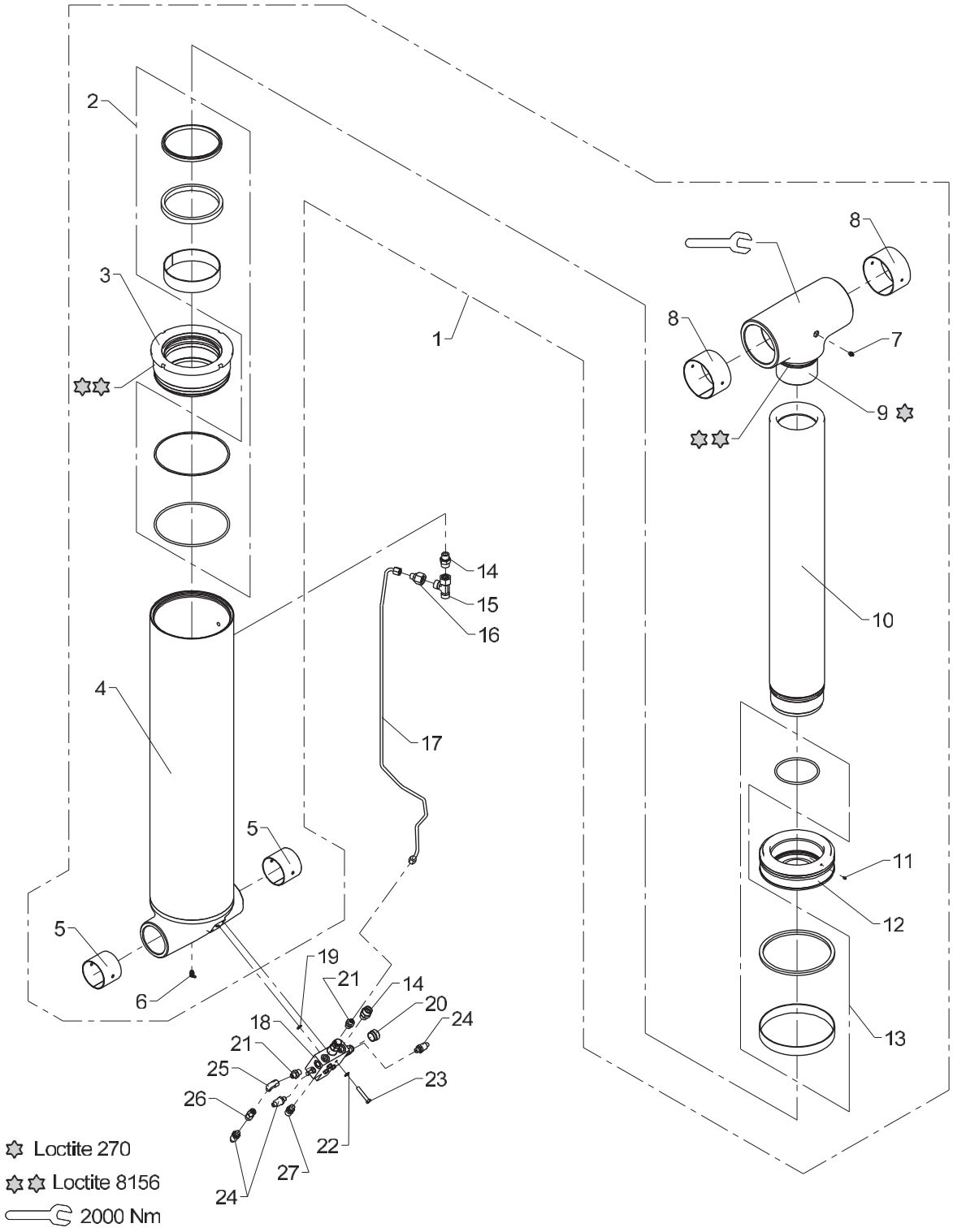

Obsolete

542 01 500

From loader 1150001
To loader 1150043

Created 27-06-2013
Modified

Boom cylinder, C220-849, with LHV

Pos	Qty.	Part no.	Description	Remarks
1	1	6390200	Boom cylinder C220x849	
2	1	6894310	Seal kit, guide	
3	1	6390205	Guide	
4	1	6390201	Cylinder tube	
5	2	23957	Bushing	PM 8570 DX
6	1	31322	Lubricator	1/8 RG - 90
7	1	31318	Lubricator	1/8" RG
8	2	23956	Bushing	PM 12070 DX
9	1	6390207	Piston rod head, Ø220	
10	1	6390206	Piston rod	
11	1	30903	Screw	
12	1	6390204	Piston	
13	1	6894320	Seal kit, piston	
14	2	26334	Connection	P-GEV 16 SR-WD
15	1	26342	Connection	ELSD 16 S
16	1	26879	Reducing connection	REDSDN 16/8 S
17	1	6390208	Pipe	
18	1	55227	Valve	
19	1	20138	O-ring	OR 10,77 x 2,62
20	1	55369	Cover for sealing	
21	2	25244	Connection	GES 8 LR 3/8-WD
22	4	31147	Face washer, 8 mm	
23	4	30139	Steel bolt, stainless	
24	3	28850	Pressure transducer	
25	1	26170	Elbow connection	EWSD 8 L
26	1	26370	Pressure gauge connection	EMASD 8 LR
27	1	26103	Pressure-gauge connect.	

50/345

Internal ref. 63 91 110

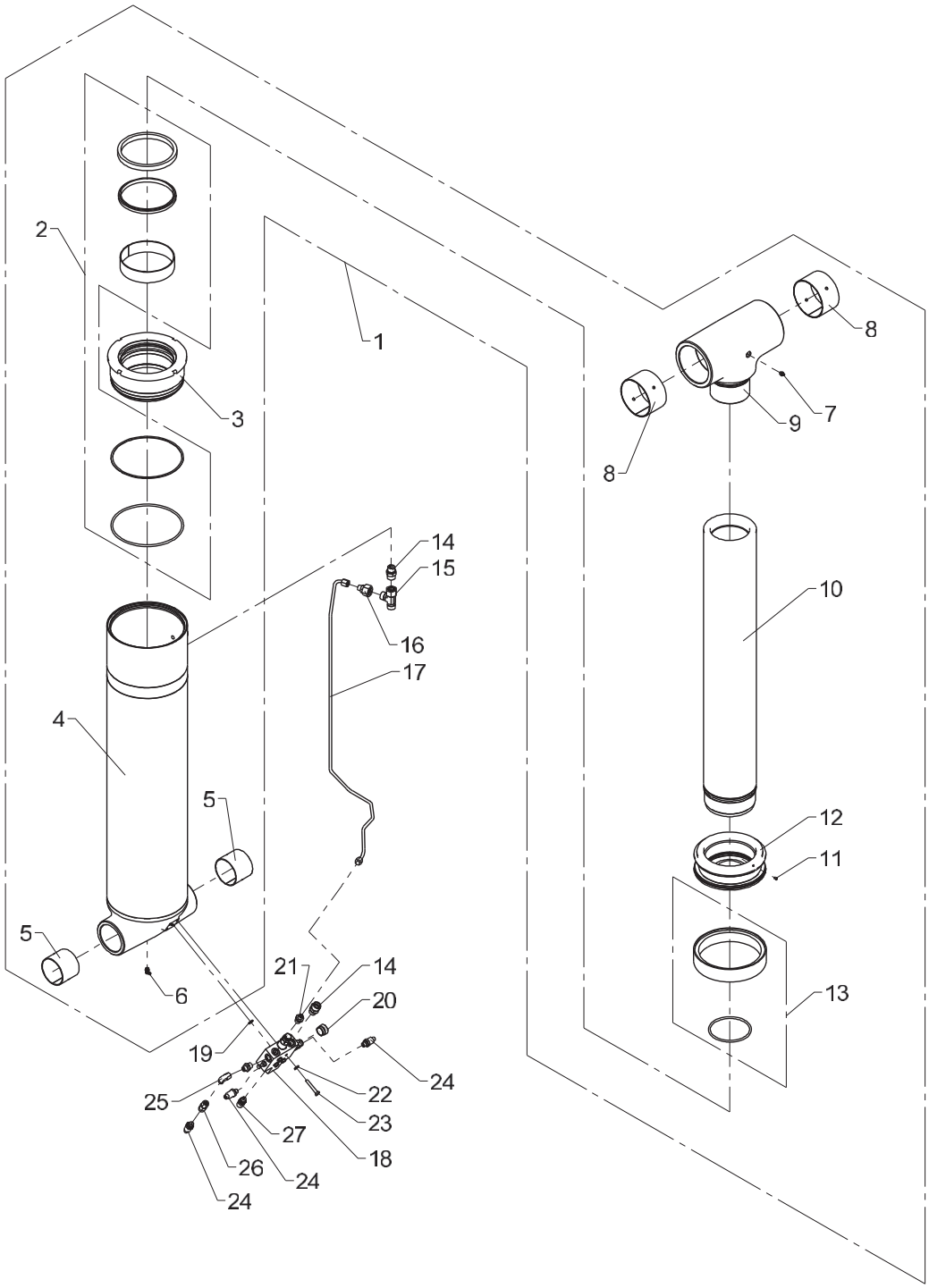

Boom cylinder, C220-849, with LHV

Pos	Qty.	Part no.	Description	Remarks
1	1	6391100	Boom cylinder C220 - 849	
2	1	6894310	Seal kit, guide	
3	1	6390205	Guide	
4	1	6390201	Cylinder tube	
5	2	23957	Bushing	PM 8570 DX
6	1	31322	Lubricator	1/8 RG - 90
7	1	31318	Lubricator	1/8" RG
8	2	23956	Bushing	PM 12070 DX
9	1	6390207	Piston rod head, Ø220	
10	1	6390206	Piston rod	
11	1	30903	Screw	MSP6 x 8
12	1	6390217	Piston C220/160	
13	1	6894490	Seal kit for piston	
14	2	26334	Connection	P-GEV 16 SR-WD
15	1	26342	Connection	ELSD 16 S
16	1	26879	Reducing connection	REDSDN 16/8 S
17	1	6390208	Pipe	
18	1	55227	Valve	
19	1	20138	O-ring	OR 10,77 x 2,62
20	1	55369	Cover for sealing	
21	2	25244	Connection	GES 8 LR 3/8-WD
22	4	31147	Face washer, 8 mm	
23	4	30139	Steel bolt, stainless	M8 x 50
24	3	28850	Pressure transducer	
25	1	26170	Elbow connection	EWSD 8 L
26	1	26370	Pressure gauge connection	EMASD 8 LR
27	1	26103	Pressure-gauge connect.	

50/345

Internal ref. 63 90 230

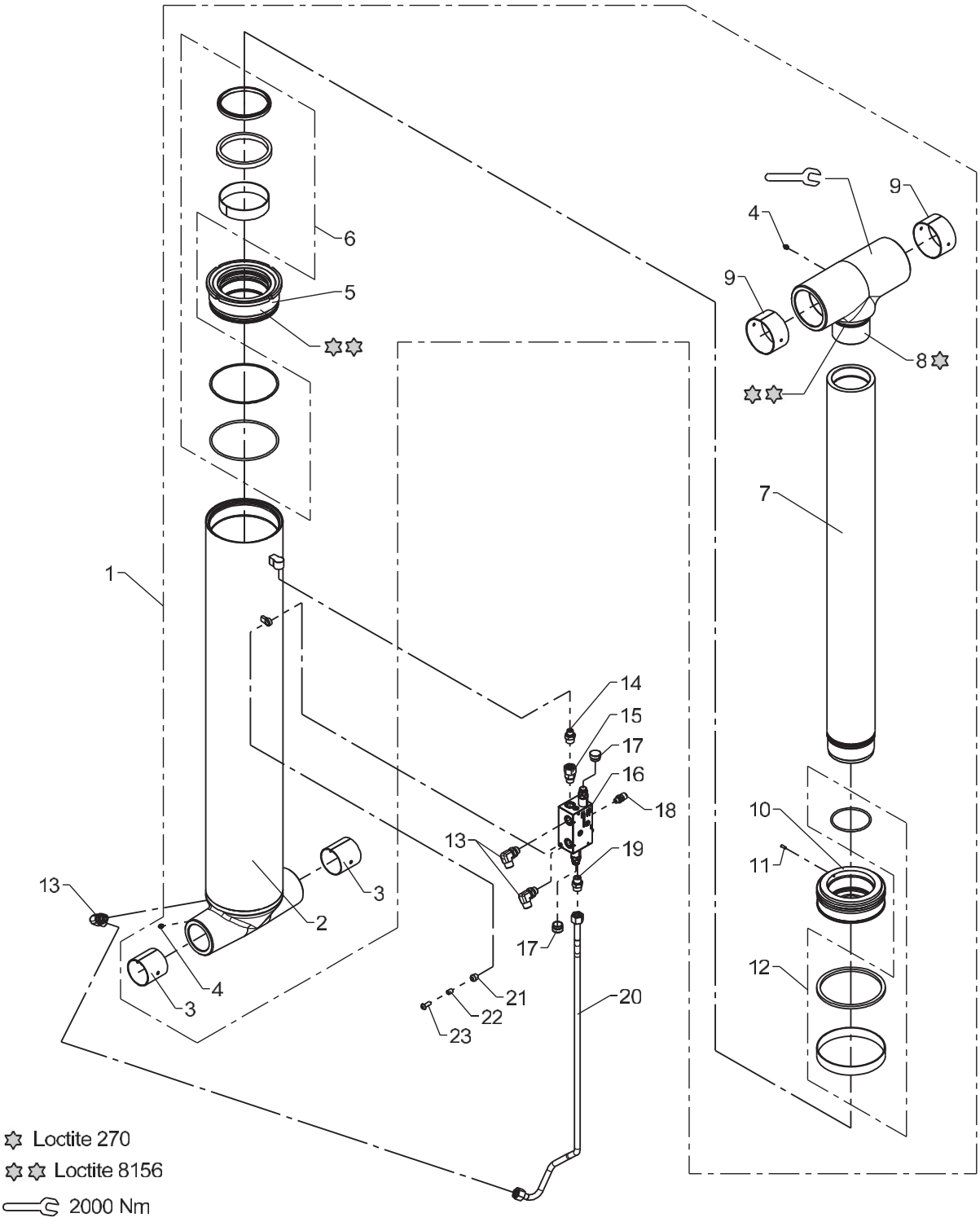

Obsolete

542 01 600

From loader 1150001
To loader 1150043

Created 27-06-2013
Modified

Jib cylinder C200-1167 with LHV

Pos	Qty.	Part no.	Description	Remarks
1	1	6390220	Jib cylinder	
2	1	6390221	Cylinder tube	
3	2	23329	Bushing	PM 8080 DX
4	2	31318	Lubricator	1/8" RG
5	1	6390225	Guide	
6	1	6894330	Seal kit, guide	
7	1	6390226	Piston rod	
8	1	6390227	Piston rod head, Ø200	
9	2	23384	Bushing	PM 11060 DX
10	1	6390224	Piston	
11	1	30562	Pointed screw, stainless	MPS6 x 16
12	1	6894340	Seal kit, piston	
13	3	26893	Elbow connection	16 mm - 1/2"
14	1	26368	Straight connection	P-GEV 16 SR 3/8-WD
15	1	26339	Connection	EGESD 16 SR-WD
16	1	55263	Load-holding valve	
17	2	55369	Cover for sealing	
18	1	26103	Pressure-gauge connect.	
19	1	26334	Connection	P-GEV 16 SR-WD
20	1	6390228	Pipe, jib up	
21	1	27088	Rubber bushing	
22	1	6300607	Spacer	
23	1	30652	Screw	M10 x 25

50/345

Internal ref. 63 91 130

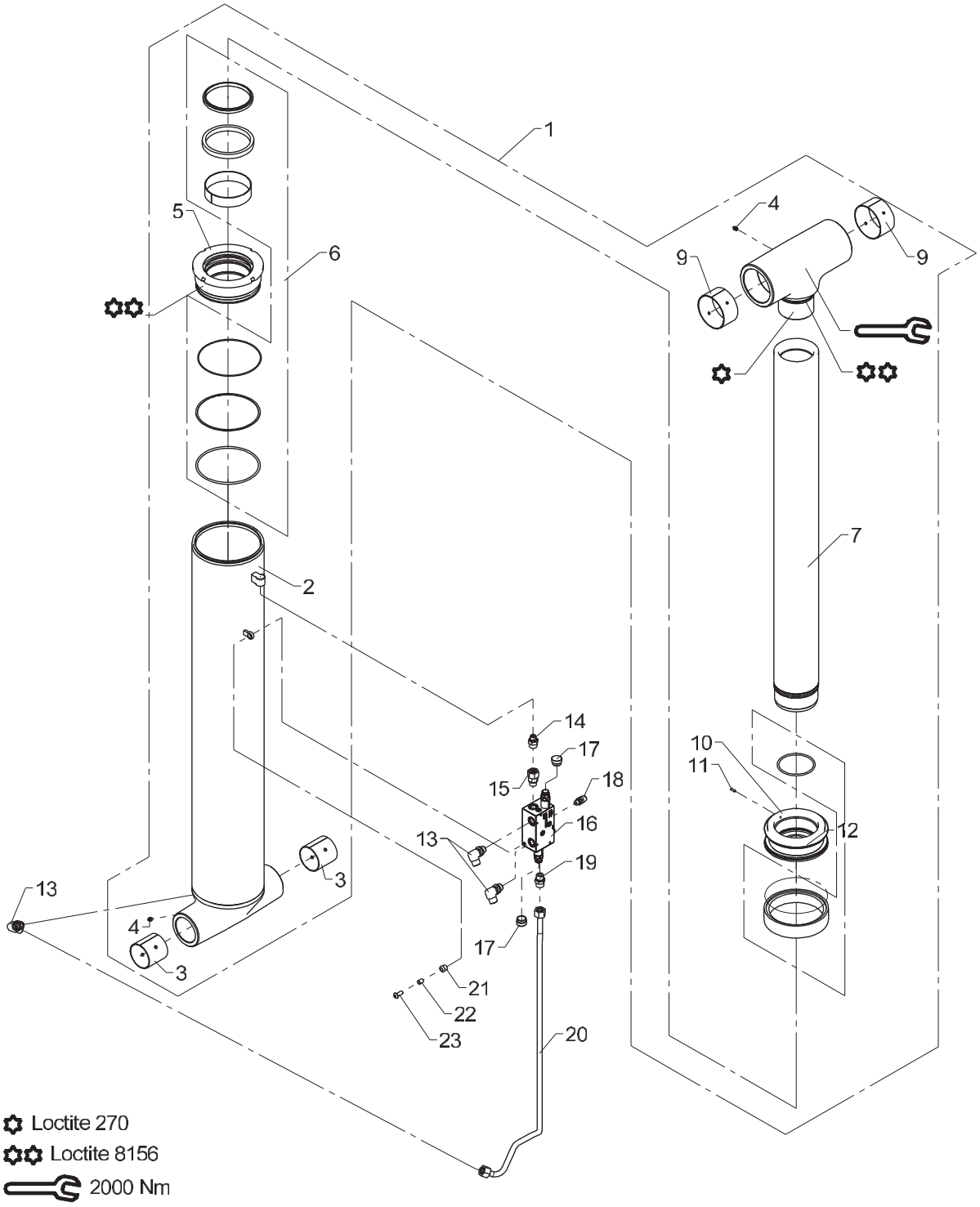

Obsolete

542 01 600 A

From loader 1150044
To loader 1150192

Created
Modified 02-07-2015

Jib cylinder C200-1167 with LHV

Pos	Qty.	Part no.	Description	Remarks
1	1	6391120	Jib cylinder C200 - 1167	
2	1	6390221	Cylinder tube	
3	2	23329	Bushing	PM 8080 DX
4	2	31318	Lubricator	1/8" RG
5	1	6390225	Guide	
6	1	6894330	Seal kit, guide	
7	1	6390226	Piston rod	
8	1	6390227	Piston rod head, Ø200	
9	2	23384	Bushing	PM 11060 DX
10	1	6390237	Piston C200/140	
11	1	30562	Pointed screw, stainless	MPS6 x 16
12	1	6894500	Seal kit f. piston	
13	3	26893	Elbow connection	16 mm - 1/2"
14	1	26368	Straight connection	P-GEV 16 SR 3/8-WD
15	1	26339	Connection	EGESD 16 SR-WD
16	1	55263	Load-holding valve	
17	2	55369	Cover for sealing	
18	1	26103	Pressure-gauge connect.	
19	1	26334	Connection	P-GEV 16 SR-WD
20	1	6390228	Pipe, jib up	
21	1	27088	Rubber bushing	
22	1	6300607	Spacer	
23	1	30652	Screw	M10 x 25

50/345

63 91 120
Internal ref. 63 91 130

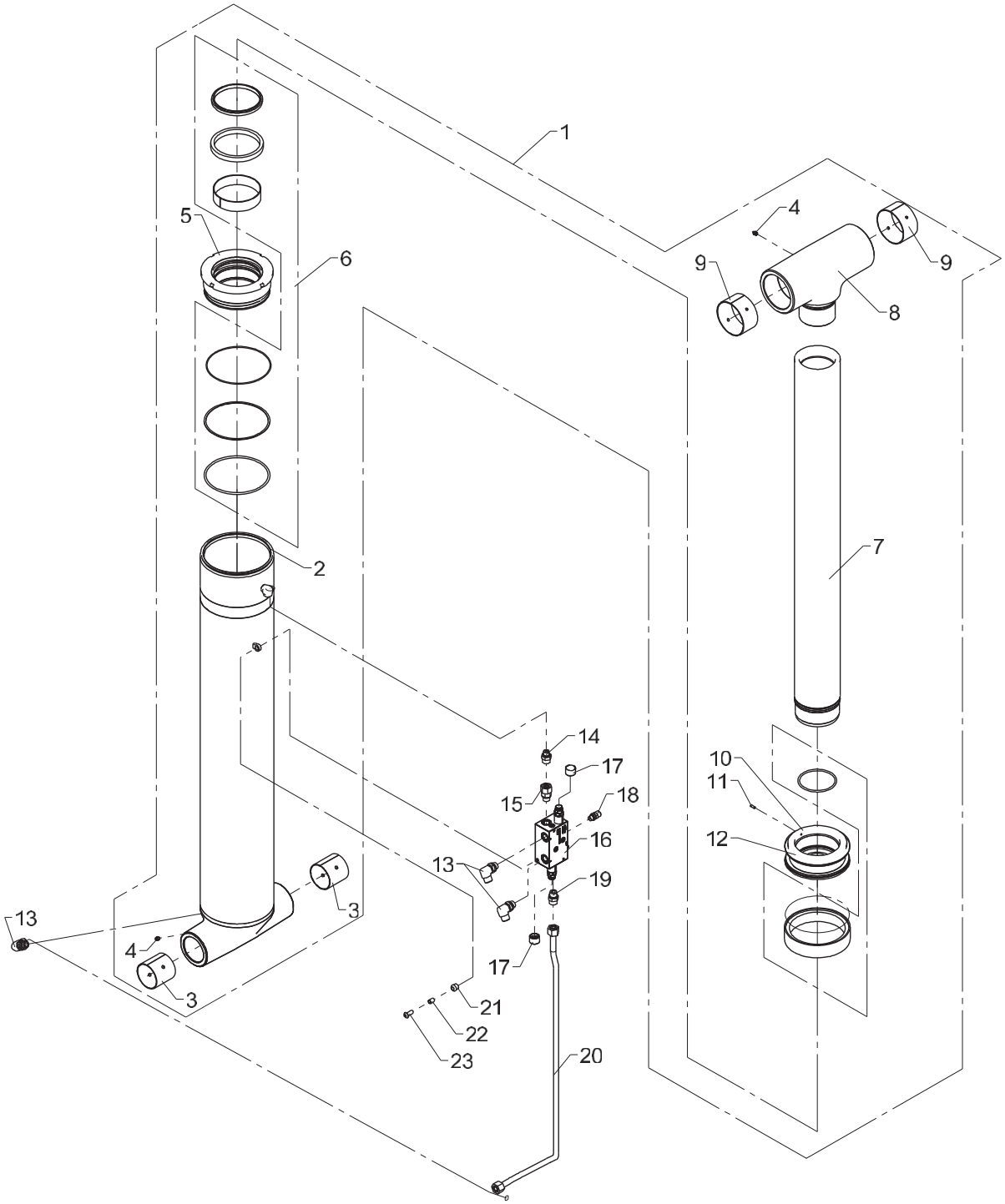

Jib cylinder C200-1167 with LHV

Pos	Qty.	Part no.	Description	Remarks
		6391130	Jib cyl. with LHV	
		6391120	Jib cylinder C200 - 1167	
1	1	6391120	Jib cylinder C200 - 1167	
2	1	6391121	Cylinder tube, ø200	
3	2	23329	Bushing	PM 8080 DX
4	2	31318	Lubricator	1/8" RG
5	1	6390225	Guide	
6	1	6894330	Seal kit, guide	
7	1	6390226	Piston rod	
8	1	6390227	Piston rod head, Ø200	
9	2	23384	Bushing	PM 11060 DX
10	1	6390237	Piston C200/140	
11	1	30562	Pointed screw, stainless	MPS6 x 16
12	1	6894500	Seal kit f. piston	
13	3	26893	Elbow connection	16 mm - 1/2"
14	1	26368	Straight connection	P-GEV 16 SR 3/8-WD
15	1	26339	Connection	EGESD 16 SR-WD
16	1	55263	Load-holding valve	
17	2	55369	Cover for sealing	
18	1	26103	Pressure-gauge connect.	
19	1	26334	Connection	P-GEV 16 SR-WD
20	1	6391128	Pipe, jib - up	
21	1	27088	Rubber bushing	
22	1	6300607	Spacer	
23	1	30652	Screw	M10 x 25

50/345

63 90 240
Internal ref. 63 90 120

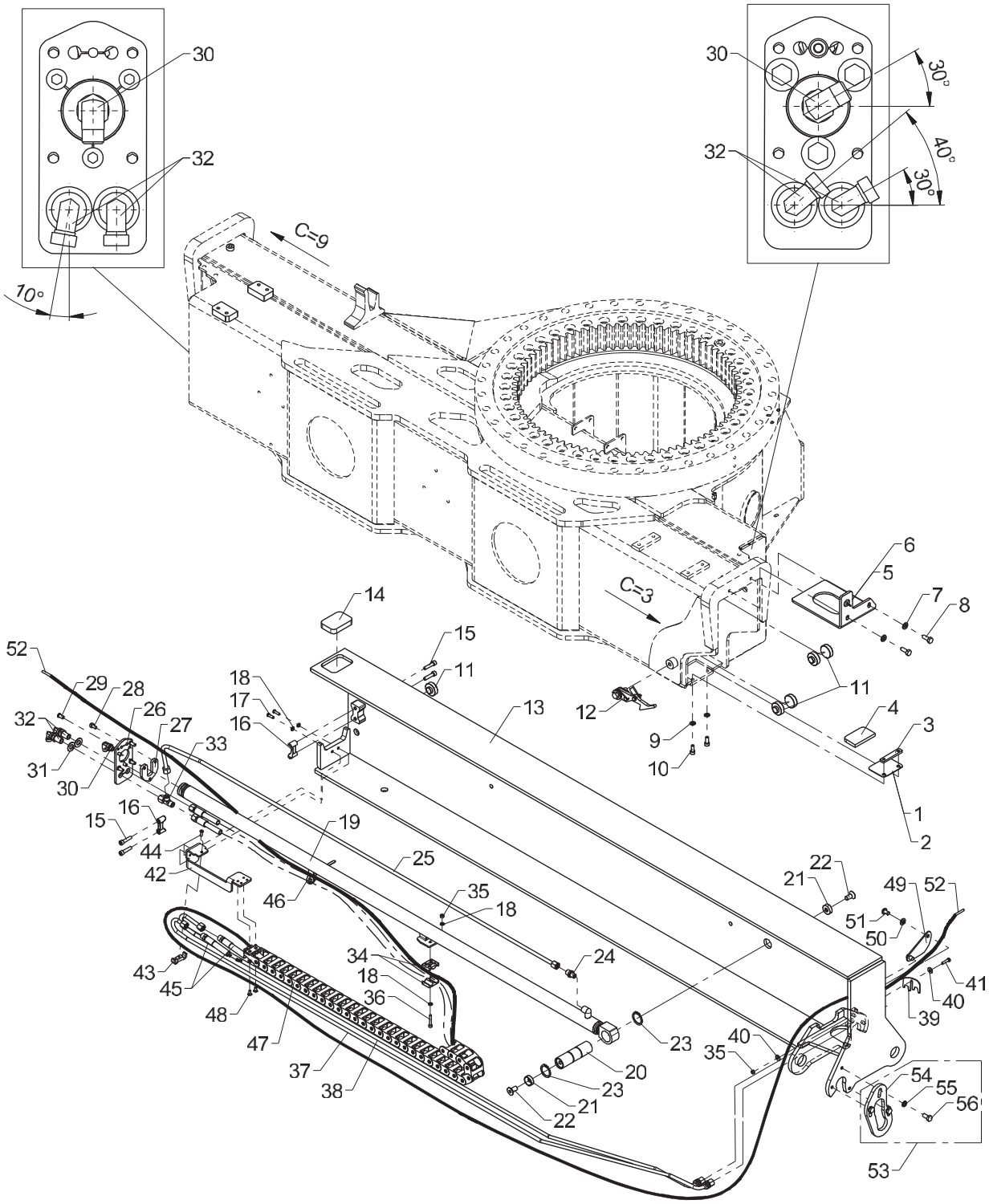

Obsolete

542 02 010

From loader 1150001
To loader

Stabilizer beam type S 1625

Created 16-08-2010
Modified 13-08-2012

Pos	Qty.	Part no.	Description	Remarks
1	1	6390108	Division plate, 1 mm	
2	1	6390105	Division plate, 2 mm	
3	1	6390109	Spacer	
4	1	63492	Slide block	
5	1	6390129	Spacer 6 mm	
6	1	6390128	Spacer 5 mm	
7	2	31565	Washer, stainless	10 mm
8	2	31513	Set screw, stainless	M10 x 25
9	2	31147	Face washer, 8 mm	
10	2	30438	Screw	MC8 x 20
11	6	63500	Guide 12 mm	
12	1	6306140	Safety lock	
13	1	6390091	Stabilizer beam	
14	1	63497	Slide block	
15	4	30444	Screw	MC8 x 35
16	2	63556	Guide	
17	2	32491	Round-head screw	M6 x 20
18	4	32302	Face washer, stainless	6 mm
19	1	6344210	Beam cylinder	
20	1	6390107	Pin	
21	2	6306241	Mounting plate	
22	2	30586	Countersunk screw	MK12 x 25
23	2	33117	Circlip	35U
24	1	25121	Connection	P-GEV 10 LR-WD
25	1	6390119	Pipe	
26	1	6390159	End plate	
27	1	6344098	Bracket	
28	3	32478	Screw	M8 x 16
29	8	32481	Screw	MCL8 x 16
30	1	26898	Elbow connection	8 mm - 1/4"
31	2	31195	Washer	14 mm
32	2	26894	Elbow connection	10mm - 90 gr.
33	1	26878	Connection	ELSD 10L
34	2	64408	Clamp	
35	2	30884	Lock nut, stainless	M6
36	1	30959	Screw	MC6 x 35
37	1	6390151	Pipe	
38	1	6390152	Pipe	
39	1	6306164	Bracket	
40	2	31134	Washer, stainless	
41	1	30114	Set screw, stainless	M6 x 25

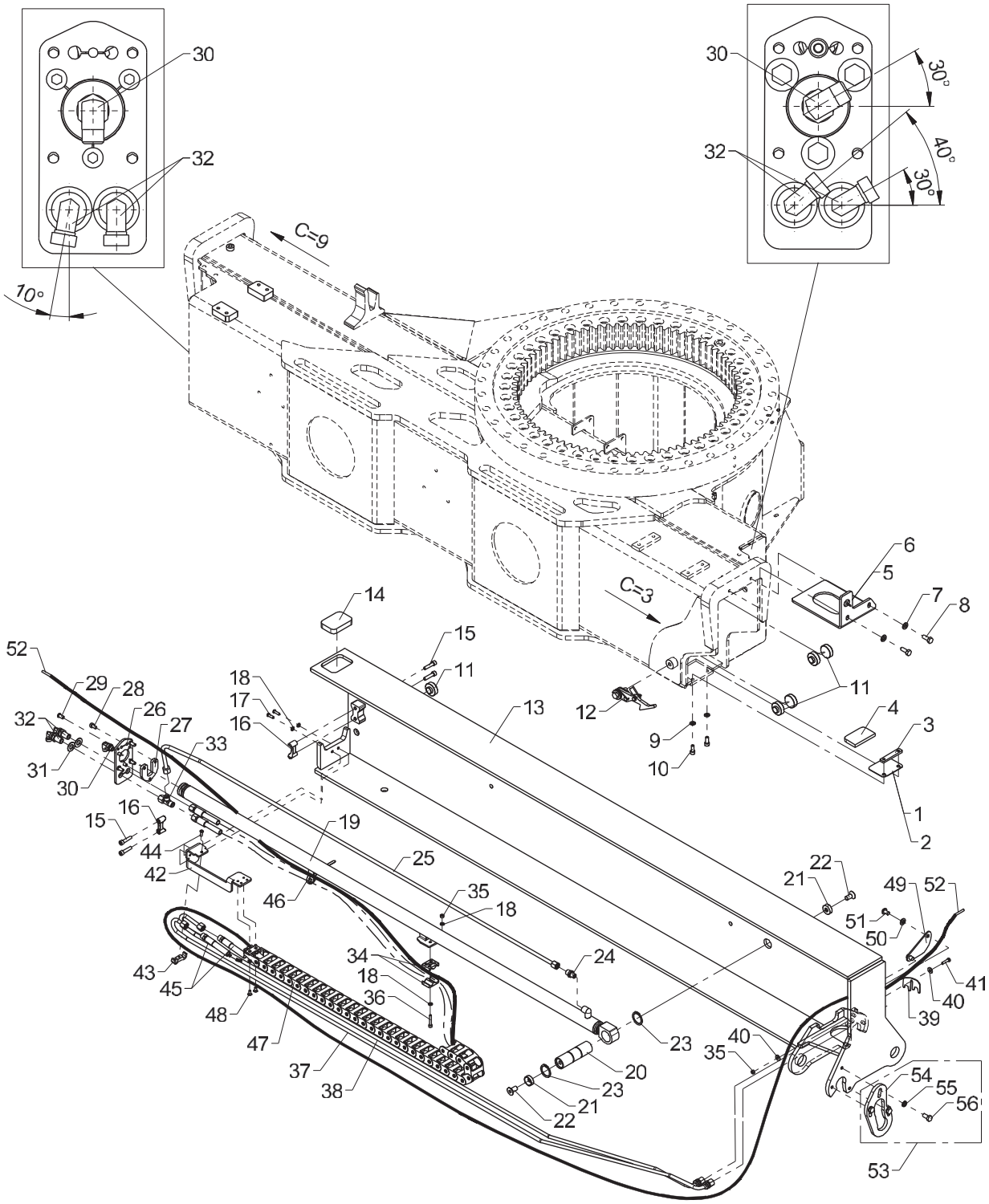
30
32
10°
30
32
30°
40°
30°
C=9
C=3
6
5
7
8
14
15
11
11
52
29
28
26
27
33
32
31
30
18
17
16
13
12
9
10
4
3
1
2
16
15
44
42
19
25
46
35
18
22
21
49
52
51
50
41
40
39
43
45
48
47
37
38
34
18
36
24
23
20
23
21
22
40
35
54
55
56
53

Obsolete

542 02 010

From loader 1150001
To loader

Stabilizer beam type S 1625

Created 16-08-2010
Modified 13-08-2012

Pos	Qty.	Part no.	Description	Remarks
42	1	6344096	Clamp	
43	1	6306097	Clamp	
44	1	32490	Screw	MCL6 x 16
45	2	56364	Hose	5/16" x 2300 mm L/S - 10
46	1	27275	Cable tie, black, 7.6x385mm	
47	1	28886	Nylon drag chain	
48	2	30542	Counter-sunk screw	MK6 x 12
49	1	6390262	Lock plate	
50	2	31177	Washer	10 mm
51	2	31081	Screw	M10 x 16
52	1	28249	Cable 2 x 0.75	
53	1	6390240	Parts for stab. cyl., type R	
54	1	6390106	Shim	
55	3	30933	Nordlock washer	
56	3	31517	Set screw, stainless	M10 x 20

50/345

63 90 240
Internal ref. 63 90 120

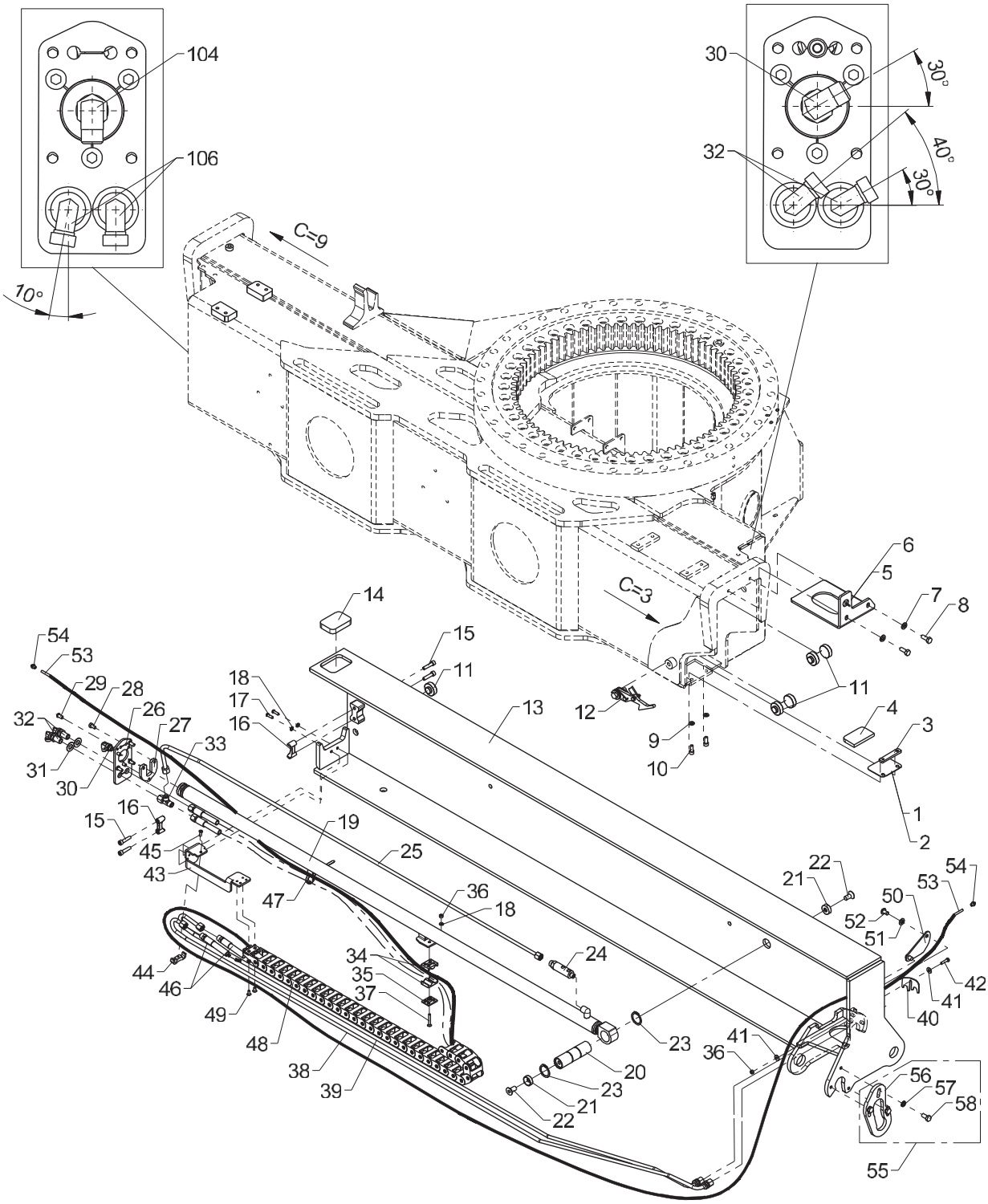

Stabilizer beam type S 1625

Pos	Qty.	Part no.	Description	Remarks
1	1	6390108	Division plate, 1 mm	
2	1	6390105	Division plate, 2 mm	
3	1	6390109	Spacer	
4	1	63492	Slide block	
5	1	6390129	Spacer 6 mm	
6	1	6390128	Spacer 5 mm	
7	2	31565	Washer, stainless	10 mm
8	2	31513	Set screw, stainless	M10 x 25
9	2	31147	Face washer, 8 mm	
10	2	30438	Screw	MC8 x 20
11	6	63500	Guide 12 mm	
12	1	6306140	Safety lock	
13	1	6390091	Stabilizer beam	
14	1	63497	Slide block	
15	4	30444	Screw	MC8 x 35
16	2	63556	Guide	
17	2	32491	Round-head screw	M6 x 20
18	3	32302	Face washer, stainless	6 mm
19	1	6344210	Beam cylinder	
20	1	6390107	Pin	
21	2	6306241	Mounting plate	
22	2	30586	Countersunk screw	MK12 x 25
23	2	33117	Circlip	35U
24	1	55294	Counter-balance valve	
25	1	6390195	Pipe	
26	1	6390159	End plate	
27	1	6344098	Bracket	
28	3	32478	Screw	M8 x 16
29	8	32481	Screw	MCL8 x 16
30	1	26898	Elbow connection	8 mm - 1/4"
31	2	31195	Washer	14 mm
32	2	26894	Elbow connection	10mm - 90 gr.
33	1	26878	Connection	ELSD 10L
34	2	64408	Clamp	
35	1	6344106	Welding plate	
36	2	30884	Lock nut, stainless	M6
37	1	32352	Countersunk screw	MK6 x 40
38	1	6390151	Pipe	
39	1	6390152	Pipe	
40	1	6306164	Bracket	
41	2	31134	Washer, stainless	

50/345

63 90 240
Internal ref. 63 90 120

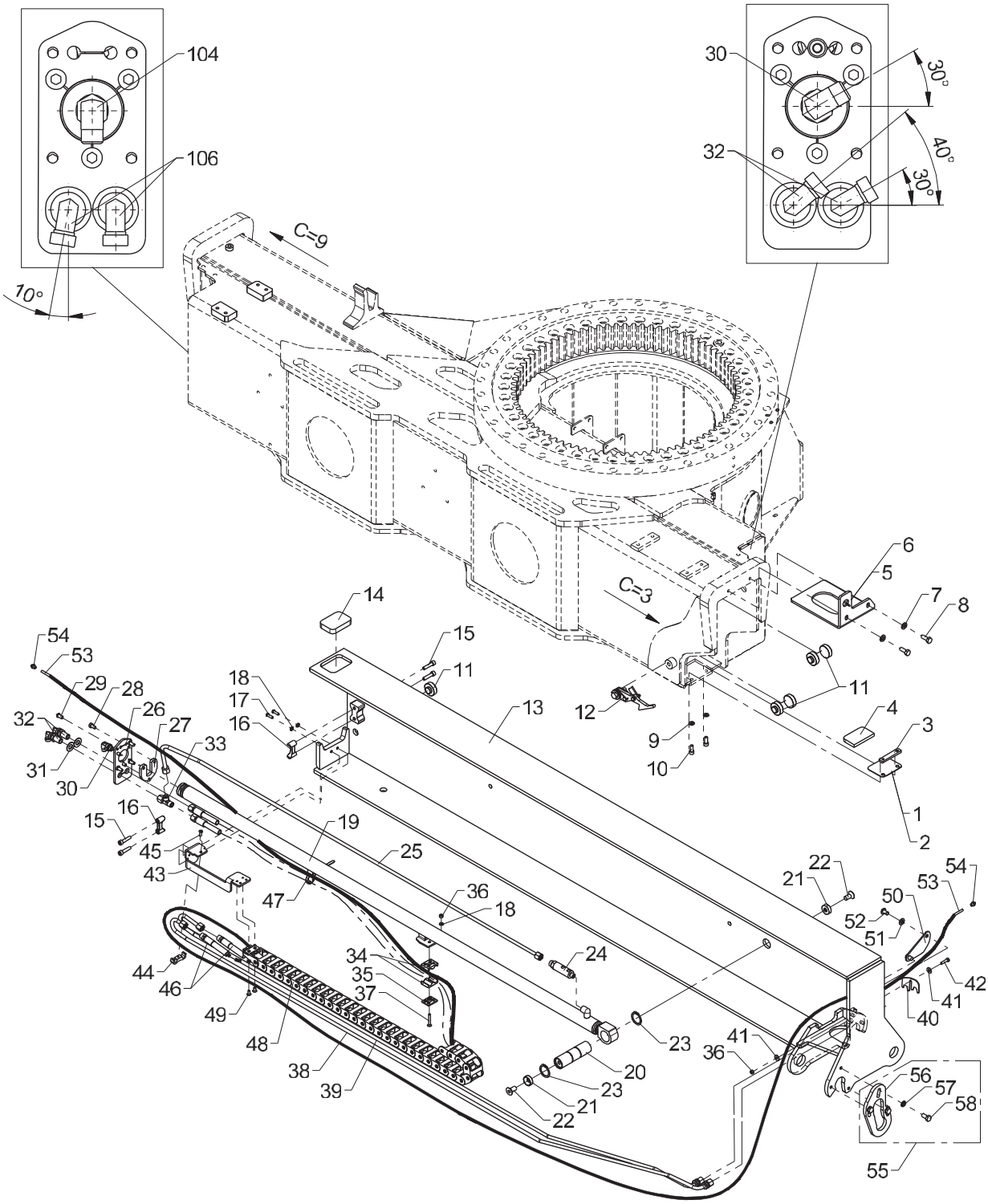

Stabilizer beam type S 1625

Pos	Qty.	Part no.	Description	Remarks
42	1	30114	Set screw, stainless	M6 x 25
43	1	6344096	Clamp	
44	1	6306097	Clamp	
45	1	32490	Screw	MCL6 x 16
46	2	56364	Hose	5/16" x 2300 mm L/S - 10
47	1	27275	Cable tie, black, 7.6x385mm	
48	1	28886	Nylon drag chain	
49	2	30542	Counter-sunk screw	MK6 x 12
50	1	6390262	Lock plate	
51	2	31177	Washer	10 mm
52	2	31081	Screw	M10 x 16
53	1	29436	Cable M8, socket and plug 6.3m	4 m
54	2	29437	Safety plug M8x1, socket	
55	1	6390240	Parts for stab. cyl., type R	
56	1	6390106	Shim	
57	3	30933	Nordlock washer	
58	3	31517	Set screw, stainless	M10 x 20

50/345

63 90 240
Internal ref. 63 90 130

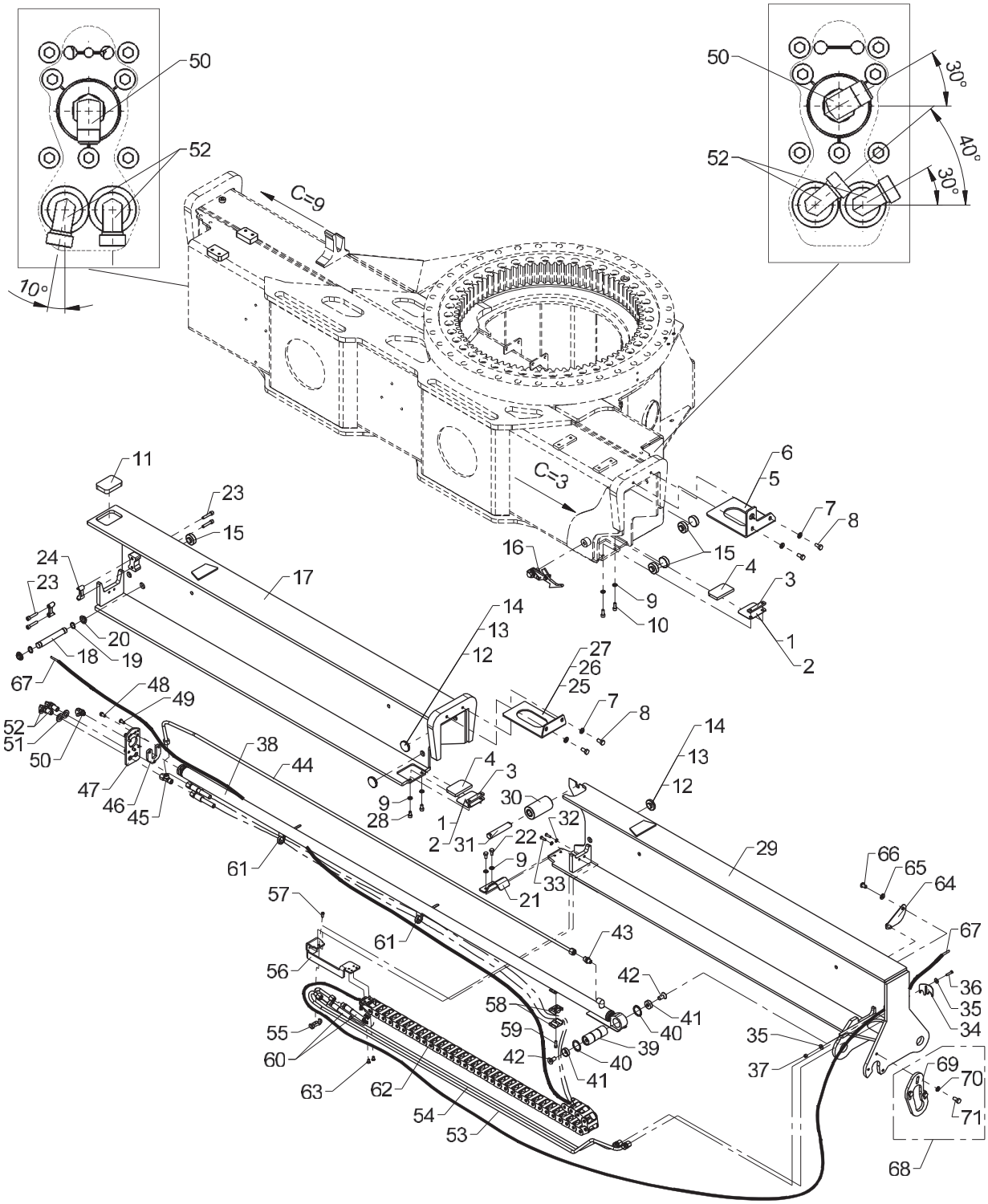

Obsolete

542 02 040

From loader 1150001
To loader

Stabilizer beam type D 2065

Created 16-08-2010
Modified 07-02-2012

Pos	Qty.	Part no.	Description	Remarks
1	2	6390108	Division plate, 1 mm	
2	2	6390105	Division plate, 2 mm	
3	2	6390109	Spacer	
4	2	63492	Slide block	
5	1	6390129	Spacer 6 mm	
6	1	6390128	Spacer 5 mm	
7	4	31565	Washer, stainless	10 mm
8	4	31517	Set screw, stainless	M10 x 20
9	6	31147	Face washer, 8 mm	8 mm
10	2	30438	Screw	MC8 x 20
11	1	63497	Slide block	
12	6	63494	Guide 6.5 mm	
13	4	63495	Guide 7.5 mm	3 mm
14	4	63496	Guide 8.5 mm	3 mm
15	6	63500	Guide 12 mm	
16	1	6306140	Safety lock	
17	1	6390111	Stabilizer beam I	
18	1	6390156	Pin	
19	2	33108	Circlip	20U
20	2	23423	Bushing	GFM 2023
21	1	6390155	Spring	
22	2	30131	Set screw, stainless	M8 x 16
23	4	30445	Sockethead screw	MC8 x 40
24	2	63556	Guide	
25	1	6390172	Spacer, 4 mm	
26	1	6390126	Spacer 5 mm	
27	1	6390127	Spacer 6 mm	
28	2	32415	Sockethead screw	MC8 x 14
29	1	6390131	Stabilizer beam II	
30	1	63493	Guide roller	
31	1	6390146	Pin	
32	2	32302	Face washer, stainless	6 mm
33	2	32491	Round-head screw	M6 x 20
34	1	6306164	Bracket	
35	2	31134	Washer, stainless	
36	1	30114	Set screw, stainless	M6 x 25
37	1	30884	Lock nut, stainless	M6
38	1	6344220	Beam cylinder	
39	1	6390147	Pin	
40	2	33117	Circlip	35U
41	2	6306241	Mounting plate	

50/345

63 90 240
Internal ref. 63 90 130

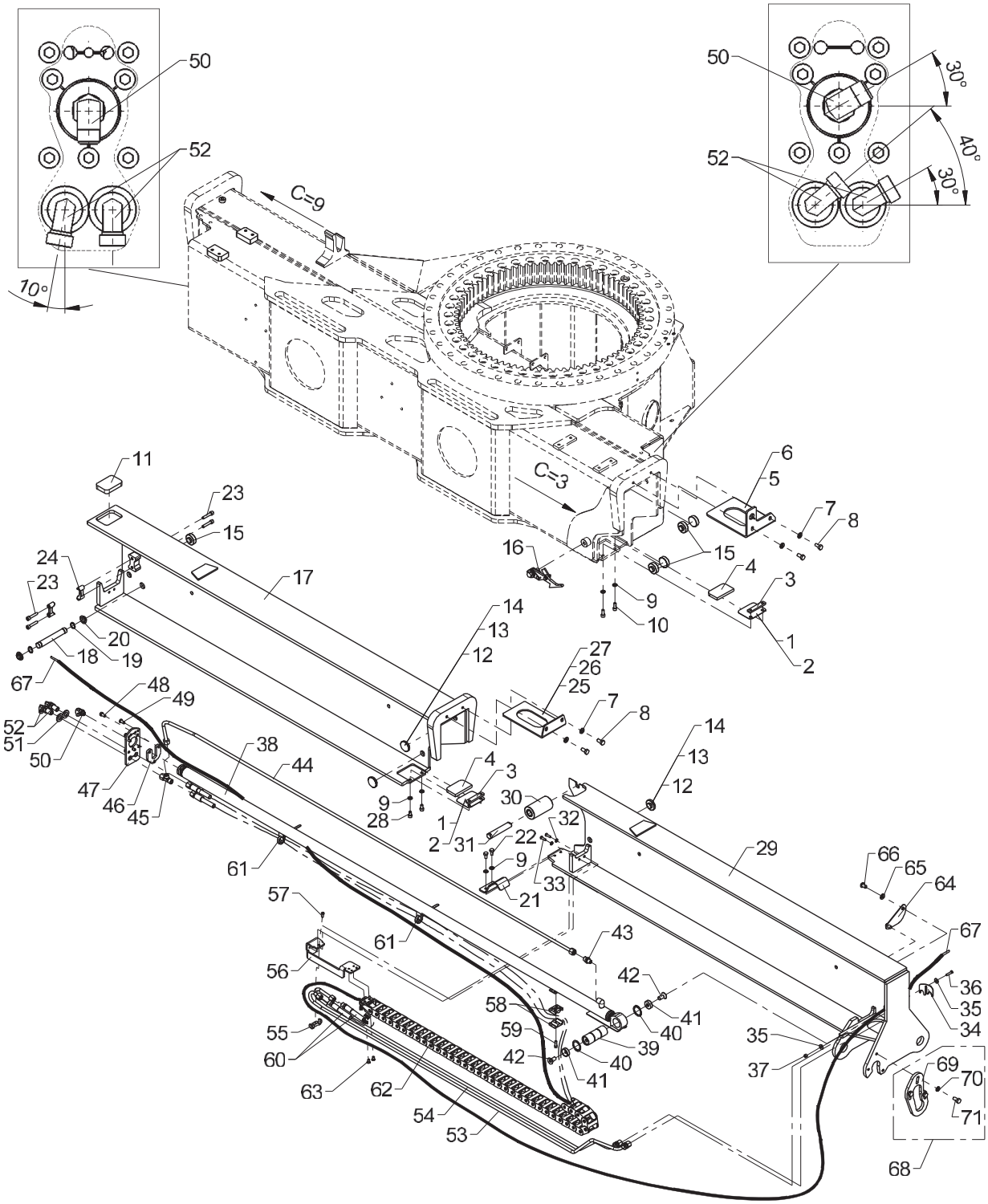

Obsolete

542 02 040

From loader 1150001
To loader

Stabilizer beam type D 2065

Created 16-08-2010
Modified 07-02-2012

Pos	Qty.	Part no.	Description	Remarks
42	2	30586	Countersunk screw	MK12 x 25
43	1	25121	Connection	P-GEV 10 LR-WD
44	1	6390149	Pipe	
45	1	26878	Connection	ELSD 10L
46	1	6344098	Bracket	
47	1	6390159	End plate	
48	3	32478	Screw	M8 x 16
49	8	32481	Screw	MCL8 x 16
50	1	26898	Elbow connection	8 mm - 1/4"
51	2	31135	Washer	16 mm
52	2	26894	Elbow connection	10mm - 90 gr.
53	1	6390153	Pipe	
54	1	6390154	Pipe	
55	1	6306097	Clamp	
56	1	6344096	Clamp	
57	1	32490	Screw	MCL6 x 16
58	2	64408	Clamp	
59	1	30427	Screw	MC6 x 20
60	2	56365	Hose	5/16" x 3340 mm L/S - 10
61	2	27275	Cable tie, black, 7.6x385mm	
62	1	28887	Nylon drag chain	
63	2	30542	Counter-sunk screw	MK6 x 12
64	1	6390262	Lock plate	
65	2	31177	Washer	10 mm
66	2	31081	Screw	M10 x 16
67	1	28249	Cable 2 x 0.75	
68	1	6390240	Parts for stab. cyl., type R	
69	1	6390106	Shim	
70	3	30933	Nordlock washer	
71	3	31517	Set screw, stainless	M10 x 20

50/345

63 90 240
Internal ref. 63 90 130

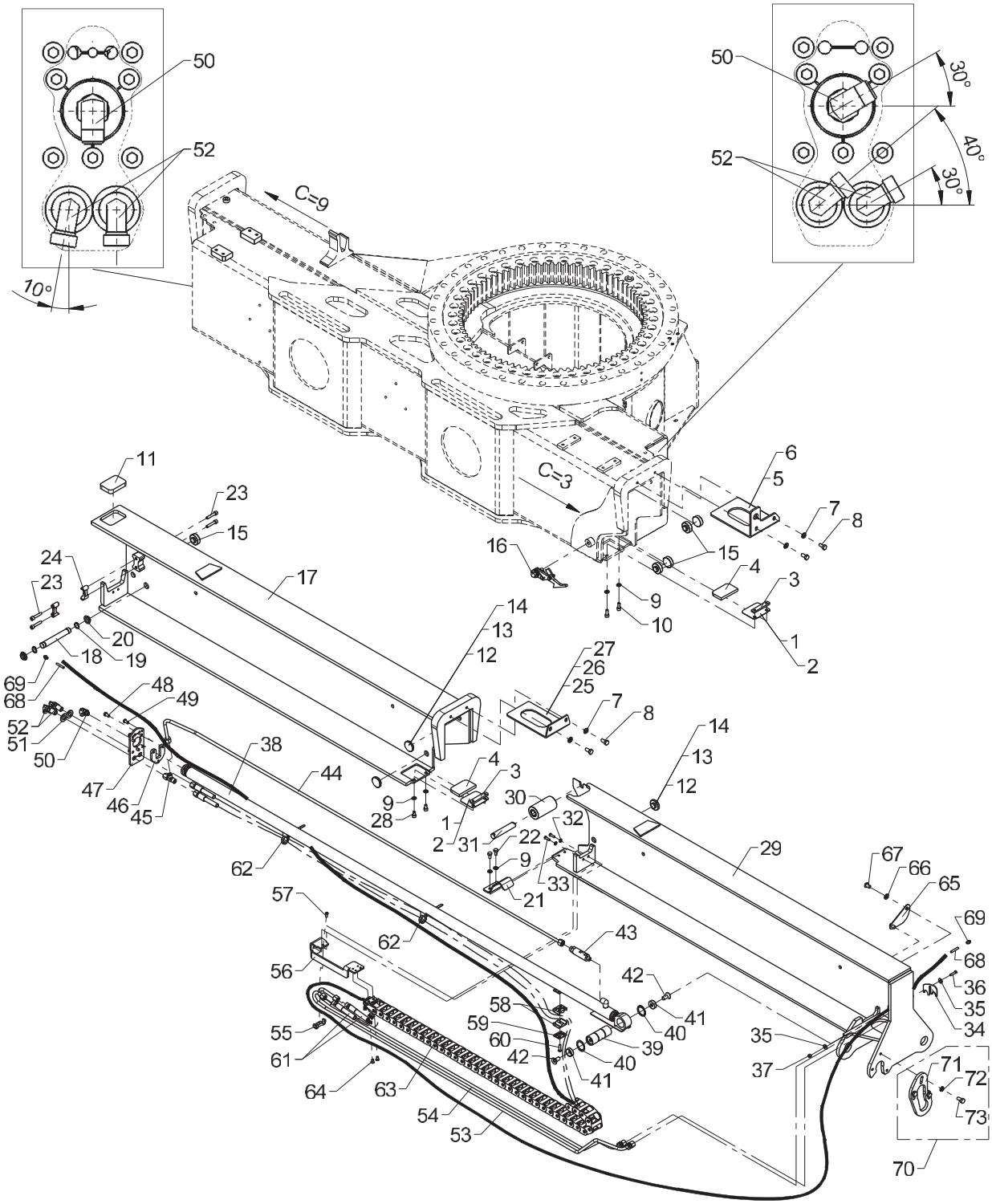

Stabilizer beam type D 2065

Pos	Qty.	Part no.	Description	Remarks
1	2	6390108	Division plate, 1 mm	
2	2	6390105	Division plate, 2 mm	
3	2	6390109	Spacer	
4	2	63492	Slide block	
5	1	6390129	Spacer 6 mm	
6	1	6390128	Spacer 5 mm	
7	4	31565	Washer, stainless	10 mm
8	4	31517	Set screw, stainless	M10 x 20
9	6	31147	Face washer, 8 mm	8 mm
10	2	30438	Screw	MC8 x 20
11	1	63497	Slide block	
12	6	63494	Guide 6.5 mm	
13	4	63495	Guide 7.5 mm	3 mm
14	4	63496	Guide 8.5 mm	3 mm
15	6	63500	Guide 12 mm	
16	1	6306140	Safety lock	
17	1	6390111	Stabilizer beam I	
18	1	6390156	Pin	
19	2	33108	Circlip	20U
20	2	23423	Bushing	GFM 2023
21	1	6390155	Spring	
22	2	30131	Set screw, stainless	M8 x 16
23	4	30445	Sockethead screw	MC8 x 40
24	2	63556	Guide	
25	1	6390172	Spacer, 4 mm	
26	1	6390126	Spacer 5 mm	
27	1	6390127	Spacer 6 mm	
28	2	32415	Sockethead screw	MC8 x 14
29	1	6390131	Stabilizer beam II	
30	1	63493	Guide roller	
31	1	6390146	Pin	
32	2	32302	Face washer, stainless	6 mm
33	2	32491	Round-head screw	M6 x 20
34	1	6306164	Bracket	
35	2	31134	Washer, stainless	
36	1	30114	Set screw, stainless	M6 x 25
37	1	30884	Lock nut, stainless	M6
38	1	6344220	Beam cylinder	
39	1	6390147	Pin	
40	2	33117	Circlip	35U
41	2	6306241	Mounting plate	

50/345

63 90 240
Internal ref. 63 90 130

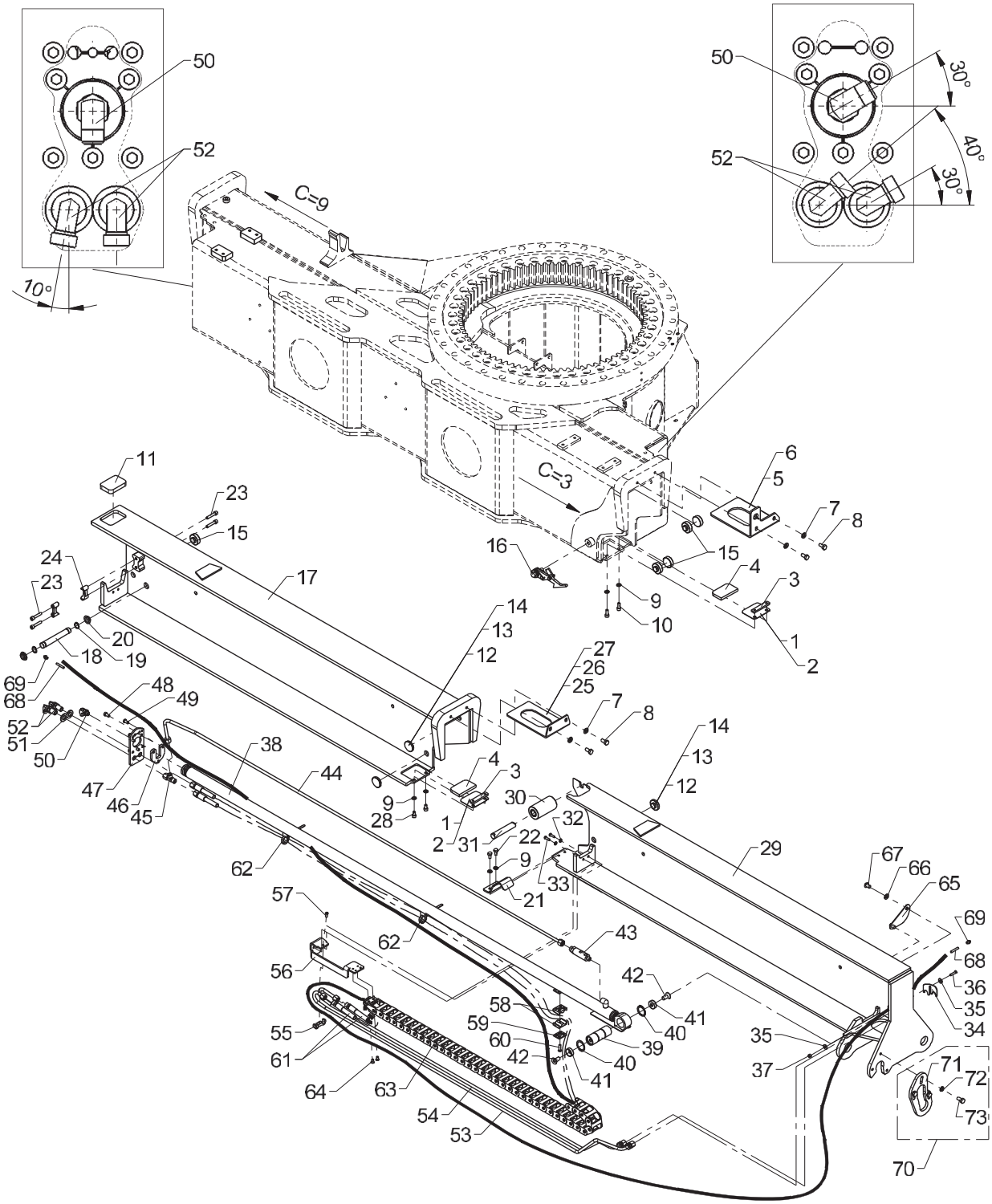

Stabilizer beam type D 2065

Pos	Qty.	Part no.	Description	Remarks
42	2	30586	Countersunk screw	MK12 x 25
43	1	55294	Counter-balance valve	
44	1	6390196	Pipe	
45	1	26878	Connection	ELSD 10L
46	1	6344098	Bracket	
47	1	6390159	End plate	
48	3	32478	Screw	M8 x 16
49	8	32481	Screw	MCL8 x 16
50	1	26898	Elbow connection	8 mm - 1/4"
51	2	31135	Washer	16 mm
52	2	26894	Elbow connection	10mm - 90 gr.
53	1	6390153	Pipe	
54	1	6390154	Pipe	
55	1	6306097	Clamp	
56	1	6344096	Clamp	
57	1	32490	Screw	MCL6 x 16
58	2	64408	Clamp	
59	1	6344106	Welding plate	
60	1	32261	Countersunk screw	MK6 x 25
61	2	56365	Hose	5/16" x 3340 mm L/S - 10
62	2	27275	Cable tie, black, 7.6x385mm	
63	1	28887	Nylon drag chain	
64	2	30542	Counter-sunk screw	MK6 x 12
65	1	6390262	Lock plate	
66	2	31177	Washer	10 mm
67	2	31081	Screw	M10 x 16
68	1	29436	Cable M8, socket and plug 6.3m	4 m
69	2	29437	Safety plug M8x1, socket	
70	1	6390240	Parts for stab. cyl., type R	
71	1	6390106	Shim	
72	3	30933	Nordlock washer	
73	3	31517	Set screw, stainless	M10 x 20

50/345

63 90 240
Internal ref. 63 90 140

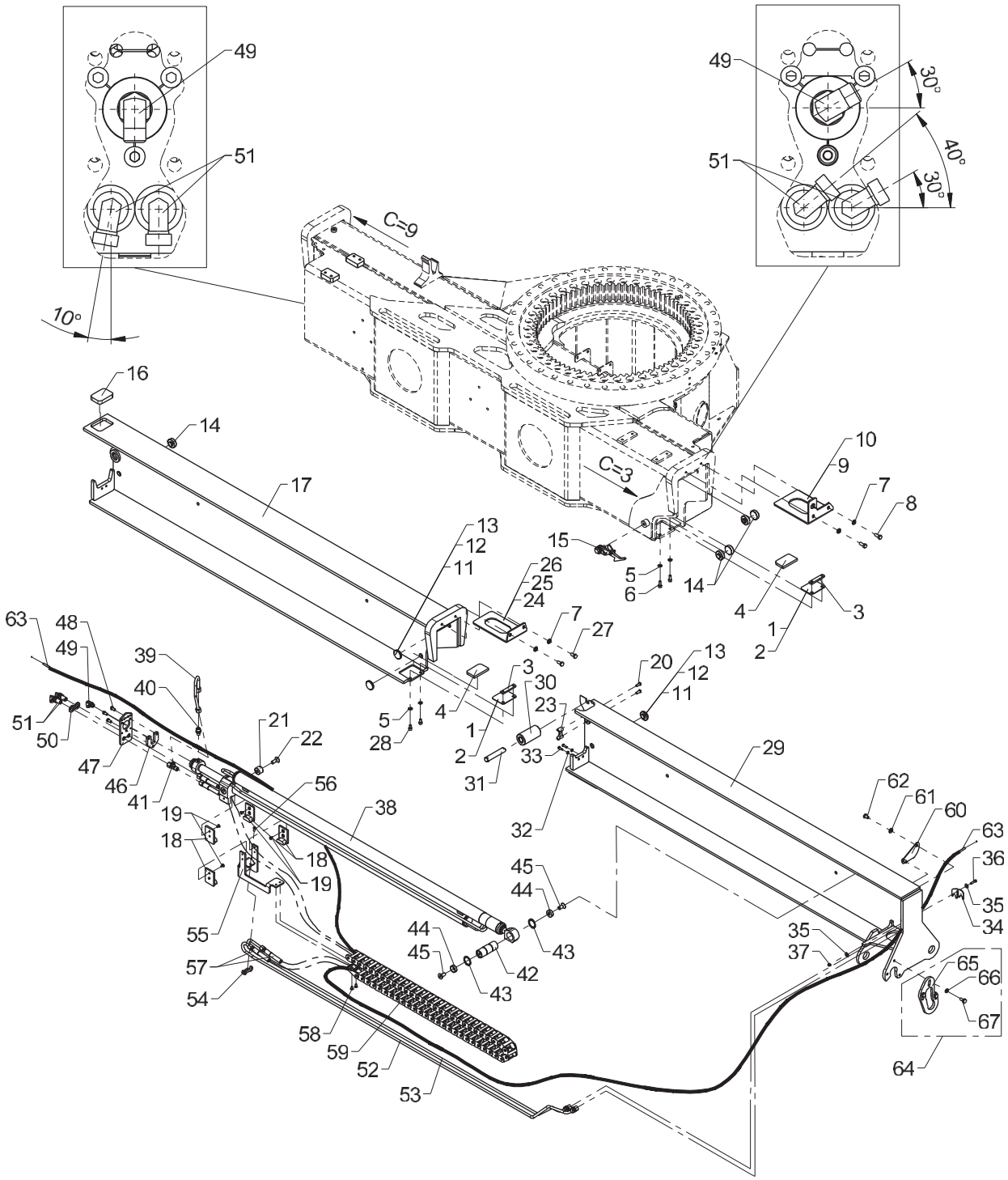

Obsolete

542 02 050

From loader 1150001
To loader

Stabilizer beam type D 2735

Created 16-08-2010
Modified 16-02-2012

Pos	Qty.	Part no.	Description	Remarks
1	2	6390108	Division plate, 1 mm	
2	2	6390105	Division plate, 2 mm	
3	2	6390109	Spacer	
4	2	63492	Slide block	
5	4	31147	Face washer, 8 mm	
6	2	30438	Screw	MC8 x 20
7	4	31565	Washer, stainless	10 mm
8	2	31513	Set screw, stainless	M10 x 25
9	1	6390129	Spacer 6 mm	
10	1	6390128	Spacer 5 mm	
11	6	63494	Guide 6.5 mm	
12	4	63495	Guide 7.5 mm	3 mm
13	4	63496	Guide 8.5 mm	3 mm
14	6	63500	Guide 12 mm	
15	1	6306140	Safety lock	
16	1	63497	Slide block	
17	1	6390121	Stabilizer beam I	
18	4	63743	Guide	
19	6	30568	Countersunk screw	MK6 x 10
20	4	32486	Screw	MCL8 x 20
21	2	6390524	Mounting plate	
22	2	30539	Countersunk screw	MK12 x 30
23	2	63556	Guide	
24	1	6390172	Spacer, 4 mm	
25	1	6390126	Spacer 5 mm	
26	1	6390127	Spacer 6 mm	
27	2	31517	Set screw, stainless	M10 x 20
28	2	32415	Sockethead screw	MC8 x 14
29	1	6390141	Stabilizer beam II	
30	1	63493	Guide roller	
31	1	6390146	Pin	
32	2	32302	Face washer, stainless	6 mm
33	2	32491	Round-head screw	M6 x 20
34	1	6306164	Bracket	
35	2	31134	Washer, stainless	
36	1	30114	Set screw, stainless	M6 x 25
37	1	30884	Lock nut, stainless	M6
38	1	6390500	Extension cylinder assembly	
39	1	6390523	Pipe	
40	1	25121	Connection	P-GEV 10 LR-WD
41	1	26878	Connection	ELSD 10L

50/345

63 90 240
Internal ref. 63 90 140

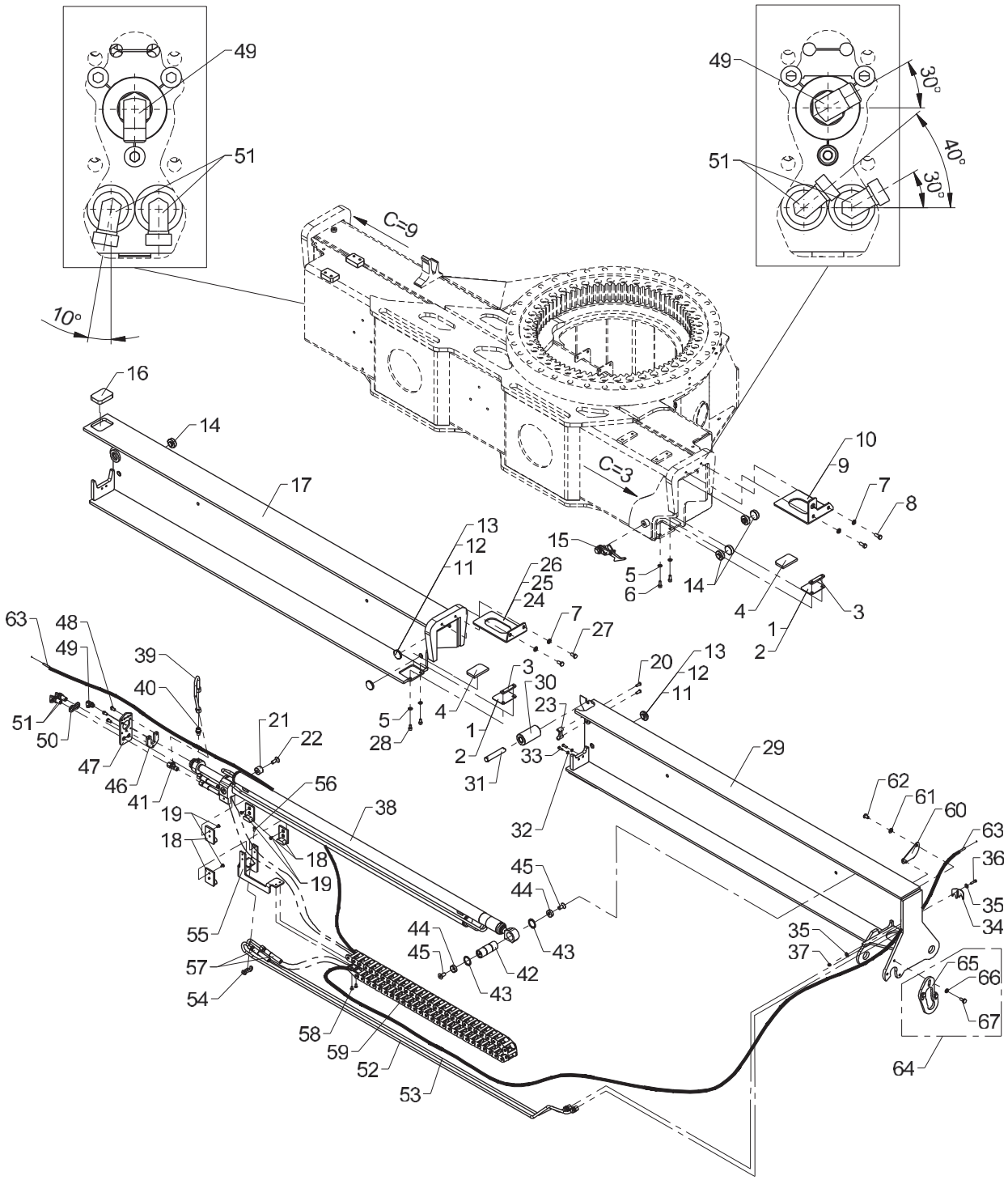

Obsolete

542 02 050

From loader 1150001
To loader

Stabilizer beam type D 2735

Created 16-08-2010
Modified 16-02-2012

Pos	Qty.	Part no.	Description	Remarks
42	1	6390147	Pin	
43	2	33117	Circlip	35U
44	2	6306241	Mounting plate	
45	2	30586	Countersunk screw	MK12 x 25
46	1	6344098	Bracket	
47	1	6390159	End plate	
48	3	32478	Screw	M8 x 16
49	1	26898	Elbow connection	8 mm - 1/4"
50	2	31135	Washer	16 mm
51	2	26894	Elbow connection	10mm - 90 gr.
52	1	6390525	Pipe	
53	1	6390526	Pipe	
54	1	6306097	Clamp	
55	1	6390157	Clamp	
56	1	32490	Screw	MCL6 x 16
57	2	56555	Hose	5/16" x 3540 mm L/S - 10
58	2	30542	Counter-sunk screw	MK6 x 12
59	1	29524	Nylon drag chain (94 links)	
60	1	6390262	Lock plate	
61	2	31177	Washer	10 mm
62	2	31081	Screw	M10 x 16
63	1	28249	Cable 2 x 0.75	4 m
64	1	6390240	Parts for stab. cyl., type R	
65	1	6390106	Shim	
66	3	30933	Nordlock washer	10 mm
67	3	31517	Set screw, stainless	M10 x 20

50/345

63 90 240
Internal ref. 63 90 140

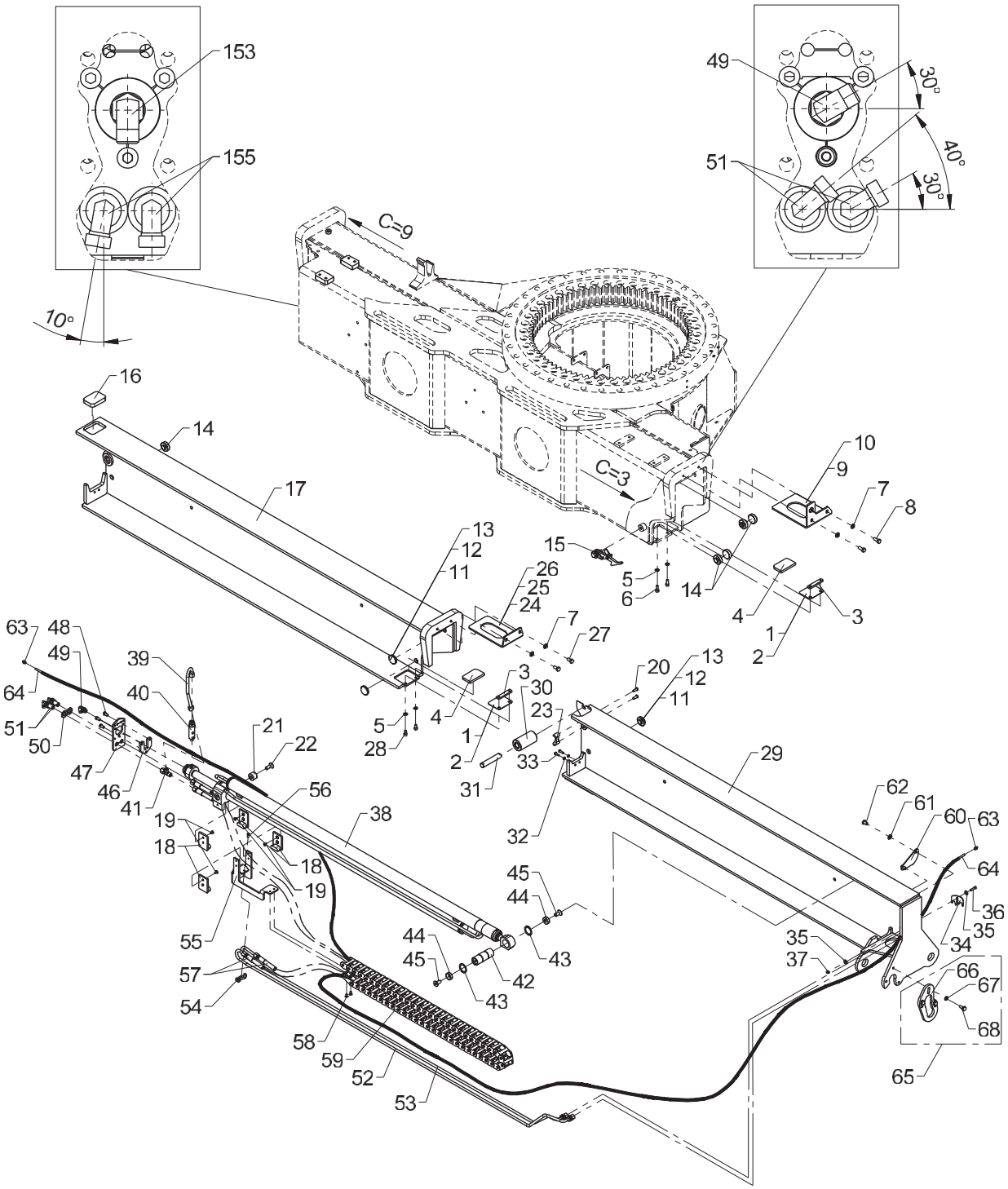

Stabilizer beam type D 2735

Pos	Qty.	Part no.	Description	Remarks
1	2	6390108	Division plate, 1 mm	
2	2	6390105	Division plate, 2 mm	
3	2	6390109	Spacer	
4	2	63492	Slide block	
5	4	31147	Face washer, 8 mm	
6	2	30438	Screw	MC8 x 20
7	4	31565	Washer, stainless	10 mm
8	2	31513	Set screw, stainless	M10 x 25
9	1	6390129	Spacer 6 mm	
10	1	6390128	Spacer 5 mm	
11	6	63494	Guide 6.5 mm	
12	4	63495	Guide 7.5 mm	3 mm
13	4	63496	Guide 8.5 mm	3 mm
14	6	63500	Guide 12 mm	
15	1	6306140	Safety lock	
16	1	63497	Slide block	
17	1	6390121	Stabilizer beam I	
18	4	63743	Guide	
19	6	30568	Countersunk screw	MK6 x 10
20	4	32486	Screw	MCL8 x 20
21	2	6390524	Mounting plate	
22	2	30539	Countersunk screw	MK12 x 30
23	2	63556	Guide	
24	1	6390172	Spacer, 4 mm	
25	1	6390126	Spacer 5 mm	
26	1	6390127	Spacer 6 mm	
27	2	31517	Set screw, stainless	M10 x 20
28	2	32415	Sockethead screw	MC8 x 14
29	1	6390141	Stabilizer beam II	
30	1	63493	Guide roller	
31	1	6390146	Pin	
32	2	32302	Face washer, stainless	6 mm
33	2	32491	Round-head screw	M6 x 20
34	1	6306164	Bracket	
35	2	31134	Washer, stainless	
36	1	30114	Set screw, stainless	M6 x 25
37	1	30884	Lock nut, stainless	M6
38	1	6390500	Extension cylinder assembly	
39	1	6390527	Pipe	
40	1	55294	Counter-balance valve	
41	1	26878	Connection	ELSD 10L

50/345

63 90 240
Internal ref. 63 90 140

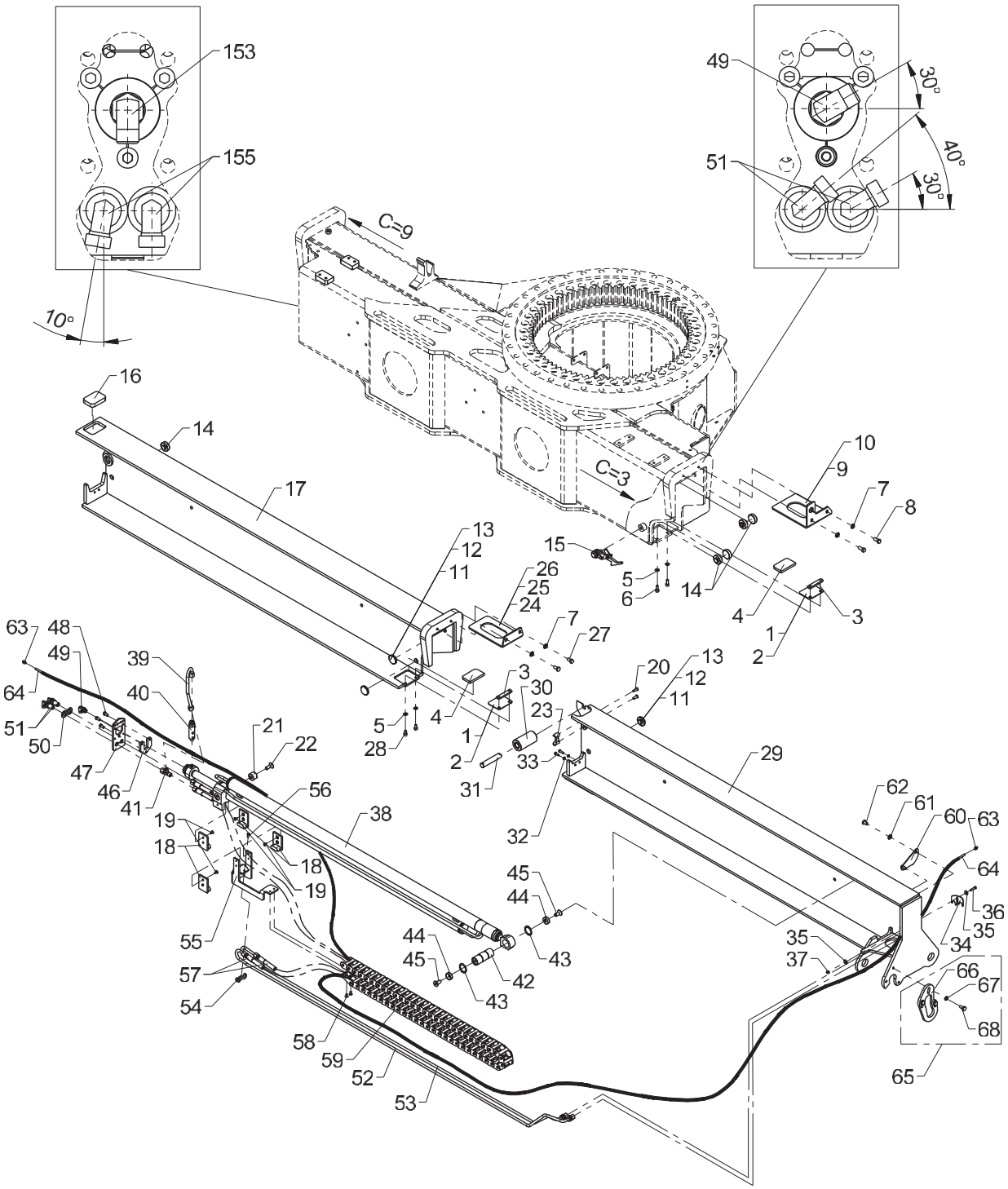

Stabilizer beam type D 2735

Pos	Qty.	Part no.	Description	Remarks
42	1	6390147	Pin	
43	2	33117	Circlip	35U
44	2	6306241	Mounting plate	
45	2	30586	Countersunk screw	MK12 x 25
46	1	6344098	Bracket	
47	1	6390159	End plate	
48	3	32478	Screw	M8 x 16
49	1	26898	Elbow connection	8 mm - 1/4"
50	2	31135	Washer	16 mm
51	2	26894	Elbow connection	10mm - 90 gr.
52	1	6390525	Pipe	
53	1	6390526	Pipe	
54	1	6306097	Clamp	
55	1	6390157	Clamp	
56	1	32490	Screw	MCL6 x 16
57	2	56555	Hose	5/16" x 3540 mm L/S - 10
58	2	30542	Counter-sunk screw	MK6 x 12
59	1	29524	Nylon drag chain (94 links)	
60	1	6390262	Lock plate	
61	2	31177	Washer	10 mm
62	2	31081	Screw	M10 x 16
63	2	29437	Safety plug M8x1, socket	
64	1	29436	Cable M8, socket and plug 6.3m	4 m
65	1	6390240	Parts for stab. cyl., type R	
66	1	6390106	Shim	
67	3	30933	Nordlock washer	10 mm
68	3	31517	Set screw, stainless	M10 x 20

50/345

Internal ref. 63 94 140

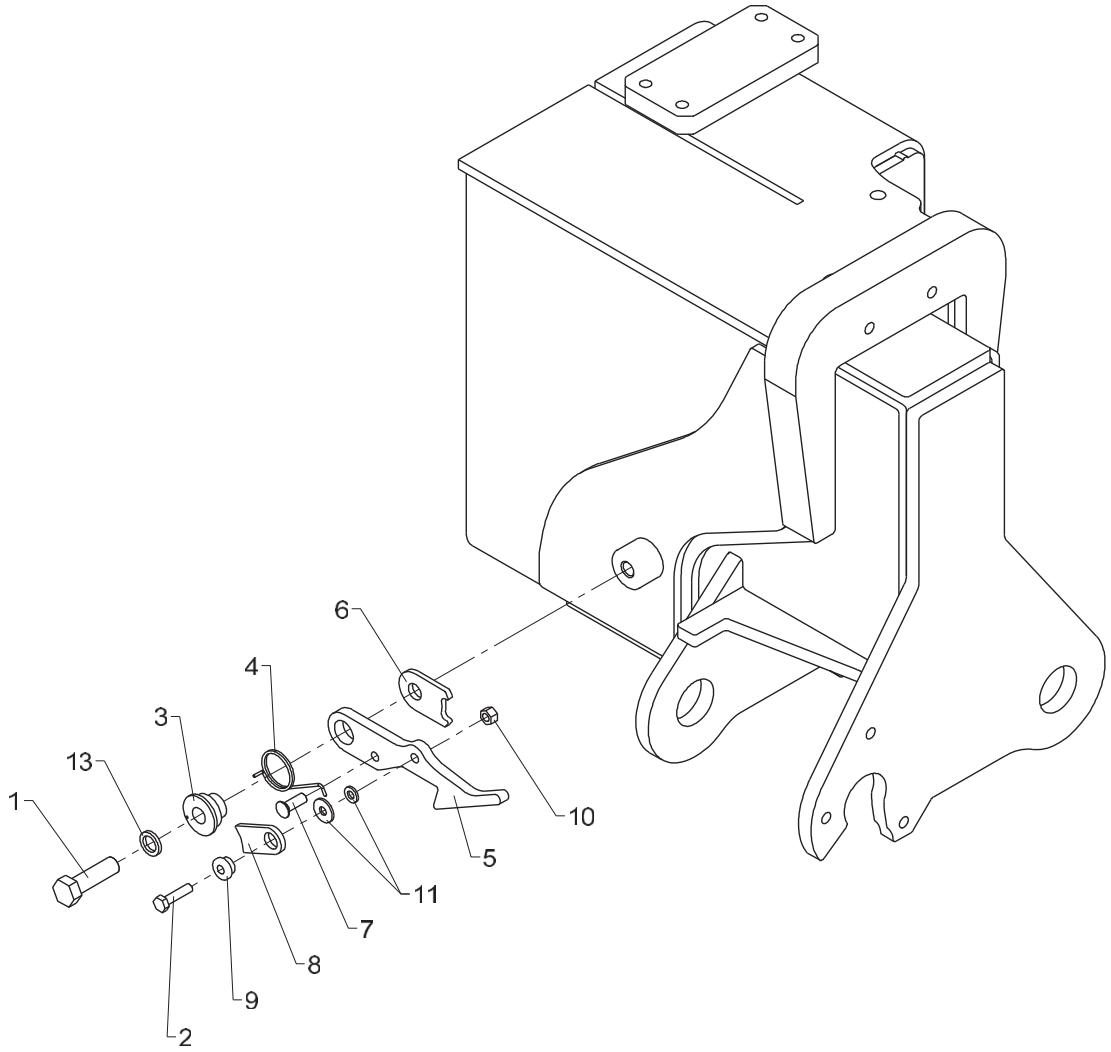

Stabilizer safety lock

Pos	Qty.	Part no.	Description	Remarks
1	1	30179	Set screw	M12 x 40
2	1	30114	Set screw, stainless	M6 x 25
3	1	6245264	Bushing	
4	1	33473	Spring	6179044
5	1	6245244	Hook	
6	1	6236044	Plate	
7	1	31290	Spike, galvanized	7 x 20
8	1	6236054	Click	
9	1	63440	Washer	
10	1	30884	Lock nut, stainless	M6
11	1	31154	Spring washer, stainless	6 mm
12	1	31134	Washer, stainless	
13	1	31576	Spring washer, stainless	12 mm

50/345

63 95 310
Internal ref. 63 91 810

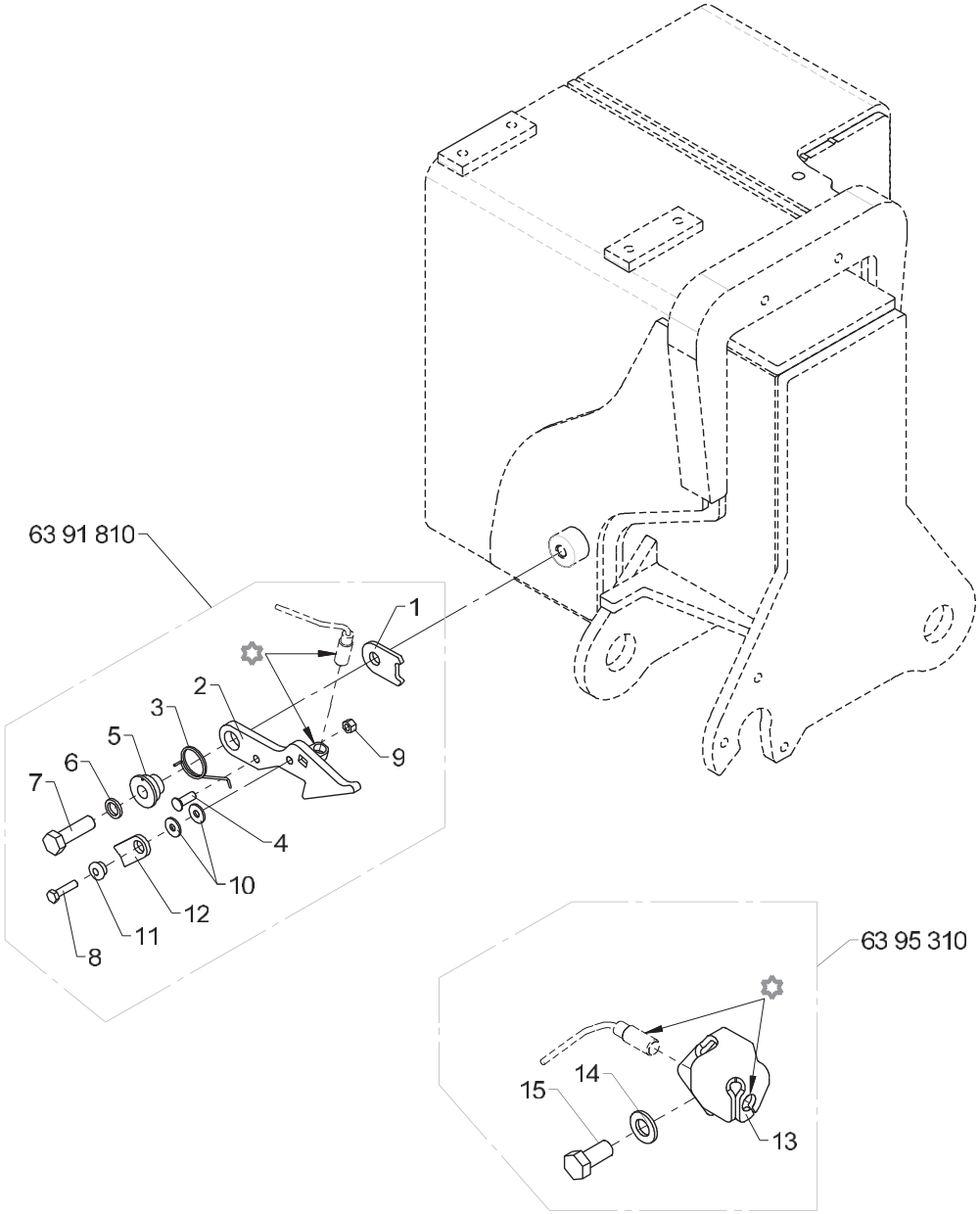

Loctite 243

Safety lock (CE)

Pos	Qty.	Part no.	Description	Remarks
		6391810		
		6395310		
1	1	6236044	Plate	
2	1	6390374	Latch	
3	1	33473	Spring	6179044
4	1	31290	Spike, galvanized	7 x 20
5	1	6245264	Bushing	
6	1	31576	Spring washer, stainless	12 mm
7	1	30179	Set screw	M12 x 40
8	1	30114	Set screw, stainless	M6 x 25
9	1	30884	Lock nut, stainless	M6
10	2	31134	Washer, stainless	
11	1	63440	Washer	
12	1	6236054	Click	
13	1	6395311	Bracket for sensor, BEW	
14	1	32338	Washer	12 mm
15	1	30176	Set screw	M12 x 25

50/345

63 90 260
Internal ref. 63 90 250

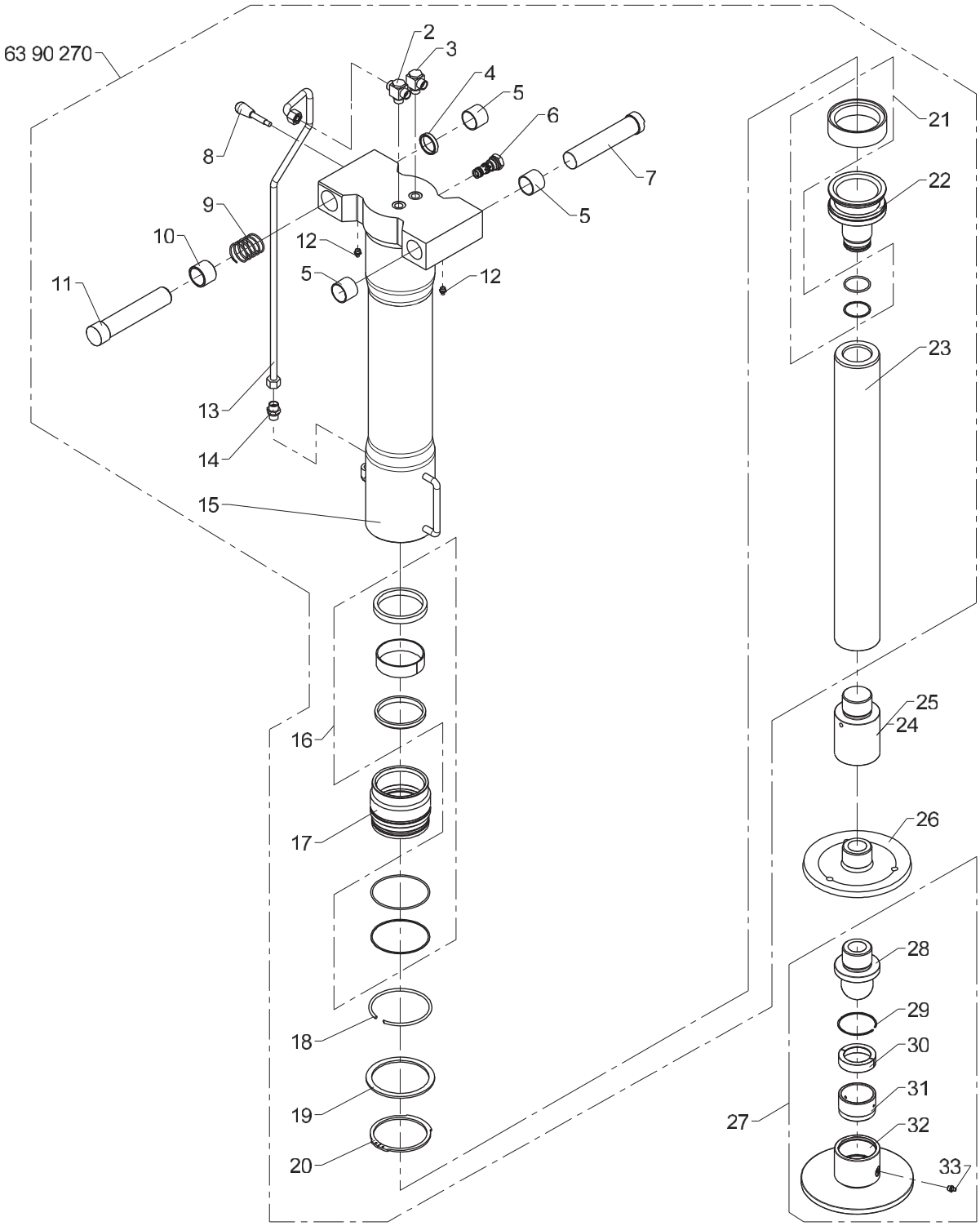

Obsolete

542 02 200

From loader 1150001
To loader 1150112

Created 25-11-2010
Modified 18-04-2013

Stabilizer cylinder, C110-550

Pos	Qty.	Part no.	Description	Remarks
1	1	6390270	Parts for stab. cyl., C110-550	
2	1	26877	T banjo union	RSTS 12 LR
3	1	25130	Banjo connection	RSWV 12 LR
4	1	6390258	Distance ring	
5	3	23408	Composite bearing	ø35/39 x 30
6	1	58496	Cartridge	
7	1	6390256	Pin	
8	1	64352	Lever with knob	
9	1	33495	Compression spring	
10	1	6390257	Bushing	
11	1	6390255	Pin	
12	2	31318	Lubricator	1/8" RG
13	1	6390268	Pipe	
14	1	25127	Connection	P-GEV 12 LR-WD
15	1	6390251	Cylinder tube	
16	1	6894360	Seal kit, guide	
17	1	6390254	Guide	
18	1	33494	Lock ring	
19	1	6390259	Back ring	
20	1	33147	Circlip	107U
21	1	6894350	Seal kit, piston	
22	1	6194343	Piston	
23	1	6300851	Piston rod	
24	1	6392852	Extension 100 mm	100mm.
25	1	6392853	Extension 160 mm	160mm.
26	1	6390275	Foot plate	
27	1	6390280	Ball joint	
28	1	6300852	Ball joint	
29	1	33270	Spring ring	SB 70
30	2	6300854	Ball seat catch	
31	1	6300853	Ball seat	
32	1	6300855	Foot plate	
33	1	31318	Lubricator	1/8" RG

50/345

63 90 180
63 90 290
Internal ref. 63 90 300

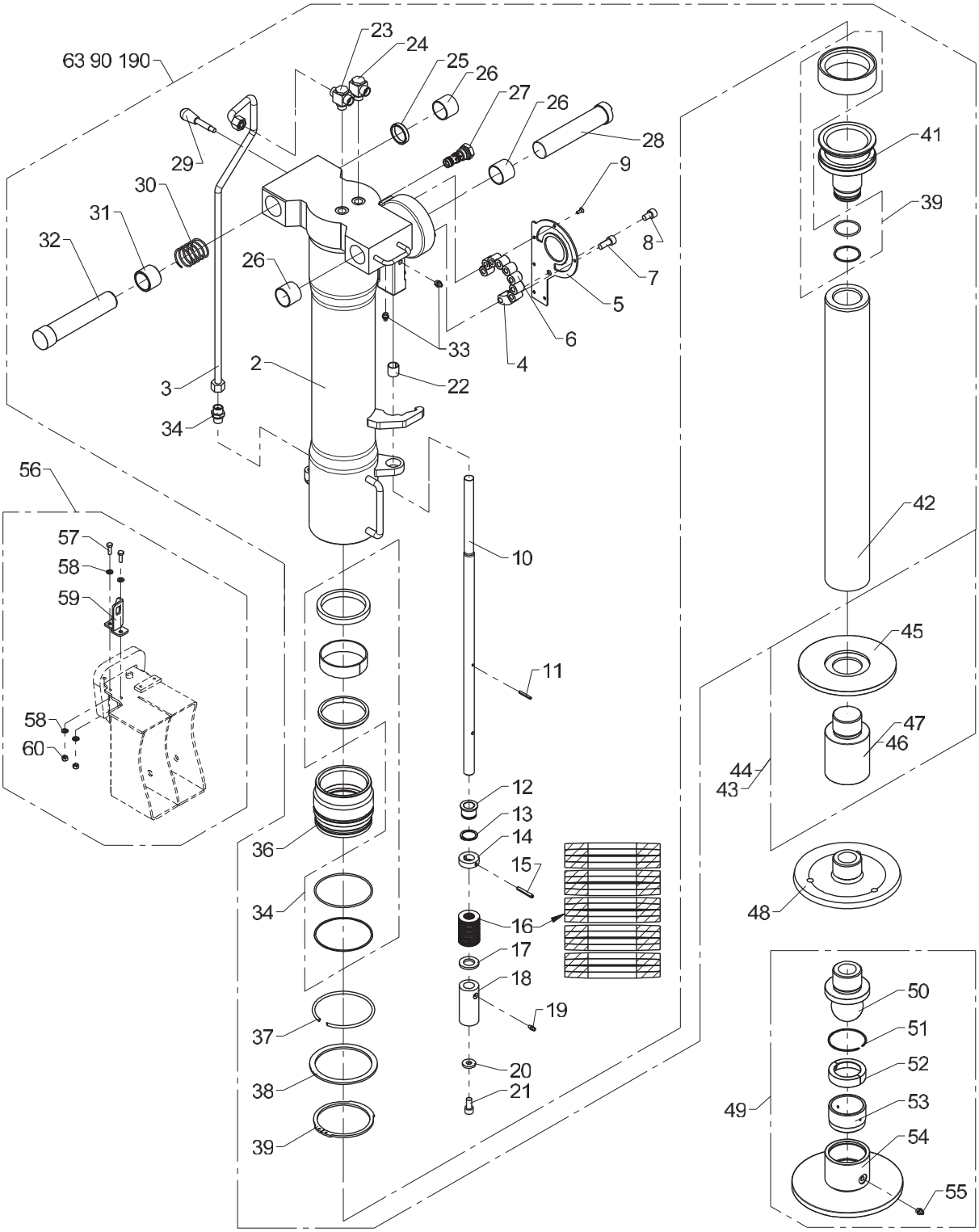

Obsolete

542 02 240

From loader 1150001
To loader 1150111

Created 25-11-2010
Modified 13-05-2013

Stabilizer cylinder, C110-550, type HR

Pos	Qty.	Part no.	Description	Remarks
1	1	6390190	Parts for stab. cyl. type HR	
2	1	6390261	Cylinder tube, HR	
3	1	6390268	Pipe	
4	1	6302433	Stop	
5	1	6390266	Cover	
6	8	23146	Cylindrical roller	RC 20 x 20 CD
7	2	30453	Screw	
8	1	30964	Screw	
9	6	32405	Sockethead screw	
10	1	6390267	Compression rod	
11	1	31204	Retaining pin	
12	1	64569	Bushing	
13	1	33122	Circlip	
14	1	6390274	Washer	
15	1	31228	Retaining pin, stainless	
16	20	33497	Disc spring	
17	1	31761	Washer	
18	1	6390273	Pipe	
19	1	31329	Lubricator	M6 x 1
20	1	31756	Washer	
21	1	30451	Screw	
22	1	23939	Bushing	MB 1820 DU-B
23	1	26877	T banjo union	RSTS 12 LR
24	1	25130	Banjo connection	RSWV 12 LR
25	1	6390258	Distance ring	
26	3	23408	Composite bearing	ø35/39 x 30
27	1	58496	Cartridge	
28	1	6390256	Pin	
29	1	64352	Lever with knob	
30	1	33495	Compression spring	
31	1	6390257	Bushing	
32	1	6390255	Pin	
33	2	31318	Lubricator	1/8" RG
34	1	25127	Connection	P-GEV 12 LR-WD
35	1	6894360	Seal kit, guide	
36	1	6390254	Guide	
37	1	33494	Lock ring	
38	1	6390259	Back ring	
39	1	33147	Circlip	107U
40	1	6894350	Seal kit, piston	
41	1	6194343	Piston	

50/345

63 90 180
63 90 290
Internal ref. 63 90 300

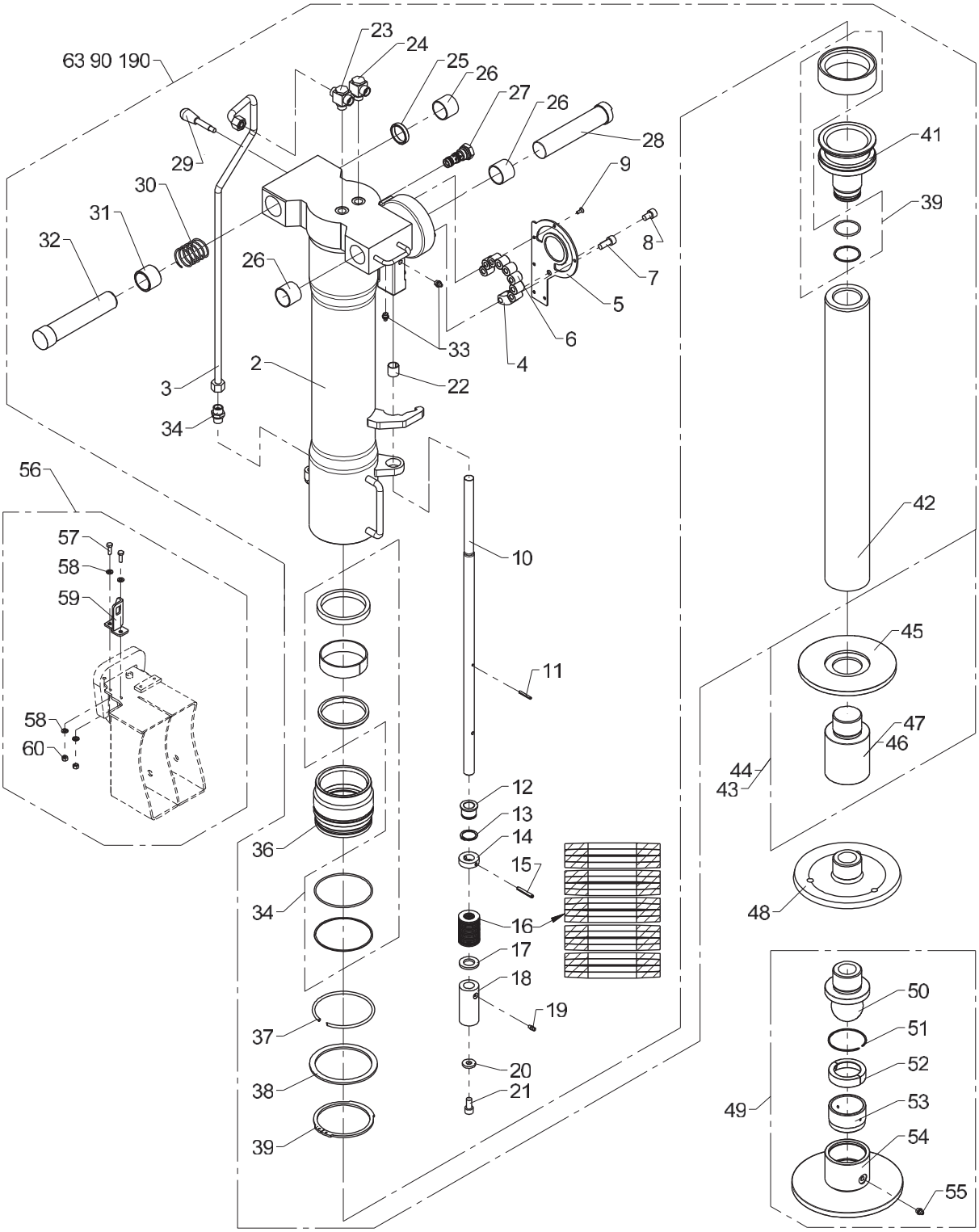

Obsolete

542 02 240

From loader 1150001
To loader 1150111

Created 25-11-2010
Modified 13-05-2013

Stabilizer cylinder, C110-550, type HR

Pos	Qty.	Part no.	Description	Remarks
42	1	6300851	Piston rod	
43	1	6392680	Extension, 100 mm cpl.	100mm
44	1	6392690	Extension, 160 mm cpl.	160mm
45	1	6390277	Plate	
46	1	6392852	Extension 100 mm	100mm.
47	1	6392853	Extension 160 mm	160mm.
48	1	6390275	Foot plate	Gev.55 - 12 pr. 1"
49	1	6390280	Ball joint	
50	1	6300852	Ball joint	
51	1	33270	Spring ring	SB 70
52	2	6300854	Ball seat catch	
53	1	6300853	Ball seat	
54	1	6300855	Foot plate	
55	1	31318	Lubricator	1/8" RG
56	1	6390180	Parts for stowing bracket	
57	2	30156	Set screw, stainless	
58	4	31565	Washer, stainless	
59	1	6390271	Bracket	
60	2	31564	Lock nut, stainless	

50/345

Internal ref. 63 91 880

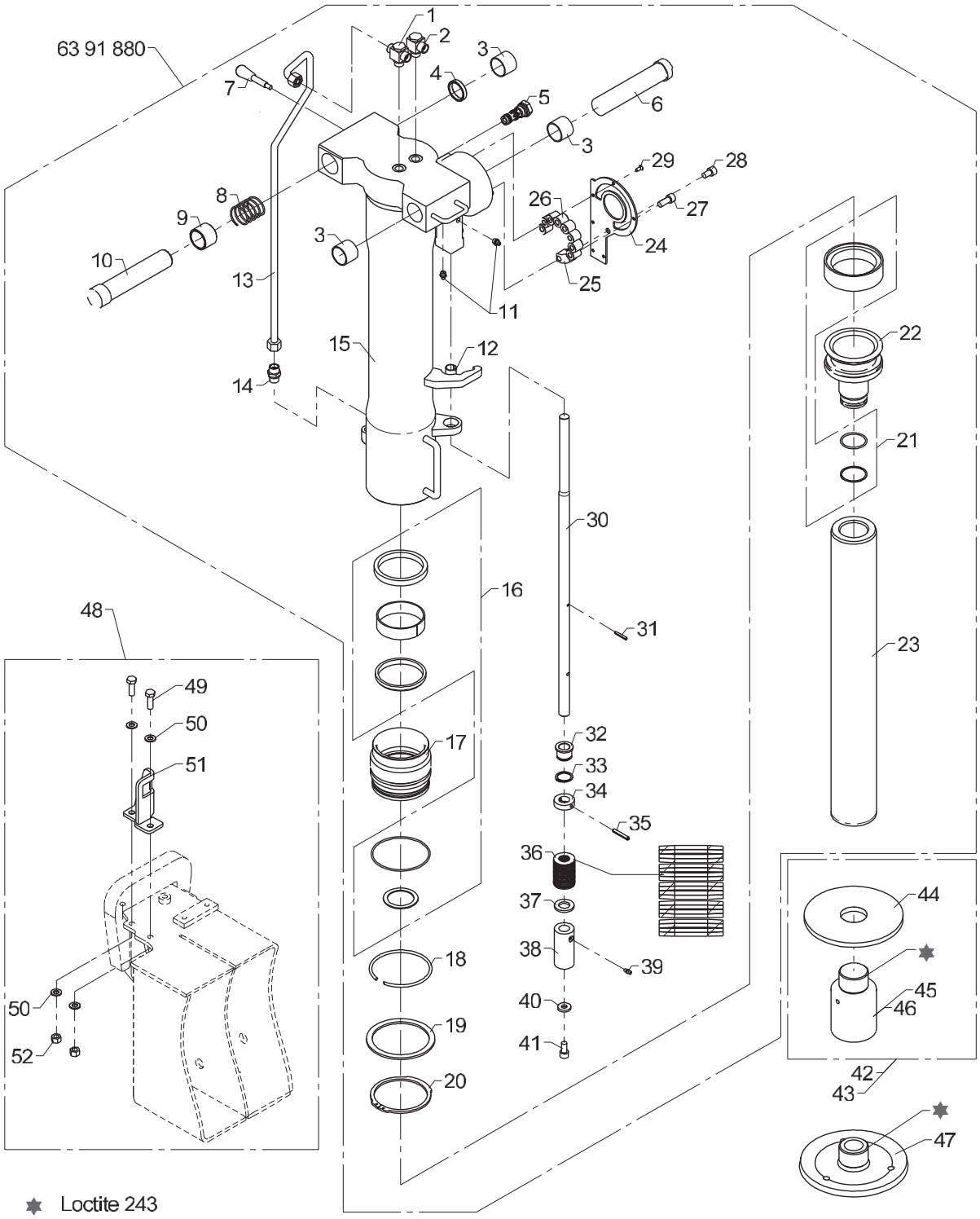

Stabilizer cylinder C110-550, type HR

Created 18-10-2013
Modified 17-08-2016

Pos	Qty.	Part no.	Description	Remarks
1	1	26877	T banjo union	RSTS 12 LR
2	1	25130	Banjo connection	RSWV 12 LR
3	3	23408	Composite bearing	ø35/39 x 30
4	1	6390258	Distance ring	
5	1	58496	Cartridge	
6	1	6390256	Pin	
7	1	64352	Lever with knob	
8	1	33495	Compression spring	
9	1	6390257	Bushing	
10	1	6390255	Pin	
11	2	31318	Lubricator	1/8" RG
12	1	23939	Bushing	MB 1820 DU-B
13	1	6390268	Pipe	
14	1	25127	Connection	P-GEV 12 LR-WD
15	1	6390261	Cylinder tube, HR	
16	1	6894360	Seal kit, guide	
17	1	6390254	Guide	
18	1	33494	Lock ring	
19	1	6390259	Back ring	
20	1	33147	Circlip	107U
21	1	6894350	Seal kit, piston	
22	1	6194343	Piston	
23	1	6300851	Piston rod	
24	1	6390266	Cover	
25	1	6302433	Stop	
26	8	23146	Cylindrical roller	RC 20 x 20 CD
27	2	30453	Screw	MC10 x 25
28	1	30964	Screw	MC10 x 16
29	6	32405	Sockethead screw	MK5 x 12
30	1	6390267	Compression rod	
31	1	31204	Retaining pin	ø4 x 30
32	1	64569	Bushing	
33	1	33122	Circlip	28U
34	1	6390274	Washer	
35	1	31228	Retaining pin, stainless	ø6 x 40
36	20	33497	Disc spring	
37	1	31761	Washer	20 mm
38	1	6390273	Pipe	
39	1	31329	Lubricator	M6 x 1
40	1	31756	Washer	
41	1	30451	Screw	MC10 x 20

50/345

Internal ref. 63 91 880

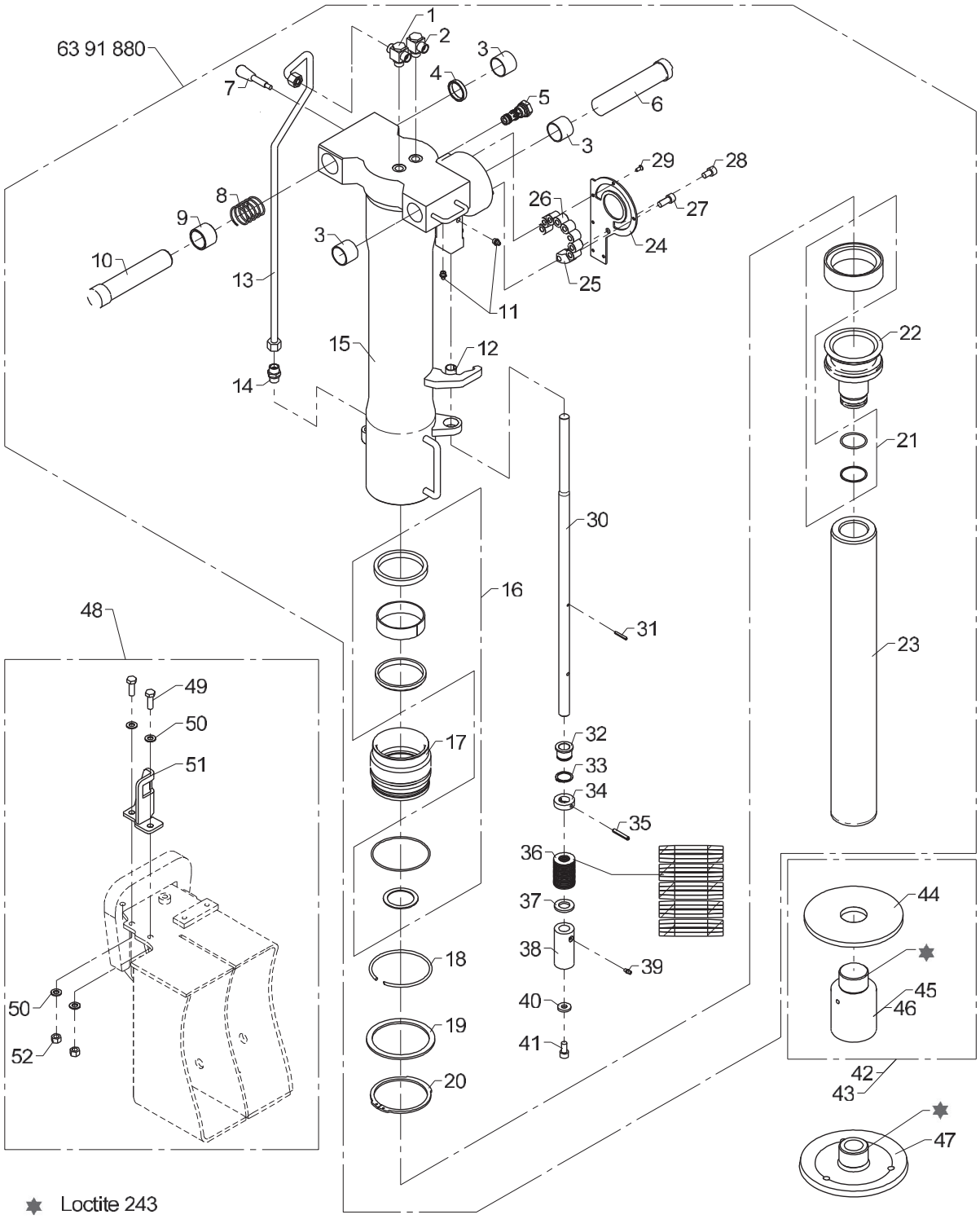

Stabilizer cylinder C110-550, type HR

Pos	Qty.	Part no.	Description	Remarks
42	1	6392680	Extension, 100 mm cpl.	
43	1	6392690	Extension, 160 mm cpl.	
44	1	6390277	Plate	
45	1	6392852	Extension 100 mm	100mm.
46	1	6392853	Extension 160 mm	160mm.
47	1	6391275	Footplate	M55x2
48	1	6390180	Parts for stowing bracket	
49	2	30156	Set screw, stainless	M10 x 30
50	4	31565	Washer, stainless	10 mm
51	1	6390271	Bracket	
52	2	31564	Lock nut, stainless	M10

50/345

Internal ref. 63 91 850

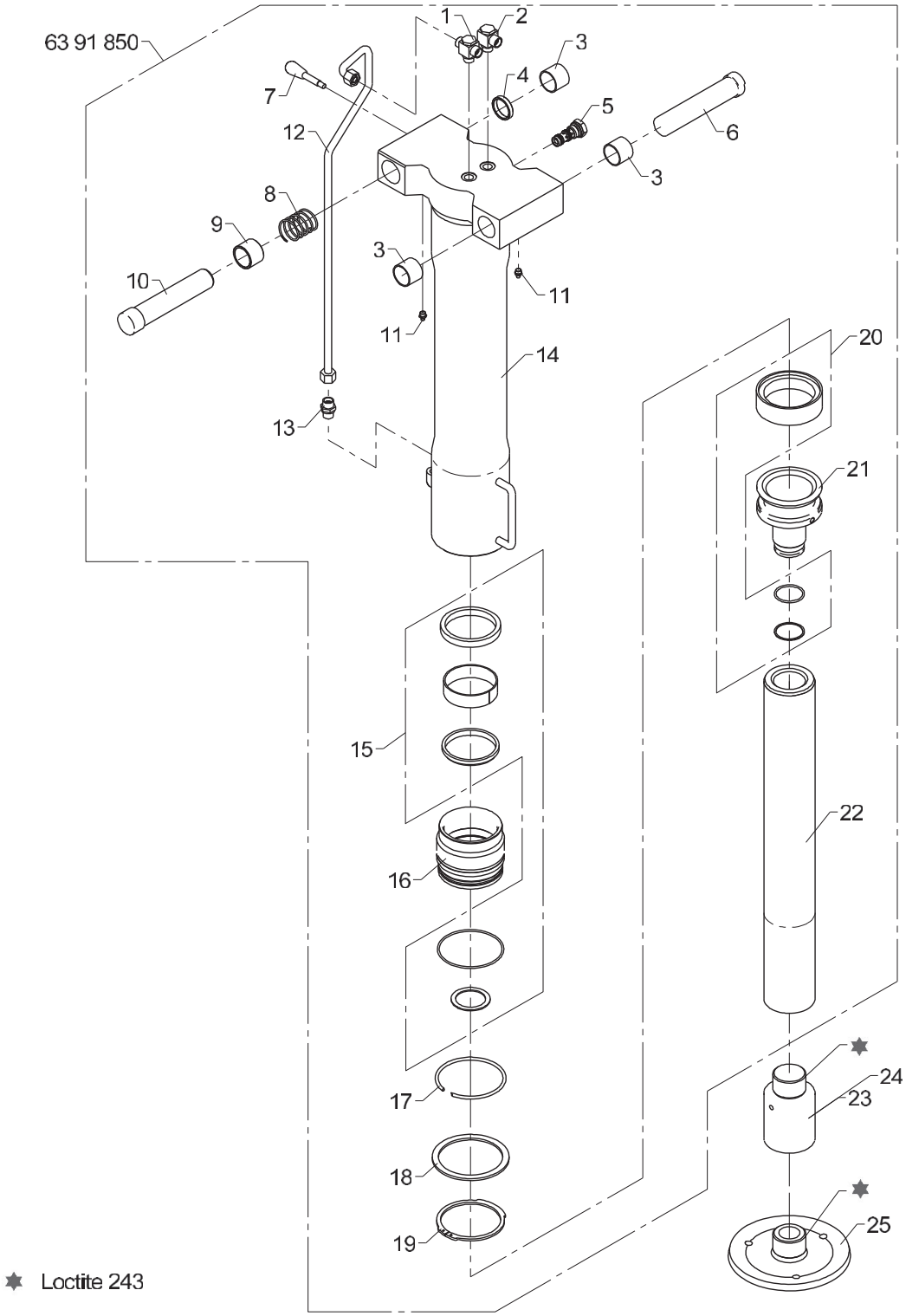

Stabilizer cylinder C110-550

Pos	Qty.	Part no.	Description	Remarks
1	1	26877	T banjo union	RSTS 12 LR
2	1	25130	Banjo connection	RSWV 12 LR
3	3	23408	Composite bearing	ø35/39 x 30
4	1	6390258	Distance ring	
5	1	58496	Cartridge	
6	1	6390256	Pin	
7	1	64352	Lever with knob	
8	1	33495	Compression spring	
9	1	6390257	Bushing	
10	1	6390255	Pin	
11	2	31318	Lubricator	1/8" RG
12	1	6390268	Pipe	
13	1	25127	Connection	P-GEV 12 LR-WD
14	1	6390251	Cylinder tube	
15	1	6894360	Seal kit, guide	
16	1	6390254	Guide	
17	1	33494	Lock ring	
18	1	6390259	Back ring	
19	1	33147	Circlip	107U
20	1	6894350	Seal kit, piston	
21	1	6384373	Piston	
22	1	6391851	Piston rod	
23	1	6392852	Extension 100 mm	100mm.
24	1	6392853	Extension 160 mm	160mm.
25	1	6391275	Footplate	M55x2

50/345

Internal ref. 63 91 240

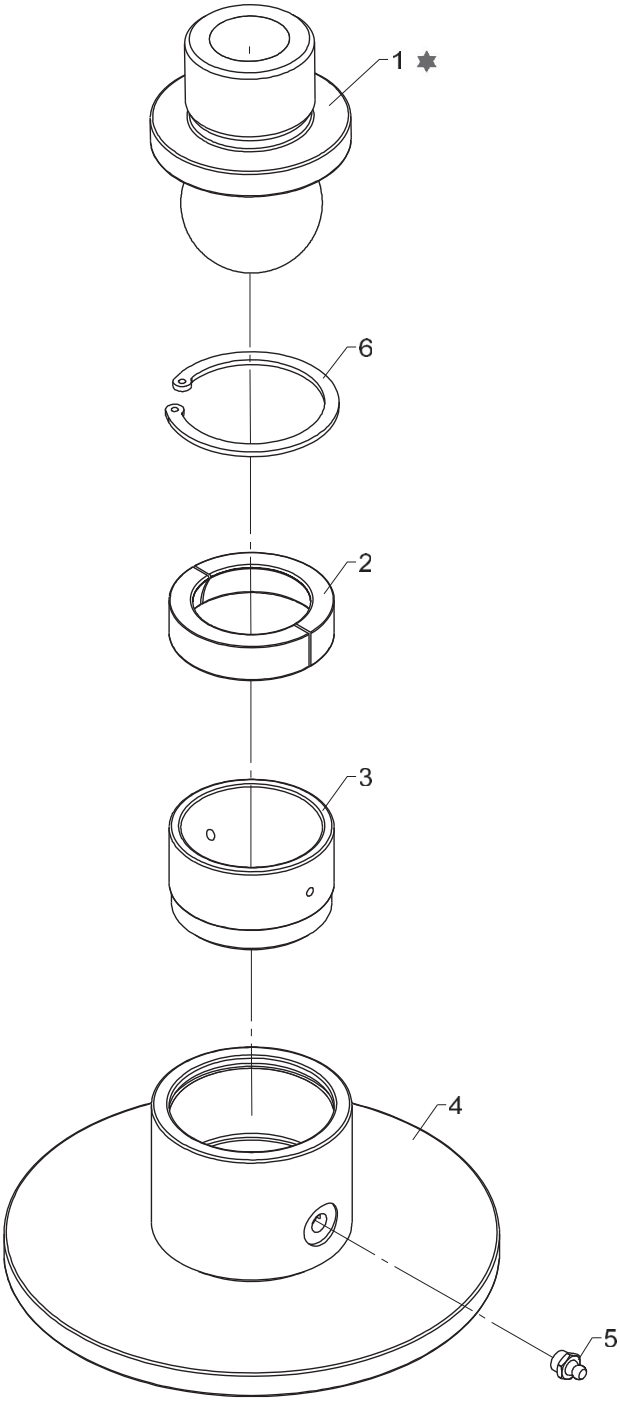

✸ Locktite 243

542 02 280

From loader 1150112
To loader

Foot plate with ball joint, cpl. (ø210)

Created 18-10-2013
Modified 23-08-2016

Pos	Qty.	Part no.	Description	Remarks
1	1	6391852	Ball joint	
2	2	6300854	Ball seat catch	
3	1	6300853	Ball seat	
4	1	6300855	Foot plate	
5	1	31318	Lubricator	1/8" RG
6	1	33190	Circlip Din 472	70 I

50/345

Internal ref. 63 44 210

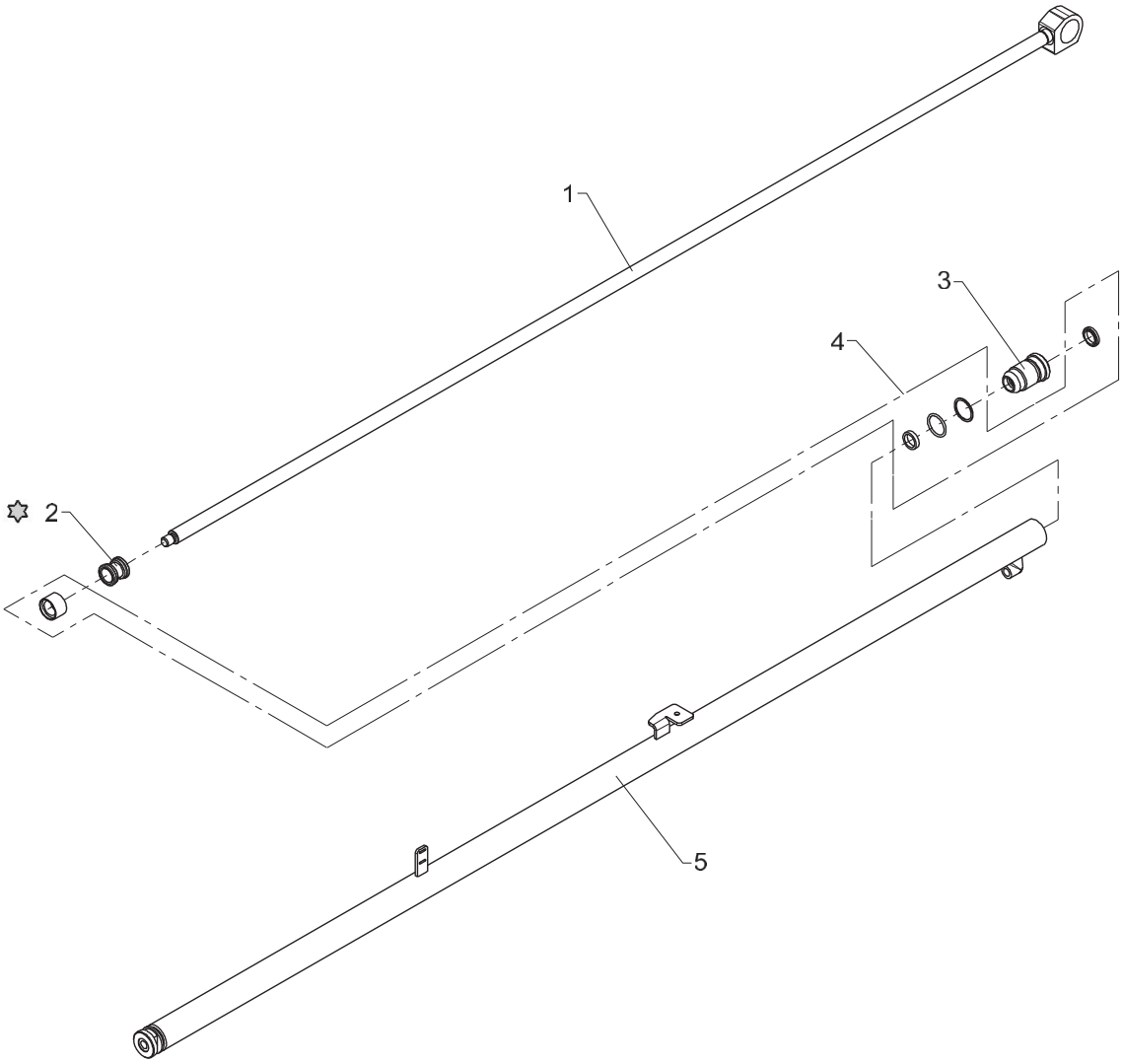

✡ Loctite 243

From loader 1150001
To loader

Beam cylinder C32 - 1625

Created 12-11-2008
Modified 08-02-2012

Pos	Qty.	Part no.	Description	Remarks
1	1	6344214	Piston rod	
2	1	6306242	Piston	
3	1	6043034	Guide	
4	1	6892290	Seal kit	
5	1	6344211	Cylinder pipe	

50/345

Internal ref. 63 44 220

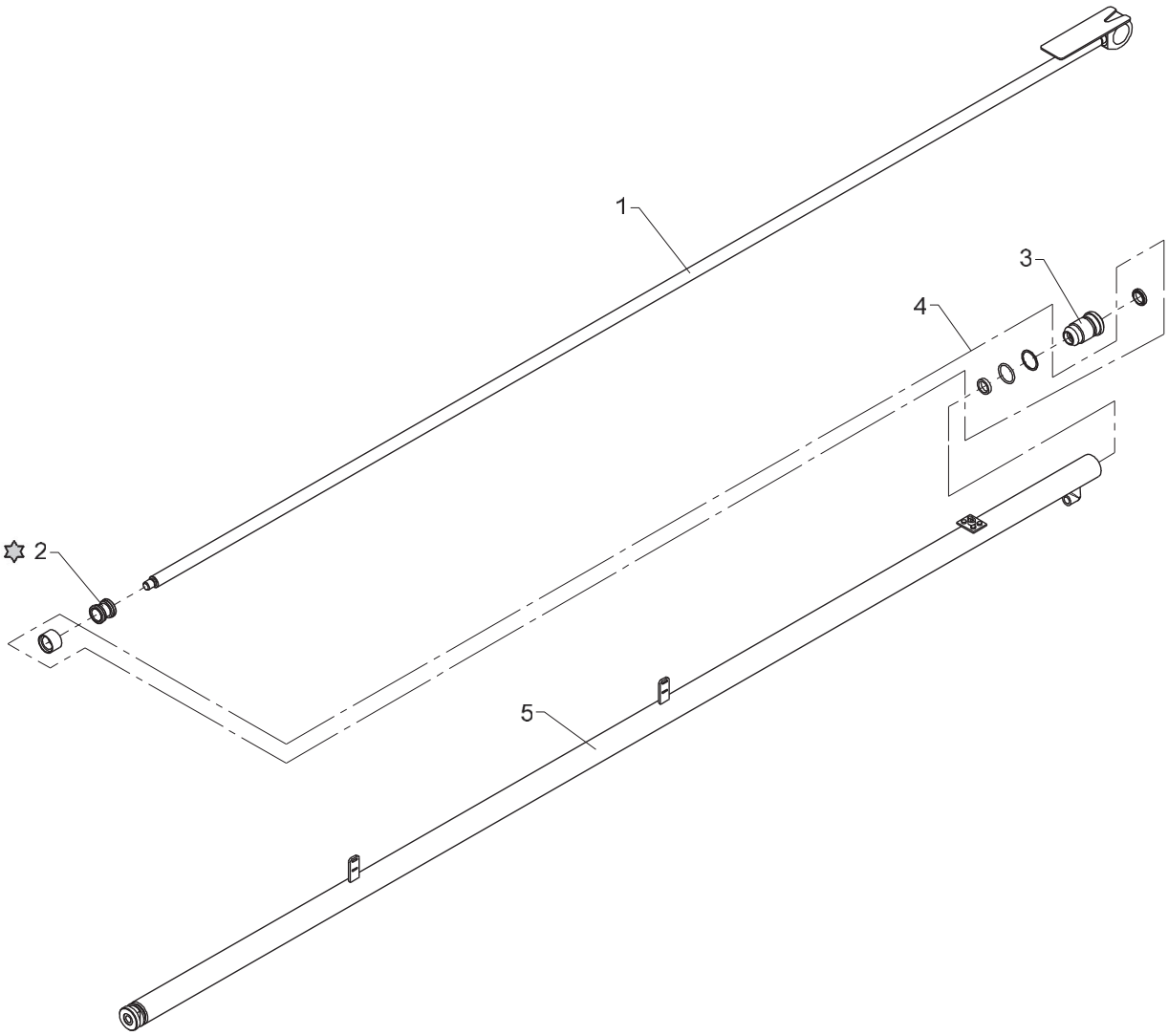

✡ Loctite 243

542 02 310

From loader 1150001
To loader

Beam cylinder C32 - 2065

Created 12-11-2008
Modified 05-03-2010

Pos	Qty.	Part no.	Description	Remarks
1	1	6344223	Piston rod	
2	1	6306242	Piston	
3	1	6043034	Guide	
4	1	6892290	Seal kit	
5	1	6344221	Cylinder pipe	

50/345

Internal ref. 63 90 500

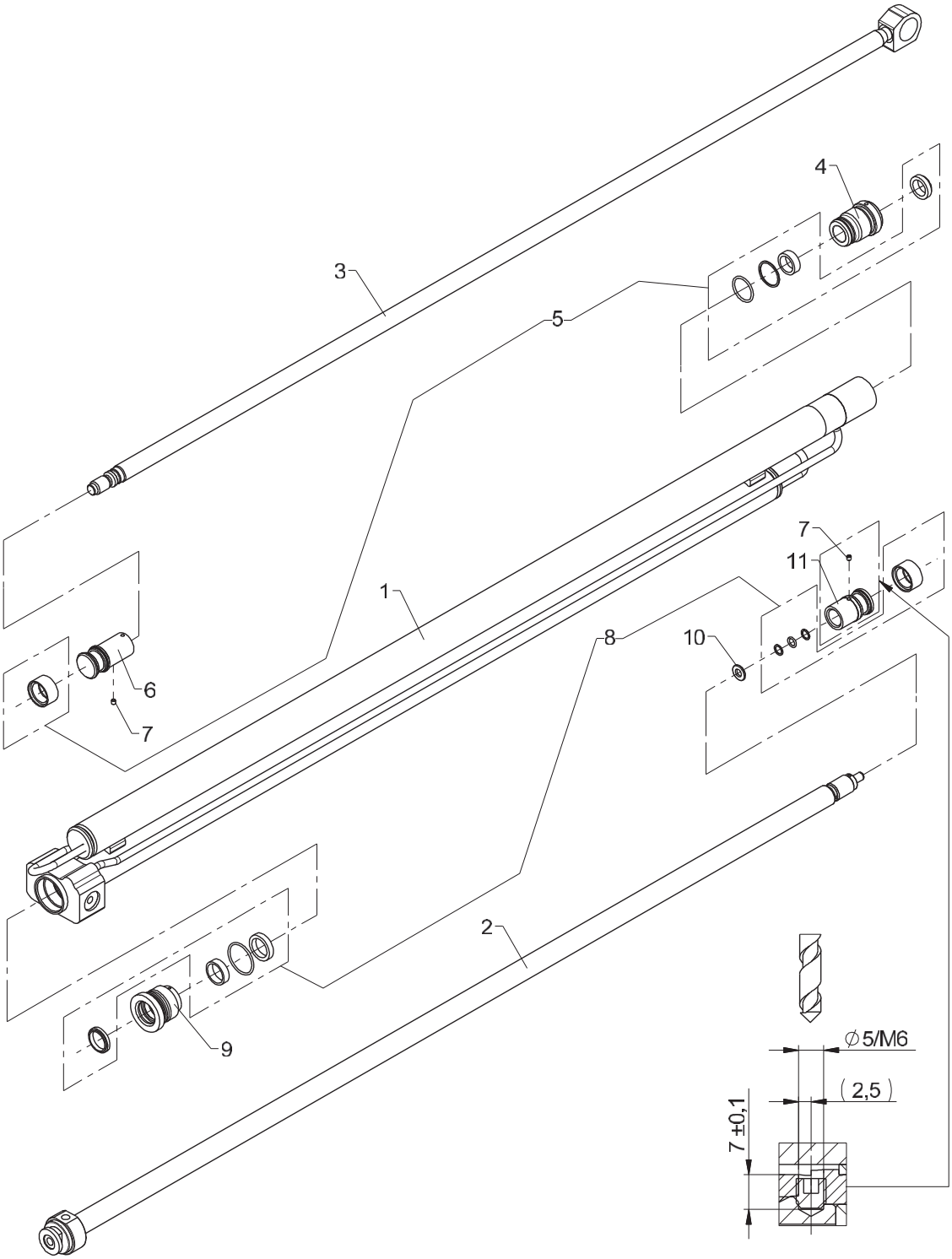

Obsolete

542 02 320

From loader 1150001
To loader 1150173

Created 25-11-2010
Modified 05-12-2013

Extension cylinder assembly, 2735, type D

Pos	Qty.	Part no.	Description	Remarks
		6390500	Extension cylinder assembly	
1	1	6390501	Cylinder assembly	
2	1	6390513	Piston rod	
3	1	6390517	Piston rod	
4	1	6194183	Guide	
5	1	6892670	Seal kit C40	
6	1	6390519	Piston	
7	2	30551	Pointed screw	MSP6 x 6
8	1	6893550	Seal kit	
9	1	1320142	Guide	
10	1	1320143	Ring	
11	1	1320141	Piston	

50/345

Internal ref. 63 90 500

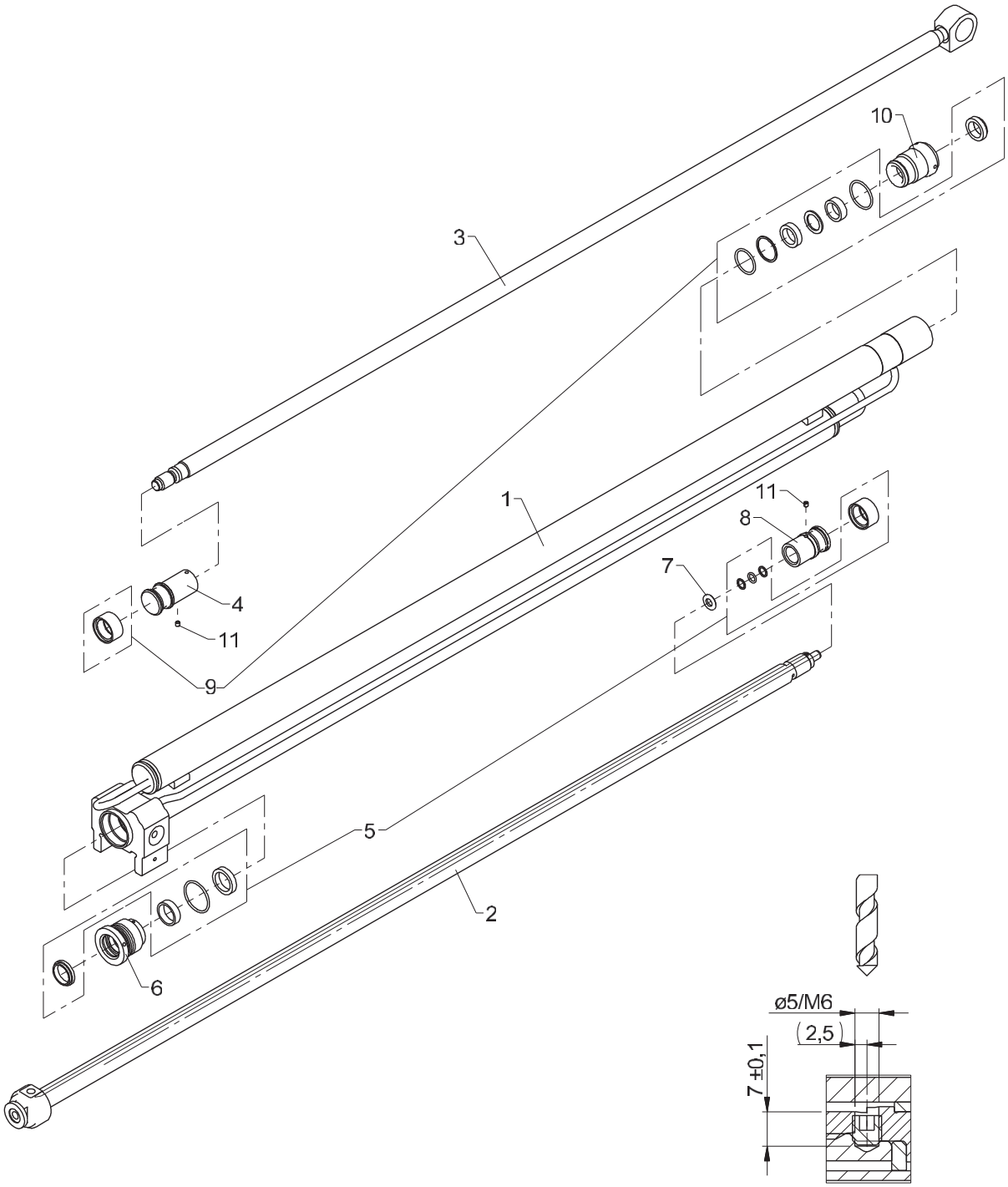

Extension cylinder assembly, 2735, type D

Pos	Qty.	Part no.	Description	Remarks
1	1	6390501	Cylinder assembly	
2	1	6390513	Piston rod	
3	1	6390517	Piston rod	
4	1	6390519	Piston	
5	1	6893550	Seal kit	
6	1	1320142	Guide	
7	1	1320143	Ring	
8	1	1320141	Piston	
9	1	6894770	Seal kit, C40	
10	1	6390509	Guide (ø 25)	
11	2	31548	Pointed screw, stainless	MSP6 x 6

50/345

Internal ref. 63 90 320

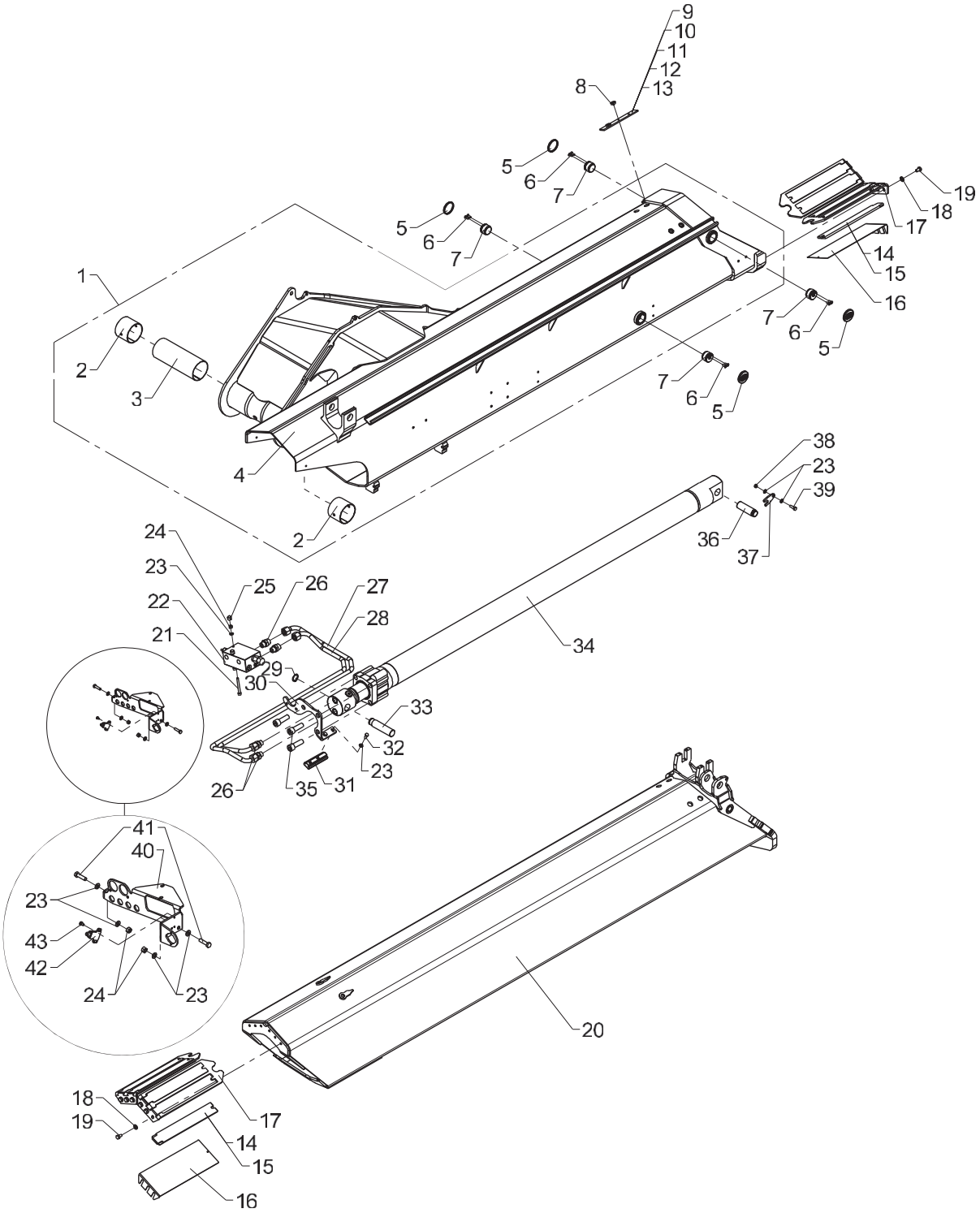

Obsolete

542 03 100

From loader 1150001
To loader 1150050

Created 16-08-2010
Modified 20-12-2010

Jib and K1 extension, complete

Pos	Qty.	Part no.	Description	Remarks
1	1	6390100	Jib with bushings	
2	2	23957	Bushing	PM 8570 DX
3	1	68022	Plate	
4	1	6390110	Jib, painted	63 90 281
5	4	64362	Plastic plug	
6	8	30540	Countersunk screw	MK6 x 16
7	4	6300334	Guide	
8	4	31864	Allen screw	M8 x 6
9	2	6360414	Spacer	4 mm
10	2	6294434	Spacer	5 mm
11	2	6193304	Spacer	6 mm
12	2	6235944	Spacer	7 mm
13	2	6193314	Spacer	8 mm
14	8	63526	Slide block	8 mm
15	8	63525	Slide block	9 mm
16	4	6300535	Shim	
17	4	6300375	Bracket for slide block	
18	12	31177	Washer	10 mm
19	12	30153	Set screw	M10 x 16
20	1	6390321	Extension I	
21	2	32428	Sockethead screw	MC8 x 70
22	1	59044	Load holding valve	
23	10	31147	Face washer, 8 mm	
24	4	30886	Lock nut, stainless	
25	2	64515	Cover for nut	
26	4	26334	Connection	P-GEV 16 SR-WD
27	1	6390641	Pipe, CI extend	
28	1	6390642	Pipe, CI retract	
29	1	33122	Circlip	28U
30	1	6390558	Bracket for slide block	
31	1	63689	Slide block with bushing	
32	2	30132	Set screw, stainless	
33	1	6390556	Pin	
34	1	6390540	Ext.cylinder I (C90/70x1800)	
35	3	32450	Screw	MC18 x 55
36	1	6390551	Pin	
37	1	6340337	Lock plate	
38	1	30856	Nut, stainless	M8
39	1	30134	Set screw, stainless	M8 x 25
40	1	6390304	Plate	
41	2	30135	Set screw, stainless	M8 x 30

50/345

Internal ref. 63 90 320

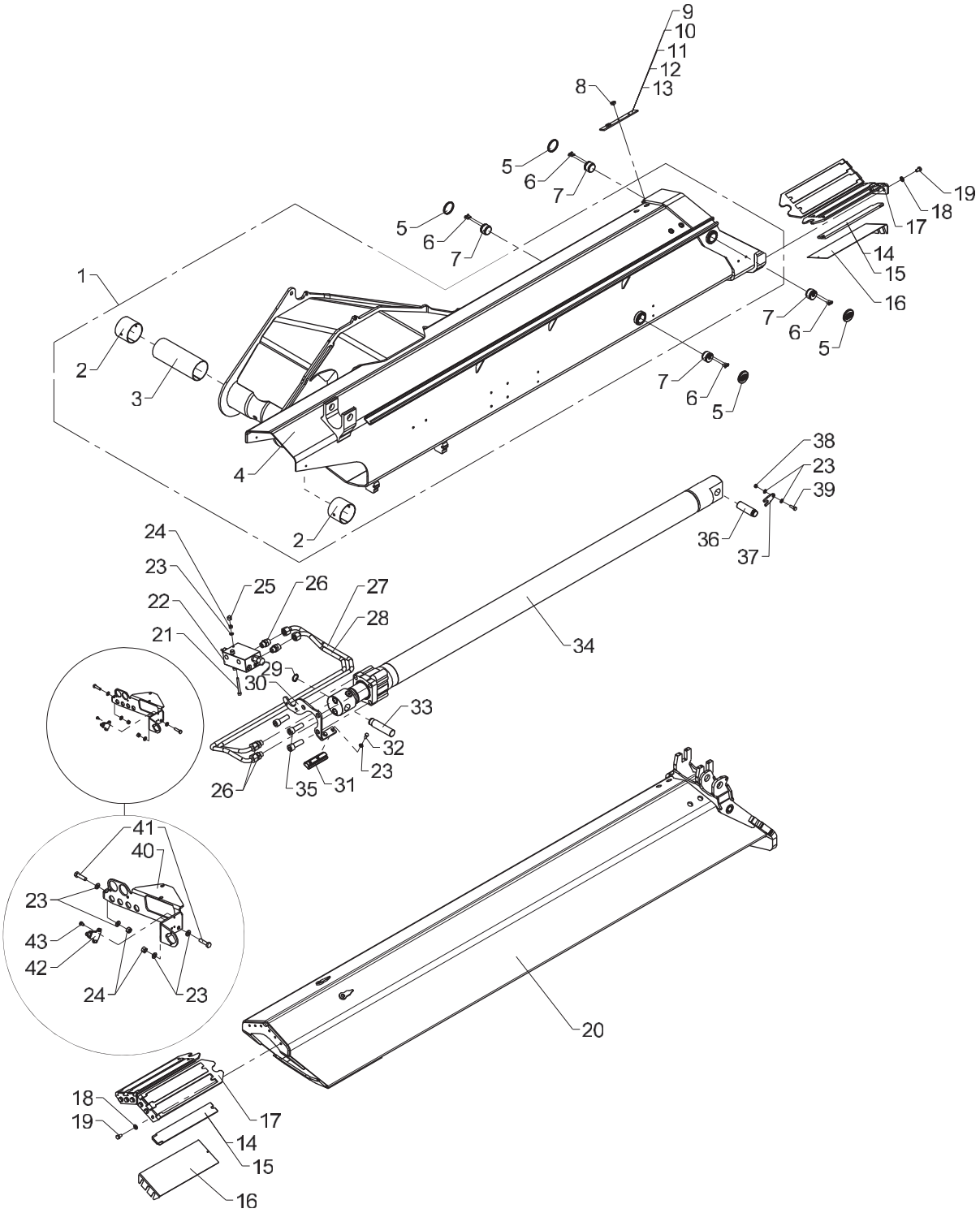

Obsolete

542 03 100

Jib and K1 extension, complete

From loader 1150001
To loader 1150050

Created 16-08-2010
Modified 20-12-2010

Pos	Qty.	Part no.	Description	Remarks
42	1	29103	Mercury switch	
43	2	31775	Screw, PH M 5 x 8	M5 x 8

50/345

Internal ref. 63 90 320

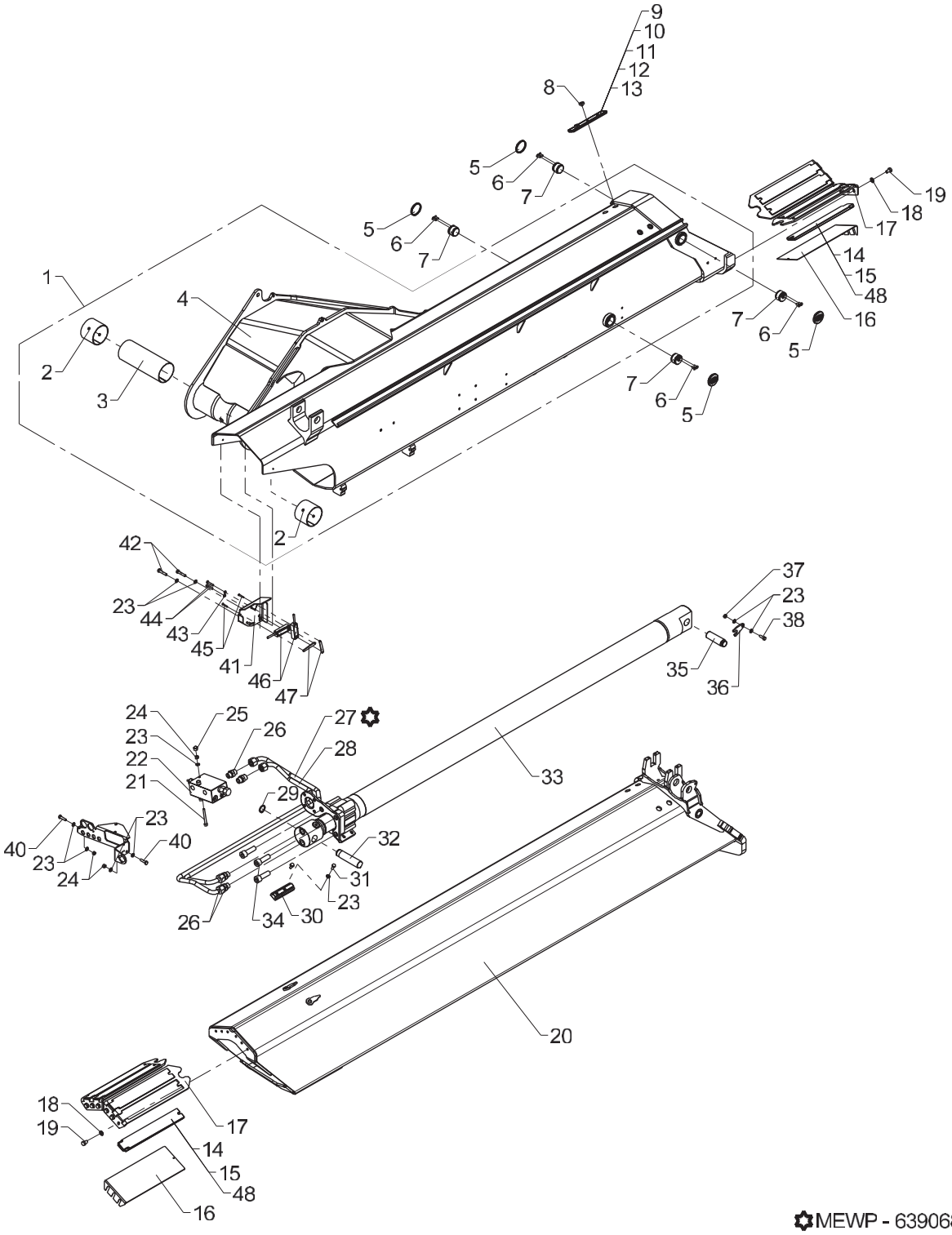

Jib and K1 extension, complete

Pos	Qty.	Part no.	Description	Remarks
1	1	6390100	Jib with bushings	
2	2	23957	Bushing	PM 8570 DX
3	1	68022	Plate	
4	1	6390110	Jib, painted	63 90 281
5	4	64362	Plastic plug	
6	8	30540	Countersunk screw	MK6 x 16
7	4	6300334	Guide	
8	4	31864	Allen screw	M8 x 6
9	2	6360414	Spacer	4 mm
10	2	6294434	Spacer	5 mm
11	2	6193304	Spacer	6 mm
12	2	6235944	Spacer	7 mm
13	2	6193314	Spacer	8 mm
14	8	63526	Slide block	8 mm
15	8	63525	Slide block	9 mm
16	4	6300535	Shim	
17	4	6300375	Bracket for slide block	
18	12	31177	Washer	10 mm
19	12	30153	Set screw	M10 x 16
20	1	6390321	Extension I	
21	2	32428	Sockethead screw	MC8 x 70
22	1	59044	Load holding valve	
23	12	31147	Face washer, 8 mm	
24	4	30886	Lock nut, stainless	M8
25	2	64515	Cover for nut	
26	4	26334	Connection	P-GEV 16 SR-WD
27	1	6390641	Pipe, CI extend	
28	1	6390642	Pipe, CI retract	
29	1	33122	Circlip	28U
30	1	63689	Slide block with bushing	
31	2	30132	Set screw, stainless	
32	1	6390556	Pin	
33	1	6390540	Ext.cylinder I (C90/70x1800)	
34	3	32450	Screw	MC18 x 55
35	1	6390551	Pin	
36	1	6340337	Lock plate	
37	1	30856	Nut, stainless	M8
38	1	30134	Set screw, stainless	M8 x 25
39	1	6390304	Plate	
40	2	30135	Set screw, stainless	M8 x 30
41	1	6390168	Sensor fittings	

50/345

Internal ref. 63 90 320

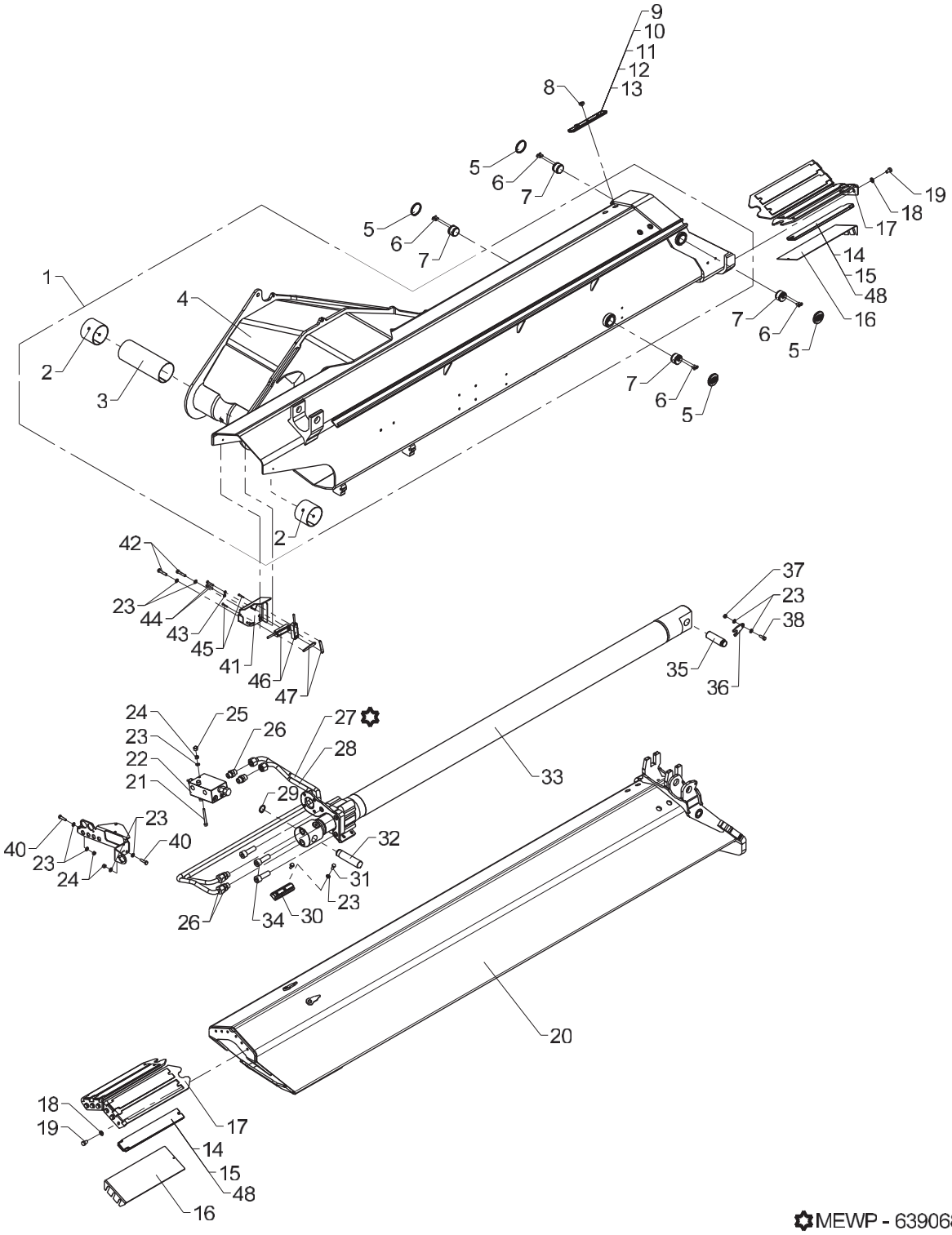

Jib and K1 extension, complete

Pos	Qty.	Part no.	Description	Remarks
42	2	30137	Set screw, stainless	M8 x 40
43	2	32302	Face washer, stainless	6 mm
44	2	30115	Steel pin, stainless	M6 x 30
45	2	30127	Set screw	M4 x 25
46	2	29295	Tilt sensor + 0.25 m cable	
47	2	6390169	Plate	
48	8	68085	Slide block	10 mm

50/345

Internal ref. 63 90 340

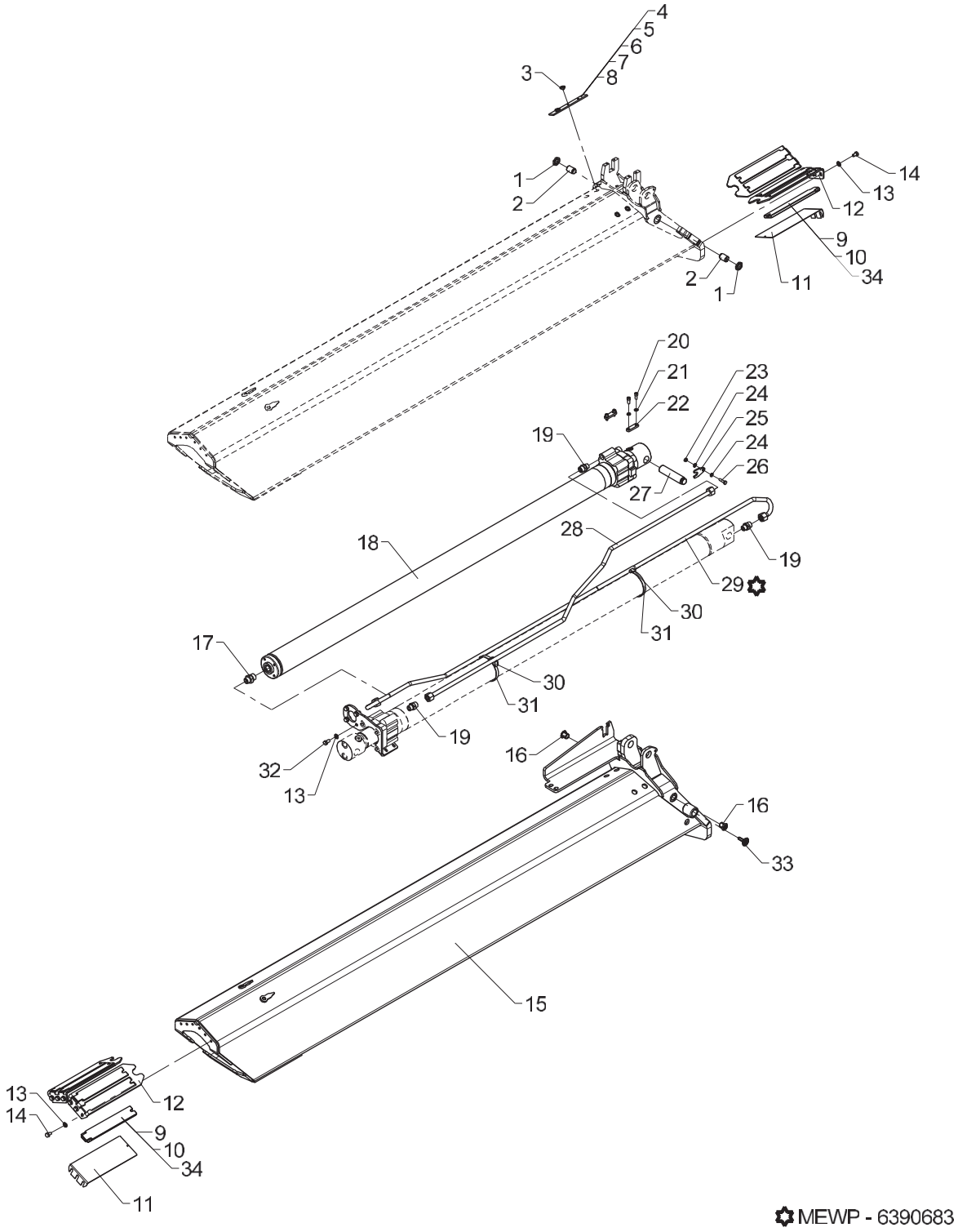

MEWP - 6390683

K2 extension, complete

Pos	Qty.	Part no.	Description	Remarks
1	2	32364	Counter nut	M24 x 2
2	2	6304409	Guide	
3	4	31864	Allen screw	M8 x 6
4	2	6360414	Spacer	4 mm
5	2	6294434	Spacer	5 mm
6	2	6193304	Spacer	6 mm
7	2	6235944	Spacer	7 mm
8	2	6193314	Spacer	8 mm
9	8	63528	Slide block	8 mm
10	8	63527	Slide block	9 mm
11	4	6300532	Shim	
12	4	6300394	Bracket for slide block	
13	16	31177	Washer	10 mm
14	12	30153	Set screw	M10 x 16
15	1	6390341	Extension II	
16	2	63487	Plug	
17	1	26390	Connection	P-GEV 16 SR 3/4-WD
18	1	6390560	Ext. cylinder II (C90/70x1875)	
19	3	26334	Connection	P-GEV 16 SR-WD
20	4	30438	Screw	MC8 x 20
21	4	31155	Spring washer	8 mm
22	2	6232964	Stowing pin	
23	1	30856	Nut, stainless	M8
24	2	31147	Face washer, 8 mm	
25	1	6340337	Lock plate	
26	1	30135	Set screw, stainless	M8 x 30
27	1	6390552	Pin	
28	1	6390644	Pipe, CII retract	
29	1	6390643	Pipe, CII extend	
30	2	64409	Clamp	
31	2	31407	Clip	
32	4	31517	Set screw, stainless	M10 x 20
33	1	63568	Plastic plug with logo	
34	8	68084	Slide block	10 mm

50/345

Internal ref. 63 90 360

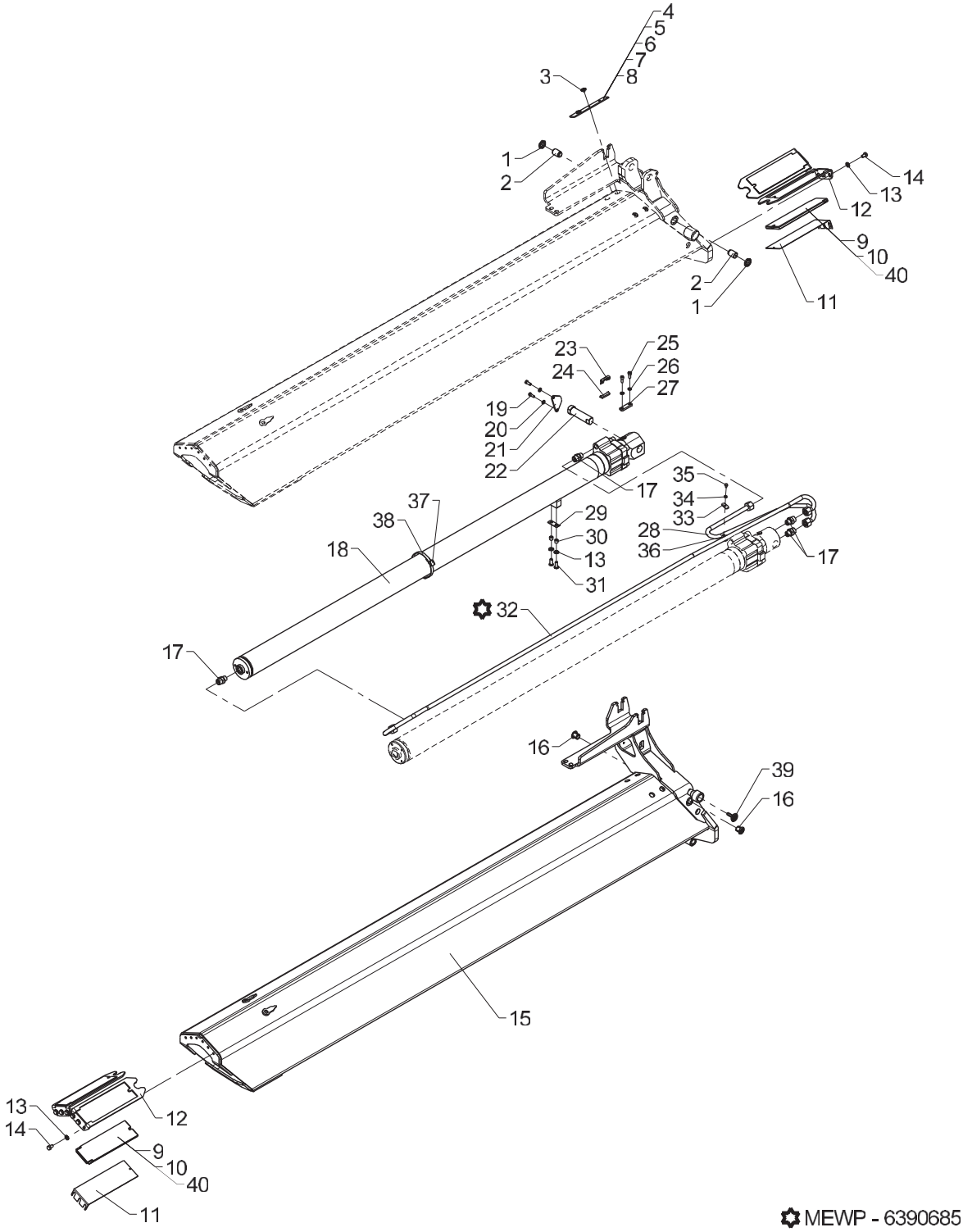

From loader 1150001
To loader

K3 extension, complete

Created 16-08-2010
Modified 28-10-2014

Pos	Qty.	Part no.	Description	Remarks
1	2	32364	Counter nut	M24 x 2
2	2	6304409	Guide	
3	4	31865	Torx screw M8 x 6 m	M8 x 6
4	2	6360414	Spacer	4 mm
5	2	6294434	Spacer	5 mm
6	2	6193304	Spacer	6 mm
7	2	6235944	Spacer	7 mm
8	2	6193314	Spacer	8 mm
9	4	63521	Slide block	8 mm
10	4	63696	Slide block	9 mm
11	4	6300533	Shim	
12	4	6300369	Bracket for slide block	
13	14	31177	Washer	10 mm
14	12	30153	Set screw	M10 x 16
15	1	6390361	Extension III	
16	2	63487	Plug	
17	4	26334	Connection	P-GEV 16 SR-WD
18	1	6390570	Ext. cylinder III(C85/63x2000)	
19	2	30132	Set screw, stainless	
20	2	31147	Face washer, 8 mm	8 mm
21	1	6390559	End plate	
22	1	6390553	Pin	
23	1	31920	Clip, stainless, 10mm	
24	1	6340317	Lock plate (10 mm)	
25	2	30438	Screw	MC8 x 20
26	2	31155	Spring washer	8 mm
27	1	6232964	Stowing pin	
28	1	6390646	Pipe, CIII retract	
29	1	6340527	Shim	
30	2	6302369	Spacer	
31	2	30652	Screw	M10 x 25
32	1	6390645	Pipe, CIII extend	
33	1	6390658	Plate (C4)	
34	1	31154	Spring washer, stainless	6 mm
35	1	30110	Set screw, stainless	M6 x 10
36	1	6390399	Clamp	
37	1	64409	Clamp	
38	1	31407	Clip	
39	1	63568	Plastic plug with logo	
40	4	68082	Slide block	10 mm

50/345

Internal ref. 63 90 380

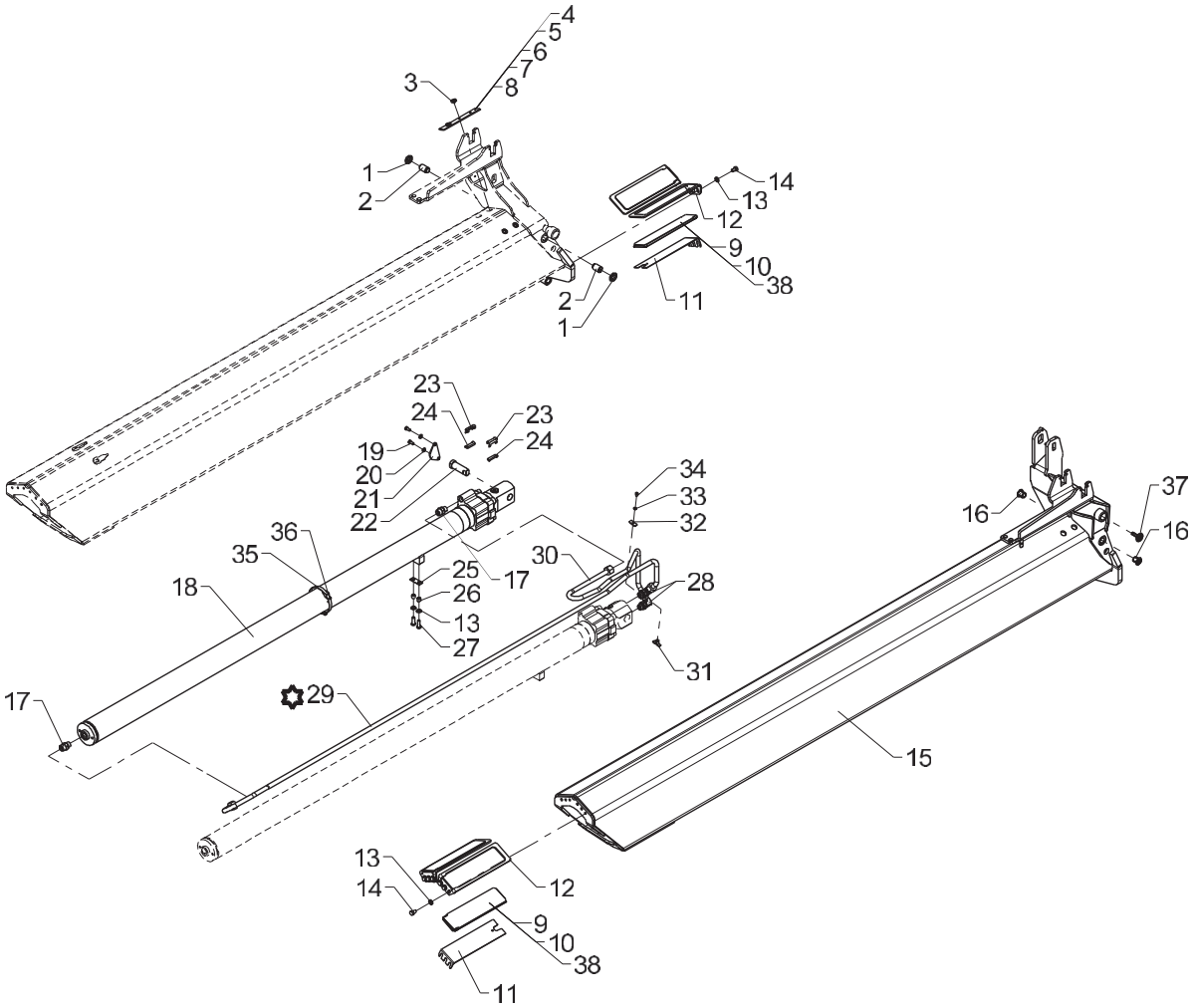

MEWP - 6390687

K4 extension, complete

Pos	Qty.	Part no.	Description	Remarks
1	2	32364	Counter nut	M24 x 2
2	2	6304409	Guide	
3	4	31864	Allen screw	M8 x 6
4	2	6360414	Spacer	4 mm
5	2	6294434	Spacer	5 mm
6	2	6193304	Spacer	6 mm
7	2	6235944	Spacer	7 mm
8	2	6193314	Spacer	8 mm
9	4	63582	Slide block	8 mm
10	4	63583	Slide block	9 mm
11	4	6300534	Shim	
12	4	6300366	Bracket for slide block	
13	14	31177	Washer	10 mm
14	12	30153	Set screw	M10 x 16
15	1	6390381	Extension IV	
16	2	63487	Plug	
17	2	26334	Connection	P-GEV 16 SR-WD
18	1	6390580	Ext. cylinder IV (C85/63x2000)	
19	2	30131	Set screw, stainless	M8 x 16
20	2	31147	Face washer, 8 mm	
21	1	6390559	End plate	
22	1	6390555	Pin	
23	2	31920	Clip, stainless, 10mm	
24	2	6340317	Lock plate (10 mm)	
25	1	6340527	Shim	
26	2	6302369	Spacer	
27	2	30649	Screw	M10 x 30
28	2	26893	Elbow connection	16 mm - 1/2"
29	1	6390647	Pipe, CIV extend	
30	1	6390648	Pipe, CIV retract	
31	1	6390399	Clamp	
32	1	6390658	Plate (C4)	
33	1	31154	Spring washer, stainless	6 mm
34	1	30110	Set screw, stainless	M6 x 10
35	1	31407	Clip	
36	1	64409	Clamp	
37	1	63568	Plastic plug with logo	
38	4	63584	Slide block	10 mm

50/345

Internal ref. 63 90 420

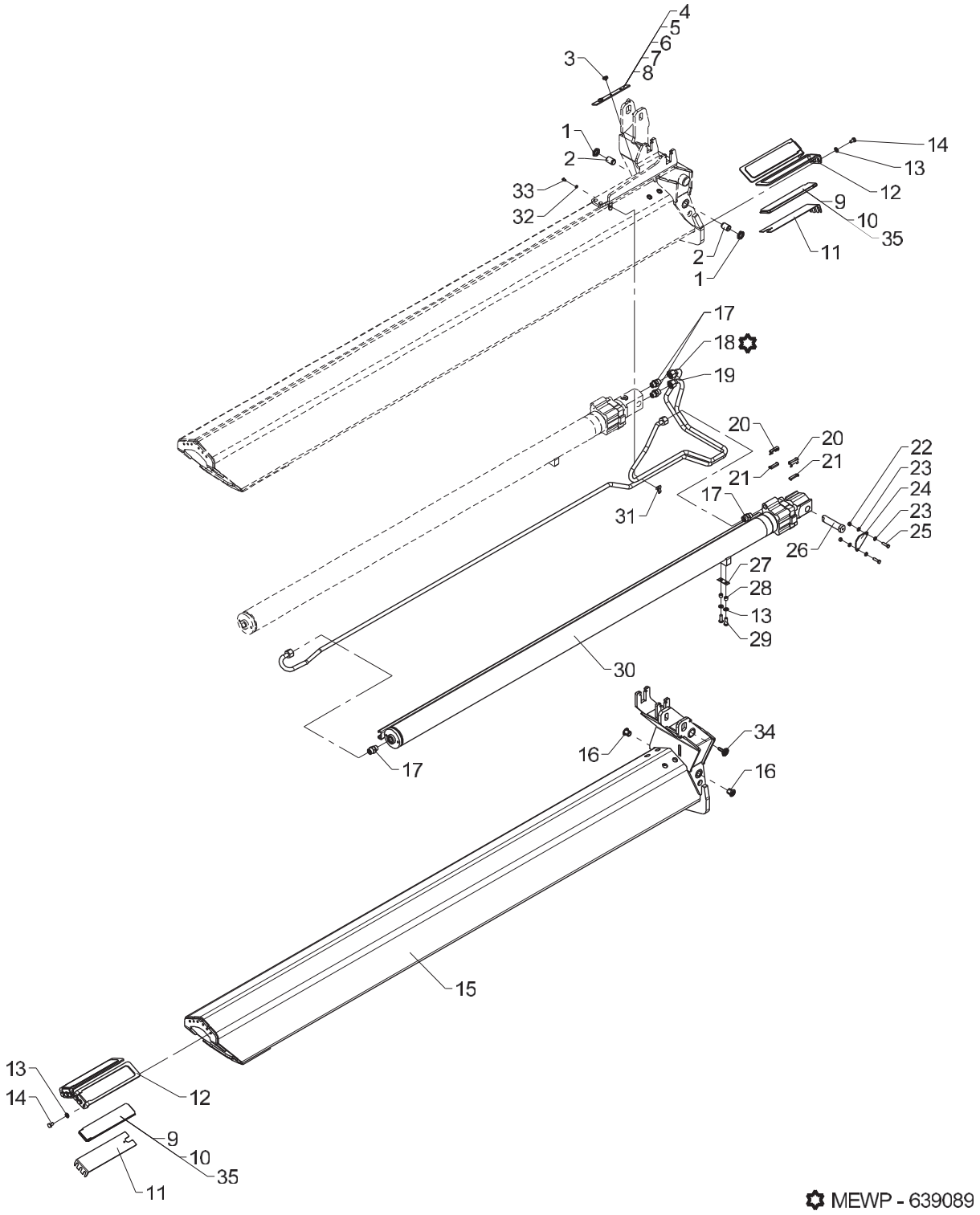

MEWP - 639089

K5 extension, complete

Pos	Qty.	Part no.	Description	Remarks
1	2	32364	Counter nut	M24 x 2
2	2	6304409	Guide	
3	4	31864	Allen screw	M8 x 6
4	2	6360414	Spacer	4 mm
5	2	6294434	Spacer	5 mm
6	2	6193304	Spacer	6 mm
7	2	6235944	Spacer	7 mm
8	2	6193314	Spacer	8 mm
9	4	63585	Slide block	8 mm
10	4	63586	Slide block	9 mm
11	4	6300534	Shim	
12	4	6300399	Bracket for slide block	
13	14	31177	Washer	10 mm
14	12	30153	Set screw	M10 x 16
15	1	6390421	Extension V	
16	2	63487	Plug	
17	4	26334	Connection	P-GEV 16 SR-WD
18	1	6390649	Pipe, CV extend	
19	1	6390651	Pipe, CV retract	
20	2	31920	Clip, stainless, 10mm	
21	2	6340317	Lock plate (10 mm)	
22	2	30886	Lock nut, stainless	M8
23	4	31147	Face washer, 8 mm	
24	1	6390559	End plate	
25	2	30135	Set screw, stainless	M8 x 30
26	1	6390554	Pin	
27	1	6340527	Shim	
28	2	6302369	Spacer	
29	2	30649	Screw	M10 x 30
30	1	6390590	Ext. cylinder V (C80/55x2150)	
31	1	6390399	Clamp	
32	1	31154	Spring washer, stainless	6 mm
33	1	30110	Set screw, stainless	M6 x 10
34	1	63568	Plastic plug with logo	
35	4	63587	Slide block	10 mm

50/345

Internal ref. 63 90 440

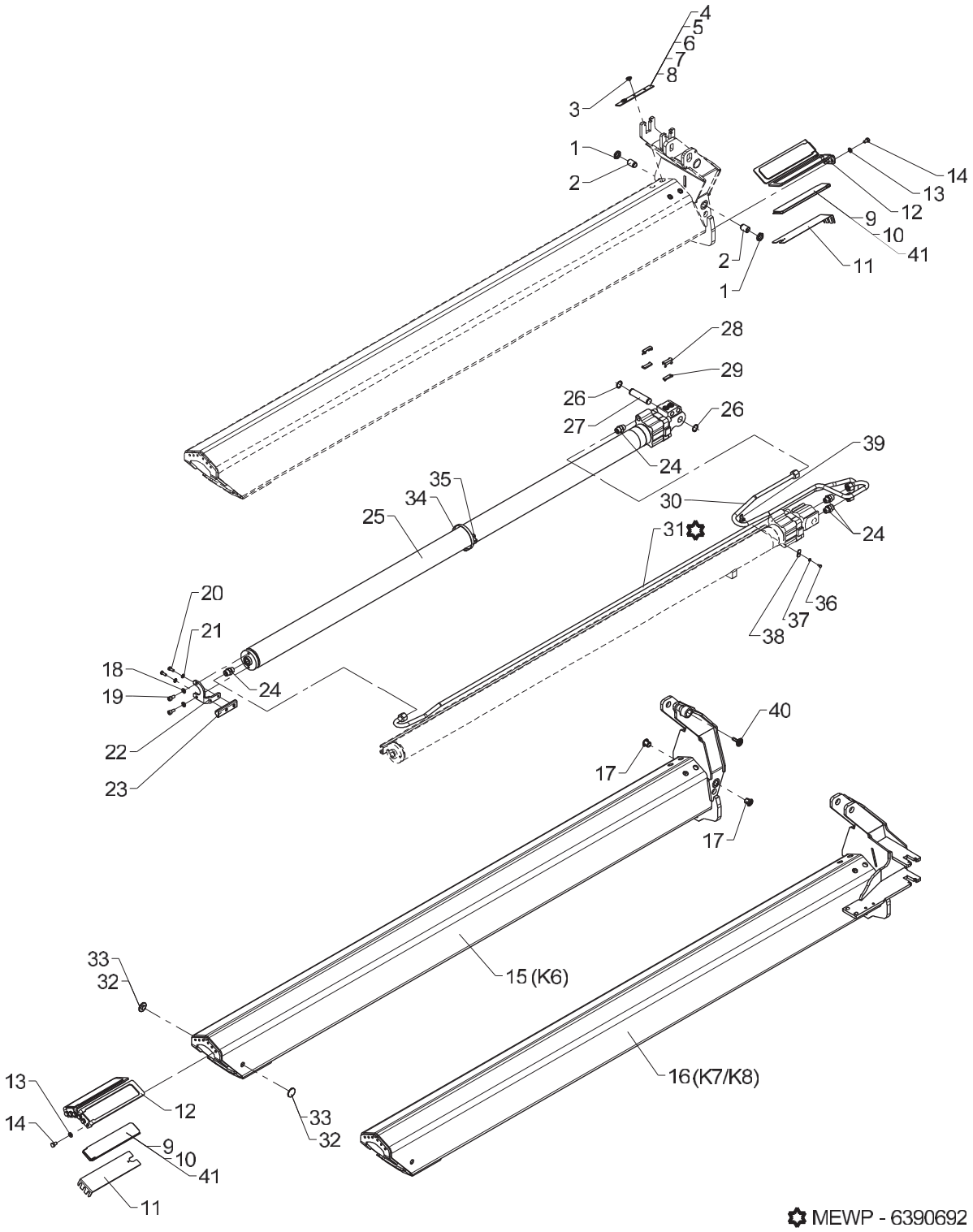

K6 extension, complete

Pos	Qty.	Part no.	Description	Remarks
1	2	32364	Counter nut	M24 x 2
2	2	6304409	Guide	
3	4	31864	Allen screw	M8 x 6
4	2	6360414	Spacer	4 mm
5	2	6294434	Spacer	5 mm
6	2	6193304	Spacer	6 mm
7	2	6235944	Spacer	7 mm
8	2	6193314	Spacer	8 mm
9	4	63585	Slide block	8 mm
10	4	63586	Slide block	9 mm
11	4	6300534	Shim	
12	4	6300399	Bracket for slide block	
13	12	31177	Washer	10 mm
14	12	30153	Set screw	M10 x 16
15	1	6390441	Extension VI (K6)	
16	1	6390451	Extension VI (K7/K8)	
17	2	63487	Plug	
18	2	31565	Washer, stainless	10 mm
19	2	30451	Screw	MC10 x 20
20	2	30132	Set screw, stainless	
21	2	31147	Face washer, 8 mm	
22	1	6390569	Bracket for slide block	
23	1	63689	Slide block with bushing	
24	4	26334	Connection	P-GEV 16 SR-WD
25	1	6390600	Ext. cylinder VI (C80/55x2225)	
26	2	33116	Circlip Din 471	26U
27	1	6390557	Pin	
28	2	31933	Clip 12 mm	
29	2	6390567	Lock plate (12 mm)	
30	1	6390653	Pipe, CVI retract	
31	1	6390652	Pipe, CVI extend	
32	2	6381484	Guide	
33	2	6394633	Guide, 7 + 1.75 mm	
34	1	31407	Clip	
35	1	64409	Clamp	
36	1	30110	Set screw, stainless	M6 x 10
37	1	31154	Spring washer, stainless	6 mm
38	1	6390658	Plate (C4)	
39	1	6390399	Clamp	
40	1	63568	Plastic plug with logo	
41	4	63587	Slide block	10 mm

50/345

Internal ref. 63 90 460

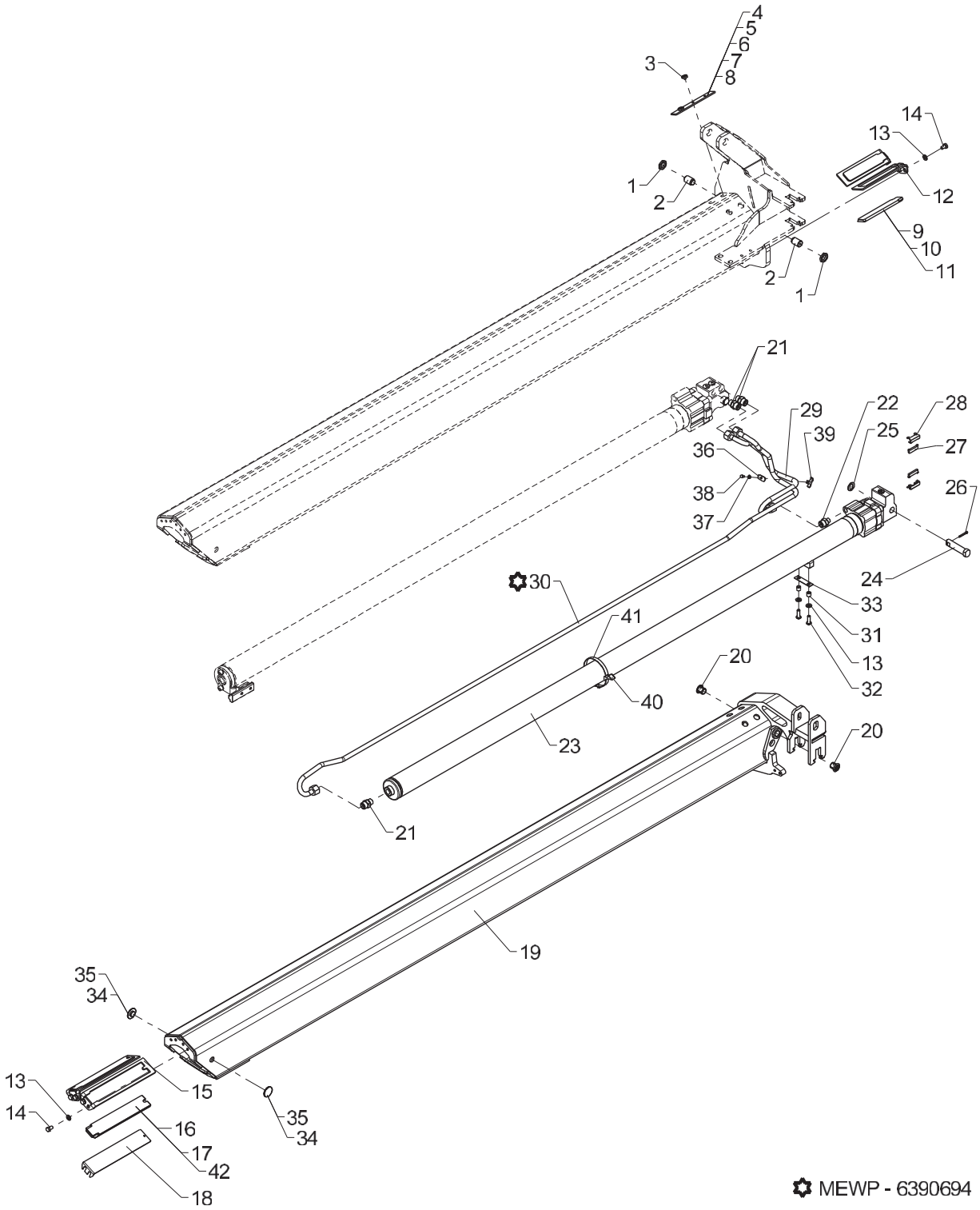

K7 extension, complete

Pos	Qty.	Part no.	Description	Remarks
1	2	32364	Counter nut	M24 x 2
2	2	6304409	Guide	
3	4	31864	Allen screw	M8 x 6
4	2	6360414	Spacer	4 mm
5	2	6294434	Spacer	5 mm
6	2	6193304	Spacer	6 mm
7	2	6235944	Spacer	7 mm
8	2	6193314	Spacer	8 mm
9	2	63518	Slide block	8 mm
10	2	63762	Slide block	6299074
11	2	63593	Slide block	10 mm
12	2	6340441	Bracket for slide block	
13	10	31177	Washer	10 mm
14	8	30153	Set screw	M10 x 16
15	2	6300368	Bracket for slide block	
16	2	63589	Slide block	9 mm
17	2	63588	Slide block	8 mm
18	2	6300568	Shim	
19	1	6390461	Extension VII	
20	2	63487	Plug	
21	3	26334	Connection	P-GEV 16 SR-WD
22	1	26368	Straight connection	P-GEV 16 SR 3/8-WD
23	1	6390610	Ext. cylinder VII(C70/45x2275)	
24	1	6344525	Pin	
25	1	6340526	Spacer	
26	1	31634	Split pin	ø5 x 32
27	2	6390567	Lock plate (12 mm)	
28	2	31933	Clip 12 mm	
29	1	6390655	Pipe, CVII retract	
30	1	6390654	Pipe, CVII extend	
31	2	6390038	Distance pipe	
32	2	30649	Screw	M10 x 30
33	1	6390398	Shim	
34	2	6394631	Guide, 5 + 2.5 mm	
35	2	6394632	Guide, 5 + 1.75 mm	
36	1	6390658	Plate (C4)	
37	1	31154	Spring washer, stainless	6 mm
38	1	30110	Set screw, stainless	M6 x 10
39	1	6390399	Clamp	
40	1	64409	Clamp	
41	1	31407	Clip	

50/345

Internal ref. 63 90 460

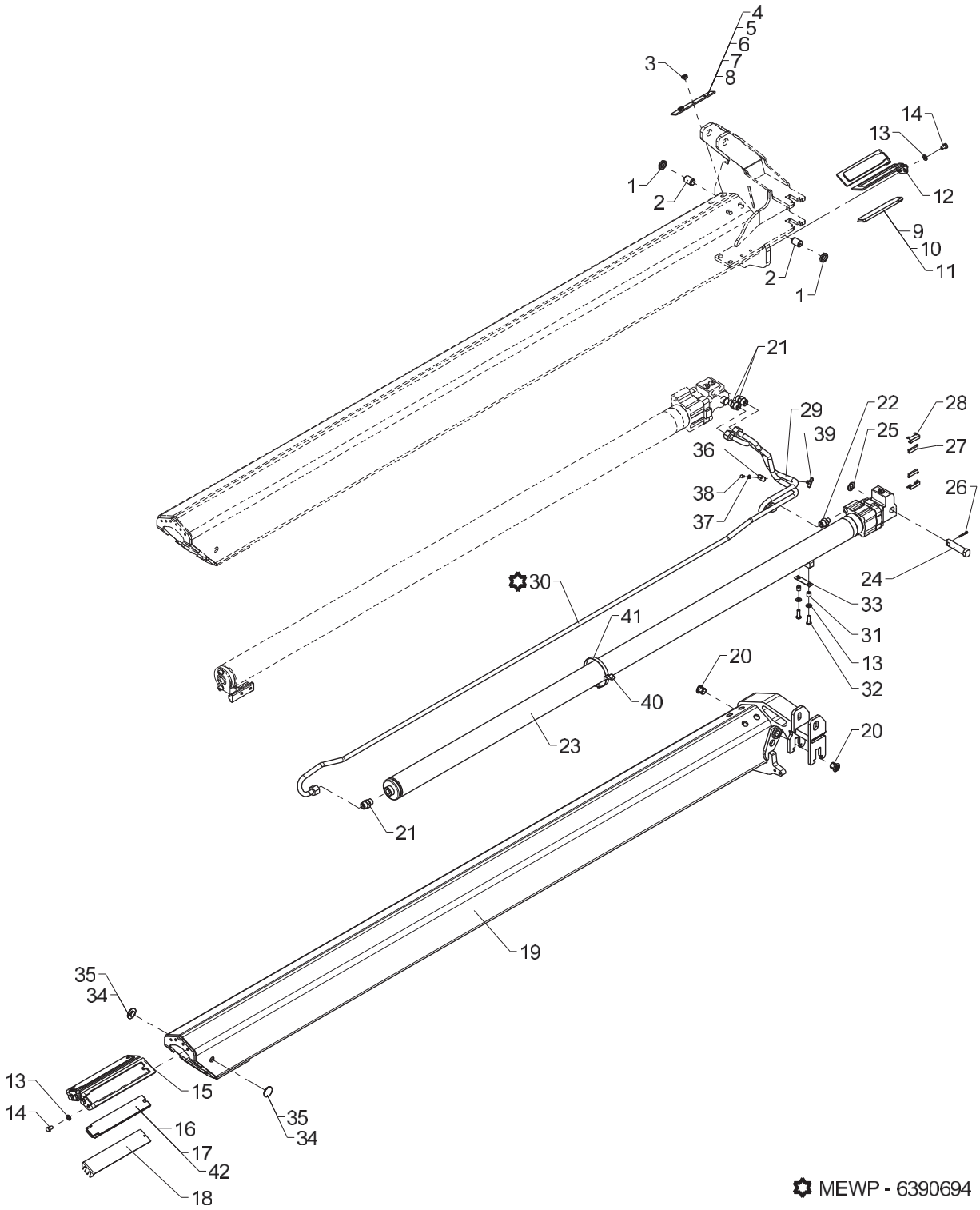

542 03 160

K7 extension, complete

From loader 1150001
To loader

Created 16-08-2010
Modified 03-06-2014

Pos	Qty.	Part no.	Description	Remarks
42	2	63590	Slide block	10 mm

50/345

Internal ref. 63 90 480

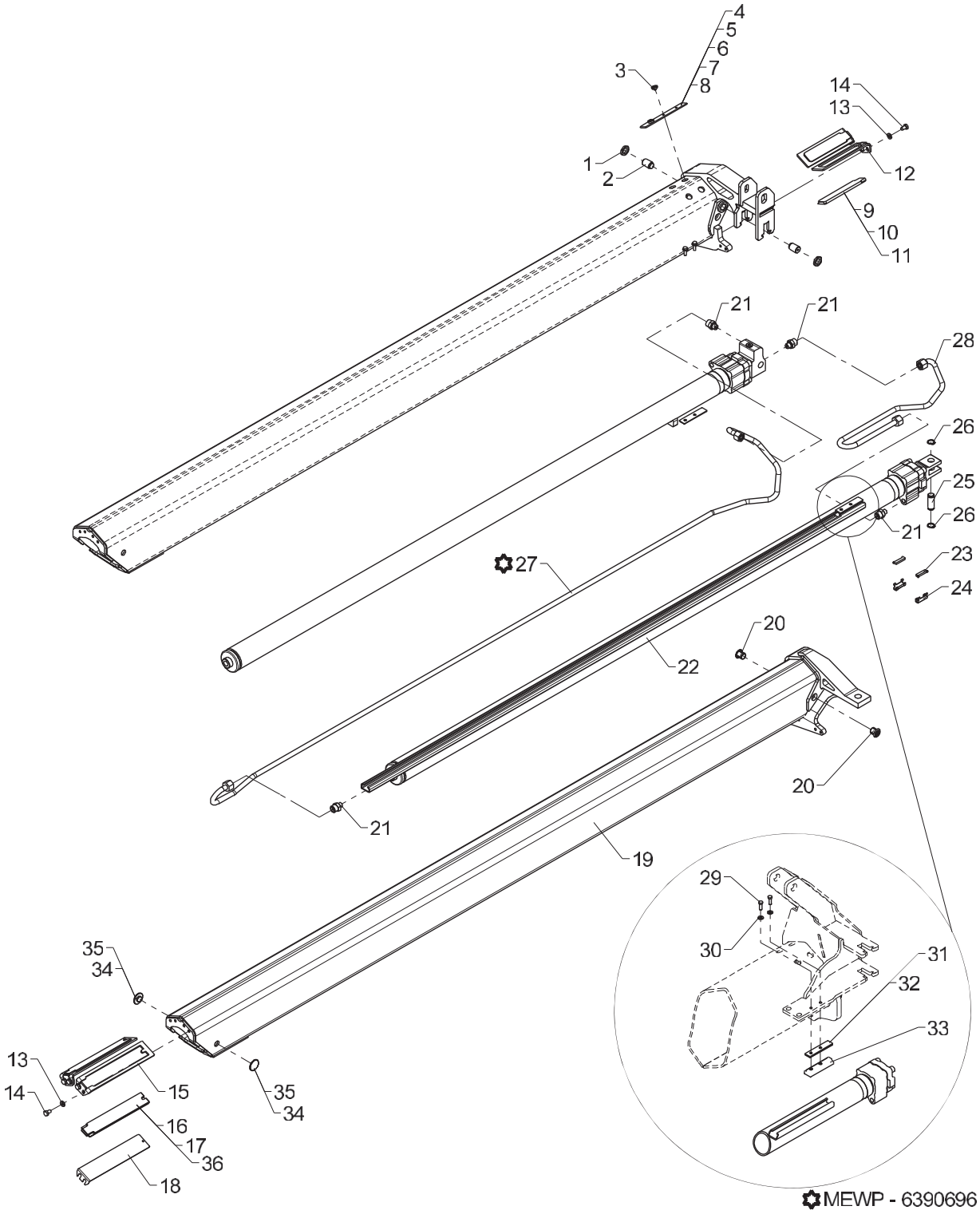

K8 extension, complete

Pos	Qty.	Part no.	Description	Remarks
1	2	32364	Counter nut	M24 x 2
2	2	6304409	Guide	
3	4	31864	Allen screw	M8 x 6
4	2	6360414	Spacer	4 mm
5	2	6294434	Spacer	5 mm
6	2	6193304	Spacer	6 mm
7	2	6235944	Spacer	7 mm
8	2	6193314	Spacer	8 mm
9	2	63518	Slide block	8 mm
10	2	63762	Slide block	6299074, 9 mm
11	2	63593	Slide block	10 mm
12	2	6340441	Bracket for slide block	
13	8	31177	Washer	10 mm
14	8	30153	Set screw	M10 x 16
15	2	6300443	Bracket for slide block	
16	2	63527	Slide block	9 mm
17	2	63528	Slide block	8 mm
18	2	6300568	Shim	
19	1	6390481	Extension VIII	
20	2	63487	Plug	
21	4	26368	Straight connection	P-GEV 16 SR 3/8-WD
22	1	6390620	Ext. cylinder VIII(C70/45Sx232	
23	2	6340317	Lock plate (10 mm)	
24	2	31920	Clip, stainless, 10mm	
25	1	6390574	Pin	
26	2	33110	Circlip	22U
27	1	6390656	Pipe, CVIII extend	
28	1	6390657	Pipe, CVIII retract	
29	2	30134	Set screw, stainless	M8 x 25
30	2	31754	Washer	8,4 x 18 x 2
31	1	6390568	Spacer, 4 mm	
32	1	6390578	Spacer, 3 mm	
33	1	63689	Slide block with bushing	
34	2	6394631	Guide, 5 + 2.5 mm	
35	2	6394632	Guide, 5 + 1.75 mm	
36	2	68084	Slide block	10 mm

50/345

Internal ref. 63 90 350

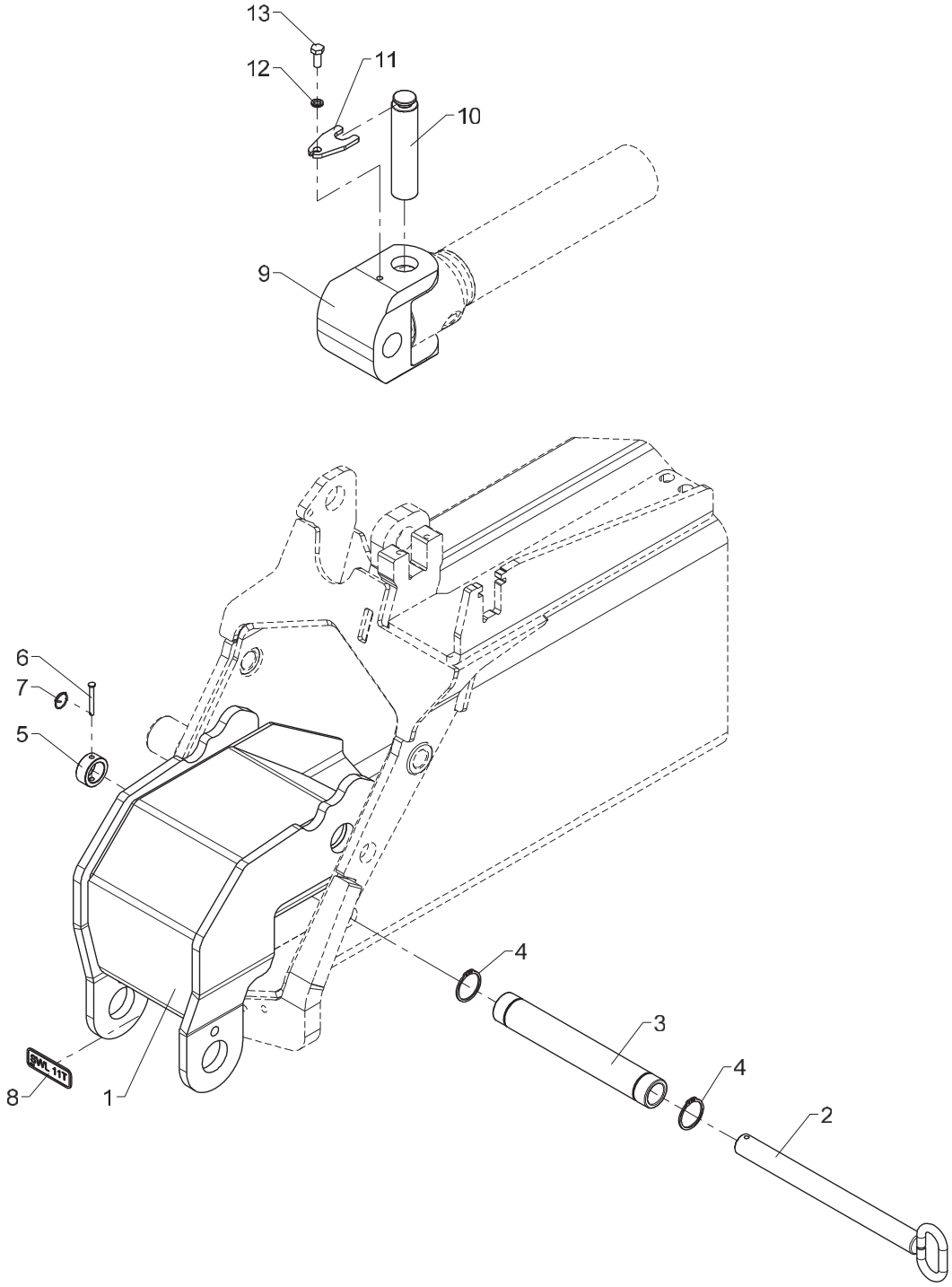

Separate hook suspension, K2

Pos	Qty.	Part no.	Description	Remarks
1	1	6390471	Hook suspension	
2	1	6390476	Pin for suspension	
3	1	6390489	Hub	
4	2	33119	Circlip	36U
5	1	6390494	Washer, short	
6	1	31280	Cotter bolt	ø5 x 40
7	1	33458	Lock ring	
8	1	66542	Plate SWL 11 t	
9	1	6390377	Adapter	
10	1	6390552	Pin	
11	1	6340337	Lock plate	
12	1	30931	Nordlock washer, 8 mm	
13	1	30132	Set screw, stainless	

50/345

Internal ref. 63 90 370

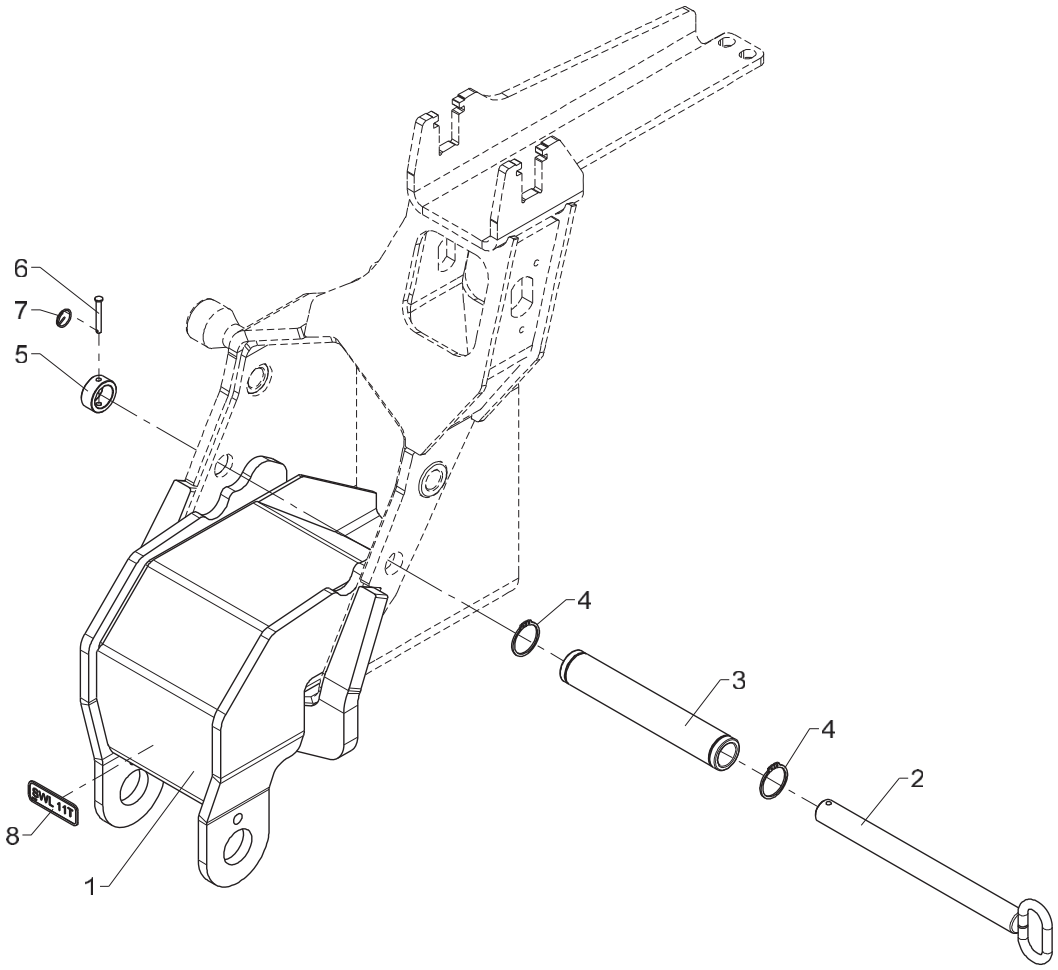

From loader 1150001
To loader

Created 16-08-2010
Modified

Separate hook suspension, K3

Pos	Qty.	Part no.	Description	Remarks
1	1	6390471	Hook suspension	
2	1	6390476	Pin for suspension	
3	1	6390479	Hub	
4	2	33119	Circlip	36U
5	1	6390494	Washer, short	
6	1	31280	Cotter bolt	ø5 x 40
7	1	33458	Lock ring	
8	1	66542	Plate SWL 11 t	

50/345

Internal ref. 63 90 390

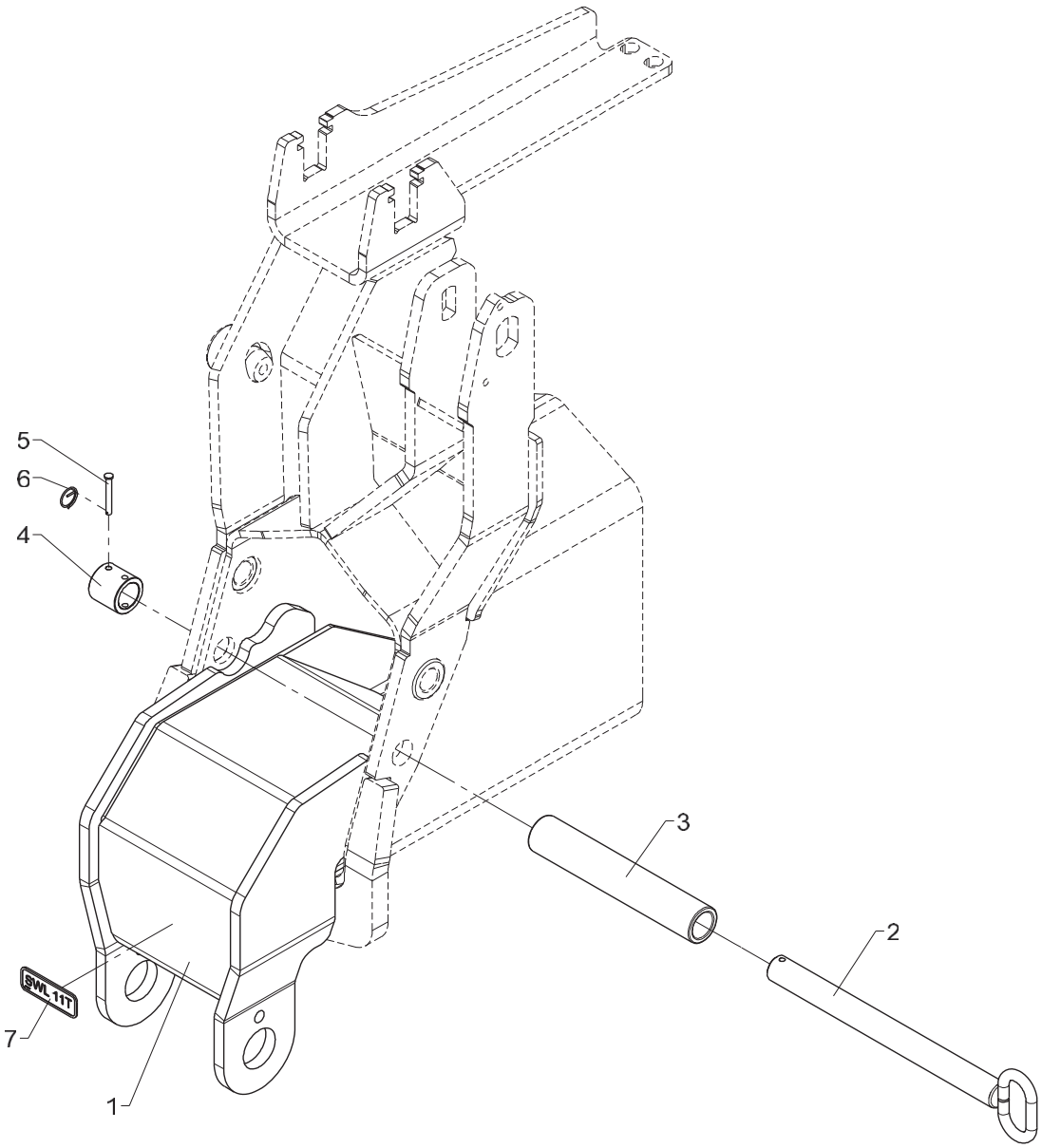

From loader 1150001
To loader

Created 16-08-2010
Modified

Separate hook suspension, K4

Pos	Qty.	Part no.	Description	Remarks
		6390390	Extra hook suspension, K4	
1	1	6390471	Hook suspension	
2	1	6390476	Pin for suspension	
3	1	6390469	Hub	
4	1	6390495	Washer, long	
5	1	31280	Cotter bolt	ø5 x 40
6	1	33458	Lock ring	
7	1	66542	Plate SWL 11 t	

50/345

Internal ref. 63 90 430

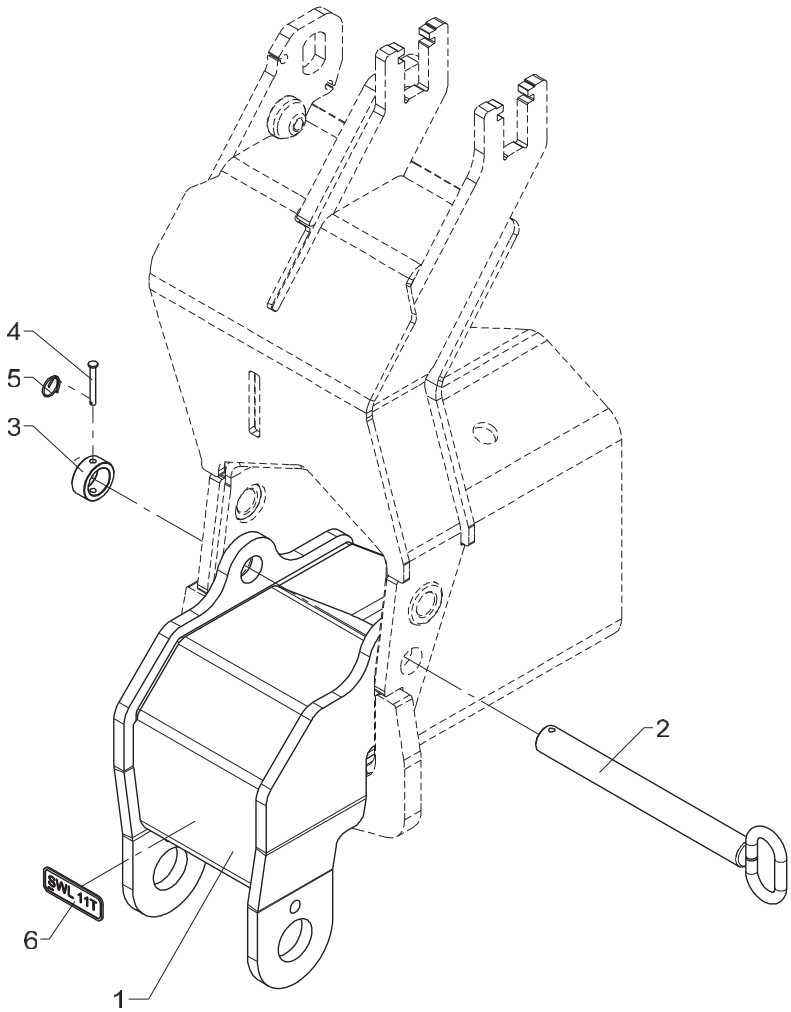

From loader 1150001
To loader

Created 16-08-2010
Modified

Separate hook suspension, K5

Pos	Qty.	Part no.	Description	Remarks
		6390430	Extra hook suspension, K5	
1	1	6390531	Hook suspension, K5	
2	1	6390536	Pin for suspension	
3	1	6390494	Washer, short	
4	1	31280	Cotter bolt	ø5 x 40
5	1	33458	Lock ring	
6	1	66542	Plate SWL 11 t	

50/345

Internal ref. 63 90 450

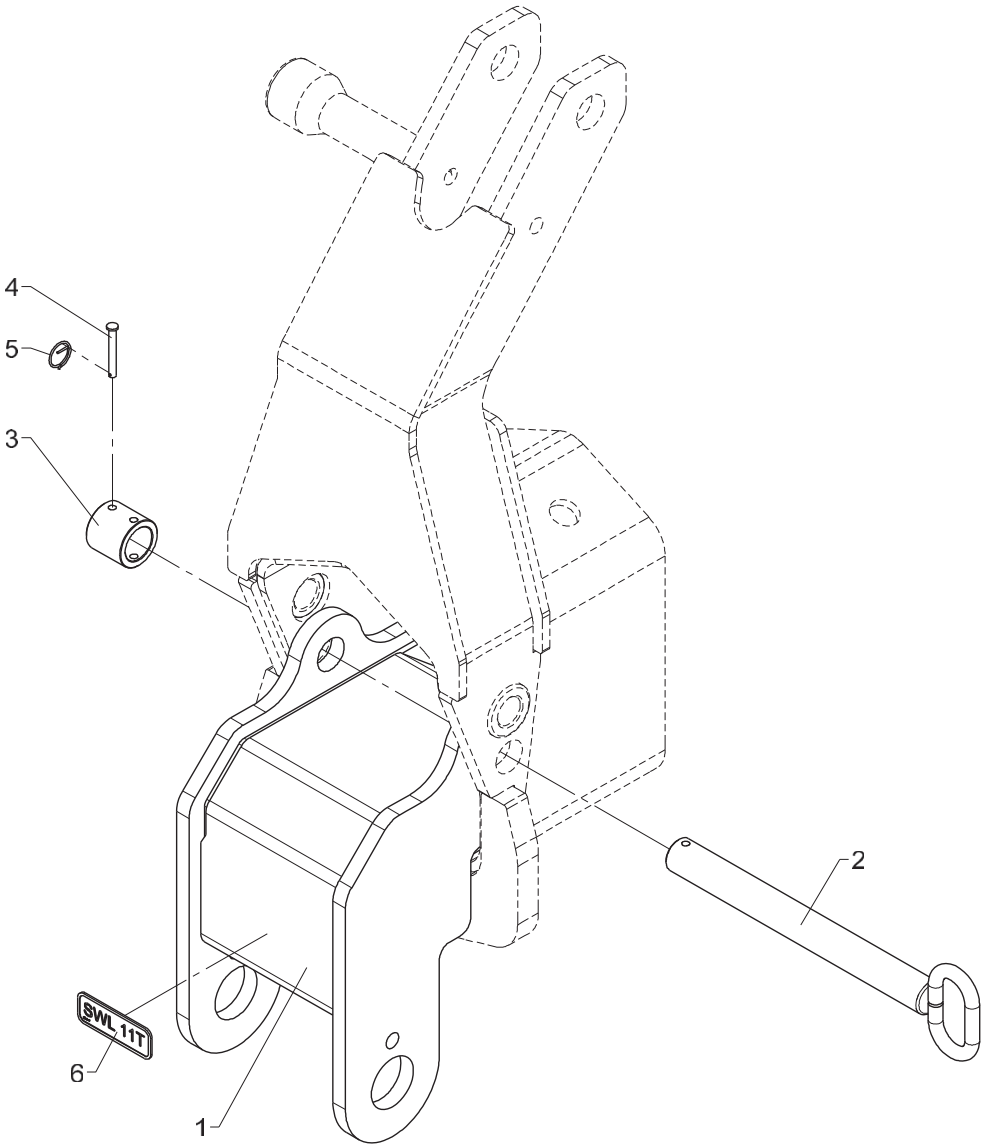

From loader 1150001
To loader

Created 16-08-2010
Modified

Separate hook suspension, K6

Pos	Qty.	Part no.	Description	Remarks
		6390450	Extra hook suspension, K6	
1	1	6390631	Hook suspension, K6	
2	1	6390536	Pin for suspension	
3	1	6390495	Washer, long	
4	1	31280	Cotter bolt	
5	1	33458	Lock ring	
6	1	66542	Plate SWL 11 t	

50/345

Internal ref. 63 90 470

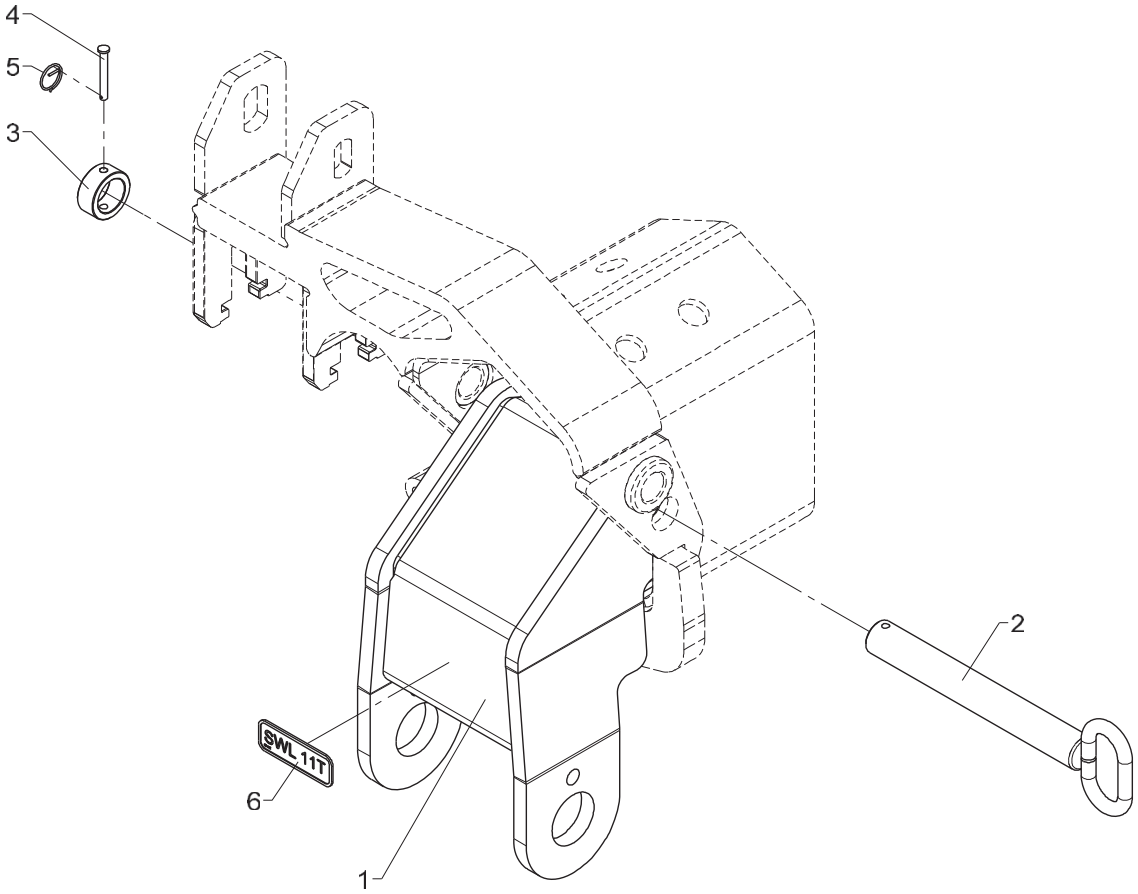

From loader 1150001
To loader

Created 16-08-2010
Modified

Separate hook suspension, K7

Pos	Qty.	Part no.	Description	Remarks
		6390470	Extra hook suspension, K7	
1	1	6390635	Hook suspension, K7	
2	1	6390676	Pin for suspension	
3	1	6390494	Washer, short	
4	1	31280	Cotter bolt	
5	1	33458	Lock ring	
6	1	66542	Plate SWL 11 t	

50/345

Internal ref. 63 90 490

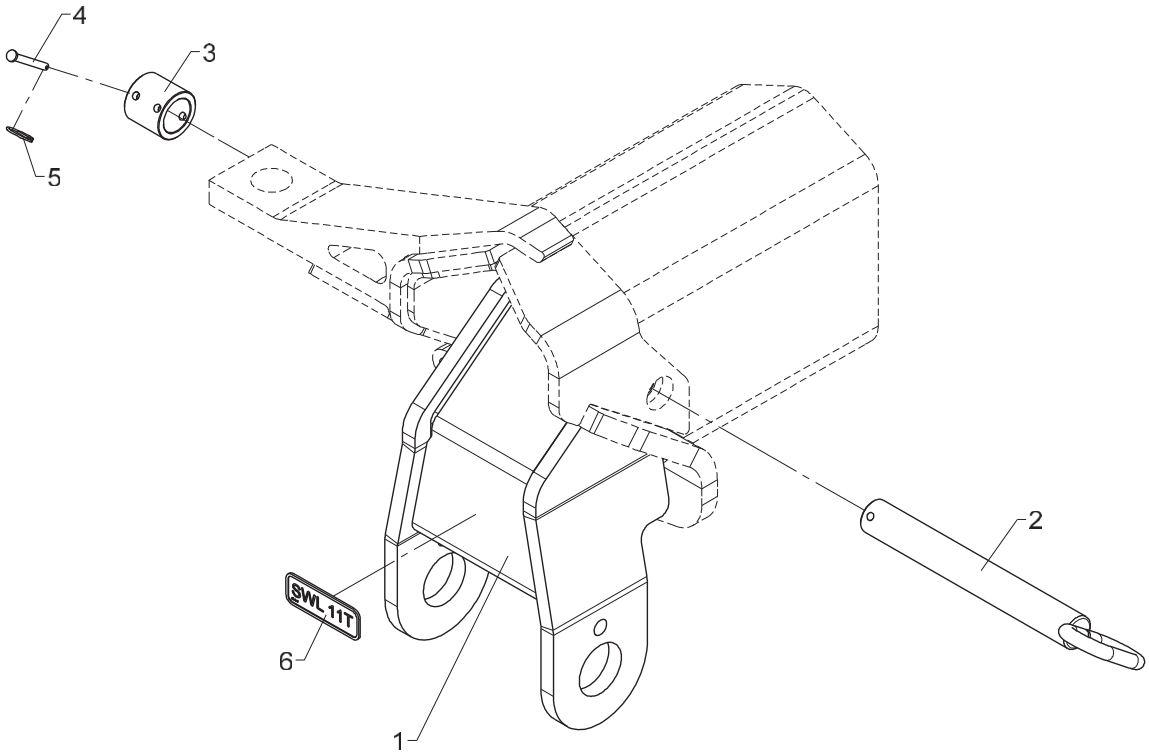

From loader 1150001
To loader

Created 16-08-2010
Modified

Separate hook suspension, K8

Pos	Qty.	Part no.	Description	Remarks
		6390490	Extra hook suspension, K8	
1	1	6390671	Hook suspension, K8	
2	1	6390676	Pin for suspension	
3	1	6390495	Washer, long	
4	1	31280	Cotter bolt	ø5 x 40
5	1	33458	Lock ring	
6	1	66542	Plate SWL 11 t	

50/345

63 95 560
Internal ref. 63 95 550

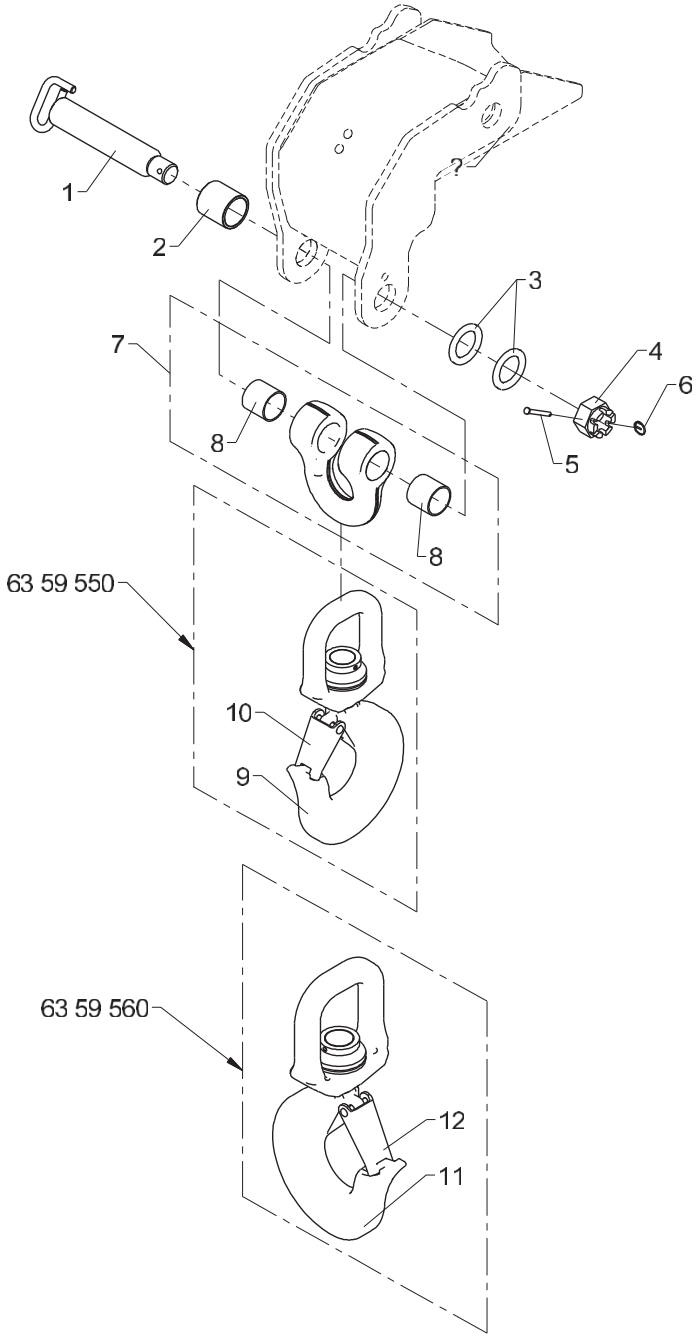

Pos	Qty.	Part no.	Description	Remarks
		6395550		
		6395560		
1	1	6300387	Pin for suspension	
2	1	68095	Spacer, ø50 / 42 x 50	
3	2	6193554	Distance ring	
4	1	30839	Nut	M30
5	1	31279	Cotter bolt	ø6 x 50
6	1	33458	Lock ring	
7	1	6395561	Shackle 22.5 t	
8	2	23969	Composite bearing	ø40/44 x 40
9	1	62167	Hook with ball bearing	
10	1	62147	Safety catch	
11	1	62196	Hook with ball bearing	
12	1	62159	Safety catch	

50/345

63 95 540
Internal ref. 63 95 530

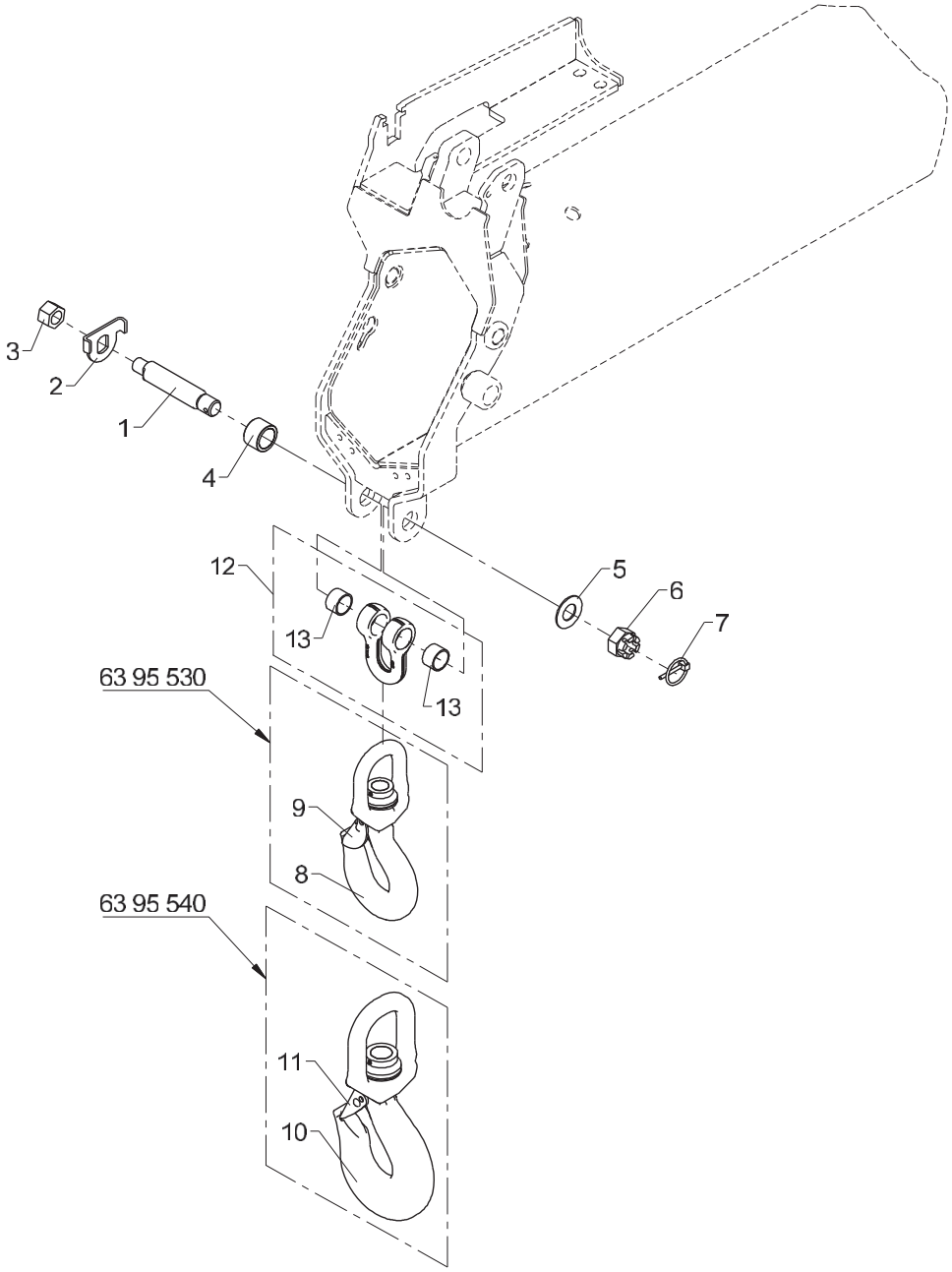

Pos	Qty.	Part no.	Description	Remarks
		6395530		
		6395540		
1	1	6662114	Pin	
2	1	6662104	Plate	
3	1	30894	Lock nut	M20
4	1	68094	Spacer, ø40 / 30 x 26	
5	1	31128	Washer	24 mm
6	1	30837	Nut	M24
7	1	31967	Ring split	ø4,5 x 40
8	1	62169	Hook with ball bearing	
9	1	62143	Safety catch	
10	1	63292	Hook, 8 t incl. bearing	
11	1	62144	Safety catch	
12	1	6395541		
13	2	23968	Composite bearing	ø28/32 x 20

50/345

Internal ref. 63 90 330

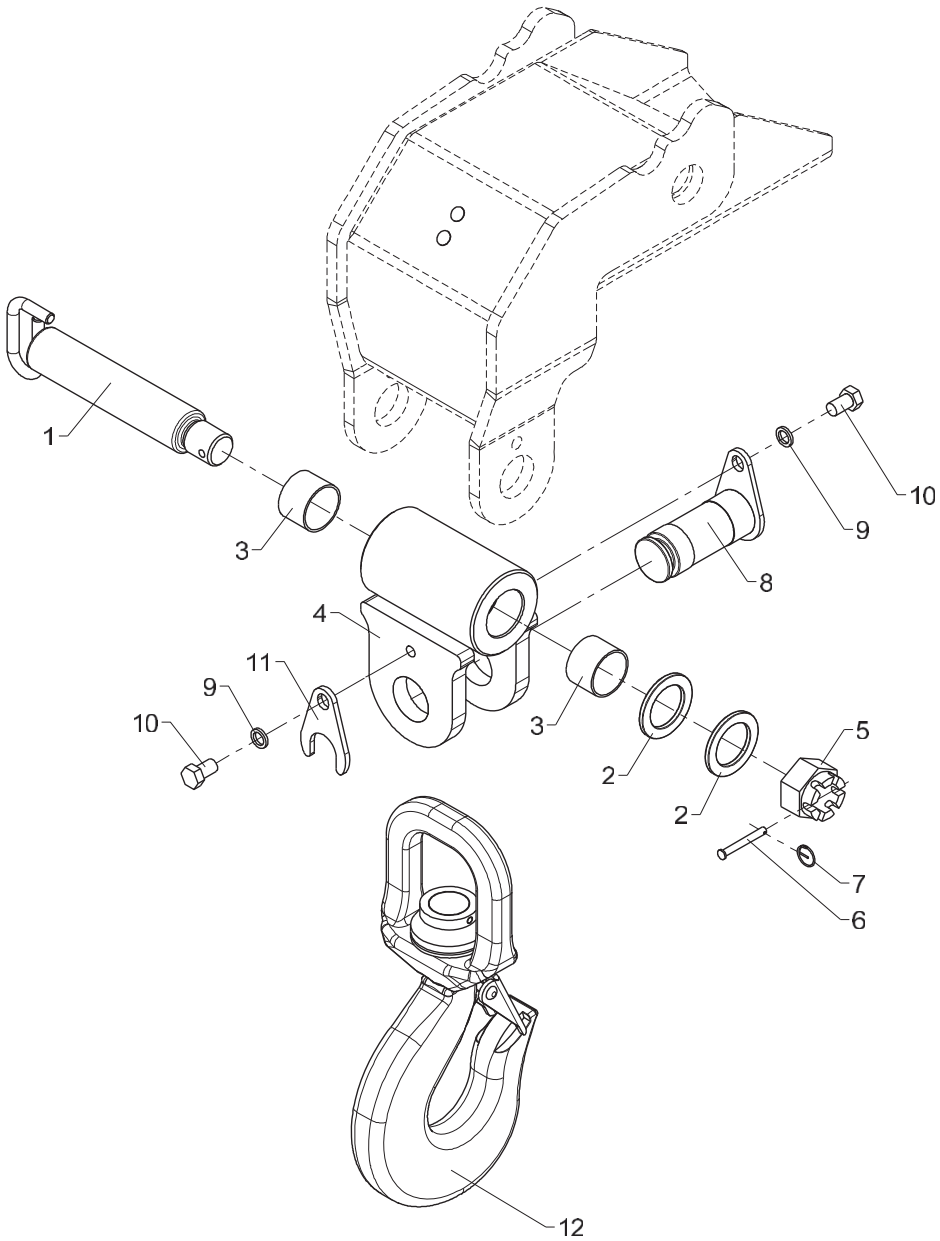

Hook suspension incl. hook

Created 16-08-2010
Modified 07-03-2013

Pos	Qty.	Part no.	Description	Remarks
		6390330	Hook suspension incl. hook	
1	1	6300387	Pin for suspension	
2	2	6193554	Distance ring	
3	2	23947	Composite bearing	ø40/44 x 30
4	1	6193483	Suspension	
5	1	30839	Nut	M30
6	1	31279	Cotter bolt	ø6 x 50
7	1	33458	Lock ring	
8	1	6193524	Pin	
9	2	31158	Spring washer	12 mm
10	2	30175	Set screw	M12 x 20
11	1	6193544	Lock plate	
12	1	62167	Hook with ball bearing	

50/345

Internal ref. 63 90 540

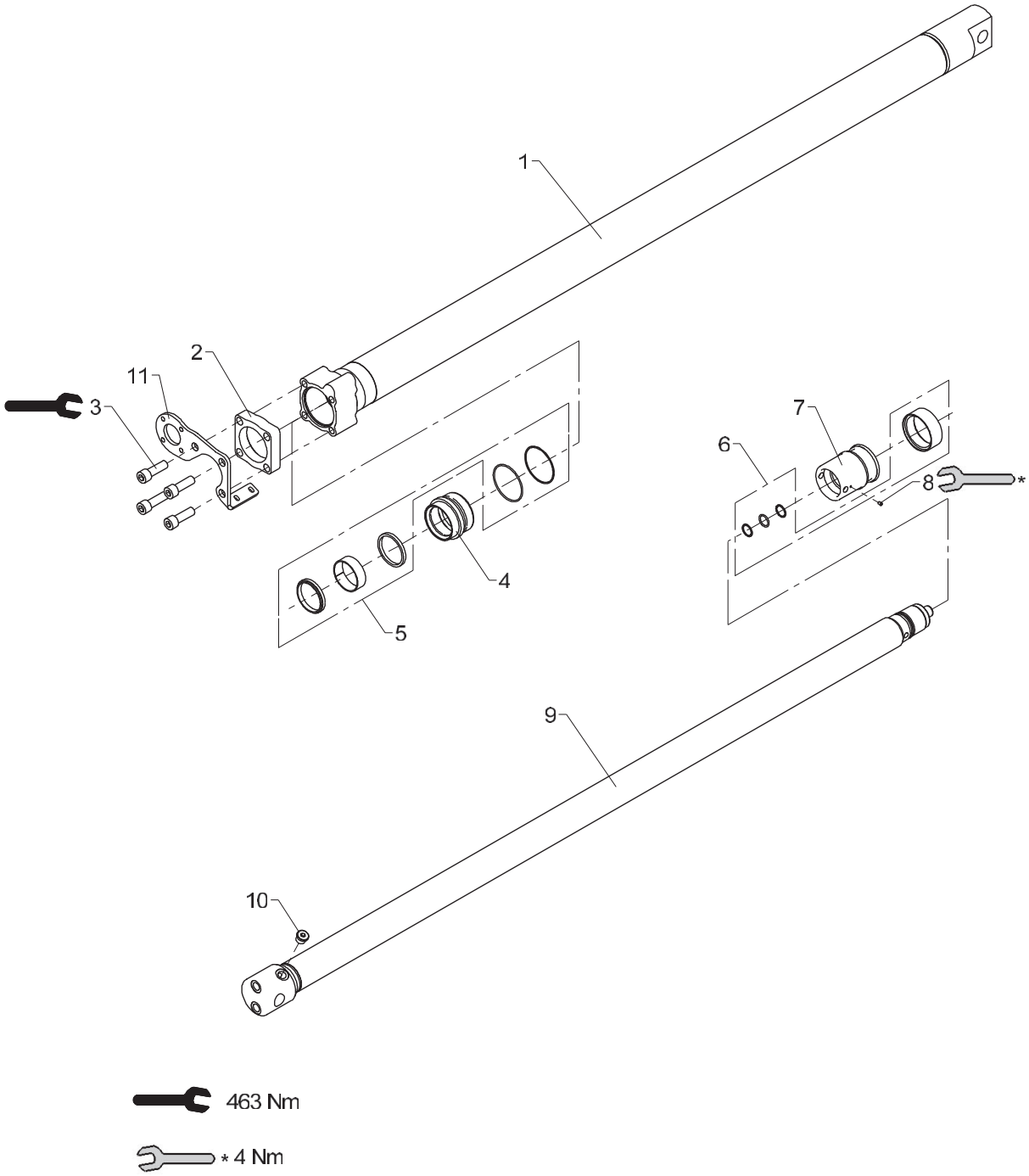

From loader 1150001
To loader

Extension cylinder I (C90/70 x 1750)

Created 25-11-2010
Modified 26-06-2014

Pos	Qty.	Part no.	Description	Remarks
		6390540	Ext.cylinder I (C90/70x1800)	
1	1	6390545	Cylinder tube	
2	1	6390544	Flange	
3	4	32450	Screw	MC18 x 55
4	1	6390547	Guide	
5	1	6893940	Seal kit for guide, C90/70	
6	1	6893950	Seal kit for piston, C90	
7	1	6390549	Piston	
8	1	30903	Screw	MSP6 x 8
9	1	6390541	Piston rod	
10	1	25103	Plug	VS-R-1/2 WD
11	1	6390558	Bracket for slide block	

50/345

Internal ref. 63 90 560

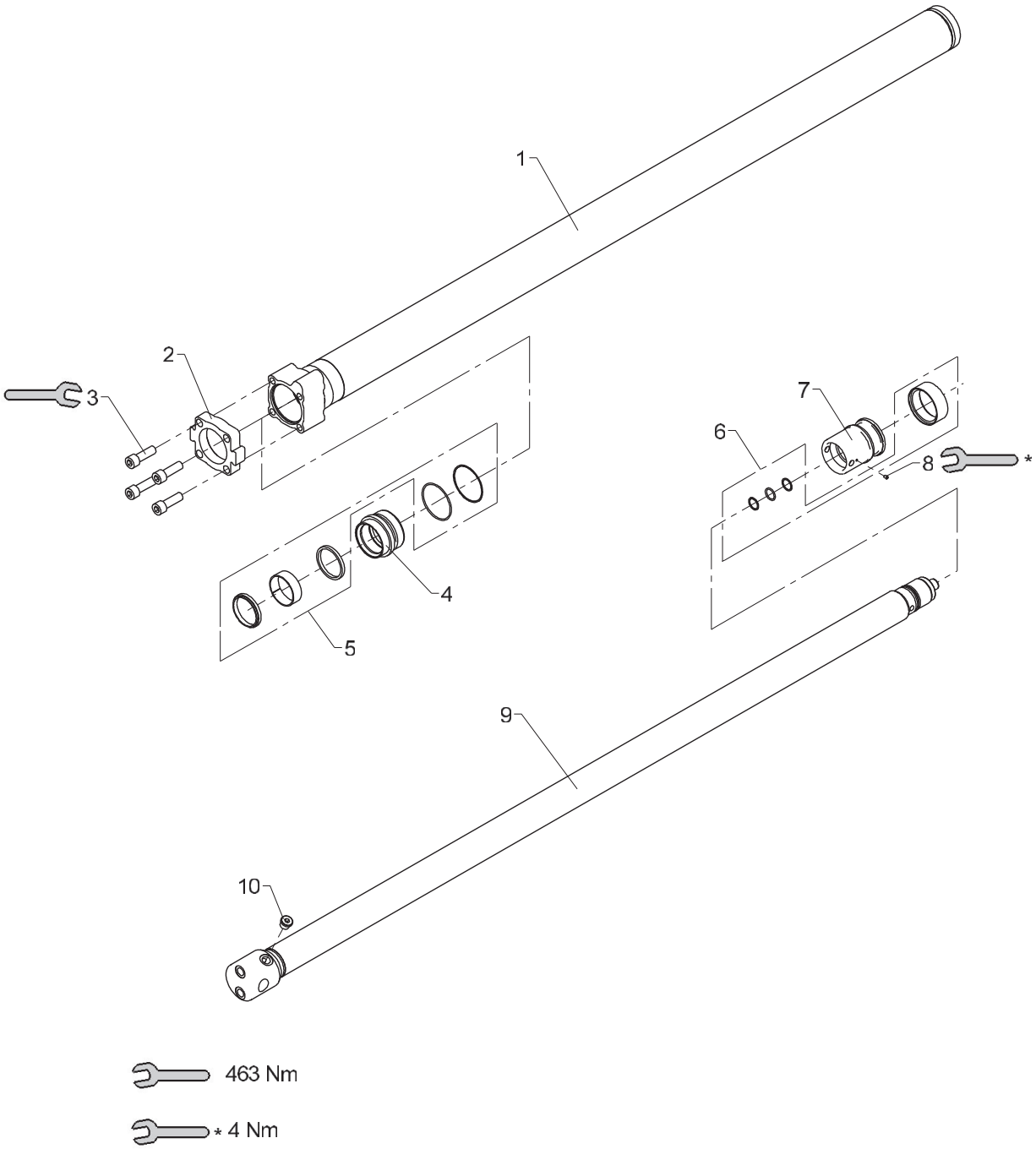

Extension cylinder II (C90/70 x 1875)

Created 25-11-2010
Modified 26-06-2014

Pos	Qty.	Part no.	Description	Remarks
		6390560	Ext. cylinder II (C90/70x1875)	
1	1	6390565	Cylinder tube	
2	1	6390564	Flange	
3	4	32450	Screw	MC18 x 55
4	1	6390547	Guide	
5	1	6893940	Seal kit for guide, C90/70	
6	1	6893950	Seal kit for piston, C90	
7	1	6390549	Piston	
8	1	30903	Screw	MSP6 x 8
9	1	6390561	Piston rod	
10	1	25103	Plug	VS-R-1/2 WD

50/345

Internal ref. 63 90 570

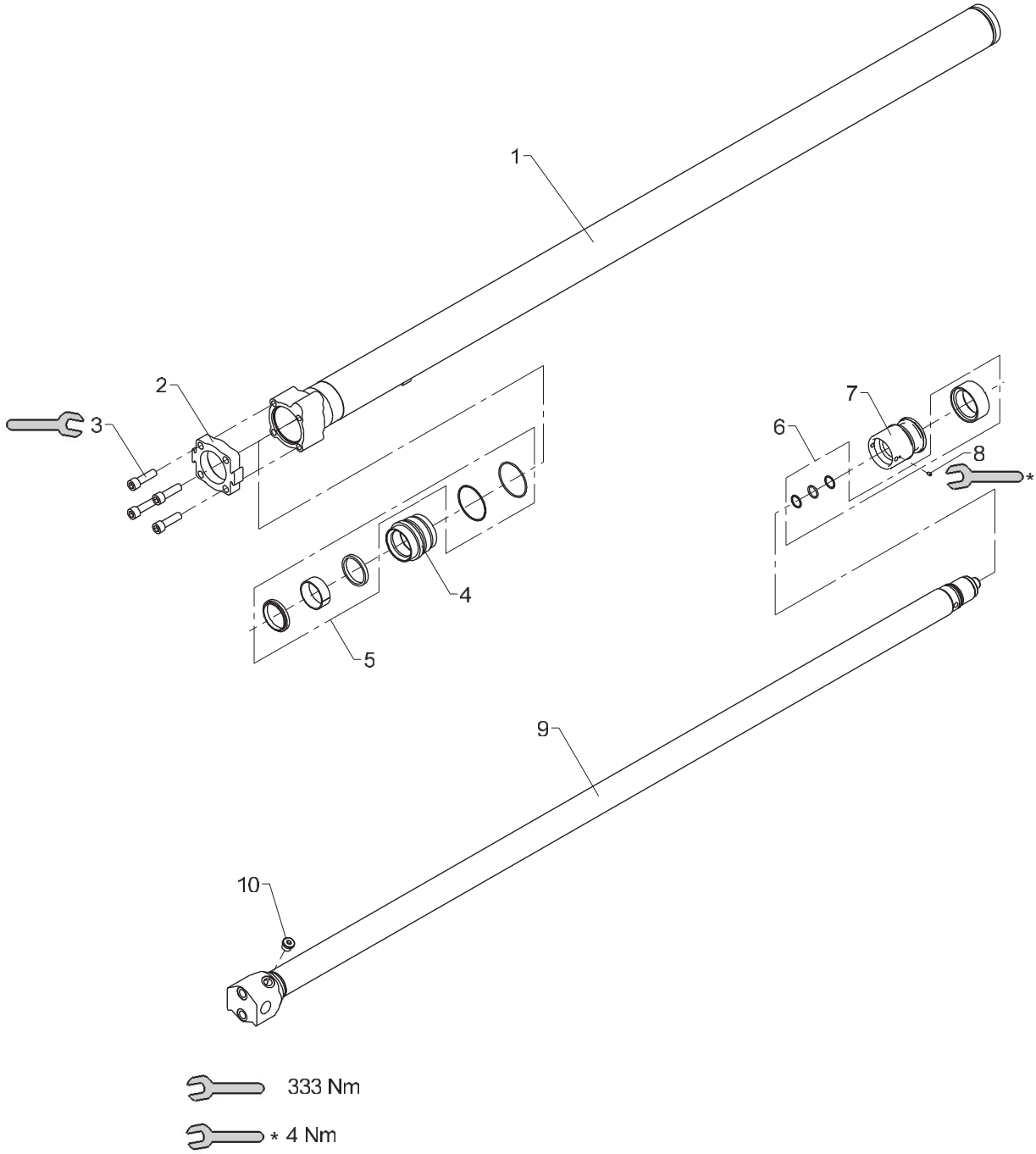

From loader 1150001
To loader

Extension cylinder III (C85/63 x 2000)

Created 25-11-2010
Modified 24-06-2014

Pos	Qty.	Part no.	Description	Remarks
		6390570	Ext. cylinder III(C85/63x2000)	
1	1	6390575	Cylinder tube	
2	1	6292483	Flange	
3	4	32420	Sockethead screw	MC16 x 55
4	1	6292433	Guide	
5	1	6893960	Seal kit for guide, C85/63	
6	1	6893970	Seal kit for piston, C85	
7	1	6390579	Piston	
8	1	30903	Screw	MSP6 x 8
9	1	6390571	Piston rod	
10	1	25103	Plug	VS-R-1/2 WD

50/345

Internal ref. 63 90 580

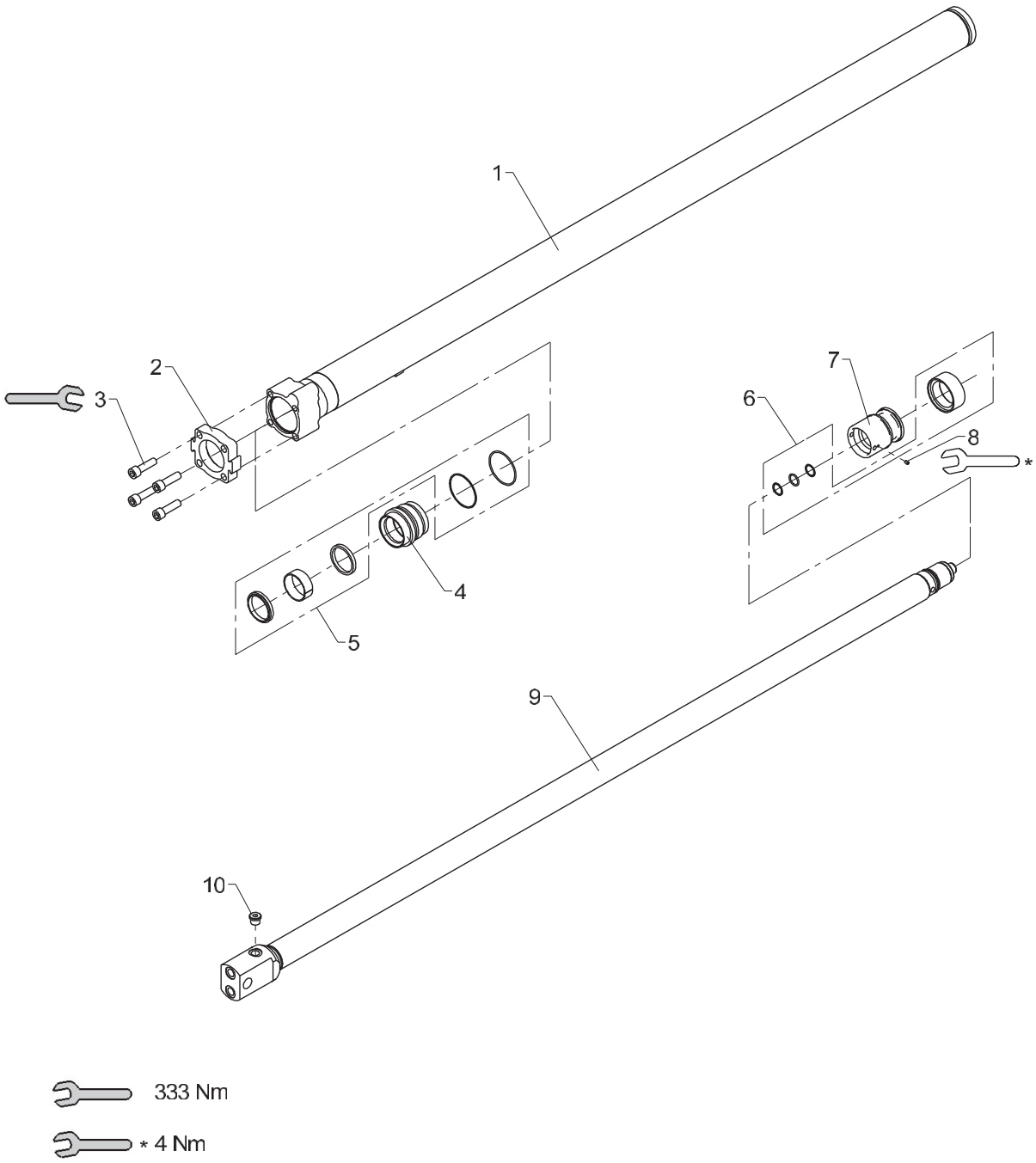

Extension cylinder IV (C85/63 x 2000)

Created 25-11-2010
Modified 08-03-2016

Pos	Qty.	Part no.	Description	Remarks
		6390580	Ext. cylinder IV (C85/63x2000)	
1	1	6390575	Cylinder tube	
2	1	6292483	Flange	
3	4	32420	Sockethead screw	MC16 x 55
4	1	6292433	Guide	
5	1	6893960	Seal kit for guide, C85/63	
6	1	6893970	Seal kit for piston, C85	
7	1	6390579	Piston	
8	1	30903	Screw	MSP6 x 8
9	1	6390581	Piston rod	
10	1	25103	Plug	VS-R-1/2 WD

50/345

Internal ref. 63 90 590

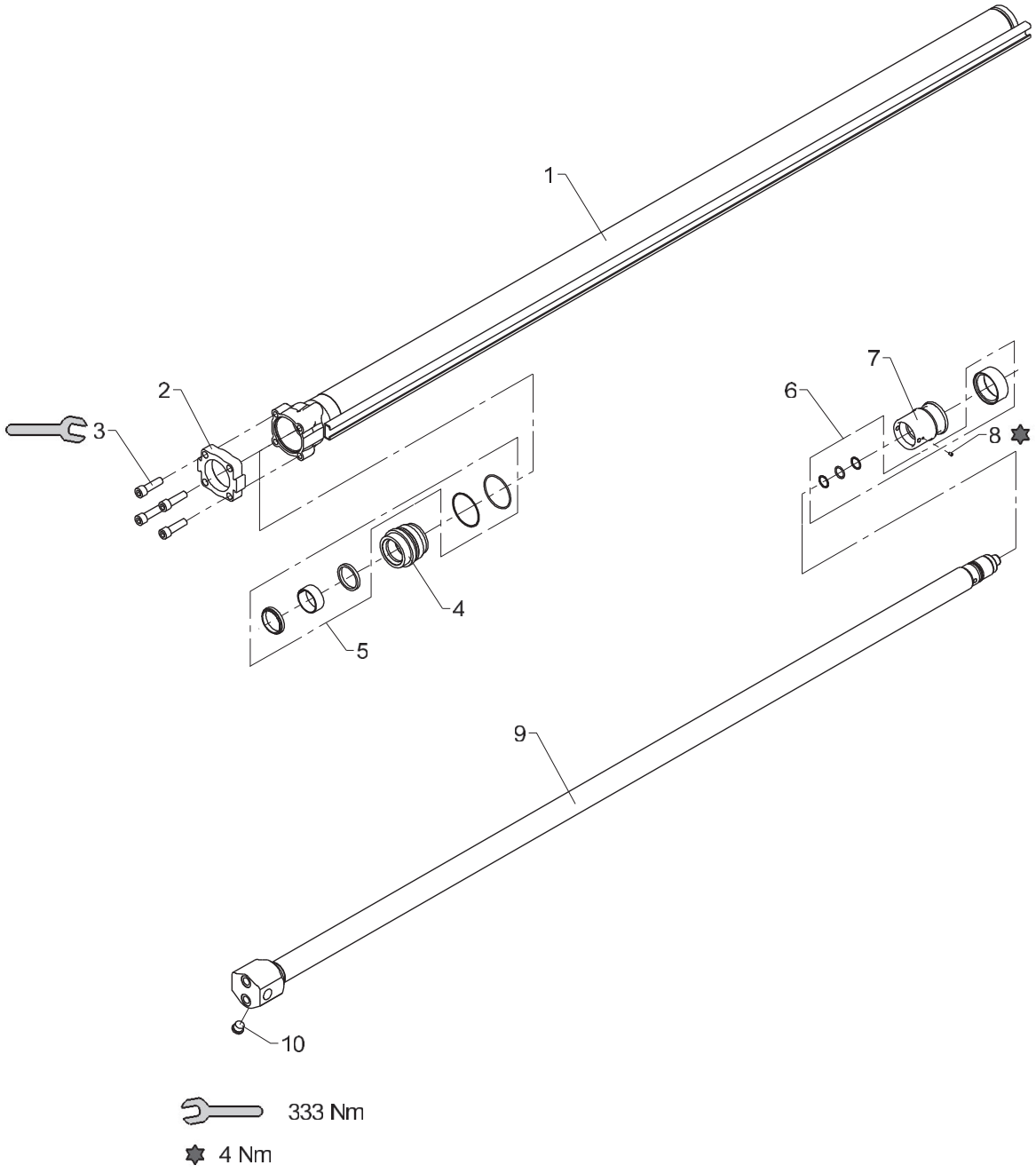

Extension cylinder V (C80/55 x 2150)

Created 25-11-2010
Modified 23-06-2014

Pos	Qty.	Part no.	Description	Remarks
		6390590	Ext. cylinder V (C80/55x2150)	
1	1	6390595	Cylinder tube	
2	1	6292733	Flange	
3	4	32420	Sockethead screw	MC16 x 55
4	1	6292683	Guide	
5	1	6893980	Seal kit for guide, C80/55	
6	1	6893990	Seal kit for piston, C80	
7	1	6390599	Piston	
8	1	30903	Screw	MSP6 x 8
9	1	6390591	Piston rod	
10	1	25103	Plug	VS-R-1/2 WD

50/345

Internal ref. 63 90 600

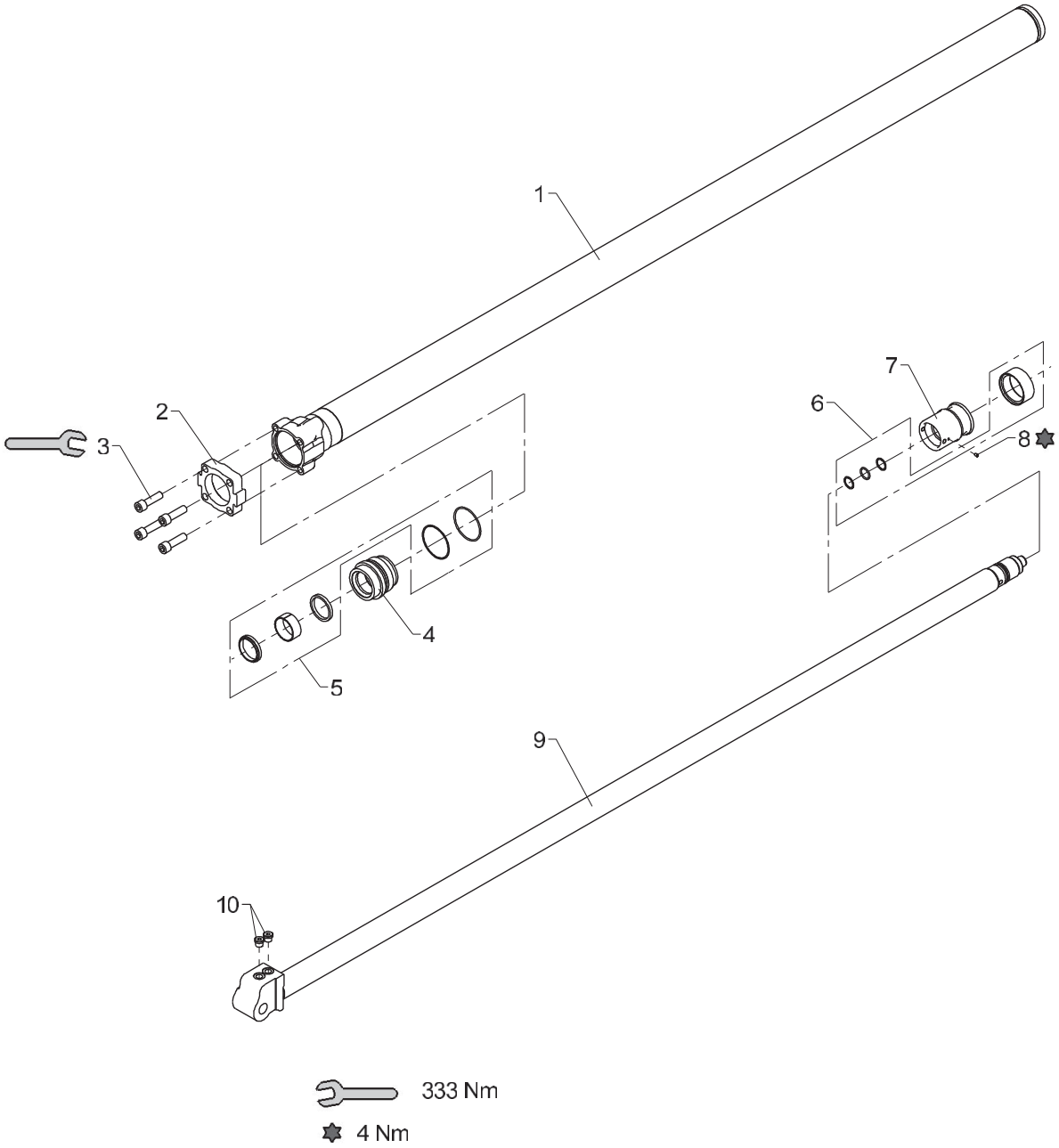

From loader 1150001
To loader

Extension cylinder VI (C80/55 x 2225)

Created 25-11-2010
Modified 23-06-2014

Pos	Qty.	Part no.	Description	Remarks
		6390600	Ext. cylinder VI (C80/55x2225)	
1	1	6390605	Cylinder tube	
2	1	6292733	Flange	
3	4	32420	Sockethead screw	MC16 x 55
4	1	6292683	Guide	
5	1	6893980	Seal kit for guide, C80/55	
6	1	6893990	Seal kit for piston, C80	
7	1	6390599	Piston	
8	1	30903	Screw	MSP6 x 8
9	1	6390601	Piston rod	
10	2	25277	Plug	VS-R-3/8 WD

50/345

Internal ref. 63 90 610

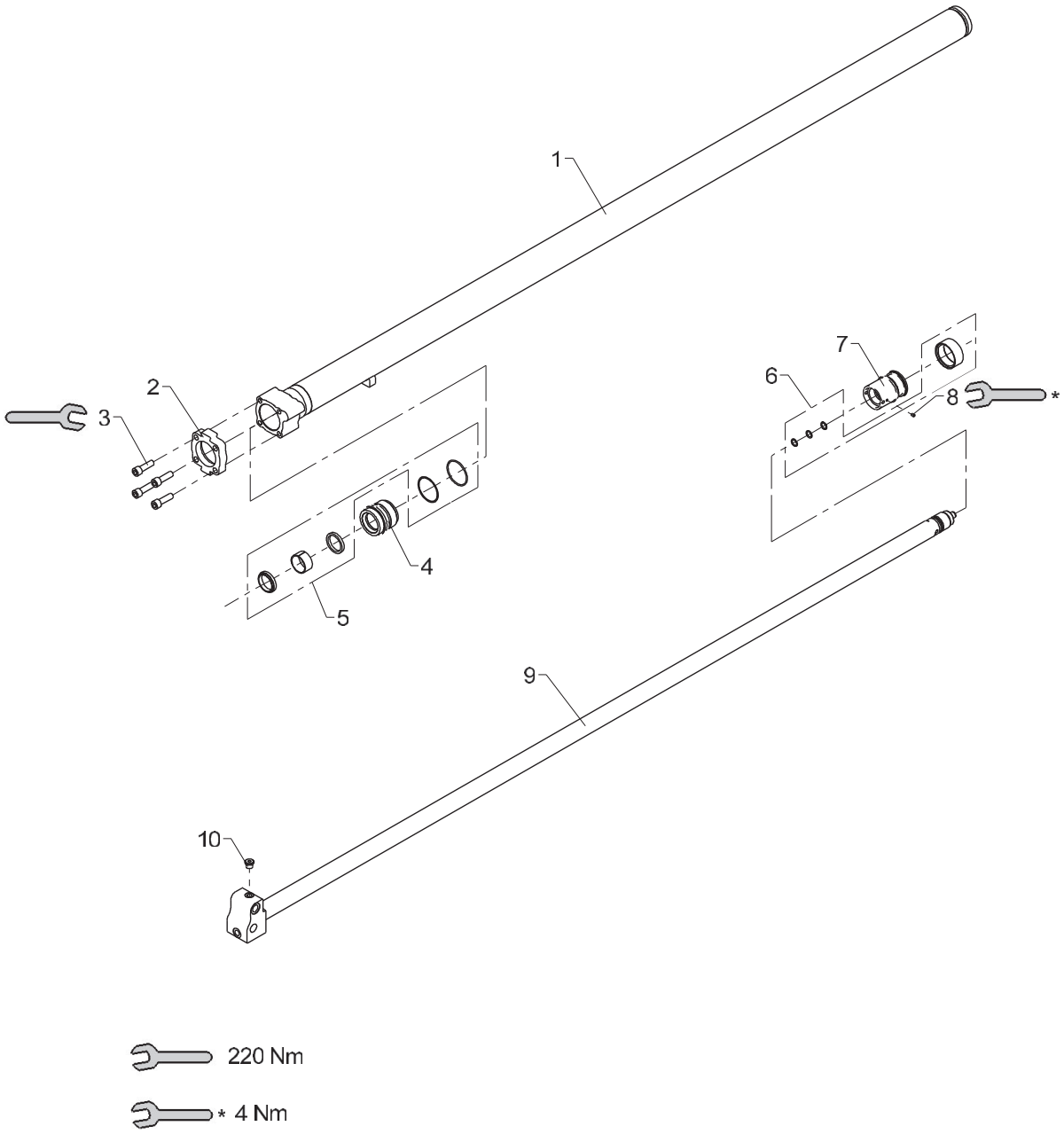

From loader 1150001
To loader

Extension cylinder VII (C70/45 x 2275)

Created 25-11-2010
Modified 26-06-2014

Pos	Qty.	Part no.	Description	Remarks
		6390610	Ext. cylinder VII(C70/45x2275)	
1	1	6390615	Cylinder tube	
2	1	6344567	Mounting flange	
3	4	32487	Screw	MC14 x 45
4	1	6390614	Guide	
5	1	6894370	Seal kit, guide, C70/45	
6	1	6894380	Seal kit, piston, C70	
7	1	6390619	Piston	
8	1	30903	Screw	MSP6 x 8
9	1	6390611	Piston rod	
10	1	25277	Plug	VS-R-3/8 WD

50/345

Internal ref. 63 90 620

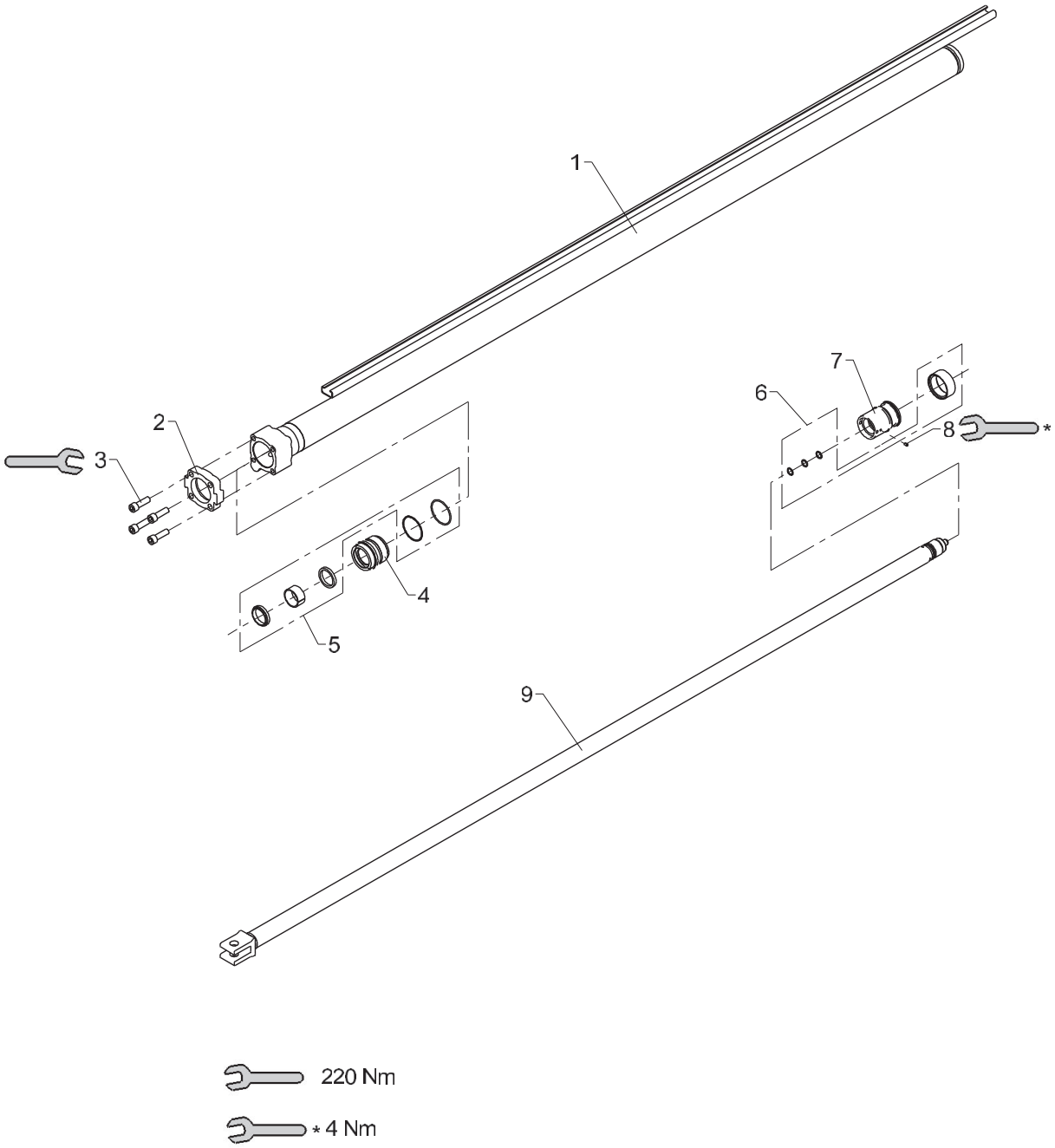

Extension cylinder VIII (C70/45S x 2325)

Created 25-11-2010
Modified 30-06-2014

Pos	Qty.	Part no.	Description	Remarks
		6390620	Ext. cylinder VIII(C70/45Sx232	
1	1	6390625	Cylinder tube	
2	1	6344567	Mounting flange	
3	4	32487	Screw	MC14 x 45
4	1	6390614	Guide	
5	1	6894370	Seal kit, guide, C70/45	
6	1	6894380	Seal kit, piston, C70	
7	1	6390619	Piston	
8	1	30903	Screw	MSP6 x 8
9	1	6390621	Piston rod	

50/345

Internal ref. 63 90 710

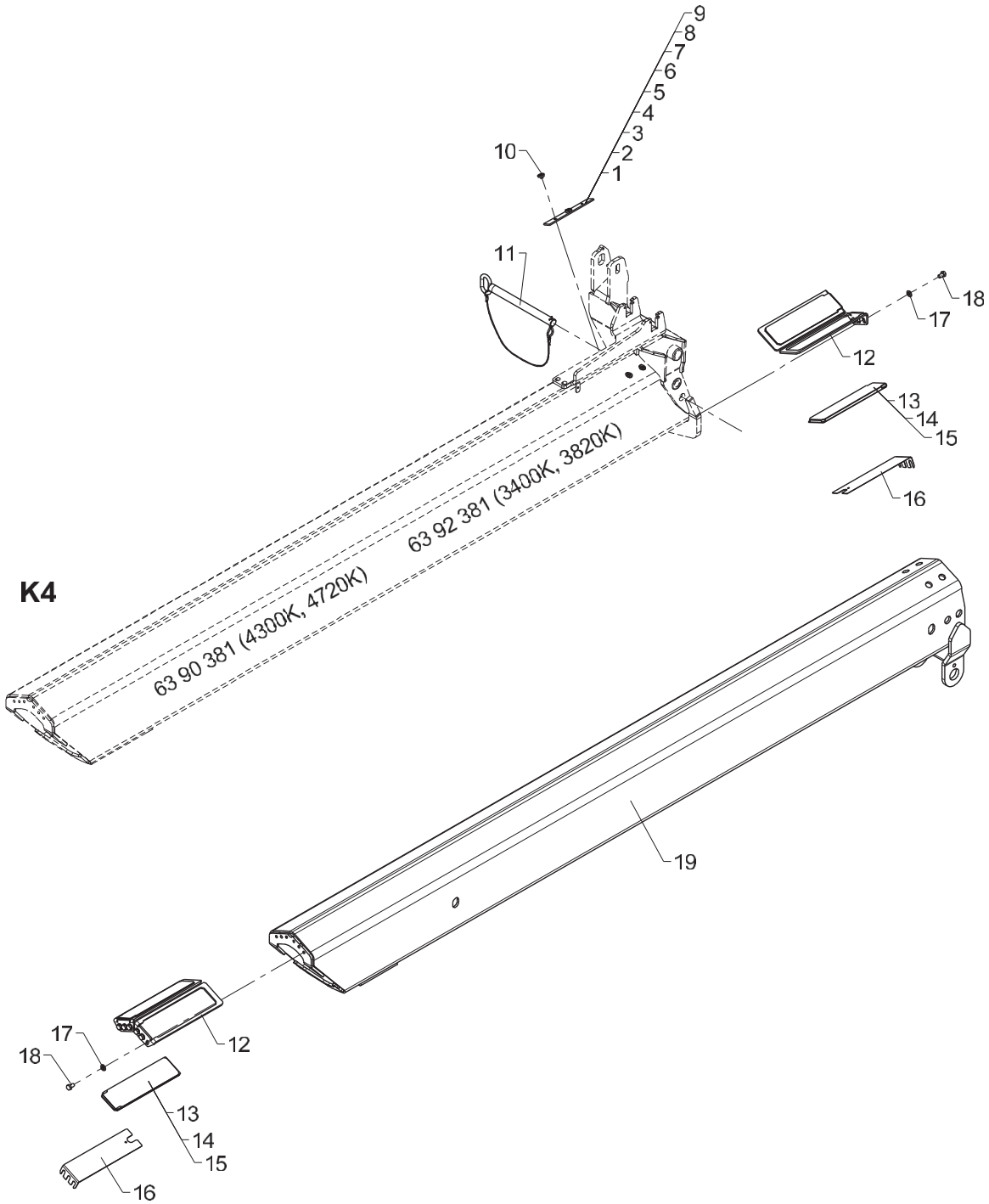

Manual extension, F5

Pos	Qty.	Part no.	Description	Remarks
1	2	6360414	Spacer	4 mm
2	2	6294434	Spacer	5 mm
3	2	6193304	Spacer	6 mm
4	2	6235944	Spacer	7 mm
5	2	6193314	Spacer	8 mm
6	2	6392632	Spacer	9 mm
7	2	6392633	Spacer	10 mm
8	2	6392634	Spacer	11 mm
9	2	6392635	Spacer	12 mm
10	4	31864	Allen screw	M8 x 6
11	1	6390716	Lock pin with split pin	
12	4	6300366	Bracket for slide block	
13	4	63582	Slide block	8 mm
14	4	63583	Slide block	9 mm
15	4	63584	Slide block	10 mm
16	4	6300534	Shim	
17	12	31177	Washer	10 mm
18	12	30153	Set screw	M10 x 16
19	1	6390711	Manual extension, F5	

50/345

Internal ref. 63 90 720

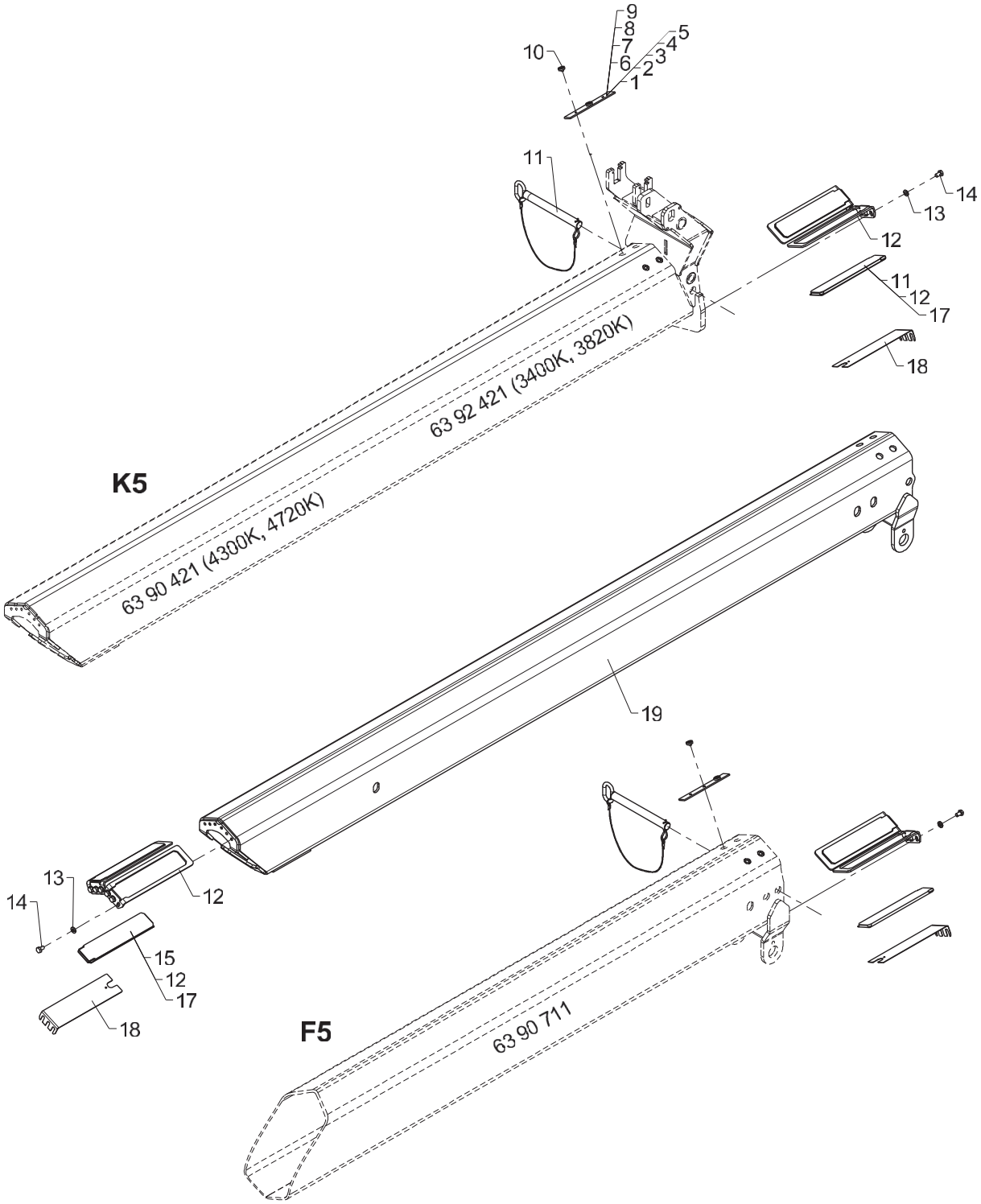

Manual extension, F6

Pos	Qty.	Part no.	Description	Remarks
1	2	6360414	Spacer	4 mm
2	2	6294434	Spacer	5 mm
3	2	6193304	Spacer	6 mm
4	2	6235944	Spacer	7 mm
5	2	6193314	Spacer	8 mm
6	2	6392632	Spacer	9 mm
7	2	6392633	Spacer	10 mm
8	2	6392634	Spacer	11 mm
9	2	6392635	Spacer	12 mm
10	4	31864	Allen screw	M8 x 6
11	1	6390726	Lock pin with split pin	
12	4	6300399	Bracket for slide block	
13	12	31177	Washer	10 mm
14	12	30153	Set screw	M10 x 16
15	4	63585	Slide block	8 mm
16	4	63586	Slide block	9 mm
17	4	63587	Slide block	10 mm
18	4	6300534	Shim	
19	1	6390721	Manual extension, F6	

50/345

Internal ref. 63 90 730

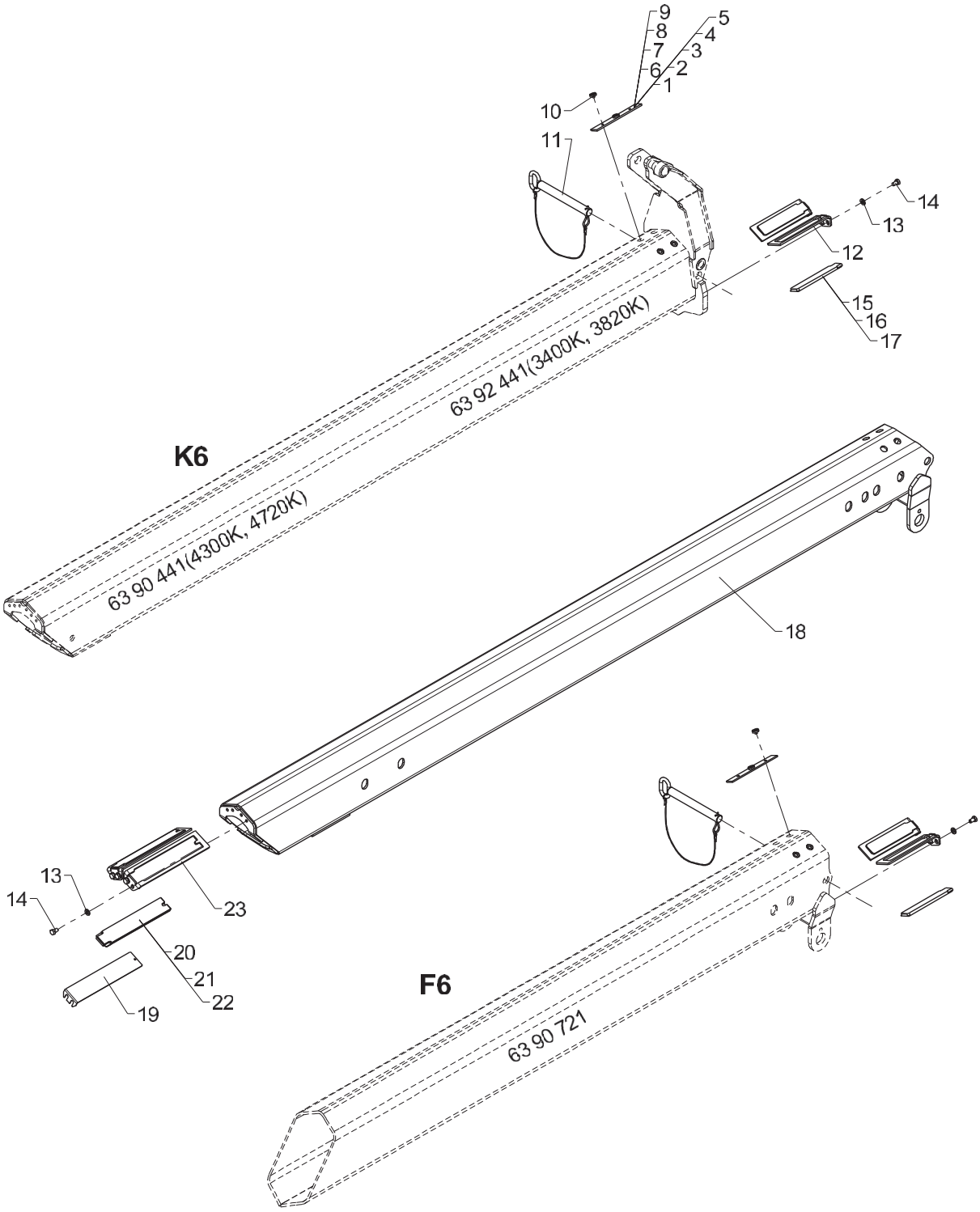

Manual extension, F7

Pos	Qty.	Part no.	Description	Remarks
1	2	6360414	Spacer	4 mm
2	2	6294434	Spacer	5 mm
3	2	6193304	Spacer	6 mm
4	2	6235944	Spacer	7 mm
5	2	6193314	Spacer	8 mm
6	2	6392632	Spacer	9 mm
7	2	6392633	Spacer	10 mm
8	2	6392634	Spacer	11 mm
9	2	6392635	Spacer	12 mm
10	4	31864	Allen screw	M8 x 6
11	1	6390736	Lock pin with split pin	
12	2	6340441	Bracket for slide block	
13	8	31177	Washer	10 mm
14	8	30153	Set screw	M10 x 16
15	2	63518	Slide block	8 mm
16	2	63762	Slide block	9 mm
17	2	63593	Slide block	10 mm
18	1	6390731	Manual extension, F7	
19	2	6300568	Shim	
20	2	63588	Slide block	8 mm
21	2	63589	Slide block	9 mm
22	2	63590	Slide block	10 mm
23	2	6300368	Bracket for slide block	

50/345

Internal ref. 63 90 740

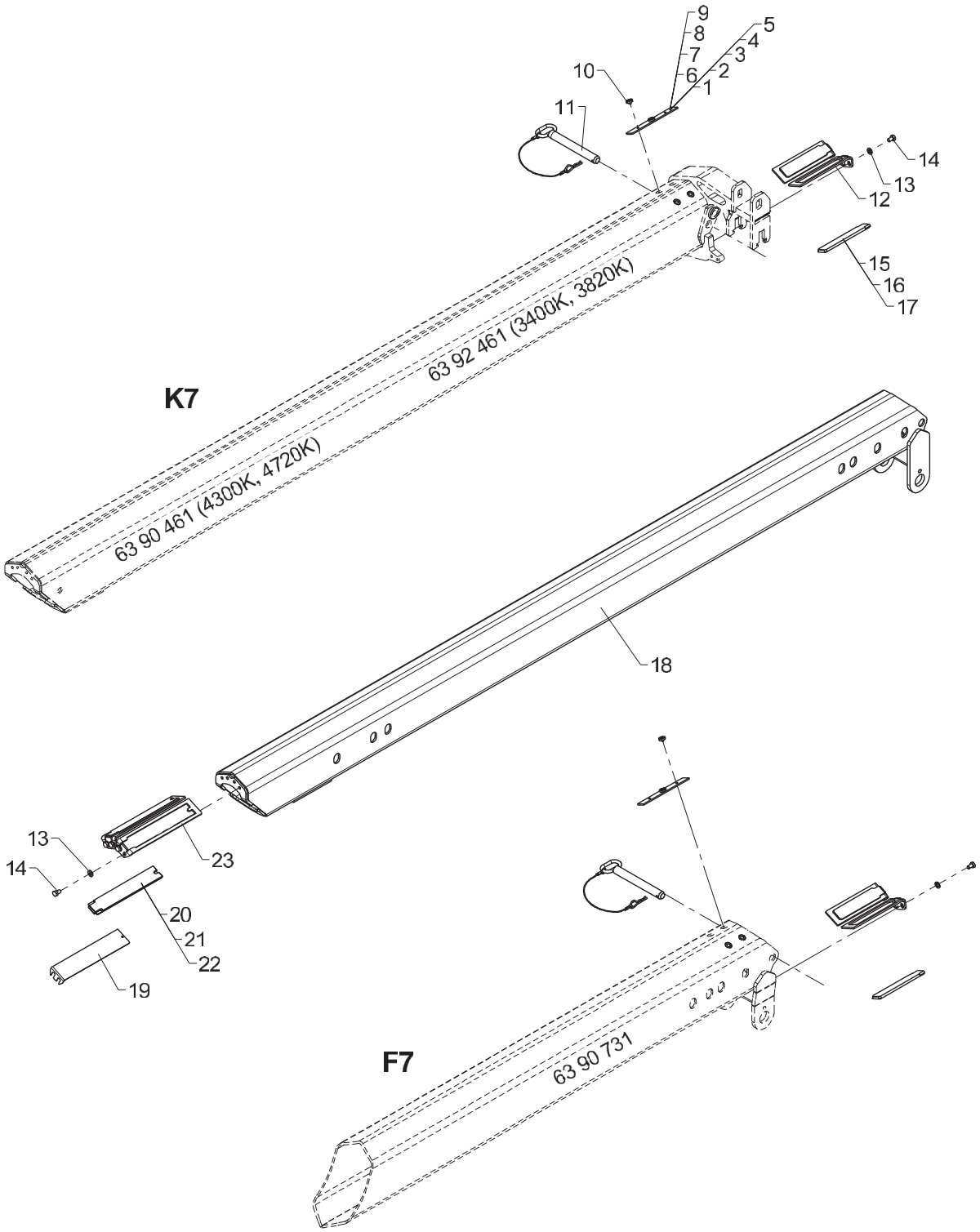

Manual extension, F8

Pos	Qty.	Part no.	Description	Remarks
1	2	6360414	Spacer	4 mm
2	2	6294434	Spacer	5 mm
3	2	6193304	Spacer	6 mm
4	2	6235944	Spacer	7 mm
5	2	6193314	Spacer	8 mm
6	2	6392632	Spacer	9 mm
7	2	6392633	Spacer	10 mm
8	2	6392634	Spacer	11 mm
9	2	6392635	Spacer	12 mm
10	4	31864	Allen screw	M8 x 6
11	1	6092454	Lock pin with chain	
12	2	6340441	Bracket for slide block	
13	8	31177	Washer	10 mm
14	8	30153	Set screw	M10 x 16
15	2	63518	Slide block	8 mm
16	2	63762	Slide block	9 mm
17	2	63593	Slide block	10 mm
18	1	6390741	Manual extension, F8	
19	2	6300568	Shim	
20	2	63527	Slide block	9 mm
21	2	63528	Slide block	8 mm
22	2	68084	Slide block	10 mm
23	2	6300443	Bracket for slide block	

50/345

Internal ref. 63 90 750

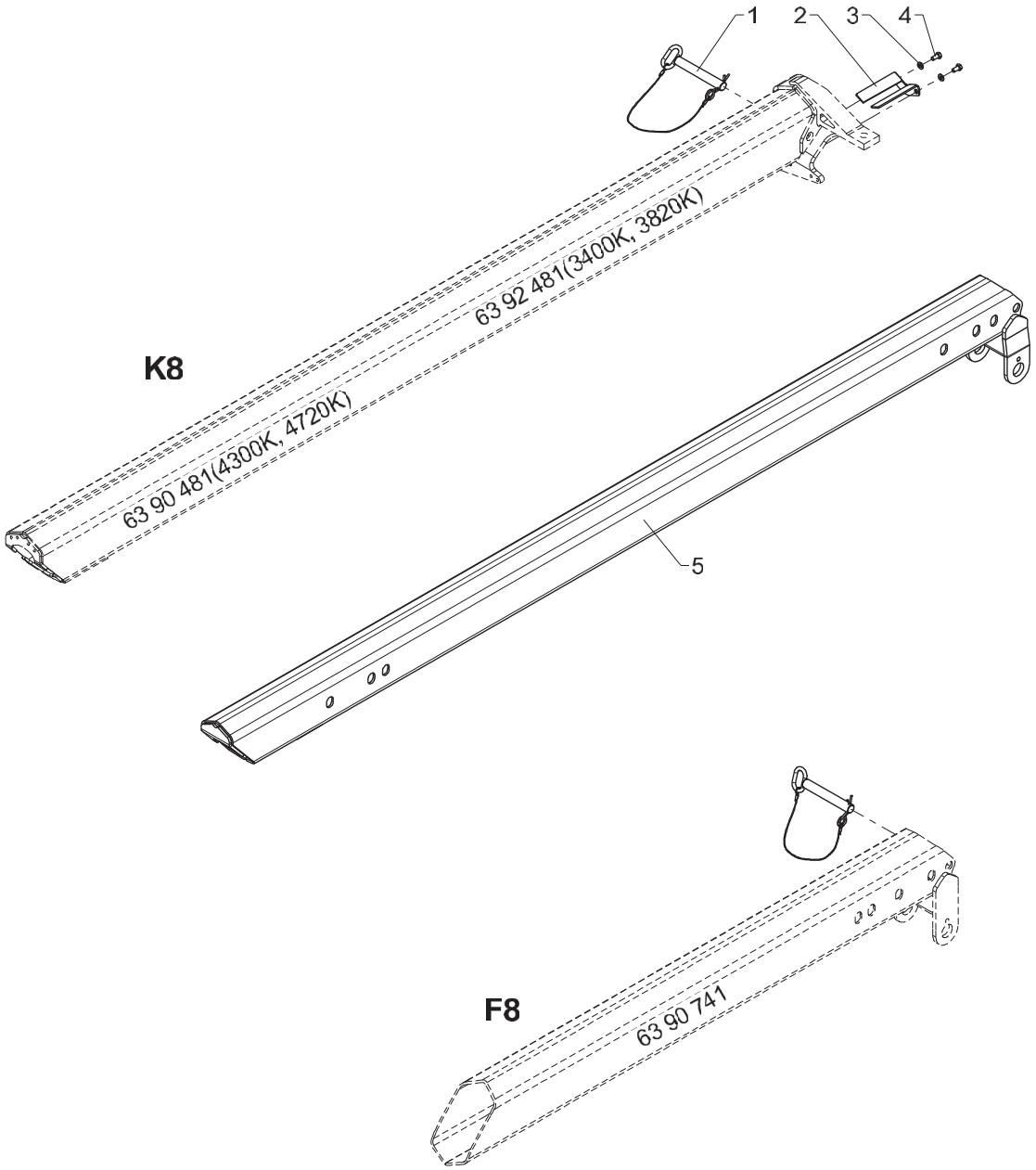

542 03 450

From loader 1150001
To loader

Created 16-08-2010
Modified 07-02-2011

Manual extension, F9

Pos	Qty.	Part no.	Description	Remarks
1	1	6390756	Lock pin with split pin	
2	1	6301177	Compression block	
3	2	31177	Washer	10 mm
4	2	30154	Set screw	M10 x 20
5	1	6390751	Manual extension, F9	

50/345

Internal ref. 63 90 760

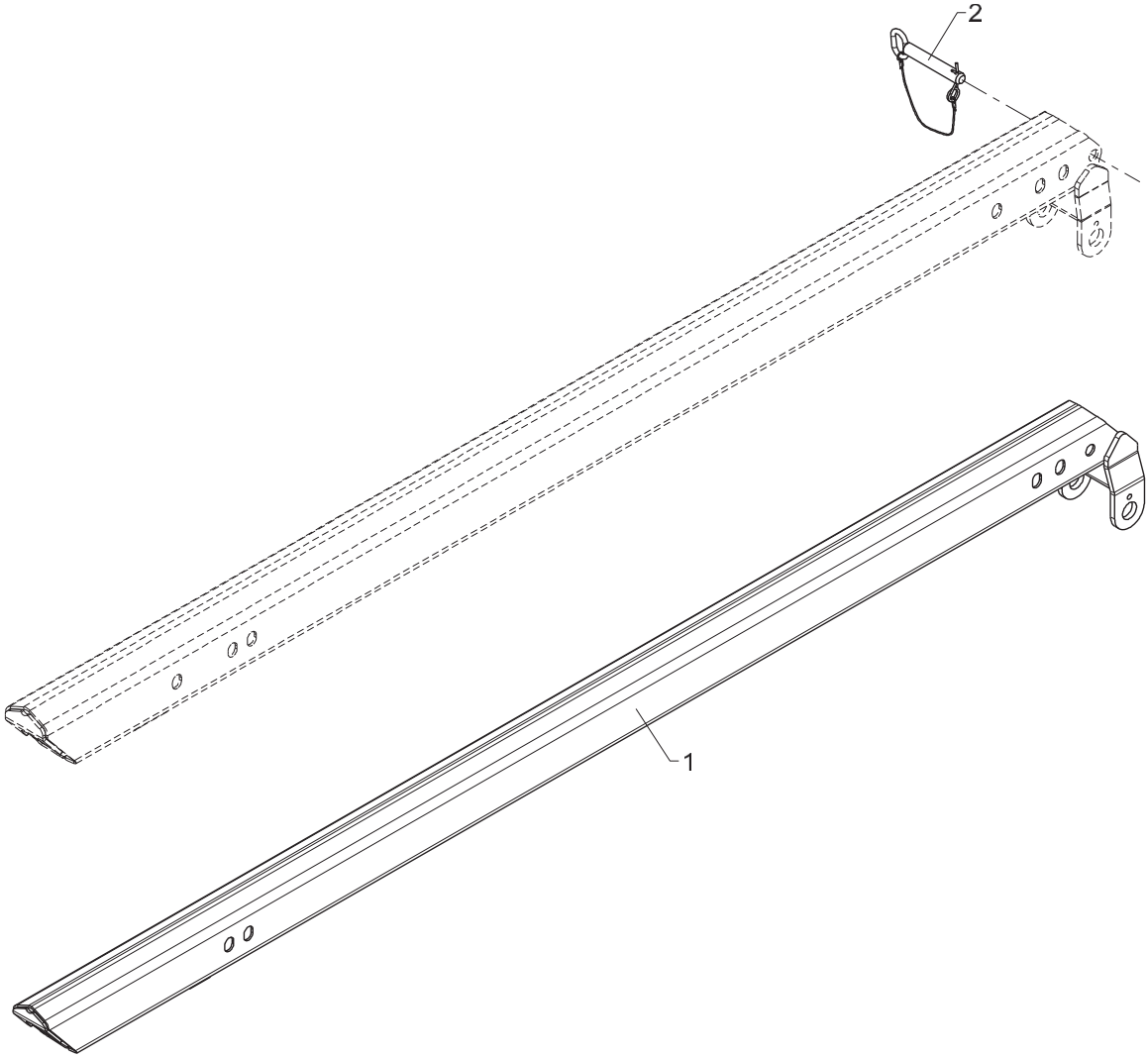

542 03 460

From loader 1150001
To loader

Created 16-08-2010
Modified

Manual extension, F10 cpl.

Pos	Qty.	Part no.	Description	Remarks
1	1	6390761	Manual extension, F10	
2	1	6874334	Lock pin with chain	

50/345

Internal ref. 63 91 200

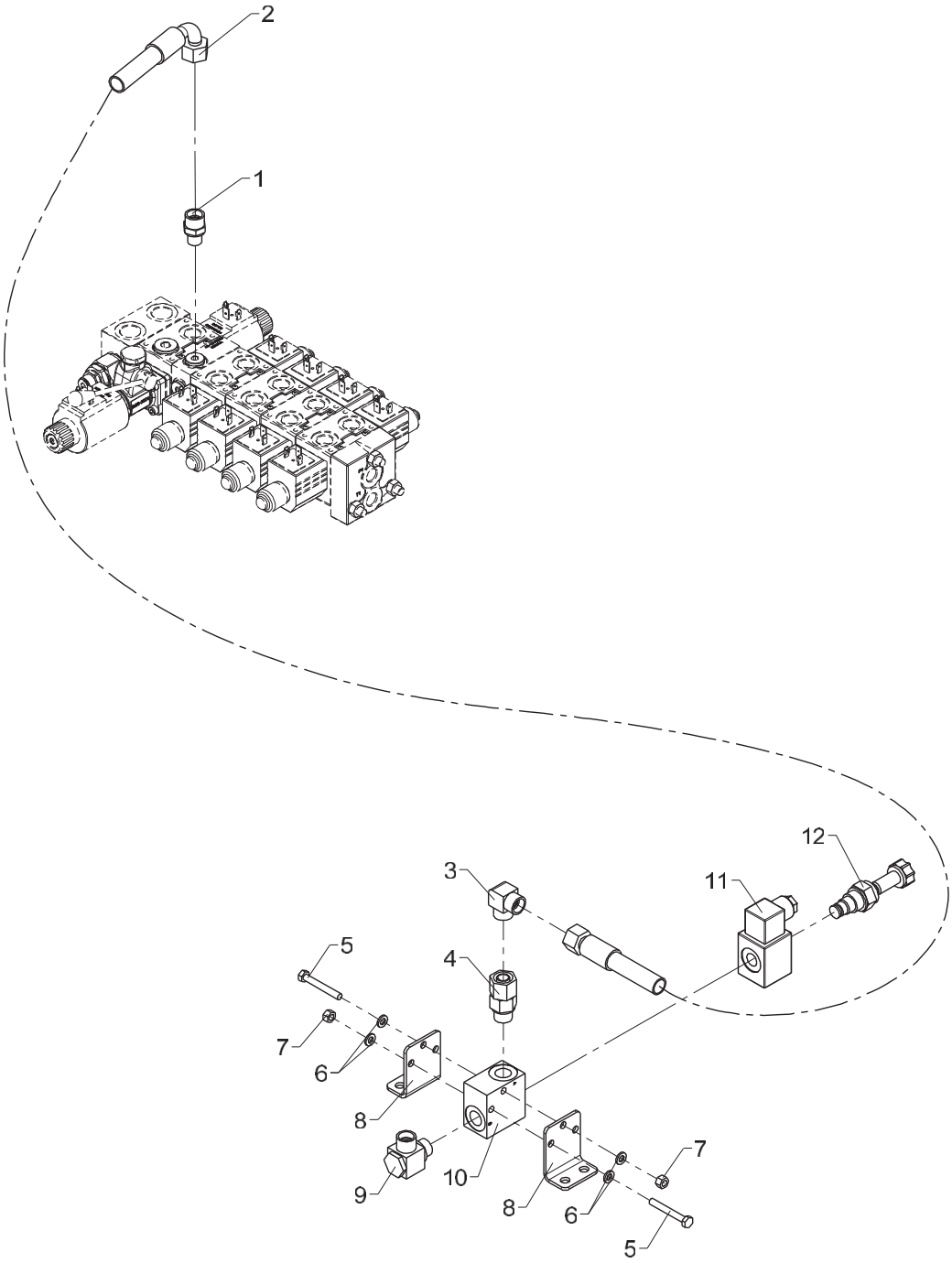

From loader 1150001
To loader

Stabilizer valve block, 5 available functions

Created 17-08-2010
Modified 14-09-2016

Pos	Qty.	Part no.	Description	Remarks
1	1	25195	Connection	P-GEV 12 LR 1/4-WD
2	1	0015020	Hose	3/8" x 1600 mm L/90°
3	1	25129	Elbow connection	WV 12 L
4	1	25240	Connection	EGESD 12 LR-WD
5	2	30118	Steel pin, stainless	M6 x 45
6	4	32302	Face washer, stainless	6 mm
7	2	30884	Lock nut, stainless	M6
8	2	6301202	Bracket	
9	1	25130	Banjo connection	RSWV 12 LR
10	1	59771	Valve housing	
11	1	61778	Solenoid	
12	1	59057	Solenoid valve	

50/345

Internal ref. 63 91 210

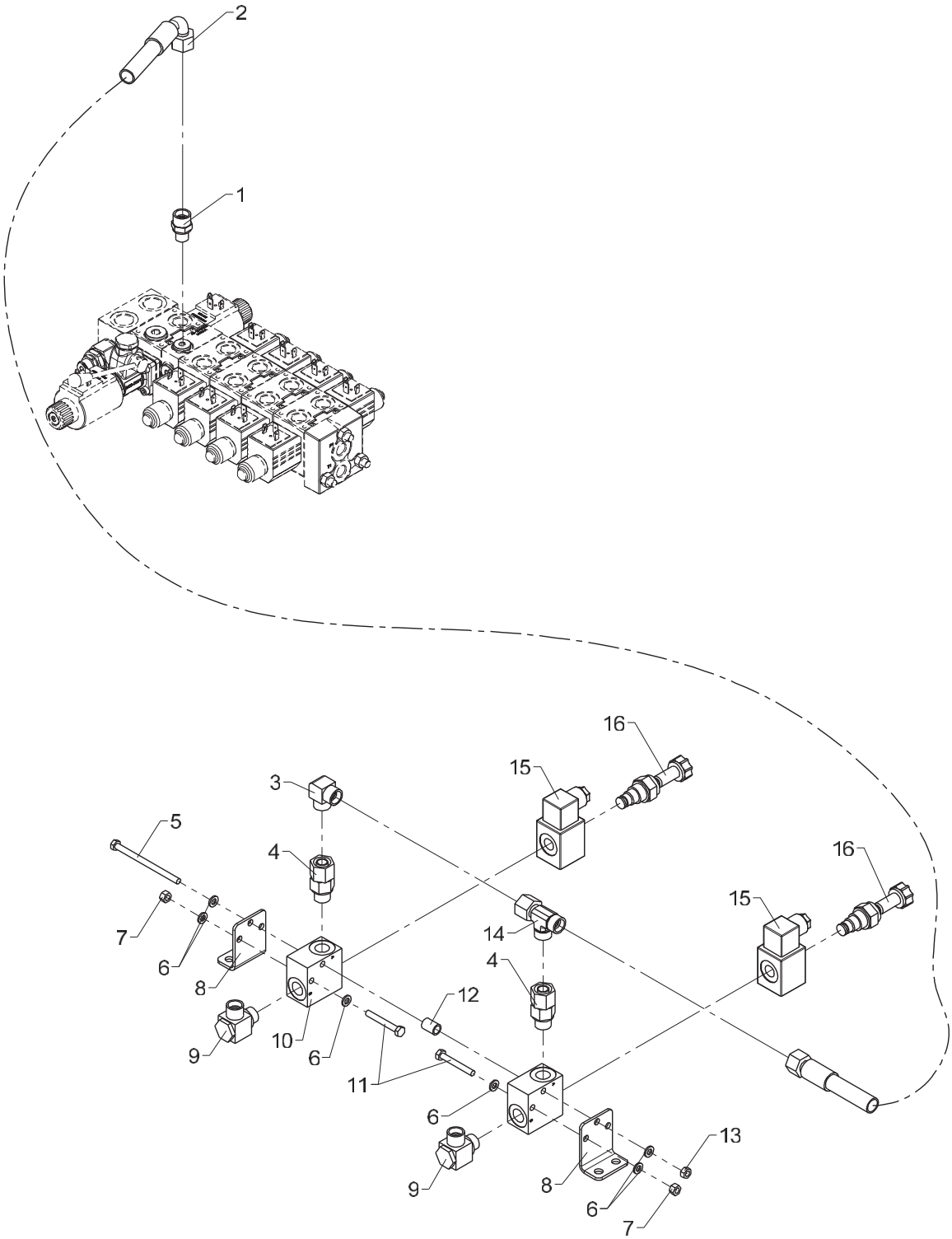

From loader 1150001
To loader

Stabilizer valve block, 6 available functions

Created 17-08-2010
Modified 14-09-2016

Pos	Qty.	Part no.	Description	Remarks
1	1	25195	Connection	P-GEV 12 LR 1/4-WD
2	1	0015020	Hose	3/8" x 1600 mm L/90°
3	1	25129	Elbow connection	WV 12 L
4	2	25240	Connection	EGESD 12 LR-WD
5	1	30124	Steel bolt, stainless	M6 x 90
6	6	32302	Face washer, stainless	6 mm
7	2	30884	Lock nut, stainless	M6
8	2	6301202	Bracket	
9	2	25130	Banjo connection	RSWV 12 LR
10	2	59771	Valve housing	
11	2	30118	Steel pin, stainless	M6 x 45
12	1	6301203	Pipe	
13	1	30854	Nut, stainless	M6
14	1	25270	Connection	ELSD 12 L
15	2	61778	Solenoid	
16	2	59057	Solenoid valve	

50/345

Internal ref. 63 91 220

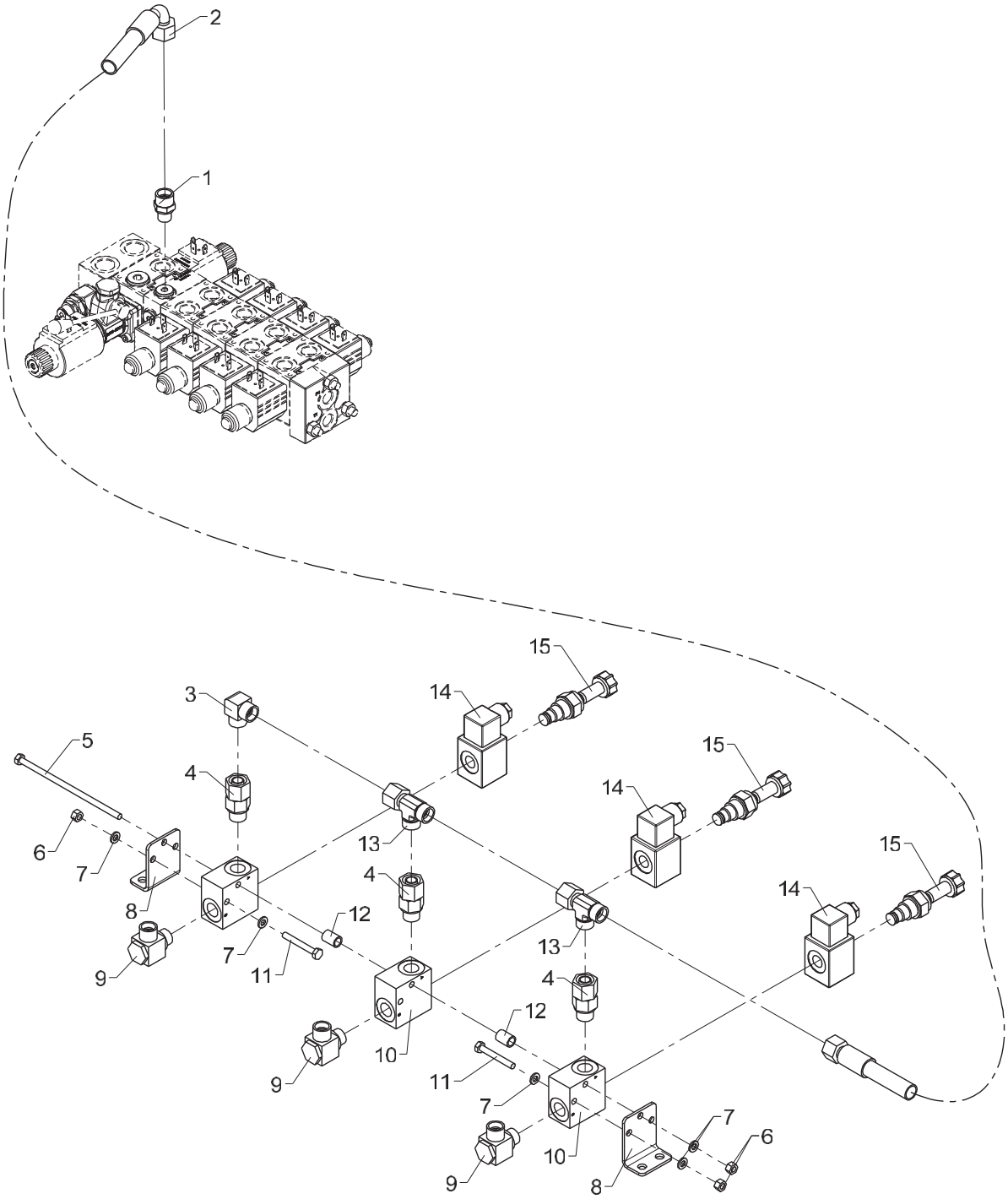

Stabilizer valve block, 7 available functions

Created 17-08-2010
Modified 14-09-2016

Pos	Qty.	Part no.	Description	Remarks
1	1	25195	Connection	P-GEV 12 LR 1/4-WD
2	1	0015020	Hose	3/8" x 1600 mm L/90°
3	1	25129	Elbow connection	WV 12 L
4	3	25240	Connection	EGESD 12 LR-WD
5	1	32922	Steel bolt	M6 x 140
6	3	30884	Lock nut, stainless	M6
7	5	32302	Face washer, stainless	6 mm
8	2	6301202	Bracket	
9	3	25130	Banjo connection	RSWV 12 LR
10	3	59771	Valve housing	
11	2	30118	Steel pin, stainless	M6 x 45
12	2	6301203	Pipe	
13	2	25270	Connection	ELSD 12 L
14	3	61778	Solenoid	
15	3	59057	Solenoid valve	

50/345

Internal ref. 63 91 230

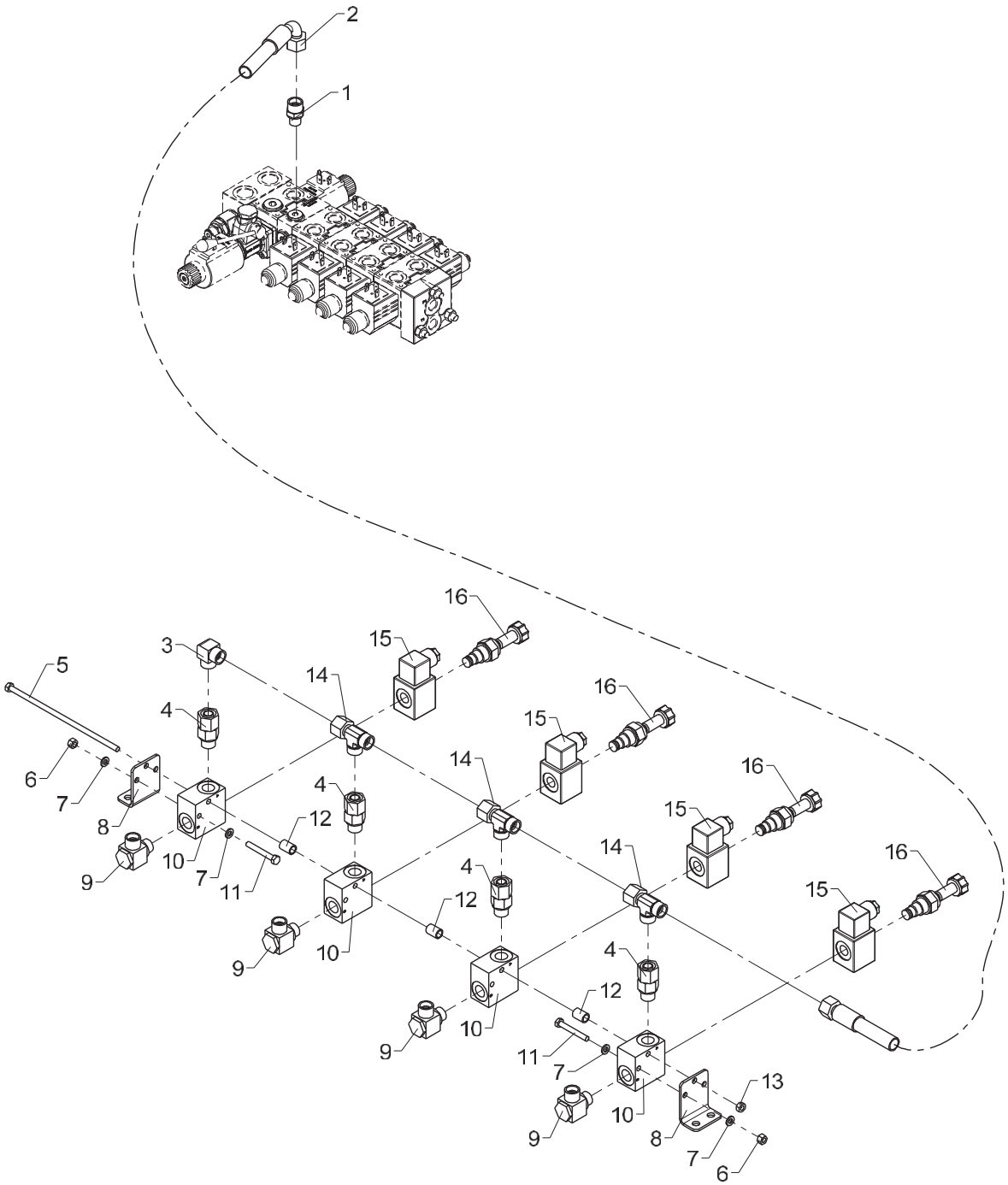

Stabilizer valve block, 8 available functions

Created 17-08-2010
Modified 14-09-2016

Pos	Qty.	Part no.	Description	Remarks
1	1	25195	Connection	P-GEV 12 LR 1/4-WD
2	1	0015020	Hose	3/8" x 1600 mm L/90°
3	1	25129	Elbow connection	WV 12 L
4	4	25240	Connection	EGESD 12 LR-WD
5	1	32257	Steel bolt	M6 x 180
6	2	30884	Lock nut, stainless	M6
7	4	32302	Face washer, stainless	6 mm
8	2	6301202	Bracket	
9	4	25130	Banjo connection	RSWV 12 LR
10	4	59771	Valve housing	
11	2	30118	Steel pin, stainless	M6 x 45
12	3	6301203	Pipe	
13	1	30854	Nut, stainless	M6
14	3	25270	Connection	ELSD 12 L
15	4	61778	Solenoid	
16	4	59057	Solenoid valve	

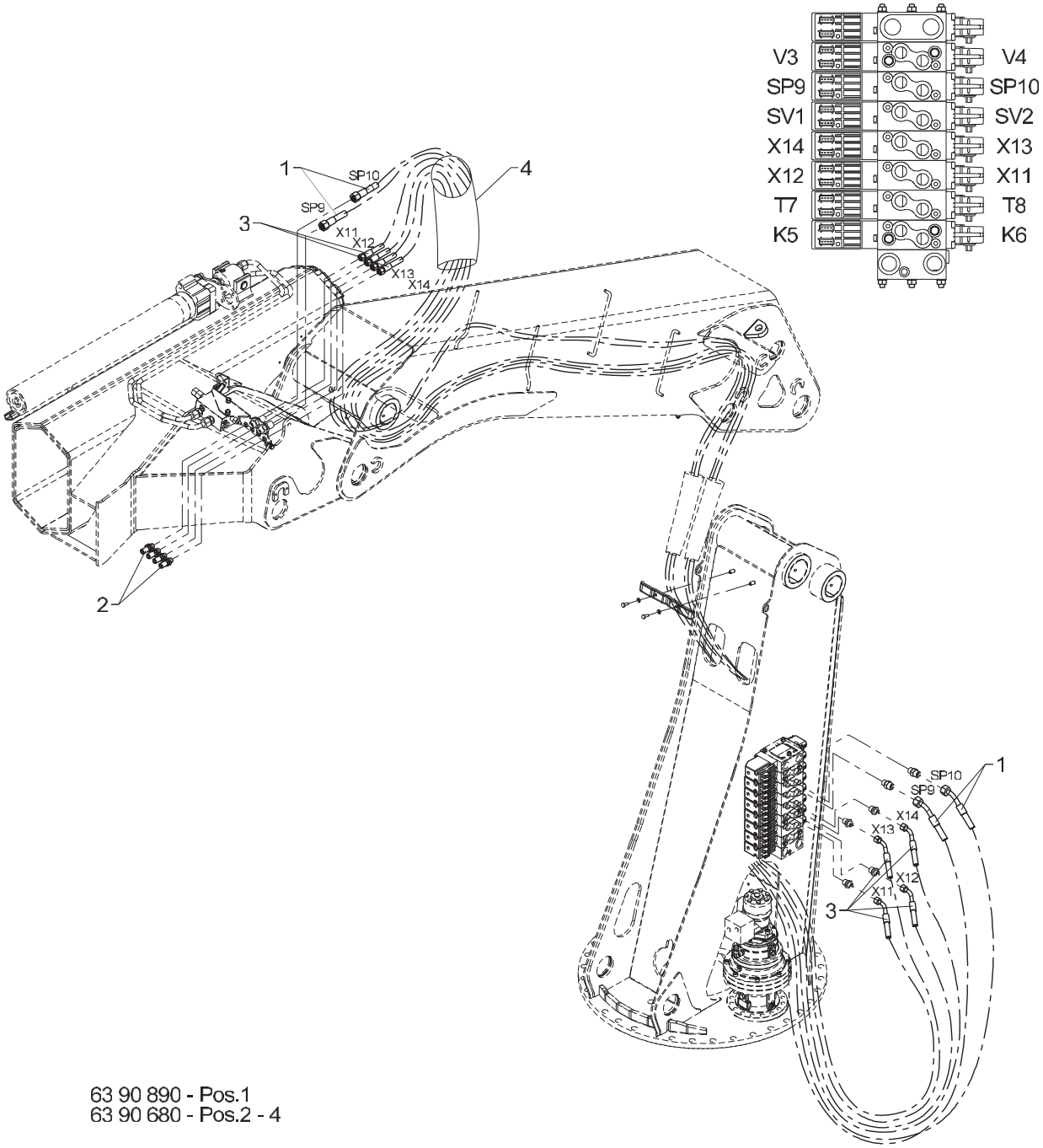

63 90 890 - Pos.1
63 90 680 - Pos.2 - 4

Hose kit, winch and extra valves

Pos	Qty.	Part no.	Description	Remarks
		6390890	Hose kit, winch	
		6390680	Hose kit, extra valves	
1	2	56552	Hose	1/2" x 5300 L/45
2	4	25201	Bulkhead connection	GSS 12 L
3	4	56554	Hose	3/8" x 5300 mm L/45°
4	1	56546	Protective cover	180 x 1000 mm

50/345

Internal ref. 63 90 650

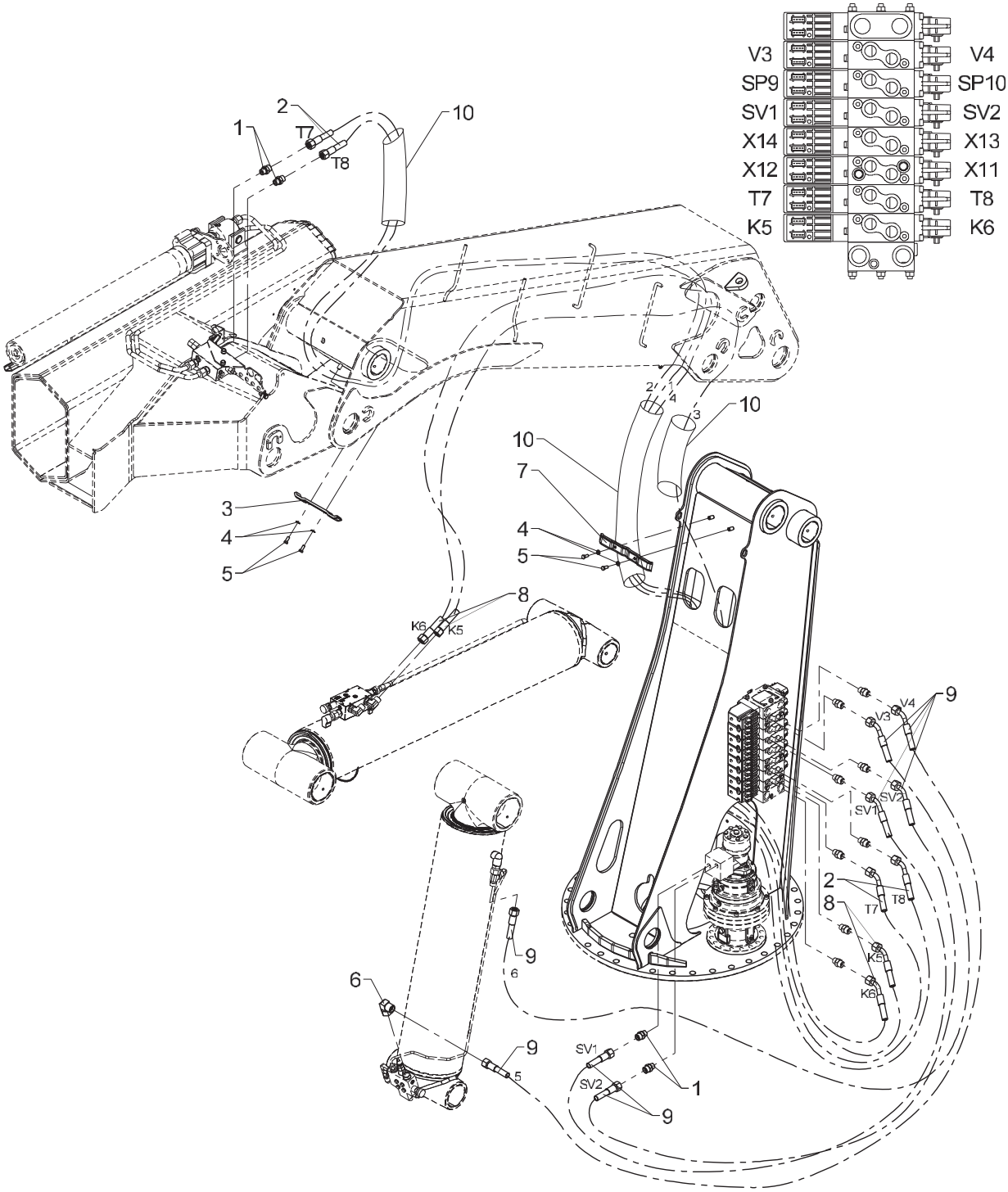

Obsolete

542 05 670

From loader 1150001
To loader 1150117

Created 16-08-2010
Modified 22-04-2013

Hose kit, loader functions

Pos	Qty.	Part no.	Description	Remarks
1	4	26334	Connection	P-GEV 16 SR-WD
2	2	56552	Hose	1/2" x 5300 L/45
3	1	6340215	Clamp, complete	
4	4	31147	Face washer, 8 mm	
5	4	30132	Set screw, stainless	
6	1	26198	Elbow connection	EWVD 20 S-SV
7	1	6390161	Clamp, complete	
8	2	56551	Hose	1/2 x 3600 L/45
9	4	56265	Hose	1/2 x 1550 L/45
10	3	62587	Protective cover	

50/345

Internal ref. 63 90 650

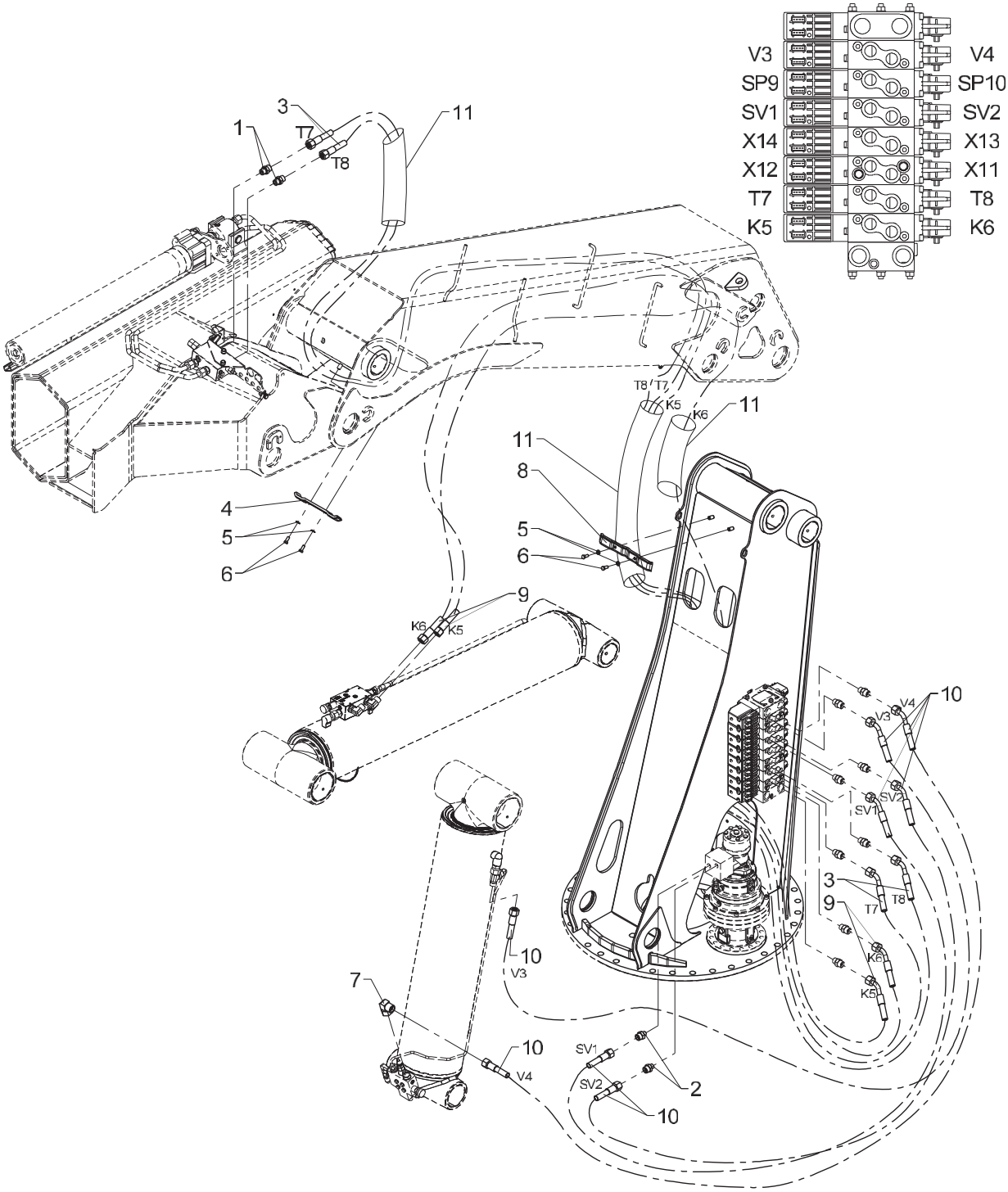

542 05 670 A

From loader 1150118
To loader

Hose kit, loader functions

Created 01-12-2013
Modified 31-01-2014

Pos	Qty.	Part no.	Description	Remarks
1	2	26334	Connection	P-GEV 16 SR-WD
2	2	26368	Straight connection	P-GEV 16 SR 3/8-WD
3	2	56552	Hose	1/2" x 5300 L/45
4	1	6340215	Clamp, complete	
5	4	31147	Face washer, 8 mm	
6	4	30132	Set screw, stainless	
7	1	26198	Elbow connection	EWVD 20 S-SV
8	1	6390161	Clamp, complete	
9	2	56551	Hose	1/2 x 3600 L/45
10	4	56265	Hose	1/2 x 1550 L/45
11	3	62587	Protective cover	

50/345

Internal ref. 63 90 670

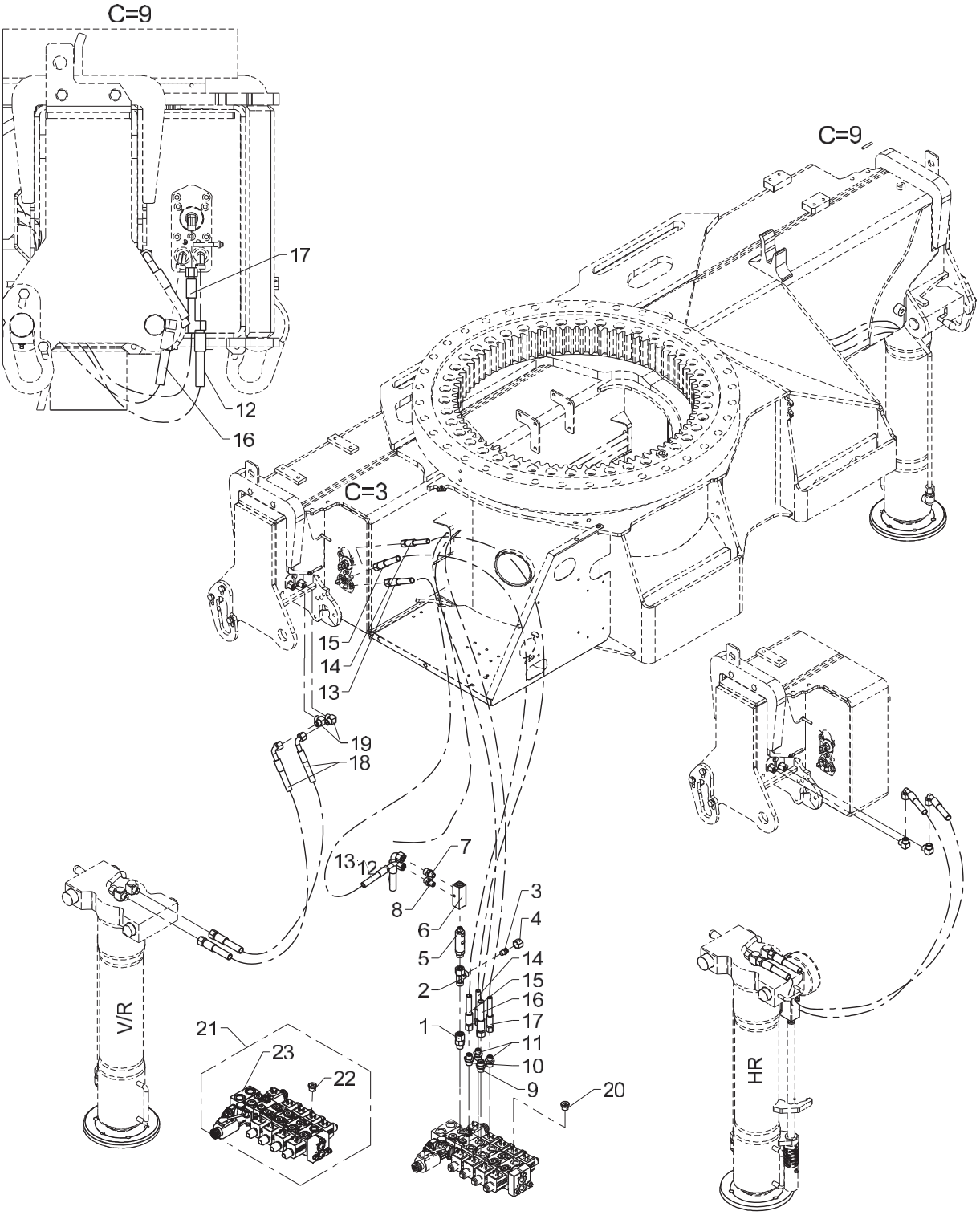

Hydraulic system, stabilizers

Pos	Qty.	Part no.	Description	Remarks
		6390670	Hydraulic system, stabilizers	
1	1	25240	Connection	EGESD 12 LR-WD
2	1	25270	Connection	ELSD 12 L
3	1	26180	Blanking plug	VSD 12 L
4	1	25183	Coupling nut	M 12 L
5	1	55239	Sequence valve	
6	1	59356	Valve block	6883334
7	1	25195	Connection	P-GEV 12 LR 1/4-WD
8	1	25121	Connection	P-GEV 10 LR-WD
9	1	25127	Connection	P-GEV 12 LR-WD
10	1	25253	Connection	P-GEV 10 LR 3/8-WD
11	2	25244	Connection	GES 8 LR 3/8-WD
12	1	56535	Hose	3/8" X 2350 mm 90/ L
13	1	56537	Hose	5/16" x 250 mm 90/ L
14	1	62512	Hose	1/4 X 500 M14 X 1.5 L/L
15	1	56538	Hose	5/16" x 550 mm L / L
16	1	56536	Hose	3/8" x 2600 mm L / L
17	1	62628	Hose	1/4 X 2600 M4X1.5L/L
18	4	56556	Hose	5/16" x 550 mm 90/L
19	4	25125	Elbow connection	WV 10 L
20	4	25277	Plug	VS-R-3/8 WD
21	1	6390660	Stabilizer valve with plugs	
22	9	25277	Plug	VS-R-3/8 WD
23	1	50510	Stabilizer valve	

50/345

63 94 530
Internal ref. 63 92 490

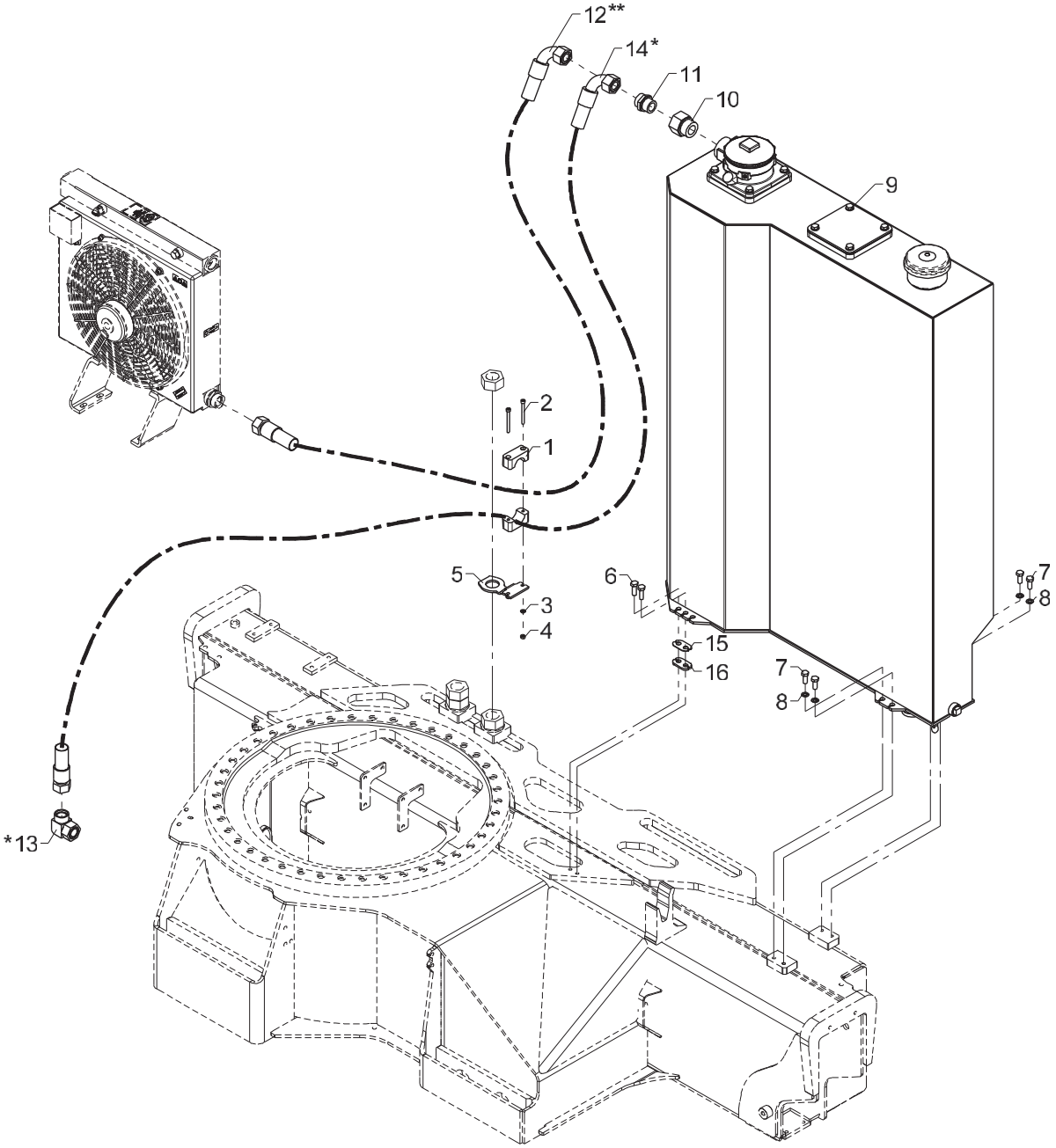

* Tank uden køler
** Tank med køler

Tank incl. fittings (250L)

Pos	Qty.	Part no.	Description	Remarks
		6392490	Hydr. oil tank, complete	
		6394530	Hose kit for tank, no cooler	*
1	1	31468	Clamp	
2	2	30966	Screw	MC6 x 65
3	2	32302	Face washer, stainless	6 mm
4	2	30884	Lock nut, stainless	M6
5	1	6301067	Fitting	
6	2	30156	Set screw, stainless	M10 x 30
7	4	30155	Set screw	M10 x 25
8	4	31118	Lock washer	10 mm
9	1	6392500	Hy. oil tank, complete 250L	
10	1	26818	Reducing connection	RED-R 1 1/4-WD/R 1
11	1	26163	Connection	P-GEV 28 LR-WD
12	1	56539	Hose 1" X 1900 mm L/90 28 L	1" X 1900 mm L/90 28 Let
13	1	26817	Elbow connection	P-EWV 28 L-SV
14	1	0019130	Hose	1" x 2900 mm o/o
15	1	6392493	Lock plate, 1mm	
16	1	6392494	Lock plate, 5mm	

50/345

63 95 290
Internal ref. 63 92 500

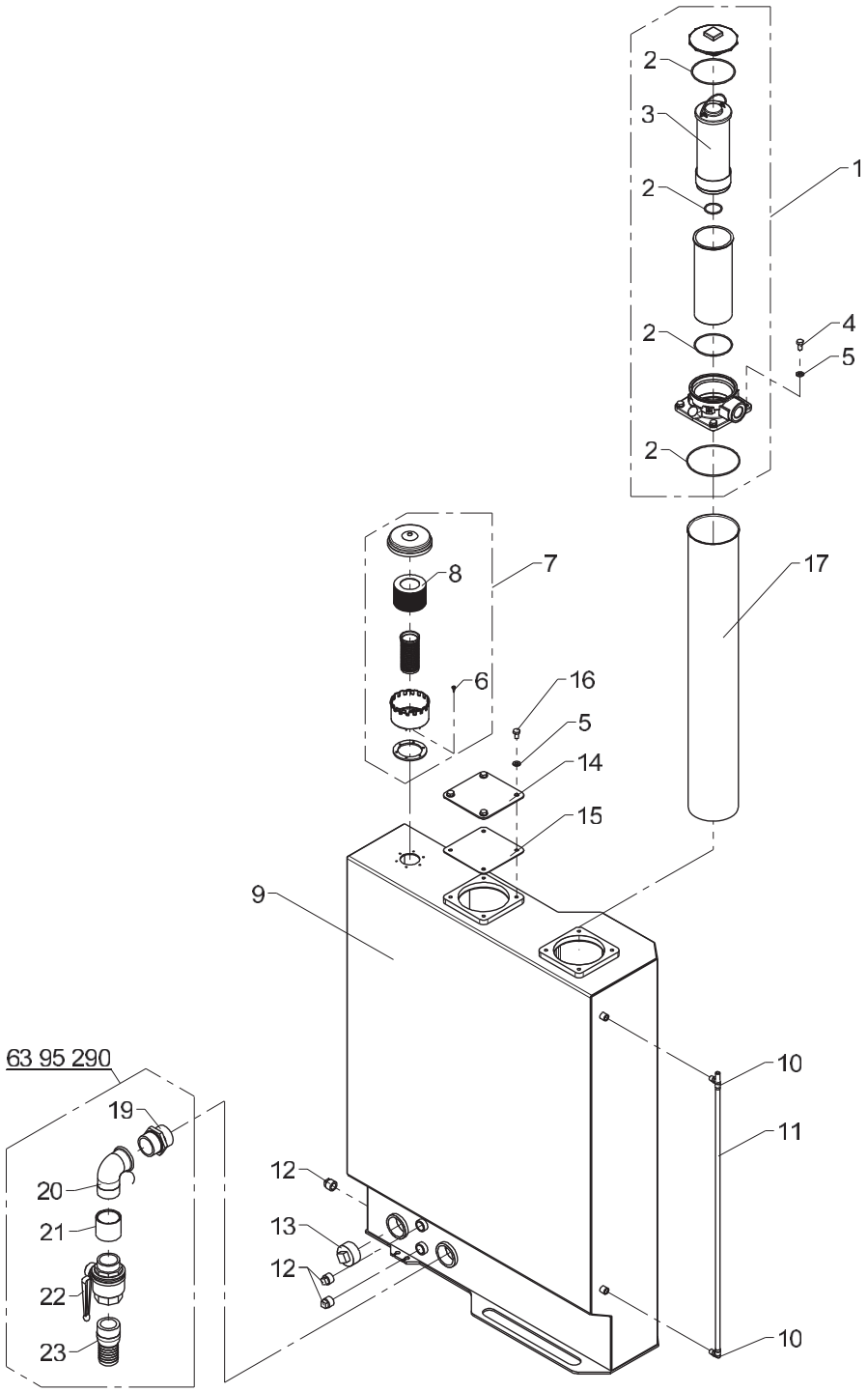

Tank, cpl.

Pos	Qty.	Part no.	Description	Remarks
1	1	49408	Return filter	
2	1	49419	Seal kit	
3	1	49409	Filter	
4	4	31517	Set screw, stainless	M10 x 20
5	8	31565	Washer, stainless	10 mm
6	6	30737	Sheet metal screw	UH4,8 x 16
7	1	60275	Air filter	
8	1	60276	Filter	
9	1	6392501	Tank	
10	2	25535	Elbow connection	
11	1	62472	Nylon pipe	900 mm
12	3	26914	Plug 3/4"	
13	1	25351	Plug	
14	1	6392511	Blanking cover	
15	1	6392512	Rubber seal, 2 mm	
16	4	31510	Set screw, stainless	M10 x 16
17	1	58409	Pipe	
18	1	6395290	Ball valve for tank	
19	1	25342	Hexagon nipple	2"
20	1	25430	Elbow	
21	1	25490	Socket	2"
22	1	58787	3-way ball valve	2"
23	1	60991	Nipple	CN 200 / HMF

50/345

63 95 290
Internal ref. 63 94 500

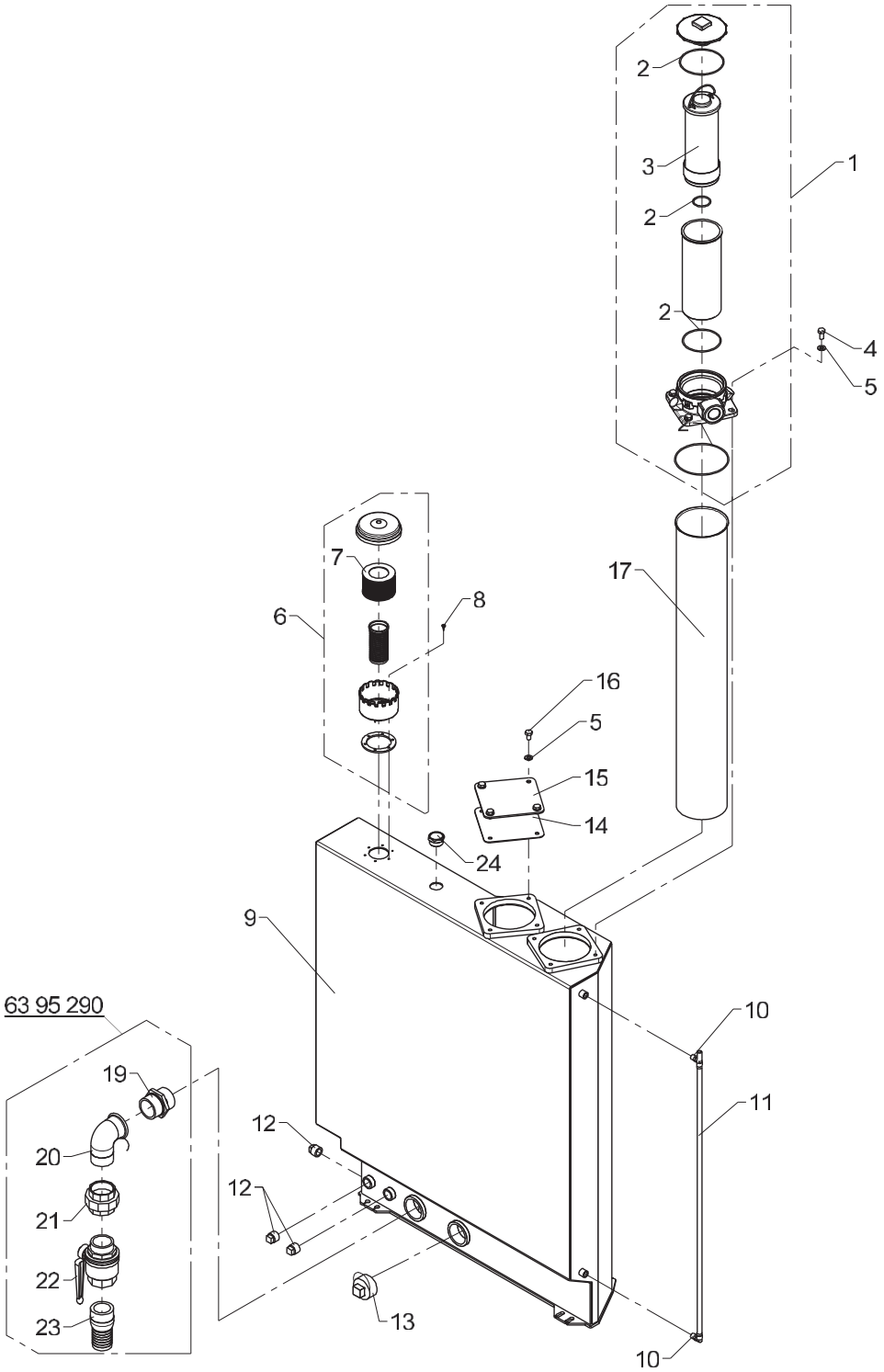

From loader 1150001
To loader

Tank, cpl. (160L)

Created 20-03-2013
Modified 16-06-2016

Pos	Qty.	Part no.	Description	Remarks
1	1	49408	Return filter	
2	1	49419	Seal kit	
3	1	49409	Filter	
4	4	31517	Set screw, stainless	M10 x 20
5	8	31565	Washer, stainless	10 mm
6	1	60275	Air filter	
7	1	60276	Filter	
8	6	30737	Sheet metal screw	UH4,8 x 16
9	1	6395881	Tank	
10	2	25535	Elbow connection	
11	1	62472	Nylon pipe	900 mm
12	3	26914	Plug 3/4"	
13	1	25398	Plug	
14	1	6392512	Rubber seal, 2 mm	
15	1	6392511	Blanking cover	
16	4	31510	Set screw, stainless	M10 x 16
17	1	58409	Pipe	
18	1	6395290	Ball valve for tank	
19	1	25342	Hexagon nipple	2"
20	1	25430	Elbow	
21	1	25595		
22	1	58787	3-way ball valve	2"
23	1	60991	Nipple	CN 200 / HMF
24	1	64588		

63 92 520
63 94 410
63 94 530
Internal ref. 63 94 520

50/345

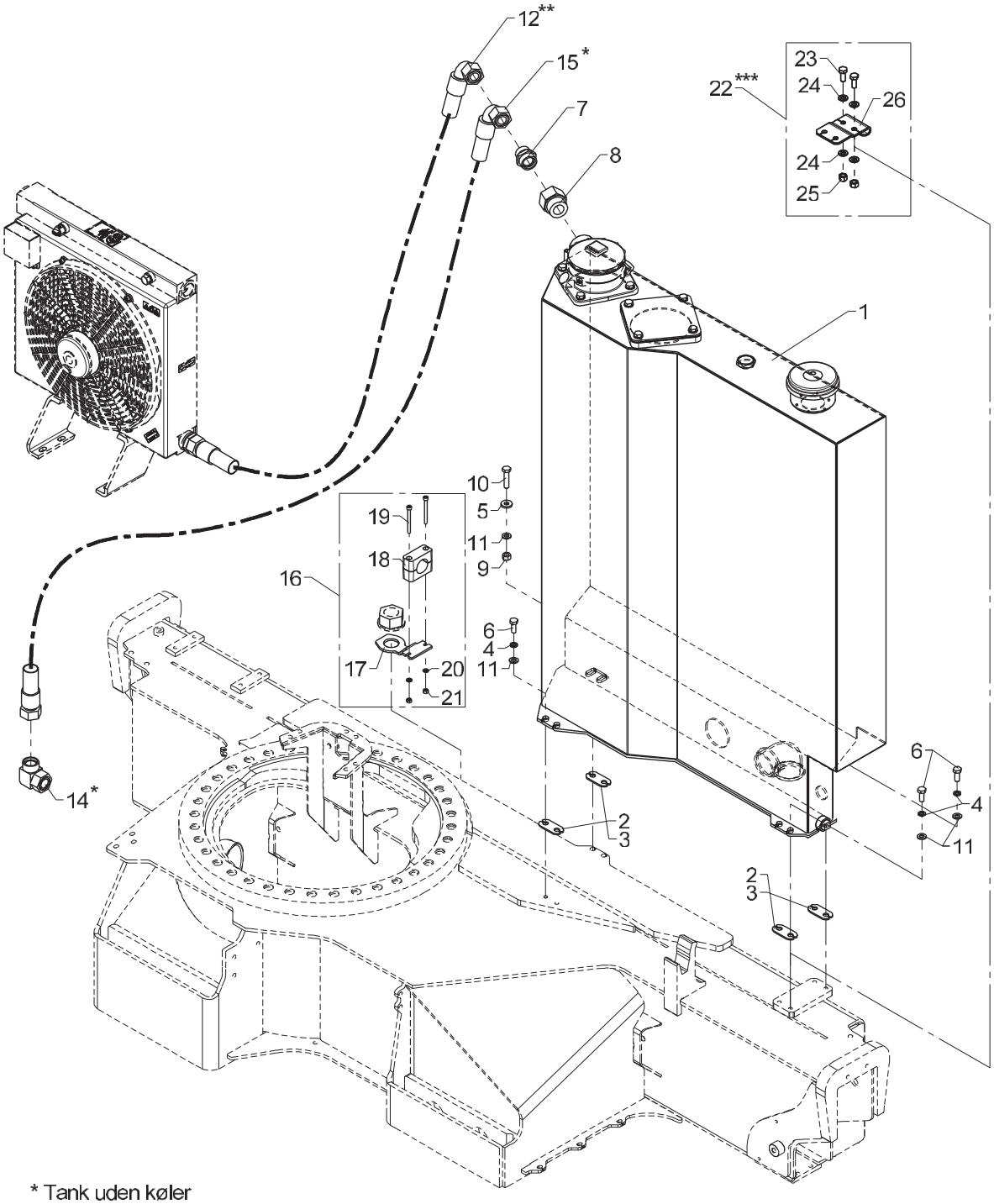

* Tank uden køler
** Tank med køler
*** Kun valgbar for 4020 og 5020 uden Fly-jib.

Tank incl. fittings (160L)

Pos	Qty.	Part no.	Description	Remarks
1	1	6394500		
2	4	6394509		A:35, R15, t1, ø12
3	2	6394512		A:35, R15, t1, ø12
4	6	31156	Spring washer	10 mm
5	2	31756	Washer	10 mm
6	6	30155	Set screw	M10 x 25
7	1	26163	Connection	P-GEV 28 LR-WD
8	1	26818	Reducing connection	RED-R 1 1/4-WD/R 1
9	2	30888	Lock nut	
10	2	30165	Steel bolt	M10 x 45
11	8	31177	Washer	10 mm
12	1	56539	Hose	1" X 1900 mm L/90 28 Let
13	1	6394530	Tank without oil cooler	
14	1	26817	Elbow connection	P-EWV 28 L-SV
15	1	0019130		1" x 2900 mm o/o
16	1	6394410		
17	1	6301067	Fitting	
18	1	31468	Clamp	
19	2	30966	Screw	MC6 x 65
20	2	32302	Face washer, stainless	6 mm
21	2	30884	Lock nut, stainless	M6
22	1	6392520		
23	2	31513	Set screw, stainless	M10 x 25
24	4	31565	Washer, stainless	10 mm
25	2	31564	Lock nut, stainless	M10
26	1	6392509		(4020/6020)

50/345

Internal ref. 63 90 630

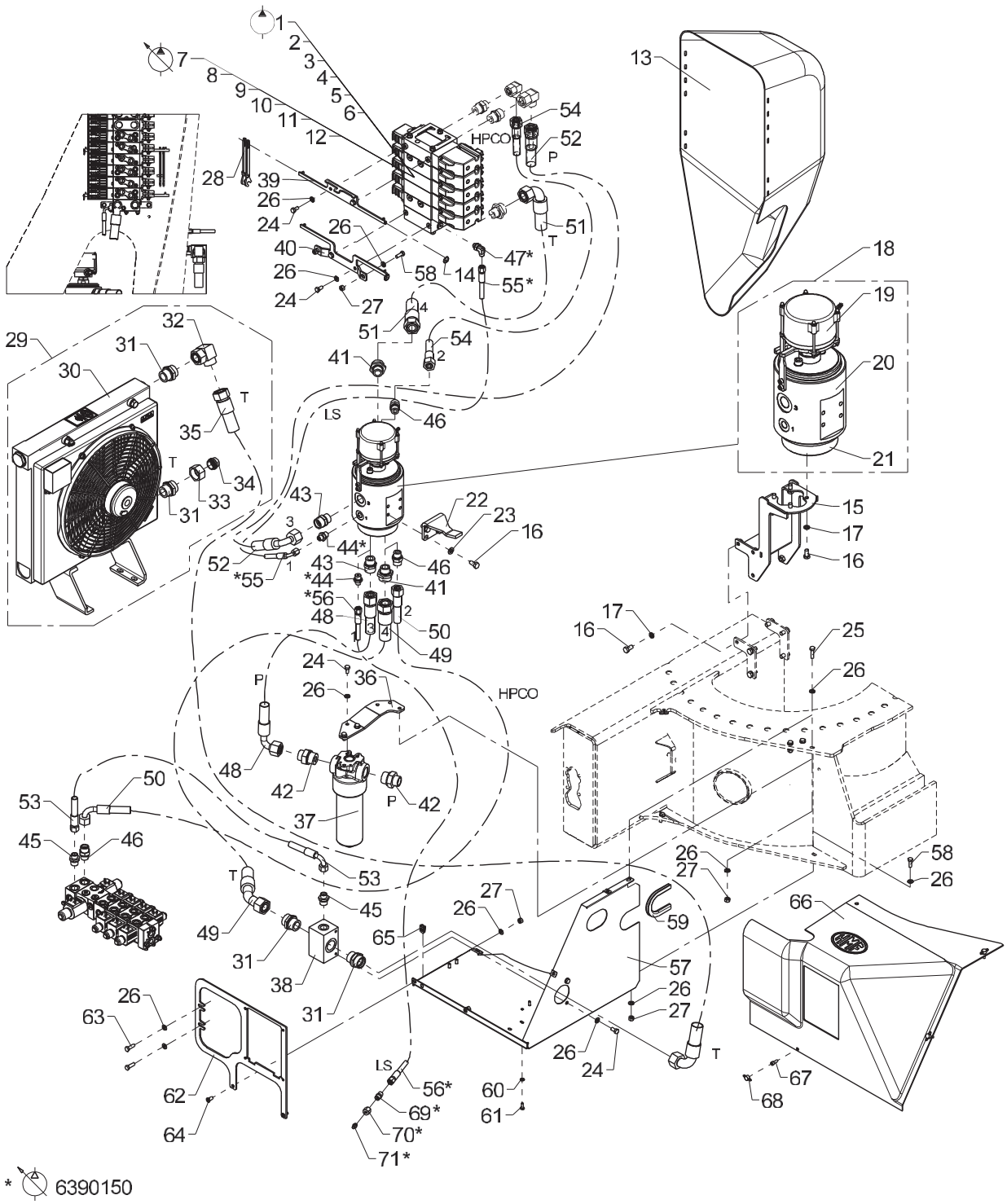

Obsolete

542 06 060

From loader 1150001
To loader 1150030

Created 31-01-2011
Modified 03-03-2011

Hydraulic system, pump and return hoses, 1 circuit

Pos	Qty.	Part no.	Description	Remarks
1	1	55602	Control valve	4 sekt.
2	1	55604	Control valve	5 sekt. Winch
3	1	55606	Control valve	5 sekt. 1 EXV
4	1	55608	Control valve	6 sekt. Winch+1 EXV
5	1	55610	Control valve	6 sekt. 2 EXV/FJ
6	1	55612	Control valve	7 sekt. Winch+2 EXV/FJ
7	1	55601	Control valve	4 sekt.
8	1	55603	Control valve	5 sekt. Winch
9	1	55605	Control valve	5 sekt. 1 EXV
10	1	55607	Control valve	6 sekt. Winch+1 EXV
11	1	55609	Control valve	6 sekt. 2 EXV/FJ
12	1	55611	Control valve	7 sekt. Winch+2 EXV/FJ
13	1	64430	Protective plate,control valve	
14	2	33458	Lock ring	
15	1	6390081	Adapter for swivel coupling	
16	14	31517	Set screw, stainless	M10 x 20
17	10	30933	Nordlock washer	10 mm
18	1	49216	Swivel coupling	
19	1	49237	Electric part, swivel coupling	
20	1	49235	Hydraulic part,swivel coupling	
21	1	49247	Seal kit	
22	1	6390087	Carrier fitting	
23	4	31565	Washer, stainless	10 mm
24	9	30131	Set screw, stainless	M8 x 16
25	3	30135	Set screw, stainless	M8 x 30
26	25	31147	Face washer, 8 mm	
27	9	30886	Lock nut, stainless	M8
28	2	6390067	Lever	
29	1	6390640	Oil coller, complete	
30	1	50262	Oil cooler, 24 V + Smartdrive	
31	4	26163	Connection	P-GEV 28 LR-WD
32	1	26817	Elbow connection	P-EWV 28 L-SV
33	1	26108	Coupling nut	M 28 L
34	1	26347	Blanking plug	VSD 28 L
35	1	56534	Hose	1" x 1600mm L/90
36	1	6390042	Bracket for filter	
37	1	49401	High pressure filter	
38	1	6340844	Connecting block	
39	1	6390085	Bracket for valve	
40	1	6390086	Bracket for valve	
41	2	26845	Connection	GES 28 LR 3/4-WD

50/345

Internal ref. 63 90 630

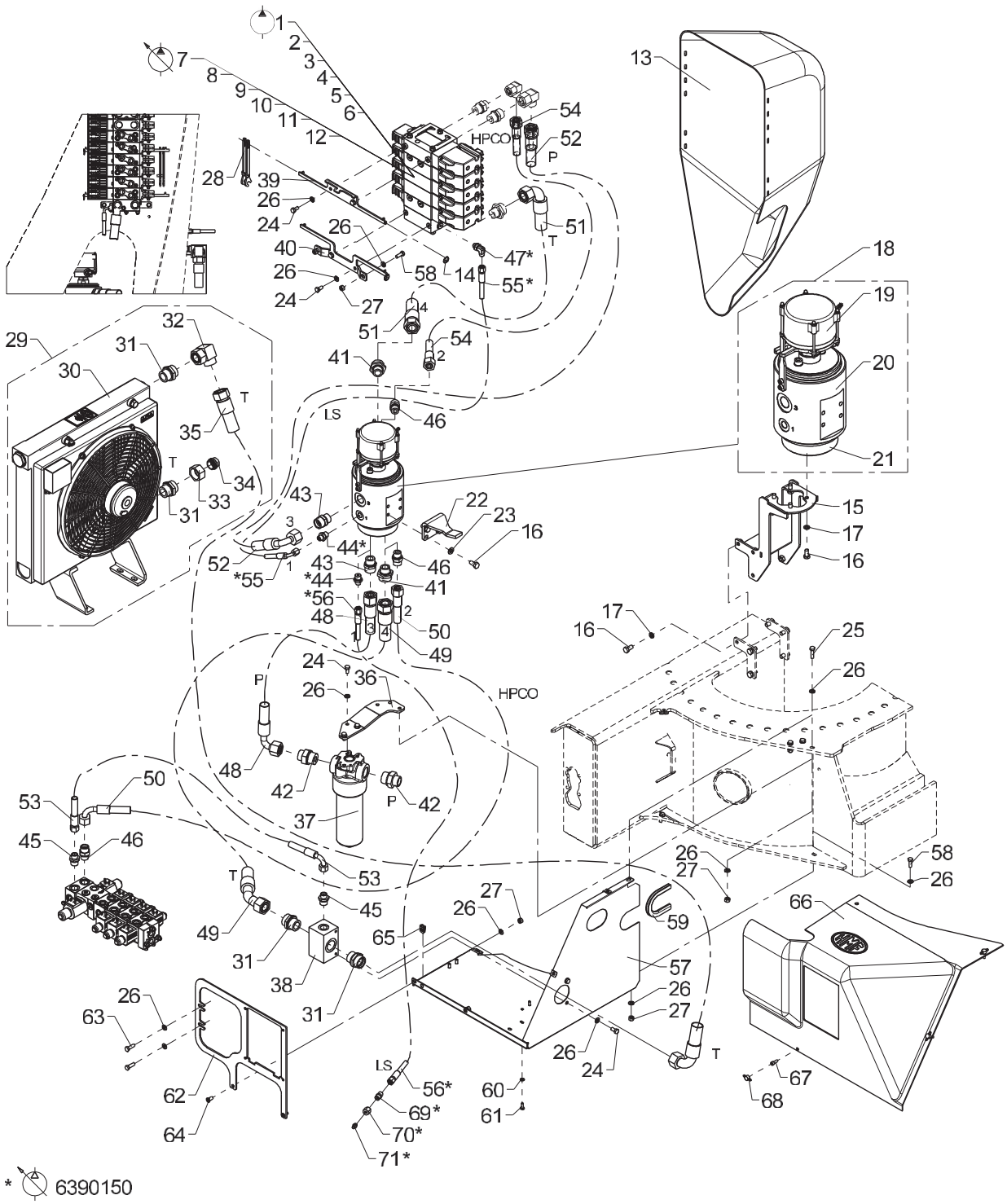

* 6390150

Obsolete

542 06 060

From loader 1150001
To loader 1150030

Created 31-01-2011
Modified 03-03-2011

Hydraulic system, pump and return hoses, 1 circuit

Pos	Qty.	Part no.	Description	Remarks
42	2	26851	Connection	GES 20 SR 1-WD
43	2	26197	Connection	P-GEV 20 SR-WD
44	2	25244	Connection	GES 8 LR 3/8-WD
45	2	25108	Connection	GES 12 LR 1/2-WD
46	3	26334	Connection	P-GEV 16 SR-WD
47	1	26898	Elbow connection	8 mm - 1/4"
48	1	62625	Hose	5/8 x 1000mm L/90
49	1	56533	Hose	1" x 950mm L/45
50	1	62686	Hose	1/2 x 1100mm L/90
51	1	56532	Hose	1" x 650mm L/90
52	1	56083	Hose	5/8 x 1200mm L/90
53	1	0017000	Hose	
54	1	62679	Hose	1/2 x 1000mm L/L
55	1	56520	Hose	1/4 x 900mm L/90
56	1	62604	Hose	1/4 x 2000mm L/L
57	1	6390041	Valve bracket	
58	4	30133	Set screw, stainless	
59	1	46587	Rubber protection	235 mm
60	4	32302	Face washer, stainless	6 mm
61	4	30112	Set screw, stainless	M6 x 16
62	1	6390043	Bracket for RCL	
63	2	30134	Set screw, stainless	M8 x 25
64	2	32481	Screw	MCL8 x 16
65	3	31068	Clip	M6 0,5 - 4,0 mm.
66	1	64429	Protection	
67	3	31539	Screw, stainless	MC6 x 16
68	3	64353	Thumb screw	M6
69	1	25246	Double connection	GS 8 L
70	1	25181	Coupling nut	M 8 L
71	1	26166	Blanking plug	VSD 8 L

50/345

Internal ref. 63 90 630

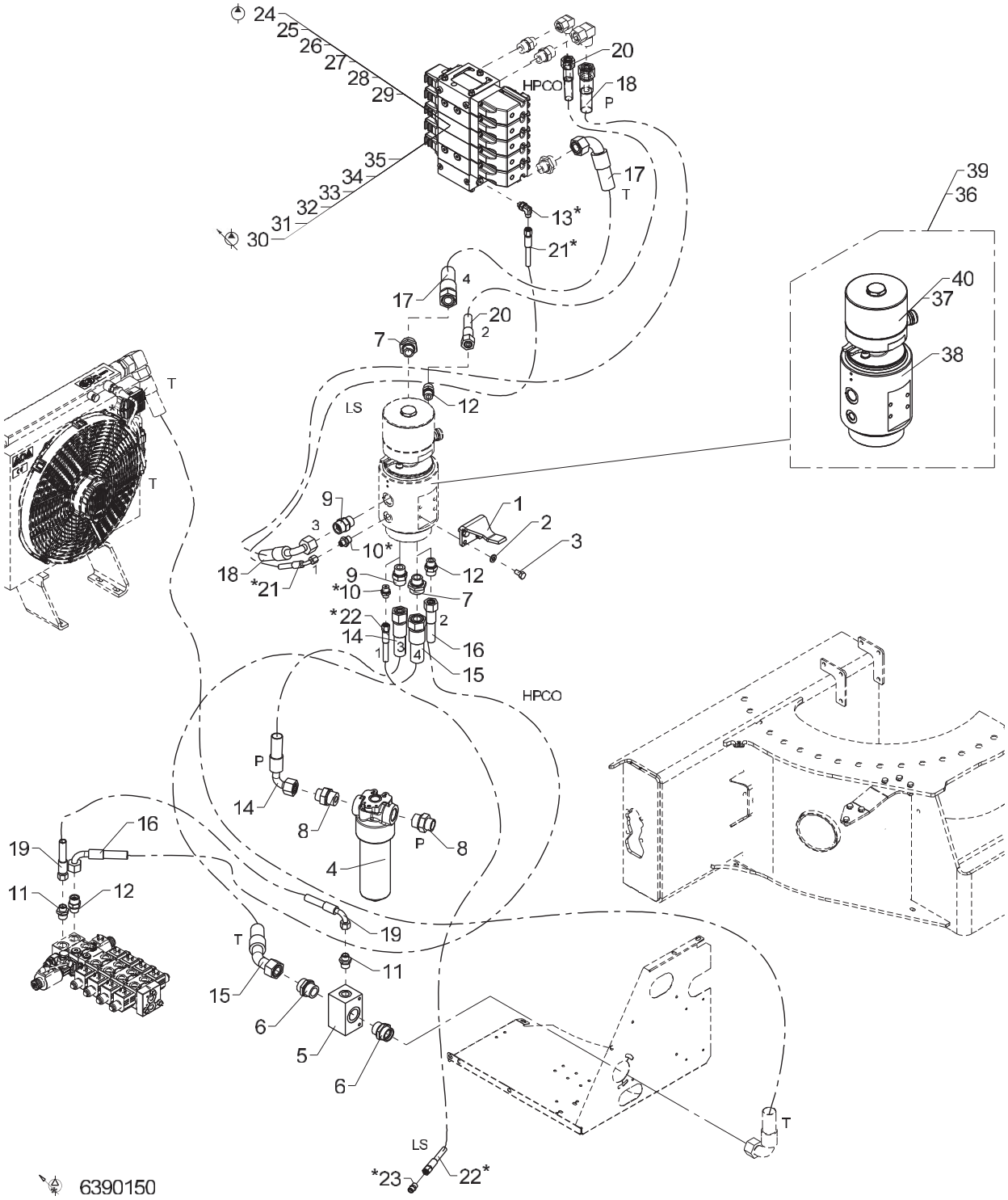

Hydraulic system, pump and return hoses, 1 circuit

Pos	Qty.	Part no.	Description	Remarks
1	1	6390087	Carrier fitting	
2	4	31565	Washer, stainless	10 mm
3	4	31517	Set screw, stainless	M10 x 20
4	1	49401	High pressure filter	
5	1	6340844	Connecting block	
6	2	26163	Connection	P-GEV 28 LR-WD
7	2	26845	Connection	GES 28 LR 3/4-WD
8	2	26851	Connection	GES 20 SR 1-WD
9	2	26197	Connection	P-GEV 20 SR-WD
10	2	25244	Connection	GES 8 LR 3/8-WD
11	2	25108	Connection	GES 12 LR 1/2-WD
12	3	26334	Connection	P-GEV 16 SR-WD
13	1	26898	Elbow connection	8 mm - 1/4"
14	1	62625	Hose	5/8 x 1000mm L/90
15	1	56533	Hose	1" x 950mm L/45
16	1	62686	Hose	1/2 x 1100mm L/90
17	1	56590	Hose	1" X 580 mm L/90
18	1	56083	Hose	5/8 x 1200mm L/90
19	1	0017000	Hose	
20	1	62679	Hose	1/2 x 1000mm L/L
21	1	56520	Hose	1/4 x 900mm L/90
22	1	62604	Hose	1/4 x 2000mm L/L
23	1	25246	Double connection	GS 8 L
24	1	55602	Control valve	4 sekt.
25	1	55604	Control valve	5 sekt. Winch
26	1	55606	Control valve	5 sekt. 1 EXV
27	1	55608	Control valve	6 sekt. Winch+1 EXV
28	1	55610	Control valve	6 sekt. 2 EXV/FJ
29	1	55612	Control valve	7 sekt. Winch+2 EXV/FJ
30	1	55601	Control valve	4 sekt.
31	1	55603	Control valve	5 sekt. Winch
32	1	55605	Control valve	5 sekt. 1 EXV
33	1	55607	Control valve	6 sekt. Winch+1 EXV
34	1	55609	Control valve	6 sekt. 2 EXV/FJ
35	1	55611	Control valve	7 sekt. Winch+2 EXV/FJ
36	1	49621	Swivel coupling	
37	1	49624	Electr. part, swivel coupling	
38	1	49623	Hydr. part, swivel coupling	
39	1	49632	Collector ring	Til Kurv
40	1	49629	Electric part	Til Kurv

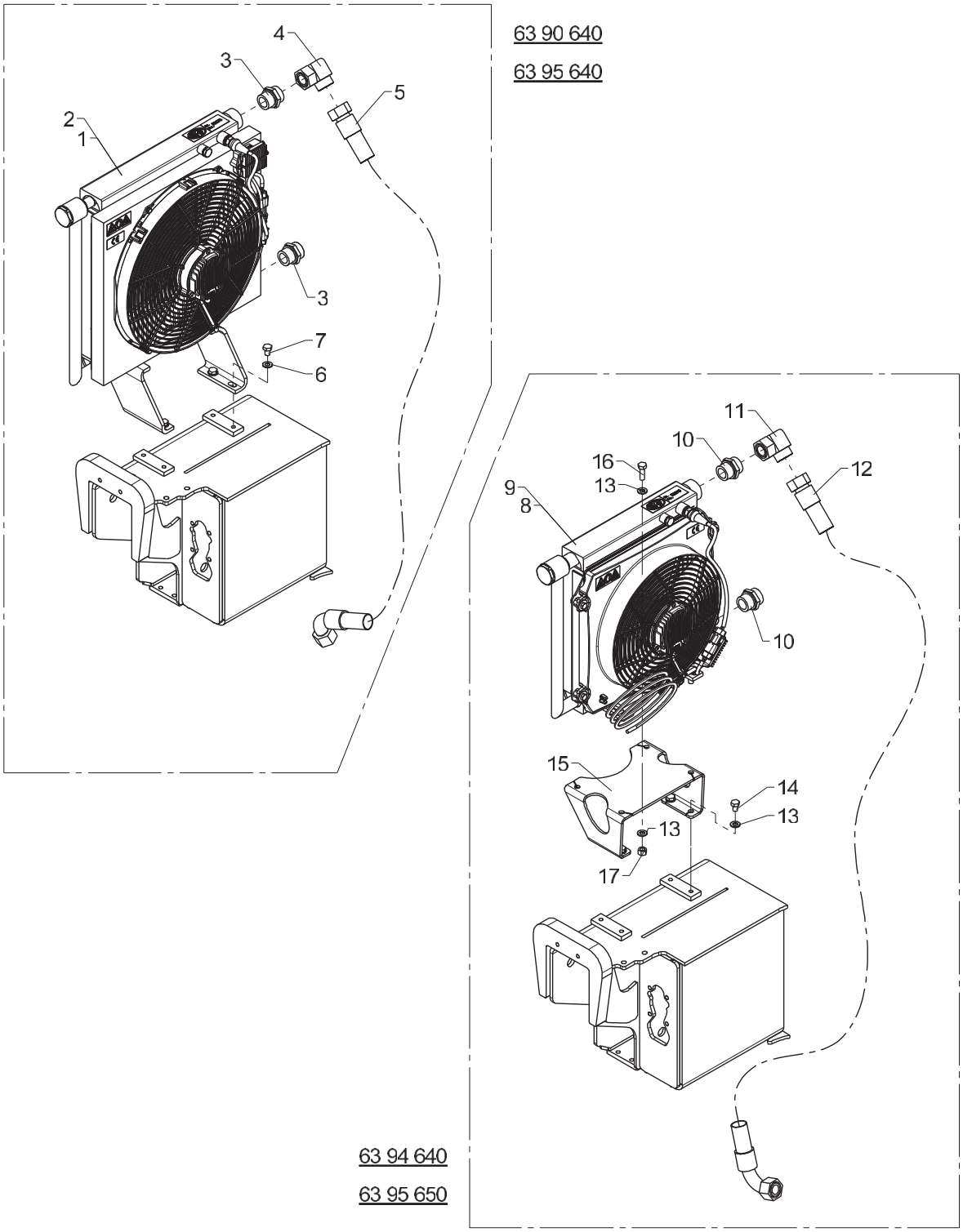
63 90 640
63 95 640
1
2
3
4
5
6
7
8
9
10
11
12
13
14
15
16
17
63 94 640
63 95 650

Oil cooler

Pos	Qty.	Part no.	Description	Remarks
		6390640	Oil coller, complete	Pos. 1, 3, 4, 5, 6, 7
		6395640		Pos. 2, 3, 4, 5, 6, 7
		6394640		Pos. 8,10,11,12,13,14,15,16,17
		6395650		Pos. 9,10,11,12,13,14,15,16,17
1	1	50274	Oil cooler 24 V + Smartdrive	
2	1	50275	Oil cooler 12 V + Smartdrive	
3	2	26163	Connection	P-GEV 28 LR-WD
4	1	26817	Elbow connection	P-EWV 28 L-SV
5	1	56534	Hose	1" x 1600mm L/90
6	4	31565	Washer, stainless	10 mm
7	4	30152	Set screw	M10 x 14
8	1	50272	Oil cooler, 24 V + Smartdrive	
9	1	50273	Oil cooler 12 V + Smartdrive	
10	2	26163	Connection	P-GEV 28 LR-WD
11	1	26817	Elbow connection	P-EWV 28 L-SV
12	1	56534	Hose	1" x 1600mm L/90
13	12	31565	Washer, stainless	10 mm
14	4	30152	Set screw	M10 x 14
15	1	6394242	Bracket for standard cooler	
16	4	30156	Set screw, stainless	M10 x 30
17	4	31564	Lock nut, stainless	M10

50/345

66 51 730
Internal ref. 66 51 670

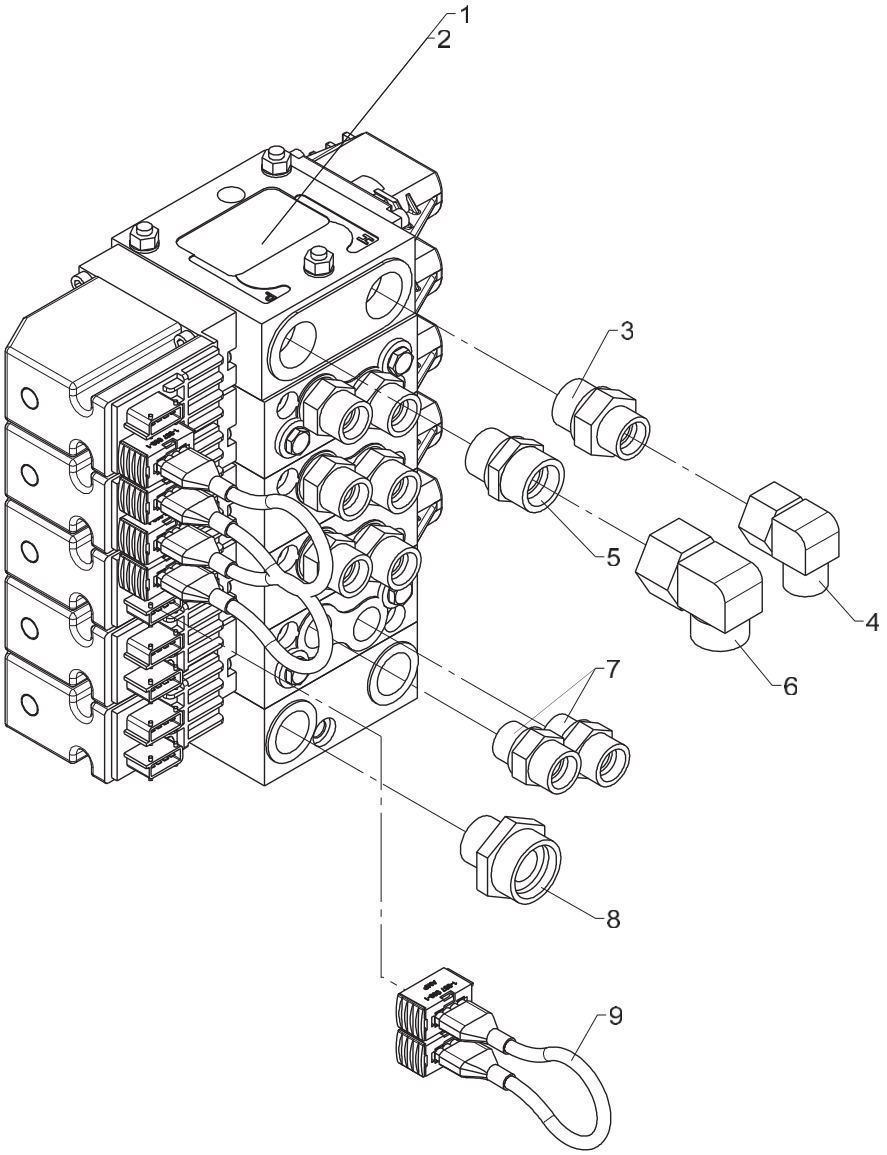

Obsolete

542 06 200

From loader 1150001
To loader 1150012

Created
Modified 14-07-2010

Valve block, 4 sects. fixed/variable

Pos	Qty.	Part no.	Description	Remarks
		6651670	Control valve,4 sec.,fix. flow	
		6651730	Control valve,4 sec.,var. flow	
1	1	55602	Control valve	4 sekt.
2	1	55601	Control valve	4 sekt.
3	1	26390	Connection	P-GEV 16 SR 3/4-WD
4	1	26340	Elbow connection	EWSD 16 S
5	1	26197	Connection	P-GEV 20 SR-WD
6	1	26198	Elbow connection	EWVD 20 S-SV
7	8	26334	Connection	P-GEV 16 SR-WD
8	1	26845	Connection	GES 28 LR 3/4-WD
9	3	62296	Cable	

50/345

66 51 730
Internal ref. 66 51 670

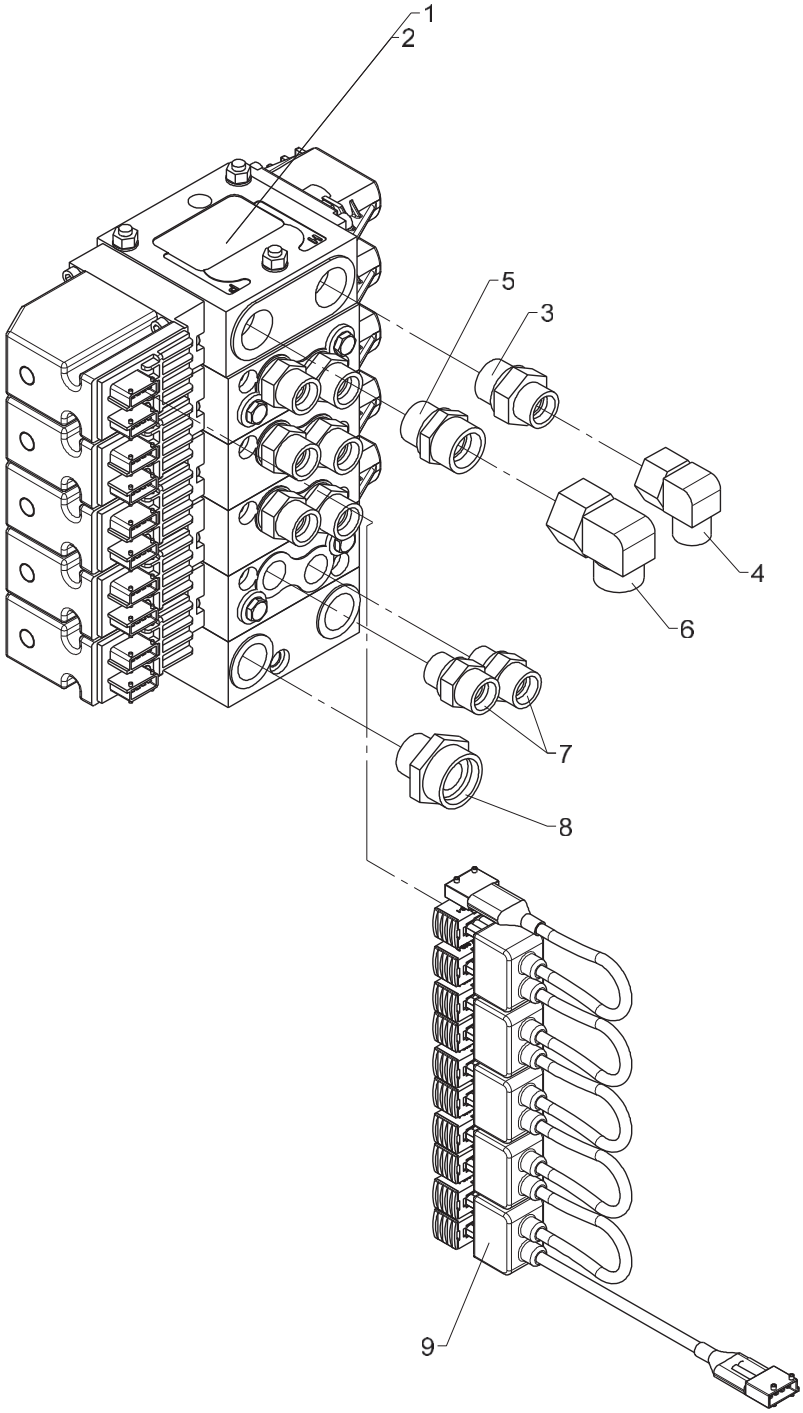

Valve block, 4 sects. fixed/variable

From loader 1150001
To loader 1150013

Created 24-06-2010
Modified 27-02-2013

Pos	Qty.	Part no.	Description	Remarks
		6651670	Control valve,4 sec.,fix. flow	
		6651730	Control valve,4 sec.,var. flow	
1	1	55602	Control valve	4 sekt.
2	1	55601	Control valve	4 sekt.
3	1	26390	Connection	P-GEV 16 SR 3/4-WD
4	1	26340	Elbow connection	EWSD 16 S
5	1	26197	Connection	P-GEV 20 SR-WD
6	1	26198	Elbow connection	EWVD 20 S-SV
7	8	26334	Connection	P-GEV 16 SR-WD
8	1	26845	Connection	GES 28 LR 3/4-WD
9	1	58986	PVED cable kit, 5 modules	

50/345

66 51 760
Internal ref. 66 51 700

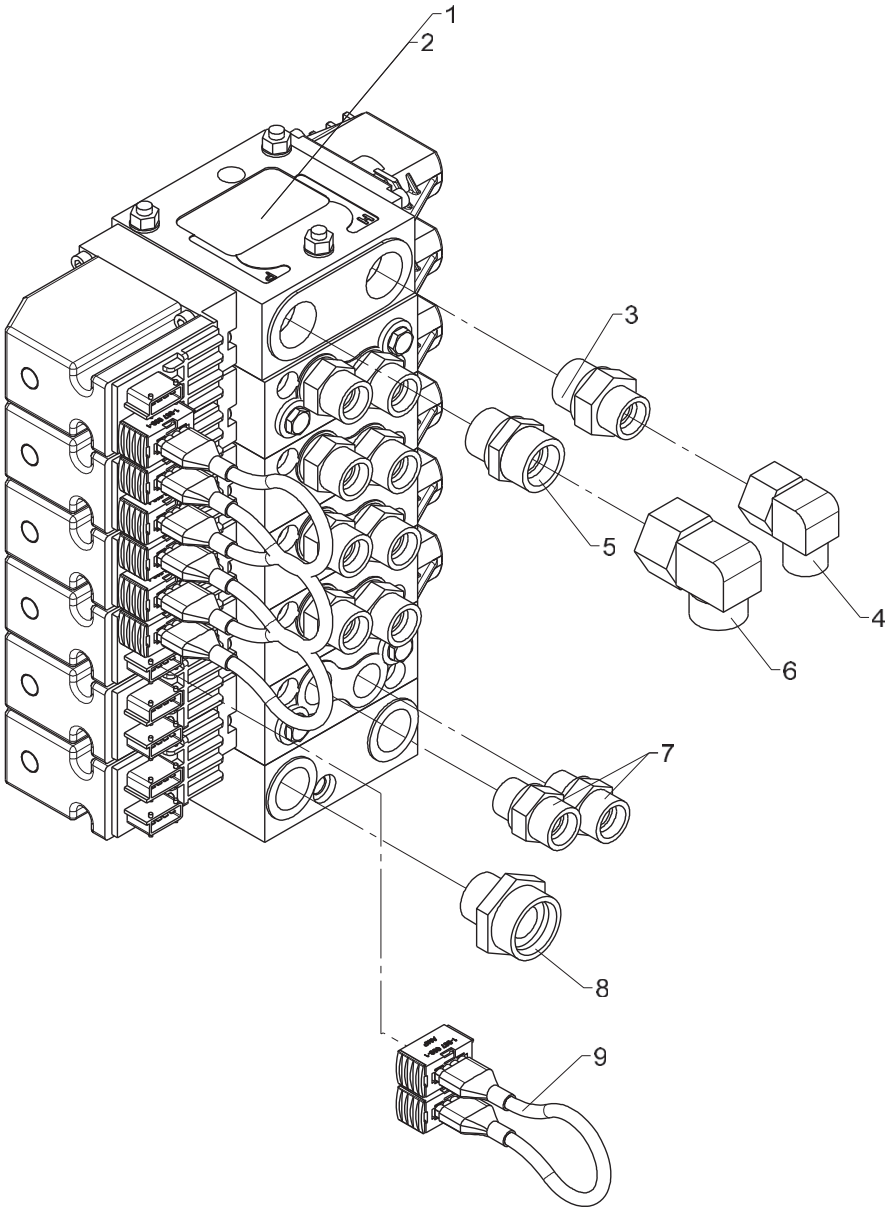

Obsolete

542 06 210

From loader 1150001
To loader 1150012

Created 24-06-2010
Modified 14-07-2010

Valve block, 5 sects. fixed/variable

Pos	Qty.	Part no.	Description	Remarks
		6651700	Valve block, 5 sect.winch fix.	
		6651760	Valve block, 5 sect.,winch var	
1	1	55604	Control valve	5 sekt. Winch
2	1	55603	Control valve	5 sekt. Winch
3	1	26390	Connection	P-GEV 16 SR 3/4-WD
4	1	26340	Elbow connection	EWSD 16 S
5	1	26197	Connection	P-GEV 20 SR-WD
6	1	26198	Elbow connection	EWVD 20 S-SV
7	10	26334	Connection	P-GEV 16 SR-WD
8	1	26845	Connection	GES 28 LR 3/4-WD
9	4	62296	Cable	

50/345

66 51 760
Internal ref. 66 51 700

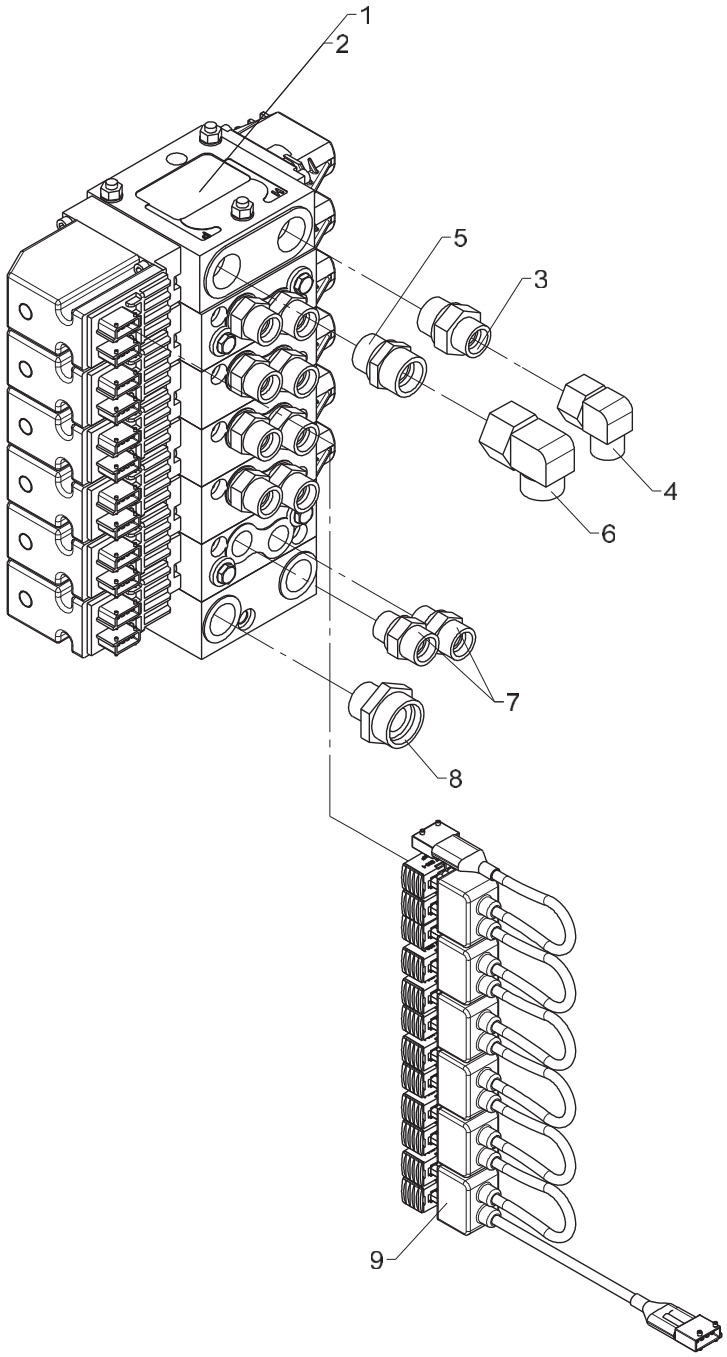

Valve block, 5 sects. fixed/variable

From loader 1150001
To loader 1150013

Created 24-06-2010
Modified 27-02-2013

Pos	Qty.	Part no.	Description	Remarks
		6651700	Valve block, 5 sect.winch fix.	
		6651760	Valve block, 5 sect.,winch var	
1	1	55604	Control valve	5 sekt. Winch
2	1	55603	Control valve	5 sekt. Winch
3	1	26390	Connection	P-GEV 16 SR 3/4-WD
4	1	26340	Elbow connection	EWSD 16 S
5	1	26197	Connection	P-GEV 20 SR-WD
6	1	26198	Elbow connection	EWVD 20 S-SV
7	10	26334	Connection	P-GEV 16 SR-WD
8	1	26845	Connection	GES 28 LR 3/4-WD
9	1	58987	PVED cable kit, 6 modules	

50/345

66 51 740
Internal ref. 66 51 680

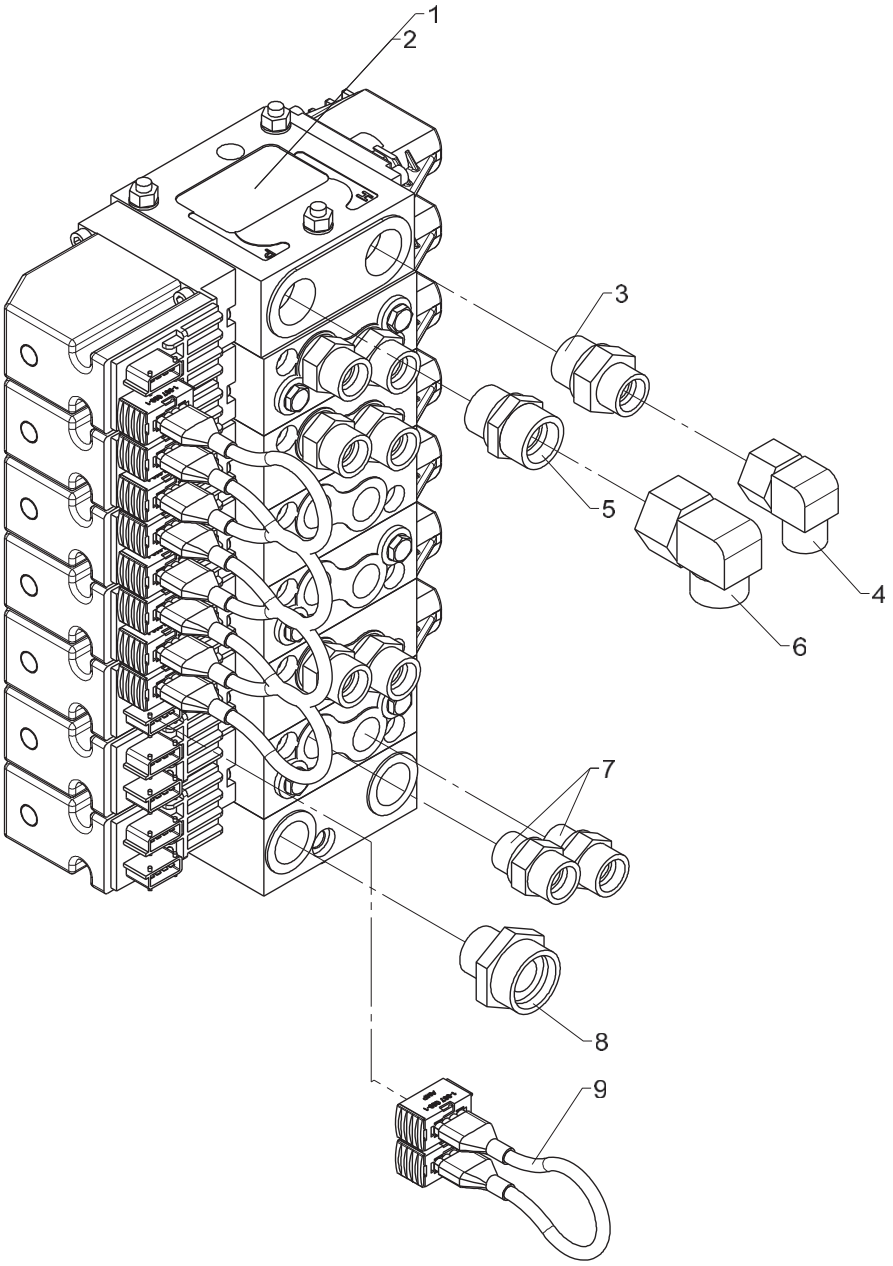

Obsolete

542 06 220

From loader 1150001
To loader 1150012

Created
Modified 14-07-2010

Valve block, 6 sects. fixed/variable

Pos	Qty.	Part no.	Description	Remarks
		6651680	Valve block, 6 sect., 2 x fix.	
		6651740	Valve block, 6 sect., 2 x var.	
1	1	55610	Control valve	6 sekt. 2 EXV/FJ
2	1	55609	Control valve	6 sekt. 2 EXV/FJ
3	1	26390	Connection	P-GEV 16 SR 3/4-WD
4	1	26340	Elbow connection	EWSD 16 S
5	1	26197	Connection	P-GEV 20 SR-WD
6	1	26198	Elbow connection	EWVD 20 S-SV
7	8	26334	Connection	P-GEV 16 SR-WD
8	1	26845	Connection	GES 28 LR 3/4-WD
9	5	62296	Cable	

50/345

66 51 740
Internal ref. 66 51 680

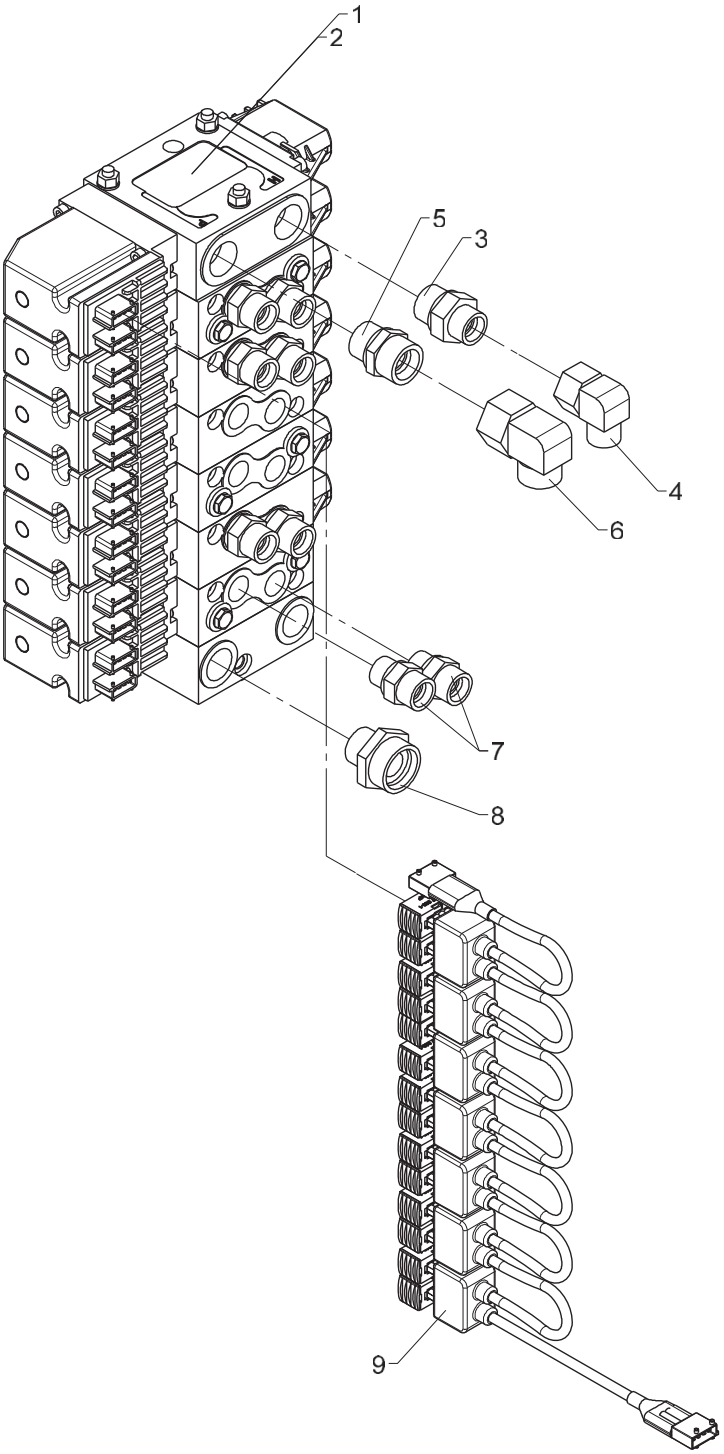

From loader 1150001
To loader 1150013

Created 24-06-2010
Modified 27-02-2013

Valve block, 6 sects. fixed/variable

Pos	Qty.	Part no.	Description	Remarks
		6651680	Valve block, 6 sect., 2 x fix.	
		6651740	Valve block, 6 sect., 2 x var.	
1	1	55610	Control valve	6 sekt. 2 EXV/FJ
2	1	55609	Control valve	6 sekt. 2 EXV/FJ
3	1	26390	Connection	P-GEV 16 SR 3/4-WD
4	1	26340	Elbow connection	EWSD 16 S
5	1	26197	Connection	P-GEV 20 SR-WD
6	1	26198	Elbow connection	EWVD 20 S-SV
7	8	26334	Connection	P-GEV 16 SR-WD
8	1	26845	Connection	GES 28 LR 3/4-WD
9	1	58988	PVED cable kit, 7 modules	

50/345

66 51 750
Internal ref. 66 51 690

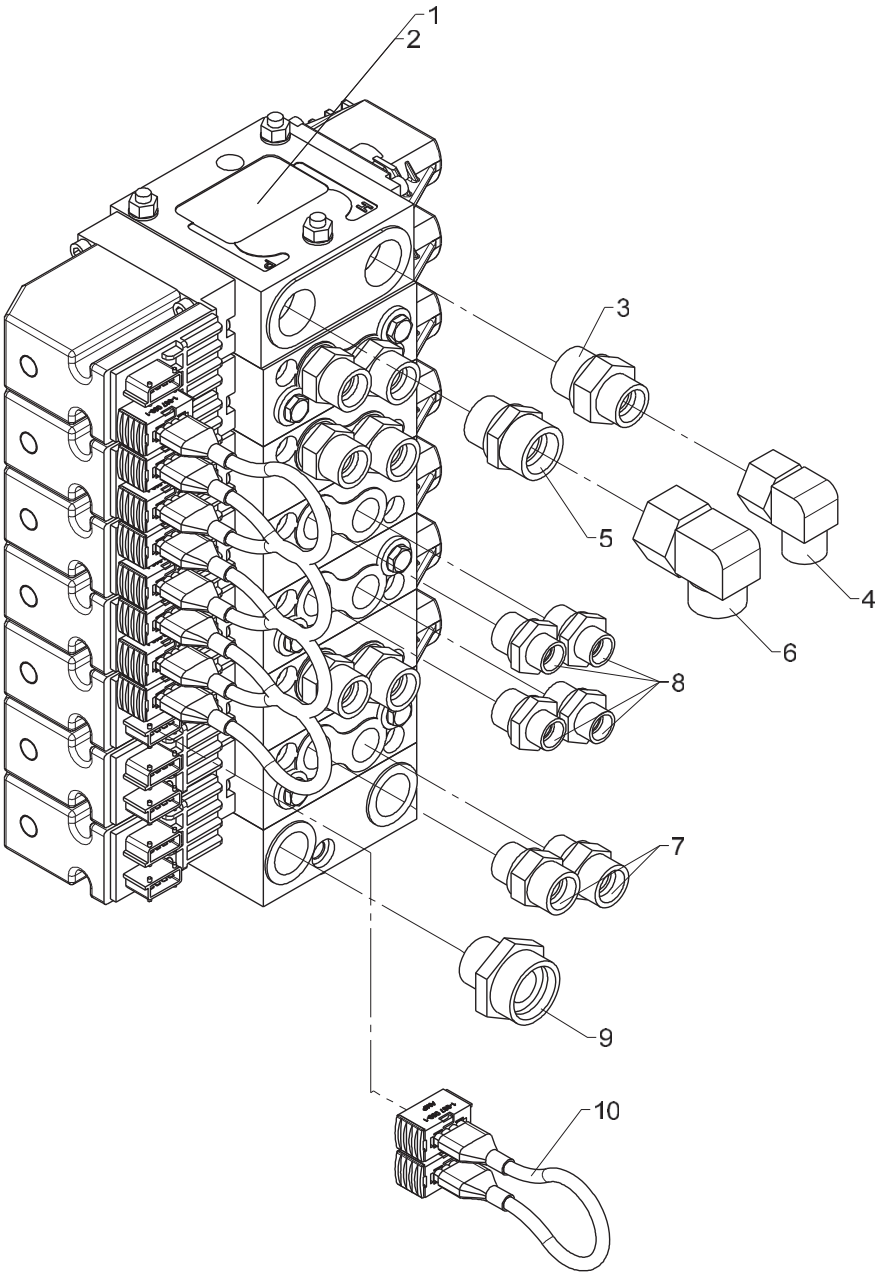

Obsolete

542 06 230

Valve block, 6 sects. EXV, fixed/variable

From loader 1150001
To loader 1150012

Created
Modified 14-07-2010

Pos	Qty.	Part no.	Description	Remarks
		6651690	Valve block, 6 sect., 2 x fix.	
		6651750	Valve block, 6 sect., 2 x var.	
1	1	55610	Control valve	6 sekt. 2 EXV/FJ
2	1	55609	Control valve	6 sekt. 2 EXV/FJ
3	1	26390	Connection	P-GEV 16 SR 3/4-WD
4	1	26340	Elbow connection	EWSD 16 S
5	1	26197	Connection	P-GEV 20 SR-WD
6	1	26198	Elbow connection	EWVD 20 S-SV
7	8	26334	Connection	P-GEV 16 SR-WD
8	4	25108	Connection	GES 12 LR 1/2-WD
9	1	26845	Connection	GES 28 LR 3/4-WD
10	5	62296	Cable	

50/345

66 51 750
Internal ref. 66 51 690

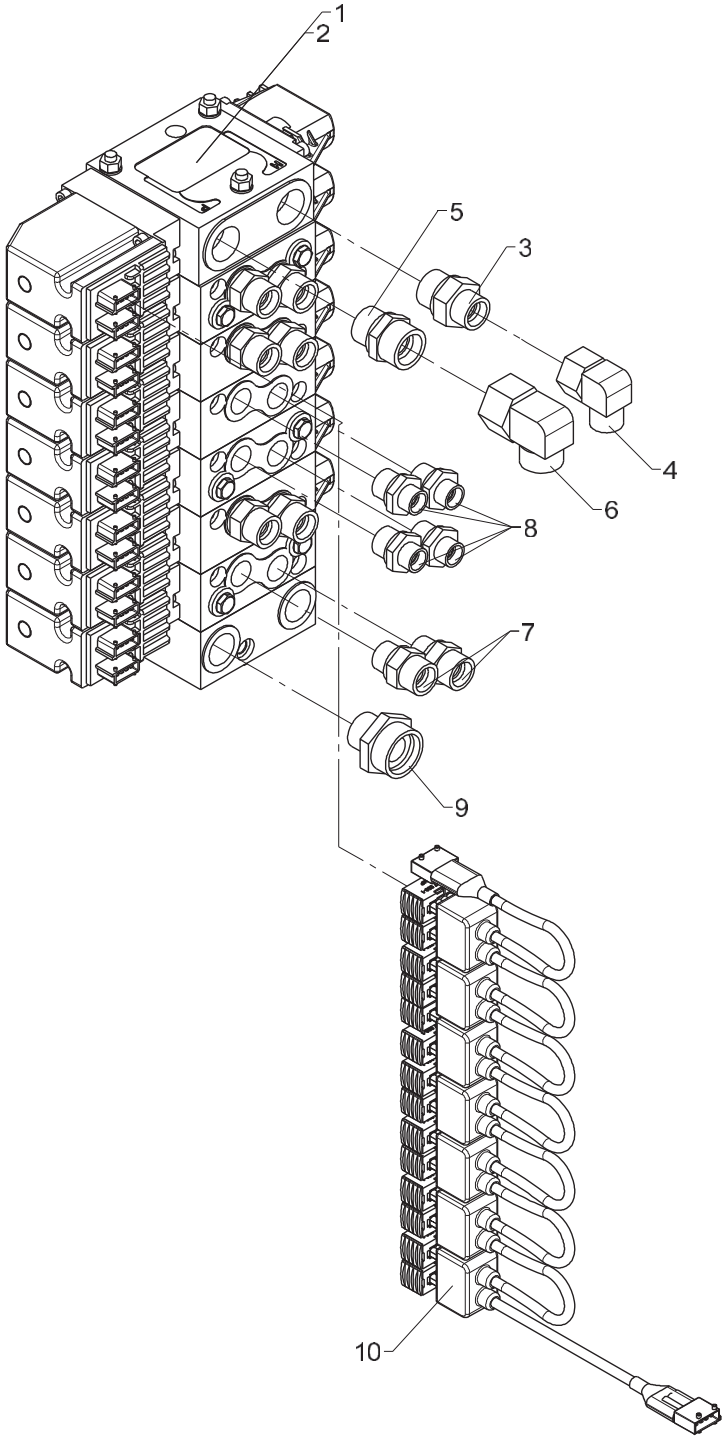

From loader 1150001
To loader 1150013

Created 24-06-2010
Modified 27-02-2013

Valve block, 6 sects. EXV, fixed/variable

Pos	Qty.	Part no.	Description	Remarks
		6651690	Valve block, 6 sect., 2 x fix.	
		6651750	Valve block, 6 sect., 2 x var.	
1	1	55610	Control valve	6 sekt. 2 EXV/FJ
2	1	55609	Control valve	6 sekt. 2 EXV/FJ
3	1	26390	Connection	P-GEV 16 SR 3/4-WD
4	1	26340	Elbow connection	EWSD 16 S
5	1	26197	Connection	P-GEV 20 SR-WD
6	1	26198	Elbow connection	EWVD 20 S-SV
7	8	26334	Connection	P-GEV 16 SR-WD
8	4	25108	Connection	GES 12 LR 1/2-WD
9	1	26845	Connection	GES 28 LR 3/4-WD
10	1	58988	PVED cable kit, 7 modules	

50/345

66 51 770
Internal ref. 66 51 710

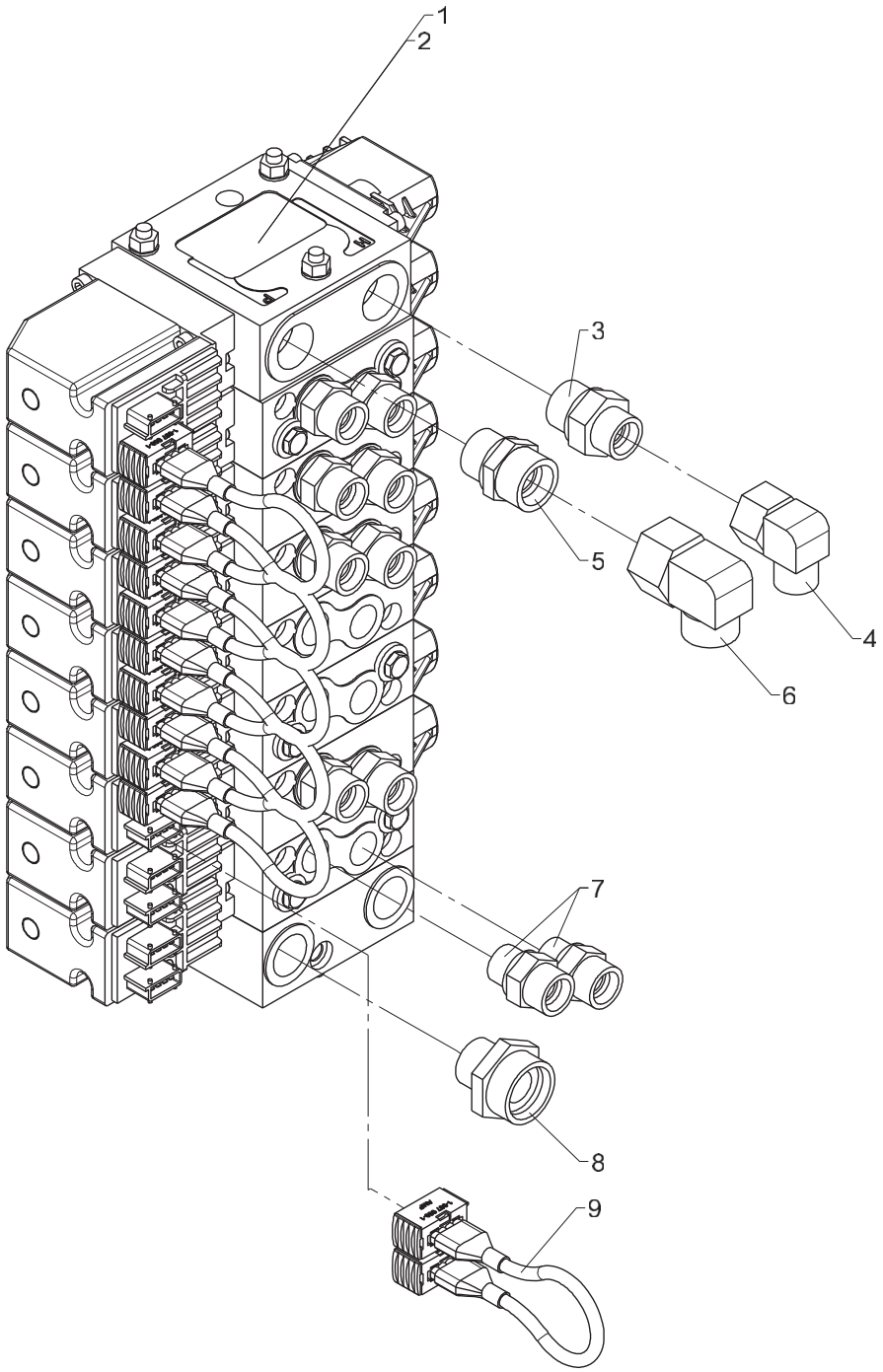

Obsolete

542 06 240

From loader 1150001
To loader 1150012

Created
Modified 14-07-2010

Valve block, 7 sects. fixed/variable

Pos	Qty.	Part no.	Description	Remarks
		6651710	Valve block,7 sect.,2xfix.treu	
		6651770	Valve block,7 sect.,2xvar.treu	
1	1	55612	Control valve	7 sekt. Winch+2 EXV/FJ
2	1	55611	Control valve	7 sekt. Winch+2 EXV/FJ
3	1	26390	Connection	P-GEV 16 SR 3/4-WD
4	1	26340	Elbow connection	EWSD 16 S
5	1	26197	Connection	P-GEV 20 SR-WD
6	1	26198	Elbow connection	EWVD 20 S-SV
7	10	26334	Connection	P-GEV 16 SR-WD
8	1	26845	Connection	GES 28 LR 3/4-WD
9	6	62296	Cable	

50/345

66 51 770
Internal ref. 66 51 710

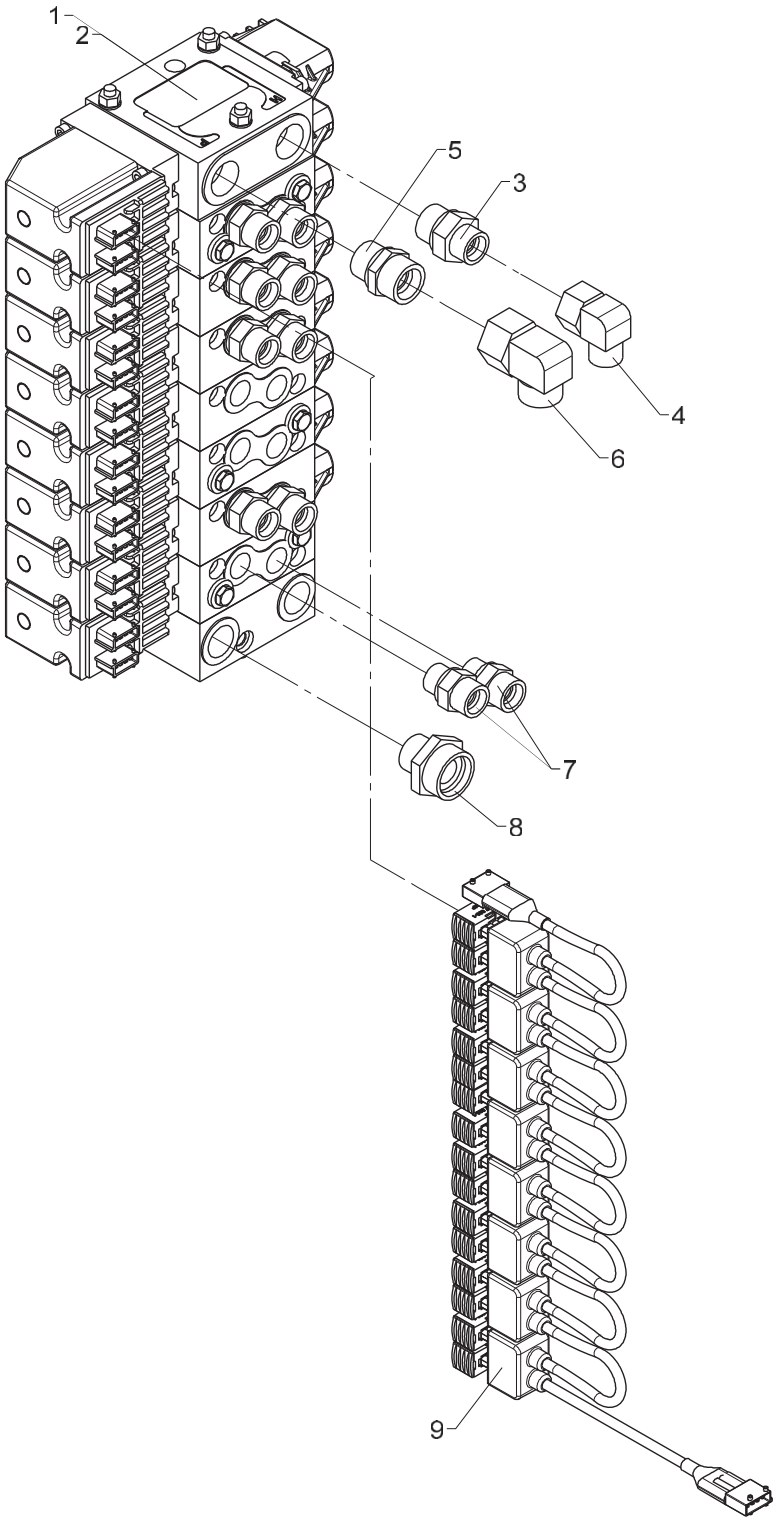

From loader
To loader 1150013

Valve block, 7 sects. fixed/variable

Created 24-06-2010
Modified 27-02-2013

Pos	Qty.	Part no.	Description	Remarks
		6651710	Valve block,7 sect.,2xfix.treu	
		6651770	Valve block,7 sect.,2xvar.treu	
1	1	55612	Control valve	7 sekt. Winch+2 EXV/FJ
2	1	55611	Control valve	7 sekt. Winch+2 EXV/FJ
3	1	26390	Connection	P-GEV 16 SR 3/4-WD
4	1	26340	Elbow connection	EWSD 16 S
5	1	26197	Connection	P-GEV 20 SR-WD
6	1	26198	Elbow connection	EWVD 20 S-SV
7	10	26334	Connection	P-GEV 16 SR-WD
8	1	26845	Connection	GES 28 LR 3/4-WD
9	1	58989	PVED cable kit, 8 modules	

50/345

66 51 780
Internal ref. 66 51 720

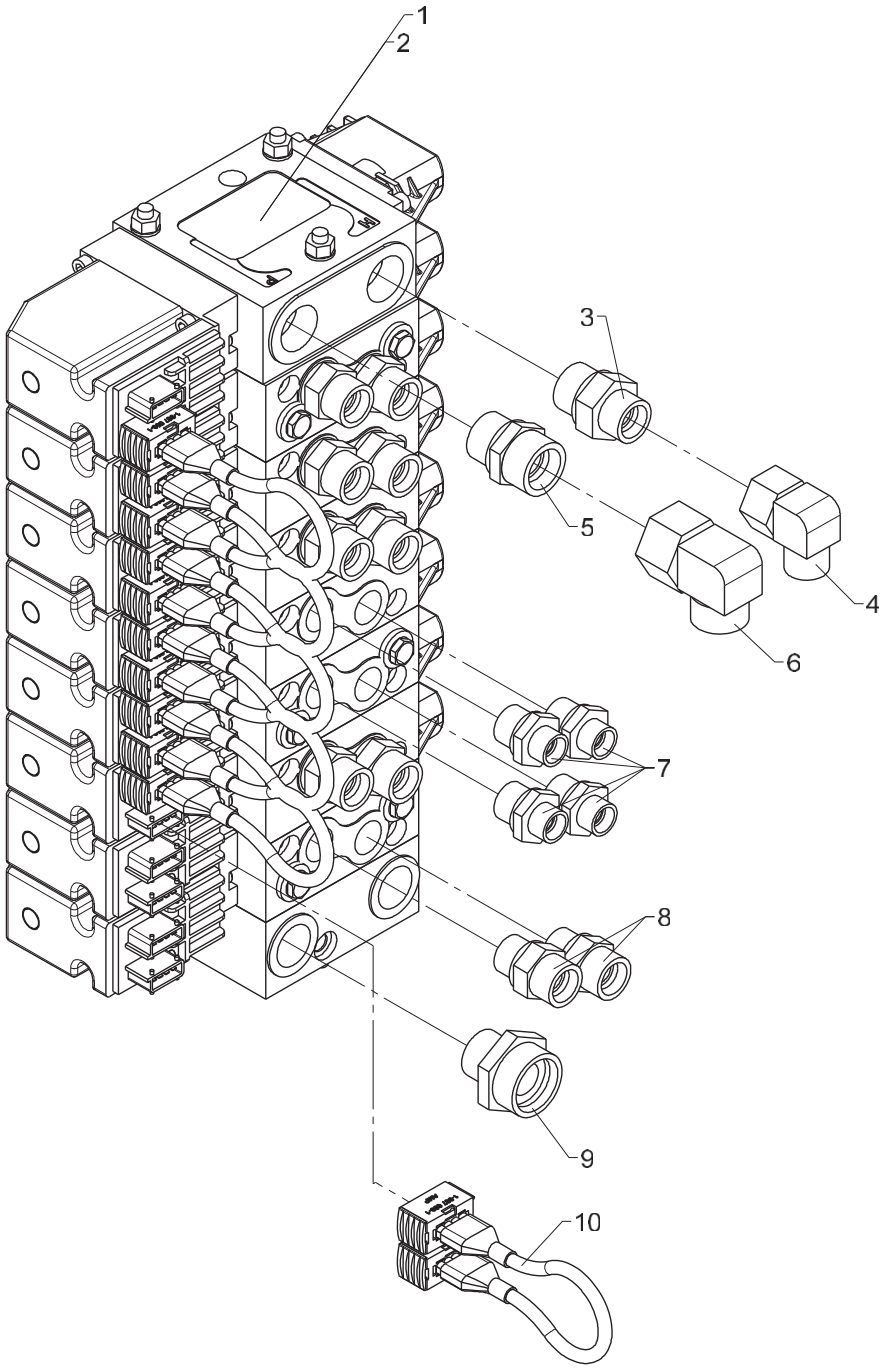

Obsolete

542 06 250

Valve block, 7 sects. EXV, fixed/variable

From loader 1150001
To loader 1150012

Created
Modified 14-07-2010

Pos	Qty.	Part no.	Description	Remarks
		6651720	Valve block,7sect.,2xfix.winc	
		6651780	Valve block,7 sect.,2xvar.winc	
1	1	55612	Control valve	7 sekt. Winch+2 EXV/FJ
2	1	55611	Control valve	7 sekt. Winch+2 EXV/FJ
3	1	26390	Connection	P-GEV 16 SR 3/4-WD
4	1	26340	Elbow connection	EWSD 16 S
5	1	26197	Connection	P-GEV 20 SR-WD
6	1	26198	Elbow connection	EWVD 20 S-SV
7	4	25108	Connection	GES 12 LR 1/2-WD
8	10	26334	Connection	P-GEV 16 SR-WD
9	1	26845	Connection	GES 28 LR 3/4-WD
10	6	62296	Cable	

50/345

66 51 780
Internal ref. 66 51 720

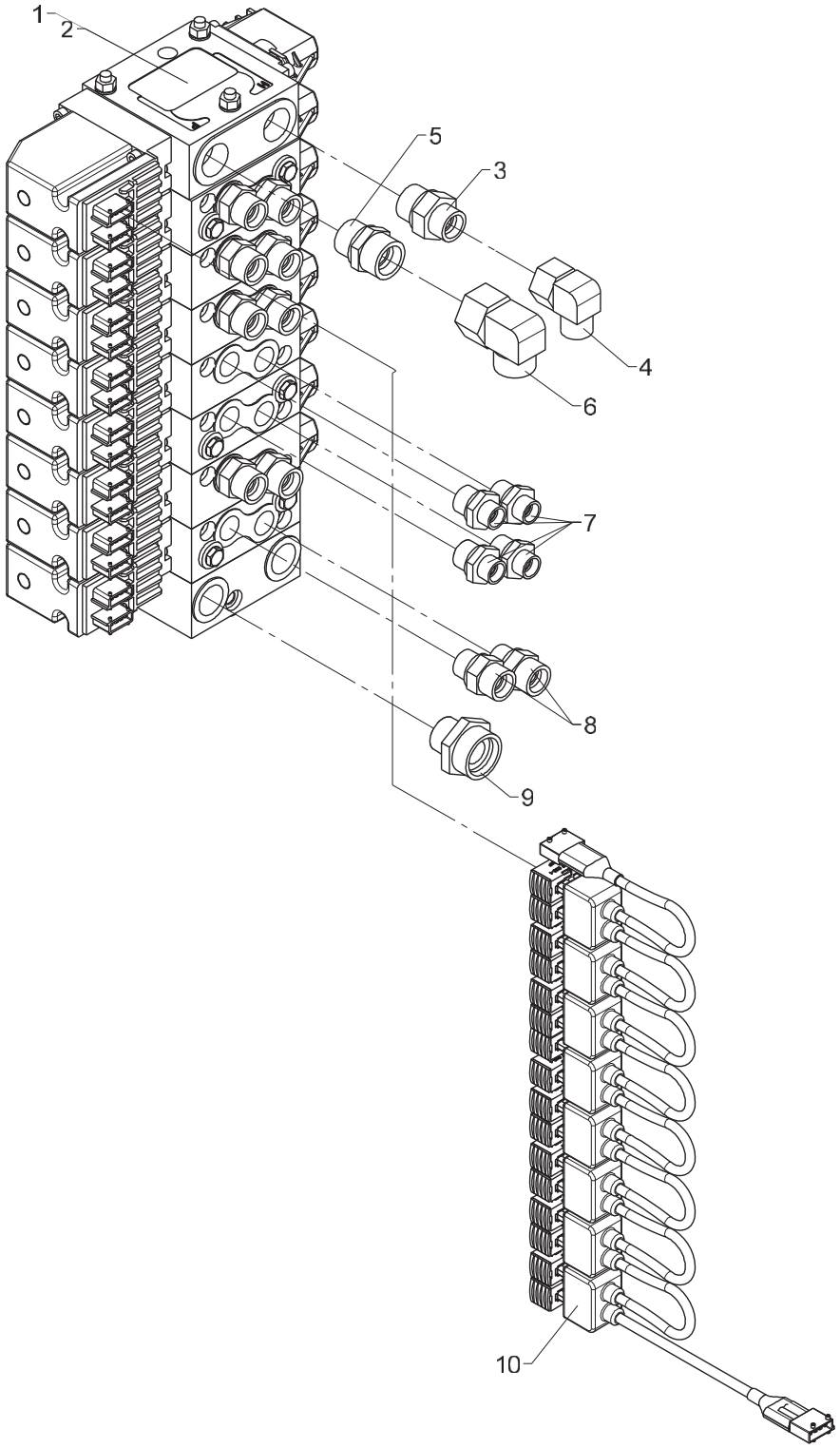

From loader 1150001
To loader 1150013

Created 24-06-2010
Modified 25-11-2010

Valve block, 7 sects. EXV, fixed/variable

Pos	Qty.	Part no.	Description	Remarks
		6651720	Valve block,7sect.,2xfix.winc	
		6651780	Valve block,7 sect.,2xvar.winc	
1	1	55612	Control valve	7 sekt. Winch+2 EXV/FJ
2	1	55611	Control valve	7 sekt. Winch+2 EXV/FJ
3	1	26390	Connection	P-GEV 16 SR 3/4-WD
4	1	26340	Elbow connection	EWSD 16 S
5	1	26197	Connection	P-GEV 20 SR-WD
6	1	26198	Elbow connection	EWVD 20 S-SV
7	4	25108	Connection	GES 12 LR 1/2-WD
8	10	26334	Connection	P-GEV 16 SR-WD
9	1	26845	Connection	GES 28 LR 3/4-WD
10	1	58989	PVED cable kit, 8 modules	

50/345

Internal ref. 99 99 545

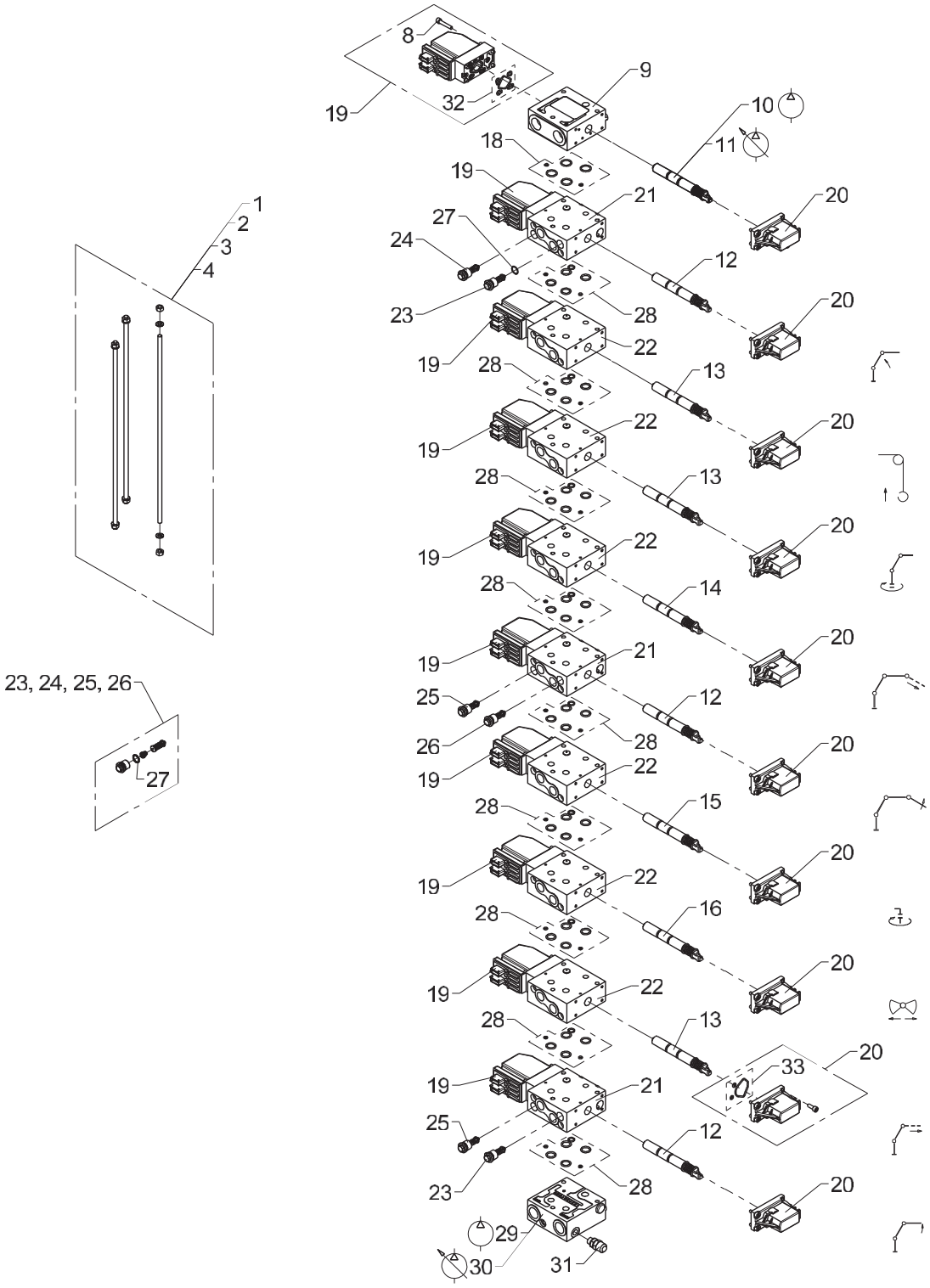

Danfoss control valve PVG32, 4-7 sections

Pos	Qty.	Part no.	Description	Remarks
1	1	58965	Connecting kit, 4 sections	
2	1	58966	Connecting kit, 5 sections	
3	1	58967	Connecting kit, 6 sections	
4	1	58968	Connecting kit, 7 sections	
5	2	30856	Nut, stainless	M8
6	2	62044	Washer	
7	1	30424	Screw	MC6 x 16
8	1	62241	Screw	
9	1	58958	PVSK valve section	
10	1	58959	Spool, OC	
11	1	58960	Spool, CC	
12	3	62029	Spool	
13	3	62055	Spool	
14	1	62034	Spool	
15	1	58902	Spool	
16	1	62070	Spool	
17	1	64416	Cover for sealing	
18	1	58925	Seal kit	
19	10	62295	Electric activation	
20	10	58919	Lever module	
21	3	62227	Basic module	
22	6	62225	Basic module	
23	2	58983	Port-relief valve	380 bar
24	1	62271	Port-relief valve	
25	2	62281	Port-relief valve	280 bar
26	1	62282	Port-relief valve	
27	1	62052	O-ring	
28	9	62237	Seal kit	
29	1	58955	Inlet section, OC	
30	1	58956	Inlet section, CC	
31	1	26103	Pressure-gauge connect.	
32	1	62240	Seal kit	
33	1	62239	Seal kit	

50/345

Internal ref. 99 99 700

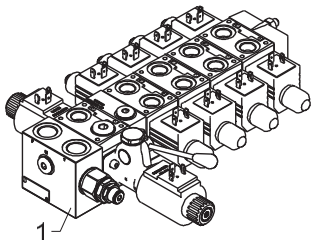

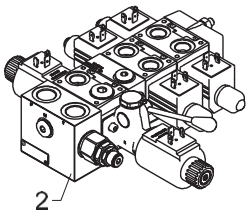

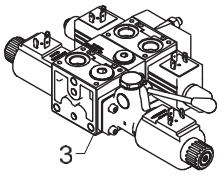

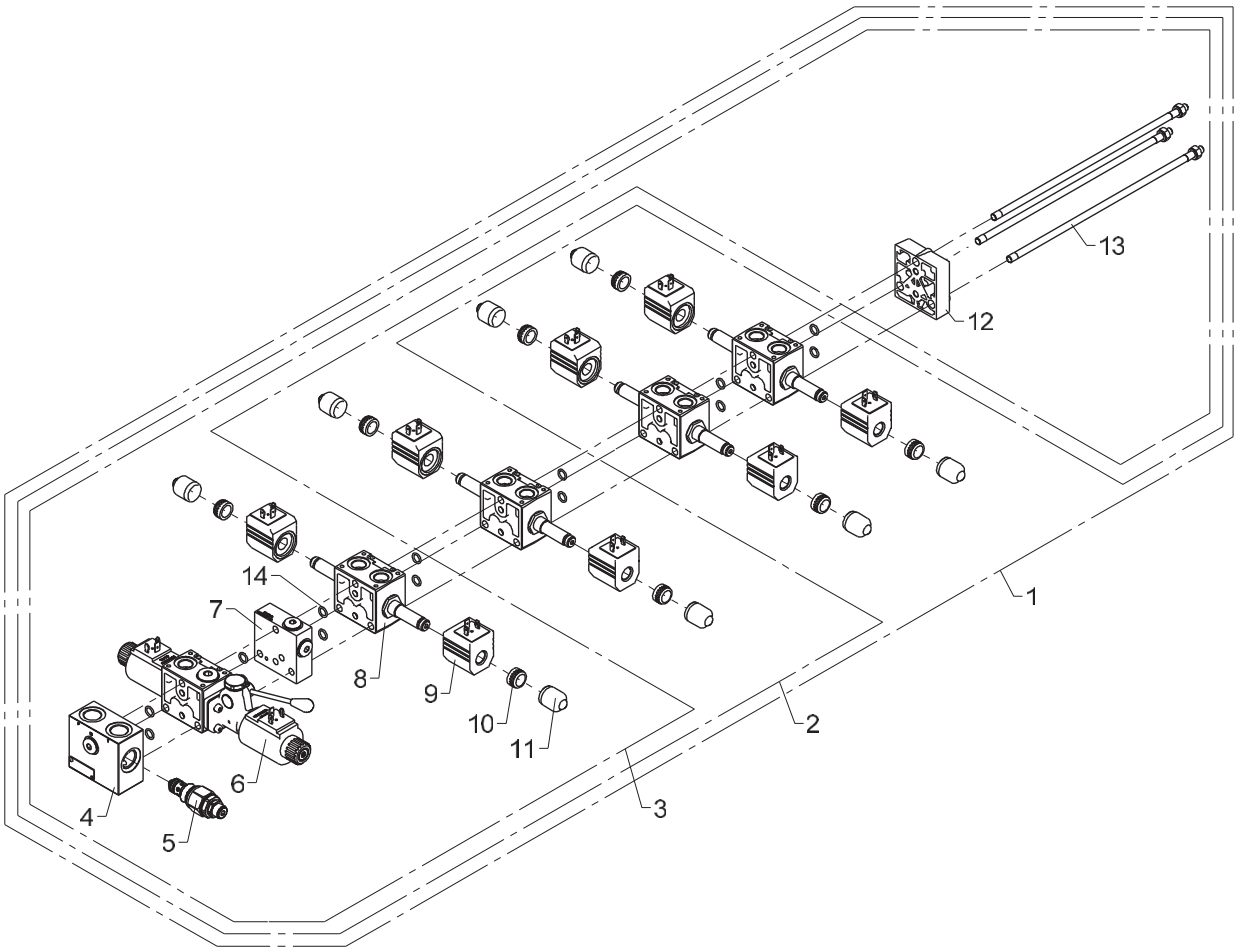

Valve block (stabilizer control valve)

Pos	Qty.	Part no.	Description	Remarks
1	1	50510	Stabilizer valve	8 funkt.
2	1	50512	Stabilizer control valve	4 funkt.
3	1	50514	Stabilizer valve block	2 funkt.
4	1	50534	Bottom block	
5	1	50530	Screw, cartridge	
6	1	50531	Valve	
7	1	50532	Module	
8	4	50533	Valve	
9	8	50535	Solenoid 24 V	
10	8	50538	Seal kit	
11	8	50516		
12	1	50537	End cap	
13	3	50522	Kit of stay bolts	
14	14	50540		ø8,5

50/345

Internal ref. 63 90 410

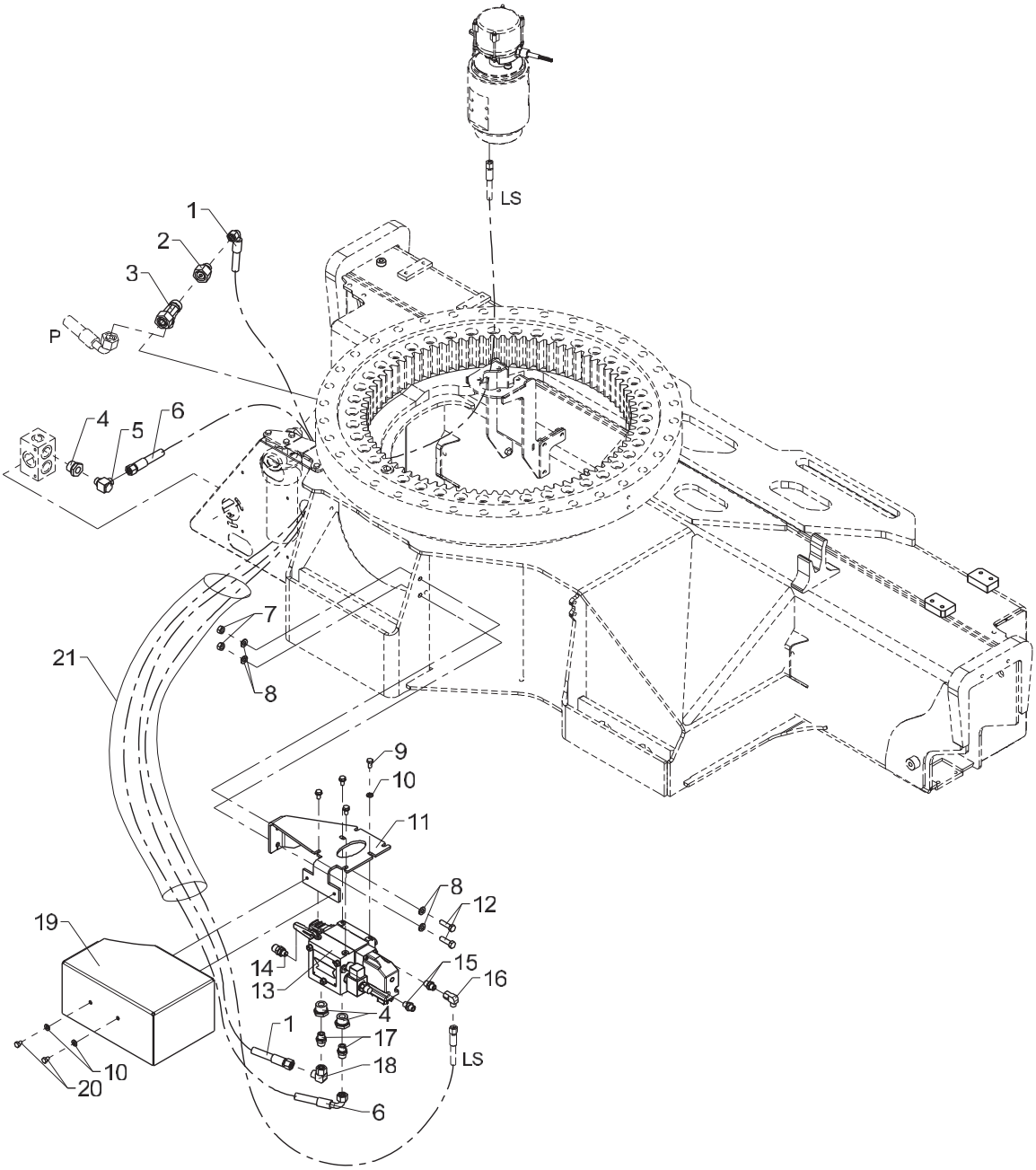

Extra RC-function on the base

Pos	Qty.	Part no.	Description	Remarks
1	1	56402	Hose	3/8 X 1250 mm 90 gr/L
2	1	26873	Reducing connection	REDSDN 20/12 S
3	1	26362	Connection	ELSD 20 S
4	3	26319	Reducing connection	RED-R 3/4-WD/R 3/8
5	1	25130	Banjo connection	RSWV 12 LR
6	1	0015030	Hose	
7	2	30858	Nut	M10
8	4	31565	Washer, stainless	10 mm
9	4	30131	Set screw, stainless	M8 x 16
10	6	31147	Face washer, 8 mm	
11	1	6302978	Valve bracket	
12	2	30157	Set screw	M10 x 35
13	1	55625	Control valve	
14	1	26103	Pressure-gauge connect.	
15	2	25109	Connection	GES 8 LR-WD
16	1	26170	Elbow connection	EWSD 8 L
17	2	25127	Connection	P-GEV 12 LR-WD
18	1	25242	Elbow connection	EWSD 12 L
19	1	6302979	Valve protection	
20	2	30105	Set screw, stainless	M8 x 10
21	1	62587	Protective cover	

50/345

68 88 410
Internal ref. 68 88 270

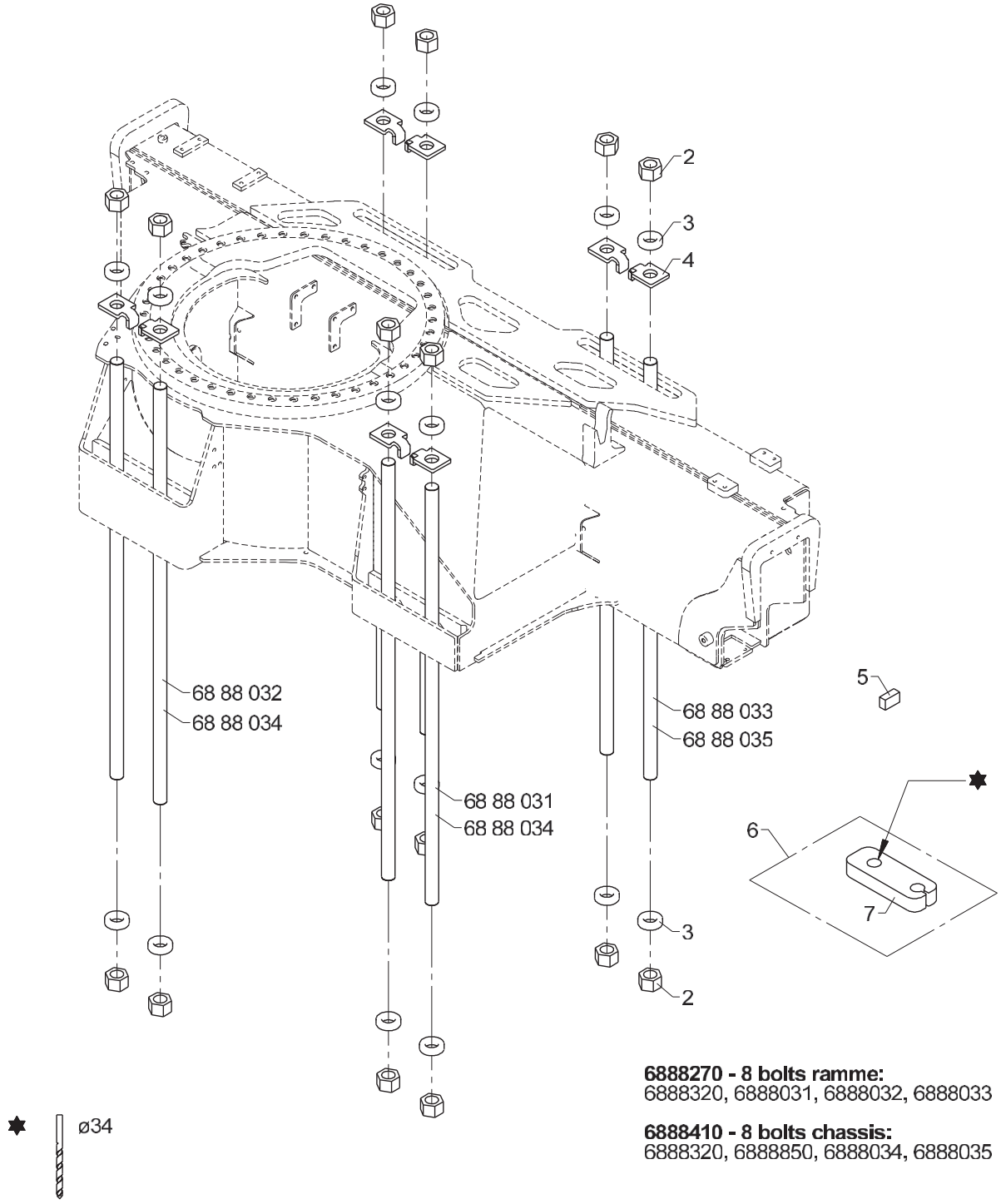

6888270 - 8 bolts ramme:
6888320, 6888031, 6888032, 6888033

6888410 - 8 bolts chassis:
6888320, 6888850, 6888034, 6888035

Mounting kit

Pos	Qty.	Part no.	Description	Remarks
		6888270		2 x 330 mm. 2 x 430 mm. 4 x 665
		6888410		4 x 850 mm. 4 x 1250 mm.
1	1	6888320	Nut/washer/stop - kit	
2	16	31087	Lock nut M33 x 2 hexagonal	M33 x 2
3	16	6394709	Mounting plate 33 mm	
4	8	6394705	Mounting plate 33 mm	
5	6	6644084	Stop block	
6	1	6668850	Mounting fittings (mount. kit)	
7	4	6300999	Clamp	
8	2	6888031	Mounting bolt, M33 x 2 x 330	
9	2	6888032	Mounting bolt, M33 x 2 x 430	
10	4	6888033	Mounting bolt, M33 x 2 x 665	
11	4	6888034	Mounting bolt, M33 x 2 x 850	
12	4	6888035	Mounting bolt, M33 x 2 x 1250	

50/345

Internal ref. 66 68 300

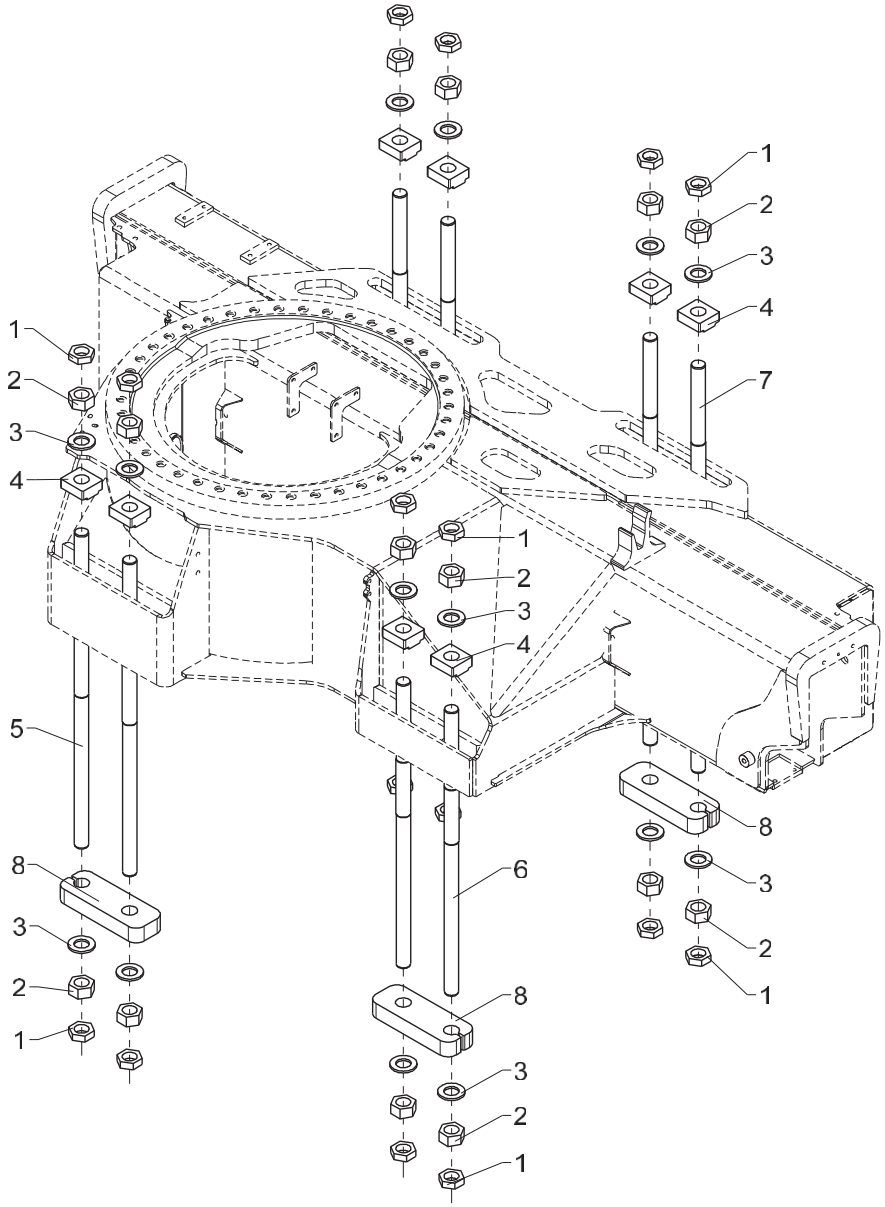

Obsolete

542 07 050

From loader 1150001
To loader 1150150

Created 17-08-2010
Modified 02-07-2012

Mounting kit

Pos	Qty.	Part no.	Description	Remarks
1	16	31056	Counter nut	M33 x 2
2	16	32342	Nut	M33 x 2
3	16	31058	Washer	34 mm
4	8	6300496	Mounting plate	
5	2	32902	Mounting bolt	850 mm
6	2	32903	Mounting bolt	770 mm
7	4	32901	Mounting bolt	1100 mm
8	4	6300999	Clamp	

50/345

Internal ref. 66 68 310

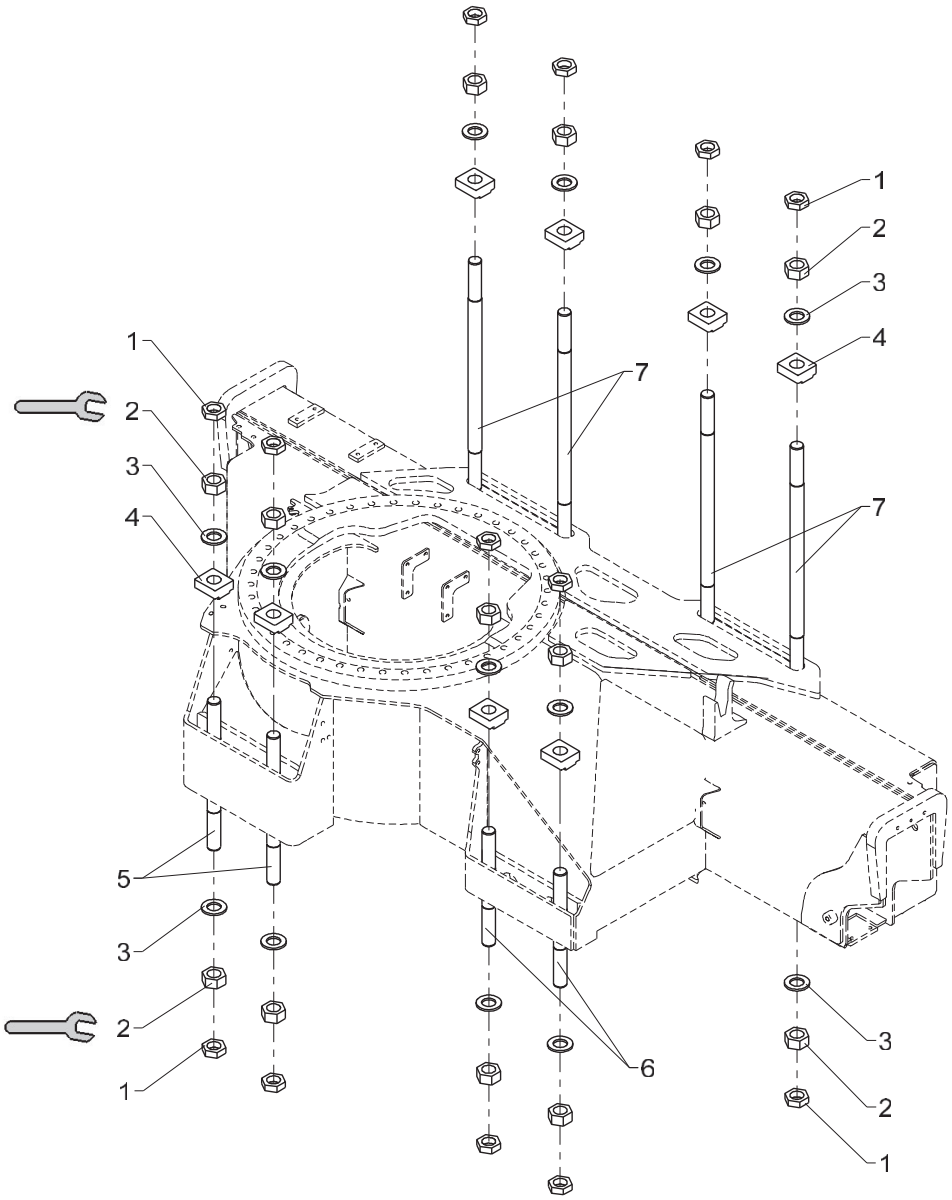

600 Nm

Obsolete

542 07 060

From loader 1150001
To loader 1150150

Created 09-06-2010
Modified 09-06-2010

Mounting kit, HMF-subframe

Pos	Qty.	Part no.	Description	Remarks
1	16	31056	Counter nut	M33 x 2
2	16	32342	Nut	M33 x 2
3	16	31058	Washer	34 mm
4	8	6300496	Mounting plate	
5	2	32905	Mounting bolt	430 mm
6	2	32906	Mounting bolt	330 mm
7	4	32904	Mounting bolt	665 mm

DECAL PARTS LIST

	PART NO.	DESCRIPTION	QTY.
	70392864	DECAL-WARNING STAB STAND CLEAR	2
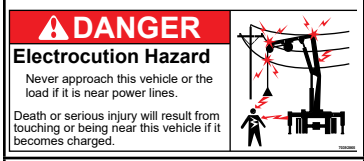	70392865	DECAL-DANGER ELEC HAZARD LG	4
	70392868	DECAL-WARNING CR LOADLINE (TRK) LARGE	4
	70392891	DECAL-DANGER DRIVE-LINE	2
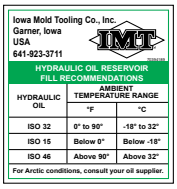	70394189	DECAL-HYDRAULIC OIL RESERVOIR	1
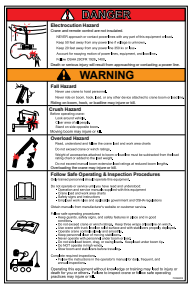	70396918	DECAL-DANGER ARTICULATED LG	2
	70396919	DECAL-DANGER ARTICULATING SM	2

DECAL PARTS LIST

	PART NO.	DESCRIPTION	QTY.
	70396021	DECAL-MADE IN DENMARK	1
	71392365	DECAL-ALIGNMENT CRANE ROTATION	1
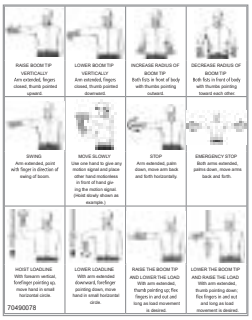	70490078	DECAL-ARTICULATING CRANE HAND SIGNALS	2
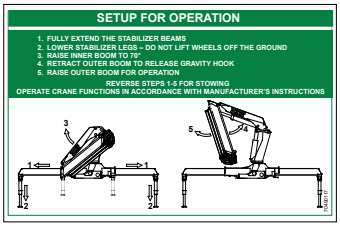	70490117	DECAL-SETUP INSTRUCTIONS	2
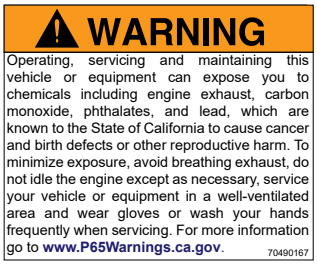	70490167	DECAL-WARNING-PROP 65	2
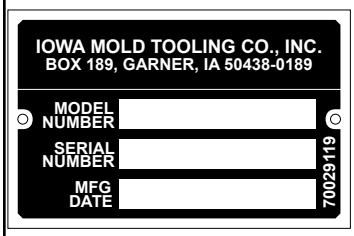	70029119	PLACARD-SERIAL NUMBER	1

DECAL PARTS LIST

	PART NO.	DESCRIPTION	QTY.
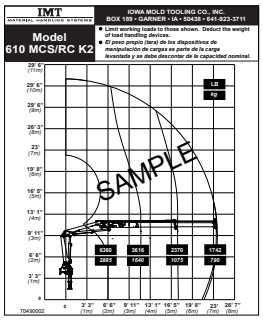	70399402-K2 70399403-K3 70399404-K4 70399405-K5 70399406-K6 70399407-K7 70399408-K8	DECAL-CP-50/345	2
 SAMPLE	70399425	DECAL-ID-50/345	2
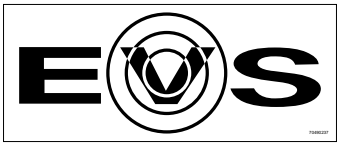	70490237	DECAL-EVS	1
	66598	MARKING TAPE - DARK-YELLOW	4
	65770	NO HIGH PRESSURE	1
	64793	SWING-UP LEG	2
	68995	EMERGENCY OPER.4 FUNC,RC	1
	66626	OPERATING LABEL	1

DECAL PARTS LIST			
	66636	STAB. OPERATION, VALVE BL.SIDE	1
	66637	STABILIZER OPERATION, DUAL CTRL SIDE	1
	66638	STAB. OPERATION, (HC-M50-2FCTS)	1
	66643	OPERATING LABEL, (PVG 32-4FCTS)	1
	66642	OPERATING LABEL, (PVG 32-6FCTS)	1
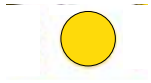	66645	LABEL	1
	66837	OPERATING LABEL	1

*MANUAL KIT NUMBER 95720380 PARTS LIST

PART NO.	DESCRIPTION
70392864	DECAL-WARNING STAB STAND CLEAR
70392865	DECAL-DANGER ELEC HAZARD LG
70392868	DECAL-WARNING CR LOADLINE (TRK) LARGE
70392891	DECAL-DANGER DRIVELINE
70394189	DECAL-HYDRAULIC OIL RESERVOIR
70396918	DECAL-DANGER ARTICULATED LG
70396919	DECAL-DANGER ARTICULATING SM
70396021	DECAL-MADE IN DENMARK
71392365	DECAL-ALIGNMENT CRANE ROTATION
70490078	DECAL-ARTICULATING CRANE HAND SIGNALS
70490117	DECAL-SETUP INSTRUCTIONS
70490167	DECAL-WARNING-PROP 65

50/345 TECHNICAL SPECIFICATION MANUAL: 99905499

50/345

Internal ref. 63 92 160

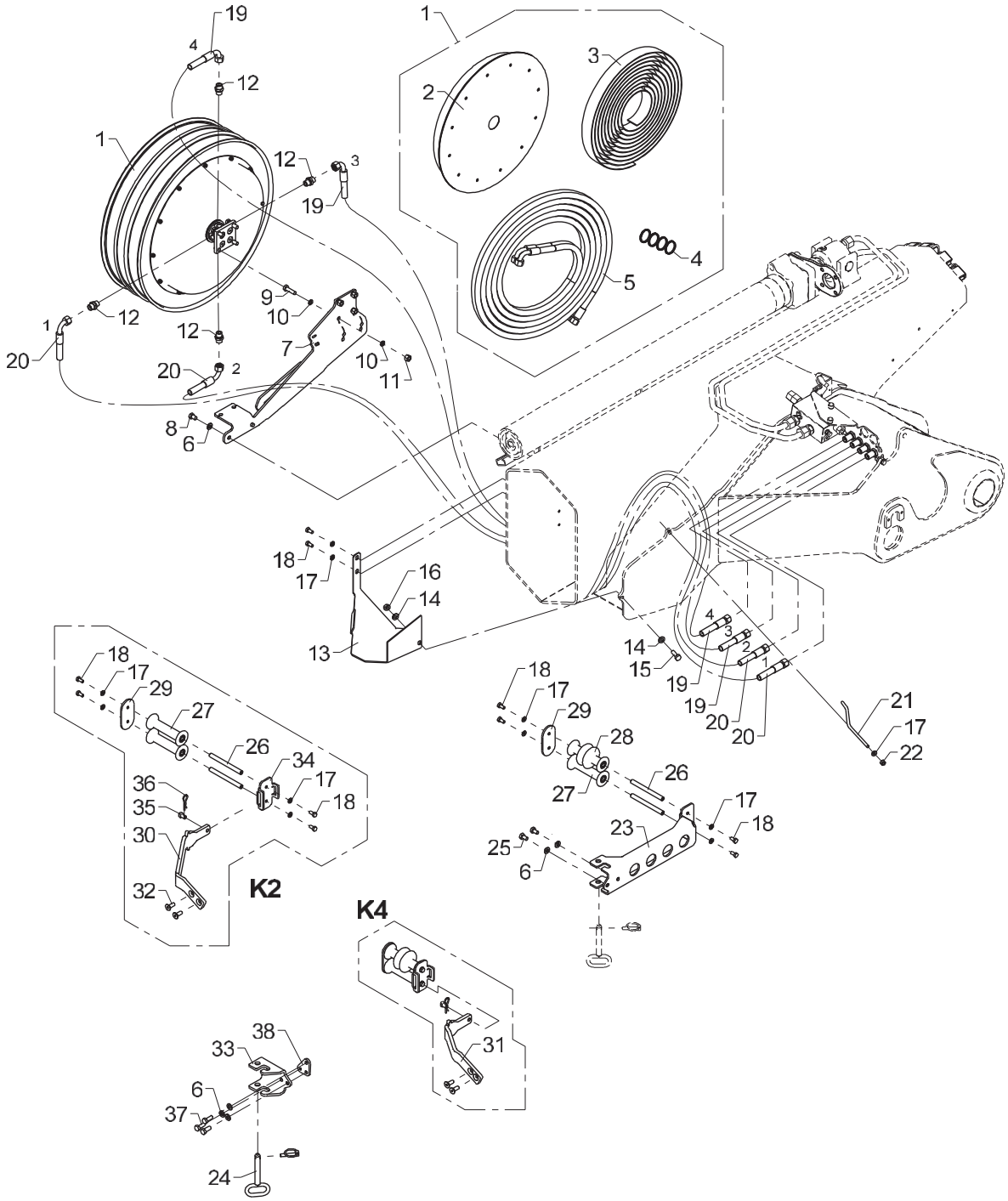

2 extra valves, hose reel K4, K5 & K6

Created 30-01-2014
Modified 14-11-2014

Pos	Qty.	Part no.	Description	Remarks
1	1	56319	Hose reel, double	3/8" x 15000 mm
2	1	56346	Spring container	
3	1	56345	Spring	
4	1	56482	Seal kit	
5	1	56310	Double hose	
6	9	31177	Washer	10 mm
7	1	6392162	Bracket for hose reel,K4-K6	
8	4	30152	Set screw	M10 x 14
9	4	30157	Set screw	M10 x 35
10	8	31156	Spring washer	10 mm
11	4	30888	Lock nut	
12	4	25127	Connection	P-GEV 12 LR-WD
13	1	6390048	Protective guard	
14	2	31565	Washer, stainless	10 mm
15	1	30156	Set screw, stainless	M10 x 30
16	1	30858	Nut	M10
17	15	31147	Face washer, 8 mm	
18	14	30131	Set screw, stainless	M8 x 16
19	2	56917	Hose	
20	2	0017410	Hose	
21	1	6390049	Hose clamp	
22	1	30886	Lock nut, stainless	M8
23	1	6302877	Attachment - jib	
24	1	1261144	Lock pin with chain	
25	2	30153	Set screw	M10 x 16
26	6	6302883	Pin	
27	4	63510	Guide roller	
28	2	63600	Guide roller	
29	3	6302882	End plate	
30	1	6390356	Attachment - ext. 2	
31	1	6390357	Attachment - ext. 4	
32	4	30546	Countersunk screw	MK10 x 25
33	1	6302926	Adapter - 5/6/8th extension	
34	2	6302881	Plate	
35	2	6302896	Lock pin	
36	2	33379	Spring	
37	3	30155	Set screw	M10 x 25
38	1	6392161	Bracket for hose reel,K4-K6	

50/345

Internal ref. 63 90 700

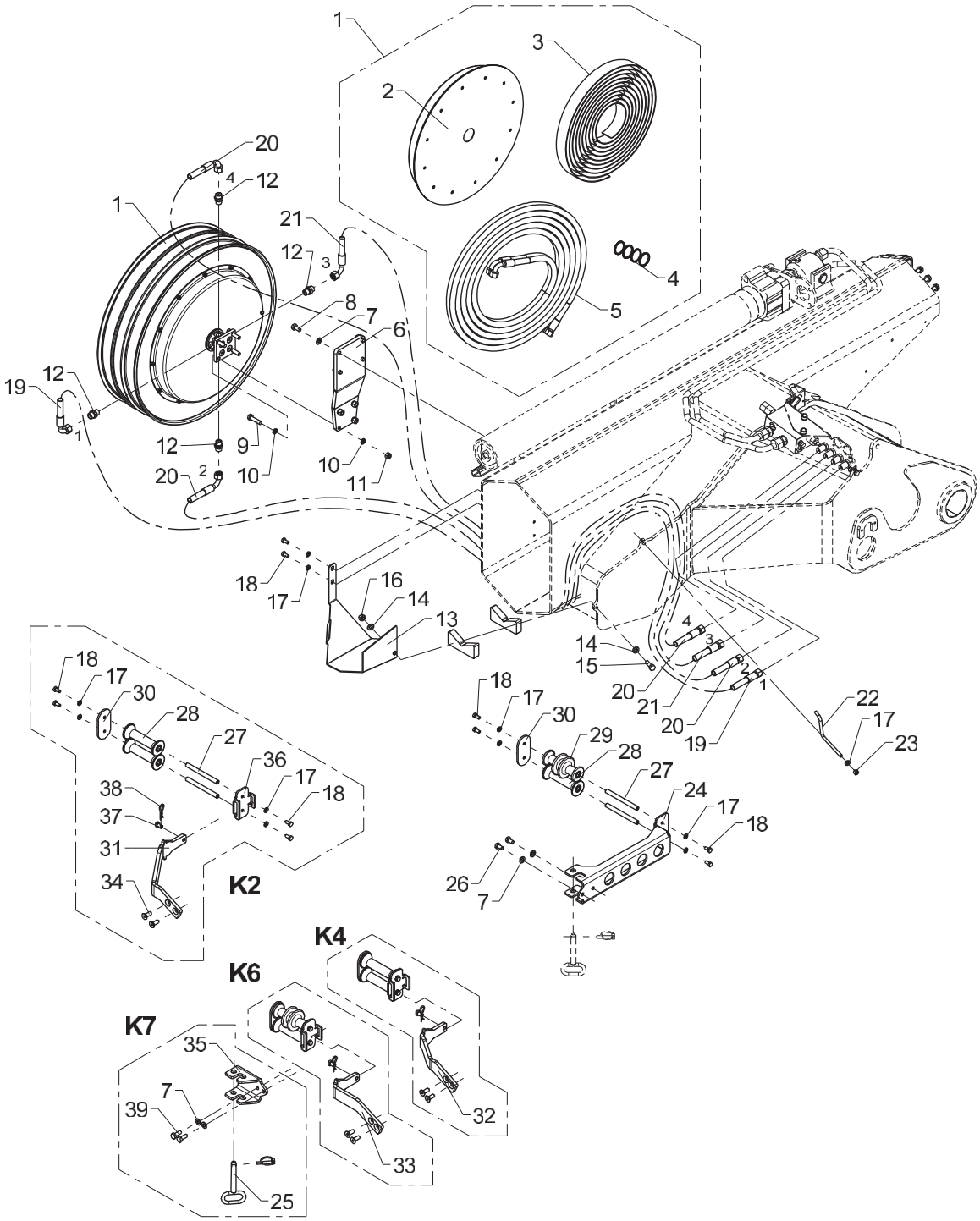

2 extra valves, hose reel K7

Pos	Qty.	Part no.	Description	Remarks
1	1	56295	Hose reel, double	3/8" x 17000 mm
2	1	56346	Spring container	
3	1	56345	Spring	
4	1	56482	Seal kit	
5	1	56312	Double hose	
6	1	6390045	Bracket for hose reel	
7	8	31177	Washer	10 mm
8	4	30154	Set screw	M10 x 20
9	4	30158	Steel bolt	M10 x 40
10	8	31156	Spring washer	10 mm
11	4	30888	Lock nut	
12	4	25127	Connection	P-GEV 12 LR-WD
13	1	6390048	Protective guard	
14	2	31565	Washer, stainless	10 mm
15	1	30156	Set screw, stainless	M10 x 30
16	1	30858	Nut	M10
17	19	31147	Face washer, 8 mm	8 mm
18	18	30131	Set screw, stainless	M8 x 16
19	1	0015020	Hose	3/8" x 1600 mm L/90°
20	2	0017530	Hose	3/8" x 1700 mm L/90°
21	1	0017700	Hose	3/8" x 1800 mm L/90°
22	1	6390049	Hose clamp	
23	1	30886	Lock nut, stainless	M8
24	1	6302877	Attachment - jib	
25	1	1261144	Lock pin with chain	
26	2	30153	Set screw	M10 x 16
27	8	6302883	Pin	
28	6	63510	Guide roller	
29	2	63600	Guide roller	
30	4	6302882	End plate	
31	1	6390356	Attachment - ext. 2	
32	1	6390357	Attachment - ext. 4	
33	1	6390358	Attachment - ext. 8	
34	6	30546	Countersunk screw	MK10 x 25
35	1	6302926	Adapter - 5/6/8th extension	
36	3	6302881	Plate	
37	3	6302896	Lock pin	
38	3	33379	Spring	
39	2	30155	Set screw	M10 x 25

50/345

Internal ref. 63 91 060

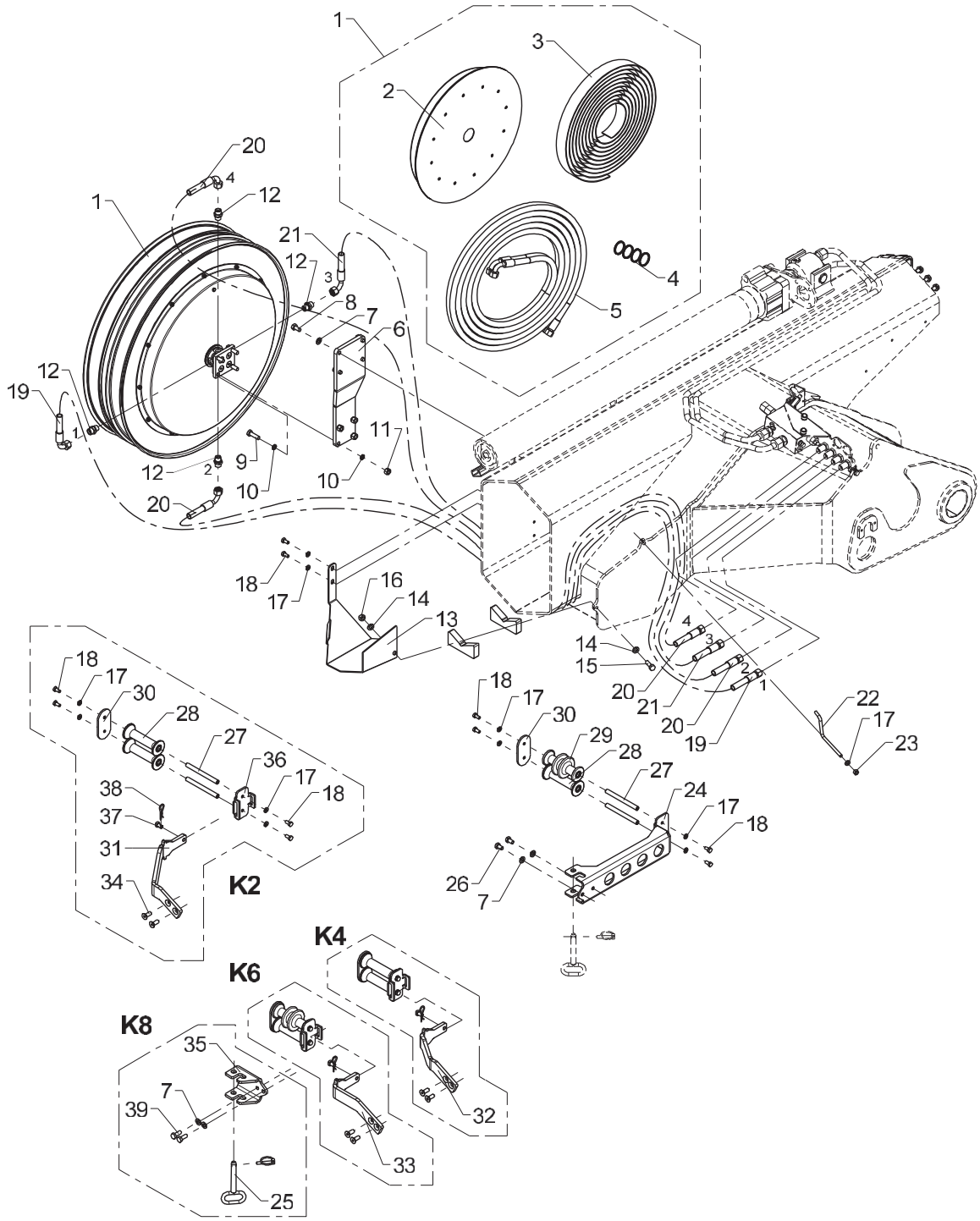

2 extra valves, hose reel K8

Pos	Qty.	Part no.	Description	Remarks
1	1	56320	Hose reel, double	3/8" x 22000 mm
2	1	56481	Spring cover	
3	1	56335	Spring	
4	1	56482	Seal kit	
5	1	56069	Double hose	
6	1	6390061	Bracket for hose reel	
7	8	31177	Washer	10 mm
8	4	30154	Set screw	M10 x 20
9	4	30157	Set screw	M10 x 35
10	8	31156	Spring washer	10 mm
11	4	30888	Lock nut	
12	4	25127	Connection	P-GEV 12 LR-WD
13	1	6390048	Protective guard	
14	2	31565	Washer, stainless	10 mm
15	1	30156	Set screw, stainless	M10 x 30
16	1	30858	Nut	M10
17	19	31147	Face washer, 8 mm	
18	18	30131	Set screw, stainless	M8 x 16
19	1	0015020	Hose	3/8" x 1600 mm L/90°
20	2	0017530	Hose	3/8" x 1700 mm L/90°
21	1	0017700	Hose	3/8" x 1800 mm L/90°
22	1	6390049	Hose clamp	
23	1	30886	Lock nut, stainless	M8
24	1	6302877	Attachment - jib	
25	1	1261144	Lock pin with chain	
26	2	30153	Set screw	M10 x 16
27	8	6302883	Pin	
28	6	63510	Guide roller	
29	2	63600	Guide roller	
30	4	6302882	End plate	
31	1	6390356	Attachment - ext. 2	
32	1	6390357	Attachment - ext. 4	
33	1	6390358	Attachment - ext. 8	
34	6	30546	Countersunk screw	MK10 x 25
35	1	6302926	Adapter - 5/6/8th extension	
36	3	6302881	Plate	
37	3	6302896	Lock pin	
38	3	33379	Spring	
39	2	30155	Set screw	M10 x 25

50/345

63 90 170
Internal ref. 63 90 160

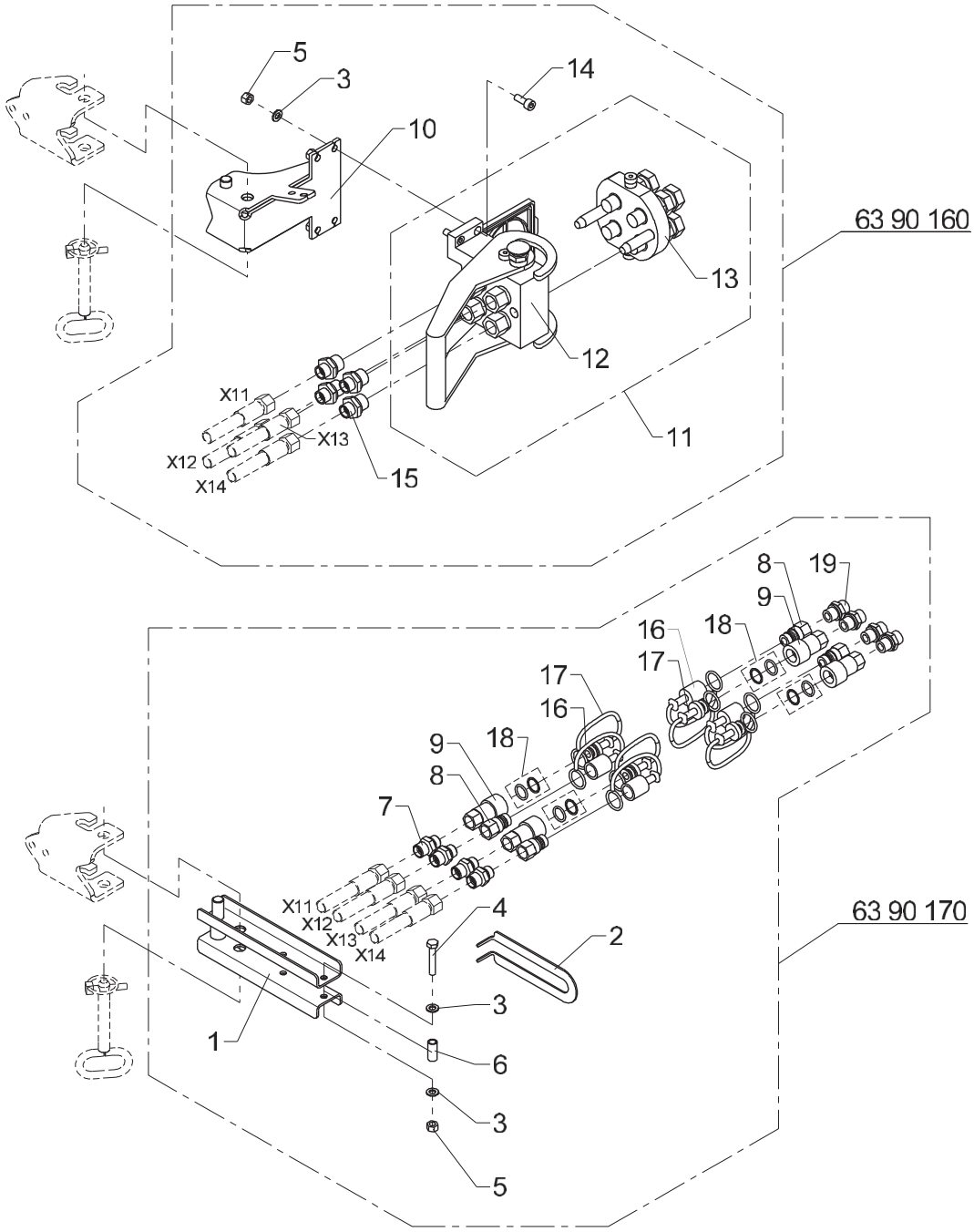

From loader 1150001
To loader

Multi- and quick-release couplings, hose reels

Created 16-08-2010
Modified 27-05-2015

Pos	Qty.	Part no.	Description	Remarks
		6390160	Multi-coupling for EXV K7 + K8	
		6390170	Quick-release coupl. EXV K7+K8	
1	1	6390158	Clamp	
2	1	6302878	Bracket	
3	6	31147	Face washer, 8 mm	
4	1	30138	Steel bolt, stainless	M8 x 45
5	5	30886	Lock nut, stainless	
6	1	6302888	Pipe	
7	4	6661444	Socket	
8	4	60620	Quick-release coupling,M	3/8"
9	4	60619	Quick-release coupling,F	3/8"
10	1	6302927	Bracket	
11	1	58430	Multifaster coupling	1/2"
12	1	58432	Multifaster coupling	
13	1	58431	Multifaster coupling	
14	4	30438	Screw	MC8 x 20
15	4	25108	Connection	GES 12 LR 1/2-WD
16	4	60622	Dust cap, F	3/8"
17	4	60621	Dust cap, M	3/8"
18	4	60635	Seal kit	
19	4	25127	Connection	P-GEV 12 LR-WD

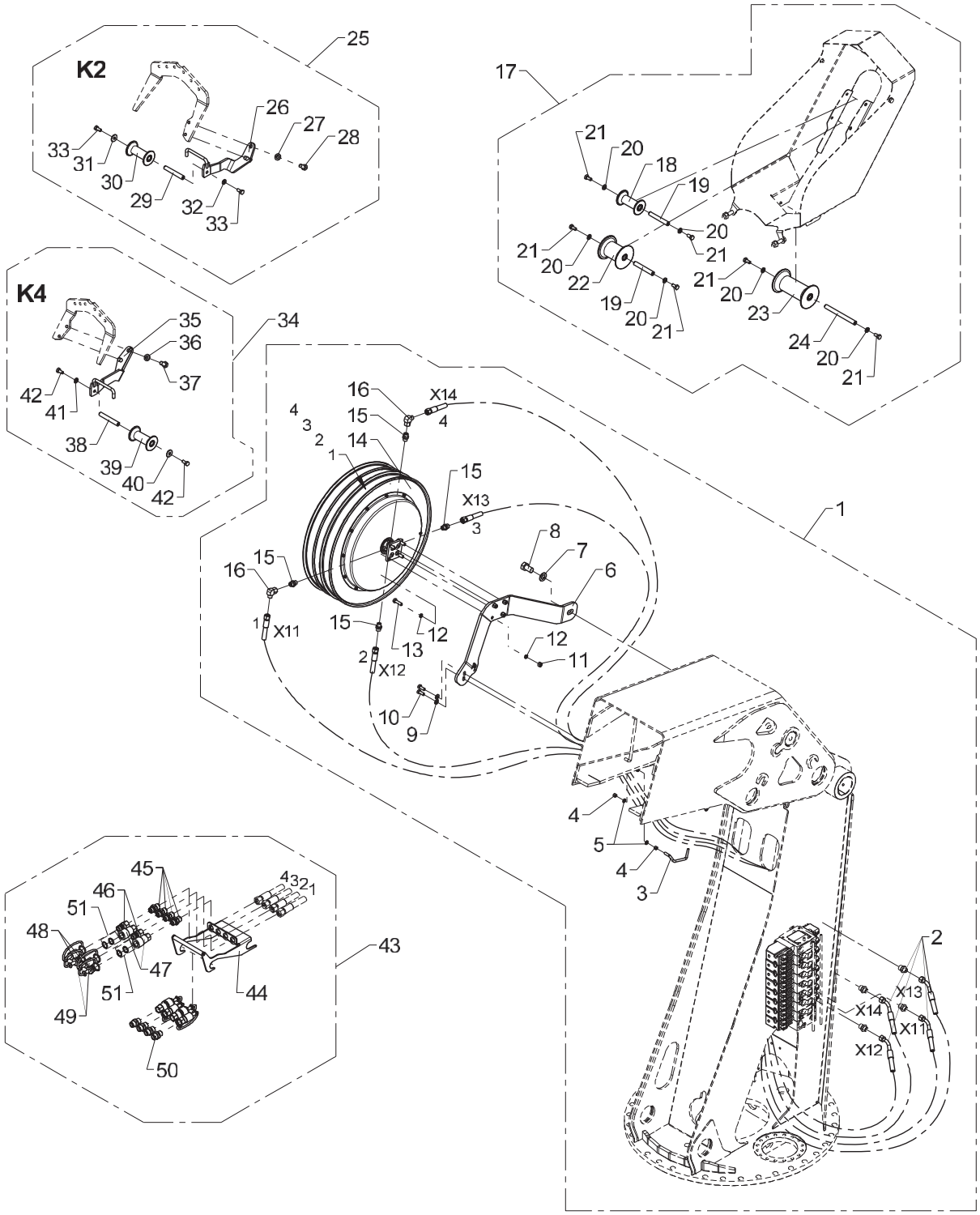
K2
K4
1
2
3
4
5
6
7
8
9
10
11
12
13
14
15
16
17
18
19
20
21
22
23
24
25
26
27
28
29
30
31
32
33
34
35
36
37
38
39
40
41
42
43
44
45
46
47
48
49
50
51
X1
X11
X12
X13
X14

Internal hose routing, cpl. 2 EXV

Pos	Qty.	Part no.	Description	Remarks
1	1	6391040	Hose kit, int. hose routing	
2	4	56559	Hose	3/8" x 3400 mm 45°/L
3	1	6390088	Hose clamp	
4	2	30886	Lock nut, stainless	
5	2	31147	Face washer, 8 mm	
6	1	6390089	Bracket for hose reel	
7	1	31179	Washer	20 mm
8	1	30242	Set screw	M20 x 35
9	2	31177	Washer	10 mm
10	2	31513	Set screw, stainless	M10 x 25
11	4	30888	Lock nut	
12	8	31156	Spring washer	10 mm
13	4	30157	Set screw	M10 x 35
14	1	56295	Hose reel, double	3/8" x 17000 mm
15	4	25127	Connection	P-GEV 12 LR-WD
16	2	25242	Elbow connection	EWSD 12 L
17	1	6391010	Reels, internal hose routing	63 90 281
18	1	63546	Guide roller	
19	2	6301042	Pin	
20	6	31147	Face washer, 8 mm	
21	6	30131	Set screw, stainless	M8 x 16
22	1	63547	Guide roller	
23	1	63544	Guide roller	
24	1	6302883	Pin	
25	1	6391020	Internal hose routing K2	
26	1	6390075	Roller bracket - ext. 2	
27	2	31177	Washer	10 mm
28	2	30154	Set screw	M10 x 20
29	1	6301042	Pin	
30	1	63546	Guide roller	
31	1	31136	Washer, stainless	
32	1	31147	Face washer, 8 mm	
33	2	30131	Set screw, stainless	M8 x 16
34	1	6391030	Internal hose routing K4	
35	1	6390077	Roller bracket - ext. 4	
36	2	31177	Washer	10 mm
37	2	30154	Set screw	M10 x 20
38	1	6301042	Pin	
39	1	63546	Guide roller	
40	1	31136	Washer, stainless	
41	1	31147	Face washer, 8 mm	

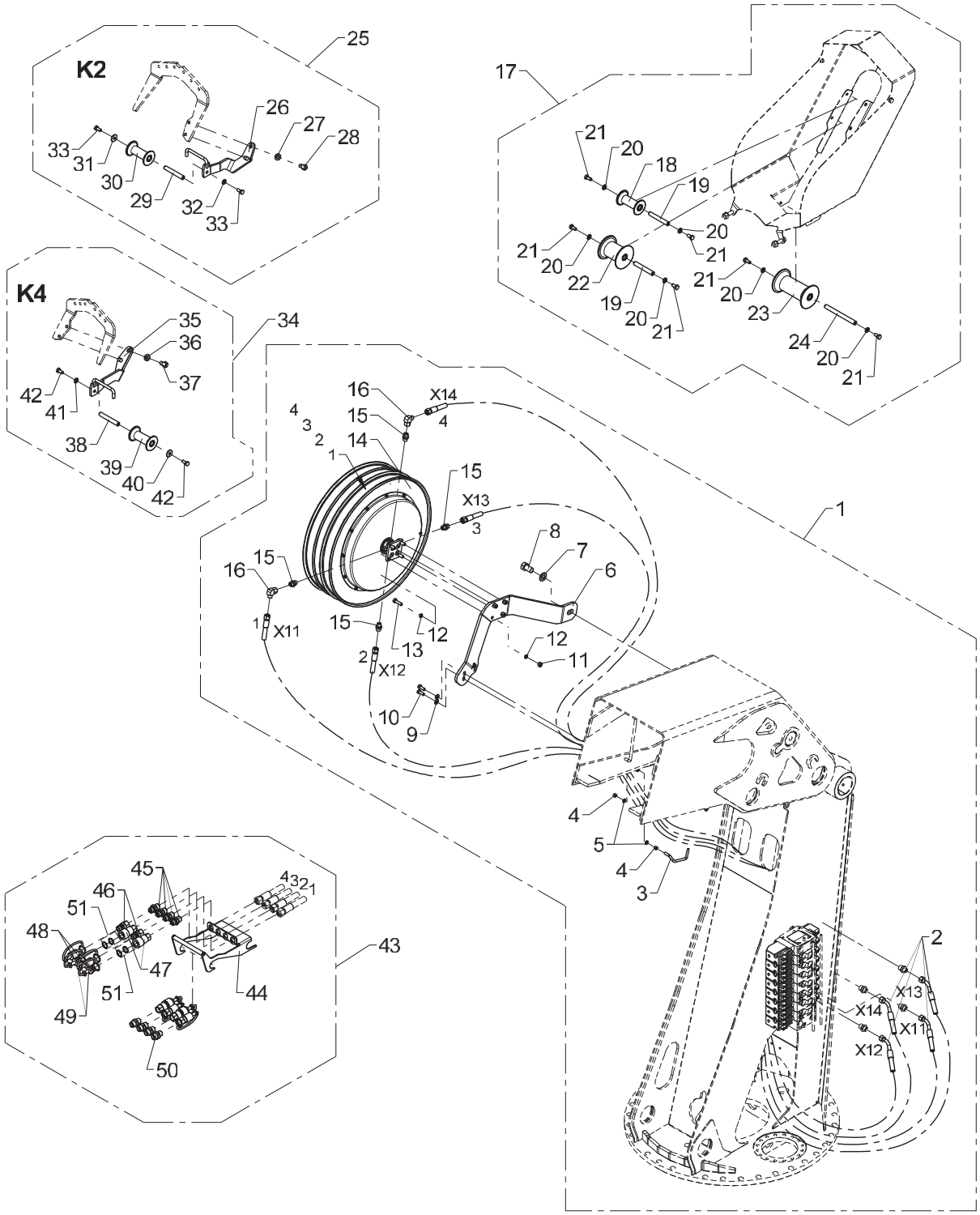
K2
K4
1
2
3
4
5
6
7
8
9
10
11
12
13
14
15
16
17
18
19
20
21
22
23
24
25
26
27
28
29
30
31
32
33
34
35
36
37
38
39
40
41
42
43
44
45
46
47
48
49
50
51
X1
X11
X12
X13
X14

Internal hose routing, cpl. 2 EXV

Created 17-08-2010
Modified 27-05-2015

Pos	Qty.	Part no.	Description	Remarks
42	2	30131	Set screw, stainless	M8 x 16
43	1	6391050	Kit,quick-release coupl. 2 EXV	
44	1	6390165	Bracket, quick-rel. couplings	
45	4	6661444	Socket	
46	4	60620	Quick-release coupling,M	3/8"
47	4	60619	Quick-release coupling,F	3/8"
48	4	60621	Dust cap, M	3/8"
49	4	60622	Dust cap, F	3/8"
50	4	25127	Connection	P-GEV 12 LR-WD
51	4	60635	Seal kit	

50/345

Internal ref. 63 95 300

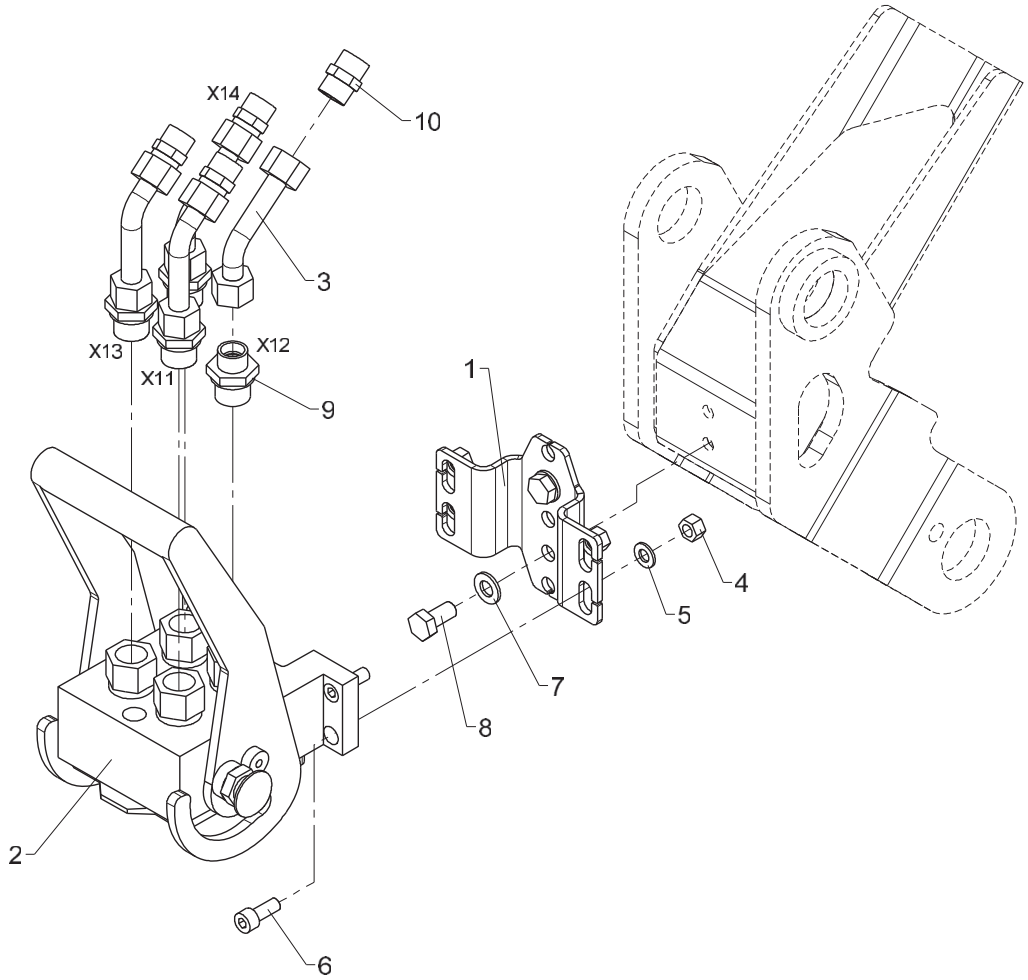

Multi-coupling, internal hose routing

Pos	Qty.	Part no.	Description	Remarks
1	1	6395301	Bracket for multi-coupling	
2	1	58430	Multifaster coupling	
3	4	6395302	Pipe for multi-coupling	
4	4	30886	Lock nut, stainless	M8
5	4	31147	Face washer, 8 mm	
6	4	30438	Screw	MC8 x 20
7	2	31565	Washer, stainless	10 mm
8	2	31517	Set screw, stainless	M10 x 20
9	4	25108	Connection	GES 12 LR 1/2-WD
10	4	25204	Double connection	GS 12 L

50/345

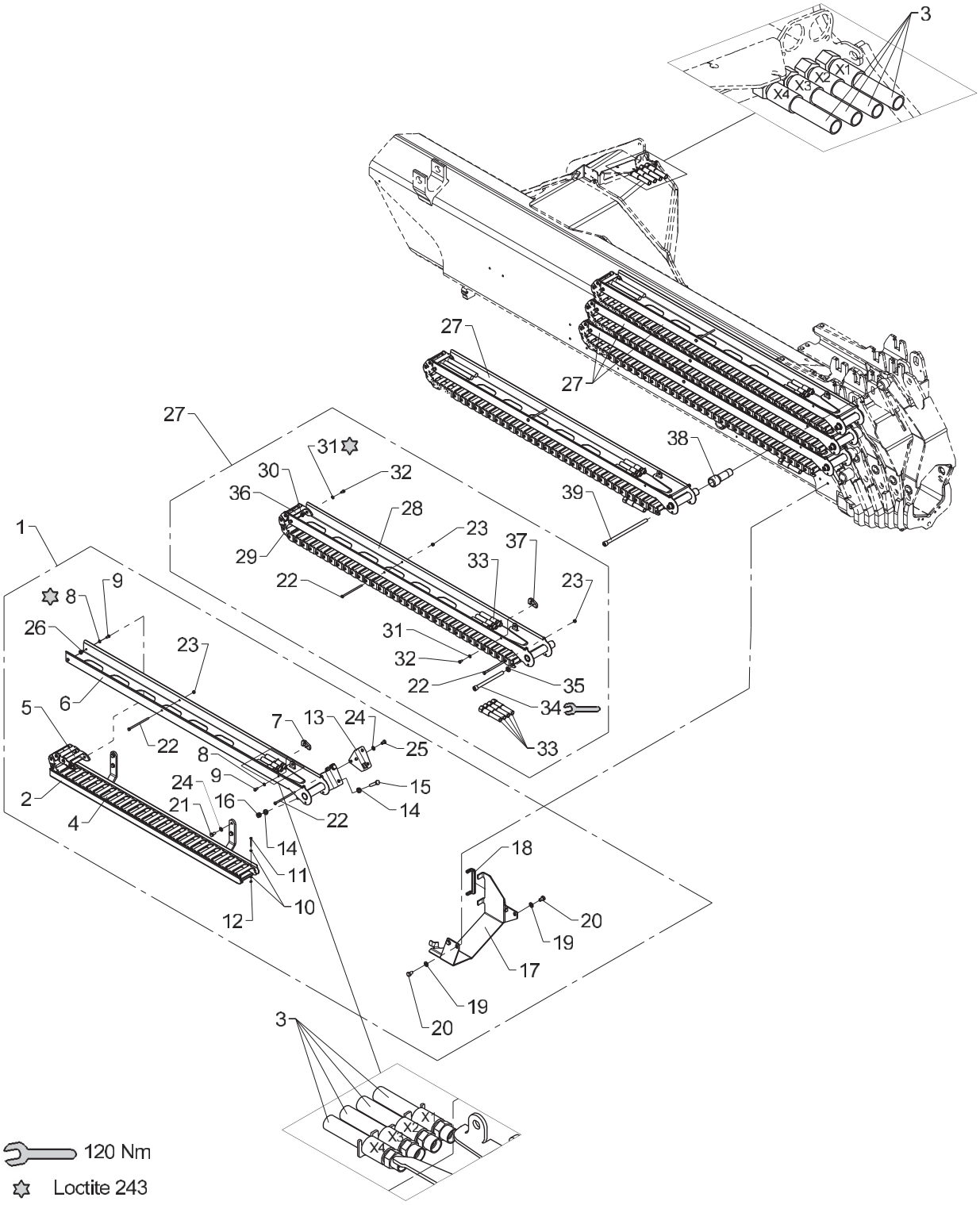
3
X1
X2
X3
X4
27
27
27
38
39
31
30
32
36
28
23
37
29
33
22
23
1
9
8
26
23
31
32
22
35
34
5
6
7
13
24
25
33
22
8
9
24
15
2
21
16
22
14
4
14
11
10
12
18
20
19
17
19
20
3
X1
X2
X3
X4
120 Nm
Loctite 243

Obsolete

542 09 880

From loader 1150001
To loader

Created 16-08-2010
Modified 28-09-2010

Hose guides, K2-K6, cpl.

Pos	Qty.	Part no.	Description	Remarks
		6390830	Hose guides, K6	1 stk. Pos.1 - 5 stk. Pos.27
		6390820	Hose guides, K5	1 stk. Pos.1 - 4 stk. Pos.27
		6390810	Hose guides, K4	1 stk. Pos.1 - 3 stk. Pos.27
		6390800	Hose guides, K3	1 stk. Pos.1 - 2 stk. Pos.27
		6390790	Hose guides, K2	1 stk. Pos.1 - 1 stk. Pos.27
1	1	6390770	Hose guide, K1	
2	1	6390661	Guide (jib)	
3	4	0017640	Hose	
4	1	28712	Nylon drag chain, 30 links	
5	1	63400	End link for nylon drag chain	
6	1	6390662	Guide (extension I)	
7	1	6340718	Bracket	
8	3	32302	Face washer, stainless	6 mm
9	3	30111	Set screw, stainless	M 6 x 12
10	4	31188	Washer, stainless	4 mm
11	2	30128	Set screw	M4 x 40
12	2	30857	Lock nut	M4
13	1	6390666	Fittings	
14	4	31565	Washer, stainless	10 mm
15	2	30159	Set screw	M10 x 50
16	2	30858	Nut	M10
17	1	6390047	Protective guard	Serie 1800/2200
18	1	22122	PVC protection	0,2 m
19	4	31177	Washer	10 mm
20	4	30153	Set screw	M10 x 16
21	4	30131	Set screw, stainless	M8 x 16
22	4	30167	Steel bolt	M6 x 60
23	3	30884	Lock nut, stainless	M6
24	6	31147	Face washer, 8 mm	8 mm
25	2	30130	Set screw, stainless	M8 x 12
26	2	6340719	Nut	
27	1	6390780	Hose guide, cpl.	
28	1	6390667	Guide (extension II-VI)	
29	1	28741	Nylon drag chain, 36 links	
30	2	6340719	Nut	
31	3	32302	Face washer, stainless	6 mm
32	3	30111	Set screw, stainless	M 6 x 12
33	4	56553	Hose	
34	1	32488	Screw	MC12 x 150
35	1	6340717	Washer	
36	1	63400	End link for nylon drag chain	

50/345

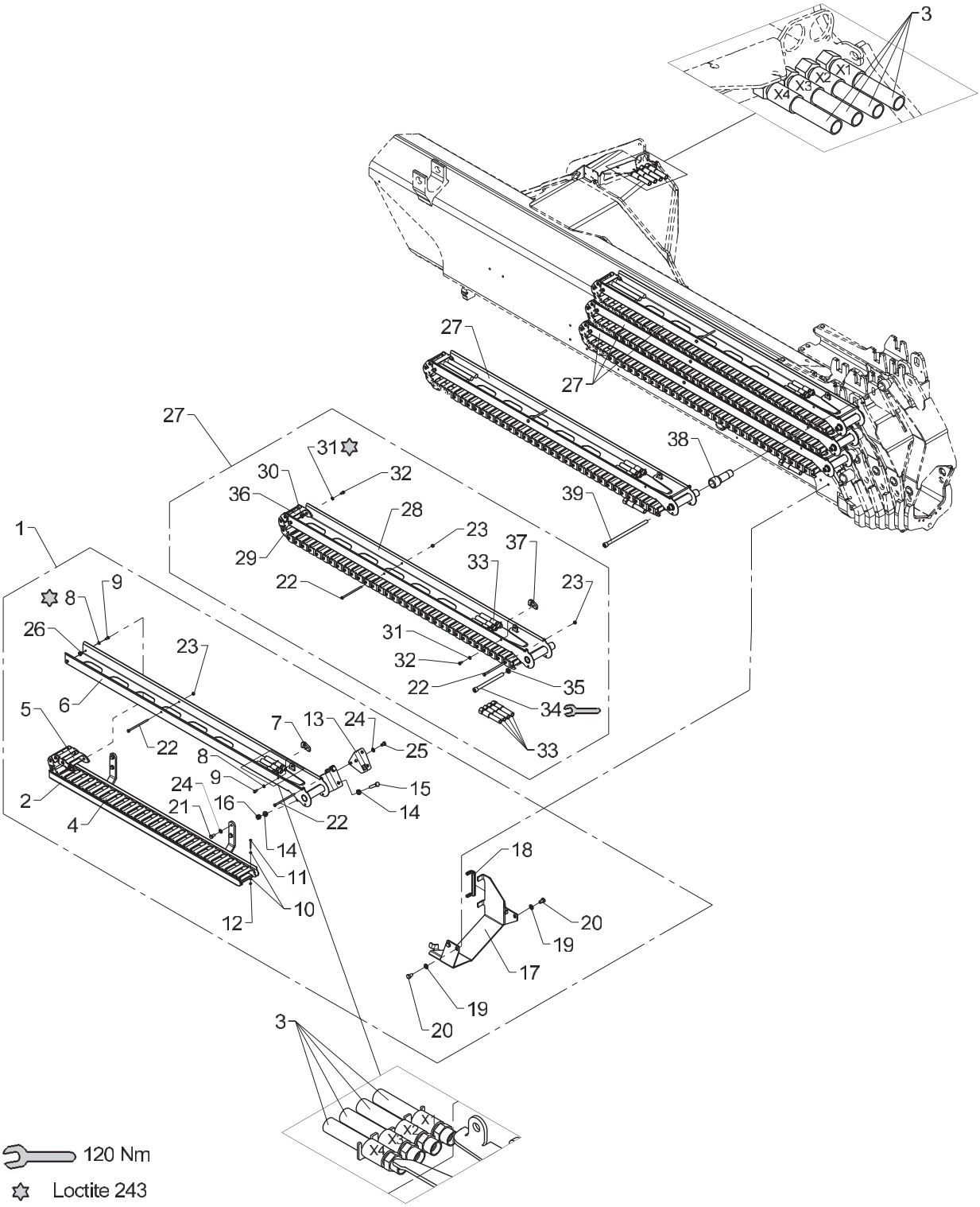
3
X1
X2
X3
X4
27
27
27
38
39
31
30
32
36
28
23
37
29
33
22
23
1
9
8
26
23
31
32
22
35
34
5
6
7
13
24
25
33
22
8
9
24
15
2
21
16
22
14
4
14
11
10
12
18
20
19
17
19
20
3
X1
X2
X3
X4
120 Nm
Loctite 243

Obsolete

542 09 880

From loader 1150001
To loader

Created 16-08-2010
Modified 28-09-2010

Hose guides, K2-K6, cpl.

Pos	Qty.	Part no.	Description	Remarks
37	1	6340718	Bracket	
38	1	6390452	Adapter	K6
39	1	32505	Screw	MC12 x 230

50/345

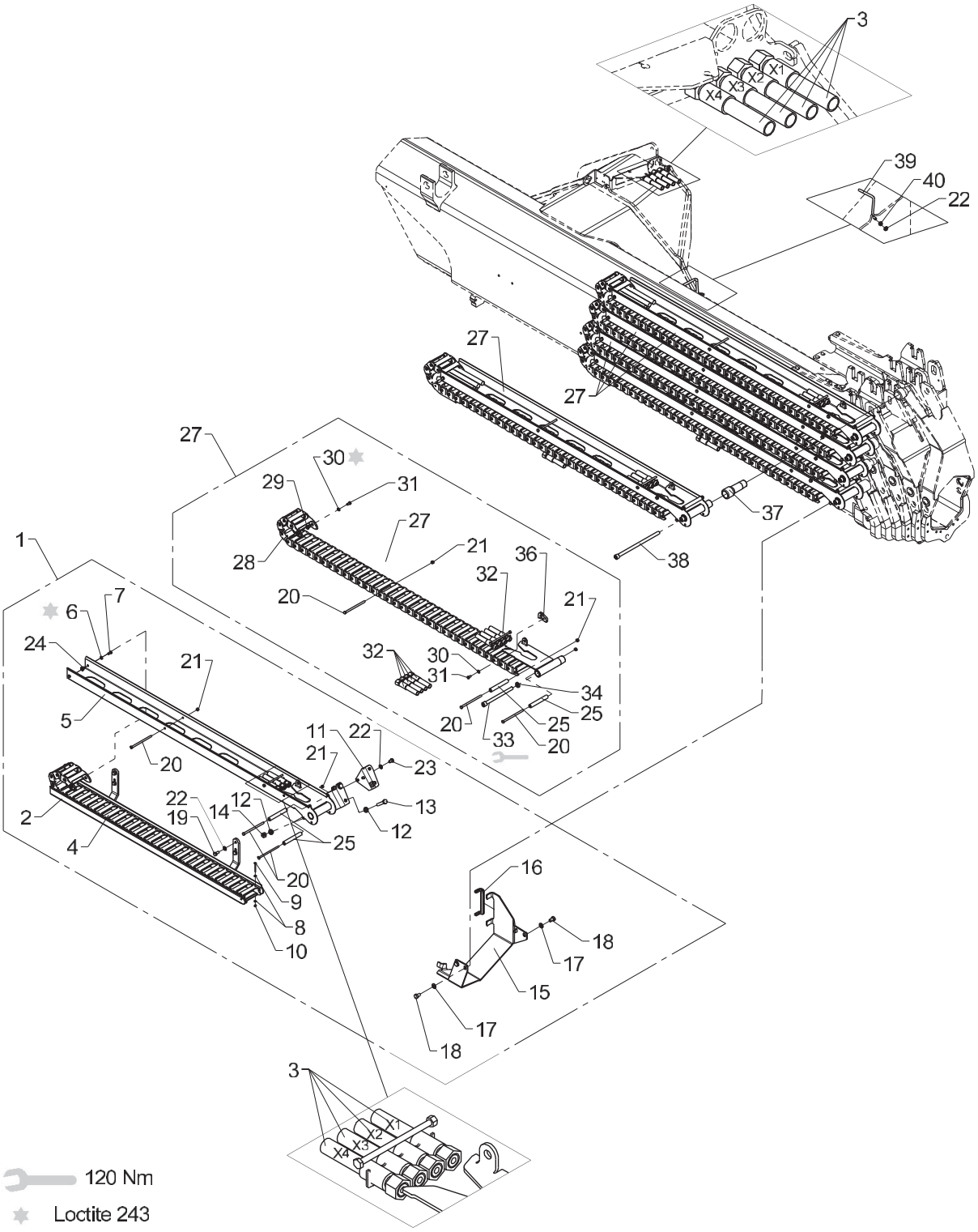
3
X1
X2
X3
X4
39
40
22
27
27
27
30
29
31
27
28
21
36
32
20
21
37
38
1
7
6
24
21
32
30
31
34
25
25
5
20
33
20
11
22
21
23
20
22
12
13
2
19
14
12
25
4
20
9
8
10
16
18
17
15
17
18
3
X1
X2
X3
X4
120 Nm
Loctite 243

Hose guides, K2-K6, cpl.

Pos	Qty.	Part no.	Description	Remarks
		6390830	Hose guides, K6	
		6390820	Hose guides, K5	
		6390810	Hose guides, K4	
		6390800	Hose guides, K3	
		6390790	Hose guides, K2	
1	1	6390770	Hose guide, K1	
2	1	6390661	Guide (jib)	
3	4	0017640	Hose	
4	1	28712	Nylon drag chain, 30 links	
5	1	6390662	Guide (extension I)	
6	2	32302	Face washer, stainless	6 mm
7	2	30111	Set screw, stainless	M 6 x 12
8	4	31188	Washer, stainless	4 mm
9	2	30128	Set screw	M4 x 40
10	2	30857	Lock nut	M4
11	1	6390666	Fittings	
12	4	31565	Washer, stainless	10 mm
13	2	30159	Set screw	M10 x 50
14	2	30858	Nut	M10
15	1	6390047	Protective guard	Serie 1800/2200
16	1	22122	PVC protection	0,2 m
17	4	31177	Washer	10 mm
18	4	30153	Set screw	M10 x 16
19	4	30131	Set screw, stainless	M8 x 16
20	8	30167	Steel bolt	M6 x 60
21	7	30884	Lock nut, stainless	M6
22	7	31147	Face washer, 8 mm	8 mm
23	2	30130	Set screw, stainless	M8 x 12
24	2	6340719	Nut	
25	4	56513	Hose	
26	1	6390780	Hose guide, cpl.	
27	1	6390667	Guide (extension II-VI)	
28	1	28741	Nylon drag chain, 36 links	
29	2	6340719	Nut	
30	3	32302	Face washer, stainless	6 mm
31	3	30111	Set screw, stainless	M 6 x 12
32	4	56553	Hose	
33	1	32488	Screw	MC12 x 150
34	1	6340717	Washer	
35	1	63400	End link for nylon drag chain	
36	1	6340718	Bracket	

50/345

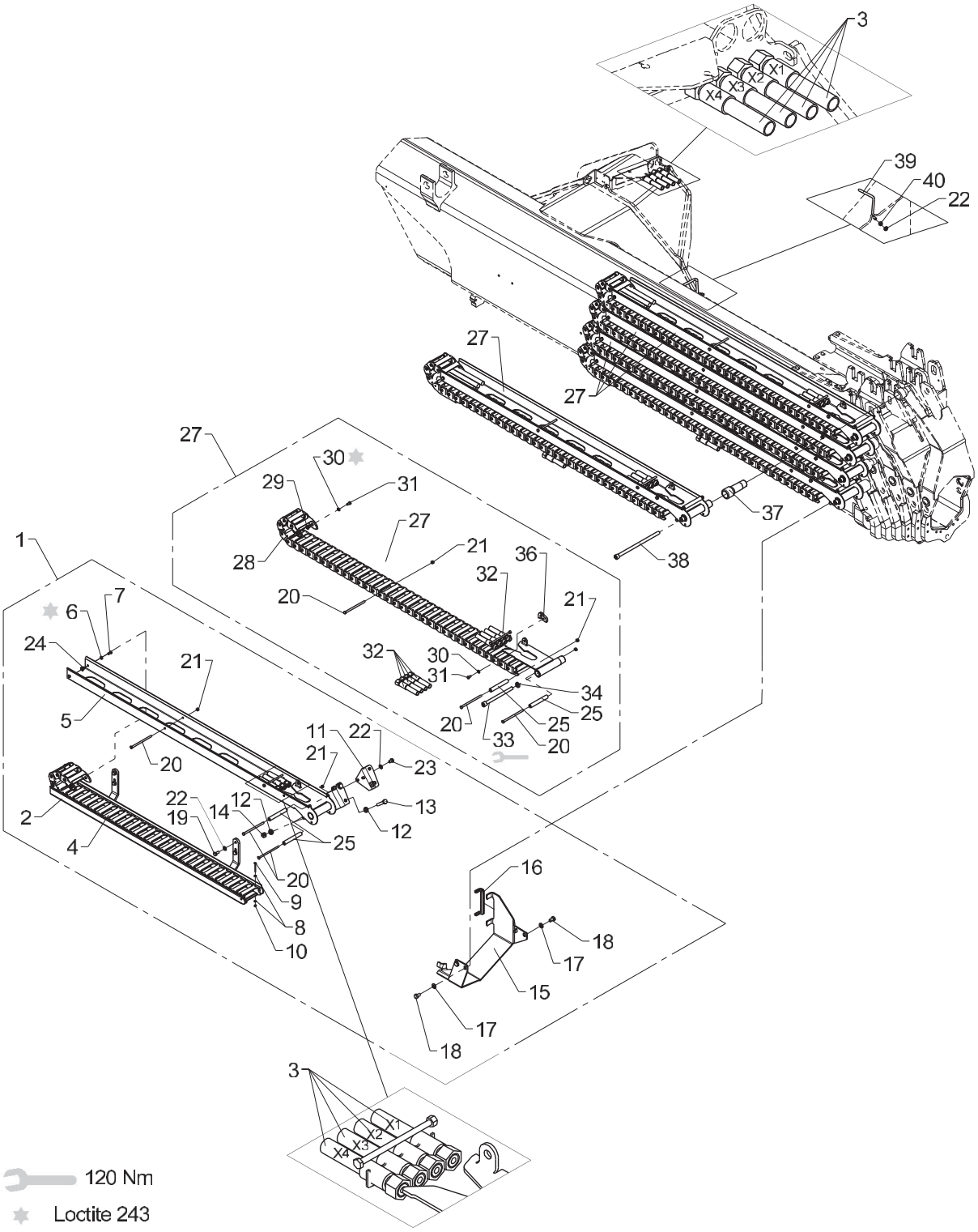
3
X1
X2
X3
X4
39
40
22
27
27
27
30
29
31
27
28
21
36
32
20
21
37
38
1
7
6
24
21
32
30
31
34
25
25
5
20
33
20
11
22
21
23
20
22
12
13
2
19
14
12
25
4
20
9
8
10
16
18
17
15
17
18
3
X1
X2
X3
X4
120 Nm
Loctite 243

Hose guides, K2-K6, cpl.

Pos	Qty.	Part no.	Description	Remarks
37	1	6390452	Adapter	K6
38	1	32505	Screw	MC12 x 230
39	1	6390049	Hose clamp	
40	1	30886	Lock nut, stainless	M8

50/345

63 91 160
Internal ref. 63 95 160

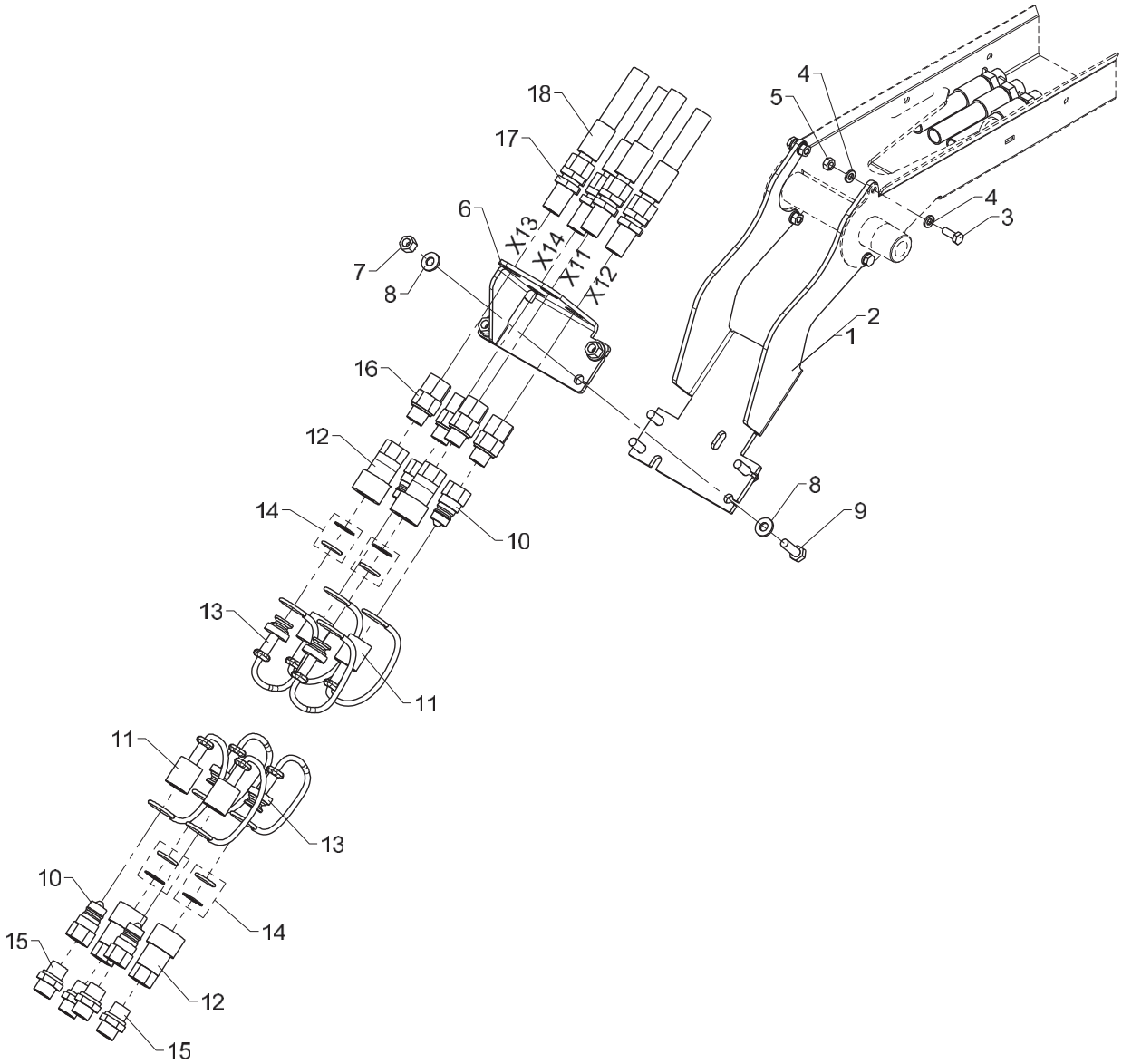

Quick-release couplings, 2 EXV, guides with bracket

Created 20-03-2013
Modified 02-07-2014

Pos	Qty.	Part no.	Description	Remarks
		6395160		K2-K3 3220
		6391160		K4-K6 3220, K2-K6 4020 5020
1	1	6394163	Adapter	K2 - K3
2	1	6390163	Adapter	K4 - K6
3	4	30112	Set screw, stainless	M6 x 16
4	8	32302	Face washer, stainless	6 mm
5	4	30854	Nut, stainless	M6
6	1	6394164	Bracket,quick-release coupling	
7	4	30886	Lock nut, stainless	M8
8	8	31754	Washer	8 mm
9	4	30134	Set screw, stainless	M8 x 25
10	4	60620	Quick-release coupling,M	3/8"
11	4	60622	Dust cap, F	3/8"
12	4	60619	Quick-release coupling,F	3/8"
13	4	60621	Dust cap, M	3/8"
14	4	60635	Seal kit	
15	4	25127	Connection	P-GEV 12 LR-WD
16	4	25240	Connection	EGESD 12 LR-WD
17	4	25201	Bulkhead connection	
18	4	56558	Hose	

50/345

Internal ref. 63 90 850

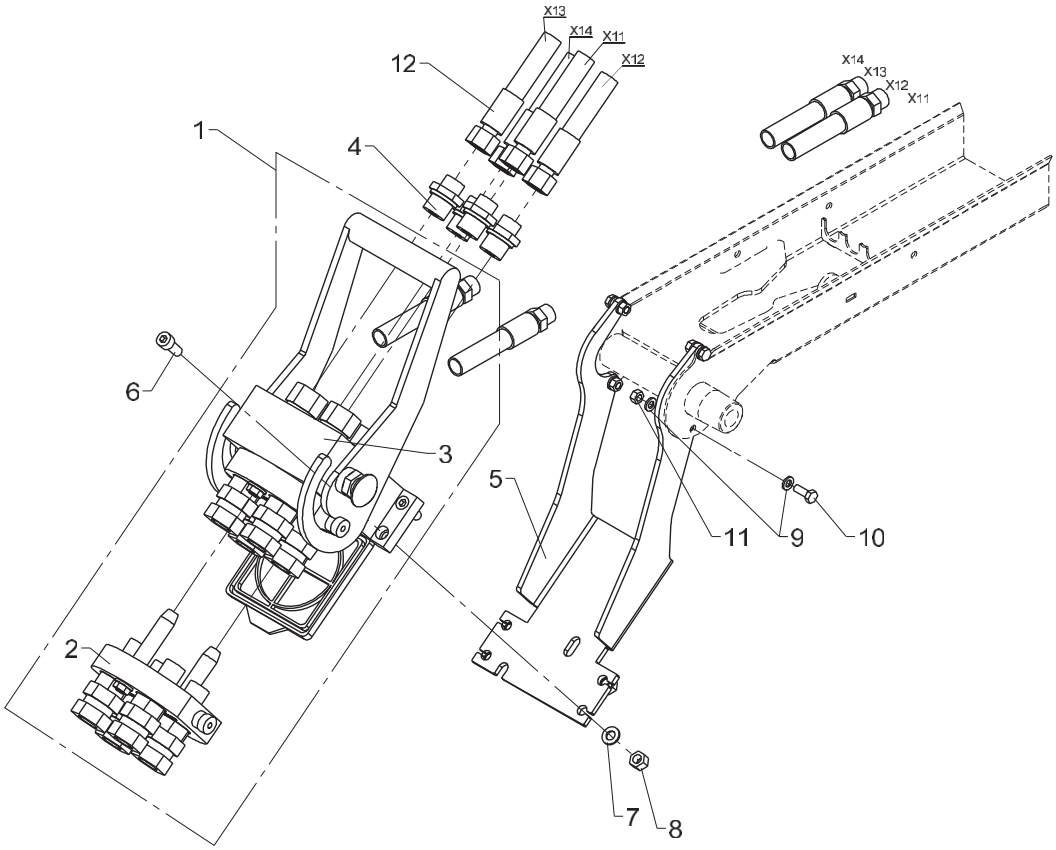

Only used at K4-K6 on 2820, 3020, 3220

Multi-couplings, 2 EXV, guides K2-K6

Created 17-08-2010
Modified 01-02-2016

Pos	Qty.	Part no.	Description	Remarks
1	1	58430	Multifaster coupling	1/2"
2	1	58431	Multifaster coupling	
3	1	58432	Multifaster coupling	
4	4	25108	Connection	GES 12 LR 1/2-WD
5	1	6390163	Adapter	
6	4	30438	Screw	MC8 x 20
7	4	31147	Face washer, 8 mm	
8	4	30886	Lock nut, stainless	
9	8	32302	Face washer, stainless	6 mm
10	4	30112	Set screw, stainless	M6 x 16
11	4	30854	Nut, stainless	M6
12	4	56558	Hose	

50/345

Internal ref. 63 90 860

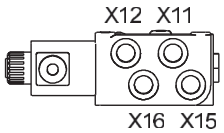

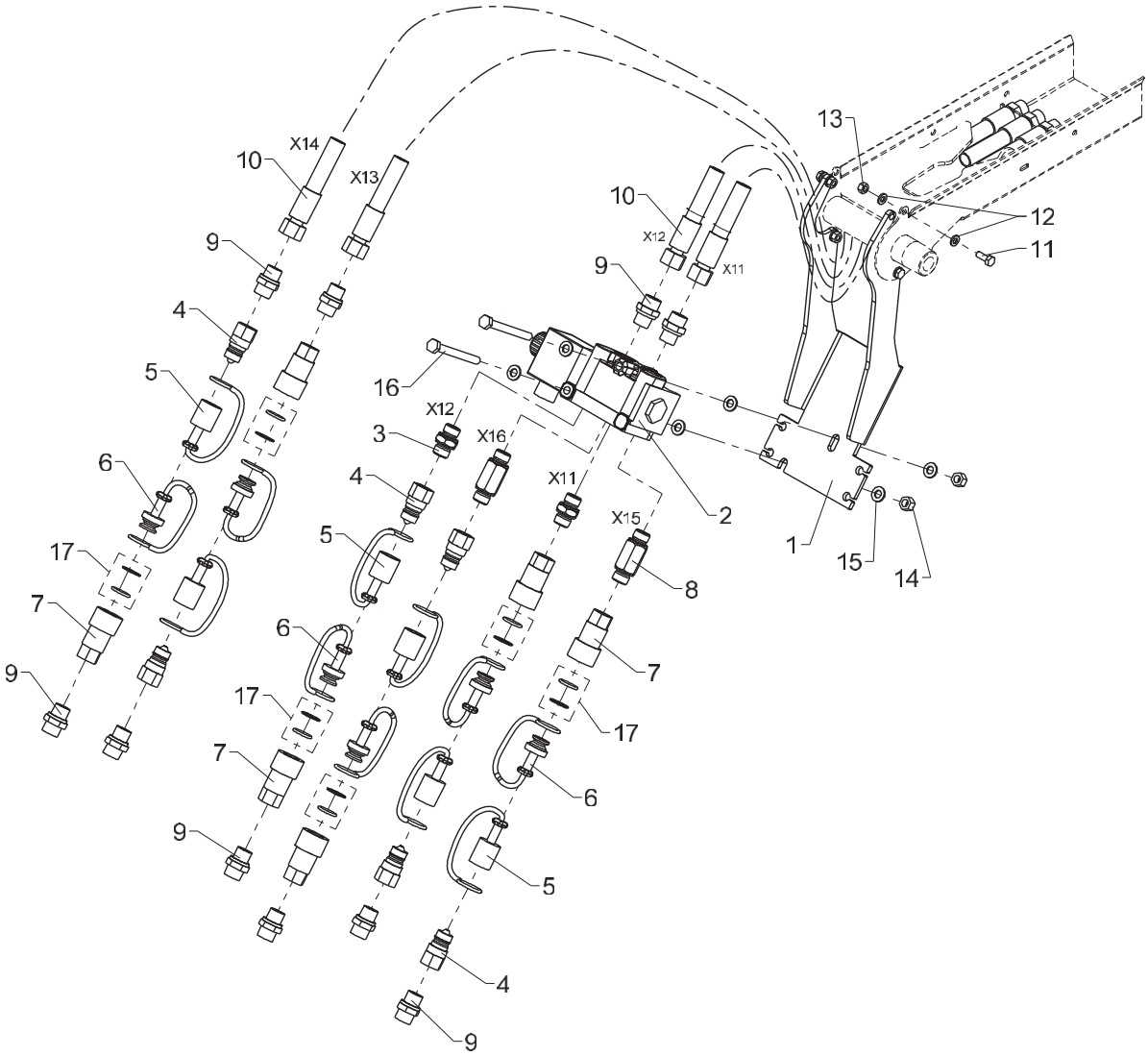

542 09 920

From loader 1150001
To loader

Kit, 3 EXV

Created 17-08-2010
Modified 26-05-2015

Pos	Qty.	Part no.	Description	Remarks
1	1	6390163	Adapter	
2	1	59062	Change-over valve	
3	2	6340775	Connection	
4	6	60620	Quick-release coupling,M	3/8"
5	6	60622	Dust cap, F	3/8"
6	6	60621	Dust cap, M	3/8"
7	6	60619	Quick-release coupling,F	3/8"
8	2	6340776	Connection	
9	10	25127	Connection	P-GEV 12 LR-WD
10	4	56558	Hose	
11	4	30112	Set screw, stainless	M6 x 16
12	8	32302	Face washer, stainless	6 mm
13	4	30854	Nut, stainless	M6
14	2	30886	Lock nut, stainless	
15	6	31147	Face washer, 8 mm	
16	2	30143	Steel bolt, stainless	M8 x 80
17	6	60635	Seal kit	

50/345

Internal ref. 63 94 900

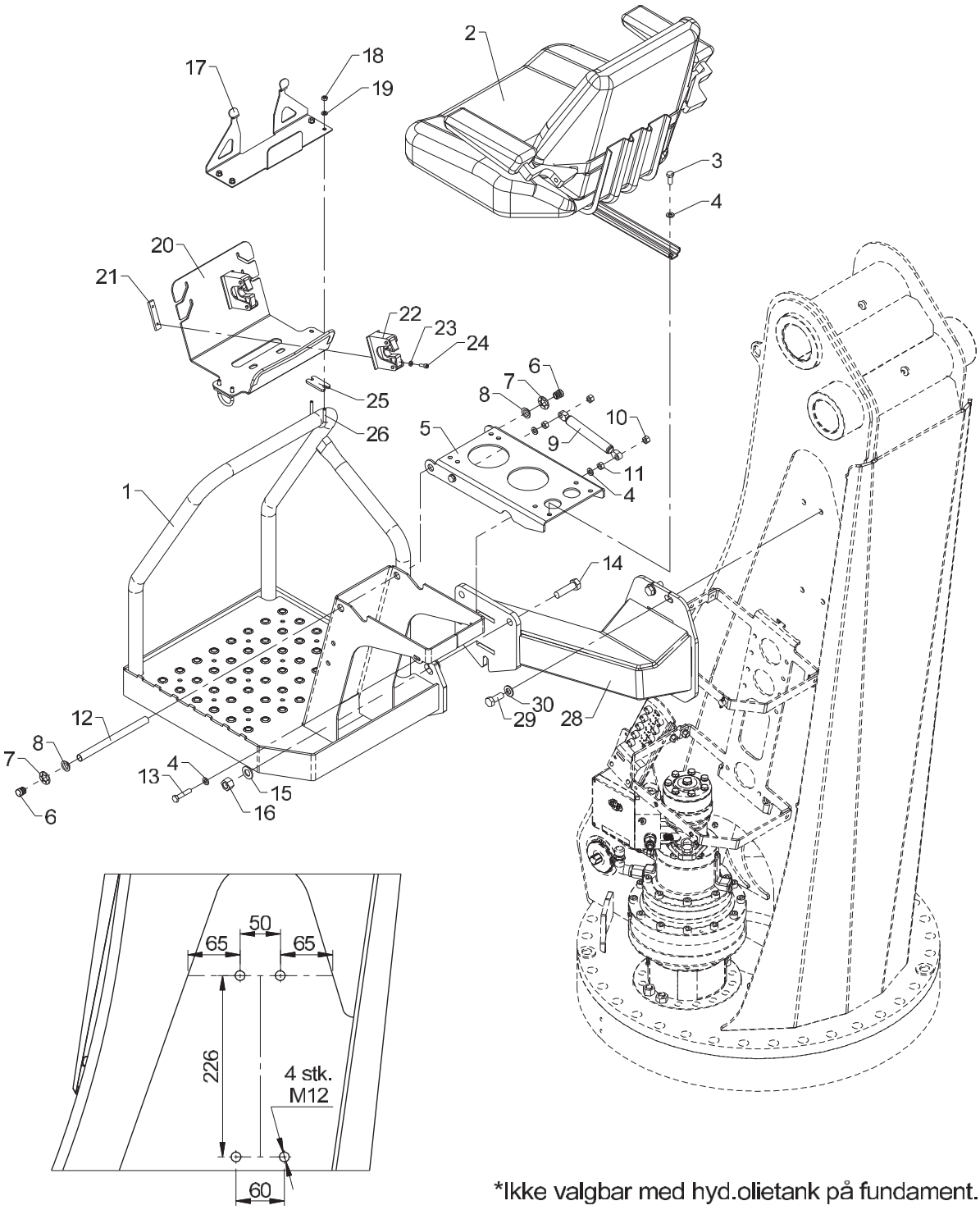

*Ikke valgbar med hyd.olietank på fundament.

Parts for top seat (TS-RC)

Created 20-03-2013
Modified 09-09-2014

Pos	Qty.	Part no.	Description	Remarks
1	1	6394901	Platform (TSRC)	
2	1	24134	Seat	
3	4	30132	Set screw, stainless	
4	12	31147	Face washer, 8 mm	
5	1	6306638	Plate, seat	
6	2	64520	Stopper	
7	2	32279	Clamping ring sleeve	15 mm
8	2	23416	Composite bearing	BB 1504,5
9	1	48460	Gas spring	
10	6	30886	Lock nut, stainless	M8
11	2	30856	Nut, stainless	M8
12	1	6306649	Pin	
13	2	30137	Set screw, stainless	M8 x 40
14	3	32249	Set screw	M14 x 50
15	6	31178	Washer	14 mm
16	3	32317	Lock nut	M14
17	1	6340902	Bracket(HETR.remote ctrl. box)	
18	4	30854	Nut, stainless	M6
19	4	32302	Face washer, stainless	6 mm
20	1	6340901	Bracket, Scanreco RC box	
21	2	8507104	Threaded plate	
22	2	46453	Bracket	
23	4	31189	Washer	5 mm
24	4	30433	Screw	MC5 x 16
25	2	6340904	Division plate	
26	2	6340903	Clamp	
27	1	46596	Rubber protection	0,3 m.
28	1	6394906	TS bracket	
29	4	31523	Set screw, stainless	M12 x 30
30	4	32338	Washer	12 mm

50/345

63 91 910
Internal ref. 63 90 900

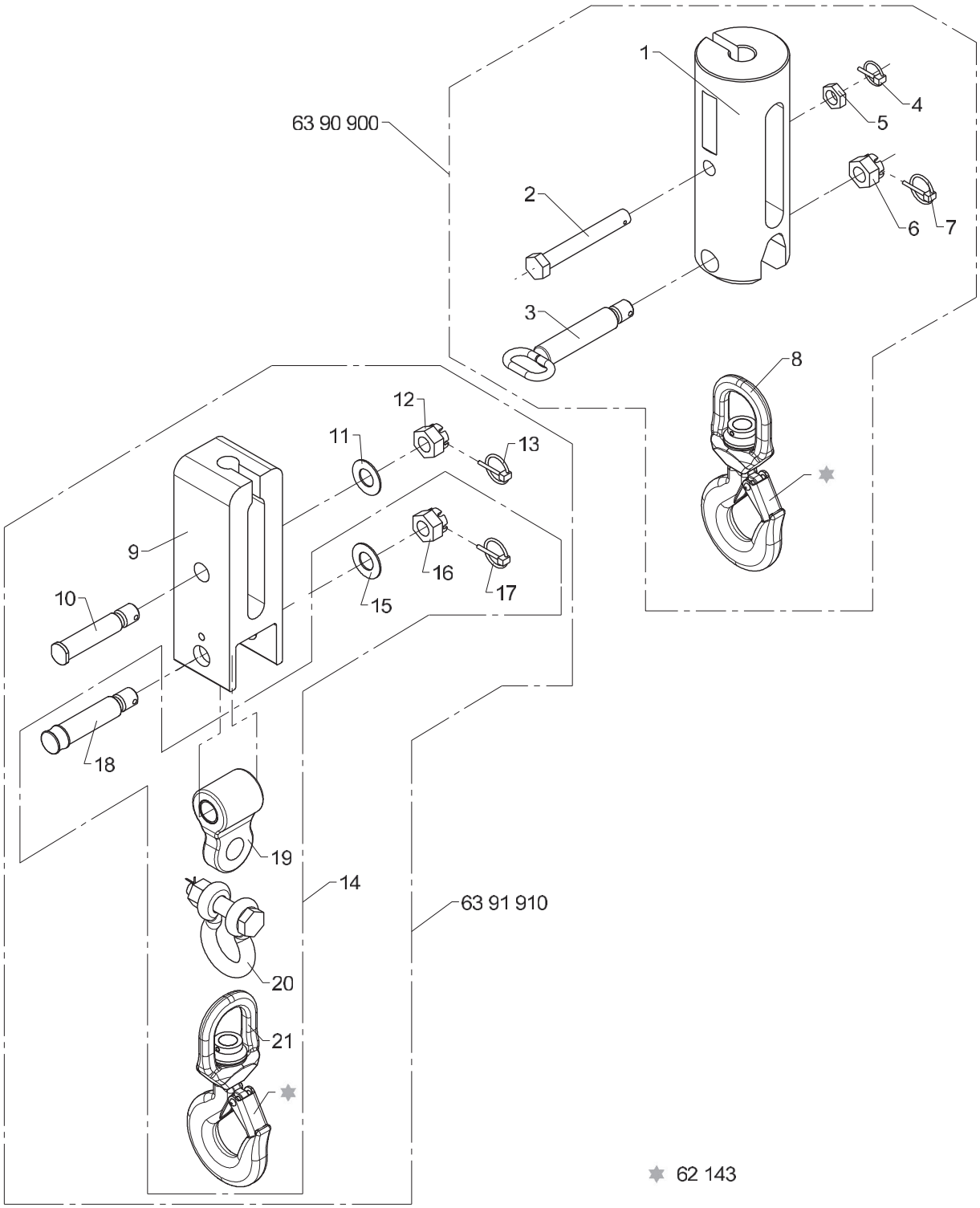

Swivel hook, 2.5 t and 3.2 t

Pos	Qty.	Part no.	Description	Remarks
		6390900	Swivel hook 3.2t	
		6391910	Swivel hook 2.5t	
1	1	6256452	Swivel hook	
2	1	6256464	Pin	
3	1	6301005	Lock pin	
4	1	33385	Ring split	ø4,5 x 27
5	1	30810	Counter nut	M20
6	1	30837	Nut	M24
7	1	31967	Ring split	ø4,5 x 40
8	1	62169	Hook with ball bearing	
9	1	6340958	Counterweight	
10	1	6340959	Pin	
11	1	31128	Washer	24 mm
12	1	30837	Nut	M24
13	1	31967	Ring split	ø4,5 x 40
14	1	6391920	Hook suspension	
15	1	31128	Washer	24 mm
16	1	30837	Nut	M24
17	1	31967	Ring split	ø4,5 x 40
18	1	6304458	Pin for suspension	
19	1	6292853	Hook suspension	
20	1	62114	Shackle with nut	
21	1	62169	Hook with ball bearing	

50/345

Internal ref. 63 90 530

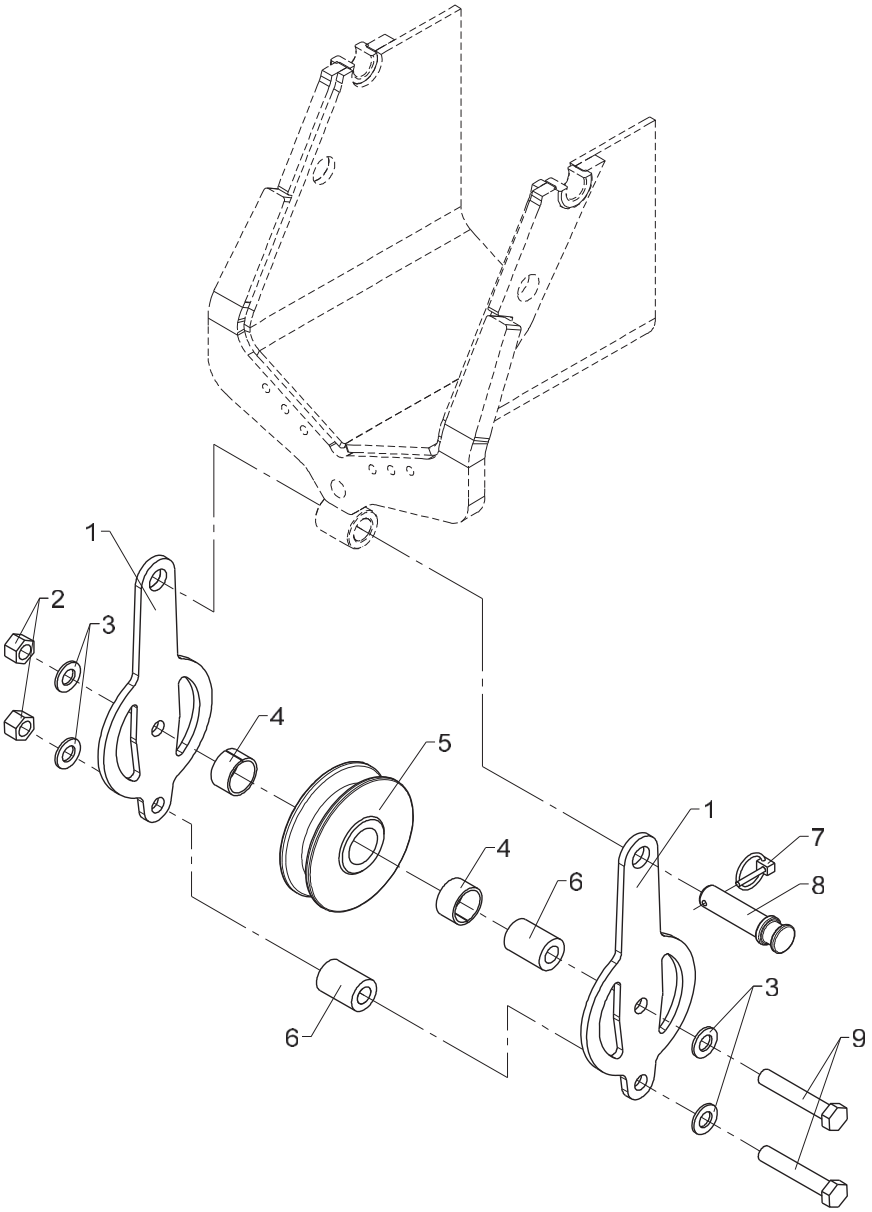

Obsolete

542 13 040

From loader 1150001
To loader

Created 16-08-2010
Modified

Wire roller guide

Pos	Qty.	Part no.	Description	Remarks
1	2	6300829	Side plate for roller guide	
2	2	30891	Lock nut	M14
3	4	31178	Washer	14 mm
4	2	23302	Bushing	MB 3020 DU
5	1	63513	Wire roller guide	
6	2	6885504	Distance pipe	
7	1	33385	Ring split	ø4,5 x 27
8	1	6300859	Pin	
9	2	30214	Steel bolt	M14 x 80

50/345

Internal ref. 63 90 530

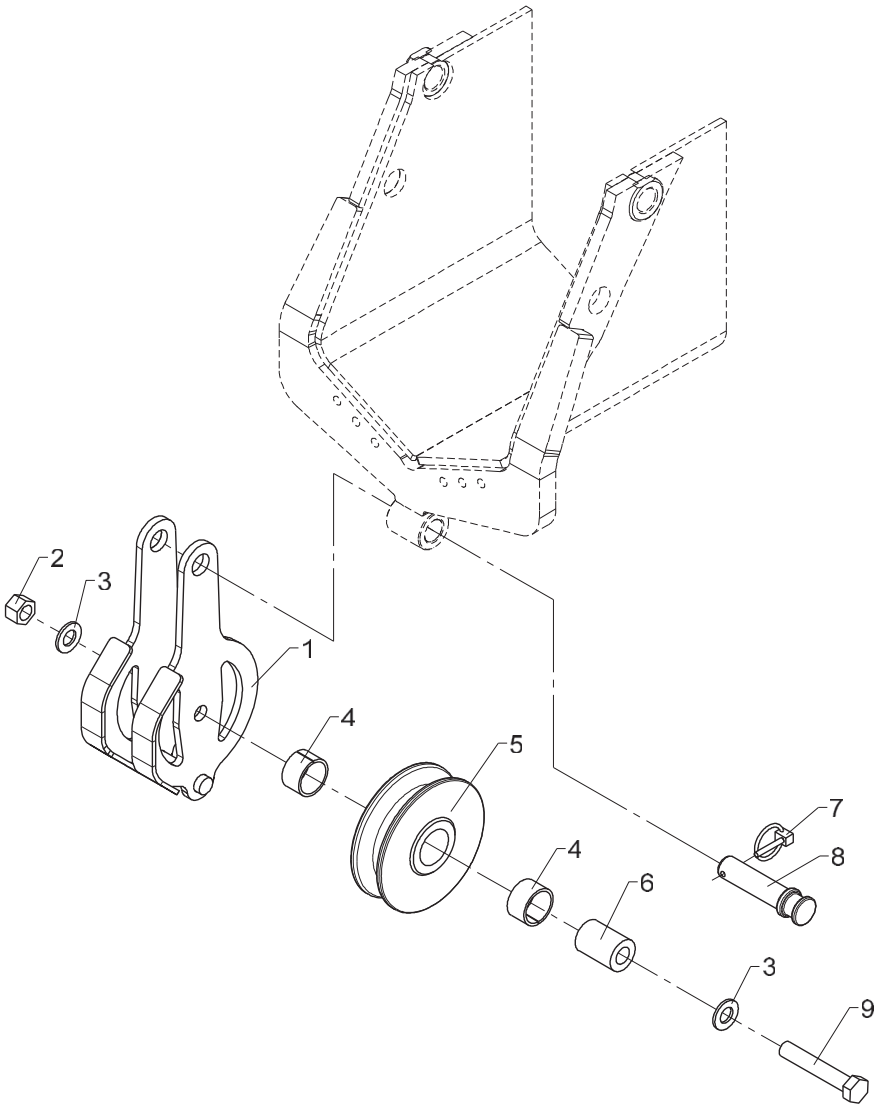

Wire roller guide

Pos	Qty.	Part no.	Description	Remarks
1	1	6300792	Wire pulley	
2	1	30891	Lock nut	M14
3	2	31178	Washer	14 mm
4	2	23302	Bushing	MB 3020 DU
5	1	63513	Wire roller guide	
6	1	6885504	Distance pipe	
7	1	33385	Ring split	ø4,5 x 27
8	1	6300859	Pin	
9	1	30214	Steel bolt	M14 x 80

50/345

Internal ref. 63 90 520

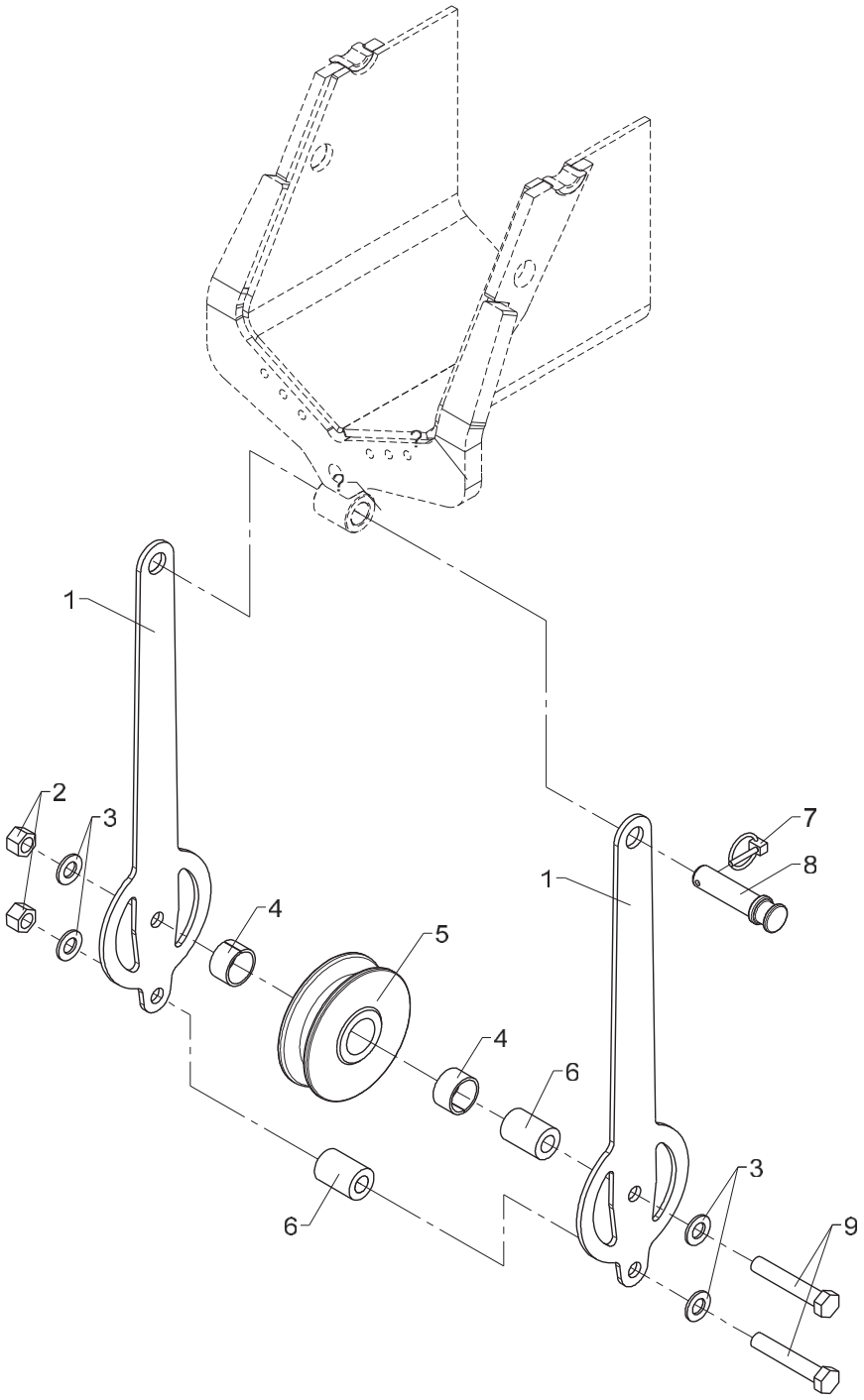

Wire roller guide (with FJ)

Pos	Qty.	Part no.	Description	Remarks
1	2	6390039	Side plate for roller guide	
2	2	30891	Lock nut	M14
3	4	31178	Washer	14 mm
4	2	23302	Bushing	MB 3020 DU
5	1	63513	Wire roller guide	
6	2	6885504	Distance pipe	
7	1	33385	Ring split	ø4,5 x 27
8	1	6300859	Pin	
9	2	30214	Steel bolt	M14 x 80

50/345

63 42 320
Internal ref. 63 42 280

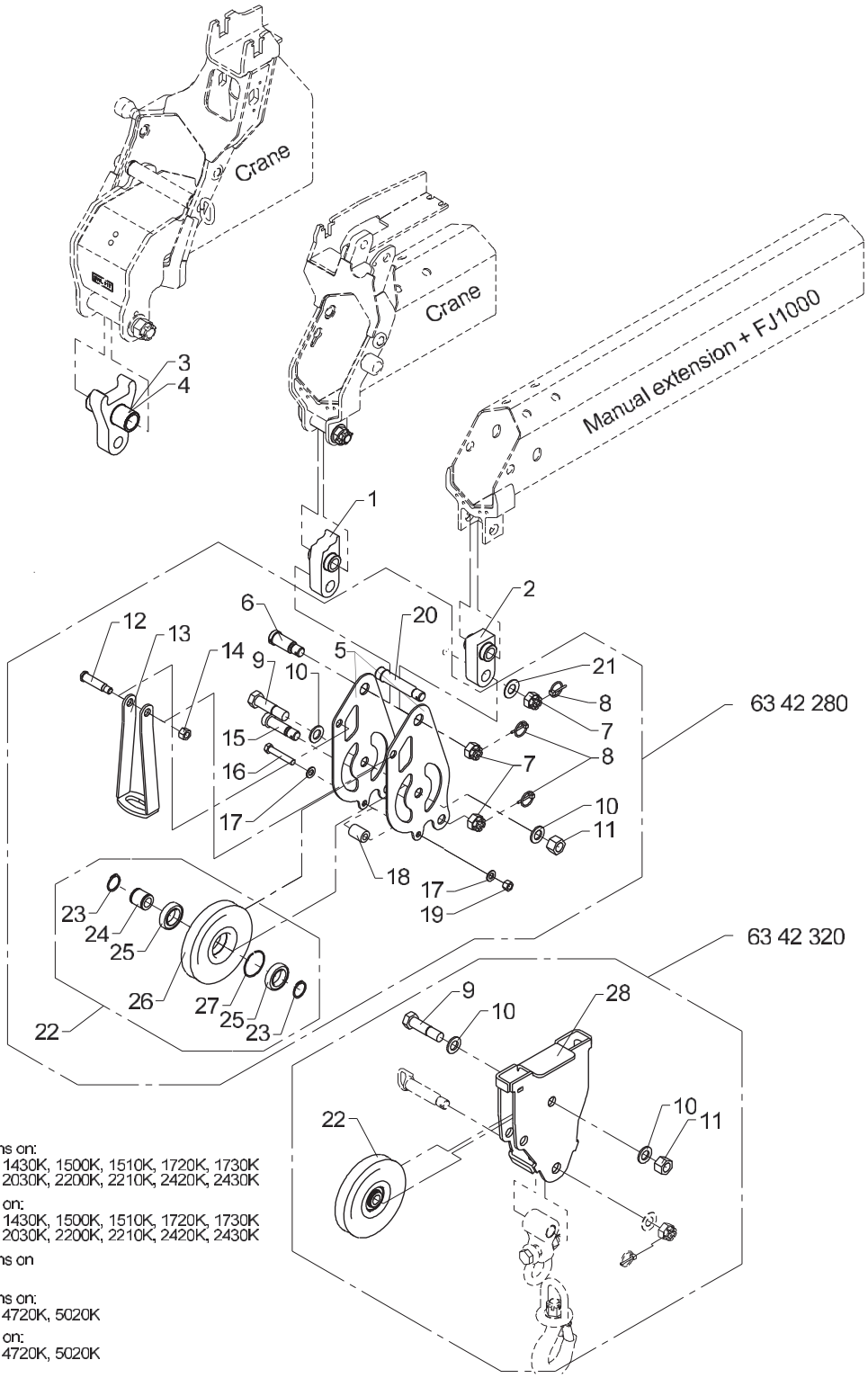

Pos 1: For Hydraulic extensions on:
1300K, 1310K, 1420K, 1430K, 1500K, 1510K, 1720K, 1730K
1800K, 1810K, 2020K, 2030K, 2200K, 2210K, 2420K, 2430K

Pos 2: For Manual extensions on:
1300K, 1310K, 1420K, 1430K, 1500K, 1510K, 1720K, 1730K
1800K, 1810K, 2020K, 2030K, 2200K, 2210K, 2420K, 2430K

For Hydraulic extensions on
FJ1000

Pos 3: For Hydraulic extensions on:
3220K, 3820K, 4020K, 4720K, 5020K

Pos 4: For Manual extensions on:
3220K, 3820K, 4020K, 4720K, 5020K

Wire pulley, double snatch block

Pos	Qty.	Part no.	Description	Remarks
		6342280	Wire sheave	
		6342320	Snatch block	
1	1	6304414	Wire pulley	Til kranarme
2	1	6340995	Wire pulley	Til man. forlængerarme
3	1	6302615	Wire pulley	
4	1	6394891	Wire pulley, manual extension	
5	2	6340981	Side plate	
6	1	6256324	Pin	
7	3	30837	Nut	M24
8	3	31967	Ring split	ø4,5 x 40
9	2	32476	Steel bolt	M24 x 95
10	4	31133	Washer	24 mm
11	2	30897	Lock nut	M24
12	1	6340982	Pin	
13	1	6340983	Wire safety device	
14	1	30892	Lock nut	M16
15	1	6300558	Pin	
16	1	30214	Steel bolt	M14 x 80
17	2	31178	Washer	14 mm
18	1	6885504	Distance pipe	
19	1	30891	Lock nut	M14
20	1	6304458	Pin for suspension	
21	1	31128	Washer	24 mm
22	2	6342290	Wire sheave with bearing	
23	2	33121	Circlip	40U
24	1	6887304	Hub	
25	2	23150	Ball bearing	
26	1	63484	Wire sheave	
27	1	23904	Spring ring	BR 68
28	1	6340997	Snatch block	

50/345

63 01 037
Internal ref. 68 87 280

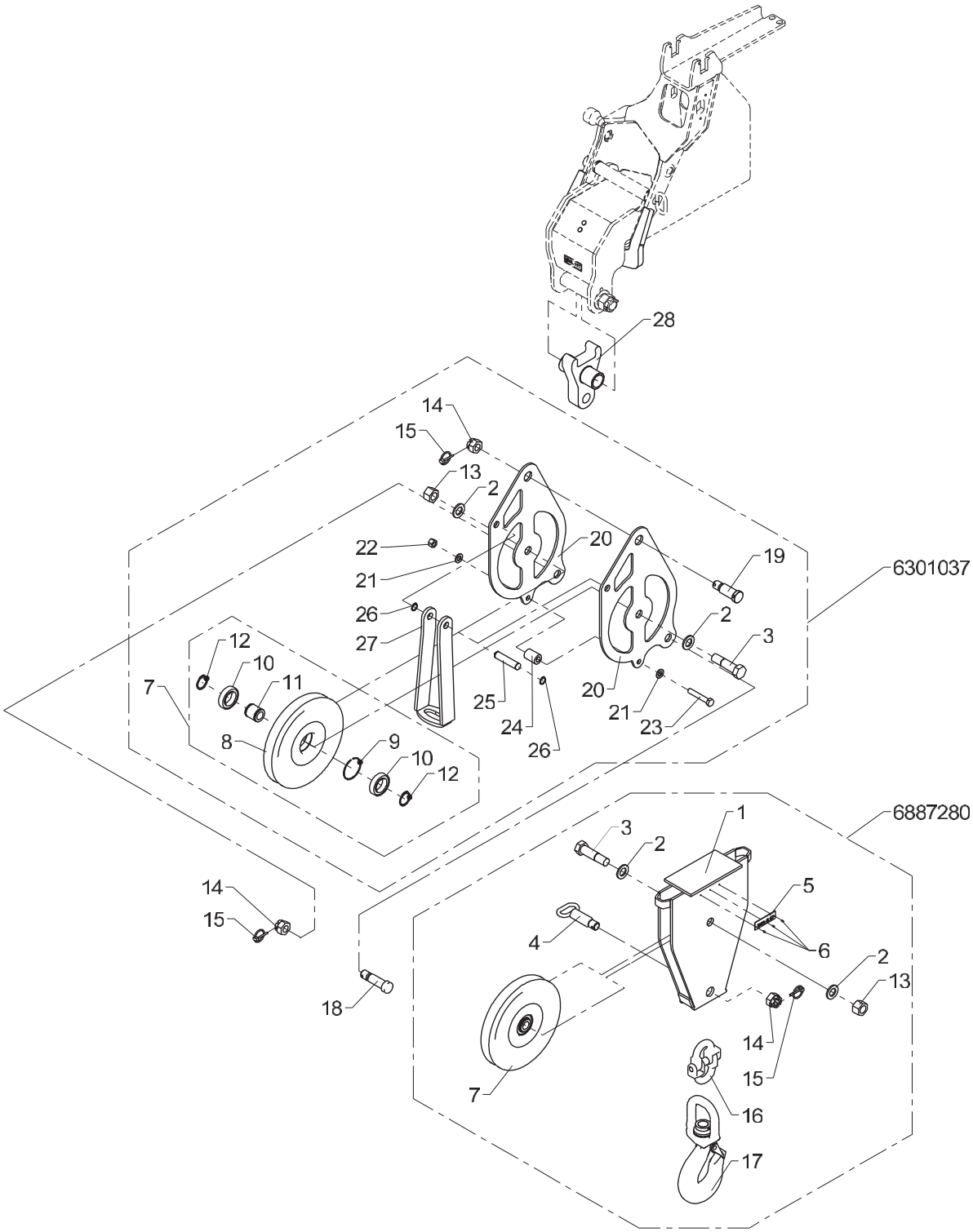

Wire pulley 3.2 t

Pos	Qty.	Part no.	Description	Remarks
		6887280	6.5 t snatch block, complete	
		6301037	Wire sheave, WS12 complete	
1	1	6887313	Snatch block	
2	4	31133	Washer	24 mm
3	2	32476	Steel bolt	M24 x 95
4	1	6301004	Lock pin	
5	1	65699	Brass label	
6	3	31340	Rivet	
7	2	6887290	Wire sheave incl. bearing	
8	1	64136	Wire disc	
9	1	23904	Spring ring	BR 68
10	2	23150	Ball bearing	
11	1	6887304	Hub	
12	2	33121	Circlip	40U
13	2	30897	Lock nut	M24
14	3	30837	Nut	M24
15	3	31967	Ring split	ø4,5 x 40
16	1	50309	Link 16 CW	
17	1	63292	Hook, 8 t incl. bearing	
18	1	6300558	Pin	
19	1	6256324	Pin	
20	2	6301038	Side plate	
21	2	31178	Washer	14 mm
22	1	30891	Lock nut	M14
23	1	30214	Steel bolt	M14 x 80
24	1	6885504	Distance pipe	
25	1	6300543	Pin	
26	2	33108	Circlip	20U
27	1	6300548	Stop	
28	1	6302615	Wire pulley	

50/345

Internal ref. 63 90 870

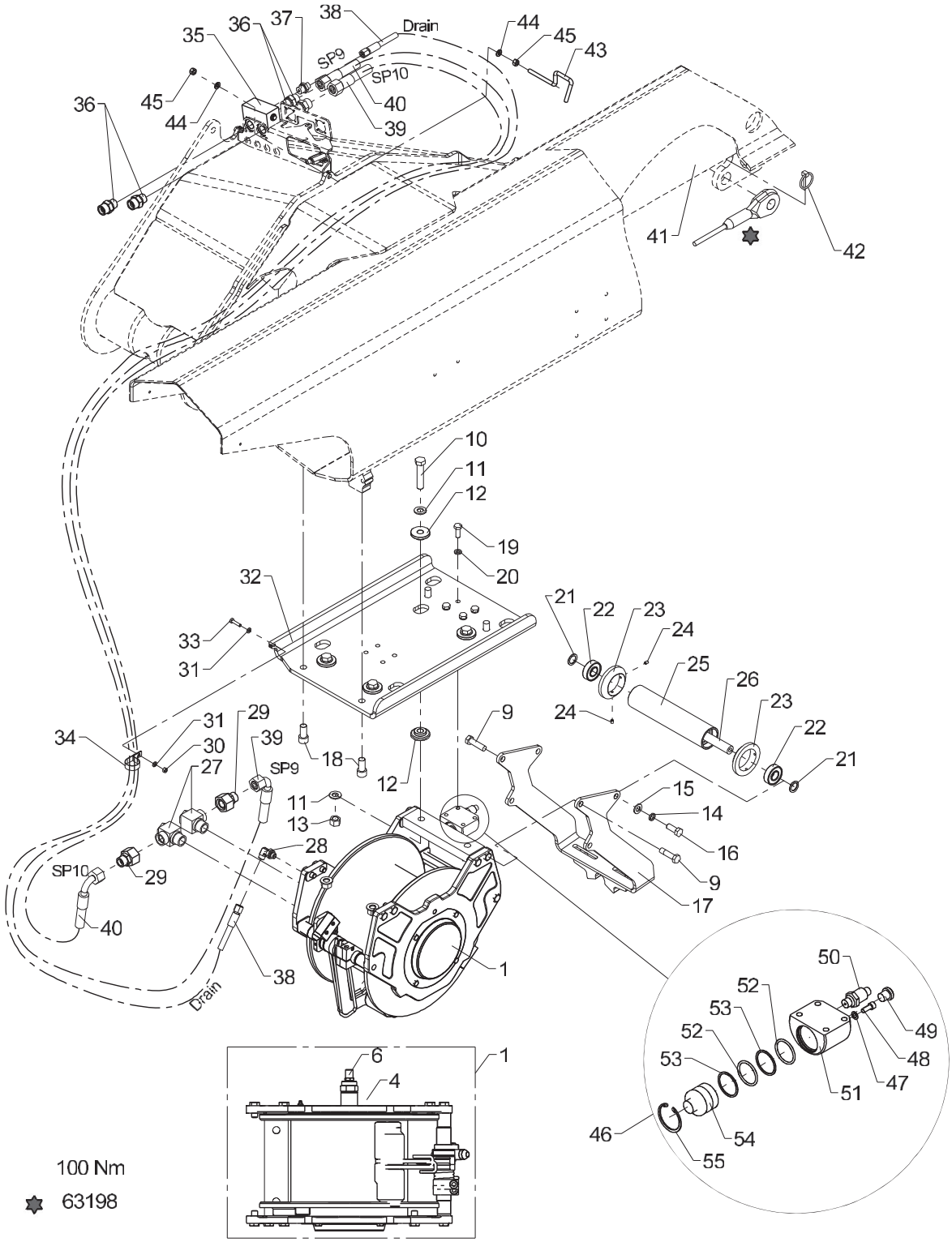

From loader 1150001
To loader

Winch 2.5 T + mounting fittings and weighing cell

Created 17-08-2010
Modified 05-09-2016

Pos	Qty.	Part no.	Description	Remarks
1	1	58285	Winch	P15
2	1	56606	Complete arm for P15/P15Ewinch	9052110D00
3	1	69251	Thimble	241000000
4	1	69252	Motor	900016300
5	1	69253	Seal kit for motor	600008100
6	1	59397	Load-holding valve	4380029
7	1	58237	Strips	10x02941061 + 11x02941060 + 2x
8	1	58262	Seal kit P15	600010600
9	2	30180	Steel bolt	M12 x 45
10	4	30213	Steel bolt	M14 x 70
11	8	31178	Washer	14 mm
12	8	6301337	Washer	
13	4	32317	Lock nut	M14
14	2	31158	Spring washer	12 mm
15	2	31131	Washer	12 mm
16	2	30177	Set screw	M12 x 30
17	1	6390062	Stowing bracket, winch	
18	4	30480	Screw	MC14 x 30
19	4	30155	Set screw	M10 x 25
20	4	30933	Nordlock washer	10 mm
21	2	33227	Back ring	SS 20 x 28 x 2
22	2	23178	Ball bearing	
23	2	6886764	Guide roller	
24	4	30903	Screw	MSP6 x 8
25	1	6290984	Guide roller	
26	1	6295614	Pin	
27	2	25258	Banjo connection	RSWV 22 LR
28	1	26898	Elbow connection	8 mm - 1/4"
29	2	26306	Reducing connection	REDSDN 20/16 S
30	1	30854	Nut, stainless	M6
31	2	32302	Face washer, stainless	6 mm
32	1	6390044	Winch bracket	
33	1	30114	Set screw, stainless	M6 x 25
34	1	31868	Clip 32 mm	
35	1	50509	Drain block for motor	
36	4	26334	Connection	P-GEV 16 SR-WD
37	1	25244	Connection	GES 8 LR 3/8-WD
38	1	62542	Hose	1/4" x 1800
39	1	62680	Hose	1/2" x 1900 L/90
40	1	62682	Hose	1/2" x 1700
41	1	6886754	Pin	

50/345

Internal ref. 63 90 870

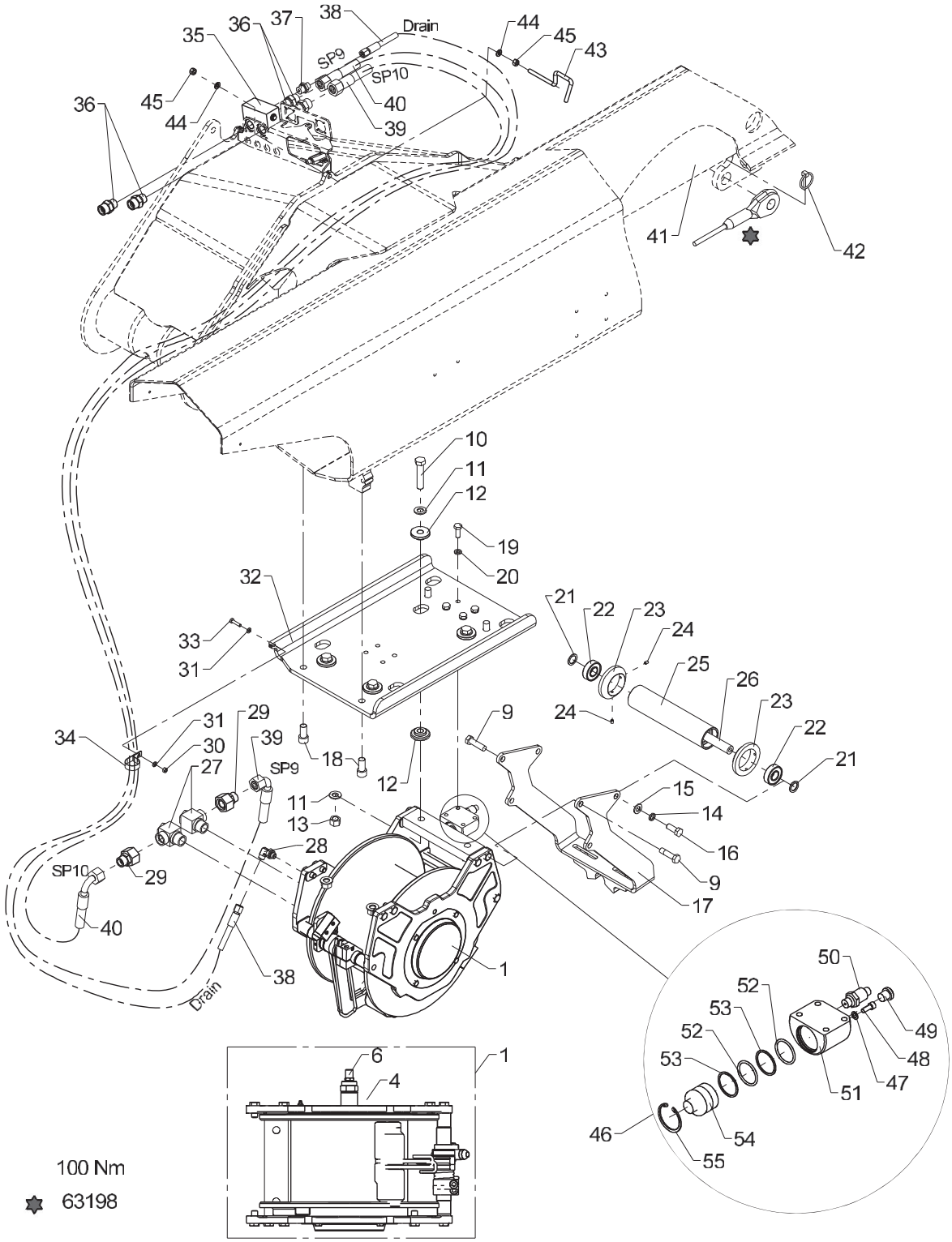

From loader 1150001
To loader

Winch 2.5 T + mounting fittings and weighing cell

Created 17-08-2010
Modified 05-09-2016

Pos	Qty.	Part no.	Description	Remarks
42	1	31967	Ring split	ø4,5 x 40
43	1	6390307	Hose clamp	
44	2	31147	Face washer, 8 mm	
45	2	30886	Lock nut, stainless	M8
46	1	6887210	Weighing cell, hydraul.	
47	1	21109	Seal washer	ø7,1 x 12 x 1
48	1	30424	Screw	MC6 x 16
49	1	25197	Plug	VS-R-1/4 WD
50	1	28850	Pressure transducer	
51	1	6300741	Housing	
52	2	20177	O-ring	OR 34,2 x 3
53	2	20705	Back ring	STR 35 x 40 x 1,3
54	1	6300742	Piston	
55	1	33178	Circlip	42 I

50/345

Internal ref. 63 90 880

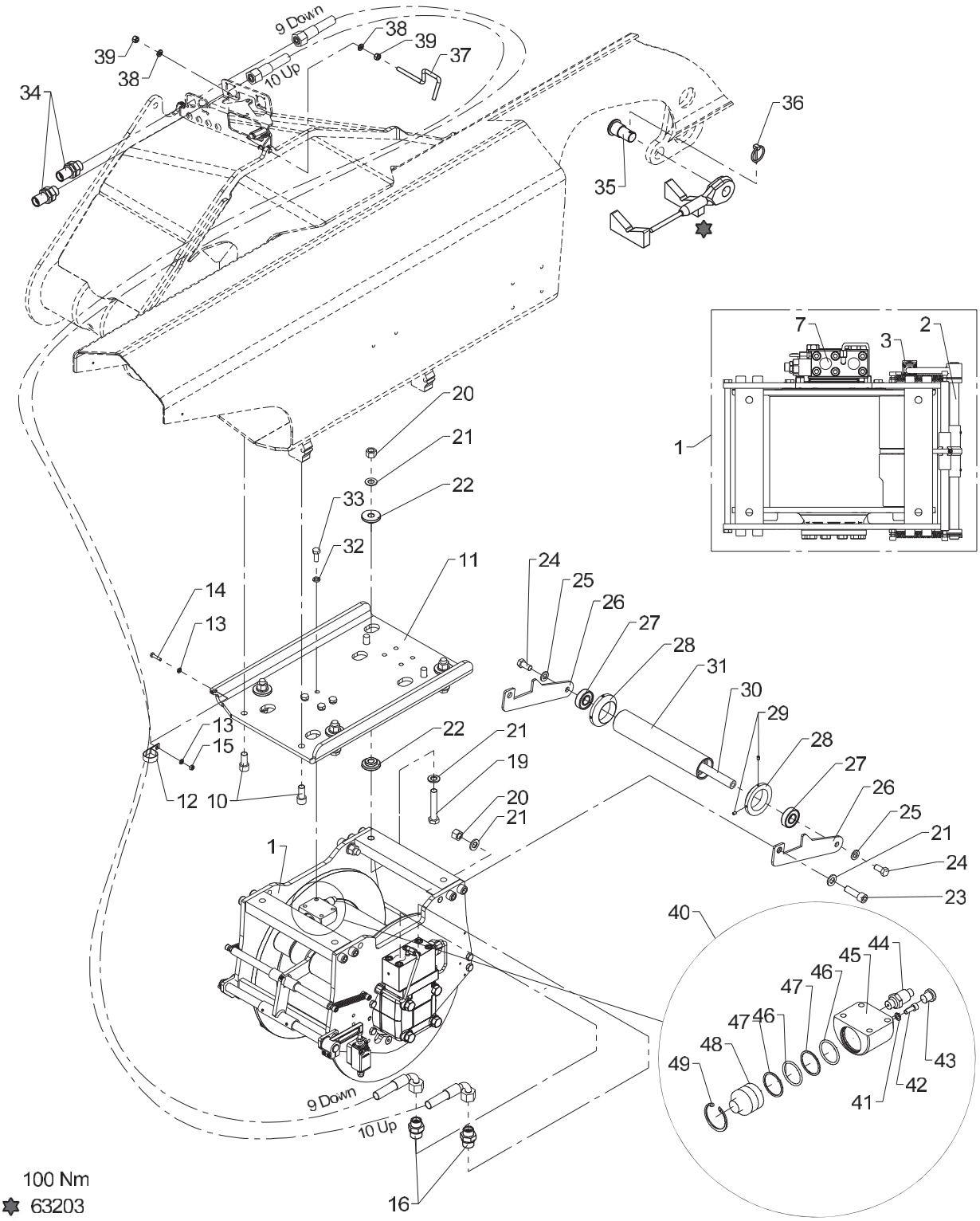

From loader 1150001
To loader

Winch 3.2 T + mounting fittings and weighing cell

Created 17-08-2010
Modified 05-09-2016

Pos	Qty.	Part no.	Description	Remarks
1	1	58281	Winch	S25
2	1	69255	Wire guide	905146800
3	1	69256	Stop	905000102
4	1	69257	Thimble	02410204
5	1	69258	Motor	425020300
6	1	69261	Seal kit for motor	600008800
7	1	69259	Valve	438014600
8	1	69262	Kit for brake	6x415030800 + 5x415040400 + 2x
9	1	69260	Seal kit for brake	600140101
10	4	30480	Screw	MC14 x 30
11	1	6390044	Winch bracket	
12	1	31868	Clip 32 mm	
13	2	32302	Face washer, stainless	6 mm
14	1	30114	Set screw, stainless	M6 x 25
15	2	30854	Nut, stainless	M6
16	2	26390	Connection	P-GEV 16 SR 3/4-WD
17	1	62680	Hose	1/2" x 1900 L/90
18	1	62682	Hose	1/2" x 1700
19	4	30214	Steel bolt	M14 x 80
20	6	30891	Lock nut	M14
21	12	31178	Washer	14 mm
22	8	6301337	Washer	
23	2	32487	Screw	MC14 x 45
24	2	30176	Set screw	M12 x 25
25	2	31131	Washer	12 mm
26	2	6301335	Guide roller bracket	
27	2	23178	Ball bearing	
28	2	6886764	Guide roller	
29	4	30903	Screw	MSP6 x 8
30	1	6300649	Pin	
31	1	6300571	Roller	
32	4	30933	Nordlock washer	10 mm
33	4	30155	Set screw	M10 x 25
34	2	26335	Bulkhead connection	P-GSV 16 S
35	1	6886754	Pin	
36	1	31967	Ring split	ø4,5 x 40
37	1	6390307	Hose clamp	
38	2	31147	Face washer, 8 mm	
39	2	30886	Lock nut, stainless	M8
40	1	6887210	Weighing cell, hydraul.	
41	1	21109	Seal washer	ø7,1 x 12 x 1

50/345

Internal ref. 63 90 880

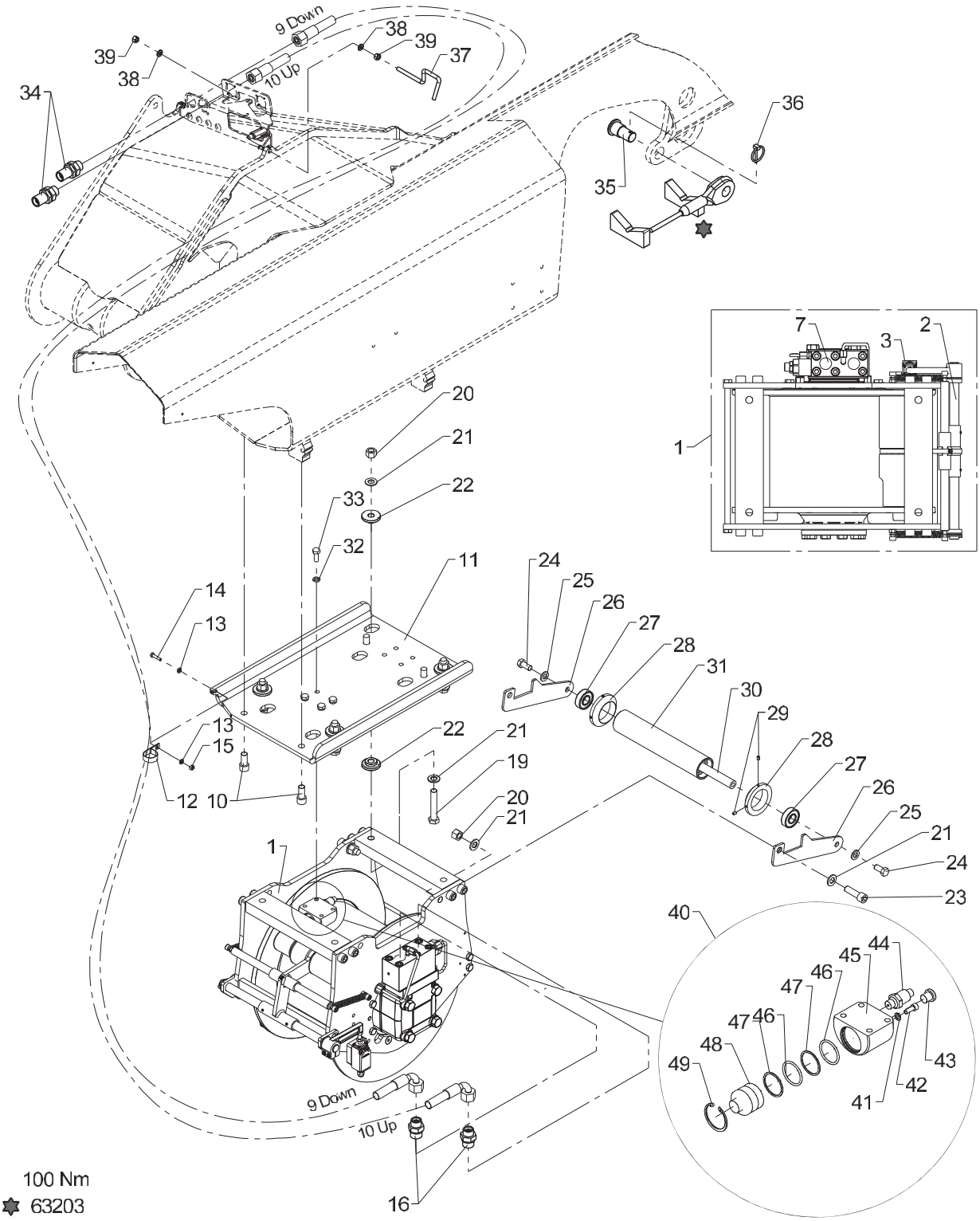

From loader 1150001
To loader

Winch 3.2 T + mounting fittings and weighing cell

Created 17-08-2010
Modified 05-09-2016

Pos	Qty.	Part no.	Description	Remarks
42	1	30424	Screw	MC6 x 16
43	1	25197	Plug	VS-R-1/4 WD
44	1	28850	Pressure transducer	
45	1	6300741	Housing	
46	2	20177	O-ring	OR 34,2 x 3
47	2	20705	Back ring	STR 35 x 40 x 1,3
48	1	6300742	Piston	
49	1	33178	Circlip	42 I

50/345

Internal ref. 63 00 830

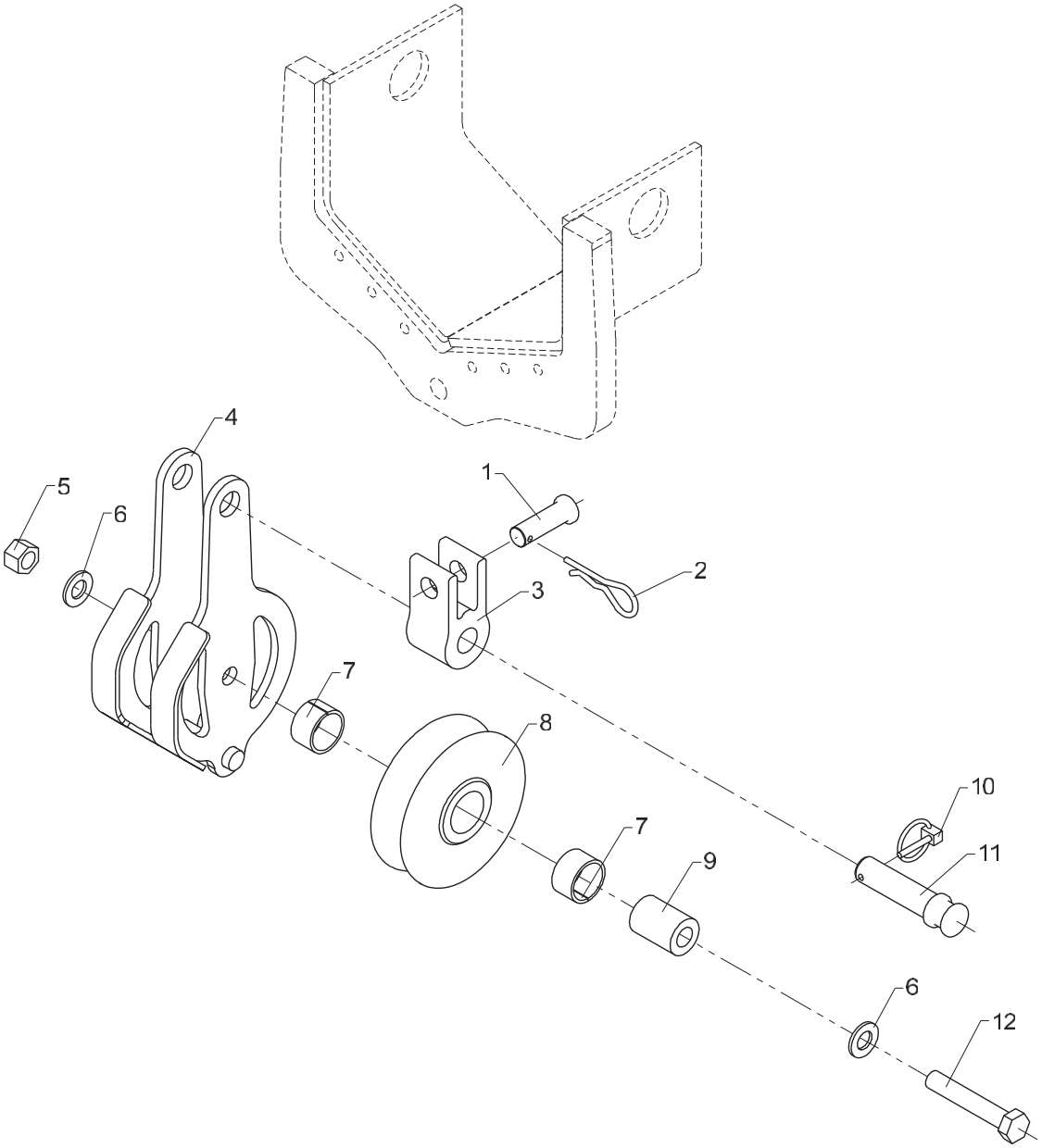

From loader 1150001
To loader

Created 15-09-2015
Modified

Wire roller guide

Pos	Qty.	Part no.	Description	Remarks
1	1	6300858	Pin	
2	1	33399	Lock spring	
3	1	6300828	Suspension for roller guide	
4	1	6300792	Wire pulley	
5	1	30891	Lock nut	M14
6	2	31178	Washer	14 mm
7	2	23302	Bushing	MB 3020 DU
8	1	63513	Wire roller guide	
9	1	6885504	Distance pipe	
10	1	33385	Ring split	ø4,5 x 27
11	1	6300859	Pin	
12	1	30214	Steel bolt	M14 x 80

4720K, 5020K

50/345

Internal ref. 66 68 760

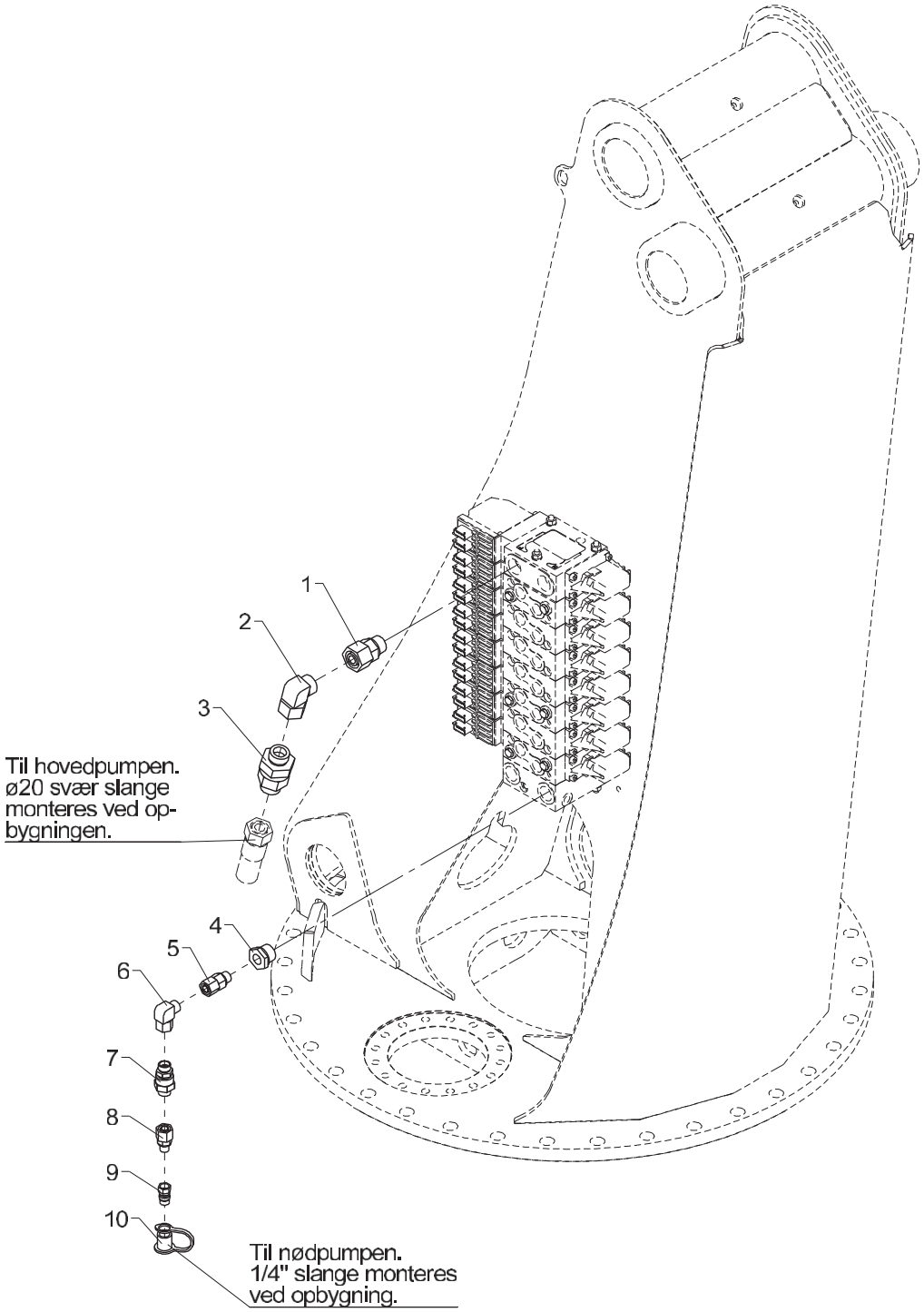

Parts for emergency pump (1 circuit)

Pos	Qty.	Part no.	Description	Remarks
1	1	26358	Connection	EGESD 20 SR-WD
2	1	26198	Elbow connection	EWVD 20 S-SV
3	1	26844	Check valve	P-RW 20 S
4	1	26319	Reducing connection	RED-R 3/4-WD/R 3/8
5	1	25240	Connection	EGESD 12 LR-WD
6	1	25242	Elbow connection	EWSD 12 L
7	1	60491	Check valve	P-RW 20 S
8	1	25241	Connection	EGESD 12 LR 1/4-WD
9	1	60697	Quick-release coupling M	1/4"
10	1	60699	Dust cap. F.	1/4"

50/345

Internal ref. 66 68 770

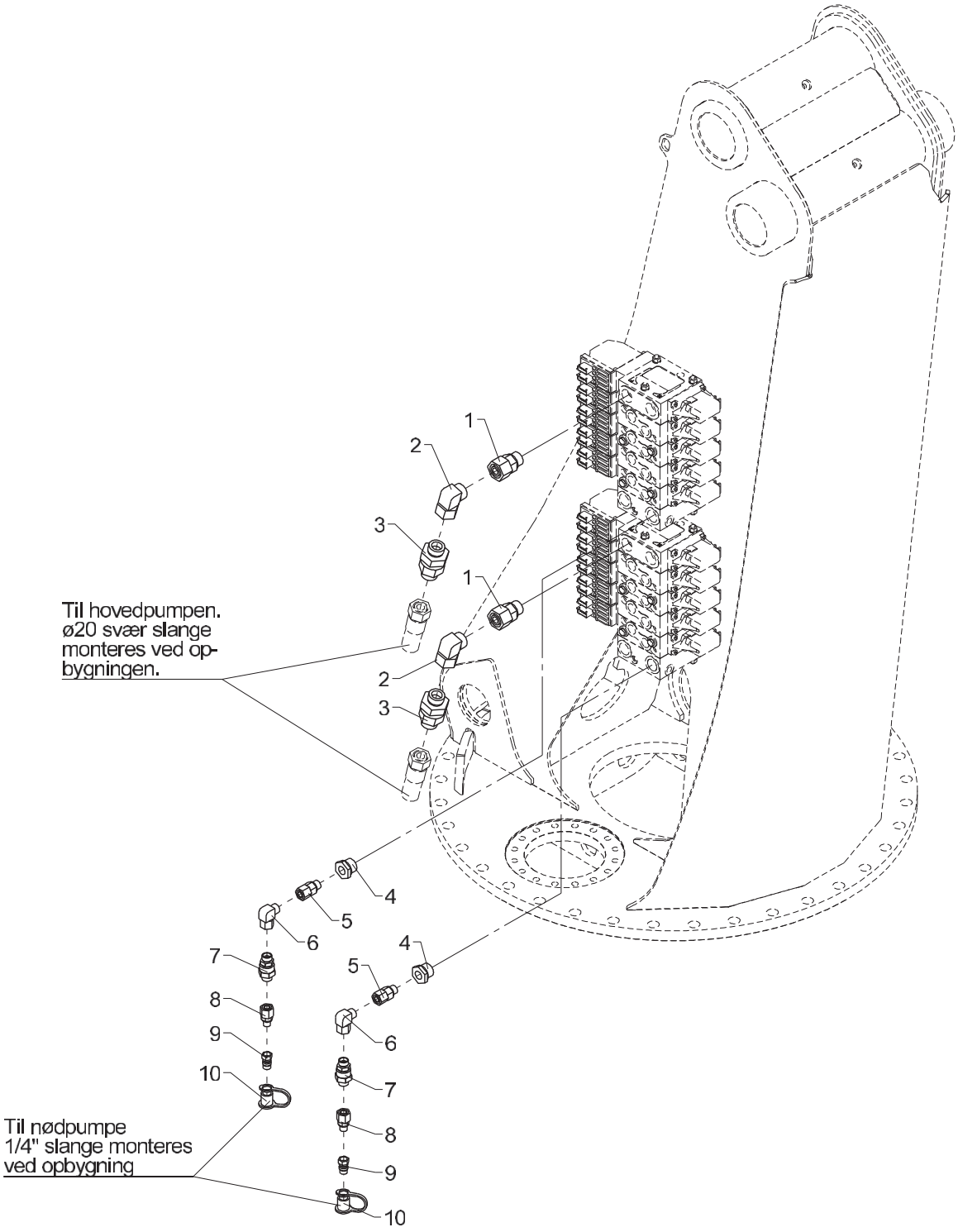

Parts for emergency pump (2 circuits)

Pos	Qty.	Part no.	Description	Remarks
1	2	26358	Connection	EGESD 20 SR-WD
2	2	26198	Elbow connection	EWVD 20 S-SV
3	2	26844	Check valve	P-RW 20 S
4	2	26319	Reducing connection	RED-R 3/4-WD/R 3/8
5	2	25240	Connection	EGESD 12 LR-WD
6	2	25242	Elbow connection	EWSD 12 L
7	2	60491	Check valve	P-RW 20 S
8	2	25241	Connection	EGESD 12 LR 1/4-WD
9	2	60697	Quick-release coupling M	1/4"
10	2	60699	Dust cap. F.	1/4"

50/345

85 18 150
85 18 130
Internal ref. 85 18 120

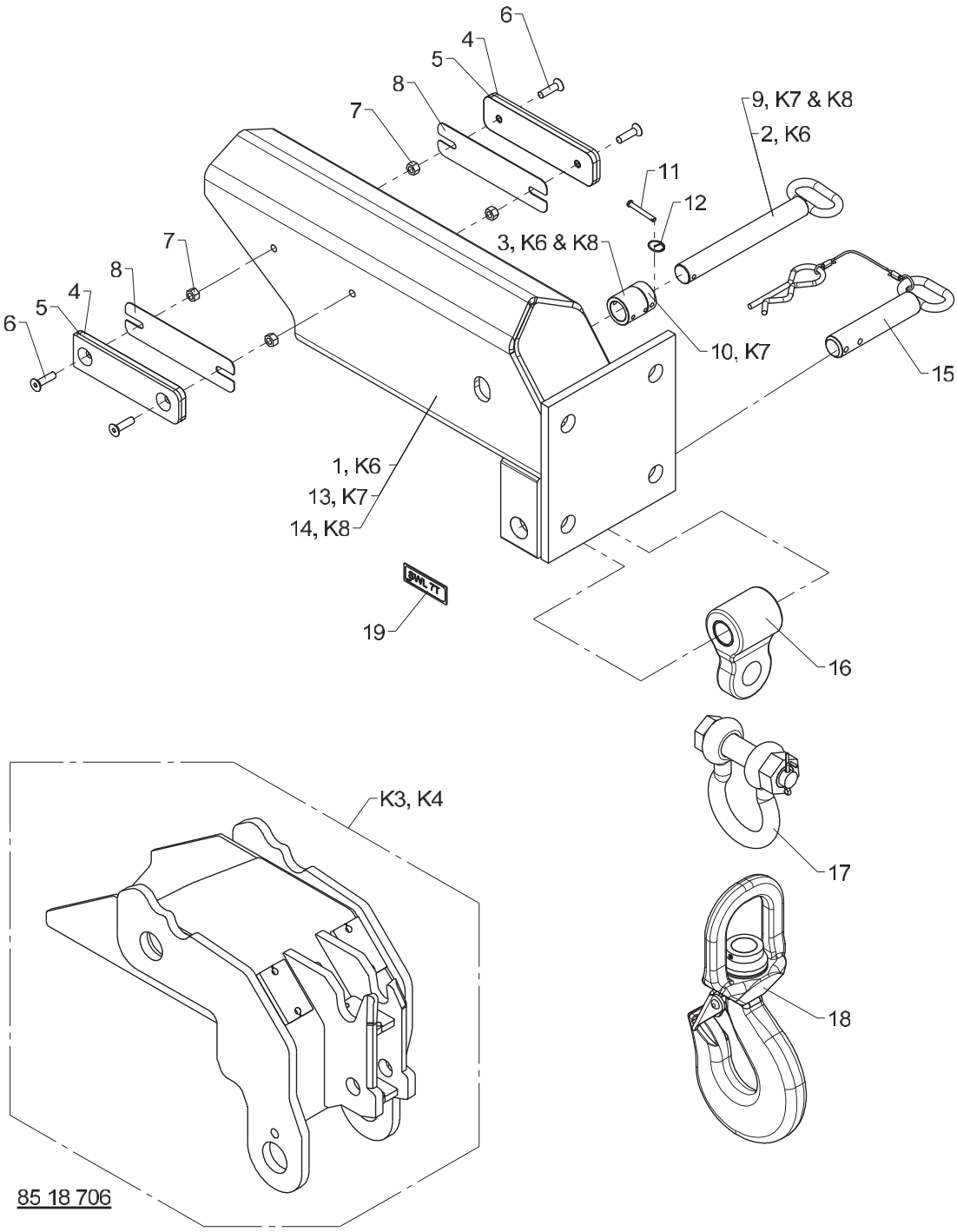

Mounting fittings for MEWP, K6, K7 & K8

Created 20-06-2013
Modified 18-09-2014

Pos	Qty.	Part no.	Description	Remarks
		8518120	Fittings, MEWP, K7	
		8518130	Fittings, MEWP, K8	
		8518150		
1	1	8518701	Insert 5020-K6	
2	1	6390536	Pin for suspension	
3	1	6390495	Washer, long	K6 & K8
4	2	6304359	Spacer	
5	2	6348211	Spacer	
6	4	30995	Countersunk screw	MK8 x 30
7	4	30886	Lock nut, stainless	M8
8	2	6305108	Adjusting plate	
9	1	6390676	Pin for suspension	
10	1	6390494	Washer, short	K7
11	1	31280	Cotter bolt	ø5 x 40
12	1	33458	Lock ring	
13	1	8518627	Insert 4720-K7	
14	1	8518628	Insert 4720-K8	
15	1	6304266	Lock pin with split pin	
16	1	6292853	Hook suspension	
17	1	62118	Shackle	
18	1	63292	Hook, 8 t incl. bearing	
19	1	66917	Label, SWL 7 t	

50/345

63 91 710
63 91 700
63 91 690
Internal ref. 63 91 680

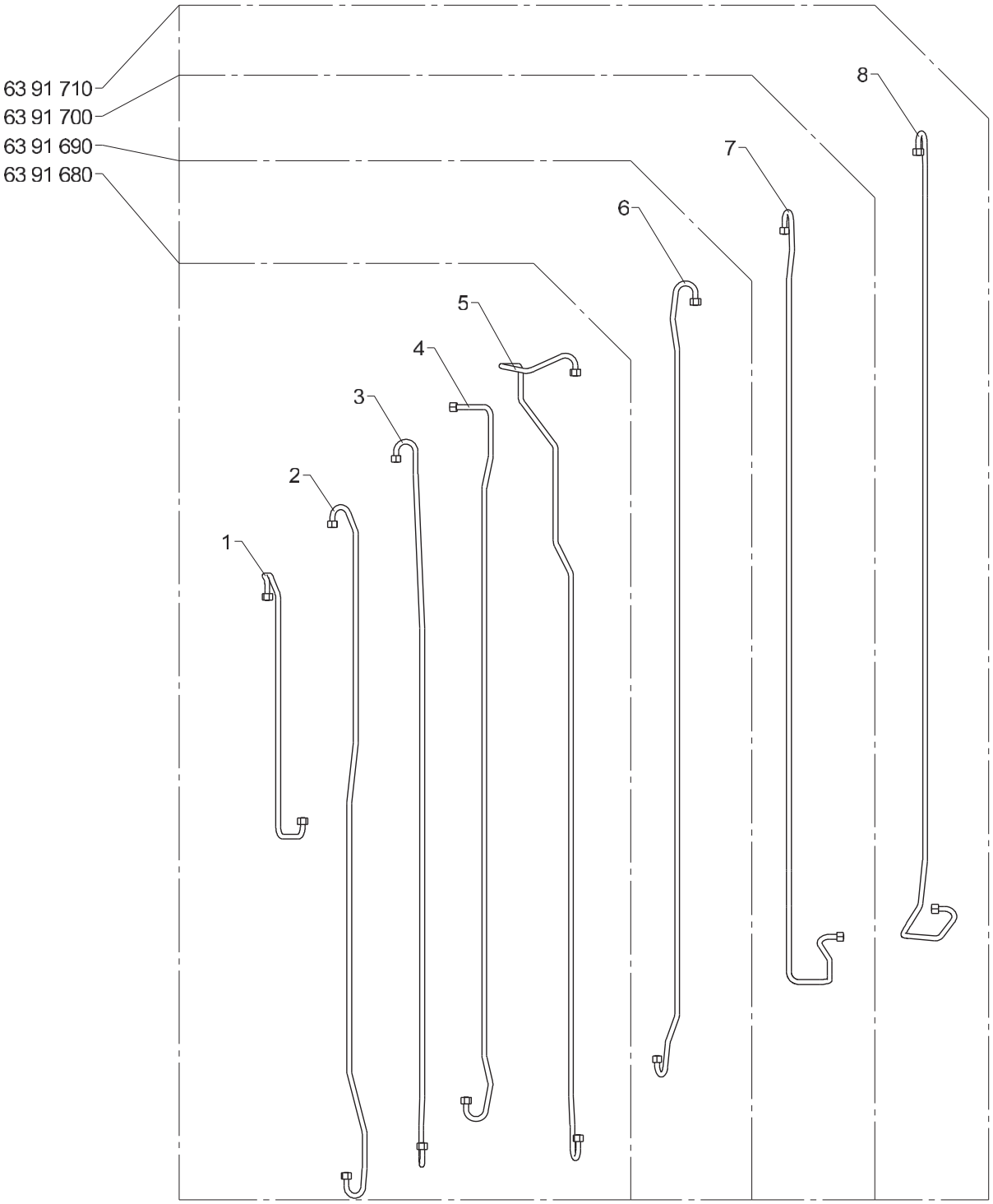

Hydraulic pipes, Walform for 5020/4020, K5-K8

Pos	Qty.	Part no.	Description	Remarks
		6391680		
		6391690		
		6391700		
		6391710		
1	1	6390681	Pipe (C1 extend, Walform)	
2	1	6390683	Pipe (C2 extend, Walform)	
3	1	6390685	Pipe (C3 extend, Walform)	
4	1	6390687	Pipe (C4 extend, Walform)	
5	1	6390689	Pipe (C5 extend, Walform)	
6	1	6390692	Pipe (C6 extend, Walform)	
7	1	6390694	Pipe (C7 extend, Walform)	
8	1	6390696	Pipe (C8 extend, Walform)	

50/345

Internal ref. 63 92 170

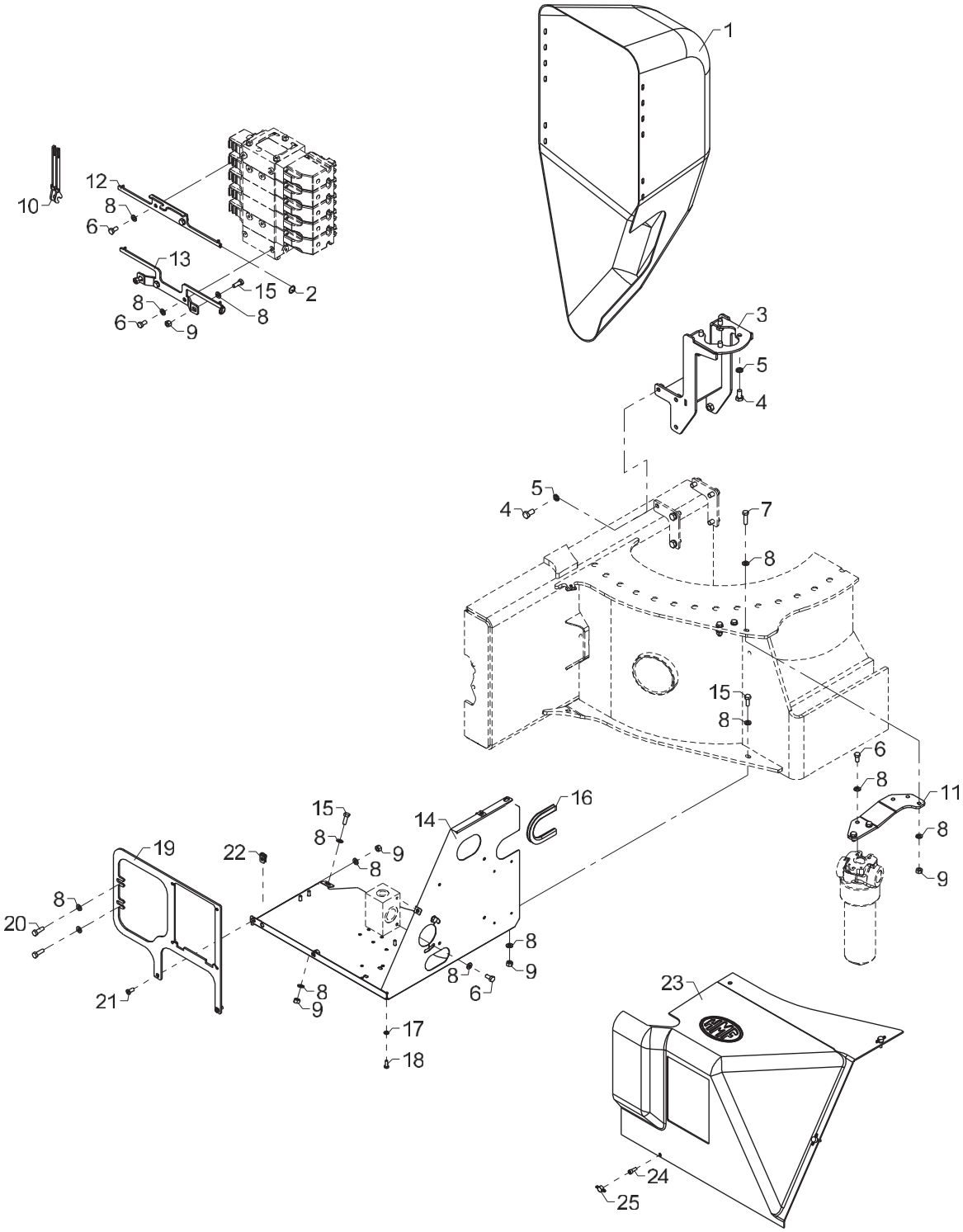

Brackets and protection plates

Pos	Qty.	Part no.	Description	Remarks
1	1	64430	Protective plate,control valve	
2	2	33458	Lock ring	
3	1	6390081	Adapter for swivel coupling	
4	10	31517	Set screw, stainless	M10 x 20
5	10	30933	Nordlock washer	10 mm
6	9	30131	Set screw, stainless	M8 x 16
7	3	30135	Set screw, stainless	M8 x 30
8	25	31147	Face washer, 8 mm	
9	9	30886	Lock nut, stainless	M8
10	2	6390067	Lever	
11	1	6390042	Bracket for filter	
12	1	6390085	Bracket for valve	
13	1	6390086	Bracket for valve	
14	1	6390041	Valve bracket	
15	4	30133	Set screw, stainless	
16	1	46587	Rubber protection	235 mm
17	4	32302	Face washer, stainless	6 mm
18	4	30112	Set screw, stainless	M6 x 16
19	1	6390043	Bracket for RCL	
20	2	30134	Set screw, stainless	M8 x 25
21	2	32481	Screw	MCL8 x 16
22	3	31068	Clip	M6 0,5 - 4,0 mm.
23	1	64429	Protection	
24	3	31539	Screw, stainless	MC6 x 16
25	3	64353	Thumb screw	M6

50/345

63 90 550
Internal ref. 63 90 510

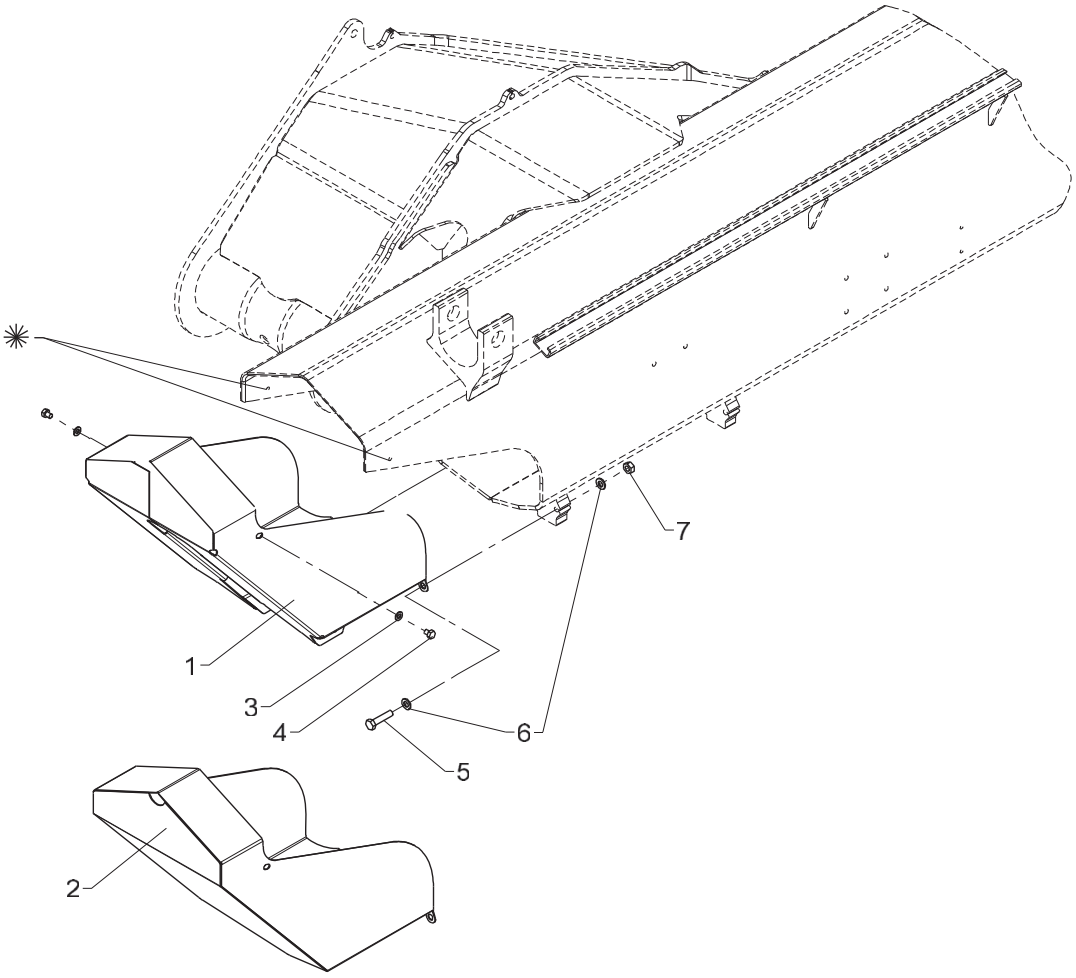

From loader 1150001
To loader

Created 16-08-2010
Modified

Shield at the end of the jib

Pos	Qty.	Part no.	Description	Remarks
		6390510	Shield for reels	Indvendig slangeføring
		6390550	Protection of jib	Slangebakker/slangeruller
1	1	6390079	Protection plate, jib	Indv. sl. føring
2	1	6390173	Protection plate, jib	Slangebakker/slangeruller
3	2	31147	Face washer, 8 mm	
4	2	30105	Set screw, stainless	M8 x 10
5	2	30377	Set screw	M10 x 45
6	4	31565	Washer, stainless	10 mm
7	2	30858	Nut	M10

50/345

Internal ref. 63 92 800

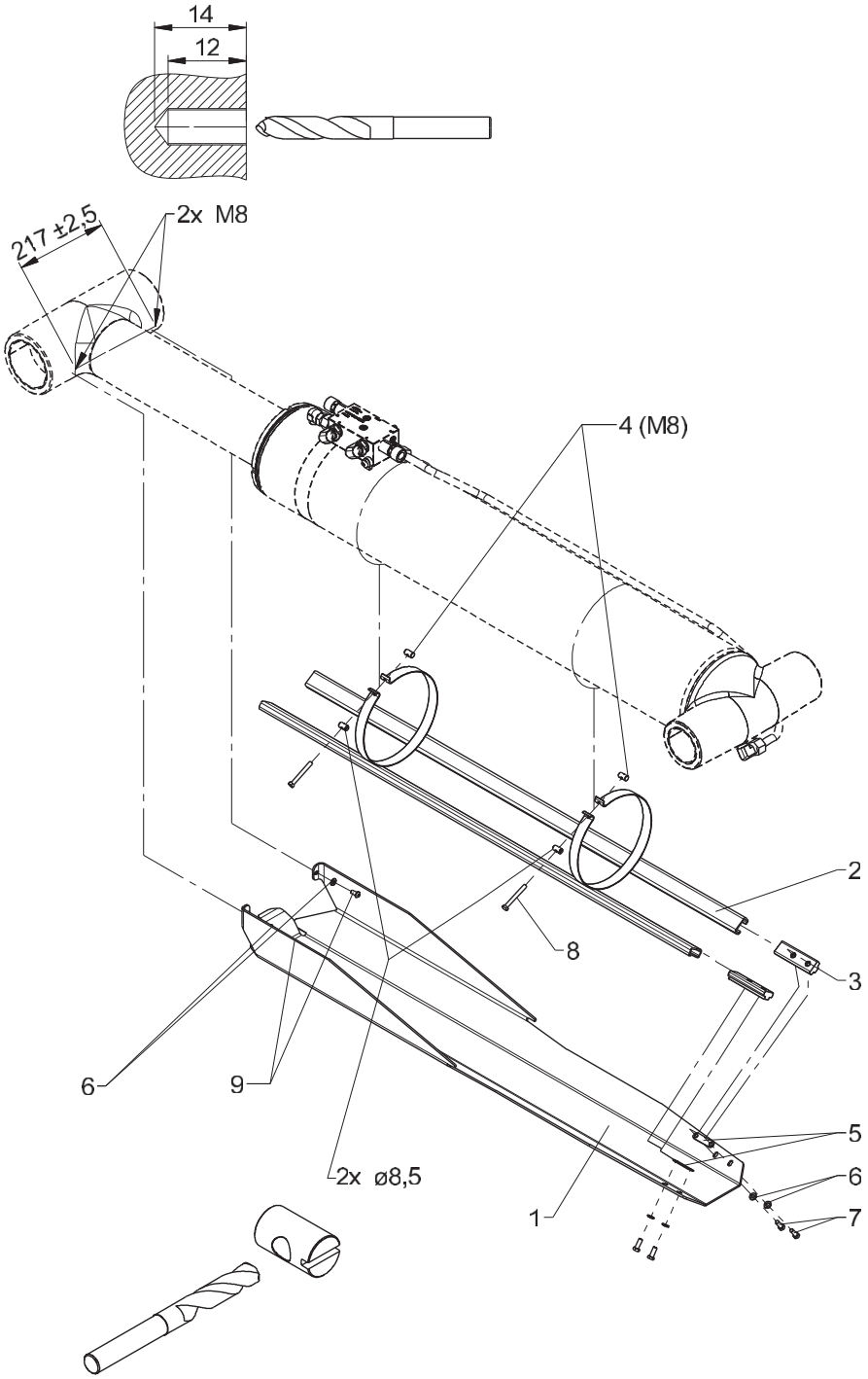

From loader 1150001
To loader

Created 22-10-2015
Modified

Protective guard, jib cylinder, cpl.

Pos	Qty.	Part no.	Description	Remarks
1	1	6392801		
2	1	6392802		
3	2	63689	Slide block with bushing	
4	4	31297		
5	2	6367297		
6	6	31147	Face washer, 8 mm	
7	4	30133	Set screw, stainless	
8	2	32250	Set screw	M8 x 65
9	2	30925	Round-head screw	M8 x 16

50/345

Internal ref. 63 41 050

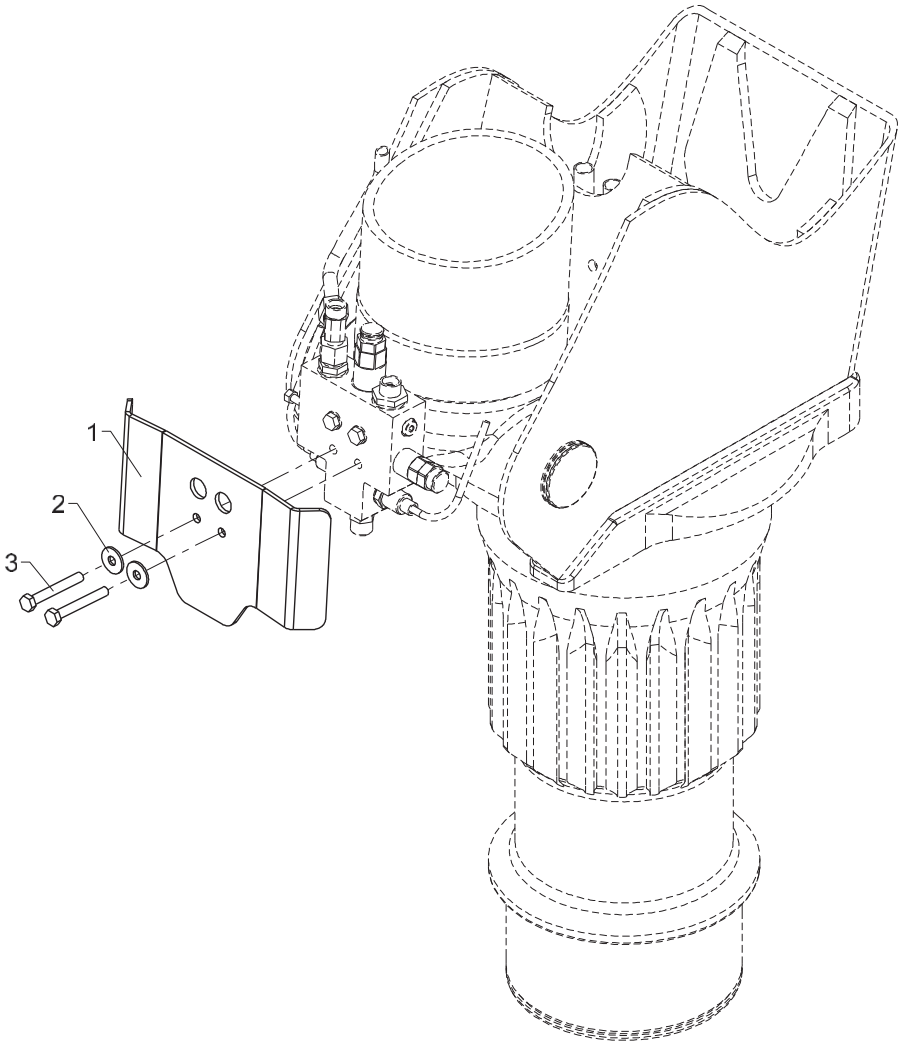

From loader 1150001
To loader

Created 13-01-2010
Modified 09-01-2014

Protective guard (LHV boom), cpl.

Pos	Qty.	Part no.	Description	Remarks
1	1	6340949	Protective guard (LHV boom)	
2	2	31136	Washer, stainless	8 mm
3	2	30141	Set screw, stainless	M8 x 60

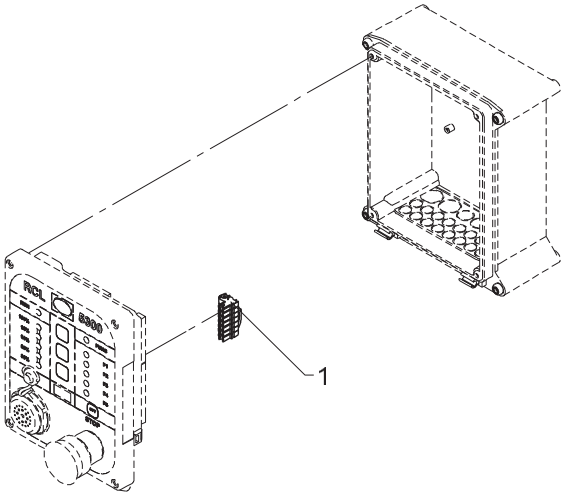
1

542 20 340

CAN termination, RCL53xx

From loader 1150001
To loader

Created 15-01-2013
Modified

Pos	Qty.	Part no.	Description	Remarks
1	1	29340	CAN termination/RCL53xx	

50/345

Internal ref. 70 08 010

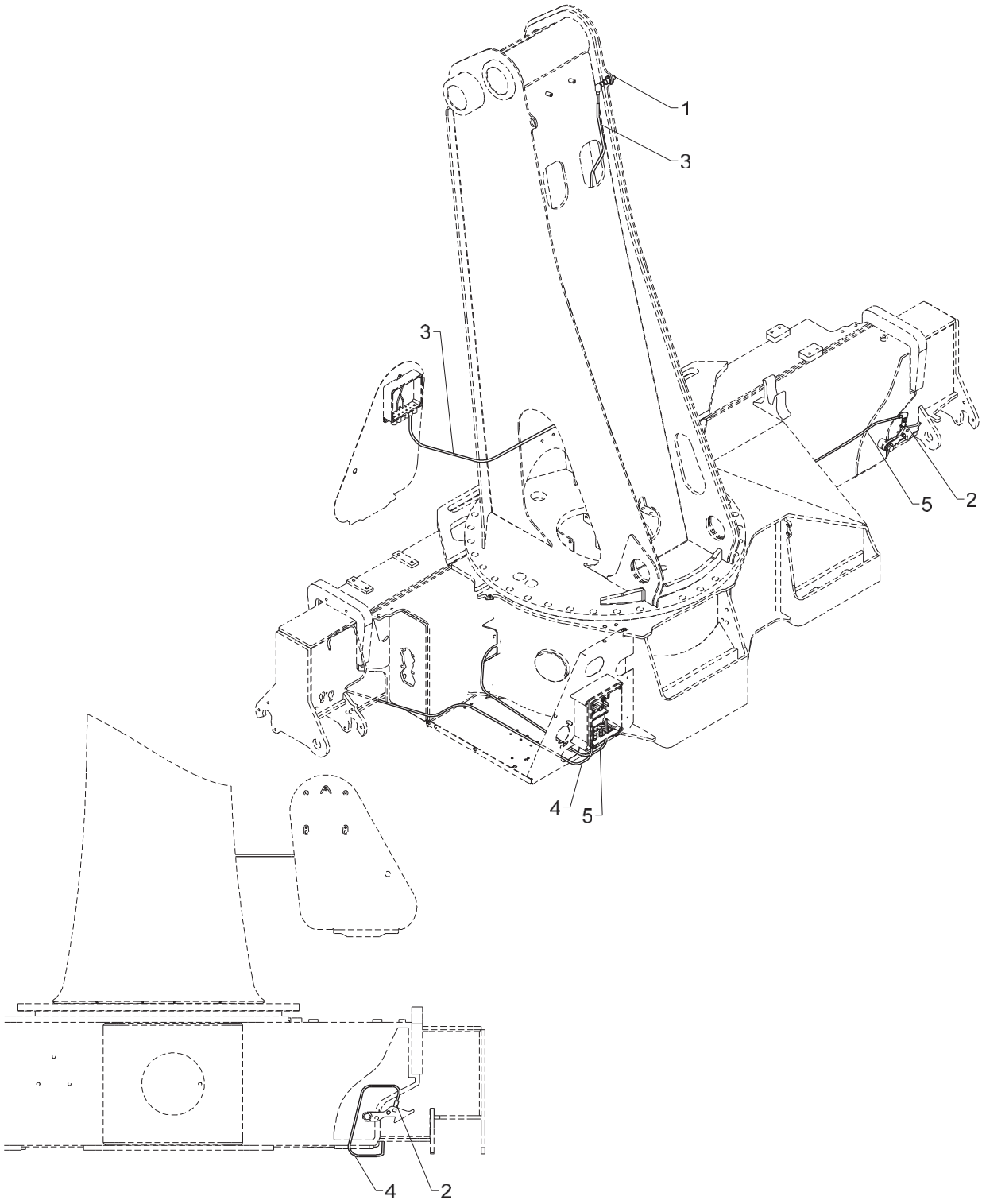

Obsolete

542 20 350

From loader 1150001
To loader

Created 24-05-2013
Modified

BEHEW

Pos	Qty.	Part no.	Description	Remarks
1	1	28980	Proximity switch	
2	2	29257	Proximity switch M12x44, 4mm	
3	1	28077	Cable with plug	
4	1	28117	Cable with plug	
5	1	28077	Cable with plug	

50/345

Internal ref. 70 08 010

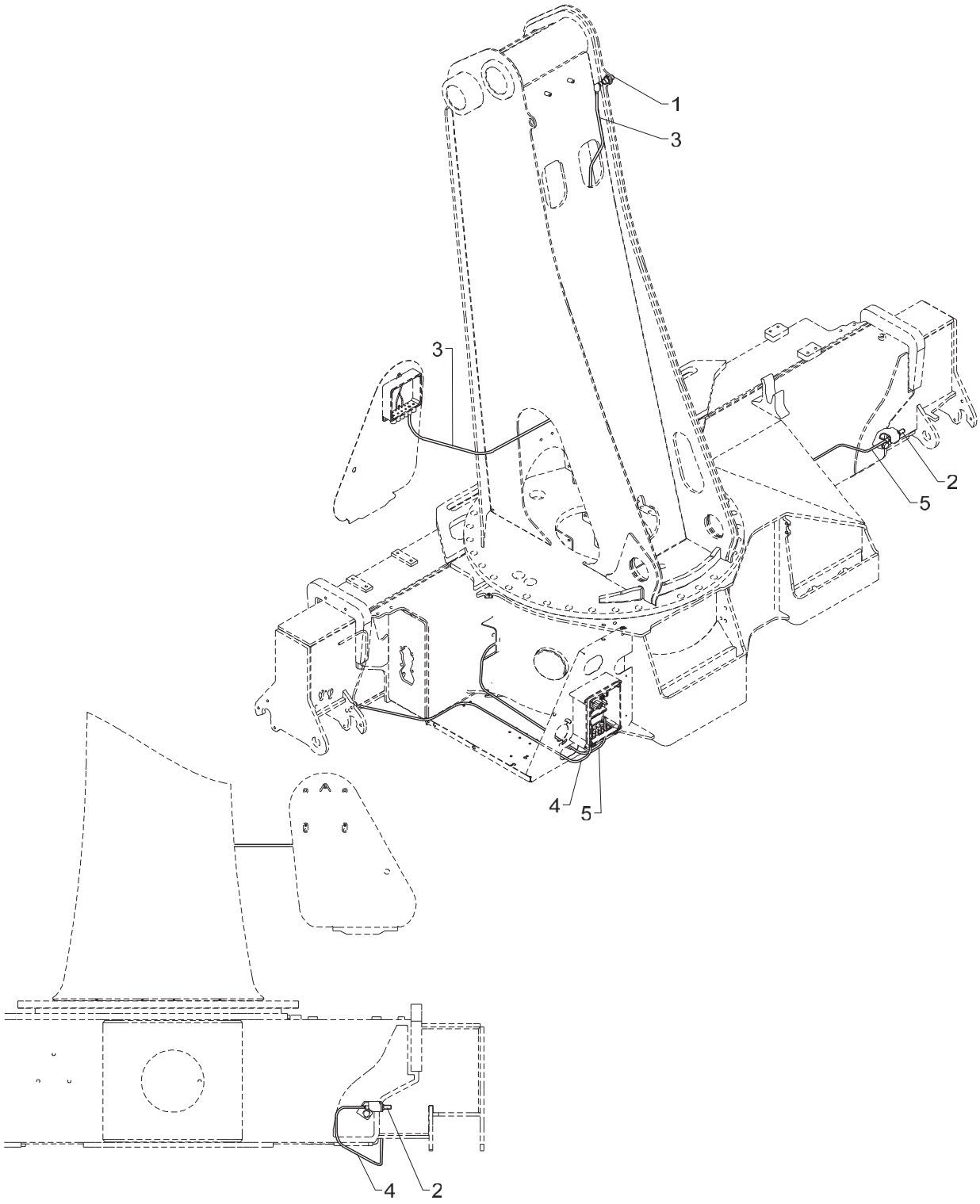

BEHEW

Pos	Qty.	Part no.	Description	Remarks
1	1	28980	Proximity switch	
2	2	29257	Proximity switch M12x44, 4mm	
3	1	28077	Cable with plug	
4	1	29223	Cable with socket, 2 m	
5	1	29224	Cable with socket, 5 m	

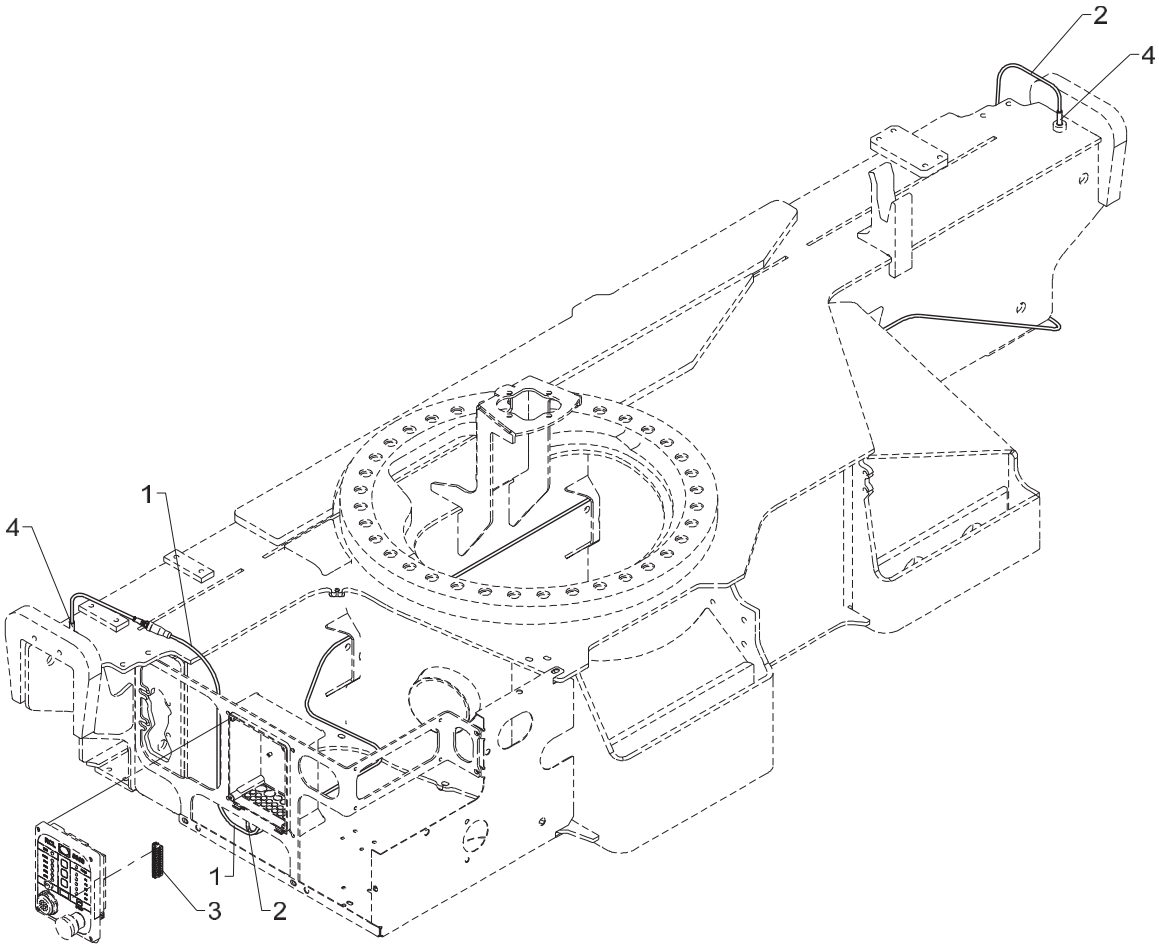
2
4
1
4
1
3
2

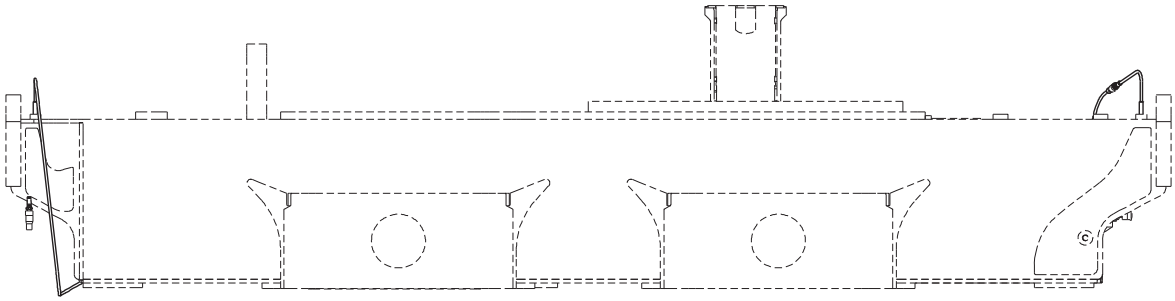

From loader 1150001
To loader

Created 18-12-2012
Modified

CYL

Pos	Qty.	Part no.	Description	Remarks
1	1	29223	Cable with socket, 2 m	
2	1	29224	Cable with socket, 5 m	
3	1	29322	Plug, 12-polar for RCL 53XX	
4	2	29282	Proximity switch M12-4mm NO	

50/345

Internal ref. 70 05 620

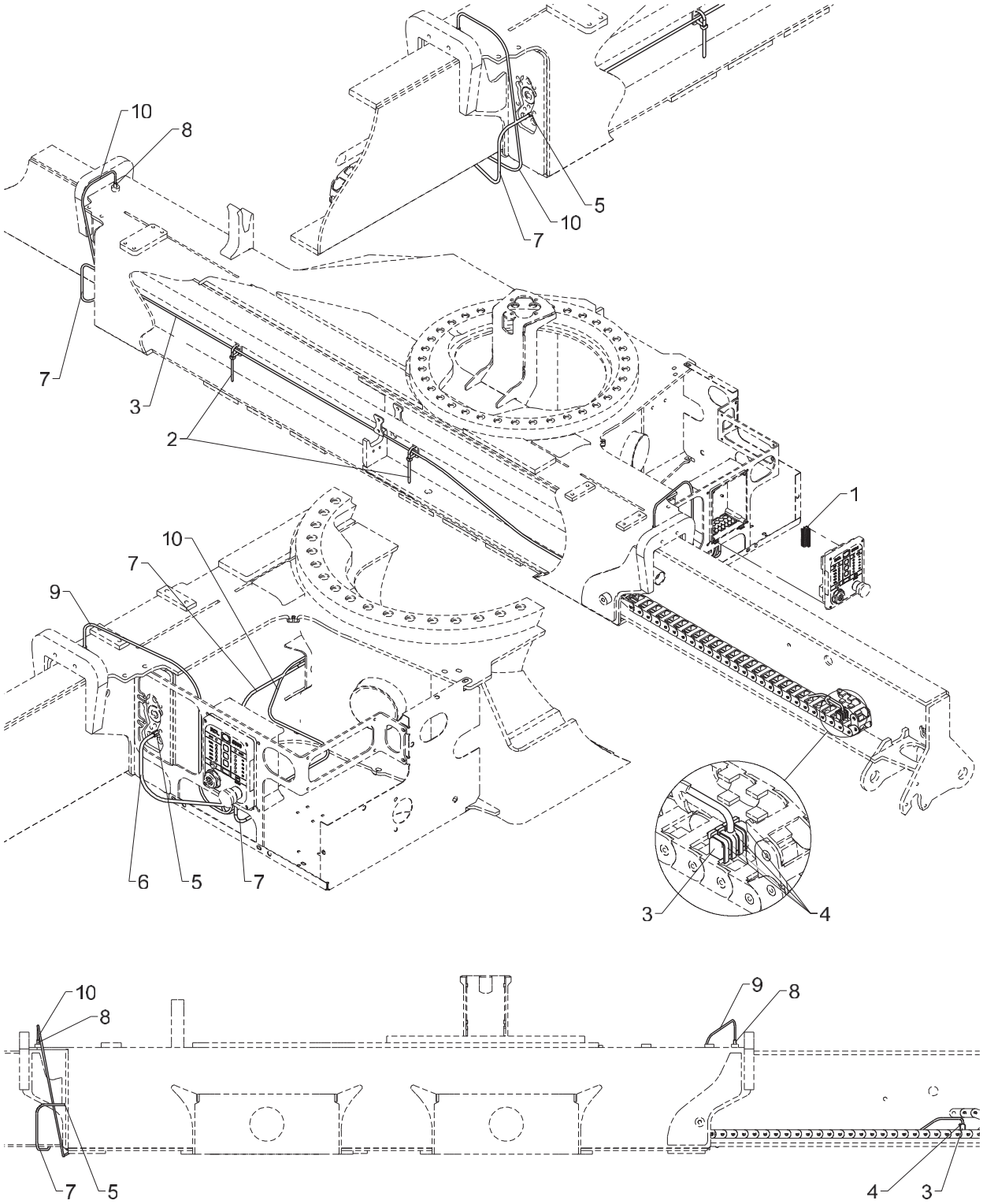

CYBEL

Pos	Qty.	Part no.	Description	Remarks
1	1	29322	Plug, 12-polar for RCL 53XX	
2	4	27275	Cable tie, black, 7.6x385mm	
3	2	29253	Tilt sensor, nylon drag chain	
4	8	27274	Clip	
5	2	29443	Panel lead-in M8 - 3-polar	
6	1	29265	Cable 2 m, M8 socket	
7	1	29264	Cable 5 m, M8 socket	
8	2	29282	Proximity switch M12-4mm NO	
9	1	29223	Cable with socket, 2 m	
10	1	29224	Cable with socket, 5 m	

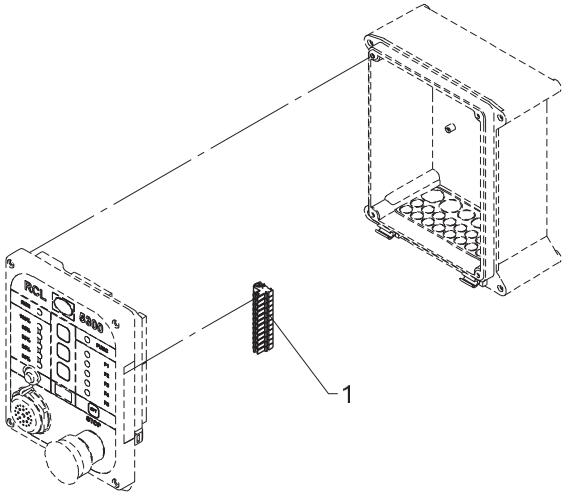
1

PAS

Pos	Qty.	Part no.	Description	Remarks
1	1	29322	Plug, 12-polar for RCL 53XX	

50/345

Internal ref. 70 08 040

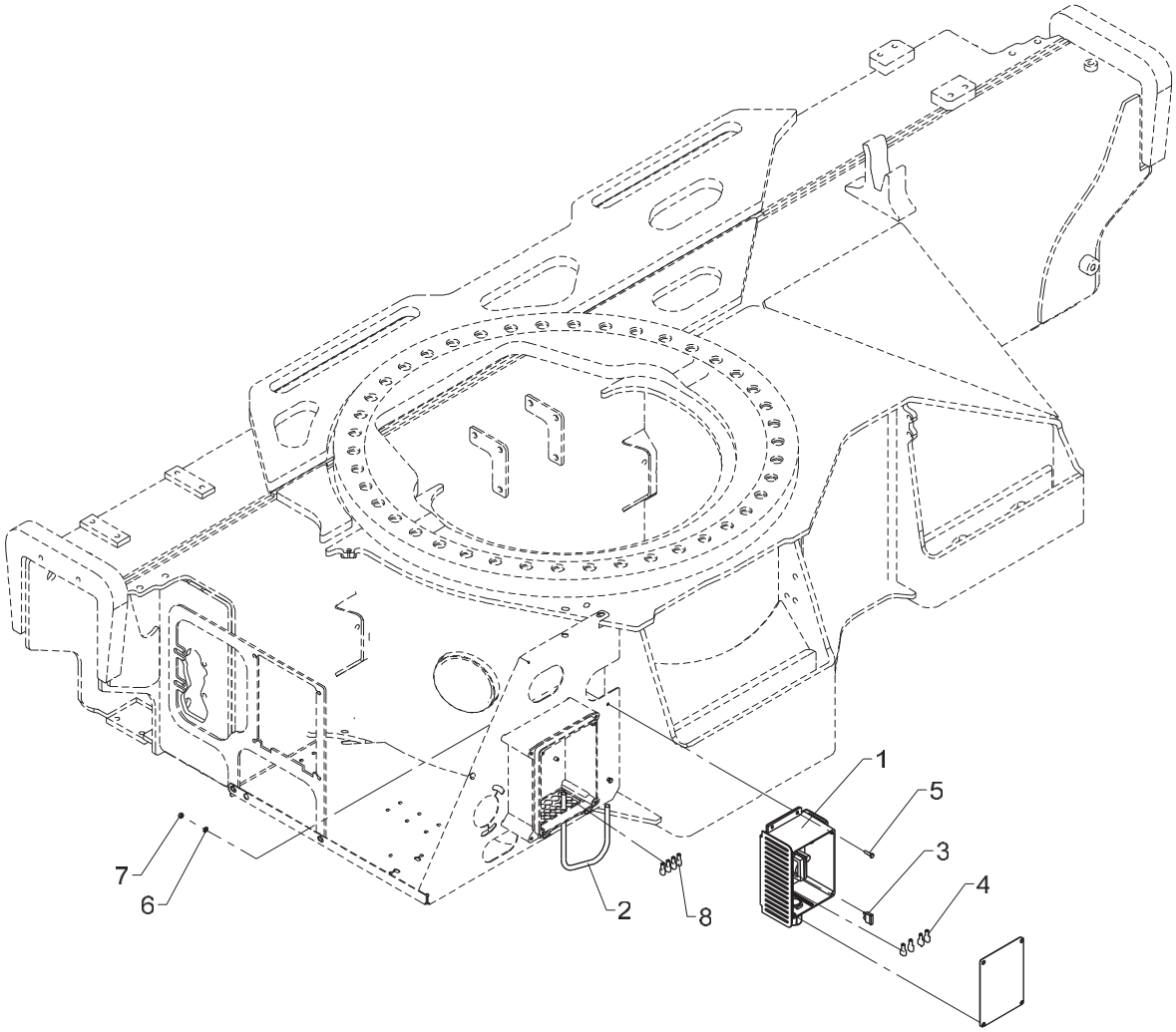

12 V converter

Pos	Qty.	Part no.	Description	Remarks
1	1	29478	Converter, 12-24 V, complete	
2	1	28278	Cable 4 x 2.5	
3	1	27378	Fuse 25 Amp	
4	4	27428	Clip	
5	4	30125	Set screw	M4 x 16
6	4	31188	Washer, stainless	4 mm
7	4	30857	Lock nut	M4
8	4	27428	Clip	

50/345

Internal ref. 70 07 950

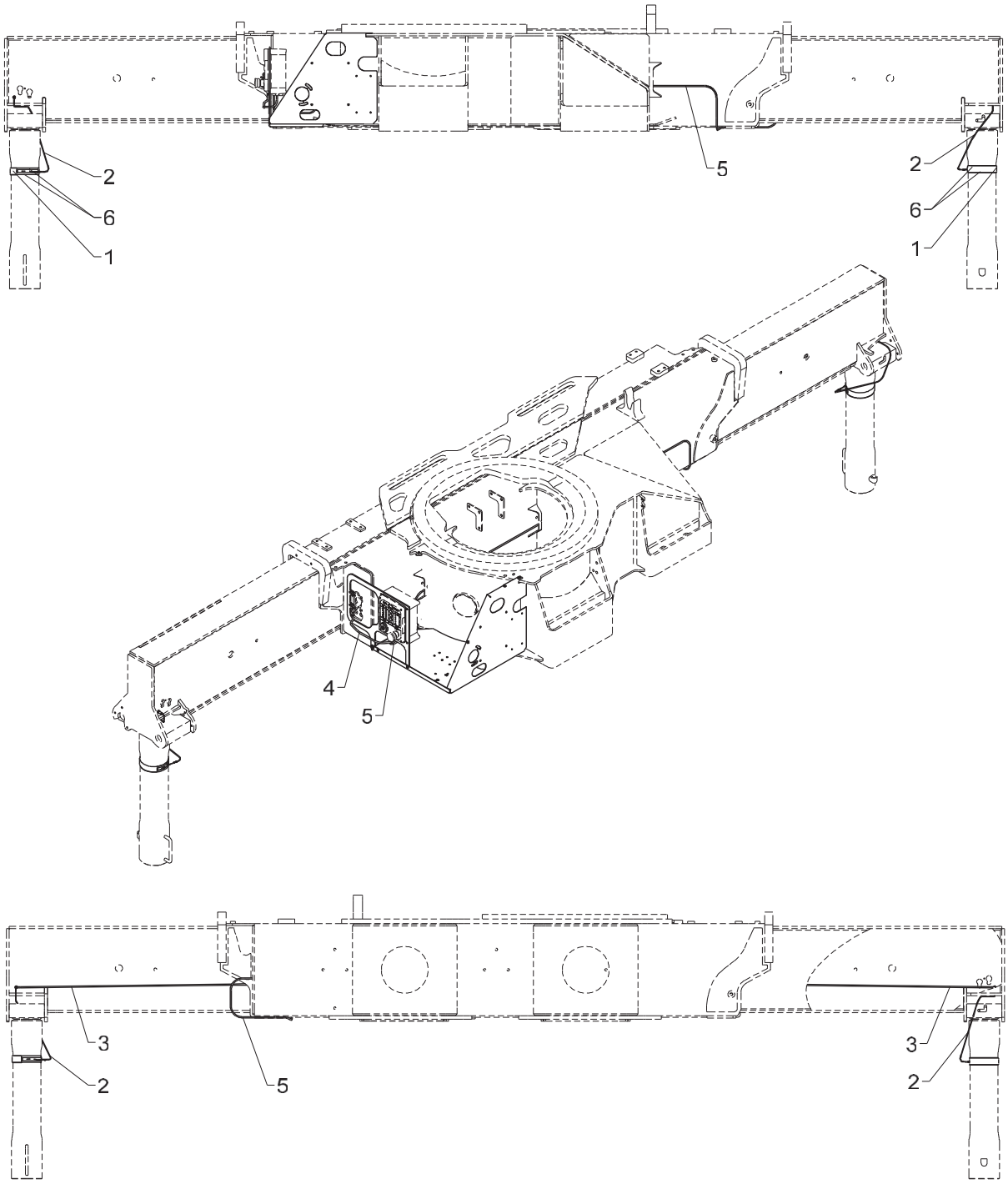

From loader 1150001
To loader

Created 29-05-2013
Modified

Alarm flash

Pos	Qty.	Part no.	Description	Remarks
1	2	29431	Alarm flash, yellow 24V, 34 cm	
2	2	29445	Cable, M8 - PUR 3-polar	
3	2	29436	Cable M8, socket and plug 6.3m	
4	1	29265	Cable 2 m, M8 socket	
5	1	29264	Cable 5 m, M8 socket	
6	4	29299	Cable tie, black 7.6x760mm	

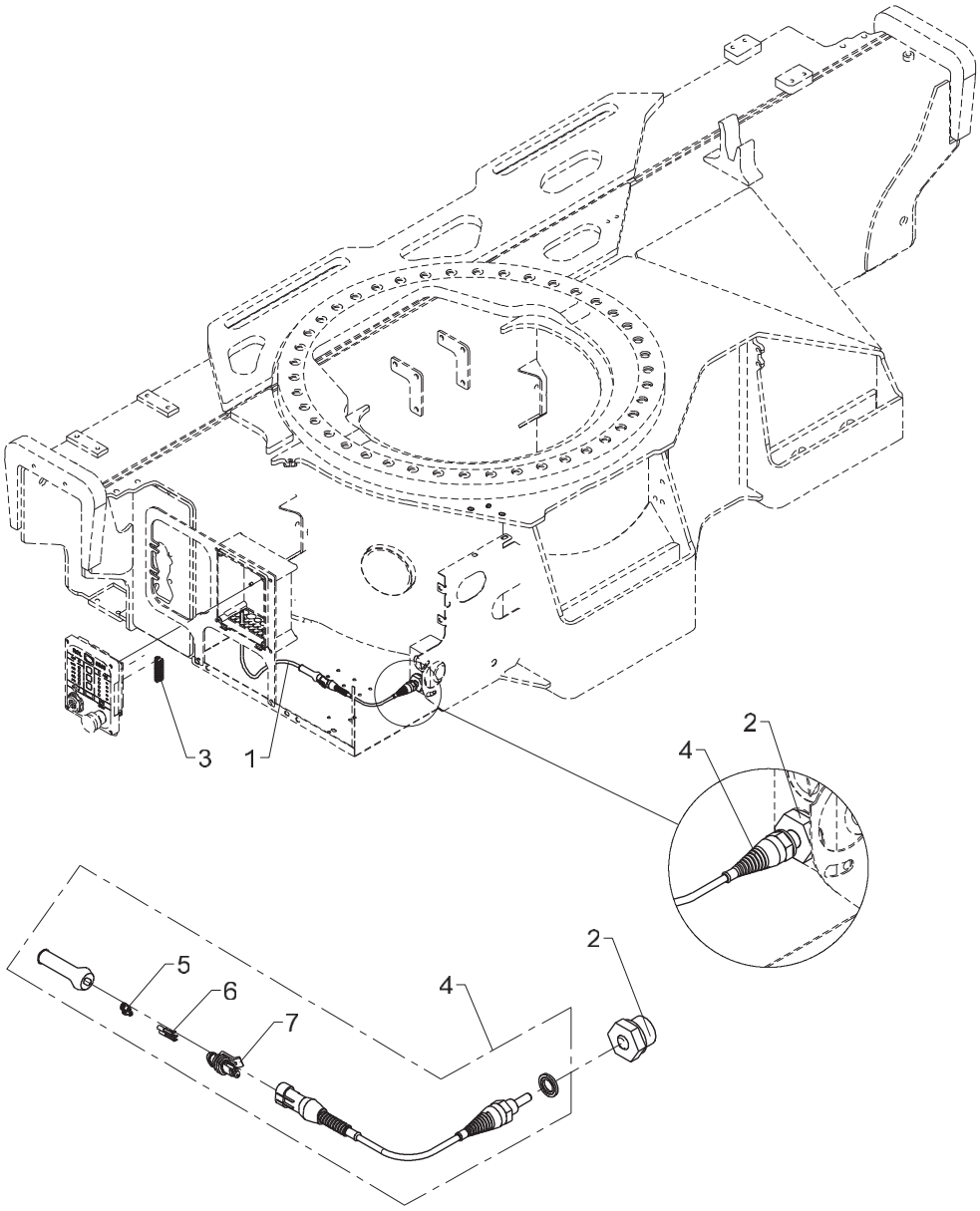
3
1
2
4
2
5
6
7
4

From loader 1150001
To loader

Temperature monitoring without oil cooler

Created 16-11-2012
Modified 01-10-2015

Pos	Qty.	Part no.	Description	Remarks
1	1	28249	Cable 2 x 0.75	1.5 m
2	1	25029	Reducing connection	RED-R 3/4-WD/R 1/4
3	1	29321	Plug, 10-polar for RCL 53XX	
4	1	49652	Thermostat for RCL5300	
5	2	29159	Cable lead-in, AMP	
6	2	28844	Socket, AMP	
7	1	28843	Bipolar socket, AMP	

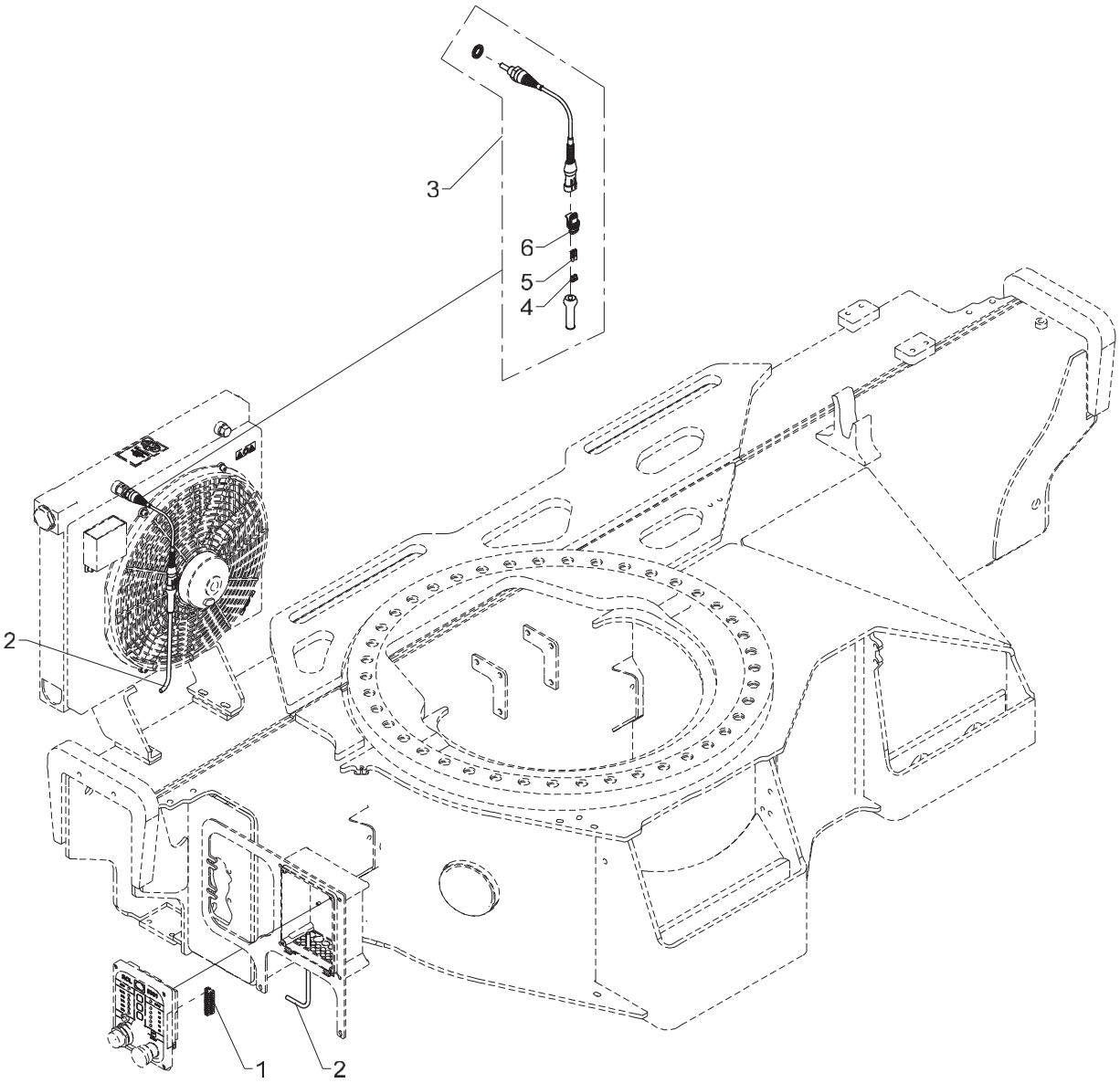
3
6
5
4
2
1
2

Temperature monitoring for oil cooler

Pos	Qty.	Part no.	Description	Remarks
1	1	29321	Plug, 10-polar for RCL 53XX	
2	1	28249	Cable 2 x 0.75	2,3 m
3	1	49652	Thermostat for RCL5300	
4	2	29159	Cable lead-in, AMP	
5	2	28844	Socket, AMP	
6	1	28843	Bipolar socket, AMP	

50/345

Internal ref. 70 05 760

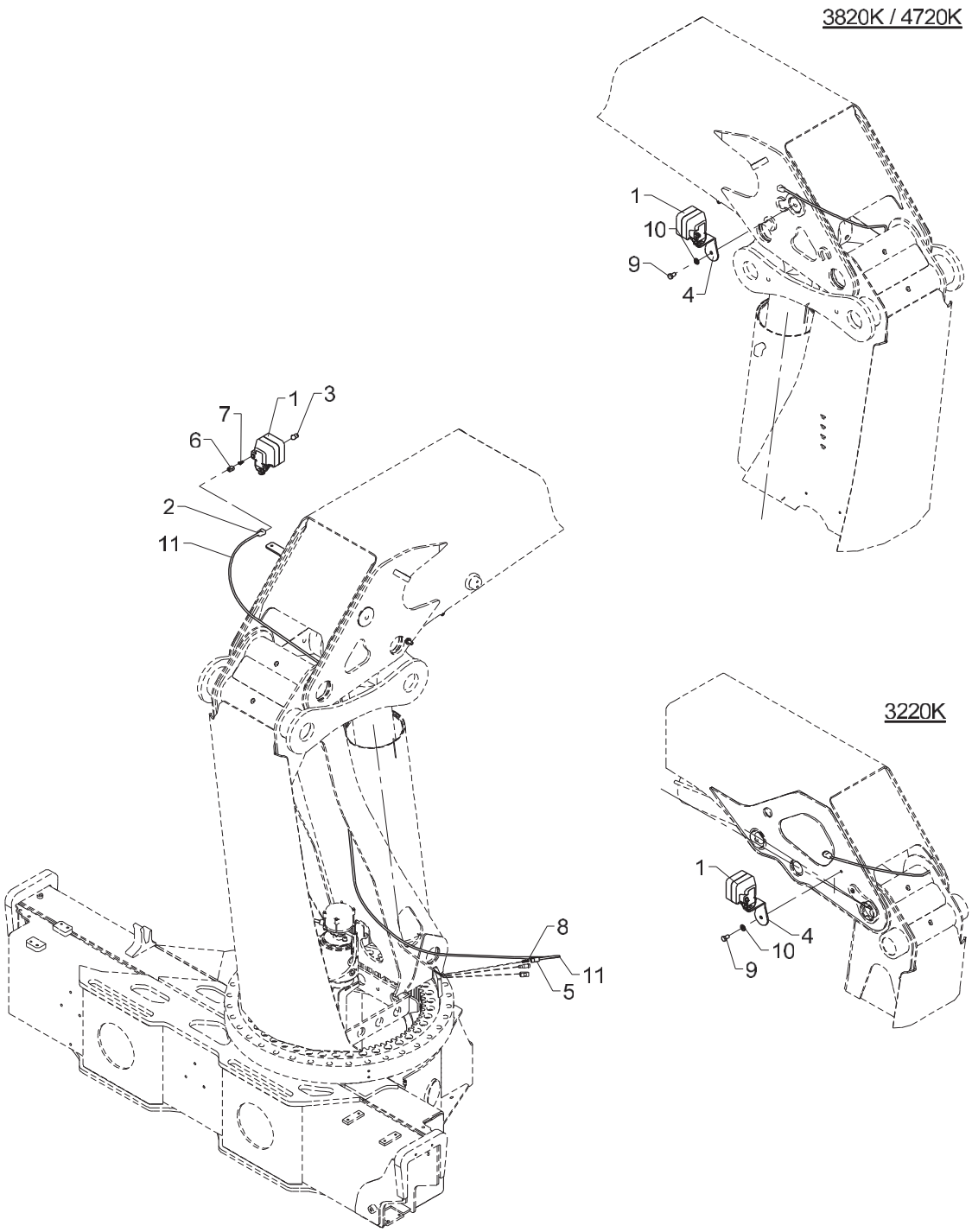

Obsolete

542 20 430

From loader 1150001
To loader

Created 18-02-2011
Modified

Spotlight, boom

Pos	Qty.	Part no.	Description	Remarks
1	1	27138	Spotlight	
2	1	29182	Cable lead-in	
3	1	27828	Bulb 24V, 70W	
4	1	6340219	Fittings	
5	1	27448	Multisocket - female	
6	1	27447	Multisocket - male	
7	2	27422	Plug	
8	2	27433	Plug	
9	1	30175	Set screw	M12 x 20
10	1	32338	Washer	12 mm
11	1	27215	Wire 2 x 1.5	3,3 m

50/345

Internal ref. 70 08 350

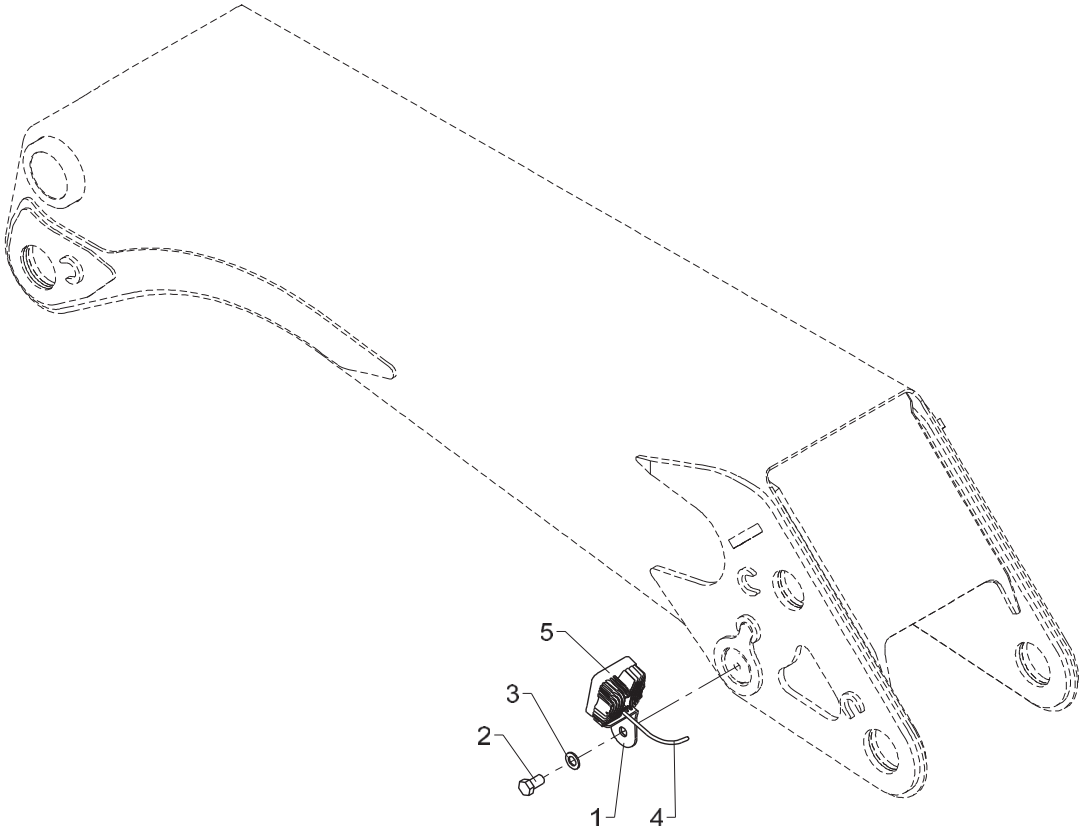

Spotlight, boom

Pos	Qty.	Part no.	Description	Remarks
1	1	7004024	Bracket for spotlight, boom	
2	1	30242	Set screw	M20 x 35
3	1	31179	Washer	20 mm
4	1	29462	Cable, LED spotlight, 9.0m	
5	1	29400	Spotlight LED 27 W	

50/345

Internal ref. 70 05 750

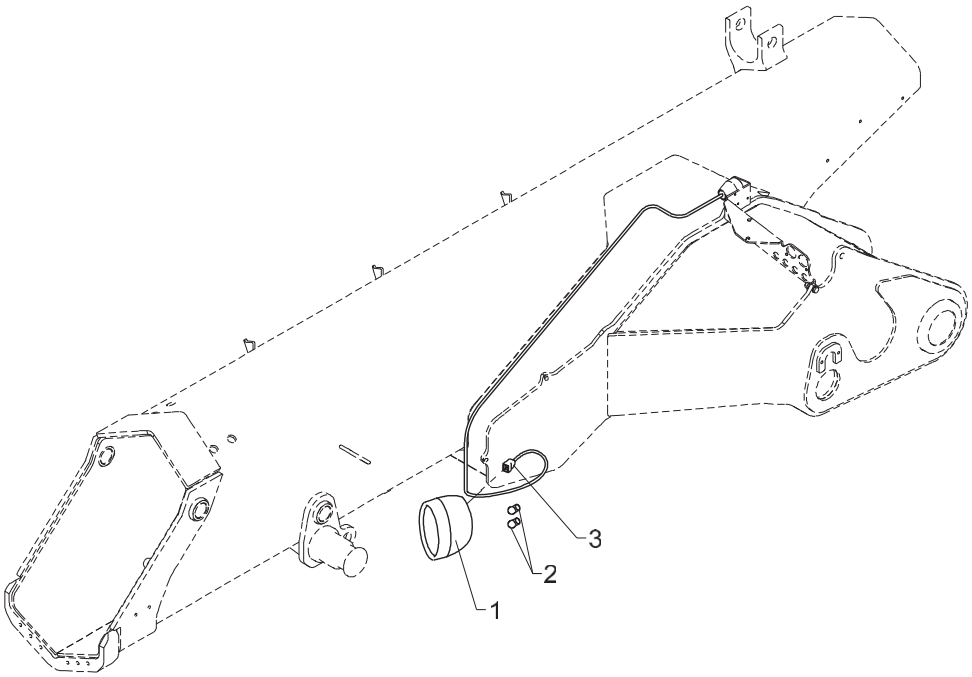

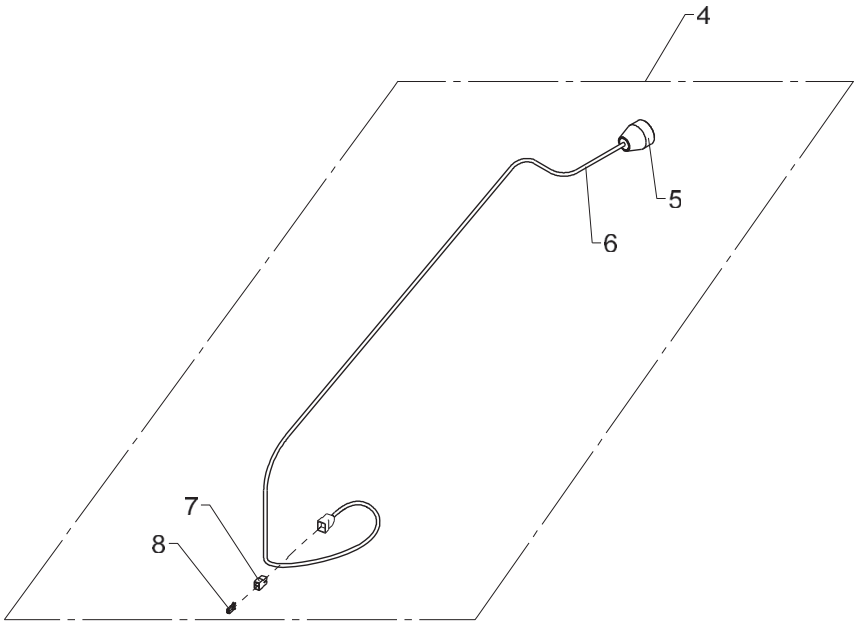

Obsolete

542 20 440

From loader 1150001
To loader

Created 01-02-2011
Modified

Spotlight, jib

Pos	Qty.	Part no.	Description	Remarks
1	1	28308	Working lamp, Twinpower 2x70W	
2	2	27828	Bulb 24V, 70W	
3	1	29182	Cable lead-in	
4	1	28747	Wiring, column, 25_45	
5	1	7004005	Plug housing, jib	
6	1	27215	Wire 2 x 1.5	
7	1	27447	Multisocket - male	
8	2	27422	Plug	

50/345

Internal ref. 70 07 510

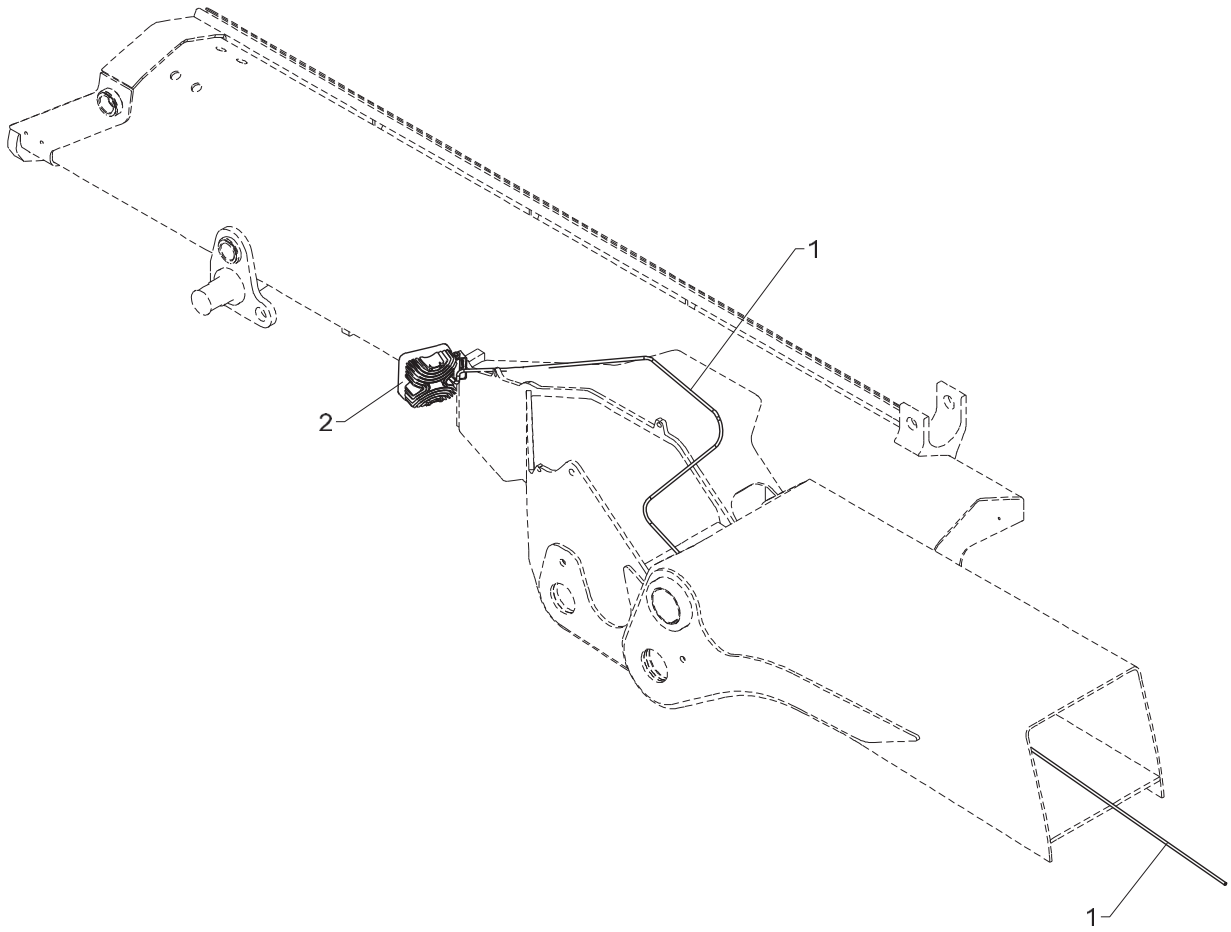

Spotlight, jib

Pos	Qty.	Part no.	Description	Remarks
1	1	29462	Cable, LED spotlight, 9.0m	
2	1	29400	Spotlight LED 27 W	

50/345

Internal ref. 70 07 530

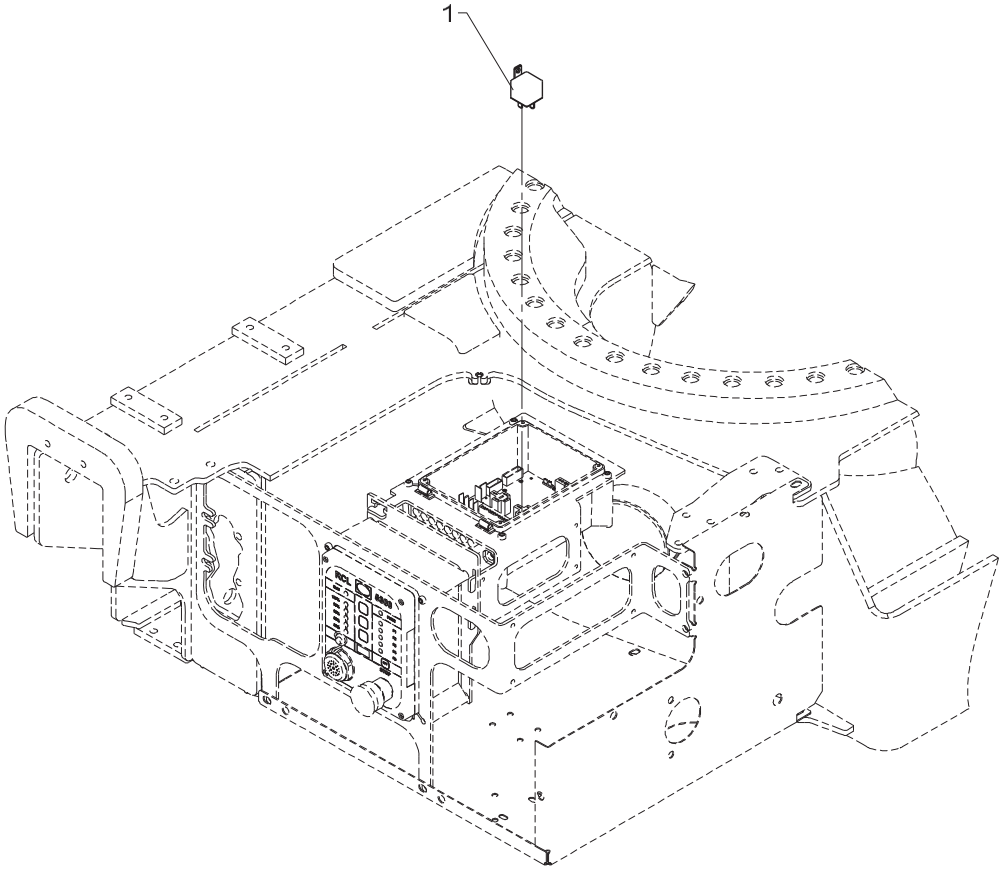

542 20 450

From loader 1150001
To loader

Created 01-02-2013
Modified

Spotlight, radio remote controlled.

Pos	Qty.	Part no.	Description	Remarks
1	1	27342	Relay, 24V	

50/345

70 05 820
Internal ref. 70 05 790

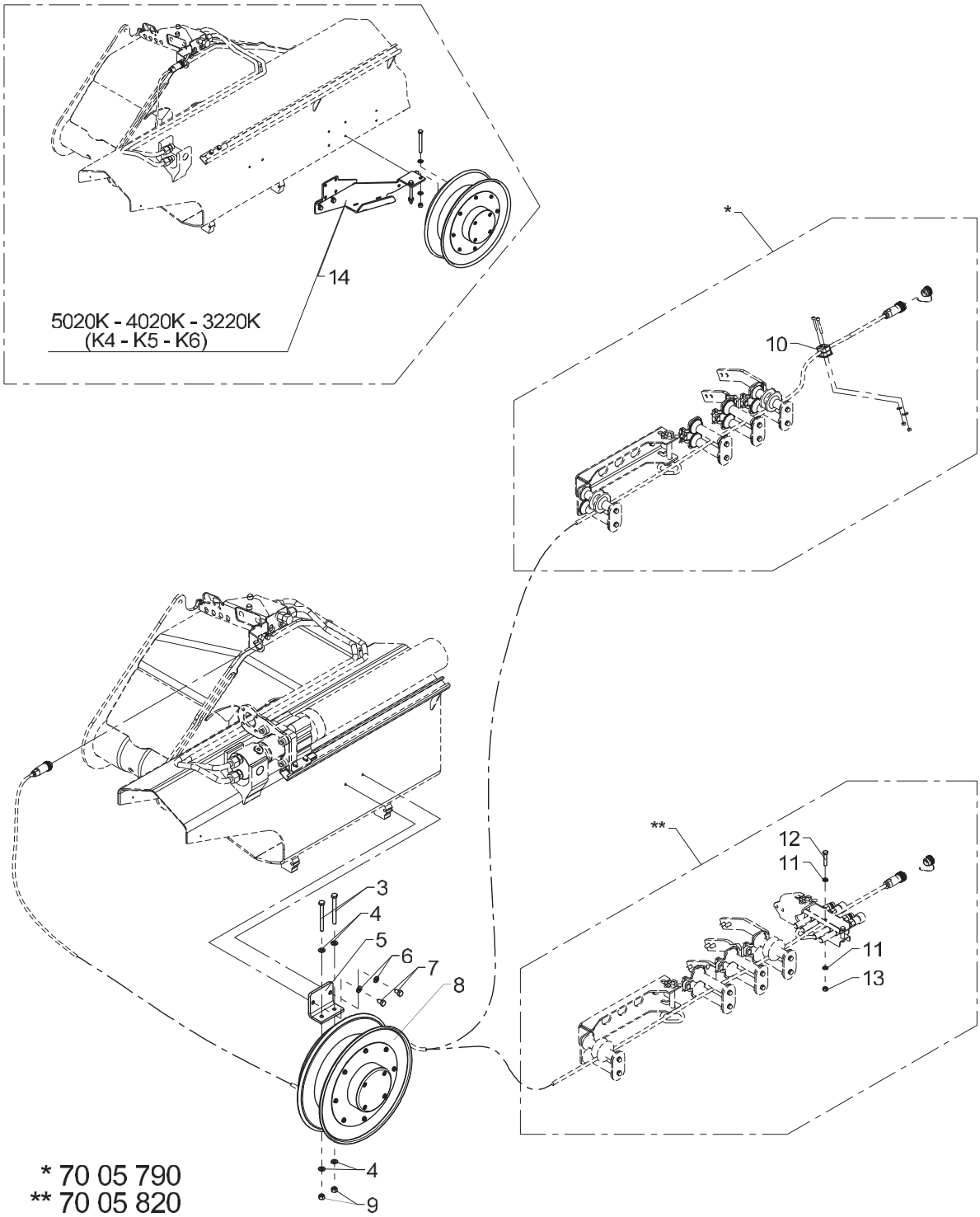

Obsolete

542 22 110

From loader 1150001
To loader 1150234

Created 17-08-2010
Modified 09-11-2010

FJ supply, hose reel, multi- and quick-release coupling

Pos	Qty.	Part no.	Description	Remarks
		7005790	FJ supply, reel, multi coupl.	
		7005820	FJ supply, reel,quick-coupling	
1	1	29275	Cable socket 7-polar 10 A	
2	1	58103	Cover	
3	2	30106	Steel bolt	M10 x 100
4	4	31565	Washer, stainless	10 mm
5	1	6301057	Bracket for cable drum	
6	2	31177	Washer	10 mm
7	2	30153	Set screw	M10 x 16
8	1	29216	Cable drum	
9	2	30888	Lock nut	
10	1	31425	Clamp	
11	2	31147	Face washer, 8 mm	
12	1	30138	Steel bolt, stainless	M8 x 45
13	1	30886	Lock nut, stainless	M8
14	1	6392162	Bracket for hose reel,K4-K6	

50/345

70 09 610
Internal ref. 70 09 600

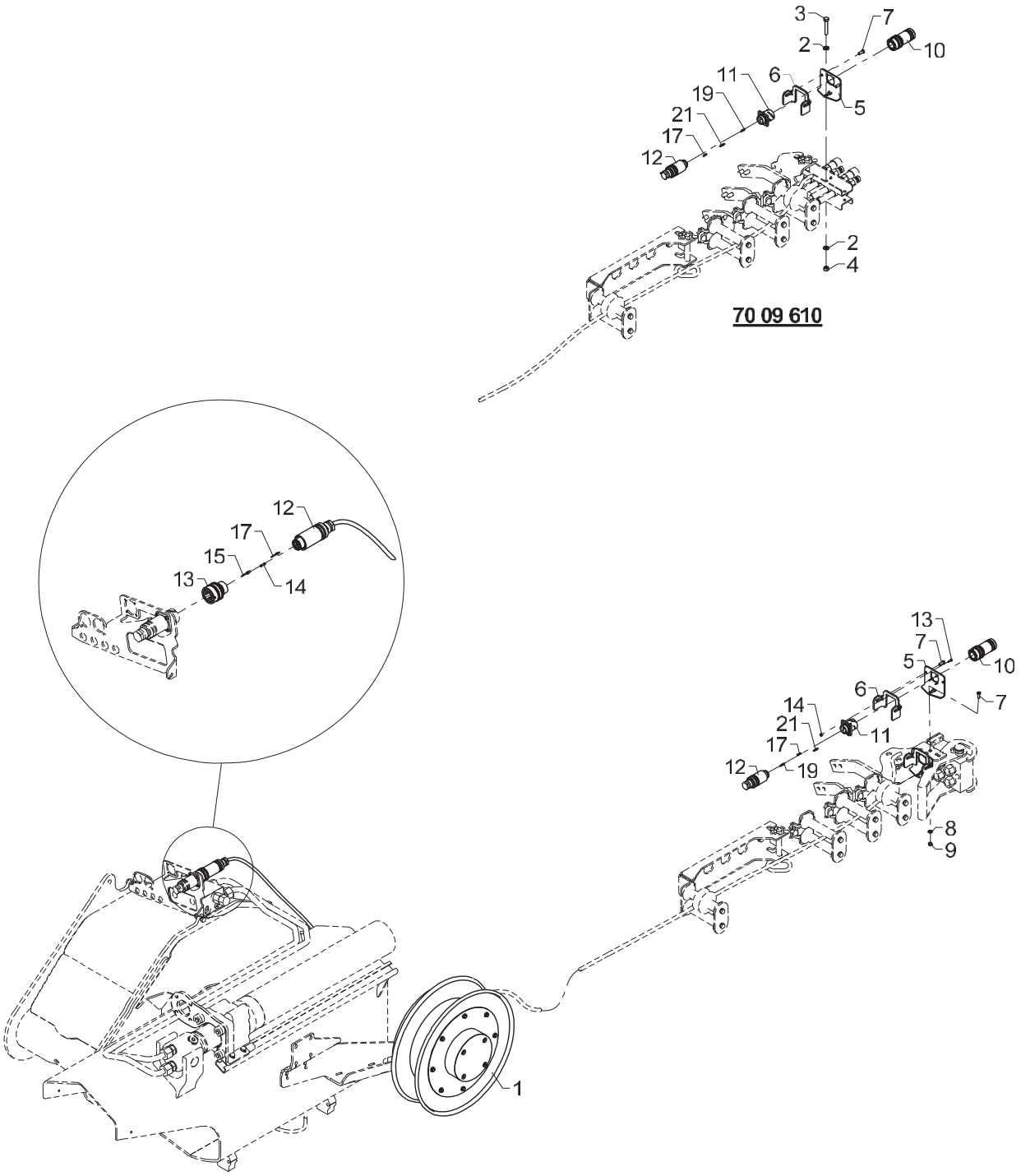

FJ supply, hose reel, multi- and quick-release coupling

Pos	Qty.	Part no.	Description	Remarks
		7009600		
		7009610	FJ supply, reel,quick-coupling	
1	1	29216	Cable drum	
2	2	31147	Face washer, 8 mm	
3	1	30139	Steel bolt, stainless	M8 x 50
4	1	30886	Lock nut, stainless	M8
5	1	7004028	Bracket, FJ plug	
6	1	7004064		
7	3	32490	Screw	MC6 x 16
8	1	32302	Face washer, stainless	6 mm
9	1	30854	Nut, stainless	M6
10	1	7009999	Dummy plug for Fly-Jib	
11	1	29628		
12	1	29635		
13	4	32386	Screw M3 x 12 stainless	M3 x 12
14	4	32387	Lock nut M3 stainless	M3
15	1	29629		
16	1	29634		
17	6	29638		
18	2	29630		
19	2	29631		
20	5	29632		
21	5	29633		

50/345

70 05 820
Internal ref. 70 05 790

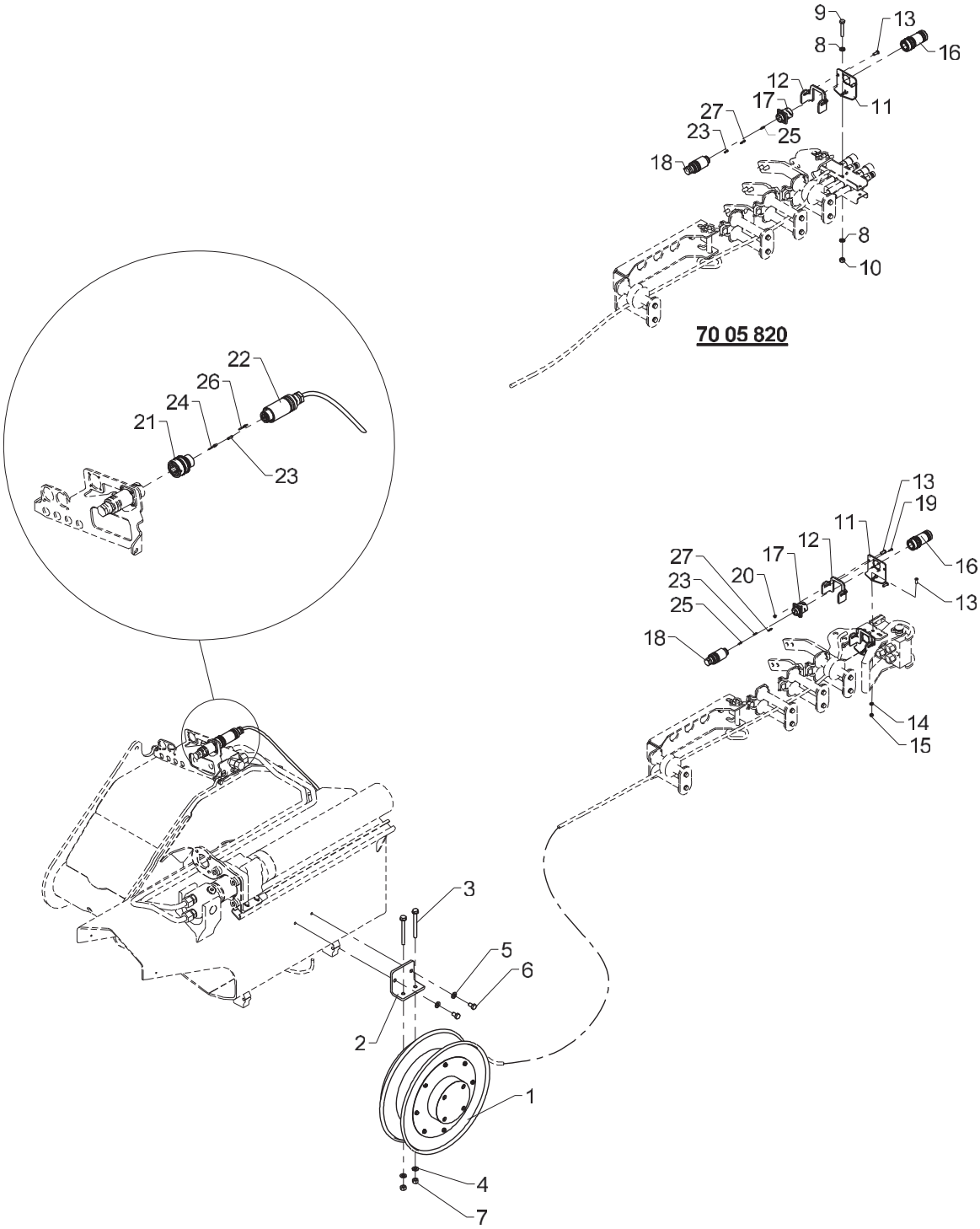

From loader 1150001
To loader

FJ supply K7, hose reel, multi- and quick-release coupling

Created 18-01-2016
Modified

Pos	Qty.	Part no.	Description	Remarks
		7005790	FJ supply, reel, multi coupl.	
		7005820	FJ supply, reel,quick-coupling	
1	1	29216	Cable drum	
2	1	6301057	Bracket for cable drum	
3	2	30106	Steel bolt	M10 x 100
4	4	31565	Washer, stainless	10 mm
5	2	31177	Washer	10 mm
6	2	30153	Set screw	M10 x 16
7	2	30888	Lock nut	
8	2	31147	Face washer, 8 mm	
9	1	30139	Steel bolt, stainless	M8 x 50
10	1	30886	Lock nut, stainless	M8
11	1	7004028	Bracket, FJ plug	
12	1	7004064		
13	3	32490	Screw	MC6 x 16
14	1	32302	Face washer, stainless	6 mm
15	1	30854	Nut, stainless	M6
16	1	7009999	Dummy plug for Fly-Jib	
17	1	29628		
18	1	29635		
19	4	32386	Screw M3 x 12 stainless	M3 x 12
20	4	32387	Lock nut M3 stainless	M3
21	1	29629		
22	1	29634		
23	6	29638		12mm
24	2	29630		
25	2	29631		
26	5	29632		
27	5	29633		

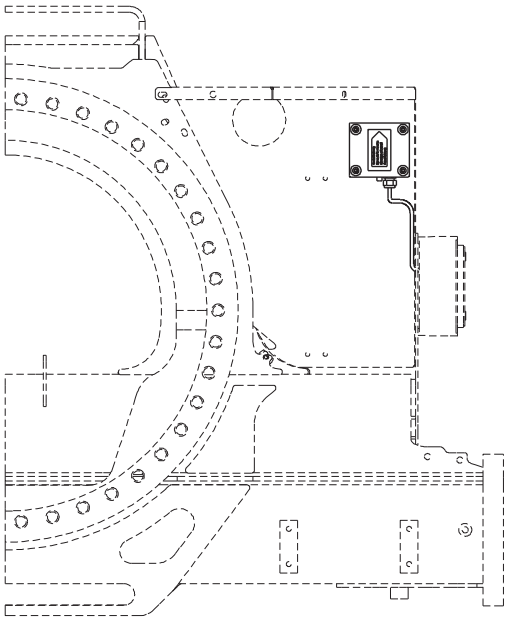

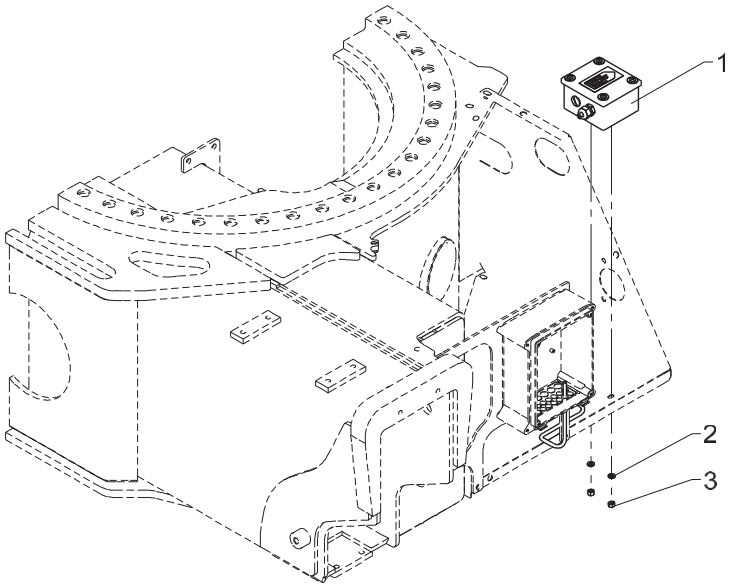
1
2
3

Obsolete

542 22 130

From loader 1150001
To loader 1150061

Created 21-02-2011
Modified 18-06-2012

EVS

Pos	Qty.	Part no.	Description	Remarks
1	1	28726	AIC 5062 for RCL 5300	250 Kbaud
2	2	32302	Face washer, stainless	6 mm
3	2	30884	Lock nut, stainless	M6

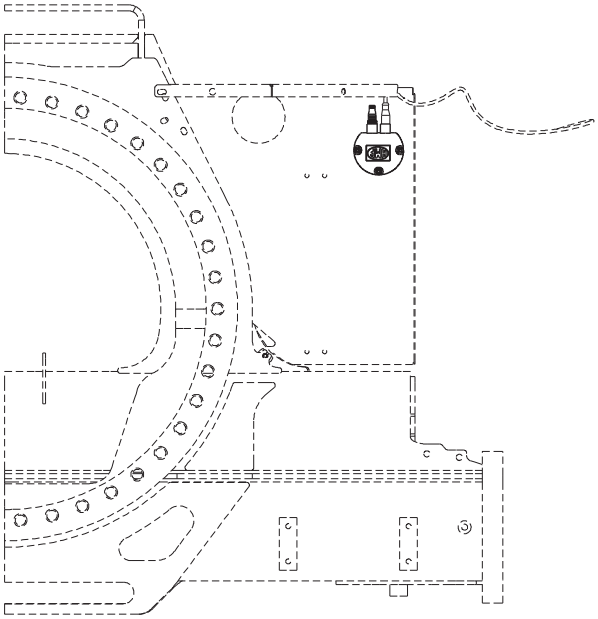

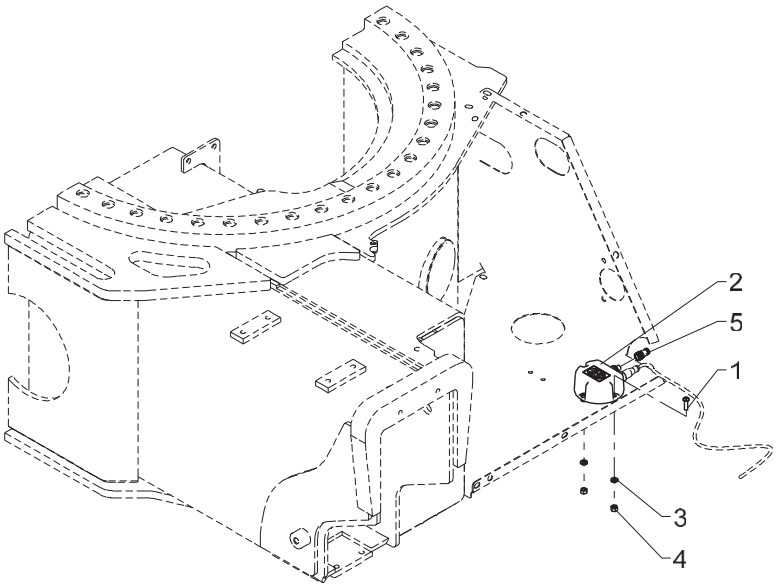
2
5
1
3
4

Obsolete

542 22 130 A

From loader 1150062
To loader

EVS

Created 24-05-2012
Modified 18-06-2012

Pos	Qty.	Part no.	Description	Remarks
1	3	32491	Round-head screw	M6 x 20
2	1	29426	Electronic inclinometer,single	
3	3	32302	Face washer, stainless	6 mm
4	3	30884	Lock nut, stainless	M6
5	1	29486	Plug M12, termination	

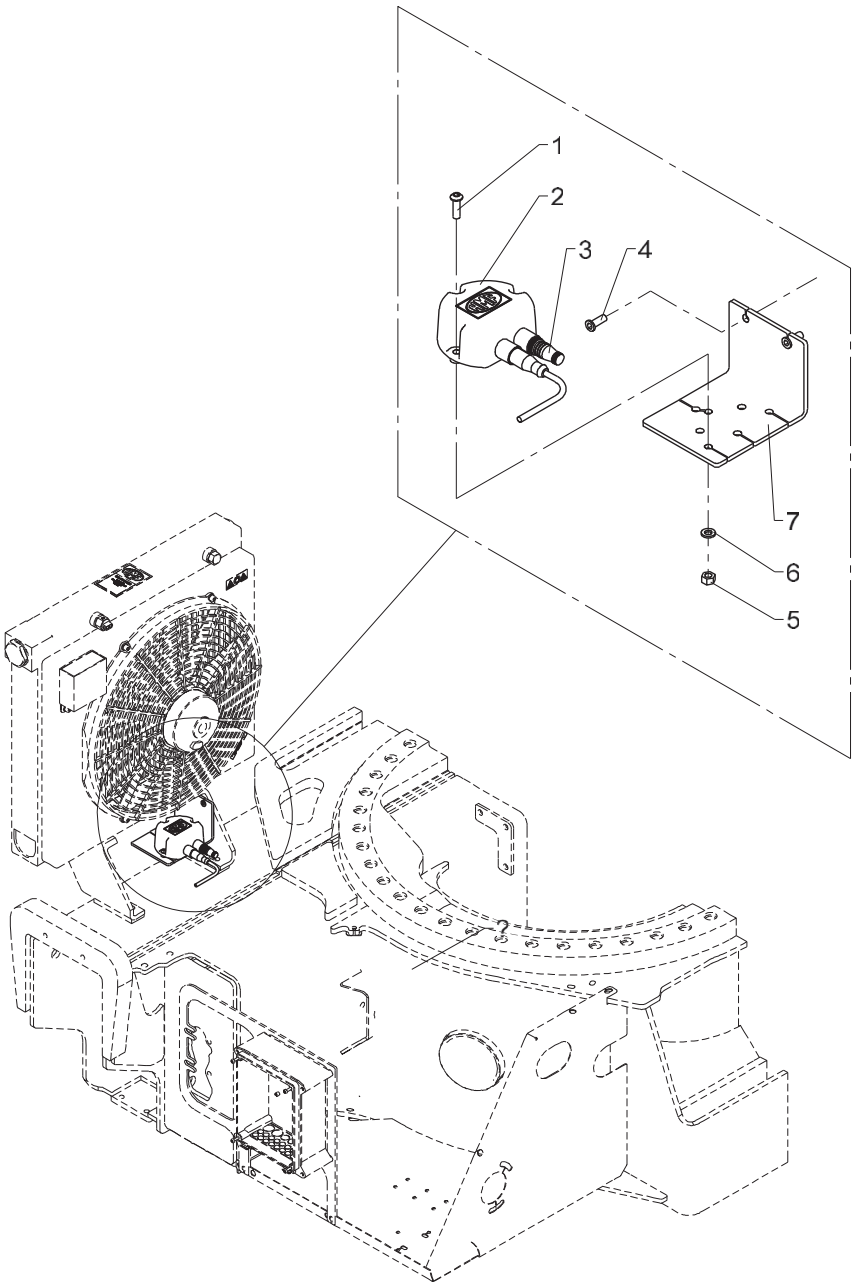
1
2
3
4
7
6
5

Obsolete

542 22 130 B

From loader 1150062
To loader

EVS

Created 04-01-2013
Modified

Pos	Qty.	Part no.	Description	Remarks
1	3	32491	Round-head screw	M6 x 20
2	1	29426	Electronic inclinometer,single	
3	1	29486	Plug M12, termination	
4	2	32490	Screw	MCL6 x 16
5	3	30884	Lock nut, stainless	M6
6	3	32302	Face washer, stainless	6 mm
7	1	7000834	Bracket	

50/345

70 09 550
Internal ref. 70 06 150

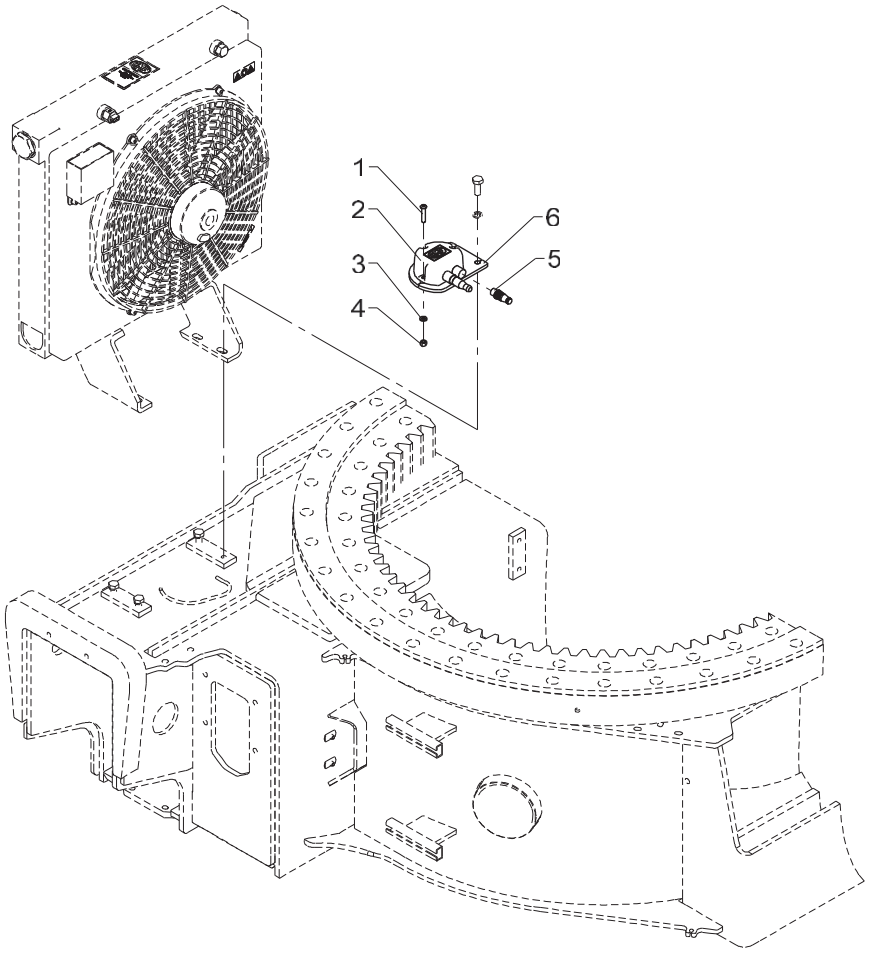

EVS

Pos	Qty.	Part no.	Description	Remarks
		7006150	Electronic Vehicle Stability	
		7009550		MEWP
1	3	32458	Screw	M6 x 30
2	1	29426	Electronic inclinometer,single	
	1	29425	Inclinometer, redundant	MEWP
3	3	32302	Face washer, stainless	6 mm
4	3	30884	Lock nut, stainless	M6
5	1	29486	Plug M12, termination	
6	1	7004013	Bracket for AIC	

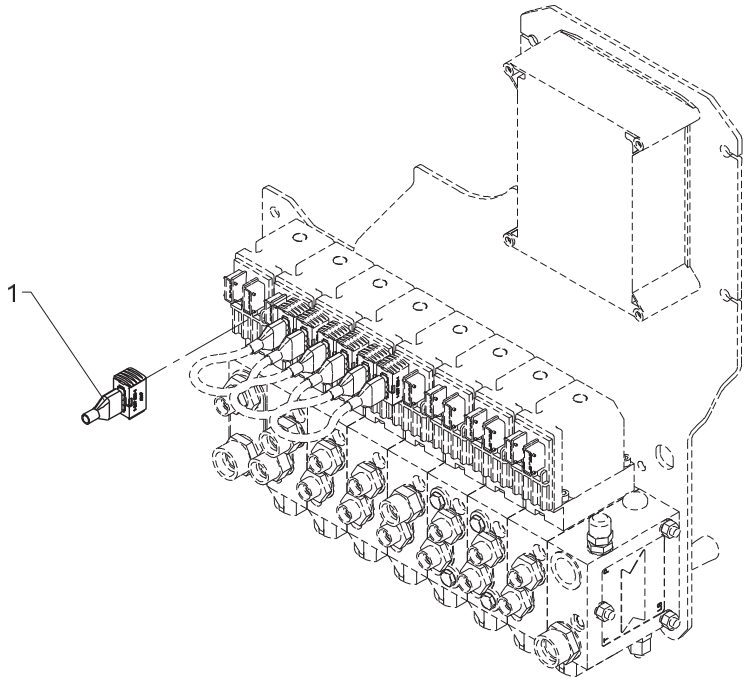
1

542 22 140

From loader 1150001
To loader

Created 04-09-2012
Modified

Termination, PVED

Pos	Qty.	Part no.	Description	Remarks
1	1	62297	Termination	

50/345

Internal ref. 70 05 720

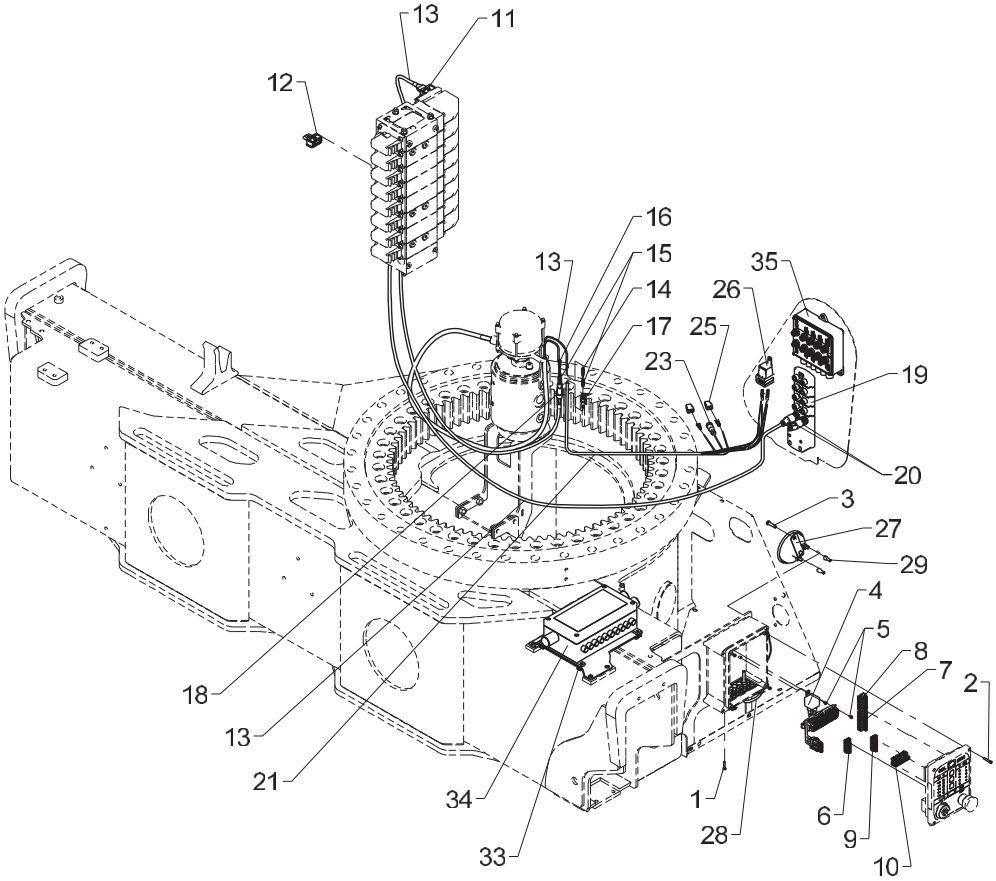

Basic parts

Pos	Qty.	Part no.	Description	Remarks
1	4	30346	Screw, stainless	4,0 x 20
2	4	30347	Screw, stainless	4,0 x 25
3	4	30340	Screw, stainless	6,0 x 25
4	1	29213	Terminal block for RC 24V	
5	3	30361	Screw, stainless	3,0 x 8
6	1	29318	Plug, 7-polar for RCL 53XX	
7	1	29322	Plug, 12-polar for RCL 53XX	
8	1	29320	Plug, 9-polar for RCL 53XX	
9	1	29319	Plug, 8-polar for RCL 53XX	
10	1	29321	Plug, 10-polar for RCL 53XX	
11	1	58953	Plug, AMP grey	
12	1	58954	Plug, AMP black	
13	3	28745	Wiring, valve block, 25_45	
14	4	28844	Socket, AMP	
15	8	28845	Cable lead-in	
16	4	29161	Plug, AMP	
17	1	29272	Plug, 4-polar, AMP	
18	1	29273	Socket, 4-polar, AMP	
19	1	part1		
20	2	29269	Socket, M12, straight 5-polar	
21	1	28746	Wiring, CIO, 25_45	
22	1	27380	Relay socket	
23	1	29223	Cable with socket, 2 m	
24	8	27422	Plug	
25	2	27447	Multisocket - male	
26	1	27340	Relay, 12 V	
27	1	28971	Horn, 24 V, 2.5 Amp.	
28	1	28249	Cable 2 x 0.75	
29	2	27429	Clamp	
30	1	6301368	Bracket	
31	1	7004005	Plug housing, jib	
32	1	29232	Socket, 7-polar, 10 A	
33	4	31068	Clip	M6 0,5 - 4,0 mm.
34	1	57158	Radio remote control	
35	1	29354	CIO5376 -special	
36	1	29103	Mercury switch	
37	1	6390304	Plate	

50/345

70 08 030
70 08 020
Internal ref. 70 07 960

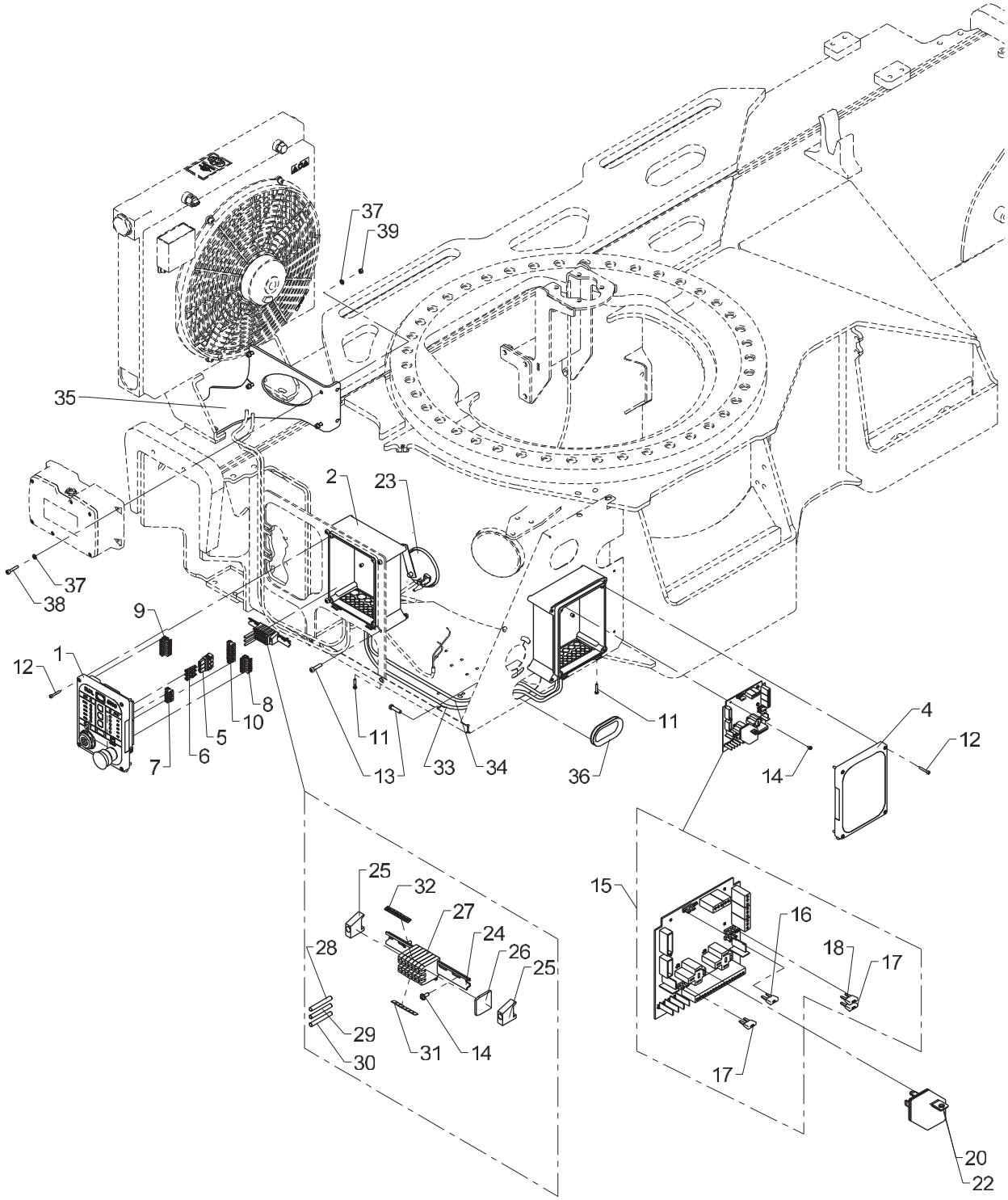

Basic electronic parts, base

Pos	Qty.	Part no.	Description	Remarks
		7007960		
		7008020	Relay, 24 V	
		7008030	Relay, 12 V	
1	1	29301	Front complete, RCL 5300	
2	2	29304	Bottom f. RCL-box incl. hinge	
3	2	29307	Cable lead-in	
4	1	29347	RCL 5300 indicator panel	
5	1	29315	Plug, 3-polar for RCL 53XX	
6	3	29316	Pin	
7	1	29317	Plug, 5-polar for RCL 53XX	
8	1	29318	Plug, 7-polar for RCL 53XX	
9	1	29319	Plug, 8-polar for RCL 53XX	
10	1	29320	Plug, 9-polar for RCL 53XX	
11	8	30346	Screw, stainless	4,0 x 20
12	8	30347	Screw, stainless	4,0 x 25
13	9	30340	Screw, stainless	6,0 x 25
14	8	30361	Screw, stainless	3,0 x 8
15	1	29473	EJB5380	
16	1	29369	Fuse 2A MINI	
17	2	27822	Fuse 10A MINI	
18	1	29370	Fuse 15A MINI	
19	1	7008020	Relay, 24 V	
20	1	27342	Relay, 24V	
21	1	7008030	Relay, 12 V	
22	1	27340	Relay, 12 V	
23	1	28971	Horn, 24 V, 2.5 Amp.	
24	1	28013	Guide rail	120 mm.
25	2	28012	End angle	
26	1	28011	End plate	
27	7	28010	Terminal	
28	1	27202	Cable	0,3 m
29	1	27204	Wire, 1 x1.5mm2	0,3 m
30	1	27120	Cable	0,3 m
31	1	28019	Labels nos. 1-10	
32	1	28965	Dekafix labels 21-30	
33	1	27221	Wire 5 x 1.5	1,2 m
34	1	28278	Cable 4 x 2.5	1,2 m
35	1	6301207	Bracket for G2	
36	1	46587	Rubber protection	250 mm
37	8	32308	Washer	5 mm
38	4	30481	Screw	

50/345

70 08 030
70 08 020
Internal ref. 70 07 960

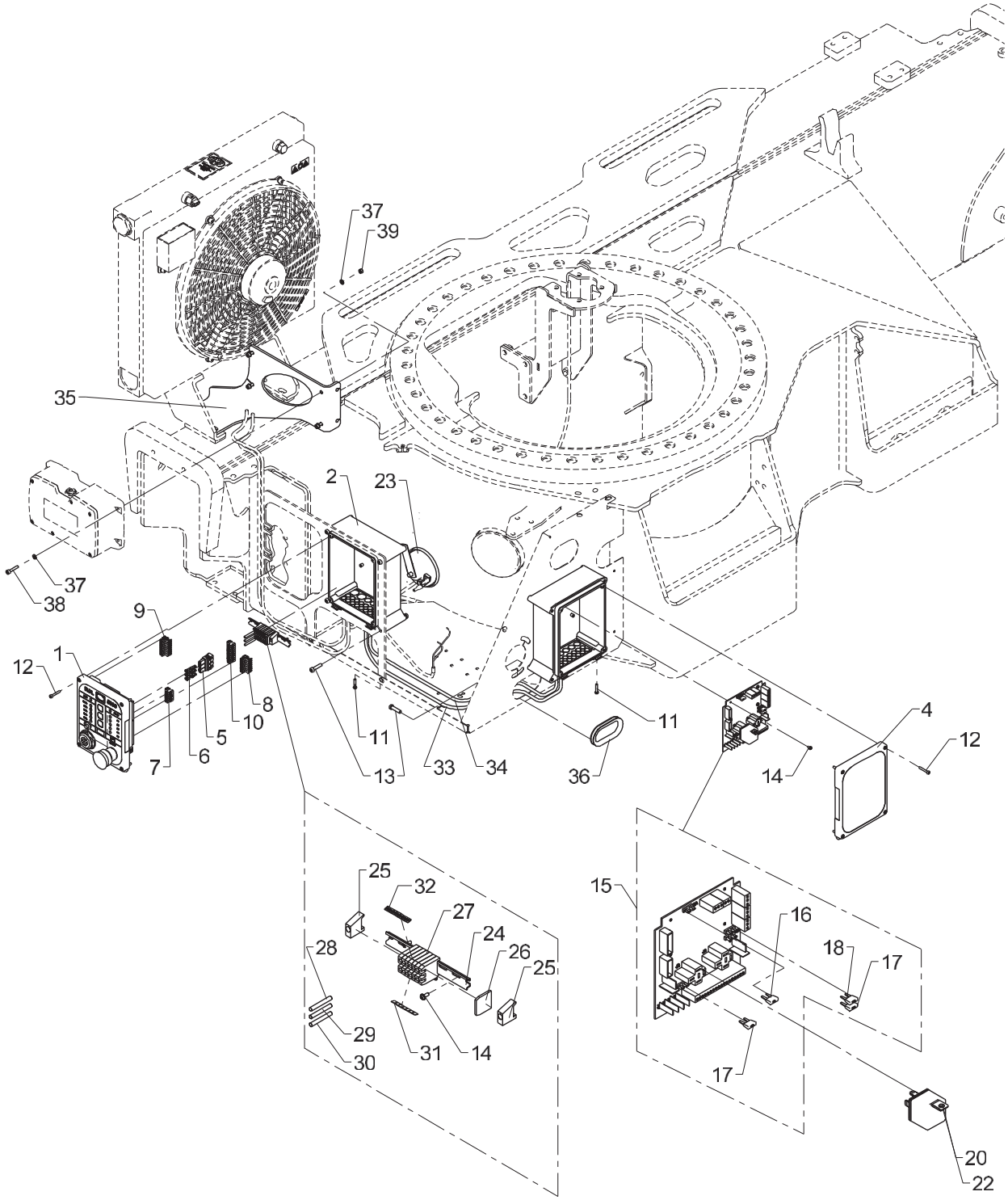

Basic electronic parts, base

Pos	Qty.	Part no.	Description	Remarks
39	4	30859	Lock nut, stainless	

50/345

Internal ref. 70 07 970

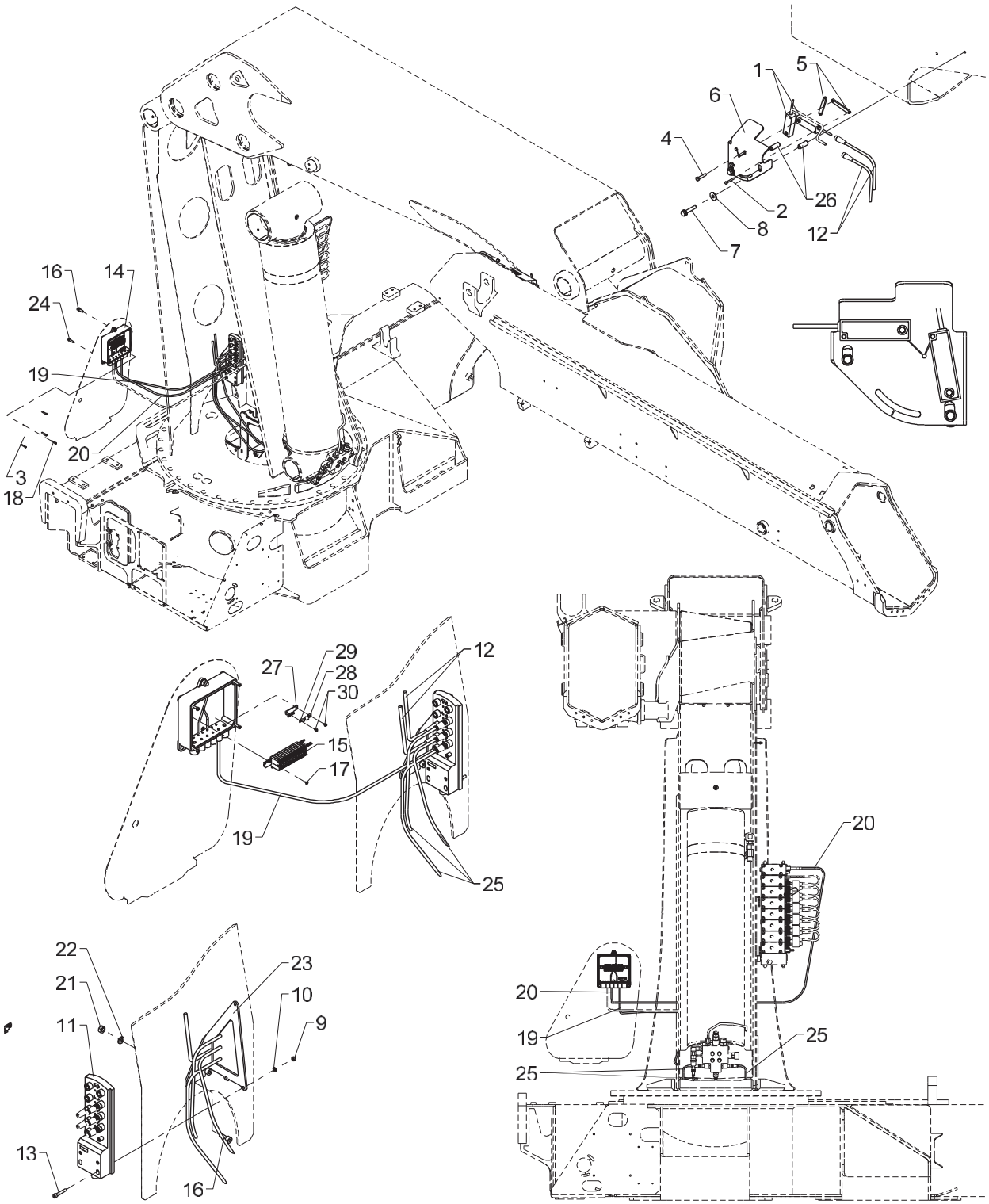

Basic electronic parts, column

Pos	Qty.	Part no.	Description	Remarks
1	2	29295	Tilt sensor + 0.25 m cable	
2	2	31790	Set screw M4 x 30	M4 x 30
3	1	29314	Cover for Fly-Jib box	
4	2	30115	Steel pin, stainless	M6 x 30
5	2	6390169	Plate	
6	1	6390168	Sensor fittings	
7	2	31092	Screw	M8 x 40
8	2	31136	Washer, stainless	
9	3	30853	Nut, stainless	M5
10	3	32308	Washer	5 mm
11	1	29470	IO module CR2033	
12	2	29497	Extension cable, 5 m	
13	3	30425	Screw	MC5 x 30
14	1	29313	Bottom f. Fly-Jib box	
15	1	7006305	Terminal block, Box2, column	
16	3	30438	Screw	MC8 x 20
17	2	28693	Screw	Ø2.9 x 6.5
18	4	30347	Screw, stainless	4,0 x 25
19	1	29456	CAN cable, M12, 2 m, female	
20	1	58978	Cable, CAN-bus 2,5 m, AMP grey	
21	3	30856	Nut, stainless	M8
22	3	31147	Face washer, 8 mm	
23	1	7004018	Fitting CR2033	
24	2	30340	Screw, stainless	6,0 x 25
25	3	29389	Extension for cable M12, 1,2m	
26	2	6394514	Distance pipe ø12 x32	
27	1	7004027	Bracket	
28	1	29612	Clamp 7.0 mm	
29	1	29611	Clamp 5.0 mm	
30	2	30782	Screw M 3x4	M3 x 4

50/345

Internal ref. 70 06 305

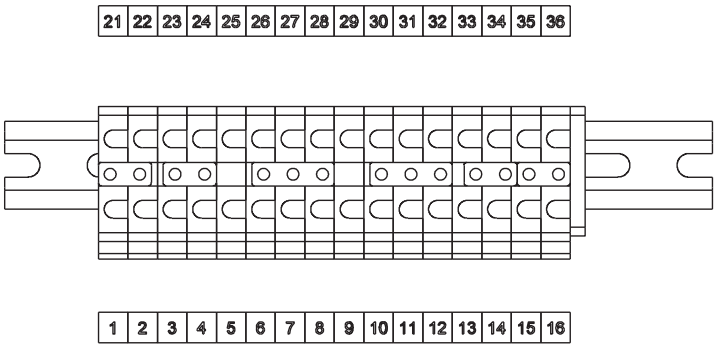

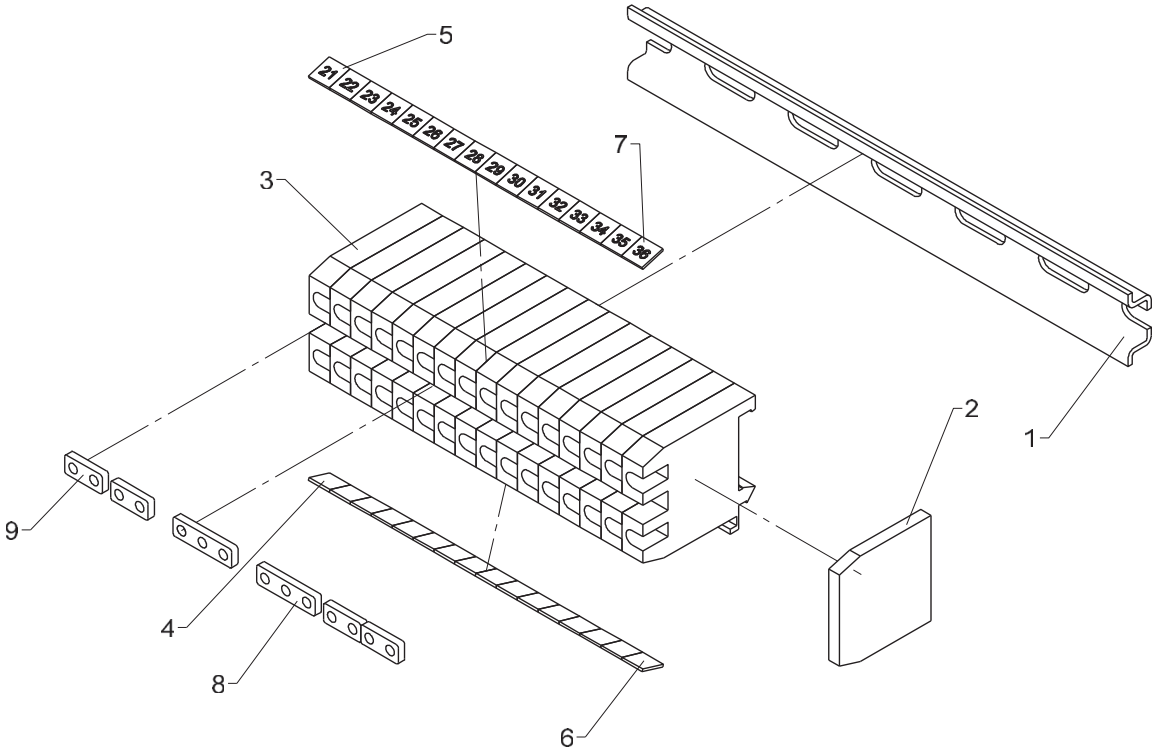

From loader 1150001
To loader

Created 17-12-2012
Modified

Terminal block, Box2, column

Pos	Qty.	Part no.	Description	Remarks
1	1	28013	Guide rail	120 mm.
2	1	28011	End plate	
3	16	28010	Terminal	
4	1	28019	Labels nos. 1-10	
5	1	28965	Dekafix labels 21-30	
6	1	28020	Labels nos. 11-20	
7	1	29427	Dekafix marker 31-40	
8	2	28014	Fish plate	
9	4	28208	Fish plate	

50/345

Internal ref. 70 06 390

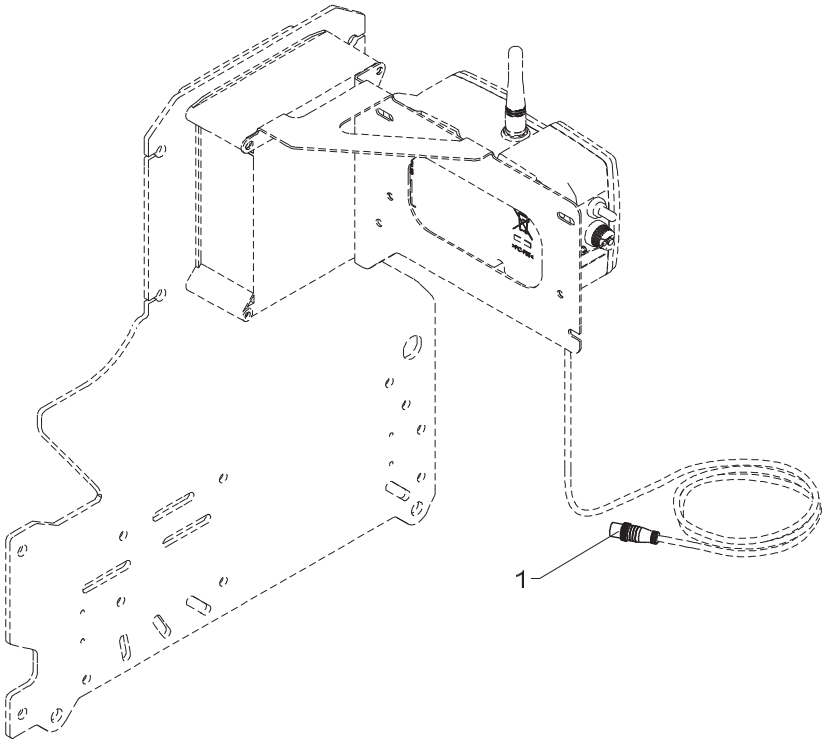

542 22 320

From loader 1150001
To loader

Created 03-09-2012
Modified

Termination, G2

Pos	Qty.	Part no.	Description	Remarks
1	1	29486	Plug M12, termination	

50/345

Internal ref. 70 06 010

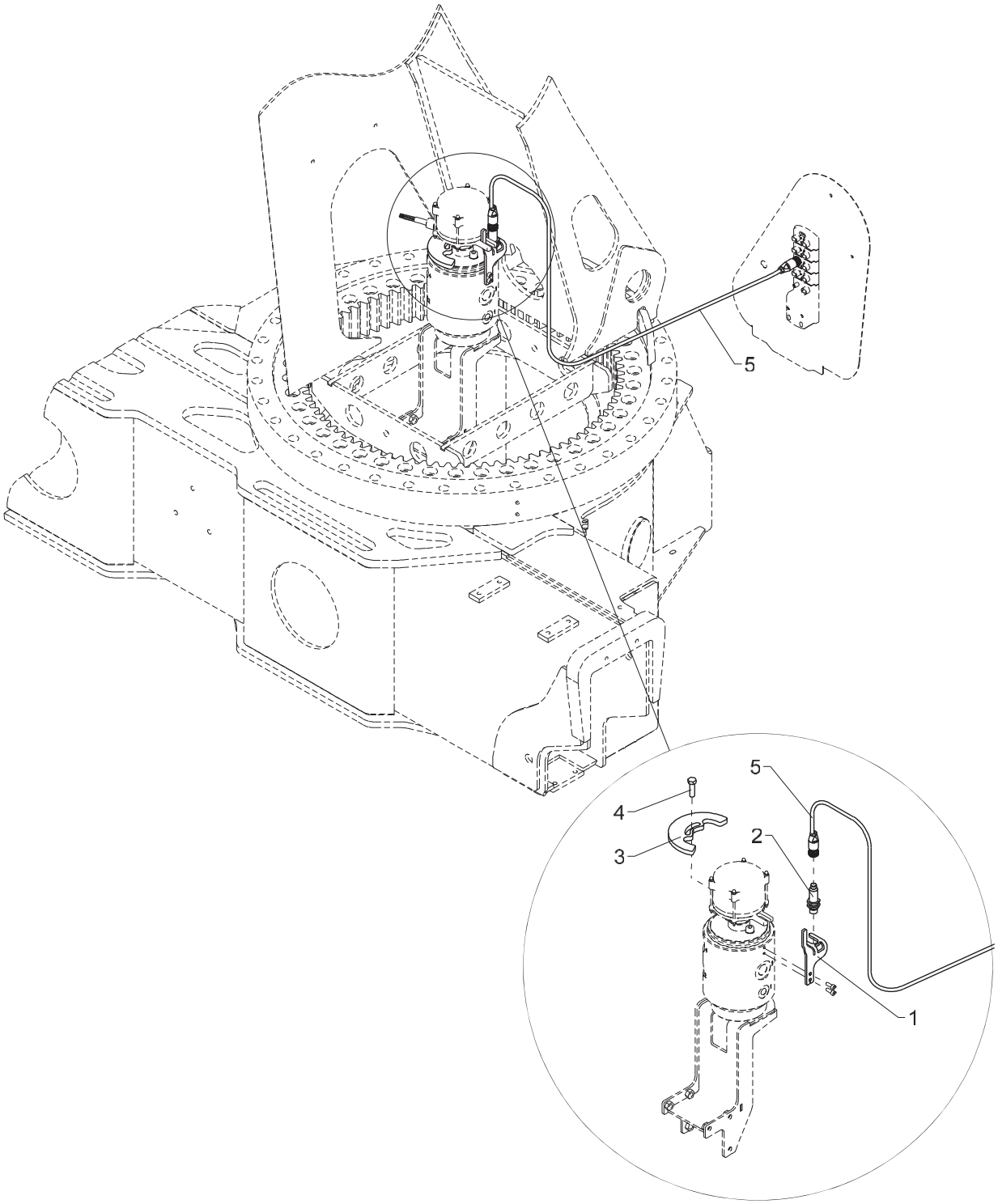

Obsolete

542 22 340

From loader 1150001
To loader 1150090

Created 25-11-2010
Modified

2-stage LMB

Pos	Qty.	Part no.	Description	Remarks
1	1	6302624	Sensor fitting	
2	1	28210	Proximity switch	
3	1	6302622	Cam disc	
4	1	30157	Set screw	M10 x 35
5	1	29266	Cable, extension M12, 1.2 m	

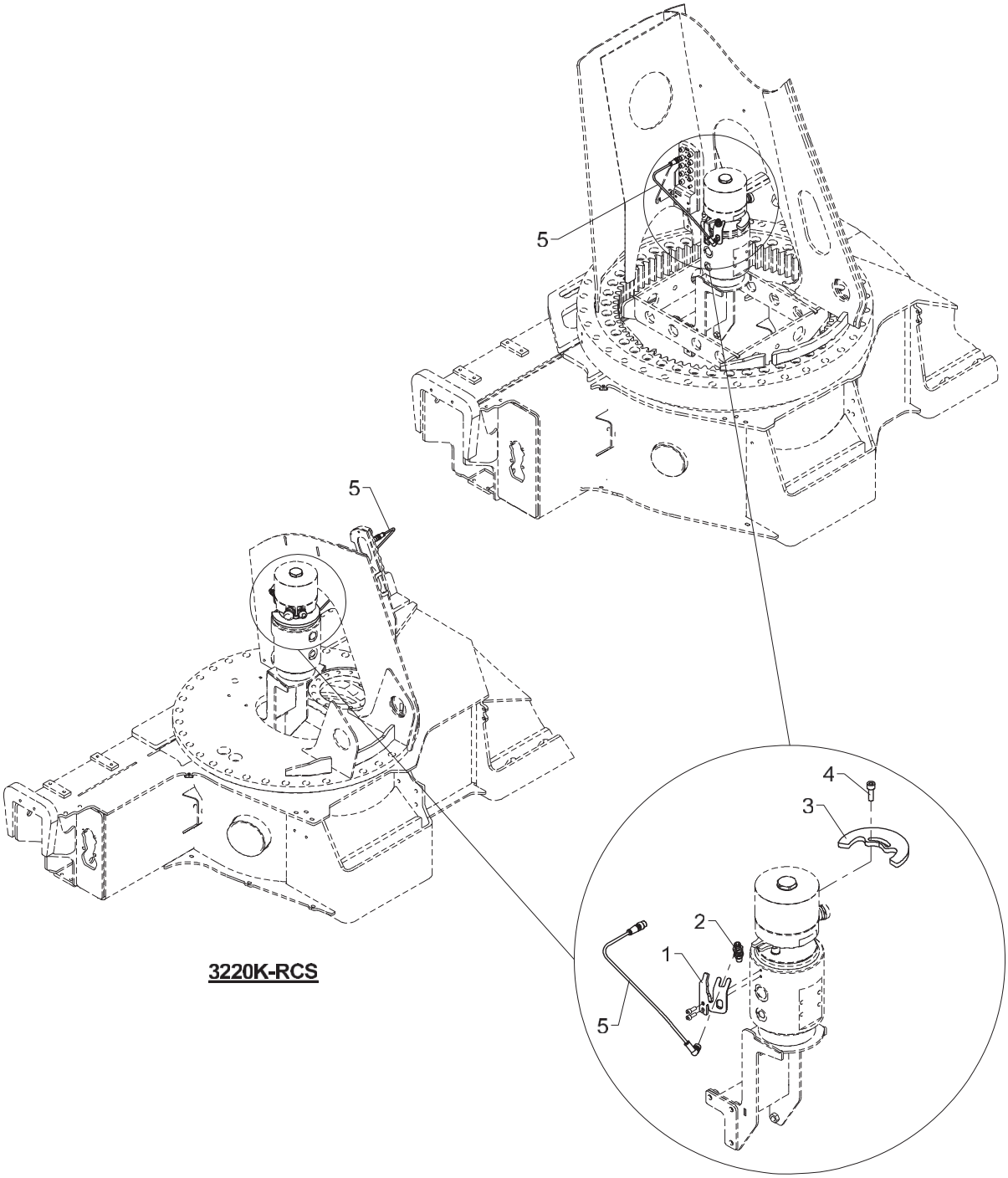

3220K-RCS

2-stage LMB

Pos	Qty.	Part no.	Description	Remarks
1	1	6392627	Fittings for M12 sensor	
2	1	29447	Proximity switchM12 8mm PNP-NO	
3	1	6302629	Cam disc for M12 sensor	
4	1	30455	Screw	MC10 x 30
5	1	29277	Cable, extension M12-M12, 2 m	

50/345

Internal ref. 70 05 990

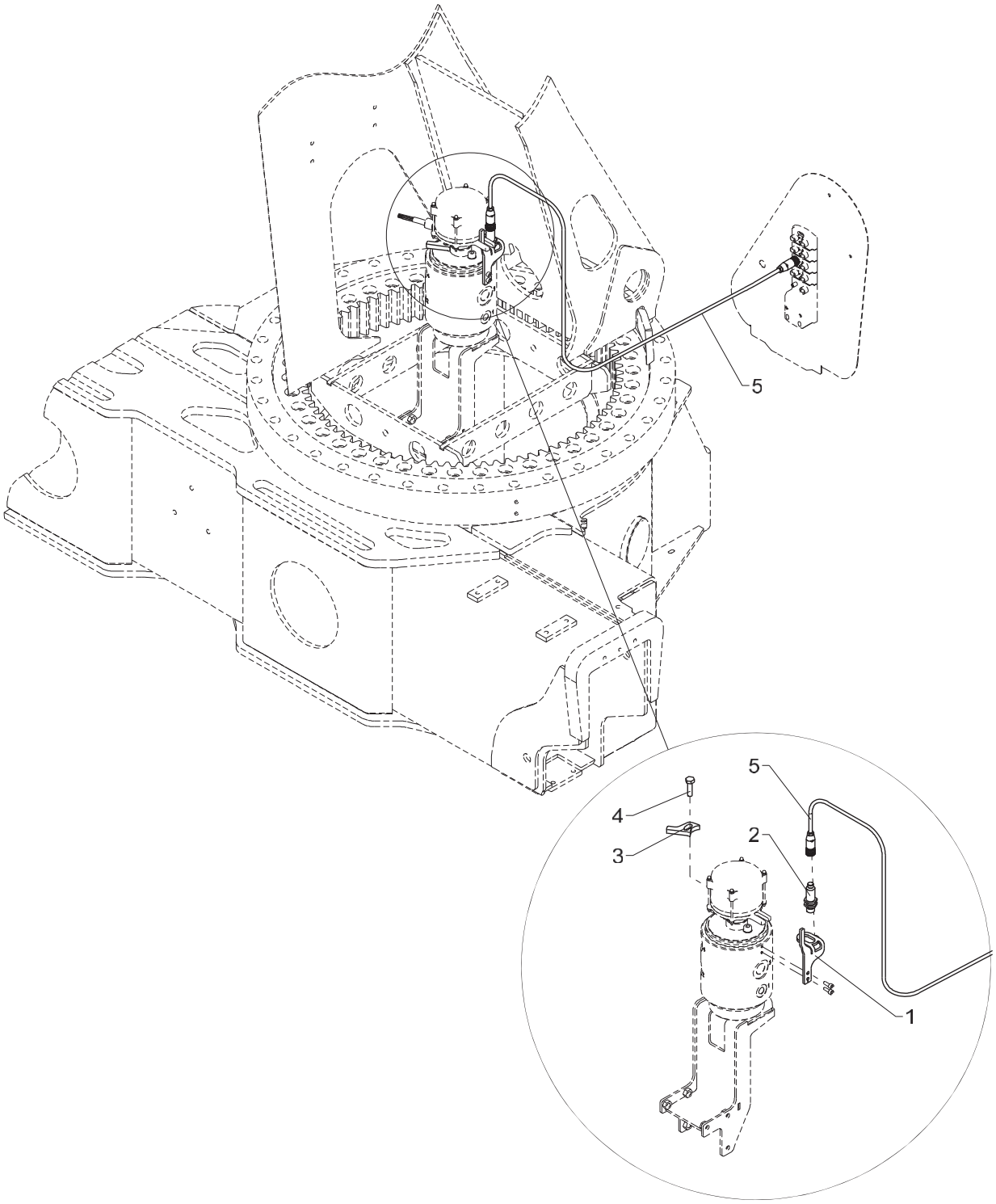

Obsolete

542 22 360

From loader 1150001
To loader

CBS - Calibrate Bypass Sensor

Created 09-08-2010
Modified 24-04-2013

Pos	Qty.	Part no.	Description	Remarks
1	1	6302624	Sensor fitting	
2	1	28210	Proximity switch	
3	1	6302625	Sensor	
4	1	30157	Set screw	M10 x 35
5	1	29266	Cable, extension M12, 1.2 m	

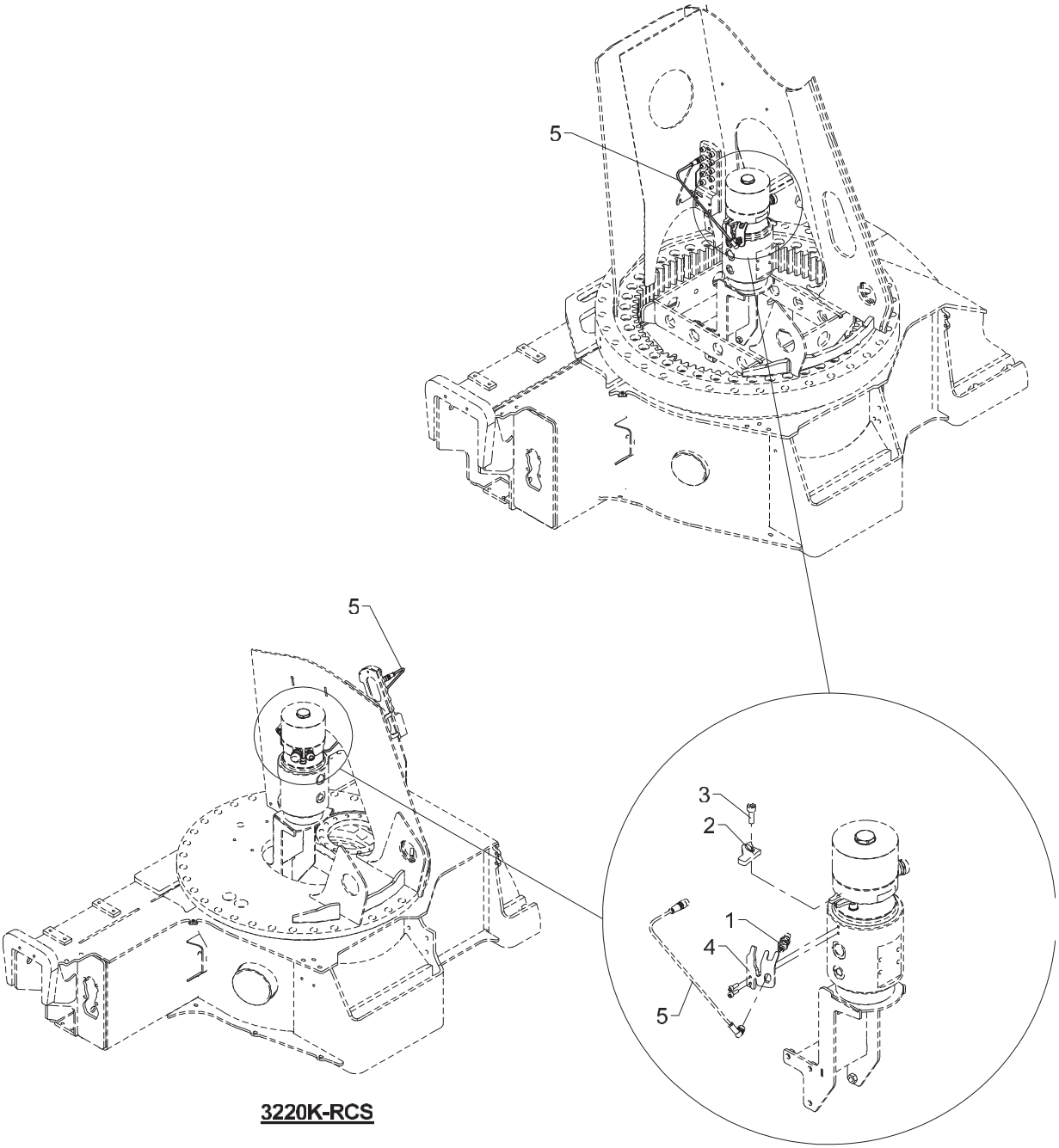

3220K-RCS

CBS

Pos	Qty.	Part no.	Description	Remarks
1	1	29447	Proximity switchM12 8mm PNP-NO	
2	1	6302628	Sensor	
3	1	30455	Screw	MC10 x 30
4	1	6392627	Fittings for M12 sensor	
5	1	29277	Cable, extension M12-M12, 2 m	

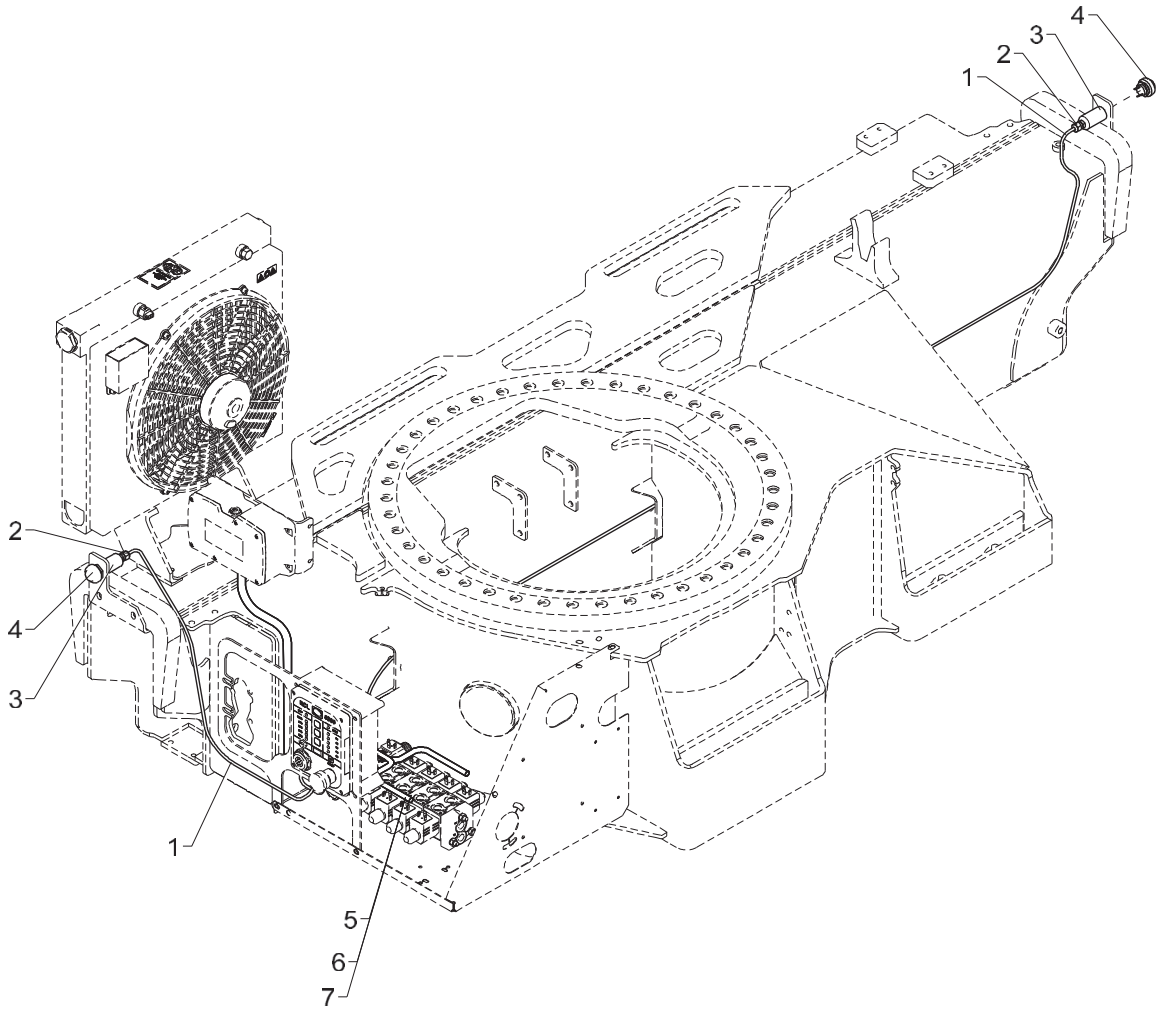
4
3
2
1
2
4
3
1
5
6
7

Obsolete

542 22 390

From loader 1150001
To loader

Created 27-05-2013
Modified 01-01-2014

Stabilizer operation via RC, 16 plugs

Pos	Qty.	Part no.	Description	Remarks
		7008080		
		7008070		
		7008060		
1	2	28148	Cable	6 m
2	2	28459	Connection	M12 x 1,5
3	2	64574	Housing	
4	2	27333	Push button	
5	1	56721	Cable, Scanreco 47925 G2	70 08 060
6	1	56722	Cable Scanreco 47924 G2	70 08 070
7	1	56723	Cable, Scanreco 47903 G2	70 08 080

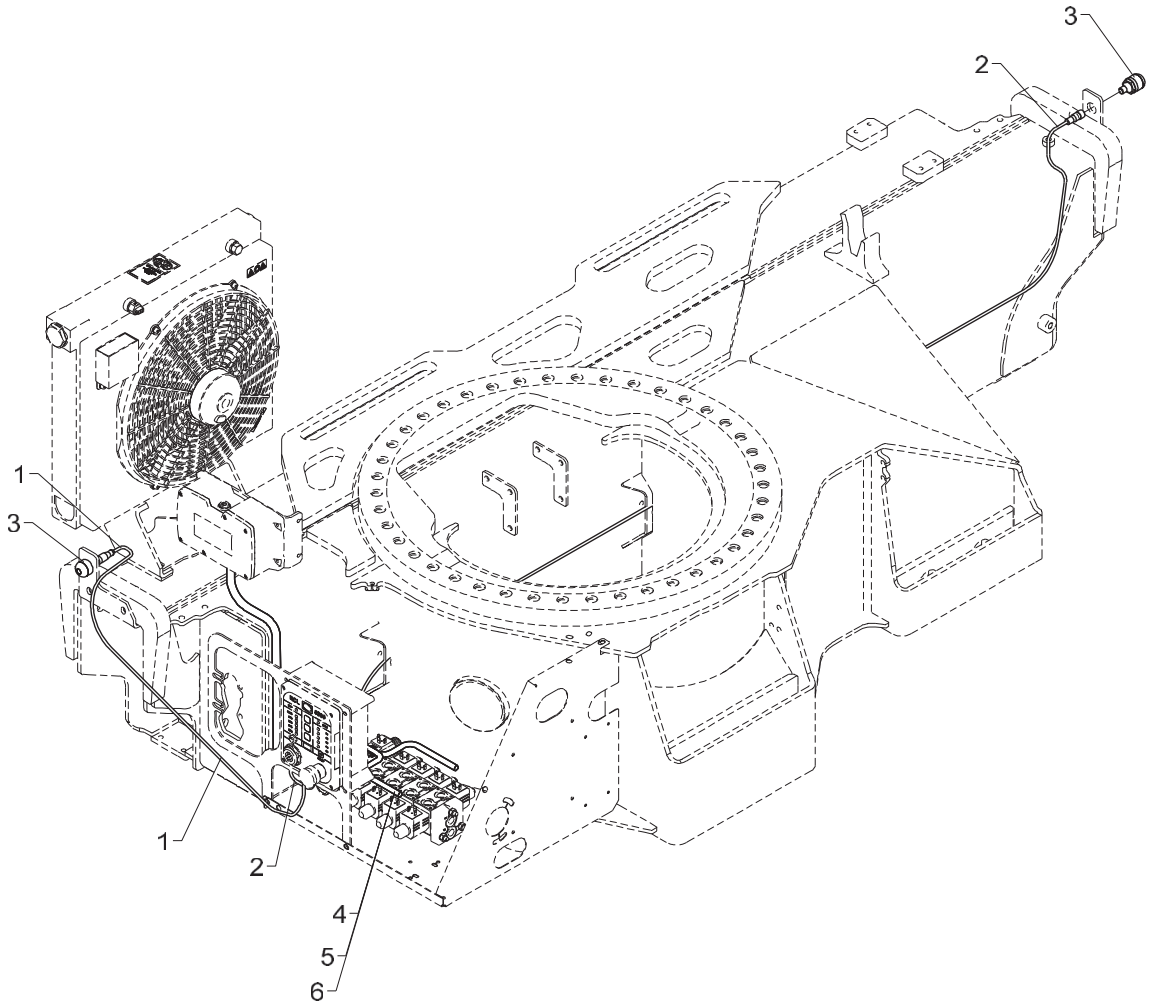
3
2
1
3
1
2
4
5
6

Stabilizer operation via RC, 16 plugs

Pos	Qty.	Part no.	Description	Remarks
		7008080		
		7008070		
		7008060		
1	1	29223	Cable with socket, 2 m	
2	1	29224	Cable with socket, 5 m	
3	2	29498	Touch button with light	
4	1	56721	Cable, Scanreco 47925 G2	70 08 060
5	1	56722	Cable Scanreco 47924 G2	70 08 070
6	1	56723	Cable, Scanreco 47903 G2	70 08 080

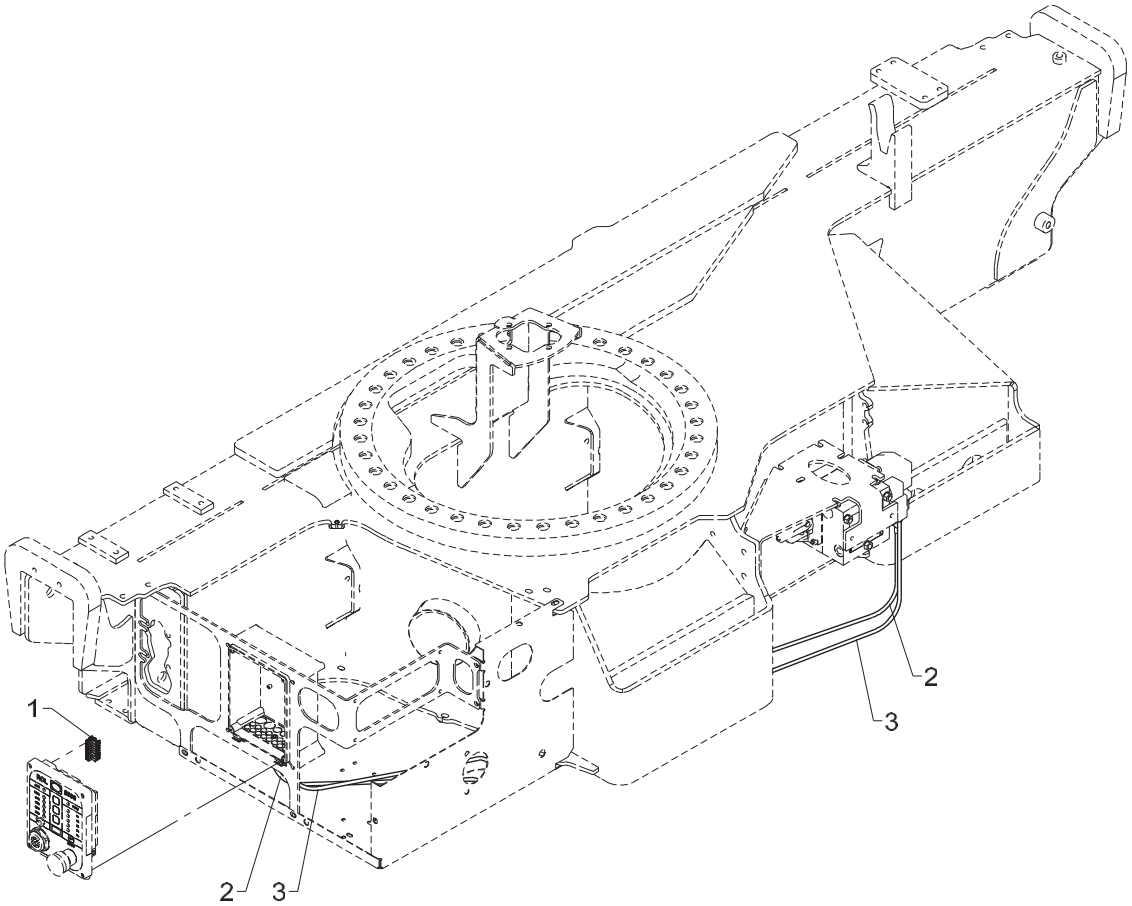
1
2
3
2
3

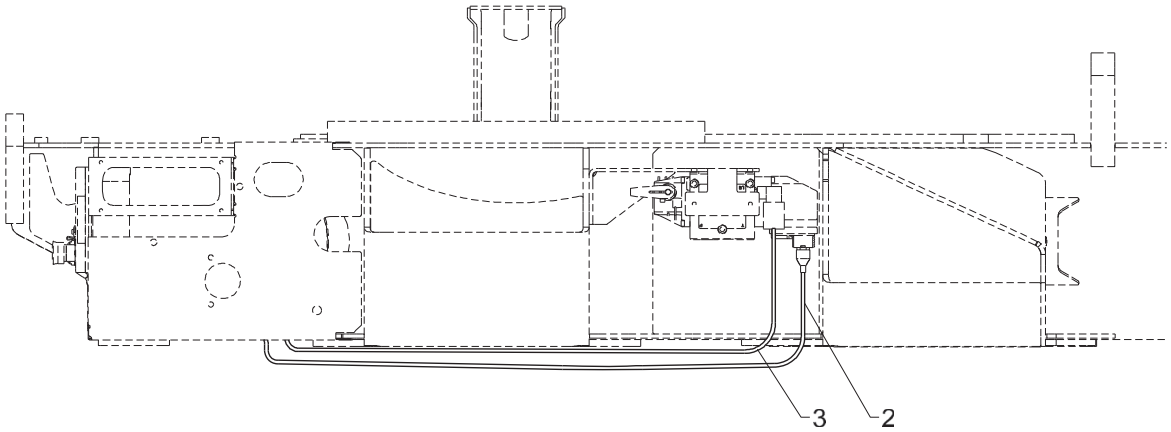
3
2

Extra RC-function on the base

Pos	Qty.	Part no.	Description	Remarks
1	1	29319	Plug, 8-polar for RCL 53XX	
2	1	58978	Cable, CAN-bus 2,5 m, AMP grey	
3	1	28286	Cable, dump valve	

50/345

Internal ref. 70 05 730

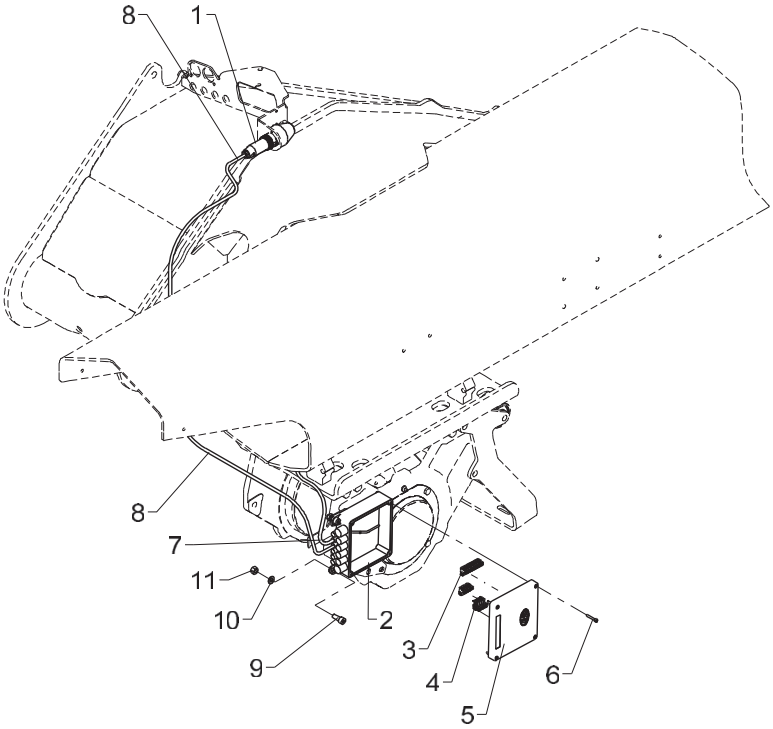

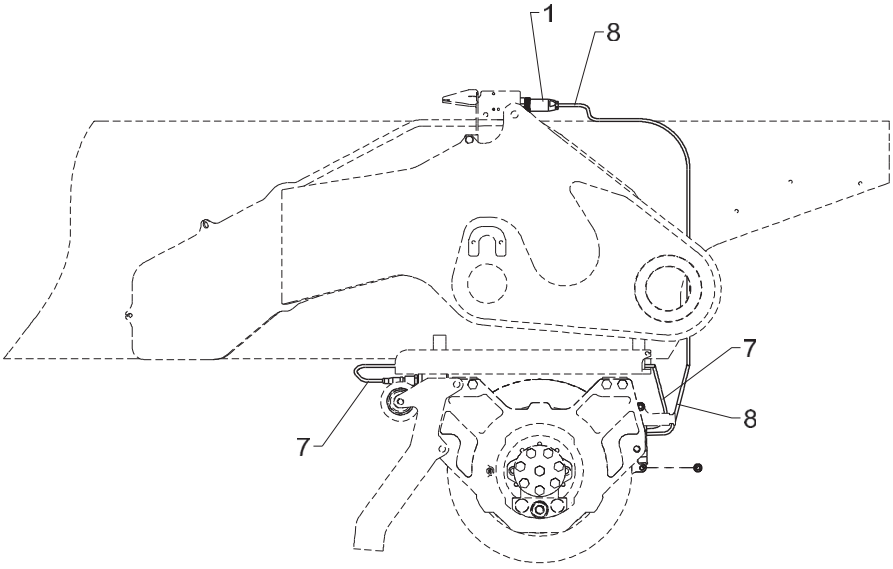

Obsolete

542 22 410

From loader 1150001
To loader
Created
Modified

Winch, (electric parts)

Pos	Qty.	Part no.	Description	Remarks
1	1	29285	Cable plug, 7-polar, 10 A	
2	1	29313	Bottom f. Fly-Jib box	
3	1	29321	Plug, 10-polar for RCL 53XX	
4	2	29317	Plug, 5-polar for RCL 53XX	
5	1	29333	WIC5333 Controller WINCH	
6	4	30347	Screw, stainless	4,0 x 25
7	2	29223	Cable with socket, 2 m	1 m
8	1	28263	CAN BUS cable	1,3 m
9	3	30438	Screw	MC8 x 20
10	2	31147	Face washer, 8 mm	
11	2	30886	Lock nut, stainless	M8

50/345

Internal ref. 70 07 980

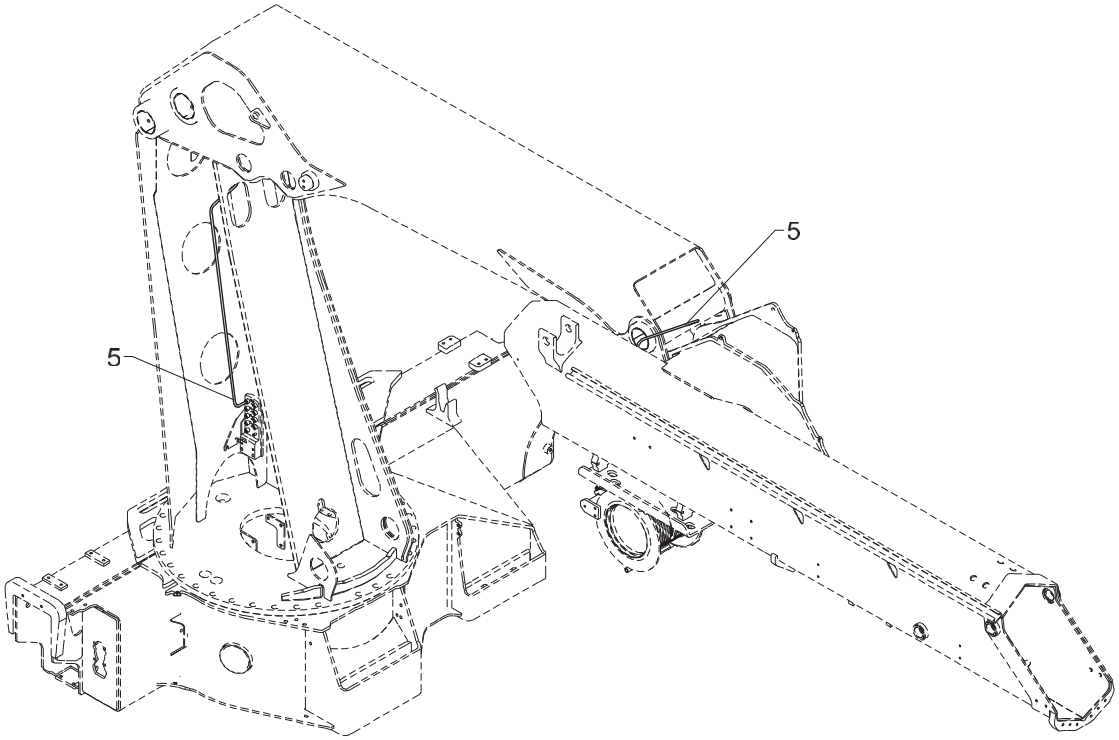

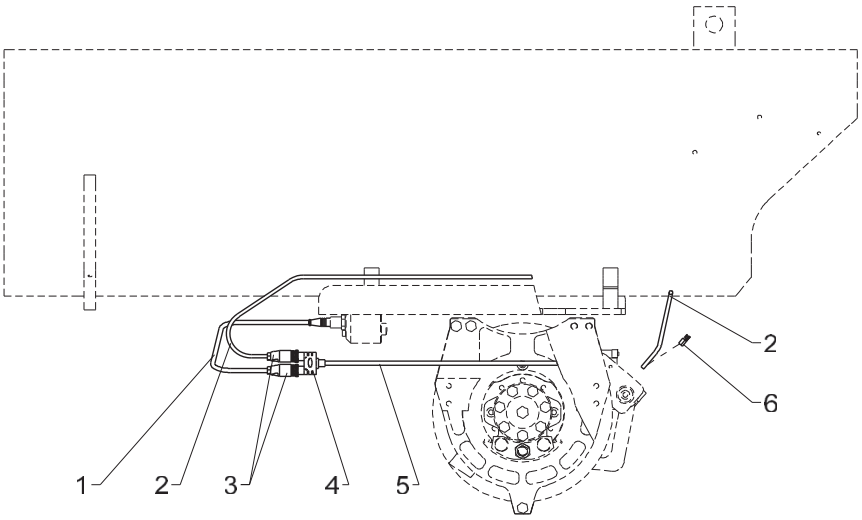

Obsolete

542 22 410 A

From loader 1150001
To loader

Created 24-04-2013
Modified 27-06-2014

Winch, electric parts

Pos	Qty.	Part no.	Description	Remarks
1	1	29223	Cable with socket, 2 m	
2	1	28249	Cable 2 x 0.75	1,0 m
3	2	29268	Plug, M12, straight 4-polar	
4	1	29477	Y-splitter 3xM12 - Parallel	
5	1	29459	Cable extension 10m M12	
6	2	28700	Cable shoe, red clevis Ø3	

50/345

Internal ref. 70 07 980

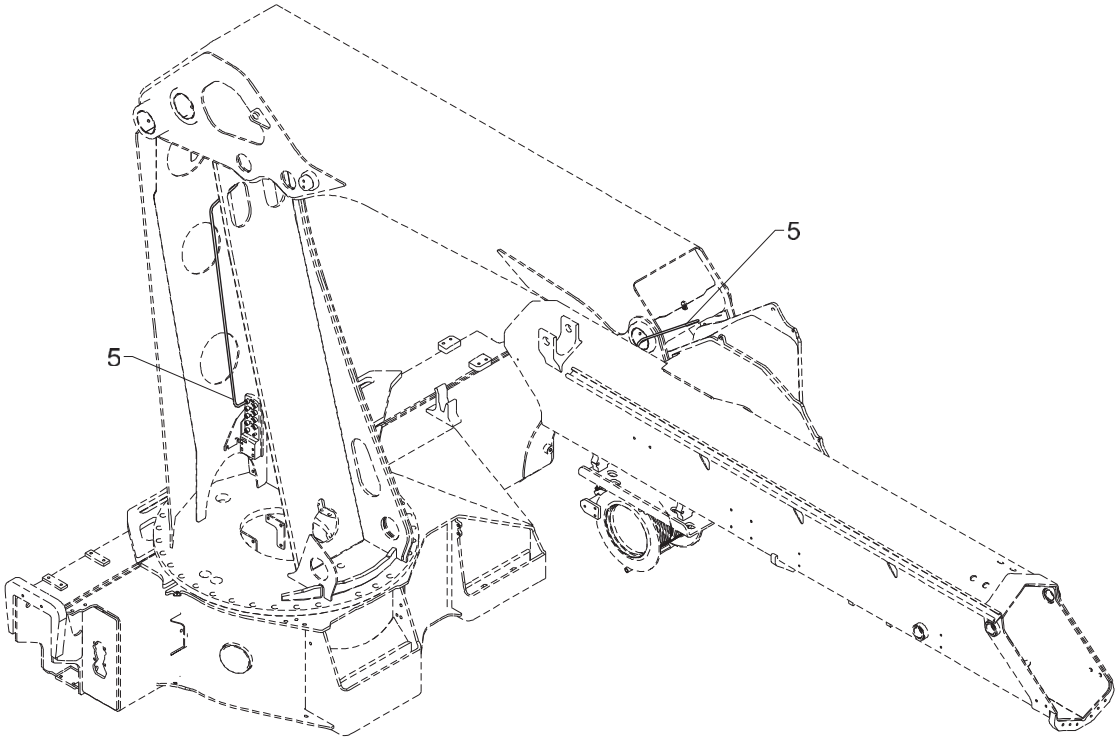

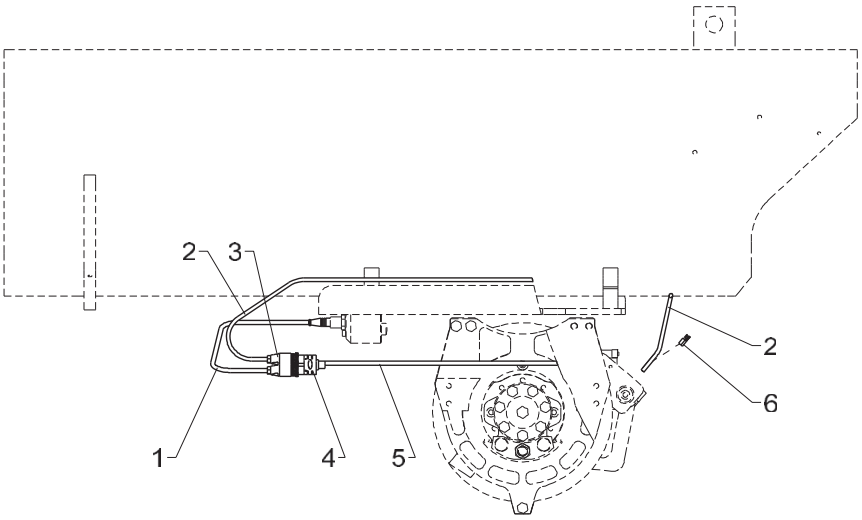

Winch, electric parts

Pos	Qty.	Part no.	Description	Remarks
1	1	29389	Extension for cable M12, 1,2m	
2	1	28249	Cable 2 x 0.75	1,0 m
3	1	29268	Plug, M12, straight 4-polar	
4	1	29477	Y-splitter 3xM12 - Parallel	
5	1	29497	Extension cable, 5 m	
6	2	28700	Cable shoe, red clevis Ø3	

50/345

Internal ref. 70 08 100

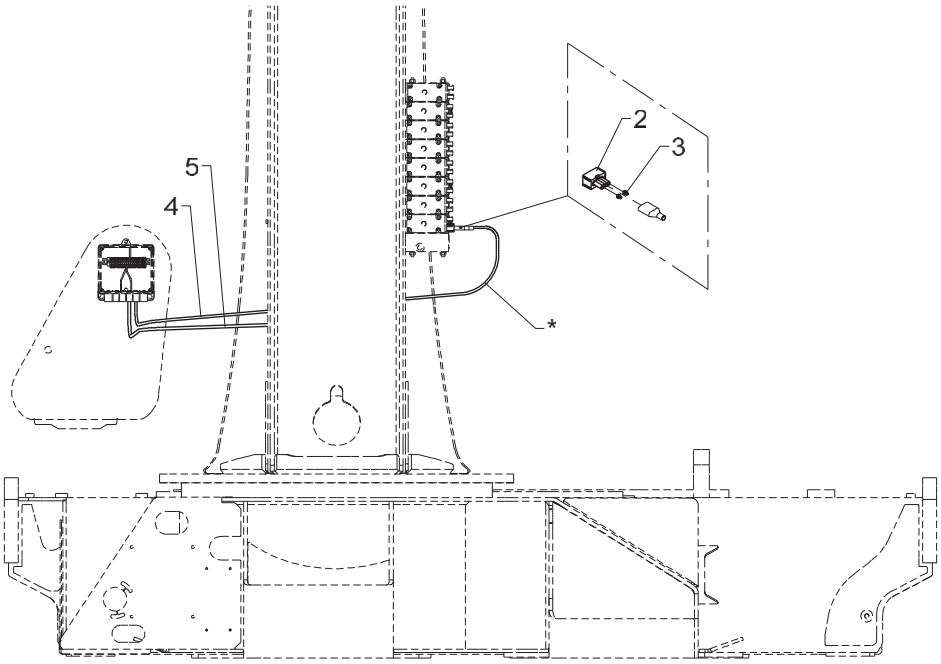

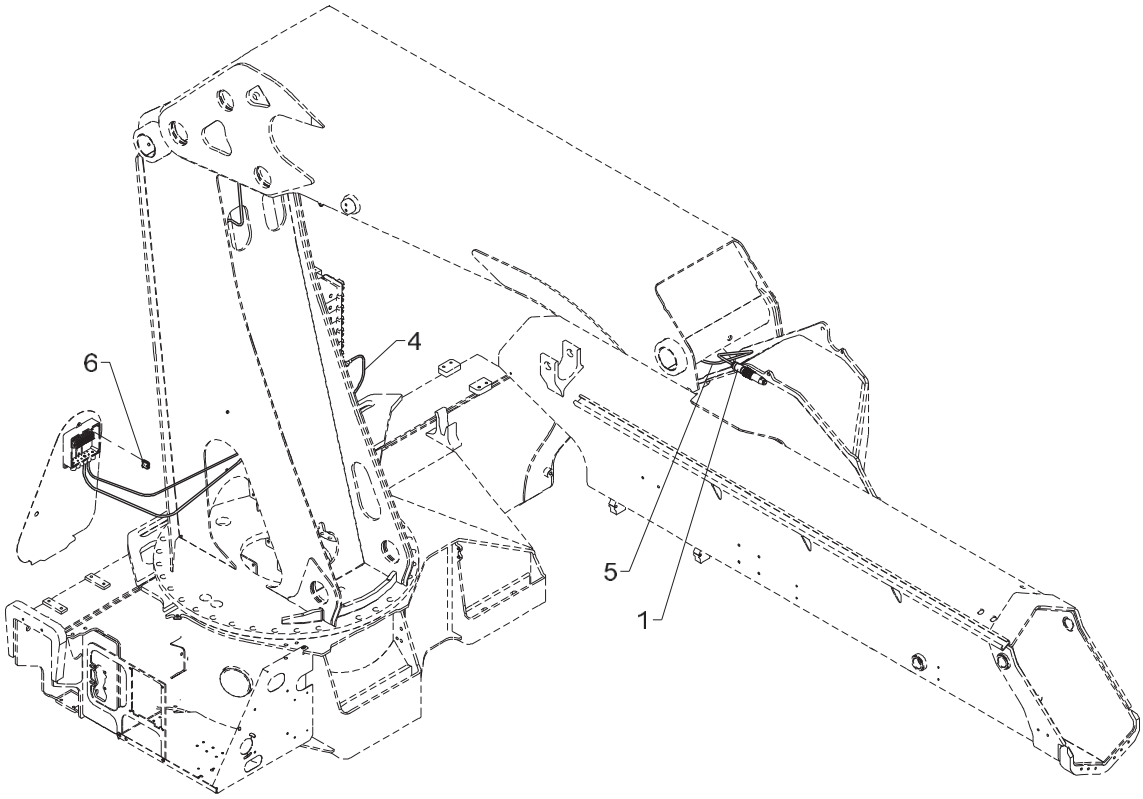

Obsolete

542 22 420

From loader 1150001
To loader

Created 27-05-2013
Modified

Fly-Jib supply Column

Pos	Qty.	Part no.	Description	Remarks
1	1	29275	Cable socket 7-polar 10 A	
2	1	58954	Plug, AMP black	
3	2	29461	Cable lead-in, safety plug AMP	
4	1	28263	CAN BUS cable	1.5 m
5	1	28263	CAN BUS cable	6 m
6	2	28010	Terminal	

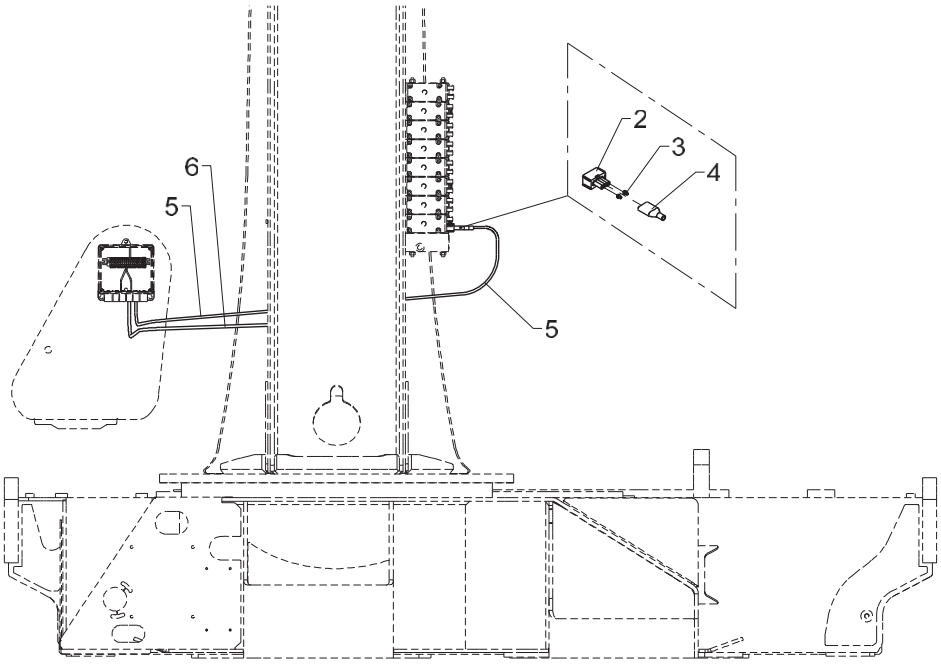
2
3
4
6
5
5

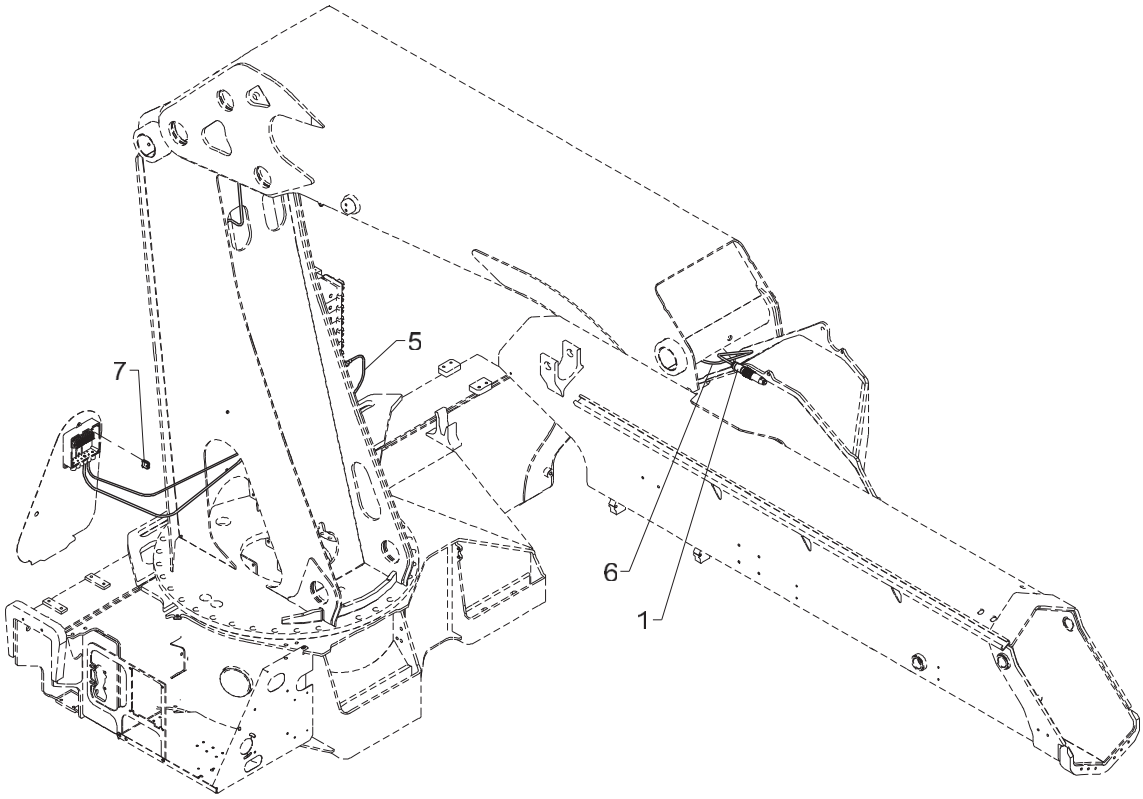
5
7
6
1

Obsolete

542 22 420 A

From loader 1150001
To loader

Created 19-02-2014
Modified

Fly-Jib supply Column

Pos	Qty.	Part no.	Description	Remarks
1	1	29275	Cable socket 7-polar 10 A	
2	1	58954	Plug, AMP black	
3	2	29461	Cable lead-in, safety plug AMP	
4	1	29457	Insulation NSA 18-6	60 mm
5	1	29399	Cable CAN Bus	2 m
6	1	28263	CAN BUS cable	6 m
7	2	28010	Terminal	

50/345

Internal ref. 70 08 100

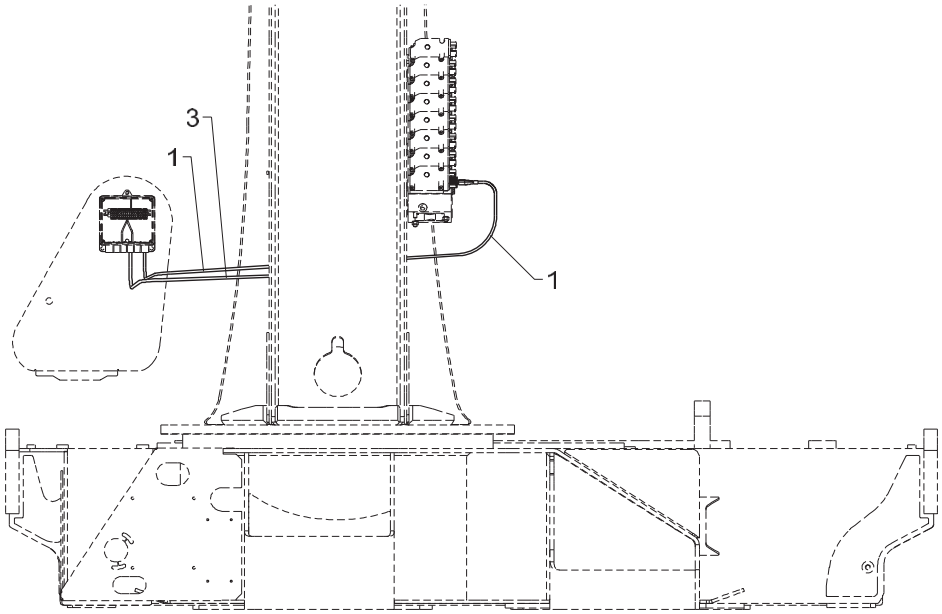

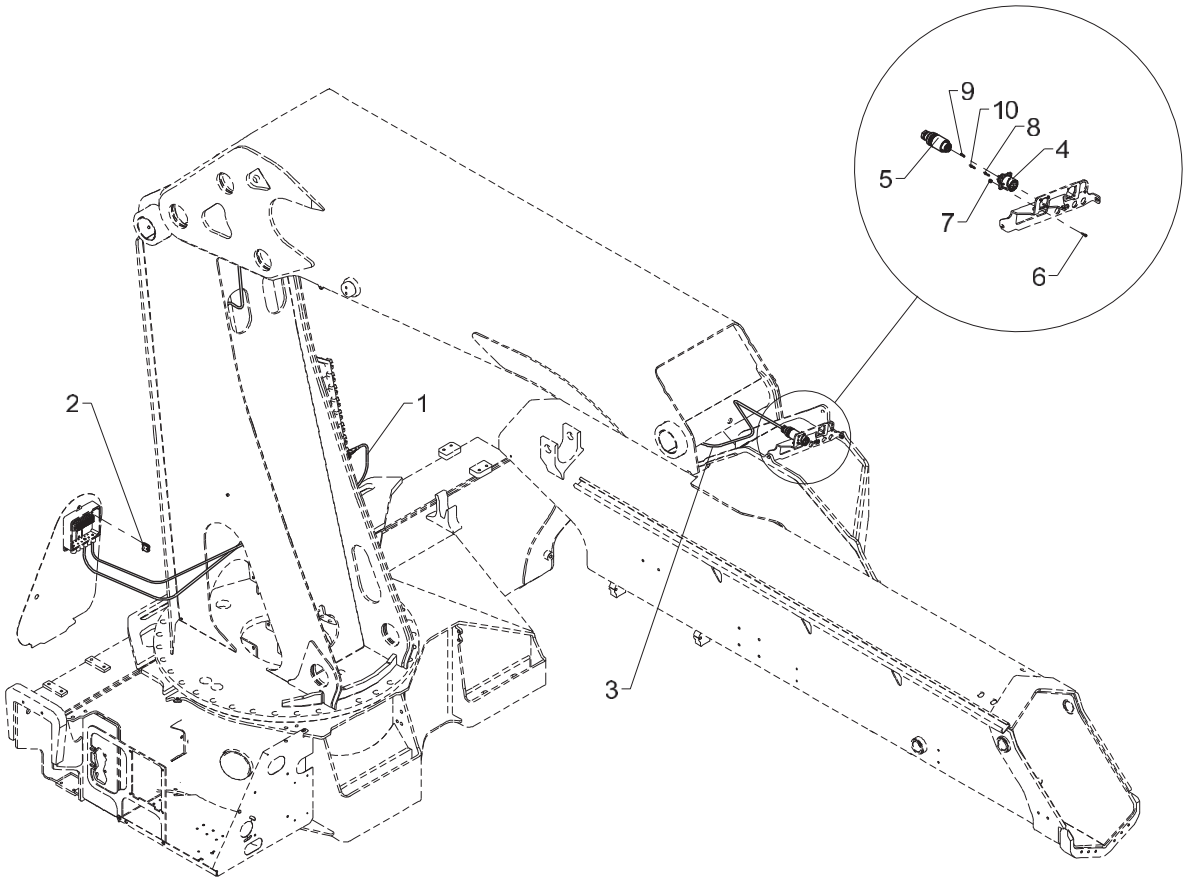

Fly-Jib supply Column

Pos	Qty.	Part no.	Description	Remarks
1	1	28759	Cable, CAN-bus 2.5 m AMP black	2 m
2	2	28010	Terminal	
3	1	28263	CAN BUS cable	6 m
4	1	29628		
5	1	29635		
6	4	32386	Screw M3 x 12 stainless	M3 x 12
7	4	32387	Lock nut M3 stainless	M3
8	2	29631		
9	3	29638		
10	5	29633		

50/345

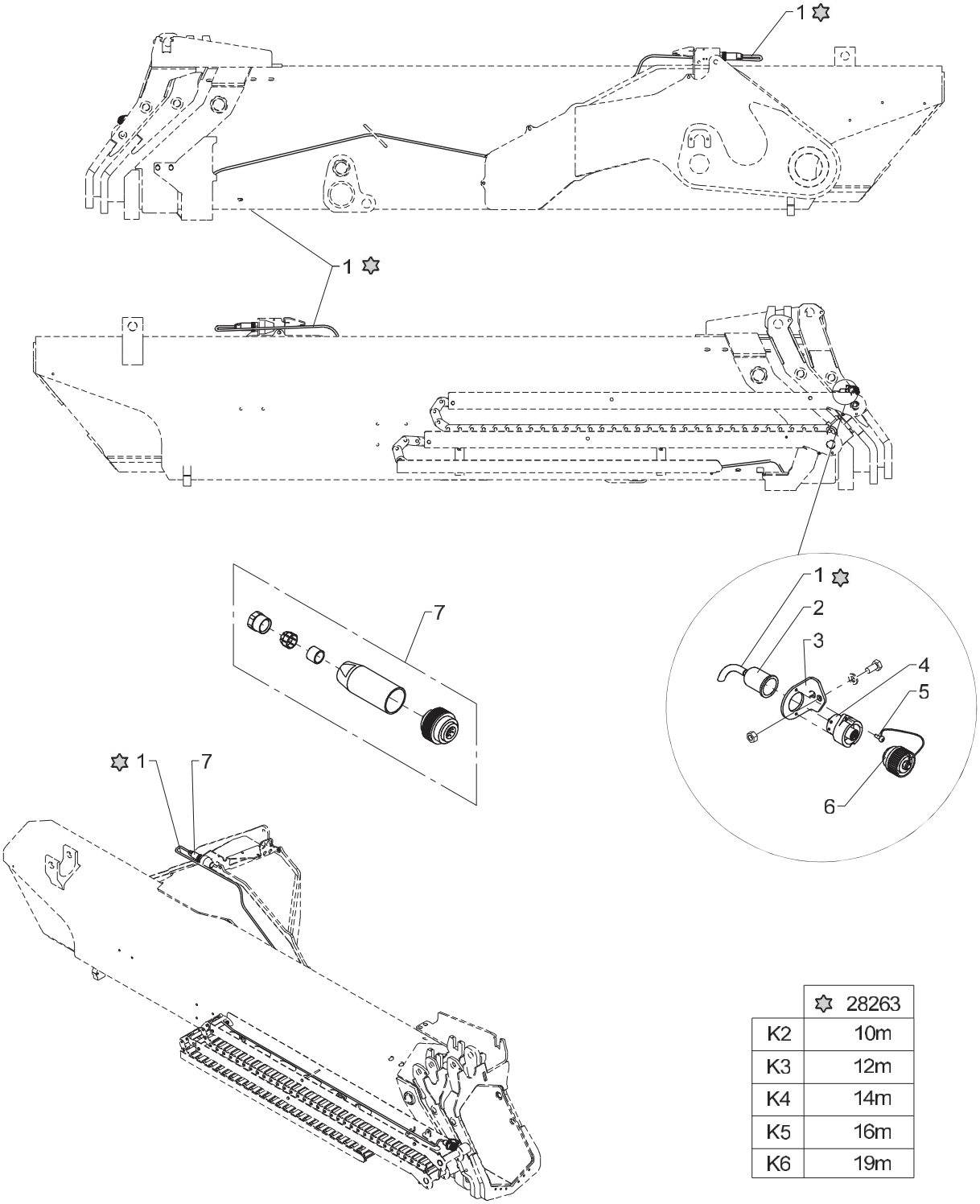

	28263
K2	10m
K3	12m
K4	14m
K5	16m
K6	19m

Obsolete

542 22 430

FJ supply, hose guides

From loader 1150001
To loader 1150238

Created
Modified 01-02-2013

Pos	Qty.	Part no.	Description	Remarks
		7005780	FJ supply, hose guide, K2	
		7006100	Electric cable, FJ K3	
		7006110	Electric cable, FJ K4	
		7006120	Electric cable, FJ K5	
		7006130	Electric cable, FJ K6	
1	1	28263	CAN BUS cable	
2	1	29233	Protection	
3	1	6340779	Adapter	
4	1	29232	Socket, 7-polar, 10 A	
5	2	31030	Screw	M3 x 8
6	1	58103	Cover	
7	1	29285	Cable plug, 7-polar, 10 A	

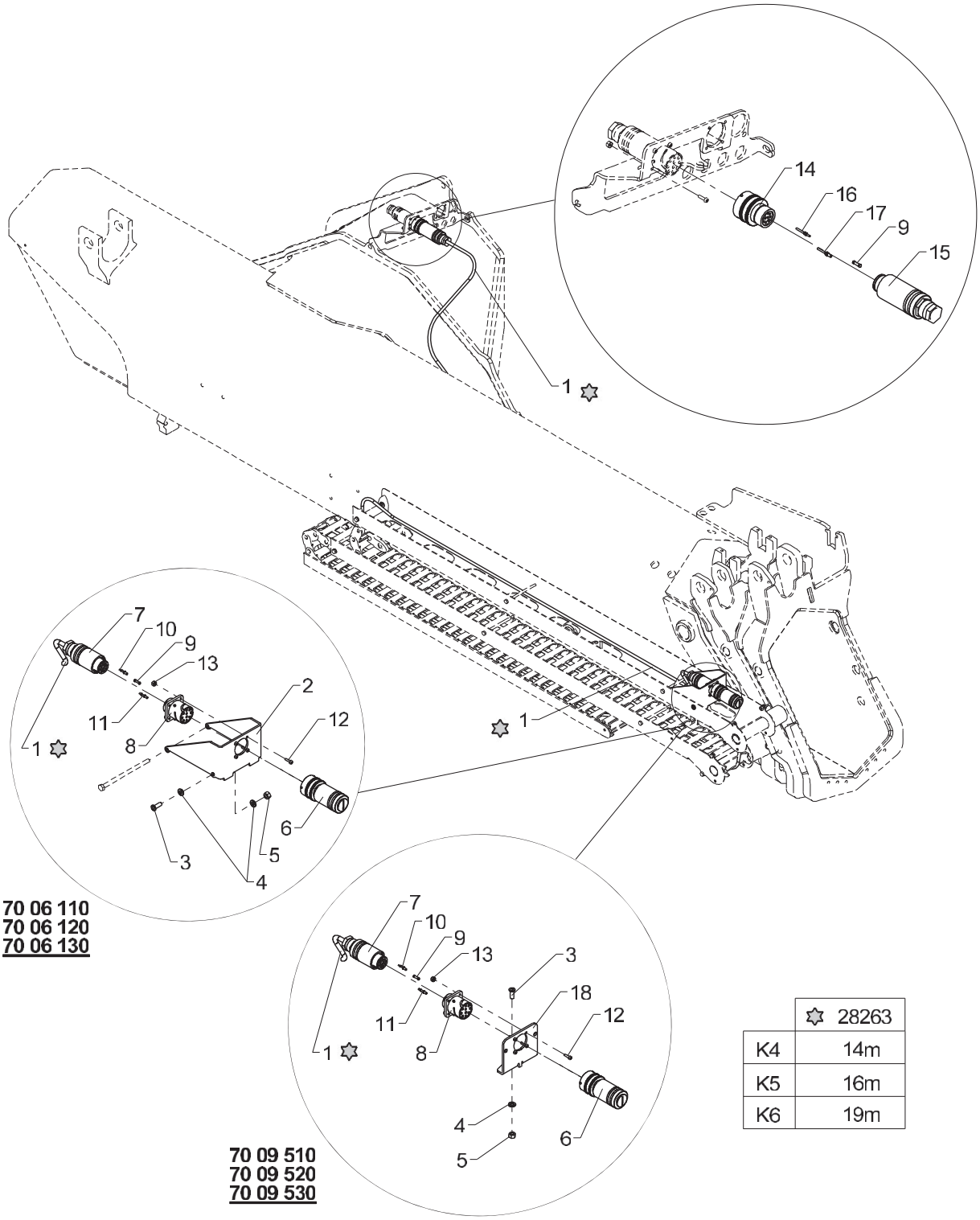

	28263
K4	14m
K5	16m
K6	19m

FJ supply

Pos	Qty.	Part no.	Description	Remarks
		7006110	Electric cable, FJ K4	3220K - 4020K - 5020K
		7006120	Electric cable, FJ K5	3220K - 4020K - 5020K
		7006130	Electric cable, FJ K6	3220K - 4020K - 5020K
		7009510		6020K - 8520K
		7009520		6020K - 8520K
		7009530		6020K - 8520K
1	1	28263	CAN BUS cable	
2	1	7004036		
3	1	32490	Screw	MC6 x 16
4	2	32302	Face washer, stainless	6 mm
5	1	30884	Lock nut, stainless	M6
6	1	7009999	Dummy plug for Fly-Jib	
7	1	29635		
8	1	29628		
9	6	29638		
10	2	29631		
11	5	29633		
12	4	32386	Screw M3 x 12 stainless	M3 x 12
13	4	32387	Lock nut M3 stainless	M3
14	1	29629		
15	1	29634		
16	5	29632		
17	2	29630		
18	1	7004028	Bracket, FJ plug	

50/345

Internal ref. 70 08 050

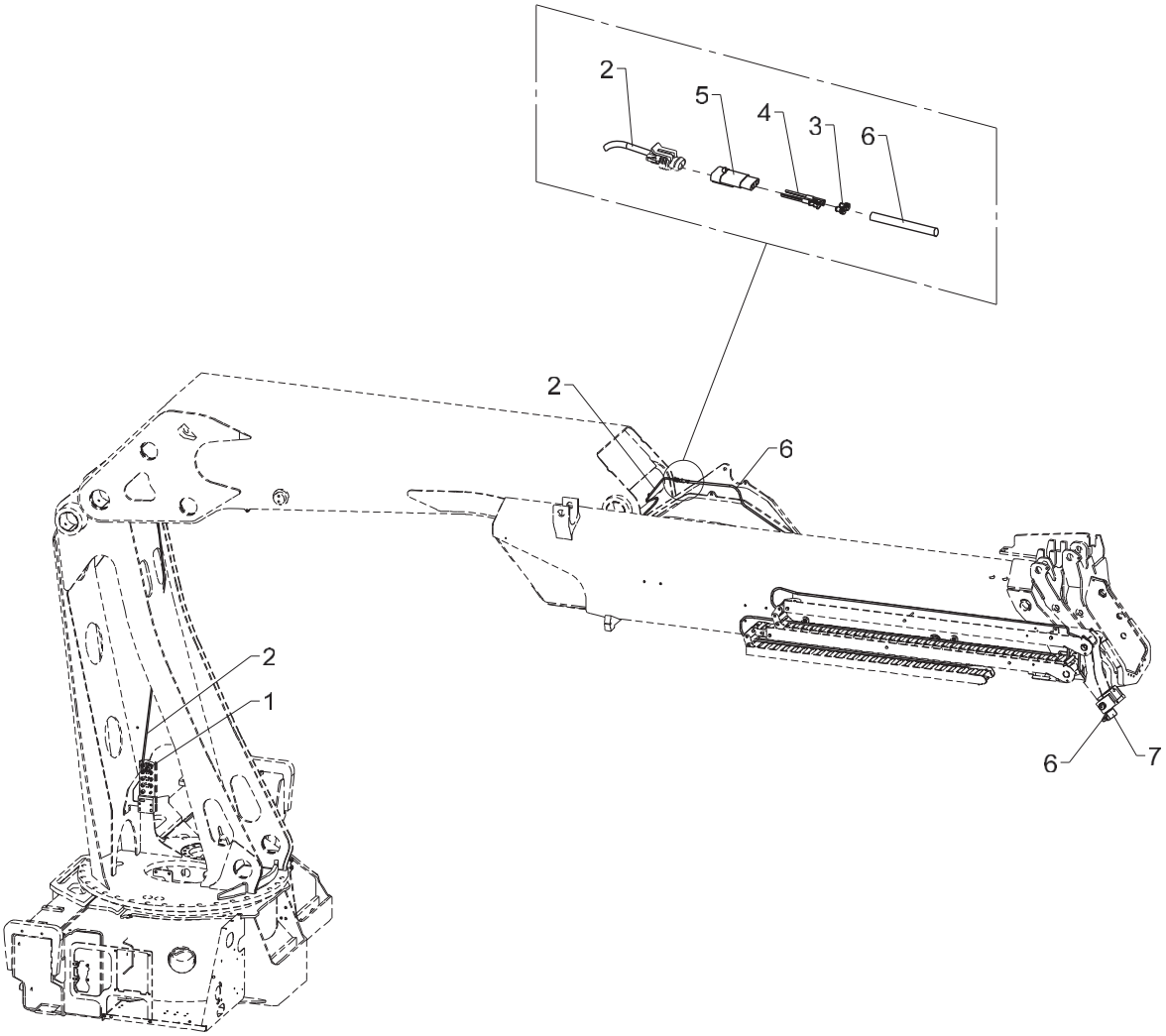

3rd extra valve

Pos	Qty.	Part no.	Description	Remarks
1	1	29268	Plug, M12, straight 4-polar	
2	1	29462	Cable, LED spotlight, 9.0m	
3	2	29159	Cable lead-in, AMP	
4	2	29161	Plug, AMP	
5	1	29160	Socket, 2-polar, AMP	
6	1	28249	Cable 2 x 0.75	18 m
7	1	28258	Plug, solenoid valve	

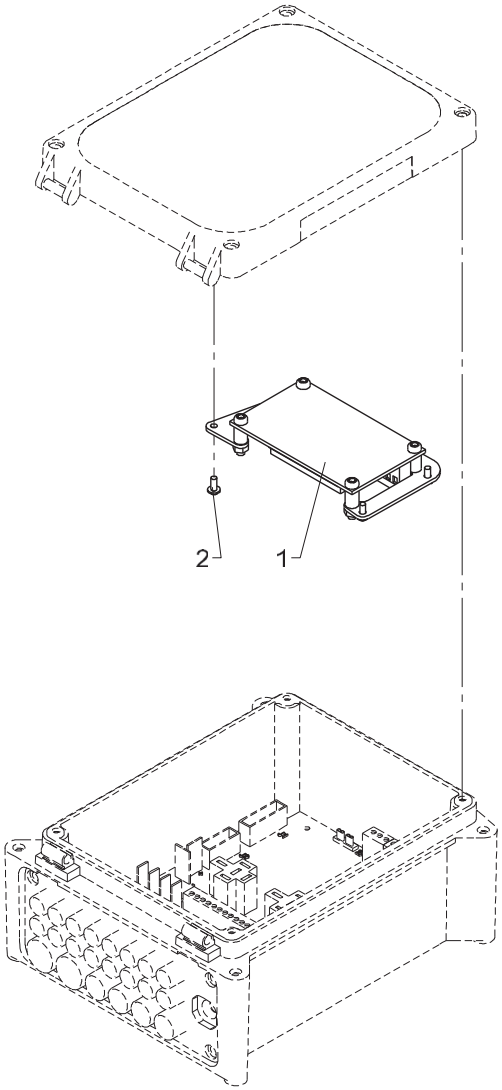
1
2
1

EJB5385, installation

Pos	Qty.	Part no.	Description	Remarks
1	1	29474	EJB5385	
2	4	30361	Screw, stainless	3,0 x 8

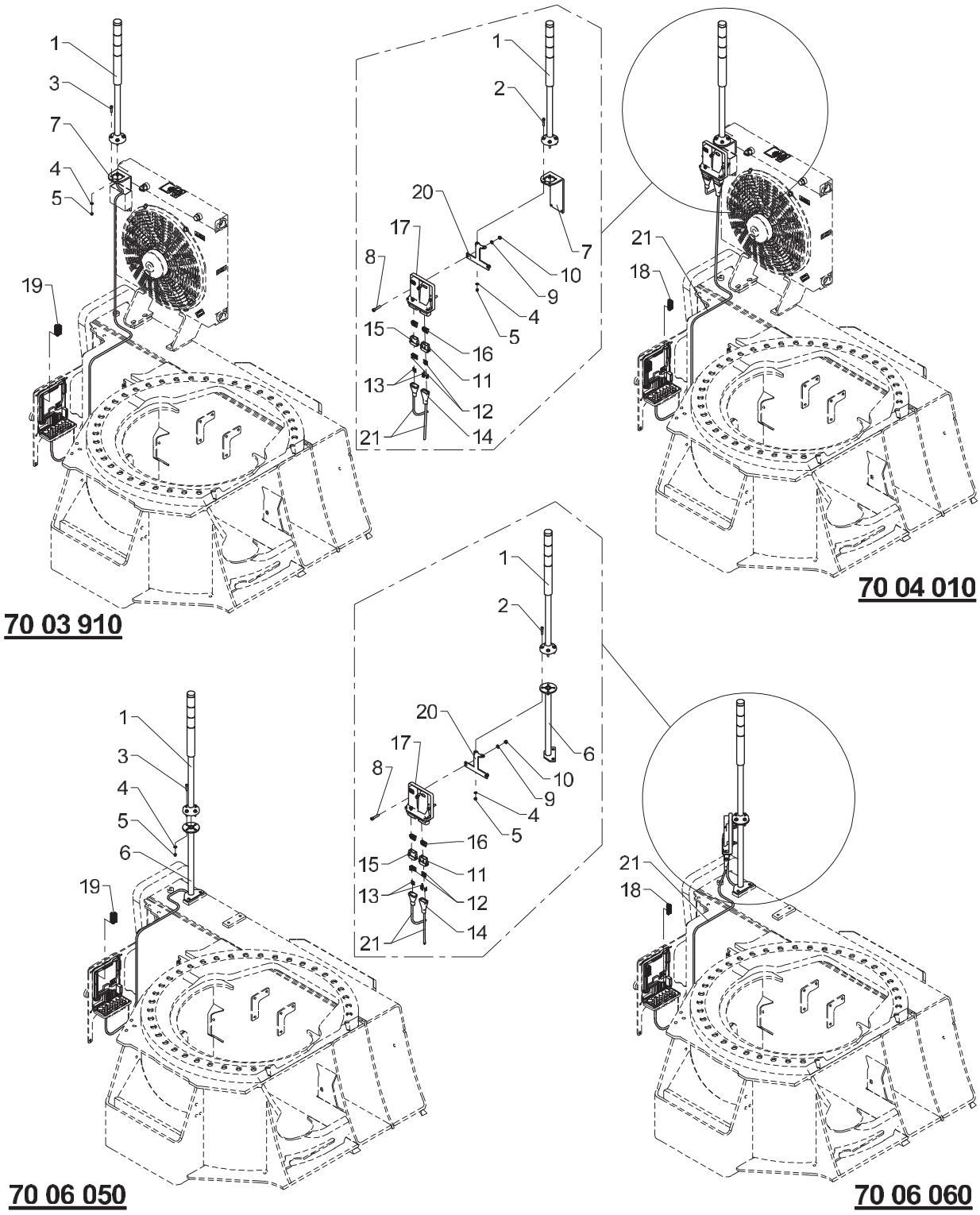
1
3
7
4
5
19
70 03 910
1
2
20
17
8
7
10
9
4
5
15
16
11
13
12
21
14
21
18
70 04 010
1
3
4
5
6
19
70 06 050
1
2
20
17
8
6
10
9
4
5
16
15
11
13
12
21
14
21
18
70 06 060

Obsolete

542 22 890

From loader 1150001
To loader 1150078

Created 25-11-2010
Modified 28-01-2011

Light tower

Pos	Qty.	Part no.	Description	Remarks
		7006050	Light tower	
		7006060	Light tower + CIO5374	
		7004010	Light tower + CIO5374	
		7003910	Light tower	
1	1	29195	Light tower incl. foot + cable	
2	4	30481	Screw	
3	4	31590	Sockethead screw	MC5 x 20
4	4	32308	Washer	5 mm
5	4	30859	Lock nut, stainless	
6	1	6301383	Bracket for light tower	
7	1	6301382	Bracket for light tower	
8	2	30961	Screw	MC6 x 30
9	2	32302	Face washer, stainless	6 mm
10	2	30884	Lock nut, stainless	M6
11	1	29327	Plug, type B for ECT5310	
12	13	29329	Pin for plug for ECT5310	
13	11	29339	Sealing for plug for ECT5310	
14	2	28566	Insulation, black	10 cm
15	1	29326	Plug, type A for ECT5310	
16	2	29328	Lock for plug for ECT5310	
17	1	29345	CIO5374 controller excl. cable	
18	1	29318	Plug, 7-polar for RCL 53XX	
19	1	29319	Plug, 8-polar for RCL 53XX	
20	1	6301387	Bracket for CIO5374 controller	
21	1	28263	CAN BUS cable	2,5 m

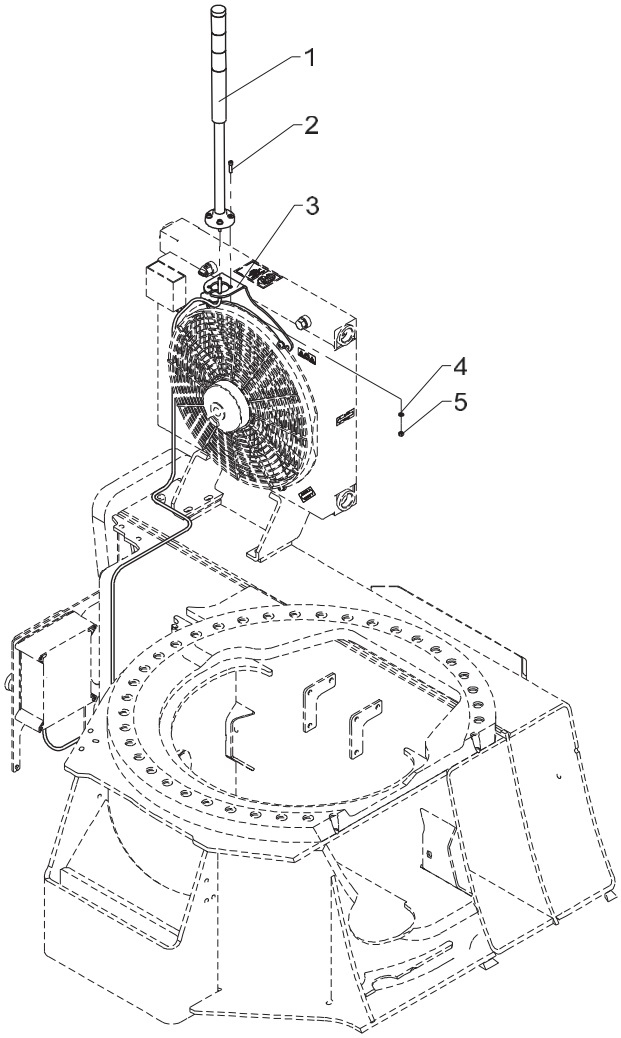

70 03 910

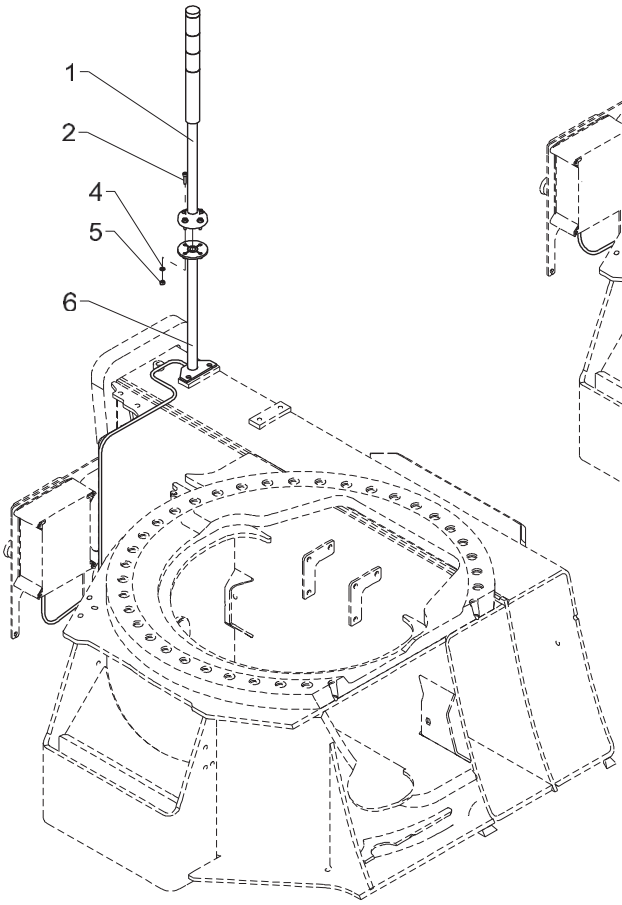

70 06 050

Obsolete

542 22 890 A

From loader 1150001
To loader 1150078

Created 07-03-2013
Modified

Light tower

Pos	Qty.	Part no.	Description	Remarks
		7006050	Light tower	
		7003910	Light tower	
1	1	29195	Light tower incl. foot + cable	
2	4	31590	Sockethead screw	MC5 x 20
3	1	6301382	Bracket for light tower	
4	4	32308	Washer	5 mm
5	4	30859	Lock nut, stainless	
6	1	6301383	Bracket for light tower	

50/345

70 03 910
Internal ref. 70 06 050

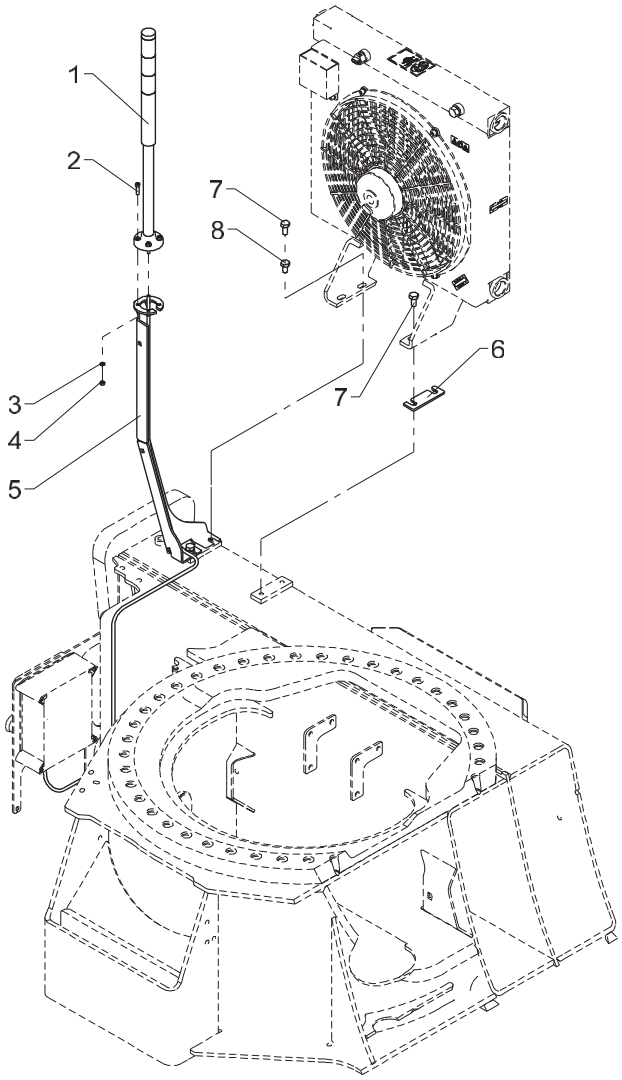

Obsolete

542 22 890 B

From loader 1150079
To loader 1150156

Created 08-05-2013
Modified 01-09-2014

Light tower

Pos	Qty.	Part no.	Description	Remarks
		7006050	Light tower	
		7003910	Light tower	
1	1	29195	Light tower incl. foot + cable	
2	4	31590	Sockethead screw	MC5 x 20
3	4	32308	Washer	5 mm
4	4	30859	Lock nut, stainless	
5	1	7004016	Support for light tower	
6	1	7004017	Support for oil cooler	70 03 910
7	4	31517	Set screw, stainless	70 03 910
8	2	31510	Set screw, stainless	70 06 050

50/345

70 03 910
Internal ref. 70 06 050

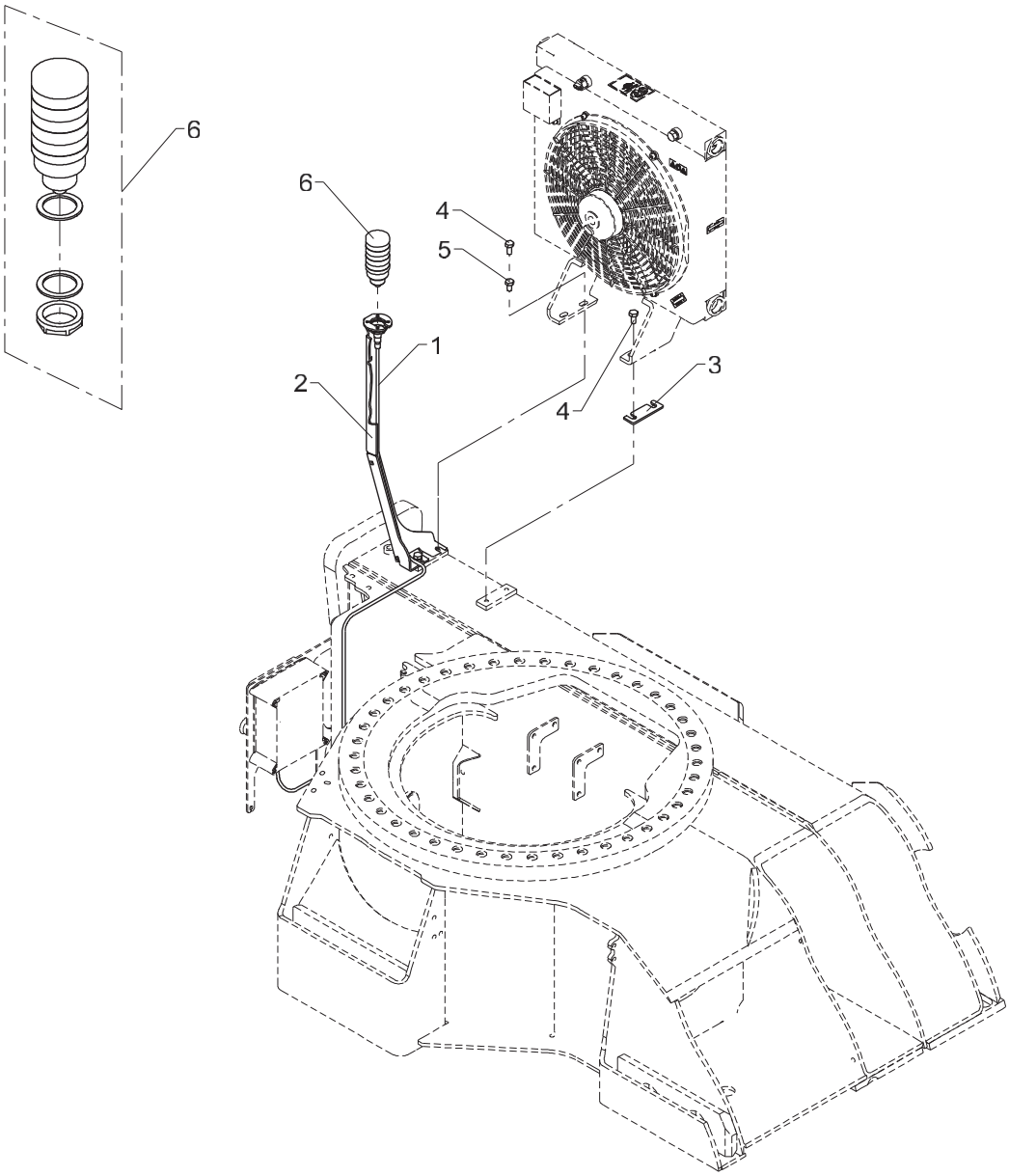

Light tower

Pos	Qty.	Part no.	Description	Remarks
		7006050	Light tower	
		7003910	Light tower	
1	1	29224	Cable with socket, 5 m	
2	1	7004016	Support for light tower	
3	1	7004017	Support for oil cooler	70 03 910
4	4	31517	Set screw, stainless	70 03 910
5	2	31510	Set screw, stainless	70 06 050
6	1	29542	Light tower	