Manual # 99905930

22/153DL, 24/169DL, 26/180DL Technical Specifications

Revision Date: 03032015

IOWA MOLD TOOLING CO., INC.
PO Box 189
Garner, IA 50438
Tel: 641-923-3711 FAX: 641-923-2424
Website: http://www.imt.com

Copyright © 2009 Iowa Mold Tooling Co., Inc.
All rights reserved

No part of this publication may be reproduced, stored in a retrieval system, or transmitted in any form or by any means, electronic, mechanical, photocopying, recording or otherwise without the prior written permission of Iowa Mold Tooling Co., Inc.

Iowa Mold Tooling Co., Inc. is an Oshkosh Corporation company.

Published on 03 March, 2015

Revisions III

Table of Contents

Chapter 1: Technical Data for 22/153DL 1

Chapter 2: Capacity Charts for 22/153DL 7

Chapter 3: Technical Data for 24/169DL 17

Chapter 4: Capacity Charts for 24/169DL 23

Chapter 5: Technical Data for 26/180DL 33

Chapter 6: Capacity Charts for 26/180DL 39

Chapter 7: Dimensional Drawings for 22/153DL, 24/169DL, 26/180DL 72

Revisions

Date	Location	Description

This Page Left Blank Intentionally

CHAPTER 1

22/153DL Technical Specifications

In this Chapter

22/153DL Performance 2

22/153DL Dimensions 3

22/153DL Weights, Basic Loader 3

22/153DL Weights, Equipment 4

22/153DL Max. Load on Stabilizers (Per Stabilizer Cylinders) 4

22/153DL Power Consumption / Oil Capacity 5

22/153DL Performance

	22/153DL K2	22/153DL K3	22/153DL K4	22/153DL K5	22/153DL K6	22/153DL K7	22/153DL K8
Loading group (EN12999)	H1/B3	H1/B3	H1/B3	H1/B3	H1/B3	H1/B3	H1/B3
Load moment	149,000 ft lb (20.6 tm)	145384 ft lb (20.1 tm)	141044 ft lb (19.5 tm)	138151 ft lb (19.1 tm)	134534 ft lb (18.6 tm)	132364 ft lb (18.3 tm)	128748 ft lb (17.8 tm)
Hydraulic reach	326.77” (8.3 m)	405.51” (10.3 m)	492.12” (12.5 m)	582.68” (14.8 m)	677.17” (17.2 m)	763.78” (19.4 m)	854.33” (21.7 m)
Hydraulic tele-scopic movement	150.80” (3830 mm)	229.53” (5830 mm)	312.20” (7930 mm)	398.82” (10130 mm)	489.76” (12440 mm)	574.02” (14580 mm)	661.02” (16790 mm)
Lifting capacity, hydraulic	661.02 lb - 169.29” (4750 kg - 4.3 m)	9810.56 lb - 173.22” (4550 kg - 4.4 m)	9612.14 lb - 177.17” (4360kg - 4.5m)	9215.31lb - 181.10” (4180kg - 4.6m)	8840.53lb - 181.10” (4010kg - 4.6m)	8553.93 lb - 185.03” (3880kg - 4.7m)	8223.23 lb - 188.98” (3730 kg - 4.8 m)
	7209.11 lb - 244.09” (3270 kg - 6.2 m)	6834.32 lb - 248.03” (3100 kg - 6.3 m)	6459.54 lb - 251.97” (2930 kg - 6.4 m)	6128.84 lb - 251.97” (2780 kg - 6.4 m)	5798.15lb - 255.91” (2630kg - 6.5m)	5555.64 lb - 259.84” (2520 kg - 6.6 m)	5269.04 lb - 263.78” (2390 kg - 6.7 m)
	5445.41 lb - 322.84” (2470 kg - 8.2 m)	5092.67 lb - 322.84” (2310 kg - 8.2 m)	4739.93 lb - 326.77” (2150 kg - 8.3 m)	4431.29 lb - 330.71” (2010 kg - 8.4 m)	4100.59 lb - 334.65” (1860 kg - 8.5 m)	3902.18 lb - 334.65” (1770 kg - 8.5 m)	3637.62 lb - 338.58” (1650 kg - 8.6 m)
		4056.50 lb - 401.57” (1840 kg - 10.2 m)	3703.76 lb - 405.51” (1680 kg - 10.3 m)	3395.11 lb - 409.45” (1540 kg - 10.4 m)	3108.51 lb - 413.39” (1410 kg - 10.5 m)	2888.05 lb - 413.39” (1310 kg - 10.5 m)	2645.54 lb - 417.32” (1200 kg - 10.6 m)
			3042.38 lb - 488.19” (1380 kg - 12.4 m)	2733.73 lb - 492.13” (1240 kg - 12.5 m)	2447.13 lb - 496.06” (1110 kg - 12.6 m)	2226.67 lb - 496.06” (1010 kg - 12.6 m)	1984.16 lb - 500” (900 kg - 12.7 m)
				2292.80 lb - 578.74” (1040 kg - 14.7 m)	1984.16 lb - 582.68” (900 kg - 14.8 m)	1785.74 lb - 582.68” (810 kg - 14.8 m)	1565.28 lb - 582.68” (710 kg - 14.9 m)
					1653.46 lb - 673.23” (750 kg - 17.1 m)	1433 lb - 673.23” (650 kg - 17.1 m)	1212.54 lb - 677.17” (550 kg - 17.2 m)
						1234.60 lb - 759.84” (560 kg - 19.3 m)	1036.17 lb - 763.78” (470 kg - 19.4 m)
							903.8 lb - 850.39” (410 kg - 21.6 m)
Lifting capacity, manual exten-sions			2403.04 lb - 578.74” (1090 kg - 14.7 m)	1785.74 lb - 673.23” (810 kg - 17.1 m)	1322.77 lb - 763.78” (600 kg - 19.4 m)	992.08 lb - 850.39” (450 kg - 21.6 m)	617.29 lb - 940.95” (280 kg - 23.9 m)
			1895.97 lb - 673.23” (860 kg - 17.1 m)	1433 lb - 763.78” (650 kg - 19.4 m)	992.08lb - 854.33” (450 kg - 21.7 m)	617.29 lb - 940.95” (280 kg - 23.9 m)	
			1543.23 lb - 763.78 (700 kg - 19.4 m)	992.08 lb - 854.33” (450 kg - 21.7 m)	617.29 lb - 21.7” (280 kg - 24.1 m)		
Slewing torque, gross	19987.9 lb-ft (27.1kNm)	19987.9 lb-ft (27.1kNm)	19987.9 lb-ft (27.1kNm)	19987.9 lb-ft (27.1kNm)	19987.9 lb-ft (27.1kNm)	19987.9 lb-ft (27.1kNm)	19987.9 lb-ft (27.1kNm)
Slewing angle	400˚	400˚	400˚	400˚	400˚	400˚	400˚
Max. heel at max. load moment	5˚	5˚	5˚	5˚	5˚	5˚	5˚
Slewing speed	24˚/s	24˚/s	24˚/s	24˚/s	24˚/s	24˚/s	24˚/s

22/153DL Dimensions

	22/153DL K2	22/153DL K3	22/153DL K4	22/153DL K5	22/153DL K6	22/153DL K7	22/153DL K8
Height above chassis	90.35” (2295 mm)	90.35” (2295 mm)	90.35” (2295 mm)	90.35” (2295 mm)	90.35” (2295 mm)	90.35” (2295 mm)	91.93” (2335 mm)
Width	98.43” (2500 mm)	98.43” (2500 mm)	98.43” (2500 mm)	98.43” (2500 mm)	98.43” (2500 mm)	98.43” (2500 mm)	98.43” (2500 mm)
Length, no extra valves	34.84” (885 mm)	34.84” (885 mm)	34.84” (885 mm)	34.84” (885 mm)	34.84” (885 mm)	39.17” (995 mm)	39.17” (995 mm)
Length, with extra valves (hose guides)	39.57” (1005 mm)	39.57” (1005 mm)	39.57” (1005 mm)	39.57” (1005 mm)	39.57” (1005 mm)		
Length, with 1 extra valve (hose reels)						39.17” (995 mm)	39.17” (995 mm)
Length, with 2 extra valves (hose reels)						40.55” (1030 mm)	40.55” (1030 mm)
Length, with extra valves (int. hose routing)	34.84” (885 mm)	34.84” (885 mm)	34.84” (885 mm)	34.84” (885 mm)	34.84” (885 mm)		
Stabilizer spread, S1 (standard)	219.49” (5575 mm)	219.49” (5575 mm)	219.49” (5575 mm)	219.49” (5575 mm)	219.49” (5575 mm)	219.49” (5575 mm)	219.49” (5575 mm)
Stabilizer spread, D	254.13” (6455 mm)	254.13” (6455 mm)	254.13” (6455 mm)	254.13” (6455 mm)	254.13” (6455 mm)	254.13” (6455 mm)	254.13” (6455 mm)

22/153DL Weights, Basic Loader

	22/153DL K2	22/153DL K3	22/153DL K4	22/153DL K5	22/153DL K6	22/153DL K7	22/153DL K8
Standard loader 1), excl. Stabilizers	4365 lb (1980 kg)	4740 lb (2150 kg)	5181 lb (2350 kg)	5512 lb (2500 kg)	5820 lb (2640 kg)	6052 lb (2745 kg)	6239 lb (2830 kg)
Stabilizers, S1 fixed	639 lb (290 kg)	639 lb (290 kg)	639 lb (290 kg)	639 lb (290 kg)	639 lb (290 kg)	639 lb (290 kg)	639 lb (290 kg)
Stabilizers, S1 swing-up	650 lb (295 kg)	650 lb (295 kg)	650 lb (295 kg)	650 lb (295 kg)	650 lb (295 kg)	650 lb (295 kg)	650 lb (295 kg)
Stabilizers, S1 hydr. swing-up	661 lb (300 kg)	661 lb (300 kg)	661 lb (300 kg)	661 lb (300 kg)	661 lb (300 kg)	661 lb (300 kg)	661 lb (300 kg)
Stabilizers, D fixed	805 lb (365 kg)	805 lb (365 kg)	805 lb (365 kg)	805 lb (365 kg)	805 lb (365 kg)	805 lb (365 kg)	805 lb (365 kg)
Stabilizers, D swing-up	815 lb (370 kg)	815 lb (370 kg)	815 lb (370 kg)	815 lb (370 kg)	815 lb (370 kg)	815 lb (370 kg)	815 lb (370 kg)
Stabilizers, D hydr. swing-up	827 lb (375 kg)	827 lb (375 kg)	827 lb (375 kg)	827 lb (375 kg)	827 lb (375 kg)	827 lb (375 kg)	827 lb (375 kg)
Mounting kit, 4 bolts	143 lb (65 kg)	143 lb (65 kg)	143 lb (65 kg)	143 lb (65 kg)	143 lb (65 kg)	143 lb (65 kg)	143 lb (65 kg)
Mounting kit, 8 bolts	132 lb (60 kg)	132 lb (60 kg)	132 lb (60 kg)	132 lb (60 kg)	132 lb (60 kg)	132 lb (60 kg)	132 lb (60 kg)
Tank, excl. oil (fitted on loader)	88 lb (45 kg)	88 lb (45 kg)	88 lb (45 kg)	88 lb (45 kg)	88 lb (45 kg)	88 lb (45 kg)	88 lb (45 kg)z
Manual extensions			176 lb (80 kg)	154 lb (70 kg)	132 lb (60 kg)	88 lb (45 kg)	77 lb (35 kg)
			154 lb (70 kg)	132 lb (60 kg)	88 lb (45 kg)	77 lb (35 kg)	
			132 lb (60 kg)	88 lb (45 kg)	77 lb (35 kg)		
Oil in loader (stowing position)	88 lb (45 kg)	110 lb (50 kg)	121 lb (55 kg)	132 lb (60 kg)	143 lb (65 kg)	154 lb (70 kg)	154 lb (70 kg)

1) Weights ± 5% because of tolerances for plate thickness

22/153DL Weights, Equipment

	22/153DL K2	22/153DL K3	22/153DL K4	22/153DL K5	22/153DL K6	22/153DL K7	22/153DL K8
Stand-up controls (HS), std.	132 lb (60 kg)	132 lb (60 kg)	132 lb (60 kg)	132 lb (60 kg)	132 lb (60 kg)	132 lb (60 kg)	132 lb (60 kg)
Stand-up controls (HS), direct valve control	154 lb (70 kg)	154 lb (70 kg)	154 lb (70 kg)	154 lb (70 kg)	154 lb (70 kg)	154 lb (70 kg)	154 lb (70 kg)
Top seat (TS)	198 lb (90 kg)	198 lb (90 kg)	198 lb (90 kg)	198 lb (90 kg)	198 lb (90 kg)	198 lb (90 kg)	198 lb (90 kg)
Top seat, ladder	44 lb (20 kg)	44 lb (20 kg)	44 lb (20 kg)	44 lb (20 kg)	44 lb (20 kg)	44 lb (20 kg)	44 lb (20 kg)
1 extra valve, hose guides	121 lb (55 kg)	143 lb (65 kg)	165 lb (75 kg)	187 lb (85 kg)	209 lb (95 kg)		
1 extra valve, hose reels						209 lb (95 kg)	209 lb (95 kg)
1 extra valve, int. hose routing	165 lb (75 kg)	165 lb (75 kg)	176 lb (80 kg)	176 lb (80 kg)	187 lb (85 kg)		
2 extra valves, hose guides	165 lb (75 kg)	198 lb (90 kg)	231 lb (105 kg)	264 lb (120 kg)	135 lb (297 kg)		
2 extra valves, hose reels						408 lb (185 kg)	408 lb (185 kg)
2 extra valves, int. hose routing	286 lb (130 kg)	286 lb (130 kg)	308 lb (140 kg)	308 lb (145 kg)	331 lb (150 kg)		
Winch (1.5 t), single snatch block	386 lb (175 kg)	386 lb (175 kg)	386 lb (175 kg)	386 lb (175 kg)	397 lb (180 kg)	397 lb (180 kg)	419 lb (190 kg)
Winch (1.5 t), double snatch block	375 lb (170 kg)	375 lb (170 kg)	375 lb (170 kg)	375 lb (170 kg)	386 lb (175 kg)	386 lb (175 kg)	397 lb (180 kg)
Winch (2.5 t), single snatch block	441lb (200kg)	441lb (200kg)	441lb (200kg)	441lb (200kg)	452 lb (205 kg)	452 lb (205 kg)	463 lb (210 kg)
Winch (2.5 t), double snatch block	430 lb (195 kg)	430 lb (195 kg)	430 lb (195 kg)	430 lb (195 kg)	440 lb (200kg)	440 lb (200 kg)	452 lb (205 kg)
High-pressure filter	15 lb (7 kg)	15 lb (7 kg)	15 lb (7 kg)	15 lb (7 kg)	15 lb (7 kg)	15 lb (7 kg)	15 lb (7 kg)
Oil cooler	55 lb (25 kg)	55 lb (25 kg)	55 lb (25 kg)	55 lb (25 kg)	55 lb (25 kg)	55 lb (25 kg)	55 lb (25 kg)

22/153DL Max. Load on Stabilizers (Per Stabilizer Cylinder)

	22/153DL K2	22/153DL K3	22/153DL K4	22/153DL K5	22/153DL K6	22/153DL K7	22/153DL K8
S1, fixed	88507 ft-lb (120 kN)	88507 ft-lb (120 kN)	88507 ft-lb (120 kN)	88507 ft-lb (120 kN)	88507 ft-lb (120 kN)	88507 ft-lb (120 kN)	88507 ft-lb (120 kN)
S1, swing-up	88507 ft-lb (120 kN)	88507 ft-lb (120 kN)	88507 ft-lb (120 kN)	88507 ft-lb (120 kN)	88507 ft-lb (120 kN)	88507 ft-lb (120 kN)	88507 ft-lb (120 kN)
S1, hydr. swing-up	88507 ft-lb (120 kN)	88507 ft-lb (120 kN)	88507 ft-lb (120 kN)	88507 ft-lb (120 kN)	88507 ft-lb (120 kN)	88507 ft-lb (120 kN)	88507 ft-lb (120 kN)
D, fixed	73756 ft-lb (100 kN)	73756 ft-lb (100 kN)	73756 ft-lb (100 kN)	73756 ft-lb (100 kN)	73756 ft-lb (100 kN)	73756 ft-lb (100 kN)	73756 ft-lb (100 kN)
D, swing-up	73756 ft-lb (100 kN)	73756 ft-lb (100 kN)	73756 ft-lb (100 kN)	73756 ft-lb (100 kN)	73756 ft-lb (100 kN)	73756 ft-lb (100 kN)	73756 ft-lb (100 kN)
D, hydr. swing-up	73756 ft-lb (100 kN)	73756 ft-lb (100 kN)	73756 ft-lb (100 kN)	73756 ft-lb (100 kN)	73756 ft-lb (100 kN)	73756 ft-lb (100 kN)	73756 ft-lb (100 kN)

22/153DL Power Consumption / Oil Capacity

	22/153DL K2	22/153DL K3	22/153DL K4	22/153DL K5	22/153DL K6	22/153DL K7	22/153DL K8
Working pressure	4351 PSI (300 Bar)	4351 PSI (300 Bar)	4351 PSI (300 Bar)	4351 PSI (300 Bar)	4351 PSI (300 Bar)	4351 PSI (300 Bar)	4351 PSI (300 Bar)
Tank capacity (fitted on loader)	23.78 Gallons (90 L)	23.78 Gallons (90 L)	23.78 Gallons (90 L)	23.78 Gallons (90 L)	23.78 Gallons (90 L)	23.78 Gallons (90 L)	23.78 Gallons (90 L)
Max. pump performance, Hydrocontrol, 1-circuit	15.85 Gallon/min (60 L/min)	15.85 Gallon/min (60 L/min)	15.85 Gallon/min (60 L/min)	15.85 Gallon/min (60 L/min)	15.85 Gallon/min (60 L/min)	15.85 Gallon/min (60 L/min)	15.85 Gallon/min (60 L/min)
Max. pump performance, Hydrocontrol, 2-circuit	2x13.2 Gallons/ min (2x50 L/min)	2x13.2 Gallons/ min (2x50 L/min)	2x13.2 Gallons/ min (2x50 L/min)	2x13.2 Gallons/ min (2x50 L/min)	2x13.2 Gallons/ min (2x50 L/min)	2x13.2 Gallons/ min (2x50 L/min)	2x13.2 Gallons/ min (2x50 L/min)
Max. pump performance, Danfoss fixed flow	-	-	-	-	-	-	-
Max. pump performance, Danfoss variable	-	-	-	-	-	-	-

This Page Left Blank Intentionally

CHAPTER 2

22/153DL Capacity Charts

In this Chapter

22/153DL Capacity Chart K2 8
22/153DL Capacity Chart K3 9
22/153DL Capacity Chart K4 10
22/153DL Capacity Chart K5 11
22/153DL Capacity Chart K6 12
22/153DL Capacity Chart K7 13
22/153DL Capacity Chart K8 14
22/153DL Capacity Chart K2-K8 15

22/153DL K2 Capacity Chart

IMT
MATERIAL HANDLING SYSTEMS

IOWA MOLD TOOLING CO., INC.
BOX 189 • GARNER • IA • 50438 • 641-923-3711

Model 22/153DL K2

- **Working loads will be limited to those shown. Deduct the weight of load handling devices.**
- **Before lift is made, stability must be checked per SAE J765A.**

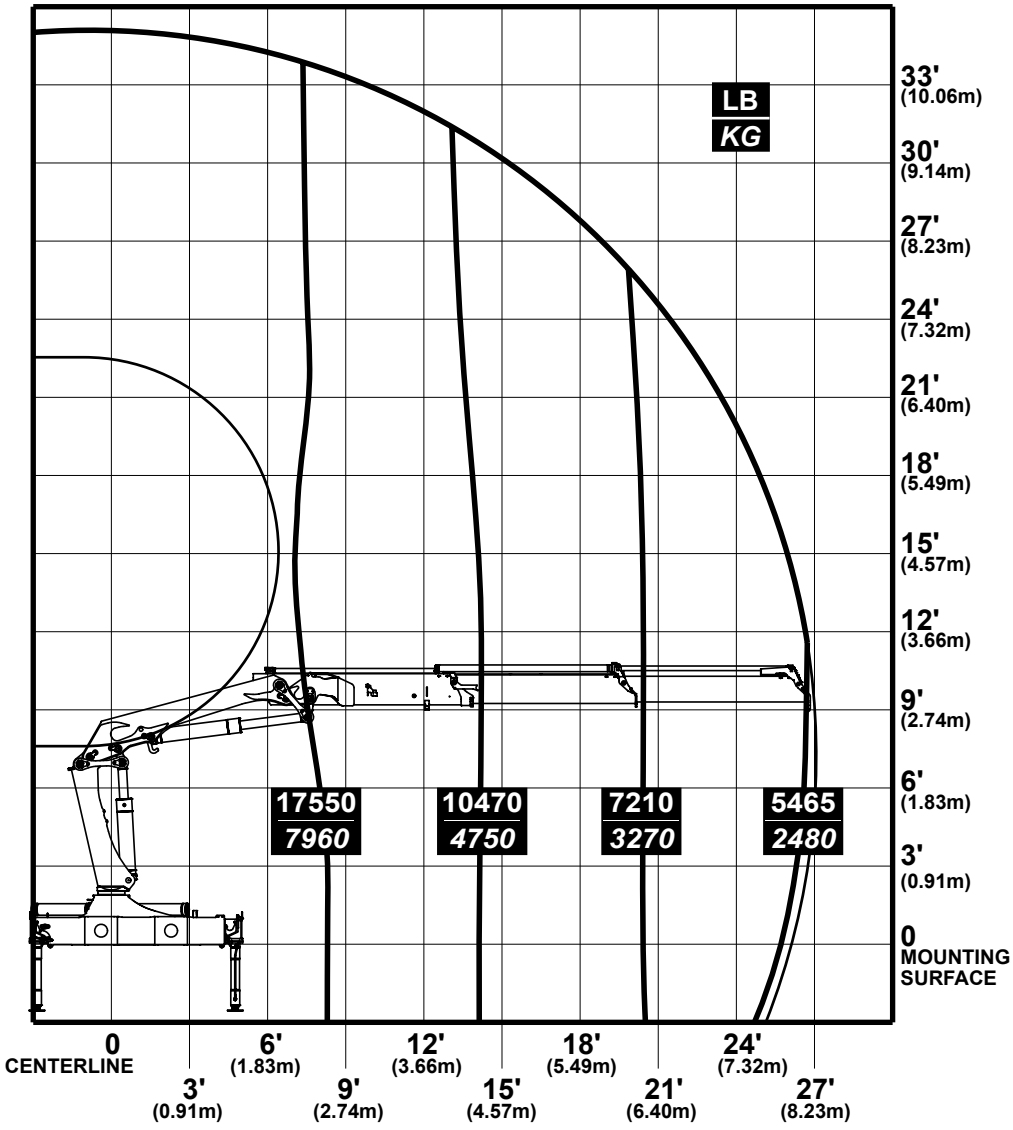

70397606

22/153DL K3 Capacity Chart

IMT
MATERIAL HANDLING SYSTEMS

IOWA MOLD TOOLING CO., INC.
BOX 189 • GARNER • IA • 50438 • 641-923-3711

Model 22/153DL K3

- Working loads will be limited to those shown. Deduct the weight of load handling devices.
- Before lift is made, stability must be checked per SAE J765A.

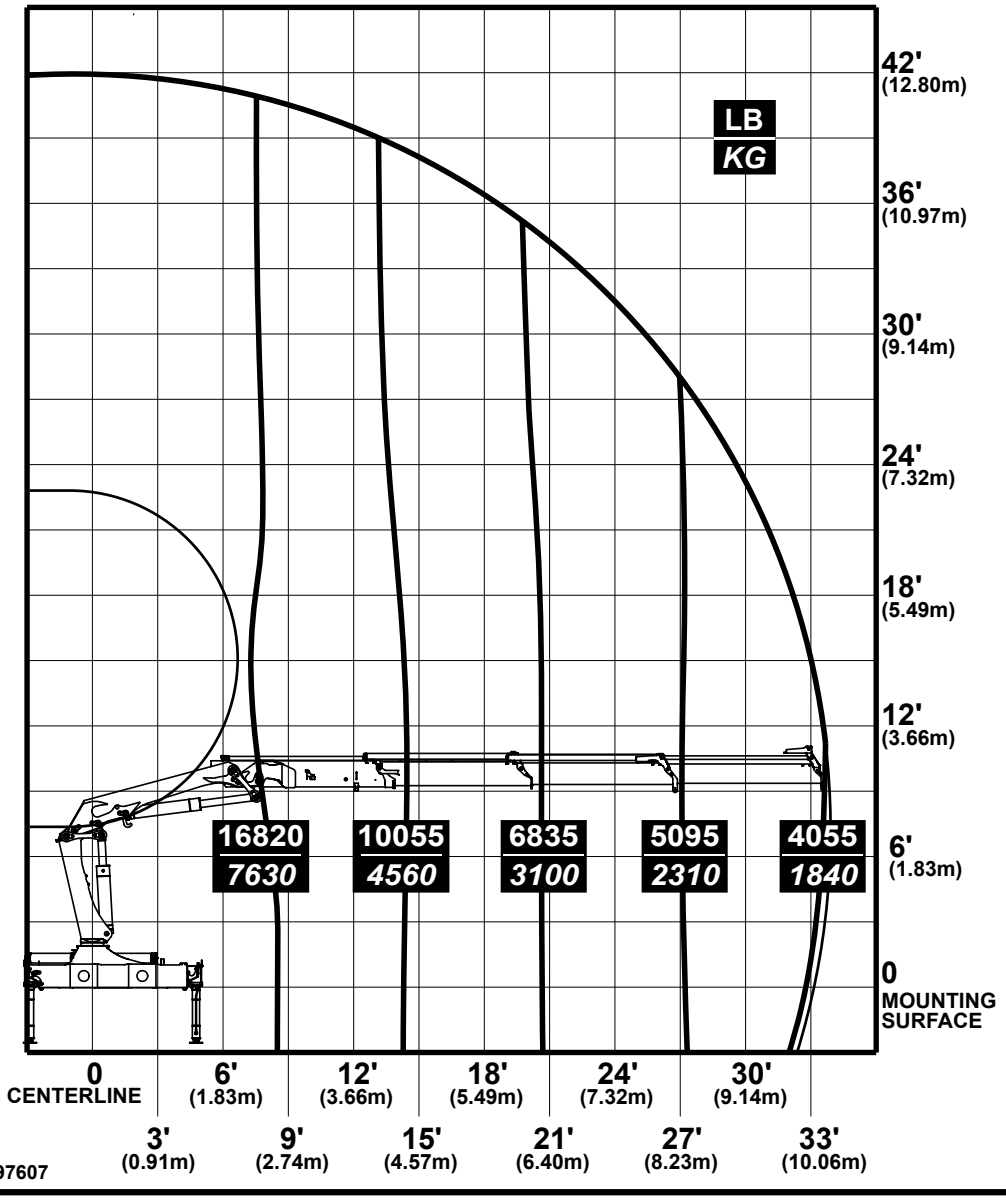

70397607

22/153DL K4 Capacity Chart

IMT
MATERIAL HANDLING SYSTEMS

IOWA MOLD TOOLING CO., INC.
BOX 189 • GARNER • IA • 50438 • 641-923-3711

Model 22/153DL K4

- Working loads will be limited to those shown. Deduct the weight of load handling devices.
- Before lift is made, stability must be checked per SAE J765A.

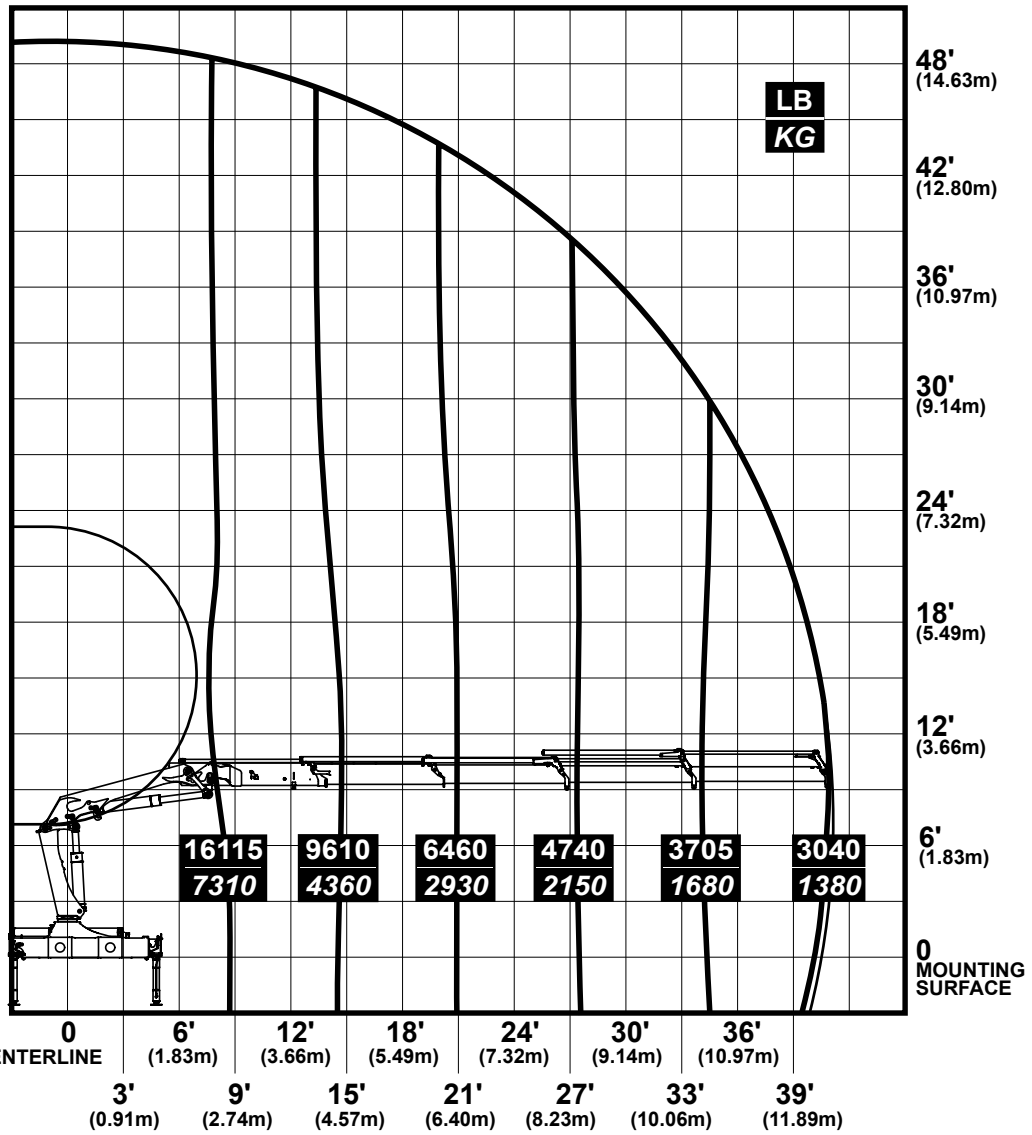

70397608

22/153DL K5 Capacity Chart

IMT
MATERIAL HANDLING SYSTEMS

IOWA MOLD TOOLING CO., INC.
BOX 189 • GARNER • IA • 50438 • 641-923-3711

Model 22/153DL K5

- **Working loads will be limited to those shown. Deduct the weight of load handling devices.**
- **Before lift is made, stability must be checked per SAE J765A.**

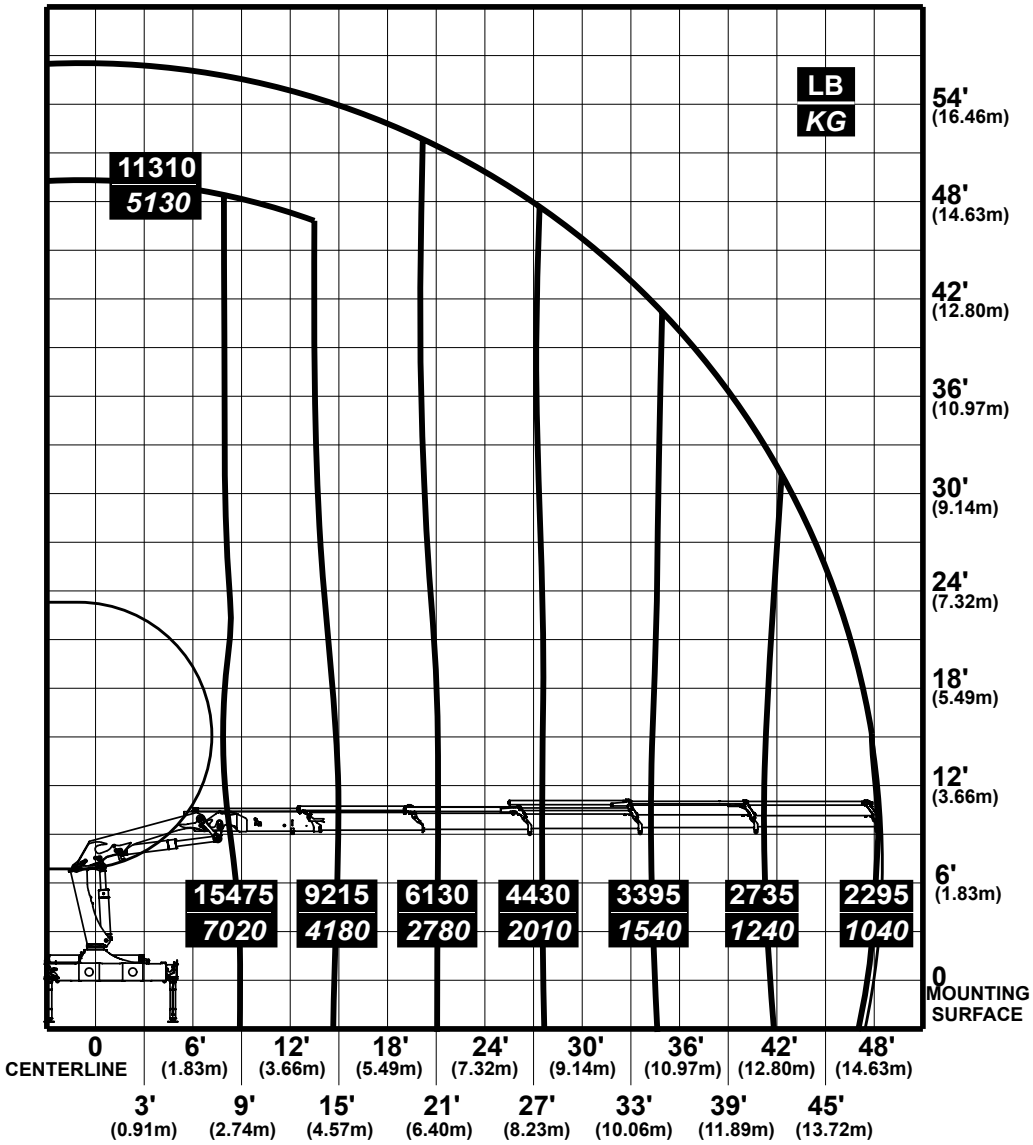

70397609

22/153DL K6 Capacity Chart

IMT
MATERIAL HANDLING SYSTEMS

IOWA MOLD TOOLING CO., INC.
BOX 189 • GARNER • IA • 50438 • 641-923-3711

Model 22/153DL K6

- Working loads will be limited to those shown. Deduct the weight of load handling devices.
- Before lift is made, stability must be checked per SAE J765A.

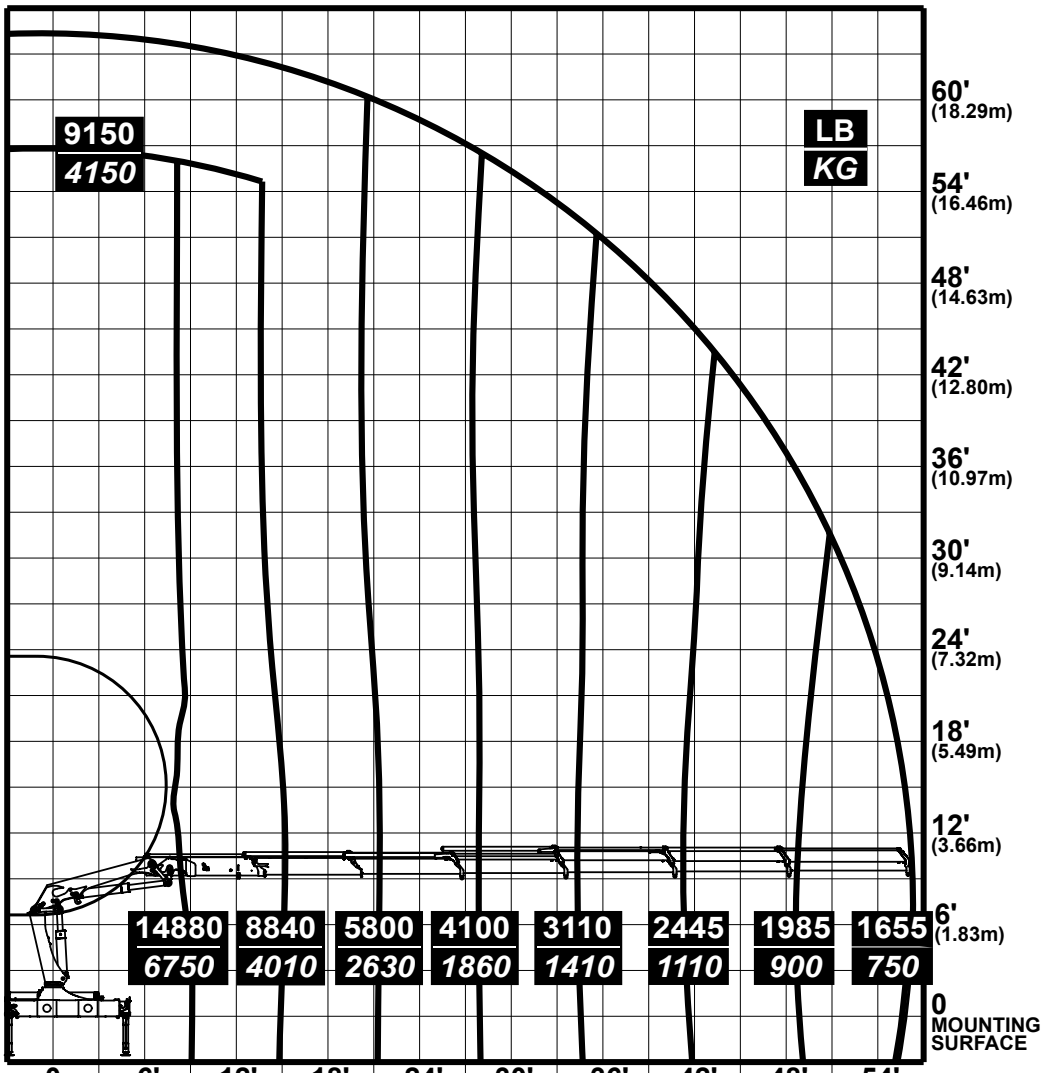

70397610

22/153DL K7 Capacity Chart

IMT
MATERIAL HANDLING SYSTEMS

IOWA MOLD TOOLING CO., INC.
BOX 189 • GARNER • IA • 50438 • 641-923-3711

Model 22/153DL K7

- **Working loads will be limited to those shown. Deduct the weight of load handling devices.**
- **Before lift is made, stability must be checked per SAE J765A.**

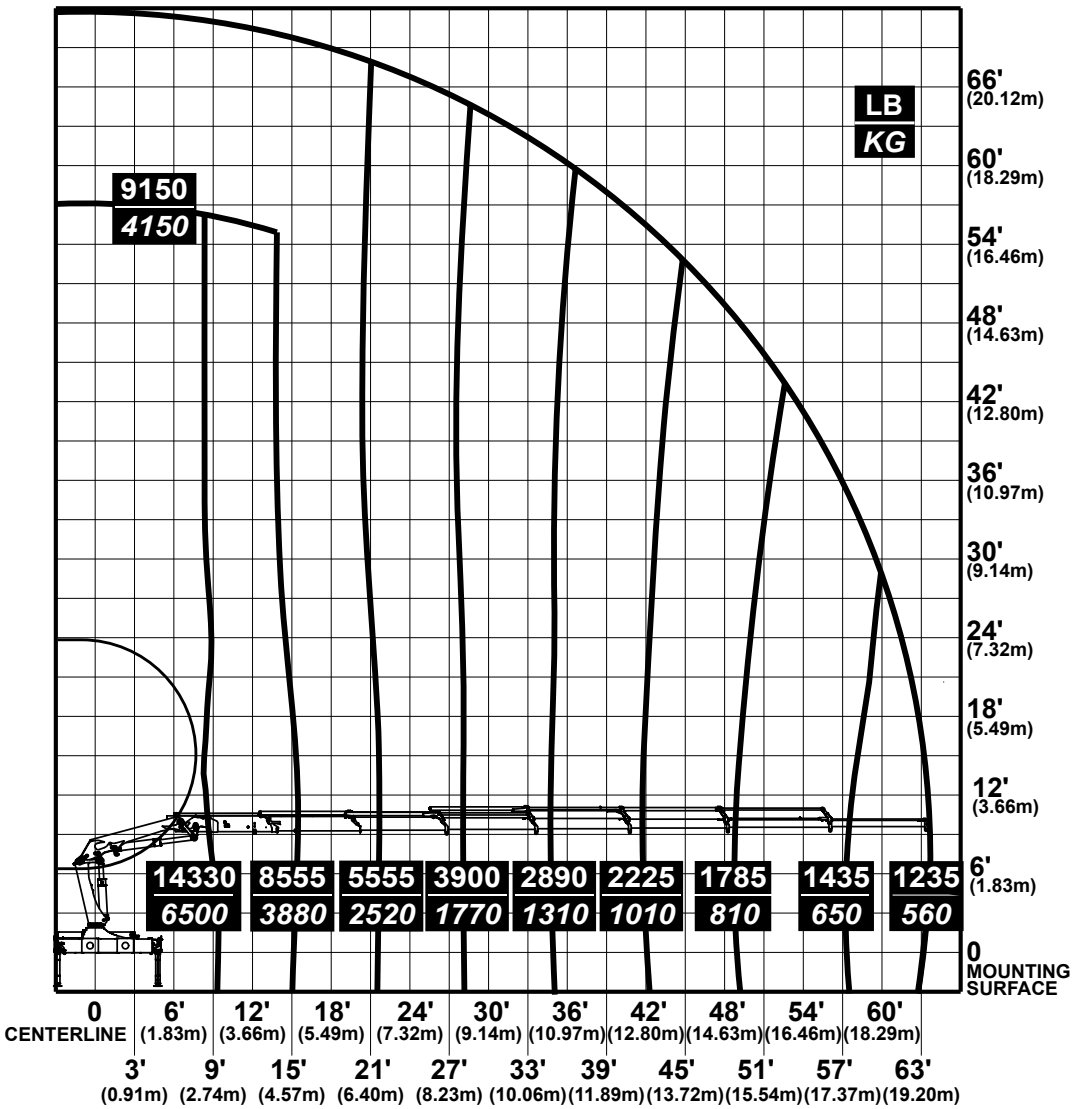

70397611

22/153DL K8 Capacity Chart

IMT
MATERIAL HANDLING SYSTEMS

IOWA MOLD TOOLING CO., INC.
BOX 189 • GARNER • IA • 50438 • 641-923-3711

Model 22/153DL K8

- Working loads will be limited to those shown. Deduct the weight of load handling devices.
- Before lift is made, stability must be checked per SAE J765A.

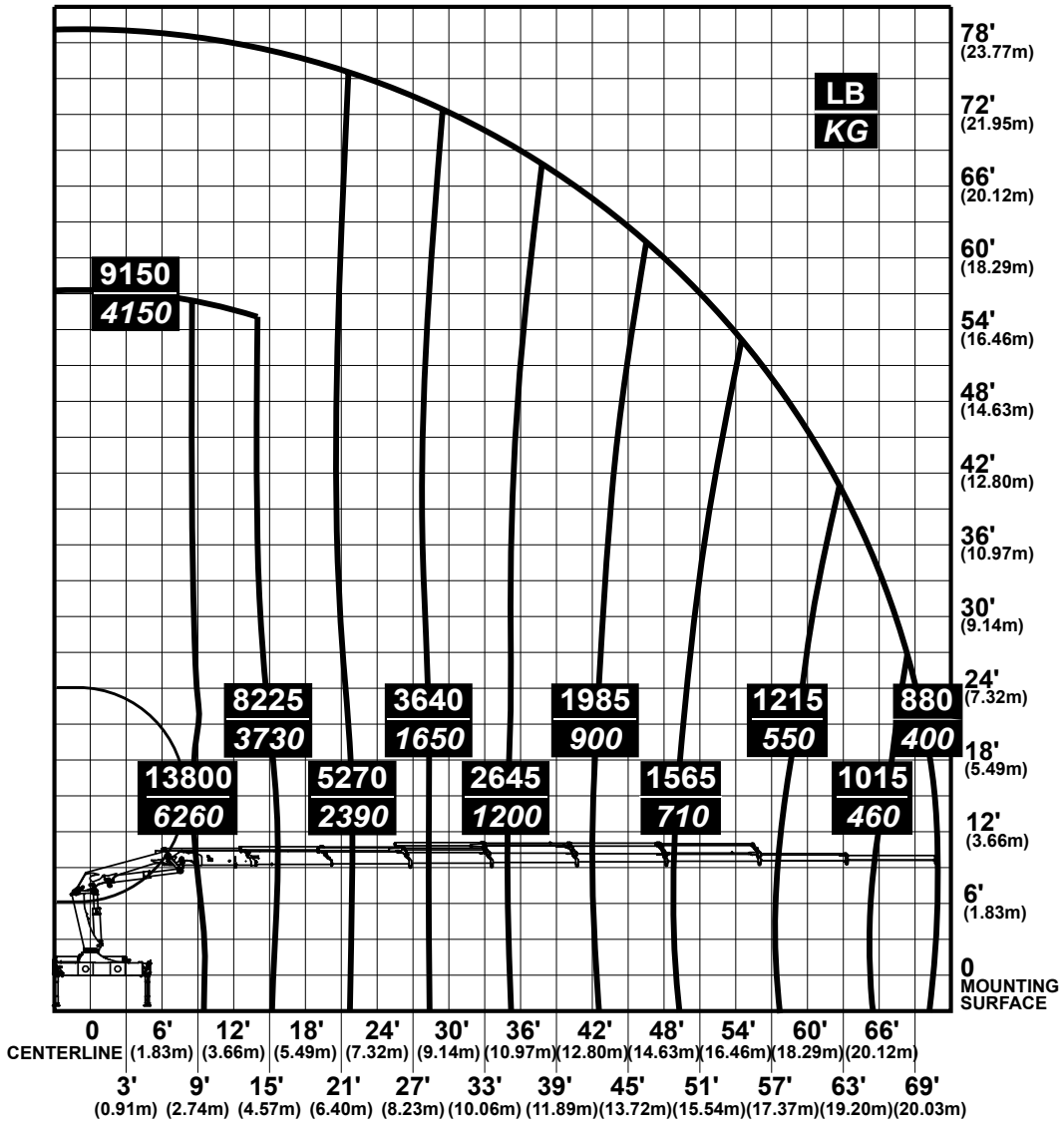

70397612

22/153DL K2-K8 Capacity Chart

K2

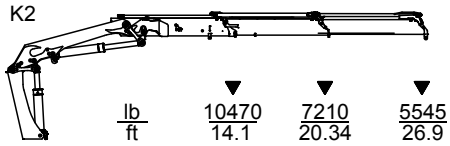

lb / ft			
	10470 / 14.1	7210 / 20.34	5545 / 26.9

K3

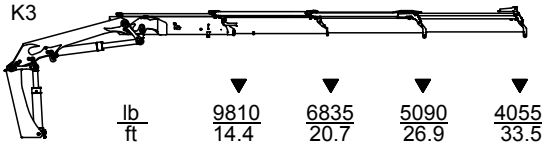

lb / ft				
	9810 / 14.4	6835 / 20.7	5090 / 26.9	4055 / 33.5

K4

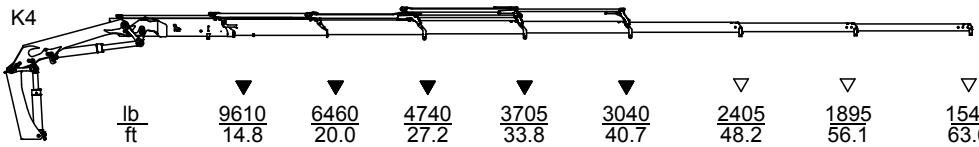

lb / ft								
	9610 / 14.8	6460 / 20.0	4740 / 27.2	3705 / 33.8	3040 / 40.7	2405 / 48.2	1895 / 56.1	1545 / 63.6

K5

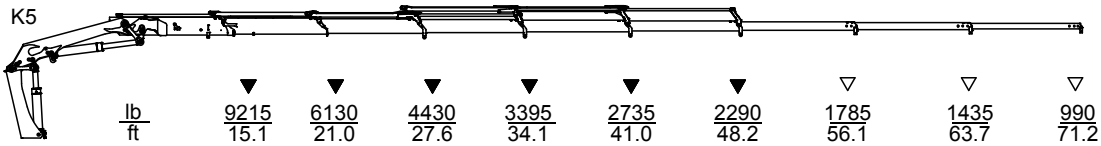

lb / ft									
	9215 / 15.1	6130 / 21.0	4430 / 27.6	3395 / 34.1	2735 / 41.0	2290 / 48.2	1785 / 56.1	1435 / 63.7	990 / 71.2

K6

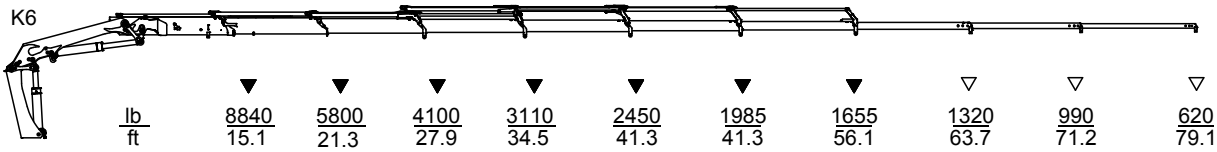

lb / ft										
	8840 / 15.1	5800 / 21.3	4100 / 27.9	3110 / 34.5	2450 / 41.3	1985 / 41.3	1655 / 56.1	1320 / 63.7	990 / 71.2	620 / 79.1

K7

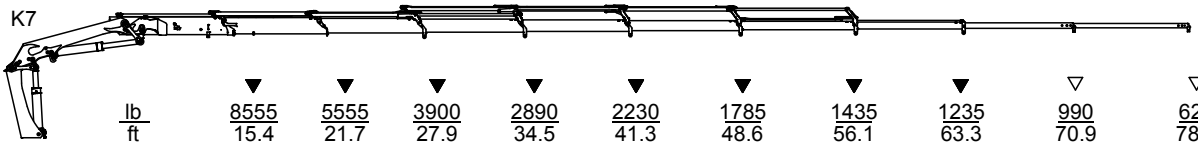

lb / ft										
	8555 / 15.4	5555 / 21.7	3900 / 27.9	2890 / 34.5	2230 / 41.3	1785 / 48.6	1435 / 56.1	1235 / 63.3	990 / 70.9	620 / 78.4

K8

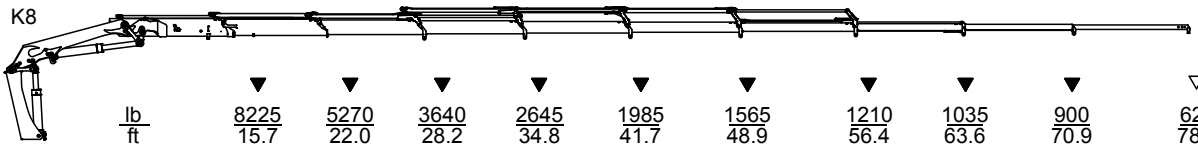

lb / ft										
	8225 / 15.7	5270 / 22.0	3640 / 28.2	2645 / 34.8	1985 / 41.7	1565 / 48.9	1210 / 56.4	1035 / 63.6	900 / 70.9	620 / 78.4

▽ Lifting capacity with man. extensions

▼ Lifting capacity without man. extensions

This Page Left Blank Intentionally

CHAPTER 4

24/169DL Technical Specifications

In this Chapter

24/169DL Performance 18
24/169DL Dimensions 19
24/169DL Weights, Basic Loader 19
24/169DL Weights, Equipment 20
24/169DL Max. Load on Stabilizers (Per Stabilizer Cylinders) 20
24/169DL Power Consumption / Oil Capacity 21

24/169DL Performance

	24/169DL K2	24/169DL K3	24/169DL K4	24/169DL K5	24/169DL K6	24/169DL K7	24/169DL K8
Loading group (EN12999)	H1/B3	H1/B3	H1/B3	H1/B3	H1/B3	H1/B3	H1/B3
Load moment	165636 ft lb (22.9 tm)	162020 ft lb (22.4 tm)	157680 ft lb (21.8 tm)	154786 ft lb (21.4 tm)	151170 ft lb (20.9 tm)	149000 ft lb (20.6 tm)	145384 ft lb (20.1 tm)
Hydraulic reach	326.77” (8.3 m)	405.51” (10.3 m)	492.12” (12.5 m)	582.68” (14.8 m)	677.17” (17.2 m)	763.78” (19.4 m)	854.33” (21.7 m)
Hydraulic tele-scopic movement	150.80” (3830 mm)	229.53” (5830 mm)	312.20” (7930 mm)	398.82” (10130 mm)	489.76” (12440 mm)	574.02” (14580 mm)	661.02” (16790 mm)
Lifting capacity, hydraulic	11640.41 lb - 169.29” (5280 kg - 4.3 m)	11177.44 lb - 173.22” (5070 kg - 4.4 m)	10736.51 lb - 177.17” (4870 kg - 4.5 m)	10339.68 lb - 181.10” (4690 kg - 4.6 m)	9942.85 lb - 181.10” (4510 kg - 4.6 m)	9634.20 lb - 185.03” (4370 kg - 4.7 m)	9281.46 lb - 188.98” (4210 kg - 4.8 m)
	8024.83 lb - 244.09” (3640 kg - 6.2 m)	7650.04 lb - 248.03” (3470 kg - 6.3 m)	7253.21 lb - 251.97” (3290 kg - 6.4 m)	6922.52 lb - 251.97” (3140 kg - 6.4 m)	6569.78 lb - 255.91” (2980 kg - 6.5 m)	6327.26 lb - 259.84” (2870 kg - 6.6 m)	6040.67 lb - 263.78” (2740 kg - 6.7 m)
	6084.76 lb - 322.84” (2760 kg - 8.2 m)	5732.02 lb - 322.84” (2600 kg - 8.2 m)	5357.23 lb - 326.77” (2430 kg - 8.3 m)	5048.59 lb - 330.71” (2290 kg - 8.4 m)	4717.89 lb - 334.65” (2140 kg - 8.5 m)	4497.43 lb - 334.65” (2040 kg - 8.5 m)	4232.88 lb - 338.58” (1920 kg - 8.6 m)
		4563.57 lb - 401.57” (2070 kg - 10.2 m)	4210.83 lb - 405.51” (1910 kg - 10.3 m)	3902.18 lb - 409.45” (1770 kg - 10.4 m)	3593.53 lb - 413.39” (1630 kg - 10.5 m)	3395.12 lb - 413.39” (1540 kg - 10.5 m)	3130.56 lb - 417.32” (1420 kg - 10.6 m)
			3461.26 lb - 488.19” (1570 kg - 12.4 m)	3152.61 lb - 492.13” (1430 kg - 12.5 m)	2866.01 lb - 496.06” (1300 kg - 12.6 m)	2645.55 lb - 496.06” (1200 kg - 12.6 m)	2403.04 lb - 500” (1090 kg - 12.7 m)
				2601.46 lb - 578.74” (1180 kg - 14.7 m)	2314.85 lb - 582.68” (1050 kg - 14.8 m)	2094.39 lb - 582.68” (950 kg - 14.8 m)	1873.93 lb - 582.68” (850 kg - 14.9 m)
					1918.02 lb - 673.23” (870 kg - 17.1 m)	1719.61 lb - 673.23” (780 kg - 17.1 m)	1499.14 lb - 677.17” (680 kg - 17.2 m)
						1477.10 lb - 759.84” (670 kg - 19.3 m)	1256.63 lb - 763.78” (570 kg - 19.4 m)
							1102.31 lb - 850.39” (500 kg - 21.6 m)
Lifting capacity, manual exten-sions			2667.59 lb - 578.74” (1210 kg - 14.7 m)	2006.21 lb - 673.23” (910 kg - 17.1 m)	1499.14 lb - 763.78” (680 kg - 19.4 m)	1157.43 lb - 850.39” (525 kg - 21.6 m)	705.48 lb - 940.95” (320 kg - 23.9 m)
			2138.48 lb - 673.23” (970 kg - 17.1 m)	1631.42 lb - 763.78” (740 kg - 19.4 m)	1157.43 lb - 854.33” (525 kg - 21.7 m)	705.48 lb - 940.95” (320 kg - 23.9 m)	
			1741.65 lb - 763.78” (790 kg - 19.4 m)	1157.43 lb - 854.33” (525 kg - 21.7 m)	705.48 lb - 21.7” (320 kg - 24.1 m)		
Slewing torque, gross	19987.9 lb-ft (27.1 kNm)	19987.9 lb-ft (27.1 kNm)	19987.9 lb-ft (27.1 kNm)	19987.9 lb-ft (27.1 kNm)	19987.9 lb-ft (27.1 kNm)	19987.9 lb-ft (27.1 kNm)	19987.9 lb-ft (27.1 kNm)
Slewing angle	400˚	400˚	400˚	400˚	400˚	400˚	400˚
Max. heel at max. load moment	5˚	5˚	5˚	5˚	5˚	5˚	5˚
Slewing speed	24˚/s	24˚/s	24˚/s	24˚/s	24˚/s	24˚/s	24˚/s

24/169DL Dimensions

	24/169DL K2	24/169DL K3	24/169DL K4	24/169DL K5	24/169DL K6	24/169DL K7	24/169DL K8
Height above chassis	90.35” (2295 mm)	90.35” (2295 mm)	90.35” (2295 mm)	90.35” (2295 mm)	90.35” (2295 mm)	90.35” (2295 mm)	90.35” (2295 mm)
Width	98.43” (2500 mm)	98.43” (2500 mm)	98.43” (2500 mm)	98.43” (2500 mm)	98.43” (2500 mm)	98.43” (2500 mm)	98.43” (2500 mm)
Length, no extra valves	34.84” (885 mm)	34.84” (885 mm)	34.84” (885 mm)	34.84” (885 mm)	34.84” (885 mm)	39.17” (995 mm)	39.17” (995 mm)
Length, with extra valves (hose guides)	39.57” (1005 mm)	39.57” (1005 mm)	39.57” (1005 mm)	39.57” (1005 mm)	39.57” (1005 mm)		
Length, with 1 extra valve (hose reels)						39.17” (995 mm)	39.17” (995 mm)
Length, with 2 extra valves (hose reels)						40.55” (1030 mm)	40.55” (1030 mm)
Length, with extra valves (int. hose routing)	34.84” (885 mm)	34.84” (885 mm)	34.84” (885 mm)	34.84” (885 mm)	34.84” (885 mm)		
Stabilizer spread, S1 (standard)	219.49” (5575 mm)	219.49” (5575 mm)	219.49” (5575 mm)	219.49” (5575 mm)	219.49” (5575 mm)	219.49” (5575 mm)	219.49” (5575 mm)
Stabilizer spread, D	254.13” (6455 mm)	254.13” (6455 mm)	254.13” (6455 mm)	254.13” (6455 mm)	254.13” (6455 mm)	254.13” (6455 mm)	254.13” (6455 mm)

24/169DL Weights, Basic Loader

	24/169DL K2	24/169DL K3	24/169DL K4	24/169DL K5	24/169DL K6	24/169DL K7	24/169DL K8
Standard loader 1), excl. Stabilizers	4365 lb (1980 kg)	4740 lb (2150 kg)	5181 lb (2350 kg)	5512 lb (2500 kg)	5820 lb (2640 kg)	6052 lb (2745 kg)	6239 lb (2830 kg)
Stabilizers, S1 fixed	639 lb (290 kg)	639 lb (290 kg)	639 lb (290 kg)	639 lb (290 kg)	639 lb (290 kg)	639 lb (290 kg)	639 lb (290 kg)
Stabilizers, S1 swing-up	650 lb (295 kg)	650 lb (295 kg)	650 lb (295 kg)	650 lb (295 kg)	650 lb (295 kg)	650 lb (295 kg)	650 lb (295 kg)
Stabilizers, S1 hydr. swing-up	661 lb (300 kg)	661 lb (300 kg)	661 lb (300 kg)	661 lb (300 kg)	661 lb (300 kg)	661 lb (300 kg)	661 lb (300 kg)
Stabilizers, D fixed	805 lb (365 kg)	805 lb (365 kg)	805 lb (365 kg)	805 lb (365 kg)	805 lb (365 kg)	805 lb (365 kg)	805 lb (365 kg)
Stabilizers, D swing-up	815 lb (370 kg)	815 lb (370 kg)	815 lb (370 kg)	815 lb (370 kg)	815 lb (370 kg)	815 lb (370 kg)	815 lb (370 kg)
Stabilizers, D hydr. swing-up	827 lb (375 kg)	827 lb (375 kg)	827 lb (375 kg)	827 lb (375 kg)	827 lb (375 kg)	827 lb (375 kg)	827 lb (375 kg)
Mounting kit, 4 bolts	143 lb (65 kg)	143 lb (65 kg)	143 lb (65 kg)	143 lb (65 kg)	143 lb (65 kg)	143 lb (65 kg)	143 lb (65 kg)
Mounting kit, 8 bolts	132 lb (60 kg)	132 lb (60 kg)	132 lb (60 kg)	132 lb (60 kg)	132 lb (60 kg)	132 lb (60 kg)	132 lb (60 kg)
Tank, excl. oil (fitted on loader)	88 lb (45 kg)	88 lb (45 kg)	88 lb (45 kg)	88 lb (45 kg)	88 lb (45 kg)	88 lb (45 kg)	88 lb (45 kg)
Manual extensions			176lb (80 kg)	154 lb (70 kg)	132 lb (60 kg)	88 lb (45 kg)	77l b (35 kg)
			154 lb (70 kg)	132 lb (60 kg)	88 lb (45 kg)	77 lb (35 kg)	
			132 lb (60 kg)	88 lb (45 kg)	77lb (35kg)		
Oil in loader (stowing position)	88 lb (45 kg)	110 lb (50 kg)	121 lb (55 kg)	132 lb (60 kg)	143 lb (65 kg)	154 lb (70 kg)	154 lb (70 kg)

1) Weights ± 5% because of tolerances for plate thickness

24/169DL Weights, Equipment

	24/169DL K2	24/169DL K3	24/169DL K4	24/169DL K5	24/169DL K6	24/169DL K7	24/169DL K8
Stand-up controls (HS), std.	132 lb (60 kg)	132 lb (60 kg)	132 lb (60 kg)	132 lb (60 kg)	132 lb (60 kg)	132 lb (60 kg)	132 lb (60 kg)
Stand-up controls (HS), direct valve control	154 lb (70 kg)	154 lb (70 kg)	154 lb (70 kg)	154 lb (70 kg)	154 lb (70 kg)	154 lb (70 kg)	154 lb (70 kg)
Top seat (TS)	198 lb (90 kg)	198 lb (90 kg)	198 lb (90 kg)	198 lb (90 kg)	198 lb (90 kg)	198 lb (90 kg)	198 lb (90 kg)
Top seat, ladder	44 lb (20 kg)	44 lb (20 kg)	44 lb (20 kg)	44 lb (20 kg)	44 lb (20 kg)	44 lb (20 kg)	44 lb (20 kg)
1 extra valve, hose guides	121 lb (55 kg)	143 lb (65 kg)	165 lb (75 kg)	187 lb (85 kg)	209 lb (95 kg)		
1 extra valve, hose reels						209 lb (95 kg)	209 lb (95 kg)
1 extra valve, int. hose routing	165 lb (75 kg)	165 lb (75 kg)	176 lb (80 kg)	176 lb (80 kg)	187 lb (85 kg)		
2 extra valves, hose guides	165 lb (75 kg)	198 lb (90 kg)	231 lb (105 kg)	264 lb (120 kg)	135 lb (297 kg)		
2 extra valves, hose reels						408 lb (185 kg)	408 lb (185 kg)
2 extra valves, int. hose routing	286 lb (130 kg)	286 lb (130 kg)	308 lb (140 kg)	308 lb (145 kg)	331 lb (150 kg)		
Winch (1.5 t), single snatch block	386 lb (175 kg)	386 lb (175 kg)	386 lb (175 kg)	386 lb (175 kg)	397 lb (180 kg)	397 lb (180 kg)	419 lb (190 kg)
Winch (1.5 t), double snatch block	375 lb (170 kg)	375 lb (170 kg)	375 lb (170 kg)	375 lb (170 kg)	386 lb (175 kg)	386 lb (175 kg)	397 lb (180 kg)
Winch (2.5 t), single snatch block	441lb (200kg)	441lb (200kg)	441lb (200kg)	441lb (200kg)	452 lb (205 kg)	452 lb (205 kg)	463 lb (210 kg)
Winch (2.5 t), double snatch block	430 lb (195 kg)	430 lb (195 kg)	430 lb (195 kg)	430 lb (195 kg)	440 lb (200kg)	440 lb (200 kg)	452 lb (205 kg)
High-pressure filter	15 lb (7 kg)	15 lb (7 kg)	15 lb (7 kg)	15 lb (7 kg)	15 lb (7 kg)	15 lb (7 kg)	15 lb (7 kg)
Oil cooler	55 lb (25 kg)	55 lb (25 kg)	55 lb (25 kg)	55 lb (25 kg)	55 lb (25 kg)	55 lb (25 kg)	55 lb (25 kg)

24/169DL Max. Load on Stabilizers (Per Stabilizer Cylinder)

	24/169DL K2	24/169DL K3	24/169DL K4	24/169DL K5	24/169DL K6	24/169DL K7	24/169DL K8
S1, fixed	88507 ft-lb (120 kN)	88507 ft-lb (120 kN)	88507 ft-lb (120 kN)	88507 ft-lb (120 kN)	88507 ft-lb (120 kN)	88507 ft-lb (120 kN)	88507 ft-lb (120 kN)
S1, swing-up	88507 ft-lb (120 kN)	88507 ft-lb (120 kN)	88507 ft-lb (120 kN)	88507 ft-lb (120 kN)	88507 ft-lb (120 kN)	88507 ft-lb (120 kN)	88507 ft-lb (120 kN)
S1, hydr. swing-up	88507 ft-lb (120 kN)	88507 ft-lb (120 kN)	88507 ft-lb (120 kN)	88507 ft-lb (120 kN)	88507 ft-lb (120 kN)	88507 ft-lb (120 kN)	88507 ft-lb (120 kN)
D, fixed	73756 ft-lb (100 kN)	73756 ft-lb (100 kN)	73756 ft-lb (100 kN)	73756 ft-lb (100 kN)	73756 ft-lb (100 kN)	73756 ft-lb (100 kN)	73756 ft-lb (100 kN)
D, swing-up	73756 ft-lb (100 kN)	73756 ft-lb (100 kN)	73756 ft-lb (100 kN)	73756 ft-lb (100 kN)	73756 ft-lb (100 kN)	73756 ft-lb (100 kN)	73756 ft-lb (100 kN)
D, hydr. swing-up	73756 ft-lb (100 kN)	73756 ft-lb (100 kN)	73756 ft-lb (100 kN)	73756 ft-lb (100 kN)	73756 ft-lb (100 kN)	73756 ft-lb (100 kN)	73756 ft-lb (100 kN)

24/169DL Power Consumption / Oil Capacity

	24/169DL K2	24/169DL K3	24/169DL K4	24/169DL K5	24/169DL K6	24/169DL K7	24/169DL K8
Working pressure	4351 PSI (300 Bar)	4351 PSI (300 Bar)	4351 PSI (300 Bar)	4351 PSI (300 Bar)	4351 PSI (300 Bar)	4351 PSI (300 Bar)	4351 PSI (300 Bar)
Tank capacity (fitted on loader)	23.78 Gallons (90 L)	23.78 Gallons (90 L)	23.78 Gallons (90 L)	23.78 Gallons (90 L)	23.78 Gallons (90 L)	23.78 Gallons (90 L)	23.78 Gallons (90 L)
Max. pump performance, Hydrocontrol, 1-circuit	15.85 Gallon/min (60 L/min)	15.85 Gallon/min (60 L/min)	15.85 Gallon/min (60 L/min)	15.85 Gallon/min (60 L/min)	15.85 Gallon/min (60 L/min)	15.85 Gallon/min (60 L/min)	15.85 Gallon/min (60 L/min)
Max. pump performance, Hydrocontrol, 2-circuit	-	-	-	-	-	-	-
Max. pump performance, Danfoss fixed flow	18.49 Gallon/min (70 L/min)	18.49 Gallon/min (70 L/min)	18.49 Gallon/min (70 L/min)	18.49 Gallon/min (70 L/min)	18.49 Gallon/min (70 L/min)	18.49 Gallon/min (70 L/min)	18.49 Gallon/min (70 L/min)
Max. pump performance, Danfoss variable	31.70 Gallon/min (120 L/min)	31.70 Gallon/min (120 L/min)	31.70 Gallon/min (120 L/min)	31.70 Gallon/min (120 L/min)	31.70 Gallon/min (120 L/min)	31.70 Gallon/min (120 L/min)	31.70 Gallon/min (120 L/min)

This Page Left Blank Intentionally

CHAPTER 5

24/169DL Capacity Charts

In this Chapter

24/169DL Capacity Chart K2 24
24/169DL Capacity Chart K3 25
24/169DL Capacity Chart K4 26
24/169DL Capacity Chart K5.....27
24/169DL Capacity Chart K6.....28
24/169DL Capacity Chart K7.....29
24/169DL Capacity Chart K8 30
24/169DL Capacity Chart K2-K8 31

24/169DL Capacity Chart K2

IMT
MATERIAL HANDLING SYSTEMS

IOWA MOLD TOOLING CO., INC.
BOX 189 • GARNER • IA • 50438 • 641-923-3711

Model 24/169DL K2

- **Working loads will be limited to those shown. Deduct the weight of load handling devices.**
- **Before lift is made, stability must be checked per SAE J765A.**

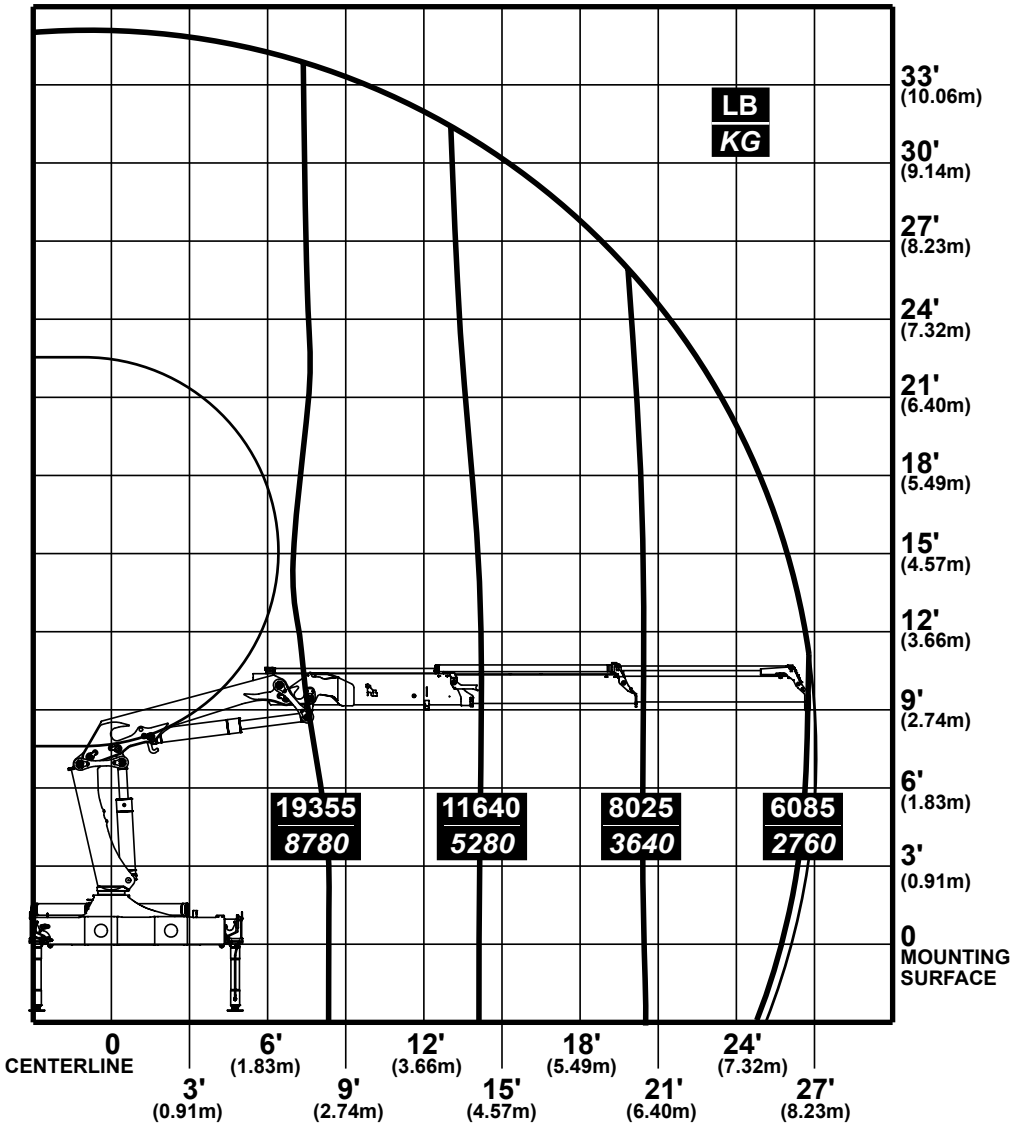

70397621

24/169DL Capacity Chart K3

IMT
MATERIAL HANDLING SYSTEMS

IOWA MOLD TOOLING CO., INC.
BOX 189 • GARNER • IA • 50438 • 641-923-3711

Model 24/169DL K3

- Working loads will be limited to those shown. Deduct the weight of load handling devices.
- Before lift is made, stability must be checked per SAE J765A.

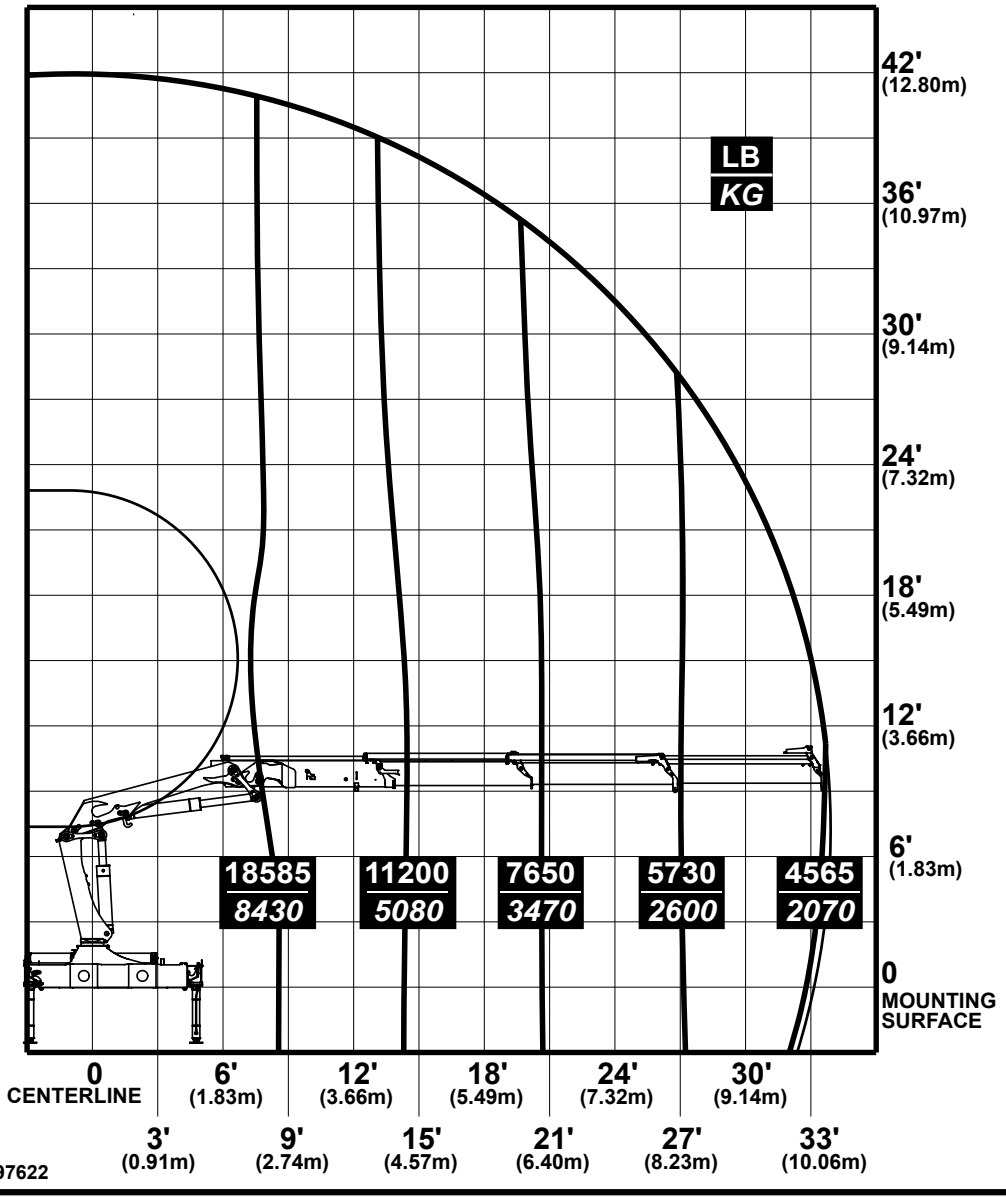

70397622

24/169DL Capacity Chart K4

IMT
MATERIAL HANDLING SYSTEMS

IOWA MOLD TOOLING CO., INC.
BOX 189 • GARNER • IA • 50438 • 641-923-3711

Model 24/169DL K4

- **Limit working loads to those shown. Deduct the weight of load handling devices.**
- ***El peso propio (tara) de los dispositivos de manipulación de cargas es parte de la carga levantada y se debe descontar de la capacidad nominal.***

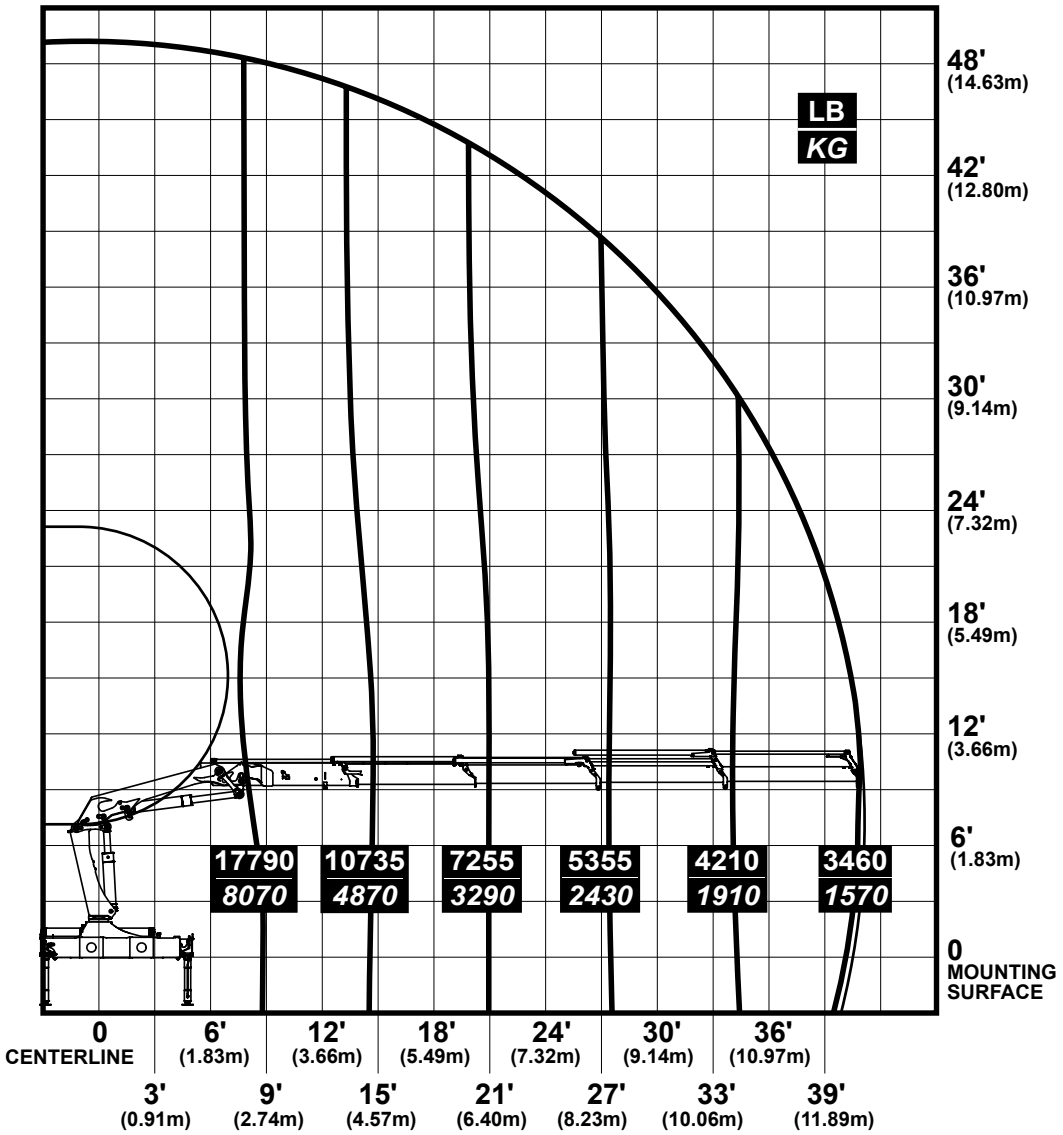

70397623

24/169DL Capacity Chart K5

IMT
MATERIAL HANDLING SYSTEMS

IOWA MOLD TOOLING CO., INC.
BOX 189 • GARNER • IA • 50438 • 641-923-3711

Model 24/169DL K5

- **Working loads will be limited to those shown. Deduct the weight of load handling devices.**
- **Before lift is made, stability must be checked per SAE J765A.**

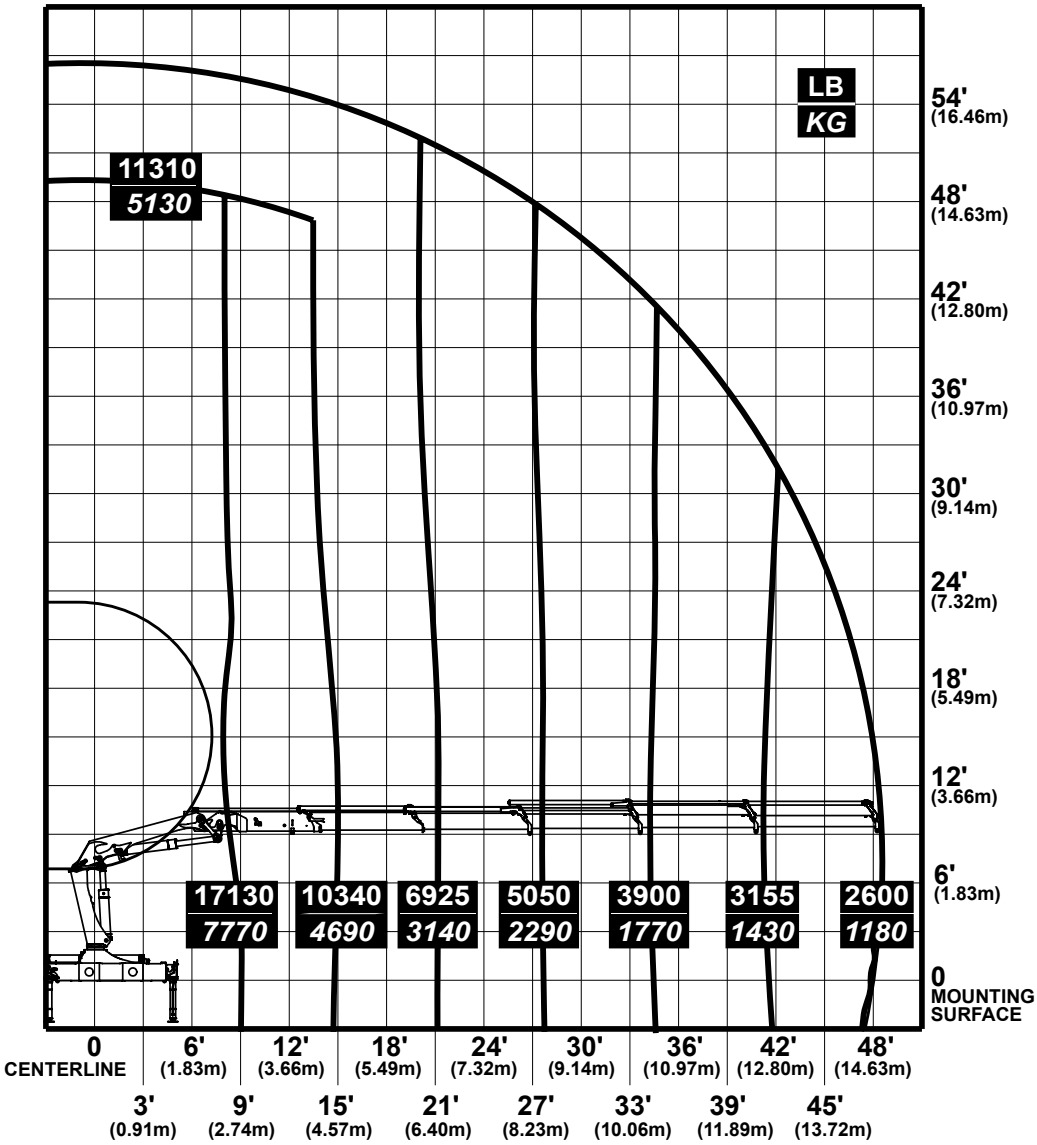

70397624

24/169DL Capacity Chart K6

IMT
MATERIAL HANDLING SYSTEMS

IOWA MOLD TOOLING CO., INC.
BOX 189 • GARNER • IA • 50438 • 641-923-3711

Model 24/169DL K6

- Working loads will be limited to those shown. Deduct the weight of load handling devices.
- Before lift is made, stability must be checked per SAE J765A.

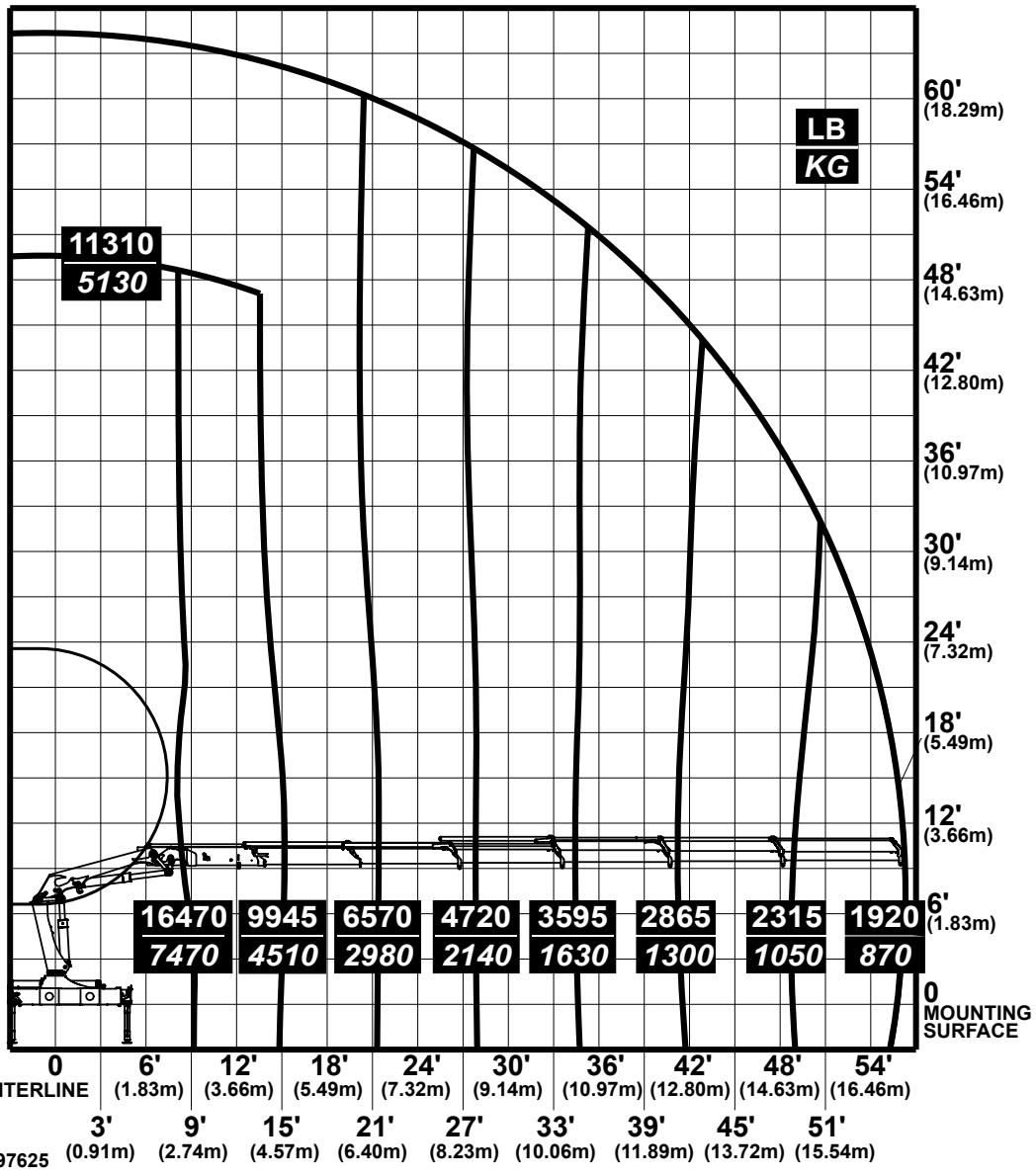

70397625

24/169DL Capacity Chart K7

IMT
MATERIAL HANDLING SYSTEMS

IOWA MOLD TOOLING CO., INC.
BOX 189 • GARNER • IA • 50438 • 641-923-3711

Model 24/169DL K7

- **Working loads will be limited to those shown. Deduct the weight of load handling devices.**
- **Before lift is made, stability must be checked per SAE J765A.**

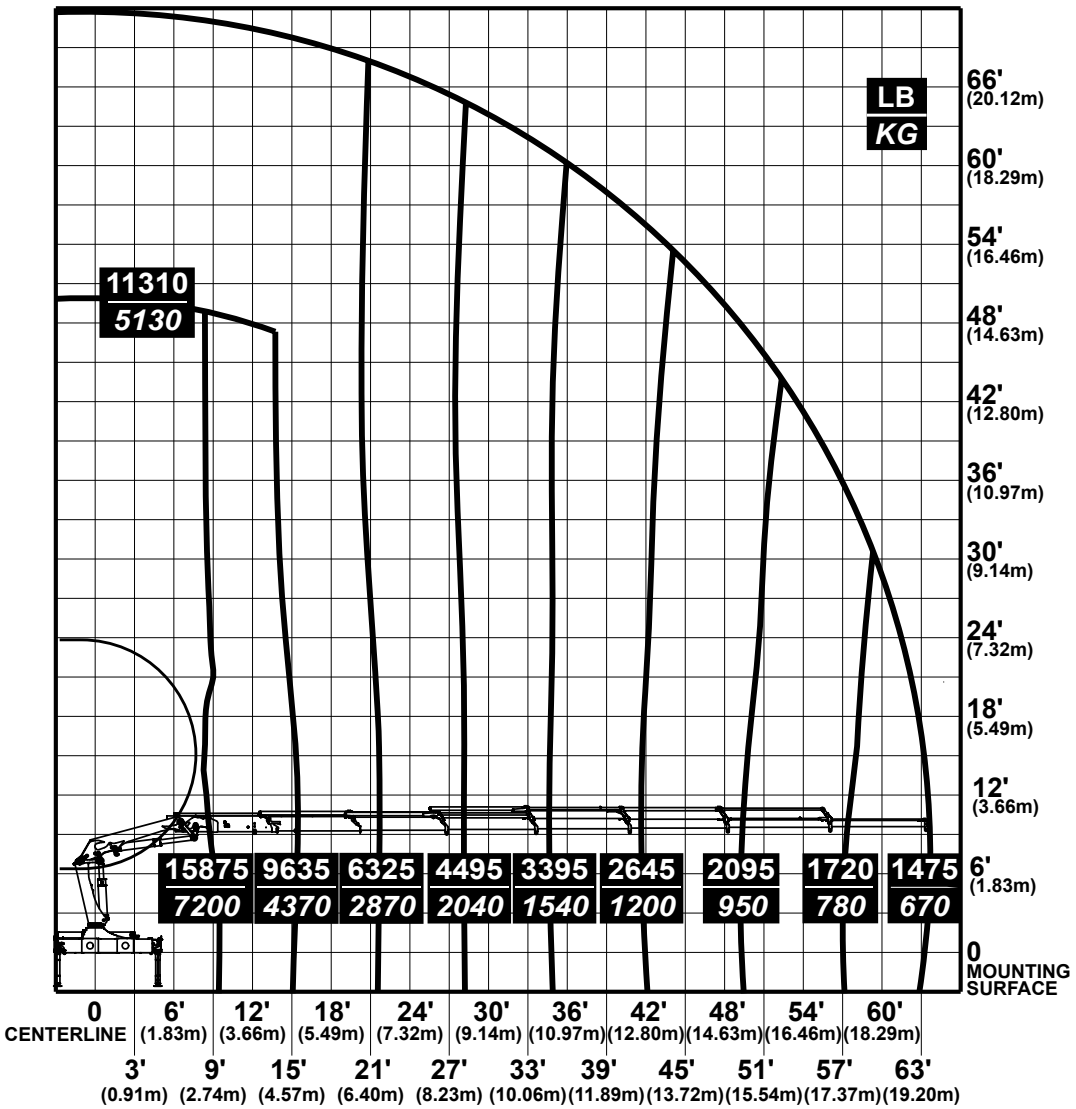

70397626

24/169DL Capacity Chart K8

IMT
MATERIAL HANDLING SYSTEMS

IOWA MOLD TOOLING CO., INC.
BOX 189 • GARNER • IA • 50438 • 641-923-3711

Model 24/169DL K8

- Working loads will be limited to those shown. Deduct the weight of load handling devices.
- Before lift is made, stability must be checked per SAE J765A.

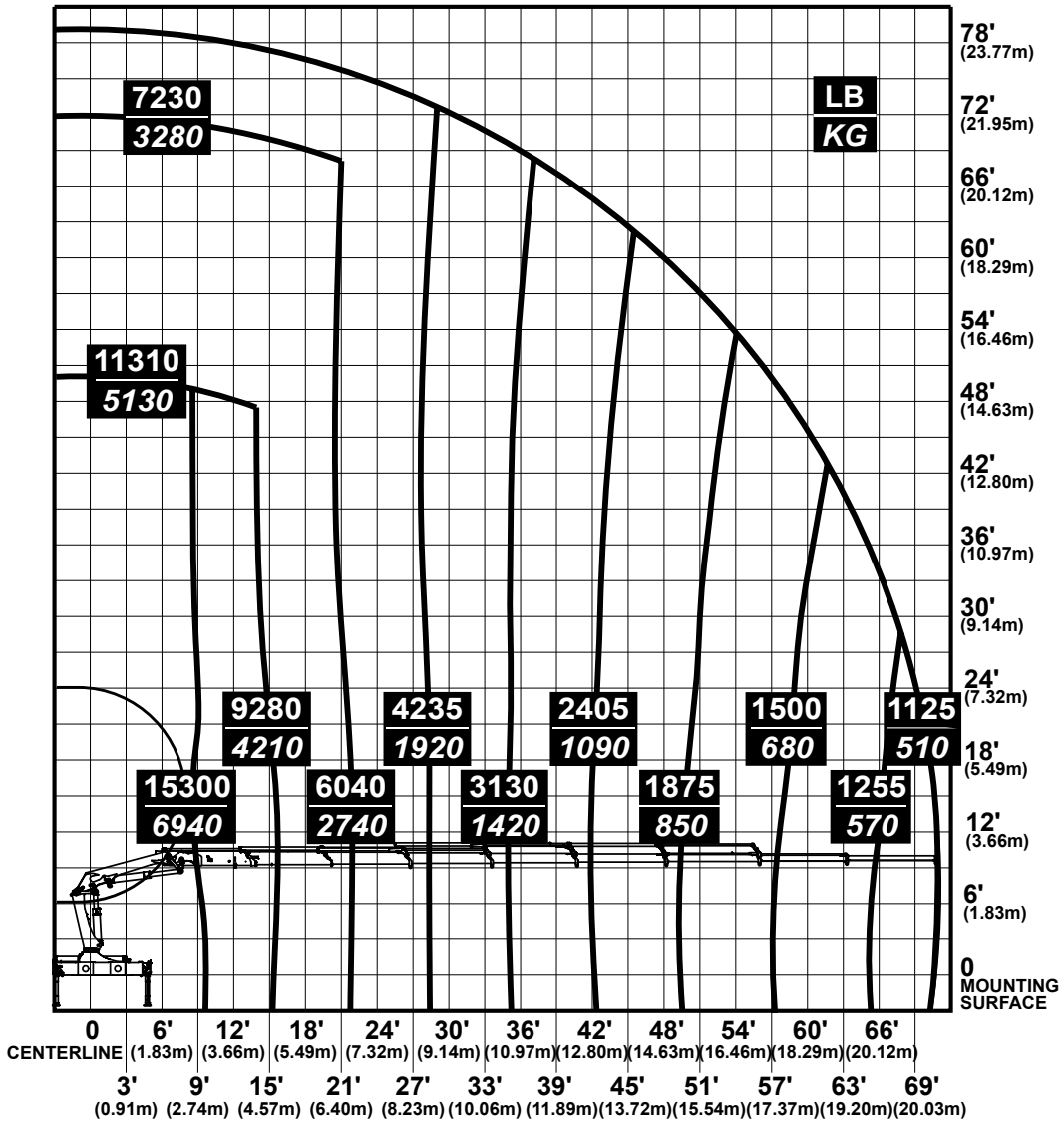

70397627

24/169DL Capacity Chart K2-K8

K2

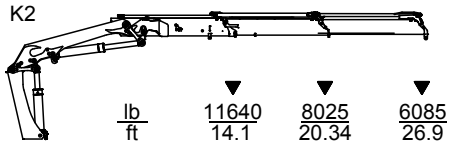

lb / ft			
	▼ 11640 / 14.1	▼ 8025 / 20.34	▼ 6085 / 26.9

K3

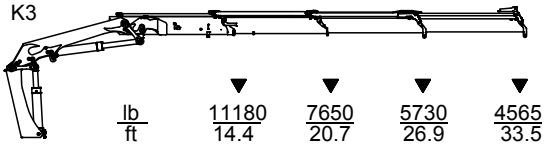

lb / ft				
	▼ 11180 / 14.4	▼ 7650 / 20.7	▼ 5730 / 26.9	▼ 4565 / 33.5

K4

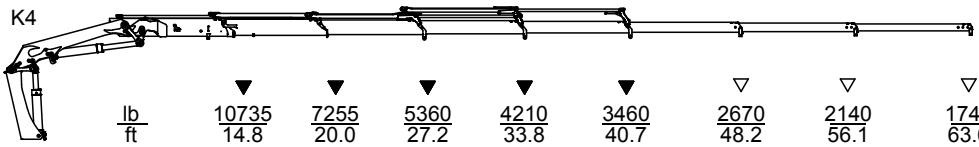

lb / ft								
	▼ 10735 / 14.8	▼ 7255 / 20.0	▼ 5360 / 27.2	▼ 4210 / 33.8	▼ 3460 / 40.7	▽ 2670 / 48.2	▽ 2140 / 56.1	▽ 1740 / 63.6

K5

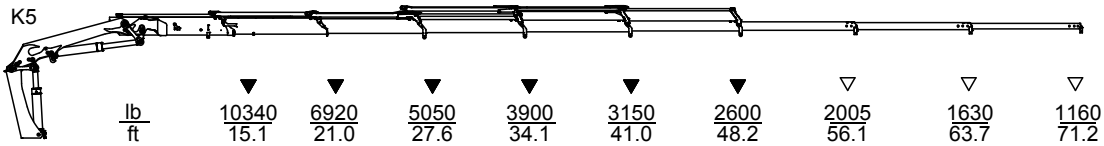

lb / ft									
	▼ 10340 / 15.1	▼ 6920 / 21.0	▼ 5050 / 27.6	▼ 3900 / 34.1	▼ 3150 / 41.0	▼ 2600 / 48.2	▽ 2005 / 56.1	▽ 1630 / 63.7	▽ 1160 / 71.2

K6

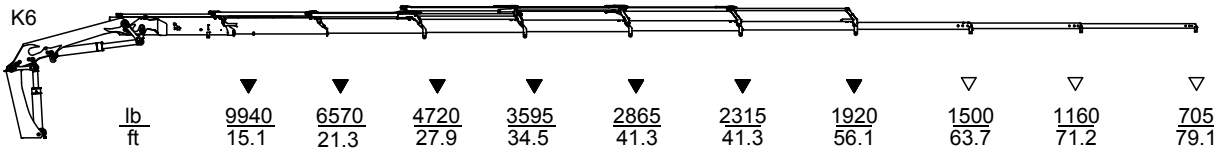

lb / ft										
	▼ 9940 / 15.1	▼ 6570 / 21.3	▼ 4720 / 27.9	▼ 3595 / 34.5	▼ 2865 / 41.3	▼ 2315 / 41.3	▼ 1920 / 56.1	▽ 1500 / 63.7	▽ 1160 / 71.2	▽ 705 / 79.1

K7

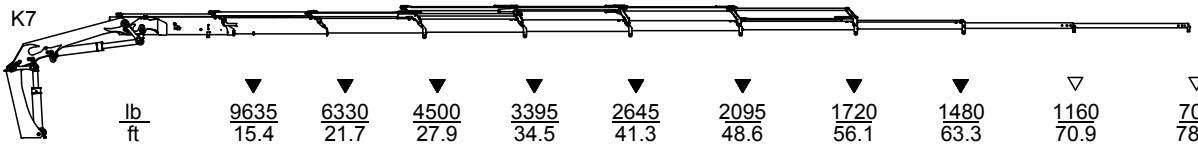

lb / ft										
	▼ 9635 / 15.4	▼ 6330 / 21.7	▼ 4500 / 27.9	▼ 3395 / 34.5	▼ 2645 / 41.3	▼ 2095 / 48.6	▼ 1720 / 56.1	▼ 1480 / 63.3	▽ 1160 / 70.9	▽ 705 / 78.4

K8

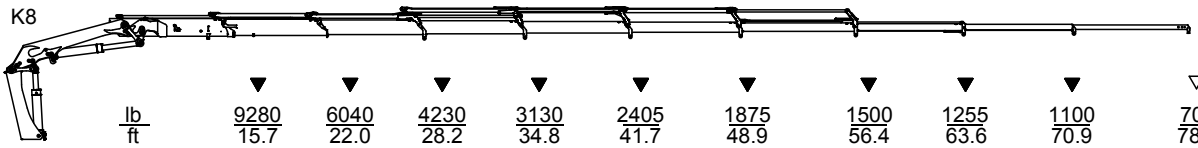

lb / ft										
	▼ 9280 / 15.7	▼ 6040 / 22.0	▼ 4230 / 28.2	▼ 3130 / 34.8	▼ 2405 / 41.7	▼ 1875 / 48.9	▼ 1500 / 56.4	▼ 1255 / 63.6	▼ 1100 / 70.9	▽ 705 / 78.4

▽ Lifting capacity with man. extensions

▼ Lifting capacity without man. extensions

This Page Left Blank Intentionally

CHAPTER 6

26/180DL Technical Specifications

In this Chapter

26/180DL Performance 34
26/180DL Dimensions 35
26/180DL Weights, Basic Loader 35
26/180DL Weights, Equipment 36
26/180DL Max. Load on Stabilizers (Per Stabilizer Cylinders) 36
26/180DL Power Consumption / Oil Capacity 37

26/180DL Performance

	26/180DL K2	26/180DL K3	26/180DL K4	26/180DL K5	26/180DL K6	26/180DL K7	26/180DL K8
Loading group (EN12999)	H1/B3	H1/B3	H1/B3	H1/B3	H1/B3	H1/B3	H1/B3
Load moment	175039 ft lb (24.2 tm)	171422 ft lb (23.7 tm)	167083 ft lb (23.1 tm)	164189 ft lb (22.7 tm)	160573 ft lb (22.2 tm)	158403 ft lb (21.9 tm)	155510 ft lb (21.5 tm)
Hydraulic reach	326.77” (8.3 m)	405.51” (10.3 m)	492.12” (12.5 m)	582.68” (14.8 m)	677.17” (17.2 m)	763.78” (19.4 m)	854.33” (21.7 m)
Hydraulic tele-scopic movement	150.80” (3830 mm)	229.53” (5830 mm)	312.20” (7930 mm)	398.82” (10130 mm)	489.76” (12440 mm)	574.02” (14580 mm)	661.02” (16790 mm)
Lifting capacity, hydraulic	12323.84 lb - 169.29” (5590 kg - 4.3 m)	11860.87 lb - 173.22” (5380 kg - 4.4 m)	11375.85 lb - 177.17” (5160 kg - 4.5 m)	10979.02 lb - 181.10” (4980 kg - 4.6 m)	10560.14 lb - 181.10” (4790 kg - 4.6 m)	10251.50 lb - 185.03” (4650 kg - 4.7 m)	9898.76 lb - 188.98” (4490 kg - 4.8 m)
	8509.84 lb - 244.09” (3860 kg - 6.2 m)	8113.01 lb - 248.03” (3680 kg - 6.3 m)	7716.18 lb - 251.97” (3500 kg - 6.4 m)	7385.49 lb - 251.97” (3350 kg - 6.4 m)	7032.75 lb - 255.91” (3190 kg - 6.5 m)	6790.24 lb - 259.84” (3080 kg - 6.6 m)	6481.59 lb - 263.78” (2940 kg - 6.7 m)
	6459.54 lb - 322.84” (2930 kg - 8.2 m)	6084.76 lb - 322.84” (2760 kg - 8.2 m)	5732.02 lb - 326.77” (2600 kg - 8.3 m)	5401.33 lb - 330.71” (2450 kg - 8.4 m)	5070.63 lb - 334.65” (2300 kg - 8.5 m)	4850.17 lb - 334.65” (2200 kg - 8.5 m)	4585.62 lb - 338.58” (2080 kg - 8.6 m)
		4563.57 lb - 401.57” (4872.22 kg - 10.2 m)	4519.48 lb - 405.51” (2050 kg - 10.3 m)	4188.78 lb - 409.45” (1900 kg - 10.4 m)	3880.14 lb - 413.39” (1760 kg - 10.5 m)	3659.67 lb - 413.39” (1660 kg - 10.5 m)	3417.16 lb - 417.32” (1550 kg - 10.6 m)
			3703.77 lb - 488.19” (1680 kg - 12.4 m)	3395.12 lb - 492.13” (1540 kg - 12.5 m)	3086.47 lb - 496.06” (1400 kg - 12.6 m)	2888.07 lb - 496.06” (1310 kg - 12.6 m)	2645.55 lb - 500” (1200 kg - 12.7 m)
				2866.01 lb - 578.74” (1300 kg - 14.7 m)	2557.36 lb - 582.68” (1160 kg - 14.8 m)	2336.90 lb - 582.68” (1060 kg - 14.8 m)	2116.44 lb - 582.68” (960 kg - 14.9 m)
					2204.62 lb - 673.23” (1000 kg - 17.1 m)	1984.16 lb - 673.23” (900 kg - 17.1 m)	1741.65 lb - 677.17” (790 kg - 17.2 m)
						1741.65 lb - 759.84” (790 kg - 19.3 m)	1521.19 lb - 763.78” (690 kg - 19.4 m)
							1344.82 lb - 850.39” (610 kg - 21.6 m)
Lifting capacity, manual exten-sions			2954.19 lb - 578.74” (1340 kg - 14.7 m)	2204.62 lb - 673.23” (1000 kg - 17.1 m)	1598.35 lb - 763.78” (725 kg - 19.4 m)	1157.43 lb - 850.39” (525 kg - 21.6 m)	705.48 lb - 940.95” (320 kg - 23.9 m)
			2314.85 lb - 673.23” (1050 kg - 17.1 m)	1763.70 lb - 763.78” (800 kg - 19.4 m)	1157.43 lb - 854.33” (525 kg - 21.7 m)	705.48 lb - 940.95” (320 kg - 23.9 m)	
			1818.81 lb - 763.78” (825 kg - 19.4 m)	1157.43 lb - 854.33” (525 kg - 21.7 m)	705.48 lb - 21.7” (320 kg - 24.1 m)		
Slewing torque, gross	19987.9 lb-ft (27.1 kNm)	19987.9 lb-ft (27.1 kNm)	19987.9 lb-ft (27.1 kNm)	19987.9 lb-ft (27.1 kNm)	19987.9 lb-ft (27.1 kNm)	19987.9 lb-ft (27.1 kNm)	19987.9 lb-ft (27.1 kNm)
Slewing angle	400˚	400˚	400˚	400˚	400˚	400˚	400˚
Max. heel at max. load moment	5˚	5˚	5˚	5˚	5˚	5˚	5˚
Slewing speed	24˚/s	24˚/s	24˚/s	24˚/s	24˚/s	24˚/s	24˚/s

26/180DL Dimensions

	26/180DL K2	26/180DL K3	26/180DL K4	26/180DL K5	26/180DL K6	26/180DL K7	26/180DL K8
Height above chassis	90.35” (2295 mm)	90.35” (2295 mm)	90.35” (2295 mm)	90.35” (2295 mm)	90.35” (2295 mm)	90.35” (2295 mm)	90.35” (2295 mm)
Width	98.43” (2500 mm)	98.43” (2500 mm)	98.43” (2500 mm)	98.43” (2500 mm)	98.43” (2500 mm)	98.43” (2500 mm)	98.43” (2500 mm)
Length, no extra valves	34.84” (885 mm)	34.84” (885 mm)	34.84” (885 mm)	34.84” (885 mm)	34.84” (885 mm)	39.17” (995 mm)	39.17” (995 mm)
Length, with extra valves (hose guides)	39.57” (1005 mm)	39.57” (1005 mm)	39.57” (1005 mm)	39.57” (1005 mm)	39.57” (1005 mm)		
Length, with 1 extra valve (hose reels)						39.17” (995 mm)	39.17” (995 mm)
Length, with 2 extra valves (hose reels)						40.55” (1030 mm)	40.55” (1030 mm)
Length, with extra valves (int. hose routing)	34.84” (885 mm)	34.84” (885 mm)	34.84” (885 mm)	34.84” (885 mm)	34.84” (885 mm)		
Stabilizer spread, S1 (standard)	219.49” (5575 mm)	219.49” (5575 mm)	219.49” (5575 mm)	219.49” (5575 mm)	219.49” (5575 mm)	219.49” (5575 mm)	219.49” (5575 mm)
Stabilizer spread, D	254.13” (6455 mm)	254.13” (6455 mm)	254.13” (6455 mm)	254.13” (6455 mm)	254.13” (6455 mm)	254.13” (6455 mm)	254.13” (6455 mm)

26/180DL Weights, Basic Loader

	26/180DL K2	26/180DL K3	26/180DL K4	26/180DL K5	26/180DL K6	26/180DL K7	26/180DL K8
Standard loader 1), excl. Stabilizers	4365 lb (1980 kg)	4740 lb (2150 kg)	5181 lb (2350 kg)	5512 lb (2500 kg)	5820 lb (2640 kg)	6052 lb (2745 kg)	6239 lb (2830 kg)
Stabilizers, S1 fixed	639 lb (290 kg)	639 lb (290 kg)	639 lb (290 kg)	639 lb (290 kg)	639 lb (290 kg)	639 lb (290 kg)	639 lb (290 kg)
Stabilizers, S1 swing-up	650 lb (295 kg)	650 lb (295 kg)	650 lb (295 kg)	650 lb (295 kg)	650 lb (295 kg)	650 lb (295 kg)	650 lb (295 kg)
Stabilizers, S1 hydr. swing-up	661 lb (300 kg)	661 lb (300 kg)	661 lb (300 kg)	661 lb (300 kg)	661 lb (300 kg)	661 lb (300 kg)	661 lb (300 kg)
Stabilizers, D fixed	805 lb (365 kg)	805 lb (365 kg)	805 lb (365 kg)	805 lb (365 kg)	805 lb (365 kg)	805 lb (365 kg)	805 lb (365 kg)
Stabilizers, D swing-up	815 lb (370 kg)	815 lb (370 kg)	815 lb (370 kg)	815 lb (370 kg)	815 lb (370 kg)	815 lb (370 kg)	815 lb (370 kg)
Stabilizers, D hydr. swing-up	827 lb (375 kg)	827 lb (375 kg)	827 lb (375 kg)	827 lb (375 kg)	827 lb (375 kg)	827 lb (375 kg)	827 lb (375 kg)
Mounting kit, 4 bolts	143 lb (65 kg)	143 lb (65 kg)	143 lb (65 kg)	143 lb (65 kg)	143 lb (65 kg)	143 lb (65 kg)	143 lb (65 kg)
Mounting kit, 8 bolts	132 lb (60 kg)	132 lb (60 kg)	132 lb (60 kg)	132 lb (60 kg)	132 lb (60 kg)	132 lb (60 kg)	132 lb (60 kg)
Tank, excl. oil (fitted on loader)	88 lb (45 kg)	88 lb (45 kg)	88 lb (45 kg)	88 lb (45 kg)	88 lb (45 kg)	88 lb (45 kg)	88 lb (45 kg)z
Manual extensions			176 lb (80 kg)	154 lb (70 kg)	132 lb (60 kg)	88 lb (45 kg)	77 lb (35 kg)
			154 lb (70 kg)	132 lb (60 kg)	88 lb (45 kg)	77 lb (35 kg)	
			132 lb (60 kg)	88 lb (45 kg)	77 lb (35 kg)		
Oil in loader (stowing position)	88 lb (45 kg)	110 lb (50 kg)	121 lb (55 kg)	132 lb (60 kg)	143 lb (65 kg)	154 lb (70 kg)	154 lb (70 kg)

1) Weights ± 5% because of tolerances for plate thickness

26/180DL Weights, Equipment

	26/180DL K2	26/180DL K3	26/180DL K4	26/180DL K5	26/180DL K6	26/180DL K7	26/180DL K8
Stand-up controls (HS), std.	132 lb (60 kg)	132 lb (60 kg)	132 lb (60 kg)	132 lb (60 kg)	132 lb (60 kg)	132 lb (60 kg)	132 lb (60 kg)
Stand-up controls (HS), direct valve control	154 lb (70 kg)	154 lb (70 kg)	154 lb (70 kg)	154 lb (70 kg)	154 lb (70 kg)	154 lb (70 kg)	154 lb (70 kg)
Top seat (TS)	198 lb (90 kg)	198 lb (90 kg)	198 lb (90 kg)	198 lb (90 kg)	198 lb (90 kg)	198 lb (90 kg)	198 lb (90 kg)
Top seat, ladder	44 lb (20 kg)	44 lb (20 kg)	44 lb (20 kg)	44 lb (20 kg)	44 lb (20 kg)	44 lb (20 kg)	44 lb (20 kg)
1 extra valve, hose guides	121 lb (55 kg)	143 lb (65 kg)	165 lb (75 kg)	187 lb (85 kg)	209 lb (95 kg)		
1 extra valve, hose reels						209 lb (95 kg)	209 lb (95 kg)
1 extra valve, int. hose routing	165 lb (75 kg)	165 lb (75 kg)	176 lb (80 kg)	176 lb (80 kg)	187 lb (85 kg)		
2 extra valves, hose guides	165 lb (75 kg)	198 lb (90 kg)	231 lb (105 kg)	264 lb (120 kg)	135 lb (297 kg)		
2 extra valves, hose reels						408 lb (185 kg)	408 lb (185 kg)
2 extra valves, int. hose routing	286 lb (130 kg)	286 lb (130 kg)	308 lb (140 kg)	308 lb (145 kg)	331 lb (150 kg)		
Winch (1.5 t), single snatch block	386 lb (175 kg)	386 lb (175 kg)	386 lb (175 kg)	386 lb (175 kg)	397 lb (180 kg)	397 lb (180 kg)	419 lb (190 kg)
Winch (1.5 t), double snatch block	375 lb (170 kg)	375 lb (170 kg)	375 lb (170 kg)	375 lb (170 kg)	386 lb (175 kg)	386 lb (175 kg)	397 lb (180 kg)
Winch (2.5 t), single snatch block	441lb (200kg)	441lb (200kg)	441lb (200kg)	441lb (200kg)	452 lb (205 kg)	452 lb (205 kg)	463 lb (210 kg)
Winch (2.5 t), double snatch block	430 lb (195 kg)	430 lb (195 kg)	430 lb (195 kg)	430 lb (195 kg)	440 lb (200kg)	440 lb (200 kg)	452 lb (205 kg)
High-pressure filter	15 lb (7 kg)	15 lb (7 kg)	15 lb (7 kg)	15 lb (7 kg)	15 lb (7 kg)	15 lb (7 kg)	15 lb (7 kg)
Oil cooler	55 lb (25 kg)	55 lb (25 kg)	55 lb (25 kg)	55 lb (25 kg)	55 lb (25 kg)	55 lb (25 kg)	55 lb (25 kg)

26/180DL Max. Load on Stabilizers (Per Stabilizer Cylinder)

	26/180DL K2	26/180DL K3	26/180DL K4	26/180DL K5	26/180DL K6	26/180DL K7	26/180DL K8
S1, fixed	88507 ft-lb (120 kN)	88507 ft-lb (120 kN)	88507 ft-lb (120 kN)	88507 ft-lb (120 kN)	88507 ft-lb (120 kN)	88507 ft-lb (120 kN)	88507 ft-lb (120 kN)
S1, swing-up	88507 ft-lb (120 kN)	88507 ft-lb (120 kN)	88507 ft-lb (120 kN)	88507 ft-lb (120 kN)	88507 ft-lb (120 kN)	88507 ft-lb (120 kN)	88507 ft-lb (120 kN)
S1, hydr. swing-up	88507 ft-lb (120 kN)	88507 ft-lb (120 kN)	88507 ft-lb (120 kN)	88507 ft-lb (120 kN)	88507 ft-lb (120 kN)	88507 ft-lb (120 kN)	88507 ft-lb (120 kN)
D, fixed	73756 ft-lb (100 kN)	73756 ft-lb (100 kN)	73756 ft-lb (100 kN)	73756 ft-lb (100 kN)	73756 ft-lb (100 kN)	73756 ft-lb (100 kN)	73756 ft-lb (100 kN)
D, swing-up	73756 ft-lb (100 kN)	73756 ft-lb (100 kN)	73756 ft-lb (100 kN)	73756 ft-lb (100 kN)	73756 ft-lb (100 kN)	73756 ft-lb (100 kN)	73756 ft-lb (100 kN)
D, hydr. swing-up	73756 ft-lb (100 kN)	73756 ft-lb (100 kN)	73756 ft-lb (100 kN)	73756 ft-lb (100 kN)	73756 ft-lb (100 kN)	73756 ft-lb (100 kN)	73756 ft-lb (100 kN)

26/180DL Power Consumption / Oil Capacity

	26/180DL K2	26/180DL K3	26/180DL K4	26/180DL K5	26/180DL K6	26/180DL K7	26/180DL K8
Working pressure	5004 PSI (345 Bar)	5004 PSI (345 Bar)	5004 PSI (345 Bar)	5004 PSI (345 Bar)	5004 PSI (345 Bar)	5004 PSI (345 Bar)	5004 PSI (345 Bar)
Tank capacity (fitted on loader)	23.78 Gallons (90 L)	23.78 Gallons (90 L)	23.78 Gallons (90 L)	23.78 Gallons (90 L)	23.78 Gallons (90 L)	23.78 Gallons (90 L)	23.78 Gallons (90 L)
Max. pump performance, Hydrocontrol, 1-circuit	15.85 Gallon/min (60 L/min)	15.85 Gallon/min (60 L/min)	15.85 Gallon/min (60 L/min)	15.85 Gallon/min (60 L/min)	15.85 Gallon/min (60 L/min)	15.85 Gallon/min (60 L/min)	15.85 Gallon/min (60 L/min)
Max. pump performance, Hydrocontrol, 2-circuit	-	-	-	-	-	-	-
Max. pump performance, Danfoss fixed flow	18.49 Gallon/min (70 L/min)	18.49 Gallon/min (70 L/min)	18.49 Gallon/min (70 L/min)	18.49 Gallon/min (70 L/min)	18.49 Gallon/min (70 L/min)	18.49 Gallon/min (70 L/min)	18.49 Gallon/min (70 L/min)
Max. pump performance, Danfoss variable	31.70 Gallon/min (120 L/min)	31.70 Gallon/min (120 L/min)	31.70 Gallon/min (120 L/min)	31.70 Gallon/min (120 L/min)	31.70 Gallon/min (120 L/min)	31.70 Gallon/min (120 L/min)	31.70 Gallon/min (120 L/min)

This Page Left Blank Intentionally

CHAPTER 7

26/180DL Capacity Charts

In this Chapter

24/169DL Capacity Chart K2 40
24/169DL Capacity Chart K3 41
24/169DL Capacity Chart K4 42
24/169DL Capacity Chart K5 43
24/169DL Capacity Chart K6 44
24/169DL Capacity Chart K7 45
24/169DL Capacity Chart K8 46
24/169DL Capacity Chart K2-K8 47

26/180DL Capacity Chart K2

IMT
MATERIAL HANDLING SYSTEMS

IOWA MOLD TOOLING CO., INC.
BOX 189 • GARNER • IA • 50438 • 641-923-3711

Model 26/180DL K2

- **Limit working loads to those shown. Deduct the weight of load handling devices.**
- ***El peso propio (tara) de los dispositivos de manipulación de cargas es parte de la carga levantada y se debe descontar de la capacidad nominal.***

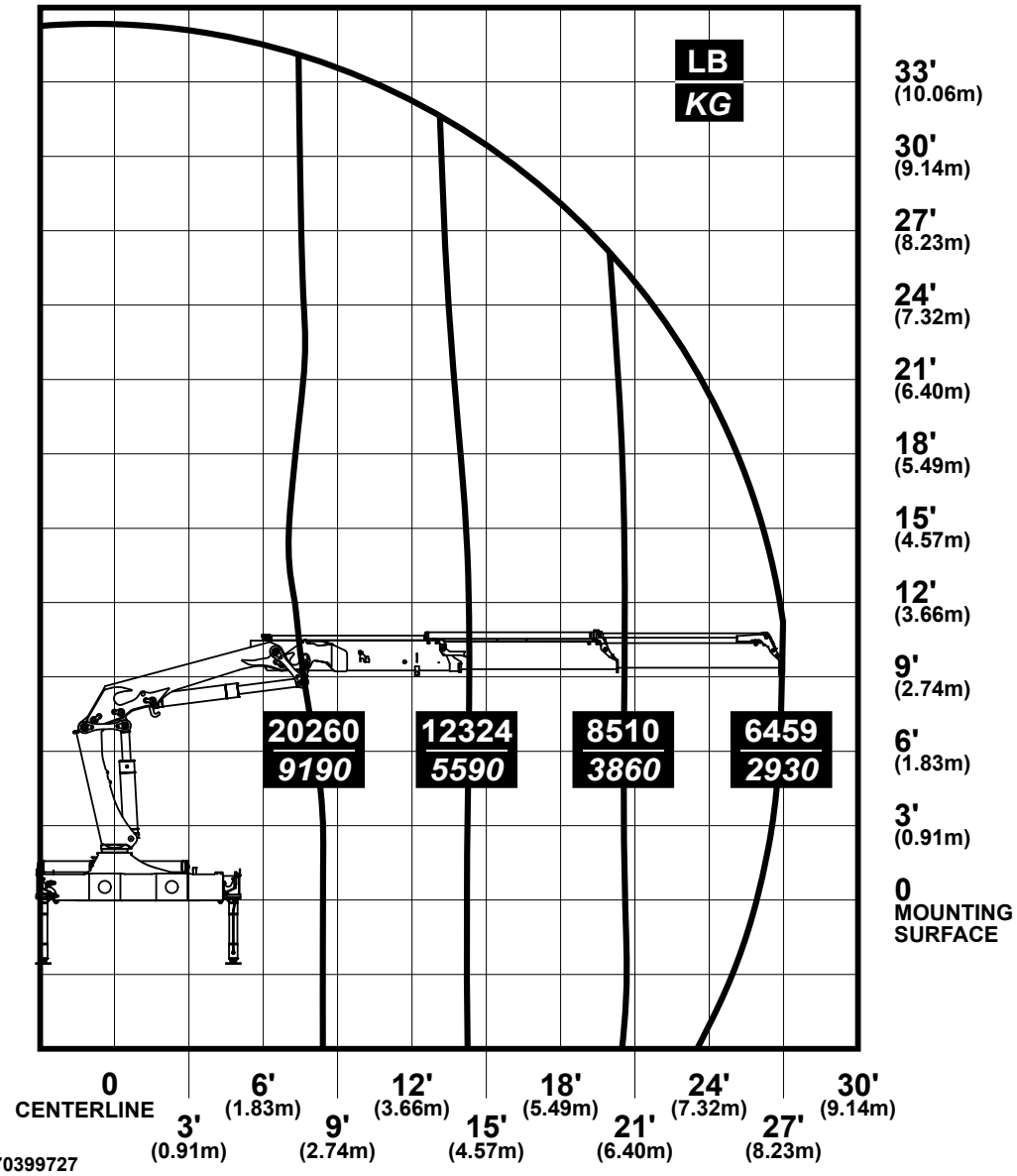

70399727

26/180DL Capacity Chart K3

IMT
MATERIAL HANDLING SYSTEMS

IOWA MOLD TOOLING CO., INC.
BOX 189 • GARNER • IA • 50438 • 641-923-3711

Model 26/180DL K3

- **Limit working loads to those shown. Deduct the weight of load handling devices.**
- ***El peso propio (tara) de los dispositivos de manipulación de cargas es parte de la carga levantada y se debe descontar de la capacidad nominal.***

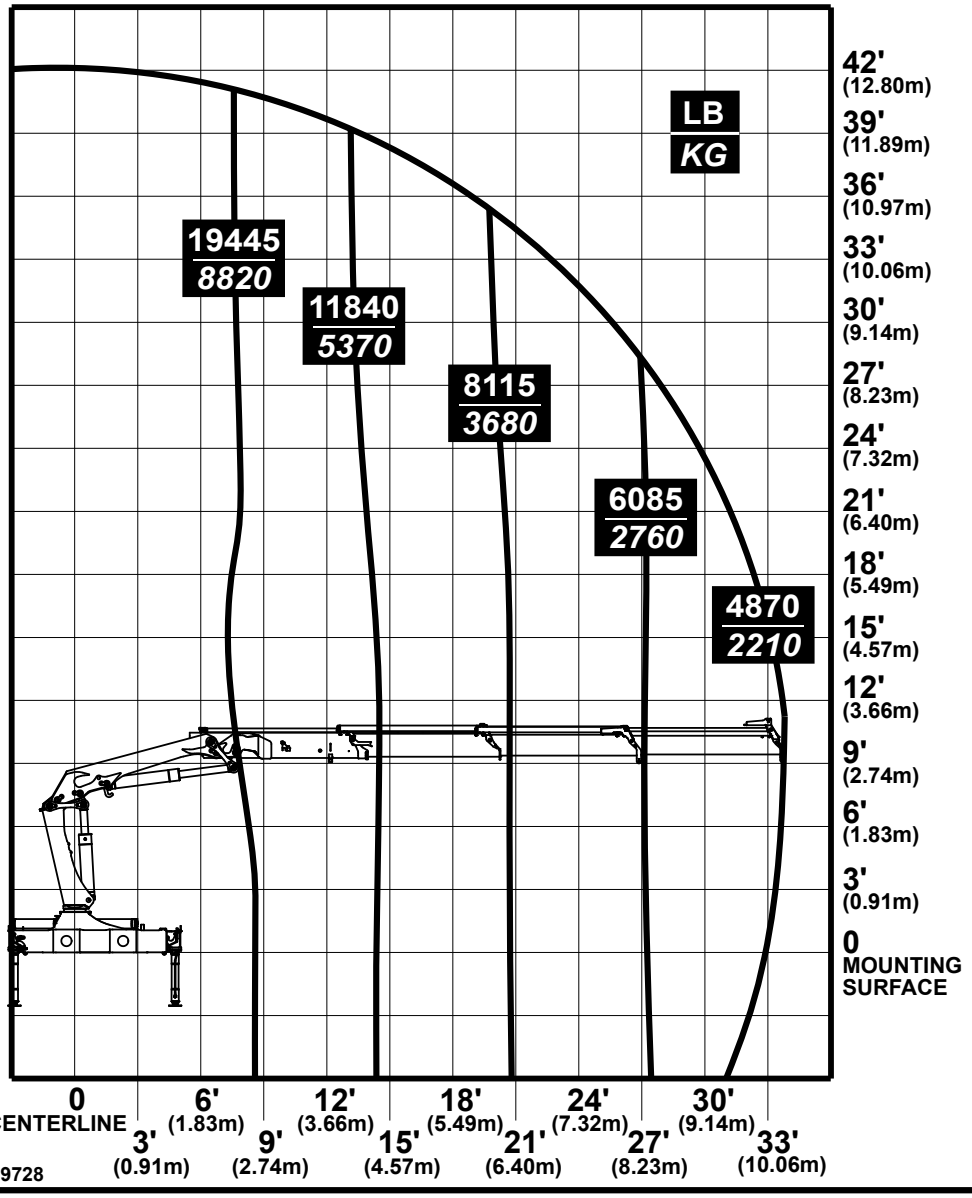

70399728

26/180DL Capacity Chart K4

IMT
MATERIAL HANDLING SYSTEMS

IOWA MOLD TOOLING CO., INC.
BOX 189 • GARNER • IA • 50438 • 641-923-3711

Model 26/180DL K4

- **Limit working loads to those shown. Deduct the weight of load handling devices.**
- ***El peso propio (tara) de los dispositivos de manipulación de cargas es parte de la carga levantada y se debe descontar de la capacidad nominal.***

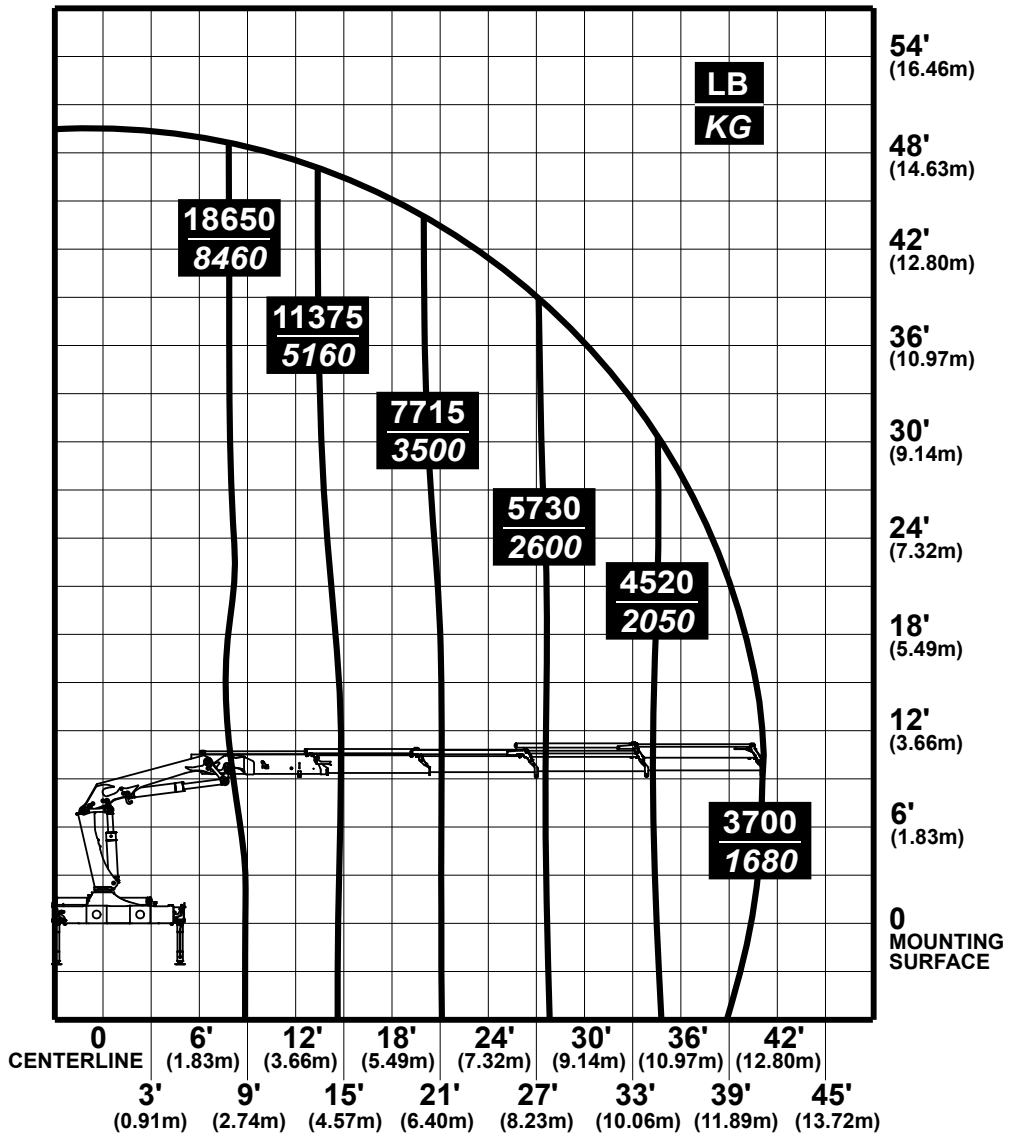

70399729

26/180DL Capacity Chart K5

IMT
MATERIAL HANDLING SYSTEMS

IOWA MOLD TOOLING CO., INC.
BOX 189 • GARNER • IA • 50438 • 641-923-3711

Model 26/180DL K5

- **Limit working loads to those shown. Deduct the weight of load handling devices.**
- ***El peso propio (tara) de los dispositivos de manipulación de cargas es parte de la carga levantada y se debe descontar de la capacidad nominal.***

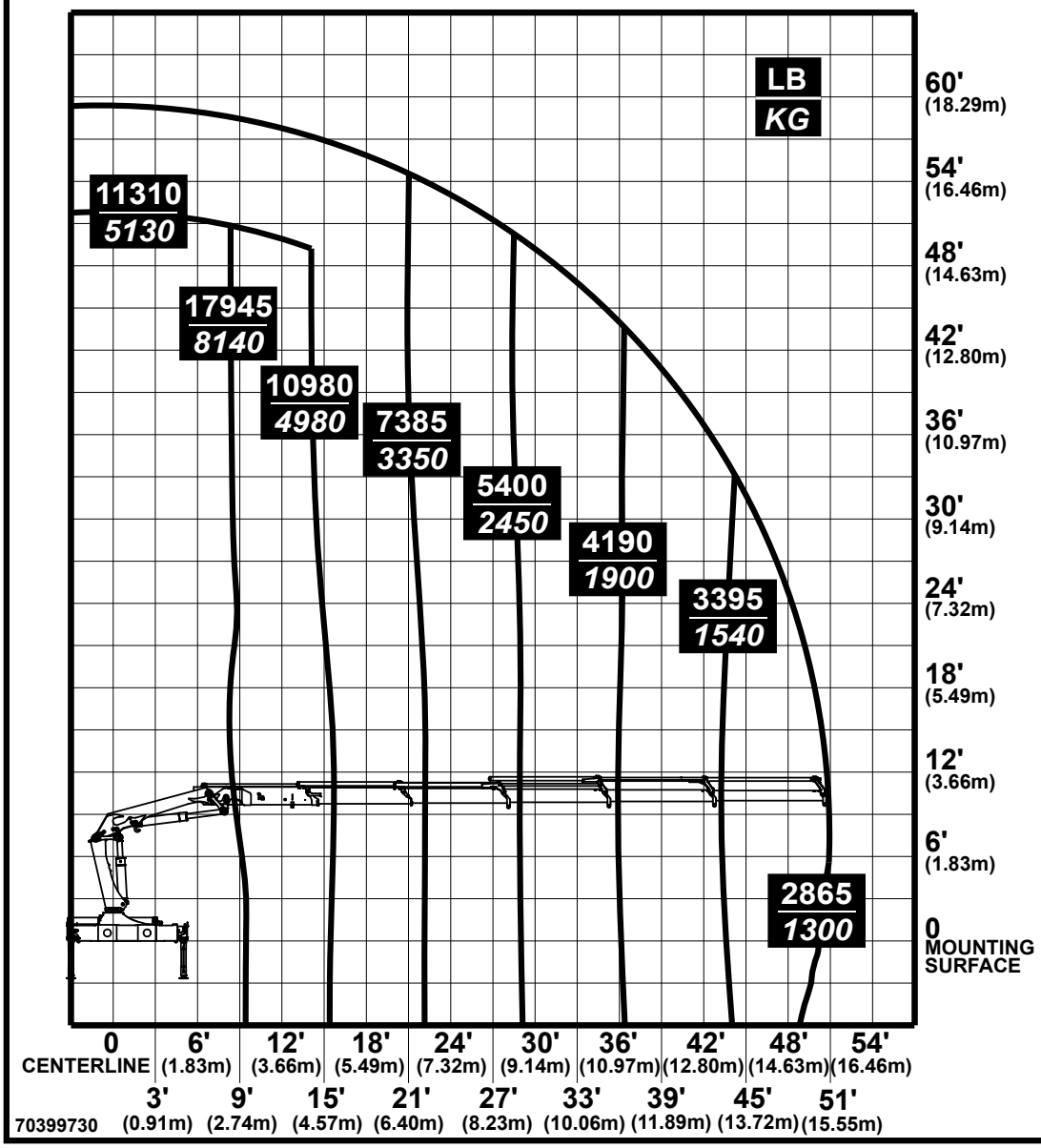

26/180DL Capacity Chart K6

IMT
MATERIAL HANDLING SYSTEMS

IOWA MOLD TOOLING CO., INC.
BOX 189 • GARNER • IA • 50438 • 641-923-3711

Model 26/180DL K6

- **Limit working loads to those shown. Deduct the weight of load handling devices.**
- ***El peso propio (tara) de los dispositivos de manipulación de cargas es parte de la carga levantada y se debe descontar de la capacidad nominal.***

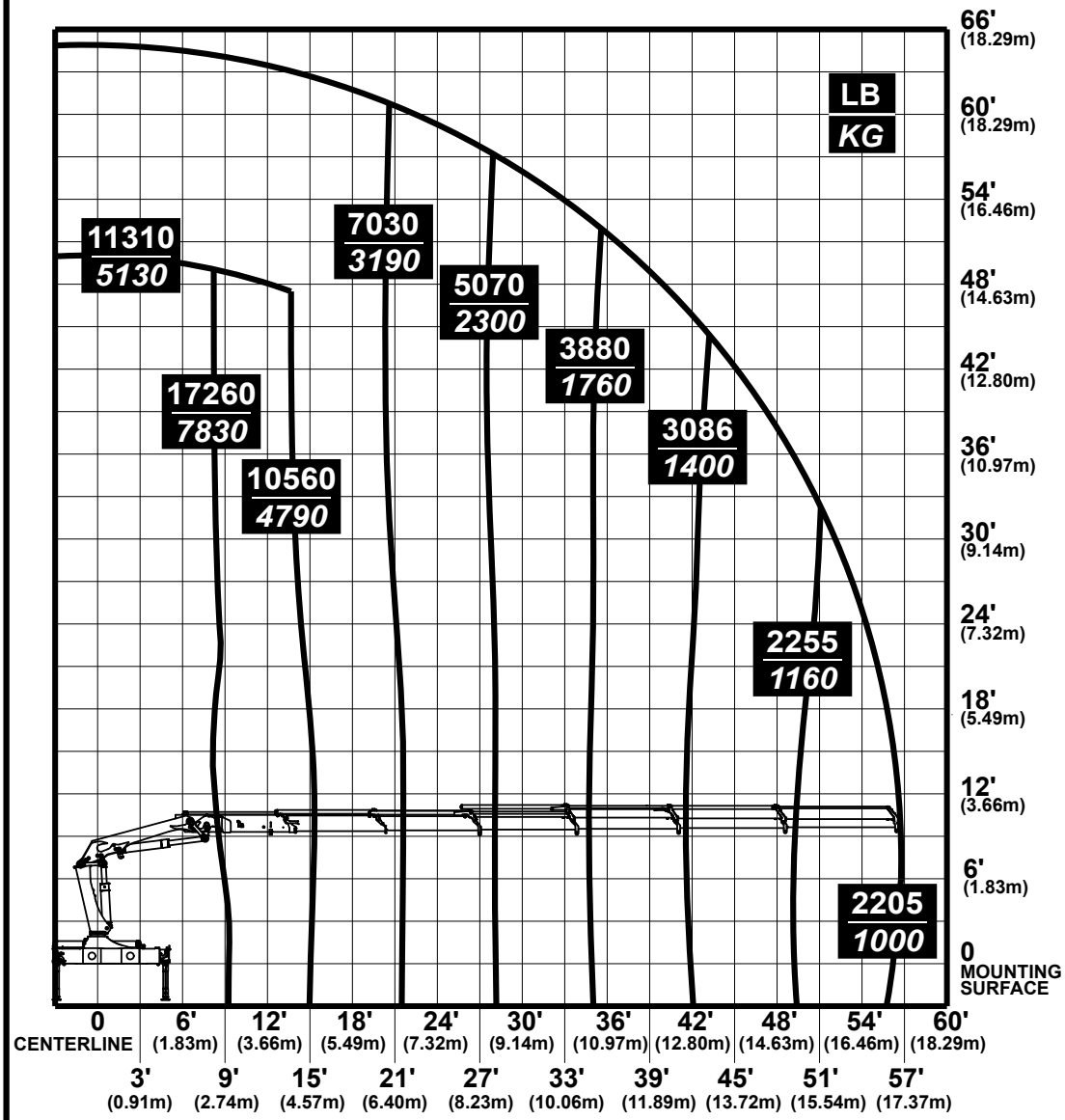

70399731

26/180DL Capacity Chart K7

IMT
MATERIAL HANDLING SYSTEMS

IOWA MOLD TOOLING CO., INC.
BOX 189 • GARNER • IA • 50438 • 641-923-3711

Model 26/180DL K7

- **Limit working loads to those shown. Deduct the weight of load handling devices.**
- ***El peso propio (tara) de los dispositivos de manipulación de cargas es parte de la carga levantada y se debe descontar de la capacidad nominal.***

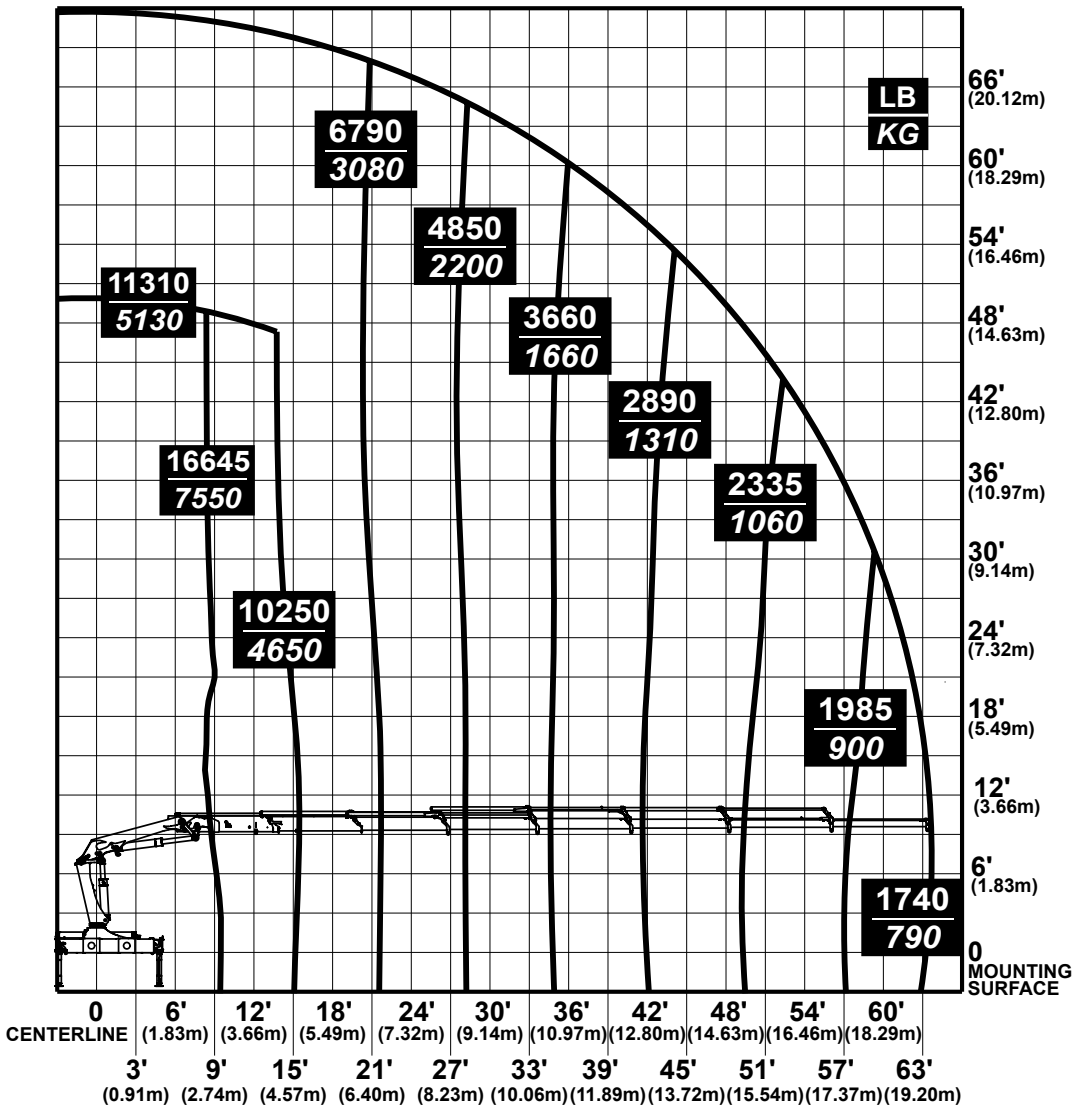

70399732

26/180DL Capacity Chart K8

IMT
MATERIAL HANDLING SYSTEMS

IOWA MOLD TOOLING CO., INC.
BOX 189 • GARNER • IA • 50438 • 641-923-3711

Model 26/180DL K8

- **Limit working loads to those shown. Deduct the weight of load handling devices.**
- ***El peso propio (tara) de los dispositivos de manipulación de cargas es parte de la carga levantada y se debe descontar de la capacidad nominal.***

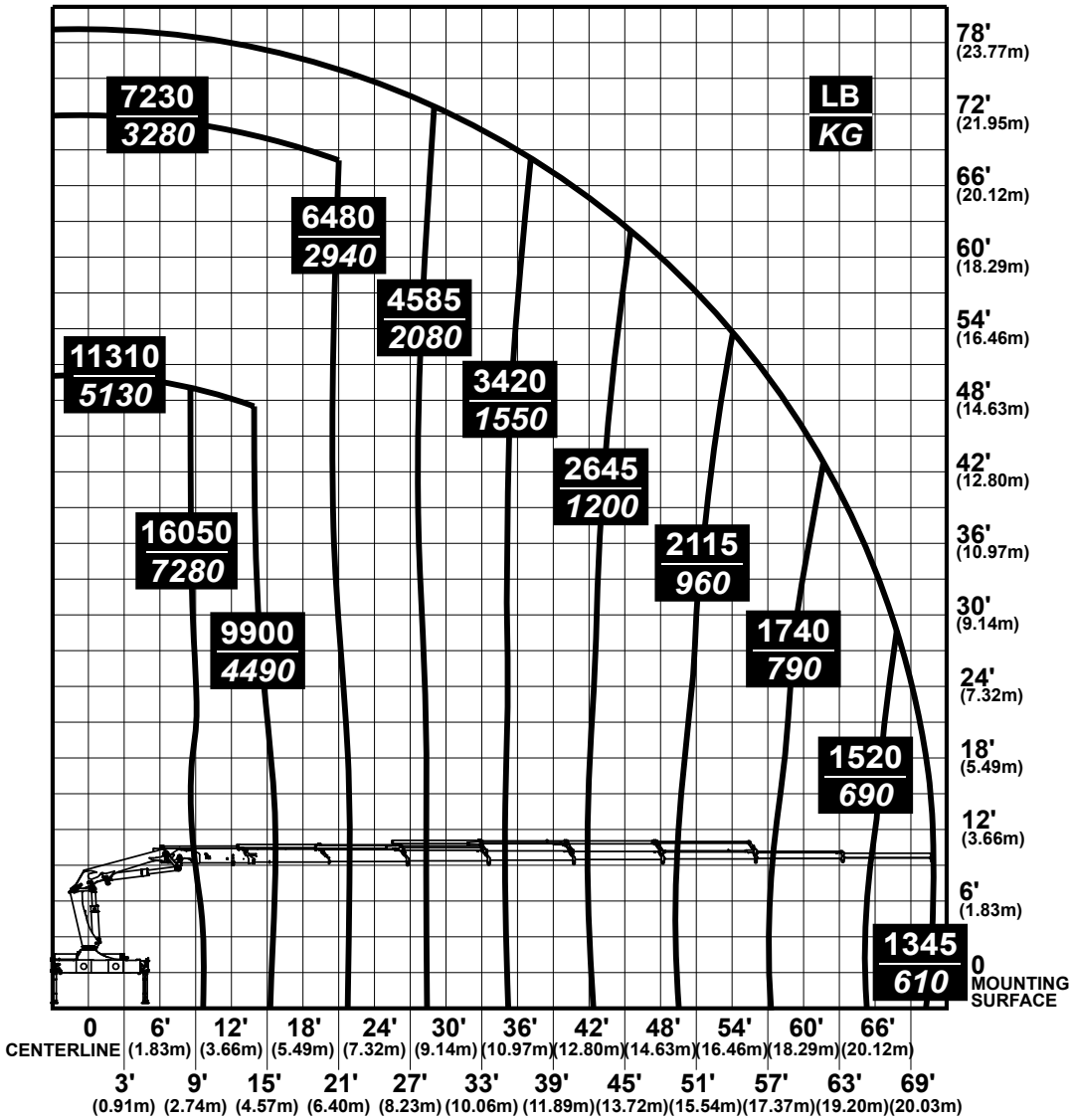

70399733

26/180DL Capacity Chart K2 - K8

K2

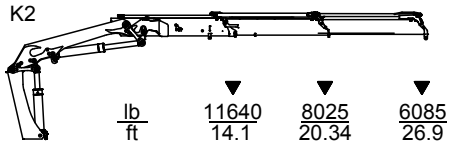

lb / ft	▼	▼	▼
	11640 / 14.1	8025 / 20.34	6085 / 26.9

K3

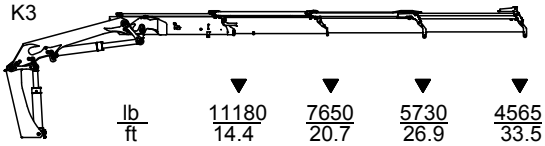

lb / ft	▼	▼	▼	▼
	11180 / 14.4	7650 / 20.7	5730 / 26.9	4565 / 33.5

K4

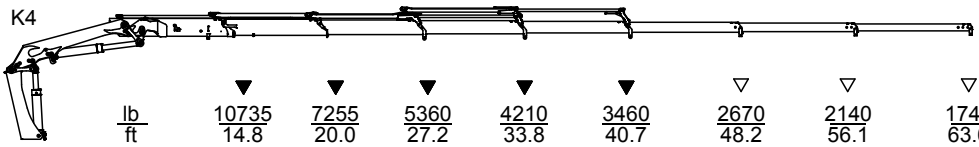

lb / ft	▼	▼	▼	▼	▼	▽	▽	▽
	10735 / 14.8	7255 / 20.0	5360 / 27.2	4210 / 33.8	3460 / 40.7	2670 / 48.2	2140 / 56.1	1740 / 63.6

K5

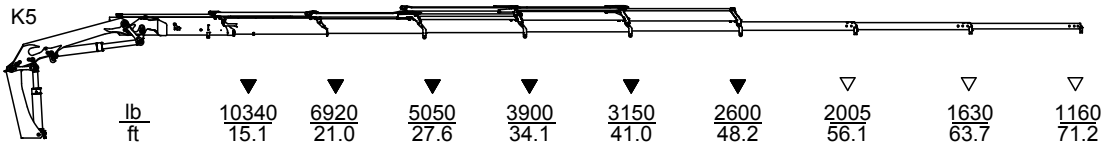

lb / ft	▼	▼	▼	▼	▼	▼	▽	▽	▽
	10340 / 15.1	6920 / 21.0	5050 / 27.6	3900 / 34.1	3150 / 41.0	2600 / 48.2	2005 / 56.1	1630 / 63.7	1160 / 71.2

K6

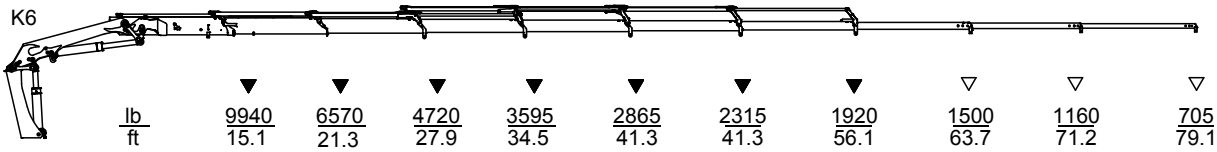

lb / ft	▼	▼	▼	▼	▼	▼	▼	▽	▽	▽
	9940 / 15.1	6570 / 21.3	4720 / 27.9	3595 / 34.5	2865 / 41.3	2315 / 41.3	1920 / 56.1	1500 / 63.7	1160 / 71.2	705 / 79.1

K7

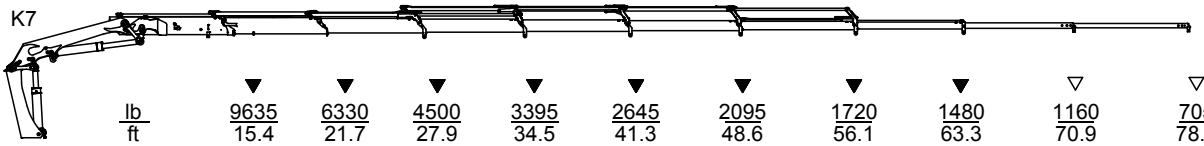

lb / ft	▼	▼	▼	▼	▼	▼	▼	▼	▽	▽
	9635 / 15.4	6330 / 21.7	4500 / 27.9	3395 / 34.5	2645 / 41.3	2095 / 48.6	1720 / 56.1	1480 / 63.3	1160 / 70.9	705 / 78.4

K8

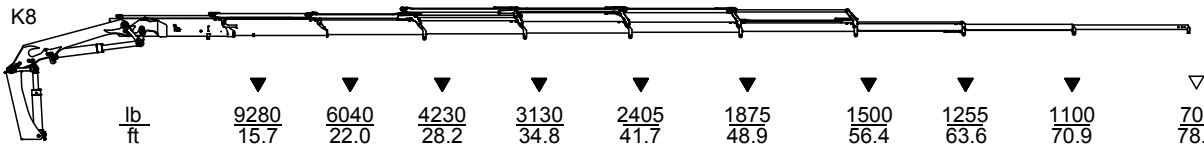

lb / ft	▼	▼	▼	▼	▼	▼	▼	▼	▼	▽
	9280 / 15.7	6040 / 22.0	4230 / 28.2	3130 / 34.8	2405 / 41.7	1875 / 48.9	1500 / 56.4	1255 / 63.6	1100 / 70.9	705 / 78.4

▽ Lifting capacity with man. extensions

▼ Lifting capacity without man. extensions

This Page Left Blank Intentionally

CHAPTER 3

22/153DL, 24/169DL, 26/180DL Dimension Sketches

In this Chapter

Dimension Sketch 50
Slewing Radius 51
Truck-Mounted Loader 52
Lifting at Column 53
Fixed Stabilizer Legs 54
Fixed Stabilizer Legs 55
Swing-up Stabilizer Legs 20° - 60° (Manual) 56
Swing-up Stabilizer Legs 20° - 60° (Manual) 57
Swing-up Stabilizer Legs 180° (Manual + Hydraulic) 58
Swing-up Stabilizer Legs 180° (Manual + Hydraulic) 59
TS Top Seat (RC) 60
TS Top Seat (HC Linear) 61
TS Top Seat (Danfoss X) 62
TS Top Seat (HC X) 63
Ladder for TS 64
Winch 65
Winch 66
Stand-Up Platform (Std) 67
Stand-Up Platform (Valve Control) 68
Internal Hose Routing K2-K6 69
Extra Valves K7,K8 70
Stowed in Truck Body 71
Centers of Gravity 72

Dimension Sketch

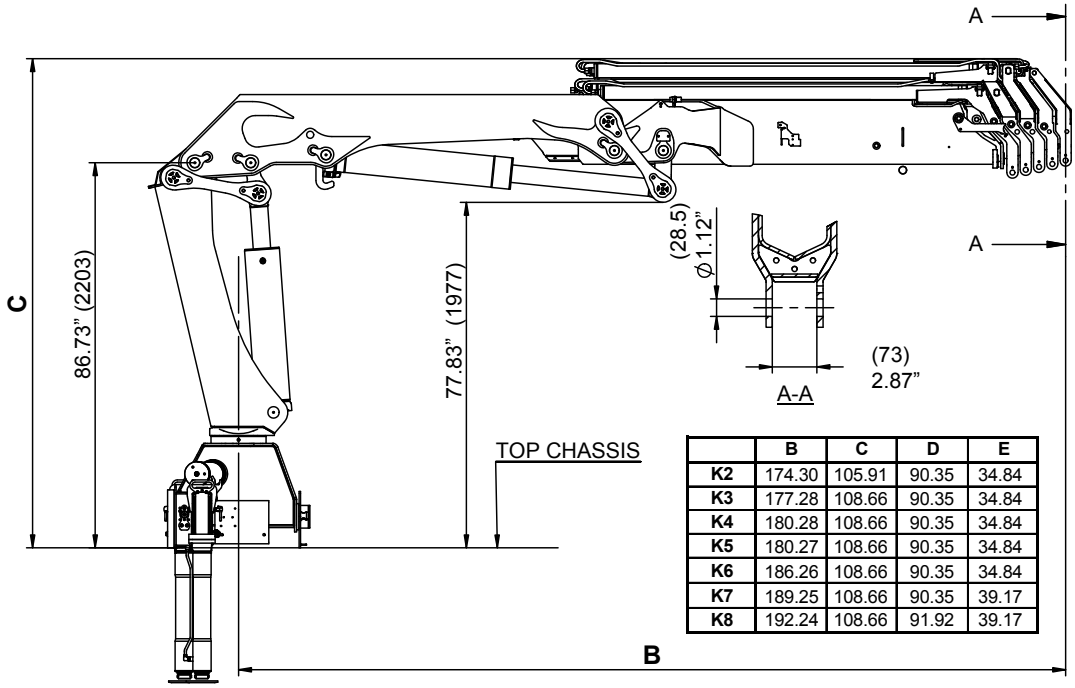

	B	C	D	E
K2	174.30	105.91	90.35	34.84
K3	177.28	108.66	90.35	34.84
K4	180.28	108.66	90.35	34.84
K5	180.27	108.66	90.35	34.84
K6	186.26	108.66	90.35	34.84
K7	189.25	108.66	90.35	39.17
K8	192.24	108.66	91.92	39.17

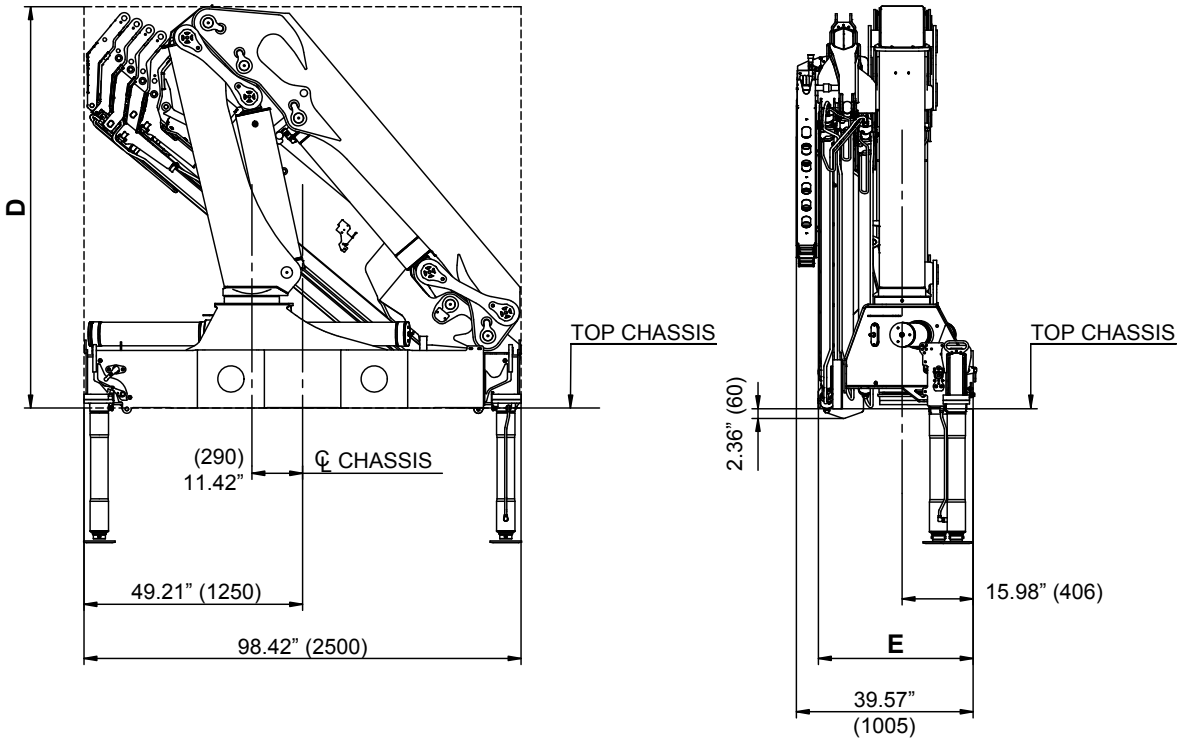

Slewing Radius

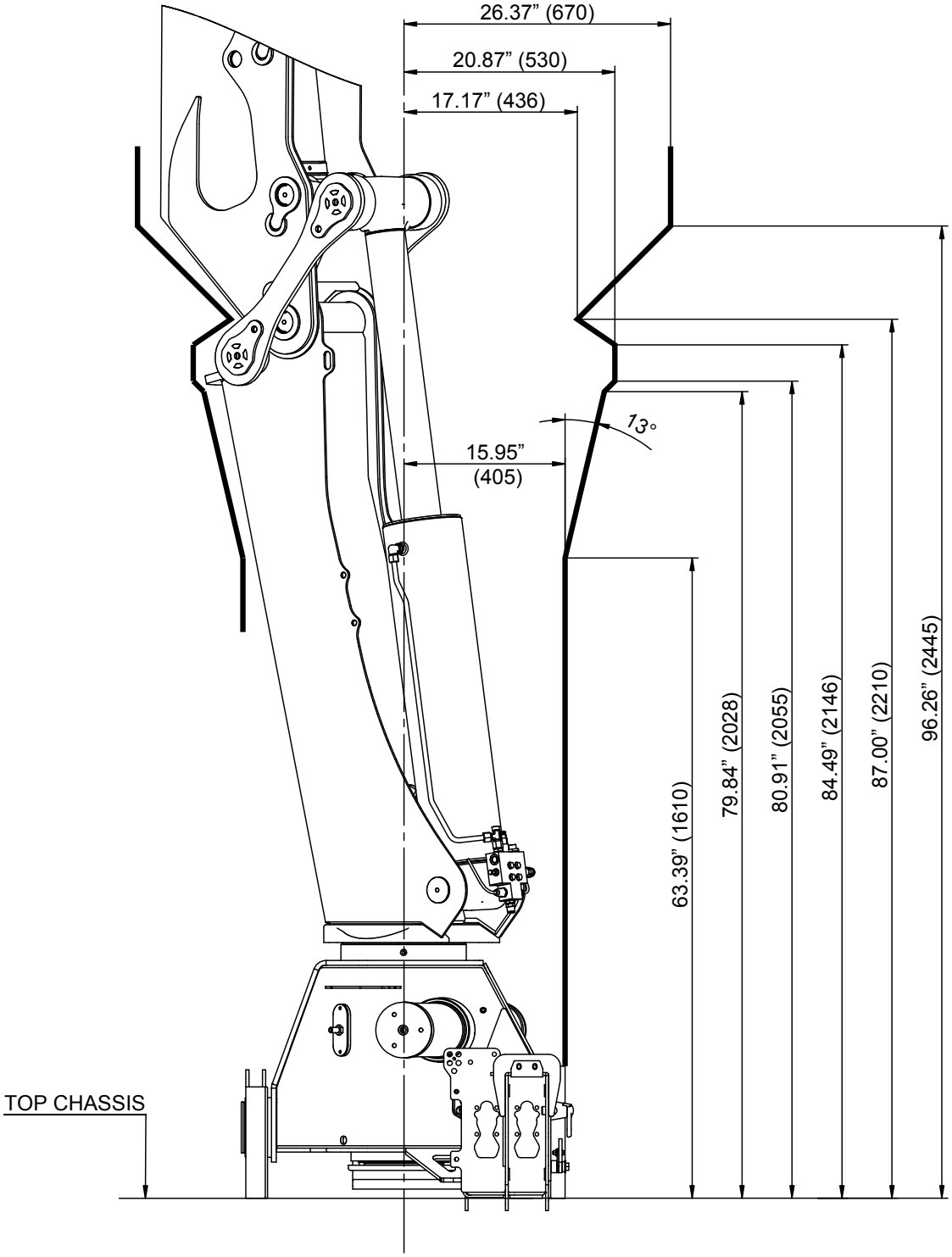

Truck-Mounted Loader

Mounting kit 8 x M24x2 bolts

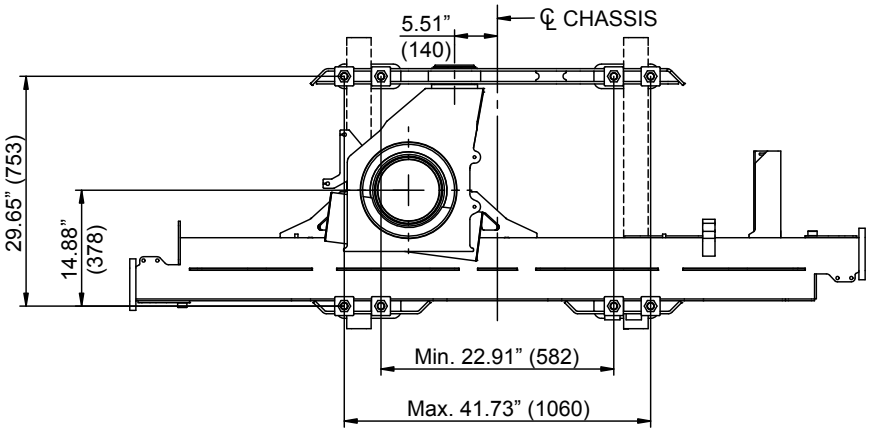

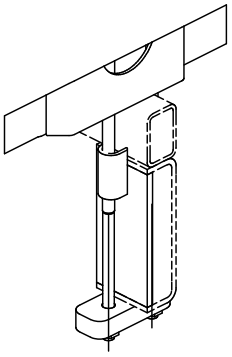

Notes:

1) Values dictated by strength considerations.

2) Drill hole when assembling

3) As regards installation - please see IMT Installation Manual

4) Mounting kits or spare parts - please see the Spare Parts Catalogue of the individual loader

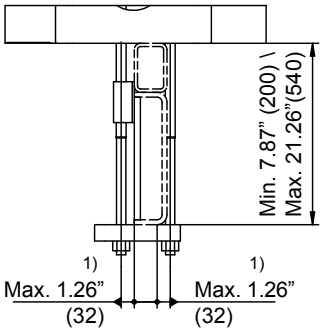

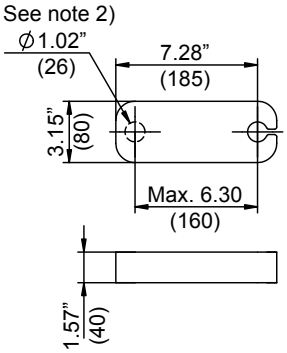

Mounting kit 3 x M33x2 bolts + 1 x M30x2 bolts

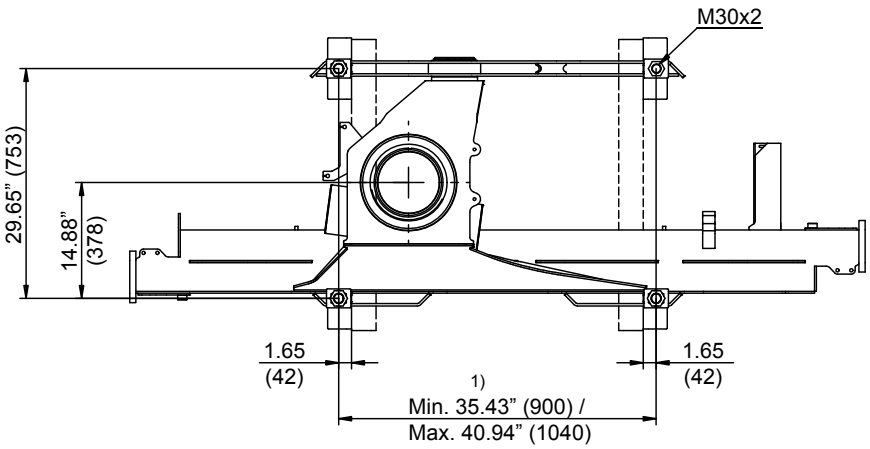

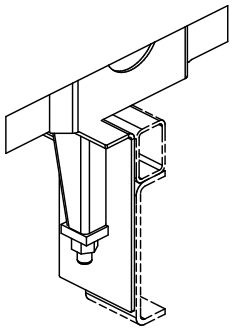

Lifting Height at Column

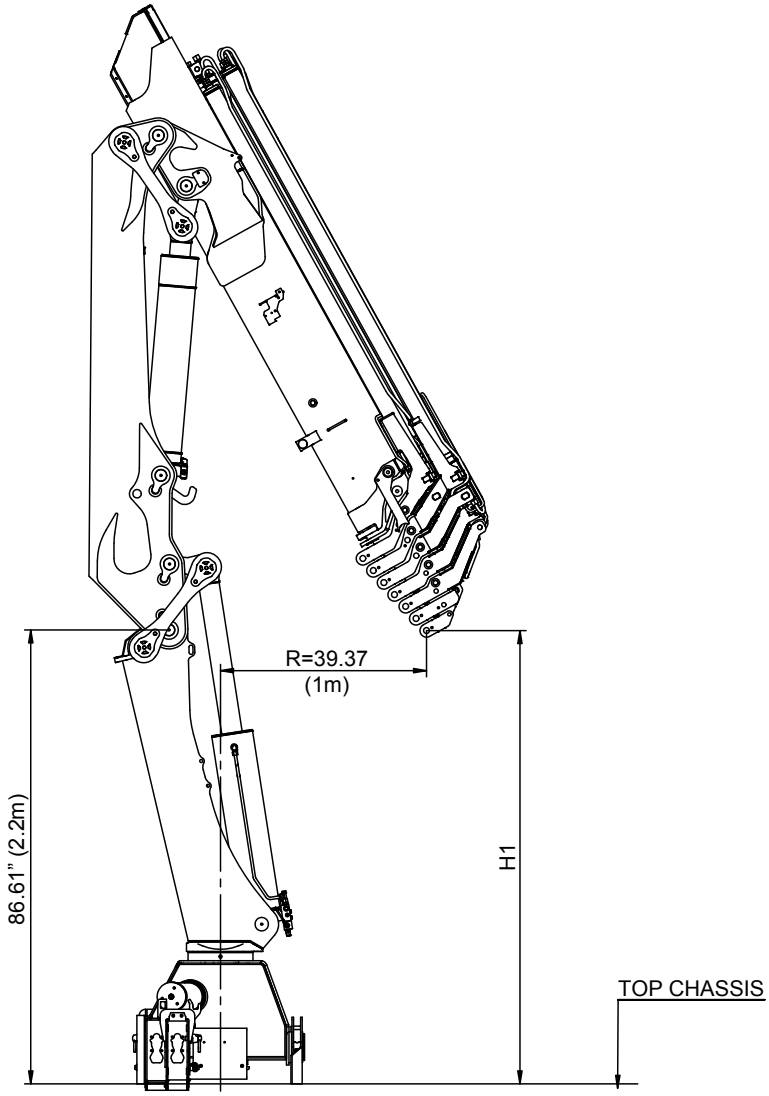

	H1	H1
K2	2.74m	107.87”
K3	2.65m	104.33”
K4	2.56m	100.79”
K5	2.47m	97.24”
K6	2.38m	93.70”
K7	2.29m	90.16”
K8	2.21m	87.01”

Fixed Stabilizer Legs

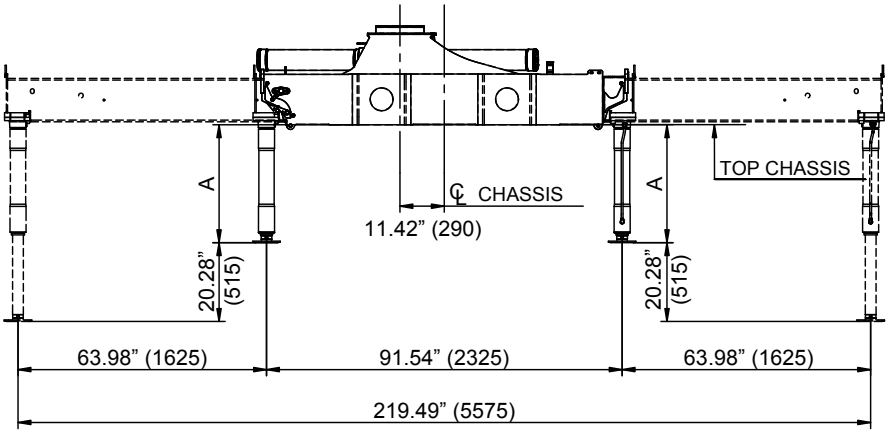

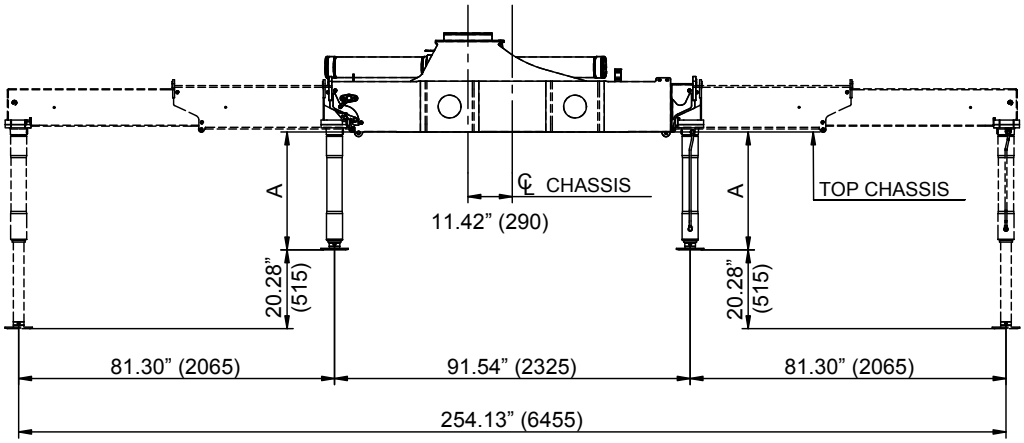

A	770	870	970
A	30.31”	34.25”	38.19”

Støttebenscylinder, kort udførelse

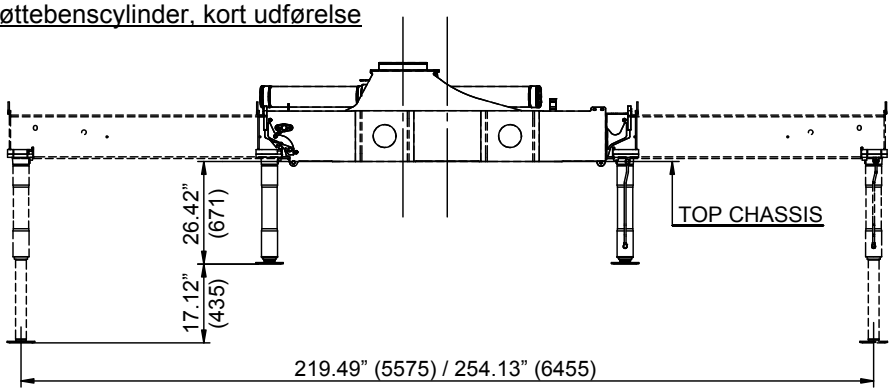

Fixed Stabilizer Legs

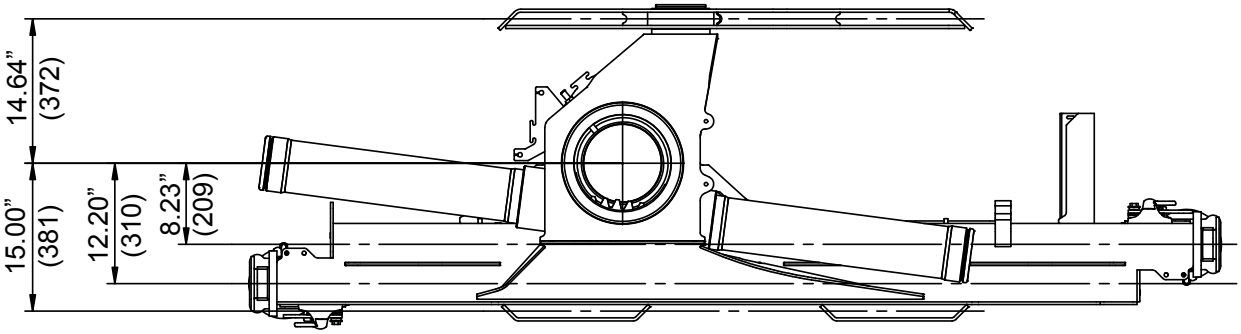

Swing-up Stabilizer Legs 20° - 60° (Manual)

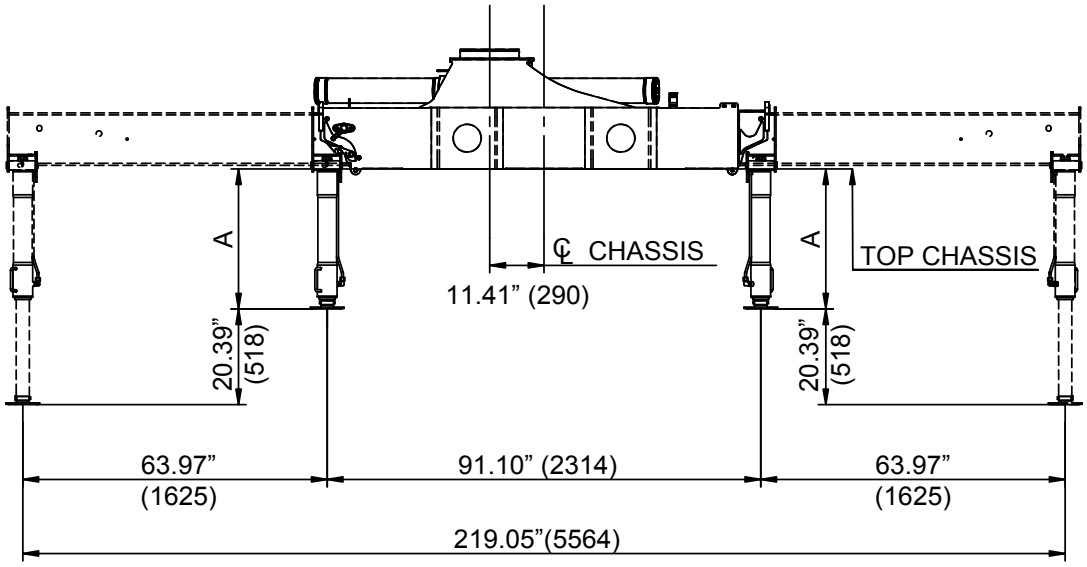

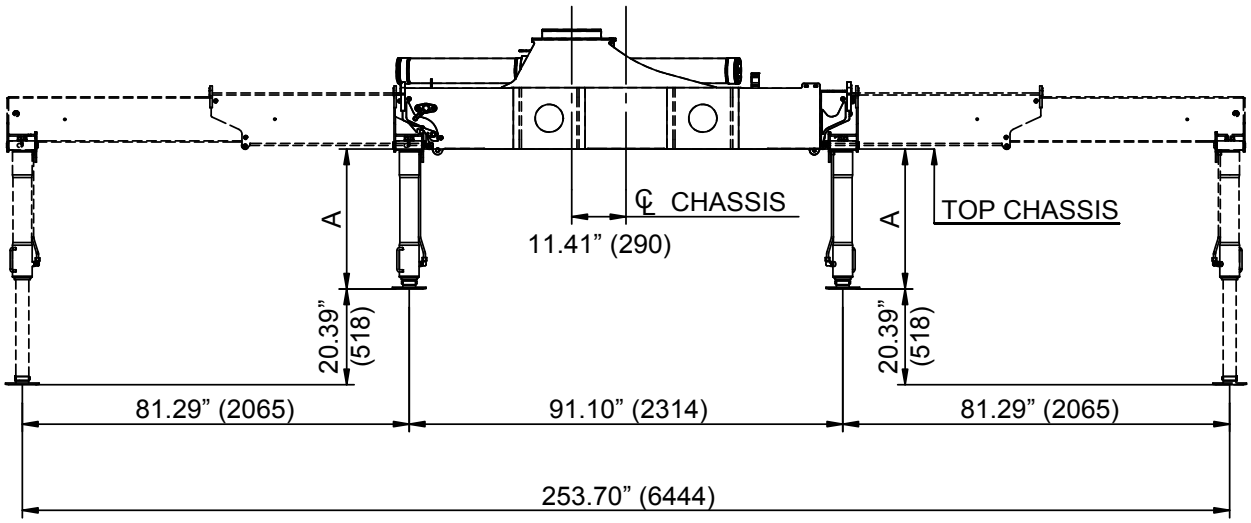

A Type R-60°	30.12” (765)	34.05” (865)	37.99” (965)
A Type R-20° (Obsolete)	29.80” (757)	33.74” (857)	37.68” (957)

Swing-up Stabilizer Legs 20° - 60° (Manual)

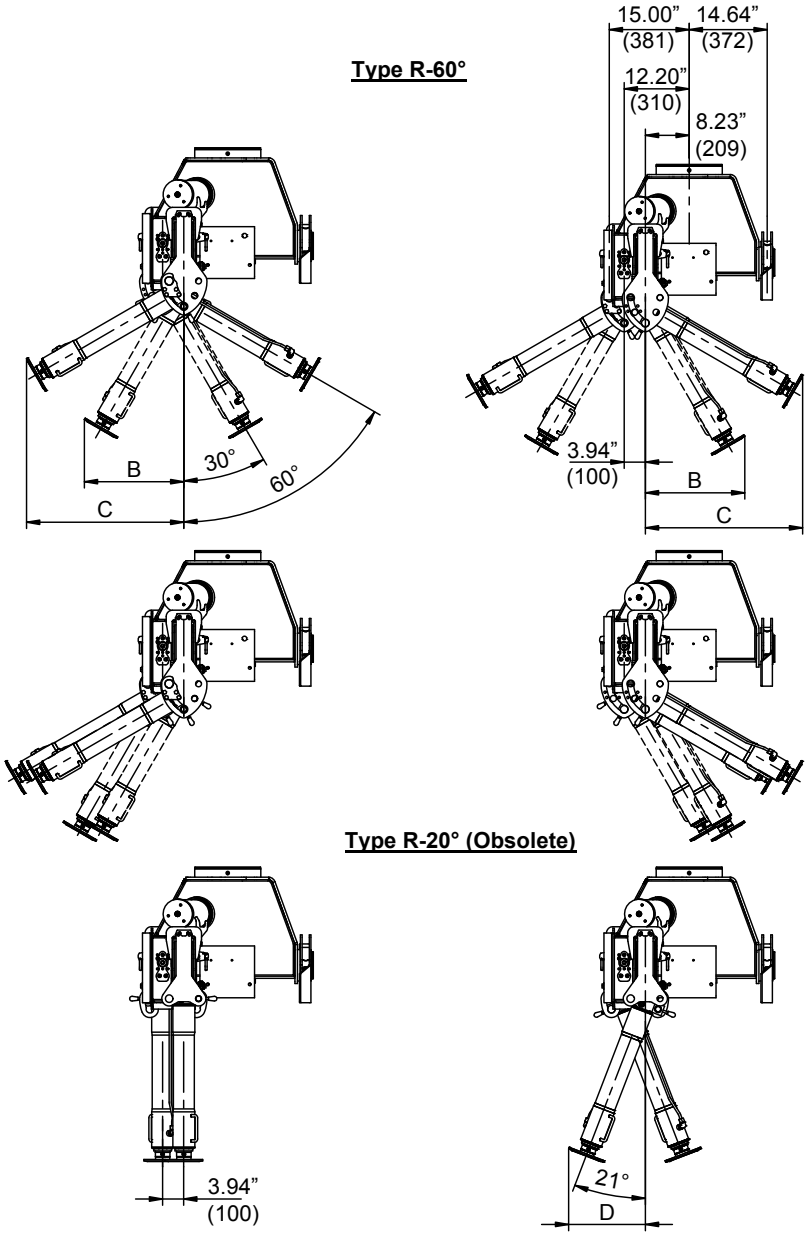

B	18.66” (474)	20.63” (524)	22.60” (574)
C	29.53” (750)	32.91” (836)	36.34” (923)
D	14.41” (366)	15.83” (402)	17.24” (438)

Swing-up Stabilizer Legs 180° (Manual + Hydraulic)

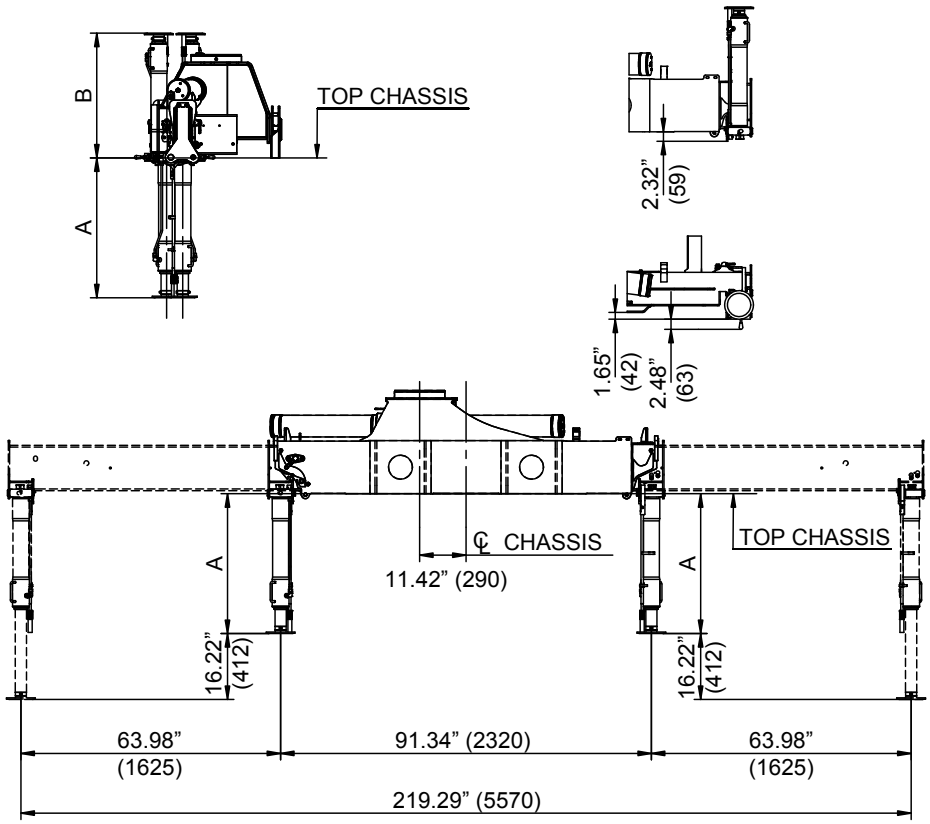

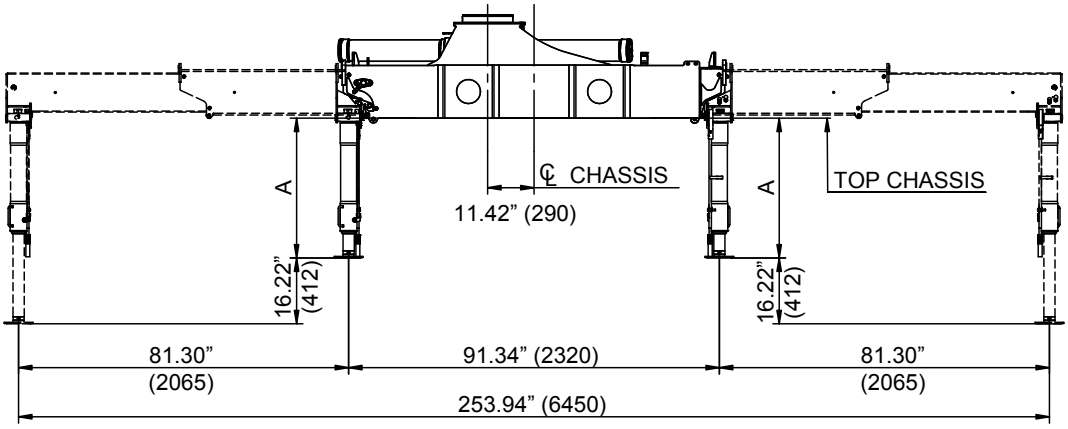

A	34.45” (875)	38.38” (975)	42.32” (1075)
B	30.75” (781)	34.68” (881)	38.62” (981)

Swing-up Stabilizer Legs 180° (Manual + Hydraulic)

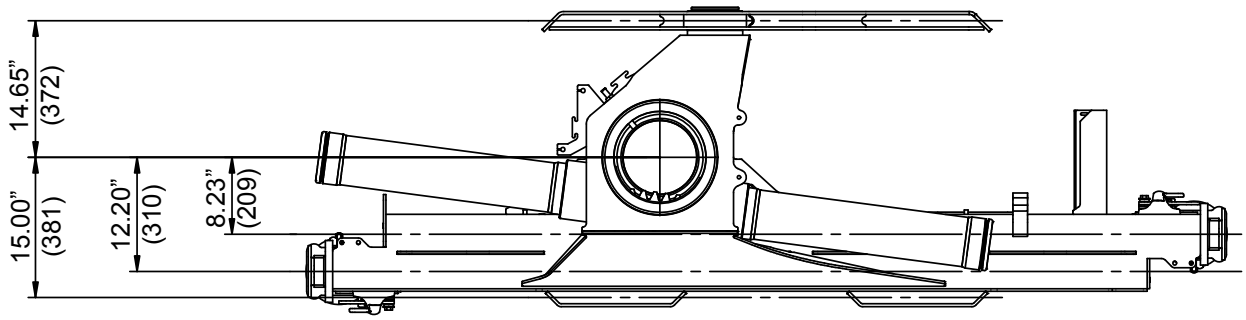

TS Top Seat (RC)

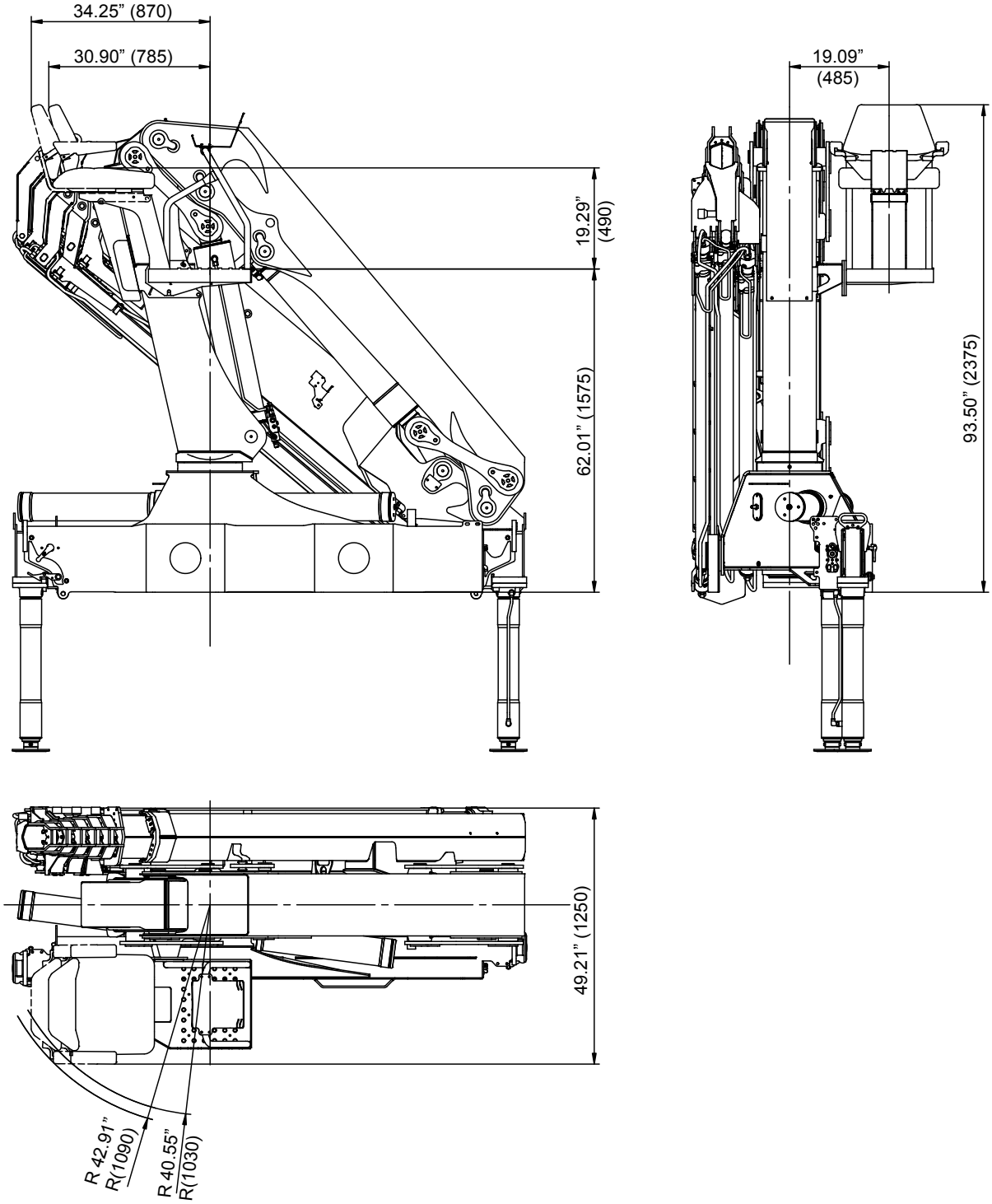

TS Top Seat (HC Linear)

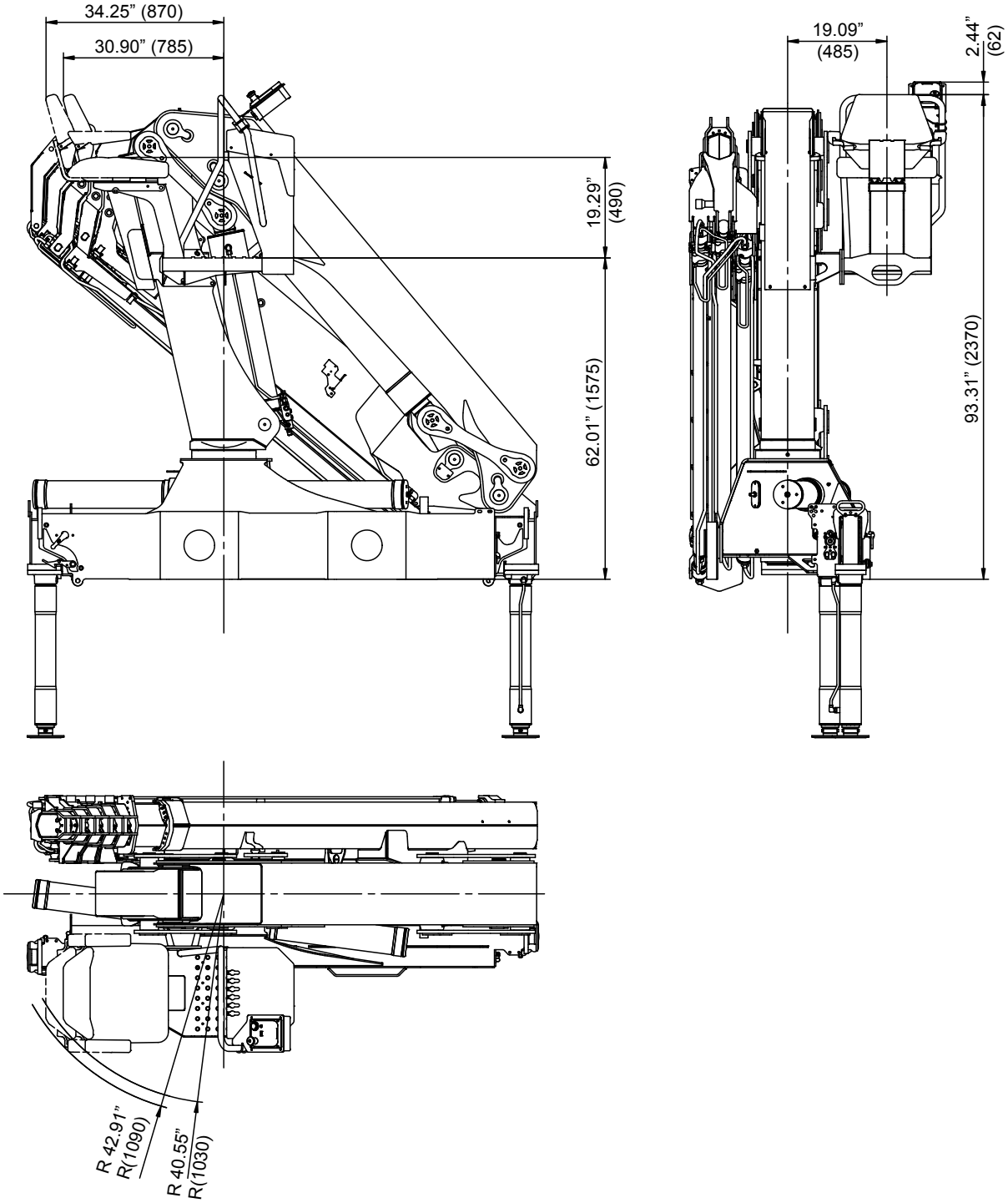

TS Top Seat (Danfoss X)

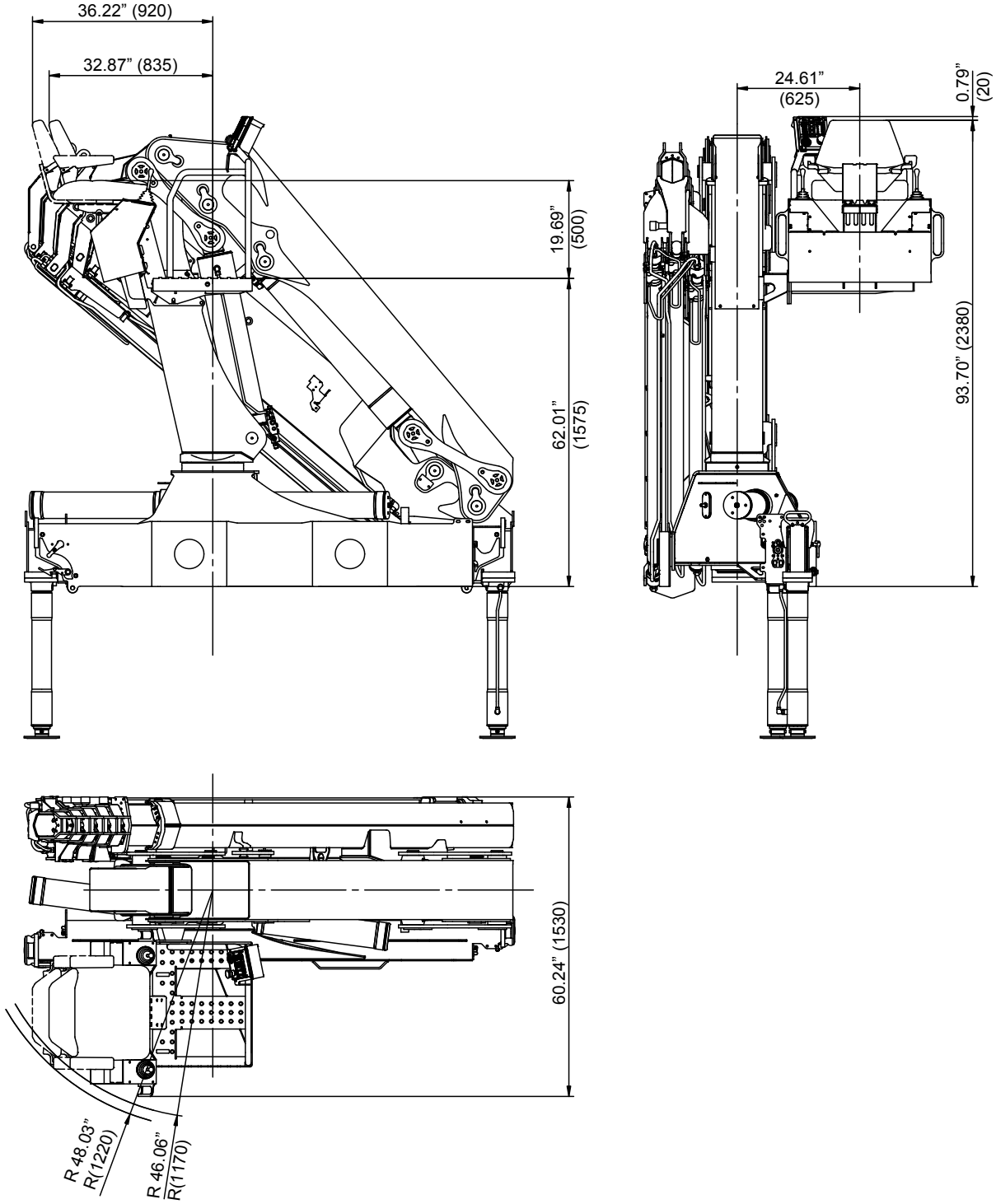

TS Top Seat (HC X)

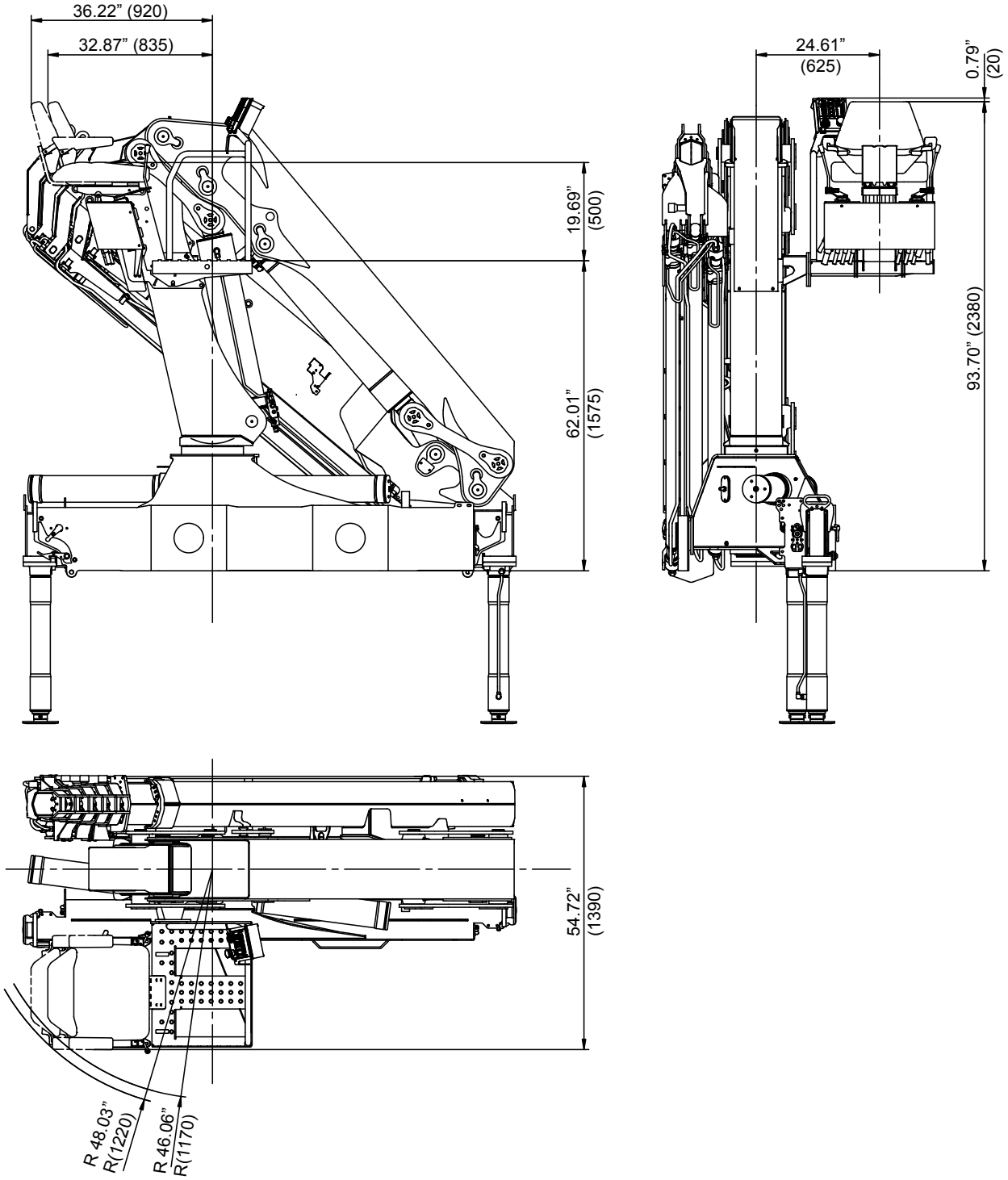

Ladder for TS

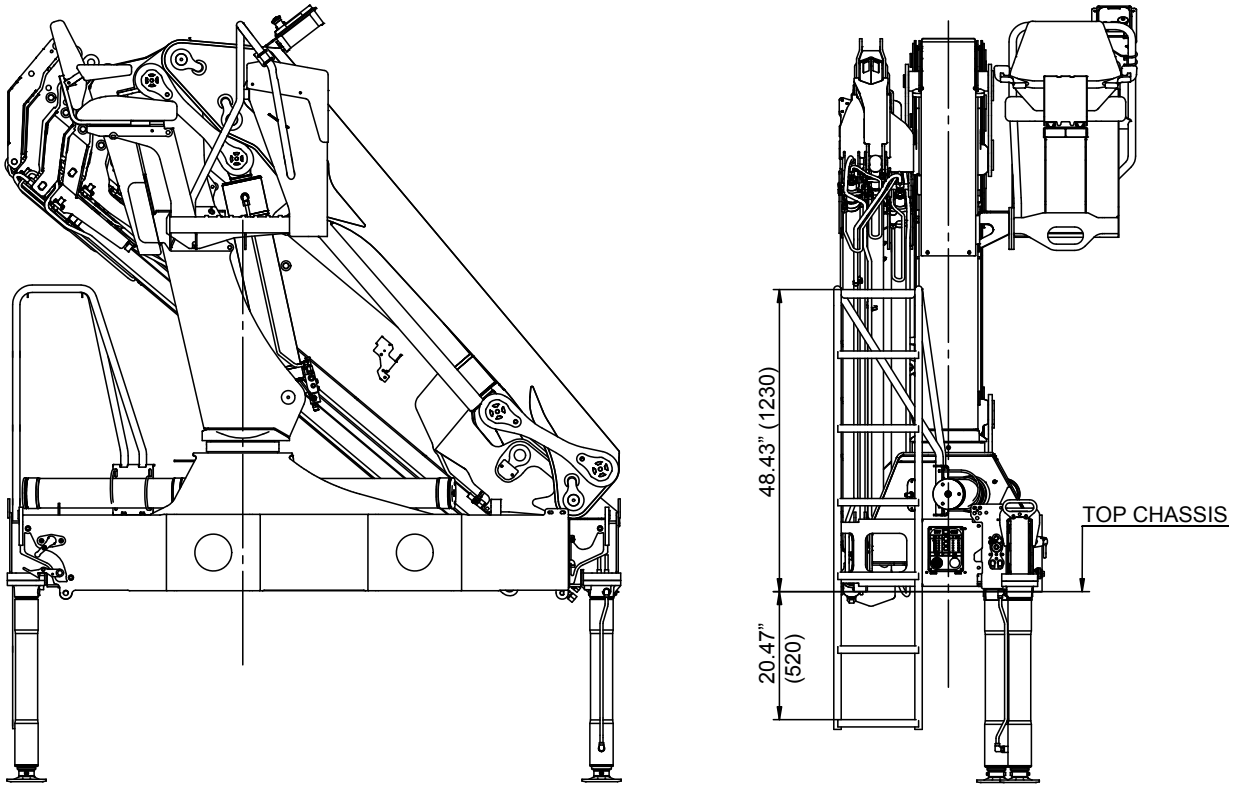

Notes:

1) Ladder cannot be used for TS RC

2) There is no access to the top seat when the loader is in stowing position

Winch

Performance (at 150 bar):	1.5T winch	1.65tn winch	2.5T winch	2.75tn winch
Max. wire pull – 1st layer	1500kg	3307lb	2500kg	5512lb
Max. wire pull – 2nd layer	1370kg	3020lb	2300kg	5071lb
Max. wire pull – 3rd layer	1260kg	2777lb	2100kg	4630lb
Max. wire pull – 4th layer	1170kg	2579lb	1950kg	4299lb

Wire speed (at 40 l/min.):	1.5T winch	1.65tn winch	2.5T winch	2.75tn winch
Max. wire speed – 1st layer	22 m/min	72 ft/min	24 m/min	79 ft/min
Max. wire speed – 2nd layer	24 m/min	79 ft/min	26 m/min	85 ft/min
Max. wire speed – 3rd layer	26 m/min	85 ft/min	28 m/min	92 ft/min
Max. wire speed – 4th layer	28 m/min	92 ft/min	30 m/min	98 ft/min

Weights:	1.5T winch	1.65tn winch	2.5T winch	2.75tn winch
Tare weight, winch (CE)	65kg	143lb	90kg	198lb
Fixed parts (valve section, brackets, hoses etc.)	50kg	110lb	50kg	110lb
Wire Ø10 x 50 m	30kg	66lb	30kg	66lb
Spare parts, single snatch block	30kg	66lb	30kg	66lb
Spare parts, double snatch block	40kg	88lb	40kg	88lb

Winch

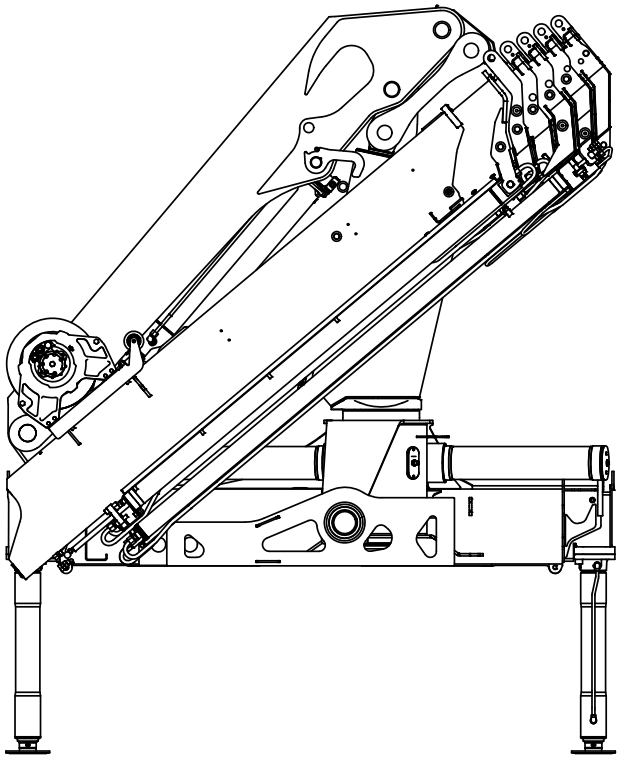

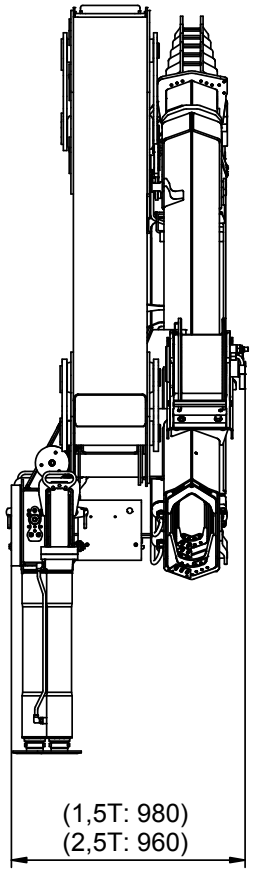

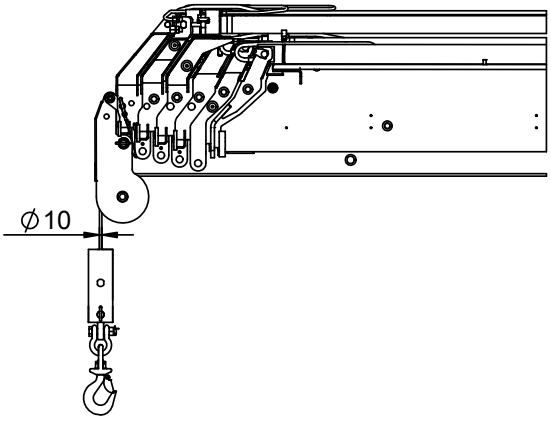

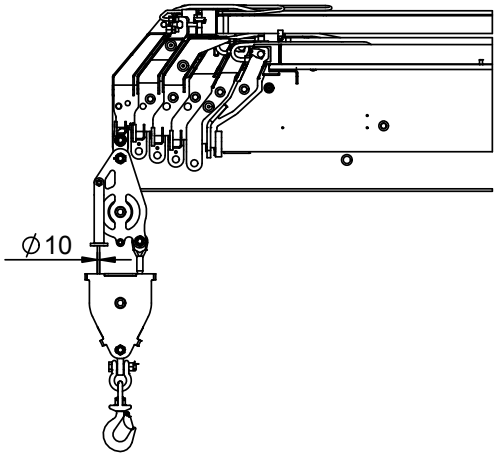

Stand-Up Platform (Std)

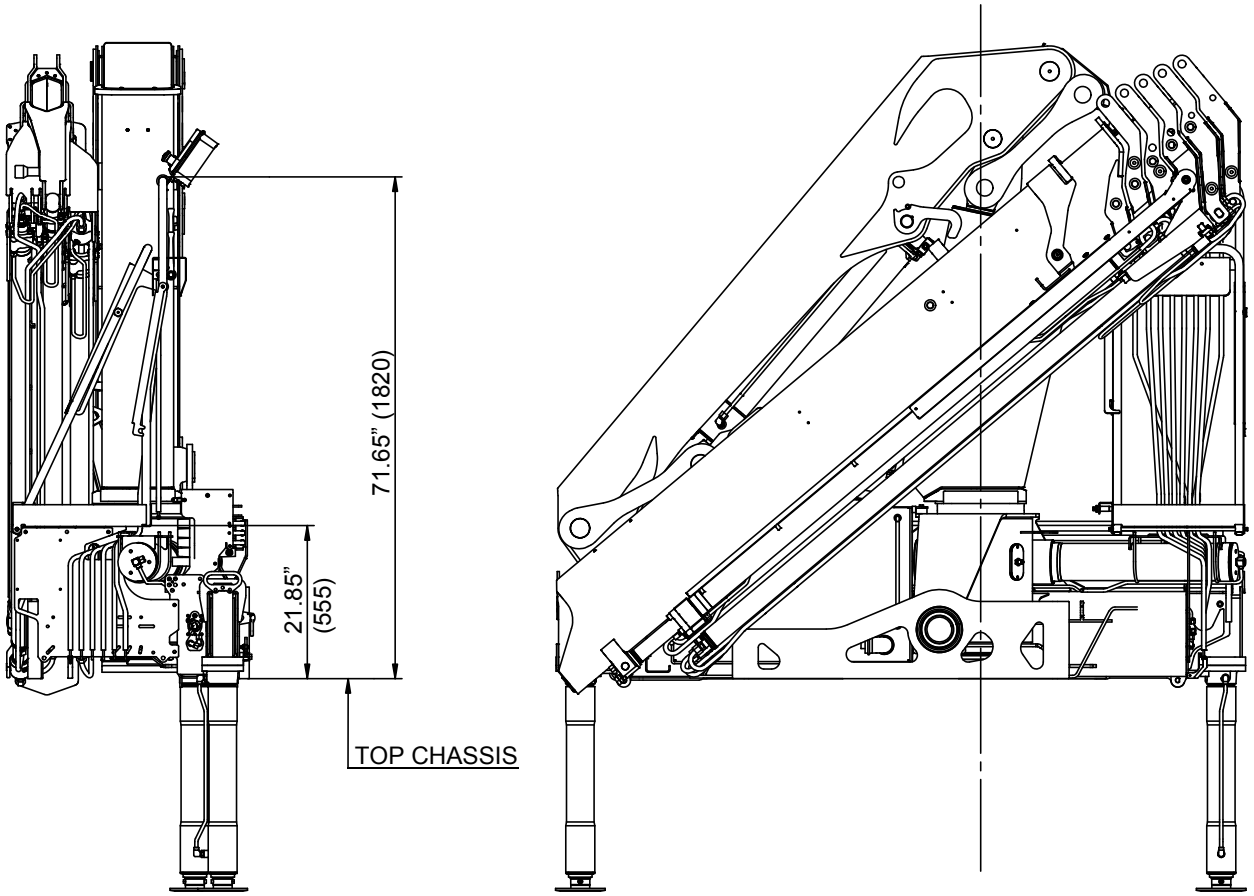

Stand-Up Platform (Valve Control)

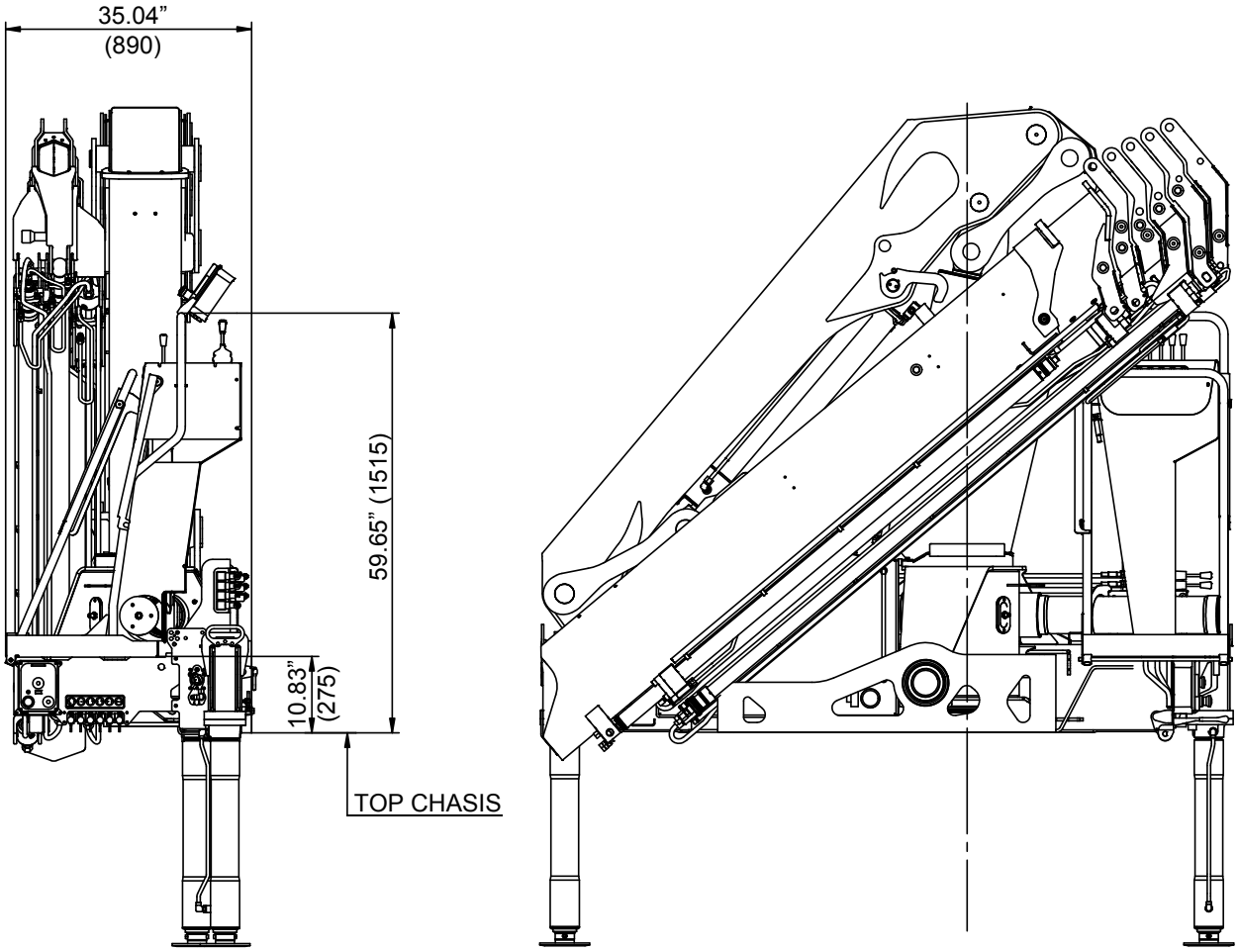

Internal Hose Routing K2-K6

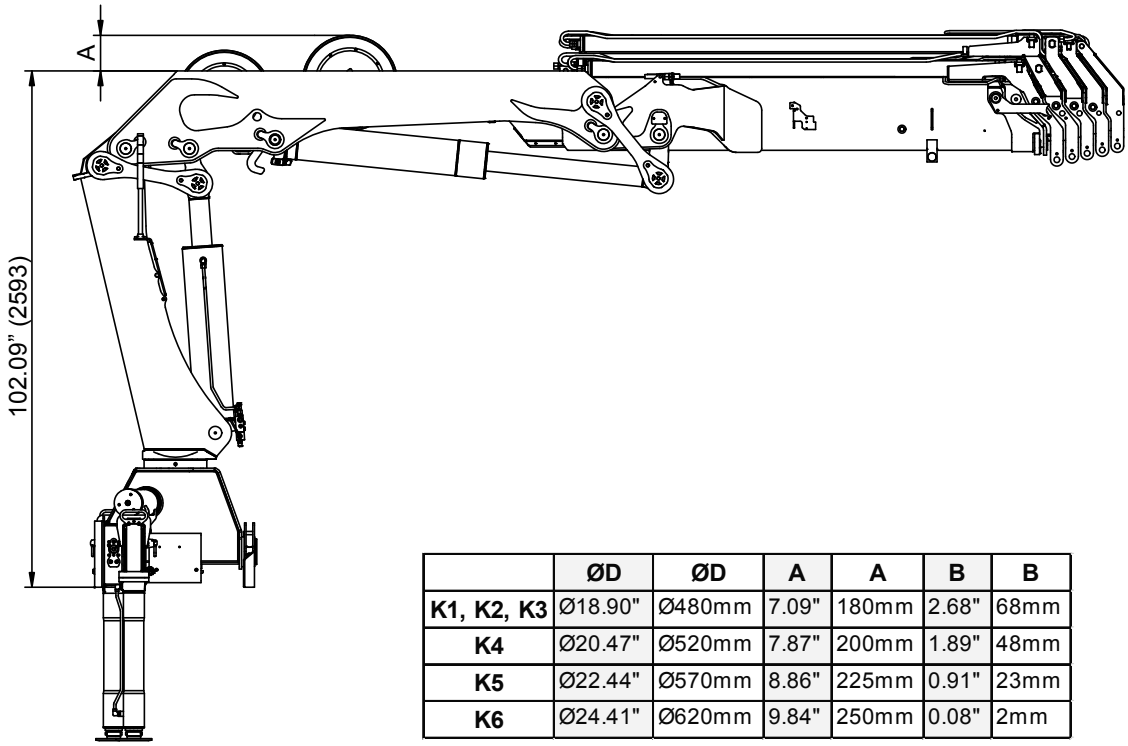

	ØD	ØD	A	A	B	B
K1, K2, K3	Ø18.90"	Ø480mm	7.09"	180mm	2.68"	68mm
K4	Ø20.47"	Ø520mm	7.87"	200mm	1.89"	48mm
K5	Ø22.44"	Ø570mm	8.86"	225mm	0.91"	23mm
K6	Ø24.41"	Ø620mm	9.84"	250mm	0.08"	2mm

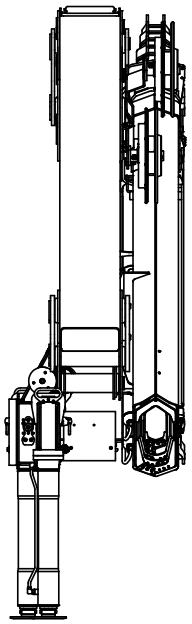

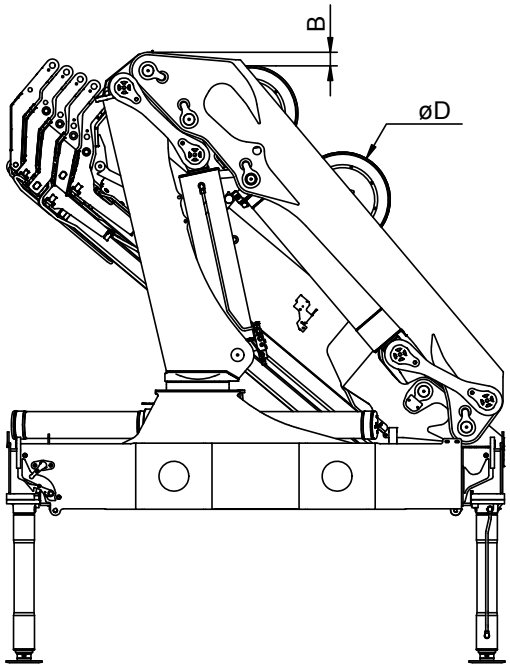

Extra Valves K7,K8

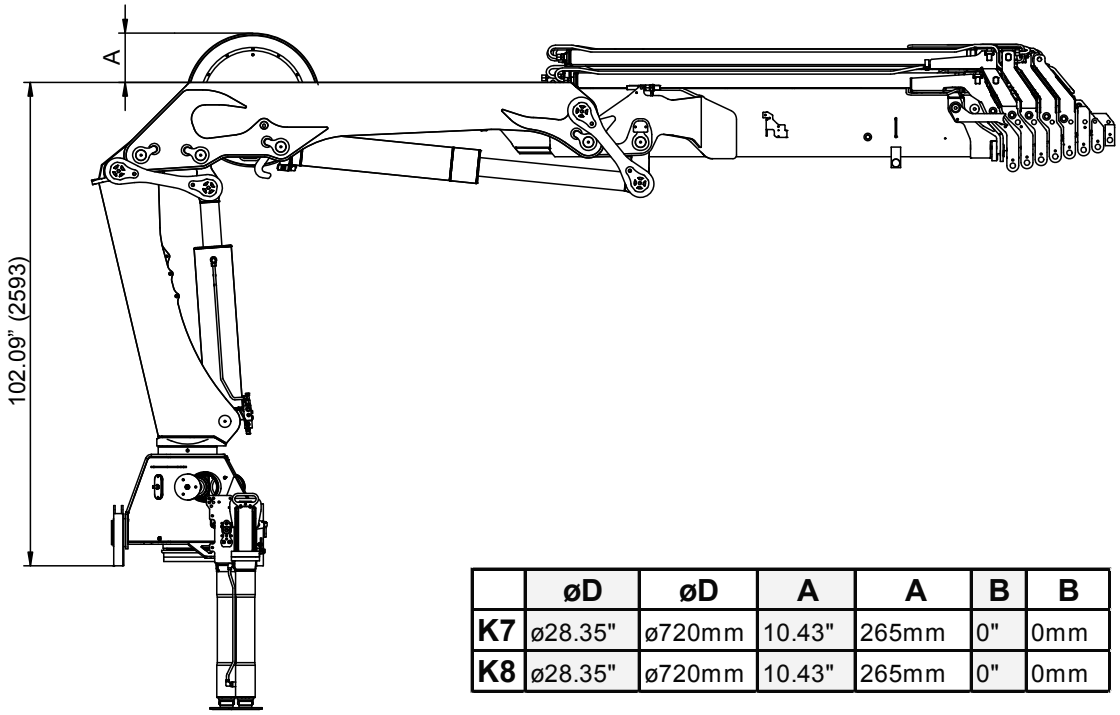

	øD	øD	A	A	B	B
K7	ø28.35"	ø720mm	10.43"	265mm	0"	0mm
K8	ø28.35"	ø720mm	10.43"	265mm	0"	0mm

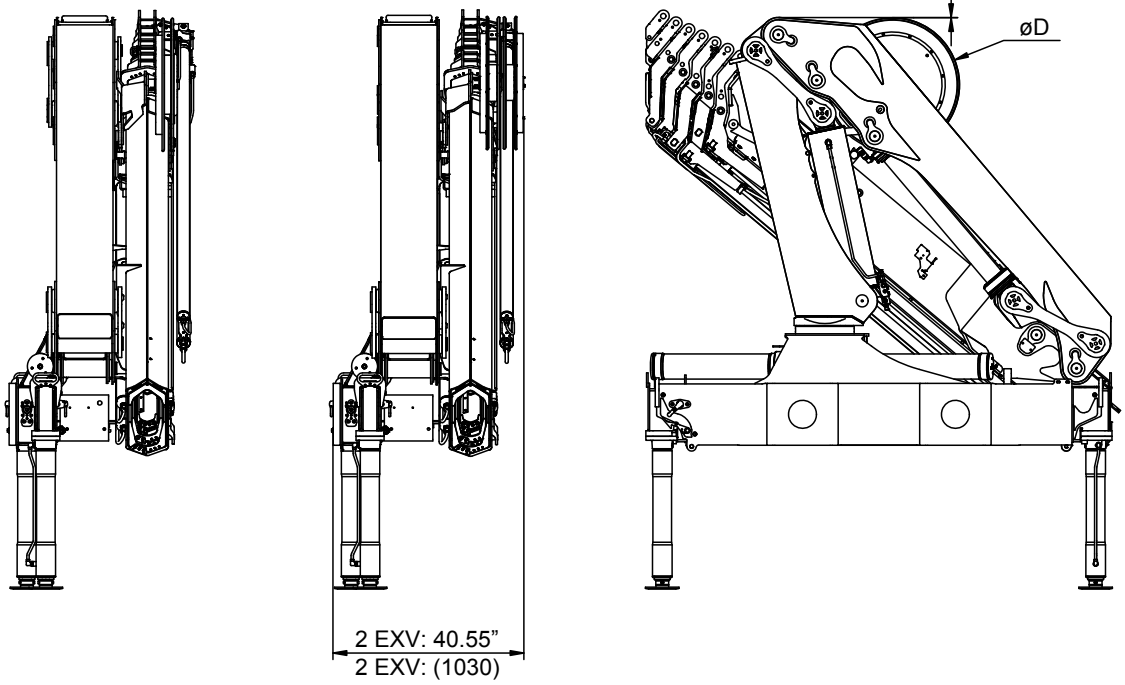

Stowed in Truck Body

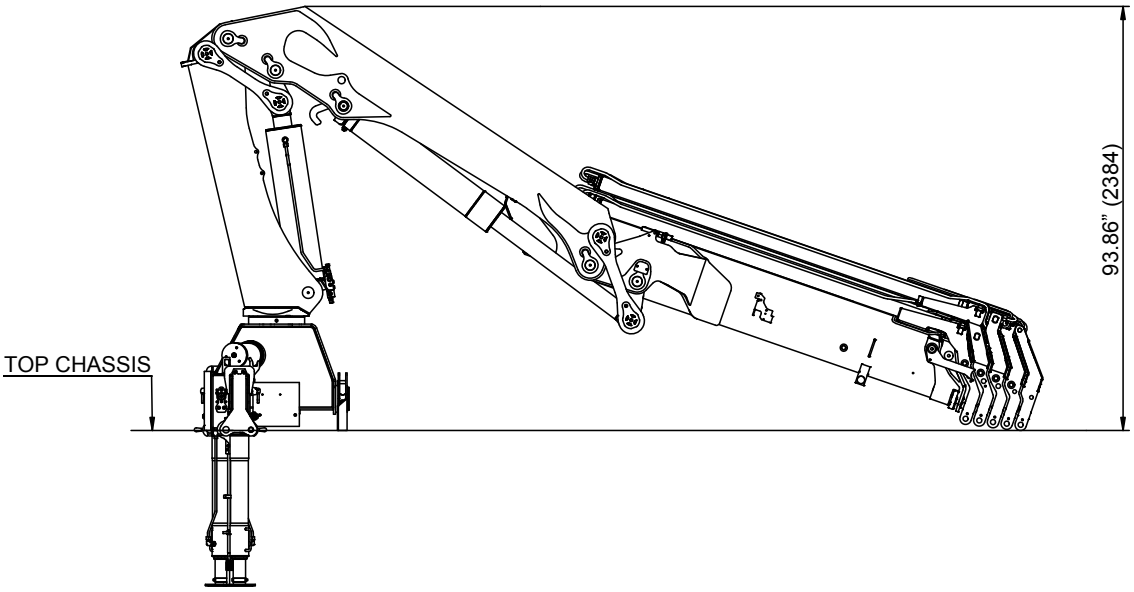

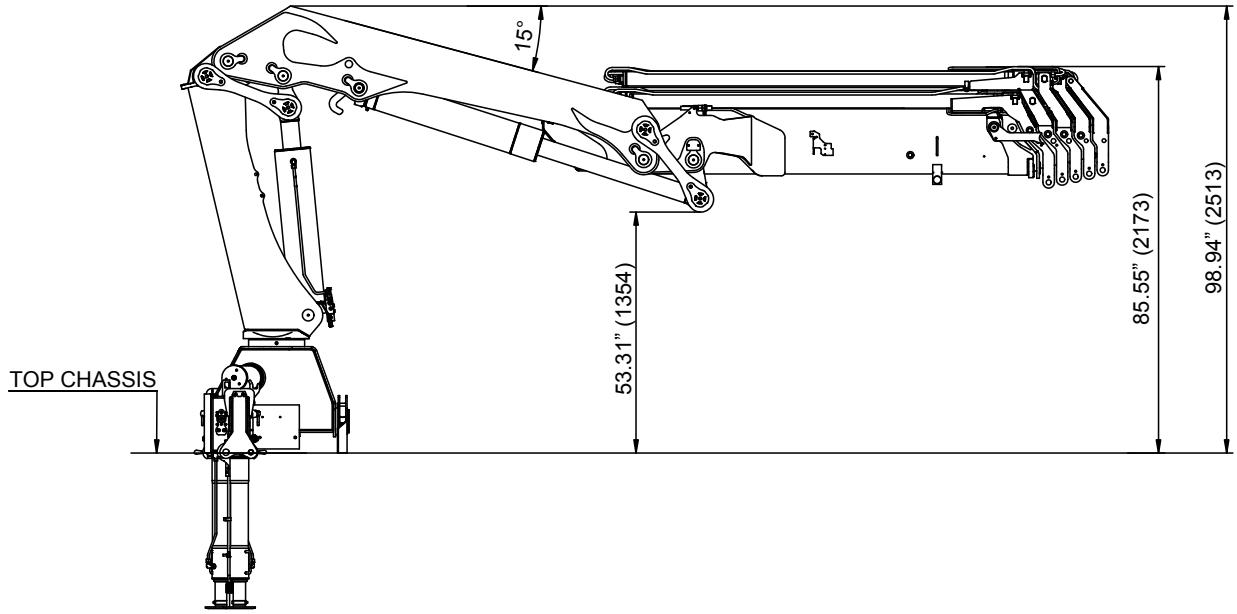

Centers of Gravity

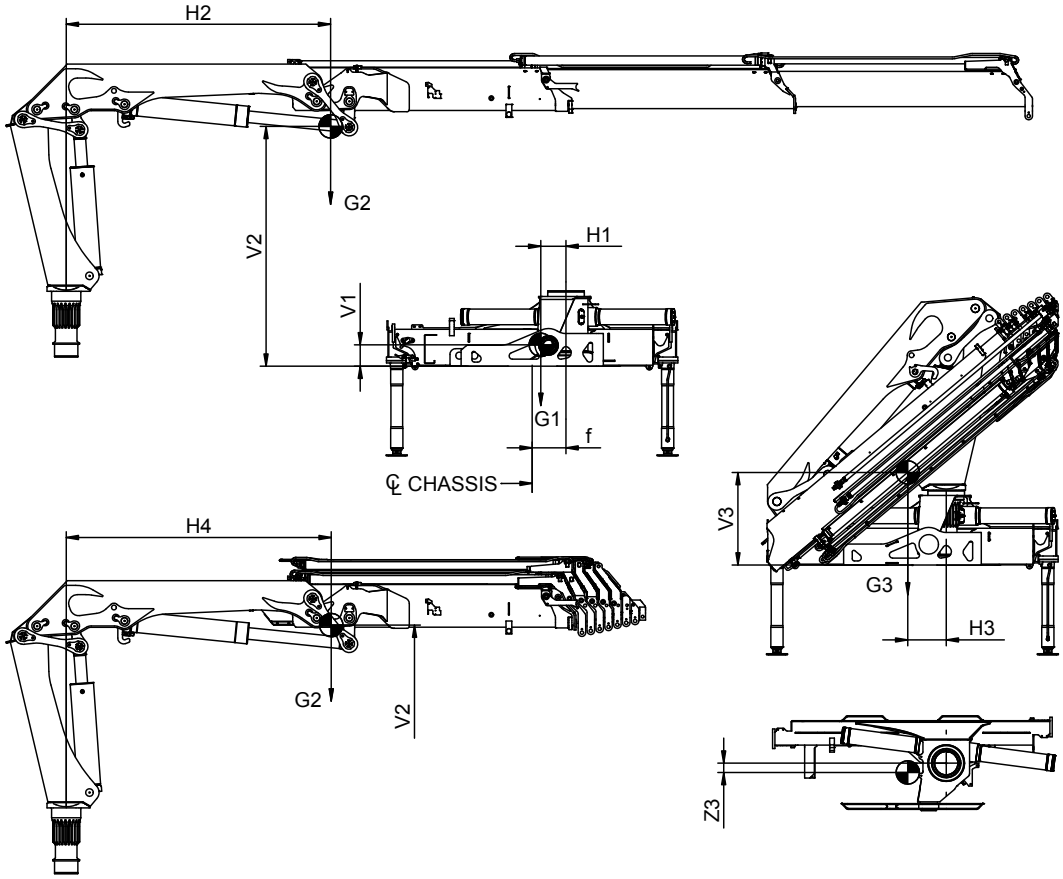

2200-K / 2420-K / 2620-K:

	mm									kg		
	V1	V2	V3	H1	H2	H3	H4	Z3	f	kg	G2	G3
K2	185	2065	795	145	2260	330	1600	20	290	870	1435	2305
K3	185	2105	820	145	2940	325	1770	35	290	870	1600	2470
K4	185	2140	840	145	3685	310	1930	55	290	870	1765	2635
K5	185	2165	855	145	4405	300	2030	70	290	870	1910	2780
K6	185	2185	870	145	5135	290	2125	85	290	870	2060	2930
K7	185	2195	890	145	5730	275	2200	95	290	870	2150	3020
K8	185	2210	905	145	6325	270	2270	105	290	870	2275	3145

	Inches									lb		
	V1	V2	V3	H1	H2	H3	H4	Z3	f	kg	G2	G3
K2	7.28	81.30	31.30	5.71	88.98	12.99	62.99	0.79	11.42	1918.02	3163.63	5081.66
K3	7.28	82.87	32.28	5.71	115.75	12.80	69.69	1.38	11.42	1918.02	3527.40	5445.42
K4	7.28	84.25	33.07	5.71	145.08	12.20	75.98	2.17	11.42	1918.02	3891.16	5809.18
K5	7.28	85.24	33.66	5.71	173.43	11.81	79.92	2.76	11.42	1918.02	4210.83	6128.85
K6	7.28	86.02	34.25	5.71	202.17	11.42	83.66	3.35	11.42	1918.02	4541.52	6459.54
K7	7.28	86.42	35.04	5.71	225.59	10.83	86.61	3.74	11.42	1918.02	4739.94	6657.96
K8	7.28	87.01	35.63	5.71	249.02	10.63	89.37	4.13	11.42	1918.02	5015.52	6933.54