IOWA MOLD TOOLING CO., INC.

P.O. Box 189
Garner, IA 50438
Tel: 641.923.3711
Fax: 641.923.2424
www.imt.com

Manual # 99906104

18/129
20/138
Parts Catalog

Revised 06-29-2016

Copyright © 2016 Iowa Mold Tooling Co., Inc.
All rights reserved

No part of this publication may be reproduced, stored in a retrieval system, or transmitted in any form or by any means, electronic, mechanical, photocopying, recording or otherwise without the prior written permission of Iowa Mold Tooling Co., Inc.

Iowa Mold Tooling Co., Inc. is an Oshkosh Corporation Company

18/129, 20/138

Description	Page no.	From loader	To loader
Basic loader			
Base, complete	535 01 010	1070001	1070651
Base, complete	535 01 010 A	1070652	
Base, complete	535 01 010 B		
Support for cylinder K5/K6/K7/K8	535 01 040	1070001	
Protection plate, cpl. (std.)	535 01 050	1070001	
Protection plate, complete (TS)	535 01 060	1070001	
Central lubrication and lubricating brush	535 01 080	1070001	1070209
Central lubrication and lubricating brush	535 01 080 A	1070210	
Slewing system, 400°	535 01 100	1070001	
Slewing system, 400°	535 01 100 A	1070001	1070422
Slewing system, 400°	535 01 100 B	1070423	
Slewing system, 400°	535 01 100 C		
Column, cpl. for link arm system, boom	535 01 300	1070001	1070136
Column, cpl. for link arm system, boom	535 01 300 A	1070137	
Column, cpl. excl. link arm system, boom	535 01 350	1070001	1070136
Column, cpl. excl. link arm system, boom	535 01 350 A	1070137	
Main boom, cpl. for link arm system, boom	535 01 400	1070001	1070136
Main boom, cpl. for link arm system, boom	535 01 400 A	1070137	
Main boom, cpl., no link arm system, boom	535 01 420	1070001	1070136
Main boom, cpl., no link arm system, boom	535 01 420 A	1070137	
Stowing hook, complete	535 01 450	1070001	
Stowing hook, complete	535 01 450 A		
Boom cylinder C160 x 750 (1800K, 22/153DL)	535 01 480	1070001	1070136
Boom cylinder C160 x 750 (1800K, 22/153DL)	535 01 480 A	1070137	
Boom cylinder C160 x 750 with LHV (1800K, 22/153DL)	535 01 490	1070001	
Boom cylinder C150 x 755 (1810K, 22/153SL)	535 01 500	107001	1070136

18/129, 20/138

Description	Page no.	From loader	To loader
Boom cylinder C150 x 755 (1810K, 22/153SL)	535 01 500 A	1070137	
Boom cylinder C150 x 755 with LHV (1810K, 22/153SL)	535 01 510	1070001	
Jib cylinder C150 x 852.5	535 01 600	1070001	1070136
Jib cylinder C150 x 852.5	535 01 600 A	1070137	
Jib cylinder with LHV	535 01 610	1070001	
Link arm system, boom	535 01 700	1070001	
Mounting fittings, basic loader incl. link arm system	535 01 720	1070001	
Mounting fittings, basic loader excl. link arm system Hose	535 01 750	1070001	
shield, cpl.	535 01 760	1070001	
Link arm system, jib	535 01 800	1070001	1070136
Link arm system, jib	535 01 800 A	1070137	
Stabilizers			
Stabilizer beam, type SV - 18'3" (5570)	535 02 010	1070001	1070090
Stabilizer beam, type SV - 18'3" (5570)	535 02 010 A	1070091	
Stabilizer beam, type SR-20° - 18'3" (5570)	535 02 020	1070001	1070070
Stabilizer beam, type SR-60°, 18'3" (5570)	535 02 021	1070071	1070090
Stabilizer beam, type SR-60°, 18'3" (5570)	535 02 021 A	1070091	
Stabilizer beam, type SH - 18'3" (5570)	535 02 030	1070001	1070095
Stabilizer beam, type SH - 18'3" (5570)	535 02 030 A	1070096	
Stabilizer beam, type DV - 21'2" (6450)	535 02 040	1070001	1070101
Stabilizer beam, type DV - 21'2" (6450)	535 02 040 A	1070102	
Stabilizer beam, type DR-20° - 21'2" (6450)	535 02 050	1070001	1070070
Stabilizer beam, type DR-60°, 21'2" (6450)	535 02 051	1070071	1070101
Stabilizer beam, type DR-60°, 21'2" (6450)	535 02 051 A	1070102	
Stabilizer beam, type DH - 21'2" (6450)	535 02 060	1070001	1070101
Stabilizer beam, type DH - 21'2" (6450)	535 02 060 A	1070102	
Detection, stabilizer down (CYL/CYBEL)	535 02 130	1070001	

18/129, 20/138

Description	Page no.	From loader	To loader
Stabilizer lock and lever	535 02 140	1070001	
Stabilizer safety lock	535 02 150	1070001	
Safety lock (CE, manual extension)	535 02 160	1070001	
Safety lock (CE, manual extension)	535 02 165	1070001	
Stabilizer cylinder, C90-520, type V	535 02 200	1070001	1070589
Stabilizer cylinder, C90-520, type V	535 02 200 A	1070590	
Stabilizer cylinder, C90-720, type V	535 02 201	1070001	
Stabilizer cylinder with check valve, C90-520, type V	535 02 210	1070001	
Stabilizer cylinder with check valve, C90-720, type V	535 02 211	1070001	
Stabilizer cylinder, C90-520, type R -20°	535 02 220	1070001	1070070
Stabilizer cylinder, C90-520, type R-60°	535 02 221	1070071	1070589
Stabilizer cylinder, C90-520, type R-60°	535 02 221 A	1070590	
Stabilizer cylinder, C90-520, type R-180°	535 02 222	1070001	1070589
Stabilizer cylinder, C90-520, type R-180°	535 02 222 A	1070590	
Stabilizer cylinder with check valve, type R-20°	535 02 230	1070001	1070070
Stabilizer cylinder with check valve, type R-60°	535 02 231	1070071	
Foot plate with ball joint, cpl. (ø180)	535 02 235	1070001	1070592
Foot plate with ball joint, cpl. (ø180)	535 02 235 A	1070593	
Extension piece, cpl.	535 02 236	1070590	
Stabilizer cylinder, C90-520, type HR	535 02 240	1070001	
Stabilizer cylinder, C90-720, type HR	535 02 241	1070001	
Stabilizer cylinder incl. swing-up mechanism, type HR	535 02 245	1070001	1070567
Stabilizer cylinder incl. swing-up mechanism, type HR	535 02 245 A	1070568	
Stabilizer cylinder incl. swing-up mechanism, type HR	535 02 246	1070001	
Stabilizer cylinder with check valve, C90-520, Type R-180°	535 02 250	1070001	
Stabilizer cylinder, C90-440, type V	535 02 260	1070001	
Stabilizer cylinder with check valve, C90-440, type V	535 02 270	1070001	

18/129, 20/138

Description	Page no.	From loader	To loader
Beam cylinder C32 - 1625	535 02 300	1070001	
Beam cylinder C32 - 2065	535 02 310	1070001	
Boom System			
Jib, complete	535 03 010	1070001	1070136
Jib, complete	535 03 010 A	1070137	
Jib, complete (winch)	535 03 020	1070001	1070136
Jib, complete (winch)	535 03 020 A	1070137	
Fitting of jib and jib cylinder	535 03 030	1070001	
Jib extension I incl. fittings	535 03 100	1070001	1070498
Jib extension I incl. fittings	535 03 100 A	1070499	
Jib extension K2 incl. fittings	535 03 110	1070001	
Jib extension K3 incl. fittings	535 03 120	1070001	
Jib extension K4 incl. fittings	535 03 130	1070001	
Jib extension K5 incl. fittings	535 03 140	1070001	
Jib extension K6 incl. fittings	535 03 150	1070001	
Jib extension VI (K7/K8) incl. fittings	535 03 155	1070001	
Jib extension K7 incl. fittings	535 03 160	1070001	
Jib extension K8 incl. fittings	535 03 170	1070001	
Hook suspension	535 03 290	1070001	
Hook suspension	535 03 290 A	1070001	
Extension cylinder I (C70/55 x 1885)	535 03 300	1070001	1070631
Extension cylinder I (C70/55 x 1885)	535 03 300 A	1070632	
Extension cylinder II (C70/55 x 1950)	535 03 310	1070001	1070628
Extension cylinder II (C70/55 x 1950)	535 03 310 A	1070629	
Extension cylinder III (C70/50 x 2000)	535 03 320	1070001	1070630
Extension cylinder III (C70/50 x 2000)	535 03 320 A	1070631	
Extension cylinder IV (C70/50 x 2100)	535 03 330	1070001	1070632

18/129, 20/138

Description	Page no.	From loader	To loader
Extension cylinder IV (C70/50 x 2100)	535 03 330 A	1070633	
Extension cylinder V (C63/45 x 2200)	535 03 340	1070001	
Extension cylinder VI (C60/40S x 2235)	535 03 350	1070001	1070576
Extension cylinder VI (C60/40S x 2235)	535 03 350 A	1070577	1070800
Extension cylinder VI (C60/40S x 2235)	535 03 350 B	1070801	
Extension cylinder VI (C63/45 x 2235)	535 03 355	1070001	
Extension cylinder VII (60/40 x 2150)	535 03 360	1070001	
Extension cylinder VII (60/40 x 2150)	535 03 360 A		
Extension cylinder VIII (C55/35S x 2200)	535 03 370	1070001	
Extension cylinder I incl. fittings	535 03 500	1070001	
Extension cylinder II incl. fittings	535 03 510	1070001	
Extension cylinder III incl. fittings	535 03 520	1070001	
Extension cylinder IV incl. fittings	535 03 530	1070001	
Extension cylinder V incl. fittings	535 03 540	1070001	
Extension cylinder VI incl. fittings	535 03 550	1070001	
Extension cylinder VI (K7/K8) incl. fittings	535 03 555	1070001	
Extension cylinder VII incl. fittings	535 03 560	1070001	
Extension cylinder VIII incl. fittings	535 03 570	1070001	
Manual extension, F5	535 03 740	1070001	
Manual extension, F6	535 03 750	1070001	
Manual extension, F7	535 03 760	1070001	
Manual extension, F8 (F8 in K7)	535 03 770	1070001	
Manual extension, F8 (F8 in F7)	535 03 775	1070001	
Manual extension, F9	535 03 780	1070001	
Hydraulic systems, valve brackets and dual controls			
Valve brackets - RC	535 05 010	1070001	
Valve brackets (excl. CE)	535 05 015	1070001	

18/129, 20/138

Description	Page no.	From loader	To loader
Valve brackets (with CE)	535 05 020	1070001	
NEM-RC kit	535 05 110	1070001	
NEM-RC kit (for external tank)	535 05 115	1070001	
Dual control, 4 functions	535 05 120	1070001	
Dual control, 5 functions	535 05 130	1070001	
Dual control, 6 functions	535 05 140	1070001	
Counter-balance valve	535 05 190	1070001	
Valve bracket, cpl. 2 fcts.	535 05 200	1070001	
Valve bracket, cpl., 2 fcts. + 2 available fcts.	535 05 205	1070001	
Valve bracket, cpl. 4 fcts.	535 05 210	1070001	
Valve bracket, cpl. 4 fcts. + 4 available	535 05 220	1070001	
Valve bracket, cpl., 2 fcts. + 2 available fcts. - RC	535 05 225	1070001	
Valve bracket, cpl. 4 fcts. - RC	535 05 230	1070001	
Valve bracket, cpl. 4 fcts. + 2 available fcts. - RC	535 05 235	1070001	
Valve bracket, cpl. 4 fcts. + 4 available - RC	535 05 240	1070001	
Pilot controlled oil supply for NEM/stabilizer valve block	535 05 250	1070001	
Valve bracket, cpl. 2 functions - RC	535 05 252	1070417	
Valve bracket, cpl. 4 fcts. - RC	535 05 254	1070417	
Valve bracket, cpl. 4 fcts. + 2 available - RC	535 05 256	1070417	
Valve bracket, cpl. 4 fcts. + 4 available - RC	535 05 258	1070417	
Valve bracket, cpl. 2 functions + 2 available functions - RC	535 05 260	1070417	
Dual control, 2 fcts. std.	535 05 270	1070001	
Dual control, 4 fcts. std.	535 05 280	1070001	
Dual control, 4 fcts., hydr. swing-up stabilizer legs	535 05 290	1070001	
Dual control.4 fcts. + 4 available functions (std.)	535 05 300	1070001	
Dual control, 4 fcts. + 4 available fcts. (hydr. swing-up stabilizer legs)	535 05 310	1070001	
Dual control, 2 fcts. (180° swing-up stab. legs)	535 05 320	1070001	

18/129, 20/138

Description	Page no.	From loader	To loader
Dual control, 4 fcts. (180° swing-up stab. legs)	535 05 330	1070001	
Kit for HDL-2 (std.)	535 05 350	1070001	
Kit for HDL-2 (std.)	535 05 350 A	1070001	
Cross-over controls, 4 functions	535 05 370	1070001	
Cross-over controls, 5 functions	535 05 380	1070001	
Cross-over controls, 6 functions	535 05 390	1070001	
Hydraulic systems, loader functions			
Hose kit, loader functions, std.	535 05 400	1070001	
Hose kit, loader functions, 1 EXV.	535 05 410	1070001	
Hose kit, loader functions, 2 EXV.	535 05 420	1070001	
Hose kit, loader functions, std./winch	535 05 430	1070001	
Hose kit, loader functions, 2 EXV/winch	535 05 440	1070001	
Hose kit, loader functions, TS (1-circuit fixed)	535 05 450	1070001	
Hose kit, loader functions TS (HC, 1 circuit, fixed flow, excl. CE)	535 05 455	1070001	
Hose kit, loader functions, TS (1-circuit variable)	535 05 460	1070001	
Hose kit, loader functions, TS (2-circuits, fixed)	535 05 470	1070001	
Hydraulic system, slewing	535 05 500	1070001	1070562
Hydraulic system, slewing	535 05 500 A	1070563	
Hydraulic systems, stabilizer beams			
Hydraulic system, stabilizers, manual extension	535 05 700	1070001	
Hydraulic system, stabilizers, hydr. extension	535 05 710	1070001	
Hydraulic system, SV (+ SR-20° -Obsolete) 18'3" (5570), manual extension	535 05 780	1070001	
Hydraulic system, SR-60°/180°, 18'3" (5570), manual extension	535 05 785	1070001	
Hydraulic system, SV (+ SR-20° -Obsolete) 18'3" (5570), hydr. extension	535 05 790	1070001	
Hydraulic system, SH + SR-60°/180° - 18'3" (5570), hydr. extension	535 05 800	1070001	
Hydraulic system, DV (+ DR-20° -Obsolete) (21'2" (6450)), hydr. extension	535 05 810	1070001	
Hydraulic system, DH + DR-60°/180° - 21'2" (6450), hydr. extension	535 05 820	1070001	
Hydraulic systems, pump and tank			

18/129, 20/138

Description	Page no.	From loader	To loader
Hydr. syst. pump + return hoses	535 06 020	1070001	
Hydr. syst. pump + return hoses (TS)	535 06 030	1070001	
Hydraulic system, pump and return hoses (TS, excl. CE)	535 06 040	1070001	
Tank, cpl.	535 06 070	1070001	
Tank incl. fittings	535 06 080	1070001	
Oil cooler	535 06 100	1070001	
High-pressure filter	535 06 120	1070001	
Hydraulic systems, valve blocks			
Valve block, 4 sects. HC-D4	535 06 200	1070001	
Valve block, 5 sects. HC-D4	535 06 210	1070001	
Valve block, 6 sects. HC-D4	535 06 220	1070001	
Valve block, 4 sects. HC-D4 NEM	535 06 230	1070001	
Valve block, 5 sects. HC-D4 NEM	535 06 240	1070001	
Valve block, 6 sects. HC-D4 NEM	535 06 250	1070001	
Valve block, 6 sect./HCD4/2+4 CE	535 06 260	1070001	
Valve block, 6 sect./HCD4/2+4 CE2.1	535 06 270	1070001	
Valve block, 6 sect. HC-D4	535 06 280	1070001	
Valve block left, 3 sects. HC-D4 TS	535 06 290	1070001	
Valve block right, 3 sects. HC-D4 TS	535 06 300	1070001	
Control valves, Danfoss, 4 sections, fixed/variable flow (std./QOPS)	535 06 310	1070001	
Control valves, Danfoss, 5 sections, fixed/variable flow with rotator (std./QOPS)	535 06 320	1070001	
Control valves, Danfoss, 5 sections, fixed/variable flow with winch (std./QOPS)	535 06 330	1070001	
Control valves, Danfoss, 6 sections, fixed/variable flow with rotator and grab (std./QOPS)	535 06 340	1070001	
Control valves, Danfoss, 6 sections, fixed/variable flow with Fly-Jib (std./QOPS)	535 06 350	1070001	
Control valves, Danfoss, 7 sections, fixed/variable flow with winch and Fly-Jib (std./QOPS)	535 06 360	1070001	
Control valves, Danfoss, 7 sections, fixed/variable flow with rotator, grab and winch (std./QOPS)	535 06 370	1070001	
Control valve, Danfoss, 3 sections, 1 circuit, fixed flow, left	535 06 450	1070001	

18/129, 20/138

Description	Page no.	From loader	To loader
Control valve, Danfoss, 3 sections, 1 circuit, fixed flow, right	535 06 460	1070001	
Control valve, Danfoss, 3 sections, 1 circuit, variable flow, left	535 06 470	1070001	
Control valve, Danfoss, 3 sections, 1 circuit, variable flow, right	535 06 480	1070001	
Danfoss control valve PVG32, 4-7 sections	535 06 490	1070001	
HC - M50 stabilizer valve section	535 06 493	1070001	
HC-D4 electro-hydraulic NEM-kit, NEM radio remote control	535 06 495	1070001	
HC - M50 electro-hydraulic NEM-kit NEM radio remote control	535 06 497	1070001	
HC-D4 valve block, 4-6 sections	535 06 499	1070001	
Labels and mounting kits			
Standard labels	535 07 010	1070001	
Operating labels	535 07 020	1070001	
Labels for emergency operation	535 07 025	1070001	
Type plates, marking tape, warning signs	535 07 030	1070001	
Lifting capacity diagrams	535 07 040	1070001	
Lifting capacity diagrams	535 07 050	1070001	
Mounting kit (8 M24 x 2 pins)	535 07 100	1070001	
Mounting kit (3 M33 x 2 + 1 M30 x 2)	535 07 110	1070001	
Mounting kit (3 M33 x 2 + 1 M30 x 2) - 50 mm.	535 07 115	1070001	
Mounting kit (3 M33 x 2 + 1 M30 x 2) - 150 mm.	535 07 120	1070001	
Mounting kit (3 M33 x 2 + 1 M30 x 2) - 250 mm.	535 07 130	1070001	
Mounting kit (8 M24 x 2 pins)	535 07 140	1070001	
Accessories, extra valves			
Hose guides, K2-1EXV.	535 09 110	1070001	1070498
Hose guides, K2-1EXV.	535 09 110 A	1070499	
Hose guides, K3-1 EXV.	535 09 120	1070001	1070498
Hose guides, K3-1 EXV.	535 09 120 A	1070499	
Hose guides, K4-1 EXV.	535 09 130	1070001	1070498
Hose guides, K4-1 EXV.	535 09 130 A	1070499	

18/129, 20/138

Description	Page no.	From loader	To loader
Hose guides, K5-1 EXV.	535 09 140	1070001	1070498
Hose guides, K5-1 EXV.	535 09 140 A	1070499	
Hose guides, K6-1 EXV.	535 09 150	1070001	1070498
Hose guides, K6-1 EXV.	535 09 150 A	1070499	
Hose guides, K2-2 EXV.	535 09 210	1070001	1070498
Hose guides, K2-2 EXV.	535 09 210 A	1070499	
Hose guides, K3-2 EXV.	535 09 220	1070001	1070498
Hose guides, K3-2 EXV.	535 09 220 A	1070499	
Hose guides, K4-2 EXV.	535 09 230	1070001	1070498
Hose guides, K4-2 EXV.	535 09 230 A	1070499	
Hose guides, K5-2 EXV.	535 09 240	1070001	1070498
Hose guides, K5-2 EXV.	535 09 240 A	1070499	
Hose guides, K6-2 EXV.	535 09 250	1070001	1070498
Hose guides, K6-2 EXV.	535 09 250 A	1070499	
Hose guides, K2-2 EXV-raised	535 09 260	1070001	
Bracket for hose reel, cpl. (jib)	535 09 280	1070001	
Attachment for hose reel, cpl. (extension 2)	535 09 290	1070001	
Attachment for hose reel, cpl. (extension 4)	535 09 300	1070001	
Hydr. system, hose reels, 2 EXV.	535 09 310	1070001	
Kit, quick-release coupling for internal hose routing, 2 EXV.	535 09 320	1070001	
Hydr. system, hose reels, 1 EXV.	535 09 330	1070001	
Kit, quick-release coupling for internal hose routing, 1 EXV.	535 09 340	1070001	
Quick-release coupling for 1 extra valve + bracket, K1-K5/T3-T4	535 09 370		
Quick-release coupling for 2 extra valves + bracket, K1-K5/T3-T4	535 09 380		
Quick-release coupling for 1 extra valve	535 09 390	1070001	
Quick-release coupling for 2 extra valves	535 09 400	1070001	
Multi-coupling for 2 extra valves K1-K5/T3-T4	535 09 410	1070001	

18/129, 20/138

Description	Page no.	From loader	To loader
Multi-coupling for 2 extra valves K6/T5	535 09 420	1070001	
Quick-release coupling for 1 extra valve + bracket, K6/T5	535 09 430		
Quick-release coupling for 2 extra valves + bracket, K6/T5	535 09 440		
Kit for 3 extra valves (K1-K5)	535 09 460	1070001	
Kit for 3 extra valves (K6)	535 09 470	1070001	
Hose clamps, complete (K7-K8)	535 09 500	1070001	
Hose reels (K7 - K8), 1 EXV.	535 09 510	1070001	
Hose reels (K7 - K8), 2 EXV.	535 09 520	1070001	
Kit, quick-release coupling for hose reel, (K7-K8), 1EXV	535 09 530	1070001	
Kit, quick-release coupling for hose reel, (K7-K8) 2EXV	535 09 540	1070001	
Accessories, stand-up controls, HS			
Stand-up controls, standard	535 10 010	1070001	
Stand-up controls, standard	535 10 010 A		
Rod control, HS std. - 4 functions	535 10 020	1070001	
Rod control, HS std. - 5 functions	535 10 030	1070001	
Rod control, HS std. - 6 functions	535 10 040	1070001	
Stabilizer operation, HS std. - 2/4 fcts.	535 10 060	1070001	
Valve bracket - HS 2 fcts./4 fcts. (oper. from HS)	535 10 070	1070001	
Stabilizer operation, HS std. - 4 fcts. + 4 available fcts.	535 10 090	1070001	
Stand-up controls, direct valve control	535 10 200	1070001	
Stand-up controls, direct valve control	535 10 200 A		
Rod control, HS, direct valve control (Danfoss)	535 10 210	1070001	
Rod control, HS, direct valve control (Danfoss)	535 10 210 A		
Rod control, HS, direct valve control (Hydrocontrol) - 4 fcts.	535 10 220	1070001	
Rod control, HS, direct valve control (Hydrocontrol) - 4 fcts.	535 10 220 A		
Rod control, HS, direct valve control (Hydrocontrol) - 5 fcts.	535 10 230	1070001	
Rod control, HS, direct valve control (Hydrocontrol) - 5 fcts.	535 10 230 A		

18/129, 20/138

Description	Page no.	From loader	To loader
Rod control, HS, direct valve control (Hydrocontrol) - 6 fcts.	535 10 240	1070001	
Rod control, HS, direct valve control (Hydrocontrol) - 6 fcts.	535 10 240 A		
Rod control, HS, direct valve control (Nordhydraulik) - 4 fcts.	535 10 242		
Rod control, HS, direct valve control (Nordhydraulik) - 5 fcts.	535 10 244		
Rod control, HS, direct valve control (Nordhydraulik) - 6 fcts.	535 10 246		
Rod control, HS, direct valve control (Nordhydraulik) - 6 fcts. - 2 circuits	535 10 248		
Stabilizer operation, HS, direct valve control	535 10 250	1070001	
Dual control, HS, direct valve control - 4 fcts.	535 10 300	1070001	
Dual control, HS, direct valve control - 5 fcts.	535 10 310	1070001	
Dual control, HS, direct valve control - 6 fcts.	535 10 320	1070001	
Valve bracket, cpl., direct valve control - 2 fcts.	535 10 350	1070001	
Valve bracket, cpl., direct valve control - 2 fcts. + 2 available fcts.	535 10 355	1070001	
Valve bracket, cpl., direct valve control - 4 fcts.	535 10 360	1070001	
Valve bracket, cpl., direct valve control - 4 fcts. + 4 available fcts.	535 10 370	1070001	
Pump and return hoses - HC - 1-circuit - HS direct valve control	535 10 460	1070001	
Pump and return hoses - HC - 2-circuit - HS direct valve control	535 10 470	1070001	
Pump and return hoses - Danfoss - HS - direct valve control	535 10 480	1070001	
Kit for HDL - HS direct valve control	535 10 485	1070001	
Hydraulic system, slewing, HS, direct valve control	535 10 490	1070001	1070562
Hydraulic system, slewing, HS, direct valve control	535 10 490 A	1070563	
Hose kit, 4 fcts. Hydrocontrol	535 10 500	1070001	
Hose kit, 5 fcts. Hydrocontrol	535 10 510	1070001	
Hose kit, HS dir. valve ctrl. (HC 6 fcts.)	535 10 520	1070001	
Mounting fittings, HSRC	535 10 800	1070001	
Mounting fittings, HSRC	535 10 800 A	1070357	
Accessories, top seat, TS			
Mounting fittings, TS	535 11 010	1070001	

18/129, 20/138

Description	Page no.	From loader	To loader
Mounting fittings, TS	535 11 010 A		
Seat, cpl.	535 11 020	1070001	
Top seat (RC), cpl.	535 11 030	1070001	
Mounting fittings, TS RC	535 11 040	1070001	
Top seat (HC linear), cpl.	535 11 050	1070001	
Top seat (HC X), cpl.	535 11 060	1070001	
Top seat (Danfoss X), cpl.	535 11 070	1070001	
Top seat (Danfoss X), cpl.	535 11 070 A		
Bracket, complete (ECT 5320 - TS)	535 11 080	1070001	
Bracket, complete (change-over valve, TS, excl. CE)	535 11 085	1070001	
Ladder for TS, cpl.	535 11 090	1070001	
Hose kit, 6 fcts., (TSHC linear)	535 11 100	1070001	
Hose kit, 6 functions (TSHC, linear, excl. CE)	535 11 105	1070001	
Hose kit, loader functions (TS HC joystick)	535 11 110	1070001	
Hose kit for pump and tank, (TS HC joystick)	535 11 120	1070001	
Hose kit, loader functions (TS Danfoss 1 circuit, fixed and variable flow)	535 11 130	1070001	
Hose kit for pump and tank (TS, Danfoss 1 circuit, fixed flow)	535 11 140	1070001	
Hose kit for pump and tank (TS, Danfoss 1 circuit, variable flow)	535 11 150	1070001	
Stabilizer operation (TS HC linear)	535 11 180	1070001	
Stabilizer operation (TS joystick)	535 11 190	1070001	
Hose shield (TS), cpl.	535 11 200	1070001	
Hose shield (TS), cpl.	535 11 200 A		
Accessories, winch			
Winch 1.5 T + mounting fittings and weighing cell	535 13 020	1070001	1070672
Winch 1.5 T + mounting fittings and weighing cell	535 13 020 A	1070673	
Winch 2.5 T + mounting fittings and weighing cell	535 13 030	1070001	
Wire pulley, single snatch block	535 13 040	1070001	

Description	Page no.	From loader	To loader
Wire pulley, double snatch block	535 13 050	1070001	
Wire roller guide	535 13 060	1070001	
Hydraulic system, winch	535 13 100	1070001	1070672
Hydraulic system, winch	535 13 100 A	1070673	
Hydraulic system, P15E	535 13 110	1070001	
Accessories, miscellaneous			
Cam disc kit (Stand-up controls)	535 16 010	1070001	
Cam disc kit (2-stage LMB)	535 16 020	1070001	
Cam disc kit (QOPS, std.), cpl.	535 16 030	1070001	
Cam disc kit (QOPS, RC), cpl.	535 16 040	1070001	
Cam disc kit (HS + 2-stage LMB)	535 16 050	1070001	
Mounting fittings, light tower	535 16 060	1070001	
Cam disc kit	535 16 070		
Protective guard, jib cylinder, cpl.	535 16 090	1070001	
Protective guard (LHV boom), cpl.	535 16 100	1070001	
	535 16 110	1070001	
Electronic parts, in general			
RCL 5300	535 20 010	1070001	
Plugs in RCL	535 20 020	1070001	
Mounting fittings for junction box (FJC 5330)	535 20 030	1070001	
CAN termination, CIO5376	535 20 040	1070001	
Terminal block, Box 1	535 20 049	1070001	
Terminal block for RCL box with RC	535 20 050	1070001	
12 V converter	535 20 055	1070001	
BEHEW	535 20 060	1070001	
BEHEW	535 20 060 A	1070001	
BEPAW, 12_23	535 20 070	1070001	
BEPAW, 12_23	535 20 070 A	1070001	

18/129, 20/138

Description	Page no.	From loader	To loader
CYW	535 20 080	1070001	
CYW	535 20 080 A	1070001	
CYBEL, single extension	535 20 090	1070001	
CYBEL double extension	535 20 100	1070001	
2CYBEL, single extension (2LMB)	535 20 110	1070001	
2CYBEL, double extension (2LMB)	535 20 120	1070001	
2CYBEL, single extension (manual)	535 20 130	1070001	
2CYBEL, double extension (man.)	535 20 135	1070001	
Alarm flash on stabilizer legs	535 20 140	1070001	
Spotlight, boom	535 20 150	1070001	
Spotlight, boom	535 20 150 A	1070001	
Spotlight, jib	535 20 160	1070001	
Spotlight, jib	535 20 160 A	1070001	
Temperature monitoring without oil cooler	535 20 170	1070001	
Temperature monitoring for oil cooler	535 20 180	1070001	
CBS - Calibrate Bypass Sensor	535 20 190	1070001	
Mounting fittings for junction box	535 20 250	1070001	
Electronic parts, manual crane			
Basic electronic parts, crane without RC	535 20 510	1070001	
Basic electronic parts, crane without RC	535 20 510 A	1070001	
Horn, no RC	535 20 520	1070001	
	535 20 525	1070001	
Mounting fittings for ECT 5320 (HS std.)	535 20 530	1070001	
ECT 5320 on stand-up platform (HS)	535 20 540	1070001	
HSL	535 20 550	1070001	
HSL-E	535 20 560	1070001	
HSL-Q, single	535 20 570	1070001	

18/129, 20/138

Description	Page no.	From loader	To loader
HSL-Q, double	535 20 580	1070001	
HSL-Q, double	535 20 580 A	1070001	
QOPS, STD.	535 20 590	1070001	
QOPS, STD.	535 20 590 A	1070001	
EVS, G2 + HDL	535 20 600	1070001	
EVS, knuckle boom crane without RC with HS or QOPS	535 20 610	1070001	
HDL without RC	535 20 620	1070001	
2-stage LMB, without RC	535 20 630	1070001	
Electronic parts, HS-10 crane			
Bottom for RCL box, no RC	535 21 040	1070001	
Wiring, base, standard	535 21 050	1070001	
Base, warning over stand-up controls (HS10)	535 21 060	1070001	
Base, warning over stand-up controls (HS10), variable flow pump	535 21 070	1070001	
Base, electronic slewing limitation (HS10)	535 21 080	1070001	
Base, electronic slewing limitation (HS10), variable flow pump	535 21 090	1070001	
Column, HS10	535 21 100	1070001	
HS10 sensor on platform	535 21 110	1070001	
ECT 5320 compl. + 3.5m cable	535 21 120	1070001	
CYBEW Transport alarm stabilizer leg and beam	535 21 130	1070001	
Electronic parts, HS-10 and TS crane			
PAW, transport alarm - stowing of loader	535 21 330	1070001	
Junction box, various electric parts	535 21 350	1070001	
Oil cooler supply	535 21 360	1070001	
CYL, 12-23	535 21 380	1070001	
CYBEL, single extension, 12-23	535 21 390	1070001	
CYBEL double extension 12-23	535 21 400	1070001	
Height indicateur	535 21 420	1070001	
Electronic parts, TS crane			

18/129, 20/138

Description	Page no.	From loader	To loader
TS platform, 1-circuit fixed flow pump	535 21 700	1070001	
TS platform, 1-circuit fixed flow pump, 2-stage LMB	535 21 710	1070001	
TS platform, 2-circuit fixed flow pump, CE basic system	535 21 720	1070001	
Mounting fittings RCL 5300 (TSRC linear)	535 21 730	1070001	
Column, TS incl. CE	535 21 740	1070001	
ECT 5320 in the valve block side, TS	535 21 750	1070001	
Electronic parts, TS, base	535 21 760	1070001	
Electronic parts, TS, Danfoss	535 21 780	1070001	
	535 21 790	1070001	
2CYBEL, single extension, TS	535 21 800	1070001	
2CYBEL, double extension, TS	535 21 810	1070001	
2-stage LMB, TS, Danfoss	535 21 840	1070001	
2-stage LMB, TS, hydrocontrol	535 21 850	1070001	
EVS-H, TS, Danfoss	535 21 870	1070001	
EVS-H, TS, Hydrocontrol	535 21 880	1070001	
Electronic parts, RC crane			
Basic electronic parts, crane with RC	535 22 010	1070001	
Basic electronic parts, crane with RC	535 22 010 A	1070001	
Terminal block for RC, 24 V	535 22 015	1070001	
Basic electronic parts, RC, BMS-1	535 22 020	1070001	
Antenna extension, Hetronic HSRC	535 22 030	1070001	
Terminal block, Box1, BMS-1	535 22 040	1070001	
Basic electronic parts, NEMRC with CE	535 22 045	1070001	
Basic electronic parts, NEMRC with CE	535 22 045 A	1070001	
Basic electronic parts, NEMRC without CE	535 22 050	1070001	
Basic electronic parts, NEMRC without CE	535 22 050 A	1070001	
2-stage LMB, RC	535 22 060	1070001	

18/129, 20/138

Description	Page no.	From loader	To loader
HSL, HSRC	535 22 070	1070001	
HSL, HS NEMRC	535 22 080	1070001	
HSL-E, HS NEMRC	535 22 090	1070001	
HSL-E, HSRC	535 22 095	1070001	
HSL-Q, HSRC	535 22 100	1070001	
HSL-Q, HSRC	535 22 100 A	1070001	
EVS, G2	535 22 110 A	1070001	
Termination, G2	535 22 120	1070001	
Winch, electric parts	535 22 130	1070001	
Column, Fly-Jib	535 22 140	1070001	
Stabilizer operation via RC	535 22 150	1070001	
Stabilizer operation via RC	535 22 150 A	1070001	
Stabilizer operation via RC (without CIO)	535 22 154	1070001	
Stabilizer operation via RC (without CIO)	535 22 154 A	1070001	
Stabilizer operation via RC (with winch)	535 22 156	1070001	
Stabilizer operation via RC (with winch)	535 22 156 A	1070001	
Fly-Jib supply, K2	535 22 160	1070001	
Spotlight, radio remote controlled.	535 22 170	1070001	
Spotlight, radio remote controlled.	535 22 170 A	1070001	
Light tower for BMS-1	535 22 180	1070001	
3rd extra valve	535 22 190	1070001	
Junction box 2, G2	535 22 200	1070001	
QOPS, STDRC	535 22 220	1070001	
QOPS, STDRC	535 22 220 A	1070001	
Light tower	535 22 230	1070001	
Hydraulic accessories			
Lifting yoke, cpl.	535 25 010	1070001	

18/129, 20/138

Description	Page no.	From loader	To loader
Hydraulic accessories	535 25 020	1070001	
Dismounting tools, cpl.(EXV)	535 25 030	1070001	
Lifting tools cpl. (Change of hoses inside the column)	535 25 040	1070001	
Holding kit (pin in hydr. extension)	535 25 050	1070001	
Spanner wrench, footplate + ball joint	535 25 060	1070001	
Kit for replacement of load-holding valve	535 25 080	1070001	

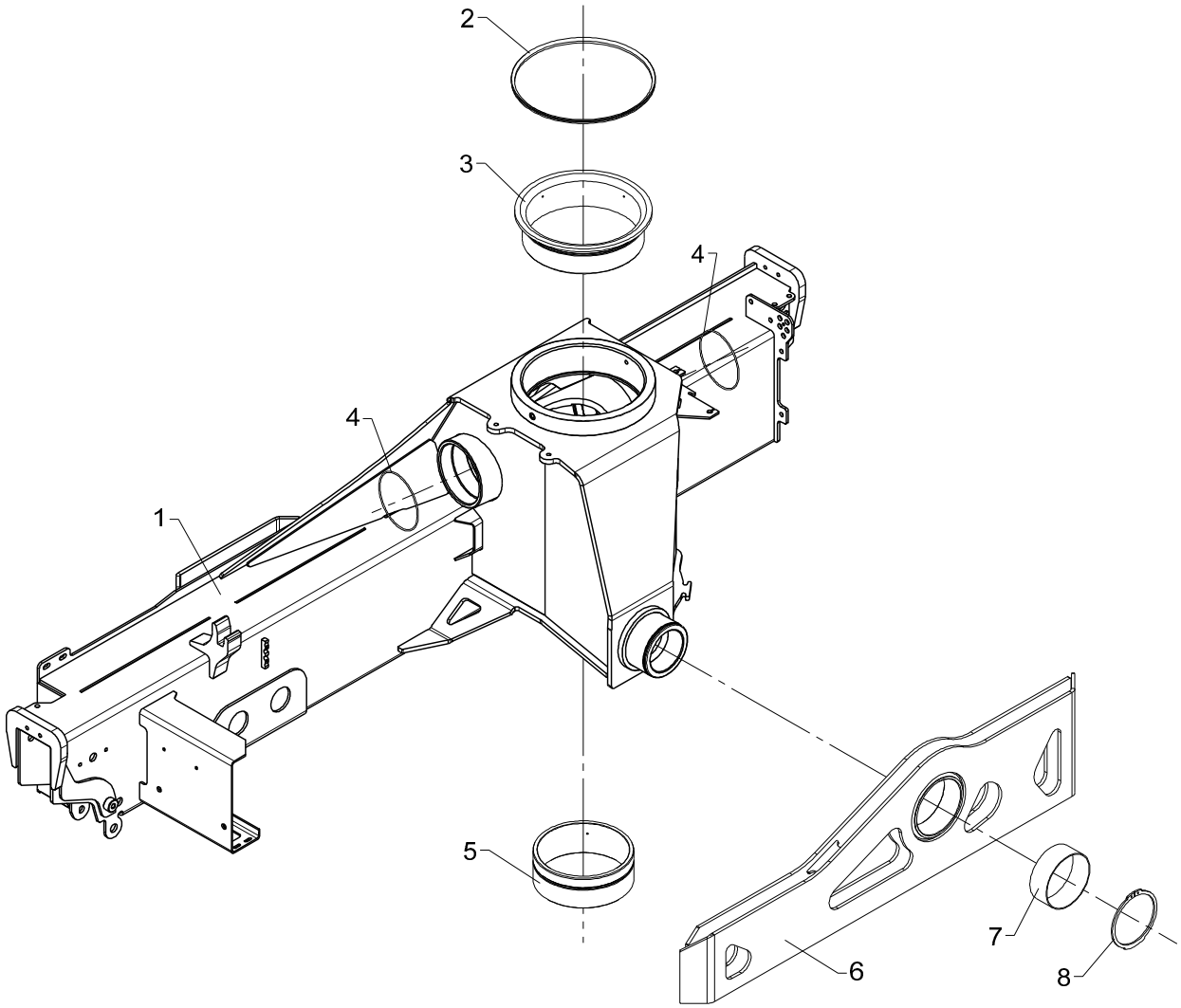
2
3
4
4
1
5
7
6
8

Obsolete

Base, complete

535 01 010

From loader 1070001
To loader 1070651

Created 28-02-2006
Modified

Pos	Qty.	Part no.	Description	Remarks
1	1	6344010	Base, painted	6344001
2	1	22154	V-ring	VL-0300
3	1	63433	Top bearing	
4	2	20205	O-ring	OR 134,5 x 3
5	1	63434	Bottom bearing	
6	1	6306135	Suspension traverse	
7	1	23406	Composite bearing	ø130 x 50
8	1	33151	Circlip	130U

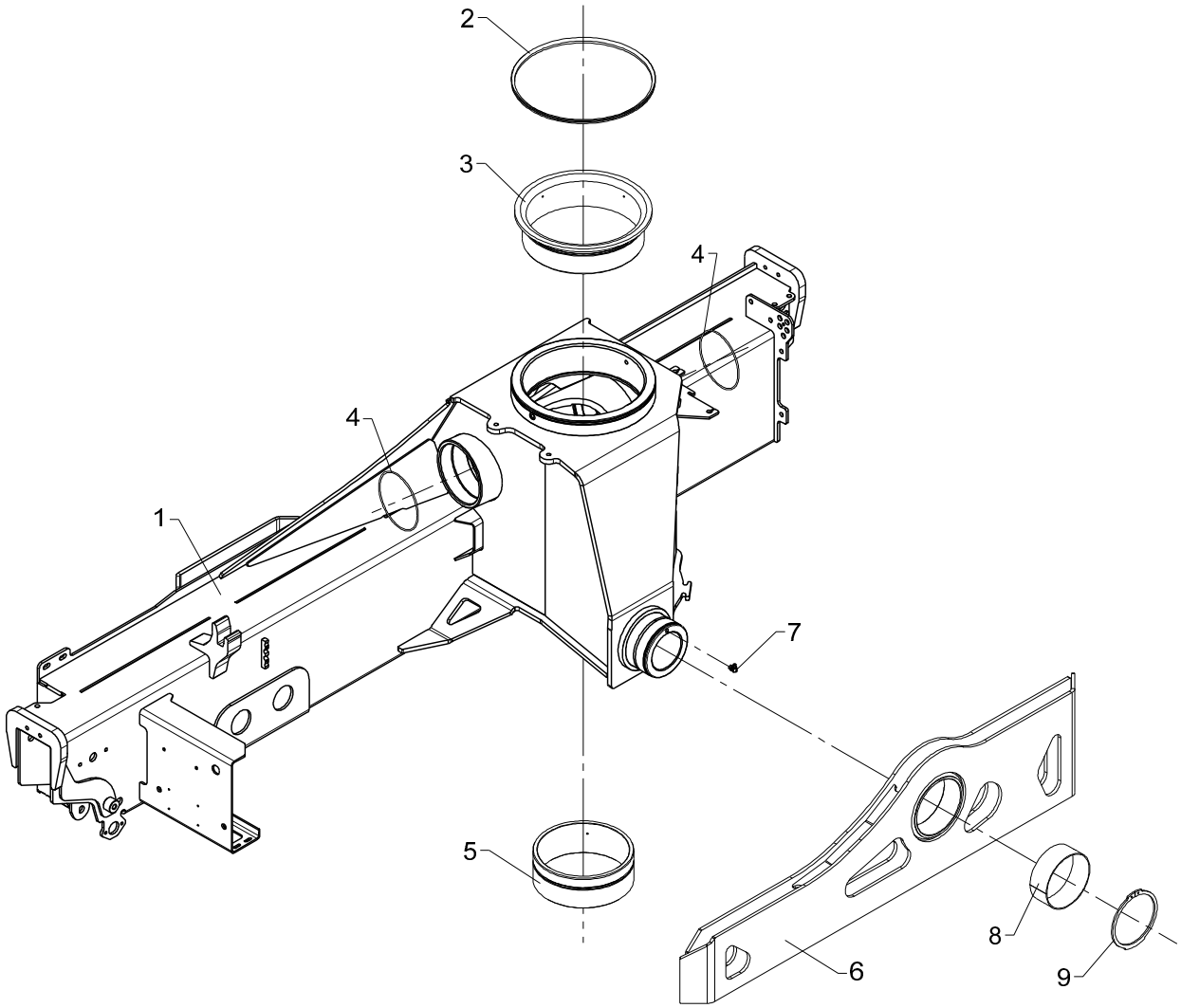
2
3
4
4
1
7
5
8
9
6

Obsolete

Base, complete

535 01 010 A

From loader 1070652
To loader

Created 10-01-2013
Modified

Pos	Qty.	Part no.	Description	Remarks
1	1	6344010	Base, painted	6344001
2	1	22154	V-ring	VL-0300
3	1	63433	Top bearing	
4	2	20205	O-ring	OR 134,5 x 3
5	1	63434	Bottom bearing	
6	1	6306135	Suspension traverse	
7	1	31322	Lubricator	1/8 RG - 90
8	1	23362	Bushing	PM 13050 DX
9	1	33151	Circlip	130U

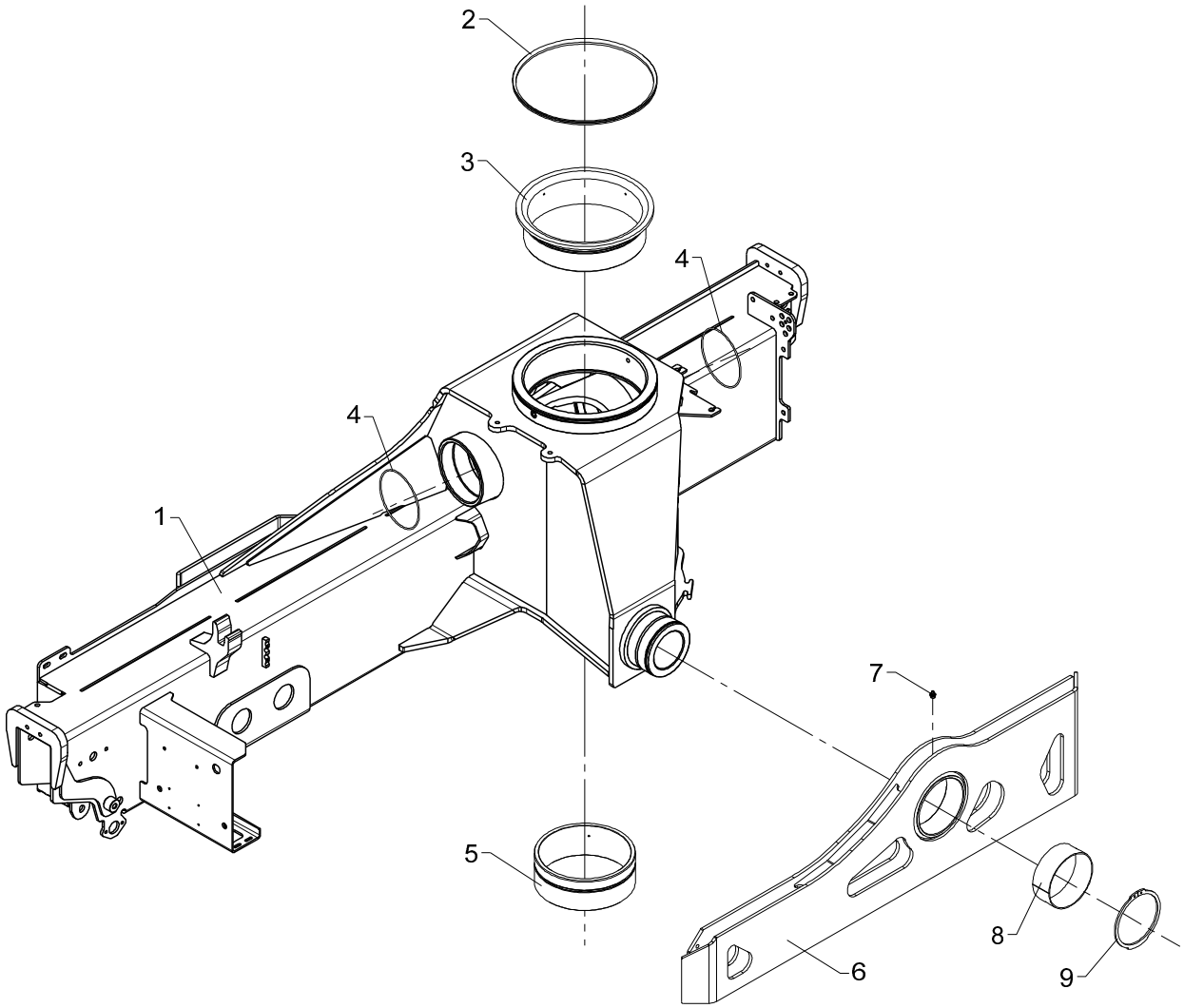
2
3
4
4
1
7
5
8
9
6

Base, complete

Pos	Qty.	Part no.	Description	Remarks
1	1	6344010	Base, painted	6345001
2	1	22154	V-ring	VL-0300
3	1	63433	Top bearing	
4	2	20205	O-ring	OR 134,5 x 3
5	1	63434	Bottom bearing	
6	1	6306135	Suspension traverse	
7	1	31318	Lubricator	1/8" RG
8	1	23362	Bushing	PM 13050 DX
9	1	33151	Circlip	130U

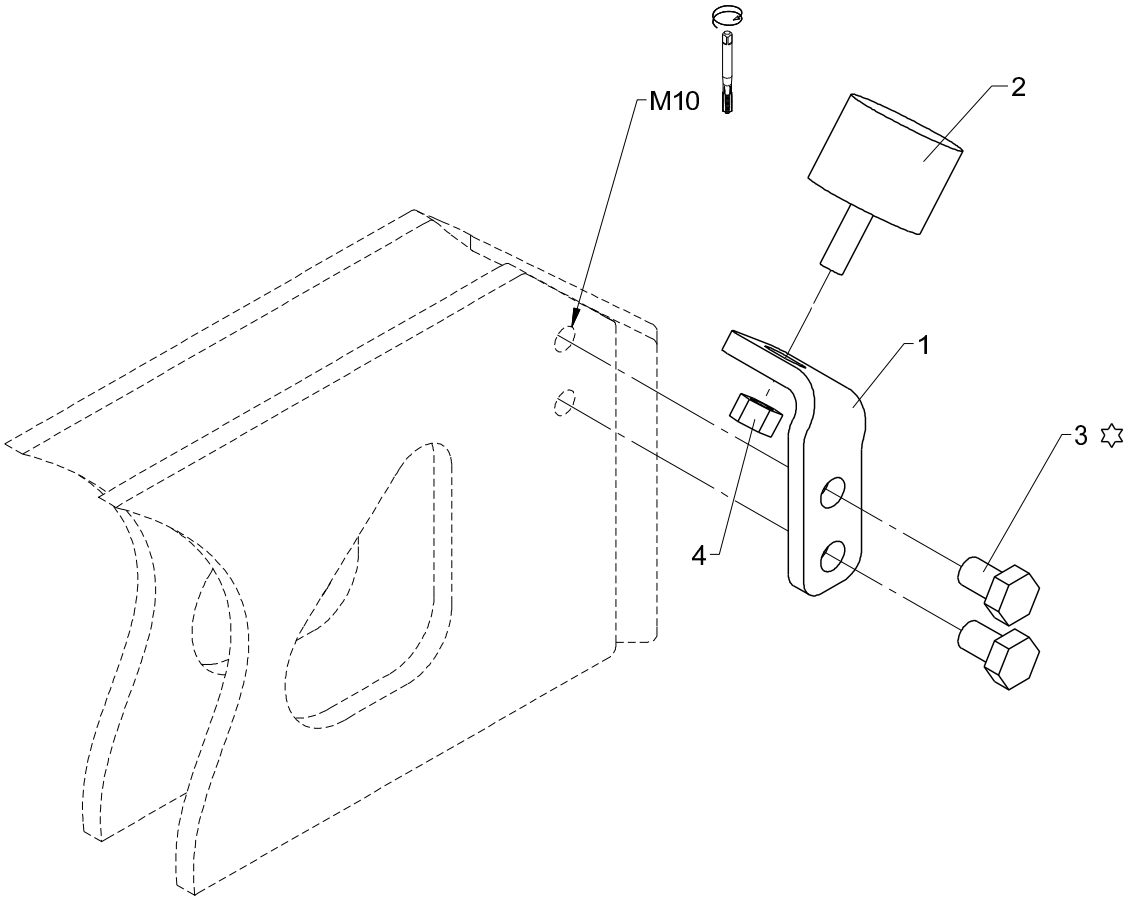

✡ Loctite 243

Support for cylinder K5/K6/K7/K8

Pos	Qty.	Part no.	Description	Remarks
1	1	6346007	Bracket	
2	1	63295	Torsion balancer	
3	2	30153	Set screw	M10 x 16
4	1	30886	Lock nut, stainless	M8

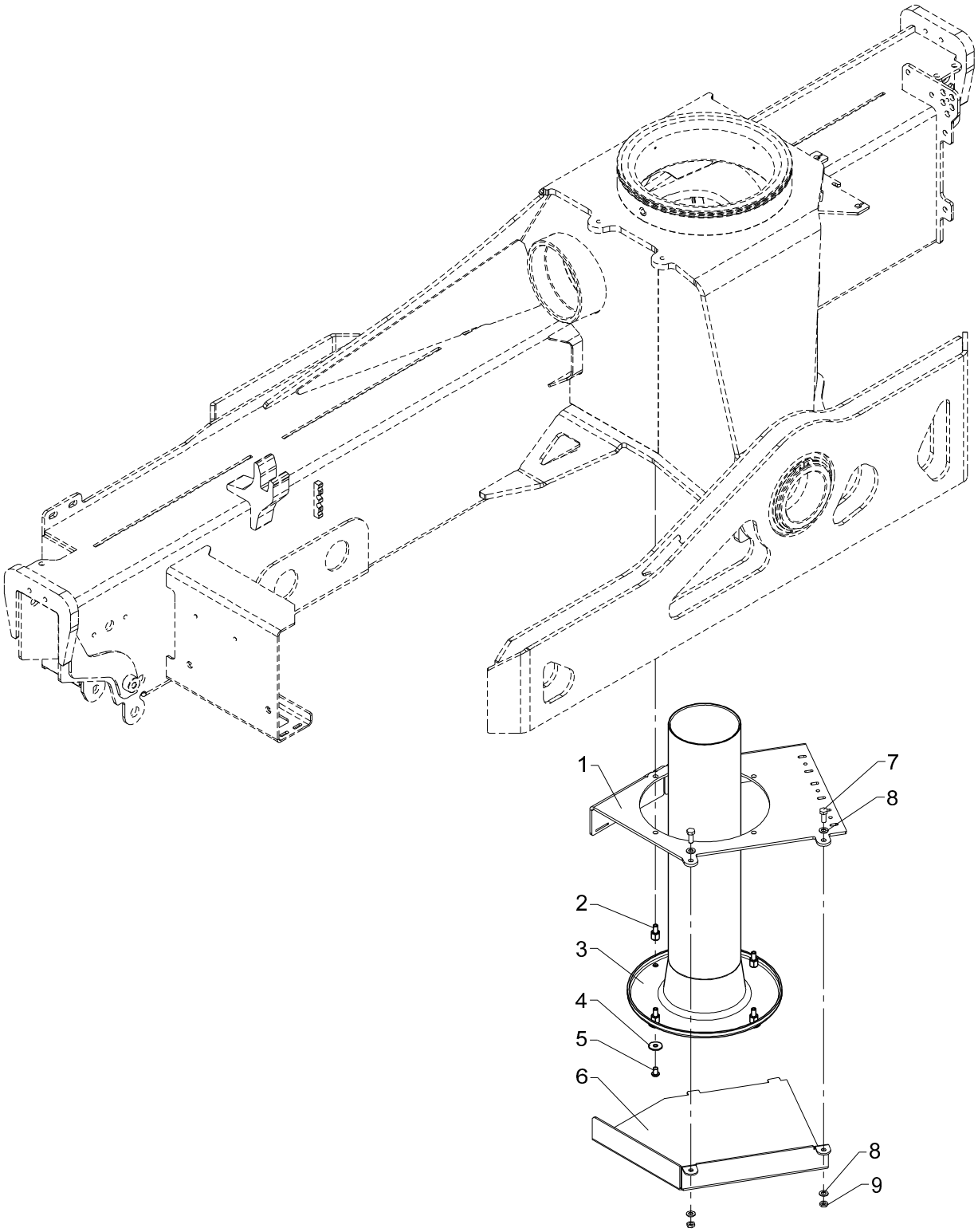
1
7
8
2
3
4
5
6
8
9

Protection plate, cpl. (std.)

535 01 050

From loader 1070001
To loader

Created 12-12-2008
Modified 08-01-2014

Pos	Qty.	Part no.	Description	Remarks
1	1	6344231	Cover	
2	4	6340223	Spacer	
3	1	63491	Bushing	
4	4	31136	Washer, stainless	8 mm
5	4	30924	Screw	M8 x 12
6	1	6340233	Hose shield	
7	2	30132	Set screw, stainless	M8 x 20
8	4	31147	Face washer, 8 mm	8 mm
9	2	30874	Counter nut, stainless	M8

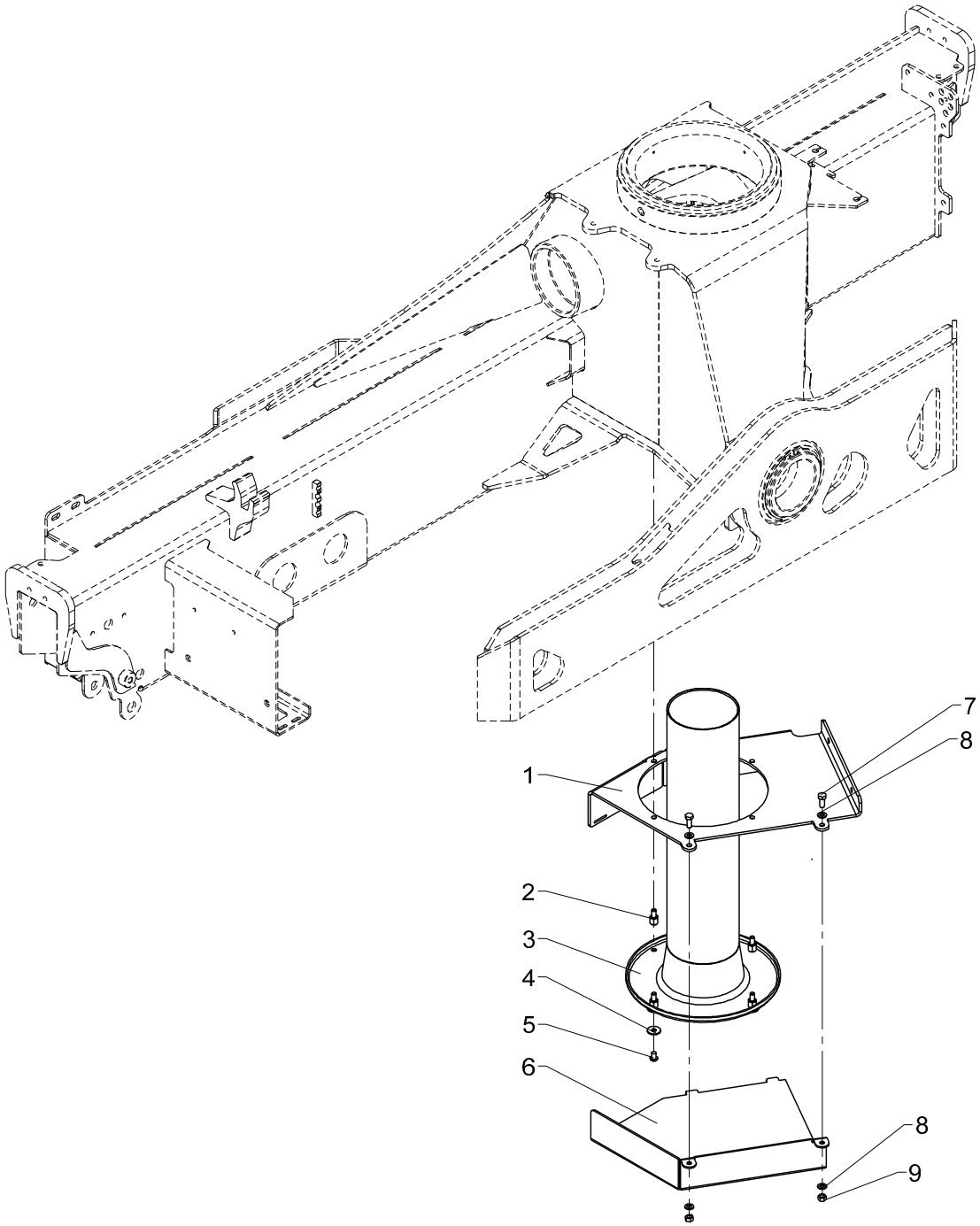
7
8
1
2
3
4
5
6
8
9

Protection plate, complete (TS)

Pos	Qty.	Part no.	Description	Remarks
1	1	6344841	Cover	
2	4	6340223	Spacer	
3	1	63491	Bushing	
4	4	31136	Washer, stainless	8 mm
5	4	30924	Screw	M8 x 12
6	1	6340843	Protection plate (TS)	
7	2	30132	Set screw, stainless	M8 x 20
8	4	31147	Face washer, 8 mm	8 mm
9	2	30856	Nut, stainless	M8

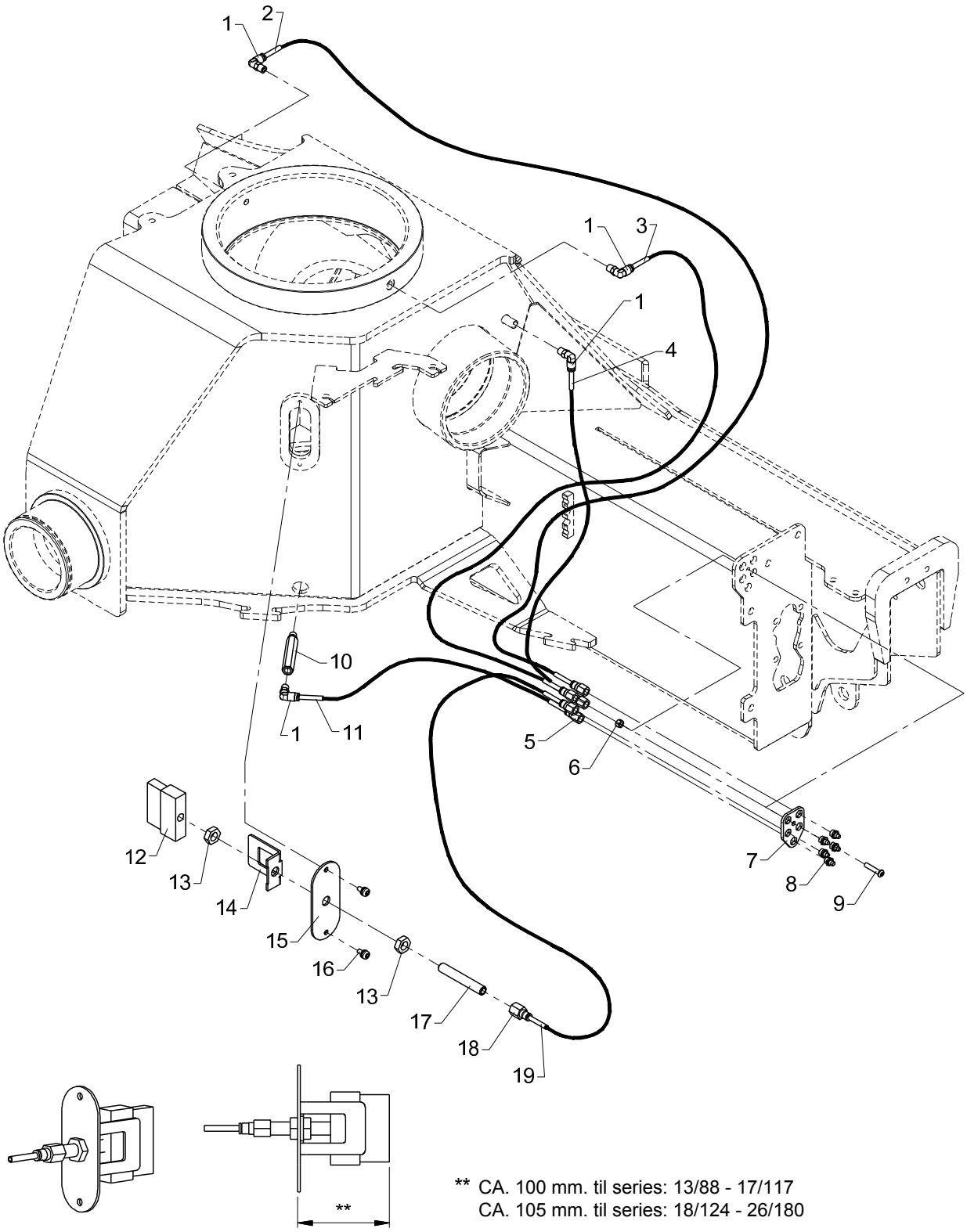

** CA. 100 mm. til series: 13/88 - 17/117
CA. 105 mm. til series: 18/124 - 26/180

Obsolete

Central lubrication and lubricating brush

535 01 080

From loader 1070001
To loader 1070209

Created 11-11-2008
Modified 01-02-2011

Pos	Qty.	Part no.	Description	Remarks
1	4	25532	Elbow connection	
2	1	41712	Cable lead-in	1260 mm
3	1	41712	Cable lead-in	970 mm
4	1	41712	Cable lead-in	640 mm
5	5	25579	Union nut	
6	1	30884	Lock nut, stainless	M6
7	1	6306038	Lock plate	
8	5	31318	Lubricator	1/8" RG
9	1	32458	Screw	M6 x 30
10	1	6340046	Nipple (1/8" RG - 90 mm)	
11	1	41712	Cable lead-in	880 mm
12	1	31395	Brush	
13	2	25354	Counter nut	1/4"
14	1	6306047	Safety device, lubrica. brush	
15	1	6306046	Cover for lubricating brush	
16	2	32479	Screw	M6 x 12
17	1	6306048	Threaded pipe	
18	1	25580	Union nut	
19	1	41712	Cable lead-in	1200 mm

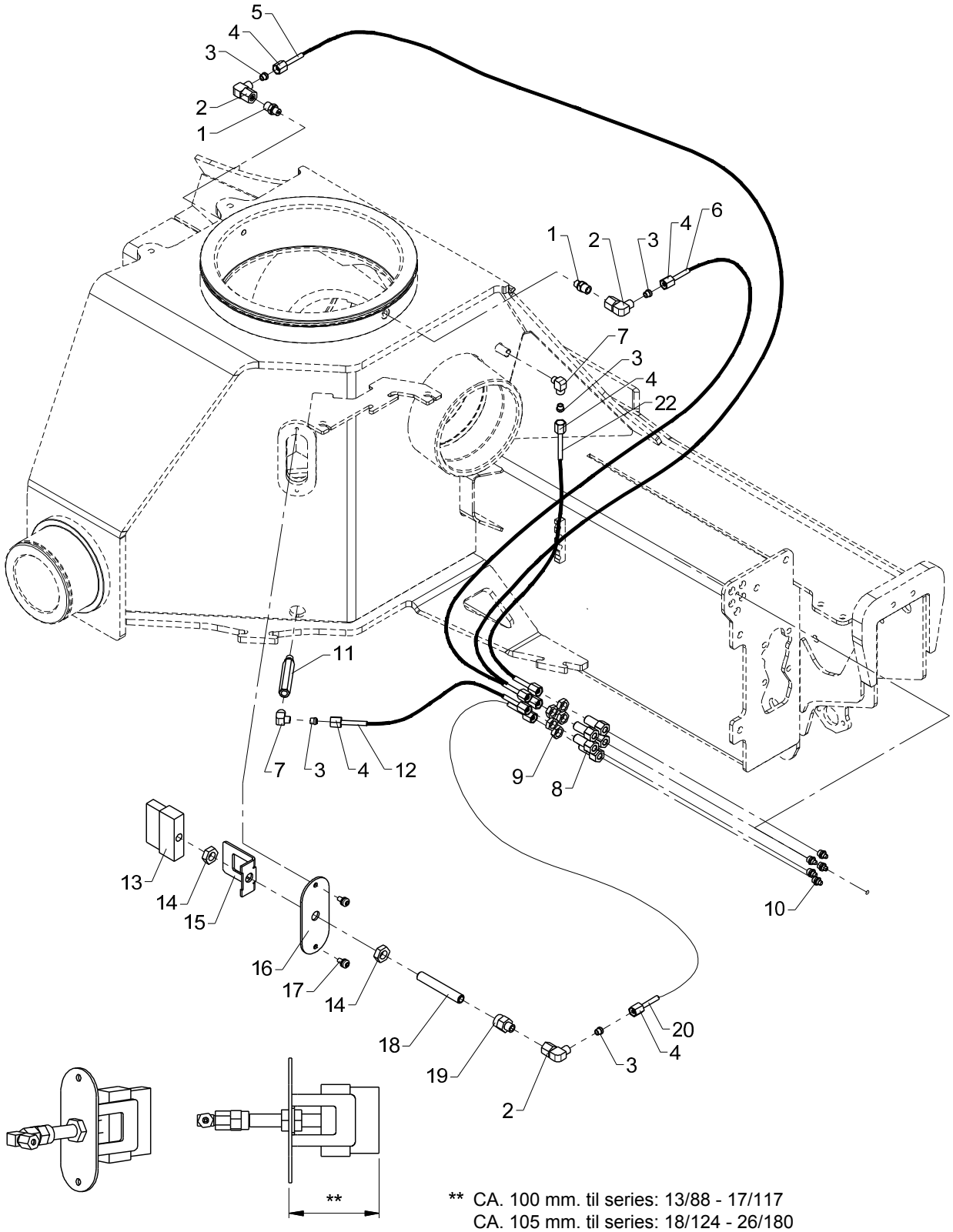

** CA. 100 mm. til series: 13/88 - 17/117
CA. 105 mm. til series: 18/124 - 26/180

Central lubrication and lubricating brush

Pos	Qty.	Part no.	Description	Remarks
		6340020	Central lubrication + brush	
1	2	26189	Connection	P-GEV 6 LR-WD
2	3	26174	Elbow connection	EWSD 6 L
3	10	26114	Profile ring	P-R 6 L/S
4	10	26164	Coupling nut	M 6 L
5	1	62821	Nylon pipe	640 mm
6	1	62821	Nylon pipe	640 mm
7	2	26186	Elbow connection	WEV 6 LRK
8	5	26891	Bulkhead connection	
9	5	26890	Counter nut	M12 x 1,5
10	5	31318	Lubricator	1/8" RG
11	1	6340046	Nipple (1/8" RG - 90 mm)	
12	1	62821	Nylon pipe	640 mm
13	1	31395	Brush	
14	2	25354	Counter nut	1/4"
15	1	6306047	Safety device, lubrica. brush	
16	1	6306046	Cover for lubricating brush	
17	2	32479	Screw	M6 x 12
18	1	6306048	Threaded pipe	
19	1	26372	Pressure gauge connection	P-MAV 6 LR
20	1	62821	Nylon pipe	640 mm
22	1	62821	Nylon pipe	1200 mm

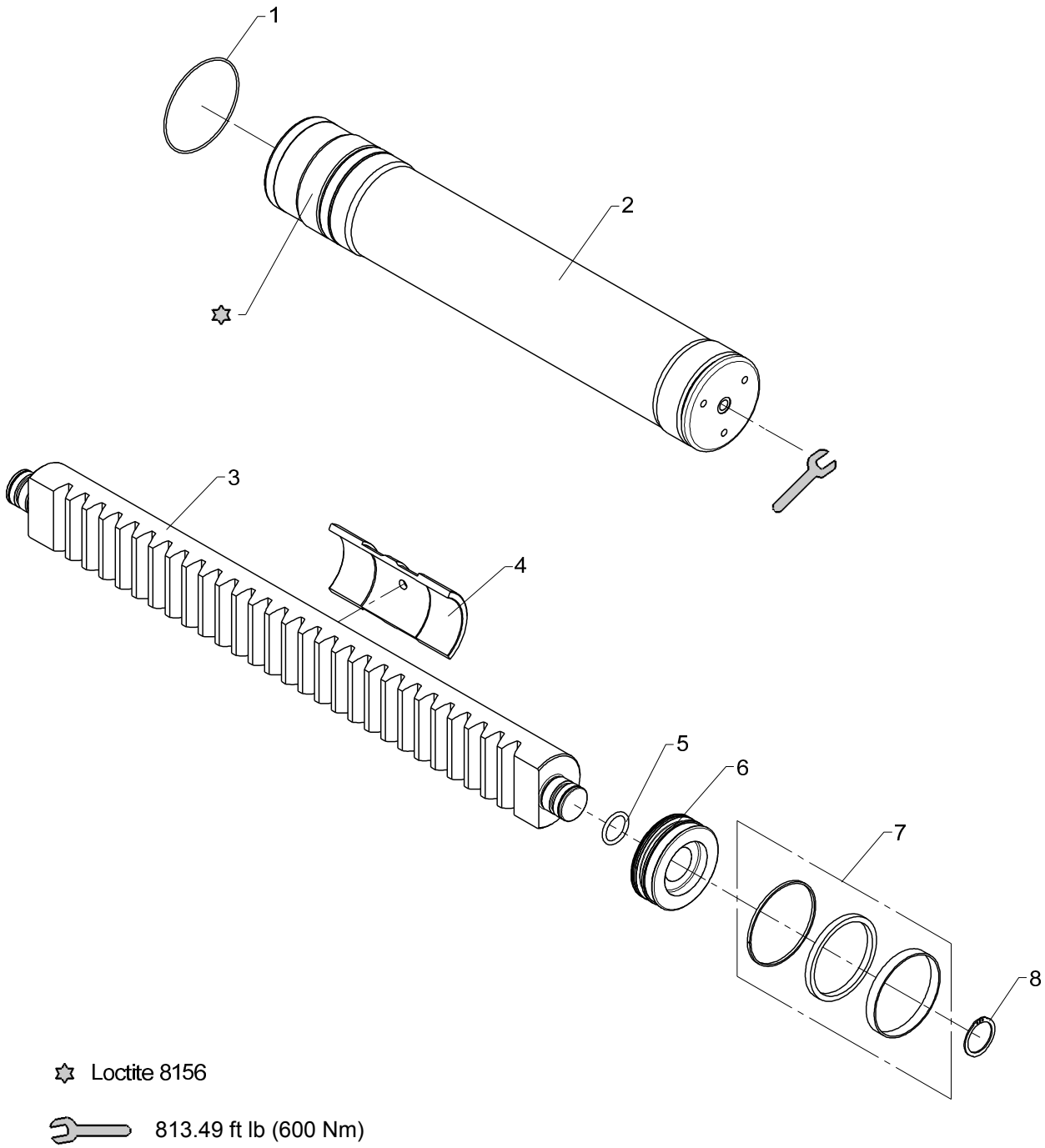

Loctite 8156

813.49 ft lb (600 Nm)

Obsolete

Slewing system, 400°

535 01 100

From loader 1070001
To loader

Created 06-01-2009
Modified

Pos	Qty.	Part no.	Description	Remarks
1	2	20205	O-ring	OR 134,5 x 3
2	2	6344041	Slewing cylinder	
3	1	6344044	Rack	
4	1	63555	Guide block	
5	2	20305	O-ring	OR 37,47 x 5,33
6	2	6344045	Piston	
7	2	6894260	Seal kit	
8	2	33129	Circlip	50U

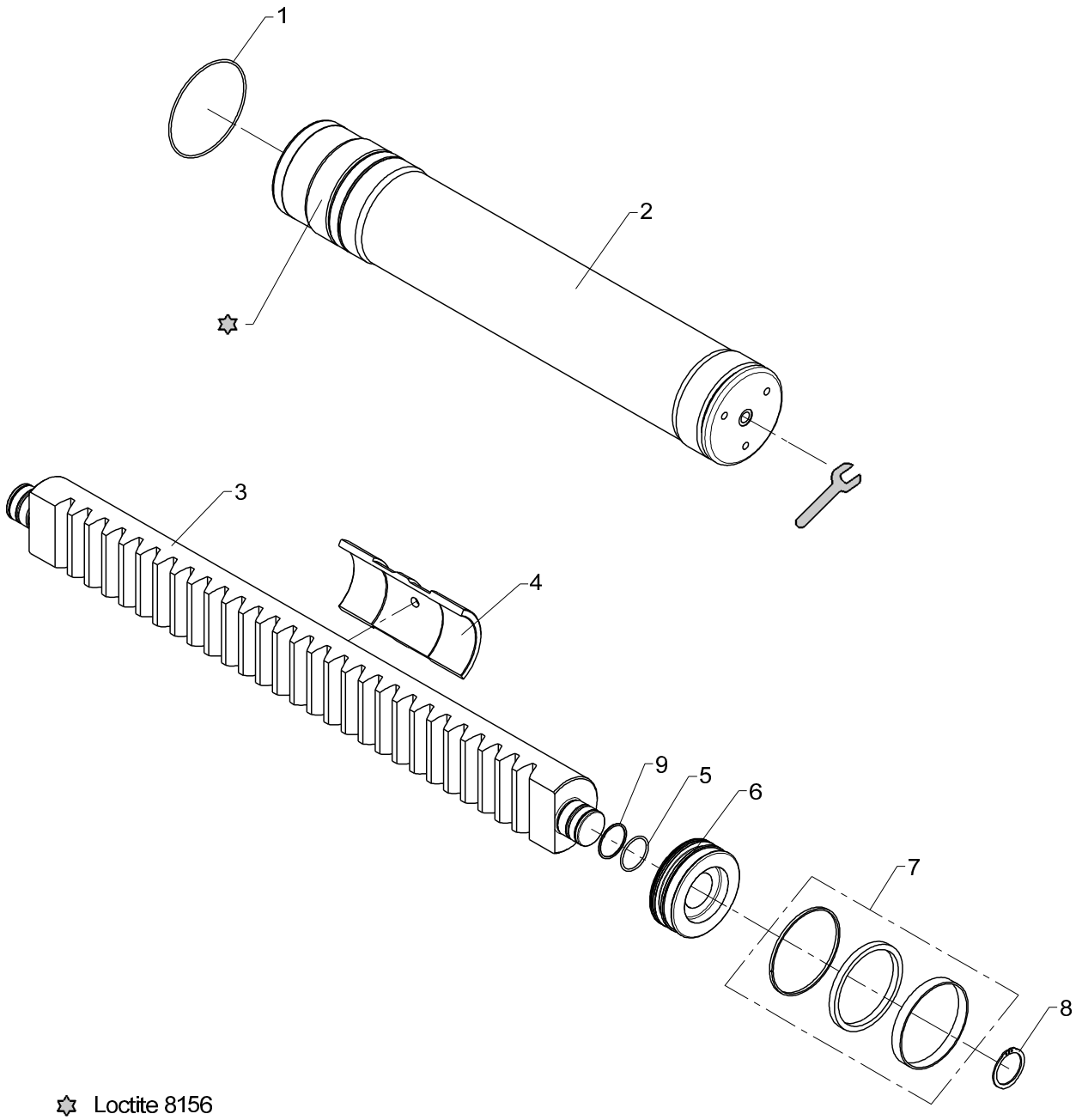

Loctite 8156

813.49 ft lb (600 Nm)

Obsolete

Slewing system, 400°

535 01 100 A

From loader 1070001
To loader 1070422

Created 22-02-2012
Modified 15-06-2012

Pos	Qty.	Part no.	Description	Remarks
1	2	20205	O-ring	OR 134,5 x 3
2	2	6344041	Slewing cylinder	
3	1	6344044	Rack	
4	1	63555	Guide block	
5	2	20181	O-ring	OR 44,2 x 3
6	2	6344045	Piston	
7	2	6894260	Seal kit	
8	2	33129	Circlip	50U
9	2	20868	Back ring	STR 45 x 50 x 1,3-Y95A

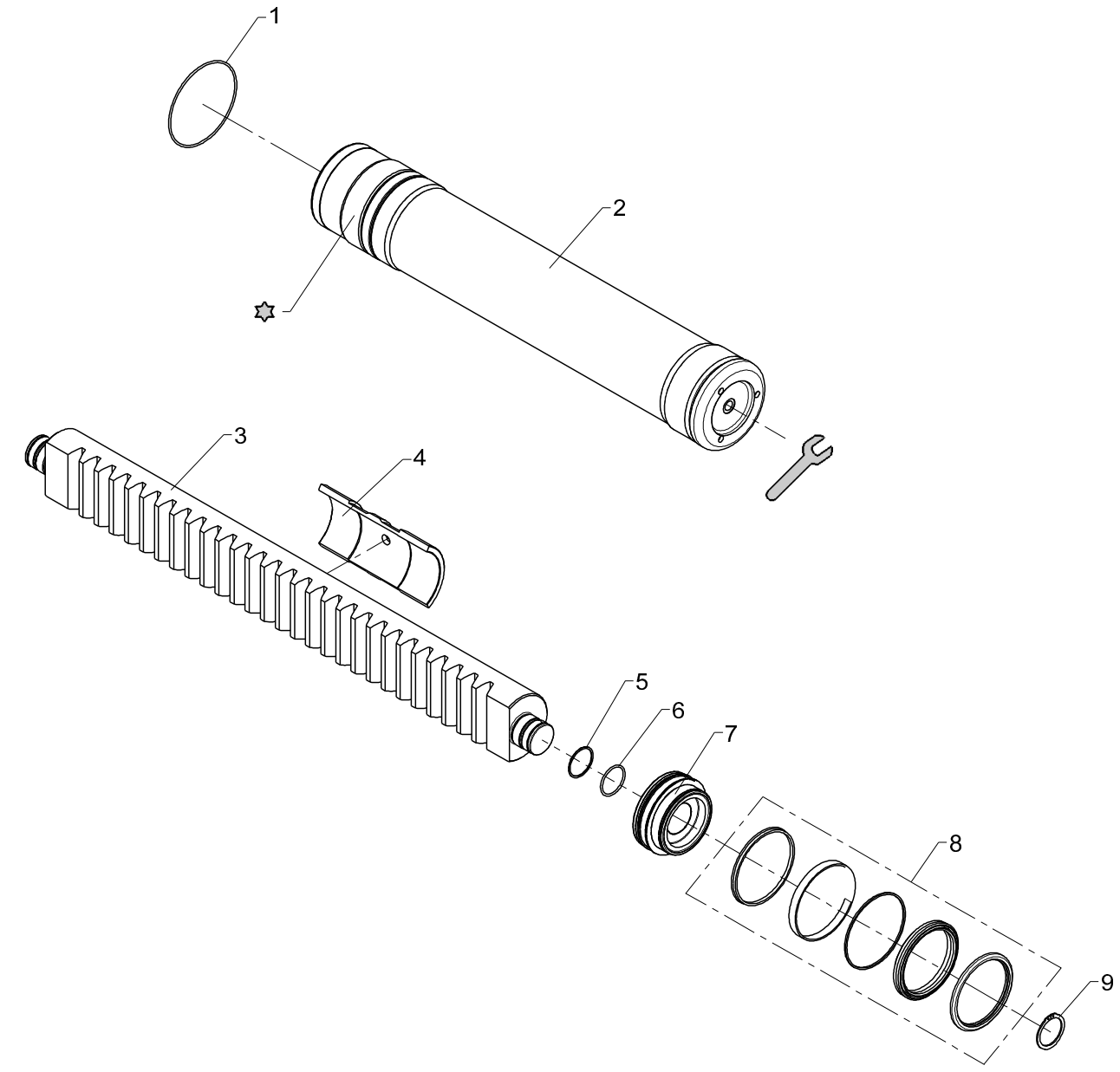

Loctite 8156

813.49 ft lb (600 Nm)

Obsolete

Slewing system, 400°

535 01 100 B

From loader 1070423
To loader

Created 15-06-2012
Modified 07-10-2014

Pos	Qty.	Part no.	Description	Remarks
1	2	20205	O-ring	OR 134,5 x 3
2	2	6346041	Slewing cylinder	
3	1	6344044	Rack	
4	1	63555	Guide block	
5	2	20868	Back ring	STR 45 x 50 x 1,3-Y95A
6	2	20181	O-ring	OR 44,2 x 3
7	2	6346085	Piston	
8	2	6894690	Seal kit f. slewing cyl.(ø125)	
9	2	33129	Circlip	50U

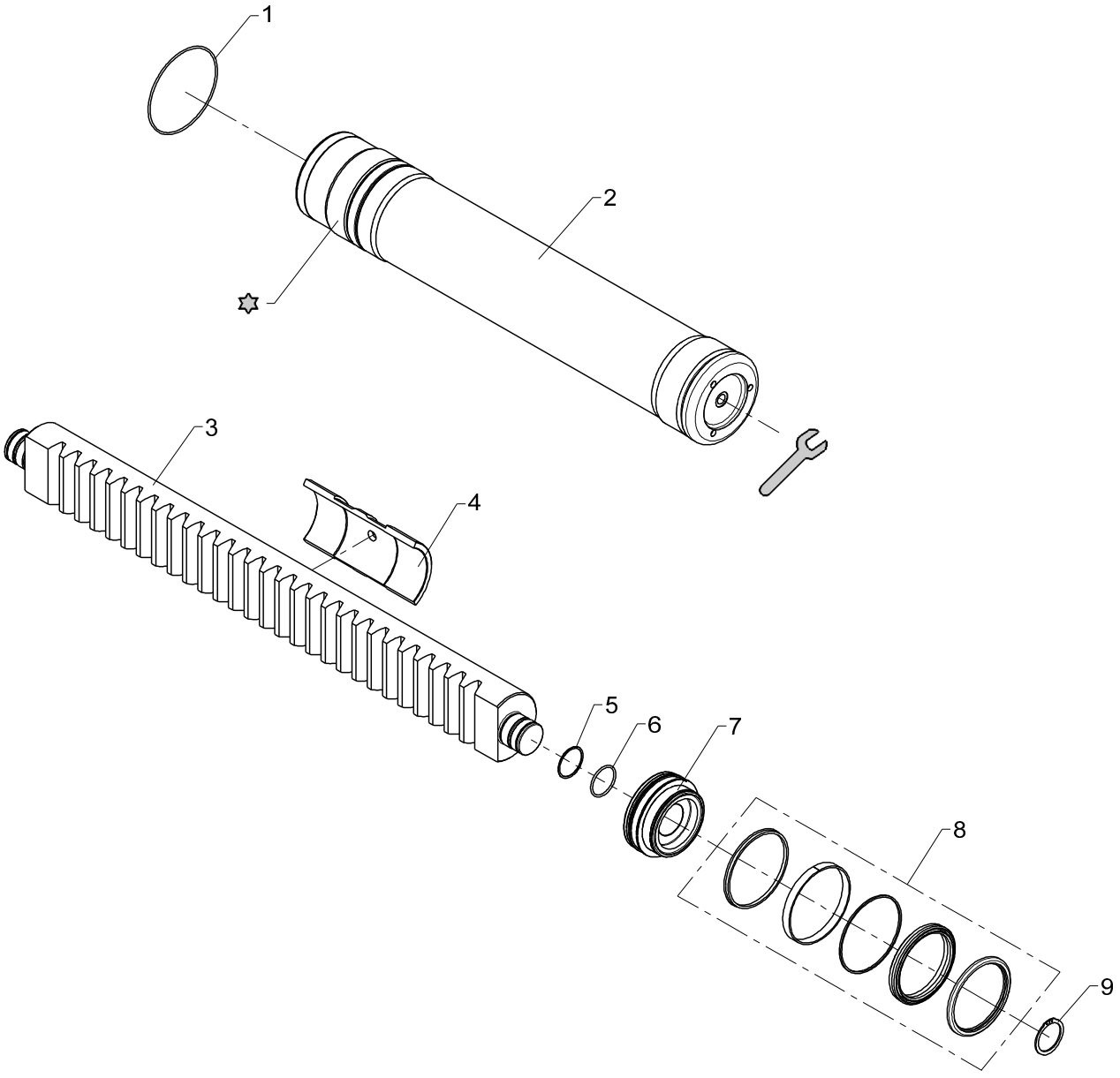

Loctite 8156

813.49 ft lb (600 Nm)

Slewing system, 400°

Pos	Qty.	Part no.	Description	Remarks
1	2	20205	O-ring	OR 134,5 x 3
2	2	6346241		
3	1	6344044		
4	1	63555		
5	2	20868	Back ring	STR 45 x 50 x 1,3-Y95A
6	2	20181	O-ring	OR 44,2 x 3
7	2	6346085		
8	2	6894690	Seal kit f. slewing cyl.(ø125)	
9	2	33129	Circlip	

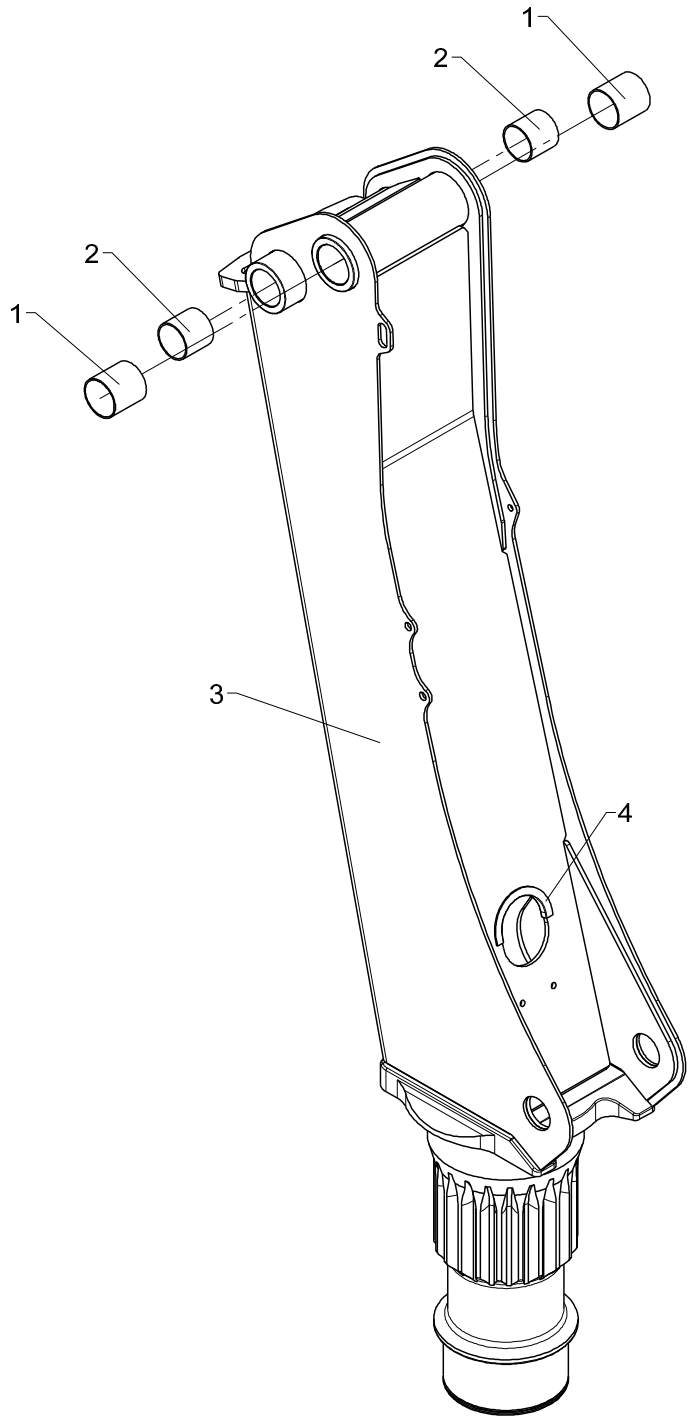
1
2
2
1
3
4

Obsolete

Column, cpl. for link arm system, boom

535 01 300

From loader 1070001
To loader 1070136

Created 12-12-2008
Modified

Pos	Qty.	Part no.	Description	Remarks
1	2	23411	Composite bearing	ø65/70 x 70
2	2	23431	Composite bearing	ø60/65 x 60
3	1	6344040	Column, painted	6344051
4	1	46587	Rubber protection	180 mm

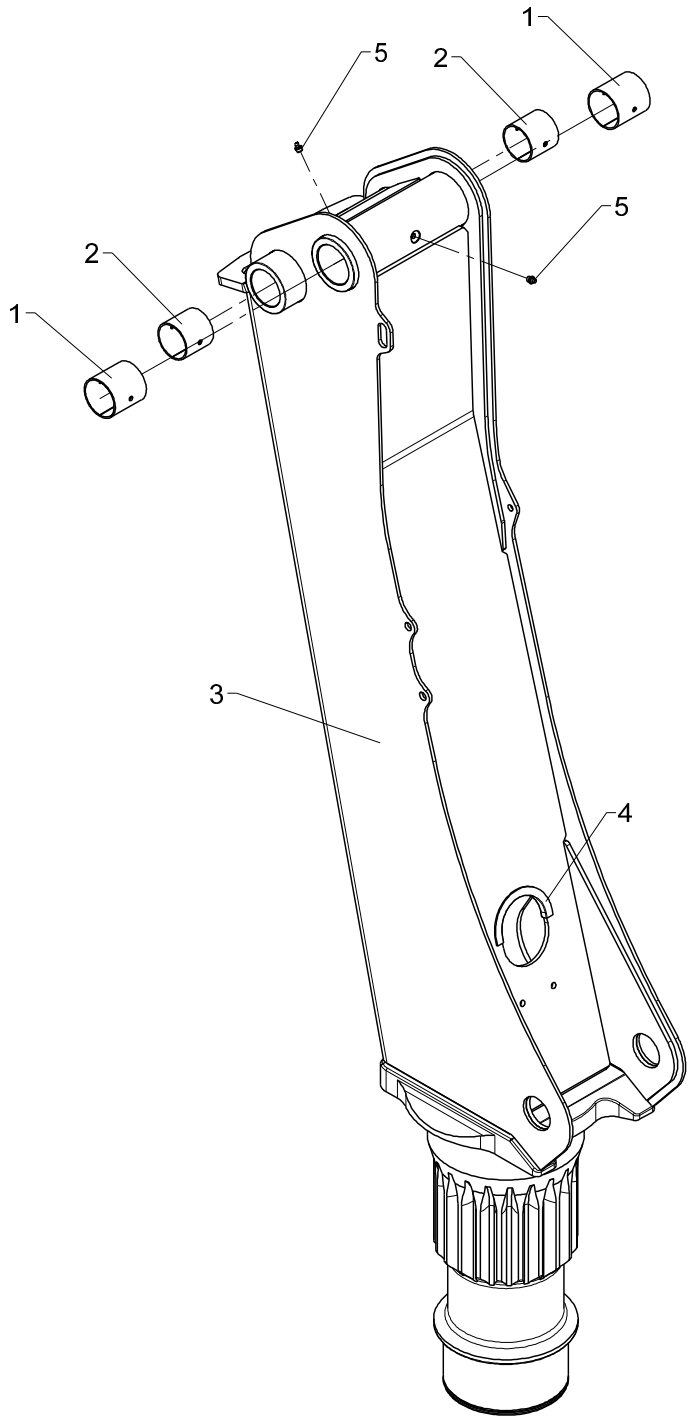
1
5
2
5
2
1
3
4

535 01 300 A

From loader 1070137
To loader

Created 20-07-2010
Modified

Column, cpl. for link arm system, boom

Pos	Qty.	Part no.	Description	Remarks
1	2	23418	Bushing	PM 6570 DX
2	2	23330	Bushing	PM 6060 DX
3	1	6344040	Column, painted	6344051
4	1	46587	Rubber protection	180 mm
5	2	31318	Lubricator	1/8" RG

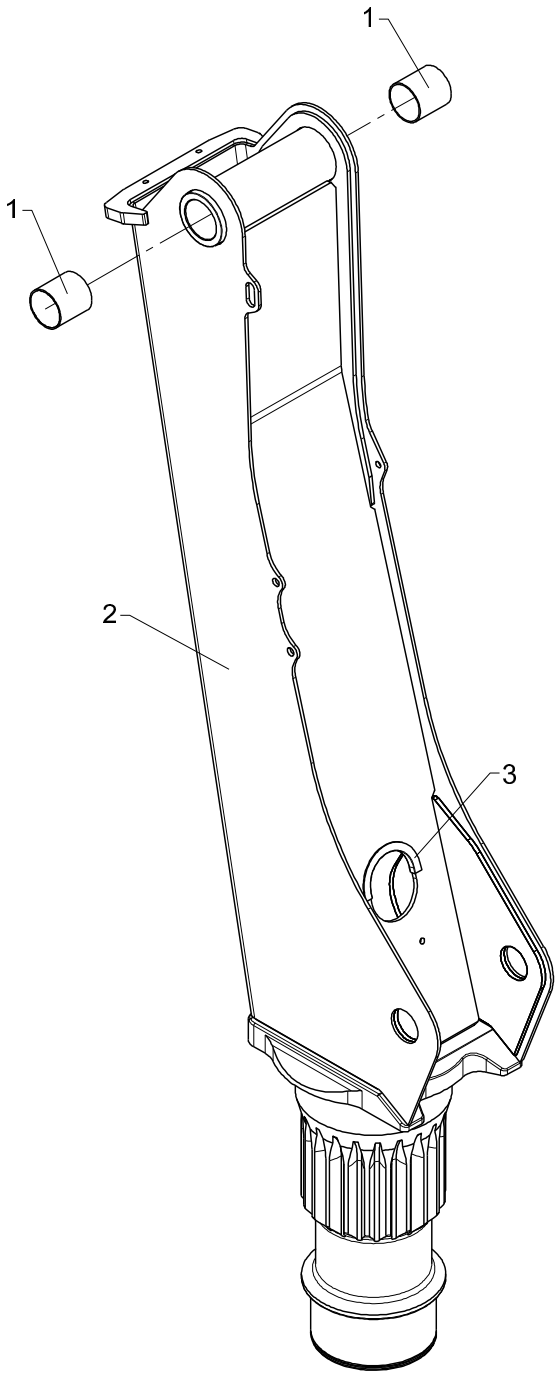
1
1
2
3

Obsolete

Column, cpl. excl. link arm system, boom

535 01 350

From loader 1070001
To loader 1070136

Created 12-12-2008
Modified

Pos	Qty.	Part no.	Description	Remarks
1	2	23411	Composite bearing	ø65/70 x 70
2	1	6344080	Column, painted	6344071
3	1	46587	Rubber protection	180 mm

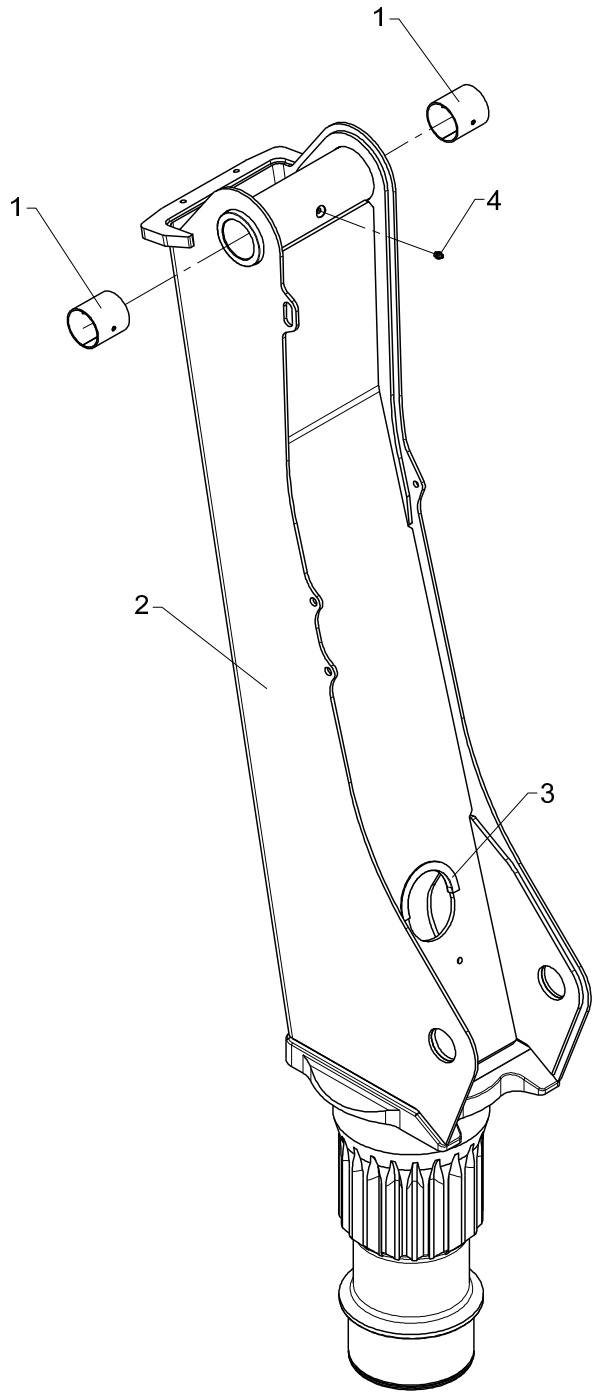
1
1
4
2
3

Column, cpl. excl. link arm system, boom

From loader 1070137
To loader
Created 20-07-2010
Modified

Pos	Qty.	Part no.	Description	Remarks
1	2	23418	Bushing	PM 6570 DX
2	1	6344080	Column, painted	6344071
3	1	46587	Rubber protection	180 mm
4	1	31318	Lubricator	1/8" RG

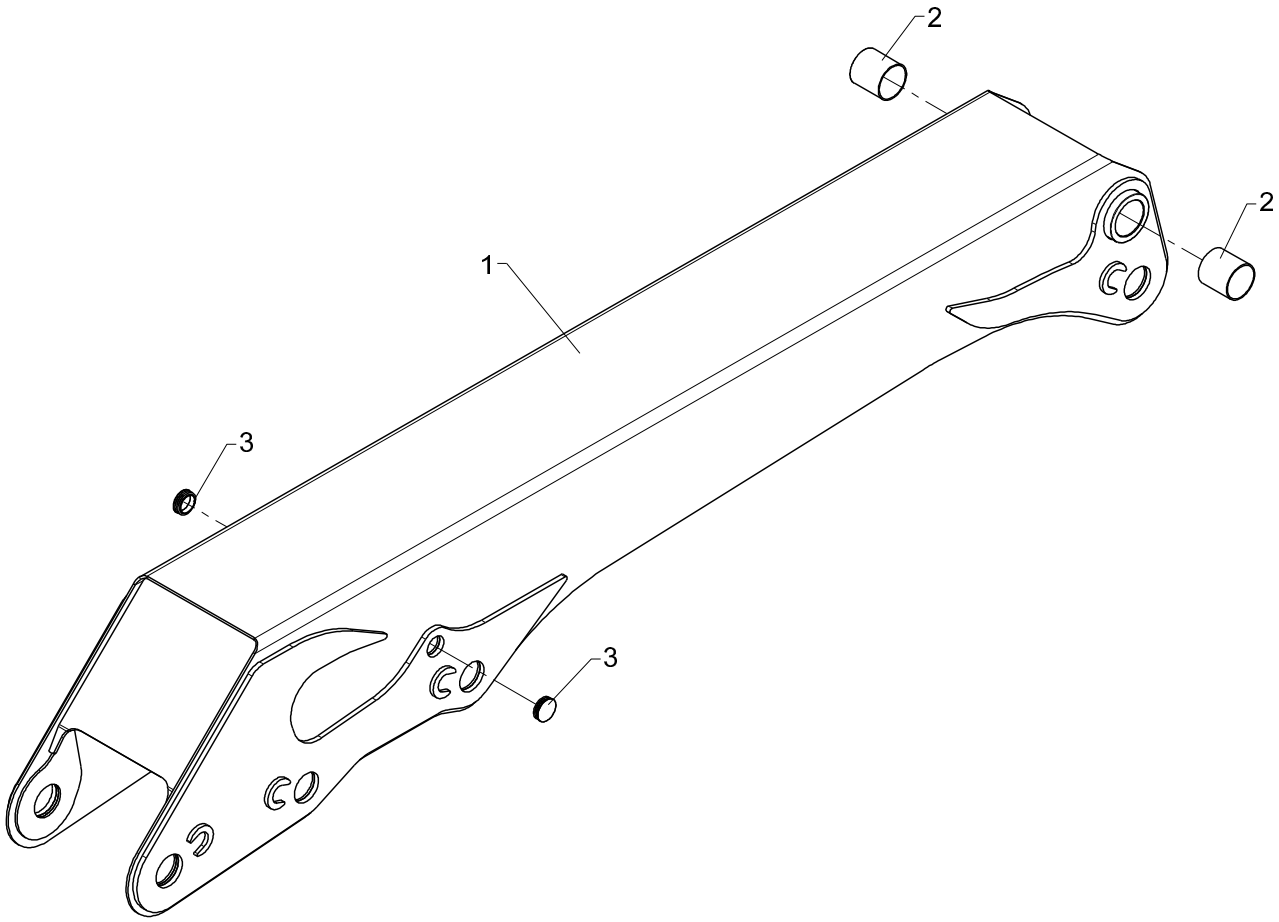
2
2
1
3
3

Obsolete

Main boom, cpl. for link arm system, boom

535 01 400

From loader 1070001
To loader 1070136

Created 12-12-2008
Modified

Pos	Qty.	Part no.	Description	Remarks
1	1	6344230	Main boom, painted	6344181
2	2	23411	Composite bearing	ø65/70 x 70
3	2	64381	Ferrule	

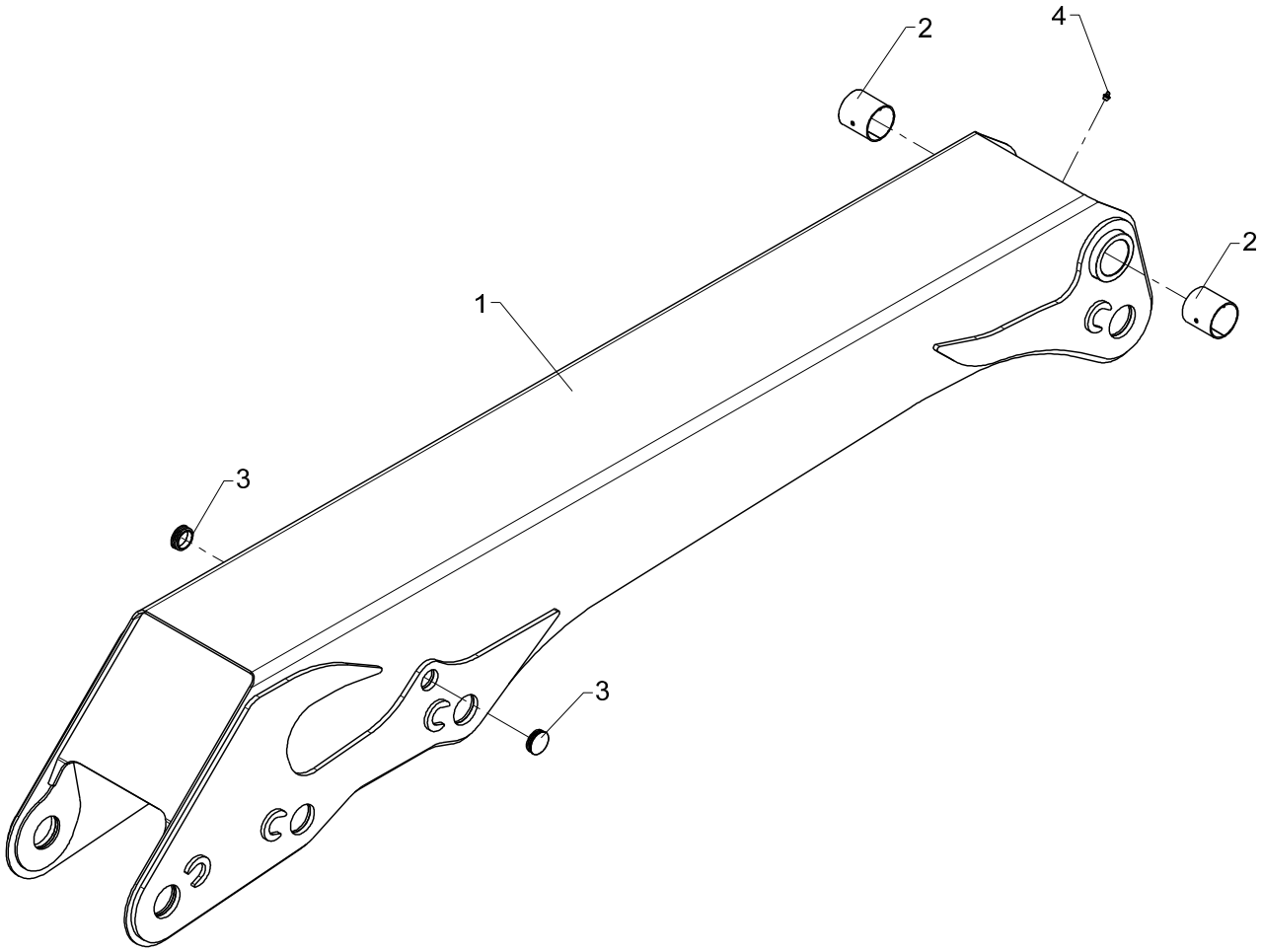
2
4
2
1
3
3

535 01 400 A

From loader 1070137
To loader

Created 19-07-2010
Modified

Main boom, cpl. for link arm system, boom

Pos	Qty.	Part no.	Description	Remarks
1	1	6344230	Main boom, painted	6344181
2	2	23418	Bushing	PM 6570 DX
3	2	64381	Ferrule	
4	1	31318	Lubricator	1/8" RG

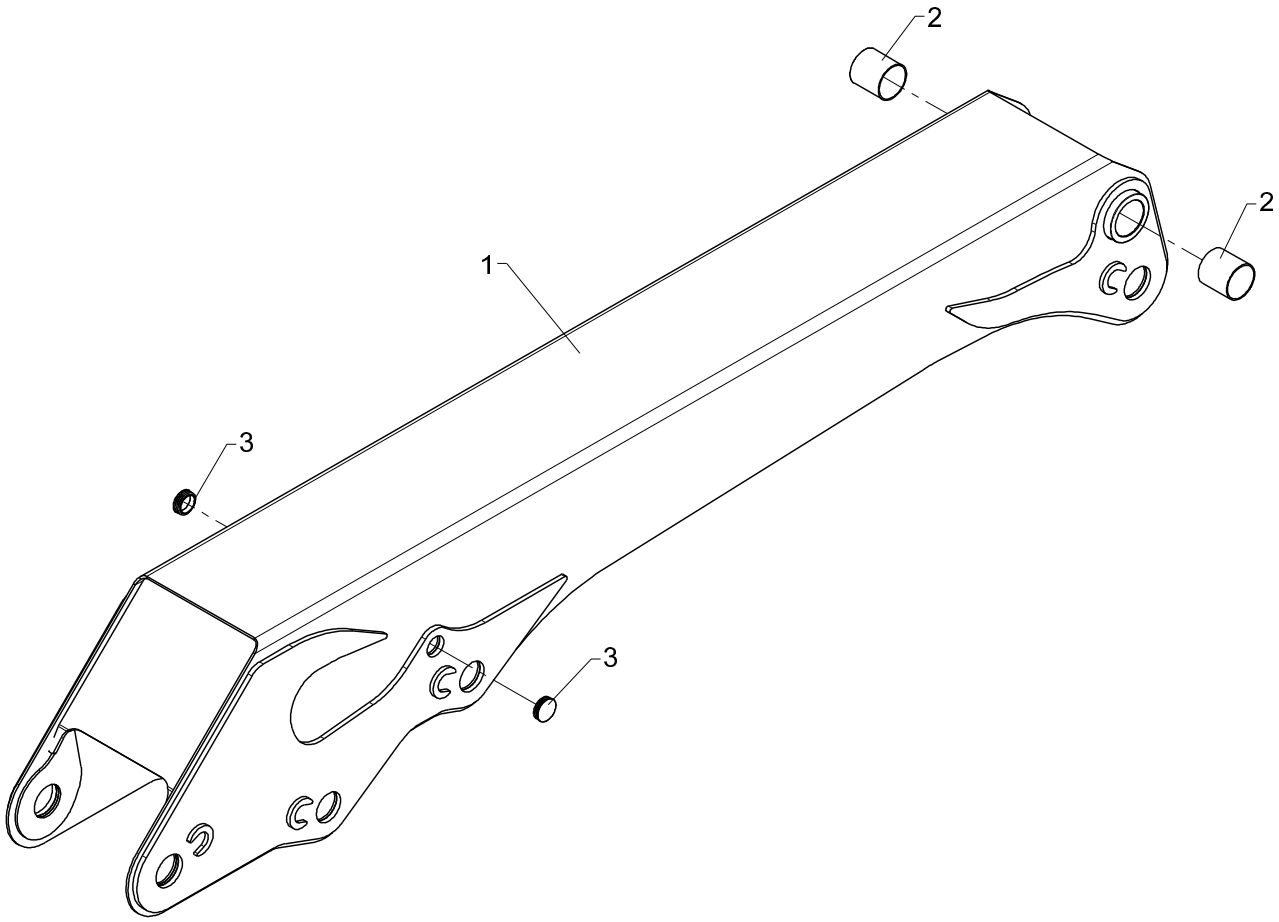
2
2
1
3
3

Obsolete

Main boom, cpl., no link arm system, boom

535 01 420

From loader 1070001
To loader 1070136

Created 12-12-2008
Modified

Pos	Qty.	Part no.	Description	Remarks
1	1	6344240	Main boom, painted	6344191
2	2	23411	Composite bearing	ø65/70 x 70
3	2	64381	Ferrule	

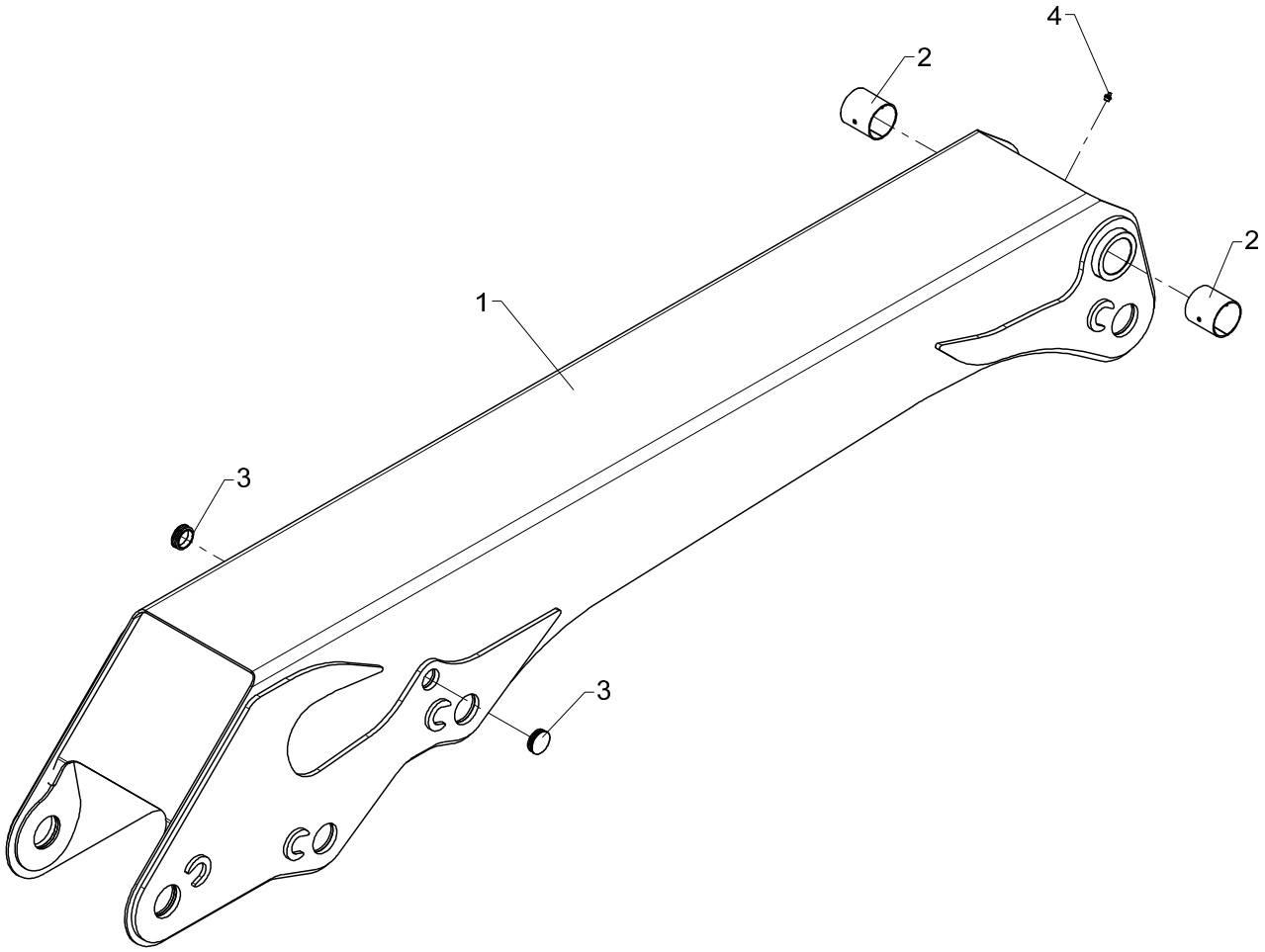
4
2
2
1
3
3

Main boom, cpl., no link arm system, boom

Pos	Qty.	Part no.	Description	Remarks
1	1	6344240	Main boom, painted	6344191
2	2	23418	Bushing	PM 6570 DX
3	2	64381	Ferrule	
4	1	31318	Lubricator	1/8" RG

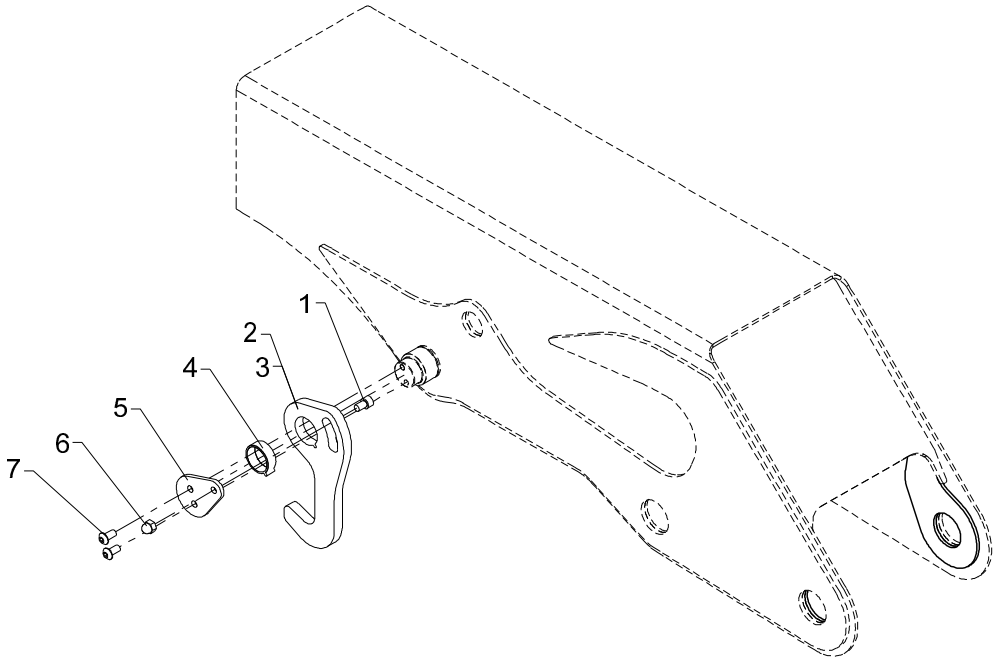
1
2
3
4
5
6
7

Obsolete

Stowing hook, complete

535 01 450

From loader 1070001
To loader

Created 11-11-2008
Modified 10-09-2013

Pos	Qty.	Part no.	Description	Remarks
		6340210	Stowing hook	
		6342210	Stowing hook, cpl. (+FJ)	
1	1	30964	Screw	MC10 x 16
2	1	6340208	Stowing hook	
3	1	6340948	Stowing hook (loader + FJ)	
4	1	63565	Bearing	
5	1	6340209	End plate	
6	1	30902	Nut	M10
7	2	30926	Steel bolt	M10 x 20

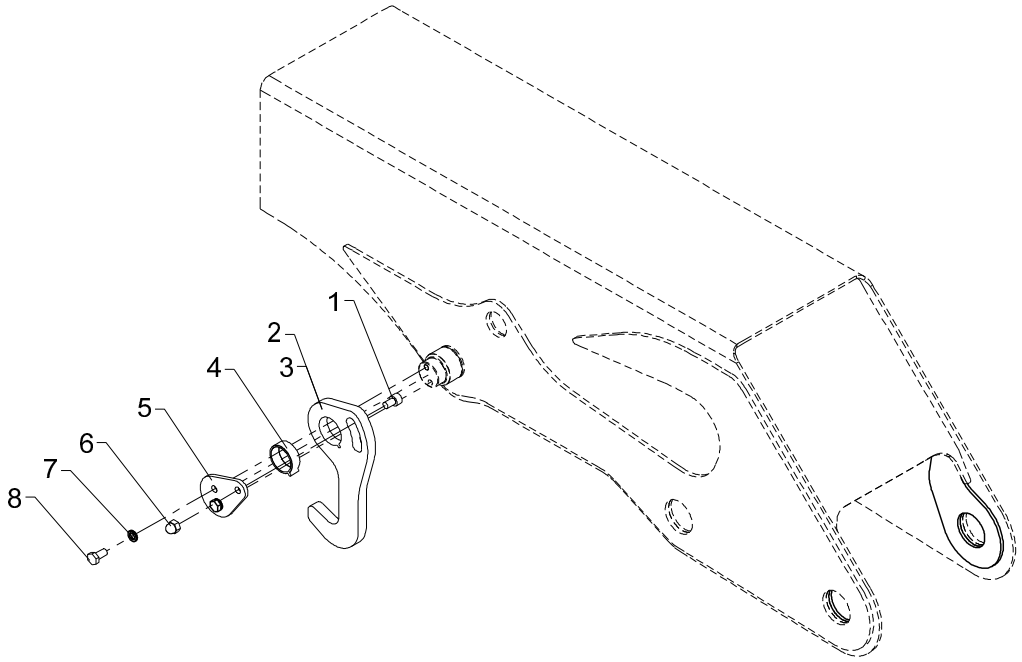
1
2
3
4
5
6
7
8

Stowing hook, complete

Pos	Qty.	Part no.	Description	Remarks
		6340210	Stowing hook	
		6342210	Stowing hook, cpl. (+FJ)	
1	1	30964	Screw	MC10 x 16
2	1	6340208	Stowing hook	
3	1	6340948	Stowing hook (loader + FJ)	
4	1	63565	Bearing	
5	1	6340209	End plate	
6	1	30902	Nut	M10
7	2	30933	Nordlock washer	
8	2	31517	Set screw, stainless	M10 x 20

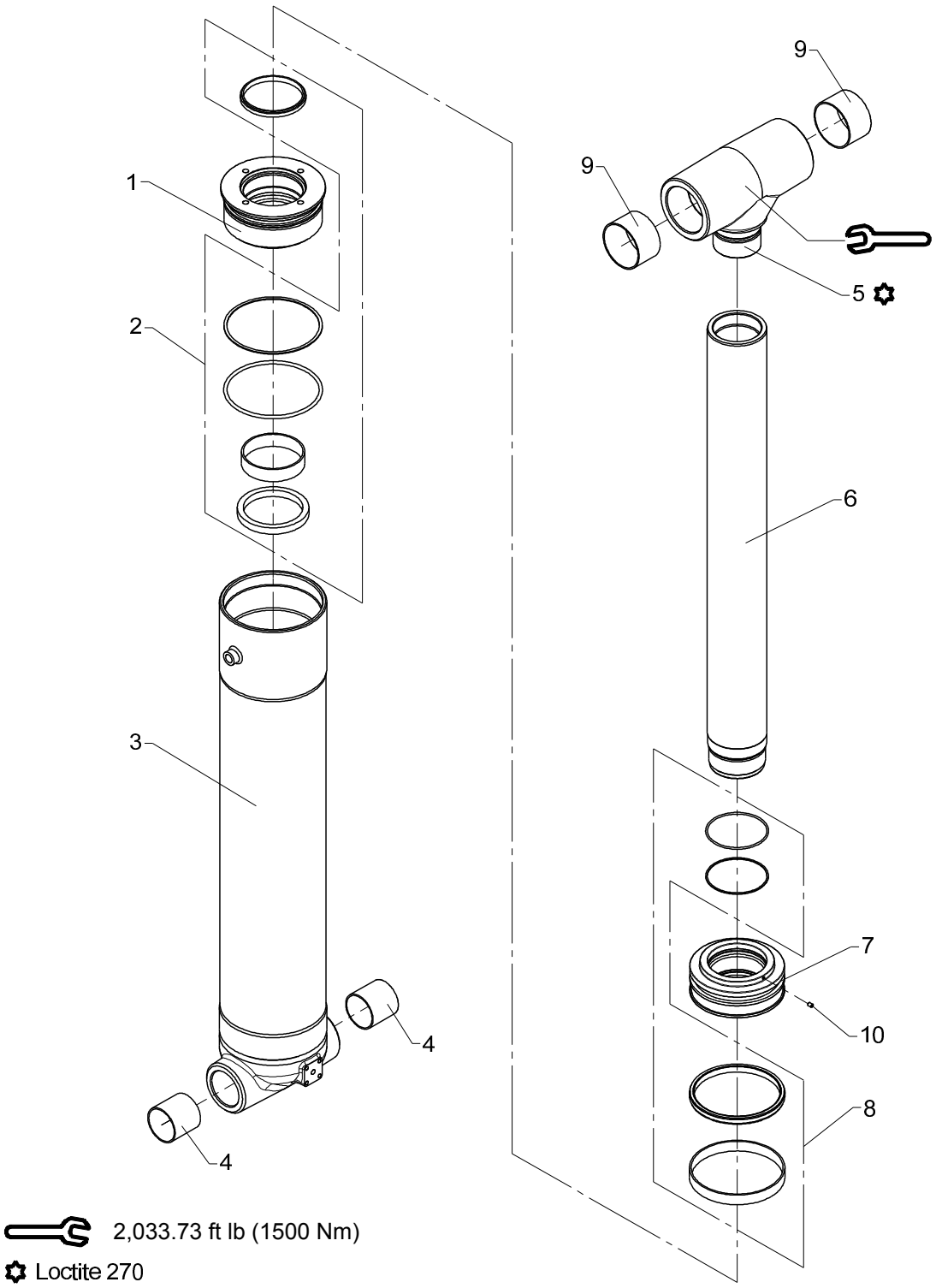
1
2
3
4
4
9
9
5
6
7
10
8
2,033.73 ft lb (1500 Nm)
Loctite 270

Obsolete

Boom cylinder C160 x 750 (1800K, 2020K)

535 01 480

From loader 1070001
To loader 1070136

Created 06-01-2009
Modified 25-02-2009

Pos	Qty.	Part no.	Description	Remarks
1	1	6344146	Guide	
2	1	6894080	Seal kit	
3	1	6344141	Cylinder tube	
4	2	23431	Composite bearing	ø60/65 x 60
5	1	6344147	Piston rod head	
6	1	6344144	Piston rod	
7	1	6344145	Piston	
8	1	6894030	Seal kit	
9	2	23414	Composite bearing	ø80/85 x 50
10	1	30903	Screw	MSP6 x 8

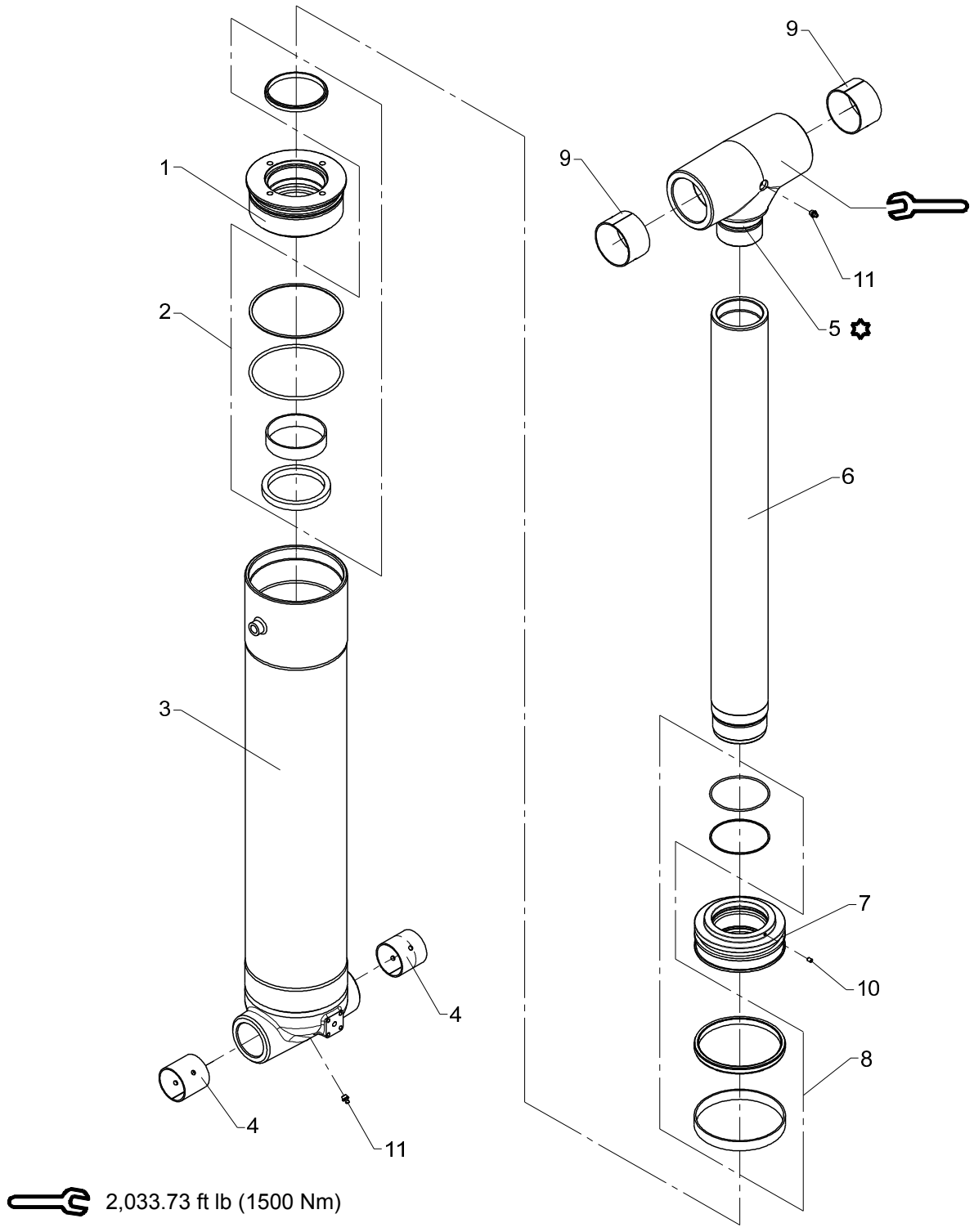

2,033.73 ft lb (1500 Nm)

Loctite 270

Boom cylinder C160 x 750 (1800K, 2020K)

Pos	Qty.	Part no.	Description	Remarks
1	1	6344146	Guide	
2	1	6894080	Seal kit	
3	1	6344141	Cylinder tube	
4	2	23330	Bushing	PM 6060 DX
5	1	6344147	Piston rod head	
6	1	6344144	Piston rod	
7	1	6344145	Piston	
8	1	6894030	Seal kit	
9	2	23421	Bushing	PM 8050 DX
10	1	30903	Screw	MSP6 x 8
11	2	31318	Lubricator	1/8" RG

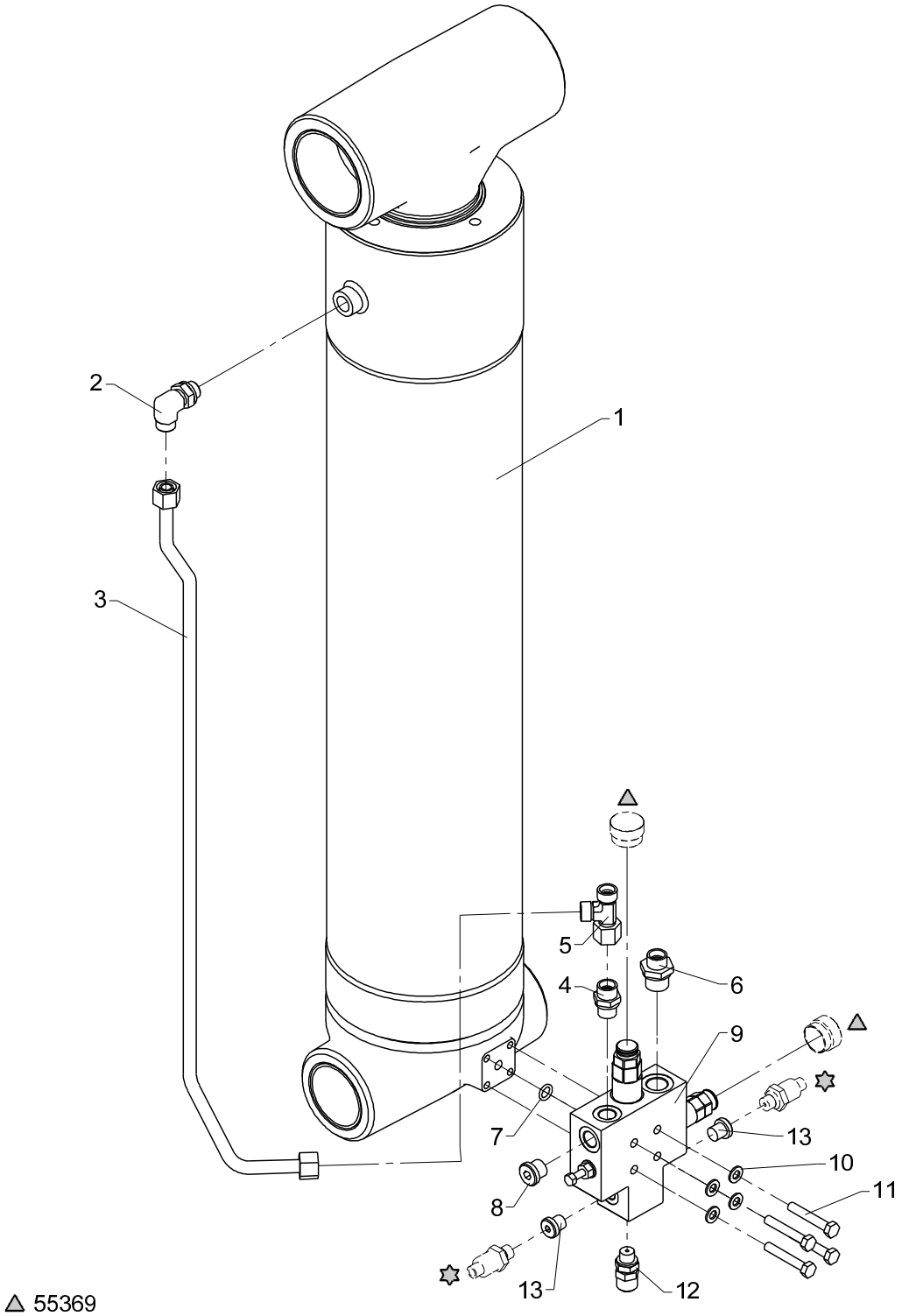

△ 55369
✡ 28850

Boom cylinder C160 x 750 with LHV (1800K, 2020K)

Pos	Qty.	Part no.	Description	Remarks
1	1	6344140	Boom cylinder	
2	1	26897	Elbow connection	12 mm - 3/8"
3	1	6344148	Pipe, boom retract	
4	1	25127	Connection	P-GEV 12 LR-WD
5	1	25270	Connection	ELSD 12 L
6	1	25108	Connection	GES 12 LR 1/2-WD
7	1	20138	O-ring	OR 10,77 x 2,62
8	1	25277	Plug	VS-R-3/8 WD
9	1	55227	Valve	
10	4	31147	Face washer, 8 mm	8 mm
11	4	30139	Steel bolt, stainless	M8 x 50
12	1	26103	Pressure-gauge connect.	
13	2	25197	Plug	VS-R-1/4 WD

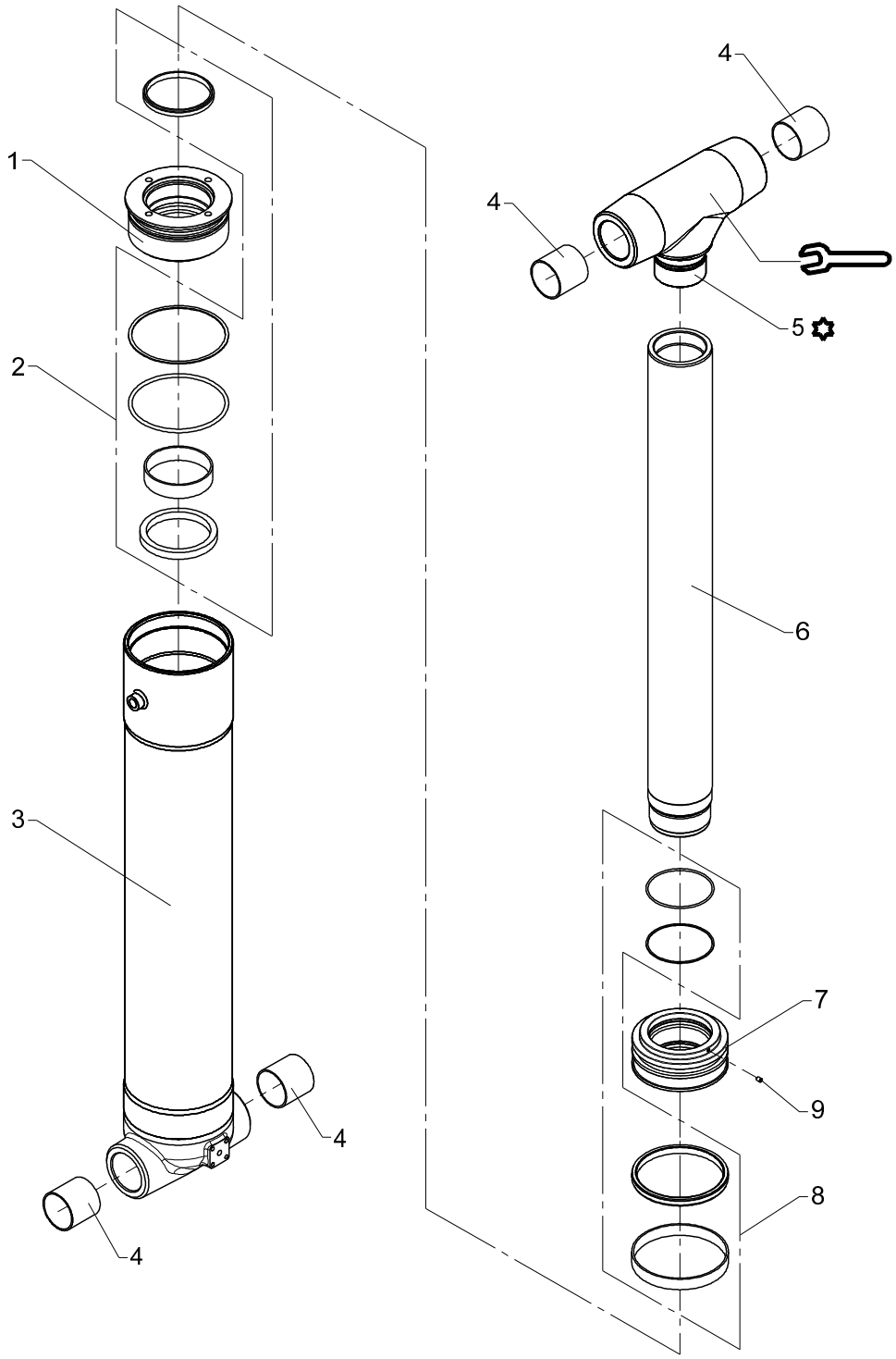

2,033.73 ft lb (1500 Nm)

Loctite 570

Obsolete

Boom cylinder C150 x 755 (1810K, 2030K)

535 01 500

From loader 1070001
To loader 1070136

Created 03-03-2006
Modified

Pos	Qty.	Part no.	Description	Remarks
1	1	6342146	Guide	
2	1	6894070	Seal kit	
3	1	6344195	Cylinder tube	
4	4	23431	Composite bearing	ø60/65 x 60
5	1	6344199	Piston rod head	
6	1	6344198	Piston rod	
7	1	6342145	Piston	
8	1	6894020	Seal kit	
9	1	30903	Screw	MSP6 x 8

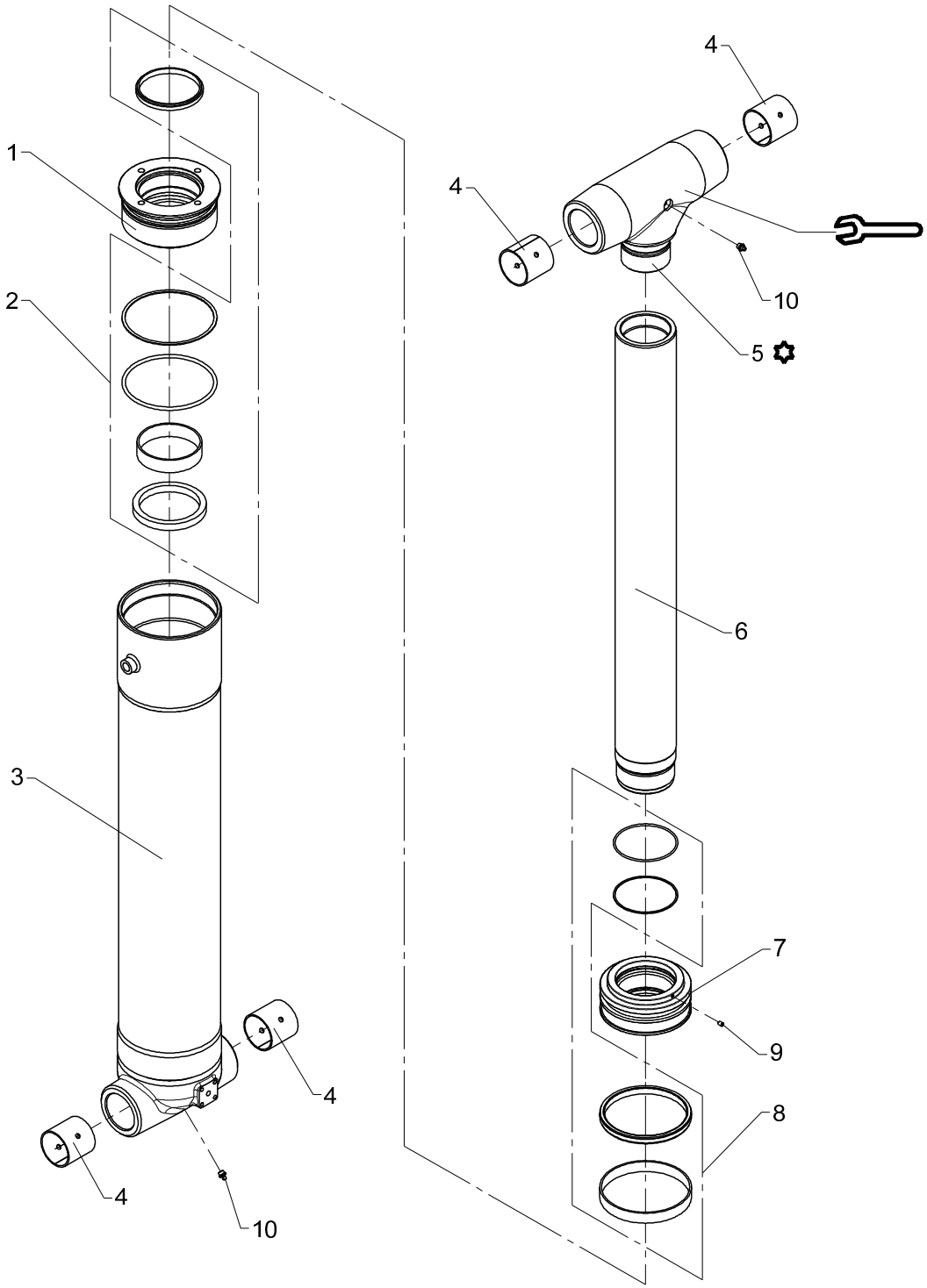

2,033.73 ft lb (1500 Nm)

Loctite 570

Boom cylinder C150 x 755 (1810K, 2030K)

Pos	Qty.	Part no.	Description	Remarks
1	1	6342146	Guide	
2	1	6894070	Seal kit	
3	1	6344195	Cylinder tube	
4	4	23330	Bushing	PM 6060 DX
5	1	6344199	Piston rod head	
6	1	6344198	Piston rod	
7	1	6342145	Piston	
8	1	6894020	Seal kit	
9	1	30903	Screw	MSP6 x 8
10	2	31318	Lubricator	1/8" RG

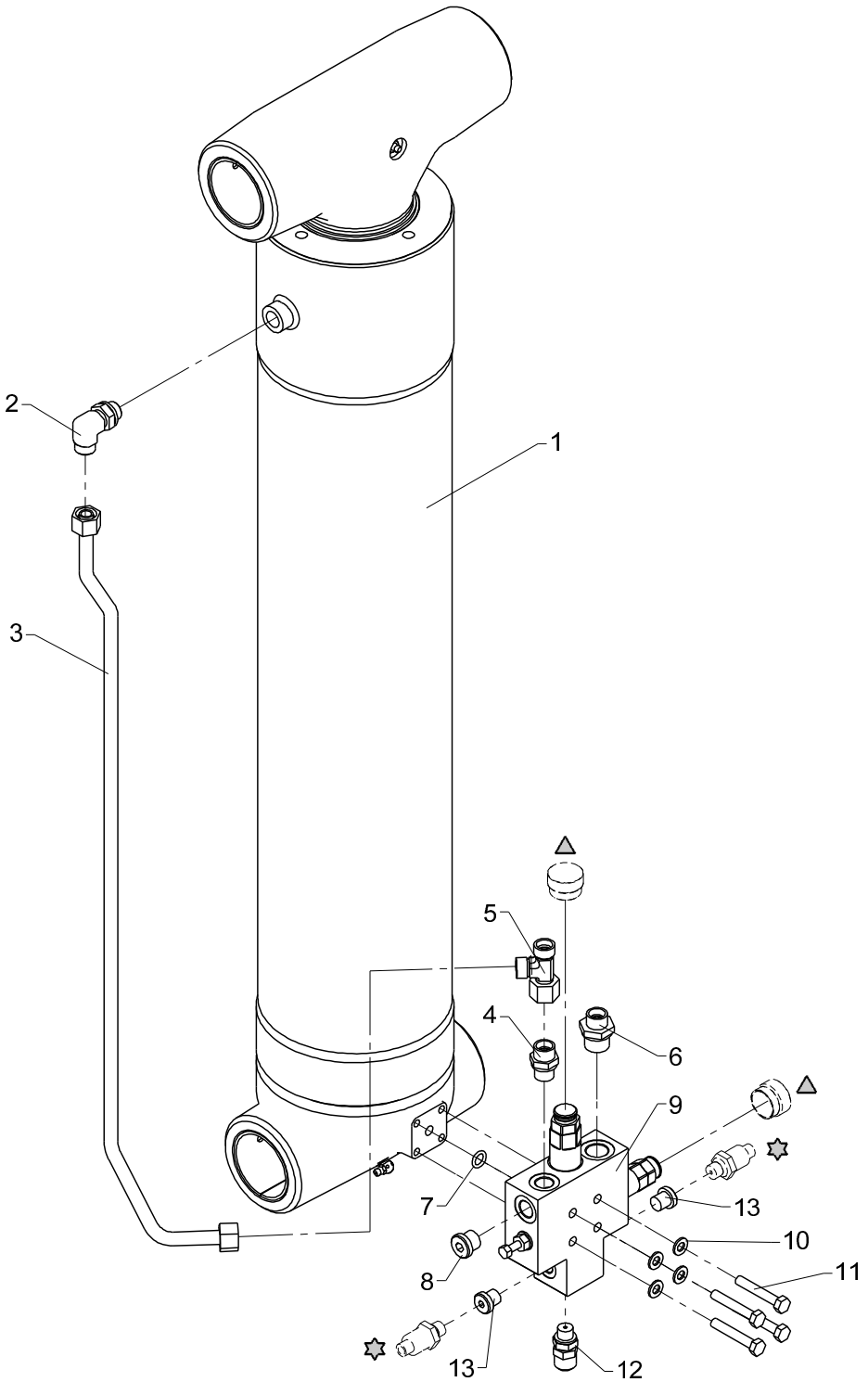

△ 55369
✡ 28850

From loader 1070001
To loader

Created 06-01-2009
Modified

Boom cylinder C150 x 755 with LHV (1810K, 2030K)

Pos	Qty.	Part no.	Description	Remarks
1	1	6344200	Boom cylinder	
2	1	26897	Elbow connection	12 mm - 3/8"
3	1	6344176	Pipe, boom retract	
4	1	25127	Connection	P-GEV 12 LR-WD
5	1	25270	Connection	ELSD 12 L
6	1	25108	Connection	GES 12 LR 1/2-WD
7	1	20138	O-ring	OR 10,77 x 2,62
8	1	25277	Plug	VS-R-3/8 WD
9	1	55227	Valve	
10	4	31147	Face washer, 8 mm	8 mm
11	3	30139	Steel bolt, stainless	M8 x 50
12	1	26103	Pressure-gauge connect.	
13	2	25197	Plug	VS-R-1/4 WD

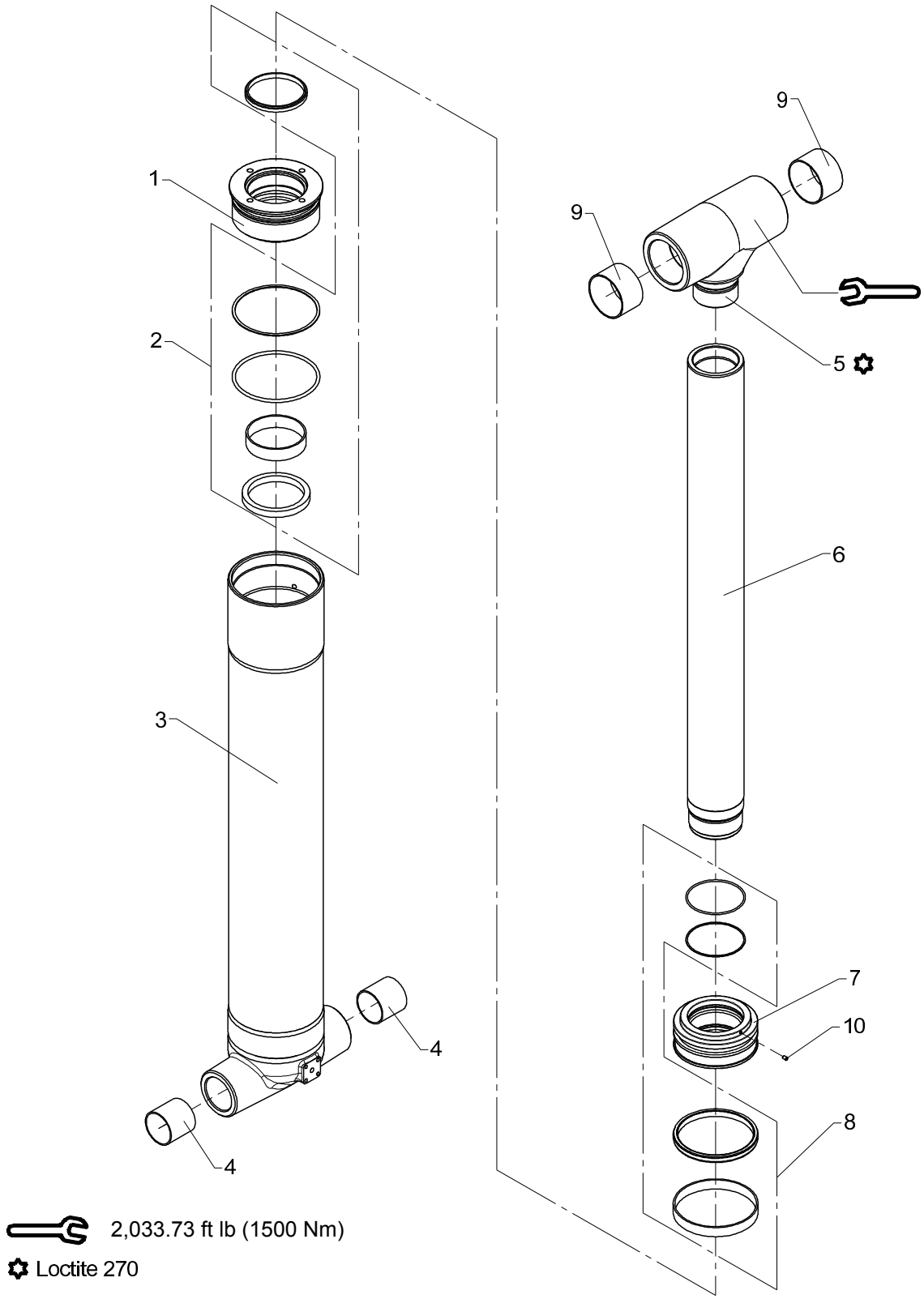
1
2
3
4
4
9
9
5
6
7
10
8
2,033.73 ft lb (1500 Nm)
Loctite 270

Obsolete

Jib cylinder C150 x 852.5

535 01 600

From loader 1070001
To loader 1070136

Created 06-01-2009
Modified

Pos	Qty.	Part no.	Description	Remarks
1	1	6342146	Guide	
2	1	6894070	Seal kit	
3	1	6344151	Cylinder tube	
4	2	23431	Composite bearing	ø60/65 x 60
5	1	6344147	Piston rod head	
6	1	6344154	Piston rod	
7	1	6342145	Piston	
8	1	6894020	Seal kit	
9	2	23414	Composite bearing	ø80/85 x 50
10	1	30903	Screw	MSP6 x 8

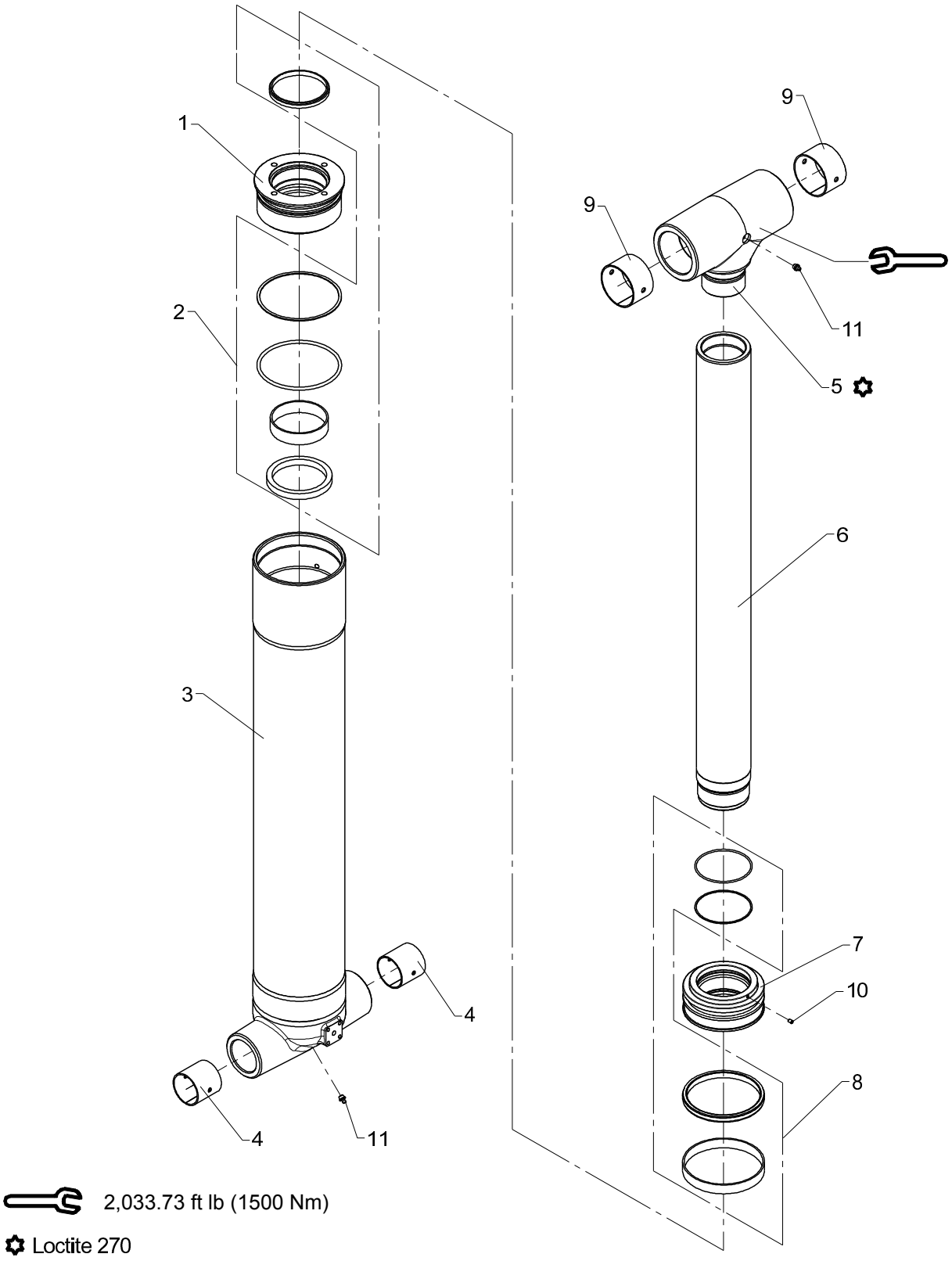

2,033.73 ft lb (1500 Nm)

Loctite 270

Jib cylinder C150 x 852.5

535 01 600 A

From loader 1070137
To loader

Created 19-07-2010
Modified 14-09-2010

Pos	Qty.	Part no.	Description	Remarks
1	1	6342146	Guide	
2	1	6894070	Seal kit	
3	1	6344151	Cylinder tube	
4	2	23330	Bushing	PM 6060 DX
5	1	6344147	Piston rod head	
6	1	6344154	Piston rod	
7	1	6342145	Piston	
8	1	6894020	Seal kit	
9	2	23421	Bushing	PM 8050 DX
10	1	30903	Screw	MSP6 x 8
11	2	31318	Lubricator	1/8" RG

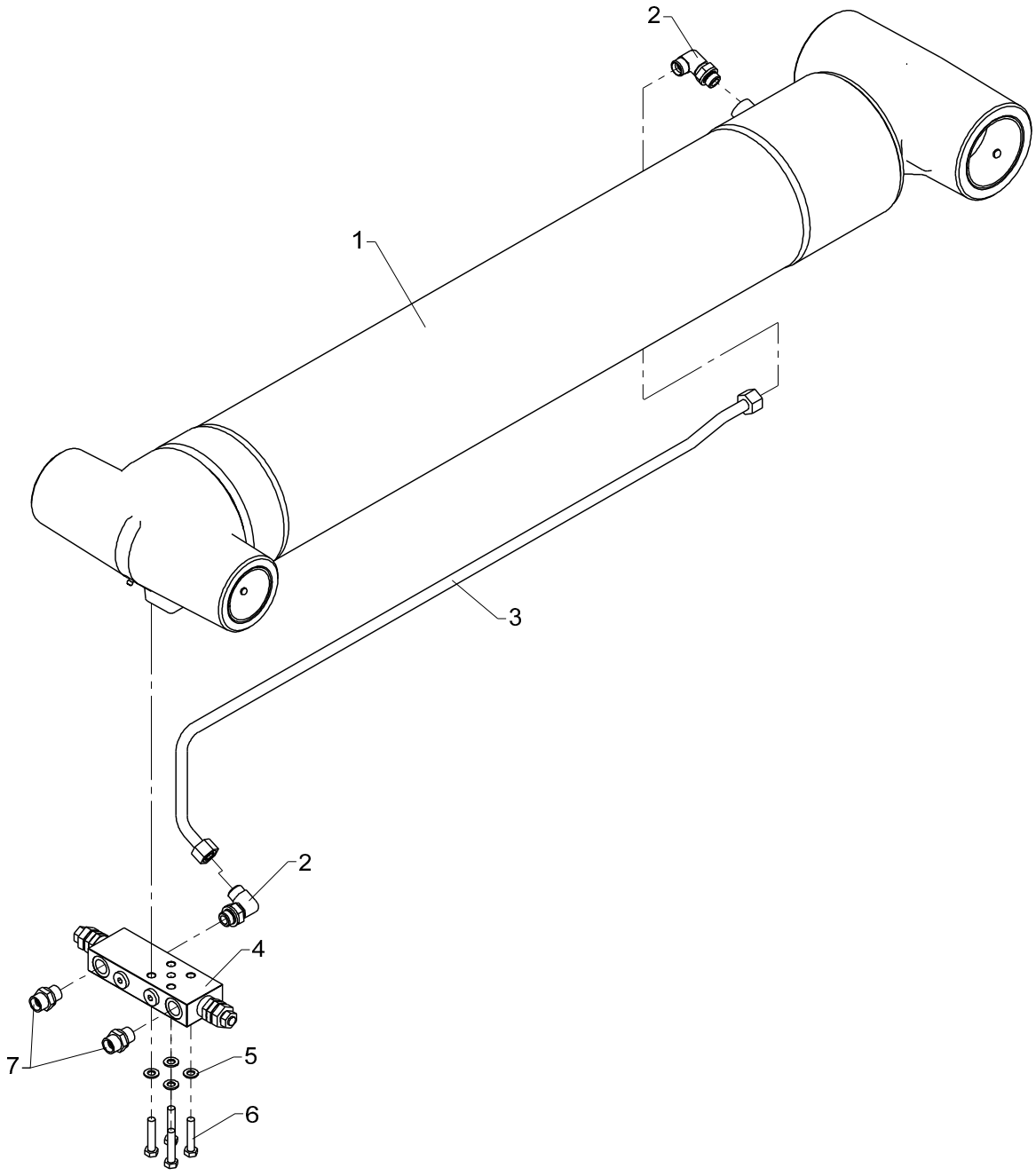
2
1
3
2
4
7
5
6

Jib cylinder with LHV

Pos	Qty.	Part no.	Description	Remarks
1	1	6344150	Jib cylinder	
2	2	26897	Elbow connection	12 mm - 3/8"
3	1	6344158	Pipe	
4	1	59027	Load-holding valve	
5	4	31147	Face washer, 8 mm	
6	4	30137	Set screw, stainless	M8 x 40
7	2	25127	Connection	P-GEV 12 LR-WD

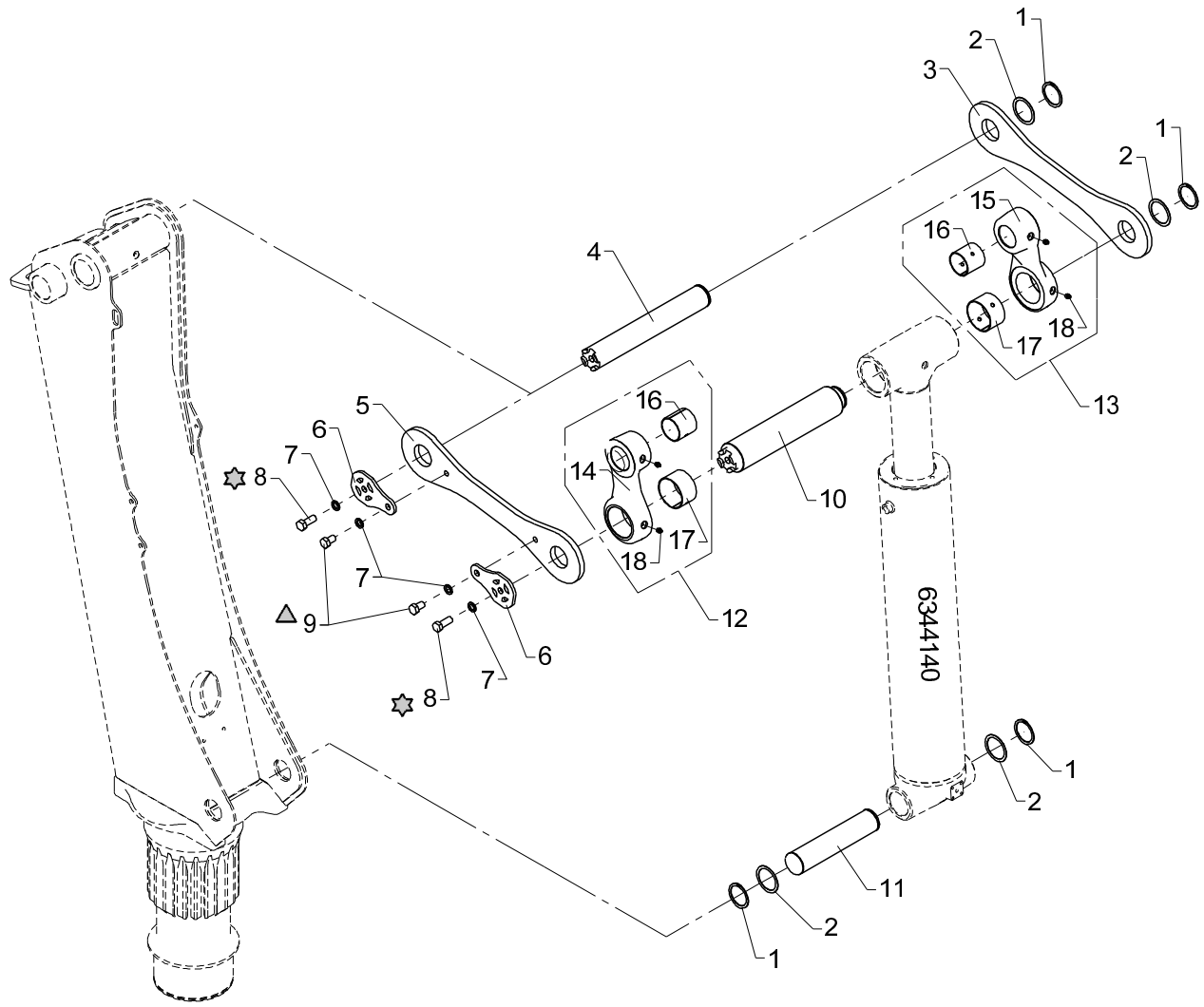

311.84 ft lb (230 Nm)

230.49 ft lb (170 Nm)

Link arm system, boom

Pos	Qty.	Part no.	Description	Remarks
1	4	33135	Circlip	60U
2	4	33266	Washer	PS 60 x 75 x 1,0
3	1	6344164	Link arm, left	
4	1	6344165	Pin	
5	1	6344163	Link arm, right	
6	2	6340179	Lock plate	
7	4	31098	Washer, 16 mm	16 mm
8	2	30222	Set screw	M16 x 40
9	2	30266	Set screw	M16 x 25
10	1	6344166	Pin	
11	1	6344149	Pin	
12	1	6344160	Push rod, right	
13	1	6344660	Push rod, left	
14	1	6344161	Push rod, right	
15	1	6344162	Push rod, left	
16	2	23330	Bushing	PM 6060 DX
17	2	23421	Bushing	PM 8050 DX
18	4	31318	Lubricator	1/8" RG

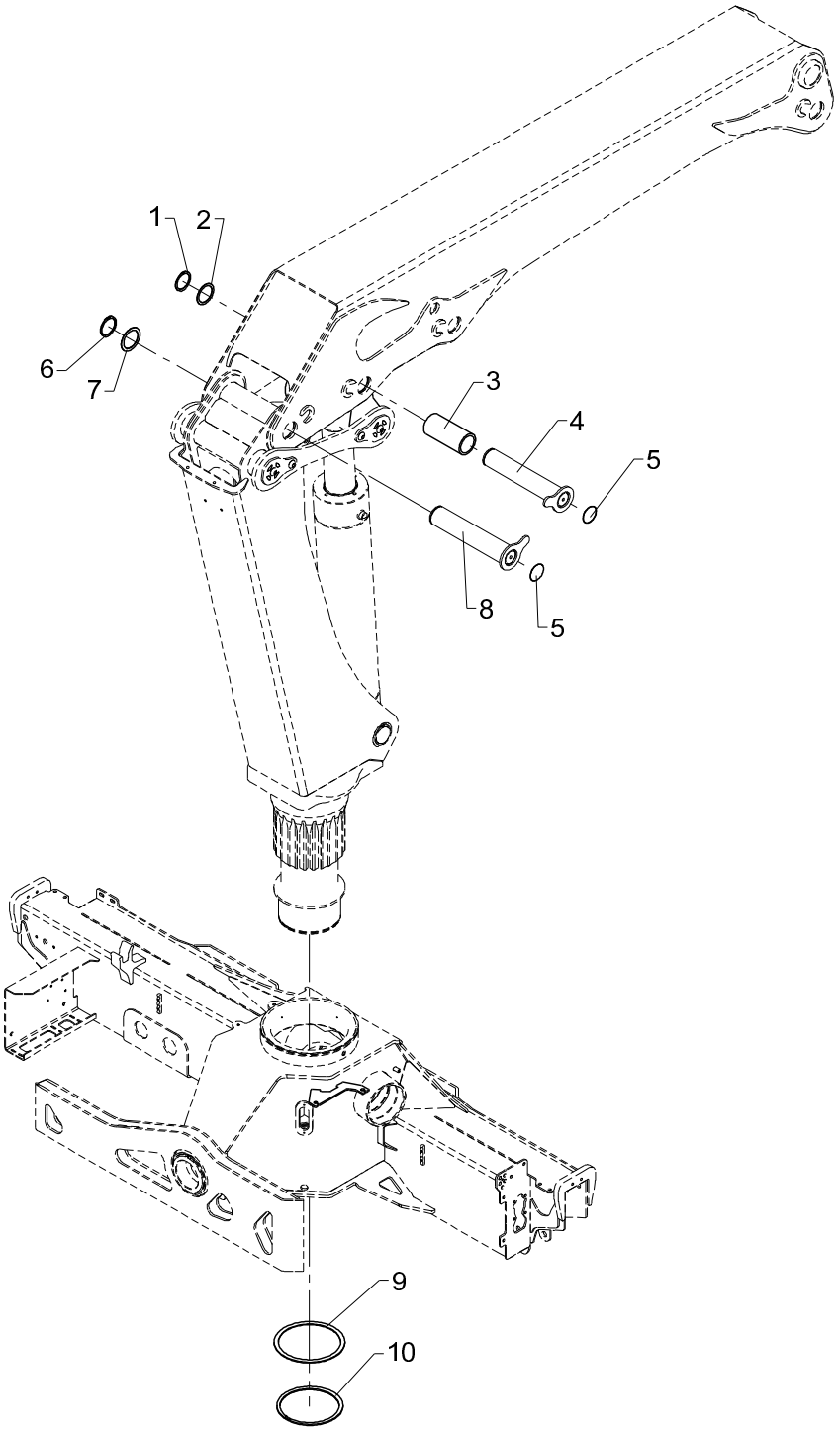
1
2
6
7
3
4
5
8
5
9
10

Mounting fittings, basic loader incl. link arm system

Pos	Qty.	Part no.	Description	Remarks
1	1	33135	Circlip	60U
2	1	33266	Washer	PS 60 x 75 x 1,0
3	1	63481	Distance pipe	
4	1	6344208	Pin	
5	2	63473	Plug	
6	1	33137	Circlip	65U
7	1	33278	Washer	PS 65 x 85 x 1,0
8	1	6344201	Pin	
9	1	6344049	Supporting washer	
10	1	33274	Circlip	200U

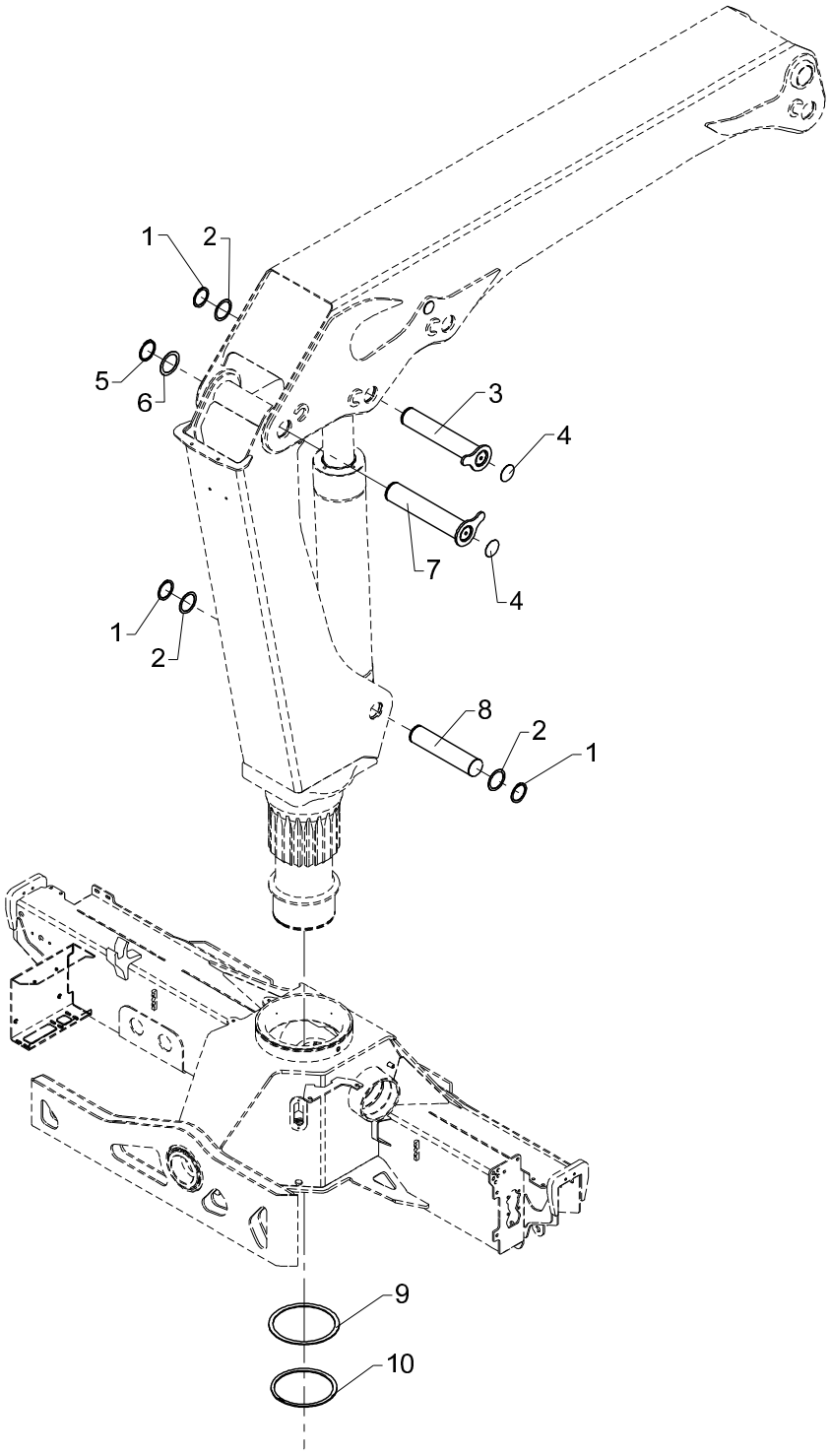
1
2
5
6
3
4
7
4
1
2
8
2
1
9
10

Mounting fittings, basic loader excl. link arm system

Pos	Qty.	Part no.	Description	Remarks
1	3	33135	Circlip	60U
2	3	33266	Washer	PS 60 x 75 x 1,0
3	1	6344208	Pin	
4	2	63473	Plug	
5	1	33137	Circlip	65U
6	1	33278	Washer	PS 65 x 85 x 1,0
7	1	6344201	Pin	
8	1	6344149	Pin	
9	1	6344049	Supporting washer	
10	1	33274	Circlip	200U

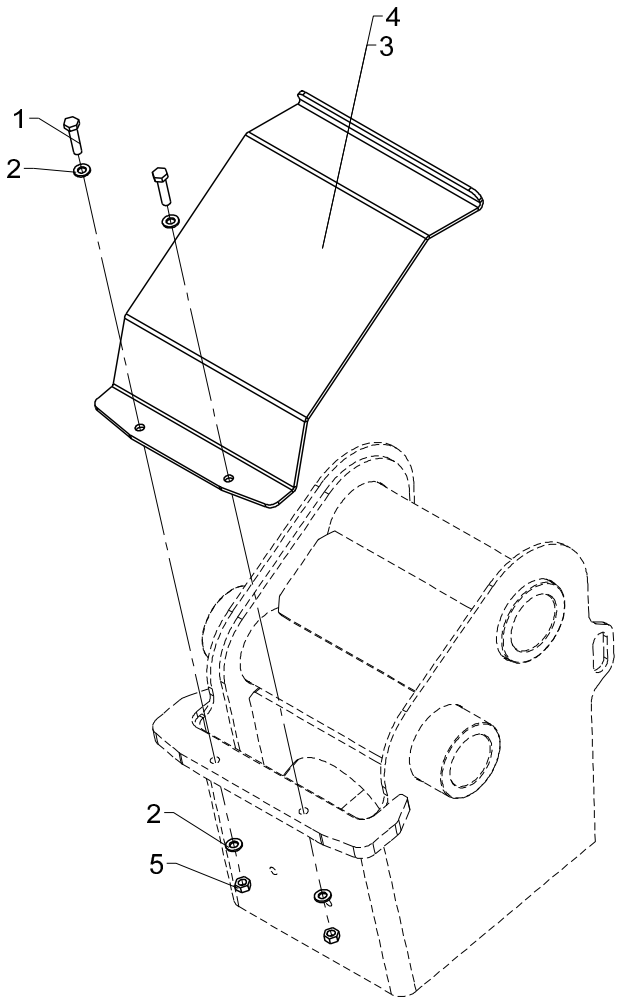
4
3
1
2
2
5

535 01 760

From loader 1070001
To loader

Created 16-12-2008
Modified 09-09-2011

Hose shield, cpl.

Pos	Qty.	Part no.	Description	Remarks
		6343220	Protective plate	
		6343240	Protective plate	
1	2	30136	Steel bolt, stainless	M8 x 35
2	4	31147	Face washer, 8 mm	8 mm
3	1	6344089	Hose shield	1800K/2020K/2200K/2420K
4	1	6344079	Hose shield	1810K/2030K/2210K/2430K/1910T
5	2	30856	Nut, stainless	M8

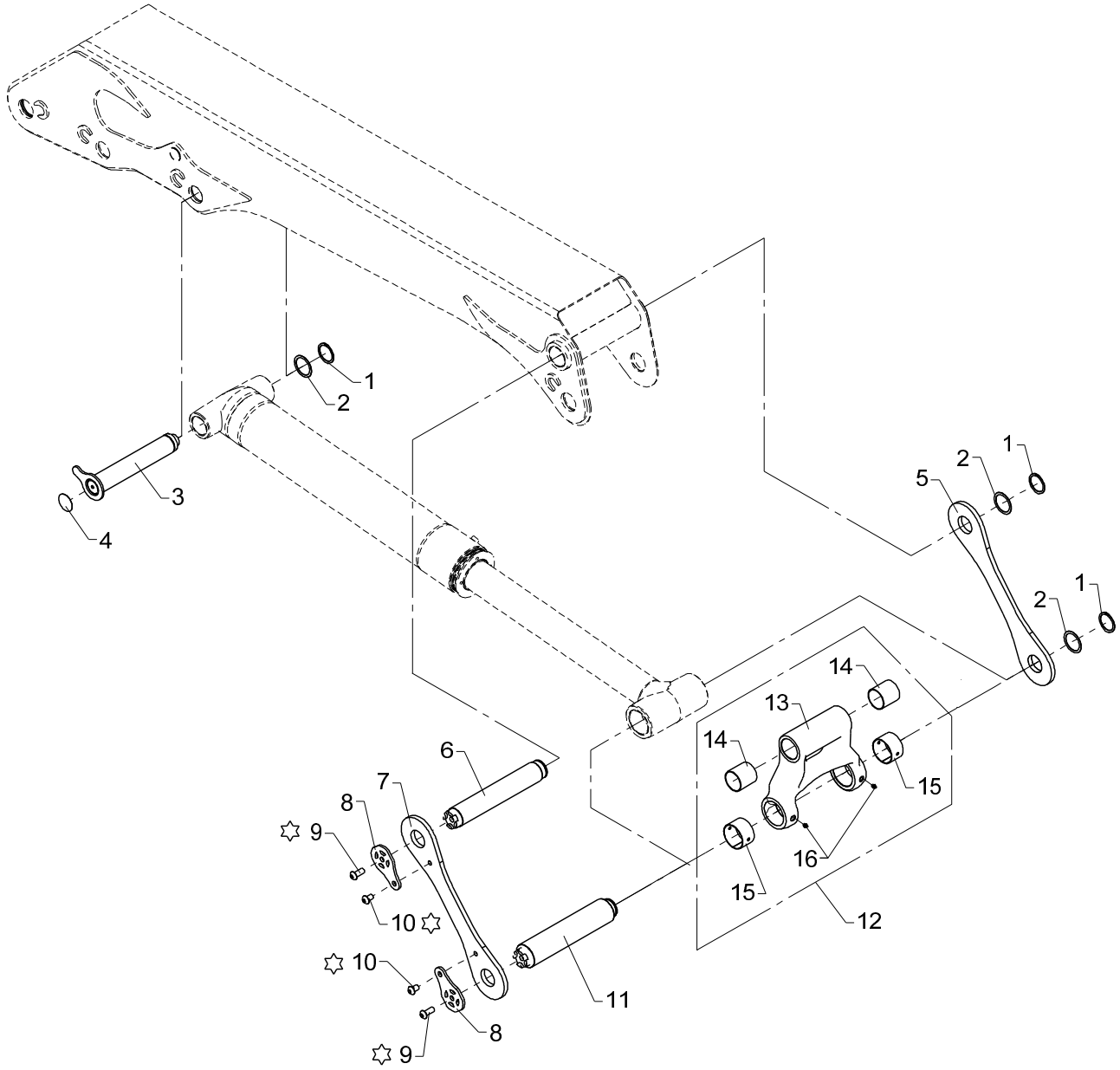

☆ Loctite 243

Obsolete

Link arm system, jib

535 01 800

From loader 1070001
To loader 1070136

Created 06-01-2009
Modified

Pos	Qty.	Part no.	Description	Remarks
1	3	33135	Circlip	60U
2	3	33266	Washer	PS 60 x 75 x 1,0
3	1	6344204	Pin	
4	1	63473	Plug	
5	1	6344164	Link arm, left	
6	1	6344167	Pin	
7	1	6344163	Link arm, right	
8	2	6340179	Lock plate	
9	2	32371	Screw	M16 x 40
10	2	32370	Screw	M16 x 25
11	1	6344166	Pin	
12	1	6344170	Push rod	
13	1	6344171	Push rod	
14	2	23411	Composite bearing	ø65/70 x 70
15	2	23421	Bushing	PM 8050 DX
16	2	31318	Lubricator	1/8" RG

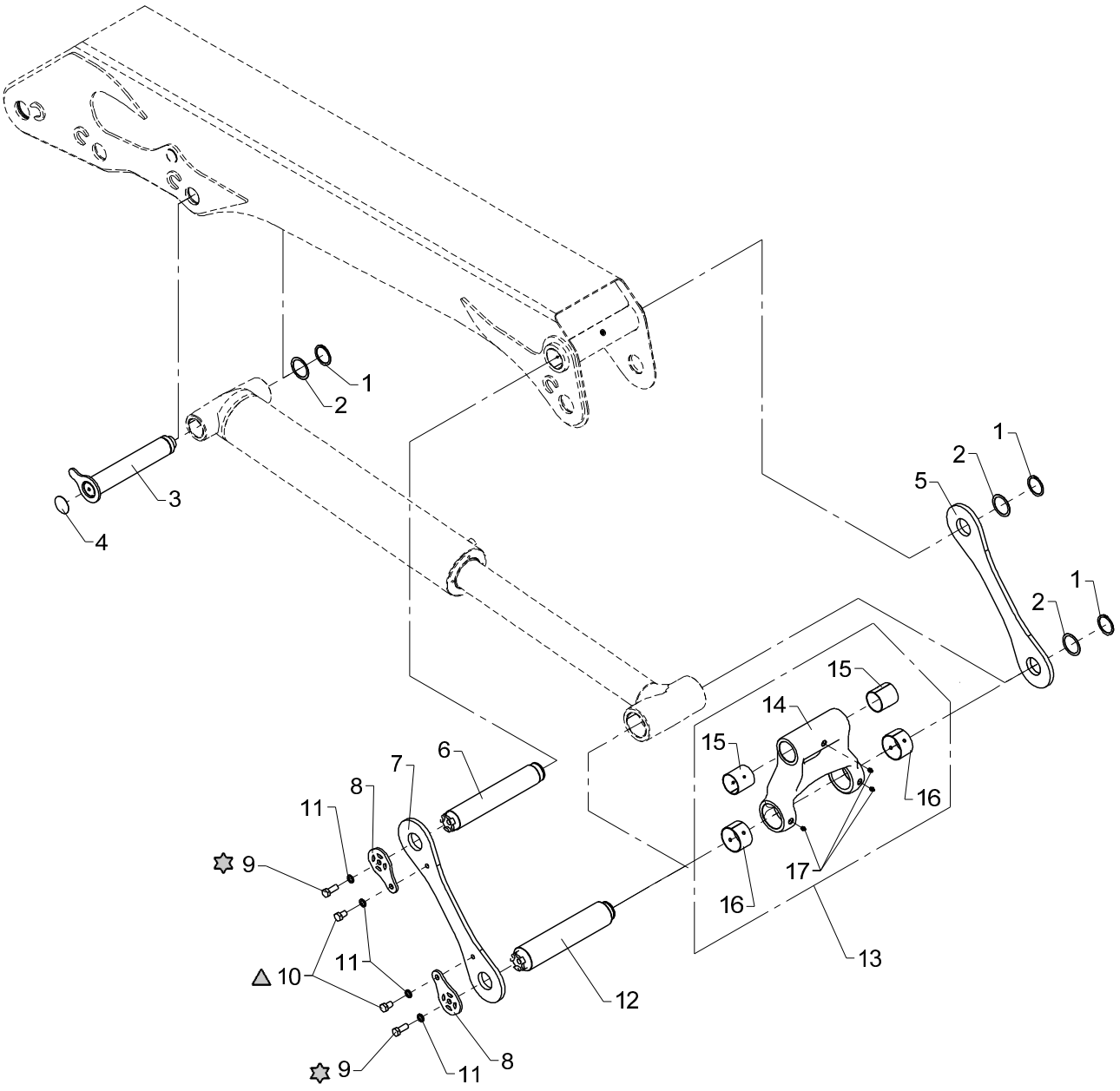

311.84 ft lb (230 Nm)

230.49 ft lb (170 Nm)

Link arm system, jib

Pos	Qty.	Part no.	Description	Remarks
1	3	33135	Circlip	60U
2	3	33266	Washer	PS 60 x 75 x 1,0
3	1	6344204	Pin	
4	1	63473	Plug	
5	1	6344164	Link arm, left	
6	1	6344167	Pin	
7	1	6344163	Link arm, right	
8	2	6340179	Lock plate	
9	2	30222	Set screw	M16 x 40
10	2	30266	Set screw	M16 x 25
11	4	31098	Washer, 16 mm	16 mm
12	1	6344166	Pin	
13	1	6344170	Push rod	
14	1	6344171	Push rod	
15	2	23418	Bushing	PM 6570 DX
16	2	23421	Bushing	PM 8050 DX
17	3	31318	Lubricator	1/8" RG

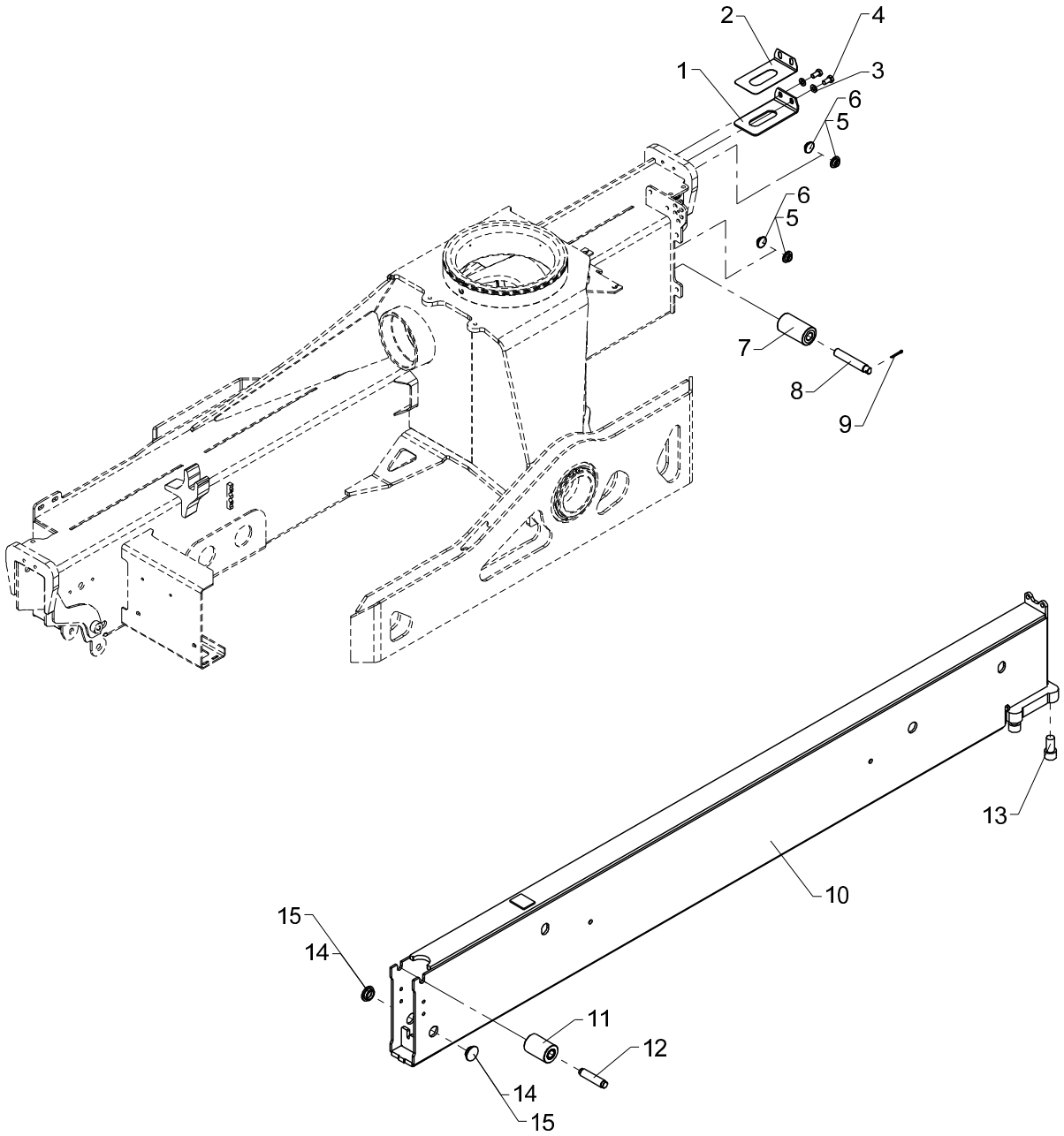
2
4
1
3
6
5
6
5
7
8
9
13
10
15
14
11
12
14
15

Obsolete

Stabilizer beam, type SV - 5570

535 02 010

From loader 1070001
To loader 1070090

Created 17-11-2008
Modified

Pos	Qty.	Part no.	Description	Remarks
1	1	6306156	Spacer	
2	1	6306722	Adjusting plate	
3	2	31565	Washer, stainless	10 mm
4	2	31517	Set screw, stainless	M10 x 20
5	4	63429	Guide	ø30 x 3 mm
6	4	63430	Guide	ø30 x 2 mm
7	1	63553	Guide roller	
8	1	6344048	Pin for guide roller	
9	1	31615	Split pin	ø4 x 32
10	1	6344121	Stabilizer beam (SV5570)	
11	1	63427	Guide roller	
12	1	6306167	Pin for guide roller	
13	4	30495	Screw	MC20 x 40
14	2	63681	Slide block	3 mm
15	2	64424	Slide block	3 mm

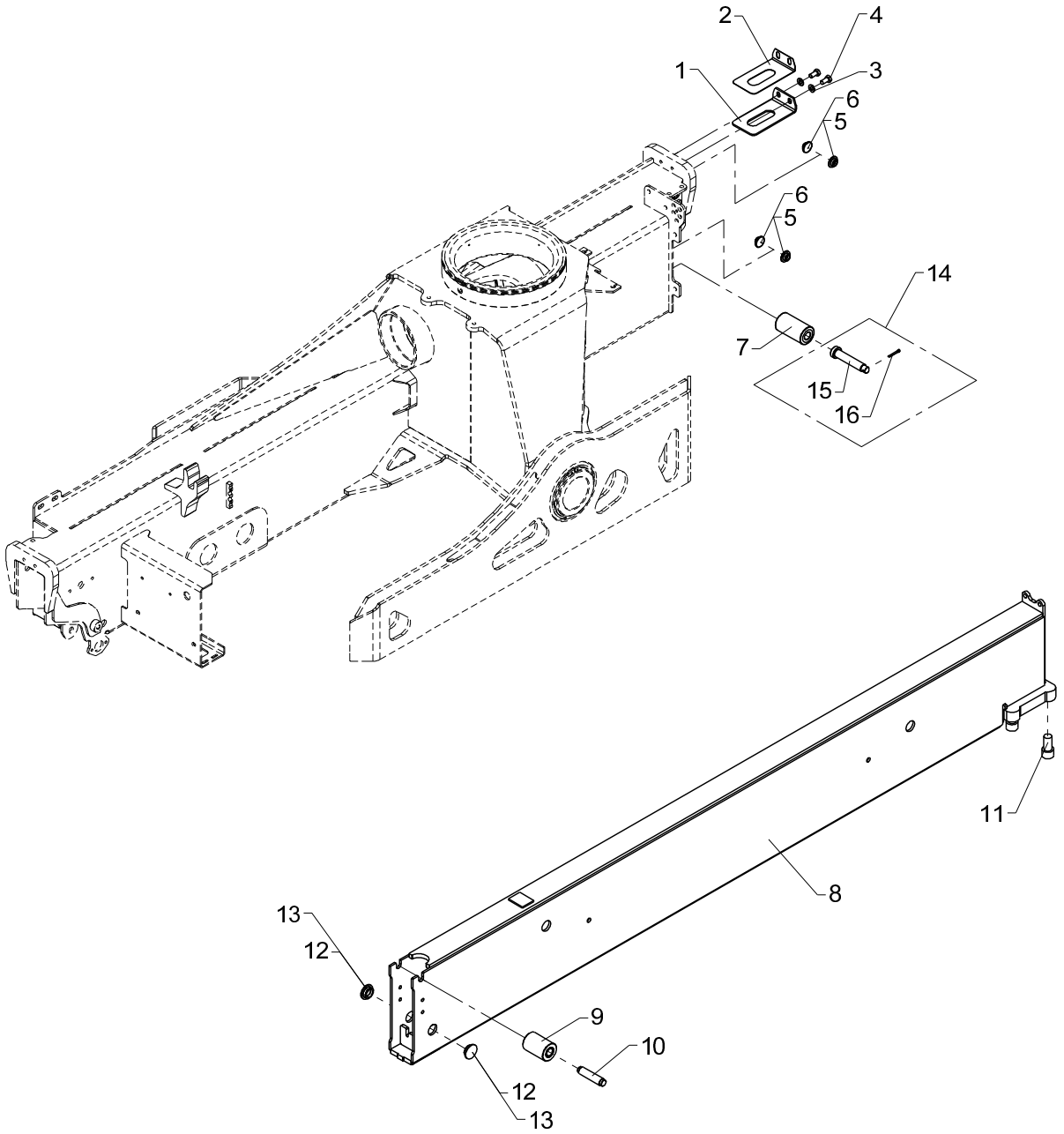
2
4
1
3
6
5
6
5
14
7
15
16
11
8
13
12
9
10
12
13

Stabilizer beam, type SV - 5570

Pos	Qty.	Part no.	Description	Remarks
		6345100	Stabilizer beam, type SV	
		6346030	No detection, legs down	
1	1	6306156	Spacer	
2	1	6306722	Adjusting plate	
3	2	31565	Washer, stainless	10 mm
4	2	31517	Set screw, stainless	M10 x 20
5	4	63429	Guide	ø30 x 3 mm
6	4	63430	Guide	ø30 x 2 mm
7	1	63553	Guide roller	
8	1	6344121	Stabilizer beam (SV5570)	
9	1	63427	Guide roller	
10	1	6306167	Pin for guide roller	
11	4	30495	Screw	MC20 x 40
12	2	63681	Slide block	3 mm
13	2	64424	Slide block	3 mm
14	1	6346030	No detection, legs down	
15	1	6345982	Pin for guide roller	
16	1	31615	Split pin	ø4 x 32

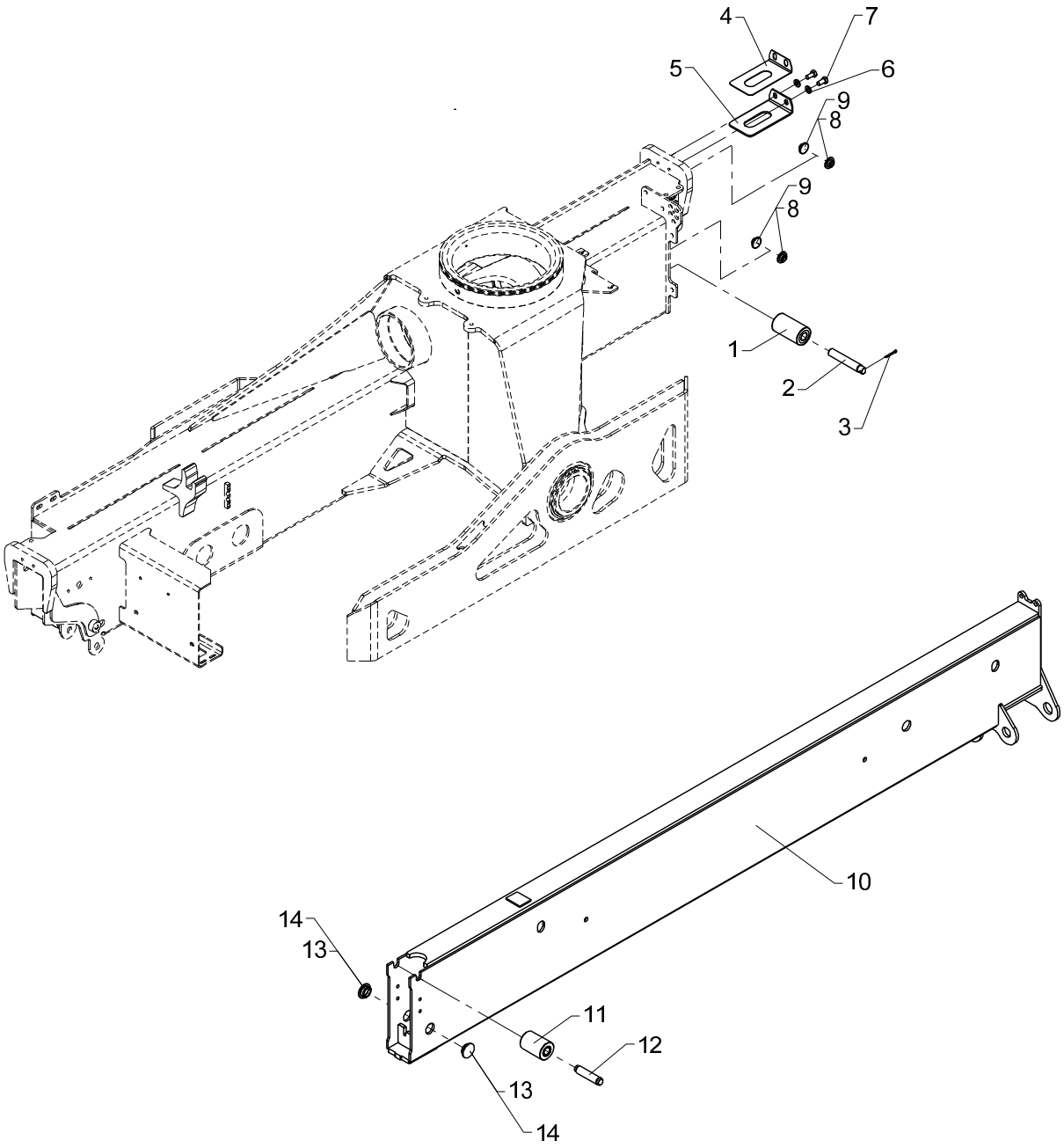
4
7
5
6
9
8
9
8
1
2
3
10
14
13
11
12
13
14

Obsolete

Stabilizer beam, type SR-20° - 5570

535 02 020

From loader 1070001
To loader 1070070

Created 17-11-2008
Modified 06-07-2009

Pos	Qty.	Part no.	Description	Remarks
1	1	63553	Guide roller	
2	1	6344048	Pin for guide roller	
3	1	31615	Split pin	ø4 x 32
4	1	6306722	Adjusting plate	
5	1	6306156	Spacer	
6	2	31565	Washer, stainless	10 mm
7	2	31517	Set screw, stainless	M10 x 20
8	4	63429	Guide	ø30 x 3 mm
9	4	63430	Guide	ø30 x 2 mm
10	1	6344131	Stabilizer beam (SR)	
11	1	63427	Guide roller	
12	1	6306167	Pin for guide roller	
13	2	63681	Slide block	3 mm
14	2	64424	Slide block	3 mm

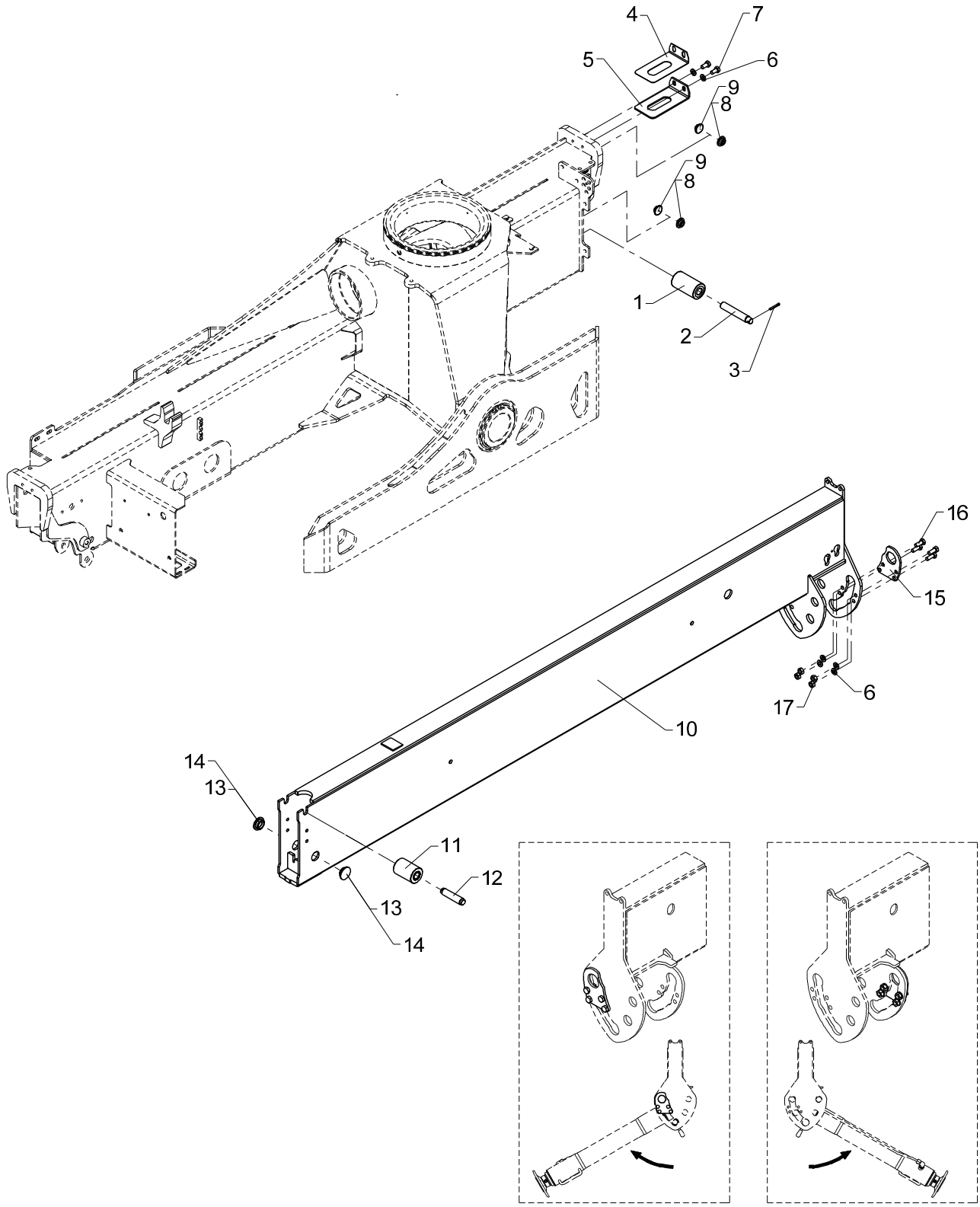
4
7
5
6
9
8
9
8
1
2
3
16
15
6
17
10
14
13
11
12
13
14

Obsolete

Stabilizer beam, type SR-60°, 5570

535 02 021

From loader 1070071
To loader 1070090

Created 10-07-2009
Modified

Pos	Qty.	Part no.	Description	Remarks
1	1	63553	Guide roller	
2	1	6344048	Pin for guide roller	
3	1	31615	Split pin	ø4 x 32
4	1	6306722	Adjusting plate	
5	1	6306156	Spacer	
6	6	31565	Washer, stainless	10 mm
7	2	31517	Set screw, stainless	M10 x 20
8	4	63429	Guide	ø30 x 3 mm
9	4	63430	Guide	ø30 x 2 mm
10	1	6344861	Stabilizer beam, SR,reversible	
11	1	63427	Guide roller	
12	1	6306167	Pin for guide roller	
13	2	63681	Slide block	3 mm
14	2	64424	Slide block	3 mm
15	1	6342855	Plate	
16	4	30155	Set screw	M10 x 25
17	4	31551	Nut, stainless	M10

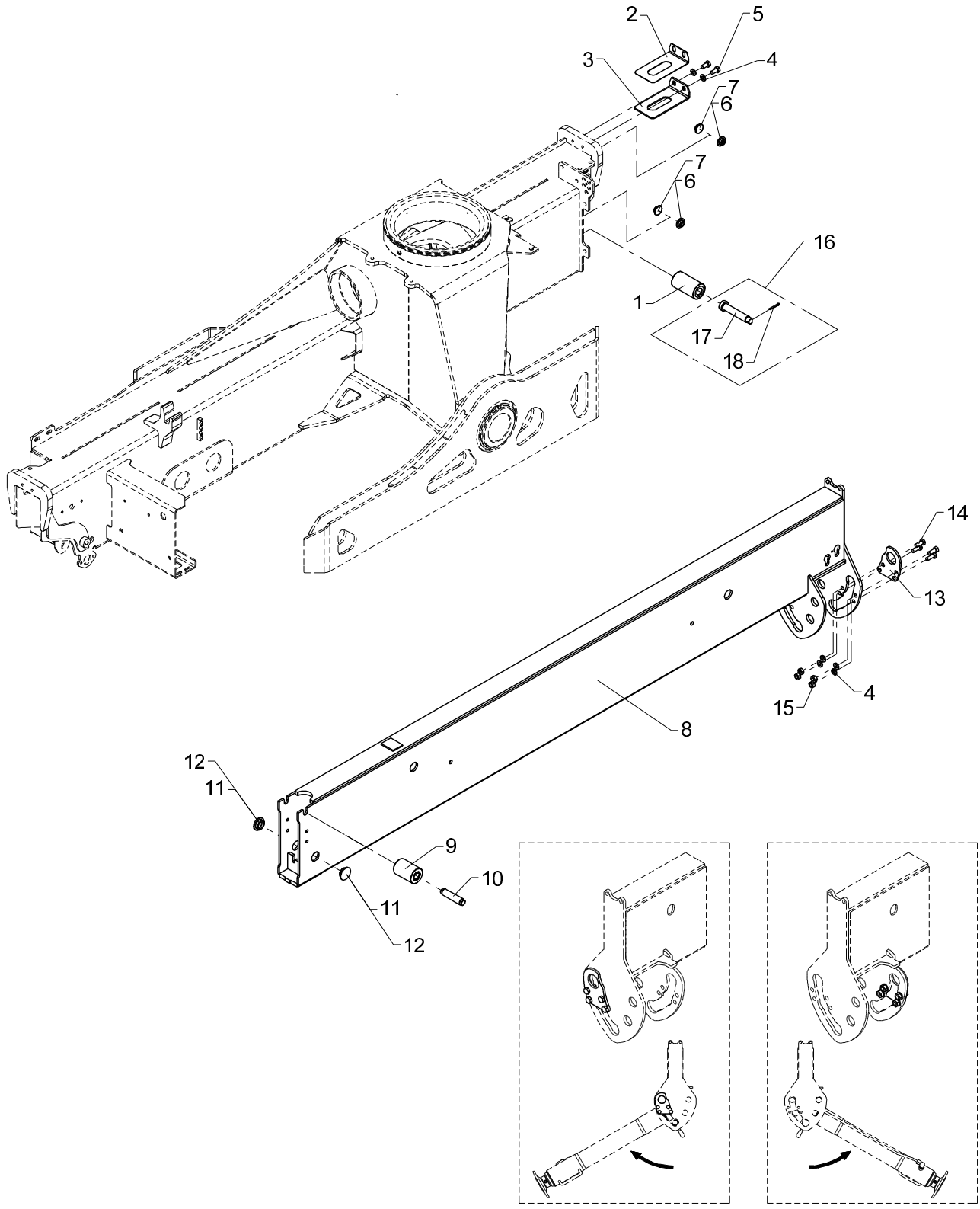
2
5
3
4
7
6
7
6
16
1
17
18
14
13
4
15
8
12
11
9
10
11
12

Stabilizer beam, type SR-60°, 5570

Pos	Qty.	Part no.	Description	Remarks
		6345820	Stabilizer beam, type SR-60°	
		6346030	No detection, legs down	
1	1	63553	Guide roller	
2	1	6306722	Adjusting plate	
3	1	6306156	Spacer	
4	6	31565	Washer, stainless	10 mm
5	2	31517	Set screw, stainless	M10 x 20
6	4	63429	Guide	ø30 x 3 mm
7	4	63430	Guide	ø30 x 2 mm
8	1	6344861	Stabilizer beam, SR,reversible	
9	1	63427	Guide roller	
10	1	6306167	Pin for guide roller	
11	2	63681	Slide block	3 mm
12	2	64424	Slide block	3 mm
13	1	6342855	Plate	
14	4	30155	Set screw	M10 x 25
15	4	31551	Nut, stainless	M10
16	1	6346030	No detection, legs down	
17	1	6345982	Pin for guide roller	
18	1	31615	Split pin	ø4 x 32

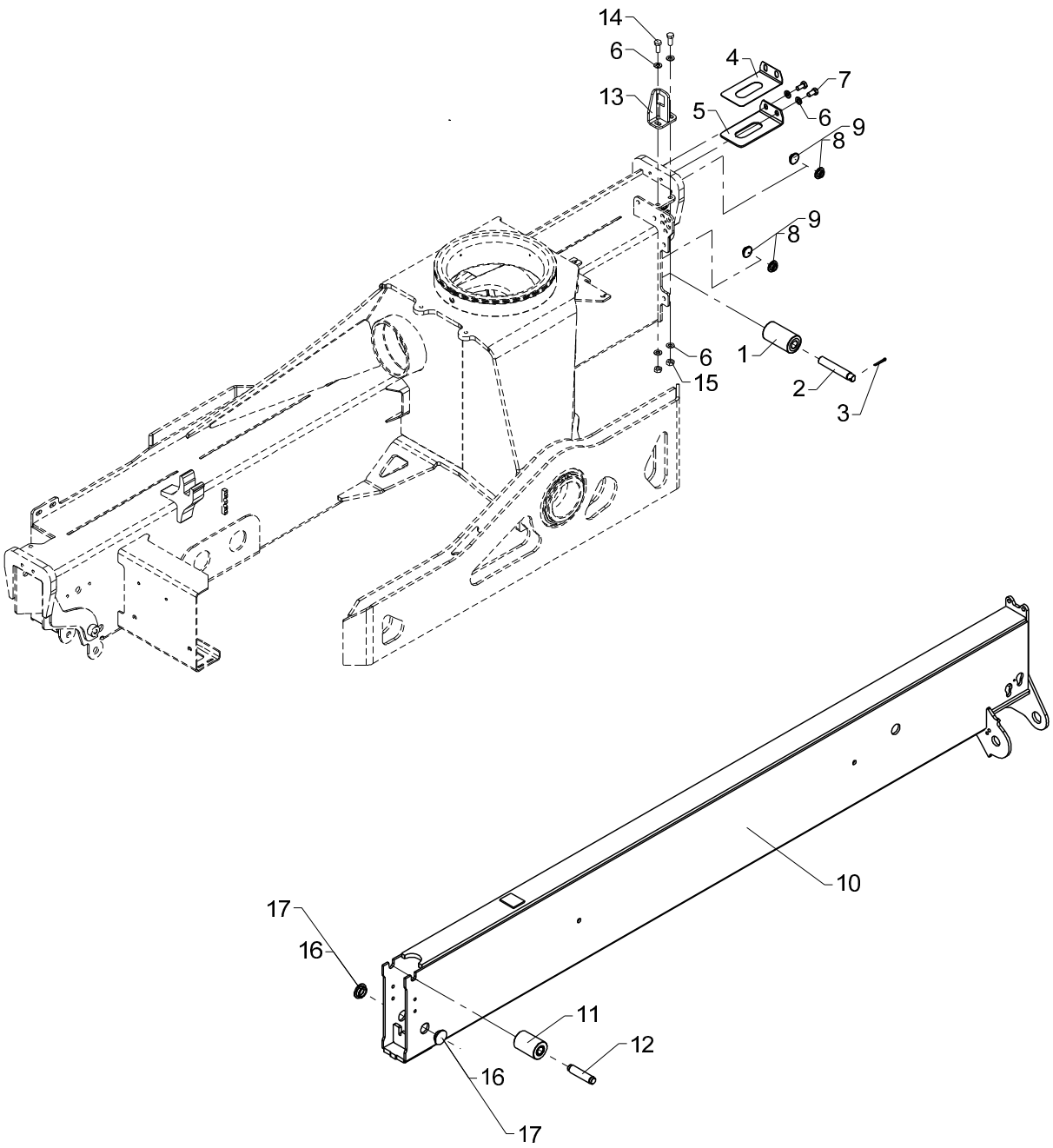
14
6
13
4
7
5
6
9
8
9
8
6
15
1
2
3
10
17
16
11
12
16
17

Obsolete

Stabilizer beam, type SH - 5570

535 02 030

From loader 1070001
To loader 1070095

Created 17-11-2008
Modified

Pos	Qty.	Part no.	Description	Remarks
1	1	63553	Guide roller	
2	1	6344048	Pin for guide roller	
3	1	31615	Split pin	ø4 x 32
4	1	6306722	Adjusting plate	
5	1	6306156	Spacer	
6	6	31565	Washer, stainless	10 mm
7	2	31517	Set screw, stainless	M10 x 20
8	4	63429	Guide	ø30 x 3 mm
9	4	63430	Guide	ø30 x 2 mm
10	1	6344135	Stabilizer beam (SH)	
11	1	63427	Guide roller	
12	1	6306167	Pin for guide roller	
13	1	6340817	Bracket	
14	2	30155	Set screw	M10 x 25
15	2	30858	Nut	M10
16	2	63681	Slide block	3 mm
17	2	64424	Slide block	3 mm

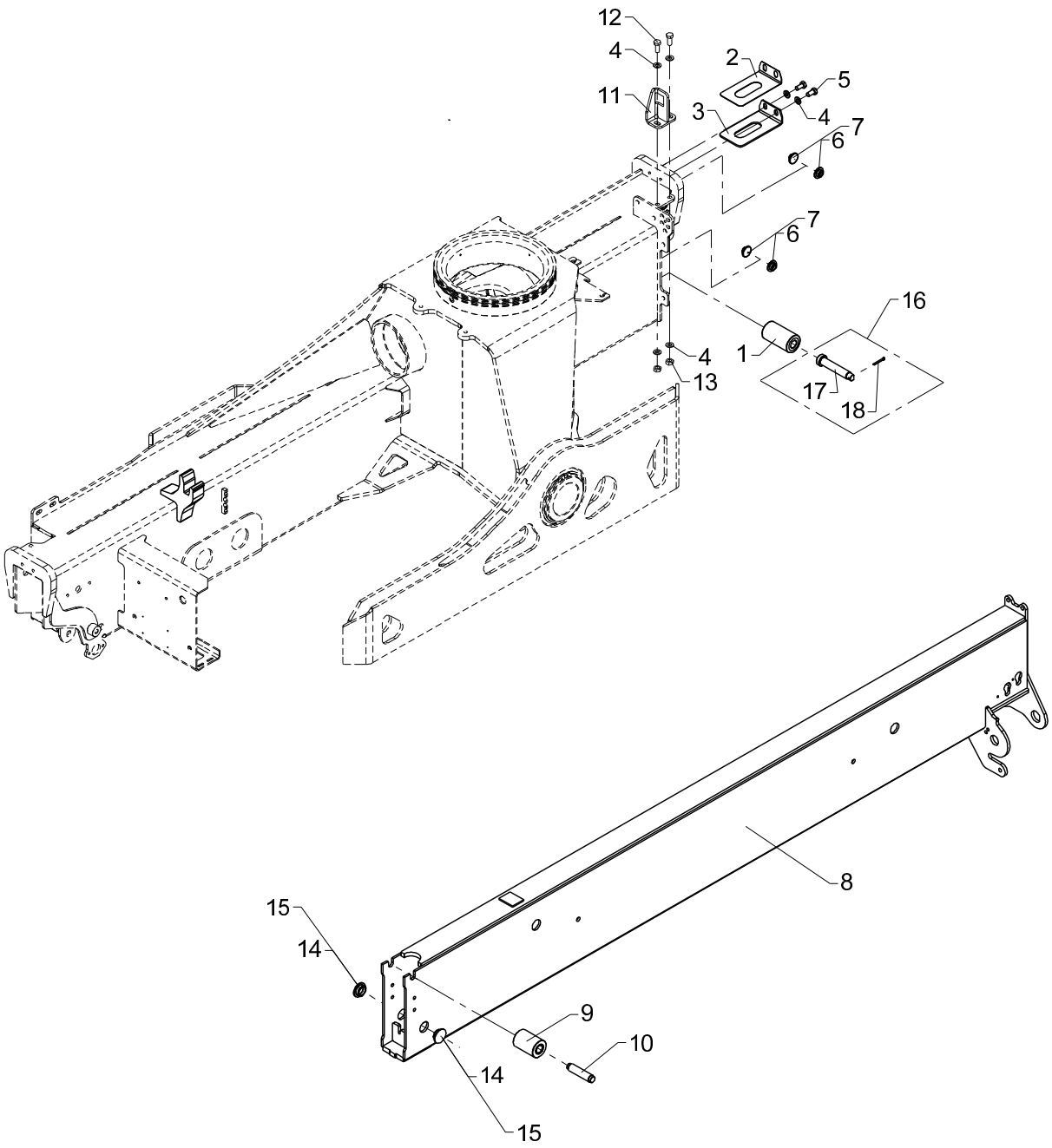
12
4
11
2
5
3
4
7
6
7
6
16
1
4
13
17
18
8
15
14
9
10
14
15

Stabilizer beam, type SH - 5570

Pos	Qty.	Part no.	Description	Remarks
		6345120	Stabilizer beam, type SH	
		6346030	No detection, legs down	
1	1	63553	Guide roller	
2	1	6306722	Adjusting plate	
3	1	6306156	Spacer	
4	6	31565	Washer, stainless	10 mm
5	2	31517	Set screw, stainless	M10 x 20
6	4	63429	Guide	ø30 x 3 mm
7	4	63430	Guide	ø30 x 2 mm
8	1	6344135	Stabilizer beam (SH)	
9	1	63427	Guide roller	
10	1	6306167	Pin for guide roller	
11	1	6340817	Bracket	
12	2	30155	Set screw	M10 x 25
13	2	30858	Nut	M10
14	2	63681	Slide block	3 mm
15	2	64424	Slide block	2 mm
16	1	6346030	No detection, legs down	
17	1	6345982	Pin for guide roller	
18	1	31615	Split pin	ø4 x 32

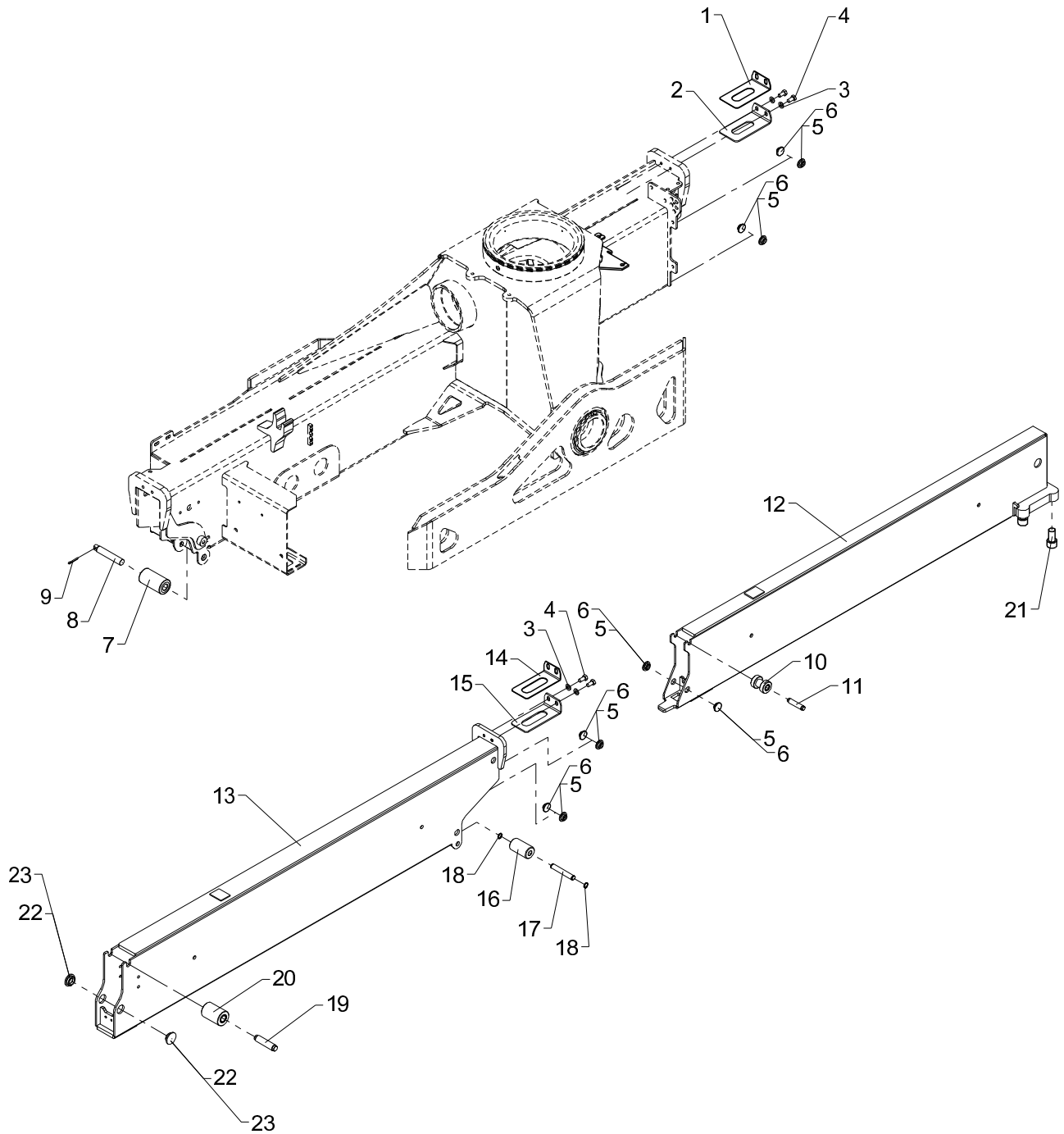
1
4
2
3
6
5
6
5
12
21
9
8
7
4
6
3
5
14
15
6
5
10
11
5
6
6
5
13
23
22
18
16
17
18
20
19
22
23

Obsolete

Stabilizer beam, type DV - 21'2" (6450)

535 02 040

From loader 1070001
To loader 1070101

Created 17-11-2008
Modified

Pos	Qty.	Part no.	Description	Remarks
1	1	6306722	Adjusting plate	
2	1	6306156	Spacer	
3	4	31565	Washer, stainless	10 mm
4	4	31517	Set screw, stainless	M10 x 20
5	10	63429	Guide	ø30 x 3 mm
6	10	63430	Guide	ø30 x 2 mm
7	1	63553	Guide roller	
8	1	6344048	Pin for guide roller	
9	1	31615	Split pin	ø4 x 32
10	1	63426	Guide roller	
11	1	6306168	Pin for guide roller	
12	1	6344101	Stabilizer beam II (DV-21'2" (6450))	
13	1	6344091	Stabilizer beam I	
14	1	6306721	Adjusting plate	
15	1	6306157	Spacer	
16	1	63986	Guide roller	
17	1	6306166	Pin for guide roller	
18	2	33104	Circlip	15U
19	1	6306167	Pin for guide roller	
20	1	63427	Guide roller	
21	4	30495	Screw	MC20 x 40
22	2	63681	Slide block	3 mm
23	2	64424	Slide block	3 mm

18/129, 20/138, 22/153

63 46 030
Internal ref. 63 45 130

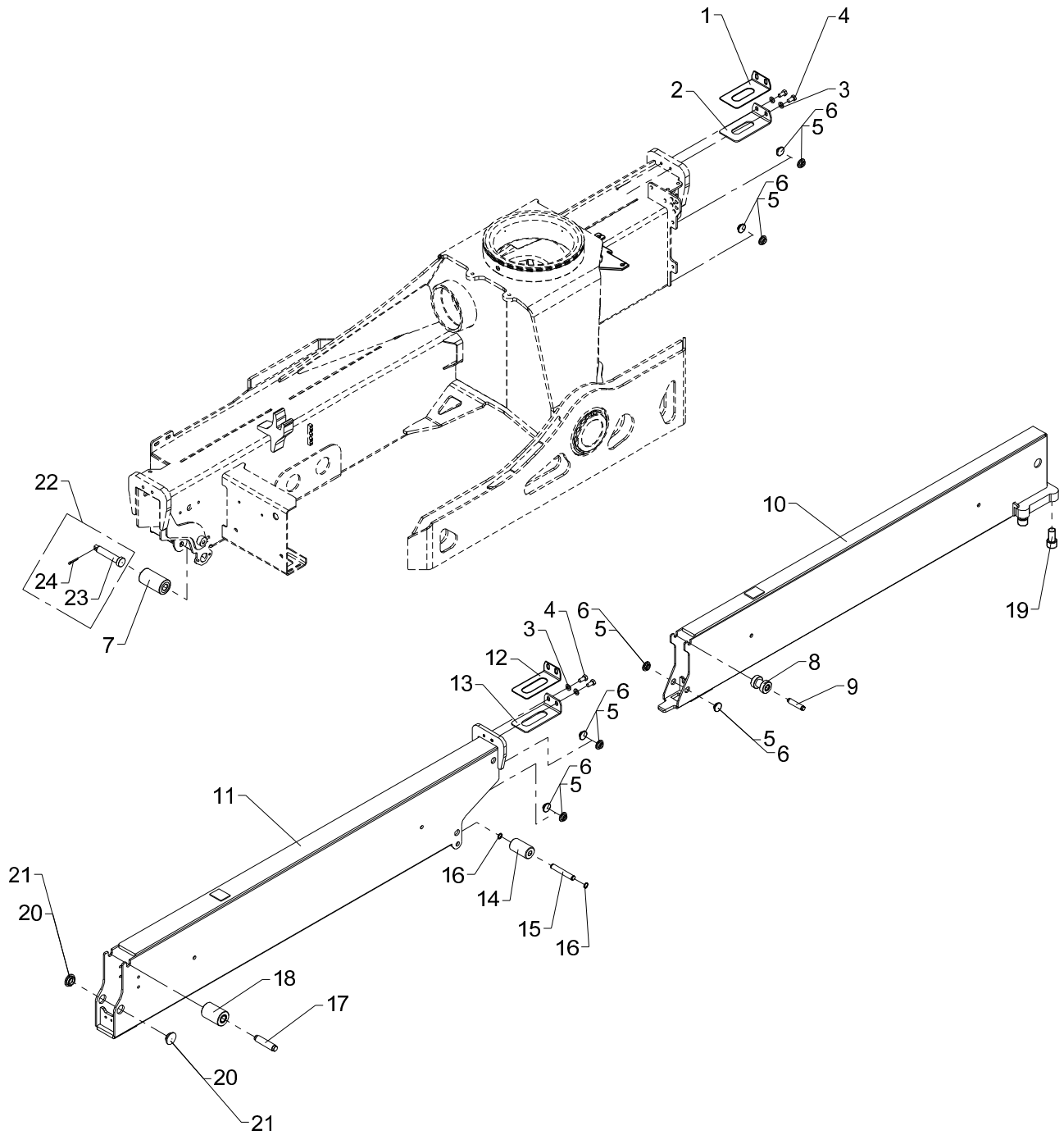

Stabilizer beam, type DV - 21'2" (6450)

Pos	Qty.	Part no.	Description	Remarks
		6345130	Stabilizer beam, type DV	
		6346030	No detection, legs down	
1	1	6306722	Adjusting plate	
2	1	6306156	Spacer	
3	4	31565	Washer, stainless	10 mm
4	4	31517	Set screw, stainless	M10 x 20
5	10	63429	Guide	ø30 x 3 mm
6	10	63430	Guide	ø30 x 2 mm
7	1	63553	Guide roller	
8	1	63426	Guide roller	
9	1	6306168	Pin for guide roller	
10	1	6344101	Stabilizer beam II (DV-21'2" (6450))	
11	1	6344091	Stabilizer beam I	
12	1	6306721	Adjusting plate	
13	1	6306157	Spacer	
14	1	63986	Guide roller	
15	1	6306166	Pin for guide roller	
16	2	33104	Circlip	15U
17	1	6306167	Pin for guide roller	
18	1	63427	Guide roller	
19	4	30495	Screw	MC20 x 40
20	2	63681	Slide block	3 mm
21	2	64424	Slide block	3 mm
22	1	6346030	No detection, legs down	
23	1	6345982	Pin for guide roller	
24	1	31615	Split pin	ø4 x 32

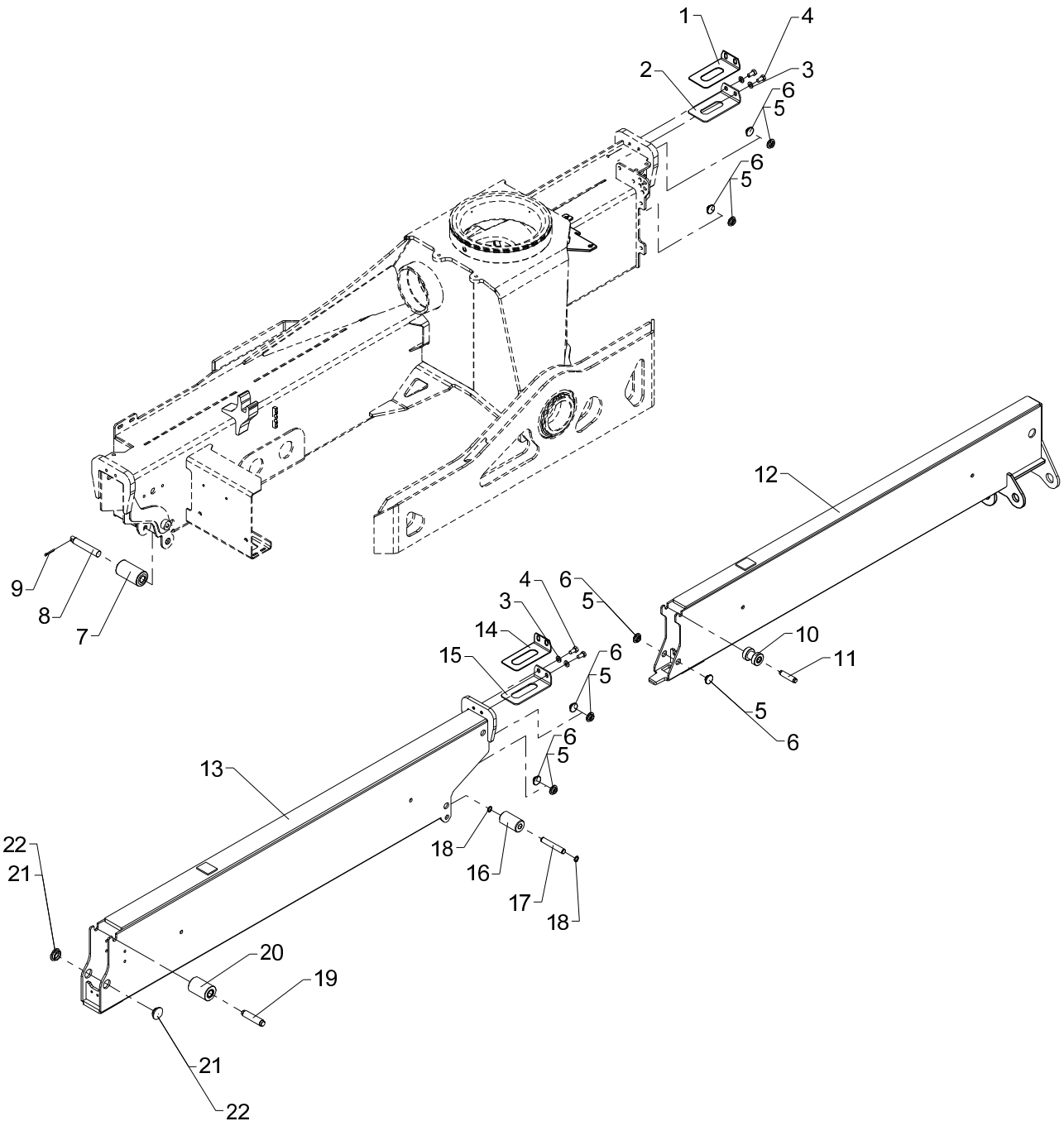
1
4
2
3
6
5
6
5
12
9
8
7
4
6
3
5
14
10
15
6
11
5
5
6
6
5
13
22
21
18
16
17
18
20
19
21
22

Obsolete

Stabilizer beam, type DR-20° - 21'2" (6450)

535 02 050

From loader 1070001
To loader 1070070

Created 17-11-2008
Modified 07-07-2009

Pos	Qty.	Part no.	Description	Remarks
1	1	6306722	Adjusting plate	
2	1	6306156	Spacer	
3	4	31565	Washer, stainless	10 mm
4	4	31517	Set screw, stainless	M10 x 20
5	10	63429	Guide	ø30 x 3 mm
6	10	63430	Guide	ø30 x 2 mm
7	1	63553	Guide roller	
8	1	6344048	Pin for guide roller	
9	1	31615	Split pin	ø4 x 32
10	1	63426	Guide roller	
11	1	6306168	Pin for guide roller	
12	1	6344111	Stabilizer beam (DR)	
13	1	6344091	Stabilizer beam I	
14	1	6306721	Adjusting plate	
15	1	6306157	Spacer	
16	1	63986	Guide roller	
17	1	6306166	Pin for guide roller	
18	2	33104	Circlip	15U
19	1	6306167	Pin for guide roller	
20	1	63427	Guide roller	
21	2	63681	Slide block	3 mm
22	2	64424	Slide block	3 mm

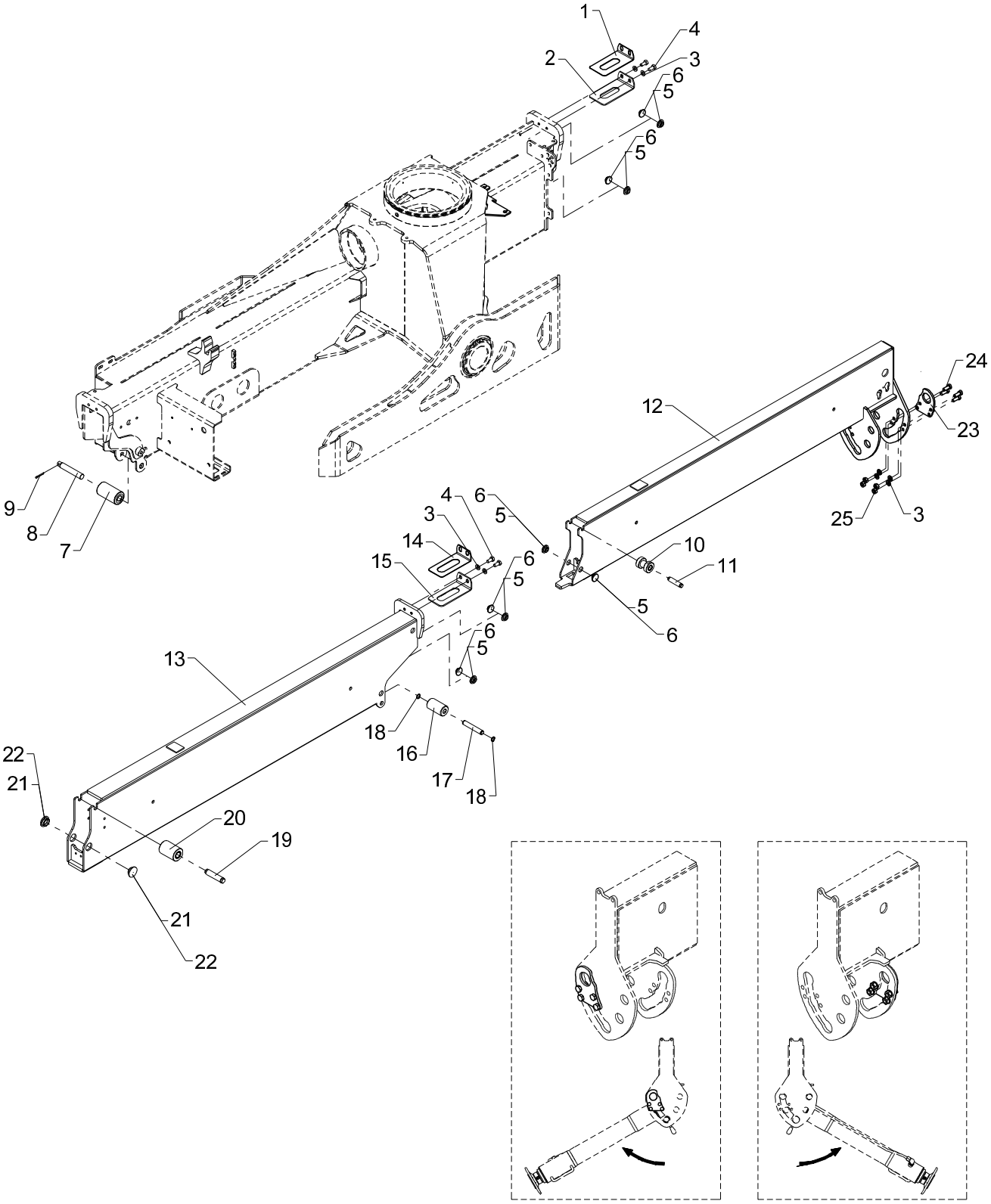
1
2
4
3
6
5
6
5
9
8
7
12
24
23
25
3
4
6
5
3
14
15
6
5
6
5
10
11
5
6
13
18
16
17
18
22
21
20
19
21
22

Obsolete

Stabilizer beam, type DR-60°, 21'2" (6450)

535 02 051

From loader 1070071
To loader 1070101
Created 10-07-2009
Modified

Pos	Qty.	Part no.	Description	Remarks
1	1	6306722	Adjusting plate	
2	1	6306156	Spacer	
3	8	31565	Washer, stainless	10 mm
4	4	31517	Set screw, stainless	M10 x 20
5	10	63429	Guide	ø30 x 3 mm
6	10	63430	Guide	ø30 x 2 mm
7	1	63553	Guide roller	
8	1	6344048	Pin for guide roller	
9	1	31615	Split pin	ø4 x 32
10	1	63426	Guide roller	
11	1	6306168	Pin for guide roller	
12	1	6344851	Stabilizer beam, DR,reversible	
13	1	6344091	Stabilizer beam I	
14	1	6306721	Adjusting plate	
15	1	6306157	Spacer	
16	1	63986	Guide roller	
17	1	6306166	Pin for guide roller	
18	2	33104	Circlip	15U
19	1	6306167	Pin for guide roller	
20	1	63427	Guide roller	
21	2	63681	Slide block	3 mm
22	2	64424	Slide block	3 mm
23	1	6342855	Plate	
24	4	30155	Set screw	M10 x 25
25	4	31551	Nut, stainless	M10

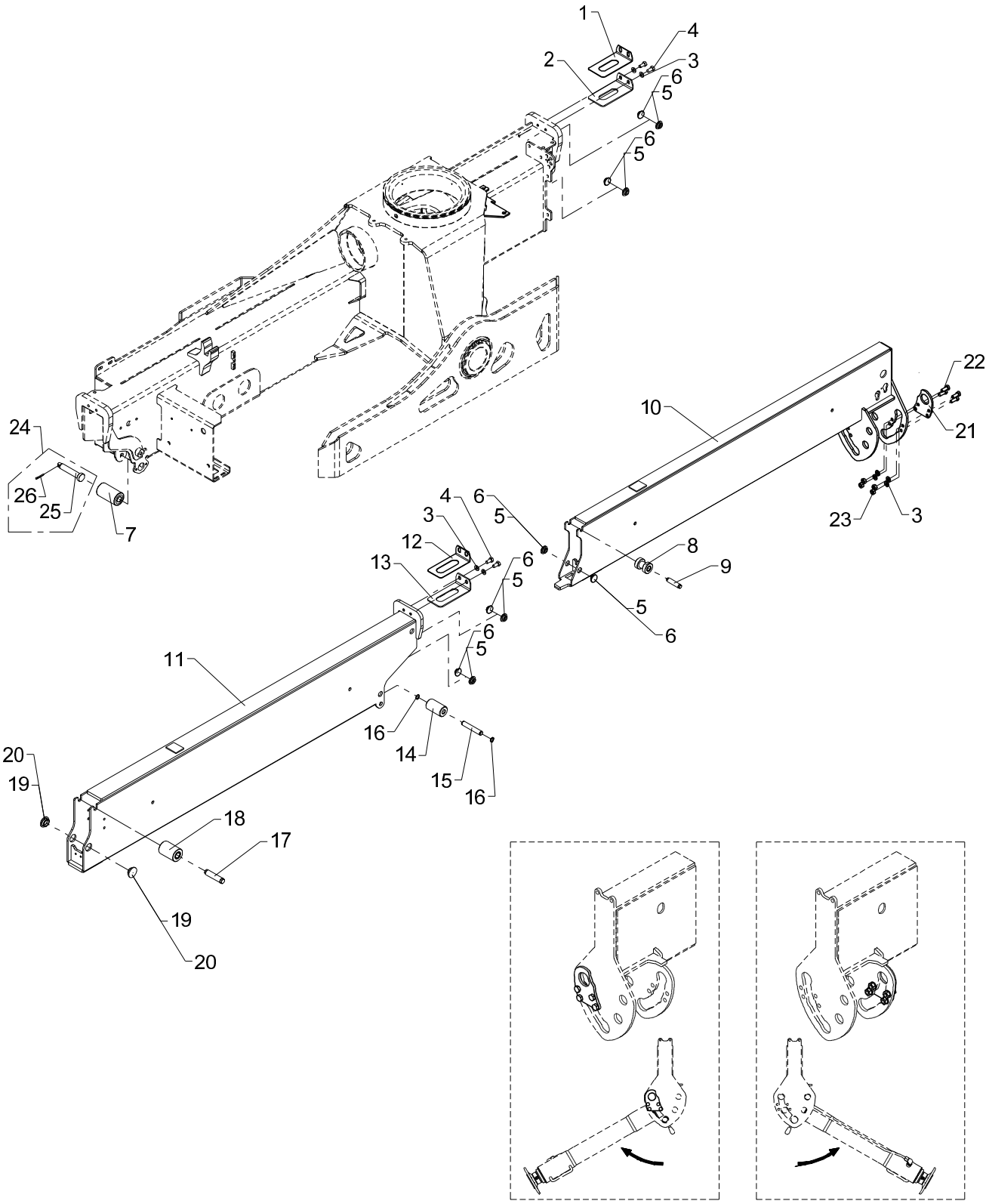
1
2
4
3
6
5
6
5
24
26
25
7
10
22
21
23
3
4
6
5
3
12
13
6
5
6
5
8
9
5
6
11
16
14
15
16
20
19
18
17
19
20

Stabilizer beam, type DR-60°, 21'2" (6450)

Pos	Qty.	Part no.	Description	Remarks
		6345830	Stabilizer beam, type DR-60°	
		6346030	No detection, legs down	
1	1	6306722	Adjusting plate	
2	1	6306156	Spacer	
3	8	31565	Washer, stainless	10 mm
4	4	31517	Set screw, stainless	M10 x 20
5	10	63429	Guide	ø30 x 3 mm
6	10	63430	Guide	ø30 x 2 mm
7	1	63553	Guide roller	
8	1	63426	Guide roller	
9	1	6306168	Pin for guide roller	
10	1	6344851	Stabilizer beam, DR,reversible	
11	1	6344091	Stabilizer beam I	
12	1	6306721	Adjusting plate	
13	1	6306157	Spacer	
14	1	63986	Guide roller	
15	1	6306166	Pin for guide roller	
16	2	33104	Circlip	15U
17	1	6306167	Pin for guide roller	
18	1	63427	Guide roller	
19	2	63681	Slide block	3 mm
20	2	64424	Slide block	3 mm
21	1	6342855	Plate	
22	4	30155	Set screw	M10 x 25
23	4	31551	Nut, stainless	M10
24	1	6346030	No detection, legs down	
25	1	6345982	Pin for guide roller	
26	1	31615	Split pin	ø4 x 32

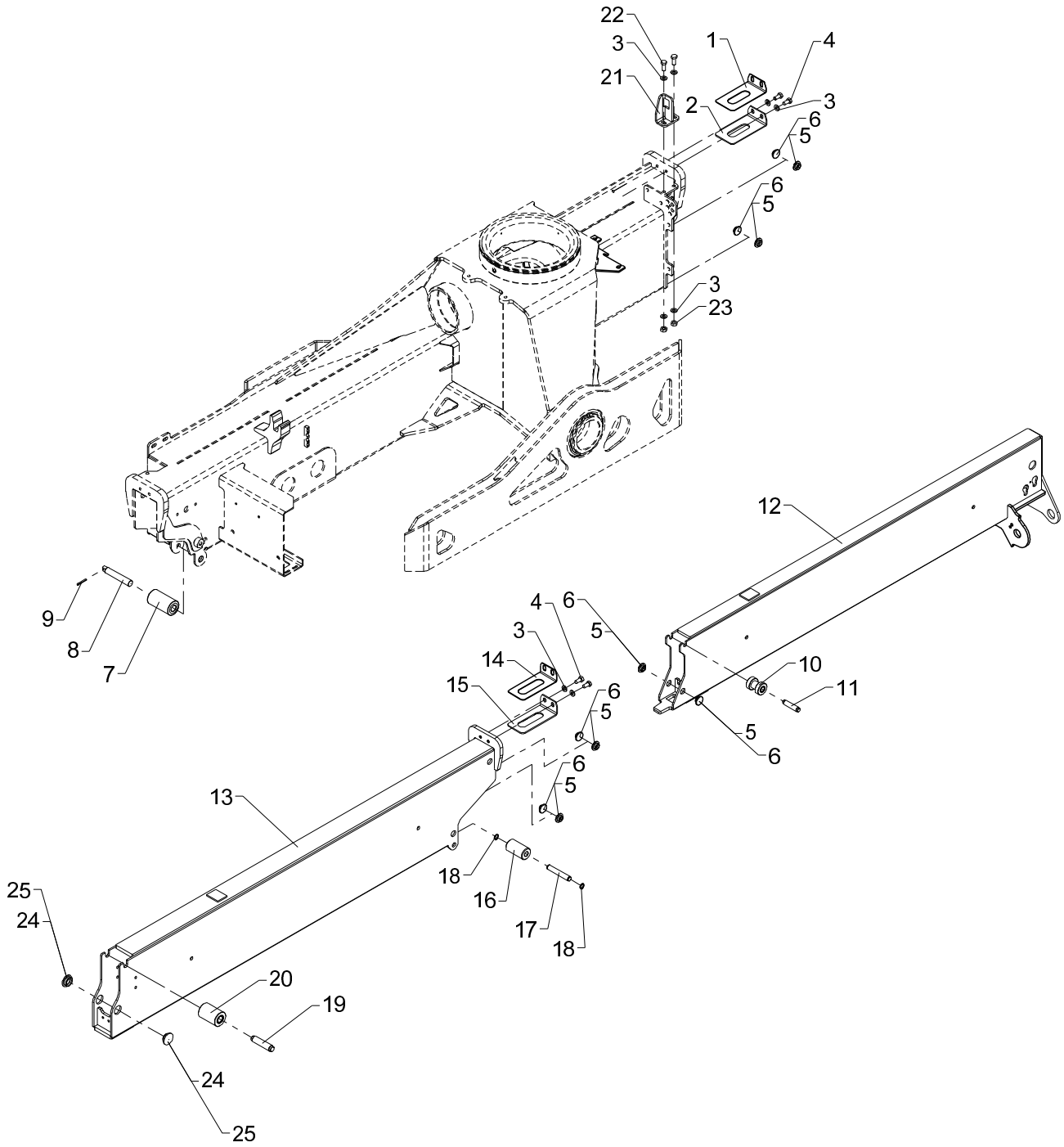
22
3
21
1
4
2
3
6
5
6
5
3
23
12
9
8
7
4
6
3
5
14
15
6
5
10
11
5
6
6
5
13
18
16
17
18
25
24
20
19
24
25

Obsolete

Stabilizer beam, type DH - 21'2" (6450)

535 02 060

From loader 1070001
To loader 1070101

Created 17-11-2008
Modified

Pos	Qty.	Part no.	Description	Remarks
1	1	6306722	Adjusting plate	
2	1	6306156	Spacer	
3	8	31565	Washer, stainless	10 mm
4	4	31517	Set screw, stainless	M10 x 20
5	10	63429	Guide	ø30 x 3 mm
6	10	63430	Guide	ø30 x 2 mm
7	1	63553	Guide roller	
8	1	6344048	Pin for guide roller	
9	1	31615	Split pin	ø4 x 32
10	1	63426	Guide roller	
11	1	6306168	Pin for guide roller	
12	1	6344115	Stabilizer beam II (DH)	
13	1	6344091	Stabilizer beam I	
14	1	6306721	Adjusting plate	
15	1	6306157	Spacer	
16	1	63986	Guide roller	
17	1	6306166	Pin for guide roller	
18	2	33104	Circlip	15U
19	1	6306167	Pin for guide roller	
20	1	63427	Guide roller	
21	1	6340817	Bracket	
22	2	30155	Set screw	M10 x 25
23	2	30858	Nut	M10
24	2	63681	Slide block	3 mm
25	2	64424	Slide block	3 mm

18/129, 20/138, 22/153

63 46 030
Internal ref. 63 45 150

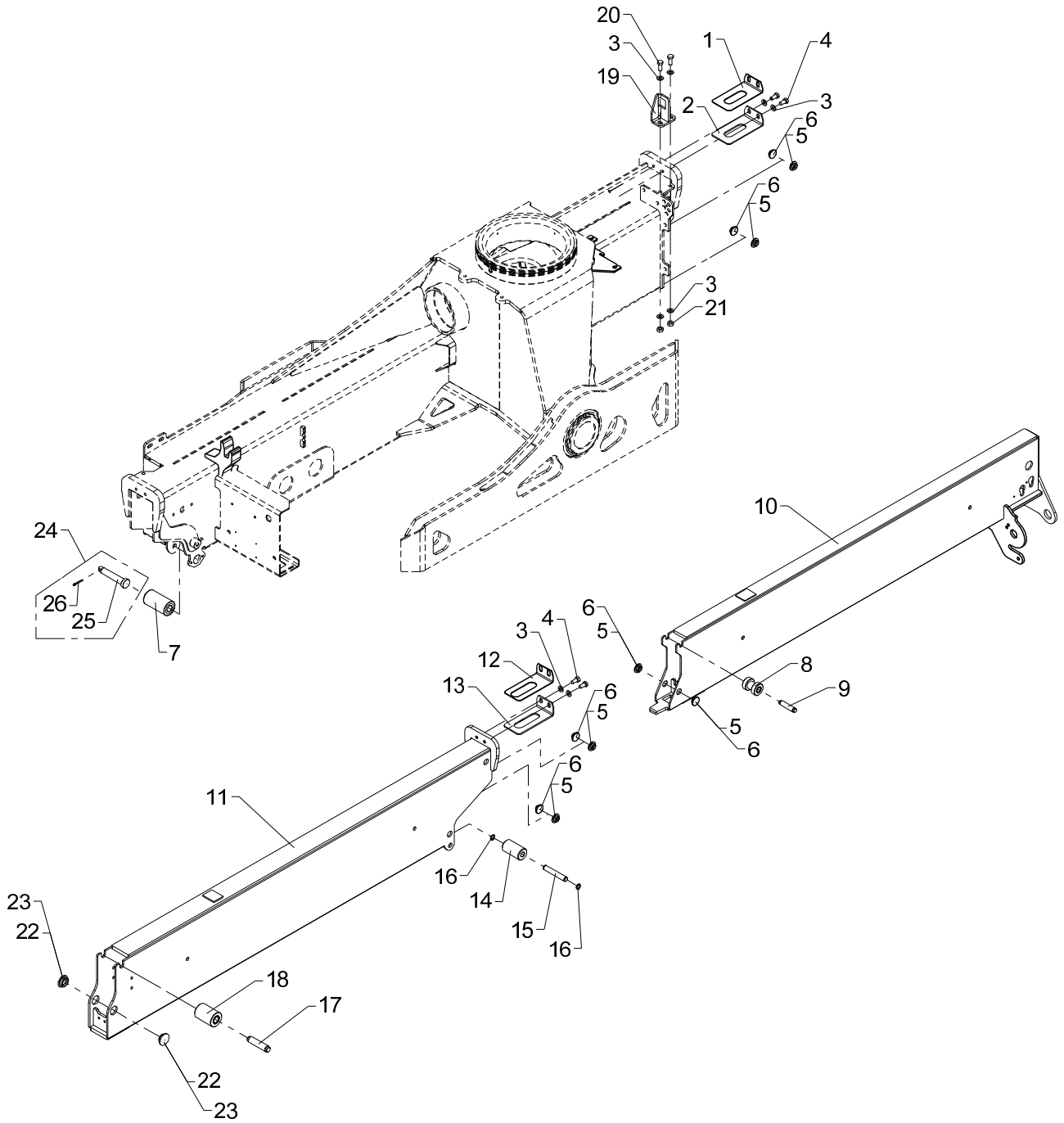

Stabilizer beam, type DH - 21'2" (6450)

Pos	Qty.	Part no.	Description	Remarks
		6345150	Stabilizer beam, type DH	
		6346030	No detection, legs down	
1	1	6306722	Adjusting plate	
2	1	6306156	Spacer	
3	8	31565	Washer, stainless	10 mm
4	4	31517	Set screw, stainless	M10 x 20
5	10	63429	Guide	ø30 x 3 mm
6	10	63430	Guide	ø30 x 2 mm
7	1	63553	Guide roller	
8	1	63426	Guide roller	
9	1	6306168	Pin for guide roller	
10	1	6344115	Stabilizer beam II (DH)	
11	1	6344091	Stabilizer beam I	
12	1	6306721	Adjusting plate	
13	1	6306157	Spacer	
14	1	63986	Guide roller	
15	1	6306166	Pin for guide roller	
16	2	33104	Circlip	15U
17	1	6306167	Pin for guide roller	
18	1	63427	Guide roller	
19	1	6340817	Bracket	
20	2	30155	Set screw	M10 x 25
21	2	30858	Nut	M10
22	2	63681	Slide block	3 mm
23	2	64424	Slide block	2 mm
24	1	6346030	No detection, legs down	
25	1	6345982	Pin for guide roller	
26	1	31615	Split pin	ø4 x 32

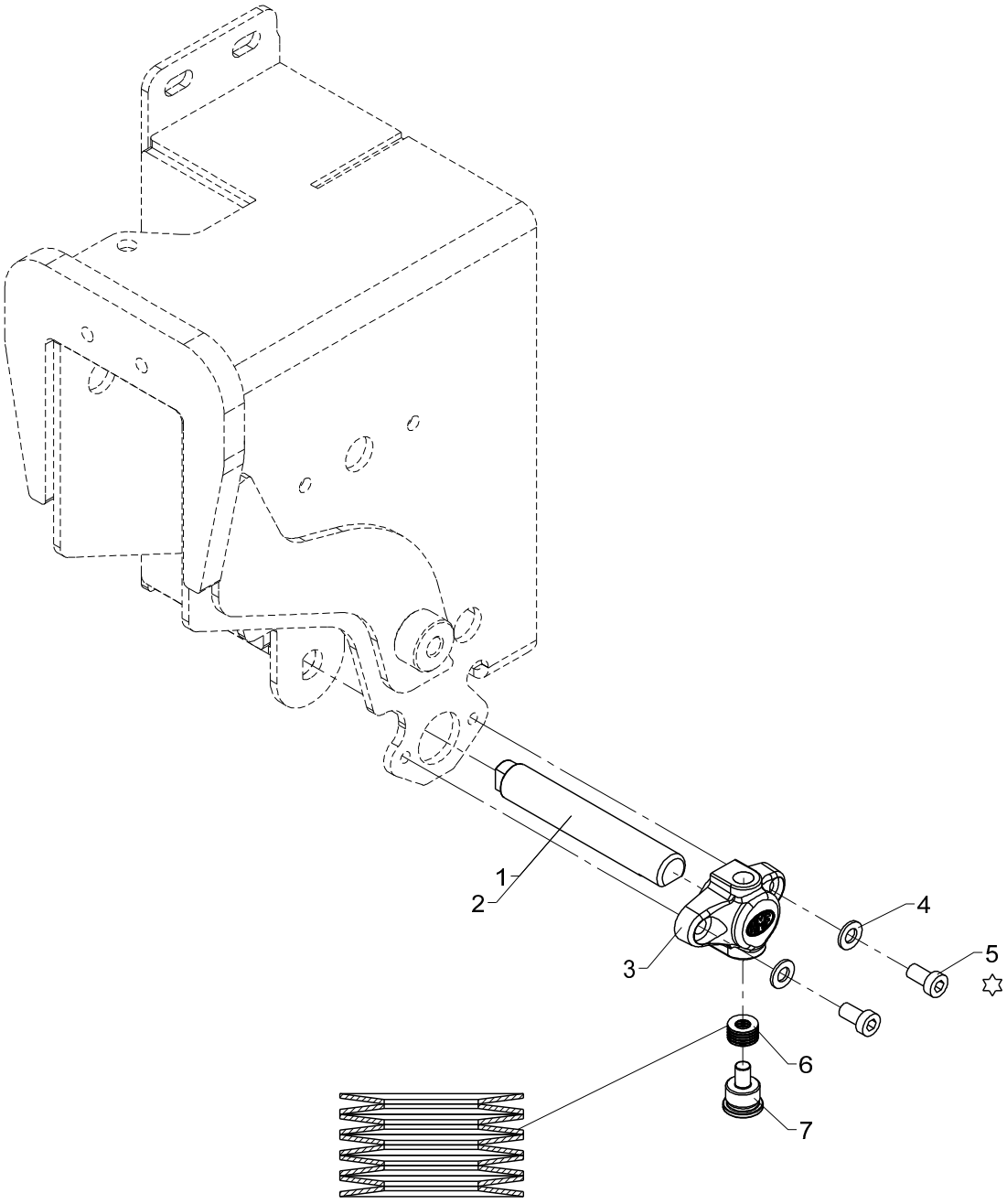

✡ Loctite 243

Detection, stabilizer down (CYL/CYBEL)

Pos	Qty.	Part no.	Description	Remarks
		6342020	Detection, legs down CYL/CYBEL	
		6346020	Detection, legs down CYL/CYBEL	
1	1	6341981	Pin for guide roller	1300/1730
2	1	6345981	Pin for guide roller	1800/22/153SL
3	1	64575	Housing	
4	2	31147	Face washer, 8 mm	8 mm
5	2	32478	Screw	M8 x 15
6	10	33496	Disc spring washer	
7	1	6341979	Pin	

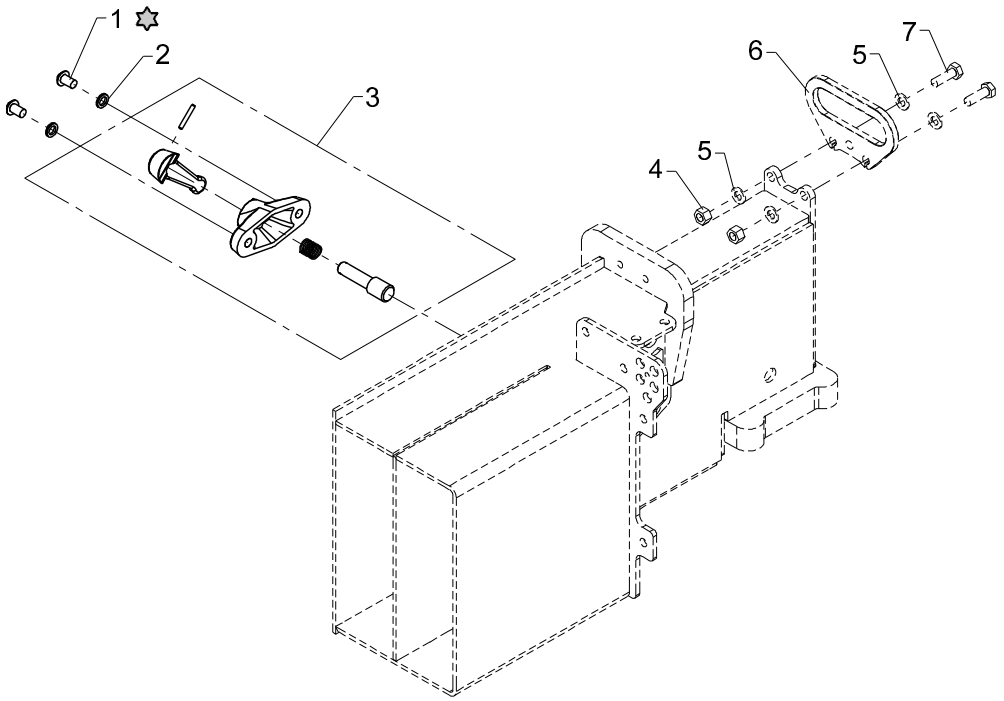

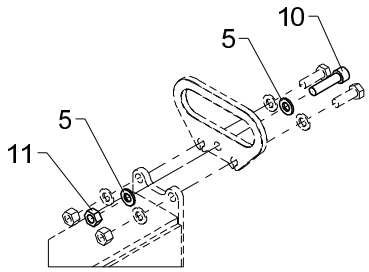

9/65 - 12/86

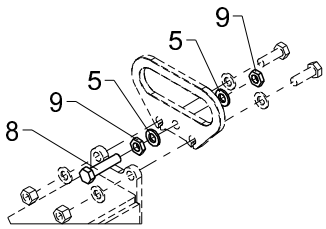

(4600) 15'2"

Loctite 243

Stabilizer lock and lever

Pos	Qty.	Part no.	Description	Remarks
		6340520	Stabilizer lock + handle	
1	2	31081	Screw	M10 x 16
2	2	30933	Nordlock washer	
3	1	63451	Stabilizer lock	
4	2	30888	Lock nut	
5	8	31565	Washer, stainless	10 mm
6	1	6306169	Lever, stabilizer beam	
7	2	30156	Set screw, stainless	M10 x 30
8	1	30377	Set screw	M10 x 45
9	2	32111	Counter nut	M10
10	1	30456	Screw	MC10 x 40
11	1	30858	Nut	M10

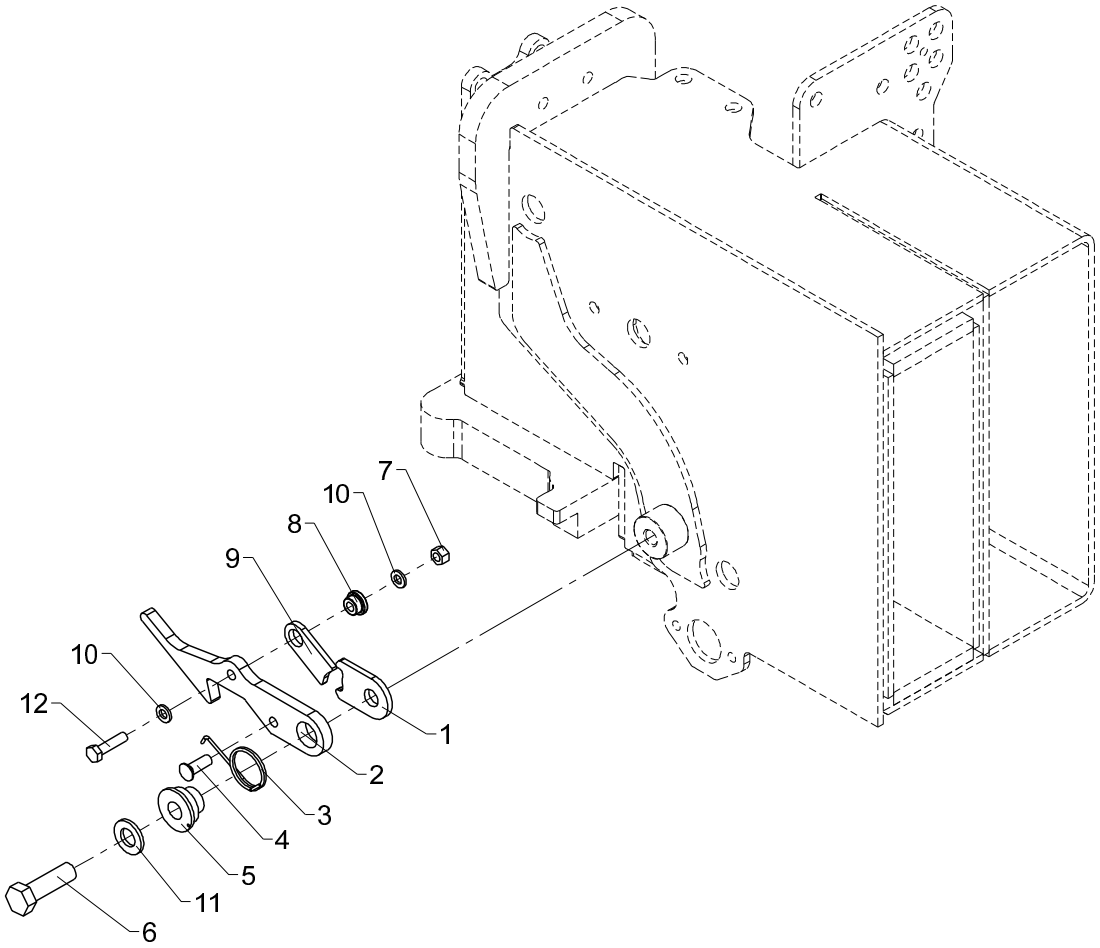
7
10
8
9
10
12
1
2
3
4
5
11
6

Stabilizer safety lock

Pos	Qty.	Part no.	Description	Remarks
1	1	6236044	Plate	
2	1	6245244	Hook	
3	1	33476	Spring	6247194
4	1	31290	Spike, galvanized	7 x 20
5	1	6245264	Bushing	
6	1	30179	Set screw	M12 x 40
7	1	30884	Lock nut, stainless	M6
8	1	63440	Washer	
9	1	6236054	Click	
10	2	32302	Face washer, stainless	6 mm
11	1	32338	Washer	12 mm
12	1	30114	Set screw, stainless	M6 x 25

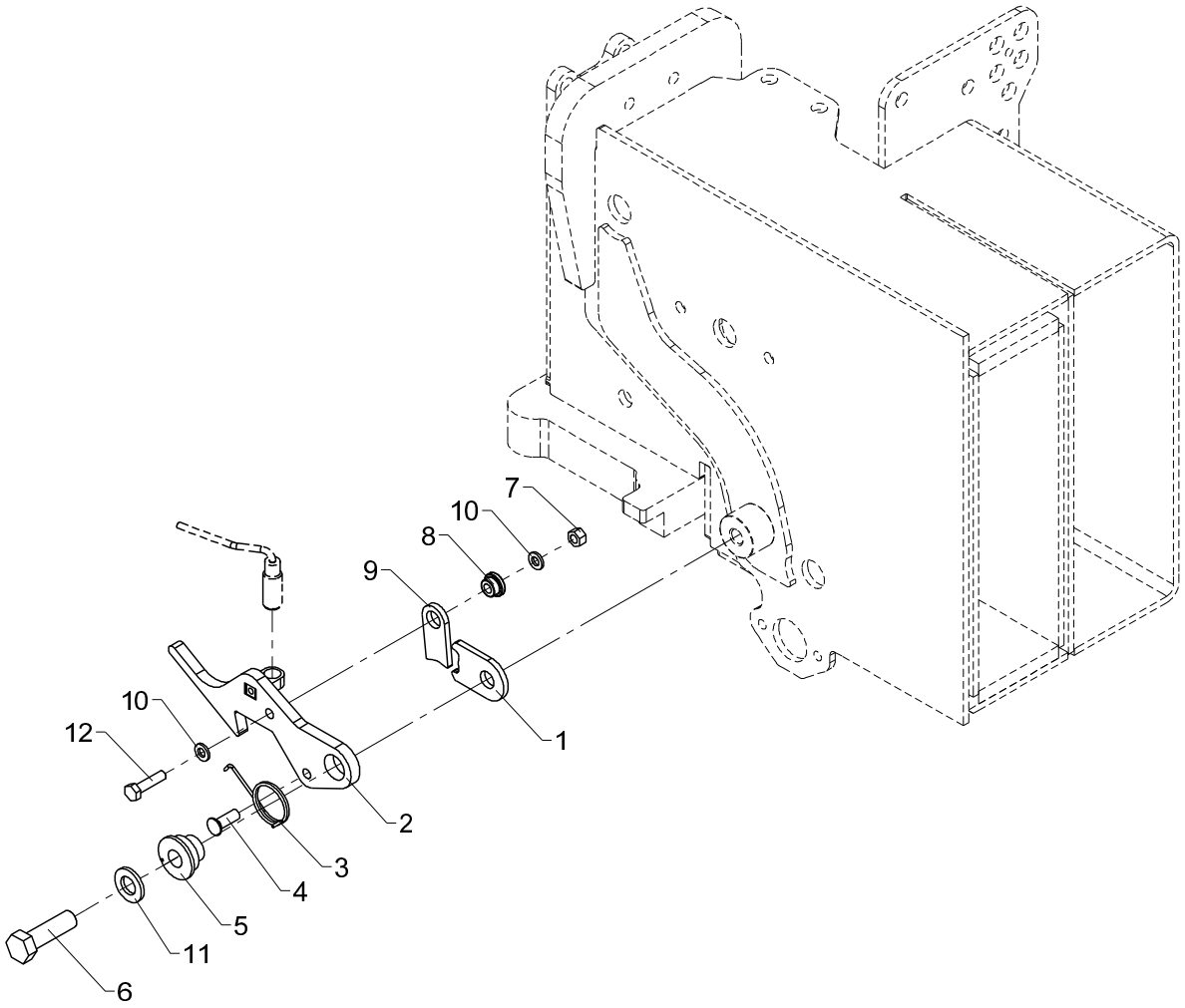
7
10
8
9
10
12
1
2
3
4
5
11
6

Safety lock (CE, manual extension)

Pos	Qty.	Part no.	Description	Remarks
1	1	6236044	Plate	
2	1	6341091	Latch	
3	1	33476	Spring	6247194
4	1	31290	Spike, galvanized	7 x 20
5	1	6245264	Bushing	
6	1	30179	Set screw	M12 x 40
7	1	30884	Lock nut, stainless	M6
8	1	63440	Washer	
9	1	6236054	Click	
10	2	32302	Face washer, stainless	6 mm
11	1	32338	Washer	12 mm
12	1	30114	Set screw, stainless	M6 x 25

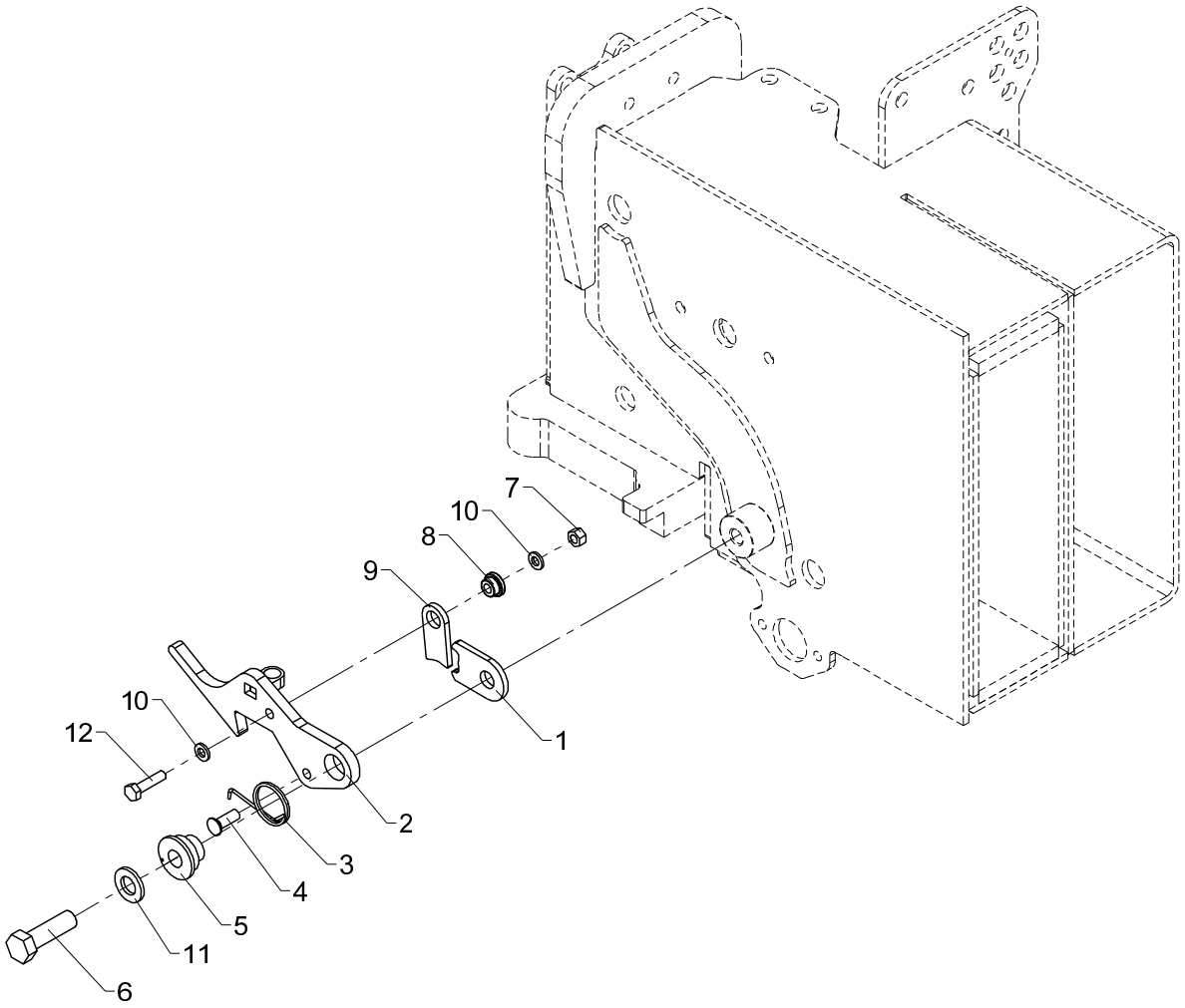
7
10
8
9
10
12
1
2
3
4
5
11
6

Safety lock (CE, manual extension)

Pos	Qty.	Part no.	Description	Remarks
1	1	6236044	Plate	
2	1	6341091	Latch	
3	1	33476	Spring	6247194
4	1	31290	Spike, galvanized	7 x 20
5	1	6245264	Bushing	
6	1	30179	Set screw	M12 x 40
7	1	30884	Lock nut, stainless	M6
8	1	63440	Washer	
9	1	6236054	Click	
10	2	32302	Face washer, stainless	6 mm
11	1	32338	Washer	12 mm
12	1	30114	Set screw, stainless	M6 x 25

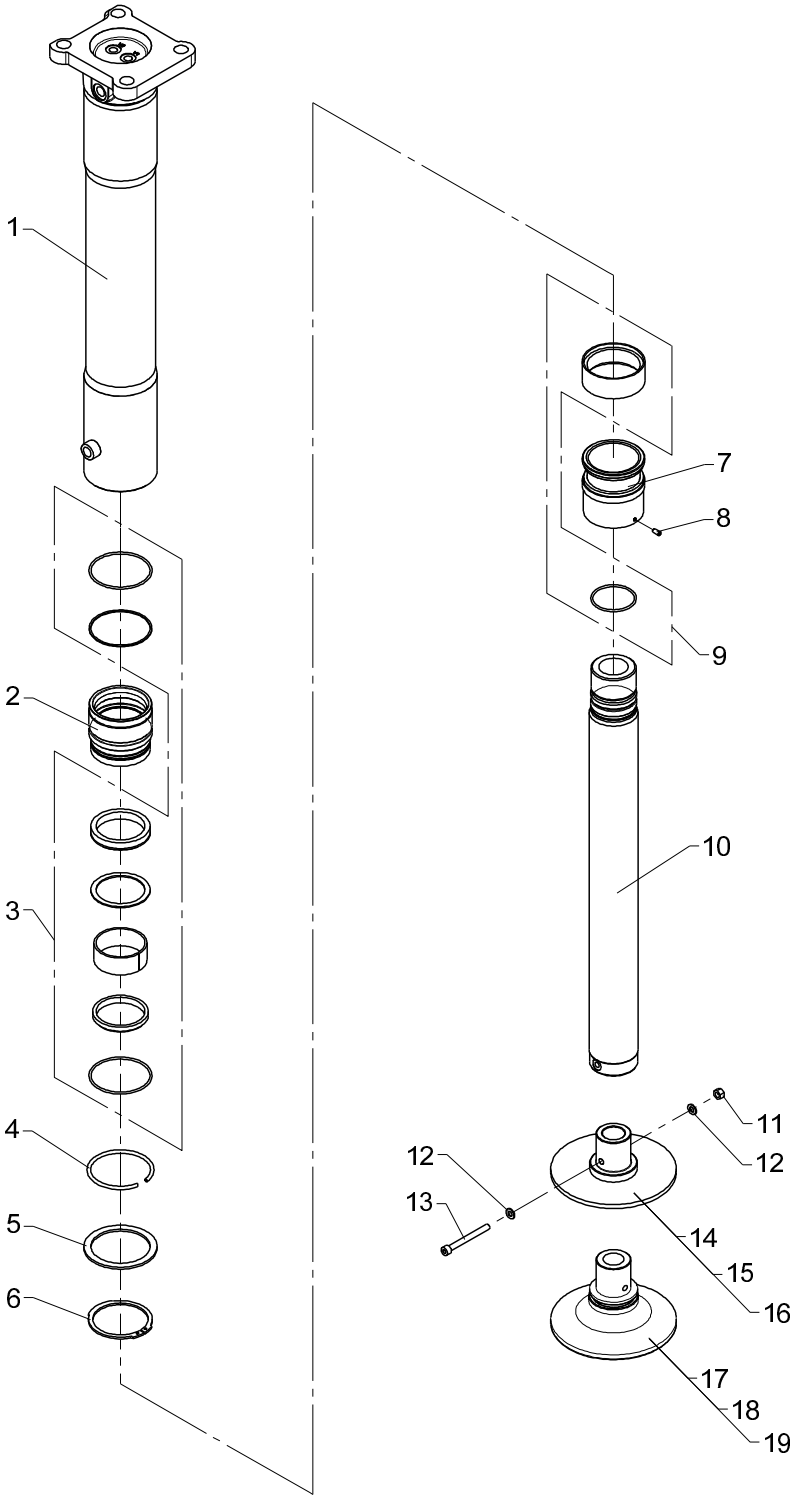
1
2
3
4
5
6
7
8
9
10
11
12
12
13
14
15
16
17
18
19

Obsolete

Stabilizer cylinder, C90-520, type V

535 02 200

From loader 1070001
To loader 1070589

Created 06-01-2009
Modified 25-10-2013

Pos	Qty.	Part no.	Description	Remarks
		6344500	Stabilizer cylinder C90-520	
1	1	6344504	Cylinder pipe, fixed leg	
2	1	6306501	Guide	
3	1	6893840	Seal kit, guide	
4	1	33488	Lock ring, black	
5	1	33236	Back ring	SS 100 x 120 x 3,5
6	1	33145	Circlip	80U
7	1	6306502	Piston	
8	1	32256	Pointed screw	MSP6 x 12
9	1	6893850	Seal kit, piston + rod	
10	1	6306503	Piston rod	
11	1	30886	Lock nut, stainless	M8
12	2	31147	Face washer, 8 mm	8 mm
13	1	30965	Screw	MC8 x 80
14	1	6306506	Footplate, standard	
15	1	6306509	Footplate, 100mm. extension	
16	1	6306512	Footplate, 200mm. extension	
17	1	6346680	Footplate + ball joint std.	
18	1	6346690	Footplate + ball joint 100 mm	
19	1	6346700	Extension piece 200mm,cpl	

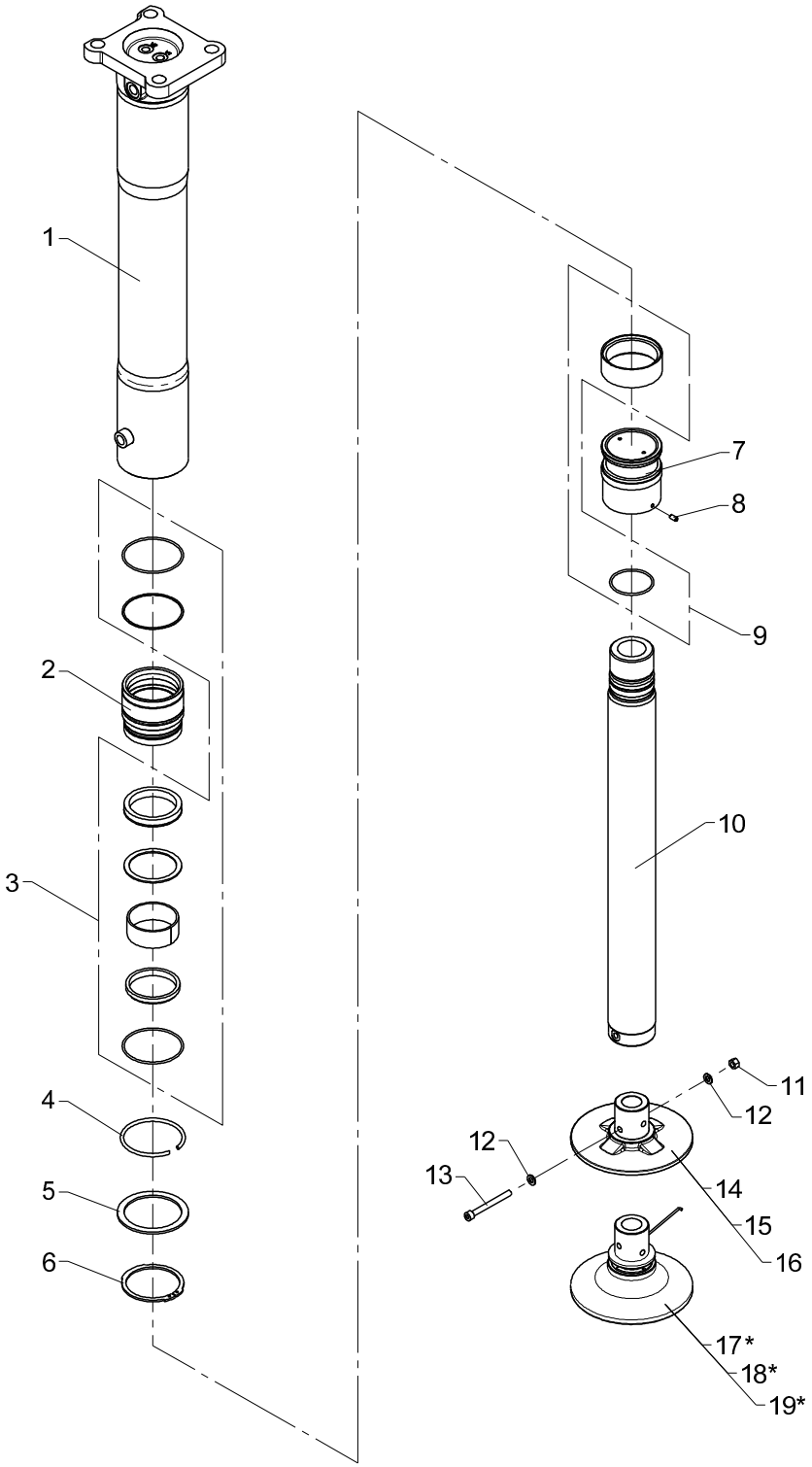

* 1244Z/1444Z: no footplate with ball joint.

Stabilizer cylinder, C90-520, type V

Pos	Qty.	Part no.	Description	Remarks
		6344500	Stabilizer cylinder C90-520	
1	1	6344504	Cylinder pipe, fixed leg	
2	1	6306501	Guide	
3	1	6893840	Seal kit, guide	
4	1	33488	Lock ring, black	
5	1	33236	Back ring	
6	1	33145	Circlip	80U
7	1	6306502	Piston	
8	1	32256	Pointed screw	MSP6 x 12
9	1	6893850	Seal kit, piston + rod	
10	1	6306503	Piston rod	
11	1	30886	Lock nut, stainless	M8
12	2	31147	Face washer, 8 mm	
13	1	30965	Screw	MC8 x 80
14	1	6306506	Footplate, standard	
15	1	6347510	Extension piece, 100 mm cpl.	
16	1	6347520	Extension piece, 200 mm cpl.	
17	1	6346680	Footplate + ball joint std.	
18	1	6347690	Footplate+ball joint,100mm cpl	
19	1	6347700	Footplate+ball joint,200mm cpl	

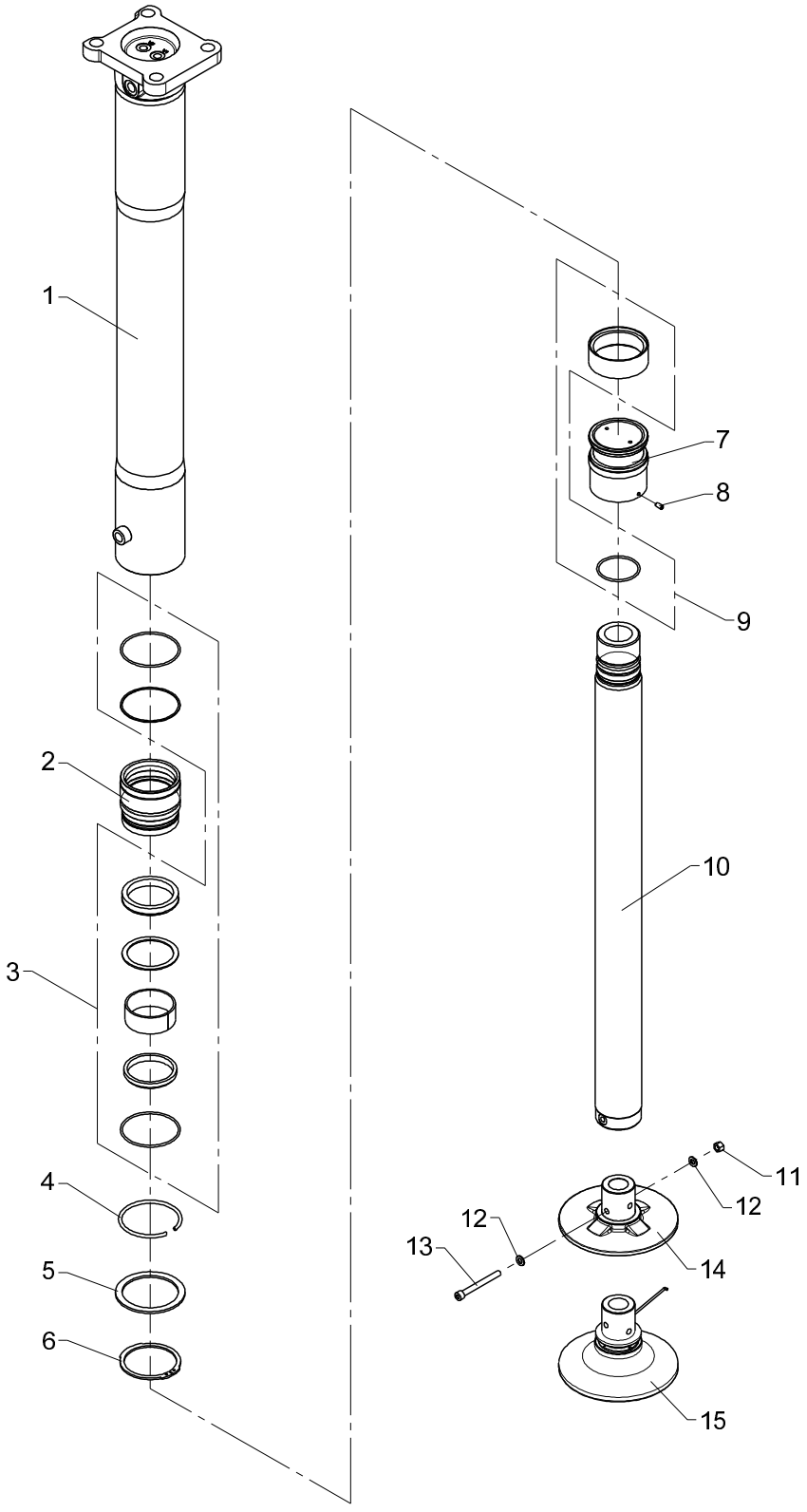
1
2
3
4
5
6
7
8
9
10
11
12
12
13
14
15

Stabilizer cylinder, C90-720, type V

Pos	Qty.	Part no.	Description	Remarks
		6343470	Stabilizer cylinder, C90-720	
1	1	6343471	Cylinder tube, fixed leg	
2	1	6306501	Guide	
3	1	6893840	Seal kit, guide	
4	1	33488	Lock ring, black	
5	1	33236	Back ring	SS 85 x 105 x 3,5
6	1	33145	Circlip	80U
7	1	6306502	Piston	
8	1	32256	Pointed screw	MSP6 x 12
9	1	6893850	Seal kit, piston + rod	
10	1	6343473	Piston rod	
11	1	30886	Lock nut, stainless	M8
12	2	31147	Face washer, 8 mm	
13	1	30965	Screw	MC8 x 80
14	1	6306506	Footplate, standard	
15	1	6346680	Footplate + ball joint std.	

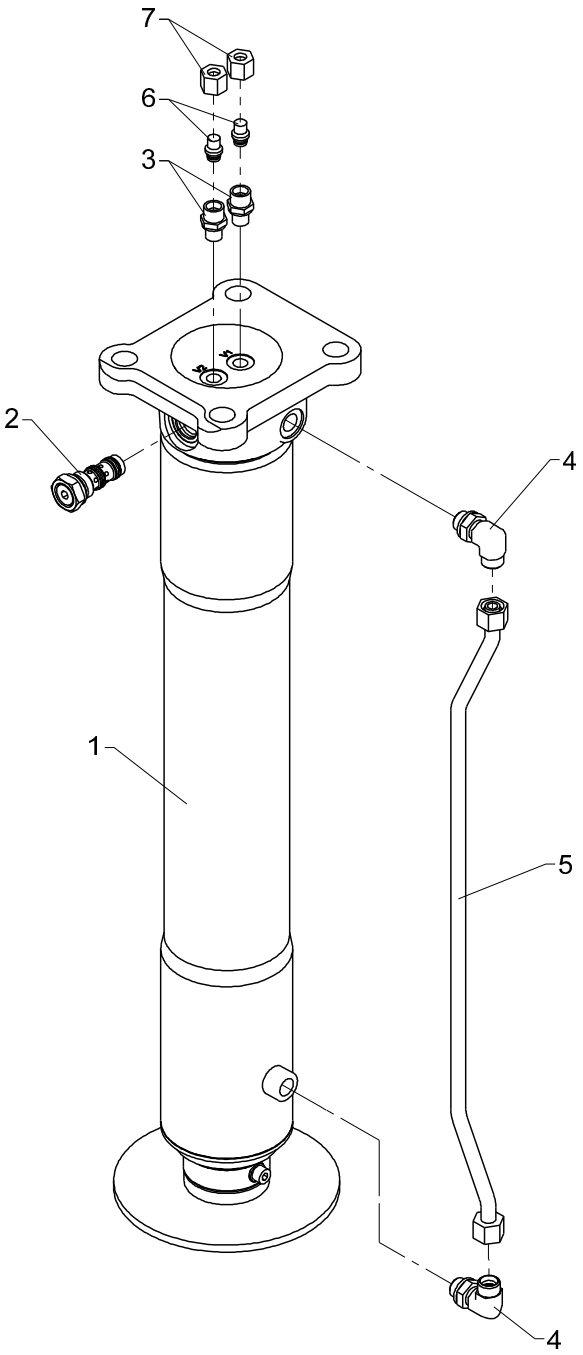
7
6
3
2
4
1
5
4

Stabilizer cylinder with check valve, C90-520, type V

Pos	Qty.	Part no.	Description	Remarks
1	1	6344500	Stabilizer cylinder C90-520	
2	1	58496	Cartridge	
3	2	25121	Connection	P-GEV 10 LR-WD
4	2	26897	Elbow connection	12 mm - 3/8"
5	1	6344514	Pipe	
6	2	25202	Blanking plug	VSD 10 L
7	2	25182	Coupling nut	M 10 L

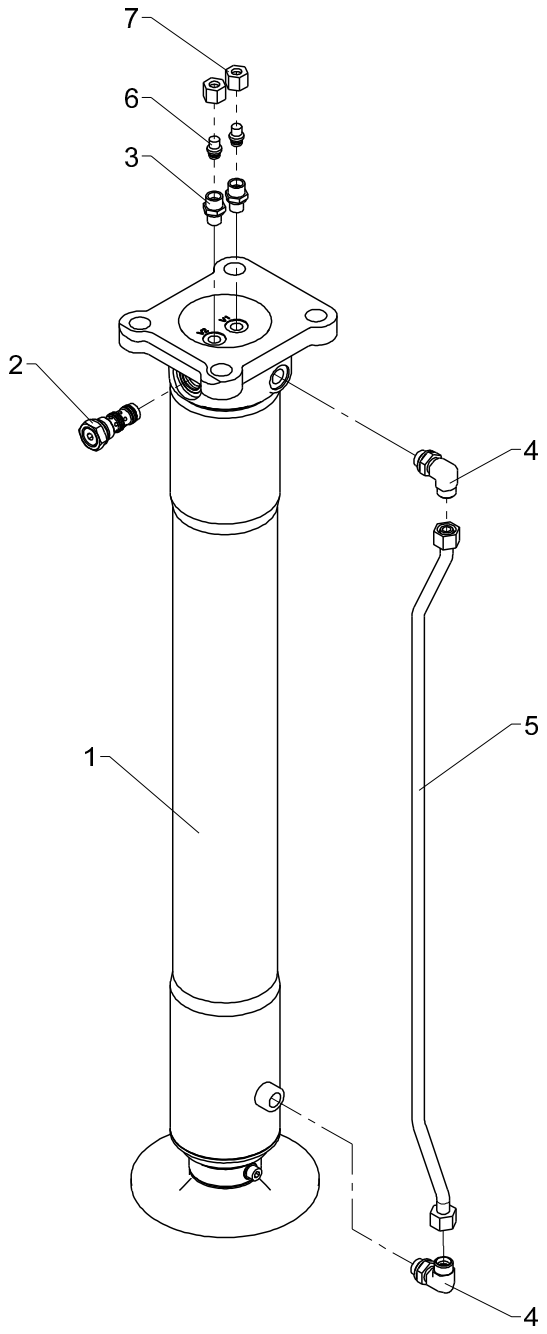
7
6
3
2
4
5
1
4

Stabilizer cylinder with check valve, C90-720, type V

Pos	Qty.	Part no.	Description	Remarks
1	1	6343470	Stabilizer cylinder, C90-720	
2	1	58496	Cartridge	
3	2	25121	Connection	P-GEV 10 LR-WD
4	2	26897	Elbow connection	12 mm - 3/8"
5	1	6343481	Pipe, V	
6	2	25202	Blanking plug	VSD 10 L
7	2	25182	Coupling nut	M 10 L

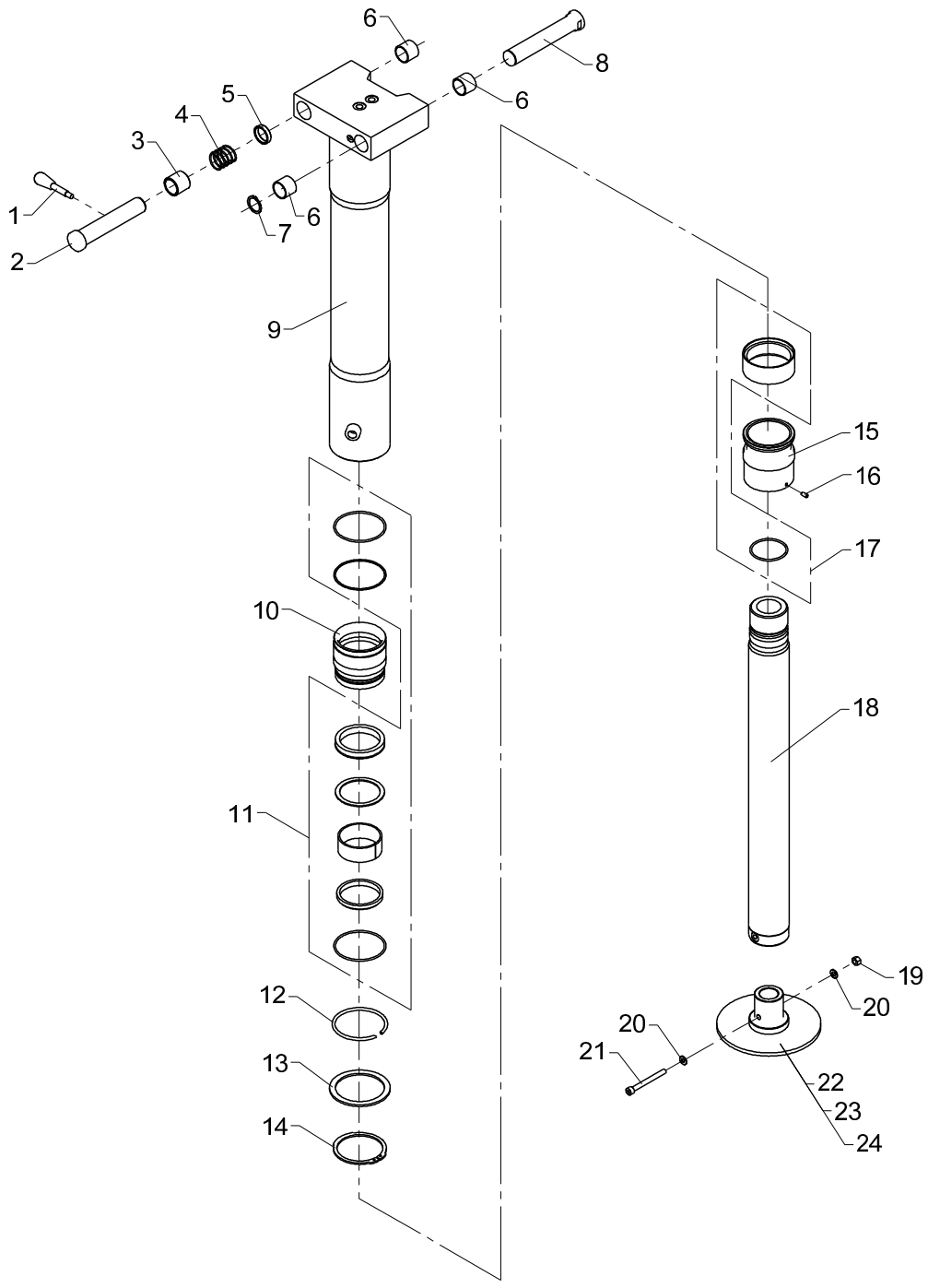
6
8
5
6
4
3
1
6
2
7
9
15
16
17
10
18
11
19
20
20
21
12
22
13
23
14
24

Obsolete

Stabilizer cylinder, C90-520, type R -20°

535 02 220

From loader 1070001
To loader 1070070

Created 06-01-2009
Modified 30-06-2009

Pos	Qty.	Part no.	Description	Remarks
		6344830	Stabilizer cylinder, type R	
1	1	64352	Lever with knob	
2	1	6344812	Pin	
3	1	6340824	Bushing	
4	1	33490	Compression spring	
5	1	6340811	Distance ring	
6	3	23417	Composite bearing	ø28/32 x 25
7	1	33122	Circlip	28U
8	1	6344813	Pin	
9	1	6344821	Cylinder tube	
10	1	6306501	Guide	
11	1	6893840	Seal kit, guide	
12	1	33488	Lock ring, black	
13	1	33236	Back ring	SS 100 x 120 x 3,5
14	1	33145	Circlip	80U
15	1	6306502	Piston	
16	1	32256	Pointed screw	MSP6 x 12
17	1	6893850	Seal kit, piston + rod	
18	1	6306503	Piston rod	
19	1	30886	Lock nut, stainless	M8
20	2	31147	Face washer, 8 mm	8 mm
21	1	30965	Screw	MC8 x 80
22	1	6306506	Footplate, standard	
23	1	6306509	Footplate, 100mm. extension	
24	1	6306512	Footplate, 200mm. extension	

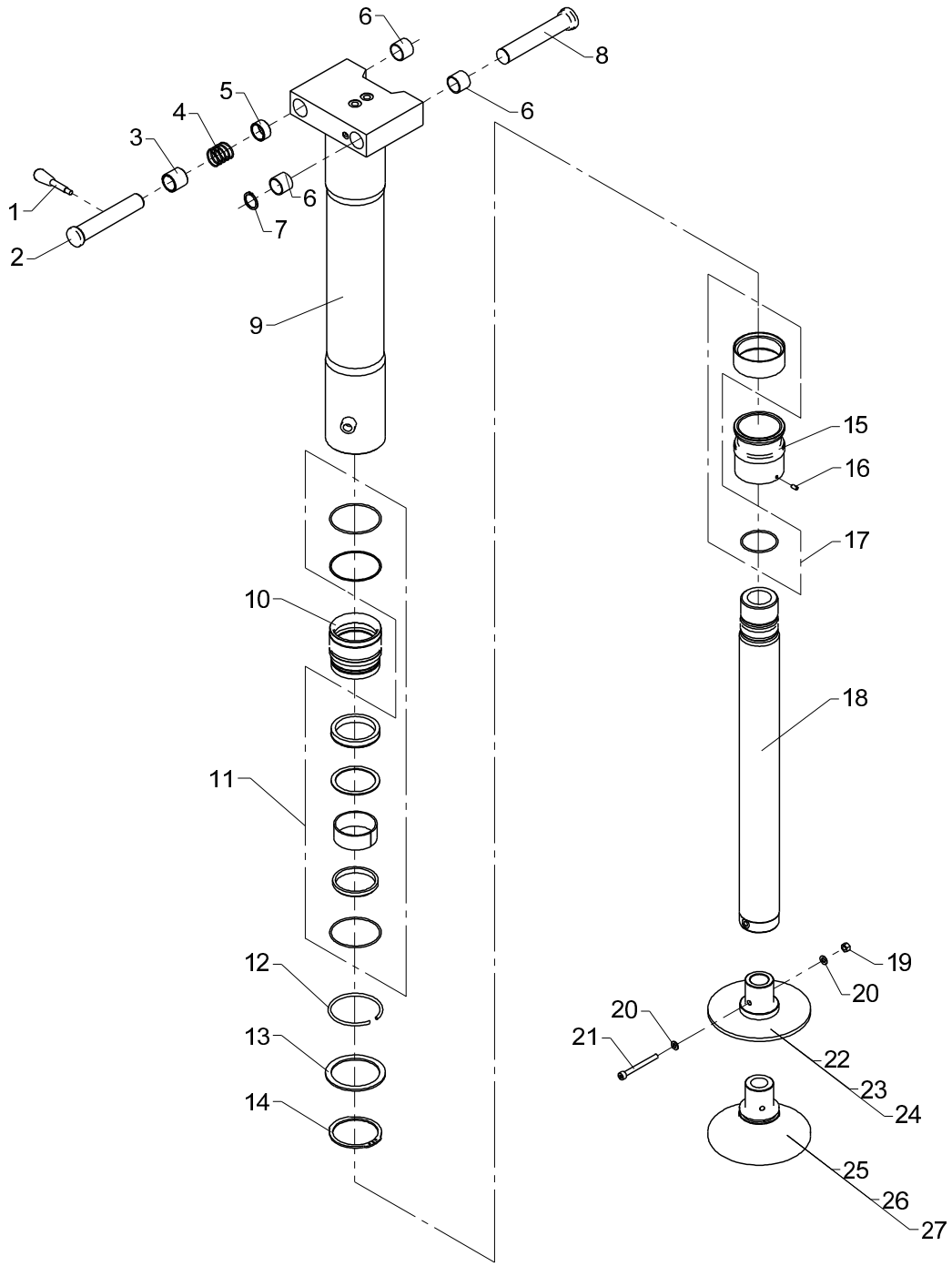
6
8
5
4
6
3
1
6
2
7
9
15
16
17
10
18
11
19
20
20
21
22
23
24
12
13
14
25
26
27

Obsolete

Stabilizer cylinder, C90-520, type R-60°

535 02 221

From loader 1070071
To loader 1070589

Created 30-06-2009
Modified 25-10-2013

Pos	Qty.	Part no.	Description	Remarks
		6345800	Stabilizer cylinder C90-520, R	
1	1	64352	Lever with knob	
2	1	6344812	Pin	
3	1	6340824	Bushing	
4	1	33490	Compression spring	
5	1	6340811	Distance ring	
6	3	23417	Composite bearing	ø28/32 x 25
7	1	33122	Circlip	28U
8	1	6344814	Pin	
9	1	6344821	Cylinder tube	
10	1	6306501	Guide	
11	1	6893840	Seal kit, guide	
12	1	33488	Lock ring, black	
13	1	33236	Back ring	SS 85 x 105 x 3,5
14	1	33145	Circlip	80U
15	1	6306502	Piston	
16	1	32256	Pointed screw	MSP6 x 12
17	1	6893850	Seal kit, piston + rod	
18	1	6306503	Piston rod	
19	1	30886	Lock nut, stainless	M8
20	2	31147	Face washer, 8 mm	8 mm
21	1	30965	Screw	MC8 x 80
22	1	6306506	Footplate, standard	
23	1	6306509	Footplate, 100mm. extension	
24	1	6306512	Footplate, 200mm. extension	
25	1	6346680	Footplate + ball joint std.	
26	1	6346690	Footplate + ball joint 100 mm	
27	1	6346700	Extension piece 200mm,cpl	

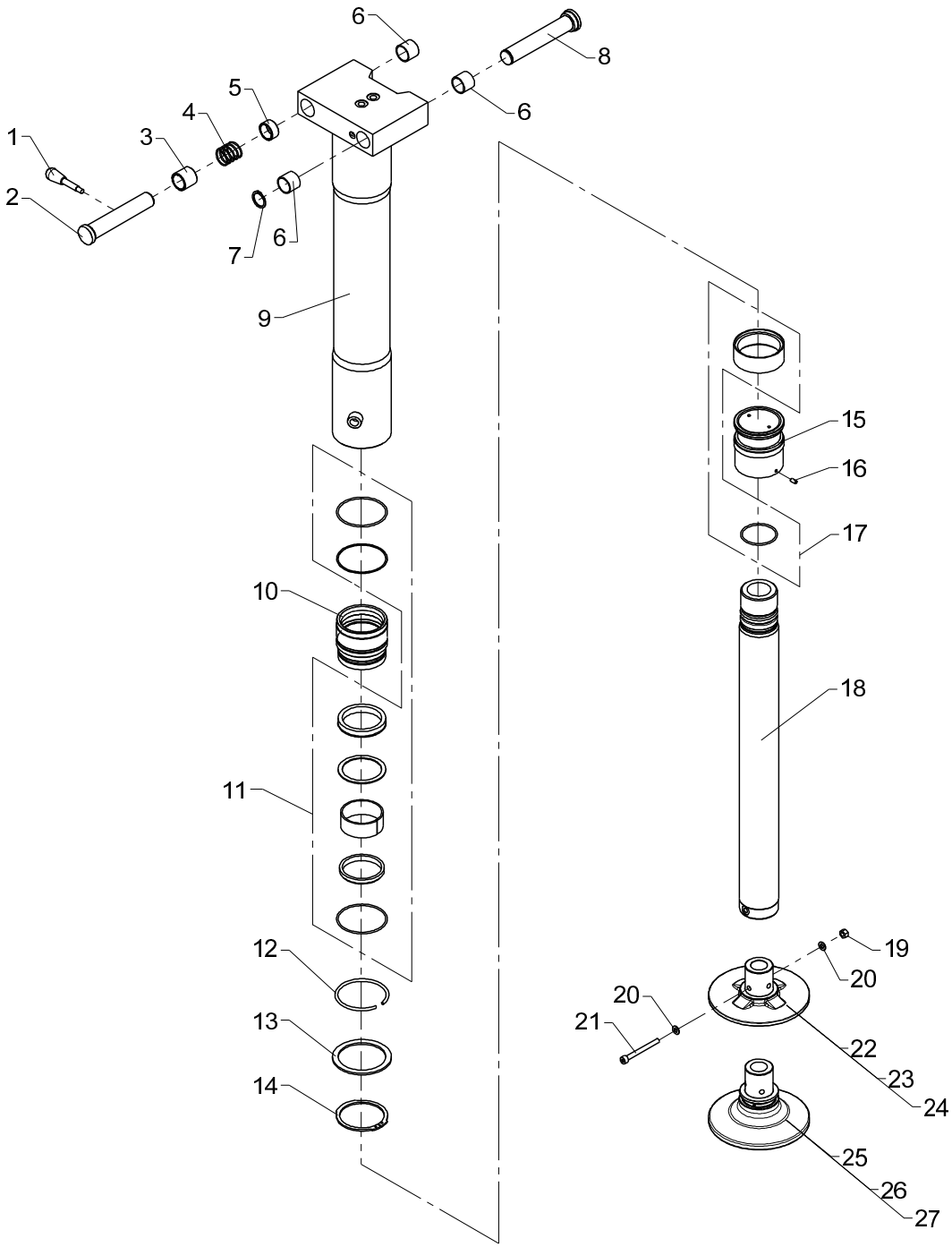
6
8
5
4
6
1
3
2
6
7
9
15
16
17
10
18
11
19
20
20
21
22
23
24
12
13
14
25
26
27

Stabilizer cylinder, C90-520, type R-60°

Created 03-04-2013
Modified 02-05-2014

Pos	Qty.	Part no.	Description	Remarks
		6345800	Stabilizer cylinder C90-520, R	
1	1	64352	Lever with knob	
2	1	6344812	Pin	
3	1	6340824	Bushing	
4	1	33490	Compression spring	
5	1	6340811	Distance ring	
6	3	23417	Composite bearing	ø28/32 x 25
7	1	33122	Circlip	28U
8	1	6344814	Pin	
9	1	6344821	Cylinder tube	
10	1	6306501	Guide	
11	1	6893840	Seal kit, guide	
12	1	33488	Lock ring, black	
13	1	33236	Back ring	SS 85 x 105 x 3,5
14	1	33145	Circlip	80U
15	1	6306502	Piston	
16	1	32256	Pointed screw	MSP6 x 12
17	1	6893850	Seal kit, piston + rod	
18	1	6306503	Piston rod	
19	1	30886	Lock nut, stainless	M8
20	2	31147	Face washer, 8 mm	
21	1	30965	Screw	MC8 x 80
22	1	6306506	Footplate, standard	
23	1	6347510	Extension piece, 100 mm cpl.	
24	1	6347520	Extension piece, 200 mm cpl.	
25	1	6346680	Footplate + ball joint std.	
26	1	6347690	Footplate+ball joint,100mm cpl	
27	1	6347700	Footplate+ball joint,200mm cpl	

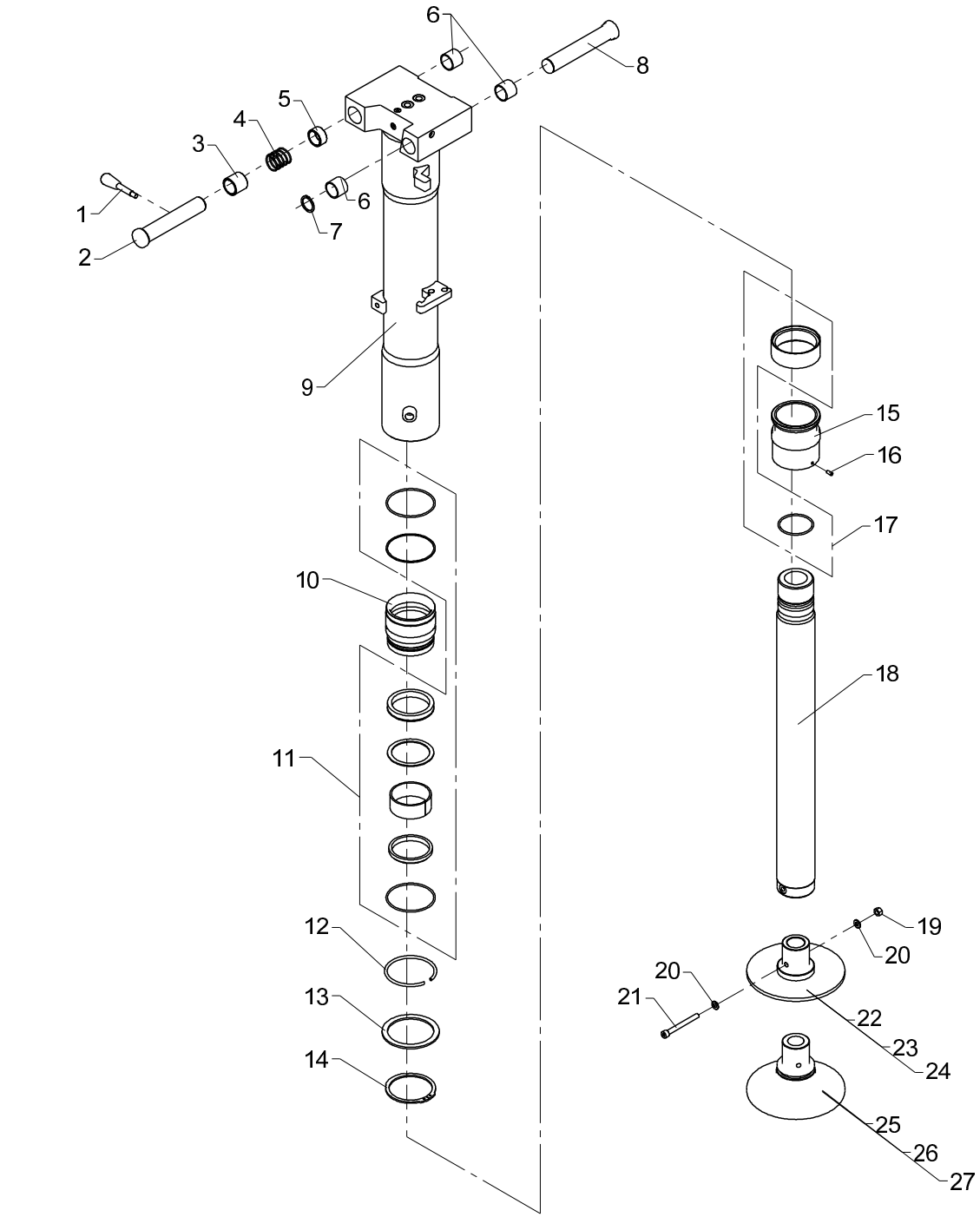

☆ Loctite 243

Obsolete

Stabilizer cylinder, C90-520, type R-180°

535 02 222

From loader 1070001
To loader 1070589

Created 03-04-2013
Modified 25-10-2013

Pos	Qty.	Part no.	Description	Remarks
		6345170	Stab. cyl., C90-520, R	
1	1	64352	Lever with knob	
2	1	6344812	Pin	
3	1	6340824	Bushing	
4	1	33490	Compression spring	
5	1	6340811	Distance ring	
6	3	23417	Composite bearing	ø28/32 x 25
7	1	33122	Circlip	28U
8	1	6344813	Pin	
9	1	6344828	Cylinder tube R180	
10	1	6306501	Guide	
11	1	6893840	Seal kit, guide	
12	1	33488	Lock ring, black	
13	1	33236	Back ring	SS 85 x 105 x 3,5
14	1	33145	Circlip	80U
15	1	6306502	Piston	
16	1	32256	Pointed screw	MSP6 x 12
17	1	6893850	Seal kit, piston + rod	
18	1	6306503	Piston rod	
19	1	30886	Lock nut, stainless	M8
20	2	31147	Face washer, 8 mm	
21	1	30965	Screw	MC8 x 80
22	1	6306506	Footplate, standard	
23	1	6306509	Footplate, 100mm. extension	
24	1	6306512	Footplate, 200mm. extension	
25	1	6346680	Footplate + ball joint std.	
26	1	6346690	Footplate + ball joint 100 mm	
27	1	6346700	Extension piece 200mm,cpl	

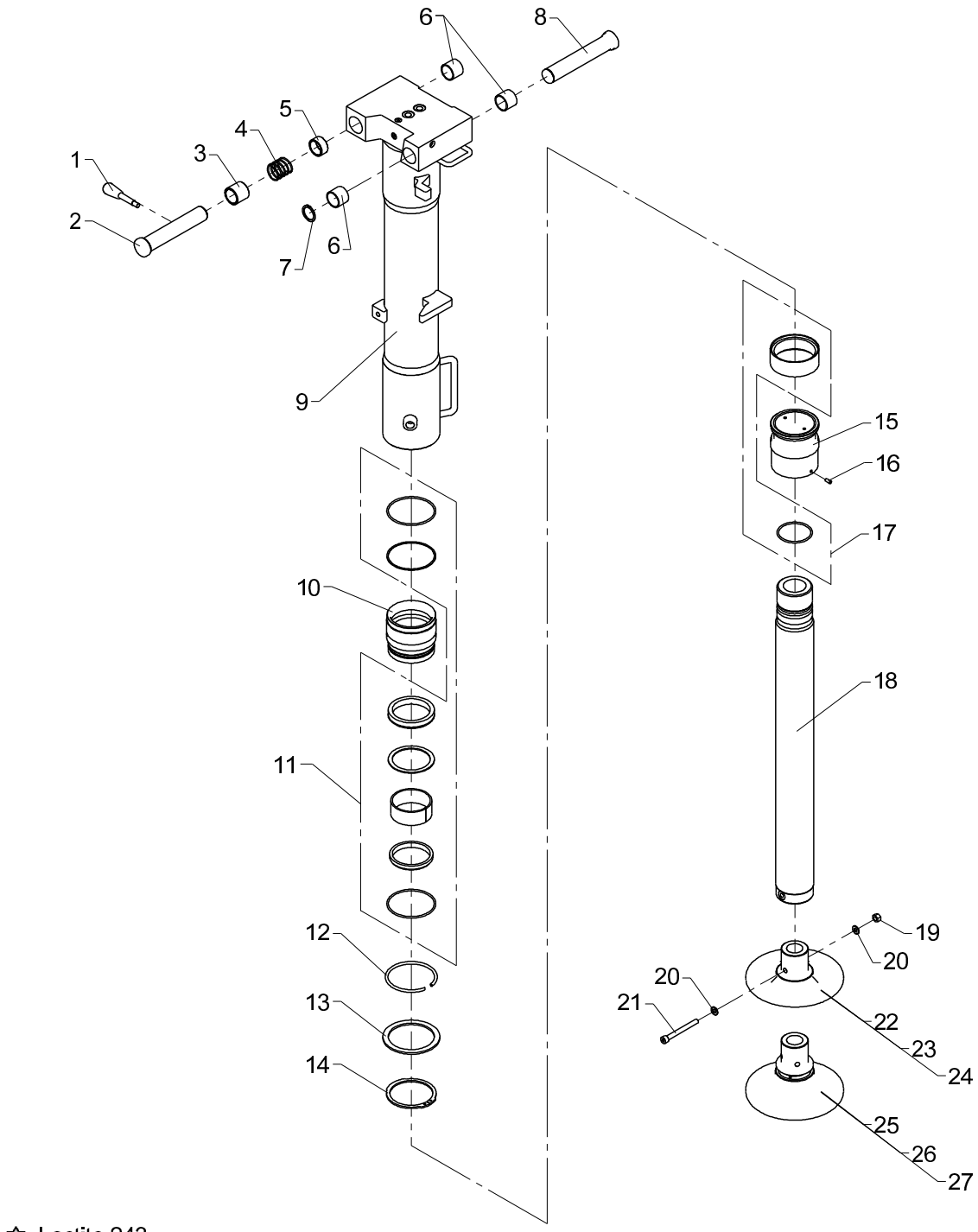

✡ Loctite 243

Stabilizer cylinder, C90-520, type R-180°

Pos	Qty.	Part no.	Description	Remarks
		6345170	Stab. cyl., C90-520, R	
1	1	64352	Lever with knob	
2	1	6344812	Pin	
3	1	6340824	Bushing	
4	1	33490	Compression spring	
5	1	6340811	Distance ring	
6	3	23417	Composite bearing	ø28/32 x 25
7	1	33122	Circlip	28U
8	1	6344813	Pin	
9	1	6344828	Cylinder tube R180	
10	1	6306501	Guide	
11	1	6893840	Seal kit, guide	
12	1	33488	Lock ring, black	
13	1	33236	Back ring	SS 85 x 105 x 3,5
14	1	33145	Circlip	80U
15	1	6306502	Piston	
16	1	32256	Pointed screw	MSP6 x 12
17	1	6893850	Seal kit, piston + rod	
18	1	6306503	Piston rod	
19	1	30886	Lock nut, stainless	M8
20	2	31147	Face washer, 8 mm	
21	1	30965	Screw	MC8 x 80
22	1	6306506	Footplate, standard	
23	1	6347510	Extension piece, 100 mm cpl.	
24	1	6347520	Extension piece, 200 mm cpl.	
25	1	6346680	Footplate + ball joint std.	
26	1	6347690	Footplate+ball joint,100mm cpl	
27	1	6347700	Footplate+ball joint,200mm cpl	

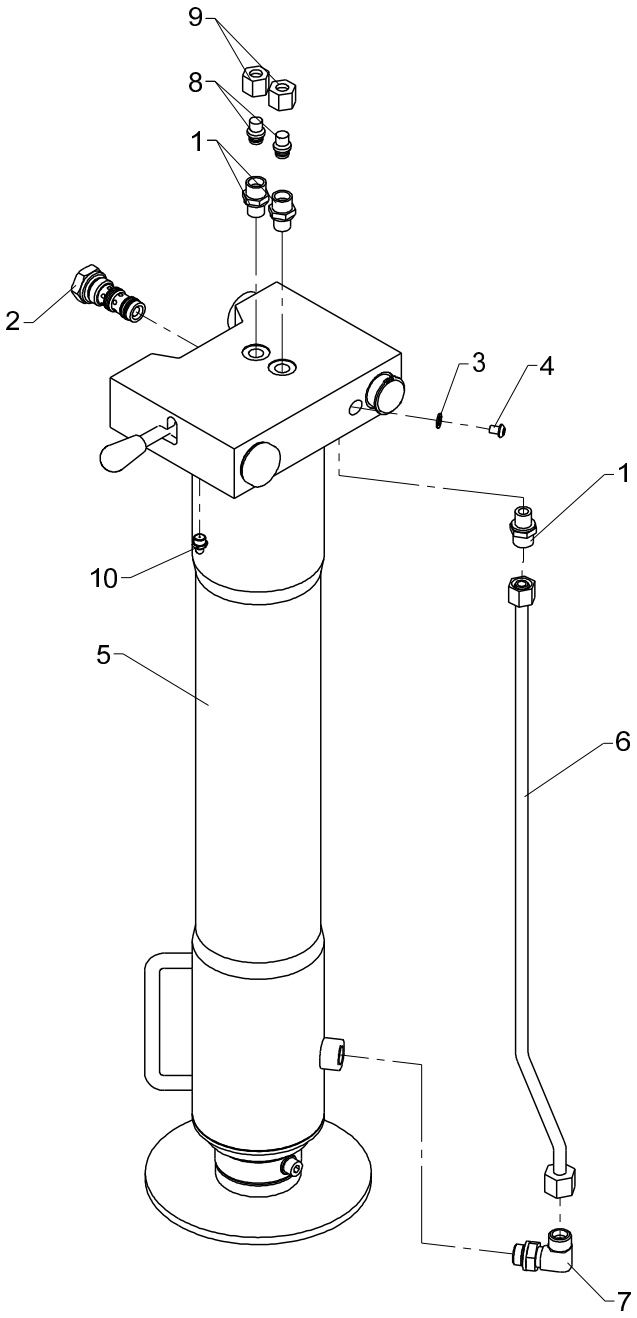
9
8
1
2
3
4
1
10
5
6
7

Obsolete

Stabilizer cylinder with check valve, type R-20°

535 02 230

From loader 1070001
To loader 1070070

Created 06-01-2009
Modified 30-06-2009

Pos	Qty.	Part no.	Description	Remarks
1	3	25121	Connection	P-GEV 10 LR-WD
2	1	58496	Cartridge	
3	1	21109	Seal washer	ø7,1 x 12 x 1
4	1	31778	Screw, stainless	M6 x 8
5	1	6344830	Stabilizer cylinder, type R	
6	1	6340823	Pipe, R	
7	1	26899	Elbow connection	10 mm - 3/8"
8	2	25202	Blanking plug	VSD 10 L
9	2	25182	Coupling nut	M 10 L
10	1	31318	Lubricator	1/8" RG

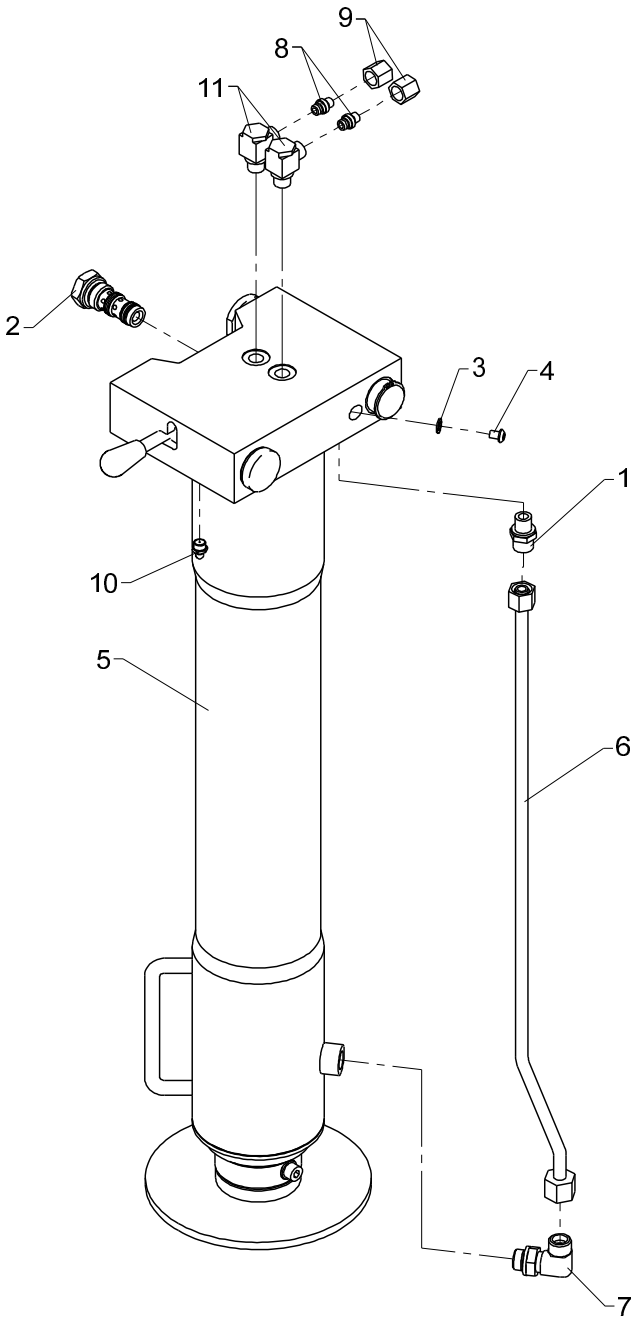
9
8
11
2
3
4
1
10
5
6
7

Stabilizer cylinder with check valve, type R-60°

Pos	Qty.	Part no.	Description	Remarks
1	1	25121	Connection	P-GEV 10 LR-WD
2	1	58496	Cartridge	
3	1	21109	Seal washer	ø7,1 x 12 x 1
4	1	31778	Screw, stainless	M6 x 8
5	1	6345800	Stabilizer cylinder C90-520, R	
6	1	6340823	Pipe, R	
7	1	26899	Elbow connection	12 mm - 3/8"
8	2	26166	Blanking plug	VSD 8 L
9	2	25181	Coupling nut	M 8 L
10	1	31318	Lubricator	1/8" RG
11	2	25113	Banjo connection	RSWV 8 LR

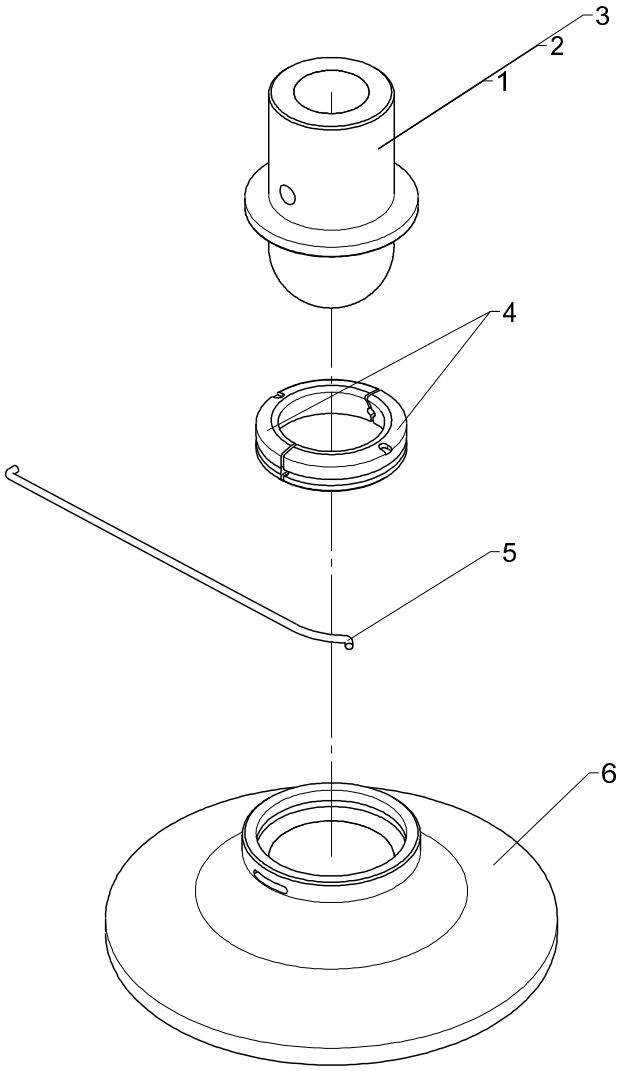

Mounting tool available, See sect. 533 25 060

Obsolete

Foot plate with ball joint, cpl. (ø180)

535 02 235

From loader 1070001
To loader 1070592
Created
Modified 25-10-2013

Pos	Qty.	Part no.	Description	Remarks
		6346680	Footplate + ball joint std.	
		6346690	Footplate + ball joint 100 mm	
		6346700	Extension piece 200mm,cpl	
1	1	6306517	Ball joint	
2	1	6306518	Ball joint, (100mm ext)	
3	1	6306519	Ball joint (200 mm ext.)	
4	2	6306516	Ball seat catch	
5	1	33927	Locking wire	
6	1	68026	Footplate ø 180 mm	

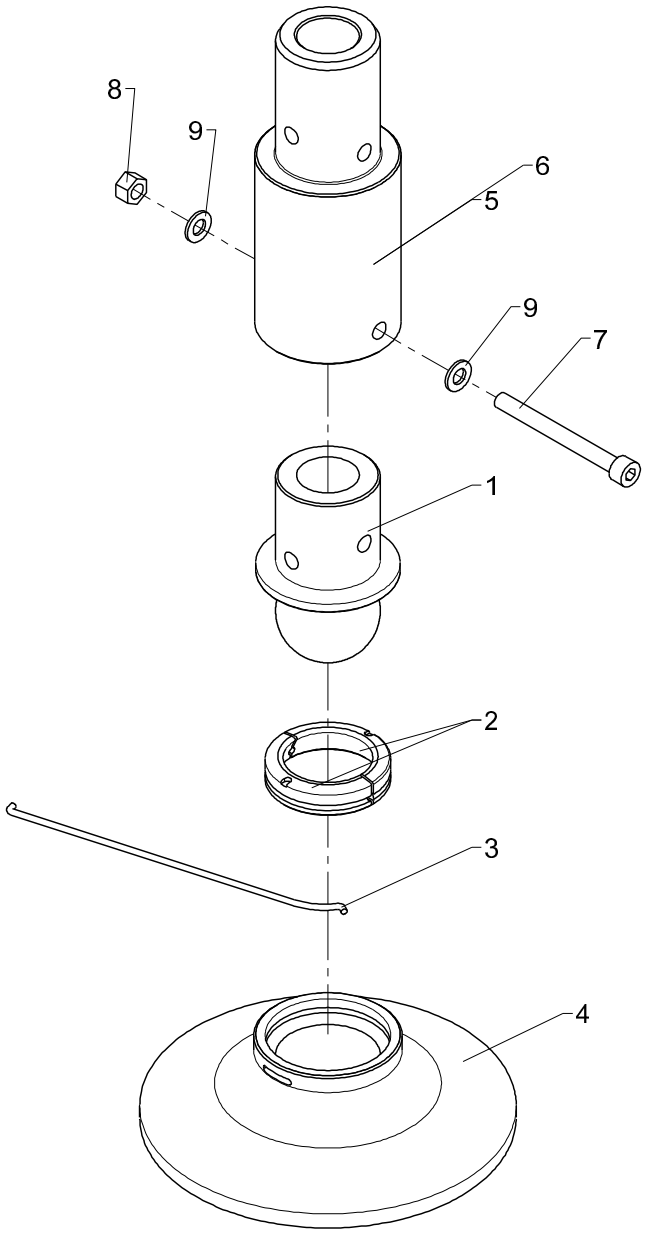

Mounting tool available, See sect. 533 25 060

Foot plate with ball joint, cpl. (ø180)

Pos	Qty.	Part no.	Description	Remarks
		6346680	Footplate + ball joint std.	
		6347690	Footplate+ball joint,100mm cpl	
		6347700	Footplate+ball joint,200mm cpl	
1	1	6306517	Ball joint	
2	2	6306516	Ball seat catch	
3	1	33927	Locking wire	
4	1	68026	Footplate ø 180 mm	
5	1	6346518	Extension piece 100 mm	
6	1	6346519	Extension piece 200 mm	
7	1	30965	Screw	MC8 x 80
8	1	30886	Lock nut, stainless	M8
9	2	31147	Face washer, 8 mm	

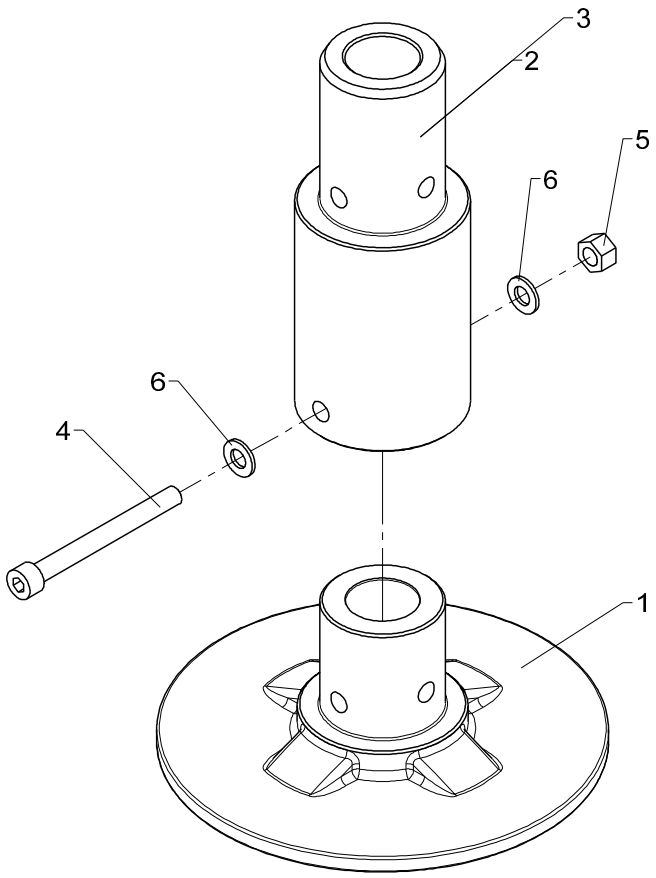
3
2
5
6
6
4
1

Extension piece, cpl.

Pos	Qty.	Part no.	Description	Remarks
1	1	6306506	Footplate, standard	
2	1	6346518	Extension piece 100 mm	
3	1	6346519	Extension piece 200 mm	
4	1	30965	Screw	MC8 x 80
5	1	30886	Lock nut, stainless	M8
6	2	31147	Face washer, 8 mm	

Patentanmeldt.
Patent pending.
Patentangemeldet.
La demande de brêvet a été déposée.
Solicitud de patente.

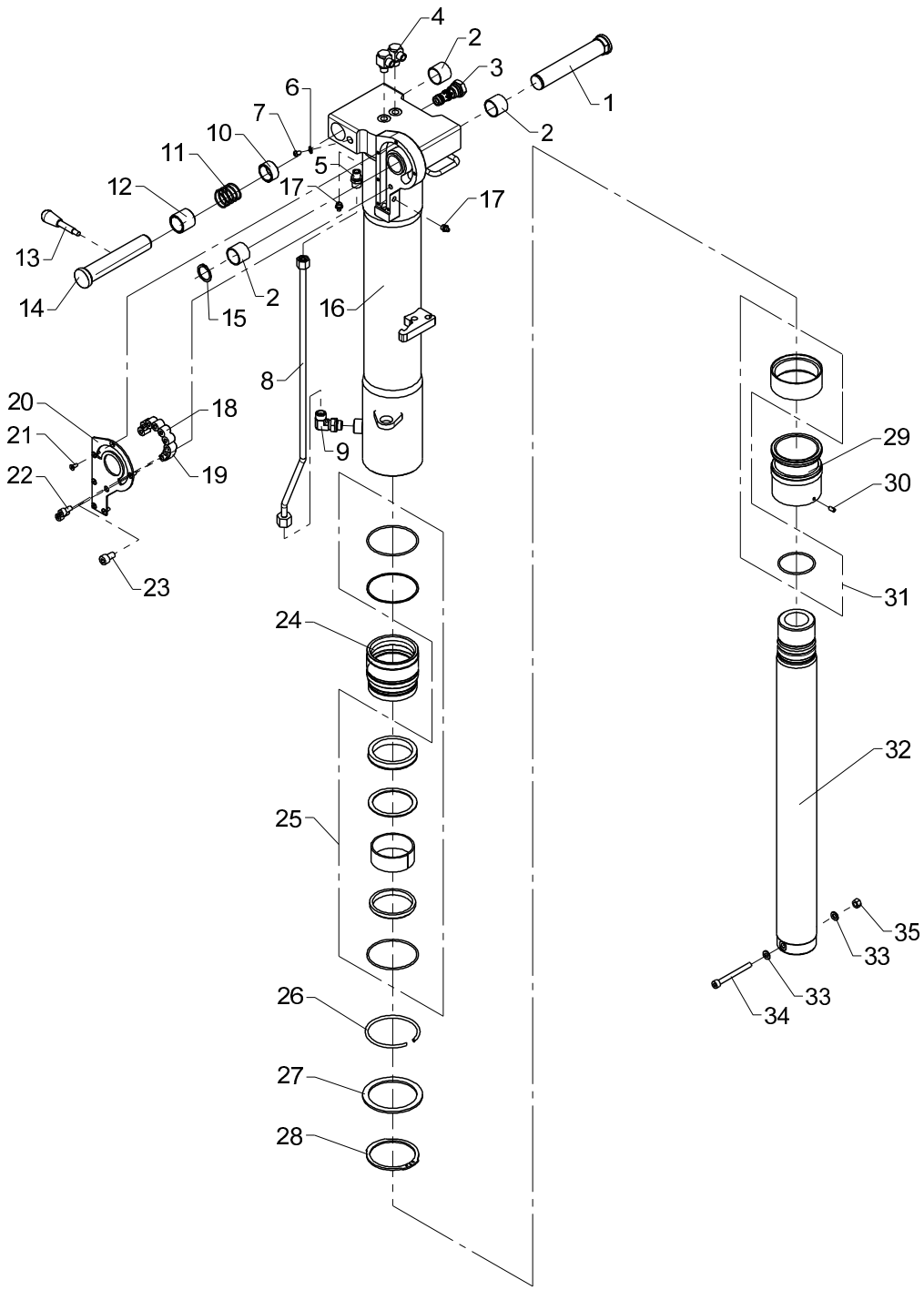

Stabilizer cylinder, C90-520, type HR

Pos	Qty.	Part no.	Description	Remarks
1	1	6344813	Pin	
2	3	23417	Composite bearing	ø28/32 x 25
3	1	58496	Cartridge	
4	2	25113	Banjo connection	RSWV 8 LR
5	1	25121	Connection	P-GEV 10 LR-WD
6	1	21109	Seal washer	ø7,1 x 12 x 1
7	1	31778	Screw, stainless	M6 x 8
8	1	6344825	Pipe	
9	1	26899	Elbow connection	12 mm - 3/8"
10	1	6340811	Distance ring	
11	1	33490	Compression spring	
12	1	6340824	Bushing	
13	1	64352	Lever with knob	
14	1	6344812	Pin	
15	1	33122	Circlip	28U
16	1	6344806	Cylinder pipe, HR	
17	2	31318	Lubricator	1/8" RG
18	7	23120	Cylindrical roller	RC 16 x 16 CD
19	1	6340808	Stop	
20	1	6340807	Cover	
21	6	32405	Sockethead screw	MK5 x 12
22	2	30449	Screw	MC8 x 16
23	1	30964	Screw	MC10 x 16
24	1	6306501	Guide	
25	1	6893840	Seal kit, guide	
26	1	33488	Lock ring, black	
27	1	33236	Back ring	SS 85 x 105 x 3,5
28	1	33145	Circlip	80U
29	1	6306502	Piston	
30	1	32256	Pointed screw	MSP6 x 12
31	1	6893850	Seal kit, piston + rod	
32	1	6306503	Piston rod	
33	2	31147	Face washer, 8 mm	
34	1	30965	Screw	MC8 x 80
35	1	30886	Lock nut, stainless	M8

Patentanmeldt.
Patent pending.
Patentangemeldet.
La demande de brêvet a été déposée.
Solicitud de patente.

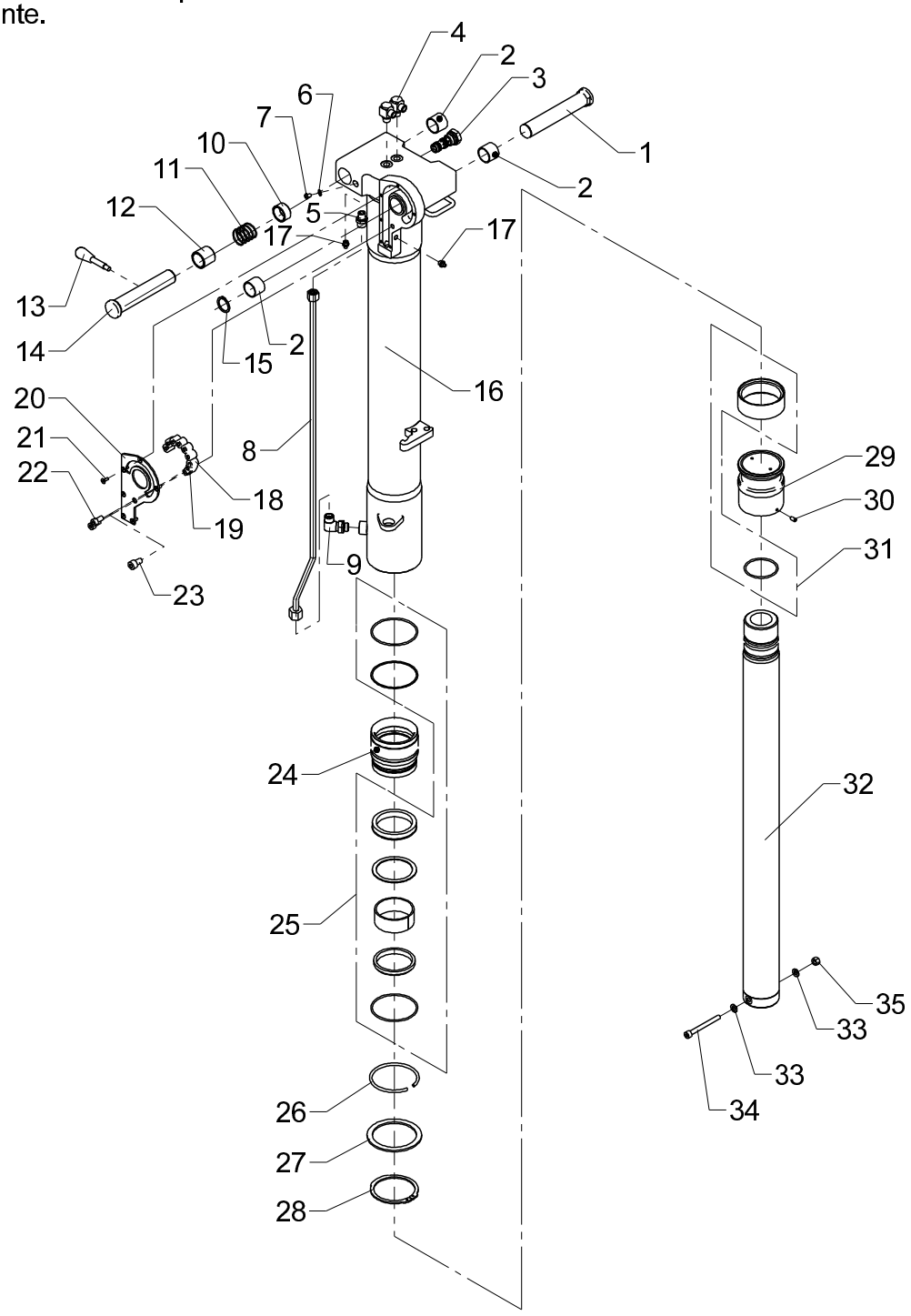

Stabilizer cylinder, C90-720, type HR

Pos	Qty.	Part no.	Description	Remarks
1	1	6344813	Pin	
2	3	23417	Composite bearing	ø28/32 x 25
3	1	58496	Cartridge	
4	2	25113	Banjo connection	RSWV 8 LR
5	1	25121	Connection	P-GEV 10 LR-WD
6	1	21109	Seal washer	ø7,1 x 12 x 1
7	1	31778	Screw, stainless	M6 x 8
8	1	6343982	Pipe, HR	
9	1	26899	Elbow connection	10 mm - 3/8"
10	1	6340811	Distance ring	
11	1	33490	Compression spring	
12	1	6340824	Bushing	
13	1	64352	Lever with knob	
14	1	6344812	Pin	
15	1	33122	Circlip	28U
16	1	6343981	Cylinder tube, HR	
17	2	31318	Lubricator	1/8" RG
18	7	23120	Cylindrical roller	RC 16 x 16 CD
19	1	6340808	Stop	
20	1	6340807	Cover	
21	6	32405	Sockethead screw	MK5 x 12
22	2	30449	Screw	MC8 x 16
23	1	30964	Screw	MC10 x 16
24	1	6306501	Guide	
25	1	6893840	Seal kit, guide	
26	1	33488	Lock ring, black	
27	1	33236	Back ring	SS 85 x 105 x 3,5
28	1	33145	Circlip	80U
29	1	6306502	Piston	
30	1	32256	Pointed screw	MSP6 x 12
31	1	6893850	Seal kit, piston + rod	
32	1	6343473	Piston rod	
33	2	31147	Face washer, 8 mm	
34	1	30965	Screw	MC8 x 80
35	1	30886	Lock nut, stainless	M8

Patentanmeldt.
Patent pending.
Patentangemeldet.
La demande de brêvet a été déposée.
Solicitud de patente.

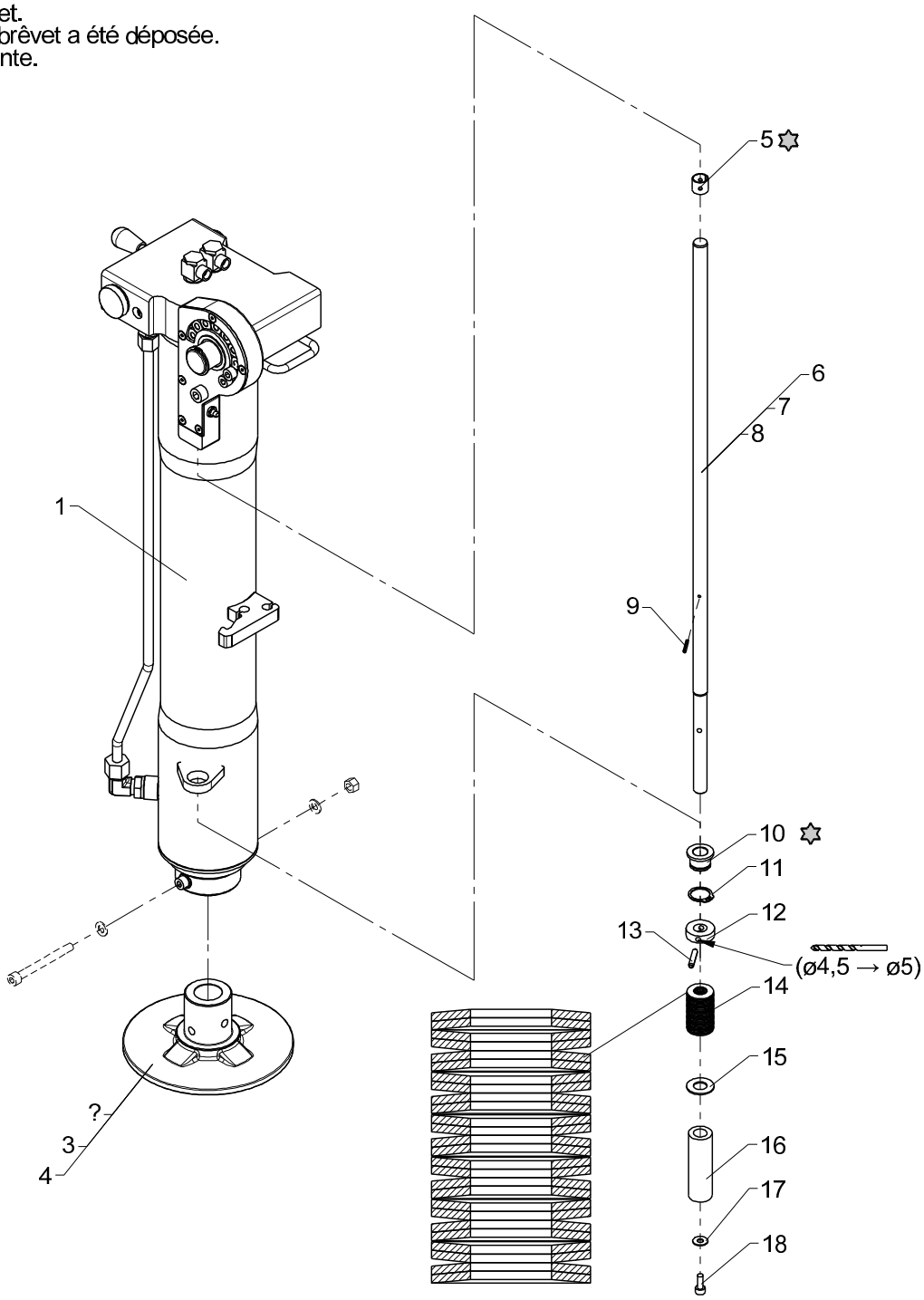

✡ Loctite 601

Obsolete

535 02 245

From loader 1070001
To loader 1070567

Created 06-01-2009
Modified 25-10-2013

Stabilizer cylinder incl. swing-up mechanism, type HR

Pos	Qty.	Part no.	Description	Remarks
		6344940	Stabilizer cylinder, complete	
		6344950	Stabilizer cylinder, complete	
		6344960	Stabilizer cylinder, complete	
1	1	6344930	Stabilizer cylinder, type HR	
2	1	6306506	Footplate, standard	
3	1	6306509	Footplate, 100mm. extension	
4	1	6306512	Footplate, 200mm. extension	
5	1	23948	Bushing	PM 1515 DX
6	1	6340809	Compression rod, standard	
7	1	6340818	Compression rod, 100 mm	
8	1	6340819	Compression rod, 200 mm	
9	1	31202	Retaining pin	ø3 x 20
10	1	63597	Bushing	
11	1	33110	Circlip	22U
12	1	6340816	Washer	
13	1	31586	Retaining pin, stainless	ø5 x 30
14	26	33489	Disc spring	
15	1	31111	Washer	14 mm
16	1	6340815	Pipe	
17	1	32306	Washer	6 mm
18	1	30424	Screw	MC6 x 16

Patentanmeldt.
Patent pending.
Patentangemeldet.
La demande de brêvet a été déposée.
Solicitud de patente.

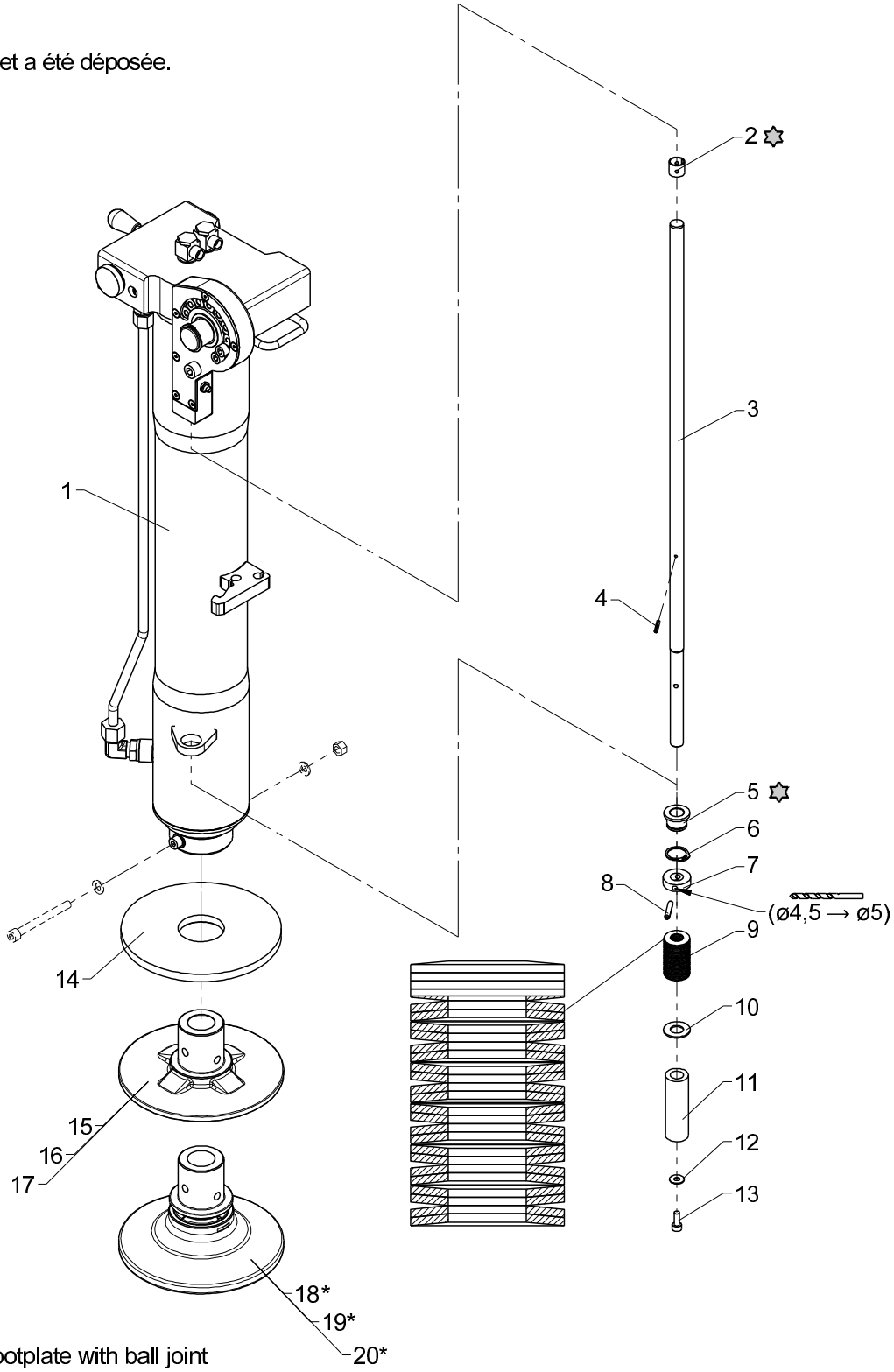

Loctite 601

* 1244Z/1444Z: no footplate with ball joint

Stabilizer cylinder incl. swing-up mechanism, type HR

Pos	Qty.	Part no.	Description	Remarks
		6347920	Stab.cylinder, C90-520, typeHR	
1	1	6344930	Stabilizer cylinder, type HR	
2	1	23948	Bushing	PM 1515 DX
3	1	6340539	Compression rod, std.	
4	1	31202	Retaining pin	ø3 x 20
5	1	63597	Bushing	
6	1	33110	Circlip	22U
7	1	6340816	Washer	
8	1	31586	Retaining pin, stainless	ø5 x 30
9	26	33489	Disc spring	
10	1	31111	Washer	14 mm
11	1	6340815	Pipe	
12	1	32306	Washer	6 mm
13	1	30424	Screw	MC6 x 16
14	1	6346538	Compression plate, HR	
15	1	6306506	Footplate, standard	
16	1	6347510	Extension piece, 100 mm cpl.	
17	1	6347520	Extension piece, 200 mm cpl.	
18	1	6346680	Footplate + ball joint std.	
19	1	6347690	Footplate+ball joint,100mm cpl	
20	1	6347700	Footplate+ball joint,200mm cpl	

Patentanmeldt.
Patent pending.
Patentangemeldet.
La demande de brêvet a été déposée.
Solicitud de patente.

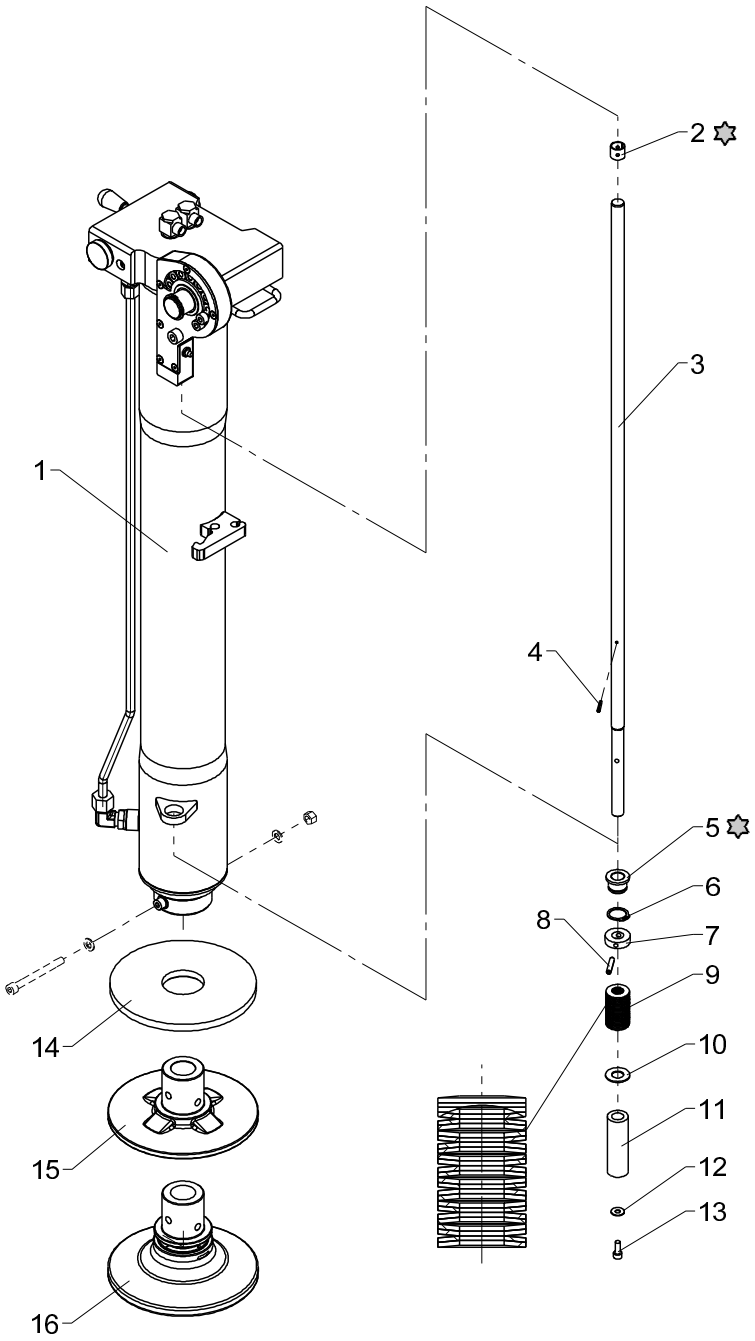

Loctite

Stabilizer cylinder incl. swing-up mechanism, type HR

Pos	Qty.	Part no.	Description	Remarks
		6343970		
1	1	6343980	Stab. cylinder C90-720,type HR	
2	1	23948	Bushing	PM 1515 DX
3	1	6343962	Copression rod	
4	1	31202	Retaining pin	ø3 x 20
5	1	63597	Bushing	
6	1	33110	Circlip	22U
7	1	6340816	Washer	
8	1	31586	Retaining pin, stainless	ø5 x 30
9	26	33489	Disc spring	
10	1	31111	Washer	14 mm
11	1	6340815	Pipe	
12	1	32306	Washer	6 mm
13	1	30424	Screw	MC6 x 16
14	1	6346538	Compression plate, HR	
15	1	6306506	Footplate, standard	
16	1	6346680	Footplate + ball joint std.	

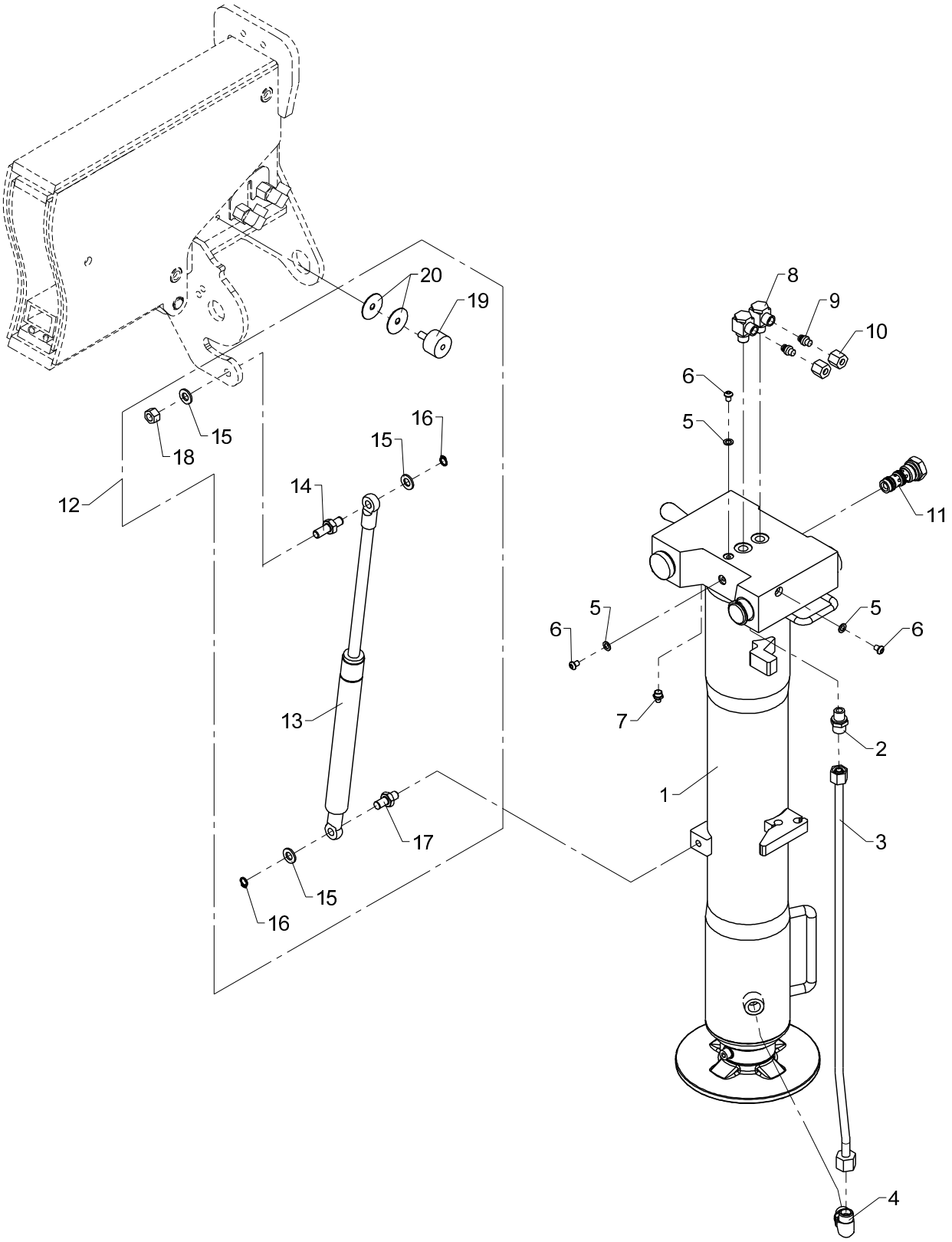
20
19
8
9
10
6
5
16
15
18
15
14
12
11
5
6
5
6
7
13
2
1
3
17
15
16
4

Stabilizer cylinder with check valve, C90-520, Type R-180°

Pos	Qty.	Part no.	Description	Remarks
		6345180	Stab. cyl. w. check valve C90	
		6343190	Gas spring with fittings	
1	1	6345170	Stab. cyl., C90-520, R	
2	1	25121	Connection	P-GEV 10 LR-WD
3	1	6340823	Pipe, R	
4	1	26899	Elbow connection	10 mm - 3/8"
5	3	21109	Seal washer	ø7,1 x 12 x 1
6	3	31778	Screw, stainless	M6 x 8
7	1	31318	Lubricator	1/8" RG
8	2	25113	Banjo connection	RSWV 8 LR
9	2	26166	Blanking plug	VSD 8 L
10	2	25181	Coupling nut	M 8 L
11	1	58496	Cartridge	
12	1	6343190	Gas spring with fittings	
13	1	48487	Gas spring	
14	1	6344067	Screw for gas spring, long	
15	3	31565	Washer, stainless	10 mm
16	2	33101	Circlip	10U
17	1	6344068	Screw for gas spring, short	
18	1	31564	Lock nut, stainless	M10
19	1	44263	Torsion balancer	
20	2	31150	Washer	8 mm

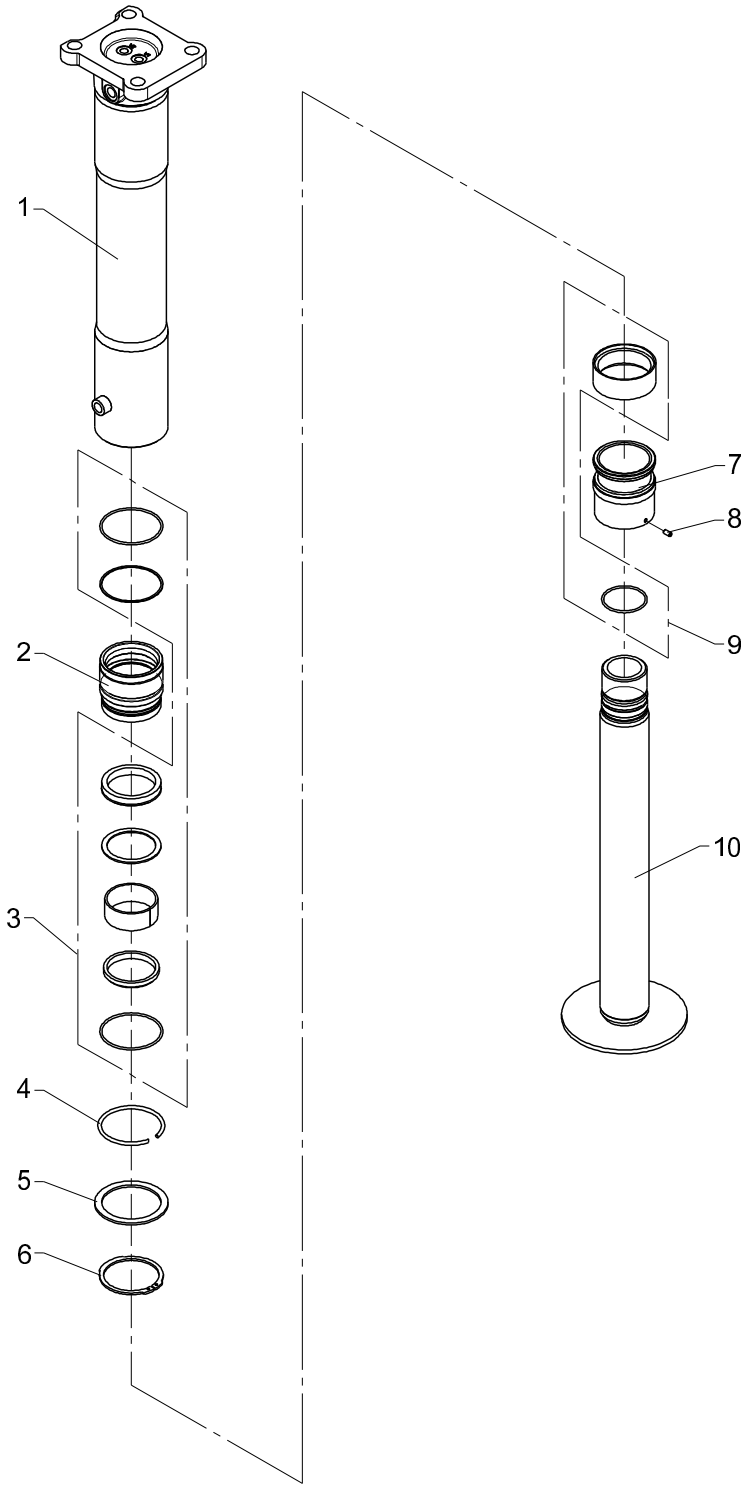
1
2
3
4
5
6
7
8
9
10

Stabilizer cylinder, C90-440, type V

Pos	Qty.	Part no.	Description	Remarks
1	1	6344941	Cylinder tube, fixed leg	
2	1	6306501	Guide	
3	1	6893840	Seal kit, guide	
4	1	33488	Lock ring, black	
5	1	33236	Back ring	SS 85 x 105 x 3,5
6	1	33145	Circlip	80U
7	1	6306502	Piston	
8	1	32256	Pointed screw	MSP6 x 12
9	1	6893850	Seal kit, piston + rod	
10	1	6344943	Piston rod	

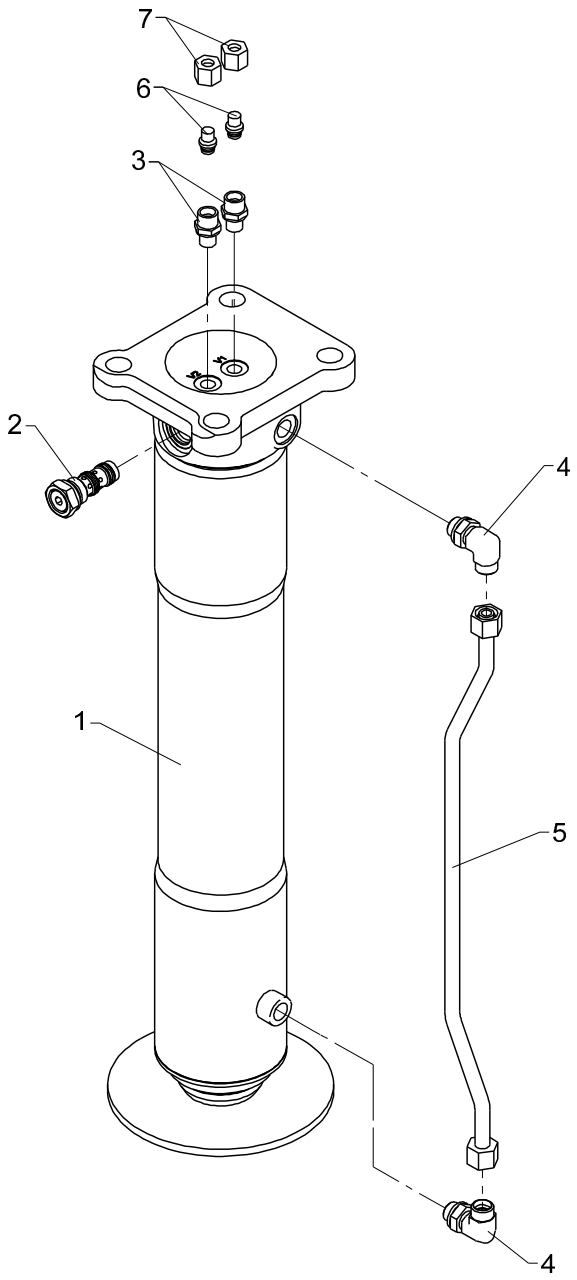
7
6
3
2
4
1
5
4

Stabilizer cylinder with check valve, C90-440, type V

Pos	Qty.	Part no.	Description	Remarks
1	1	6345500	Stabilizer cylinder	
2	1	58496	Cartridge	
3	2	25121	Connection	P-GEV 10 LR-WD
4	2	26897	Elbow connection	12 mm - 3/8"
5	1	6344945	Pipe	
6	2	25202	Blanking plug	VSD 10 L
7	2	25182	Coupling nut	M 10 L

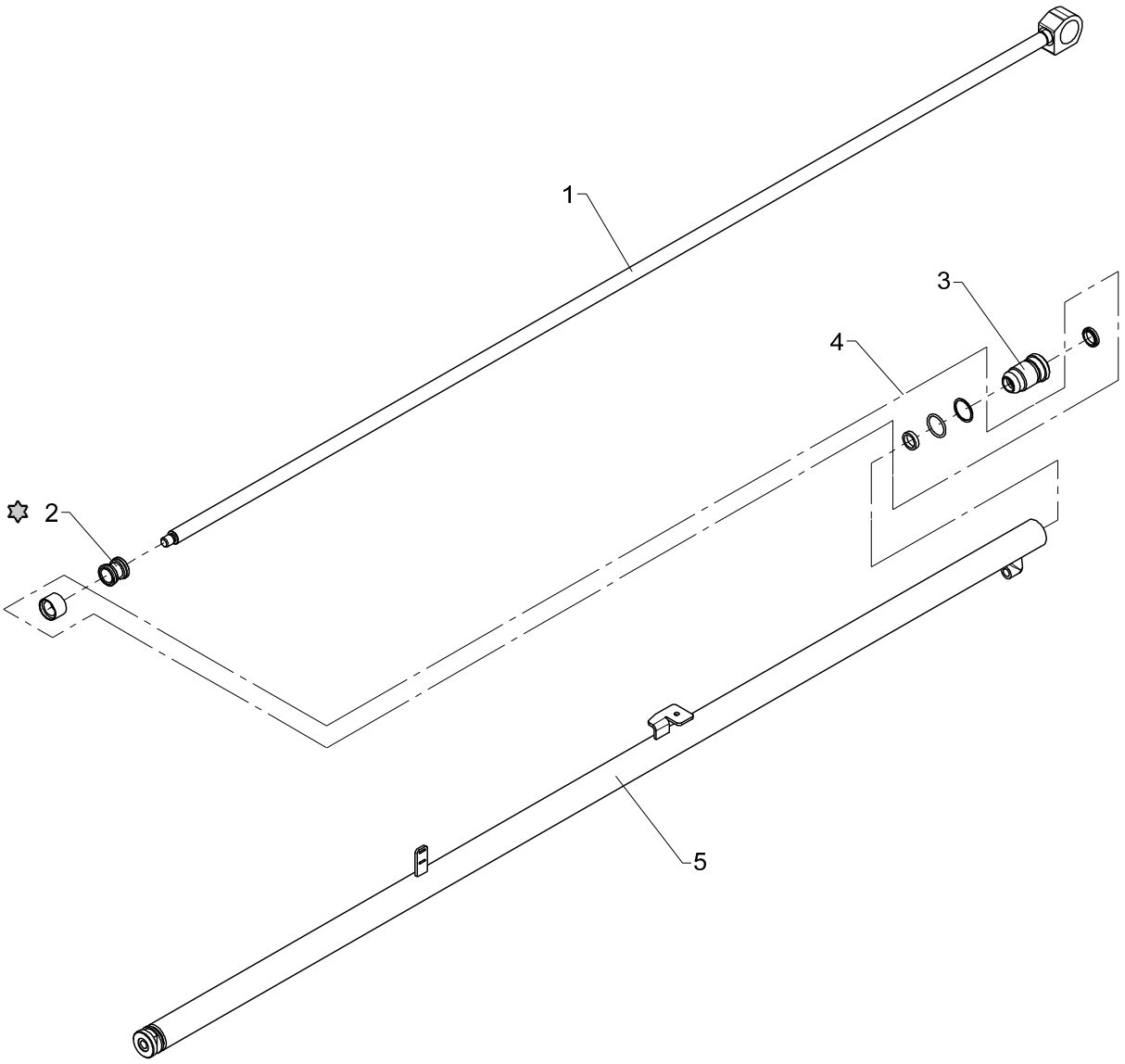

✡ Loctite 243

Beam cylinder C32 - 1625

Pos	Qty.	Part no.	Description	Remarks
1	1	6344214	Piston rod	
2	1	6306242	Piston	
3	1	6043034	Guide	
4	1	6892290	Seal kit	
5	1	6344211	Cylinder pipe	

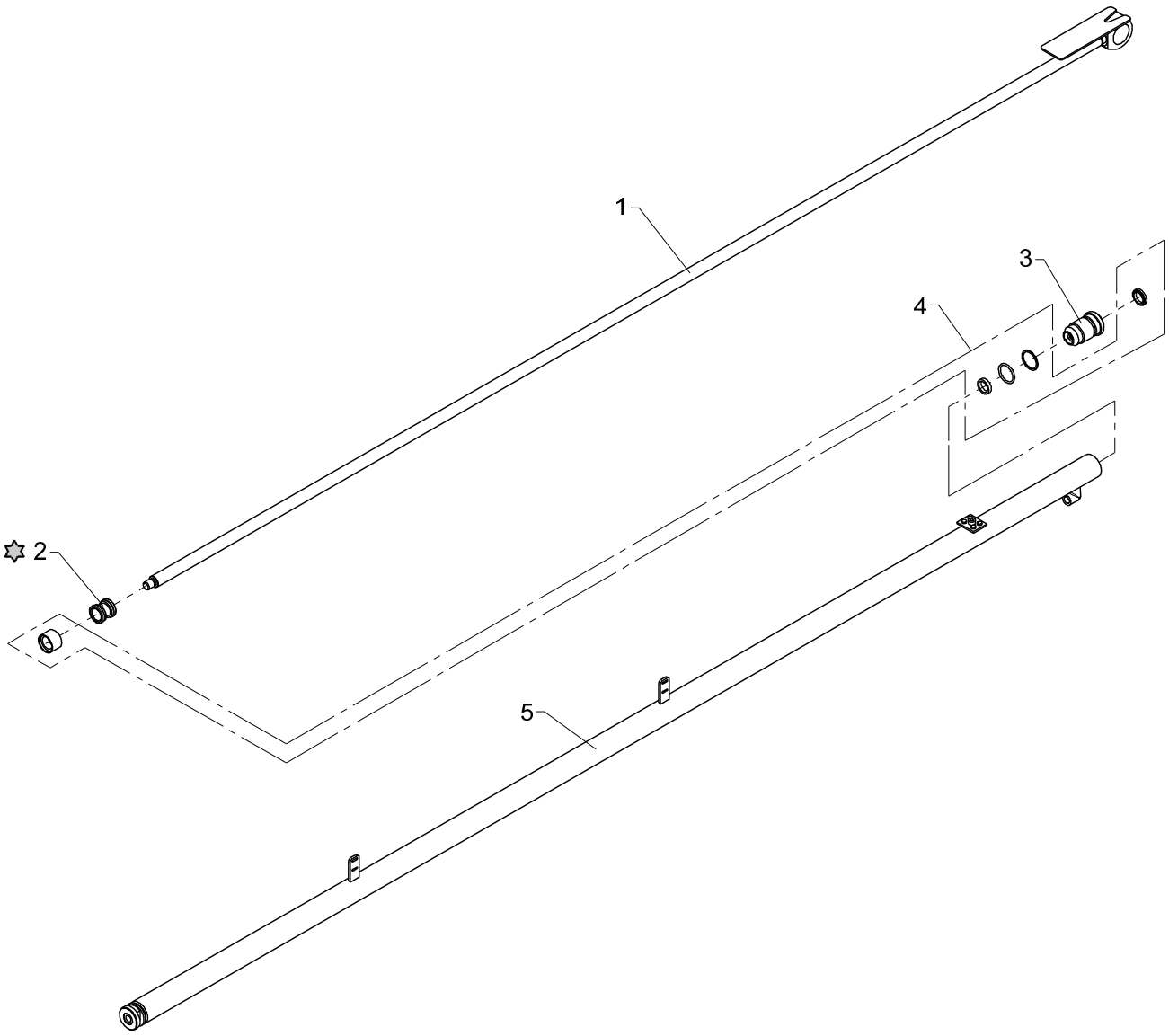

✡ Loctite 243

Beam cylinder C32 - 2065

Pos	Qty.	Part no.	Description	Remarks
1	1	6344223	Piston rod	
2	1	6306242	Piston	
3	1	6043034	Guide	
4	1	6892290	Seal kit	
5	1	6344221	Cylinder pipe	

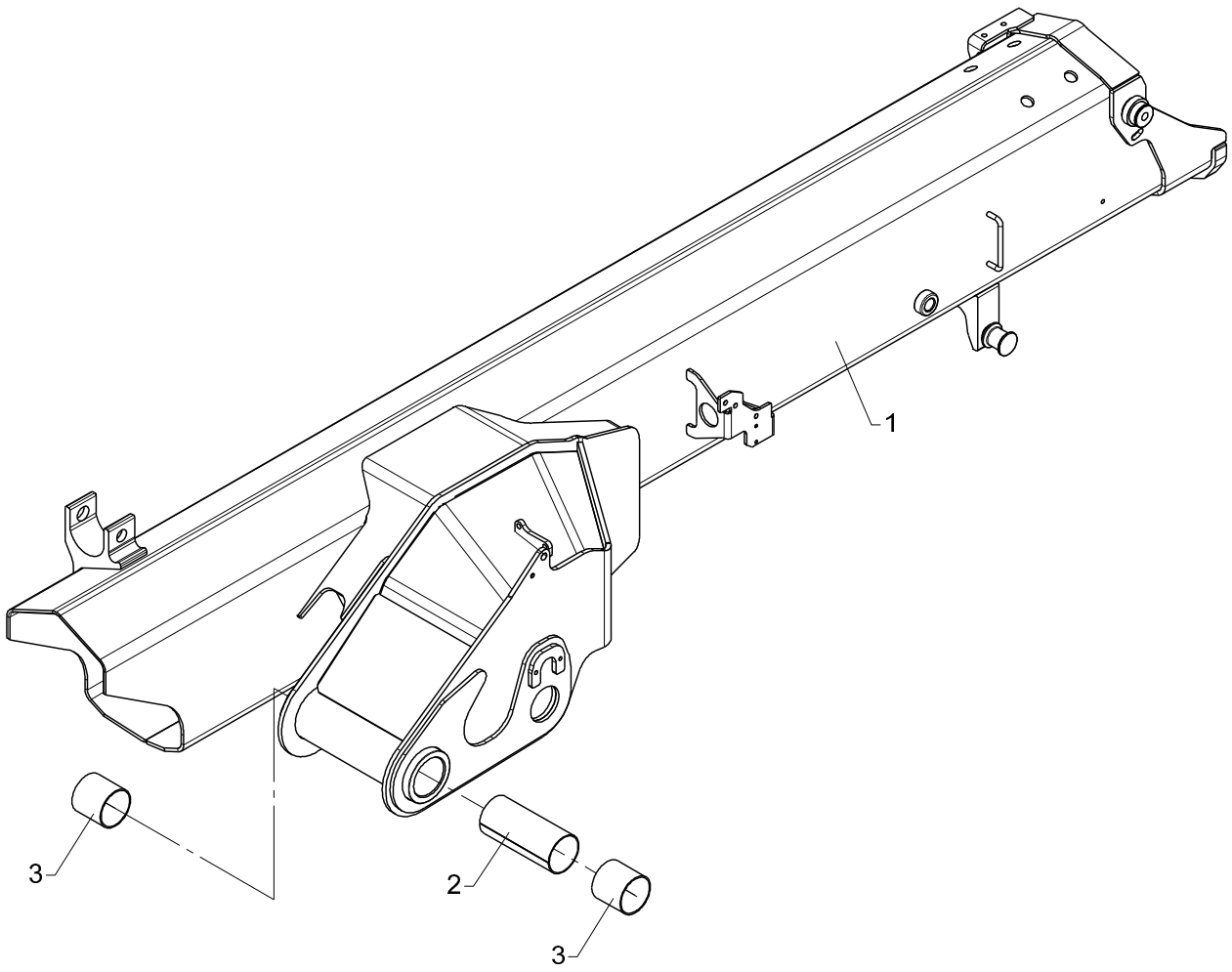
1
2
3
3

Obsolete

Jib, complete

535 03 010

From loader 1070001
To loader 1070136

Created 06-01-2009
Modified

Pos	Qty.	Part no.	Description	Remarks
1	1	6344280	Jib, painted	6344281
2	1	63476	Plate	
3	2	23433	Composite bearing	ø65/70 x 65

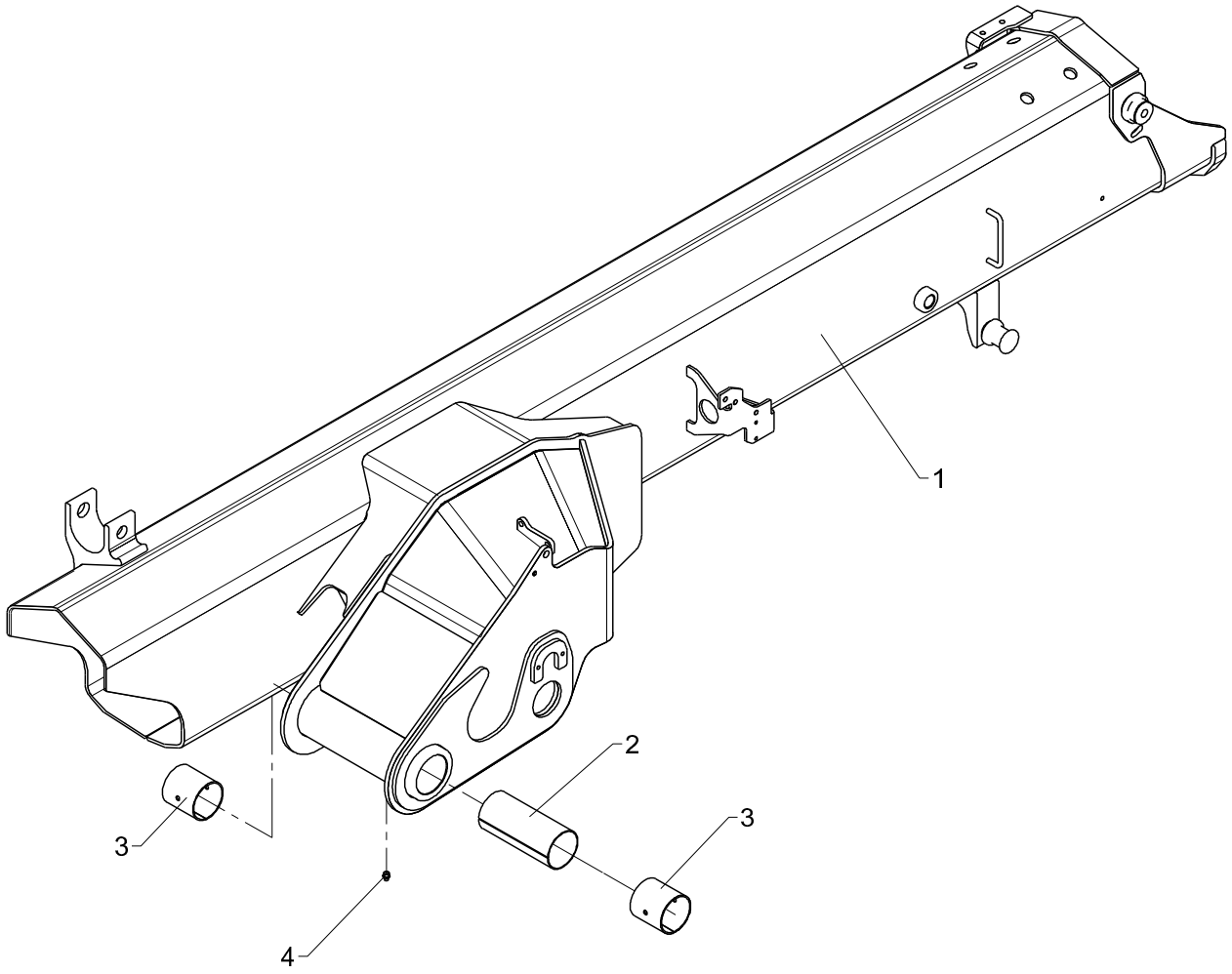
1
2
3
3
4

Jib, complete

Pos	Qty.	Part no.	Description	Remarks
1	1	6344280	Jib, painted	6344281
2	1	63476	Plate	
3	2	23418	Bushing	PM 6570 DX
4	1	31318	Lubricator	1/8" RG

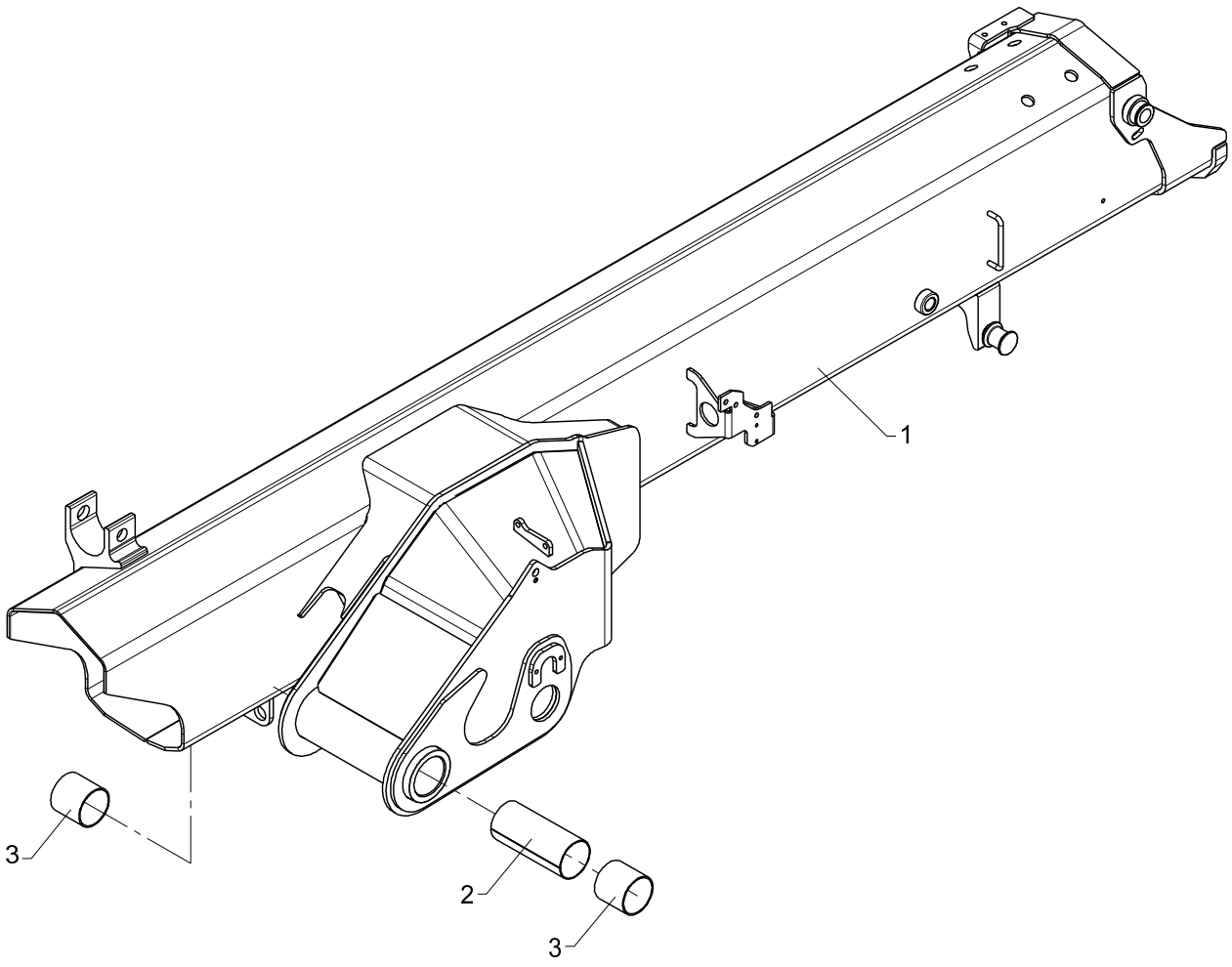
1
3
2
3

Obsolete

Jib, complete (winch)

535 03 020

From loader 1070001
To loader 1070136
Created 06-01-2009
Modified

Pos	Qty.	Part no.	Description	Remarks
1	1	6344970	Jib, painted (winch)	6344971
2	1	63476	Plate	
3	2	23433	Composite bearing	ø65/70 x 65

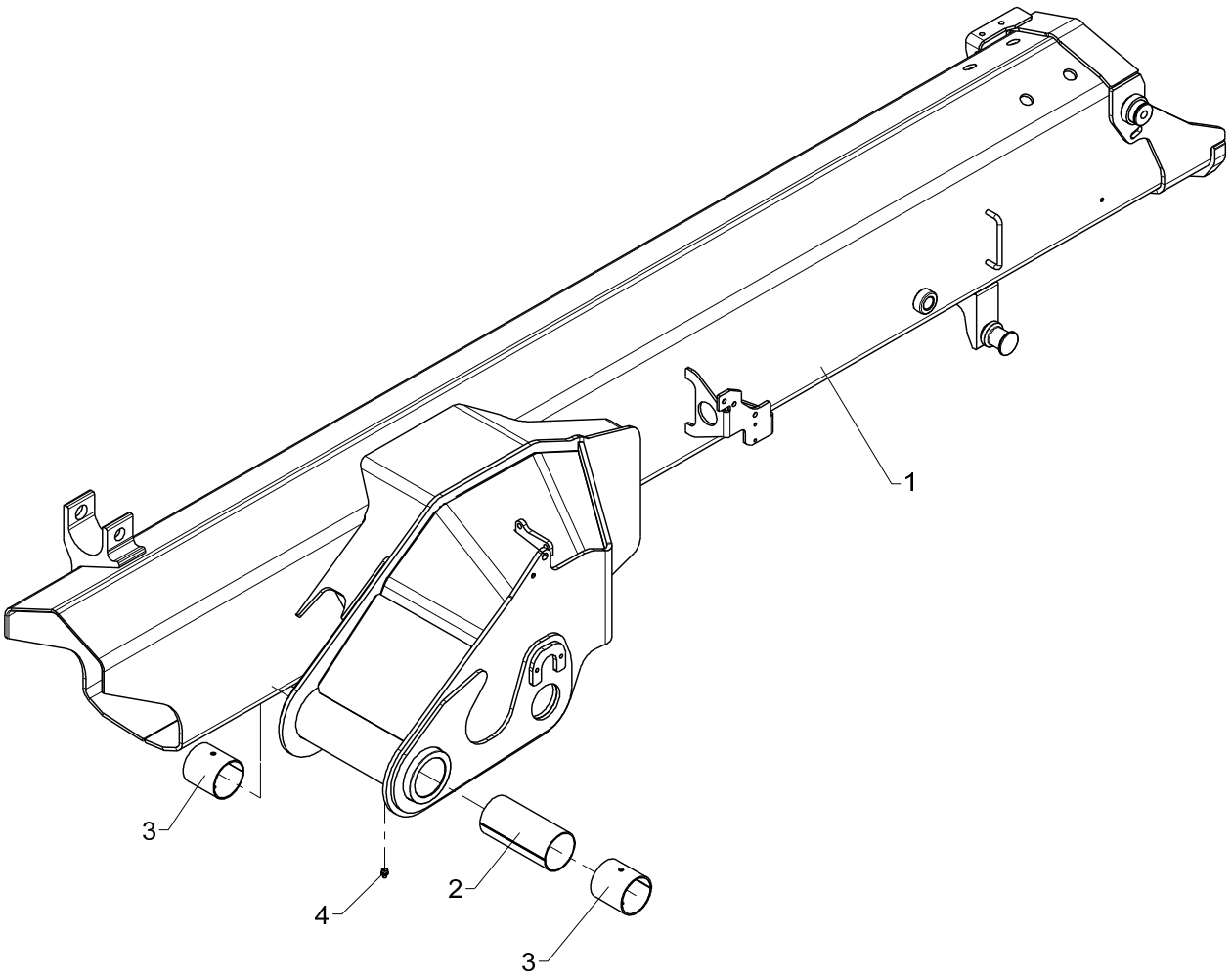
1
3
4
2
3

Jib, complete (winch)

Pos	Qty.	Part no.	Description	Remarks
1	1	6344970	Jib, painted (winch)	6344971
2	1	68035	Plate for spacer	
3	2	23418	Bushing	PM 6570 DX
4	1	31318	Lubricator	1/8" RG

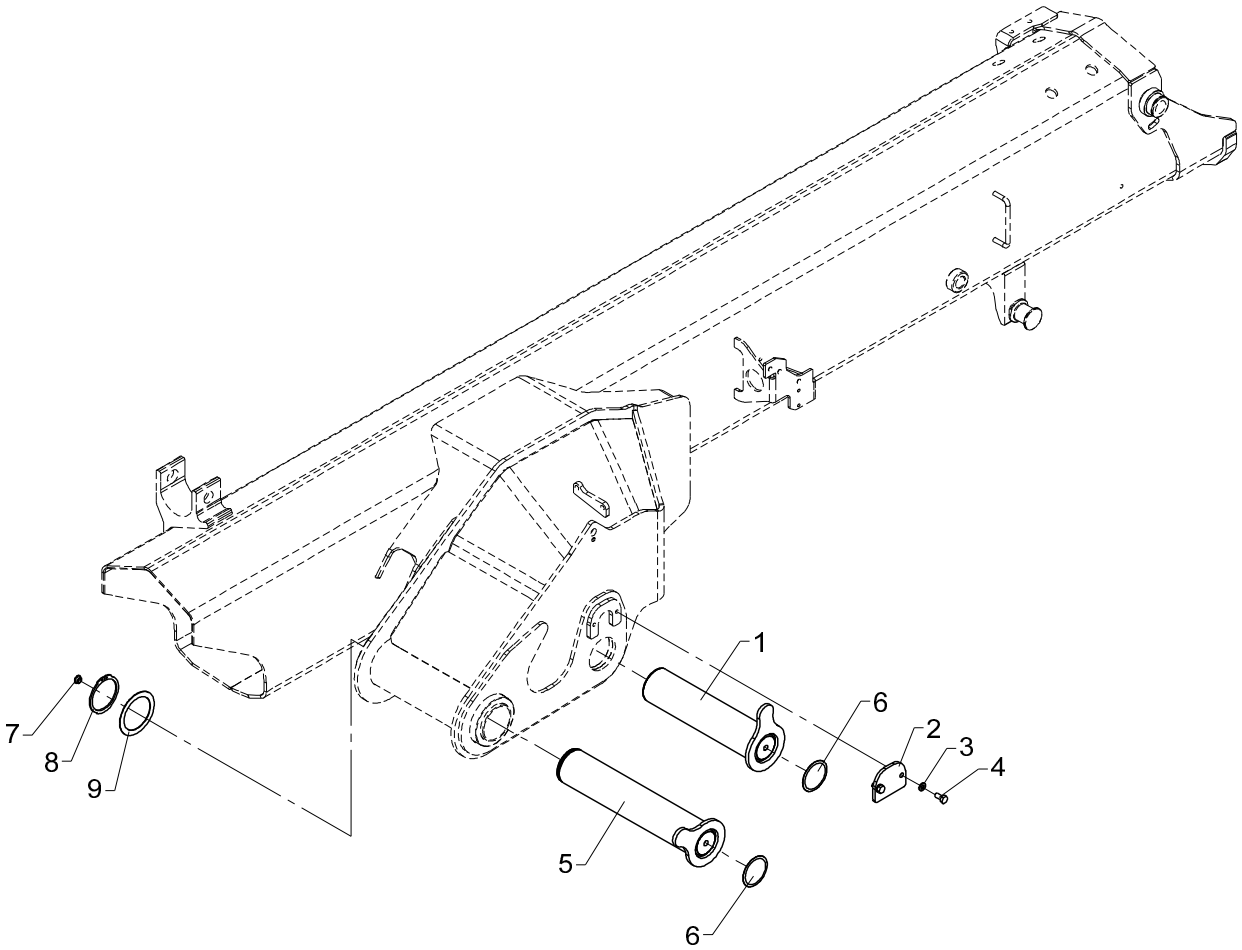
1
6
2
3
4
7
8
9
5
6

Fitting of jib and jib cylinder

Pos	Qty.	Part no.	Description	Remarks
1	1	6344206	Pin	
2	1	6340318	Lock plate	
3	2	31155	Spring washer	8 mm
4	2	30131	Set screw, stainless	M8 x 16
5	1	6344201	Pin	
6	2	63473	Plug	
7	1	64371	Plug	
8	1	33137	Circlip	65U
9	1	33278	Washer	PS 65 x 85 x 1,0

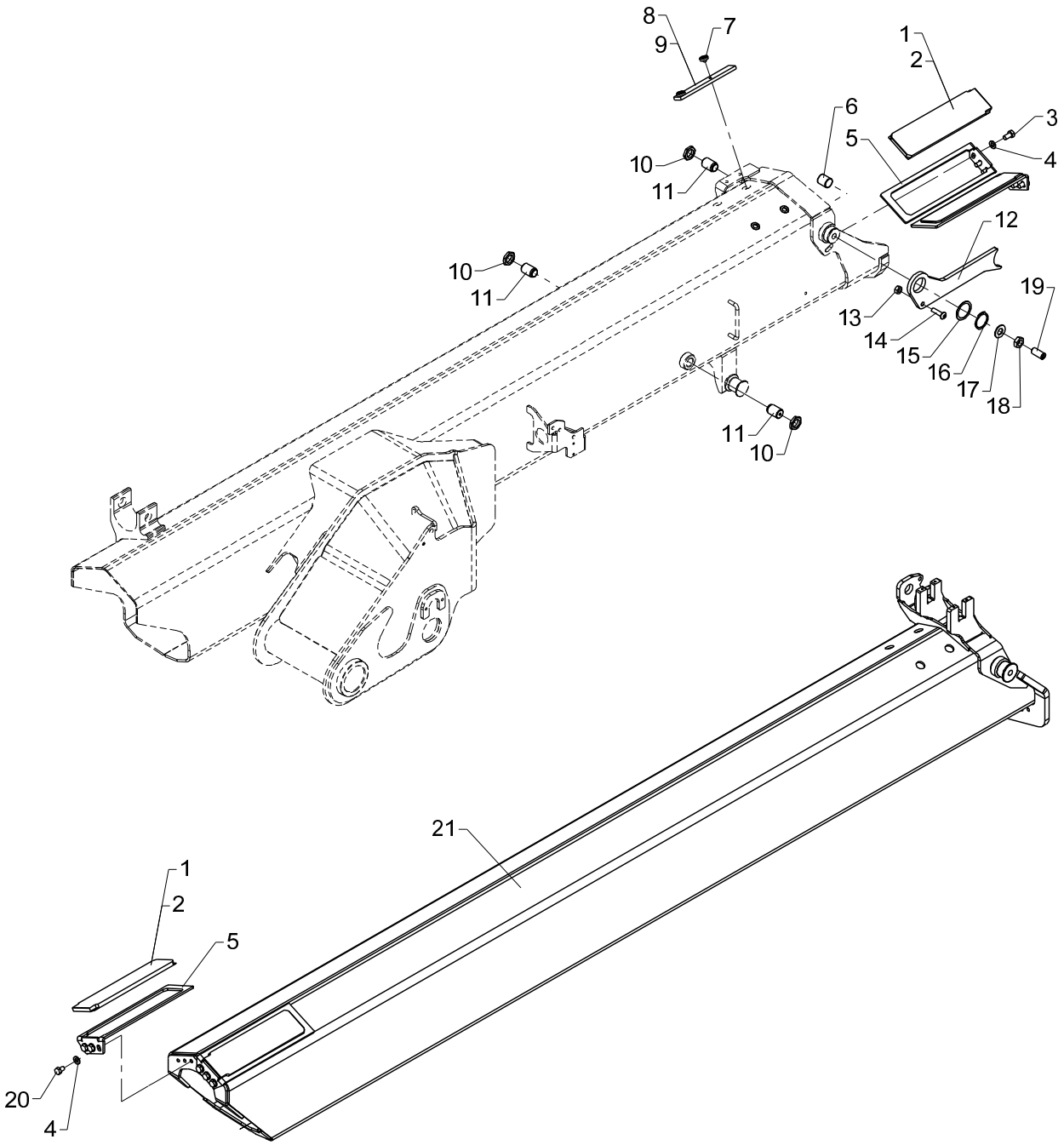
8
9
7
1
2
6
5
3
4
10
11
12
19
13
14
15
16
17
18
21
20

Obsolete

Jib extension I incl. fittings

535 03 100

From loader 1070001
To loader 1070498

Created 06-01-2009
Modified 07-01-2013

Pos	Qty.	Part no.	Description	Remarks
1	4	63583	Slide block	9 mm
2	4	63584	Slide block	10 mm
3	6	31517	Set screw, stainless	M10 x 20
4	12	31177	Washer	10 mm
5	4	6300366	Bracket for slide block	
6	1	6340335	Guide	
7	4	31864	Allen screw	M8 x 6
8	2	6244064	Wear plate	7 mm
9	2	6243014	Wear plate	8 mm
10	3	32364	Counter nut	M24 x 2
11	3	6304409	Guide	
12	1	6344319	Lock pawl	
13	1	30858	Nut	M10
14	1	31772	Screw	M10 x 35
15	1	31102	Washer Ø40 x 50x 1,0	ø40 x 50 x 1,0
16	1	33121	Circlip	40U
17	1	31196	Washer	16 mm
18	1	30821	Counter nut	M16
19	1	30567	Pointed screw	MSP16 x 35
20	6	30152	Set screw	M10 x 14
21	1	6344321	Extension I	

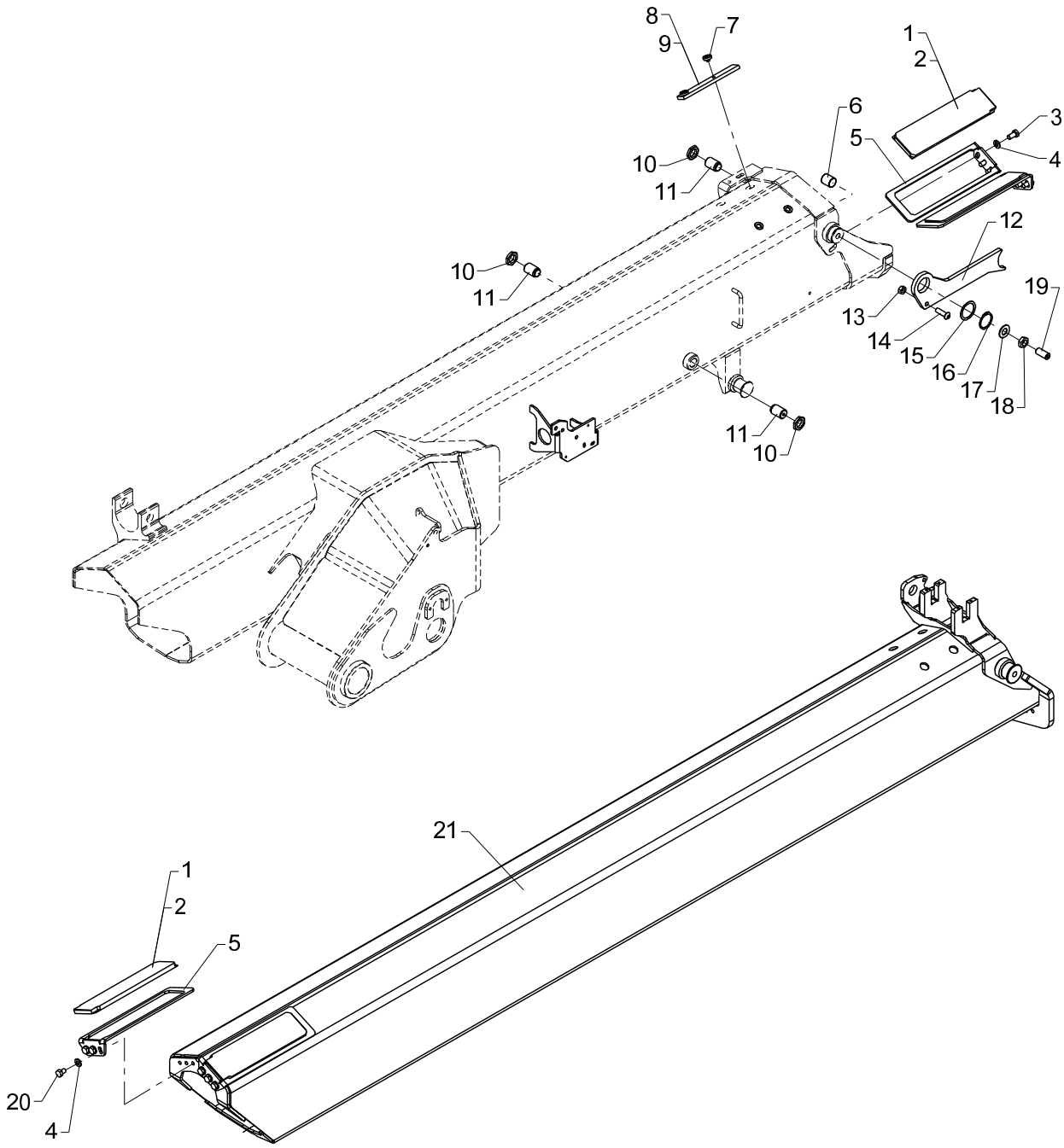
8
9
7
1
2
6
3
5
4
10
11
12
10
11
19
13
14
15
16
17
18
11
10
21
1
2
5
20
4

Jib extension I incl. fittings

Pos	Qty.	Part no.	Description	Remarks
1	4	63583	Slide block	9 mm
2	4	63584	Slide block	10 mm
3	6	31517	Set screw, stainless	M10 x 20
4	12	31177	Washer	10 mm
5	4	6300366	Bracket for slide block	
6	1	6340335	Guide	
7	4	31864	Allen screw	M8 x 6
8	2	6244064	Wear plate	7 mm
9	2	6243014	Wear plate	8 mm
10	3	32364	Counter nut	M24 x 2
11	3	6304409	Guide	
12	1	6344319	Lock pawl	
13	1	30858	Nut	M10
14	1	31772	Screw	M10 x 35
15	1	31102	Washer Ø40 x 50x 1,0	ø40 x 50 x 1,0
16	1	33121	Circlip	40U
17	1	31196	Washer	16 mm
18	1	30821	Counter nut	M16
19	1	30567	Pointed screw	MSP16 x 35
20	6	30152	Set screw	M10 x 14
21	1	6344531	Jib extension I	

18/129, 20/138, 22/153

Internal ref. 63 44 340

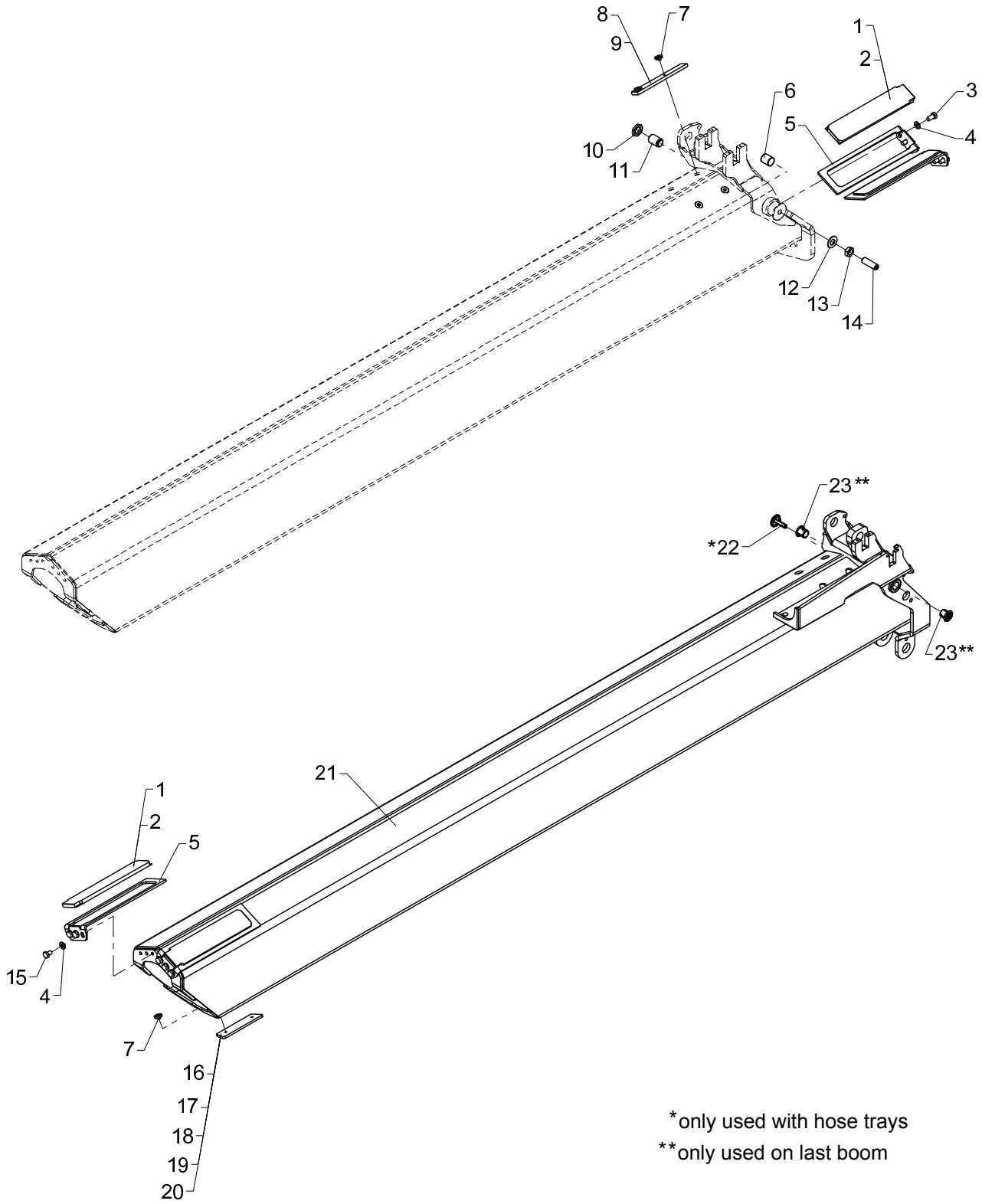

*only used with hose trays

**only used on last boom

Jib extension K2 incl. fittings

Pos	Qty.	Part no.	Description	Remarks
		6344340	Jib extension K2incl. fittings	
1	4	63586	Slide block	9 mm
2	4	63587	Slide block	10 mm
3	6	31517	Set screw, stainless	M10 x 20
4	12	31177	Washer	10 mm
5	4	6300399	Bracket for slide block	
6	1	6340335	Guide	
7	8	31865	Torx screw M8 x 6 m	M8 x 6
8	2	6244064	Wear plate	7 mm
9	2	6243014	Wear plate	8 mm
10	1	32364	Counter nut	M24 x 2
11	1	6304409	Guide	
12	1	31196	Washer	16 mm
13	1	30821	Counter nut	M16
14	1	32495	Pointed screw	MSP16 x 50
15	6	30152	Set screw	M10 x 14
16	2	6340396	Spacer, 1.5mm	1,5 mm
17	2	6340416	Spacer	5 mm
18	2	6340377	Spacer	6 mm
19	2	6340378	Spacer	7 mm
20	2	6340379	Spacer	8 mm
21	1	6344341	Extension II	
22	1	63568	Plastic plug with logo	
23	2	63487	Plug	

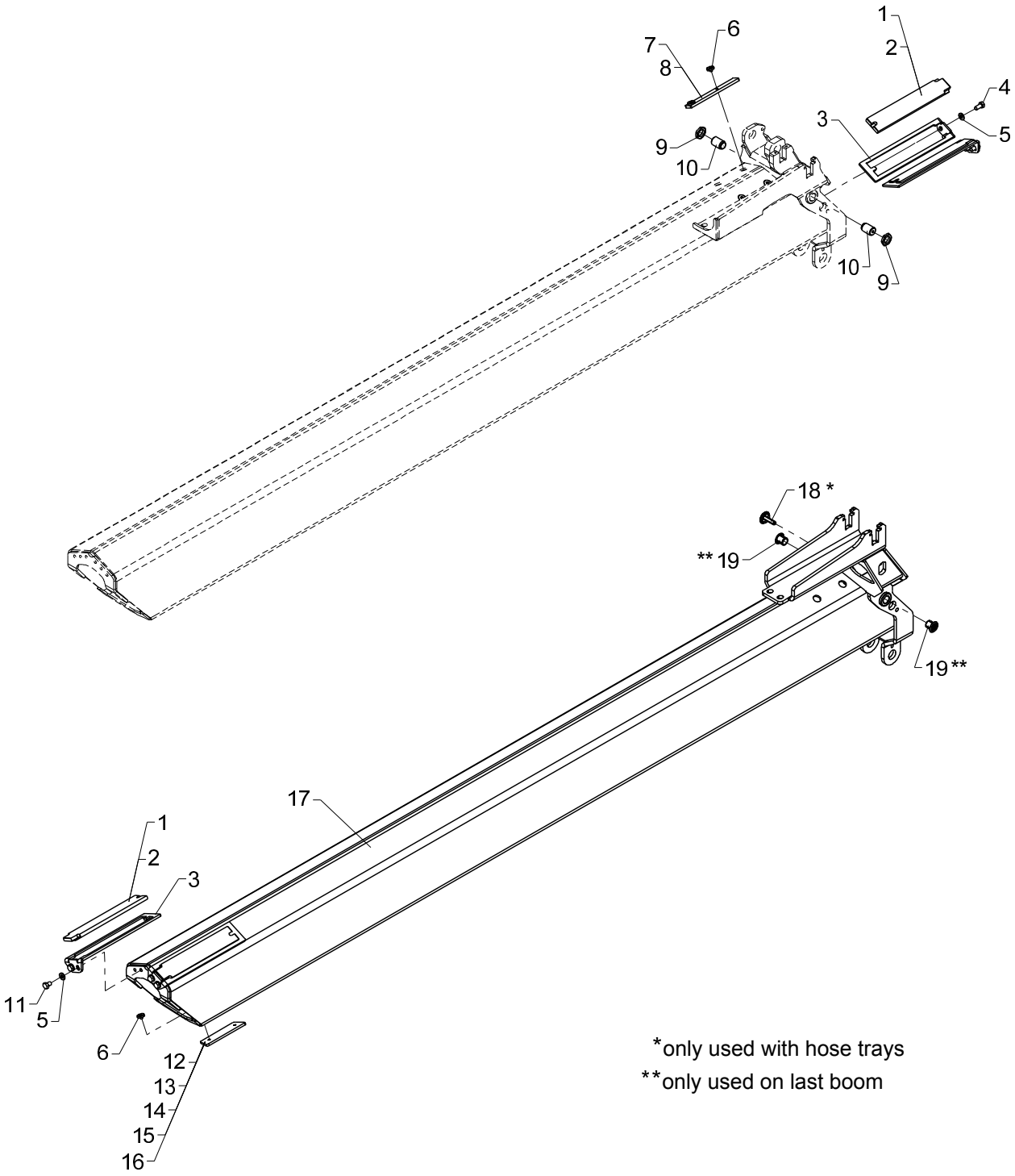

*only used with hose trays

**only used on last boom

Jib extension K3 incl. fittings

Pos	Qty.	Part no.	Description	Remarks
		6344360	Jib extension K3incl. fittings	
1	4	63589	Slide block	9 mm
2	4	63590	Slide block	10 mm
3	4	6300368	Bracket for slide block	
4	4	31517	Set screw, stainless	M10 x 20
5	8	31177	Washer	10 mm
6	8	31865	Torx screw M8 x 6 m	M8 x 6
7	2	6244064	Wear plate	7 mm
8	2	6243014	Wear plate	8 mm
9	2	32364	Counter nut	M24 x 2
10	2	6304409	Guide	
11	4	30152	Set screw	M10 x 14
12	2	6340396	Spacer, 1.5mm	1,5 mm
13	2	6340416	Spacer	5 mm
14	2	6340377	Spacer	6 mm
15	2	6340378	Spacer	7 mm
16	2	6340379	Spacer	8 mm
17	1	6344361	Extension III	
18	1	63568	Plastic plug with logo	
19	2	63487	Plug	

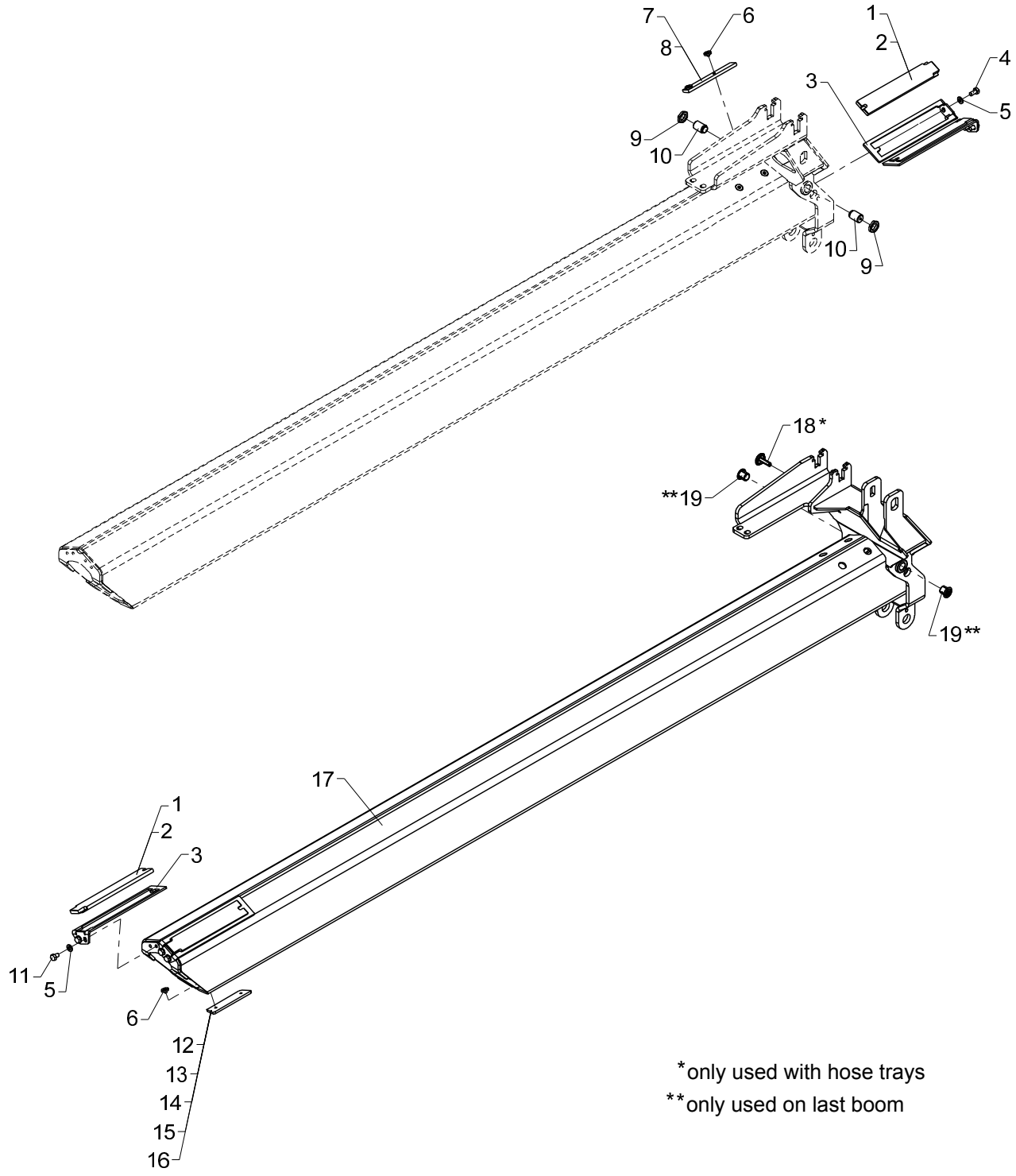

*only used with hose trays

**only used on last boom

Jib extension K4 incl. fittings

Pos	Qty.	Part no.	Description	Remarks
		6344380	Jib extension K4incl. fittings	
1	4	63589	Slide block	9 mm
2	4	63590	Slide block	10 mm
3	4	6300368	Bracket for slide block	
4	4	31517	Set screw, stainless	M10 x 20
5	8	31177	Washer	10 mm
6	8	31865	Torx screw M8 x 6 m	M8 x 6
7	2	6244064	Wear plate	7 mm
8	2	6243014	Wear plate	8 mm
9	2	32364	Counter nut	M24 x 2
10	2	6304409	Guide	
11	4	30152	Set screw	M10 x 14
12	2	6340396	Spacer, 1.5mm	1,5 mm
13	2	6340416	Spacer	5 mm
14	2	6340377	Spacer	6 mm
15	2	6340378	Spacer	7 mm
16	2	6340379	Spacer	8 mm
17	1	6344381	Extension IV	
18	1	63568	Plastic plug with logo	
19	2	63487	Plug	

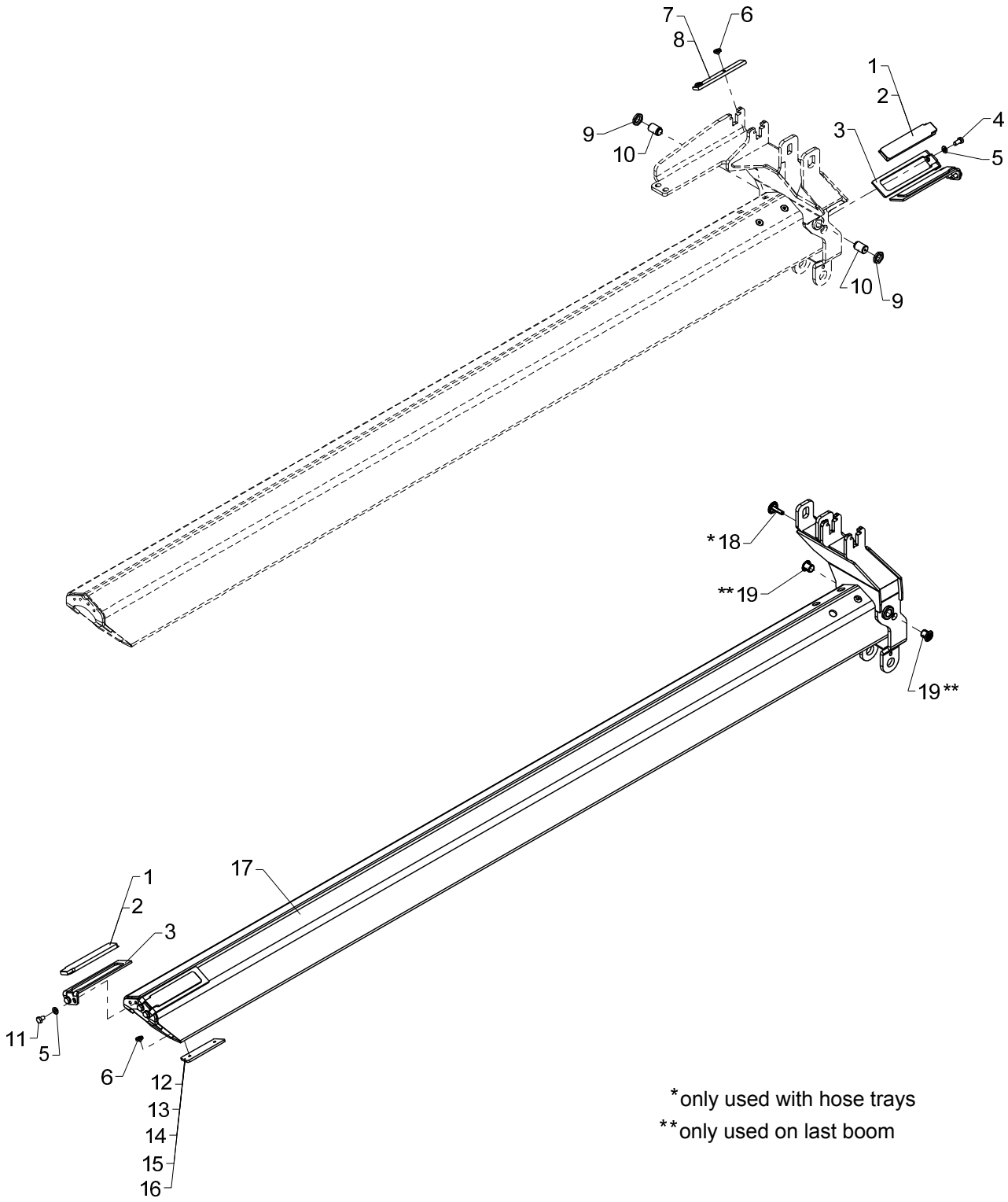

*only used with hose trays

**only used on last boom

Jib extension K5 incl. fittings

Pos	Qty.	Part no.	Description	Remarks
		6344400	Jib extension K5incl. fittings	
1	4	63762	Slide block	6299074, 9 mm
2	4	63593	Slide block	10 mm
3	4	6340441	Bracket for slide block	
4	4	31517	Set screw, stainless	M10 x 20
5	8	31177	Washer	10 mm
6	8	31865	Torx screw M8 x 6 m	M8 x 6
7	2	6244064	Wear plate	7 mm
8	2	6243014	Wear plate	8 mm
9	2	32364	Counter nut	M24 x 2
10	2	6304409	Guide	
11	4	30152	Set screw	M10 x 14
12	2	6340396	Spacer, 1.5mm	1,5 mm
13	2	6340416	Spacer	5 mm
14	2	6340377	Spacer	6 mm
15	2	6340378	Spacer	7 mm
16	2	6340379	Spacer	8 mm
17	1	6344401	Extension V	
18	1	63568	Plastic plug with logo	
19	2	63487	Plug	

18/129, 20/138, 22/153

Internal ref. 63 44 420

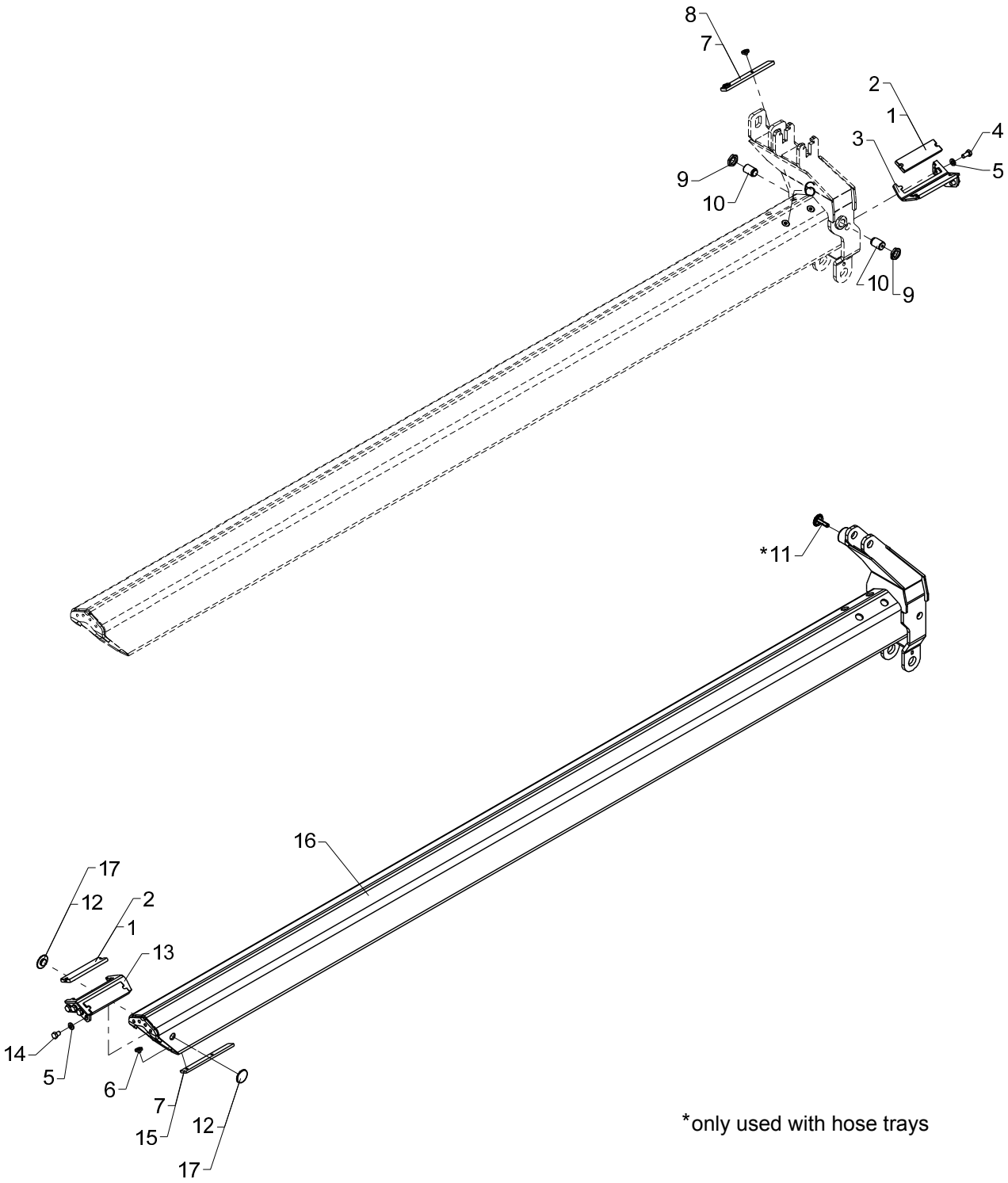

*only used with hose trays

Jib extension K6 incl. fittings

Pos	Qty.	Part no.	Description	Remarks
1	4	63574	Slide block	9 mm
2	4	63575	Side block	10 mm
3	1	6340442	Bracket for slide block	
4	3	31517	Set screw, stainless	M10 x 20
5	7	31177	Washer	10 mm
6	8	31865	Torx screw M8 x 6 m	M8 x 6
7	4	6244064	Wear plate	7 mm
8	2	6243014	Wear plate	8 mm
9	2	32364	Counter nut	M24 x 2
10	2	6304409	Guide	
11	1	63568	Plastic plug with logo	
12	2	6394631	Guide, 5 + 2.5 mm	
13	1	6340445	Bracket for slide block	
14	4	30152	Set screw	M10 x 14
15	2	6243004	Wear plate	6 mm
16	1	6344421	Extension VI	
17	2	6394632	Guide, 5 + 1.75 mm	

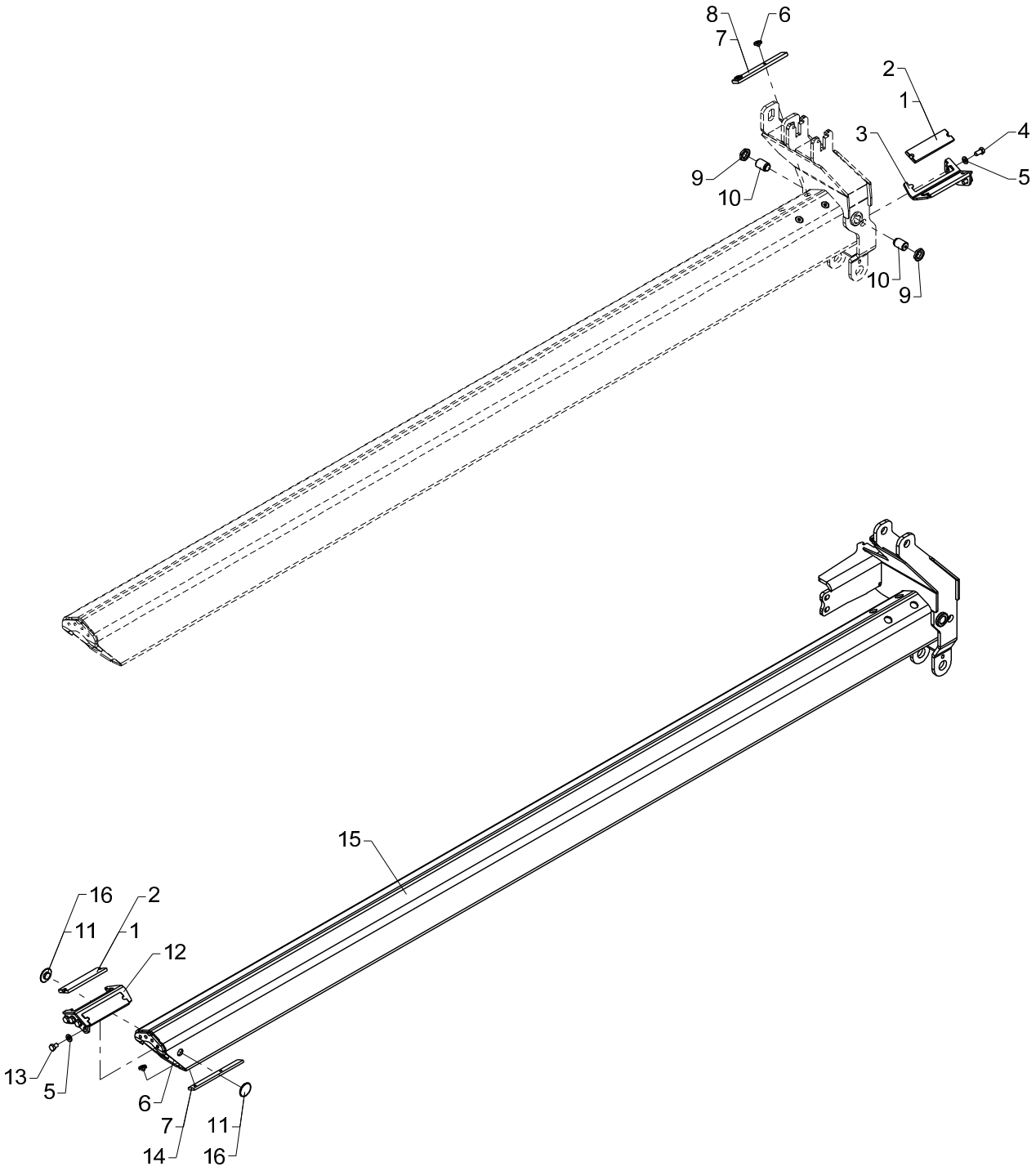
8
7
6
2
1
3
4
5
9
10
10
9
15
16
11
2
1
12
13
5
6
7
14
11
16

Jib extension VI (K7/K8) incl. fittings

Pos	Qty.	Part no.	Description	Remarks
1	4	63573	Slide block	8 mm
2	4	63574	Slide block	9 mm
3	1	6340442	Bracket for slide block	
4	3	31517	Set screw, stainless	M10 x 20
5	7	31177	Washer	10 mm
6	8	31865	Torx screw M8 x 6 m	M8 x 6
7	4	6244064	Wear plate	7 mm
8	2	6243014	Wear plate	8 mm
9	2	32364	Counter nut	M24 x 2
10	2	6304409	Guide	
11	2	6394631	Guide, 5 + 2.5 mm	
12	1	6340445	Bracket for slide block	
13	4	30152	Set screw	M10 x 14
14	2	6243004	Wear plate	6 mm
15	1	6344441	Extension VI	
16	2	6394632	Guide, 5 + 1.75 mm	

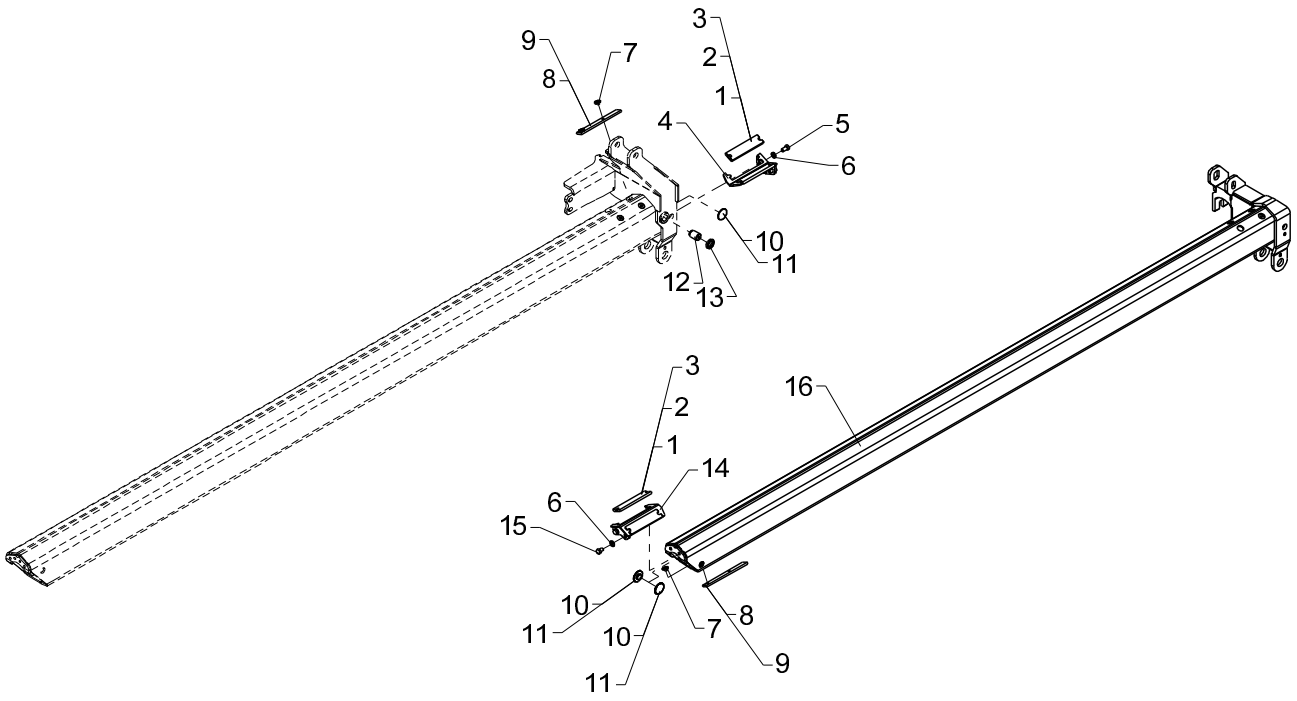
9
7
8
3
2
1
4
5
6
10
11
12
13
3
2
1
14
6
15
16
10
11
10
11
7
8
9

Jib extension K7 incl. fittings

Pos	Qty.	Part no.	Description	Remarks
1	4	63570	Slide block	8 mm
2	4	63571	Slide block	9 mm
3	4	63572	Slide block	10 mm
4	1	6340447	Bracket for slide block	
5	3	31517	Set screw, stainless	M10 x 20
6	5	31177	Washer	10 mm
7	8	31865	Torx screw M8 x 6 m	M8 x 6
8	4	6243004	Wear plate	6 mm
9	4	6244064	Wear plate	7 mm
10	3	6394631	Guide, 5 + 2.5 mm	
11	3	6394632	Guide, 5 + 1.75 mm	
12	1	6304409	Guide	
13	1	32364	Counter nut	M24 x 2
14	1	6340451	Bracket for slide block	
15	2	30152	Set screw	M10 x 14
16	1	6344461	Extension K7	

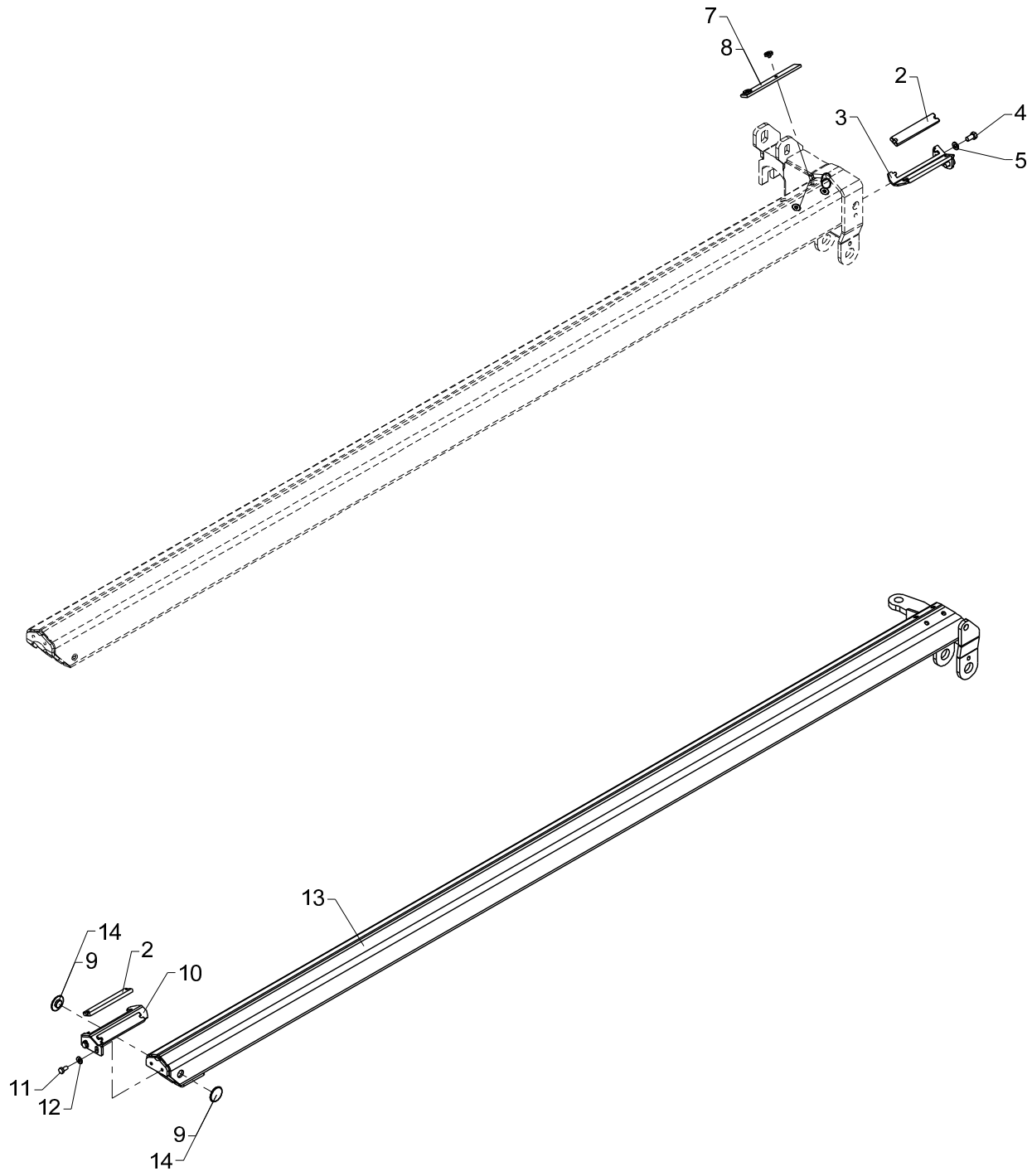
7
8
2
3
4
5
13
14
9
2
10
11
12
9
14

Jib extension K8 incl. fittings

Pos	Qty.	Part no.	Description	Remarks
1	4	63594	Slide block	8 mm
2	4	63595	Slide block	9 mm
3	1	6304296	Bracket	
4	2	31517	Set screw, stainless	M10 x 20
5	2	31177	Washer	10 mm
6	4	31865	Torx screw M8 x 6 m	M8 x 6
7	2	6243004	Wear plate	6 mm
8	2	6244064	Wear plate	7 mm
9	2	6394631	Guide, 5 + 2.5 mm	
10	1	6304303	Bracket	
11	2	30131	Set screw, stainless	M8 x 16
12	2	31754	Washer	8,4 x 18 x 2
13	1	6344481	Extension K8	
14	2	6394632	Guide, 5 + 1.75 mm	

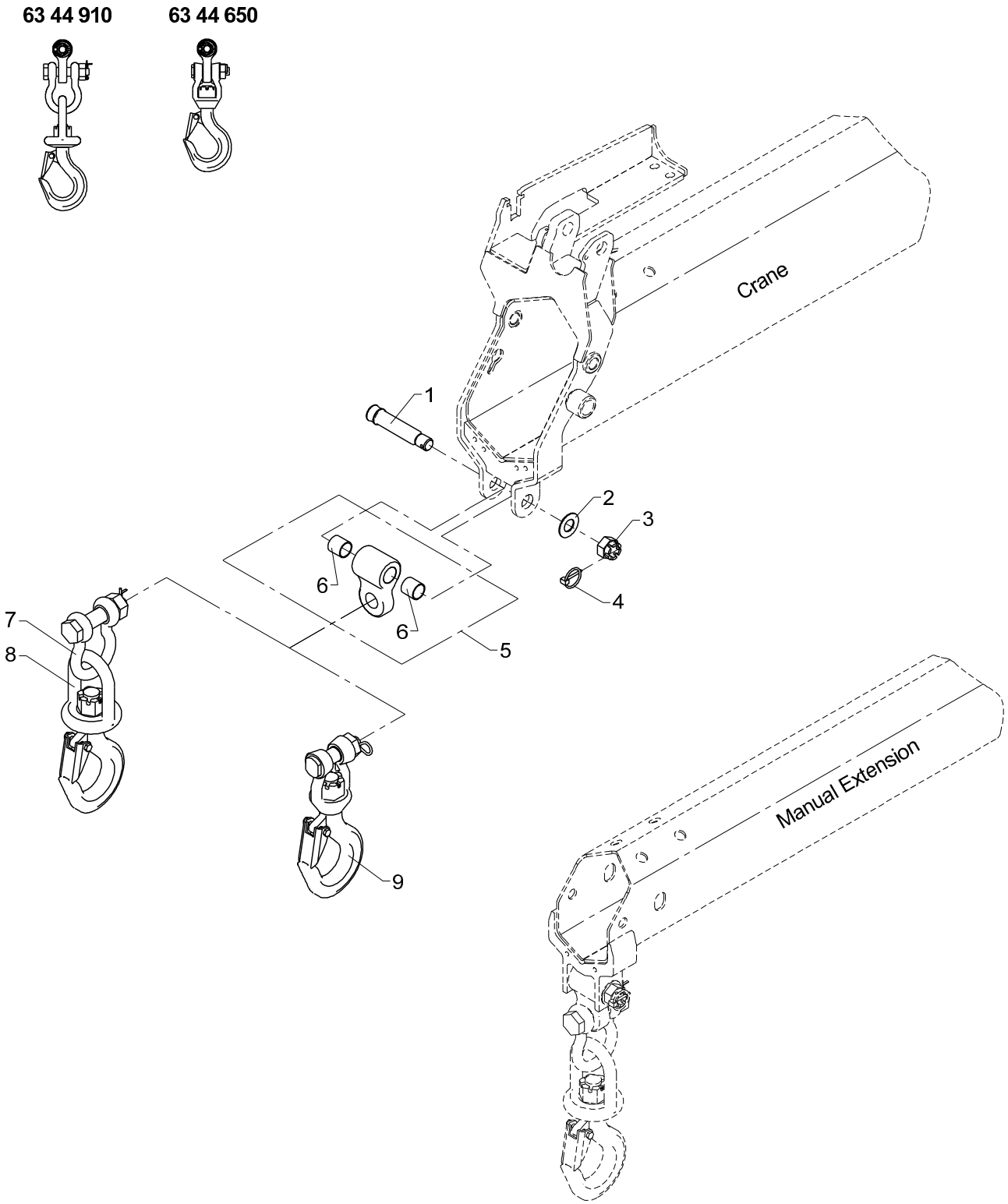
63 44 910
63 44 650
Crane
1
2
3
4
5
6
6
7
8
9
Manual Extension

Obsolete

Hook suspension

535 03 290

From loader 1070001
To loader

Created 03-06-2009
Modified 20-12-2011

Pos	Qty.	Part no.	Description	Remarks
		6344910	Hook suspension	
		6344650	Hook suspension	Serie 2020K, 2420K
1	1	6304458	Pin for suspension	
2	1	31128	Washer	24 mm
3	1	30837	Nut	M24
4	1	31967	Ring split	ø4,5 x 40
5	1	6292853	Hook suspension	
6	2	23945	Composite bearing	ø28/32 x 30
7	1	62118	Shackle	
8	1	63282	Hook, SWL 8 t. black	
9	1	62100	Hook with suspension	Serie 2020K, 2420K

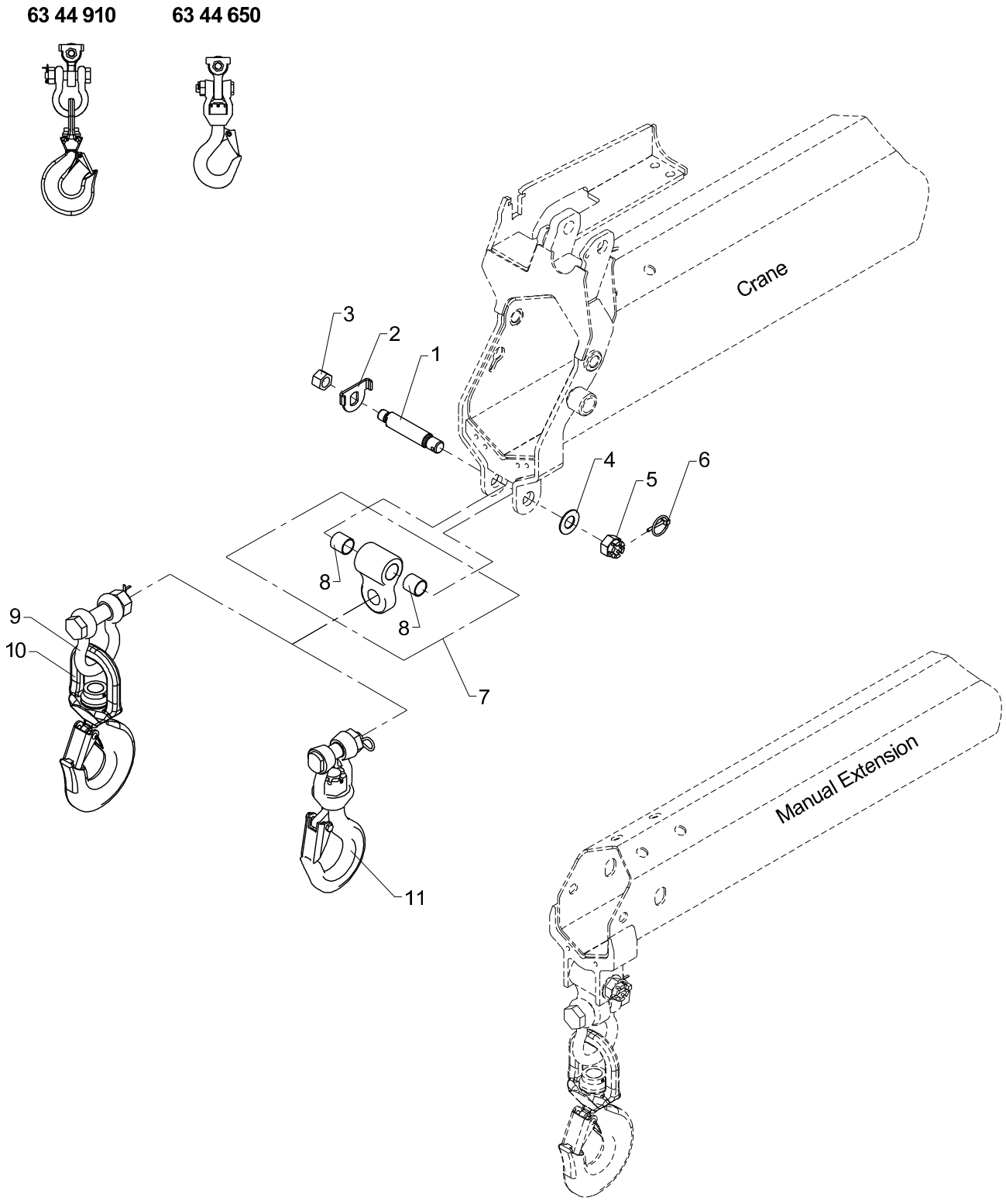
63 44 910
63 44 650
Crane
Manual Extension
1
2
3
4
5
6
7
8
8
9
10
11

Hook suspension

Pos	Qty.	Part no.	Description	Remarks
		6344910	Hook suspension	
		6344650	Hook suspension	
1	1	6662114	Pin	
2	1	6662104	Plate	
3	1	30894	Lock nut	M20
4	1	31128	Washer	24 mm
5	1	30837	Nut	M24
6	1	31967	Ring split	ø4,5 x 40
7	1	6292853	Hook suspension	
8	2	23945	Composite bearing	ø28/32 x 30
9	1	62118	Shackle	
10	1	63292	Hook, 8 t incl. bearing	
11	1	62100	Hook with suspension	

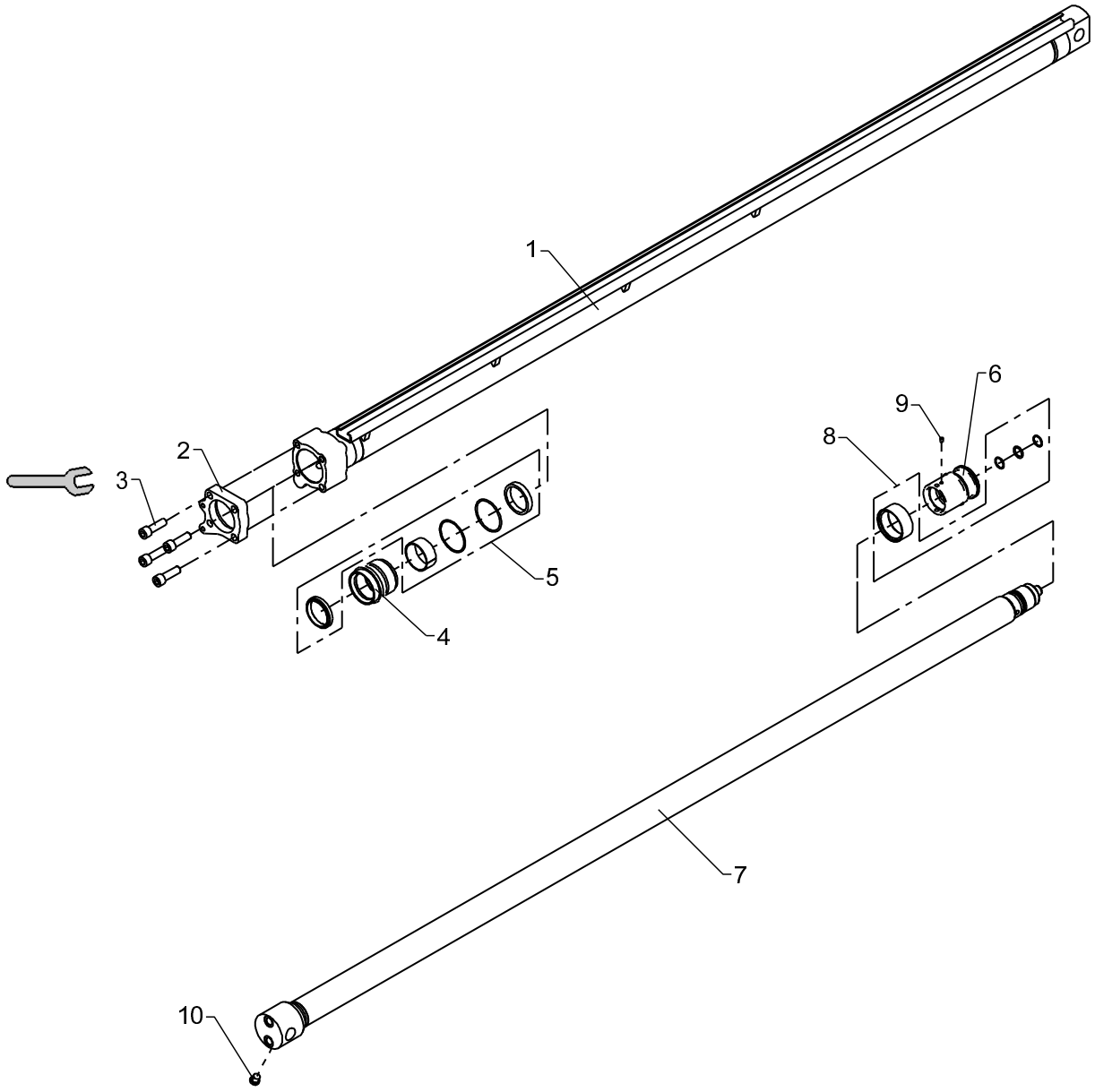

298.28 ft lb (220 Nm)

Obsolete

Extension cylinder I (C70/55 x 1885)

535 03 300

From loader 1070001
To loader 1070631

Created 08-06-2009
Modified 28-02-2011

Pos	Qty.	Part no.	Description	Remarks
1	1	6344545	Cylinder tube	
2	1	6344553	Mounting flange	
3	4	32487	Screw	MC14 x 45
4	1	6344551	Guide	
5	1	6894180	Seal kit	
6	1	6344552	Piston	
7	1	6344541	Piston rod	
8	1	6894170	Seal kit	
9	1	30903	Screw	MSP6 x 8
10	1	25197	Plug	VS-R-1/4 WD

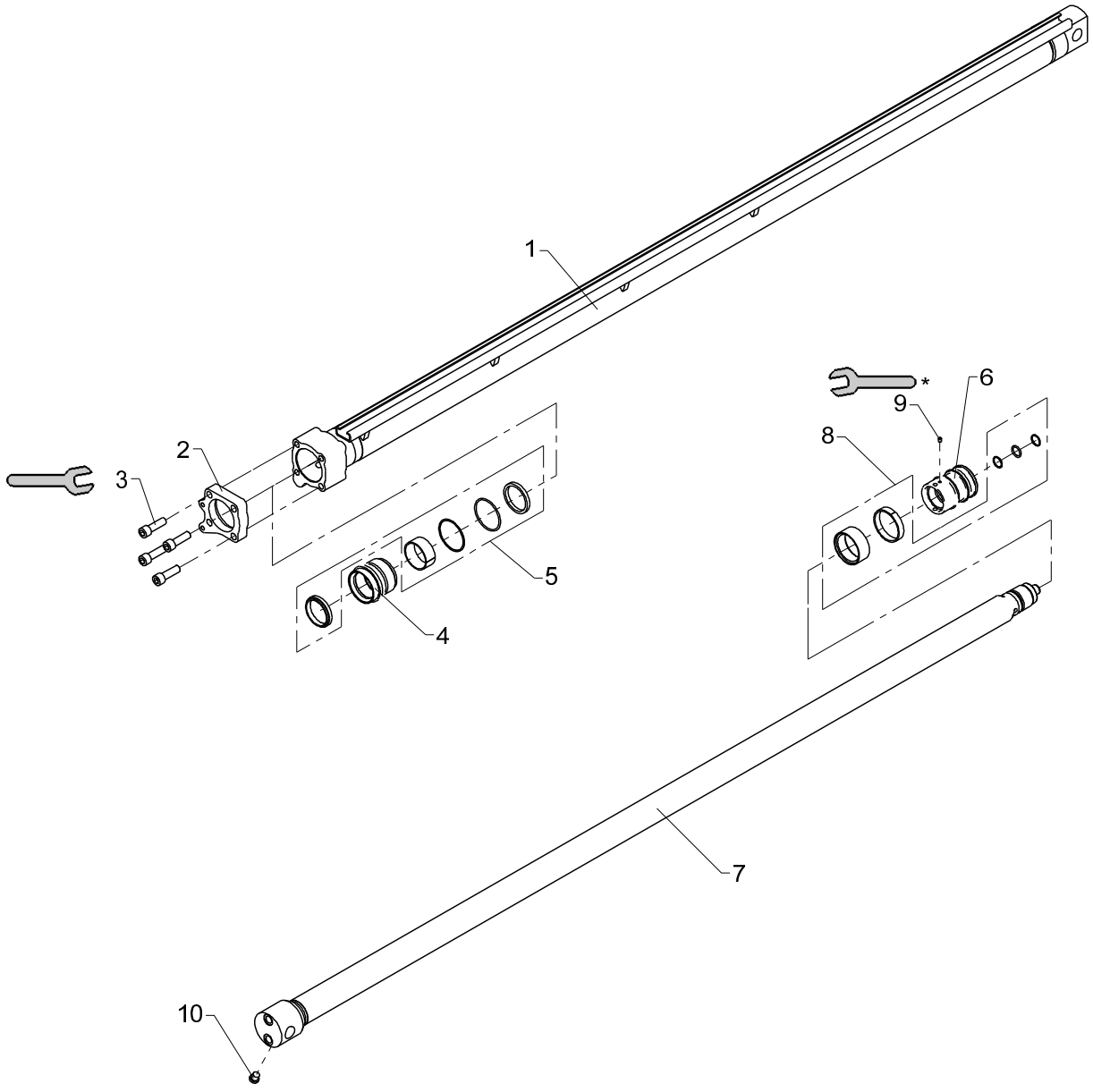

298.28 ft lb (220 Nm)

* 5.42 ft lb (4 Nm)

Extension cylinder I (C70/55 x 1885)

Pos	Qty.	Part no.	Description	Remarks
1	1	6344545	Cylinder tube	
2	1	6344553	Mounting flange	
3	4	32487	Screw	MC14 x 45
4	1	6344551	Guide	
5	1	6894180	Seal kit	
6	1	6354506	Piston (C70)	
7	1	6344538	Piston rod	
8	1	6894700	Seal kit, C70/50	
9	1	30903	Screw	MSP6 x 8
10	1	25197	Plug	VS-R-1/4 WD

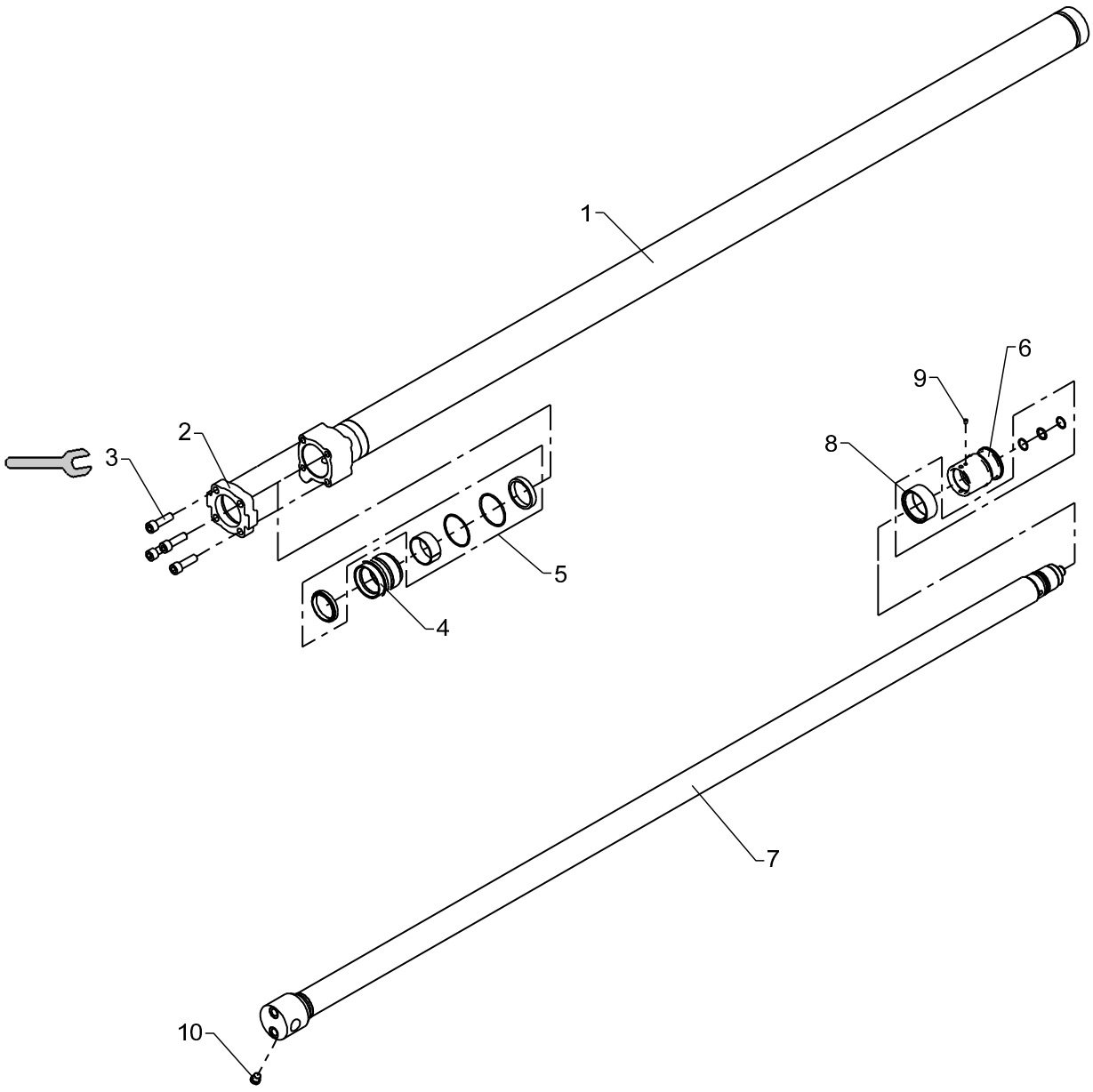

298.28 ft lb (220 Nm)

Obsolete

Extension cylinder II (C70/55 x 1950)

535 03 310

From loader 1070001
To loader 1070628

Created 08-06-2009
Modified 28-02-2011

Pos	Qty.	Part no.	Description	Remarks
1	1	6344565	Cylinder tube	
2	1	6344567	Mounting flange	
3	4	32487	Screw	MC14 x 45
4	1	6344551	Guide	
5	1	6894180	Seal kit	
6	1	6344552	Piston	
7	1	6344561	Piston rod	
8	1	6894170	Seal kit	
9	1	30903	Screw	MSP6 x 8
10	1	25197	Plug	VS-R-1/4 WD

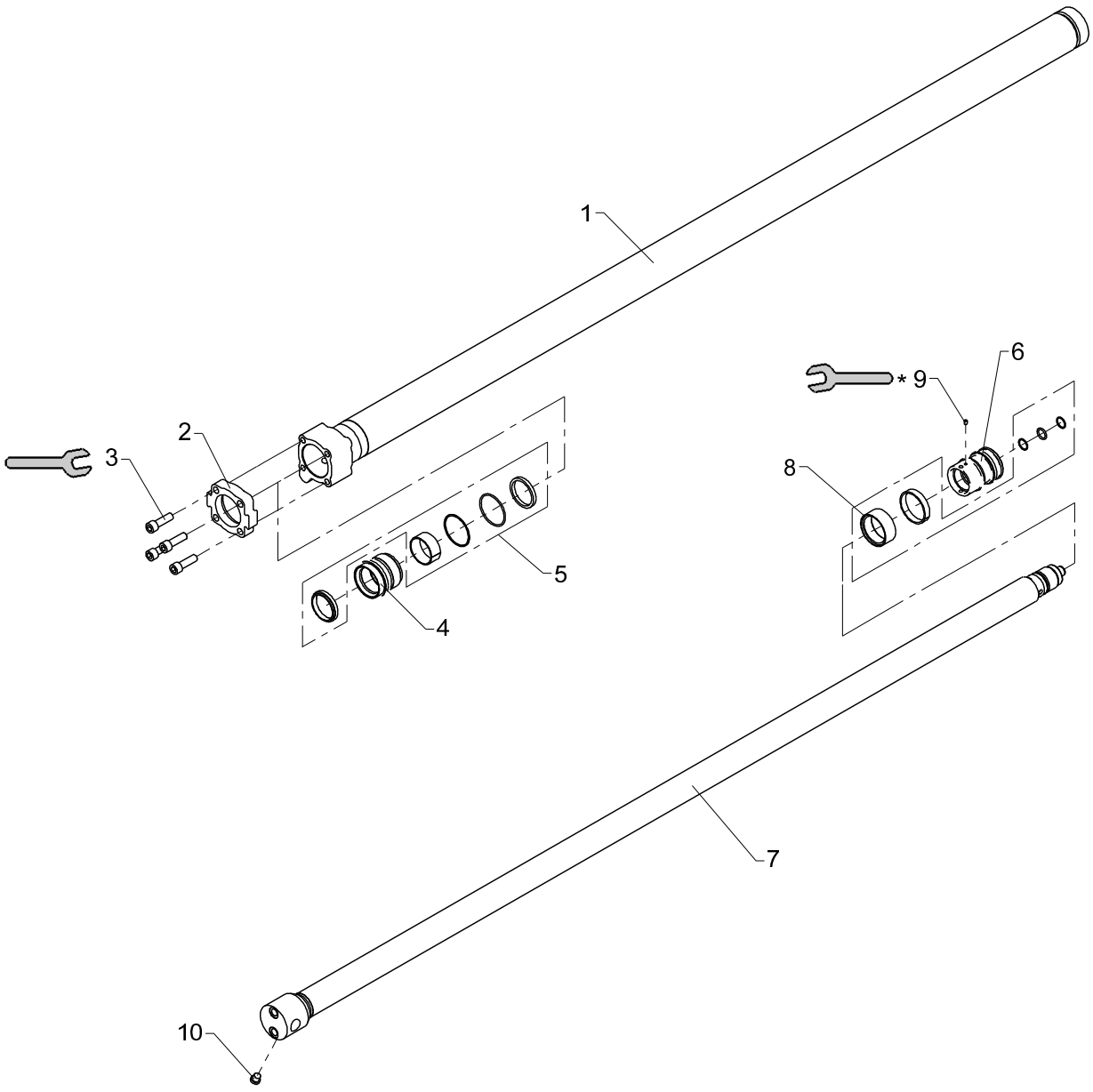

298.28 ft lb (220 Nm)

* 5.42 ft lb (4 Nm)

Extension cylinder II (C70/55 x 1950)

Pos	Qty.	Part no.	Description	Remarks
1	1	6344565	Cylinder tube	
2	1	6344567	Mounting flange	
3	4	32487	Screw	MC14 x 45
4	1	6344551	Guide	
5	1	6894180	Seal kit	
6	1	6354506	Piston (C70)	
7	1	6344568	Piston rod	
8	1	6894700	Seal kit, C70/50	
9	1	30903	Screw	MSP6 x 8
10	1	25197	Plug	VS-R-1/4 WD

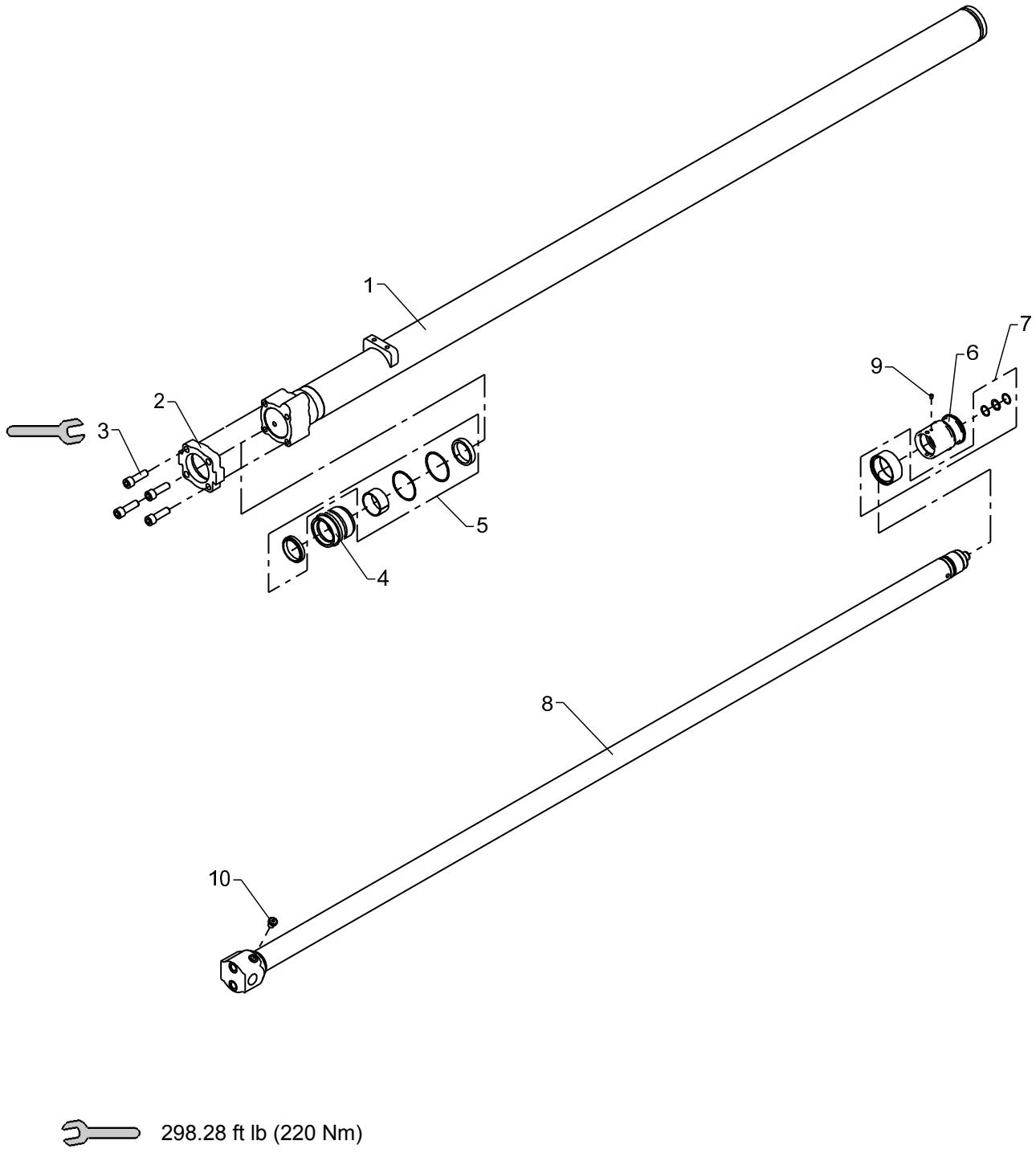

298.28 ft lb (220 Nm)

Obsolete

Extension cylinder III (C70/50 x 2000)

535 03 320

From loader 1070001
To loader 1070630

Created 08-06-2009
Modified 28-02-2011

Pos	Qty.	Part no.	Description	Remarks
1	1	6344575	Cylinder tube	
2	1	6344567	Mounting flange	
3	4	32487	Screw	MC14 x 45
4	1	6344577	Guide	
5	1	6894190	Seal kit	
6	1	6344552	Piston	
7	1	6894170	Seal kit	
8	1	6344571	Piston rod	
9	1	30903	Screw	MSP6 x 8
10	1	25197	Plug	VS-R-1/4 WD

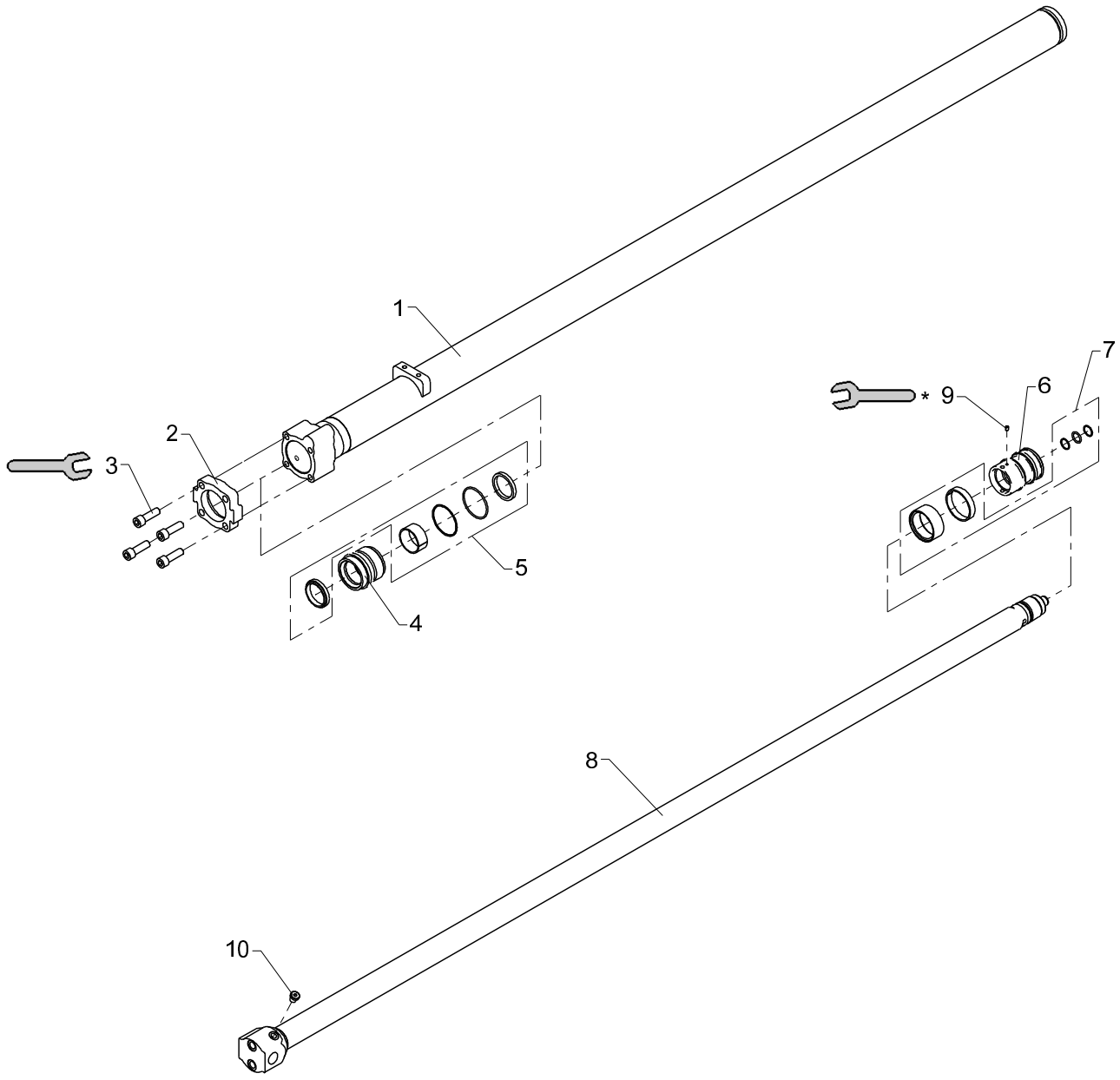

298.28 ft lb (220 Nm)

* 5.42 ft lb (4 Nm)

Extension cylinder III (C70/50 x 2000)

Pos	Qty.	Part no.	Description	Remarks
1	1	6344575	Cylinder tube	
2	1	6344567	Mounting flange	
3	4	32487	Screw	MC14 x 45
4	1	6344577	Guide	
5	1	6894190	Seal kit	
6	1	6354506	Piston (C70)	
7	1	6894700	Seal kit, C70/50	
8	1	6344578	Piston rod	
9	1	30903	Screw	MSP6 x 8
10	1	25197	Plug	VS-R-1/4 WD

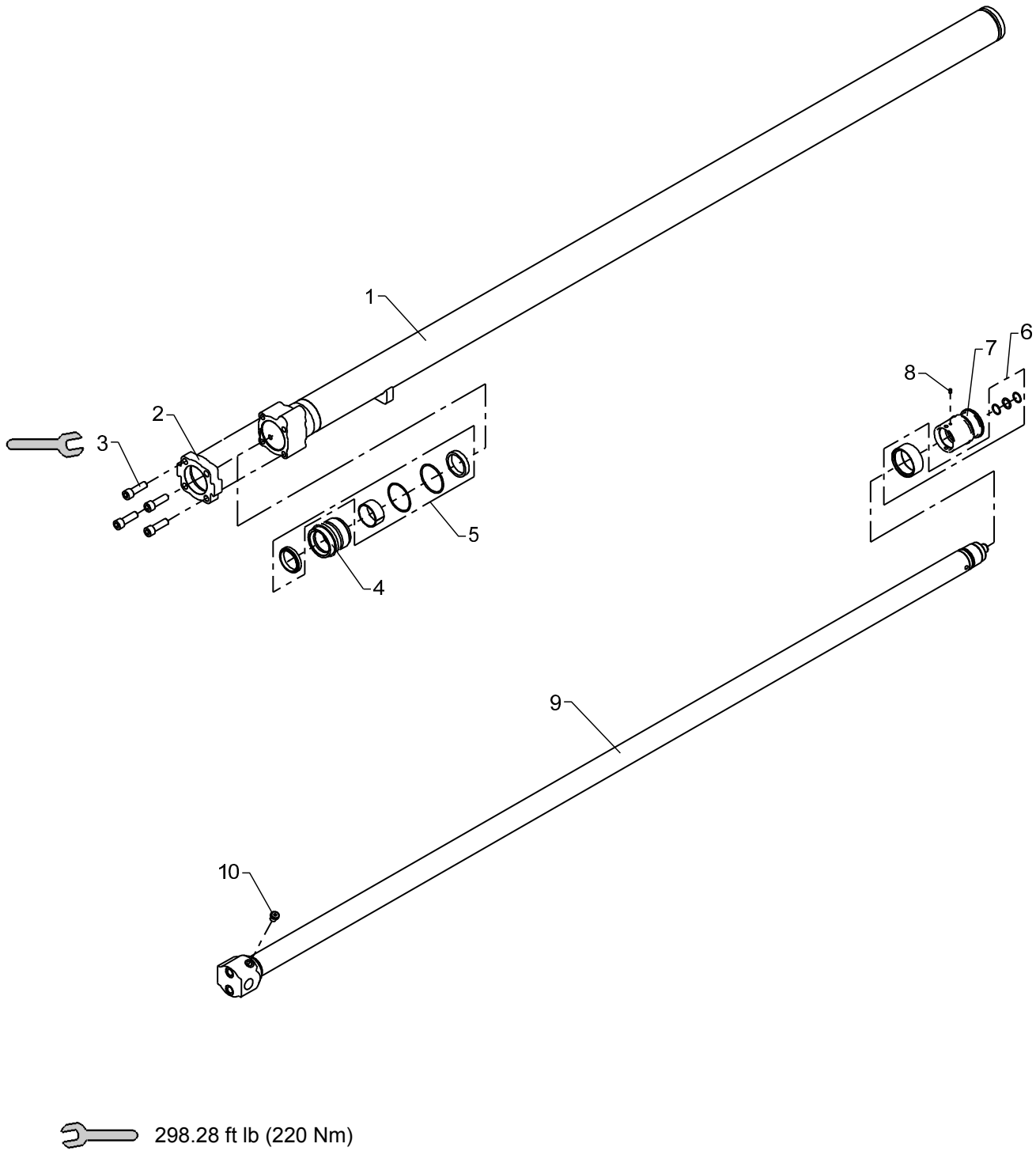

298.28 ft lb (220 Nm)

Obsolete

Extension cylinder IV (C70/50 x 2100)

535 03 330

From loader 1070001
To loader 1070632

Created 08-06-2009
Modified 18-12-2013

Pos	Qty.	Part no.	Description	Remarks
1	1	6344585	Cylinder tube	
2	1	6344567	Mounting flange	
3	4	32487	Screw	MC14 x 45
4	1	6344577	Guide	
5	1	6894190	Seal kit	
6	1	6894170	Seal kit	
7	1	6344552	Piston	
8	1	30903	Screw	MSP6 x 8
9	1	6344581	Piston rod	
10	1	25197	Plug	VS-R-1/4 WD

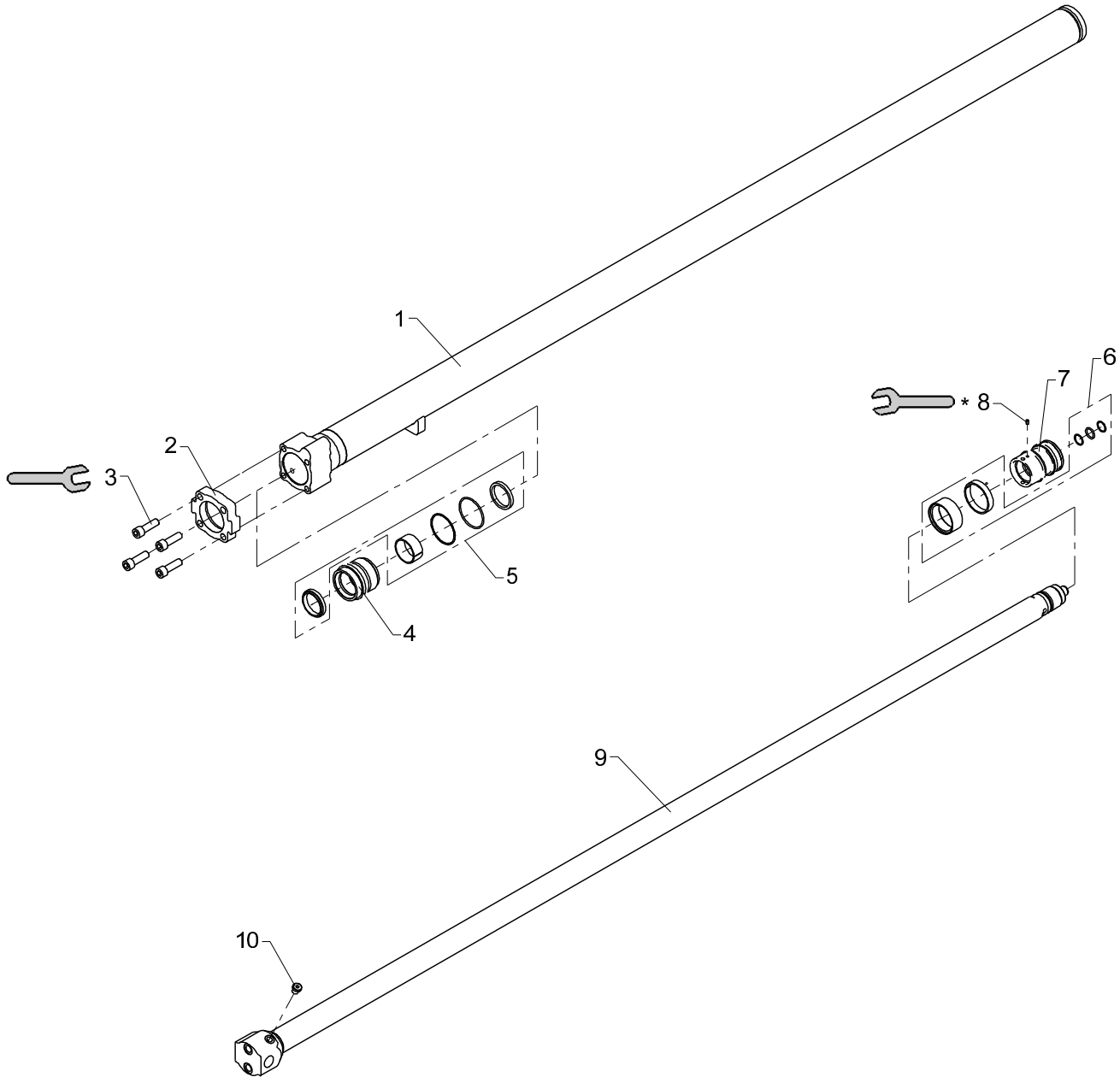

298.28 ft lb (220 Nm)

* 5.42 ft lb (4 Nm)

Extension cylinder IV (C70/50 x 2100)

Created 28-02-2013
Modified 26-06-2014

Pos	Qty.	Part no.	Description	Remarks
1	1	6344585	Cylinder tube	
2	1	6344567	Mounting flange	
3	4	32487	Screw	MC14 x 45
4	1	6344577	Guide	
5	1	6894190	Seal kit	
6	1	6894700	Seal kit, C70/50	
7	1	6354506	Piston (C70)	
8	1	30903	Screw	MSP6 x 8
9	1	6344588	Piston rod	
10	1	25197	Plug	VS-R-1/4 WD

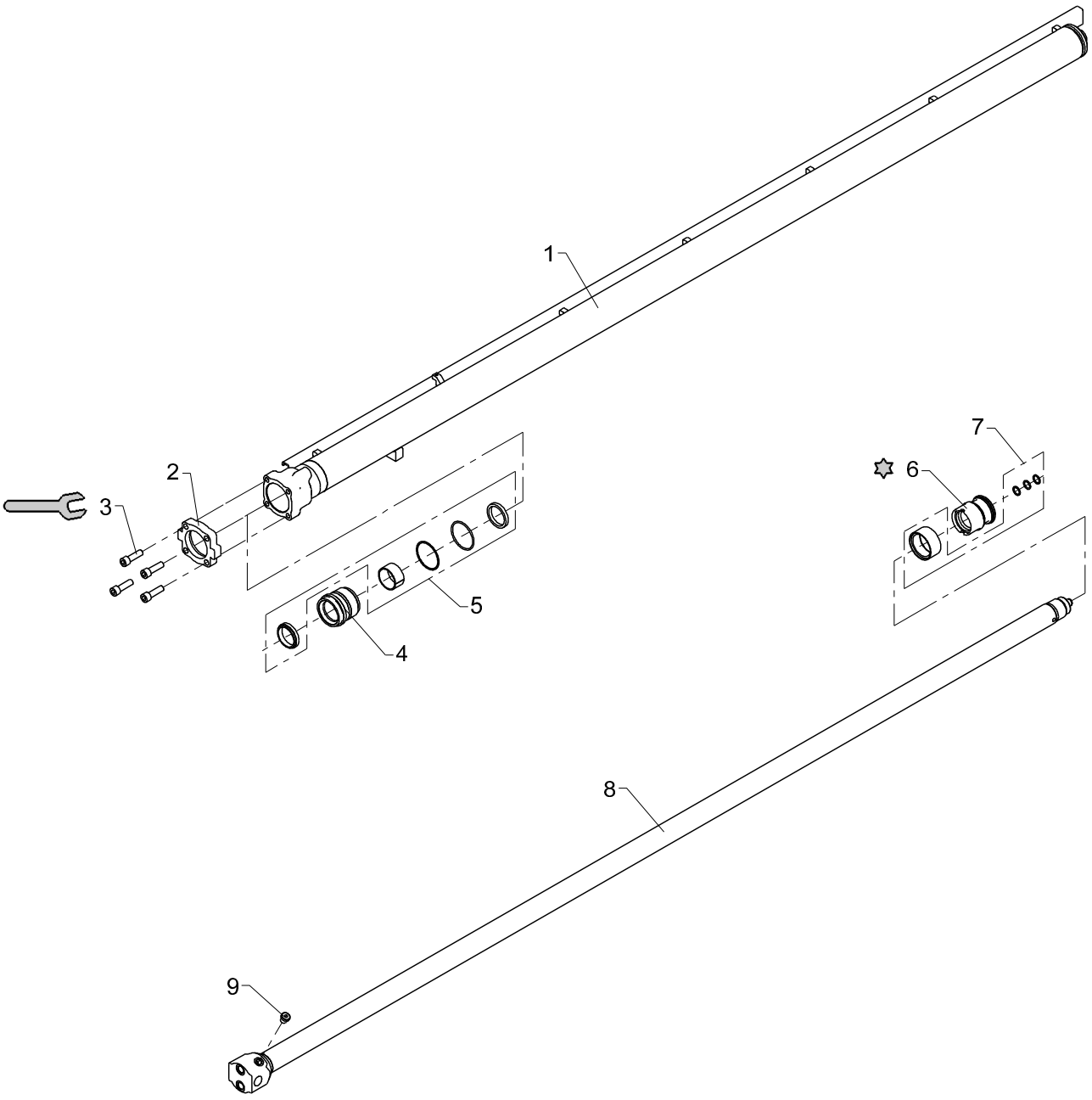

189.81 ft lb (140 Nm)

Loctite 243

Extension cylinder V (C63/45 x 2200)

Pos	Qty.	Part no.	Description	Remarks
1	1	6344595	Cylinder tube	
2	1	6340567	Mounting flange	
3	4	30475	Screw	MC12 x 40
4	1	6340554	Guide	
5	1	6894140	Seal kit f. guide	
6	1	6340552	Piston	
7	1	6894120	Seal kit f. piston	
8	1	6344591	Piston rod	
9	1	25197	Plug	VS-R-1/4 WD

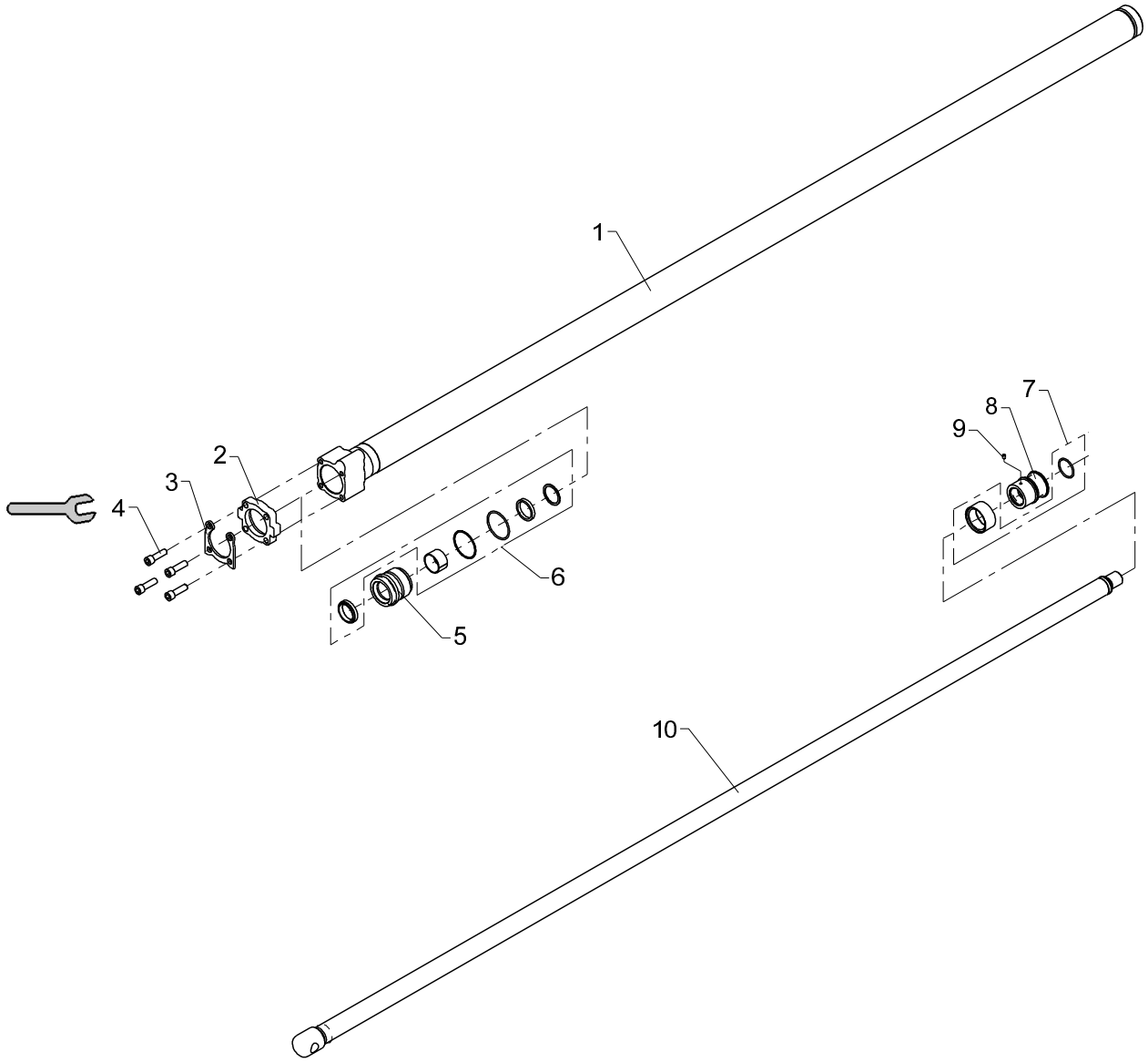

189.81 ft lb (140 Nm)

Obsolete

Extension cylinder VI (C60/40S x 2235)

535 03 350

From loader 1070001
To loader 1070576

Created 09-06-2009
Modified 05-09-2013

Pos	Qty.	Part no.	Description	Remarks
1	1	6344605	Cylinder tube	
2	1	6340567	Mounting flange	
3	1	6344526	Safety device	
4	4	30475	Screw	MC12 x 40
5	1	6340555	Guide	
6	1	6894150	Seal kit, guide	
7	1	6893810	Seal kit, piston	
8	1	6306744	Piston	
9	1	30903	Screw	MSP6 x 8
10	1	6344601	Piston rod	

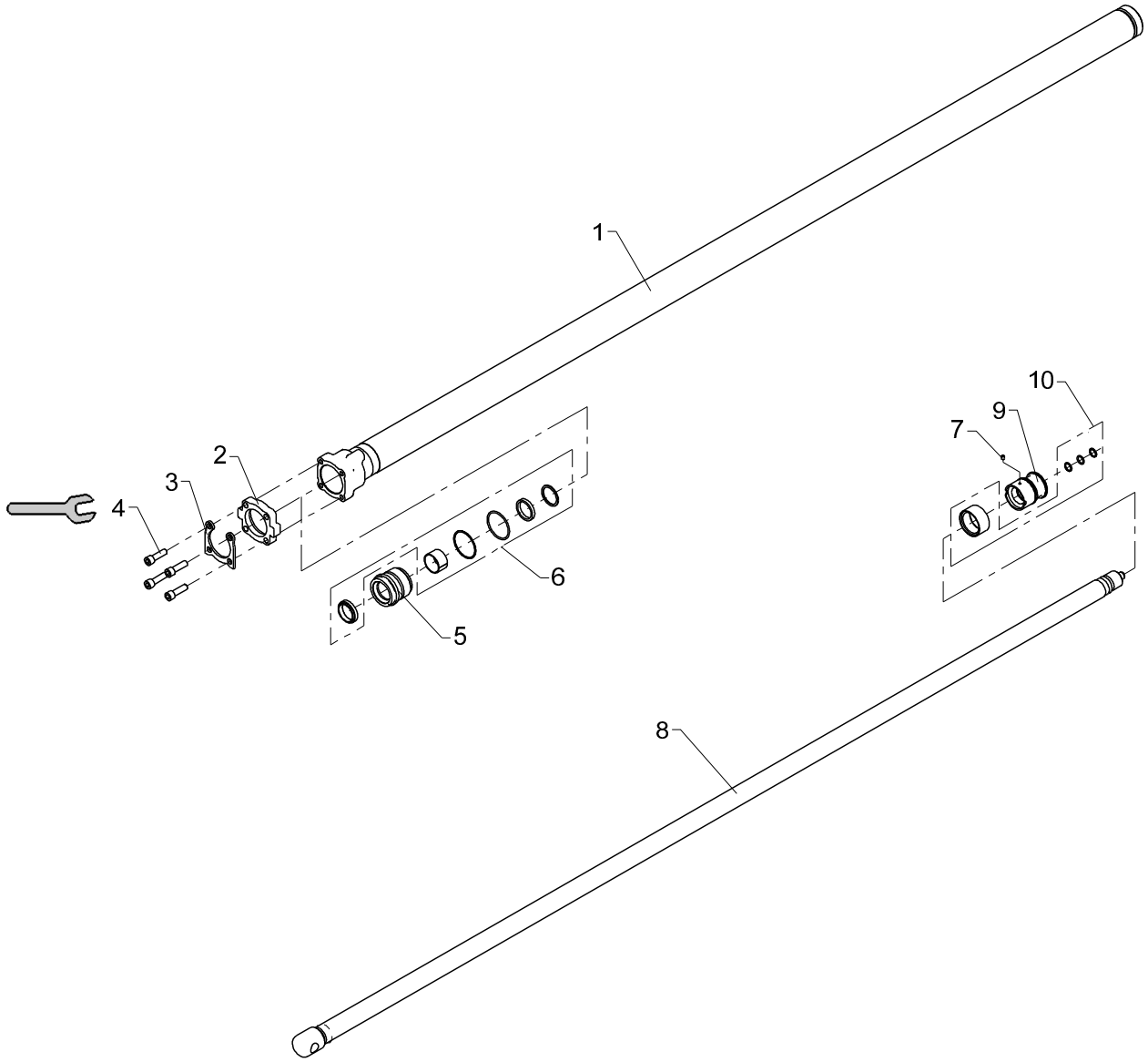

189.81 ft lb (140 Nm)

Obsolete

Extension cylinder VI (C60/40S x 2235)

535 03 350 A

From loader 1070577
To loader 1070800

Created 23-01-2013
Modified 05-09-2013

Pos	Qty.	Part no.	Description	Remarks
1	1	6344605	Cylinder tube	
2	1	6340567	Mounting flange	
3	1	6344526	Safety device	
4	4	30475	Screw	MC12 x 40
5	1	6340555	Guide	
6	1	6894150	Seal kit, guide	
7	1	30903	Screw	MSP6 x 8
8	1	6344608	Piston rod	
9	1	6306741	Piston	
10	1	6893790	Seal kit, piston	

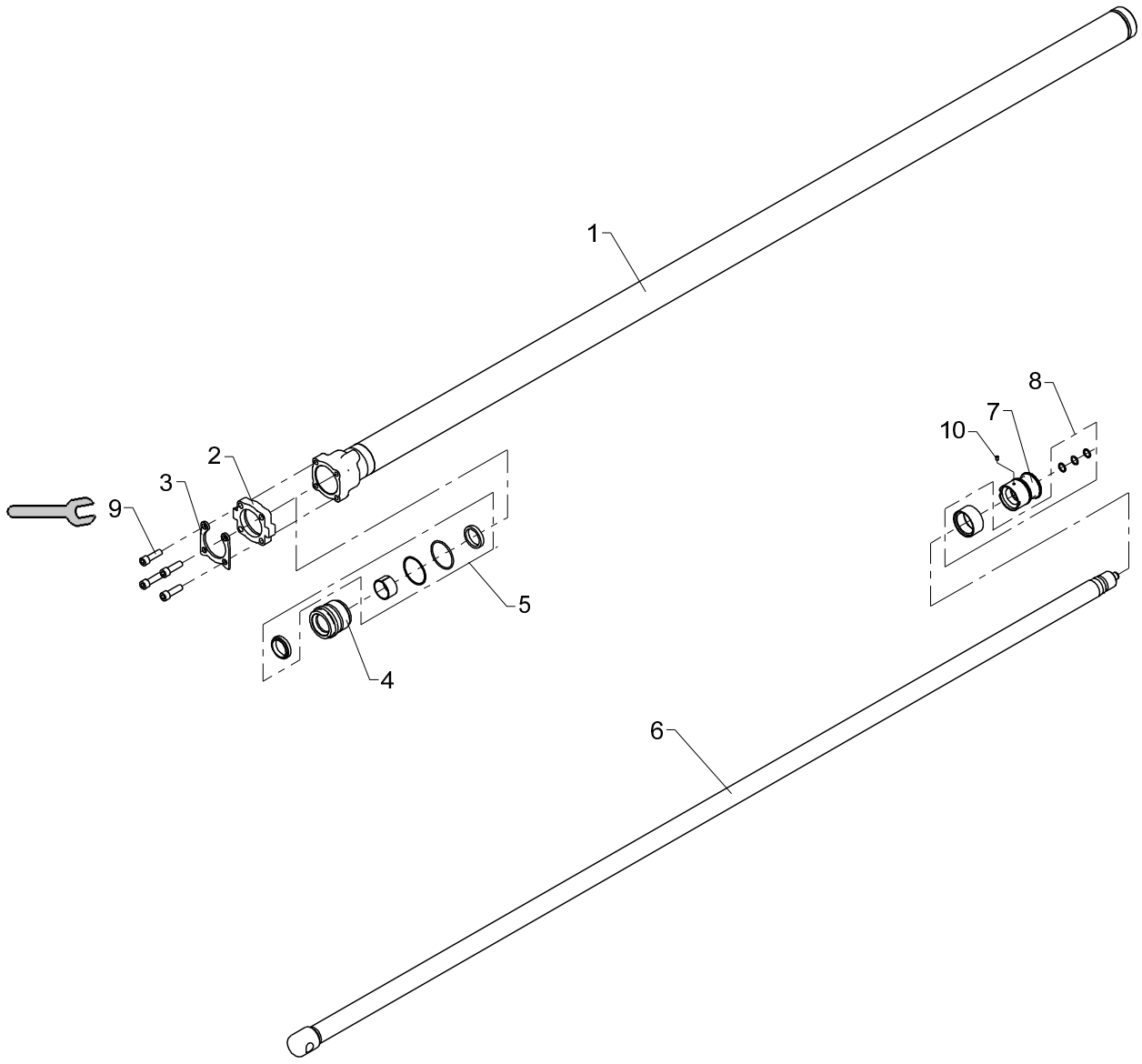

189.81 ft lb (140 Nm)

Extension cylinder VI (C60/40S x 2235)

Pos	Qty.	Part no.	Description	Remarks
1	1	6344605	Cylinder tube	
2	1	6340567	Mounting flange	
3	1	6344526	Safety device	
4	1	6340556	Guide (C60/40)	
5	1	6894830	Seal kit for guide (C60)	
6	1	6344608	Piston rod	
7	1	6306741	Piston	
8	1	6893790	Seal kit, piston	
9	4	30475	Screw	MC12 x 40
10	1	30903	Screw	MSP6 x 8

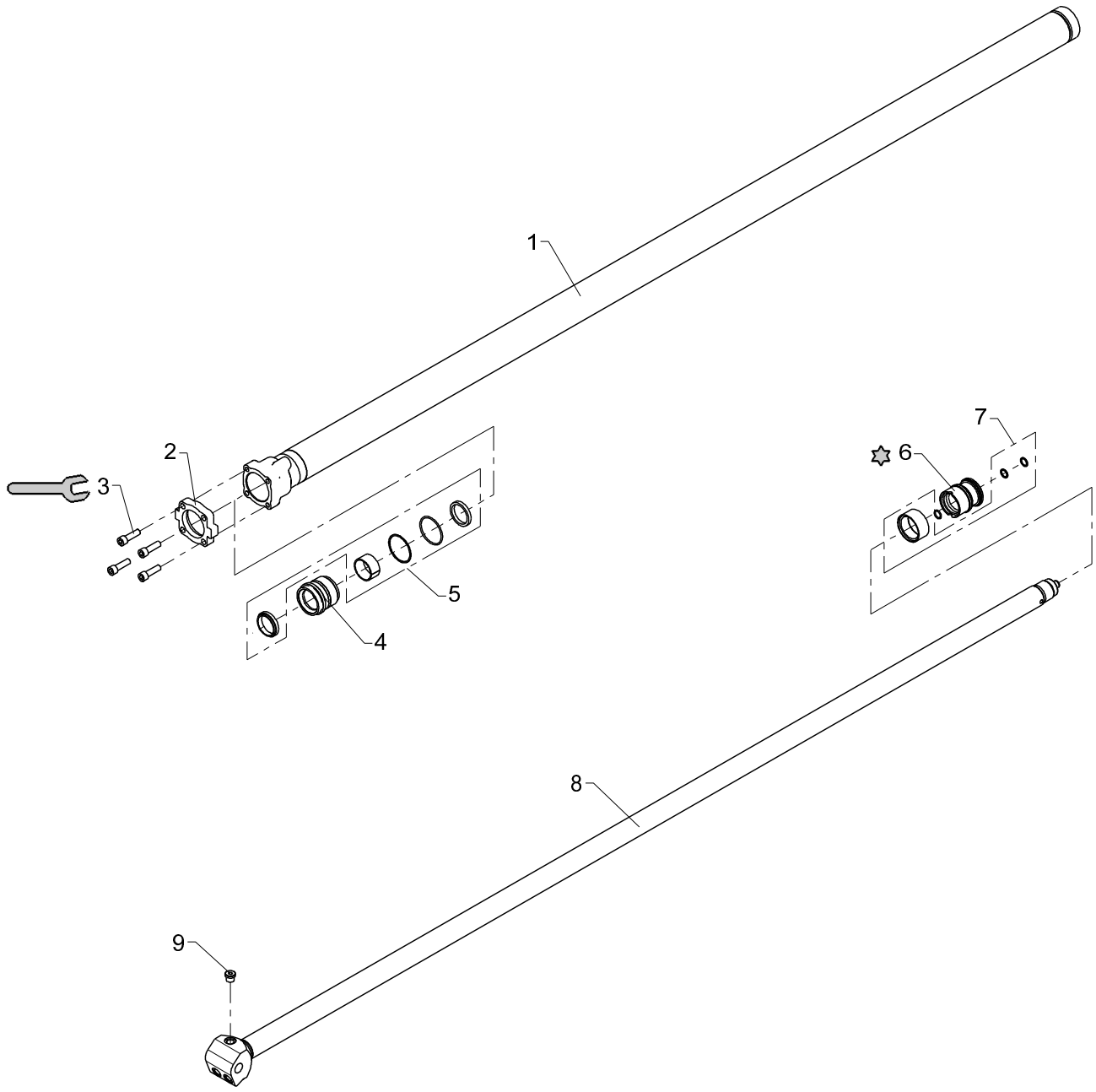

189.81 ft lb (140 Nm)

Loctite 243

Extension cylinder VI (C63/45 x 2235)

Pos	Qty.	Part no.	Description	Remarks
1	1	6344615	Cylinder tube	
2	1	6340567	Mounting flange	
3	4	30475	Screw	MC12 x 40
4	1	6340554	Guide	
5	1	6894140	Seal kit f. guide	
6	1	6340552	Piston	
7	1	6894120	Seal kit f. piston	
8	1	6344611	Piston rod	
9	1	25277	Plug	VS-R-3/8 WD

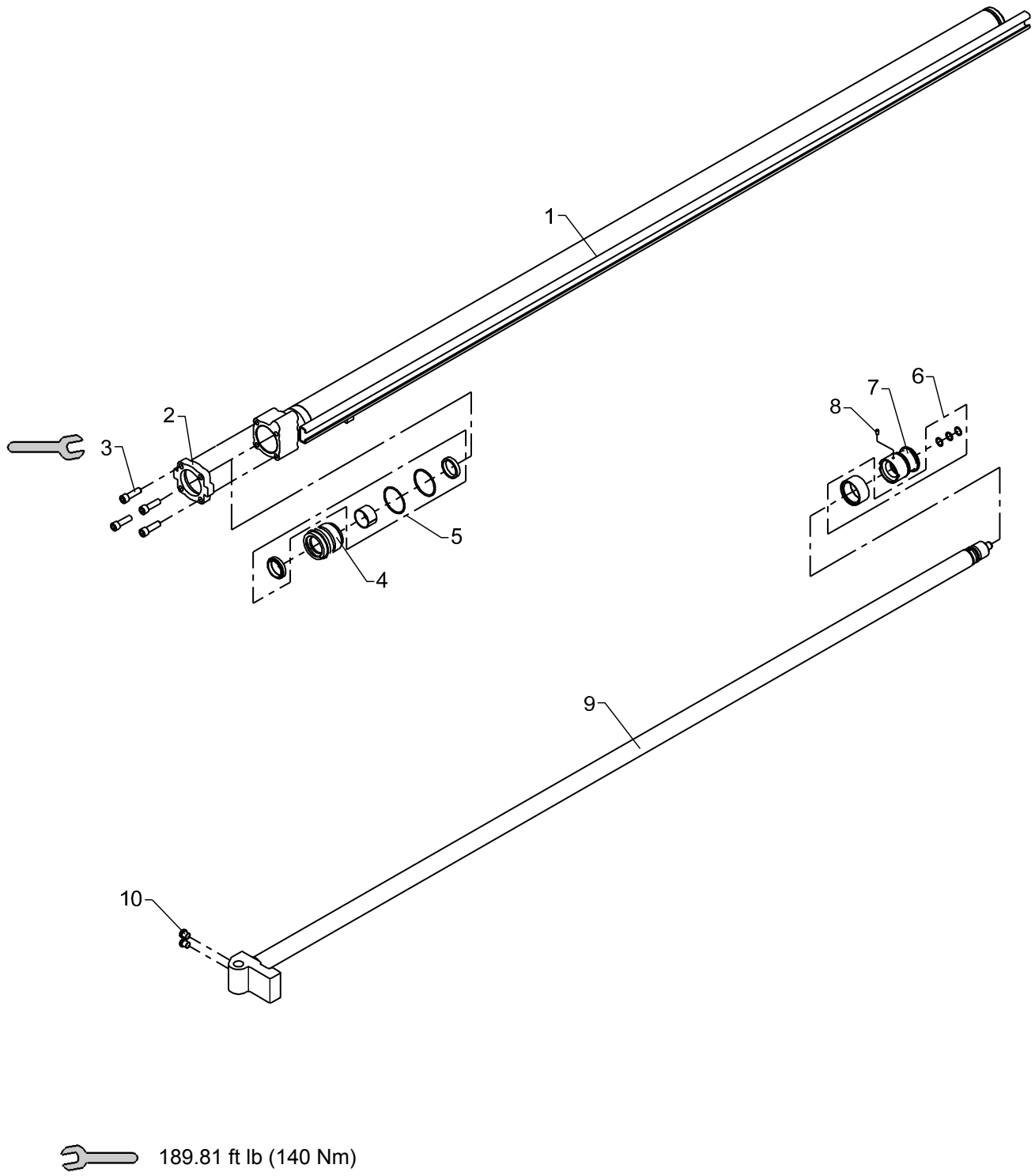

189.81 ft lb (140 Nm)

Obsolete

Extension cylinder VII (60/40 x 2150)

535 03 360

From loader 1070001
To loader

Created 09-06-2009
Modified

Pos	Qty.	Part no.	Description	Remarks
1	1	6344625	Cylinder tube	
2	1	6340567	Mounting flange	
3	4	30475	Screw	MC12 x 40
4	1	6340555	Guide	
5	1	6894150	Seal kit, guide	
6	1	6893790	Seal kit, piston	
7	1	6306741	Piston	
8	1	30556	Pointed screw	MSP6 x 10
9	1	6344621	Piston rod	
10	2	25197	Plug	VS-R-1/4 WD

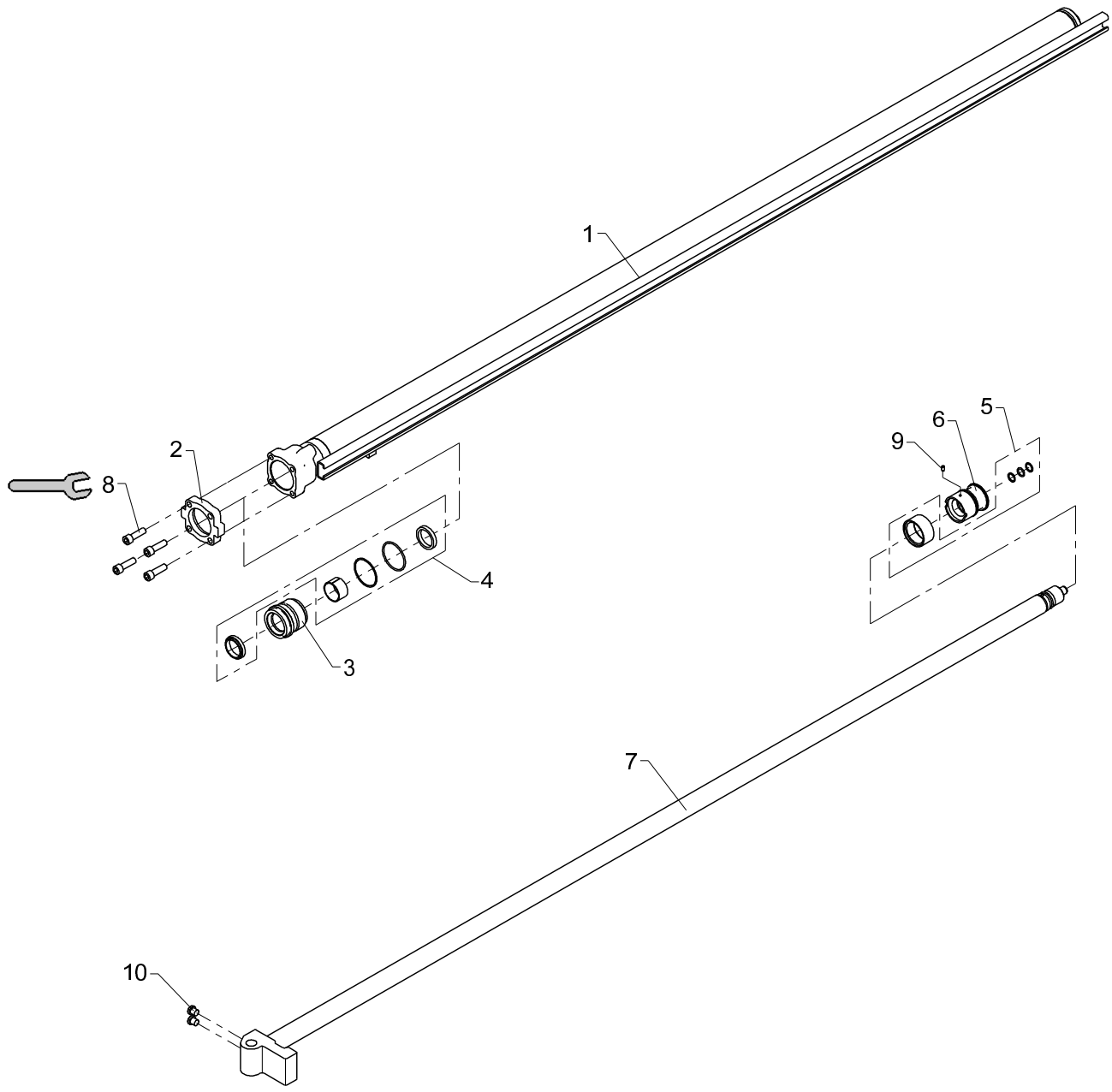

189.81 ft lb (140 Nm)

Extension cylinder VII (60/40 x 2150)

Pos	Qty.	Part no.	Description	Remarks
1	1	6344625	Cylinder tube	
2	1	6340567	Mounting flange	
3	1	6340556	Guide (C60/40)	
4	1	6894830	Seal kit for guide (C60)	
5	1	6893790	Seal kit, piston	
6	1	6306741	Piston	
7	1	6344621	Piston rod	
8	4	30475	Screw	MC12 x 40
9	1	30556	Pointed screw	MSP6 x 10
10	2	25197	Plug	VS-R-1/4 WD

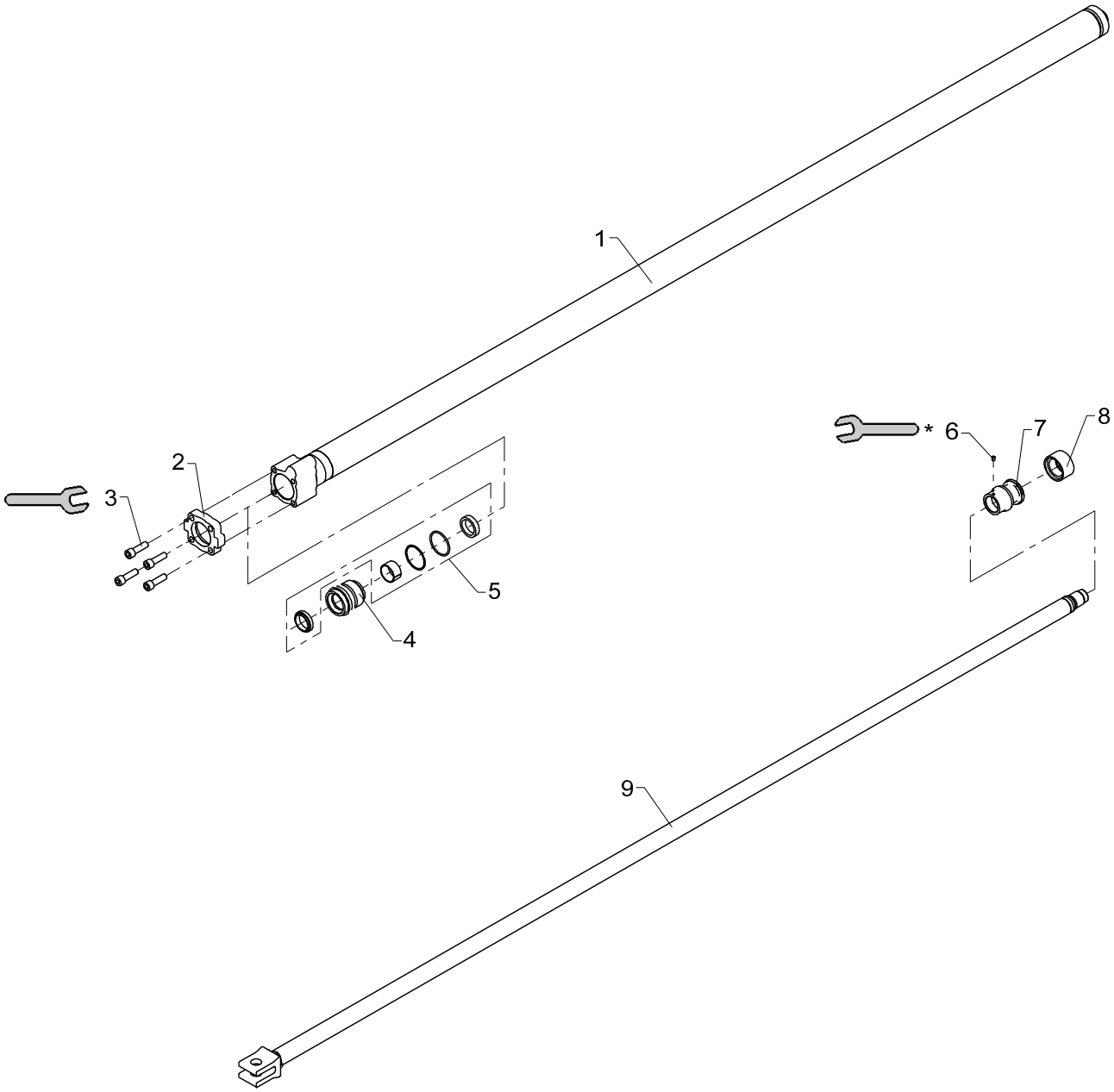

189.81 ft lb (140 Nm)

* 5.42 ft lb (4 Nm)

Extension cylinder VIII (C55/35S x 2200)

Pos	Qty.	Part no.	Description	Remarks
1	1	6340605	Cylinder pipe	
2	1	6340613	Mounting flange	
3	4	30475	Screw	MC12 x 40
4	1	6340611	Guide	
5	1	6894160	Seal kit, guide	
6	1	30903	Screw	MSP6 x 8
7	1	6340612	Piston	
8	1	20776	Seal	MD 63/51 x 20,5
9	1	6344631	Piston rod	

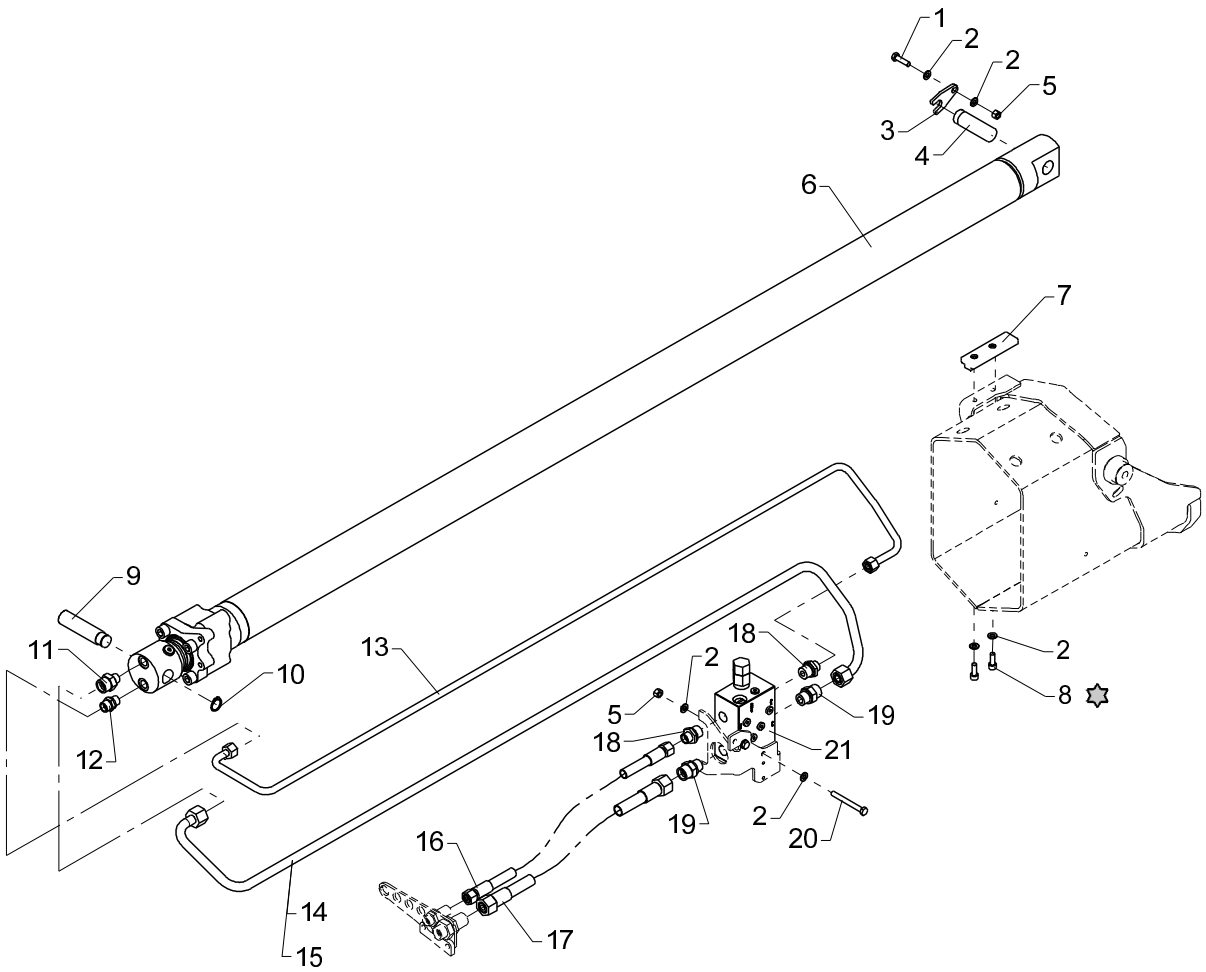

✡ Loctite 243

Extension cylinder I incl. fittings

Pos	Qty.	Part no.	Description	Remarks
		6344330	Extension cylinder I +fittings	
		6347330	Ext. cyl. I +fittings, basket	
1	1	30135	Set screw, stainless	M8 x 30
2	8	31147	Face washer, 8 mm	8 mm
3	1	6340337	Lock plate	
4	1	6344522	Pin	
5	3	30886	Lock nut, stainless	M8
6	1	6344540	Extension cylinder I	
7	1	63689	Slide block with bushing	
8	2	30460	Sockethead screw	MC8 x 22
9	1	6344521	Pin	
10	1	33110	Circlip	22U
11	1	26368	Straight connection	P-GEV 16 SR 3/8-WD
12	1	25127	Connection	P-GEV 12 LR-WD
13	1	6344642	Pipe	
14	1	6344641	Pipe	
15	1	6345641	Pipe, CI extend	
16	1	56383	Hose	3/8 X 650 mm L/L
17	1	56384	Hose	1/2 X 680 mm L/L
18	2	25108	Connection	GES 12 LR 1/2-WD
19	2	26334	Connection	P-GEV 16 SR-WD
20	2	30812	Steel bolt, stainless	M8 x 75
21	1	59044	Load holding valve	

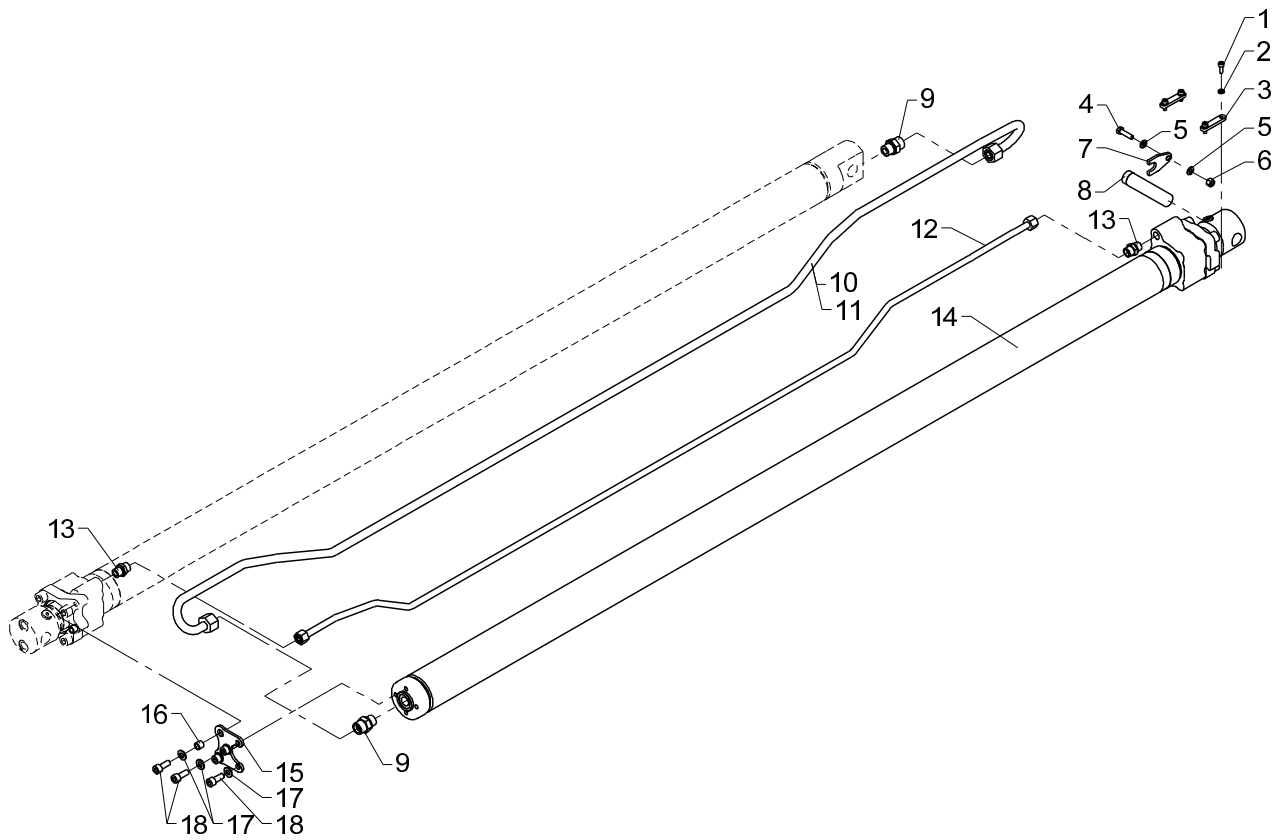
1
2
3
4
5
5
6
7
8
9
9
10
11
12
13
13
14
15
16
17
17
18
18

Extension cylinder II incl. fittings

Pos	Qty.	Part no.	Description	Remarks
		6344350	Extension cylinder II+fittings	
		6347350	Ext. cyl. II+fittings, basket	
1	4	31539	Screw, stainless	MC6 x 16
2	4	31154	Spring washer, stainless	6 mm
3	2	6340336	Lock plate	
4	1	30135	Set screw, stainless	M8 x 30
5	2	31147	Face washer, 8 mm	8 mm
6	1	30886	Lock nut, stainless	M8
7	1	6340337	Lock plate	
8	1	6344523	Pin	
9	2	26334	Connection	GEV 16 SR-WD
10	1	6344643	Pipe	
11	1	6345643	Pipe, CII extend	
12	1	6344644	Pipe	
13	2	25127	Connection	GES 12 LR-WD
14	1	6344560	Extension cylinder II	
15	1	6344524	Plate	
16	2	6302369	Spacer	
17	5	31177	Washer	10 mm
18	5	30453	Screw	MC10 x 25

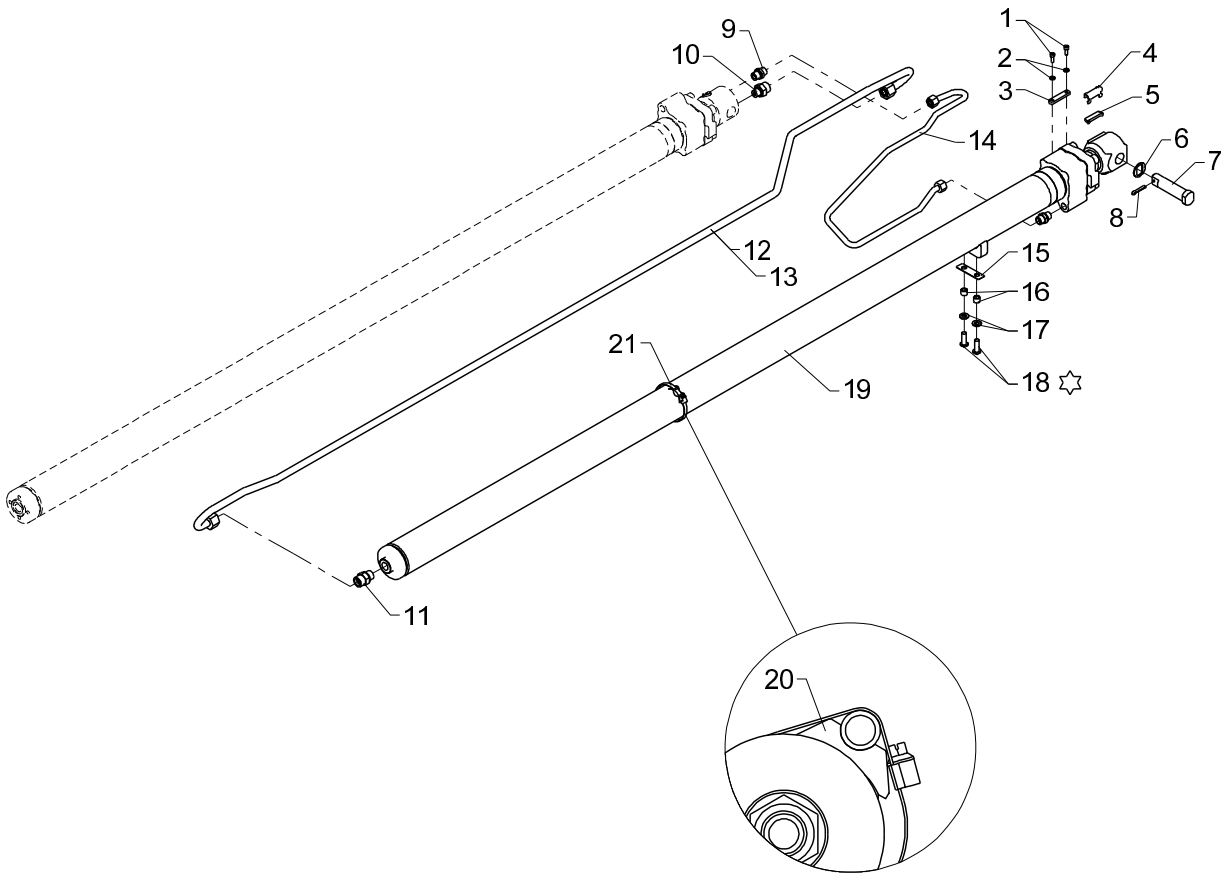

☆ Loctite 243

Extension cylinder III incl. fittings

Pos	Qty.	Part no.	Description	Remarks
		6344370	Extension cylinderIII+fittings	
		6347370	Ext. cyl. III+fittings, basket	
1	2	31539	Screw, stainless	MC6 x 16
2	2	31154	Spring washer, stainless	6 mm
3	1	6340336	Lock plate	
4	1	31920	Clip, stainless, 10mm	
5	1	6340317	Lock plate (10 mm)	
6	1	6304289	Spacer	
7	1	6304062	Pin	
8	1	31634	Split pin	ø5 x 32
9	2	25127	Connection	P-GEV 12 LR-WD
10	1	26368	Straight connection	P-GEV 16 SR 3/8-WD
11	1	26334	Connection	P-GEV 16 SR-WD
12	1	6344645	Pipe	
13	1	6345645	Pipe, CIII extend	
14	1	6344646	Pipe	
15	1	6304279	Shim	
16	2	6302369	Spacer	
17	2	31177	Washer	10 mm
18	2	30649	Screw	M10 x 30
19	1	6344570	Extension cylinder III	
20	1	64409	Clamp	
21	1	31406	Clip	

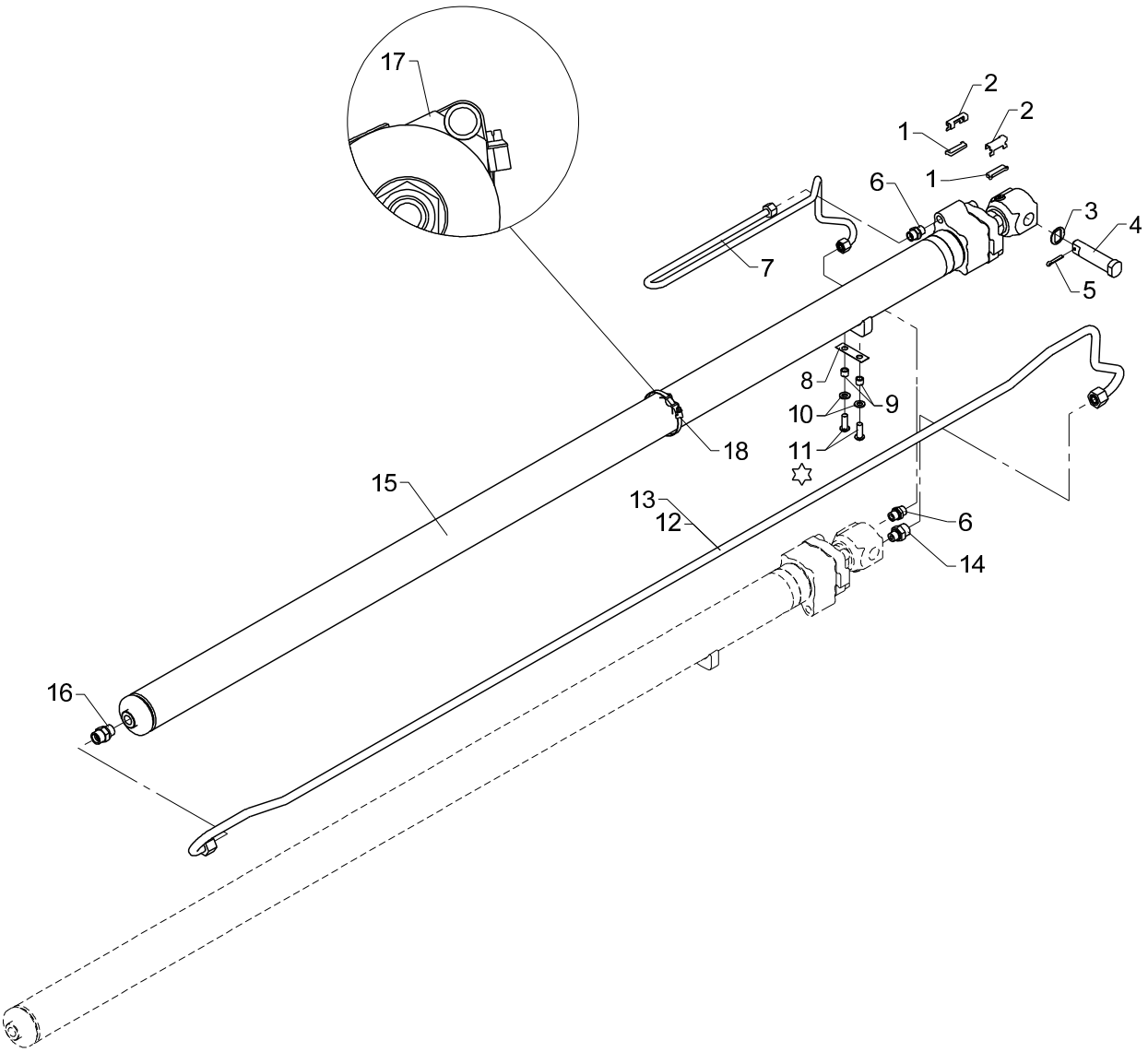

✡ Loctite 243

Extension cylinder IV incl. fittings

Pos	Qty.	Part no.	Description	Remarks
		6344390	Extension cylinder IV+fittings	
		6347390	Ext. cyl. IV+fittings, basket	
1	2	6340317	Lock plate (10 mm)	
2	2	31920	Clip, stainless, 10mm	
3	1	6304289	Spacer	
4	1	6304062	Pin	
5	1	31634	Split pin	ø5 x 32
6	2	25127	Connection	GES 12 LR-WD
7	1	6344648	Pipe	
8	1	6304279	Shim	
9	2	6302369	Spacer	
10	2	31177	Washer	10 mm
11	2	30649	Screw	M10 x 30
12	1	6344647	Pipe	
13	1	6345647	Pipe, CIV extend	
14	1	26368	Straight connection	GEV 16 S/R 3/8-WD
15	1	6344580	Extension cylinder IV	
16	1	26334	Connection	GEV 16 SR-WD
17	1	64409	Clamp	
18	1	31406	Clip	

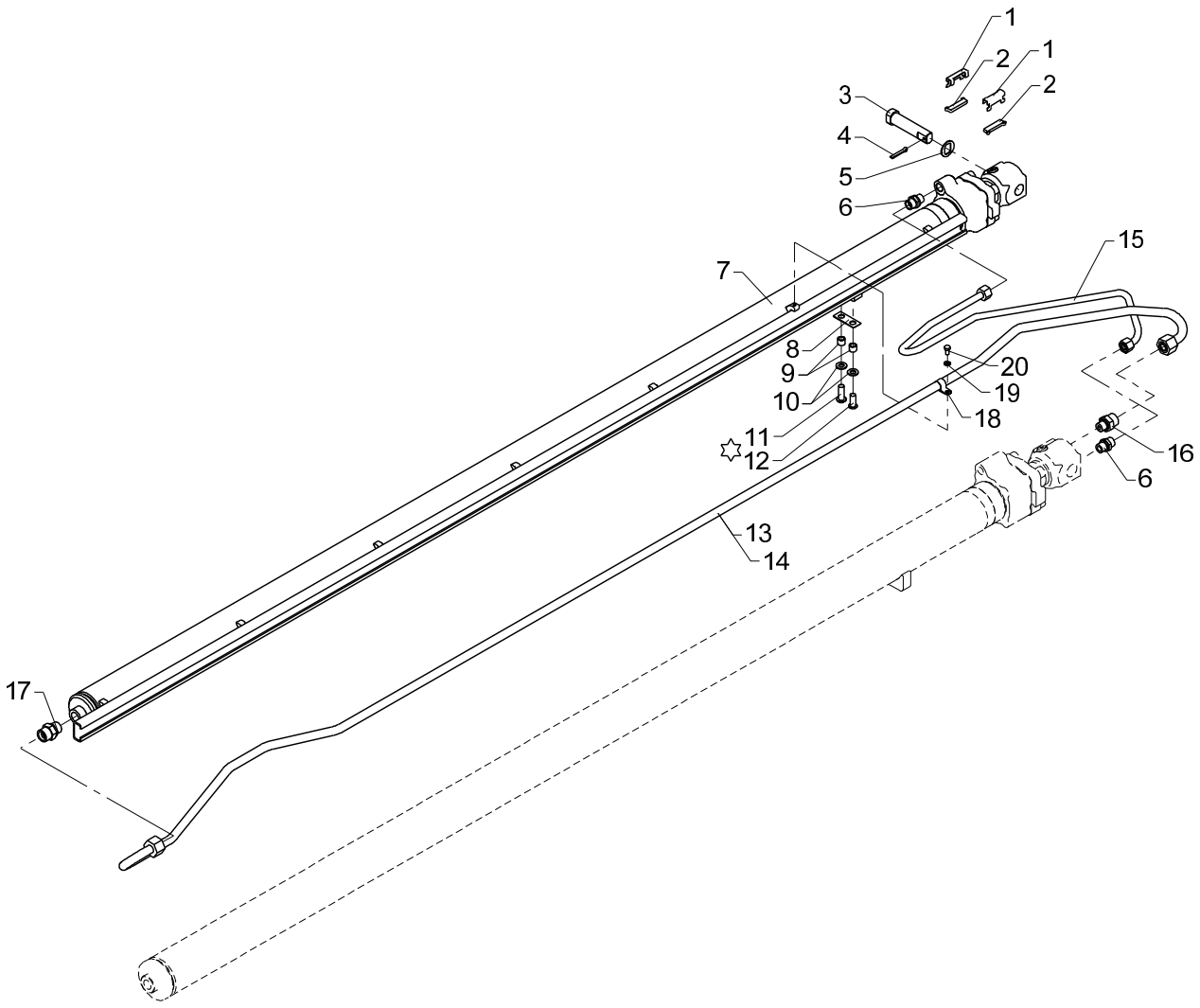

☆ Loctite 243

Extension cylinder V incl. fittings

Pos	Qty.	Part no.	Description	Remarks
		6344410	Extension cylinder V+fittings	
		6347410	Ext. cyl. V+fittings, basket	
1	2	31920	Clip, stainless, 10mm	
2	2	6340317	Lock plate (10 mm)	
3	1	6344525	Pin	
4	1	31634	Split pin	ø5 x 32
5	1	6340526	Spacer	
6	2	25127	Connection	P-GEV 12 LR-WD
7	1	6344590		
8	1	6340527	Shim	
9	2	6302369	Spacer	
10	2	31177	Washer	10 mm
11	1	30649	Screw	M10 x 30
12	1	32348	Cylinder screw	MC10 x 25
13	1	6344649	Pipe	
14	1	6345649		
15	1	6344651		
16	1	26368	Straight connection	P-GEV 16 SR 3/8-WD
17	1	26334	Connection	P-GEV 16 SR-WD
18	1	33493		
19	1	32302	Face washer, stainless	6 mm
20	1	30111	Set screw, stainless	M6 x 12

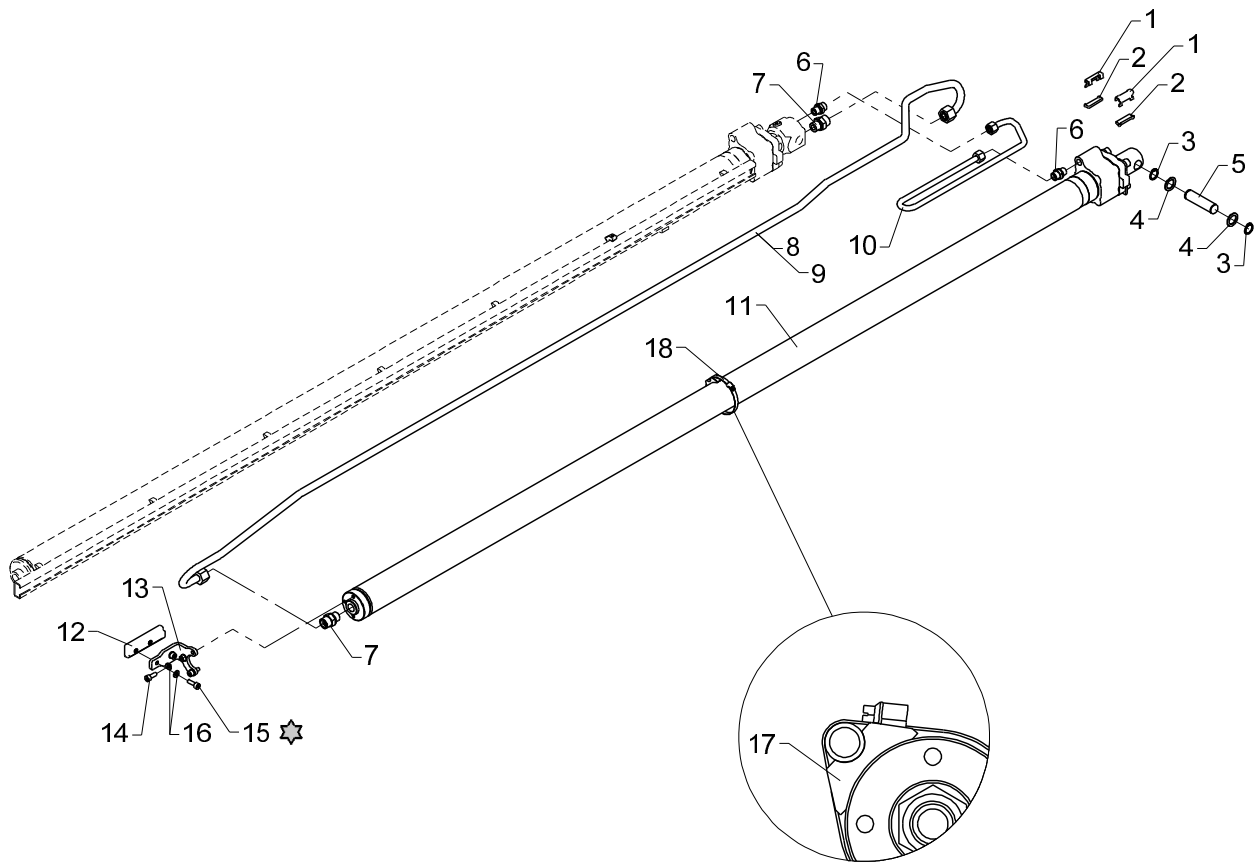

✡ Loctite 243

Extension cylinder VI incl. fittings

Pos	Qty.	Part no.	Description	Remarks
		6344430	Extension cyl. VI(K6)+fittings	
		6347430	Ext. cyl. VI (K6)+fittings	
1	2	31920	Clip, stainless, 10mm	
2	2	6340317	Lock plate (10 mm)	
3	2	33110	Circlip	22U
4	2	33228	Back ring	SS 22 x 32 x 2
5	1	6304229	Pin	
6	2	25127	Connection	P-GEV 12 LR-WD
7	2	26334	Connection	P-GEV 16 SR-WD
8	1	6344652	Pipe	
9	1	6345652	Pipe, CVI extend	
10	1	6344653	Pipe	
11	1	6344600	Extension cylinder VI	
12	1	63689	Slide block with bushing	
13	1	6344529	Bracket for slide block	
14	3	30438	Screw	MC8 x 20
15	2	30460	Sockethead screw	MC8 x 22
16	5	31147	Face washer, 8 mm	8 mm
17	1	64409	Clamp	
18	1	31406	Clip	

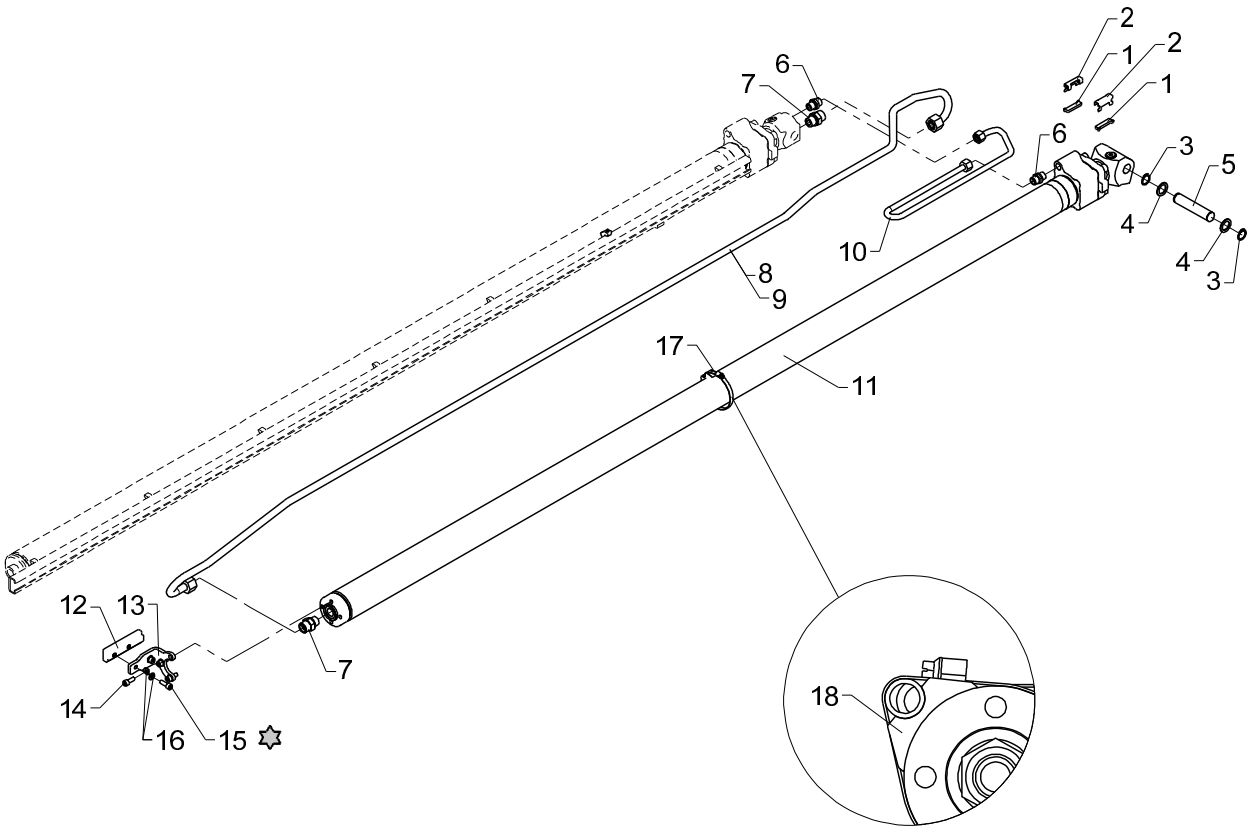

Loctite 243

Extension cylinder VI (K7/K8) incl. fittings

Pos	Qty.	Part no.	Description	Remarks
		6344450	Ext. cyl.VI (K7/K8) + fittings	
		6347460	Ext. cyl. VI(K7/K8)+fittings	
1	2	6340317	Lock plate (10 mm)	
2	2	31920	Clip, stainless, 10mm	
3	2	33110	Circlip	22U
4	2	33228	Back ring	SS 22 x 32 x 2
5	1	6344527	Pin	
6	2	25127	Connection	P-GEV 12 LR-WD
7	2	26334	Connection	P-GEV 16 SR-WD
8	1	6344652	Pipe	
9	1	6345652	Pipe, CVI extend	
10	1	6344653	Pipe	
11	1	6344610	Extension cylinder VI	
12	1	63689	Slide block with bushing	
13	1	6344528	Bracket for slide block	
14	3	30438	Screw	MC8 x 20
15	2	30460	Sockethead screw	MC8 x 22
16	5	31147	Face washer, 8 mm	8 mm
17	1	31406	Clip	
18	1	64409	Clamp	

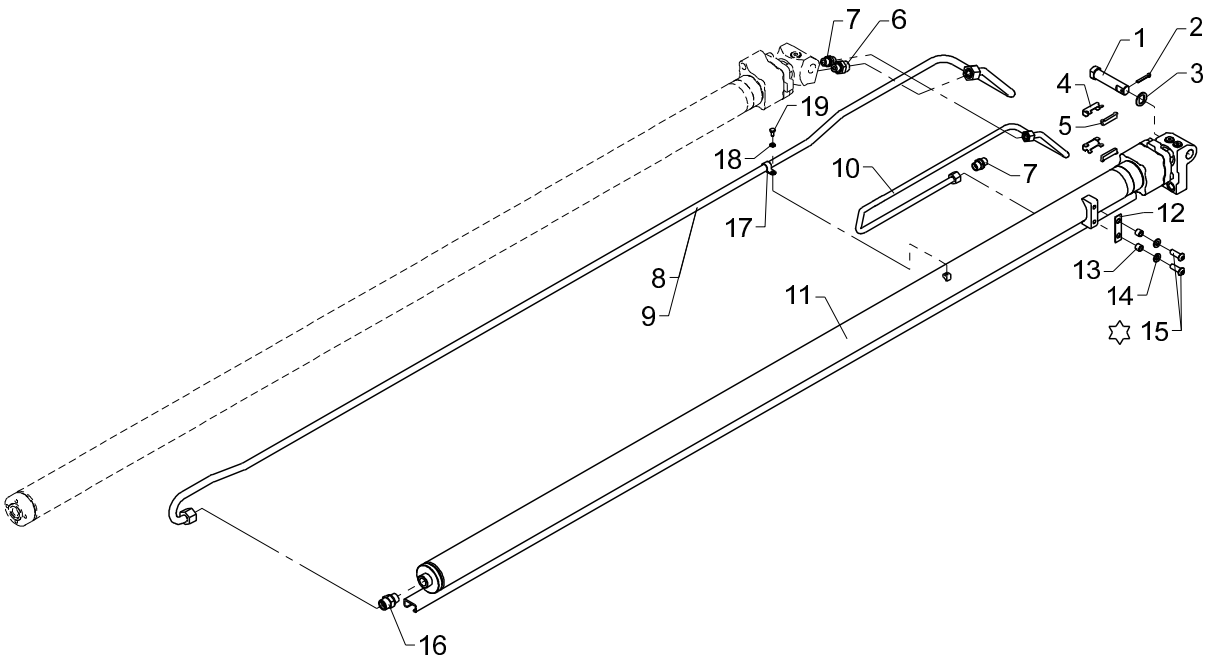

✡ Loctite 243

Extension cylinder VII incl. fittings

Pos	Qty.	Part no.	Description	Remarks
		6344470	Extension cylinderVII+fittings	
		6347470	Ext. cyl. VII+fittings, basket	
1	1	6344525	Pin	
2	1	31634	Split pin	ø5 x 32
3	1	6340526	Spacer	
4	2	31920	Clip, stainless, 10mm	
5	2	6340317	Lock plate (10 mm)	
6	1	26368	Straight connection	P-GEV 16 SR 3/8-WD
7	2	25127	Connection	P-GEV 12 LR-WD
8	1	6344654	Pipe	
9	1	6345654	Pipe, CVII extend	
10	1	6344655	Pipe	
11	1	6344620	Extension cylinder VII	
12	1	6304279	Shim	
13	2	6302369	Spacer	
14	2	31177	Washer	10 mm
15	2	30649	Screw	M10 x 30
16	1	26334	Connection	P-GEV 16 SR-WD
17	1	33493	Clamp	
18	1	32302	Face washer, stainless	6 mm
19	1	30111	Set screw, stainless	M6 x 12

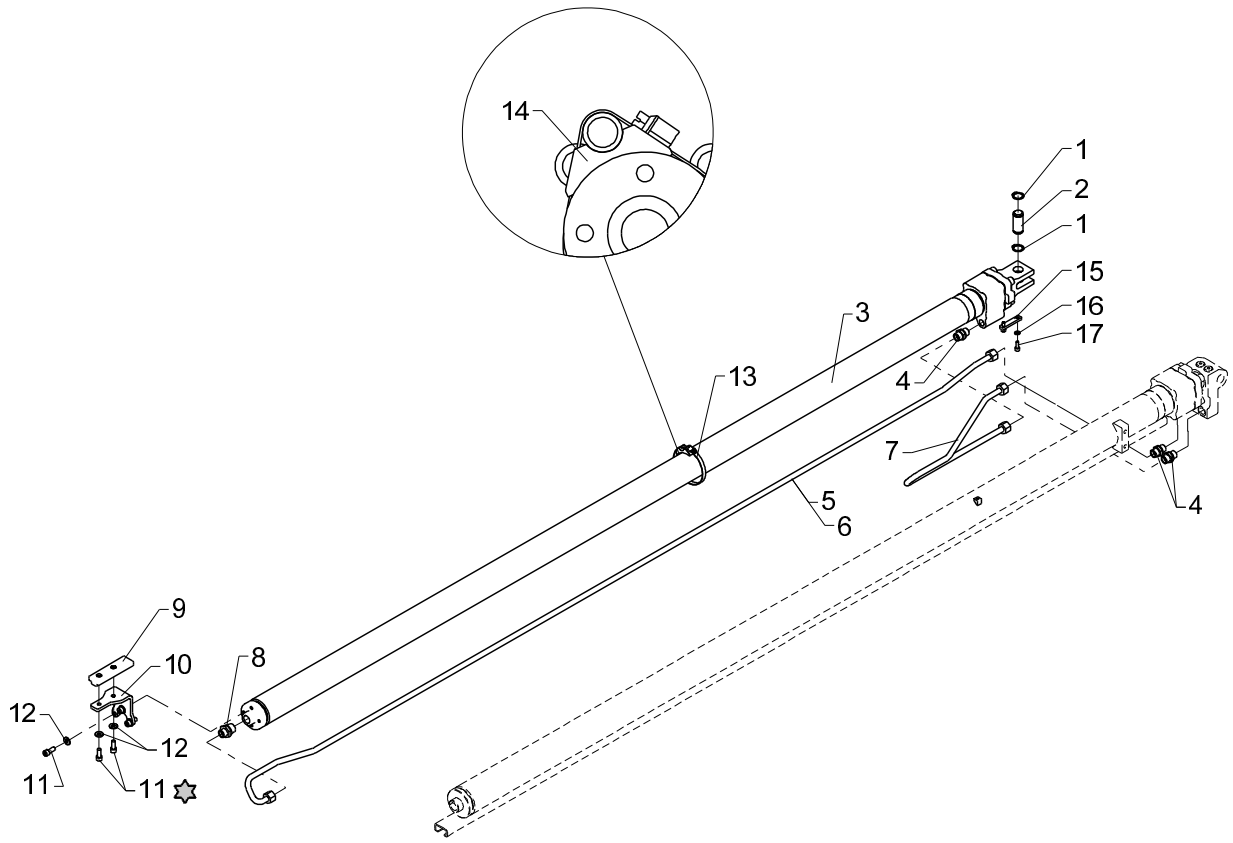

Loctite 243

Extension cylinder VIII incl. fittings

Pos	Qty.	Part no.	Description	Remarks
		6344490	Extension cyl. VIII + fittings	
		6347490	Ext. cyl.VIII+fittings, basket	
1	2	33110	Circlip	22U
2	1	6306379	Pin	
3	1	6344630	Extension cylinder VIII	
4	3	25127	Connection	P-GEV 12 LR-WD
5	1	6344656	Pipe	
6	1	6345656	Pipe CVIII extend	
7	1	6344657	Pipe	
8	1	25108	Connection	GES 12 LR 1/2-WD
9	1	63689	Slide block with bushing	
10	1	6344639	Bracket for slide block	
11	5	30438	Screw	MC8 x 20
12	5	31754	Washer	8,4 x 18 x 2
13	1	31406	Clip	
14	1	64409	Clamp	
15	2	6340336	Lock plate	
16	4	31154	Spring washer, stainless	6 mm
17	4	31539	Screw, stainless	MC6 x 16

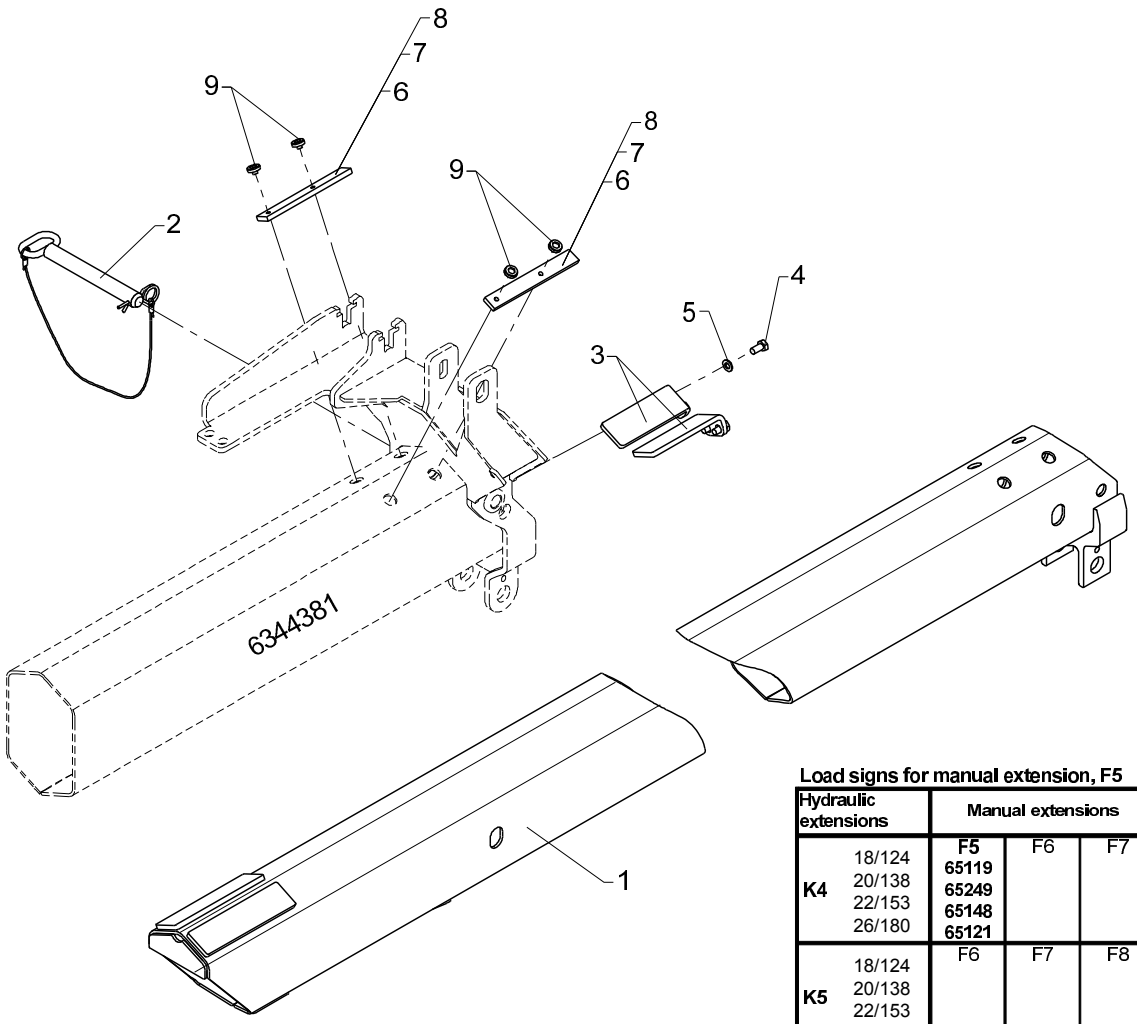

K4

Load signs for manual extension, F5

Hydraulic extensions		Manual extensions		
K4	18/124 20/138 22/153 26/180	**F5** **65119** **65249** **65148** **65121**	F6	F7
K5	18/124 20/138 22/153 26/180	F6	F7	F8
K6	18/124 20/138 22/153 26/180	F7	F8	F9
K7	18/124 20/138 22/153 26/180	F8	F9	
K8	18/124 20/138 22/153 26/180	F9		

Manual extension, F5

Pos	Qty.	Part no.	Description	Remarks
1	1	6344691	Manual extension, F5	
2	1	6092454	Lock pin with chain	
3	2	6340689	Shim	
4	4	30154	Set screw	M10 x 20
5	4	31177	Washer	10 mm
6	2	6243004	Wear plate	6 mm
7	2	6244064	Wear plate	7 mm
8	2	6243014	Wear plate	8 mm
9	4	31864	Allen screw	M8 x 6

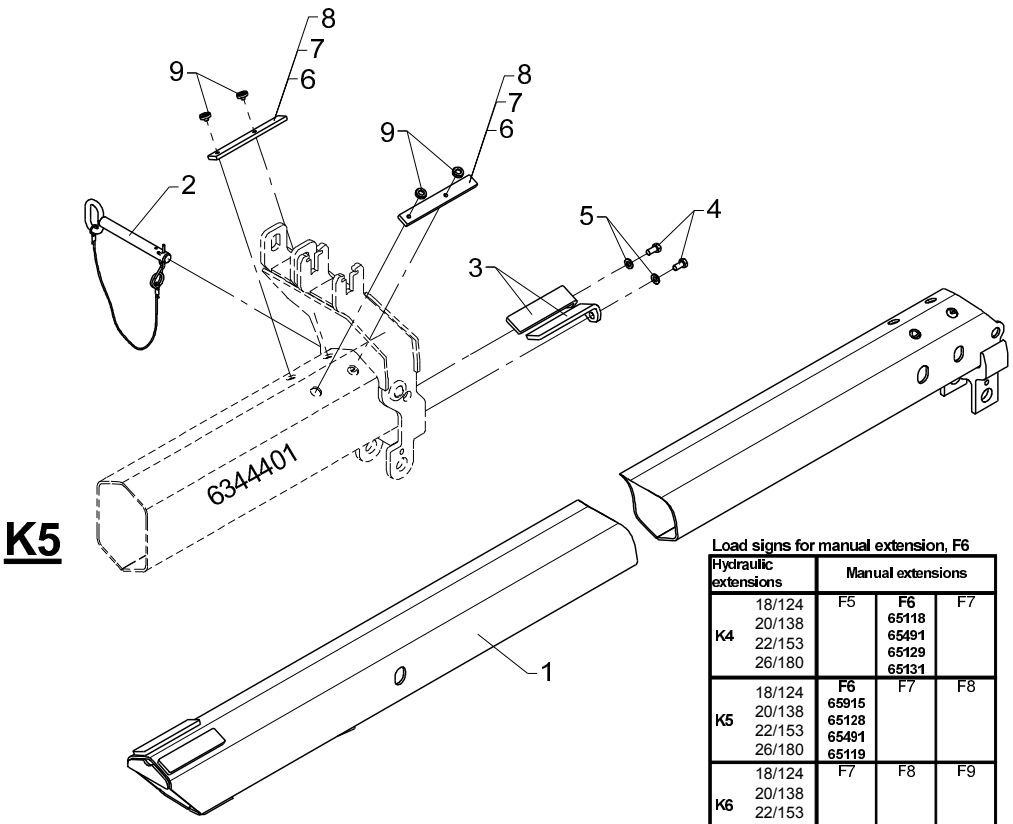

K5

Load signs for manual extension, F6

Hydraulic extensions		Manual extensions		
K4	18/124 20/138 22/153 26/180	F5	**F6** **65118** **65491** **65129** **65131**	F7
K5	18/124 20/138 22/153 26/180	**F6** **65915** **65128** **65491** **65119**	F7	F8
K6	18/124 20/138 22/153 26/180	F7	F8	F9
K7	18/124 20/138 22/153 26/180	F8	F9	
K8	18/124 20/138 22/153 26/180	F9		

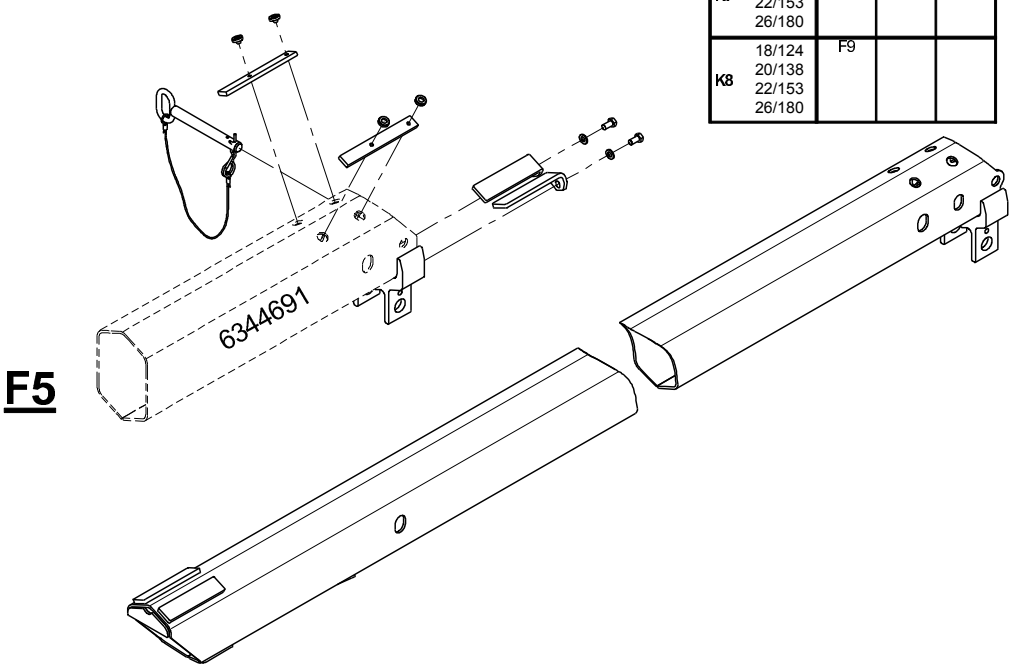

F5

Manual extension, F6

Pos	Qty.	Part no.	Description	Remarks
1	1	6344701	Manual extension, F6	
2	1	6340397	Lock pin with lock spring	
3	2	6340699	Shim	
4	2	30154	Set screw	M10 x 20
5	2	31177	Washer	10 mm
6	2	6243004	Wear plate	6 mm
7	2	6244064	Wear plate	7 mm
8	2	6243014	Wear plate	8 mm
9	4	31864	Allen screw	M8 x 6

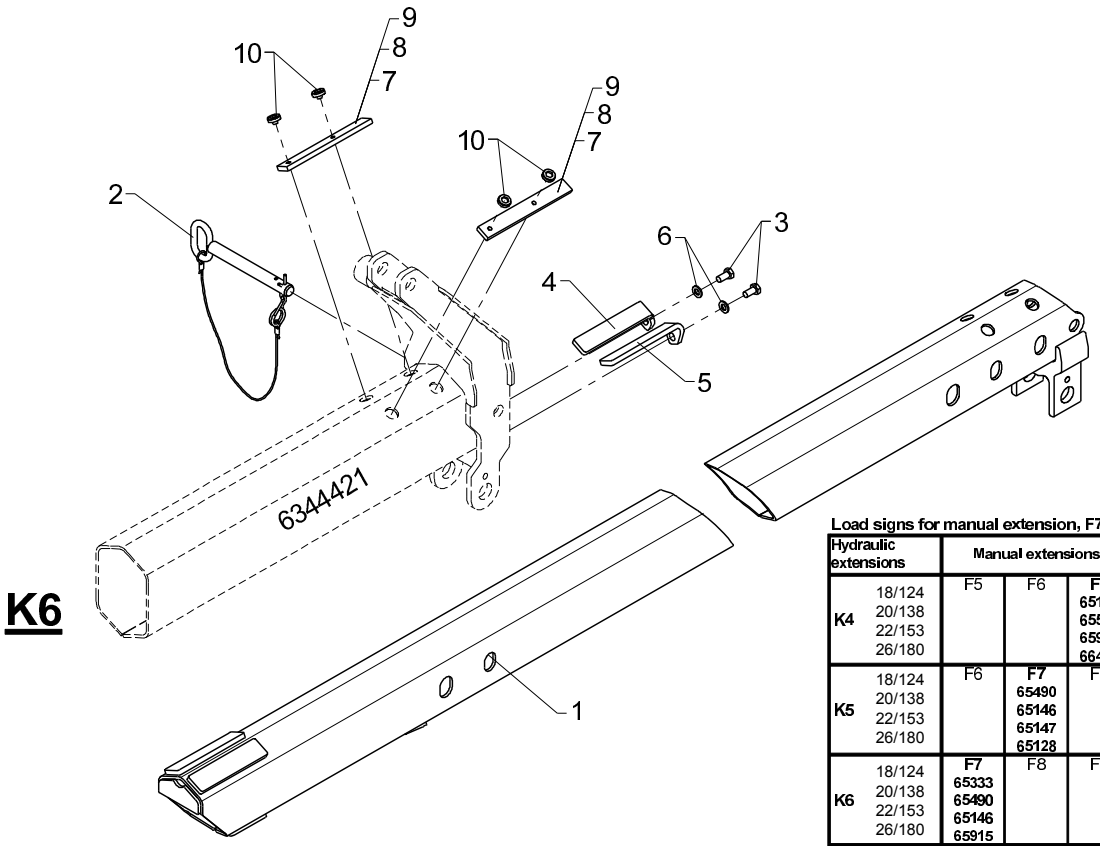

K6

Load signs for manual extension, F7

Hydraulic extensions		Manual extensions		
K4	18/124 20/138 22/153 26/180	F5	F6	**F7** **65117** **65552** **65915** **66460**
K5	18/124 20/138 22/153 26/180	F6	**F7** **65490** **65146** **65147** **65128**	F8
K6	18/124 20/138 22/153 26/180	**F7** **65333** **65490** **65146** **65915**	F8	F9
K7	18/124 20/138 22/153 26/180	F8	F9	
K8	18/124 20/138 22/153 26/180	F9		

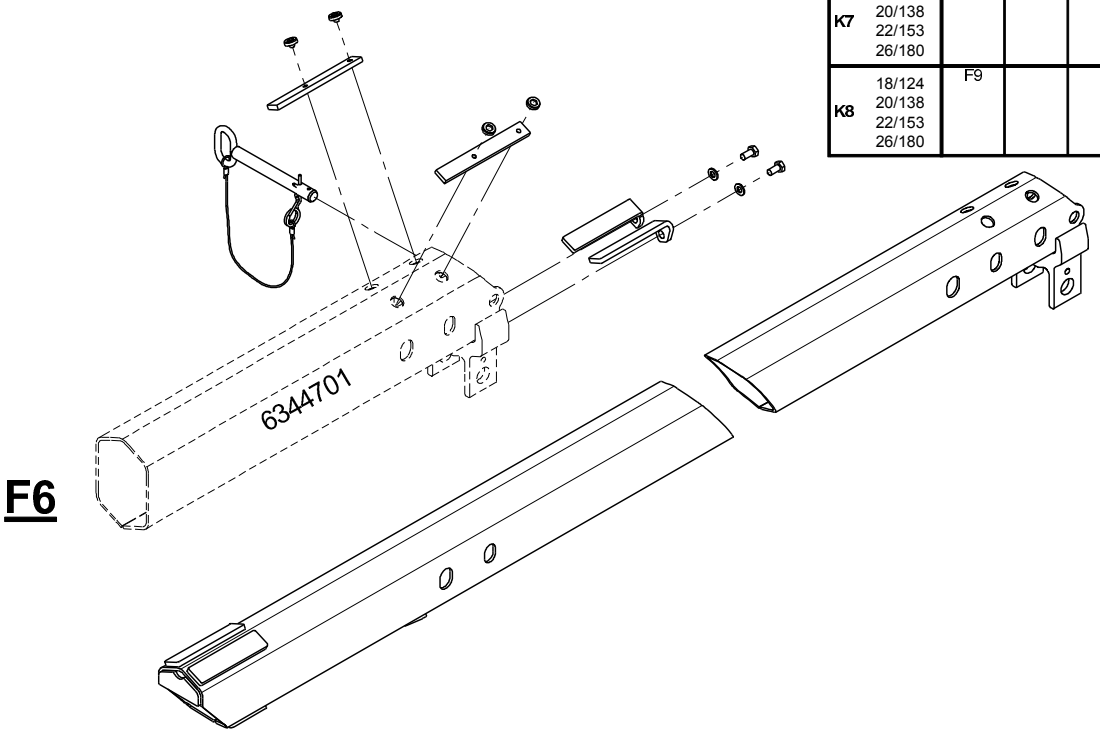

F6

Manual extension, F7

Pos	Qty.	Part no.	Description	Remarks
1	1	6344711	Manual extension, F7	
2	1	6340397	Lock pin with lock spring	
3	2	31517	Set screw, stainless	M10 x 20
4	1	6340709	Shim, left	
5	1	6340708	Shim, right	
6	2	31177	Washer	10 mm
7	2	6243004	Wear plate	6 mm
8	2	6244064	Wear plate	7 mm
9	2	6243014	Wear plate	8 mm
10	4	31864	Allen screw	M8 x 6

18/129, 20/138, 22/153

Internal ref. 63 44 720

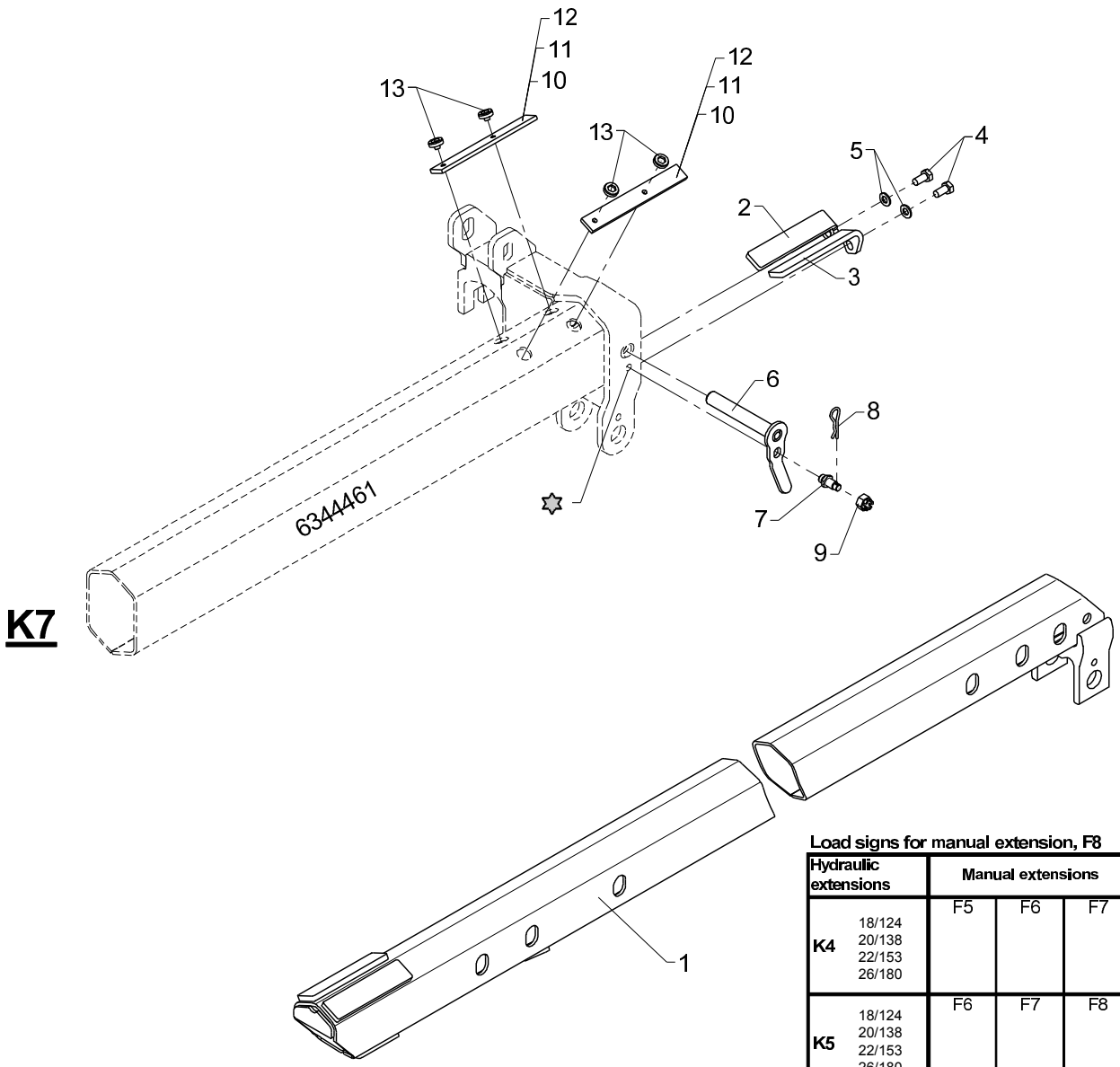

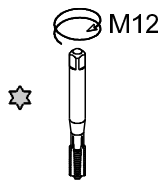

Load signs for manual extension, F8

Hydraulic extensions		Manual extensions		
K4	18/124 20/138 22/153 26/180	F5	F6	F7
K5	18/124 20/138 22/153 26/180	F6	F7	F8
K6	18/124 20/138 22/153 26/180	F7	F8	F9
K7	18/124 20/138 22/153 26/180	**F8** **66461** **65965** **65115** **65563**	F9	
K8	18/124 20/138 22/153 26/180	F9		

Manual extension, F8 (F8 in K7)

Pos	Qty.	Part no.	Description	Remarks
1	1	6344721	Manual extension, F8	
2	1	6340709	Shim, left	
3	1	6340708	Shim, right	
4	2	31517	Set screw, stainless	M10 x 20
5	2	31177	Washer	10 mm
6	1	6344727	Pin	
7	1	6340359	Lock pin	
8	1	33379	Spring	
9	1	32127	Nut	M12
10	2	6243004	Wear plate	6 mm
11	2	6244064	Wear plate	7 mm
12	2	6243014	Wear plate	8 mm
13	4	31864	Allen screw	M8 x 6

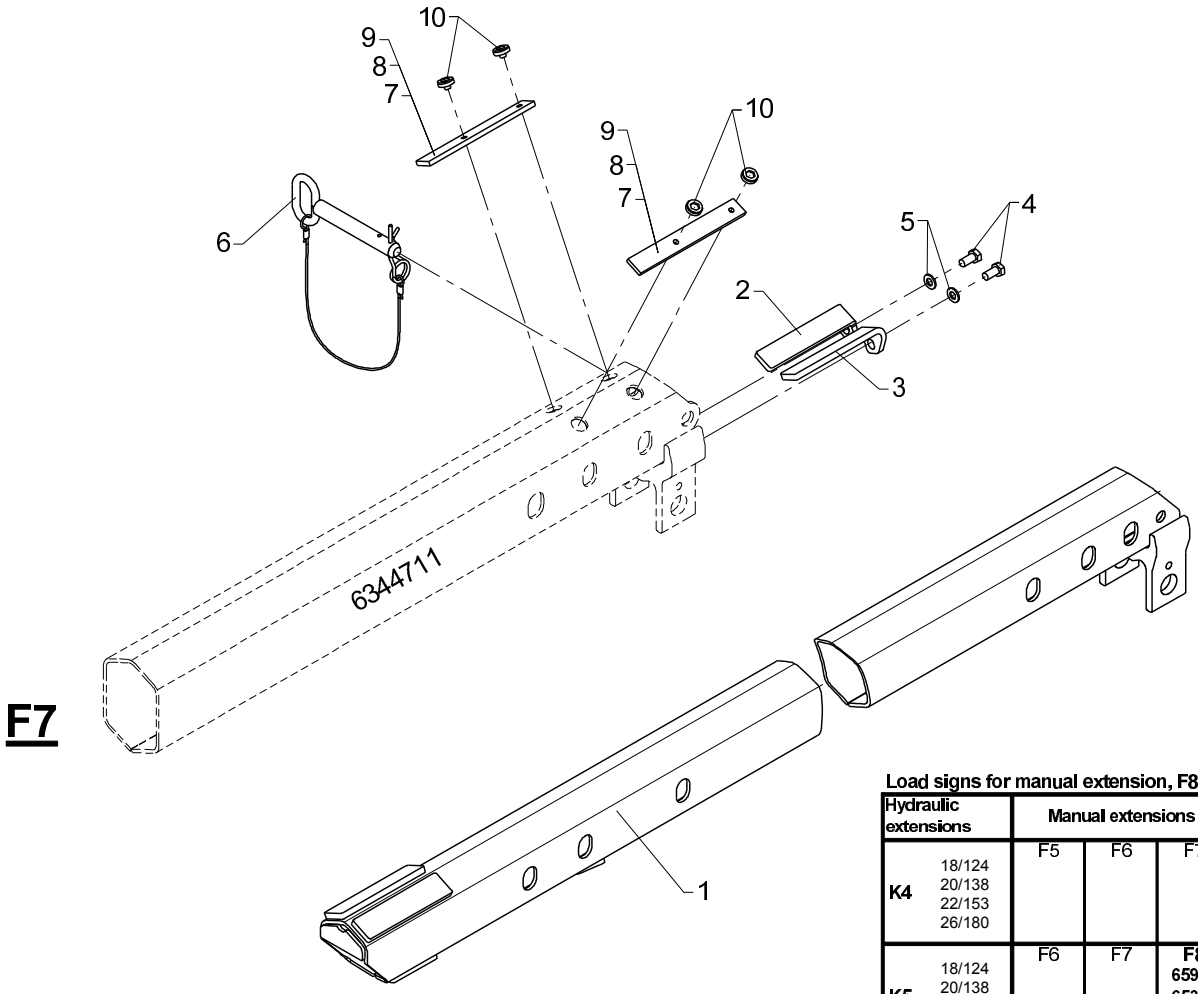

F7

Load signs for manual extension, F8

Hydraulic extensions		Manual extensions		
K4	18/124 20/138 22/153 26/180	F5	F6	F7
K5	18/124 20/138 22/153 26/180	F6	F7	**F8** **65965** **65333** **65115** **65563**
K6	18/124 20/138 22/153 26/180	F7	**F8** **65144** **65115** **65115** **65563**	F9
K7	18/124 20/138 22/153 26/180	F8	F9	
K8	18/124 20/138 22/153 26/180	F9		

Manual extension, F8 (F8 in F7)

Pos	Qty.	Part no.	Description	Remarks
1	1	6344721	Manual extension, F8	
2	1	6340709	Shim, left	
3	1	6340708	Shim, right	
4	2	31517	Set screw, stainless	M10 x 20
5	2	31177	Washer	10 mm
6	1	6301166	Lock pin with split pin	
7	2	6243004	Wear plate	6 mm
8	2	6244064	Wear plate	7 mm
9	2	6243014	Wear plate	8 mm
10	4	31864	Allen screw	M8 x 6

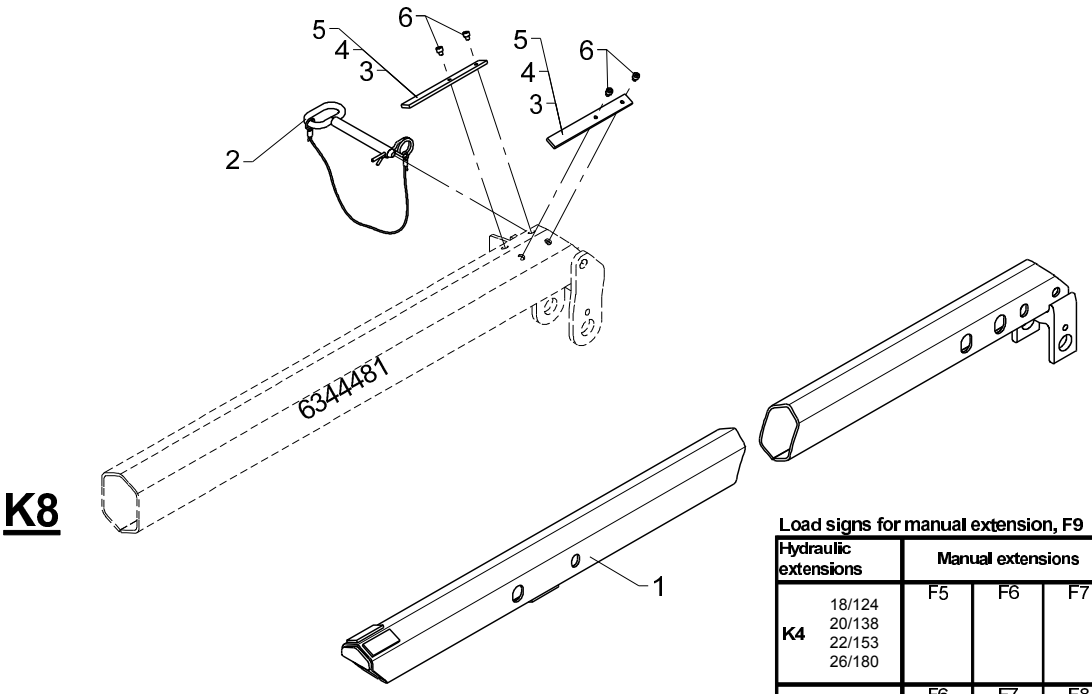

K8

Load signs for manual extension, F9

Hydraulic extensions		Manual extensions		
K4	18/124 20/138 22/153 26/180	F5	F6	F7
K5	18/124 20/138 22/153 26/180	F6	F7	F8
K6	18/124 20/138 22/153 26/180	F7	F8	**F9** **66594** **65559** **66594** **65590**
K7	18/124 20/138 22/153 26/180	F8	**F9** **66594** **65590** **66594** **65590**	
K8	18/124 20/138 22/153 26/180	**F9** **66594** **65590** **66594** **65590**		

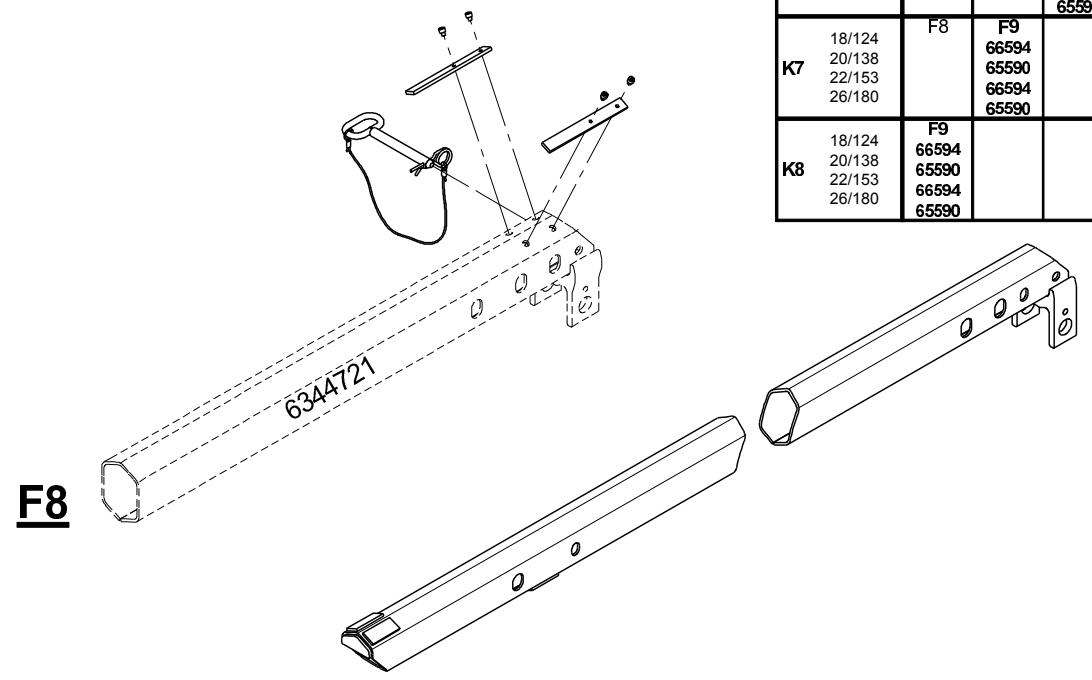

F8

Manual extension, F9

Pos	Qty.	Part no.	Description	Remarks
1	1	6344731	Manual extension, F9	
2	1	6135434	Lock pin	
3	2	6233814	Wear plate	
4	2	6233794	Wear plate	
5	2	6233804	Wear plate	
6	4	30956	Screw	MC6 x 6

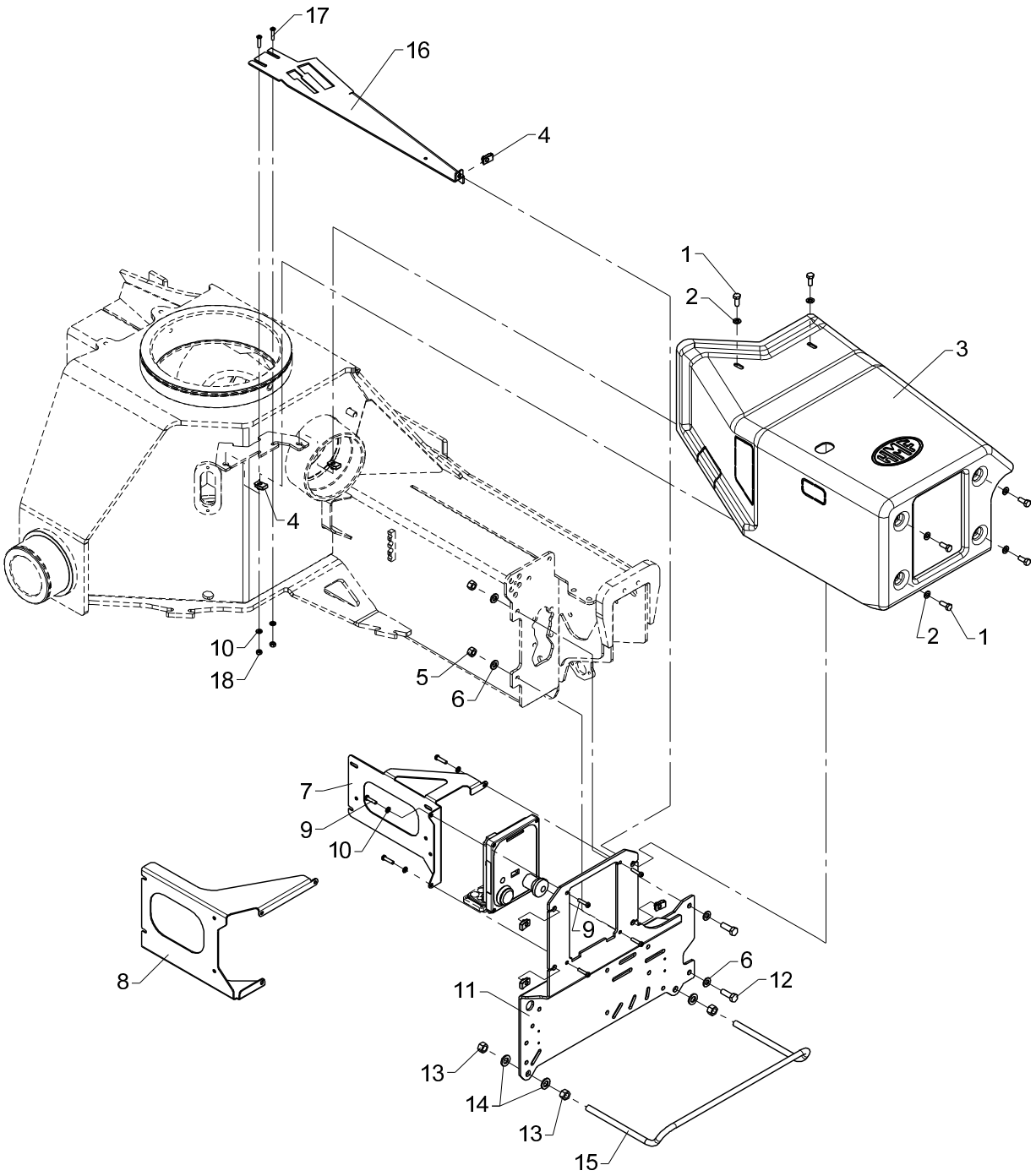
17
16
4
1
2
3
4
2
1
10
18
5
6
7
9
10
9
8
6
12
11
13
14
13
15

Valve brackets - RC

Pos	Qty.	Part no.	Description	Remarks
		6340950	Valve brackets	
		6340940	Valve brackets	
1	6	30132	Set screw, stainless	
2	6	31147	Face washer, 8 mm	
3	1	64407	Shield	
4	6	31069	Clip	M8 1,5 - 5,5 mm.
5	2	31564	Lock nut, stainless	M10
6	4	31565	Washer, stainless	10 mm
7	1	6340242	Mounting fittings	
8	1	6340243	Mounitng bracket	
9	7	30340	Screw, stainless	6,0 x 25
10	5	32302	Face washer, stainless	6 mm
11	1	6340241	Valve bracket	
12	2	30156	Set screw, stainless	M10 x 30
13	4	30860	Nut, stainless	M12
14	4	32338	Washer	12 mm
15	1	6239973	Clamp	
16	1	6340946	Reinforcement	
17	2	32509	Screw, 6 x 25	MC6 x 25
18	2	30854	Nut, stainless	M6

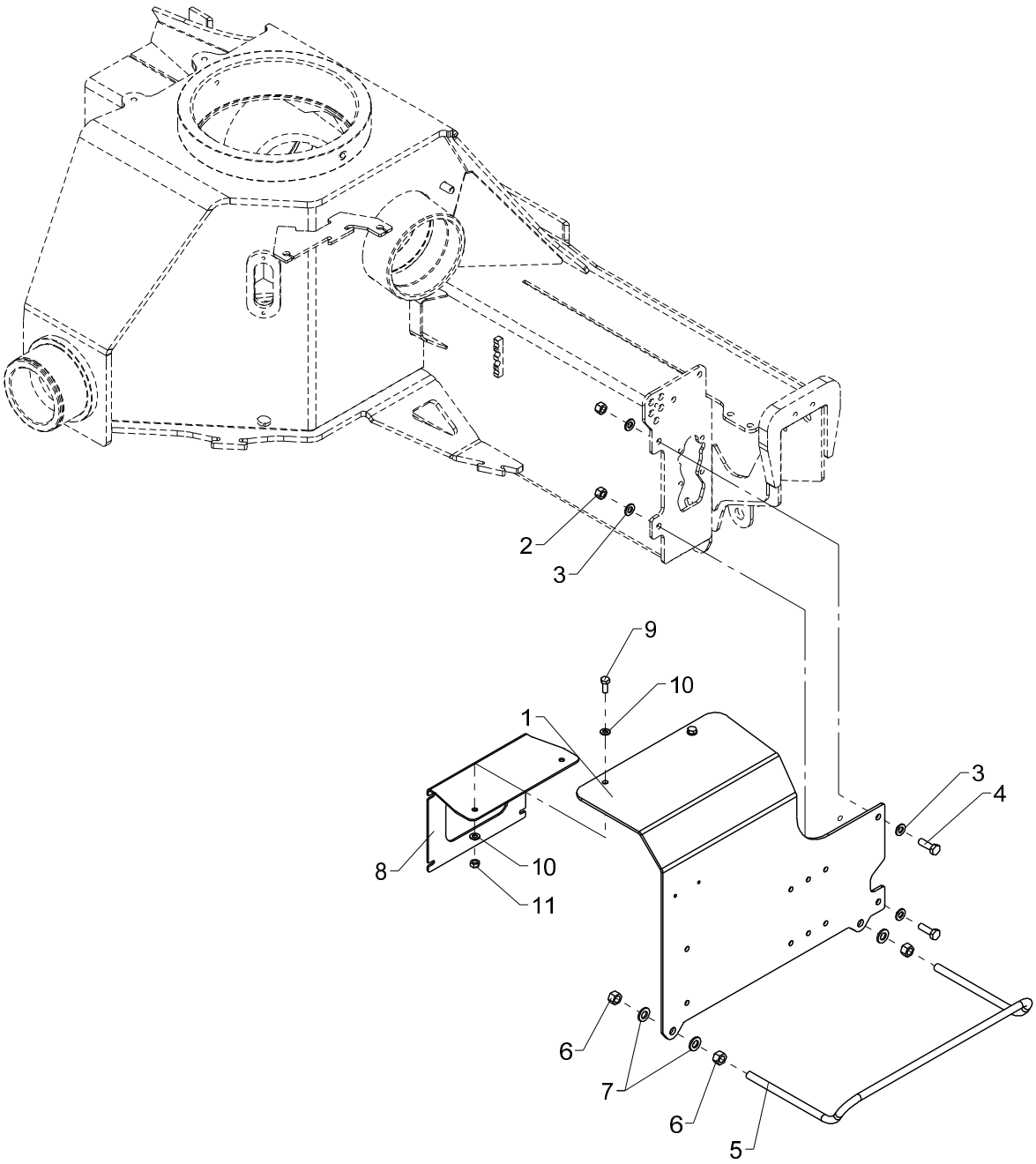
2
3
9
10
1
3
4
8
10
11
6
7
6
5

Valve brackets (excl. CE)

Pos	Qty.	Part no.	Description	Remarks
		6341920	Valve brackets, std.(no CE)	Pos.1 - 7
		6341780	Valve brackets, RC (no CE)	Pos.1 - 11
1	1	6340275	Valve bracket (excl. CE)	
2	2	31564	Lock nut, stainless	M10
3	4	31565	Washer, stainless	10 mm
4	2	30156	Set screw, stainless	M10 x 30
5	1	6239973	Clamp	
6	4	30860	Nut, stainless	M12
7	4	32338	Washer	12 mm
8	1	6340277	Mounting fittings	
9	2	30132	Set screw, stainless	M8 x 20
10	4	31147	Face washer, 8 mm	8 mm
11	2	30856	Nut, stainless	M8

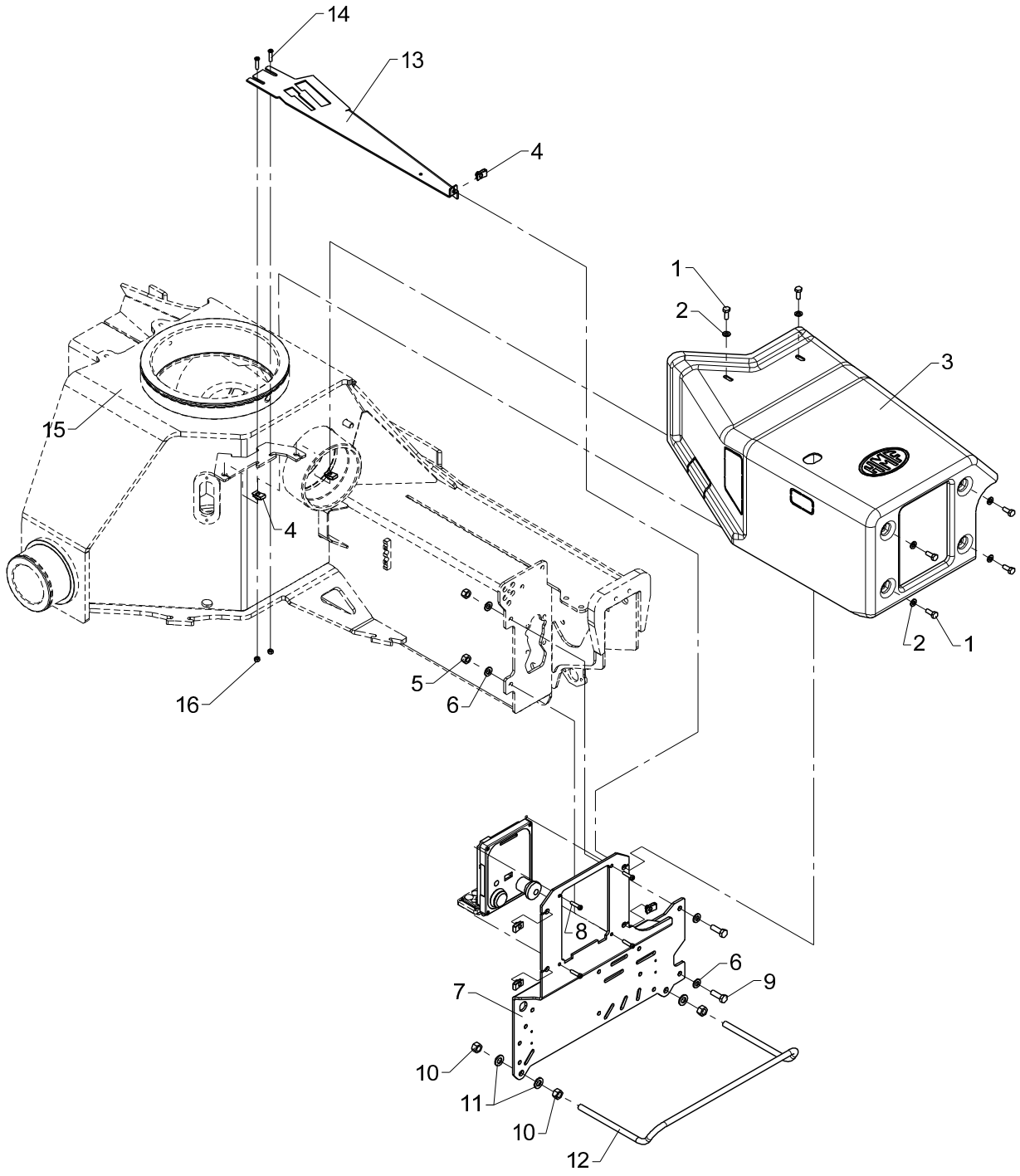
14
13
4
1
2
3
15
4
2
1
16
5
6
8
6
9
7
10
11
10
12

Valve brackets (with CE)

Pos	Qty.	Part no.	Description	Remarks
1	6	30132	Set screw, stainless	
2	6	31147	Face washer, 8 mm	
3	1	64407	Shield	
4	6	31069	Clip	M8 1,5 - 5,5 mm.
5	2	31564	Lock nut, stainless	M10
6	4	31565	Washer, stainless	10 mm
7	1	6340241	Valve bracket	
8	4	30340	Screw, stainless	6,0 x 25
9	2	30156	Set screw, stainless	M10 x 30
10	4	30860	Nut, stainless	M12
11	4	32338	Washer	12 mm
12	1	6239973	Clamp	
13	1	6340946	Reinforcement	
14	2	32509	Screw, 6 x 25	MC6 x 25
15	2	32302	Face washer, stainless	6 mm
16	2	30854	Nut, stainless	M6

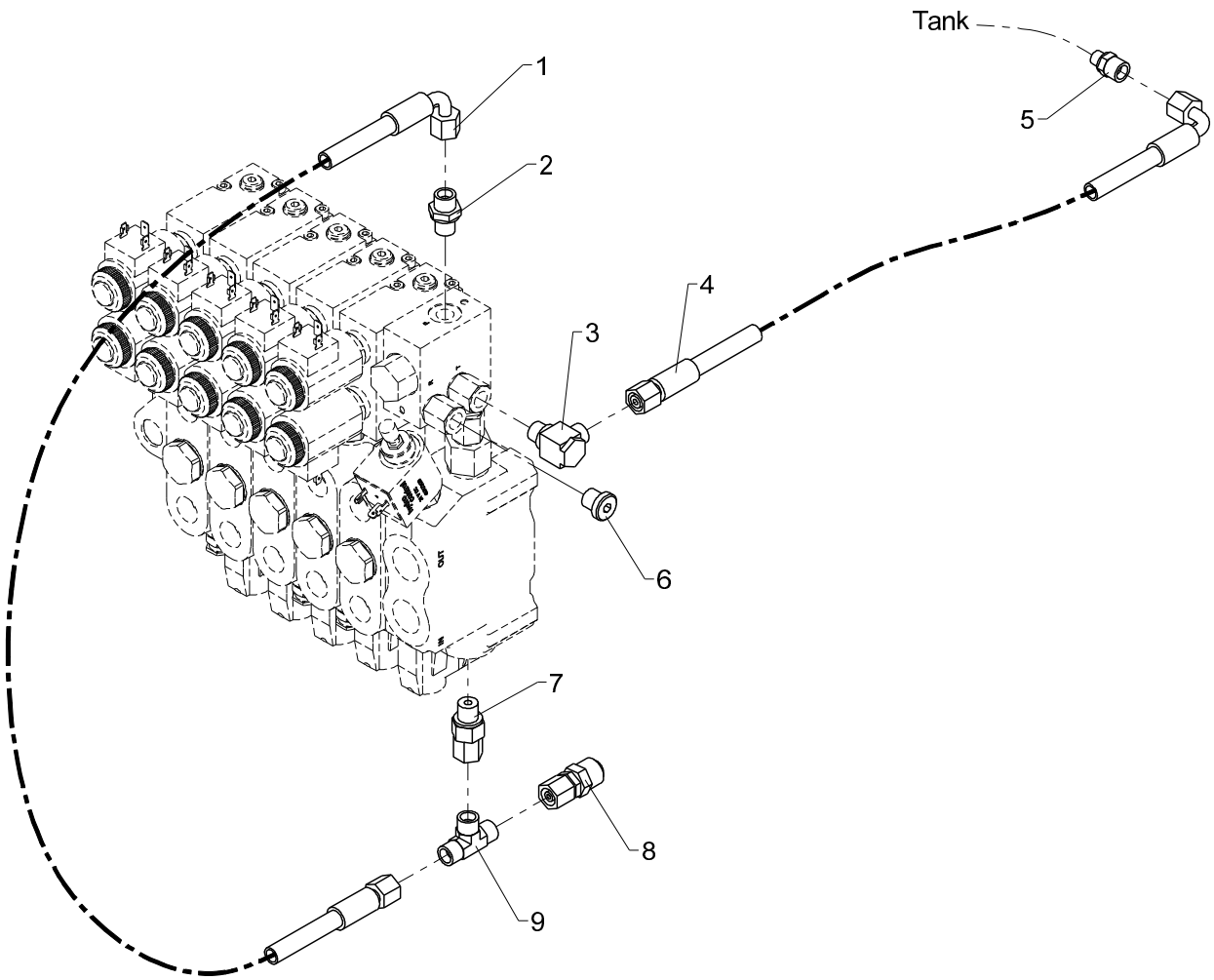
Tank
1
2
3
4
5
6
7
8
9

NEM-RC kit

Pos	Qty.	Part no.	Description	Remarks
1	1	62526	Hose	1/4 X 550 M14 X 1.5 L/90
2	1	25109	Connection	GES 8 LR-WD
3	1	25113	Banjo connection	RSWV 8 LR
4	1	62540	Hose	1/4 X 2150 M14X1.5 L/90
5	1	25584	Connection	GES 8 LR 1-8 - 25584
6	1	25197	Plug	VS-R-1/4 WD
7	1	26104	Connection	EGESD 8 LR-WD
8	1	26148	Connection	
9	1	25114	T-connection	TV 8 L

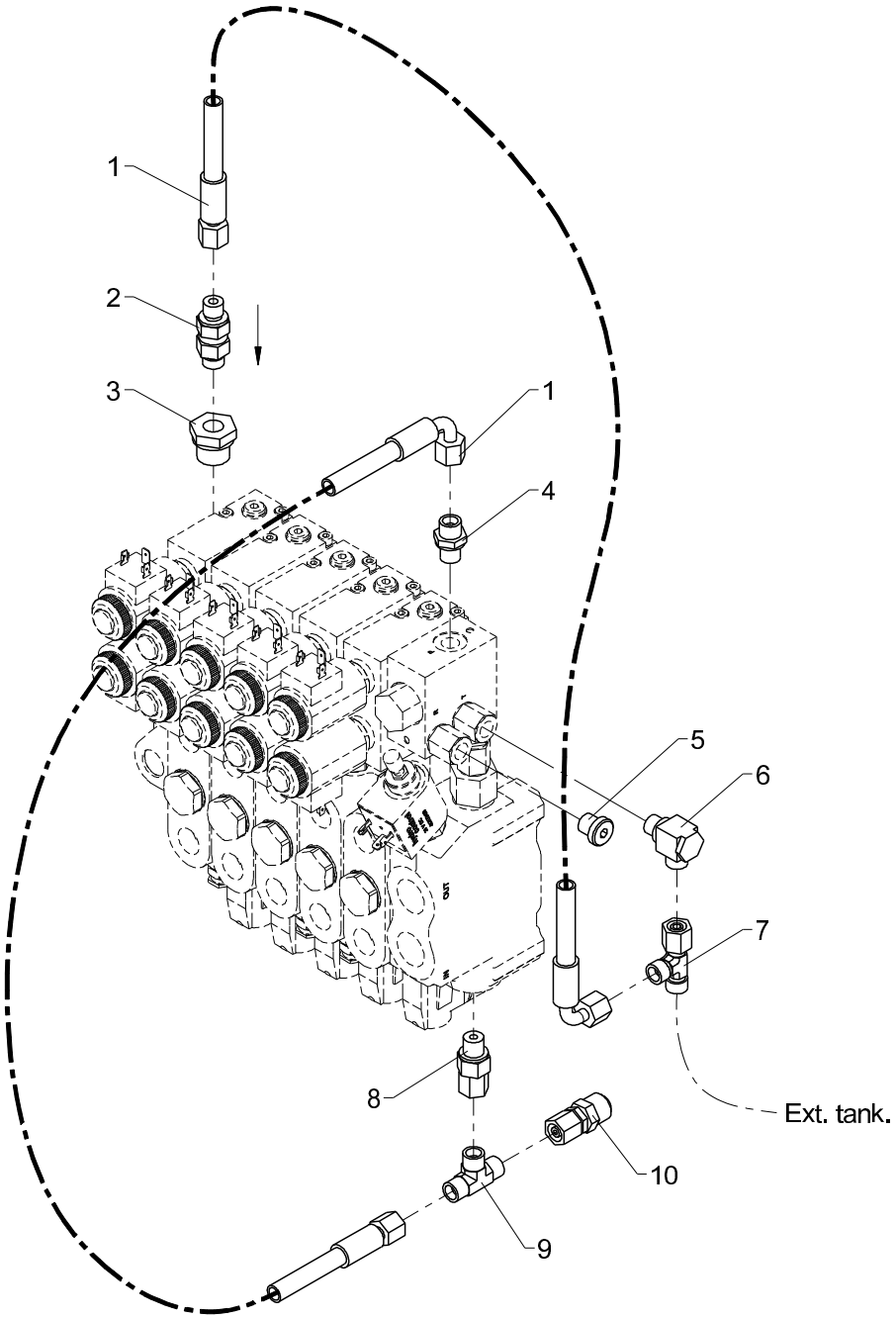
1
2
3
1
4
5
6
7
8
Ext. tank.
10
9

NEM-RC kit (for external tank)

Pos	Qty.	Part no.	Description	Remarks
1	2	62526	Hose	1/4 X 550 M14 X 1.5 L/90
2	1	60425	Check valve	RVZ 8 LR-WD
3	1	25180	Reducing connection	RED-R 1/2-WD/R 1/4
4	1	25109	Connection	GES 8 LR-WD
5	1	25197	Plug	VS-R-1/4 WD
6	1	25113	Banjo connection	RSWV 8 LR
7	1	25249	Connection	ELSD 8 L
8	1	26104	Connection	EGESD 8 LR-WD
9	1	25114	T-connection	TV 8 L
10	1	26148	Connection	

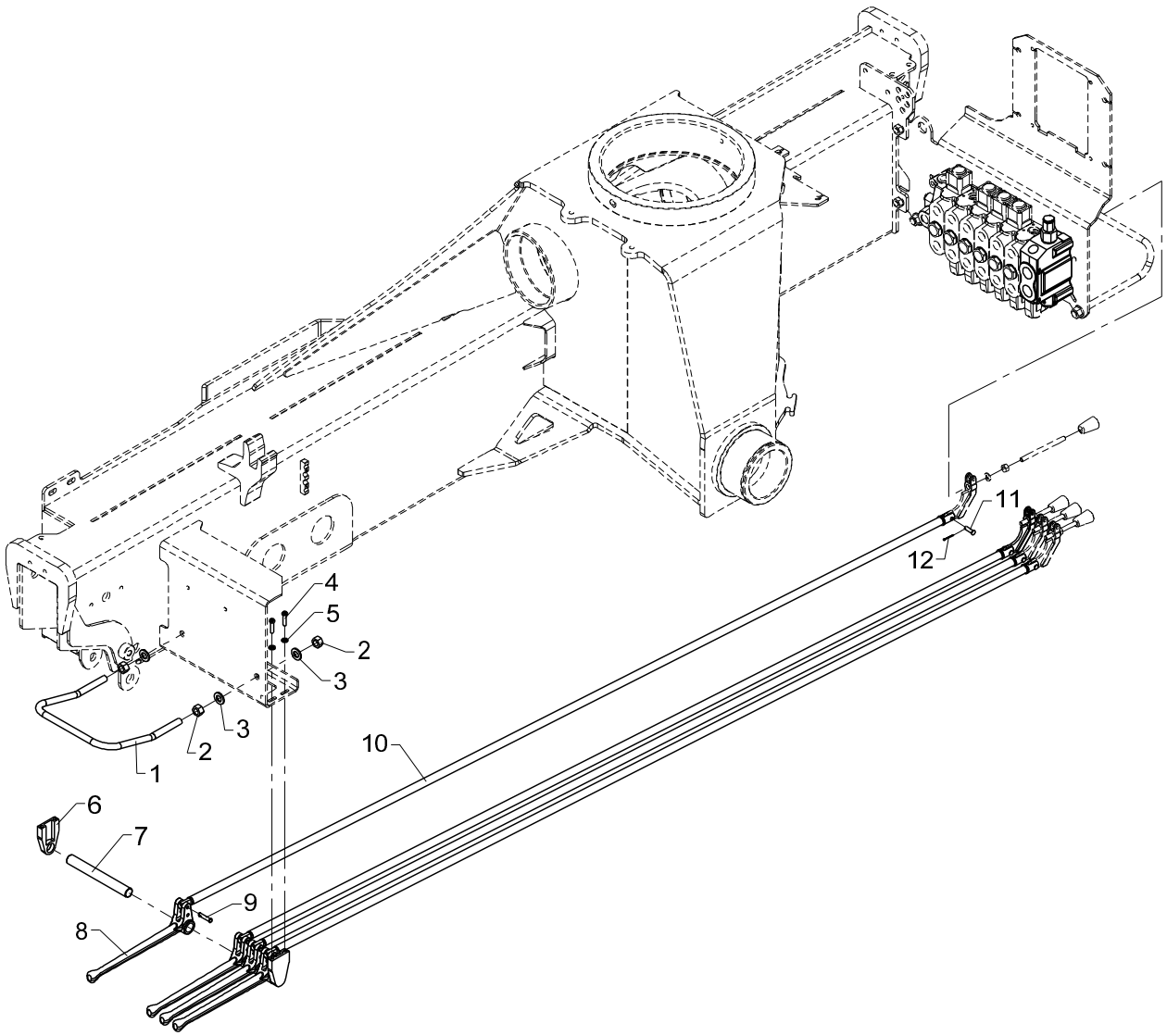
4
5
2
3
3
2
1
10
11
12
6
7
9
8

Dual control, 4 functions

Pos	Qty.	Part no.	Description	Remarks
1	1	6340247	Safety guard	
2	4	30860	Nut, stainless	M12
3	4	32338	Washer	12 mm
4	4	30340	Screw, stainless	6,0 x 25
5	4	32302	Face washer, stainless	6 mm
6	2	63564	Bracket for pin	
7	1	6340248	Pin	
8	4	63443	Lever for dual controls	
9	4	63468	Split pin with spring lock	
10	4	6340246	Connecting rod	
11	4	31271	Cotter bolt	ø6 x 21
12	4	31601	Split pin, stainless	ø1,6 x 20

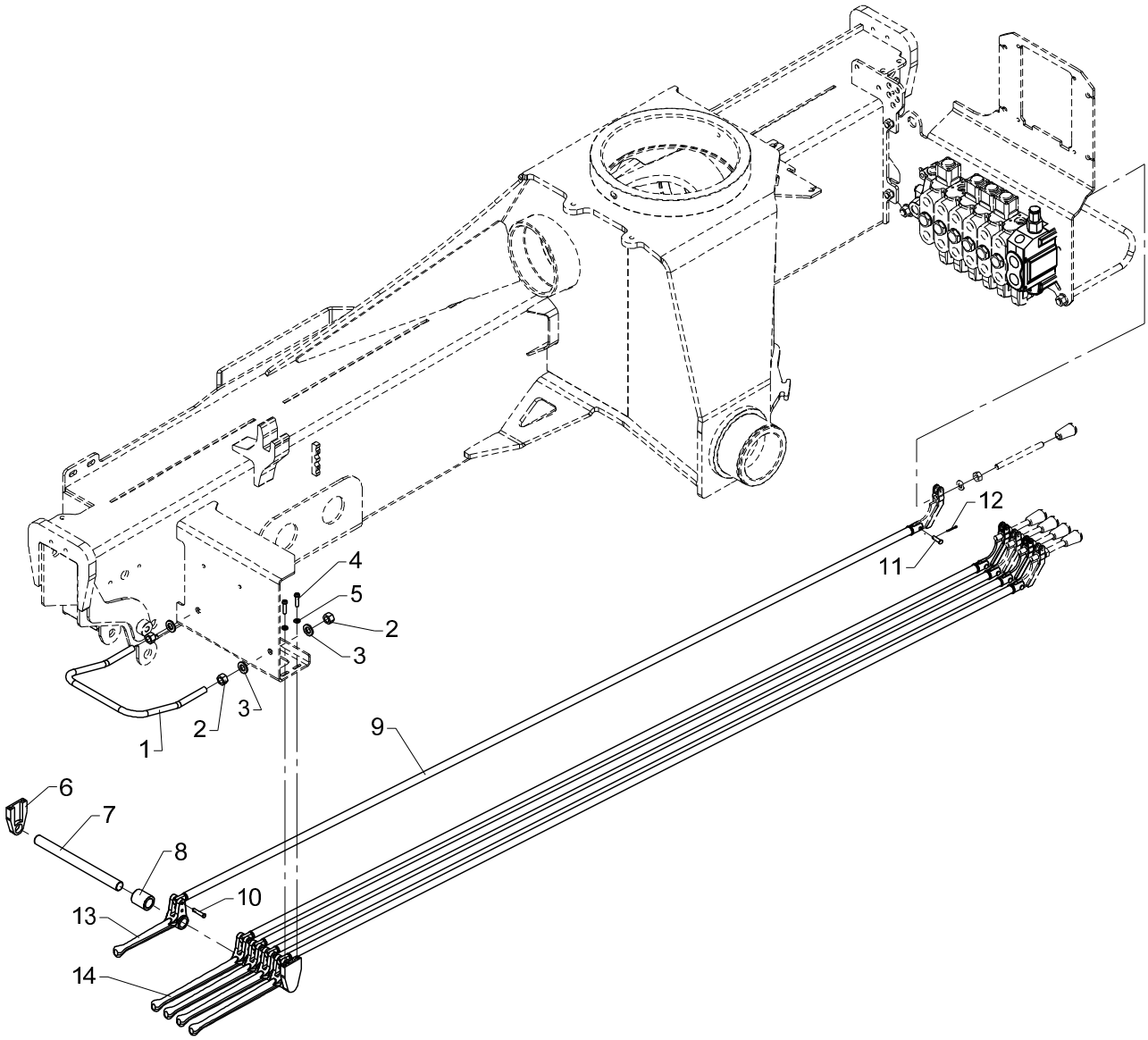
1
2
3
4
5
2
3
6
7
8
9
10
11
12
13
14

Dual control, 5 functions

Pos	Qty.	Part no.	Description	Remarks
1	1	6340247	Safety guard	
2	4	30860	Nut, stainless	M12
3	4	32338	Washer	12 mm
4	4	30340	Screw, stainless	6,0 x 25
5	4	32302	Face washer, stainless	6 mm
6	2	63564	Bracket for pin	
7	1	6340249	Pin	
8	1	63598	Bushing	
9	5	6340246	Connecting rod	
10	5	63468	Split pin with spring lock	
11	5	31271	Cotter bolt	ø6 x 21
12	5	31601	Split pin, stainless	ø1,6 x 20
13	1	63444	Lever for dual controls	
14	4	63443	Lever for dual controls	

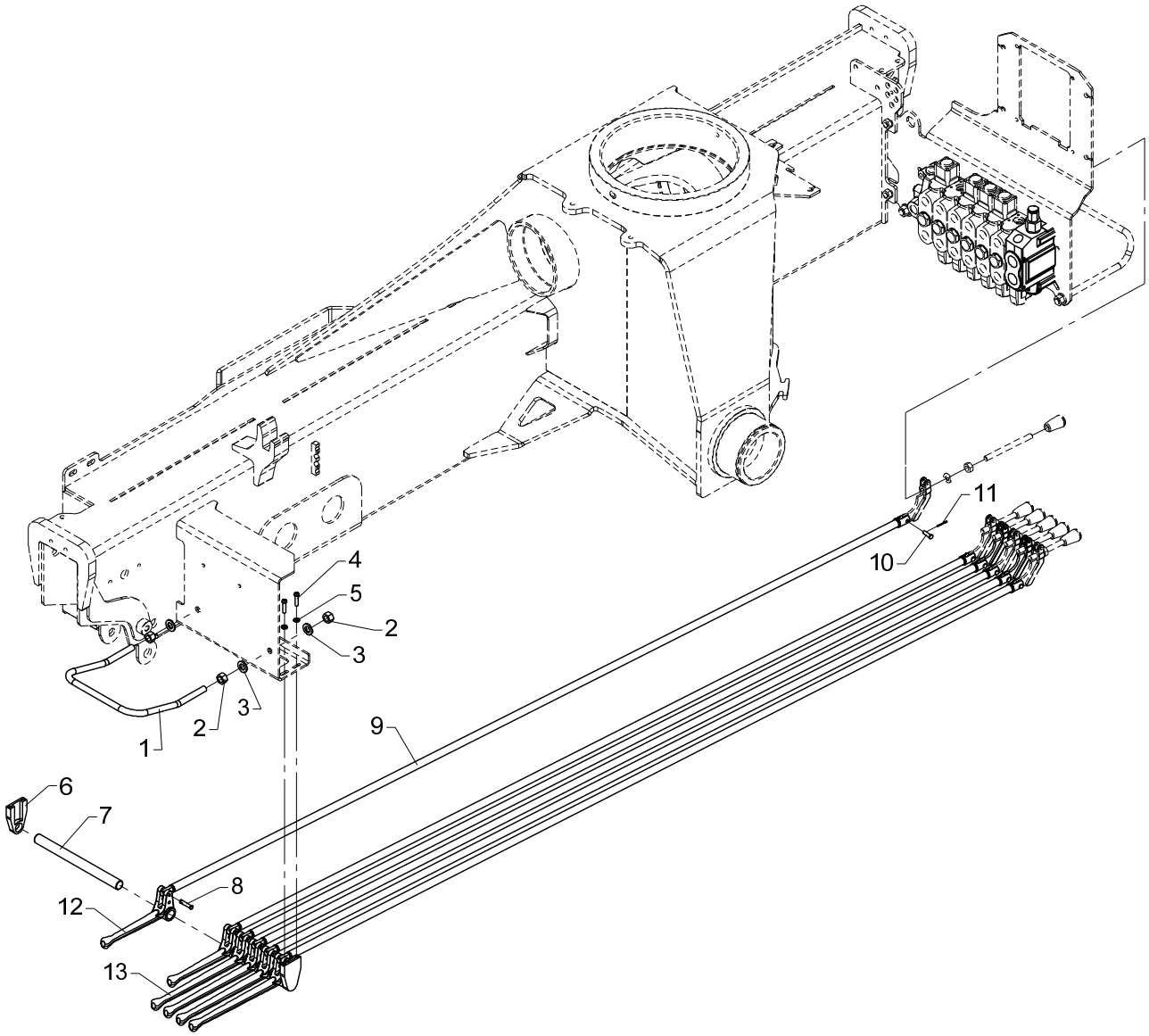
4
5
2
3
1
2
3
9
11
10
6
7
8
12
13

Dual control, 6 functions

Pos	Qty.	Part no.	Description	Remarks
1	1	6340247	Safety guard	
2	4	30860	Nut, stainless	M12
3	4	32338	Washer	12 mm
4	4	30340	Screw, stainless	6,0 x 25
5	4	32302	Face washer, stainless	6 mm
6	2	63564	Bracket for pin	
7	1	6340249	Pin	
8	6	63468	Split pin with spring lock	
9	6	6340246	Connecting rod	
10	6	31271	Cotter bolt	ø6 x 21
11	6	31601	Split pin, stainless	ø1,6 x 20
12	2	63444	Lever for dual controls	
13	4	63443	Lever for dual controls	

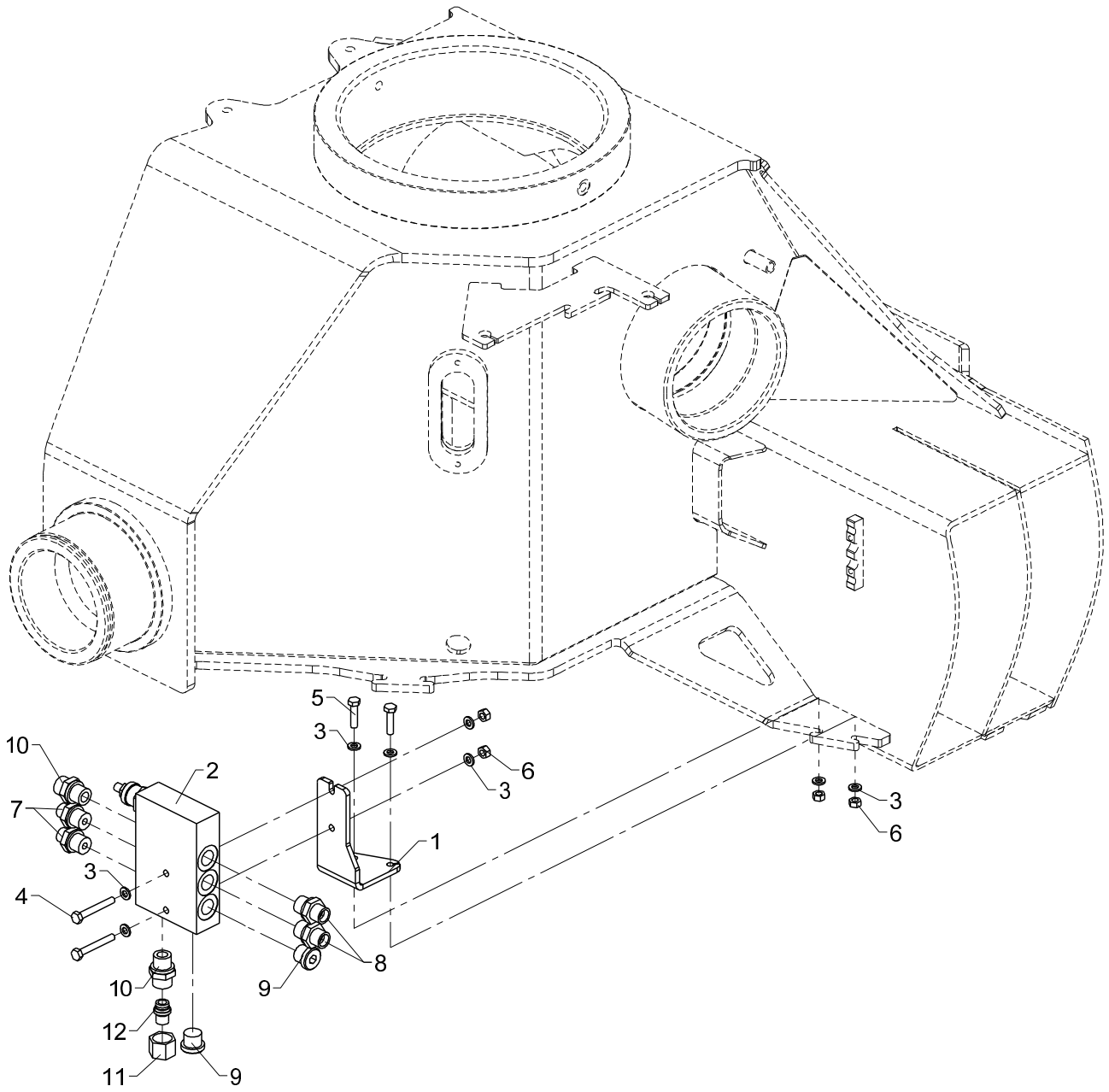
5
3
6
3
10
2
7
1
3
3
6
4
8
10
9
12
11
9

Counter-balance valve

Created 20-11-2008
Modified 05-05-2014

Pos	Qty.	Part no.	Description	Remarks
1	1	6340273	Bracket (counter-balance valve	
2	1	50521	Sequence valve	
3	8	32302	Face washer, stainless	6 mm
4	2	30118	Steel pin, stainless	M6 x 45
5	2	30114	Set screw, stainless	M6 x 25
6	4	30854	Nut, stainless	M6
7	2	25244	Connection	GES 8 LR 3/8-WD
8	2	25253	Connection	P-GEV 10 LR 3/8-WD
9	2	25277	Plug	VS-R-3/8 WD
10	2	25127	Connection	P-GEV 12 LR-WD
11	1	25183	Coupling nut	M 12 L
12	1	26180	Blanking plug	VSD 12 L

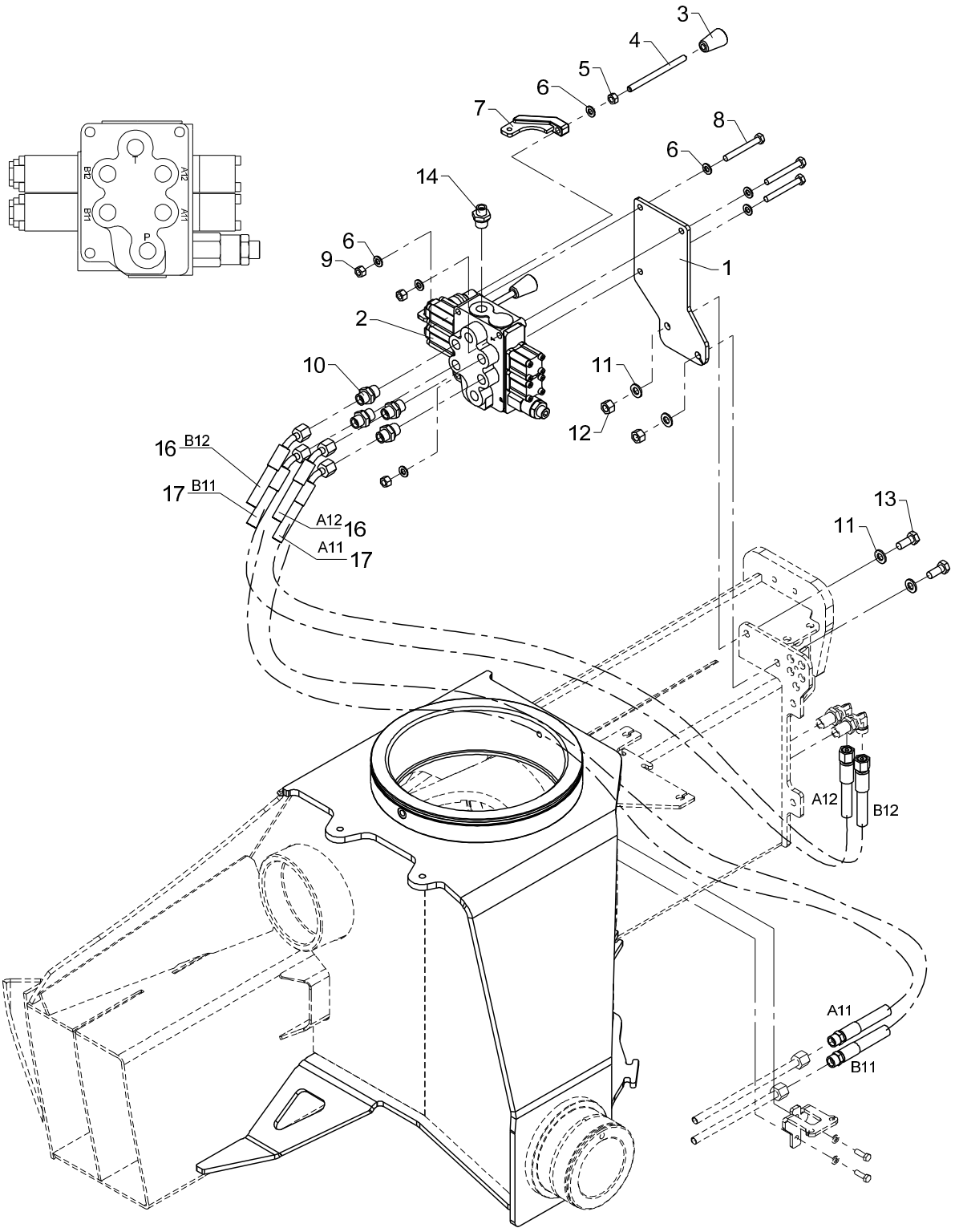
3
4
5
6
7
8
6
14
6
9
1
2
10
11
12
16 B12
17 B11
A12 16
A11 17
13
11
A12
B12
A11
B11
T
B12
A12
B11
A11
P

535 05 200

From loader 1070001
To loader

Created 20-11-2008
Modified 05-05-2014

Valve bracket, cpl. 2 fcts.

Pos	Qty.	Part no.	Description	Remarks
		6341210	Valve bracket, compl. 2 functs	
		6341600	Hose kit, 2 functions	
1	1	6340254	Valve bracket (2 functions)	
2	1	55225	Stabilizer valve	
3	2	59224	Knob for lever	
4	2	1330187	Control lever, long, straight	
5	2	30856	Nut, stainless	M8
6	8	31147	Face washer, 8 mm	8 mm
7	2	63450	Adapter for dual controls	
8	3	30259	Steel bolt, stainless	M8 x 65
9	3	30886	Lock nut, stainless	M8
10	4	25253	Connection	P-GEV 10 LR 3/8-WD
11	4	31565	Washer, stainless	10 mm
12	2	31564	Lock nut, stainless	M10
13	2	31513	Set screw, stainless	M10 x 25
14	1	25244	Connection	GES 8 LR 3/8-WD
15	1	6341600	Hose kit, 2 functions	
16	2	56393	Hose	5/16"x950mm L/V 10Let / vinkel 45
17	2	56394	Hose	5/16"x600mm S/V 10L studs / vink

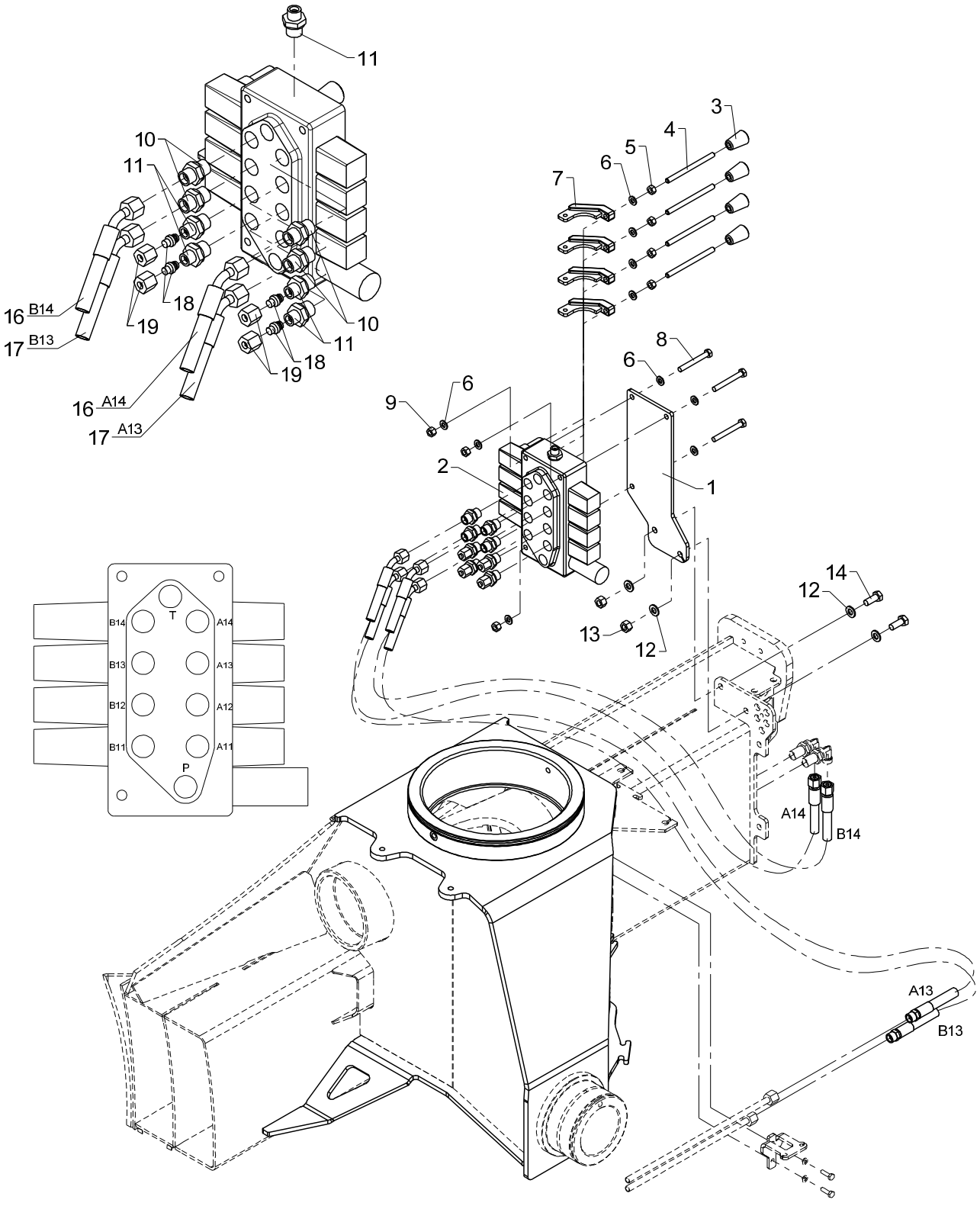
11
10
11
16 B14
17 B13
19
18
10
11
18
19
16 A14
17 A13
3
4
5
6
7
8
6
9
6
2
1
14
12
13
12
T
B14
A14
B13
A13
B12
A12
B11
A11
P
A14
B14
A13
B13

Valve bracket, cpl., 2 fcts. + 2 available fcts.

Pos	Qty.	Part no.	Description	Remarks
		6341060	Valve br., cpl.2fcts.+2 avail.	
		6341600	Hose kit, 2 functions	
1	1	6340255	Valve bracket (4 functions)	
2	1	55226	Stabilizer valve	
3	4	59224	Knob for lever	
4	4	1330187	Control lever, long, straight	
5	4	30856	Nut, stainless	M8
6	10	31147	Face washer, 8 mm	8 mm
7	4	63450	Adapter for dual controls	
8	3	30259	Steel bolt, stainless	M8 x 65
9	3	30886	Lock nut, stainless	M8
10	4	25253	Connection	P-GEV 10 LR 3/8-WD
11	5	25244	Connection	GES 8 LR 3/8-WD
12	4	31565	Washer, stainless	10 mm
13	2	31564	Lock nut, stainless	M10
14	2	31513	Set screw, stainless	M10 x 25
15	1	6341600	Hose kit, 2 functions	
16	2	56393	Hose	5/16"x950mm L/V
17	2	56394	Hose	5/16"x600mm S/V
18	4	26166	Blanking plug	VSD 8 L
19	4	25181	Coupling nut	M 8 L

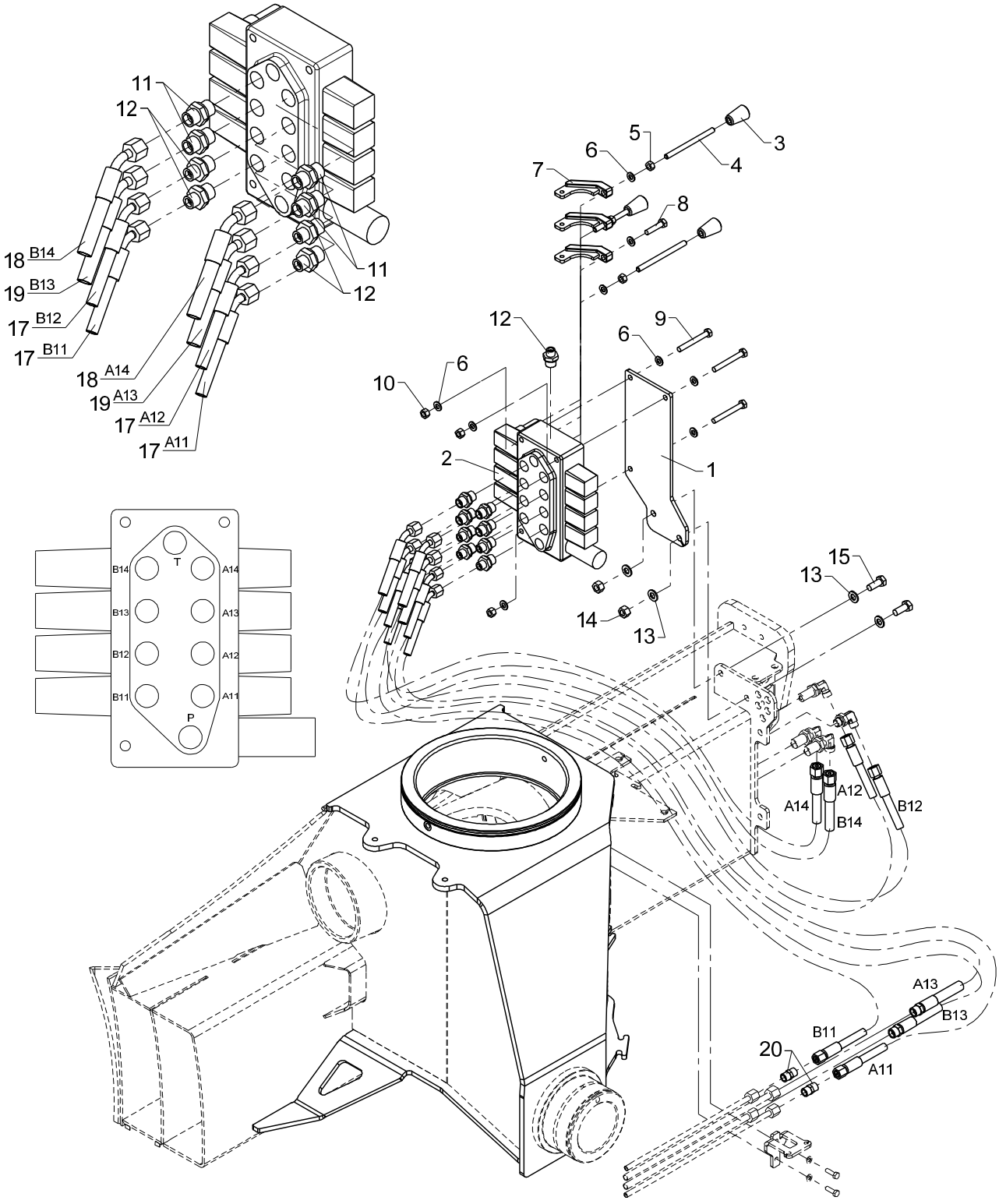
11
12
18 B14
19 B13
17 B12
17 B11
18 A14
19 A13
17 A12
17 A11
11
12
5
6
3
4
7
8
12
6
9
10
6
2
1
15
13
14
13
T
B14
A14
B13
A13
B12
A12
B11
A11
P
A14
A12
B14
B12
A13
B13
B11
20
A11

Valve bracket, cpl. 4 fcts.

Pos	Qty.	Part no.	Description	Remarks
		6341220	Valve bracket, cpl., 4 funct.	
		6341610	Hose kit, 4 functions	
1	1	6340255	Valve bracket (4 functions)	
2	1	55226	Stabilizer valve	
3	3	59224	Knob for lever	
4	3	1330187	Control lever, long, straight	
5	3	30856	Nut, stainless	M8
6	10	31147	Face washer, 8 mm	8 mm
7	3	63450	Adapter for dual controls	
8	1	30136	Steel bolt, stainless	M8 x 35
9	3	30259	Steel bolt, stainless	M8 x 65
10	3	30886	Lock nut, stainless	M8
11	4	25253	Connection	P-GEV 10 LR 3/8-WD
12	5	25244	Connection	GES 8 LR 3/8-WD
13	4	31565	Washer, stainless	10 mm
14	2	31564	Lock nut, stainless	M10
15	2	31513	Set screw, stainless	M10 x 25
16	1	6341610	Hose kit, 4 functions	
17	4	56381	Hose	1/4"x600mm L/V 8Let / vinkel 45 gr
18	2	56393	Hose	5/16"x950mm L/V 10Let / vinkel 45
19	2	56394	Hose	5/16"x600mm S/V 10L studs / vink
20	2	25246	Double connection	GS 8 L

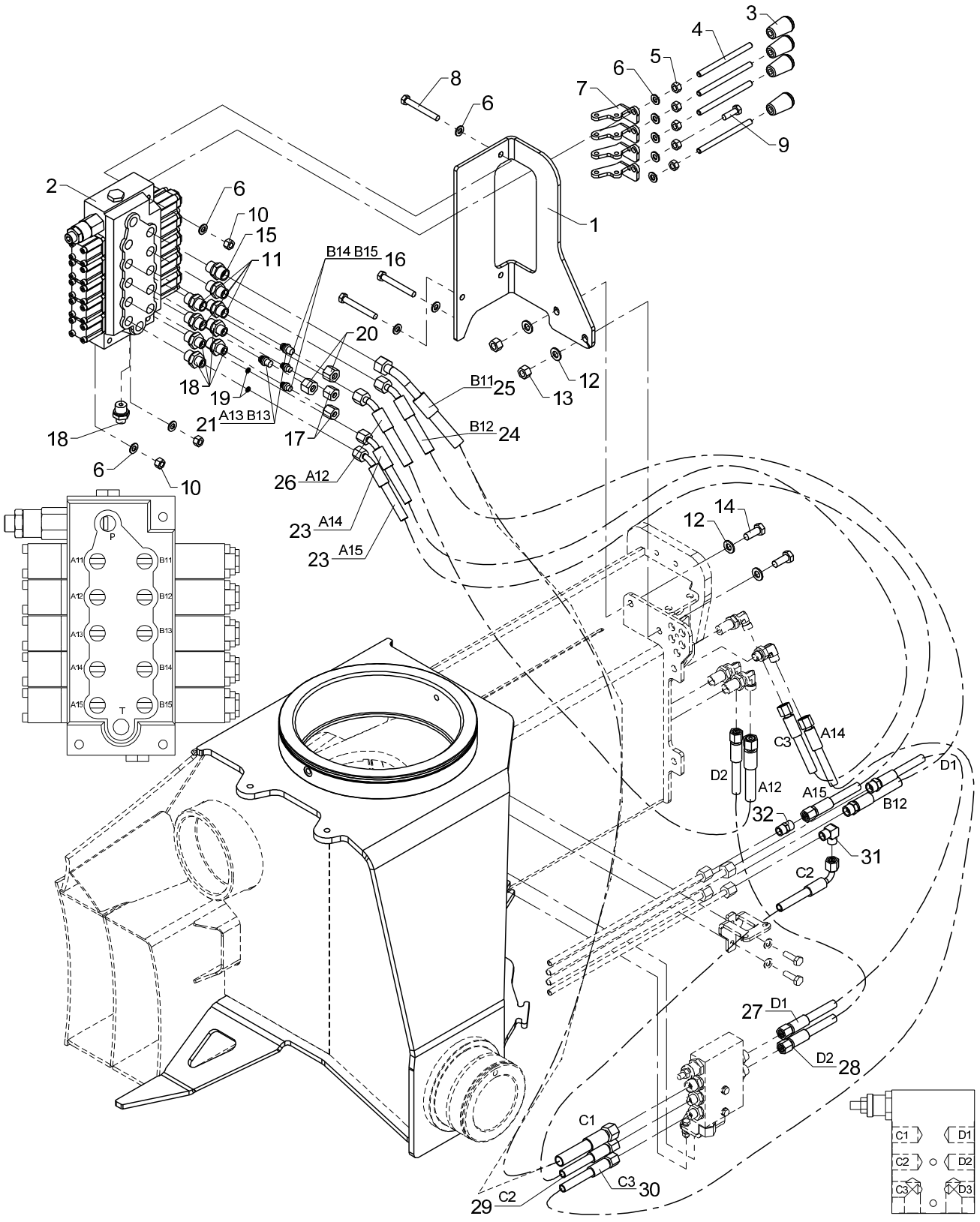
3
4
5
6
7
8
6
9
2
6
10
15
11
B14 B15
16
1
20
18
19
A13 B13
21
17
B11
25
12
13
B12
24
18
6
10
26
A12
23
A14
23
A15
P
A11
B11
A12
B12
A13
B13
A14
B14
A15
B15
T
12
14
C3
A14
D2
A12
A15
D1
B12
32
31
C2
27
D1
D2
28
C1
C3
30
29
C2
C1
D1
C2
D2
C3
D3

Valve bracket, cpl. 4 fcts. + 4 available

Pos	Qty.	Part no.	Description	Remarks
		6341250	Valve br., cpl.4fcts.+4 avail.	
		6341620	Hose kit, 4 fcts + 4 available	
1	1	6340271	Valve bracket (4 + 4 fcts.)	
2	1	55277	Valve block, complete	
3	4	59224	Knob for lever	
4	4	1330187	Control lever, long, straight	
5	5	30856	Nut, stainless	M8
6	11	31147	Face washer, 8 mm	8 mm
7	4	6340229	Adapter	
8	3	30259	Steel bolt, stainless	M8 x 65
9	1	30134	Set screw, stainless	M8 x 25
10	3	30886	Lock nut, stainless	M8
11	4	25253	Connection	P-GEV 10 LR 3/8-WD
12	4	31565	Washer, stainless	10 mm
13	2	31564	Lock nut, stainless	M10
14	2	31513	Set screw, stainless	M10 x 25
15	1	25127	Connection	P-GEV 12 LR-WD
16	2	26166	Blanking plug	VSD 8 L
17	2	25181	Coupling nut	M 8 L
18	5	25244	Connection	GES 8 LR 3/8-WD
19	2	60963	Washer	
20	2	25182	Coupling nut	M 10 L
21	2	25202	Blanking plug	VSD 10 L
22	1	6341620	Hose kit, 4 fcts + 4 available	
23	2	56381	Hose	1/4"x600mm L/V 8Let / vinkel 45 gr
24	1	56394	Hose	5/16"x600mm S/V 10L studs / vink
25	1	56511	Hose	3/8 X 900 mm 45/L 12Let
26	1	56393	Hose	5/16"x950mm L/V 10Let / vinkel 45
27	1	56460	Hose	1/4" x 550mm L/S-10mm
28	1	56510	Hose	1/4 X 600 mm L/L 10Let
29	1	62525	Hose	1/4 X 400 M14 X 1.5 L/90
30	1	62569	Hose	1/4 X 800 M14 X 1.5 L/L
31	1	25247	Elbow connection	WV 8 L
32	1	25246	Double connection	GS 8 L

18/129, 20/138, 22/153

63 42 570
Internal ref. 63 42 550

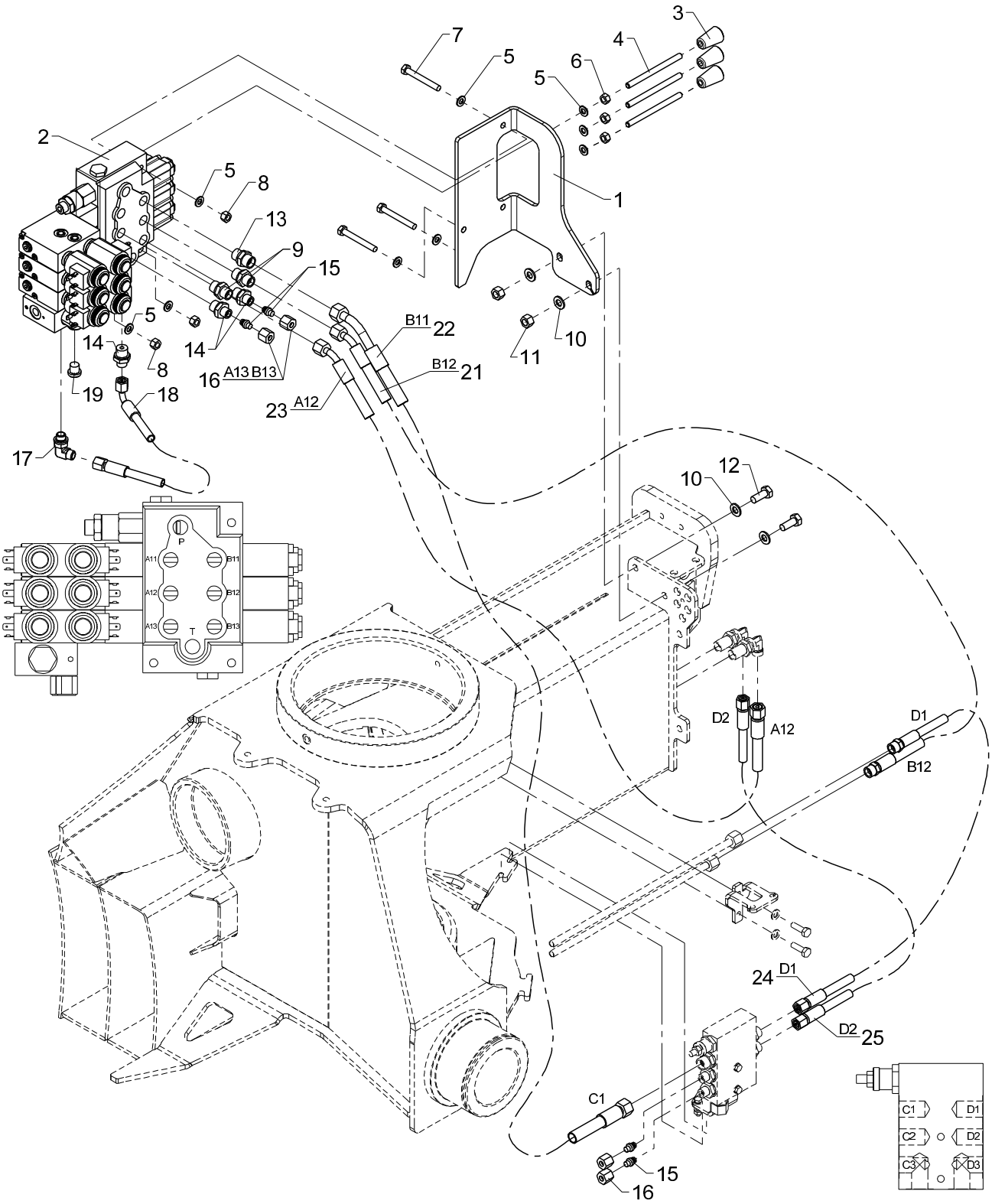

Valve bracket, cpl., 2 fcts. + 2 available fcts. - RC

Pos	Qty.	Part no.	Description	Remarks
		6342550	Valve br., cpl.2fcts.+2 avail.	
		6342570	Hose kit, 2 fcts + 2 avail. RC	
1	1	6340272	Valve bracket (4 fcts. RC)	
2	1	55276	Valve block, complete	
3	3	59224	Knob for lever	
4	3	1330187	Control lever, long, straight	
5	9	31147	Face washer, 8 mm	
6	3	30856	Nut, stainless	M8
7	3	30259	Steel bolt, stainless	M8 x 65
8	3	30886	Lock nut, stainless	M8
9	2	25253	Connection	P-GEV 10 LR 3/8-WD
10	4	31565	Washer, stainless	10 mm
11	2	31564	Lock nut, stainless	M10
12	2	31513	Set screw, stainless	M10 x 25
13	1	25127	Connection	P-GEV 12 LR-WD
14	3	25244	Connection	GES 8 LR 3/8-WD
15	4	26166	Blanking plug	VSD 8 L
16	4	25181	Coupling nut	M 8 L
17	1	26898	Elbow connection	8 mm - 1/4"
18	1	56531	Hose	1/4X200 M14X1.5 L/90
19	1	25197	Plug	VS-R-1/4 WD
20	1	6342570	Hose kit, 2 fcts + 2 avail. RC	
21	1	56394	Hose	5/16"x600mm S/V
22	1	56511	Hose	3/8"x900mm V/O 10L
23	1	56393	Hose	5/16"x950mm L/V
24	1	56460	Hose	1/4" x 550mm L/S-10mm
25	1	56510	Hose	1/4" x 600mm L/L 10Let

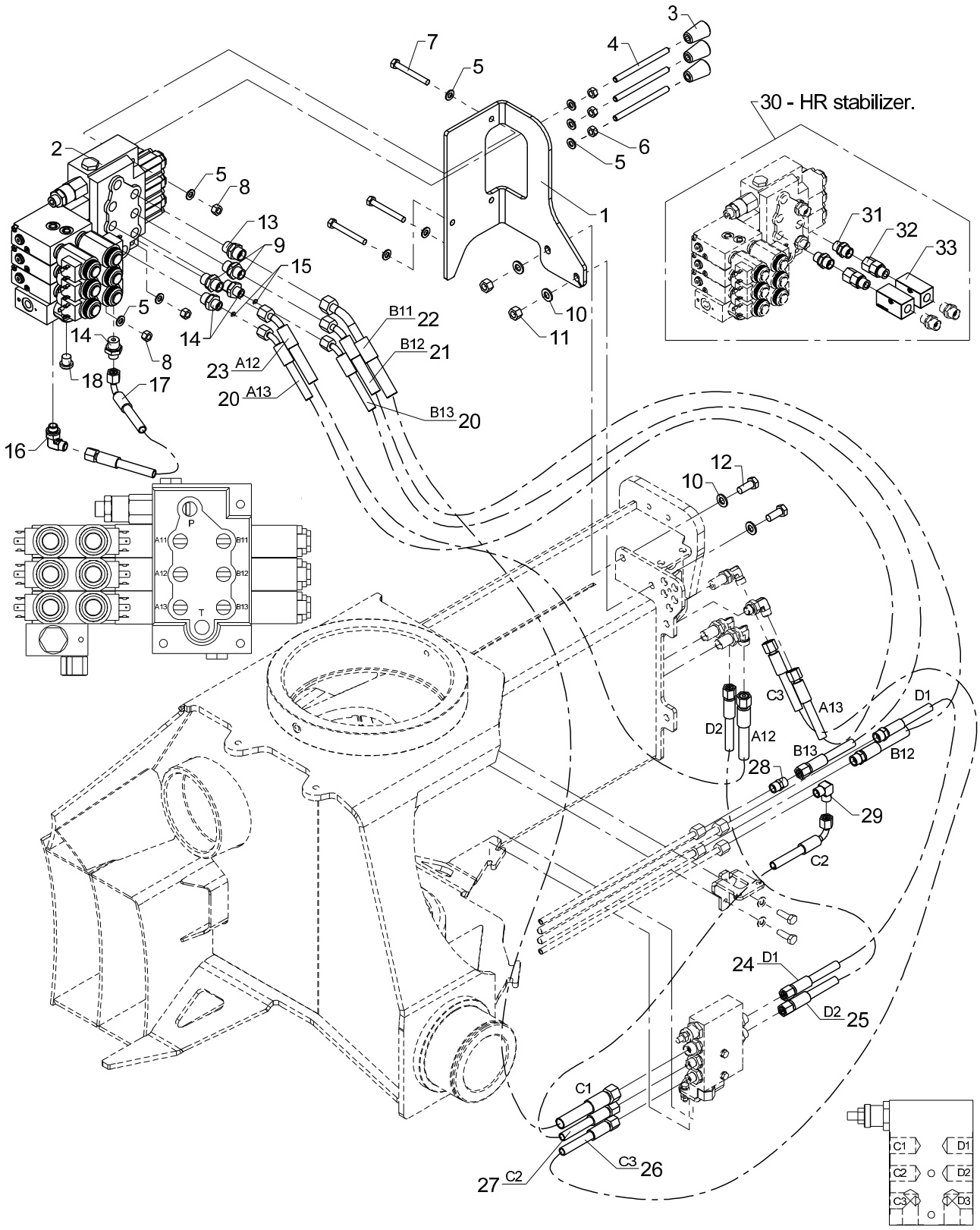
30 - HR stabilizer.
P
T
A11
A12
A13
B11
B12
B13
C1
C2
C3
D1
D2
D3

Valve bracket, cpl. 4 fcts. - RC

Pos	Qty.	Part no.	Description	Remarks
		6341230	Valve bracket, cpl. 4 fcts.RC	
1	1	6340272	Valve bracket (4 fcts. RC)	
2	1	55276	Valve block, complete	
3	3	59224	Knob for lever	
4	3	1330187	Control lever, long, straight	
5	9	31147	Face washer, 8 mm	8 mm
6	3	30856	Nut, stainless	M8
7	3	30259	Steel bolt, stainless	M8 x 65
8	3	30886	Lock nut, stainless	M8
9	2	25253	Connection	P-GEV 10 LR 3/8-WD
10	4	31565	Washer, stainless	10 mm
11	2	31564	Lock nut, stainless	M10
12	2	31513	Set screw, stainless	M10 x 25
13	1	25127	Connection	P-GEV 12 LR-WD
14	3	25244	Connection	GES 8 LR 3/8-WD
15	2	60963	Washer	
16	1	26898	Elbow connection	8 mm - 1/4"
17	1	56531	Hose	1/4 X 200 M14 X 1.5 L/90
18	1	25197	Plug	VS-R-1/4 WD
19	1	6341620	Hose kit, 4 fcts + 4 available	
20	2	56381	Hose	1/4"x600mm L/V 8Let / vinkel 45 gr
21	1	56394	Hose	5/16"x600mm S/V 10L studs / vink
22	1	56511	Hose	3/8 X 900 mm 45/L 12Let
23	1	56393	Hose	5/16"x950mm L/V 10Let / vinkel 45
24	1	56460	Hose	1/4" x 550mm L/S-10mm
25	1	56510	Hose	1/4 X 600 mm L/L 10Let
26	1	62569	Hose	1/4 X 800 M14 X 1.5 L/L
27	1	62525	Hose	1/4 X 400 M14 X 1.5 L/90
28	1	25246	Double connection	P-GV 8 L
29	1	25247	Elbow connection	WV 8 L
30	1	6341520	Restrictor valve, HR legs	
31	2	25127	Connection	P-GEV 12 LR-WD
32	2	25240	Connection	EGESD 12 LR-WD
33	2	49187	Restrictor/check valve 3/8"	

18/129, 20/138, 22/153

63 41 520
63 41 620
Internal ref. 63 41 720

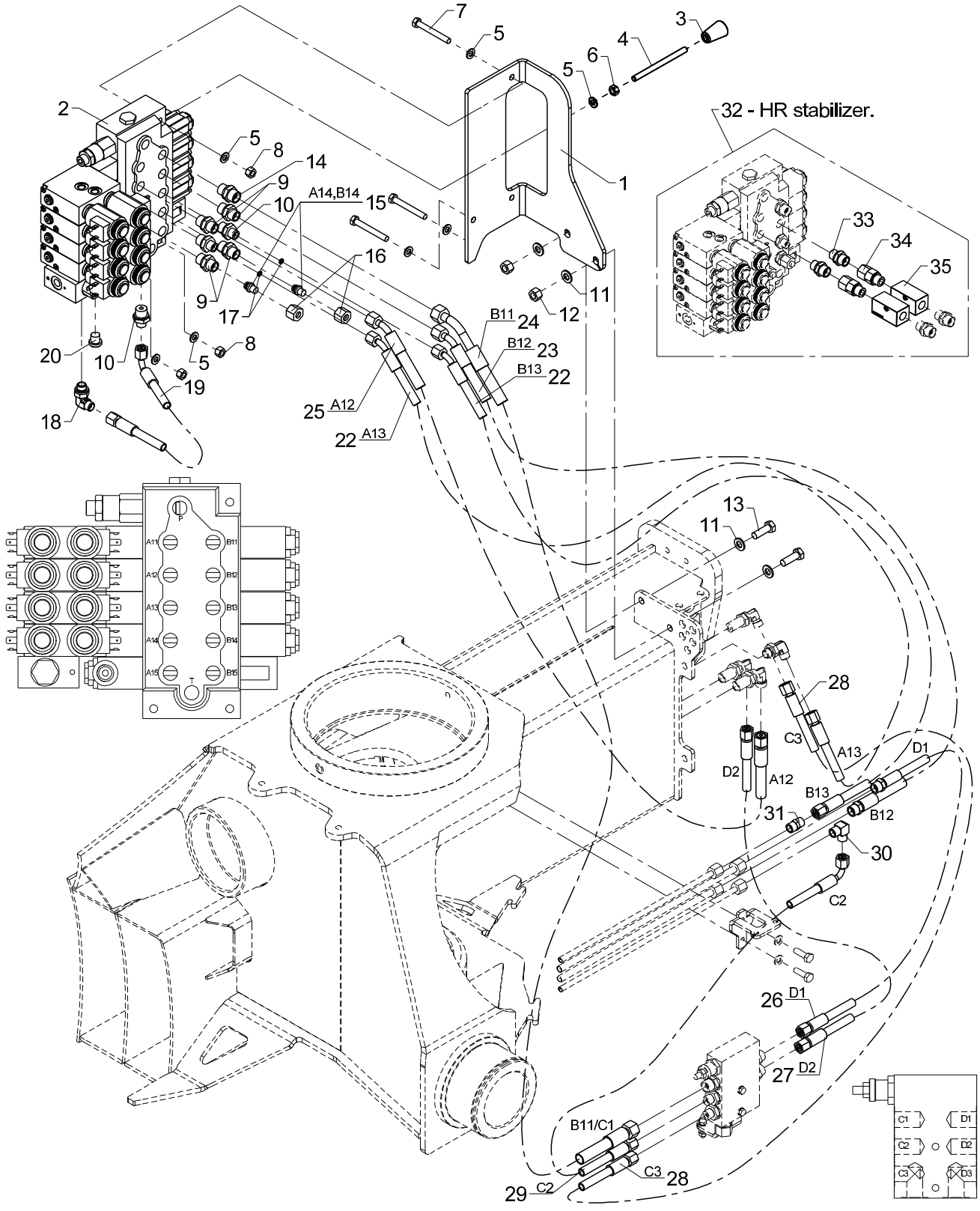

Valve bracket, cpl. 4 fcts. + 2 available fcts. - RC

Pos	Qty.	Part no.	Description	Remarks
		6341720	Valve bracket,cpl.4fct+2avail.	
1	1	6340271	Valve bracket (4 + 4 fcts.)	
2	1	55282	Valve block, complete	
3	4	59224	Knob for lever	
4	4	1330187	Control lever, long, straight	
5	11	31147	Face washer, 8 mm	8 mm
6	5	30856	Nut, stainless	M8
7	3	30259	Steel bolt, stainless	M8 x 65
8	3	30886	Lock nut, stainless	M8
9	4	25253	Connection	P-GEV 10 LR 3/8-WD
10	3	25244	Connection	GES 8 LR 3/8-WD
11	4	31565	Washer, stainless	10 mm
12	2	31564	Lock nut, stainless	M10
13	2	30156	Set screw, stainless	M10 x 30
14	1	25127	Connection	P-GEV 12 LR-WD
15	2	25202	Blanking plug	VSD 10 L
16	2	25182	Coupling nut	M 10 L
17	2	60963	Washer	
18	1	26898	Elbow connection	8 mm - 1/4"
19	1	56531	Hose	1/4X200 M14X1.5 L/90
20	1	25197	Plug	VS-R-1/4 WD
21	1	6341620	Hose kit, 4 fcts + 4 available	
22	2	56381	Hose	1/4"x600mm L/V
23	1	56394	Hose	5/16"x600mm S/V
24	1	56511	Hose	3/8"x900mm V/O 10L
25	1	56393	Hose	5/16"x950mm L/V
26	1	56460	Hose	1/4" x 550mm L/S-10mm
27	1	56510	Hose	1/4 X 600 mm L/L 10Let
28	1	62569	Hose	1/4 X 800 M14 X 1.5 L/L
29	1	62525	Hose	1/4 X 400 M14 X 1.5 L/90
30	1	25247	Elbow connection	WV 8 L
31	1	25246	Double connection	GS 8 L
32	1	6341520	Restrictor valve, HR legs	
33	2	25127	Connection	P-GEV 12 LR-WD
34	2	25240	Connection	EGESD 12 LR-WD
35	2	49187	Restrictor/check valve 3/8"	

18/129, 20/138, 22/153

63 41 520
63 41 620
Internal ref. 63 41 270

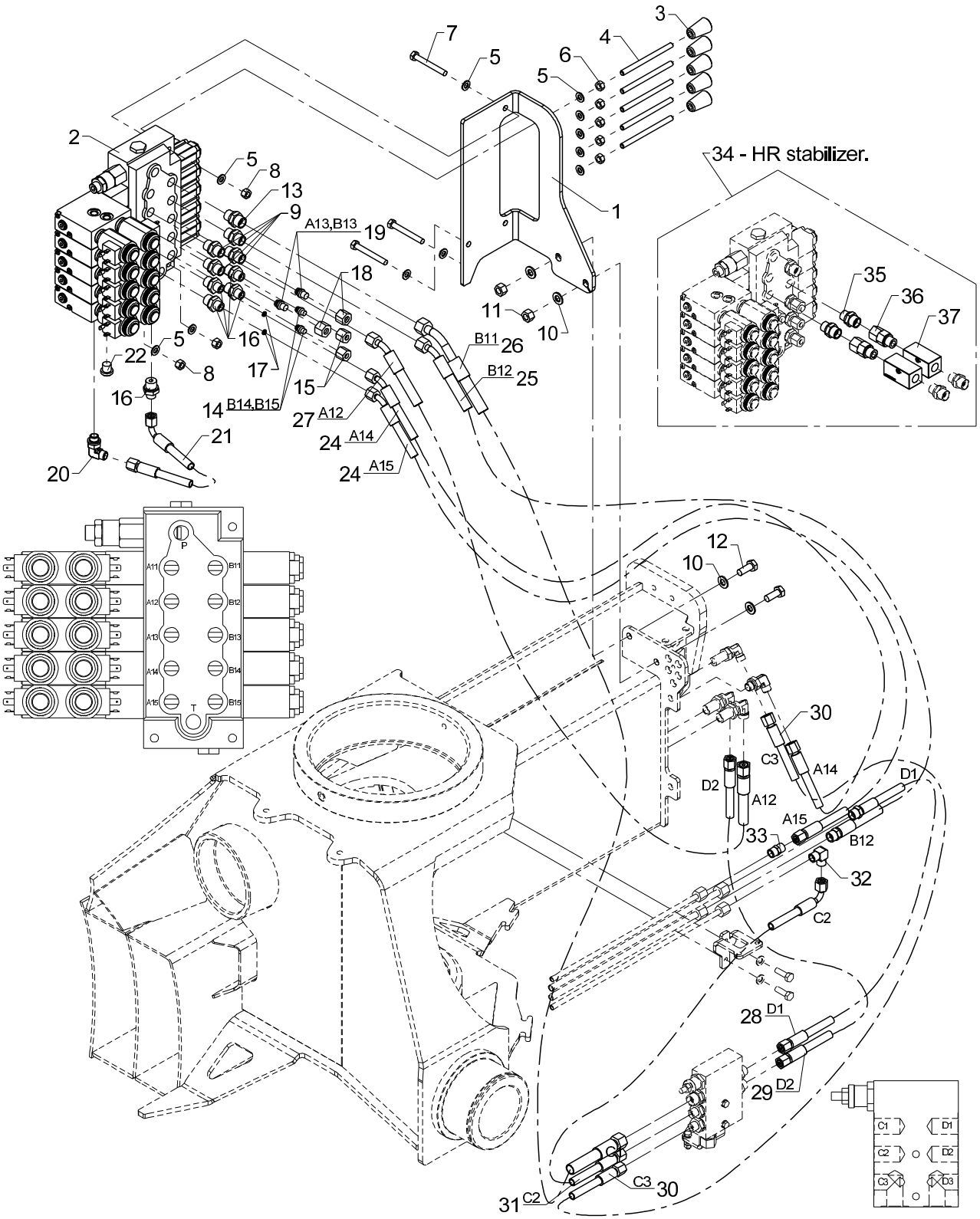

Valve bracket, cpl. 4 fcts. + 4 available - RC

Pos	Qty.	Part no.	Description	Remarks
		6341270	Valve br., cpl.4fcts.+4 avail.	
1	1	6340271	Valve bracket (4 + 4 fcts.)	
2	1	55275	Valve block, complete	
3	5	59224	Knob for lever	
4	5	1330187	Control lever, long, straight	
5	11	31147	Face washer, 8 mm	8 mm
6	5	30856	Nut, stainless	M8
7	3	30259	Steel bolt, stainless	M8 x 65
8	3	30886	Lock nut, stainless	M8
9	4	25253	Connection	P-GEV 10 LR 3/8-WD
10	4	31565	Washer, stainless	10 mm
11	2	31564	Lock nut, stainless	M10
12	2	31513	Set screw, stainless	M10 x 25
13	1	25127	Connection	P-GEV 12 LR-WD
14	2	26166	Blanking plug	VSD 8 L
15	2	25181	Coupling nut	M 8 L
16	5	25244	Connection	GES 8 LR 3/8-WD
17	2	60963	Washer	
18	2	25182	Coupling nut	M 10 L
19	2	25202	Blanking plug	VSD 10 L
20	1	26898	Elbow connection	8 mm - 1/4"
21	1	56531	Hose	1/4X200 M14X1.5 L/90
22	1	25197	Plug	VS-R-1/4 WD
23	1	6341620	Hose kit, 4 fcts + 4 available	
24	2	56381	Hose	1/4"x600mm L/V 8Let / vinkel 45 gr
25	1	56394	Hose	5/16"x600mm S/V 10L studs / vink
26	1	56511	Hose	3/8 X 900 mm 45/L 12Let
27	1	56393	Hose	5/16"x950mm L/V 10Let / vinkel 45
28	1	56460	Hose	1/4" x 550mm L/S-10mm
29	1	56510	Hose	1/4 X 600 mm L/L 10Let
30	1	62569	Hose	1/4 X 800 M14 X 1.5 L/L
31	1	62525	Hose	1/4 X 400 M14 X 1.5 L/90
32	1	25247	Elbow connection	WV 8 L
33	1	25246	Double connection	P-GV 8 L
34	1	6341520	Restrictor valve, HR legs	
35	2	25127	Connection	P-GEV 12 LR-WD
36	2	25240	Connection	EGESD 12 LR-WD
37	2	49187	Restrictor/check valve 3/8"	

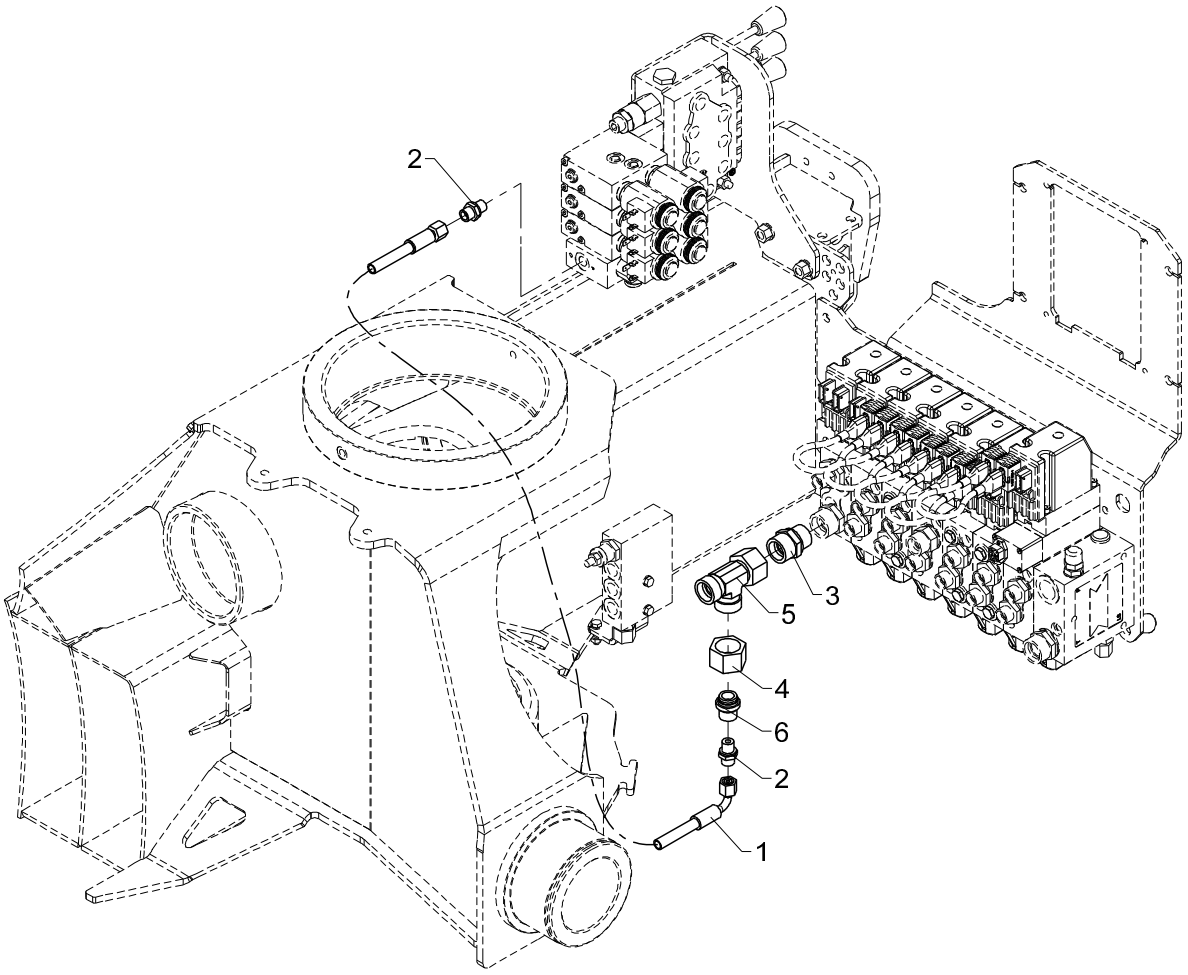
2
5
3
4
6
2
1

Pilot controlled oil supply for NEM/stabilizer valve block

Pos	Qty.	Part no.	Description	Remarks
1	1	56520	Hose	1/4 X 900 M14X1.5 L/90 (350 bar)
2	2	25109	Connection	GES 8 LR-WD
3	1	26197	Connection	P-GEV 20 SR-WD
4	1	26109	Coupling nut	M 20 S
5	1	26362	Connection	ELSD 20 S
6	1	25585	Plug	VSD 20 S

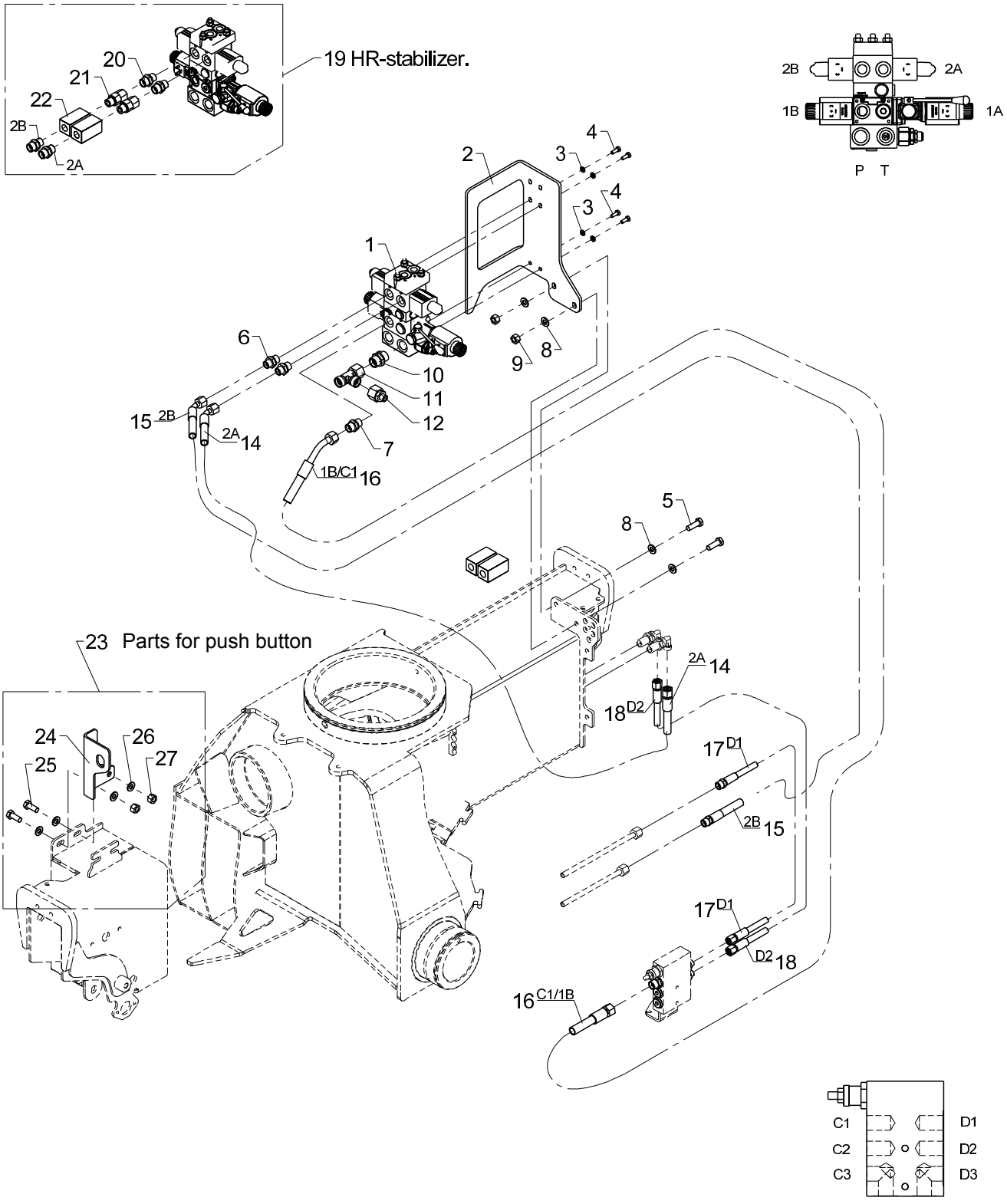
19 HR-stabilizer.
20
21
22
2B
2A
2B
2A
1B
1A
P T
2
3
4
3
4
1
6
8
9
10
11
12
15 2B
2A 14
7
1B/C1 16
5
8
23 Parts for push button
24
25
26
27
2A 14
18 D2
17 D1
2B 15
17 D1
D2 18
16 C1/1B
C1
C2
C3
D1
D2
D3

Valve bracket, cpl. 2 functions - RC

Pos	Qty.	Part no.	Description	Remarks
		6353840	Valve bracket,cpl. 2 fcts. RC	
		6353740	Hose kit, 2 functions	
		6341520	Restrictor valve, HR legs	
		6353600	Parts f.acknowledgement button	
1	1	50514	Stabilizer valve block	
2	1	6353272	Valve bracket, 2+4 functions	
3	4	32302	Face washer, stainless	6 mm
4	4	30112	Set screw, stainless	M6 x 16
5	2	30156	Set screw, stainless	M10 x 30
6	2	25253	Connection	P-GEV 10 LR 3/8-WD
7	1	25127	Connection	P-GEV 12 LR-WD
8	4	31565	Washer, stainless	10 mm
9	2	31564	Lock nut, stainless	M10
10	1	25143	Connection	P-GEV 15 LR-WD
11	1	26142	Connection	ELSD 15 L
12	1	25285	Connection	REDSDN 15/8 L
13	1	6353740	Hose kit, 2 functions	
14	1	56393	Hose	5/16"x950mm L/V
15	1	56394	Hose	5/16"x600mm S/V
16	1	56511	Hose	3/8"x900mm V/O 12L
17	1	56460	Hose	1/4" x 550mm L/S-10mm
18	1	56510	Hose	1/4 X 600 mm L/L 10Let
19	1	6341520	Restrictor valve, HR legs	
20	4	25127	Connection	P-GEV 12 LR-WD
21	2	25240	Connection	EGESD 12 LR-WD
22	2	49187	Restrictor/check valve 3/8"	
23	1	6353600	Parts f.acknowledgement button	
24	1	6353271	Bracket f. acknowledgemt butto	
25	2	31513	Set screw, stainless	M10 x 25
26	4	31565	Washer, stainless	10 mm
27	2	31564	Lock nut, stainless	M10

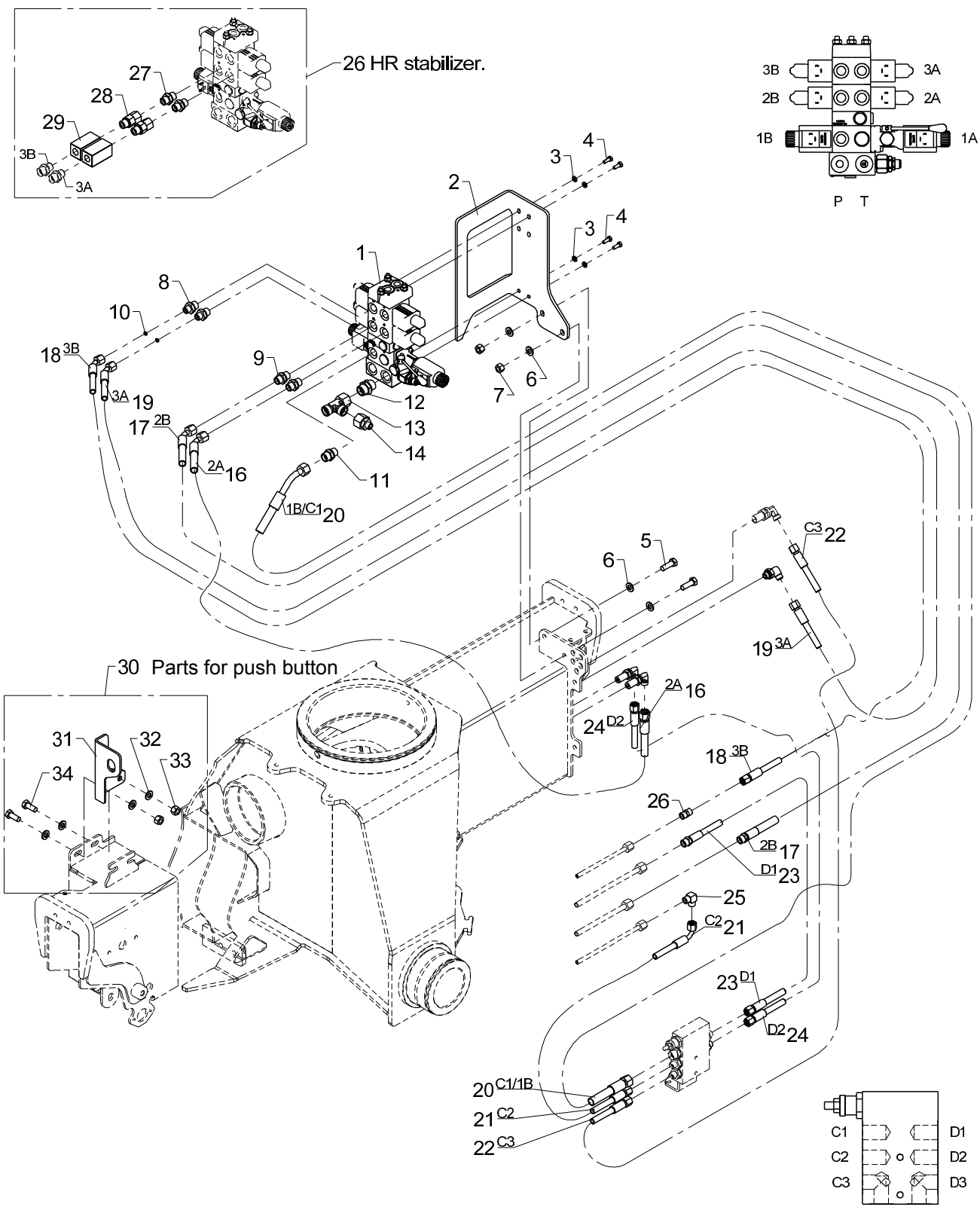
26 HR stabilizer.
27
28
29
3B
3A
3B
2B
1B
3A
2A
1A
P T
4
3
2
1
8
10
18 3B
9
3A 19
17 2B
2A 16
12
13
14
11
1B/C1 20
7
6
5
C3 22
19 3A
2A 16
24 D2
18 3B
26
2B 17
D1 23
25
C2 21
23 D1
D2 24
20 C1/1B
21 C2
22 C3
30 Parts for push button
31
32
33
34
C1
C2
C3
D1
D2
D3

Valve bracket, cpl. 4 fcts. - RC

Pos	Qty.	Part no.	Description	Remarks
		6353850	Valve bracket,cpl. 4 fcts. RC	
		6353670	Hose kit, 4 functions+4/2avail	
		6341520	Restrictor valve, HR legs	
		6353600	Parts f.acknowledgement button	
1	1	50512	Stabilizer control valve	
2	1	6353272	Valve bracket (4 fcts. RC)	
3	4	32302	Face washer, stainless	6 mm
4	4	30112	Set screw, stainless	M6 x 16
5	2	30156	Set screw, stainless	M10 x 30
6	4	31565	Washer, stainless	10 mm
7	2	31564	Lock nut, stainless	M10
8	2	25244	Connection	GES 8 LR 3/8-WD
9	2	25253	Connection	P-GEV 10 LR 3/8-WD
10	2	60963	Washer	
11	1	25127	Connection	P-GEV 12 LR-WD
12	1	25143	Connection	P-GEV 15 LR-WD
13	1	26142	Connection	ELSD 15 L
14	1	25285	Reducing connection	REDSDN 15/8 L
15	1	6353670		
16	1	56393	Hose	5/16"x950mm L/V
17	1	56394	Hose	5/16"x600mm S/V
18	1	56381	Hose	
19	1	56963		
20	1	56511	Hose	3/8"x900mm V/O 12L
21	1	62525	Hose	
22	1	62569	Hose	
23	1	56460	Hose	
24	1	56510	Hose	
25	1	25247	Elbow connection	WV 8 L
26	1	25246	Double connection	GS 8 L
26	1	6341520		
27	2	25253	Connection	P-GEV 10 LR 3/8-WD
28	2	25240	Connection	EGESD 12 LR-WD
29	2	49187		
30	1	6353600		
31	1	6353271		
32	4	31565	Washer, stainless	10 mm
33	2	31564	Lock nut, stainless	M10
34	2	31513	Set screw, stainless	M10 x 25

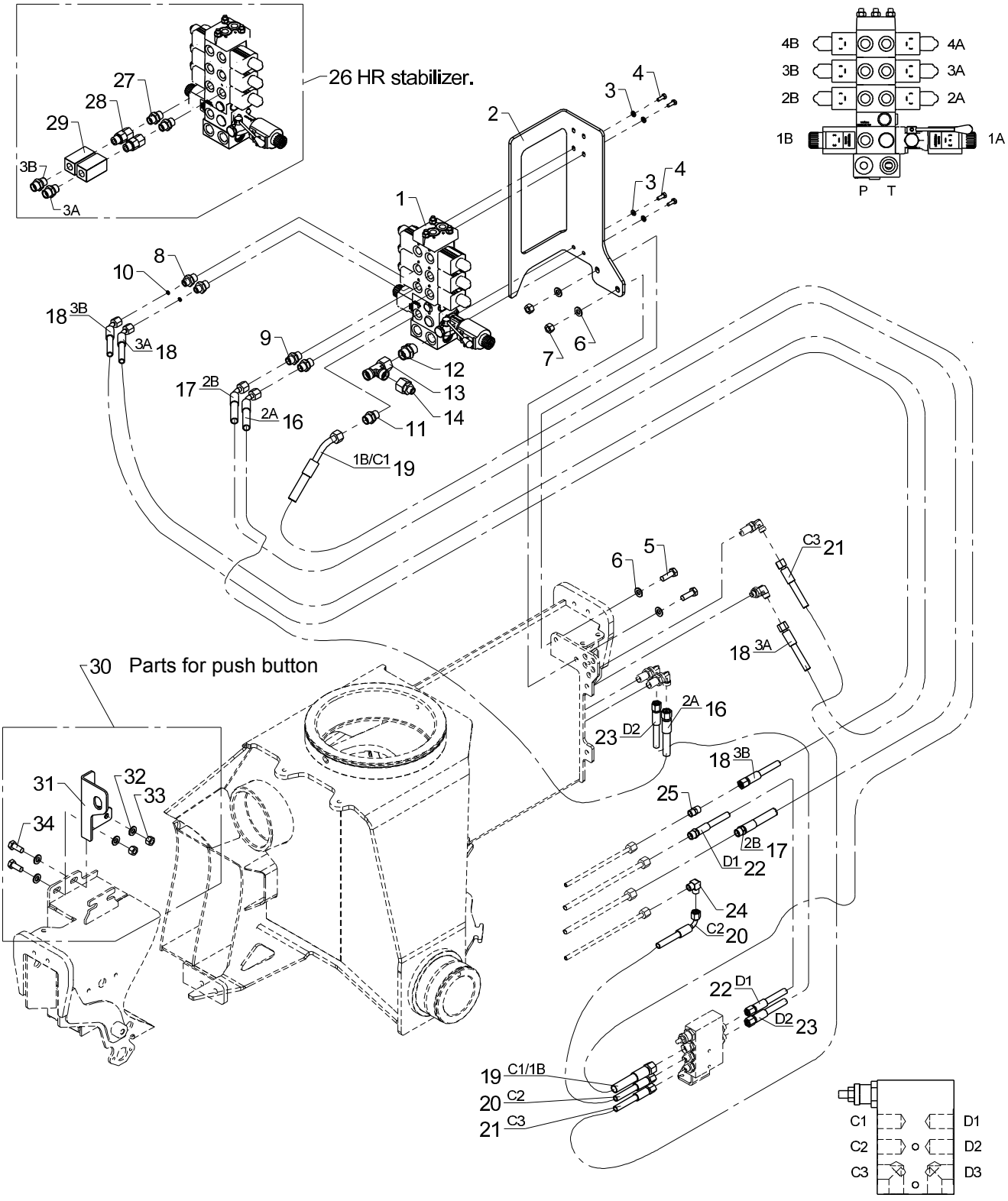
26 HR stabilizer.
30 Parts for push button
4B
4A
3B
3A
2B
2A
1B
1A
P
T
C1
C2
C3
D1
D2
D3
C1/1B

Valve bracket, cpl. 4 fcts. + 2 available - RC

Pos	Qty.	Part no.	Description	Remarks
		6353860	Valve bracket,cpl. 4 fcts. +2	
		6353670	Hose kit, 4 functions+4/2avail	
		6341520	Restrictor valve, HR legs	
		6353600	Parts f.acknowledgement button	
1	1	50513	Stabilizer valve block	
2	1	6353273	Valve bracket, 6+8 functions	
3	4	32302	Face washer, stainless	6 mm
4	4	30112	Set screw, stainless	M6 x 16
5	2	30156	Set screw, stainless	M10 x 30
6	4	31565	Washer, stainless	10 mm
7	2	31564	Lock nut, stainless	M10
8	2	25244	Connection	GES 8 LR 3/8-WD
9	2	25253	Connection	P-GEV 10 LR 3/8-WD
10	2	60963	Washer	
11	1	25127	Connection	P-GEV 12 LR-WD
12	1	25143	Connection	P-GEV 15 LR-WD
13	1	26142	Connection	ELSD 15 L
14	1	25285	Connection	REDSDN 15/8 L
15	1	6353670	Hose kit, 4 functions+4/2avail	
16	1	56393	Hose	5/16"x950mm L/V
17	1	56394	Hose	5/16"x600mm S/V
18	2	56963	Hose 1/4"x700mm L/V	
19	1	56511	Hose	3/8"x900mm V/O 12L
20	1	62525	Hose	1/4 X 400 M14 X 1.5 L/90
21	1	62569	Hose	1/4 X 800 M14 X 1.5 L/L
22	1	56460	Hose	1/4" x 550mm L/S-10mm
23	1	56510	Hose	1/4 X 600 mm L/L 10Let
24	1	25247	Elbow connection	WV 8 L
25	1	25246	Double connection	GS 8 L

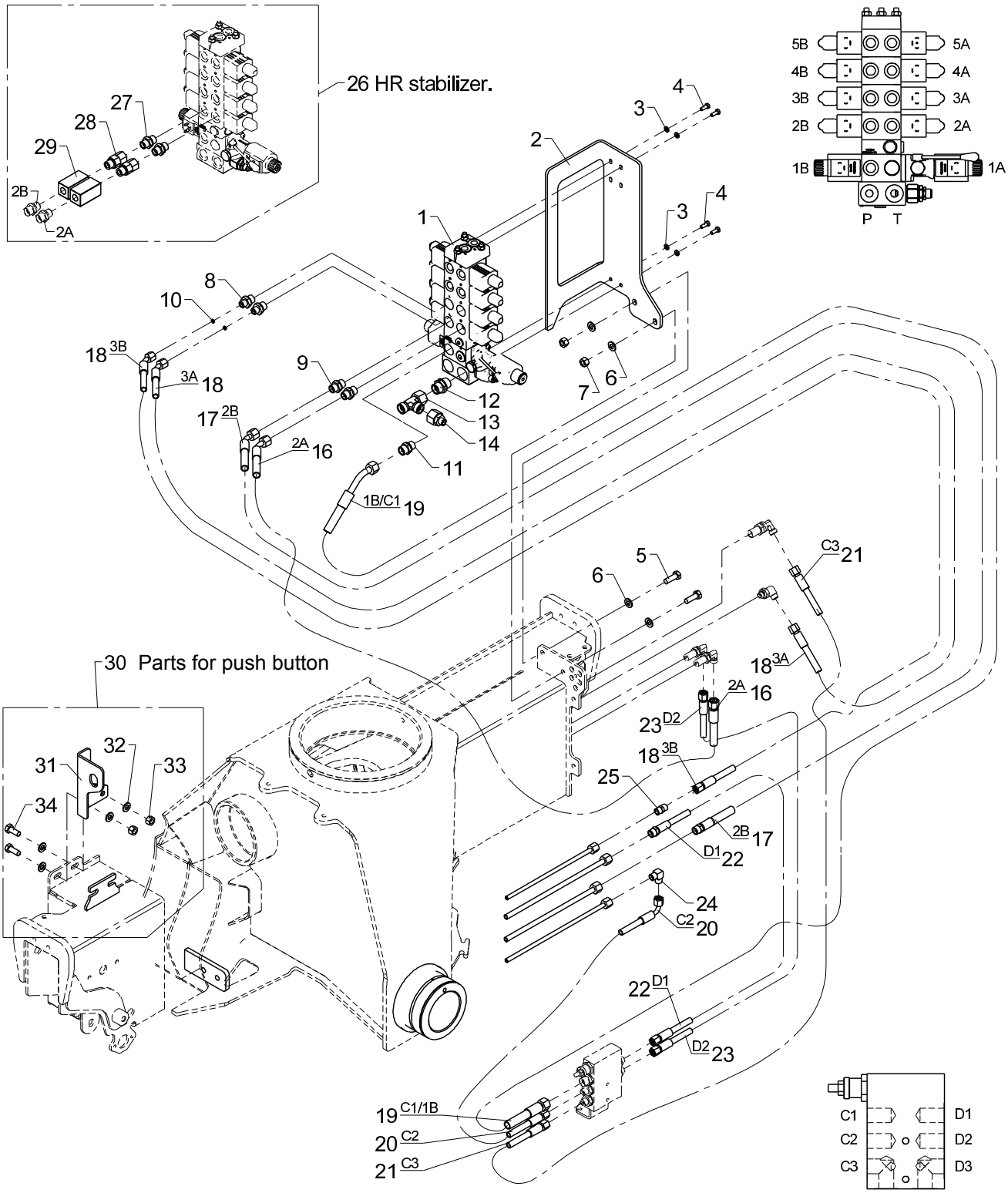
26 HR stabilizer.
30 Parts for push button
5B
4B
3B
2B
1B
5A
4A
3A
2A
1A
P T
C1
C2
C3
D1
D2
D3

Valve bracket, cpl. 4 fcts. + 4 available - RC

Pos	Qty.	Part no.	Description	Remarks
		6353870	Valve br., cpl.4fcts.+4 avail.	
		6353670	Hose kit, 4 functions+4/2avail	
		6341520	Restrictor valve, HR legs	
		6353600	Parts f.acknowledgement button	
1	1	50510	Stabilizer valve	
2	1	6353273	Valve bracket, 6+8 functions	
3	4	32302	Face washer, stainless	6 mm
4	4	30112	Set screw, stainless	M6 x 16
5	2	30156	Set screw, stainless	M10 x 30
6	4	31565	Washer, stainless	10 mm
7	2	31564	Lock nut, stainless	M10
8	2	25244	Connection	GES 8 LR 3/8-WD
9	2	25253	Connection	P-GEV 10 LR 3/8-WD
10	2	60963	Washer	
11	1	25127	Connection	P-GEV 12 LR-WD
12	1	25143	Connection	P-GEV 15 LR-WD
13	1	26142	Connection	ELSD 15 L
14	1	25285	Connection	REDSDN 15/8 L
15	1	6353670	Hose kit, 4 functions+4/2avail	
16	1	56393	Hose	5/16"x950mm L/V
17	1	56394	Hose	5/16"x600mm S/V
18	2	56963	Hose 1/4"x700mm L/V	
19	1	56511	Hose	3/8"x900mm V/O 12L
20	1	62525	Hose	1/4 X 400 M14 X 1.5 L/90
21	1	62569	Hose	1/4 X 800 M14 X 1.5 L/L
22	1	56460	Hose	1/4" x 550mm L/S-10mm
23	1	56510	Hose	1/4 X 600 mm L/L 10Let
24	1	25247	Elbow connection	WV 8 L
25	1	25246	Double connection	GS 8 L

18/129, 20/138, 22/153

63 53 600
63 41 520
63 53 740
Internal ref. 63 53 880

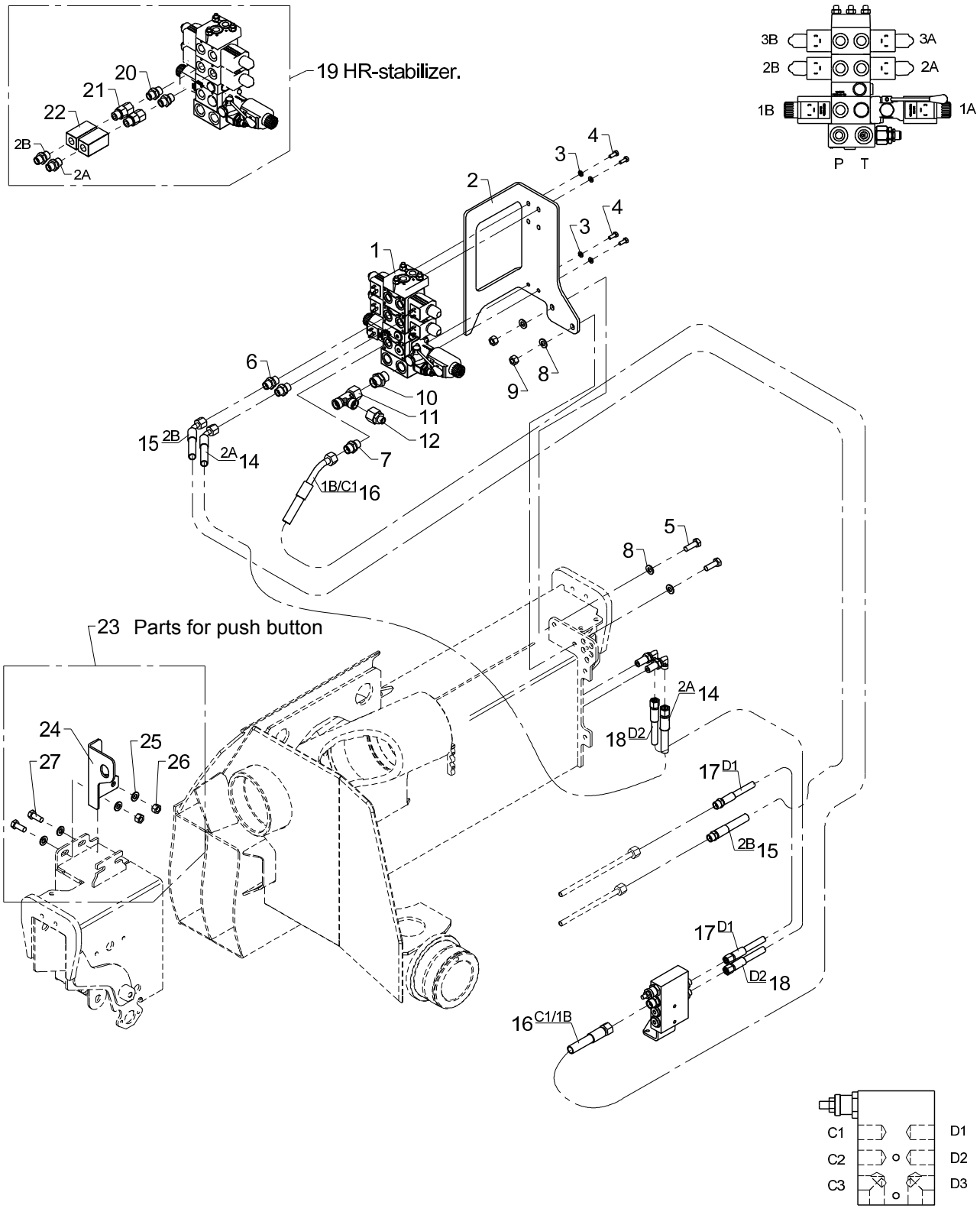

Valve bracket, cpl. 2 functions + 2 available functions - RC

Pos	Qty.	Part no.	Description	Remarks
		6353880	Valve bracket,cpl. 2+2avail.RC	
		6353740	Hose kit, 2 functions	
		6341520	Restrictor valve, HR legs	
		6353600	Parts f.acknowledgement button	
1	1	50512	Stabilizer control valve	
2	1	6353272	Valve bracket, 2+4 functions	
3	4	32302	Face washer, stainless	6 mm
4	4	30112	Set screw, stainless	M6 x 16
5	2	30156	Set screw, stainless	M10 x 30
6	2	25253	Connection	P-GEV 10 LR 3/8-WD
7	1	25127	Connection	P-GEV 12 LR-WD
8	4	31565	Washer, stainless	10 mm
9	2	31564	Lock nut, stainless	M10
10	1	25143	Connection	P-GEV 15 LR-WD
11	1	26142	Connection	ELSD 15 L
12	1	25285	Connection	REDSDN 15/8 L
13	1	6353740	Hose kit, 2 functions	
14	1	56393	Hose	5/16"x950mm L/V
15	1	56394	Hose	5/16"x600mm S/V
16	1	56511	Hose	3/8"x900mm V/O 12L
17	1	56460	Hose	1/4" x 550mm L/S-10mm
18	1	56510	Hose	1/4 X 600 mm L/L 10Let
19	1	6341520	Restrictor valve, HR legs	
20	4	25253	Connection	P-GEV 10 LR 3/8-WD
21	2	25240	Connection	EGESD 12 LR-WD
22	2	49187	Restrictor/check valve 3/8"	
23	1	6353600	Parts f.acknowledgement button	
24	1	6353271	Bracket f. acknowledgemt butto	
25	4	31565	Washer, stainless	10 mm
26	2	31564	Lock nut, stainless	M10
27	2	31513	Set screw, stainless	M10 x 25

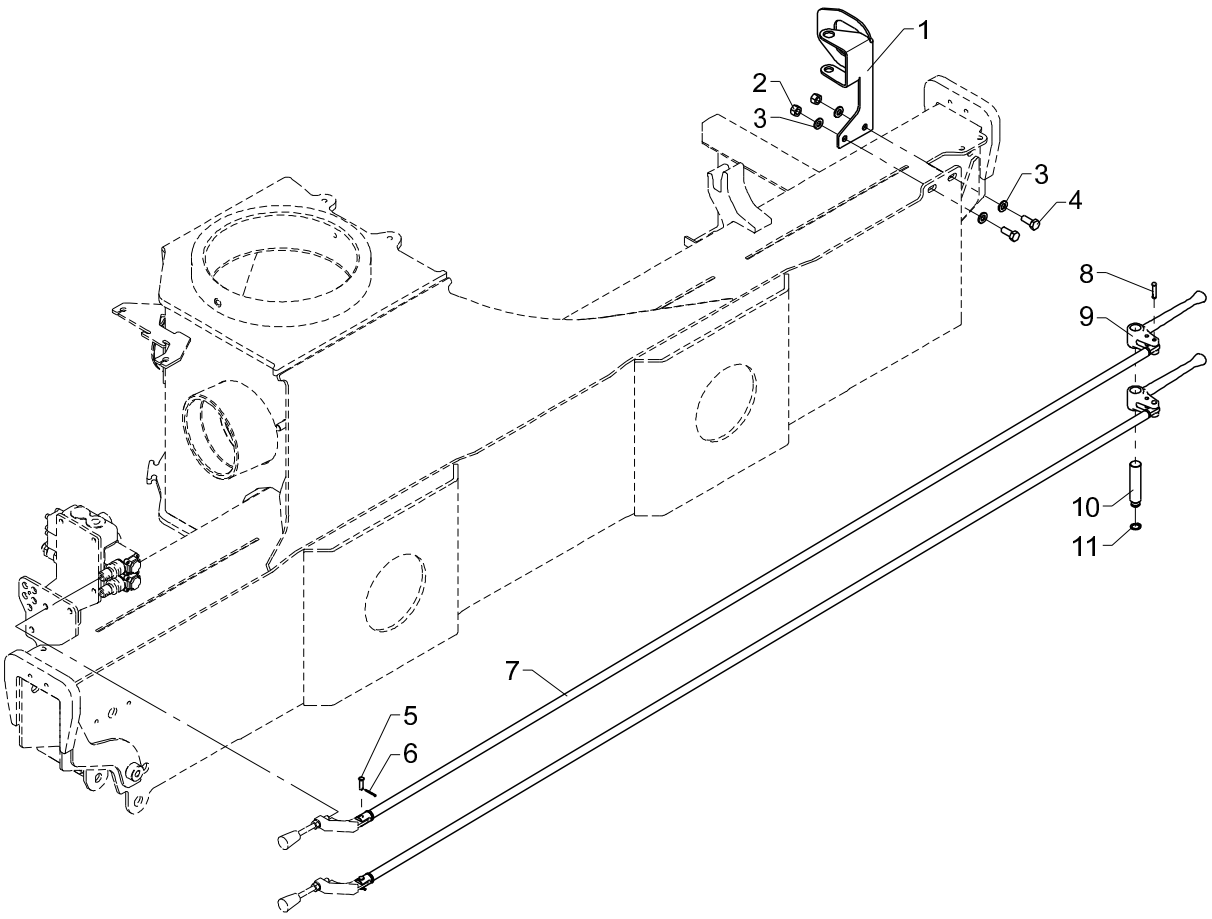
1
2
3
3
4
8
9
10
11
7
5
6

Dual control, 2 fcts. std.

535 05 270

From loader 1070001
To loader

Created 13-11-2008
Modified

Pos	Qty.	Part no.	Description	Remarks
1	1	6340256	Bracket for dual control	
2	2	31564	Lock nut, stainless	M10
3	4	31565	Washer, stainless	10 mm
4	2	31513	Set screw, stainless	M10 x 25
5	2	31271	Cotter bolt	ø6 x 21
6	2	31601	Split pin, stainless	ø1,6 x 20
7	2	6340263	Connecting rod	
8	2	63468	Split pin with spring lock	
9	2	63444	Lever for dual controls	
10	1	6340261	Pin (2 functions)	
11	1	33104	Circlip	15U

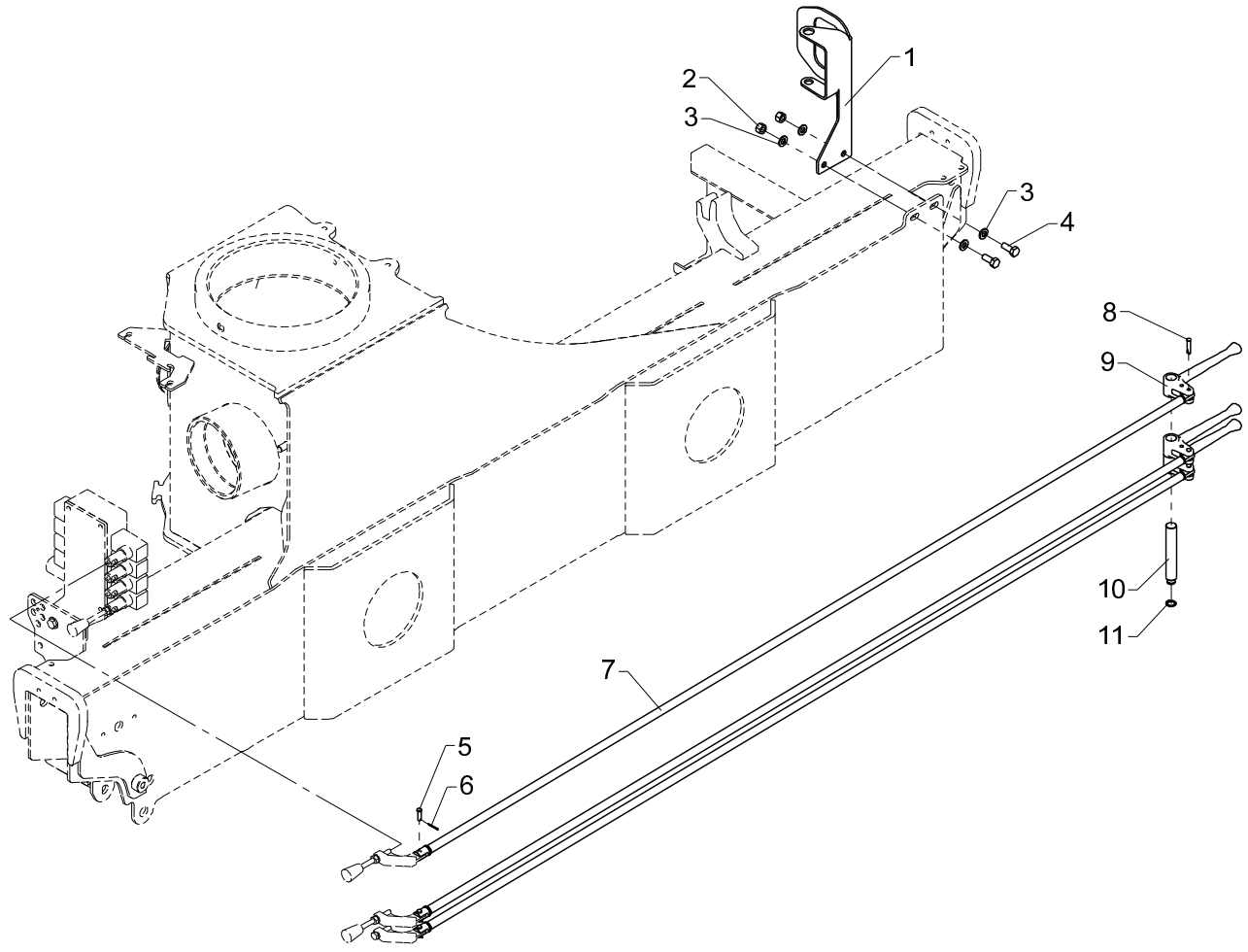
1
2
3
3
4
8
9
10
11
7
5
6

Dual control, 4 fcts. std.

535 05 280

From loader 1070001
To loader

Created 13-11-2008
Modified

Pos	Qty.	Part no.	Description	Remarks
1	1	6340257	Bracket for dual control	
2	2	31564	Lock nut, stainless	M10
3	4	31565	Washer, stainless	10 mm
4	2	31513	Set screw, stainless	M10 x 25
5	3	31271	Cotter bolt	ø6 x 21
6	3	31601	Split pin, stainless	ø1,6 x 20
7	3	6340263	Connecting rod	
8	3	63468	Split pin with spring lock	
9	3	63444	Lever for dual controls	
10	1	6340262	Pin (4 functions)	
11	1	33104	Circlip	15U

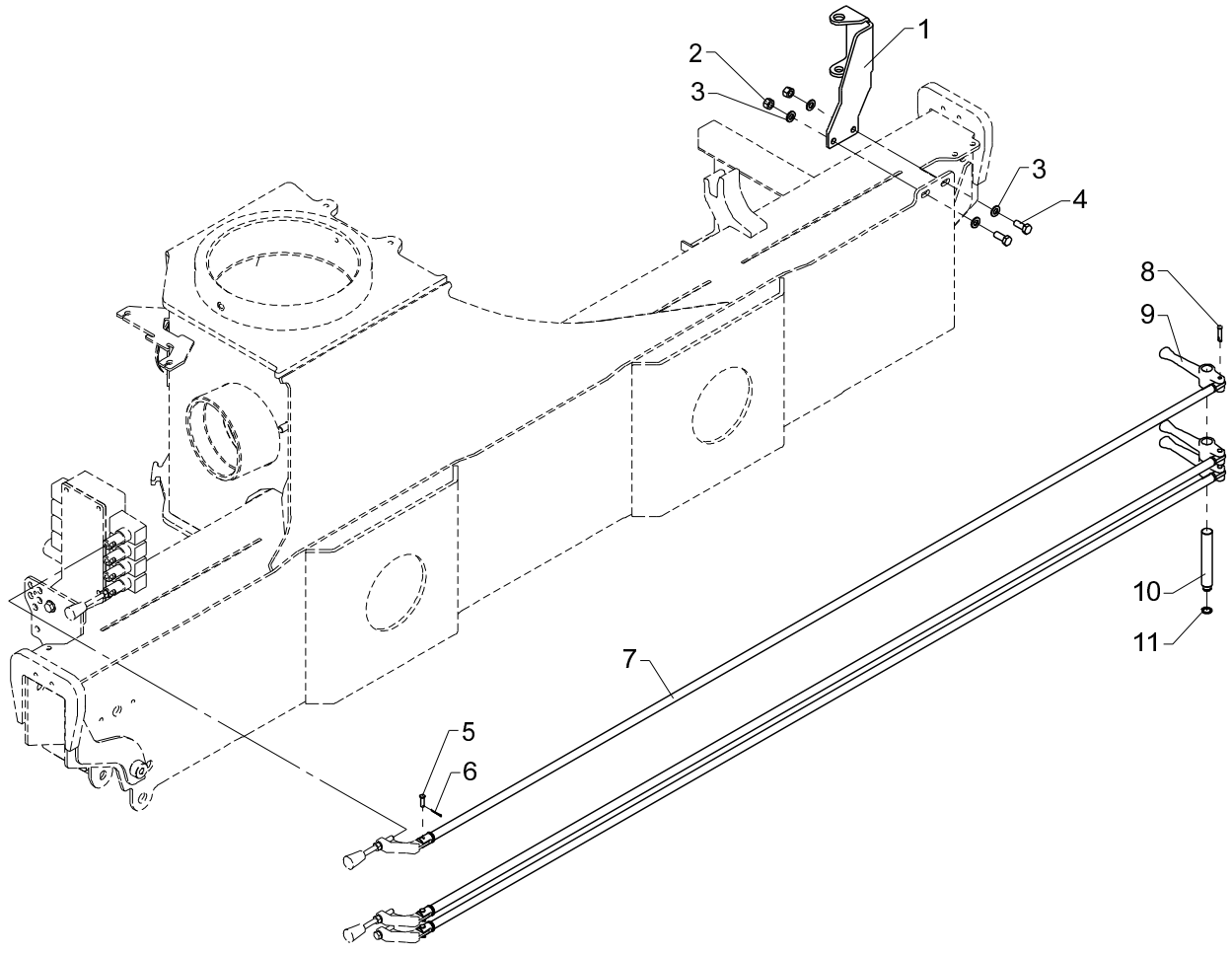
1
2
3
3
4
8
9
10
11
7
5
6

Dual control, 4 fcts., hydr. swing-up stabilizer legs

Pos	Qty.	Part no.	Description	Remarks
1	1	6340259	Bracket for dual control	
2	2	31564	Lock nut, stainless	M10
3	4	31565	Washer, stainless	10 mm
4	2	31513	Set screw, stainless	M10 x 25
5	3	31271	Cotter bolt	ø6 x 21
6	3	31601	Split pin, stainless	ø1,6 x 20
7	3	6340263	Connecting rod	
8	3	63468	Split pin with spring lock	
9	3	63483	Lever for dual control	
10	1	6340262	Pin (4 functions)	
11	1	33104	Circlip	15U

18/129, 20/138, 22/153

Internal ref. 63 45 870

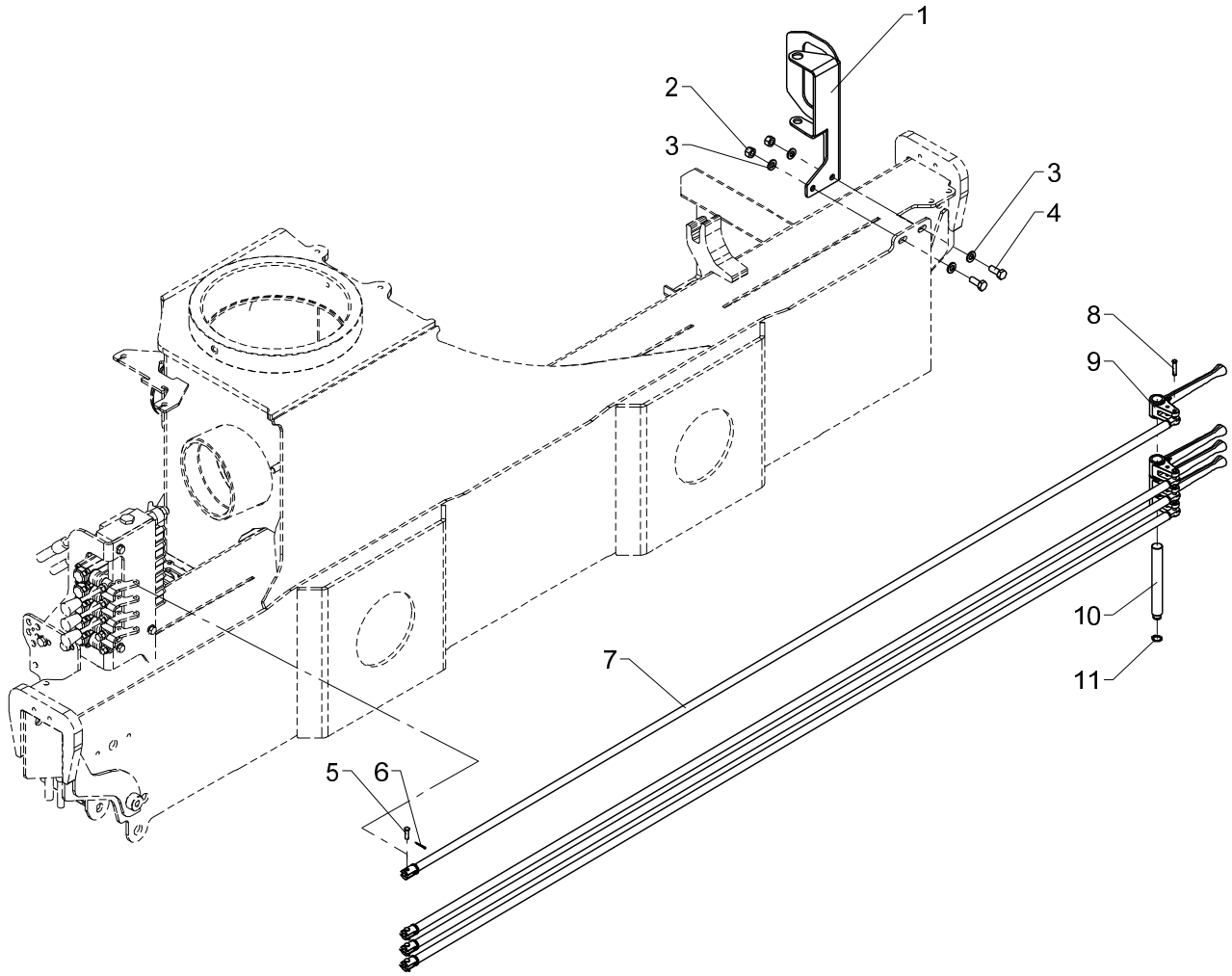

Dual control.4 fcts. + 4 available functions (std.)

Pos	Qty.	Part no.	Description	Remarks
1	1	6340258	Bracket, dual control (4 + 4)	
2	2	31564	Lock nut, stainless	M10
3	4	31565	Washer, stainless	10 mm
4	2	31513	Set screw, stainless	M10 x 25
5	4	31271	Cotter bolt	ø6 x 21
6	4	31601	Split pin, stainless	ø1,6 x 20
7	4	6340263	Connecting rod	
8	4	63468	Split pin with spring lock	
9	4	63444	Lever for dual controls	
10	1	6340264	Pin(4 fcts.+4 available fcts.)	
11	1	33104	Circlip	15U

18/129, 20/138, 22/153

Internal ref. 63 45 880

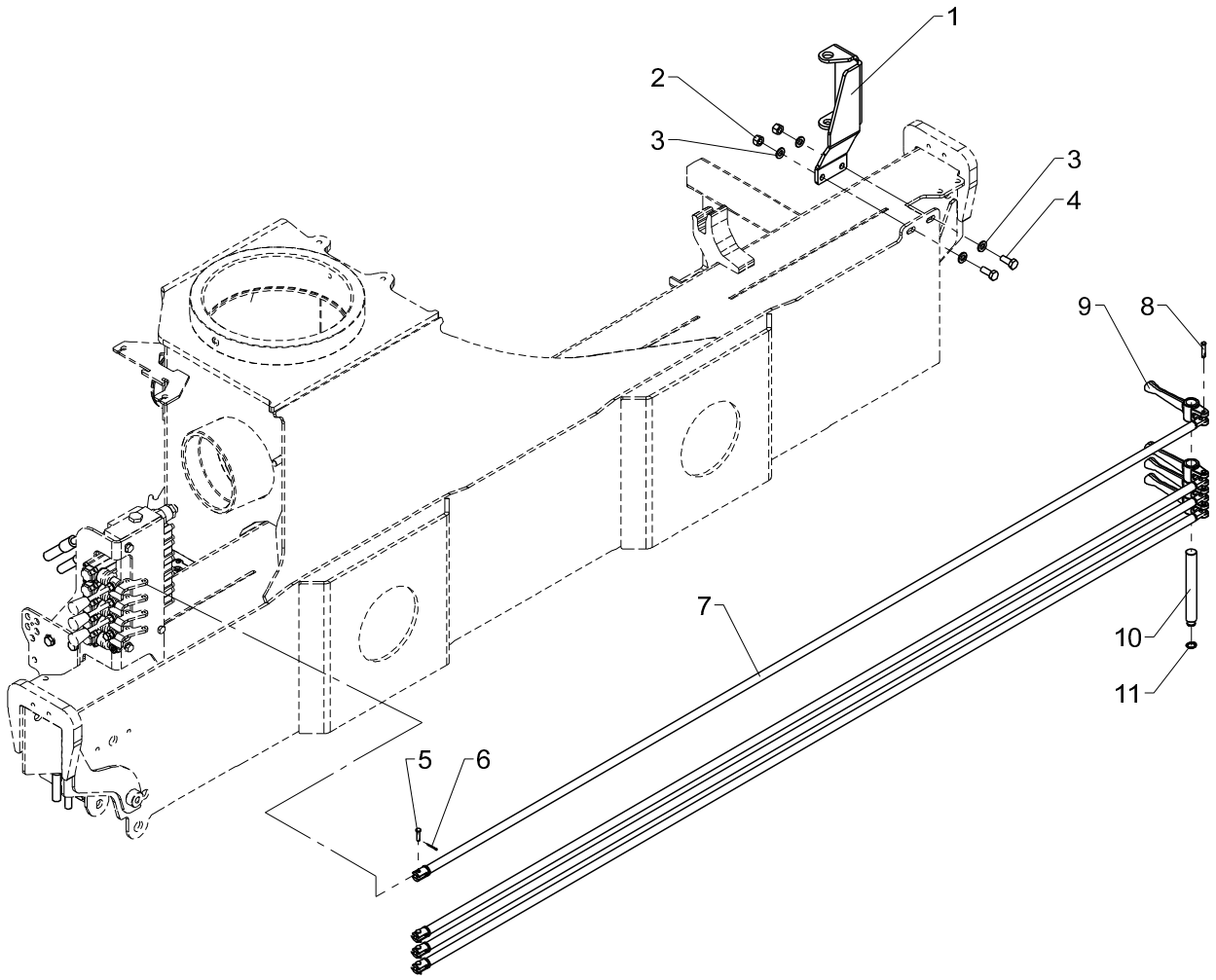

Dual control, 4 fcts. + 4 available fcts. (hydr. swing-up stabilizer legs)

Pos	Qty.	Part no.	Description	Remarks
1	1	6340269	Bracket for dual control	
2	2	31564	Lock nut, stainless	M10
3	4	31565	Washer, stainless	10 mm
4	2	31513	Set screw, stainless	M10 x 25
5	4	31271	Cotter bolt	ø6 x 21
6	4	31601	Split pin, stainless	ø1,6 x 20
7	4	6340263	Connecting rod	
8	4	63468	Split pin with spring lock	
9	4	63483	Lever for dual control	
10	1	6340264	Pin(4 fcts.+4 available fcts.)	
11	1	33104	Circlip	15U

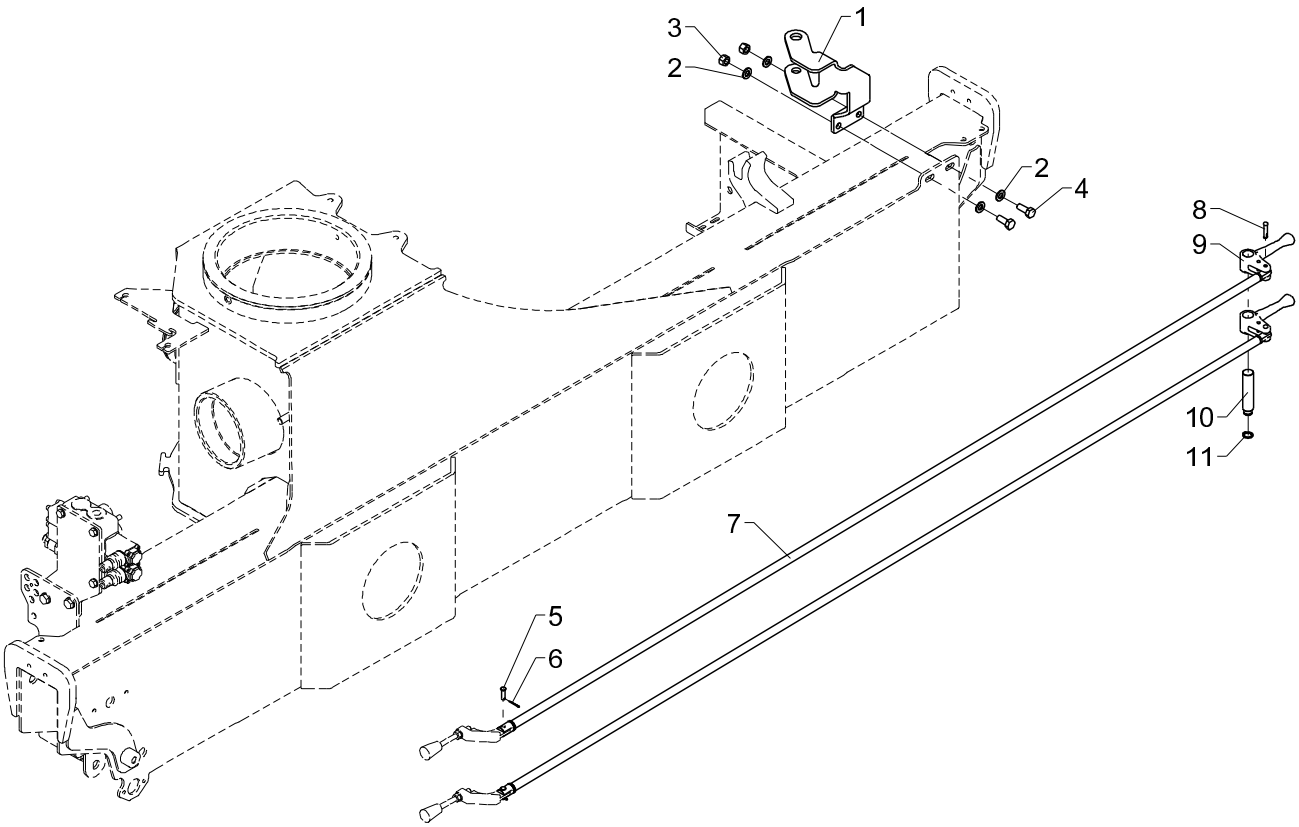
3
2
1
2
4
8
9
10
11
7
5
6

Dual control, 2 fcts. (180° swing-up stab. legs)

Pos	Qty.	Part no.	Description	Remarks
1	1	6340418	Bracket, dual ctrl., 4 fct.	
2	4	31565	Washer, stainless	10 mm
3	2	31564	Lock nut, stainless	M10
4	2	31513	Set screw, stainless	M10 x 25
5	2	31271	Cotter bolt	
6	2	31601	Split pin, stainless	
7	2	6340246	Connecting rod	
8	2	63468	Split pin with spring lock	
9	2	63446	Lever for dual controls	
10	1	6340261	Pin (2 functions)	
11	1	33104	Circlip	15U

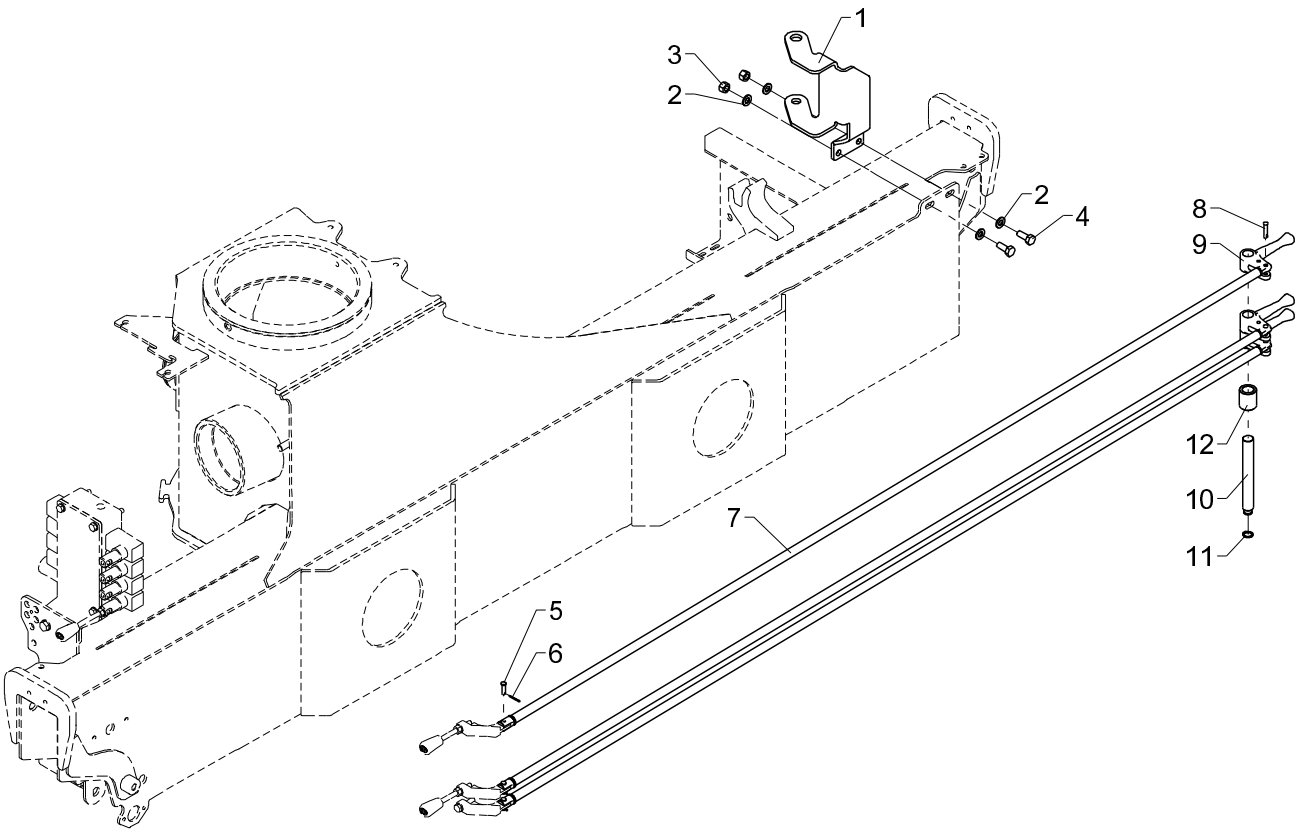
1
3
2
2
4
8
9
12
10
11
7
5
6

Dual control, 4 fcts. (180° swing-up stab. legs)

From loader 1070001
To loader
Created 17-06-2014
Modified

Pos	Qty.	Part no.	Description	Remarks
1	1	6340419	Bracket for dual control,4 fct	
2	4	31565	Washer, stainless	10 mm
3	2	31564	Lock nut, stainless	M10
4	2	31513	Set screw, stainless	M10 x 25
5	3	31271	Cotter bolt	
6	3	31601	Split pin, stainless	
7	3	6340246	Connecting rod	
8	3	63468	Split pin with spring lock	
9	3	63446	Lever for dual controls	
10	1	6340264	Pin(4 fcts.+4 available fcts.)	
11	1	33104	Circlip	15U
12	1	63598	Bushing	ø30/ø20 x 35

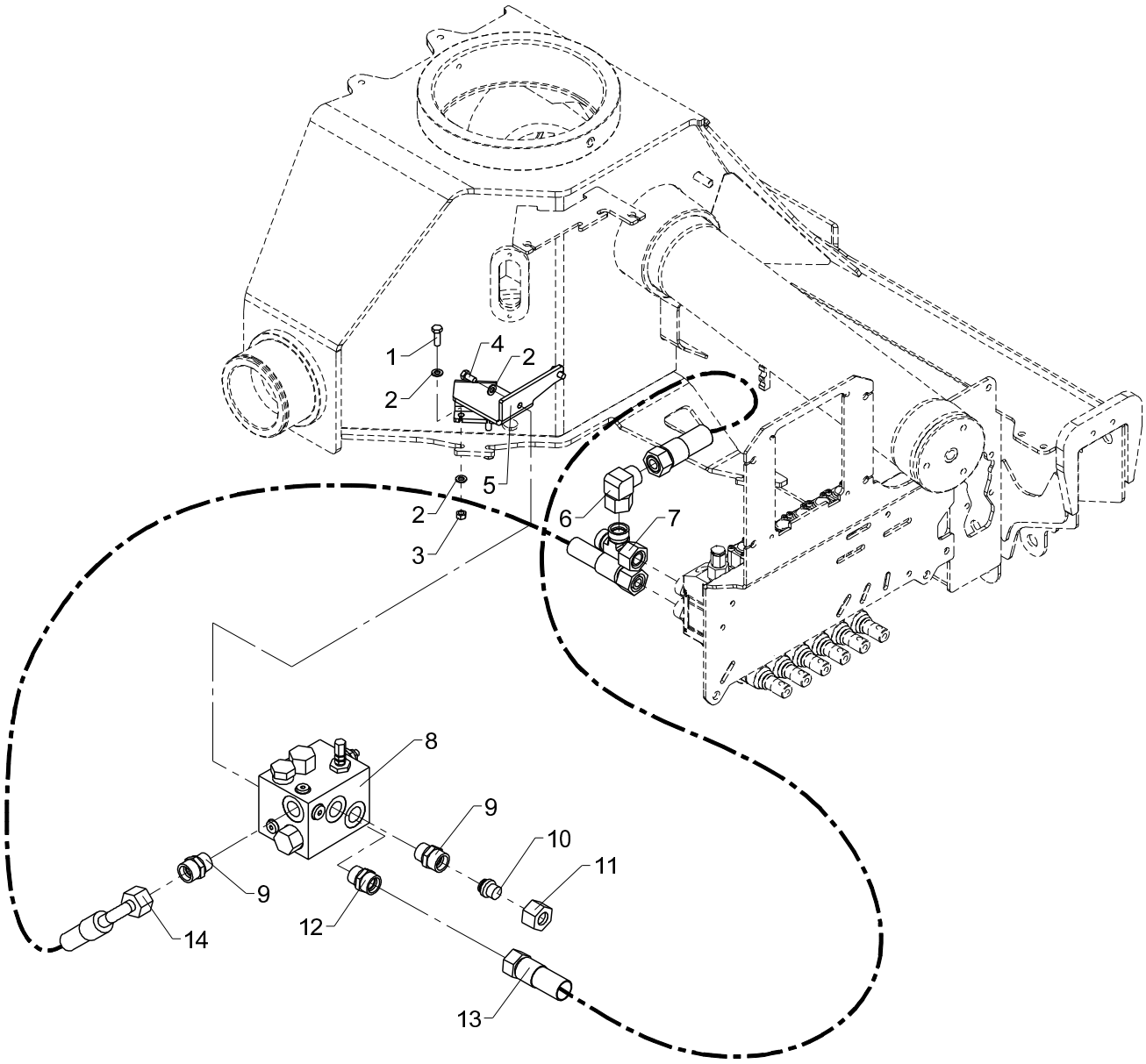
1
2
4
2
5
2
3
6
7
8
9
10
11
9
12
14
13

Obsolete

Kit for HDL-2 (std.)

535 05 350

From loader 1070001
To loader

Created 20-11-2008
Modified

Pos	Qty.	Part no.	Description	Remarks
1	2	30134	Set screw, stainless	M8 x 25
2	6	31147	Face washer, 8 mm	8 mm
3	2	30856	Nut, stainless	M8
4	2	30131	Set screw, stainless	M8 x 16
5	1	6340848	Bracket (HDL-2)	
6	1	25209	Elbow connection	EWSD 22 L
7	1	26149	Connection	ELSD 22 L
8	1	59018	HDL-2 valve	
9	2	26197	Connection	P-GEV 20 SR-WD
10	1	26361	Blanking plug	VSD 20 S
11	1	26109	Coupling nut	M 20 S
12	1	25169	Connection	P-GEV 22 LR-WD
13	1	62559	Hose	
14	1	62668	Hose	

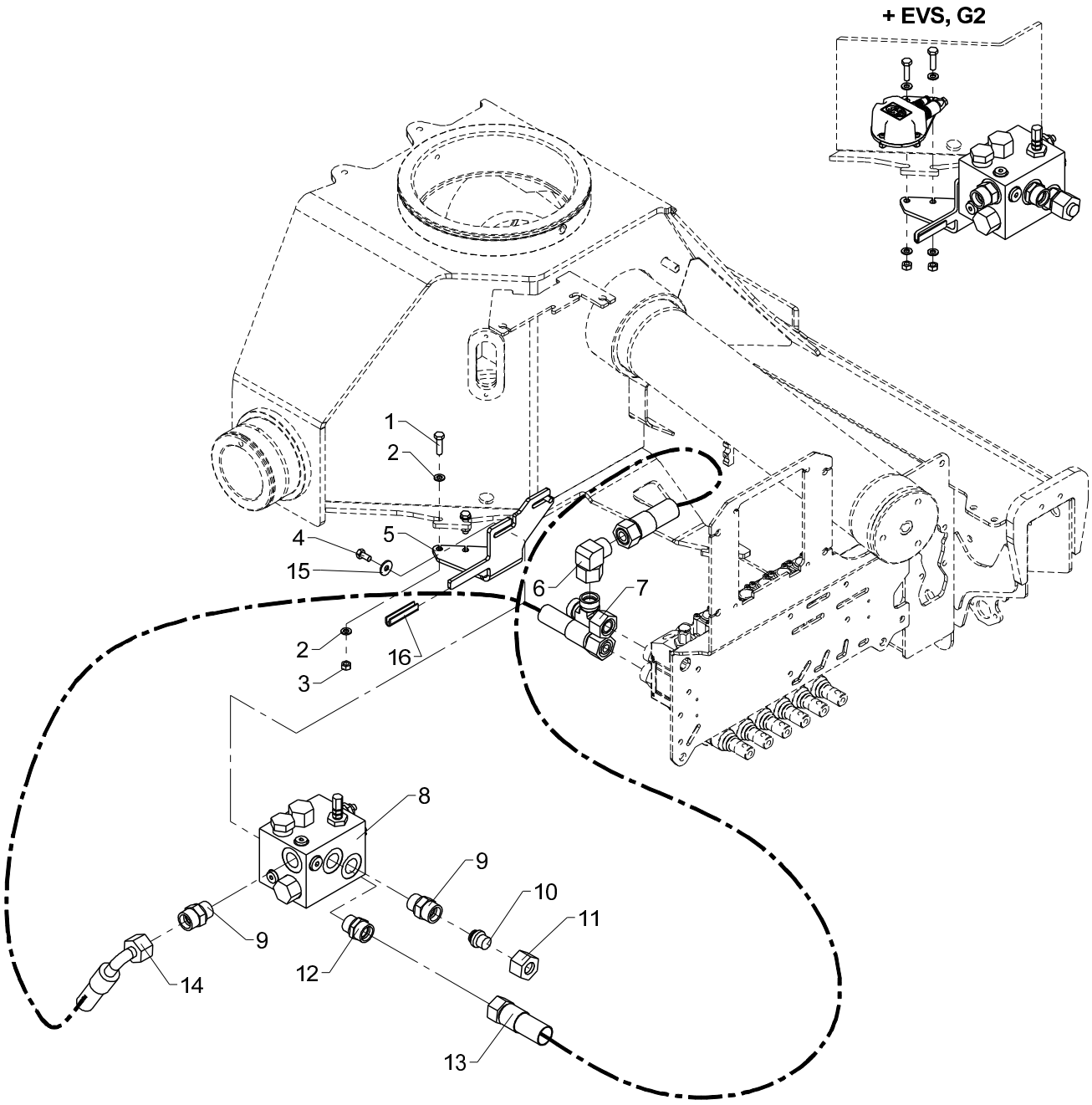
+ EVS, G2
1
2
4
5
15
6
7
2
16
3
8
9
10
11
9
12
14
13

Kit for HDL-2 (std.)

Pos	Qty.	Part no.	Description	Remarks
1	2	30135	Set screw, stainless	M8 x 30
2	4	31147	Face washer, 8 mm	
3	2	30856	Nut, stainless	M8
4	2	30131	Set screw, stainless	M8 x 16
5	1	6365274	Fittings (AIC 5062)	
6	1	25209	Elbow connection	EWSD 22 L
7	1	26149	Connection	ELSD 22 L
8	1	59018	HDL-2 valve	
9	2	26197	Connection	P-GEV 20 SR-WD
10	1	26361	Blanking plug	VSD 20 S
11	1	26109	Coupling nut	M 20 S
12	1	25169	Connection	P-GEV 22 LR-WD
13	1	62559	Hose	
14	1	62668	Hose	
15	2	31136	Washer, stainless	8 mm
16	1	46596	Rubber protection	60 mm

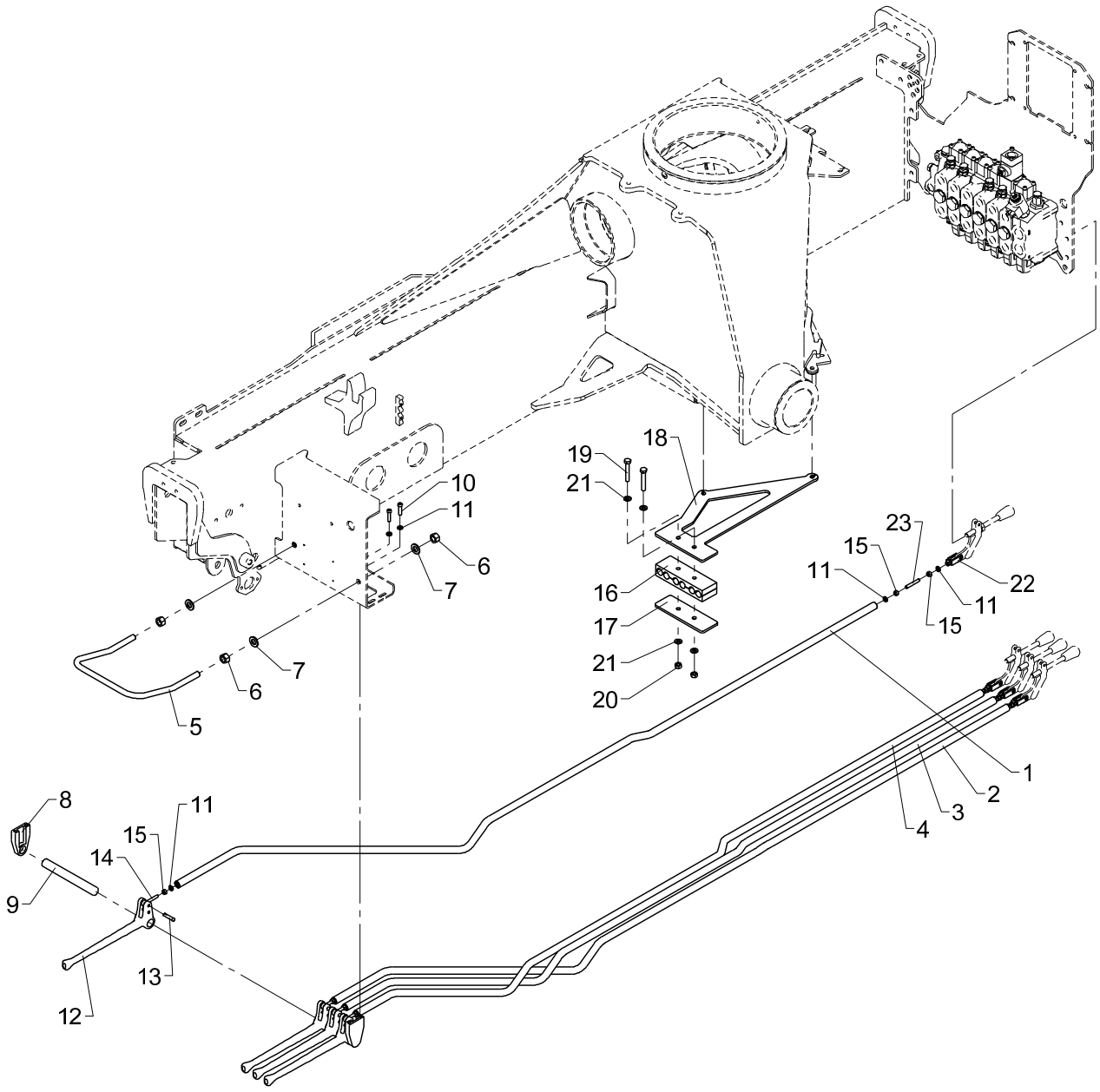
19
21
18
10
11
6
7
16
17
21
20
23
15
11
22
11
15
5
6
7
8
11
15
14
9
13
12
1
2
3
4

Cross-over controls, 4 functions

Pos	Qty.	Part no.	Description	Remarks
1	1	6341921	Connecting rod,cross-over ctrl	
2	1	6341922	Connecting rod,cross-over ctrl	
3	1	6341923	Connecting rod,cross-over ctrl	
4	1	6341924	Connecting rod,cross-over ctrl	
5	1	6340247	Safety guard	
6	4	30860	Nut, stainless	M12
7	4	32338	Washer	12 mm
8	2	63564	Bracket for pin	
9	1	6340248	Pin	
10	4	30340	Screw, stainless	6,0 x 25
11	16	32302	Face washer, stainless	6 mm
12	4	63443	Lever for dual controls	
13	4	63468	Split pin with spring lock	
14	4	32114	Pin	M6 x 40
15	12	30854	Nut, stainless	M6
16	2	68069	Guide	
17	1	6363248	Top plate	
18	1	6341247	Bracket f. cross controls	
19	2	30139	Steel bolt, stainless	M8 x 50
20	2	30856	Nut, stainless	M8
21	4	31147	Face washer, 8 mm	
22	4	48414	Clevis	
23	4	31007	Pointed screw	MSP6 x 40

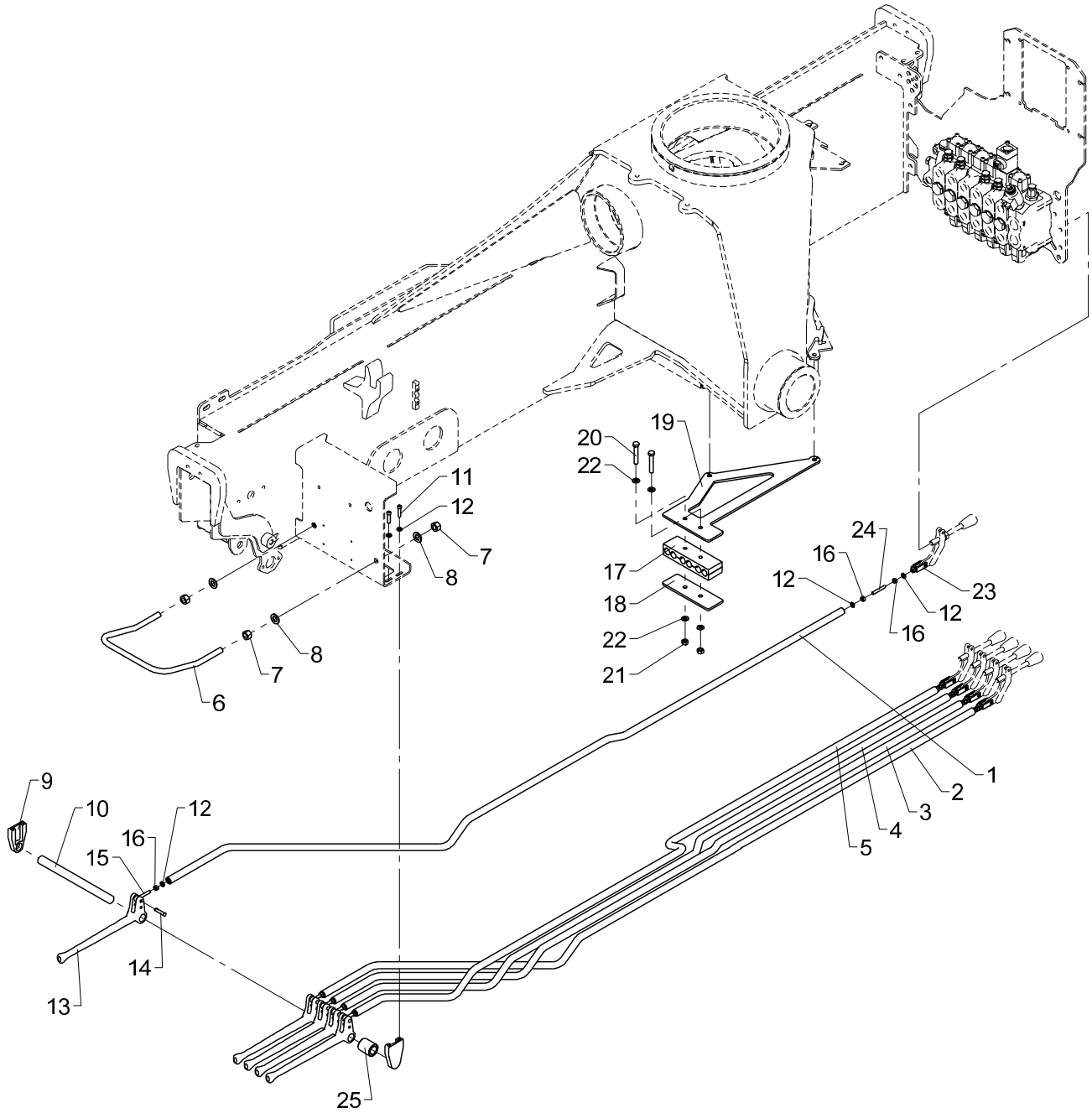
19
20
22
11
12
7
8
17
18
22
21
24
16
12
23
12
16
6
7
8
9
10
12
16
15
14
13
1
2
3
4
5
25

Cross-over controls, 5 functions

Pos	Qty.	Part no.	Description	Remarks
1	1	6341921	Connecting rod,cross-over ctrl	
2	1	6341922	Connecting rod,cross-over ctrl	
3	1	6341923	Connecting rod,cross-over ctrl	
4	1	6341924	Connecting rod,cross-over ctrl	
5	1	6341925	Connecting rod,cross-over ctrl	
6	1	6340247	Safety guard	
7	4	30860	Nut, stainless	M12
8	4	32338	Washer	12 mm
9	2	63564	Bracket for pin	
10	1	6340249	Pin	
11	4	30340	Screw, stainless	6,0 x 25
12	19	32302	Face washer, stainless	6 mm
13	5	63443	Lever for dual controls	
14	5	63468	Split pin with spring lock	
15	5	32114	Pin	M6 x 40
16	15	30854	Nut, stainless	M6
17	2	68069	Guide	
18	1	6363248	Top plate	
19	1	6341247	Bracket f. cross controls	
20	2	30139	Steel bolt, stainless	M8 x 50
21	2	30856	Nut, stainless	M8
22	4	31147	Face washer, 8 mm	
23	5	48414	Clevis	
24	5	31007	Pointed screw	MSP6 x 40
25	1	63598	Bushing	ø30/ø20 x 35

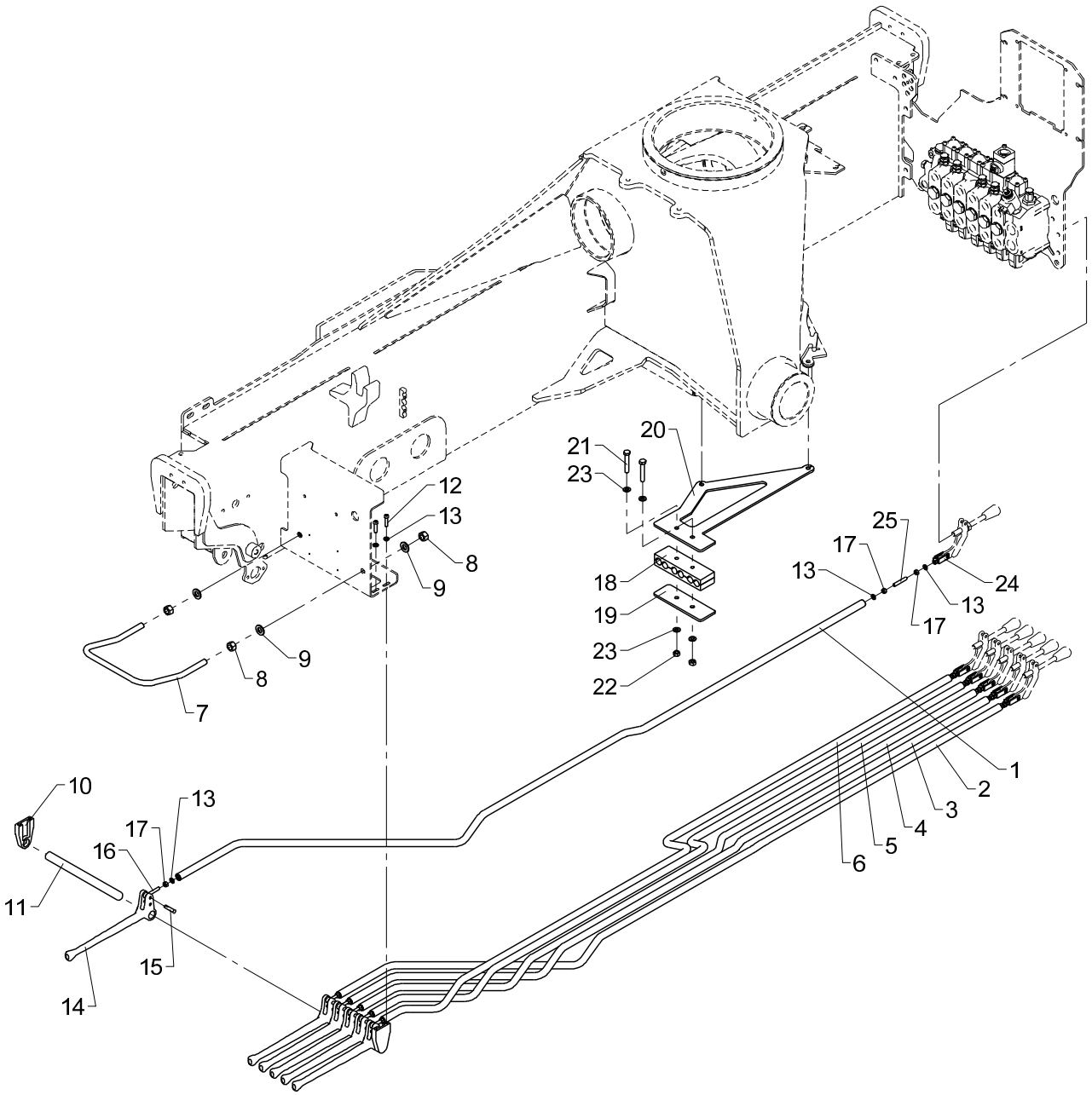
20
21
23
12
13
8
9
18
19
23
22
25
17
13
24
13
17
9
8
7
10
13
17
16
11
15
14
1
2
3
4
5
6

Cross-over controls, 6 functions

Pos	Qty.	Part no.	Description	Remarks
1	1	6341921	Connecting rod,cross-over ctrl	
2	1	6341922	Connecting rod,cross-over ctrl	
3	1	6341923	Connecting rod,cross-over ctrl	
4	1	6341924	Connecting rod,cross-over ctrl	
5	1	6341925	Connecting rod,cross-over ctrl	
6	1	6341926	Connecting rod,cross-over ctrl	
7	1	6340247	Safety guard	
8	4	30860	Nut, stainless	M12
9	4	32338	Washer	12 mm
10	2	63564	Bracket for pin	
11	1	6340249	Pin	
12	4	30340	Screw, stainless	6,0 x 25
13	22	32302	Face washer, stainless	6 mm
14	6	63443	Lever for dual controls	
15	6	63468	Split pin with spring lock	
16	6	32114	Pin	M6 x 40
17	18	30854	Nut, stainless	M6
18	2	68069	Guide	
19	1	6363248	Top plate	
20	1	6341247	Bracket f. cross controls	
21	2	30139	Steel bolt, stainless	M8 x 50
22	2	30856	Nut, stainless	M8
23	4	31147	Face washer, 8 mm	
24	6	48414	Clevis	
25	6	31007	Pointed screw	MSP6 x 40

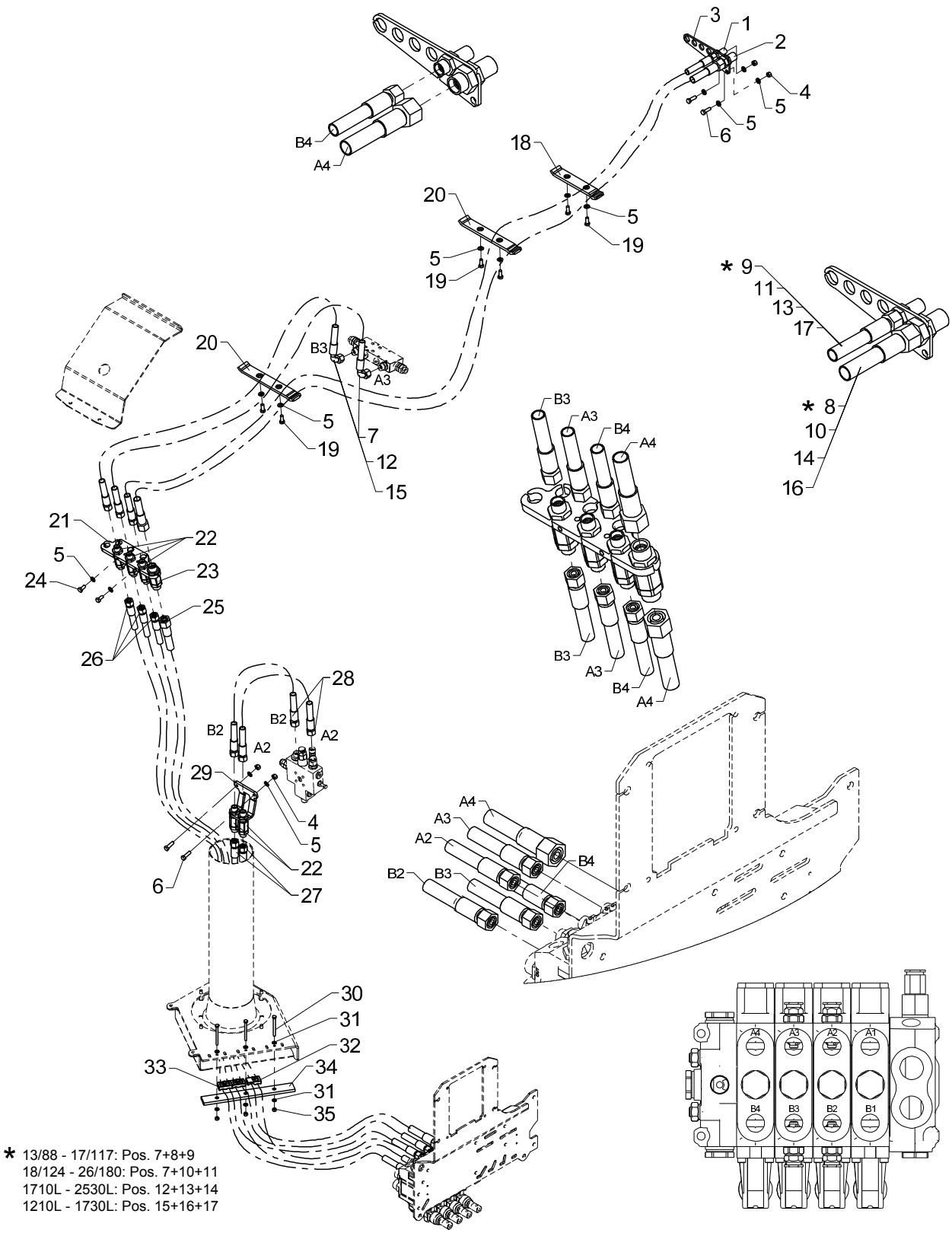

* 13/88 - 17/117: Pos. 7+8+9
18/124 - 26/180: Pos. 7+10+11
1710L - 2530L: Pos. 12+13+14
1210L - 1730L: Pos. 15+16+17

Hose kit, loader functions, std.

Pos	Qty.	Part no.	Description	Remarks
		6343010	Hose kit, column, std.	
		6343080	Hose kit, boom cylinder	
		6343090	Hose kit, main boom, std.	
		6346450	Hose kit, main boom, std.V	
		6355110	Hose kit, main boom, std.	1210L/1730L
		6355470	Hose kit, main boom, std.	1710L/2530L
		6343250	Clamp kit, std.	
1	1	25201	Bulkhead connection	GSS 12 L
2	1	26335	Bulkhead connection	P-GSV 16 S
3	1	6340315	Bracket, bulkhead connections	
4	4	30886	Lock nut, stainless	M8
5	14	31147	Face washer, 8 mm	8 mm
6	4	30134	Set screw, stainless	M8 x 25
7	2	0017690	Hose	3/8" x 1300 mm V90/L
8	1	56382	Hose	
9	1	0017600	Hose	
10	1	56529	Hose	1/2 X 3500 mm L/L
11	1	0017770	Hose	
12	2	56950	Hose 3/8" x 2450 L/90 (12L)	
13	1	56951	Hose 3/8" x 4650 L/L (12L)	
14	1	56952	Hose 1/2" x 4650 L/L(16S)	
15	2	56917	Hose	
16	1	56918	Hose	
17	1	56916	Hose	
18	1	6340211	Clamp, complete	
19	6	30132	Set screw, stainless	
20	2	6340213	Clamp, complete	
21	1	6340252	Bracket for swivel coupling	
22	5	58478	Swivel coupling	M18 x 1,5 12L
23	1	58479	Swivel coupling	M24 x 1,5 16L
24	2	30131	Set screw, stainless	M8 x 16
25	1	62846	Hose	1/2" x 2750 L/L (16S, M24X1.5)
26	3	0015130	Hose	3/8" x 2750 L/L (12L)
27	2	0015120	Hose	3/8" x 1400 L/L (12L)
28	2	0015500	Hose	
29	1	6340251	Clamp for swivel coupling	
30	3	30199	Steel bolt, stainless	M6 x 65
31	6	32302	Face washer, stainless	6 mm
32	1	63562	Clamp	
33	2	63561	Clamp	
34	1	6340238	Clamp, complete	

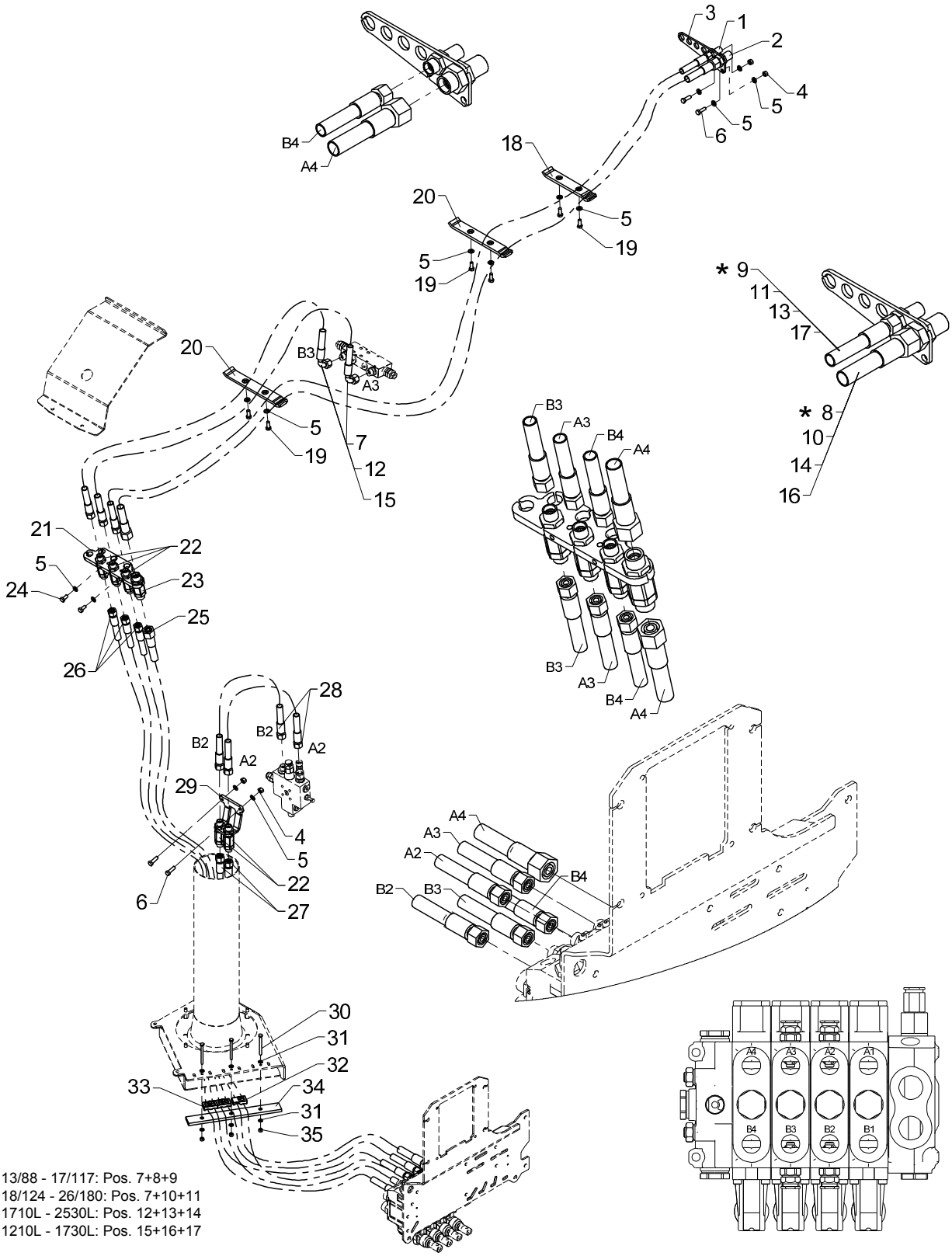

* 13/88 - 17/117: Pos. 7+8+9
18/124 - 26/180: Pos. 7+10+11
1710L - 2530L: Pos. 12+13+14
1210L - 1730L: Pos. 15+16+17

Hose kit, loader functions, std.

Pos	Qty.	Part no.	Description	Remarks
35	3	30884	Lock nut, stainless	M6

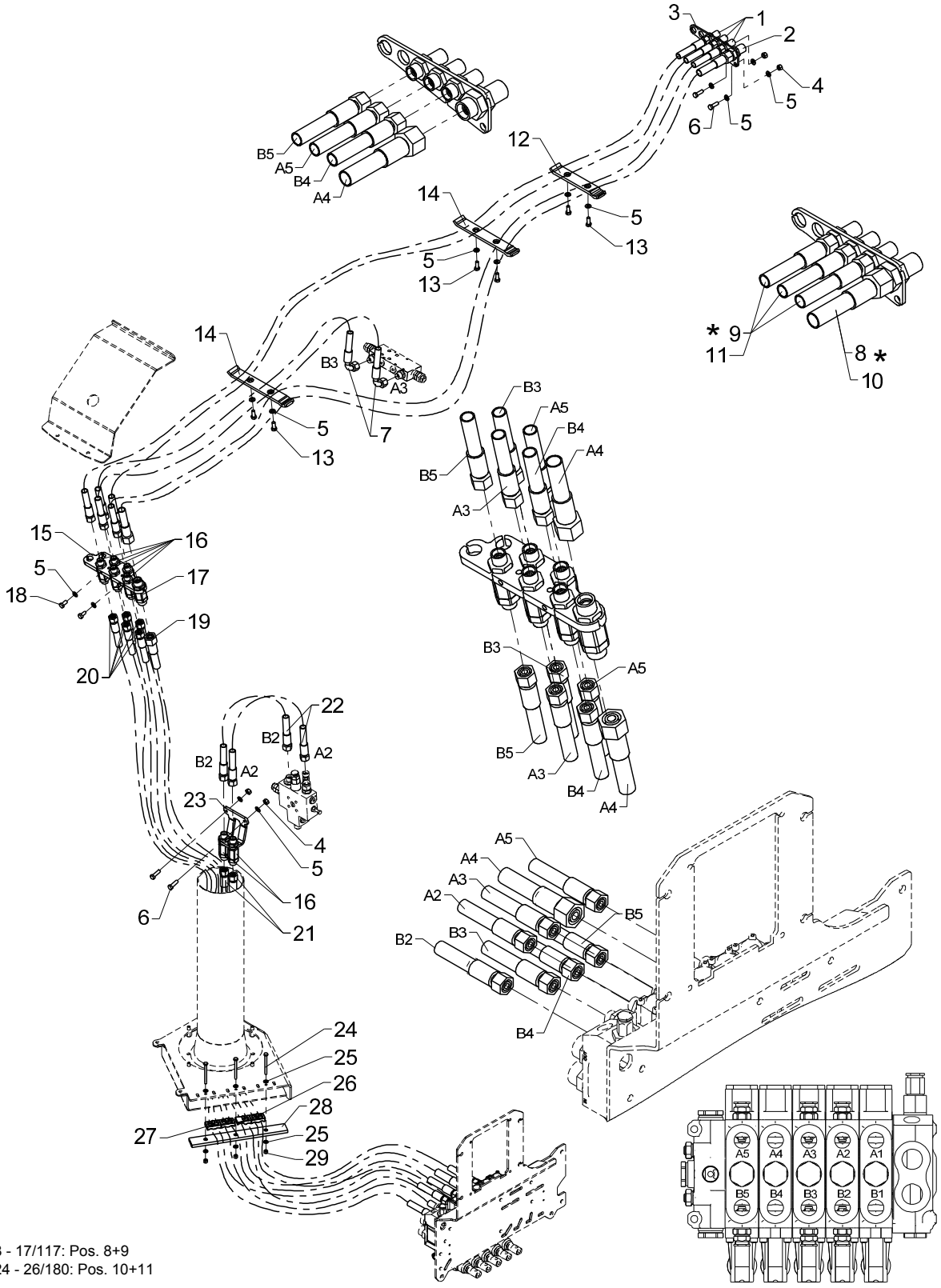

* 13/88 - 17/117: Pos. 8+9
18/124 - 26/180: Pos. 10+11

Hose kit, loader functions, 1 EXV.

Pos	Qty.	Part no.	Description	Remarks
		6343040	Hose kit, column, 1 EXV	
		6343110	Hose kit, main boom, 1 EXV	
		6346470	Hose kit, main boom, 1 EXV	
		6343080	Hose kit, boom cylinder	
		6343260	Clamp, 1 EXV	
1	3	25201	Bulkhead connection	GSS 12 L
2	1	26335	Bulkhead connection	P-GSV 16 S
3	1	6340315	Bracket, bulkhead connections	
4	4	30886	Lock nut, stainless	M8
5	14	31147	Face washer, 8 mm	8 mm
6	4	30134	Set screw, stainless	M8 x 25
7	2	0017690	Hose	
8	1	56382	Hose	1/2 X 3400 mm L/L
9	3	0017600	Hose	
10	1	56529	Hose	1/2 X 3500 mm L/L
11	3	0017770	Hose	
12	1	6340211	Clamp, complete	
13	6	30132	Set screw, stainless	M8 x 20
14	2	6340213	Clamp, complete	
15	1	6340252	Bracket for swivel coupling	
16	7	58478	Swivel coupling	M18 x 1,5 12L
17	1	58479	Swivel coupling	M24 x 1,5 16L
18	2	30131	Set screw, stainless	M8 x 16
19	1	62846	Hose	1/2 X 2750 M24X1.5 L/L
20	5	0015130	Hose	
21	2	0015120	Hose	
22	2	0015500	Hose	
23	1	6340251	Clamp for swivel coupling	
24	3	30199	Steel bolt, stainless	M6 x 65
25	6	32302	Face washer, stainless	6 mm
26	1	63562	Clamp	
27	3	63561	Clamp	
28	1	6340238	Clamp, complete	
29	3	30884	Lock nut, stainless	M6

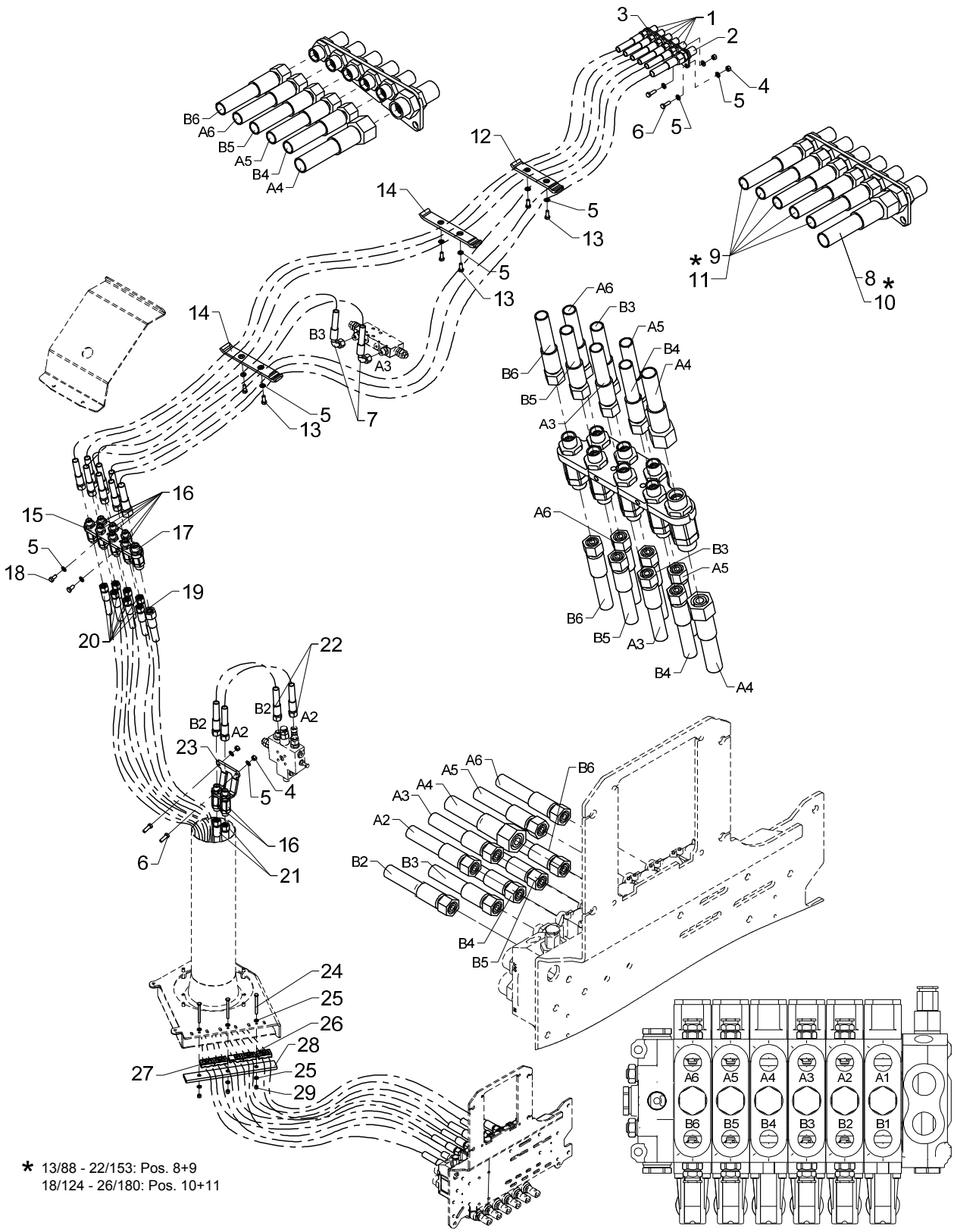
* 13/88 - 22/153: Pos. 8+9
18/124 - 26/180: Pos. 10+11

Hose kit, loader functions, 2 EXV.

Pos	Qty.	Part no.	Description	Remarks
		6343050	Hose kit, column, 2 EXV	
		6343120	Hose kit, main boom, 2 EXV	1300K-1830K, 2310S
		6346480	Hose kit, main boom, 2 EXV	1800K-2630K
		6343080	Hose kit, boom cylinder	
		6343270	Clamp, 2 EXV	
1	5	25201	Bulkhead connection	GSS 12 L
2	1	26335	Bulkhead connection	P-GSV 16 S
3	1	6340315	Bracket, bulkhead connections	
4	4	30886	Lock nut, stainless	M8
5	14	31147	Face washer, 8 mm	8 mm
6	4	30134	Set screw, stainless	M8 x 25
7	2	0017690	Hose	
8	1	56382	Hose	1/2 X 3400 mm L/L
9	5	0017600	Hose	
10	1	56529	Hose	1/2 X 3500 mm L/L
11	5	0017770	Hose	
12	1	6340211	Clamp, complete	
13	6	30132	Set screw, stainless	M8 x 20
14	2	6340213	Clamp, complete	
15	1	6340252	Bracket for swivel coupling	
16	9	58478	Swivel coupling	M18 x 1,5 12L
17	1	58479	Swivel coupling	M24 x 1,5 16L
18	2	30131	Set screw, stainless	M8 x 16
19	1	62846	Hose	1/2 X 2750 M24X1.5 L/L
20	7	0015130	Hose	
21	2	0015120	Hose	
22	2	0015500	Hose	
23	1	6340251	Clamp for swivel coupling	
24	3	30199	Steel bolt, stainless	M6 x 65
25	6	32302	Face washer, stainless	6 mm
26	1	63562	Clamp	
27	4	63561	Clamp	
28	1	6340238	Clamp, complete	
29	3	30884	Lock nut, stainless	M6

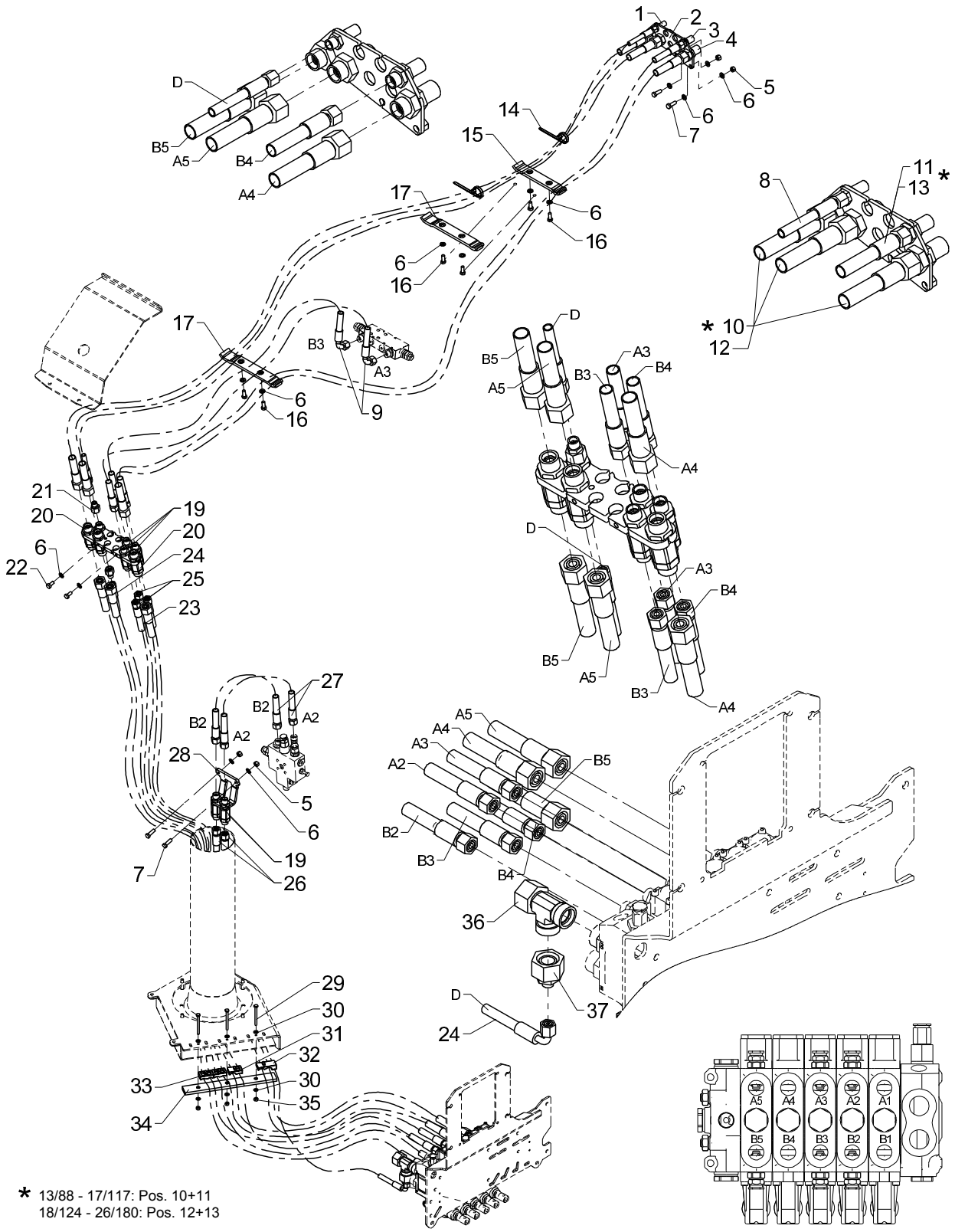

* 13/88 - 17/117: Pos. 10+11
18/124 - 26/180: Pos. 12+13

Hose kit, loader functions, std./winch

Pos	Qty.	Part no.	Description	Remarks
		6343020	Hose kit, column, winch	
		6343080	Hose kit, boom cylinder	
		6343100	Hose kit, main boom, winch	
		6346460	Hose kit, main boom, winch	
		6343290	Clamp, winch	
1	1	25261	Bulkhead connection	P-GSV 8 L
2	1	6340986	Bracket, bulkhead connections	
3	1	25201	Bulkhead connection	GSS 12 L
4	3	26335	Bulkhead connection	P-GSV 16 S
5	4	30886	Lock nut, stainless	M8
6	14	31147	Face washer, 8 mm	8 mm
7	4	30134	Set screw, stainless	M8 x 25
8	1	62539	Hose	1/4 X 3430 M14 X 1.5 L/L
9	2	0017690	Hose	
10	3	56382	Hose	1/2 X 3400 mm L/L
11	1	0017600	Hose	
12	3	56529	Hose	1/2 X 3500 mm L/L
13	1	0017770	Hose	
14	2	27275	Cable tie, black, 7.6x385mm	7,6 x 390mm
15	1	6340211	Clamp, complete	
16	6	30132	Set screw, stainless	M8 x 20
17	2	6340217	Clamp, complete	
18	1	6340253	Bracket for swivel coupling	
19	6	58478	Swivel coupling	M18 x 1,5 12L
20	3	58479	Swivel coupling	M24 x 1,5 16L
21	2	26101	Reducing connection	REDSDN 12/8 L
22	2	30131	Set screw, stainless	M8 x 16
23	3	62846	Hose	1/2 X 2750 M24X1.5 L/L
24	1	56024	Hose	1/4X2800 M14X1.5 L/90
25	3	0015130	Hose	
26	2	0015120	Hose	
27	2	0015500	Hose	
28	1	6340251	Clamp for swivel coupling	
29	3	30199	Steel bolt, stainless	M6 x 65
30	6	32302	Face washer, stainless	6 mm
31	1	63562	Clamp	
32	1	63563	Clamp	
33	2	63561	Clamp	
34	1	6340238	Clamp, complete	
35	3	30884	Lock nut, stainless	M6
36	1	26149	Connection	ELSD 22 L

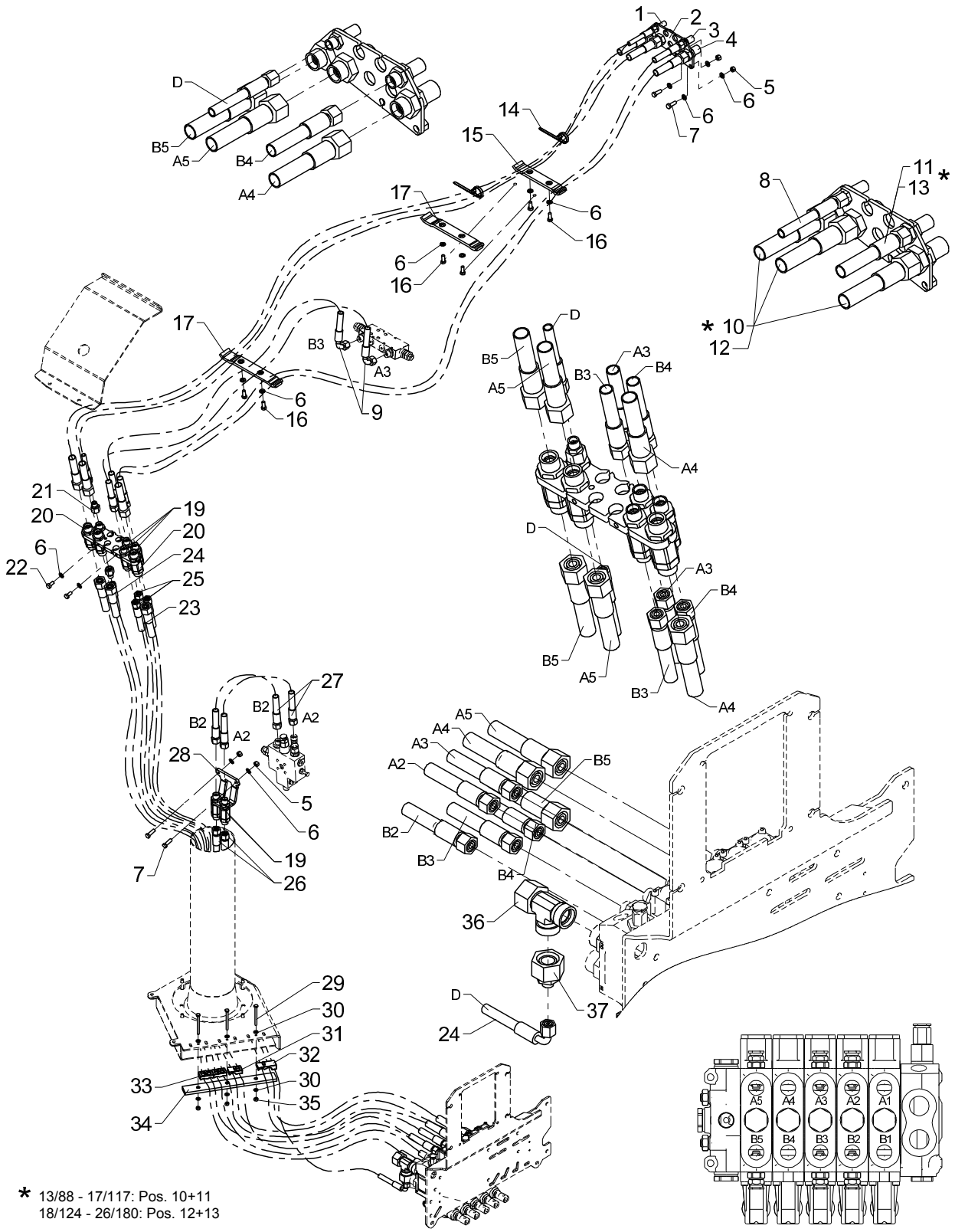

* 13/88 - 17/117: Pos. 10+11
18/124 - 26/180: Pos. 12+13

Hose kit, loader functions, std./winch

Pos	Qty.	Part no.	Description	Remarks
37	1	25286	Reducing connection	REDSDN 22/8 L

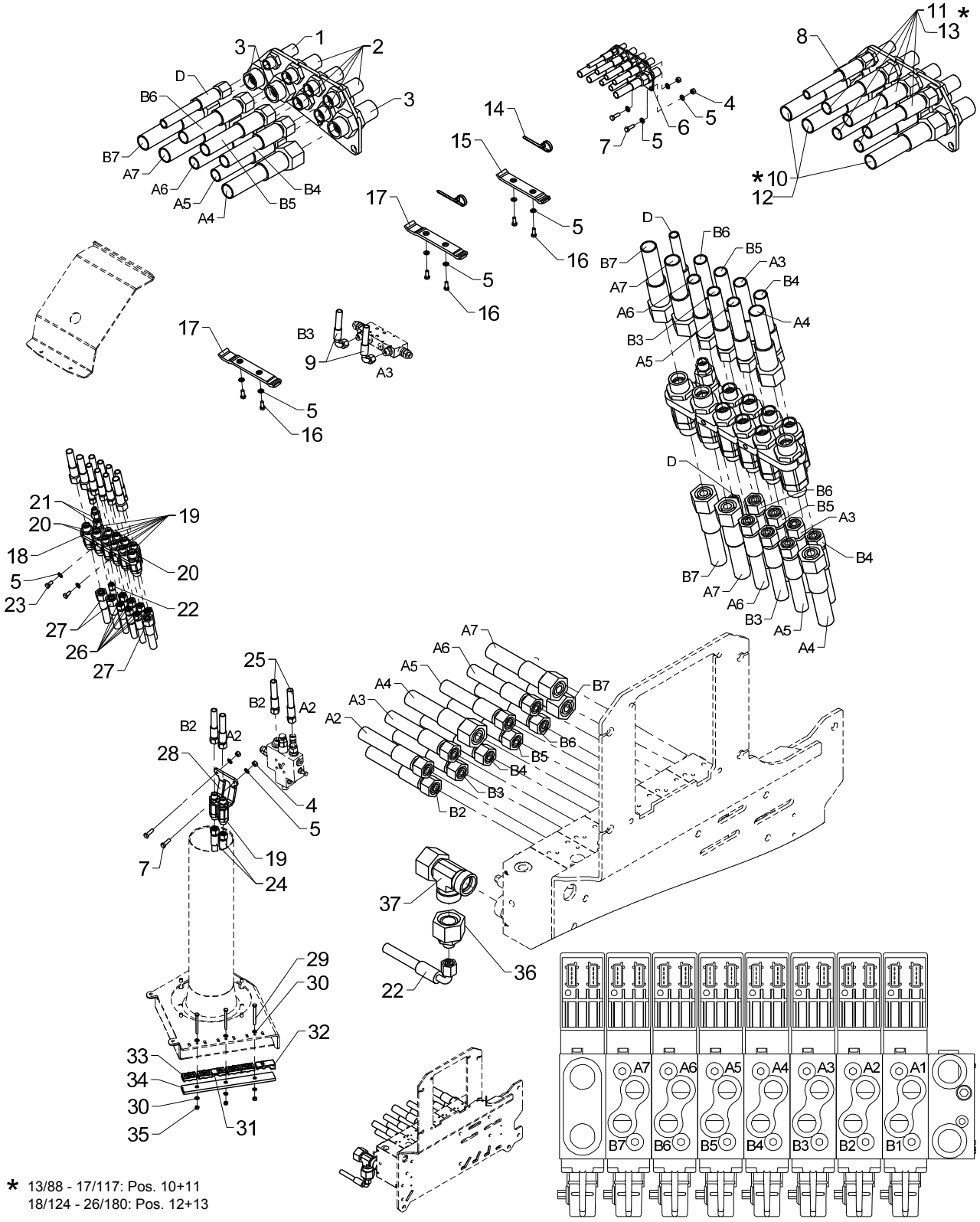

* 13/88 - 17/117: Pos. 10+11
18/124 - 26/180: Pos. 12+13

Hose kit, loader functions, 2 EXV/winch

Pos	Qty.	Part no.	Description	Remarks
		6343030	Hose kit, column, 2 EXV/winch	
		6343130	Hose kit, main boom, 2 EXV/win	
		6346490	Hose kit, main boom, 2 EXV	
		6343080	Hose kit, boom cylinder	
		6343290	Clamp, winch	
1	1	25261	Bulkhead connection	P-GSV 8 L
2	5	25201	Bulkhead connection	GSS 12 L
3	3	26335	Bulkhead connection	P-GSV 16 S
4	4	30886	Lock nut, stainless	M8
5	14	31147	Face washer, 8 mm	8 mm
6	1	6340986	Bracket, bulkhead connections	
7	4	30134	Set screw, stainless	M8 x 25
8	1	62539	Hose	1/4 X 3430 M14 X 1.5 L/L
9	2	0017690	Hose	
10	3	56382	Hose	1/2 X 3400 mm L/L
11	5	0017600	Hose	
12	3	56529	Hose	1/2 X 3500 mm L/L
13	5	0017770	Hose	
14	2	27275	Cable tie, black, 7.6x385mm	7,6 x 390mm
15	1	6340211	Clamp, complete	
16	6	30132	Set screw, stainless	M8 x 20
17	2	6340217	Clamp, complete	
18	1	6340253	Bracket for swivel coupling	
19	10	58478	Swivel coupling	M18 x 1,5 12L
20	3	58479	Swivel coupling	M24 x 1,5 16L
21	2	26101	Reducing connection	REDSDN 12/8 L
22	1	56024	Hose	1/4X2800 M14X1.5 L/90
23	2	30131	Set screw, stainless	M8 x 16
24	2	0015120	Hose	
25	2	0015500	Hose	
26	7	0015130	Hose	
27	3	62846	Hose	1/2 X 2750 M24X1.5 L/L
28	1	6340251	Clamp for swivel coupling	
29	3	30199	Steel bolt, stainless	M6 x 65
30	6	32302	Face washer, stainless	6 mm
31	1	63562	Clamp	
32	1	63563	Clamp	
33	4	63561	Clamp	
34	1	6340238	Clamp, complete	
35	3	30884	Lock nut, stainless	M6
36	1	25286	Reducing connection	REDSDN 22/8 L

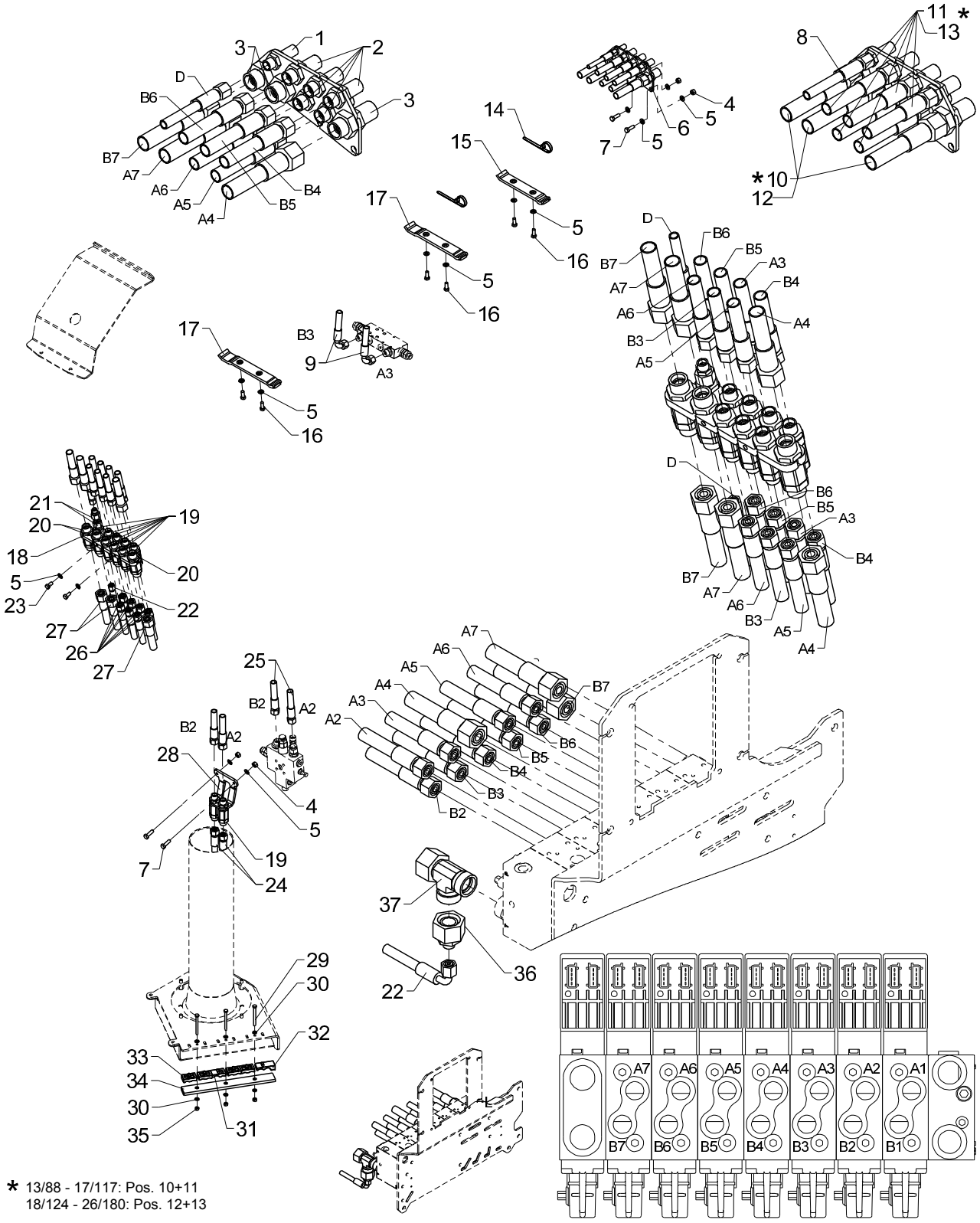

* 13/88 - 17/117: Pos. 10+11
18/124 - 26/180: Pos. 12+13

Hose kit, loader functions, 2 EXV/winch

From loader 1070001
To loader

Created 24-11-2008
Modified 30-03-2009

Pos	Qty.	Part no.	Description	Remarks
37	1	26149	Connection	ELSD 22 L

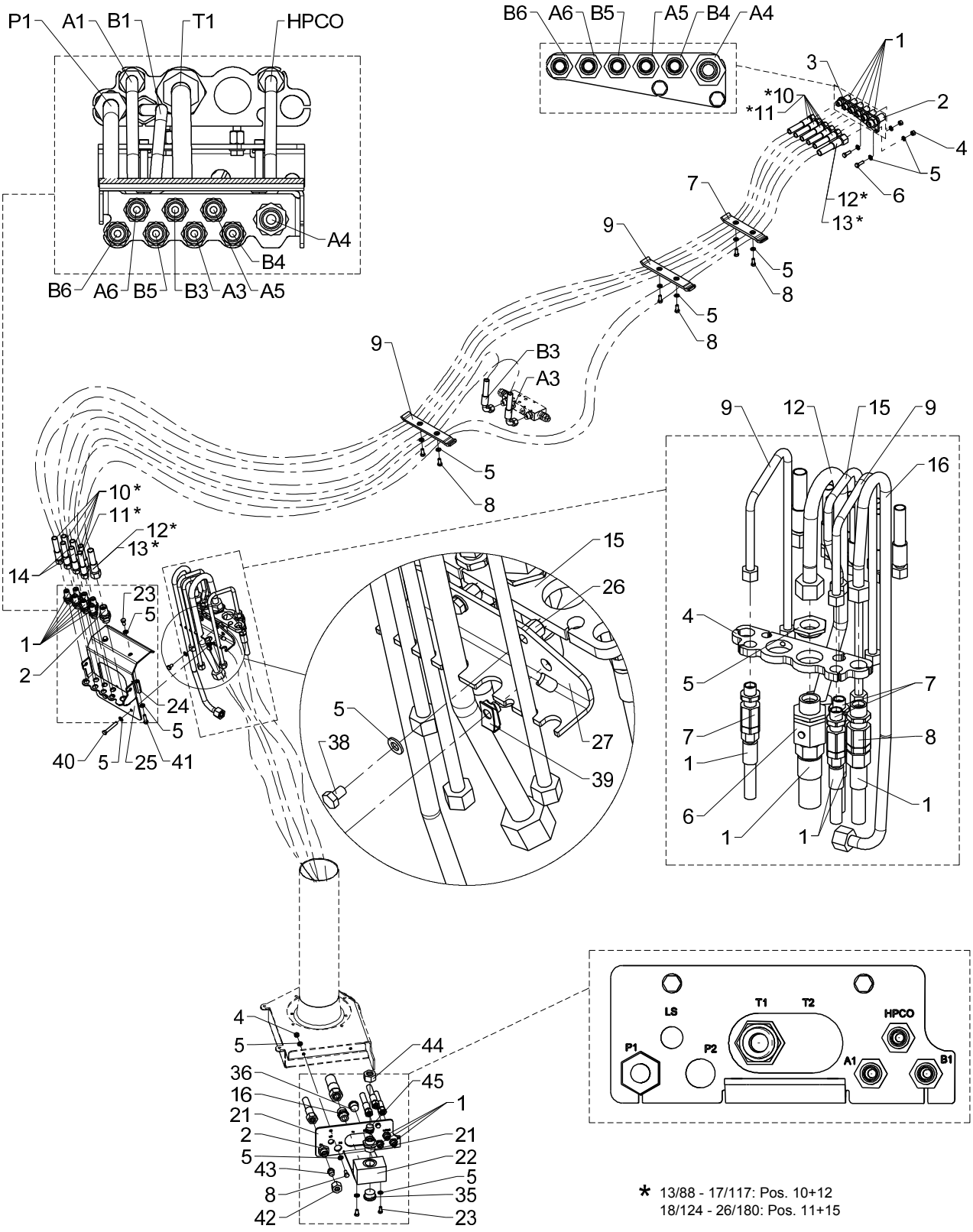

* 13/88 - 17/117: Pos. 10+12
18/124 - 26/180: Pos. 11+15

Hose kit, loader functions, TS (1-circuit fixed)

Pos	Qty.	Part no.	Description	Remarks
		6341750	Hose kit, loader functions, TS	1 kreds fast
		6343120	Hose kit, main boom, 2 EXV	1300K/1500K
		6346480	Hose kit, main boom, 2 EXV	1800K/2200K
1	15	25201	Bulkhead connection	GSS 12 L
2	3	26335	Bulkhead connection	P-GSV 16 S
3	1	6340315	Bracket, bulkhead connections	
4	4	30886	Lock nut, stainless	M8
5	28	31147	Face washer, 8 mm	8 mm
6	2	30134	Set screw, stainless	M8 x 25
7	1	6340211	Clamp, complete	
8	12	30132	Set screw, stainless	M8 x 20
9	4	6340213	Clamp, complete	
10	5	0017600	Hose	
11	5	0017770	Hose	
12	1	56382	Hose	
13	1	56529	Hose	1/2 X 3500 mm L/L
14	2	0017690	Hose	3/8" x 1300 mm V90/L
15	1	6340221	Bracket for swivel couplingTS	
16	1	26197	Connection	P-GEV 20 SR-WD
17	1	6340839	Nut	
18	1	59823	Swivel coupling	M30 x 2 20S
19	3	58478	Swivel coupling	M18 x 1,5 12L
20	1	58479	Swivel coupling	M24 x 1,5 16L
21	1	6340842	Plate (TS)	
22	1	6340844	Connecting block	
23	4	30131	Set screw, stainless	M8 x 16
24	2	6340222	Spacer	
25	1	6340224	Bracket (TS)	
26	2	6340223	Spacer	
27	1	6340225	Clamp	
28	2	6340837	Pipe (slewing - TS)	
29	1	6340833	Pipe (T1 - TS)	
30	1	6340836	Pipe (HPCO - TS)	
31	1	6340831	Pipe (P1 - TS)	
32	3	0017240	Hose	
33	1	56519	Hose	
34	1	56518	Hose	
35	1	26321	Plug	VS-R 1" WD
36	1	26355	Plug	VS-R-3/4 WD
37	1	26122	Connection	P-GEV 22 LR 1-WD
38	2	30130	Set screw, stainless	M8 x 12

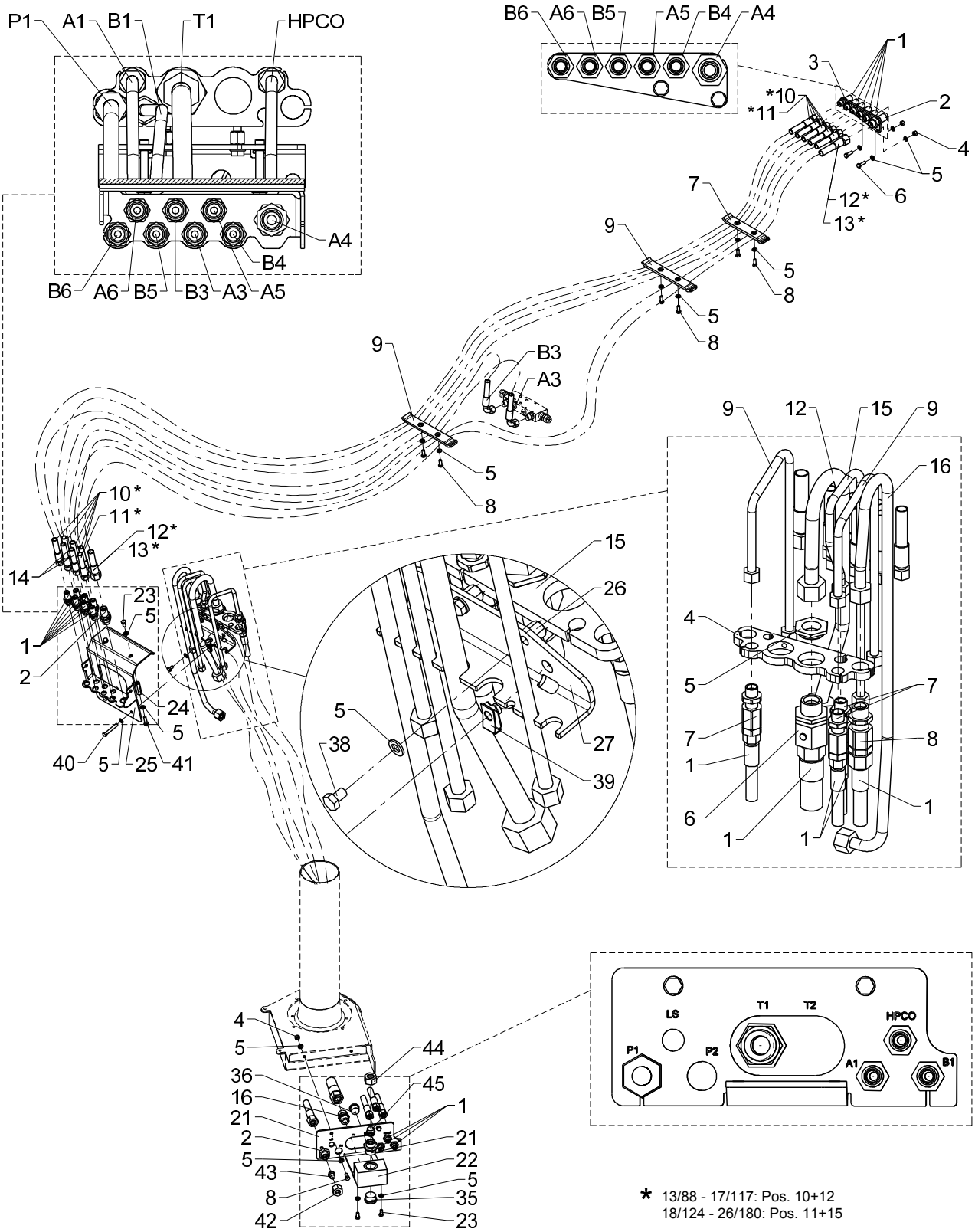

* 13/88 - 17/117: Pos. 10+12
18/124 - 26/180: Pos. 11+15

Hose kit, loader functions, TS (1-circuit fixed)

Pos	Qty.	Part no.	Description	Remarks
39	2	31069	Clip	M8 1,5 - 5,5 mm.
40	2	30140	Steel bolt, stainless	M8 x 55
41	2	30135	Set screw, stainless	M8 x 30
42	1	26338	Coupling nut	M 16 S
43	1	26343	Blanking plug	VSD 16 S
44	1	25186	Coupling nut	M 22 L
45	1	26301	Blanking plug	VSD 22 L

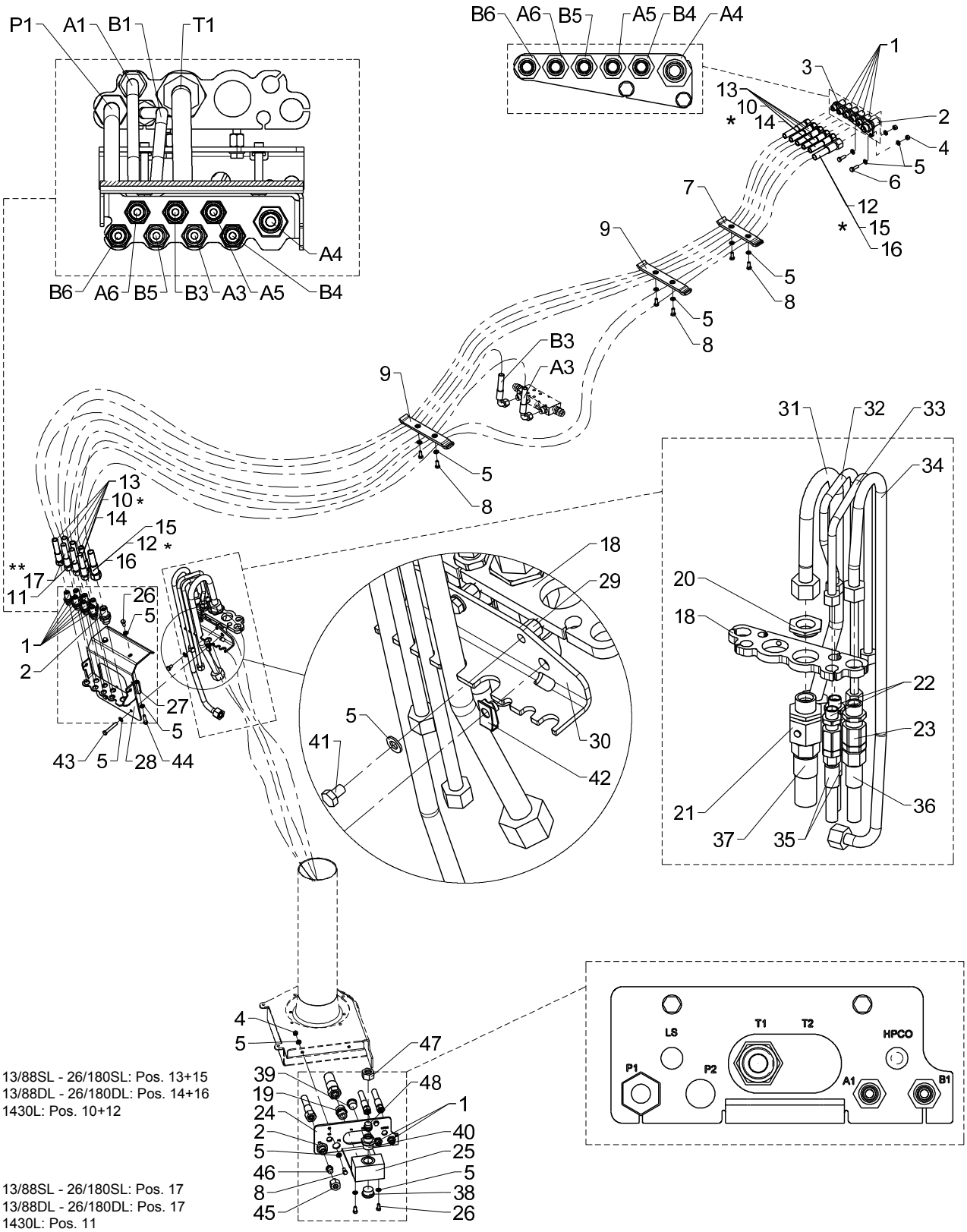

* 13/88SL - 26/180SL: Pos. 13+15
13/88DL - 26/180DL: Pos. 14+16
1430L: Pos. 10+12

** 13/88SL - 26/180SL: Pos. 17
13/88DL - 26/180DL: Pos. 17
1430L: Pos. 11

Hose kit, loader functions TS (HC, 1 circuit, fixed flow, excl. CE)

Pos	Qty.	Part no.	Description	Remarks
		6341690	Hose kit, loader fcts.TS	1 kreds fast, ekskl. CE
		6343120	Hose kit, main boom, 2 EXV	1300K/1500K
		6346480	Hose kit, main boom, 2 EXV	1800K/2200K
1	14	25201	Bulkhead connection	GSS 12 L
2	3	26335	Bulkhead connection	P-GSV 16 S
3	1	6340315	Bracket, bulkhead connections	
4	4	30886	Lock nut, stainless	M8
5	24	31147	Face washer, 8 mm	8 mm
6	2	30134	Set screw, stainless	M8 x 25
7	1	6340211	Clamp, complete	
8	8	30132	Set screw, stainless	M8 x 20
9	2	6340213	Clamp, complete	
10	5	56916	Hose	
11	2	56917	Hose	
12	1	56918	Hose	
13	5	0017600	Hose	
14	5	0017770	Hose	
15	1	56382	Hose	1/2 X 3400 mm L/L
16	1	56529	Hose	1/2 X 3500 mm L/L
17	2	0017690	Hose	
18	1	6340221	Bracket for swivel couplingTS	
19	1	26197	Connection	P-GEV 20 SR-WD
20	1	6340839	Nut	
21	1	59823	Swivel coupling	M30 x 2 20S
22	2	58478	Swivel coupling	M18 x 1,5 12L
23	1	58479	Swivel coupling	M24 x 1,5 16L
24	1	6340842	Plate (TS)	
25	1	6340844	Connecting block	
26	4	30131	Set screw, stainless	M8 x 16
27	2	6340222	Spacer	
28	1	6340224	Bracket (TS)	
29	2	6340223	Spacer	
30	1	6340225	Clamp	
31	1	6340833	Pipe (T1 - TS)	
32	1	6340836	Pipe (HPCO - TS)	
33	1	6340837	Pipe (slewing - TS)	
34	1	6340831	Pipe (P1 - TS)	
35	2	0017240	Hose	
36	1	56519	Hose	
37	1	56518	Hose	
38	1	26321	Plug	VS-R 1" WD

18/129, 20/138, 22/153

63 46 480
63 43 120
Internal ref. 63 41 690

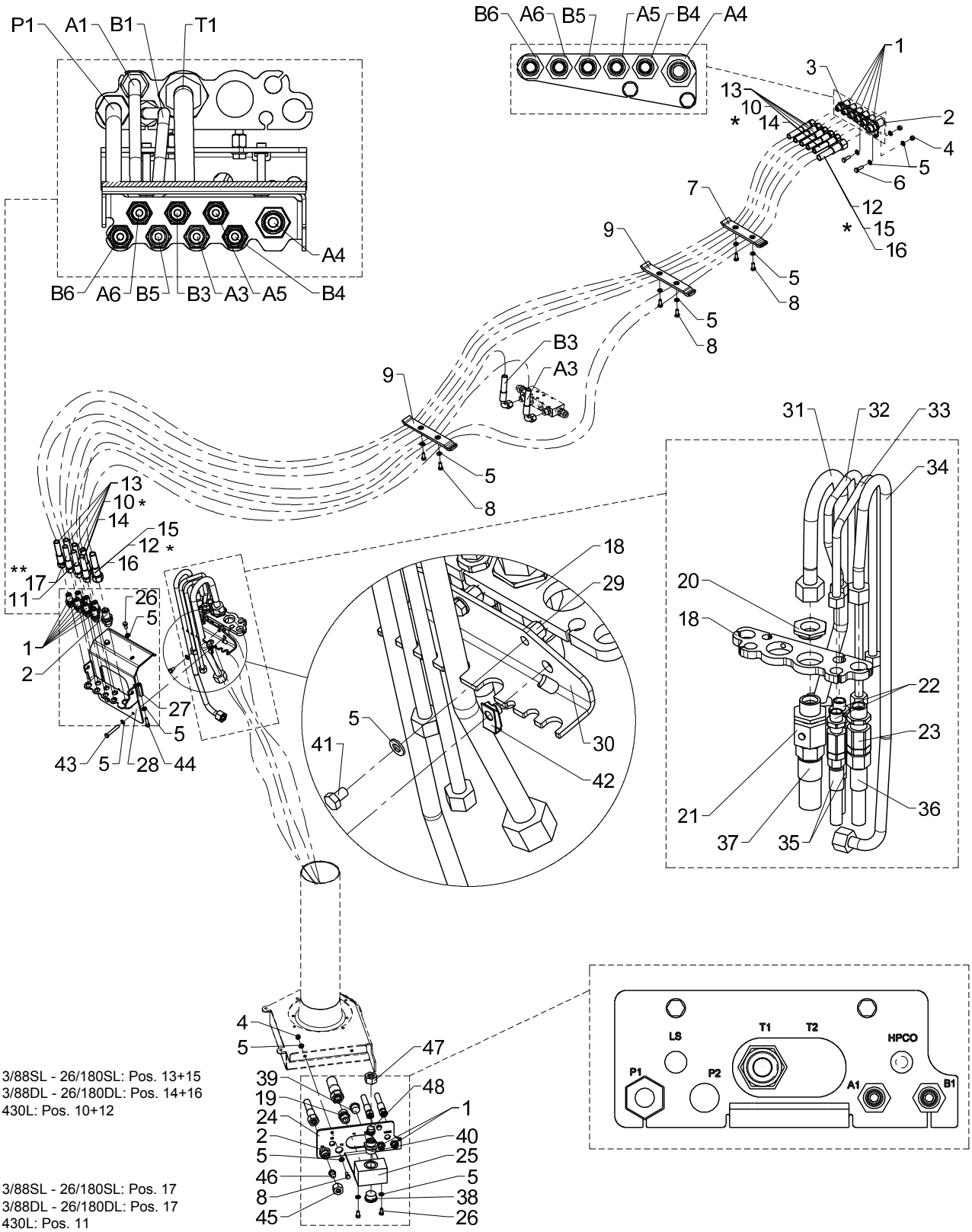

* 13/88SL - 26/180SL: Pos. 13+15
13/88DL - 26/180DL: Pos. 14+16
1430L: Pos. 10+12

** 13/88SL - 26/180SL: Pos. 17
13/88DL - 26/180DL: Pos. 17
1430L: Pos. 11

Hose kit, loader functions TS (HC, 1 circuit, fixed flow, excl. CE)

Pos	Qty.	Part no.	Description	Remarks
39	1	26355	Plug	VS-R-3/4 WD
40	1	26122	Connection	P-GEV 22 LR 1-WD
41	2	30130	Set screw, stainless	M8 x 12
42	2	31069	Clip	M8 1,5 - 5,5 mm.
43	2	30140	Steel bolt, stainless	M8 x 55
44	2	30135	Set screw, stainless	M8 x 30
45	1	26338	Coupling nut	M 16 S
46	1	26343	Blanking plug	VSD 16 S
47	1	25186	Coupling nut	M 22 L
48	1	26301	Blanking plug	VSD 22 L

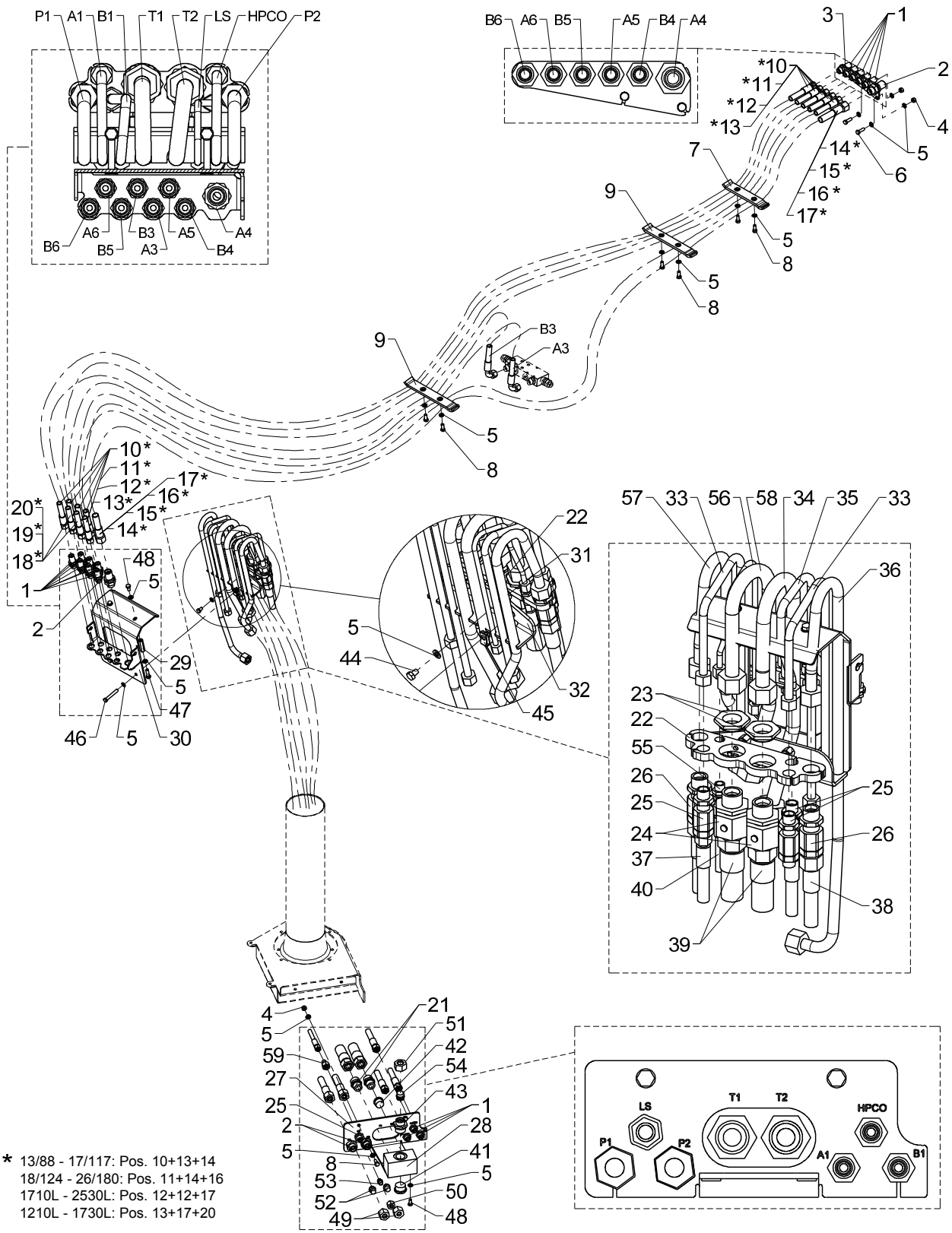

* 13/88 - 17/117: Pos. 10+13+14
18/124 - 26/180: Pos. 11+14+16
1710L - 2530L: Pos. 12+12+17
1210L - 1730L: Pos. 13+17+20

Hose kit, loader functions, TS (1-circuit variable)

Pos	Qty.	Part no.	Description	Remarks
		6341760	Hose kit, loader fcts.TS/1circ	1 kreds variabel
		6343120	Hose kit, main boom, 2 EXV	1300K/1500K
		6346480	Hose kit, main boom, 2 EXV	1800K/2200K
		6355480	Hose kit, main boom, 2EXV	1710L/2110L
		6355460	Hose kit, main boom 2 EXV	1210L/1510L
1	15	25201	Bulkhead connection	GSS 12 L
2	5	26335	Bulkhead connection	P-GSV 16 S
3	1	6340315	Bracket, bulkhead connections	
4	4	30886	Lock nut, stainless	M8
5	28	31147	Face washer, 8 mm	8 mm
6	2	30134	Set screw, stainless	M8 x 25
7	1	6340211	Clamp, complete	
8	12	30132	Set screw, stainless	M8 x 20
9	4	6340213	Clamp, complete	
10	5	0017600	Hose	
11	5	0017770	Hose	
12	5	56951	Hose 3/8" x 4650 L/L (12L)	
13	5	56916	Hose	
14	1	56382	Hose	
15	1	56529	Hose	1/2 X 3500 mm L/L
16	1	56952	Hose 1/2" x 4650 L/L(16S)	
17	1	56918	Hose	
18	2	0017690	Hose	3/8" x 1300 mm V90/L
19	2	56950	Hose 3/8" x 2450 L/90 (12L)	
20	2	56917	Hose	
21	2	26197	Connection	P-GEV 20 SR-WD
22	1	6340221	Bracket for swivel couplingTS	
23	2	6340839	Nut	
24	2	59823	Swivel coupling	M30 x 2 20S
25	4	58478	Swivel coupling	M18 x 1,5 12L
26	2	58479	Swivel coupling	M24 x 1,5 16L
27	1	6340842	Plate (TS)	
28	1	6340844	Connecting block	
29	2	6340222	Spacer	
30	1	6340224	Bracket (TS)	
31	2	6340223	Spacer	
32	1	6340225	Clamp	
33	2	6340837	Pipe (slewing - TS)	
34	1	6340833	Pipe (T1 - TS)	
35	1	6340836	Pipe (HPCO - TS)	
36	1	6340831	Pipe (P1 - TS)	

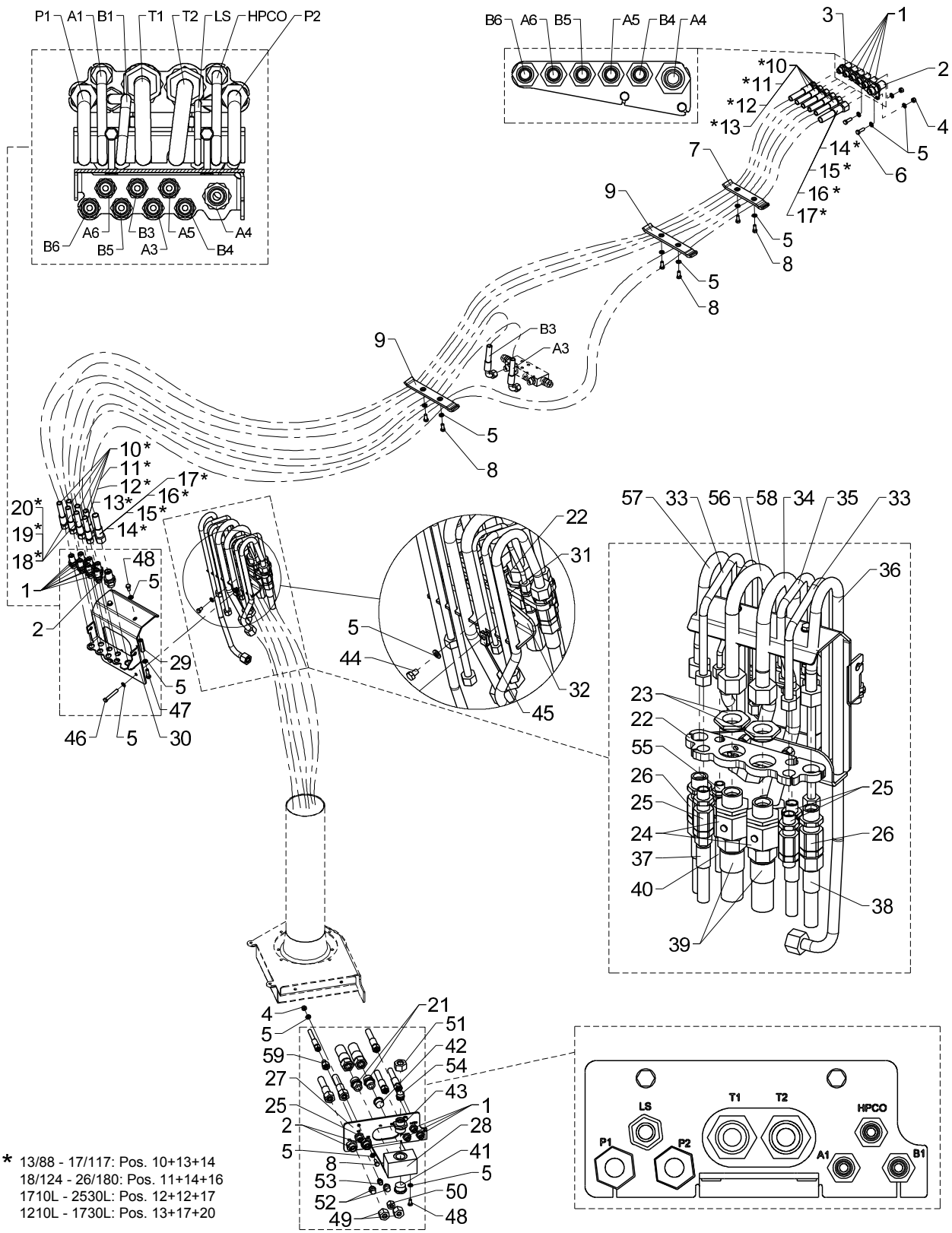

* 13/88 - 17/117: Pos. 10+13+14
18/124 - 26/180: Pos. 11+14+16
1710L - 2530L: Pos. 12+12+17
1210L - 1730L: Pos. 13+17+20

Hose kit, loader functions, TS (1-circuit variable)

Pos	Qty.	Part no.	Description	Remarks
37	3	0017240	Hose	
38	2	56519	Hose	
39	2	56518	Hose	
40	1	56517	Hose	
41	1	26321	Plug	VS-R 1" WD
42	1	26355	Plug	VS-R-3/4 WD
43	1	26122	Connection	P-GEV 22 LR 1-WD
44	2	30130	Set screw, stainless	M8 x 12
45	2	31069	Clip	M8 1,5 - 5,5 mm.
46	2	30140	Steel bolt, stainless	M8 x 55
47	2	30135	Set screw, stainless	M8 x 30
48	4	30131	Set screw, stainless	M8 x 16
49	2	26338	Coupling nut	M 16 S
50	1	25183	Coupling nut	M 12 L
51	1	25186	Coupling nut	M 22 L
52	2	26343	Blanking plug	VSD 16 S
53	1	26180	Blanking plug	VSD 12 L
54	1	26301	Blanking plug	VSD 22 L
55	1	25261	Bulkhead connection	P-GSV 8 L
56	1	6340835	Pipe (LS - TS)	
57	1	6340832	Pipe (P2 - TS)	
58	1	6340834	Pipe (T2 - TS)	
59	1	26101	Reducing connection	REDSDN 12/8 L

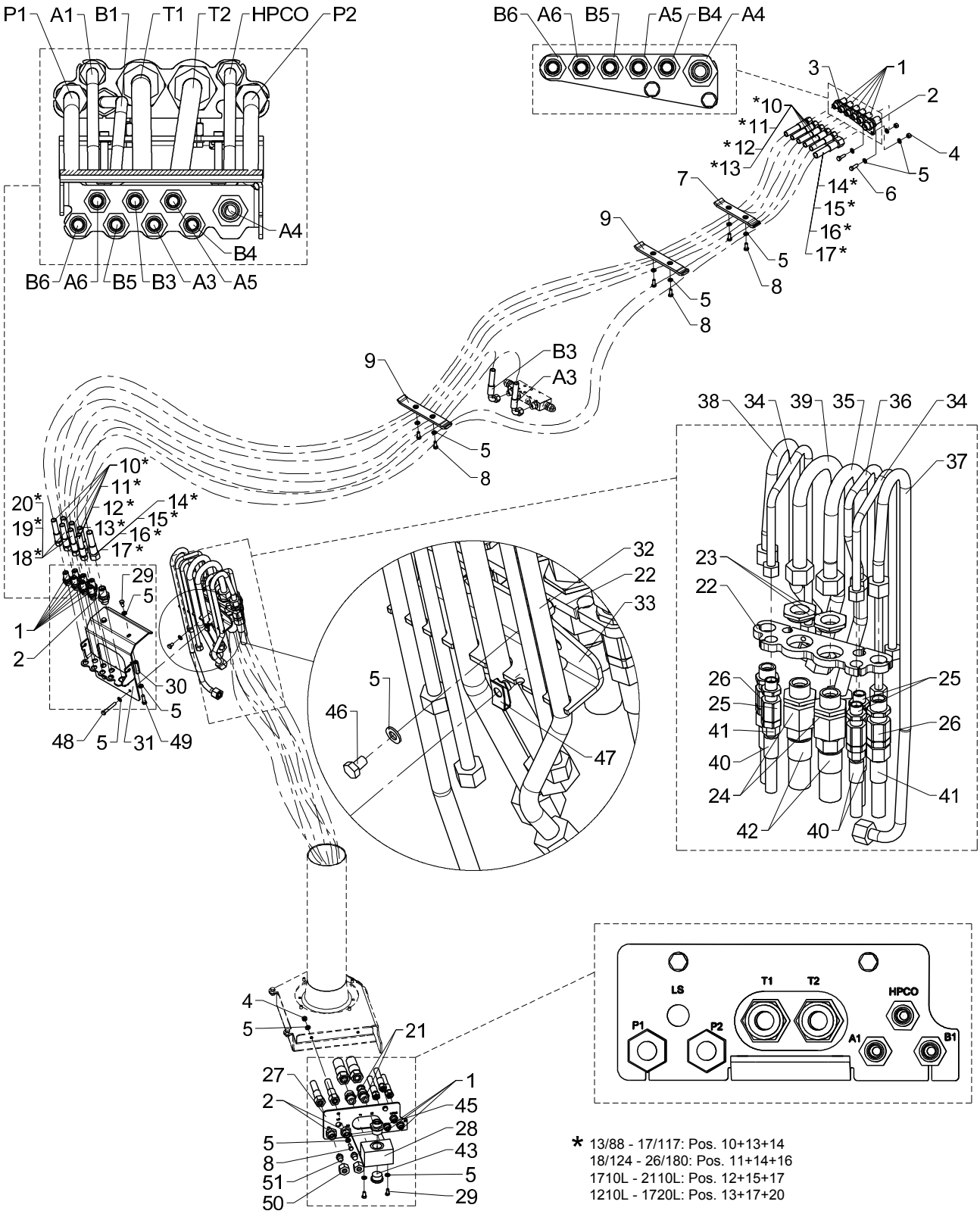

* 13/88 - 17/117: Pos. 10+13+14
18/124 - 26/180: Pos. 11+14+16
1710L - 2110L: Pos. 12+15+17
1210L - 1720L: Pos. 13+17+20

Hose kit, loader functions, TS (2-circuits, fixed)

Pos	Qty.	Part no.	Description	Remarks
		6341770	Hose kit, TS 2 circuits	Danfoss 1 kreds fast/HC 2 kreds fa
		6343120	Hose kit, main boom, 2 EXV	1300K/1500K
		6346480	Hose kit, main boom, 2 EXV	1800K/2200K
		6355480	Hose kit, main boom, 2EXV	1710L/2110L
		6355460	Hose kit, main boom 2 EXV	1210L/1510L
1	15	25201	Bulkhead connection	GSS 12 L
2	4	26335	Bulkhead connection	P-GSV 16 S
3	1	6340315	Bracket, bulkhead connections	
4	4	30886	Lock nut, stainless	M8
5	28	31147	Face washer, 8 mm	8 mm
6	2	30134	Set screw, stainless	M8 x 25
7	1	6340211	Clamp, complete	
8	12	30132	Set screw, stainless	M8 x 20
9	4	6340213	Clamp, complete	
10	5	0017600	Hose	
11	5	0017770	Hose	
12	5	56951	Hose 3/8" x 4650 L/L (12L)	
13	5	56916	Hose	
14	1	56382	Hose	
15	1	56529	Hose	1/2 X 3500 mm L/L
16	1	56952	Hose 1/2" x 4650 L/L(16S)	
17	1	56918	Hose	
18	2	0017690	Hose	3/8" x 1300 mm V90/L
19	2	56950	Hose 3/8" x 2450 L/90 (12L)	
20	2	56917	Hose	
21	2	26197	Connection	P-GEV 20 SR-WD
22	1	6340221	Bracket for swivel couplingTS	
23	2	6340839	Nut	
24	2	59823	Swivel coupling	M30 x 2 20S
25	3	58478	Swivel coupling	M18 x 1,5 12L
26	2	58479	Swivel coupling	M24 x 1,5 16L
27	1	6340842	Plate (TS)	
28	1	6340844	Connecting block	
29	4	30131	Set screw, stainless	M8 x 16
30	2	6340222	Spacer	
31	1	6340224	Bracket (TS)	
32	2	6340223	Spacer	
33	1	6340225	Clamp	
34	2	6340837	Pipe (slewing - TS)	
35	1	6340833	Pipe (T1 - TS)	
36	1	6340836	Pipe (HPCO - TS)	

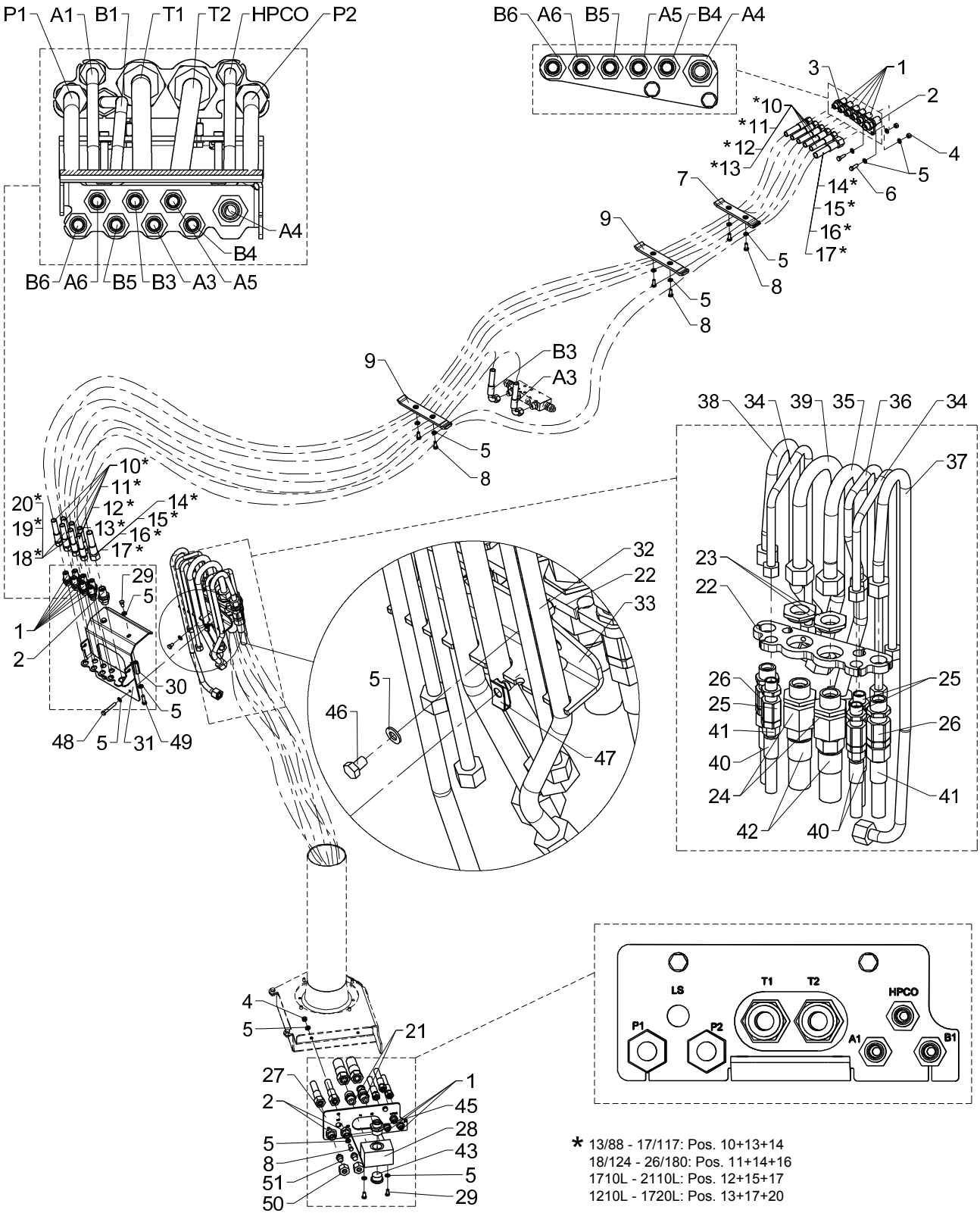

* 13/88 - 17/117: Pos. 10+13+14
18/124 - 26/180: Pos. 11+14+16
1710L - 2110L: Pos. 12+15+17
1210L - 1720L: Pos. 13+17+20

Hose kit, loader functions, TS (2-circuits, fixed)

Pos	Qty.	Part no.	Description	Remarks
37	1	6340831	Pipe (P1 - TS)	
38	1	6340832	Pipe (P2 - TS)	
39	1	6340834	Pipe (T2 - TS)	
40	3	0017240	Hose	
41	2	56519	Hose	
42	2	56518	Hose	
43	1	26321	Plug	VS-R 1" WD
44	1	25103	Plug	VS-R-1/2 WD
45	1	26122	Connection	P-GEV 22 LR 1-WD
46	2	30130	Set screw, stainless	M8 x 12
47	2	31069	Clip	M8 1,5 - 5,5 mm.
48	2	30140	Steel bolt, stainless	M8 x 55
49	2	30135	Set screw, stainless	M8 x 30
50	2	26338	Coupling nut	M 16 S
51	2	26343	Blanking plug	VSD 16 S

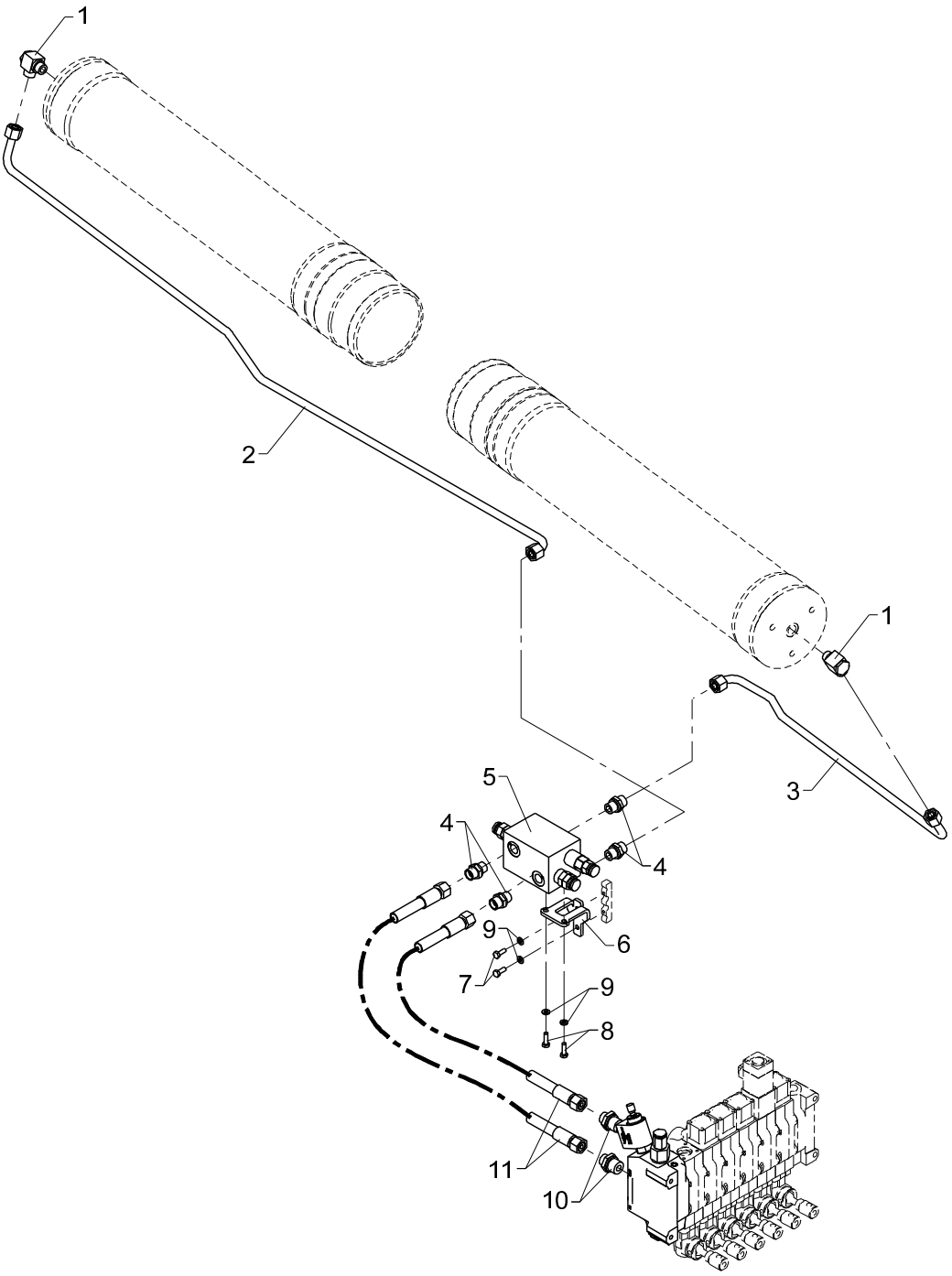
1
2
1
3
5
4
4
9
6
7
9
8
11
10

Obsolete

Hydraulic system, slewing

535 05 500

From loader 1070001
To loader 1070562

Created 21-02-2007
Modified 31-10-2013

Pos	Qty.	Part no.	Description	Remarks
1	2	25130	Banjo connection	RSWV 12 LR
2	1	6344279	Pipe	
3	1	6344278	Pipe	
4	4	25127	Connection	P-GEV 12 LR-WD
5	1	55262	Load-holding valve	
6	1	6340237	Bracket for load-holding valve	
7	2	30112	Set screw, stainless	M6 x 16
8	2	30113	Set screw, stainless	M6 x 20
9	4	32302	Face washer, stainless	6 mm
10	2	25108	Connection	GES 12 LR 1/2-WD
11	2	0017970	Hose	

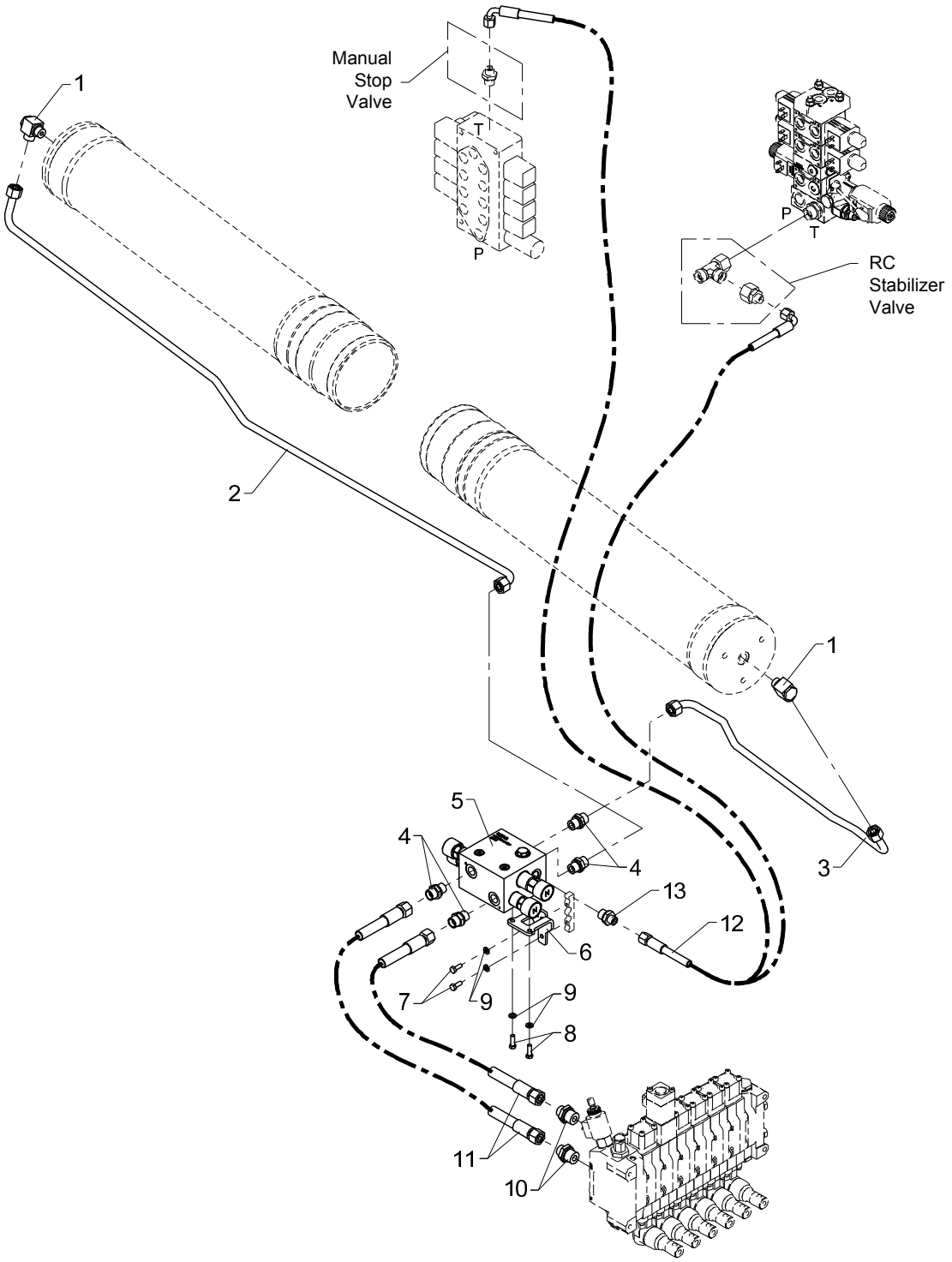
Manual
Stop
Valve
T
P
1
2
P
T
RC
Stabilizer
Valve
1
3
5
4
4
13
12
6
7
9
9
8
11
10

Hydraulic system, slewing

Pos	Qty.	Part no.	Description	Remarks
		6344310	Hydraulic system, slewing	
1	2	25130	Banjo connection	RSWV 12 LR
2	1	6344279	Pipe	
3	1	6344278	Pipe	
4	4	25127	Connection	P-GEV 12 LR-WD
5	1	55711	Load-holding valve	
6	1	6340237	Bracket for load-holding valve	
7	2	30112	Set screw, stainless	M6 x 16
8	2	30113	Set screw, stainless	M6 x 20
9	4	32302	Face washer, stainless	6 mm
10	2	25108	Connection	GES 12 LR 1/2-WD
11	2	0017970	Hose	
12	1	62526	Hose	1/4 X 550 M14 X 1.5 L/90
13	1	25244	Connection	GES 8 LR 3/8-WD

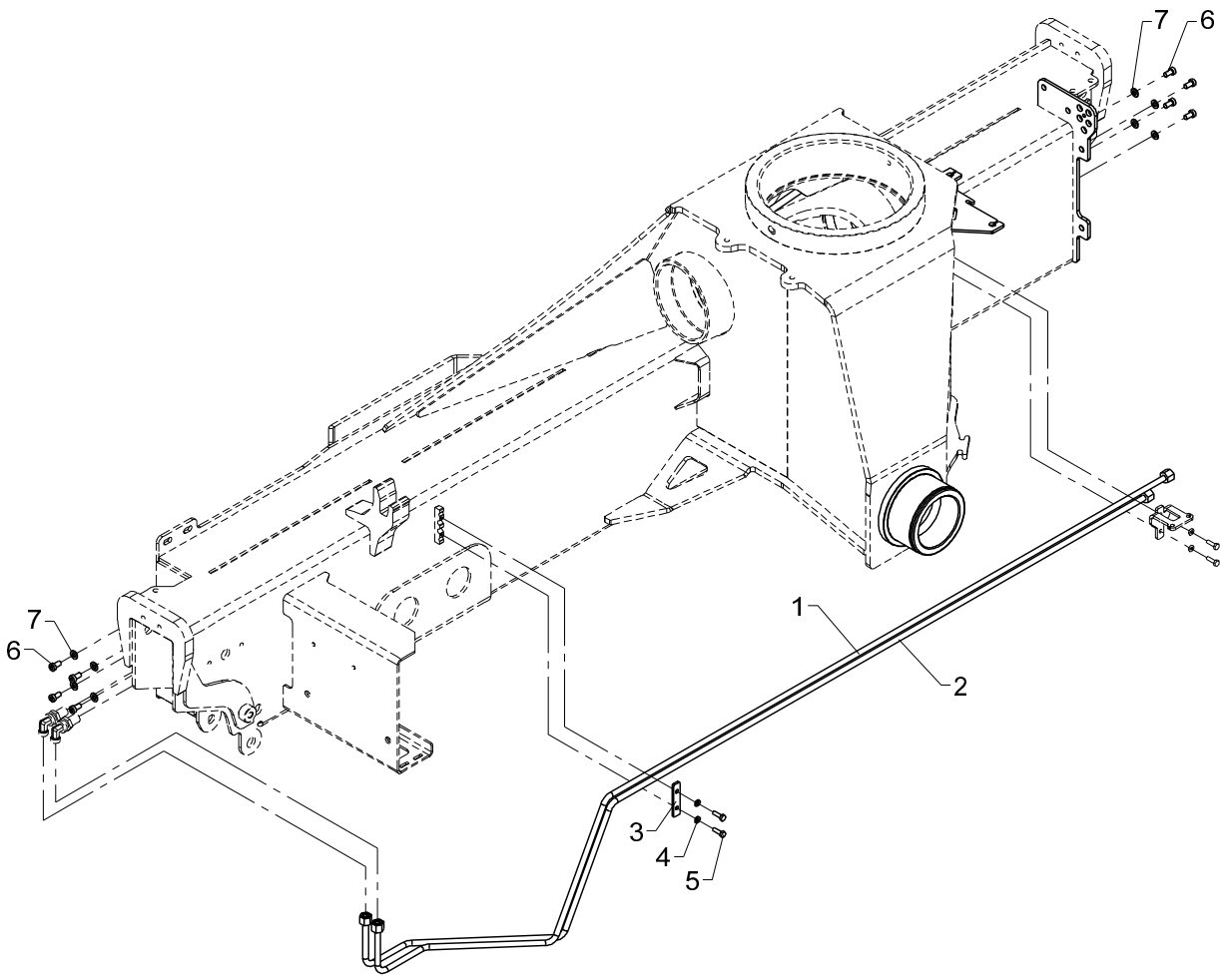
7
6
7
6
1
2
3
4
5

Hydraulic system, stabilizers, manual extension

Pos	Qty.	Part no.	Description	Remarks
		6345190	Hydr. system stabilizers,2fcts	
1	1	6344265	Pipe, stabilizers	
2	1	6344266	Pipe, stabilizers	
3	1	6340236	Plate	
4	2	32302	Face washer, stainless	6 mm
5	2	30113	Set screw, stainless	M6 x 20
6	8	32478	Screw	M8 x 15
7	8	31147	Face washer, 8 mm	8 mm

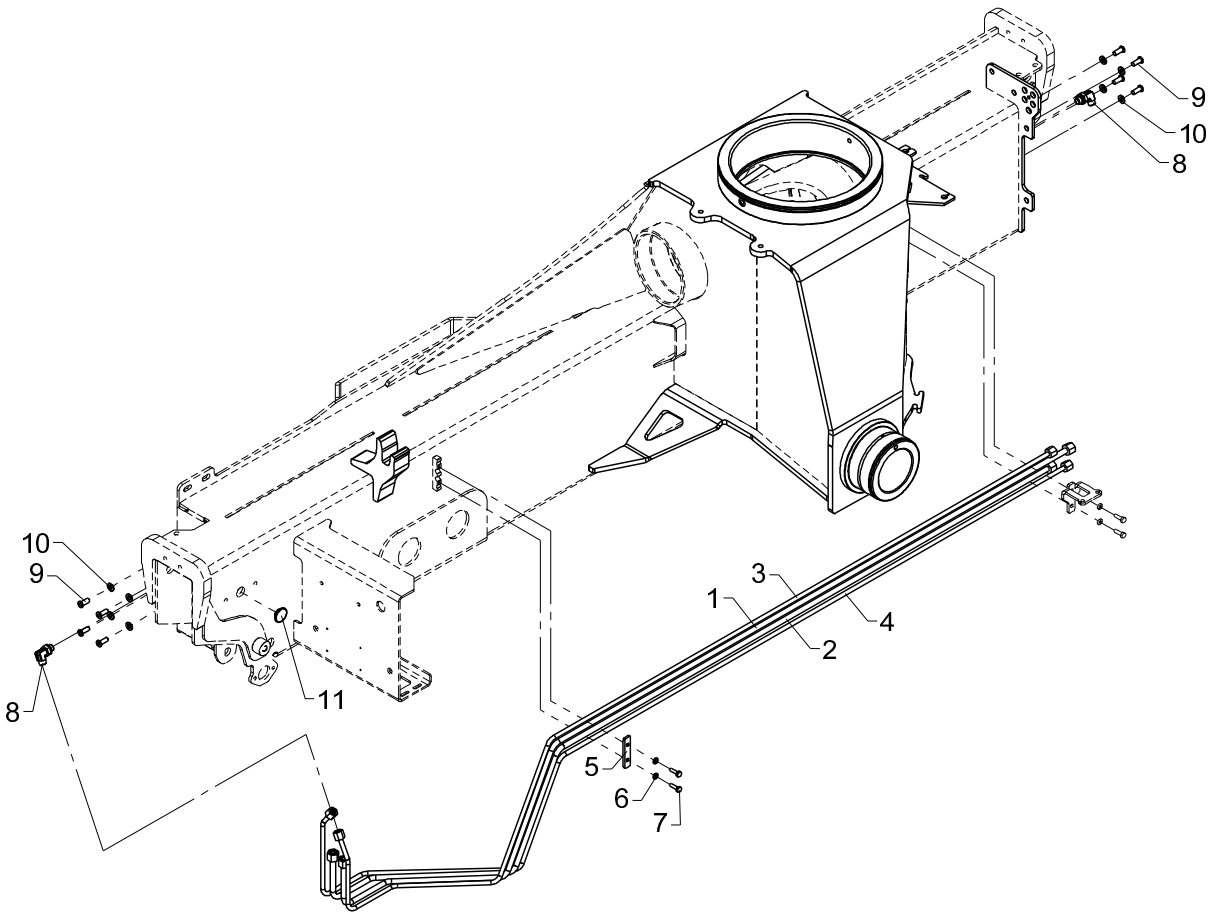
9
10
8
10
9
8
11
3
1
4
2
5
6
7

Hydraulic system, stabilizers, hydr. extension

Pos	Qty.	Part no.	Description	Remarks
		6345200	Hydr. system stabilizers,4fcts	
1	1	6344265	Pipe, stabilizers	
2	1	6344266	Pipe, stabilizers	
3	1	6344267	Pipe, stabilizers	
4	1	6344268	Pipe, stabilizers	
5	1	6340236	Plate	
6	2	32302	Face washer, stainless	6 mm
7	2	30113	Set screw, stainless	M6 x 20
8	2	26898	Elbow connection	8 mm - 1/4"
9	8	32486	Screw	MCL8 x 20
10	8	31147	Face washer, 8 mm	8 mm
11	2	63430	Guide	ø30 x 2 mm

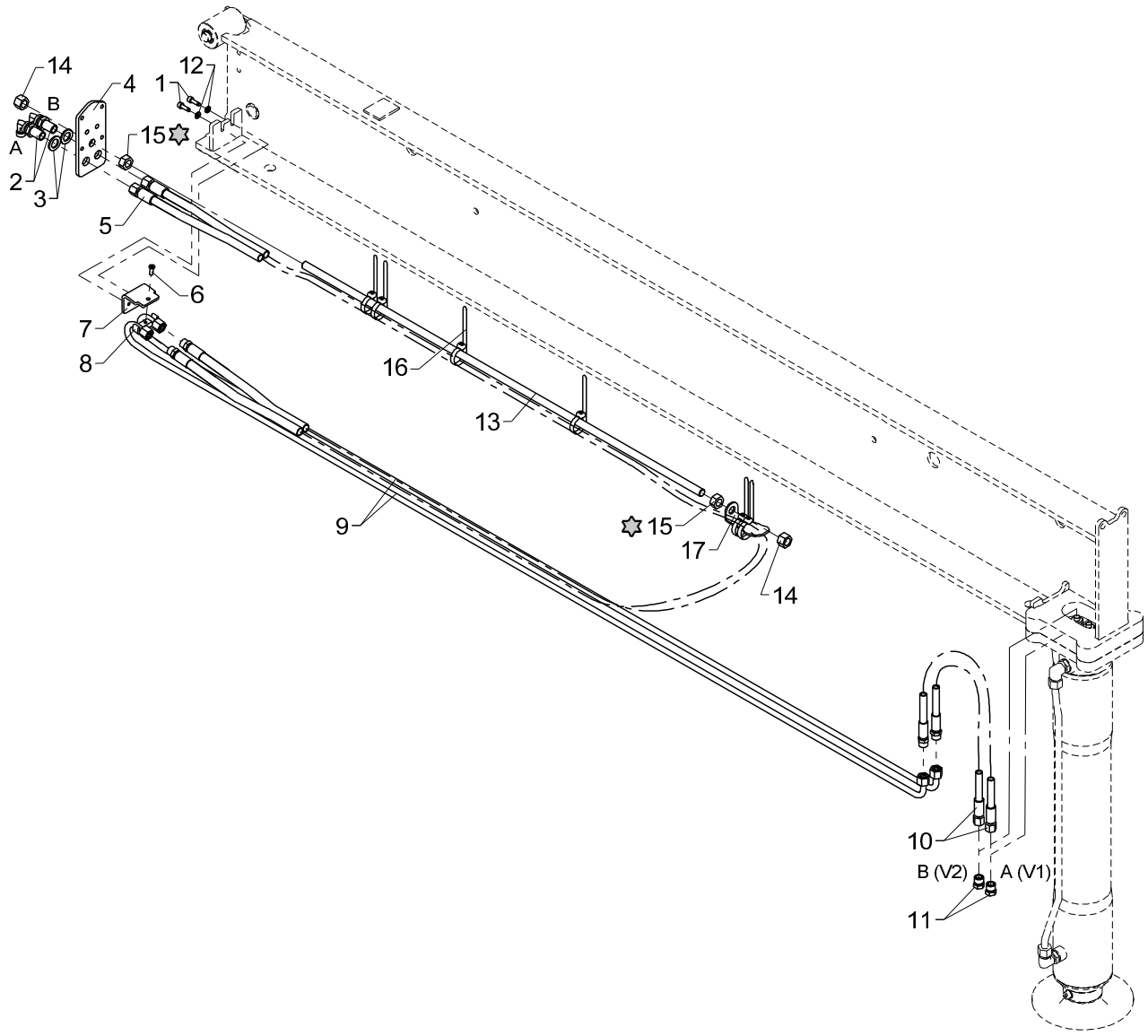

Loctite 270

Hydraulic system, SV (+ SR-20° -Obsolete) 5570, manual extension

Pos	Qty.	Part no.	Description	Remarks
1	2	31539	Screw, stainless	MC6 x 16
2	2	26894	Elbow connection	10mm - 90 gr.
3	2	31791	Washer M16, stainless	16 mm
4	1	6344095	End plate	
5	1	56279	Hose	
6	1	32490	Screw	MC6 x 16
7	1	6344109	Clamp	
8	1	6306097	Clamp	
9	2	6344218	Pipe	
10	2	56460	Hose	1/4" x 550 mm L/S - 10
11	2	25635	Screw	VSK 10L
12	2	32302	Face washer, stainless	6 mm
13	1	31262	Threaded pin	
14	2	32317	Lock nut	M14
15	2	32145	Nut, stainless	M14
16	6	27275	Cable tie, black, 7.6x385mm	
17	1	6344107	Clamp	

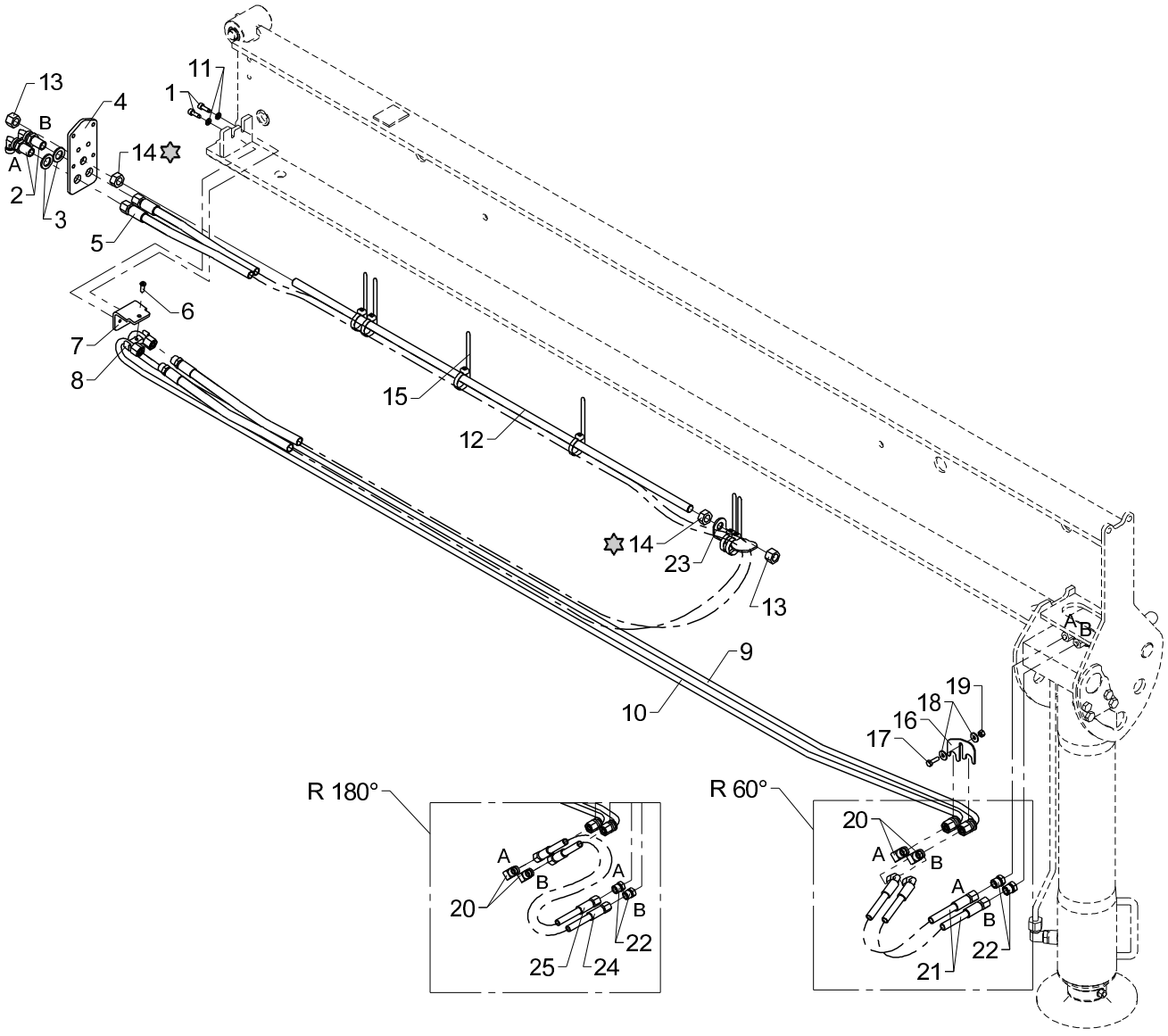
13
4
11
1
B
A
14
2
3
5
6
7
8
15
12
14
23
13
9
10
19
18
16
17
A
B
R 180°
R 60°
20
A
B
A
B
22
25
24
20
A
B
A
B
22
21

Loctite 270

Hydraulic system, SR-60°/180°, 5570, manual extension

Pos	Qty.	Part no.	Description	Remarks
		6345520	Hydr. syst., SR-60°- 5570 man	
		6343620	Hydraulic syst.,SR180°,5570man	
1	2	31539	Screw, stainless	MC6 x 16
2	2	26894	Elbow connection	10mm - 90 gr.
3	2	31791	Washer M16, stainless	16 mm
4	1	6344095	End plate	
5	1	56279	Hose	
6	1	32490	Screw	MC6 x 16
7	1	6344109	Clamp	
8	1	6306097	Clamp	
9	1	6344234	Pipe	
10	1	6344233	Pipe	
11	2	32302	Face washer, stainless	6 mm
12	1	31262	Threaded pin	
13	2	32317	Lock nut	M14
14	2	32145	Nut, stainless	M14
15	6	27275	Cable tie, black, 7.6x385mm	
16	1	6306164	Bracket	
17	1	30113	Set screw, stainless	M6 x 20
18	2	31134	Washer, stainless	6 mm
19	1	30884	Lock nut, stainless	M6
20	2	25125	Elbow connection	WV 10 L
21	2	56363	Hose	L=8mm / V=10 mm
22	2	25635	Screw	VSK 10L
23	1	6344107	Clamp	
24	1	56905	Hose 1/4 X 550 mm	L=8mm/L=10mm
25	1	56904	Hose 1/4 X 500 mm	L=8mm/L=10mm

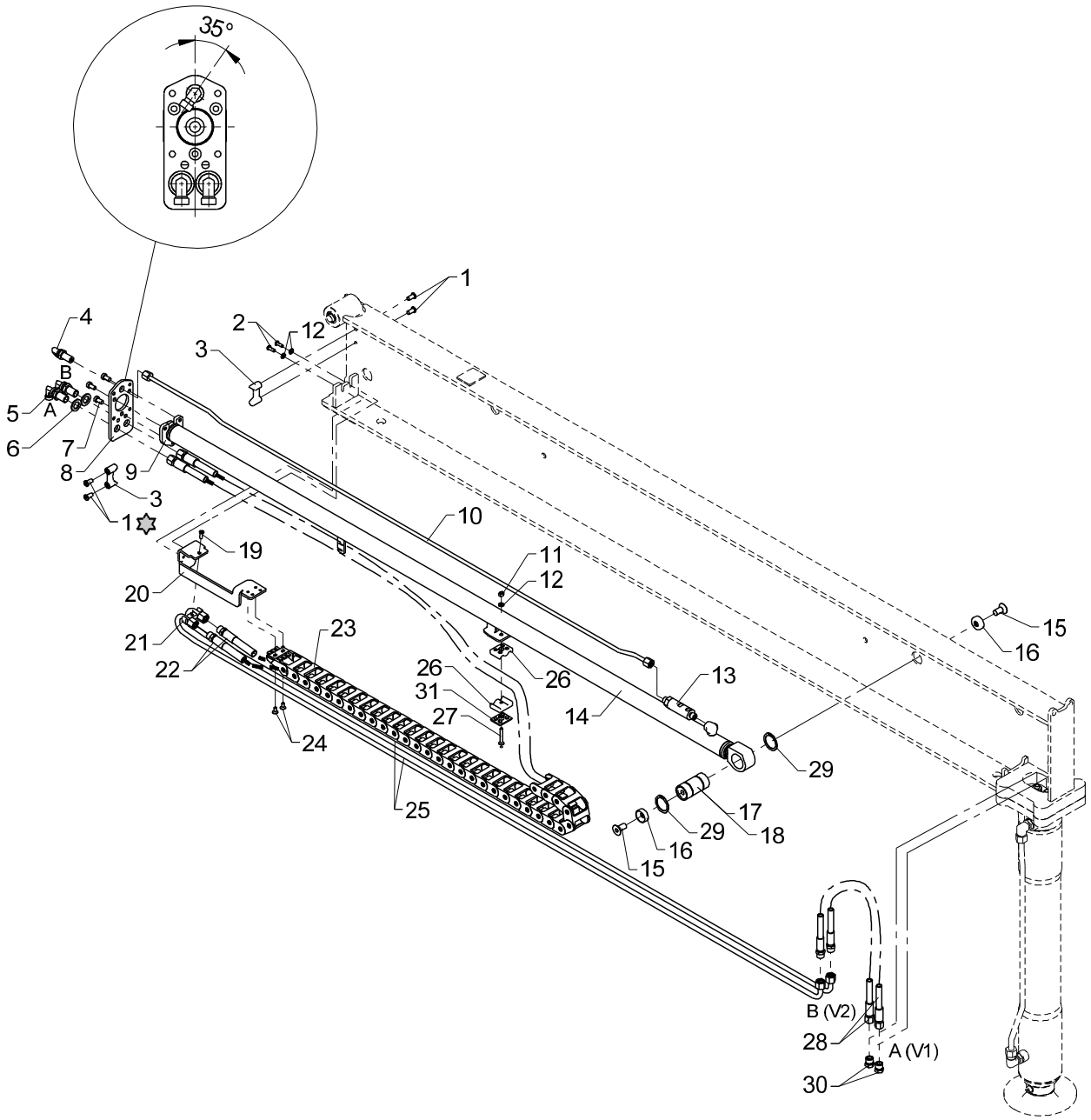
35°
1
2
12
3
4
B
5
A
6
7
8
9
3
1
10
19
11
12
20
21
23
22
26
31
27
26
13
14
15
16
29
24
25
17
29
18
16
15
B (V2)
28
A (V1)
30

Loctite 243

Hydraulic system, SV (+ SR-20° -Obsolete) 5570, hydr. extension

Pos	Qty.	Part no.	Description	Remarks
		6340880	Hydraulic system, SV-SR - 5570	
		6344530	Hydraulic system, SV-SR - 5570	
1	4	32481	Screw	MCL8 x 16
2	2	32222	Button head screw	M6 x 16
3	2	63556	Guide	
4	1	26864	Elbow connection	WSS 8L
5	2	26894	Elbow connection	10mm - 90 gr.
6	2	31791	Washer M16, stainless	16 mm
7	3	32478	Screw	M8 x 16
8	1	6344097	End plate	
9	1	6344098	Bracket	
10	1	6344219	Pipe	
11	1	30884	Lock nut, stainless	M6
12	3	32302	Face washer, stainless	6 mm
13	1	55228	Sequence valve	
14	1	6344210	Beam cylinder	
15	2	30586	Countersunk screw	MK12 x 25
16	2	6306241	Mounting plate	
17	1	6340118	Pin	Serie 1300/1500
18	1	6344118	Pin	Serie 1800/2200
19	1	32490	Screw	MCL6 x 16
20	1	6344096	Clamp	
21	1	6306097	Clamp	
22	2	56364	Hose	5/16" x 2300 mm L/S - 10
23	1	28886	Nylon drag chain	
24	2	30542	Counter-sunk screw	MK6 x 12
25	2	6344218	Pipe	
26	2	64408	Clamp	
27	1	32352	Countersunk screw	MK6 x 40
28	2	56460	Hose	1/4" x 550 mm L/S - 10
29	2	33117	Circlip	35U
30	2	25635	Screw	VSK 10L
31	1	6344106	Welding plate	

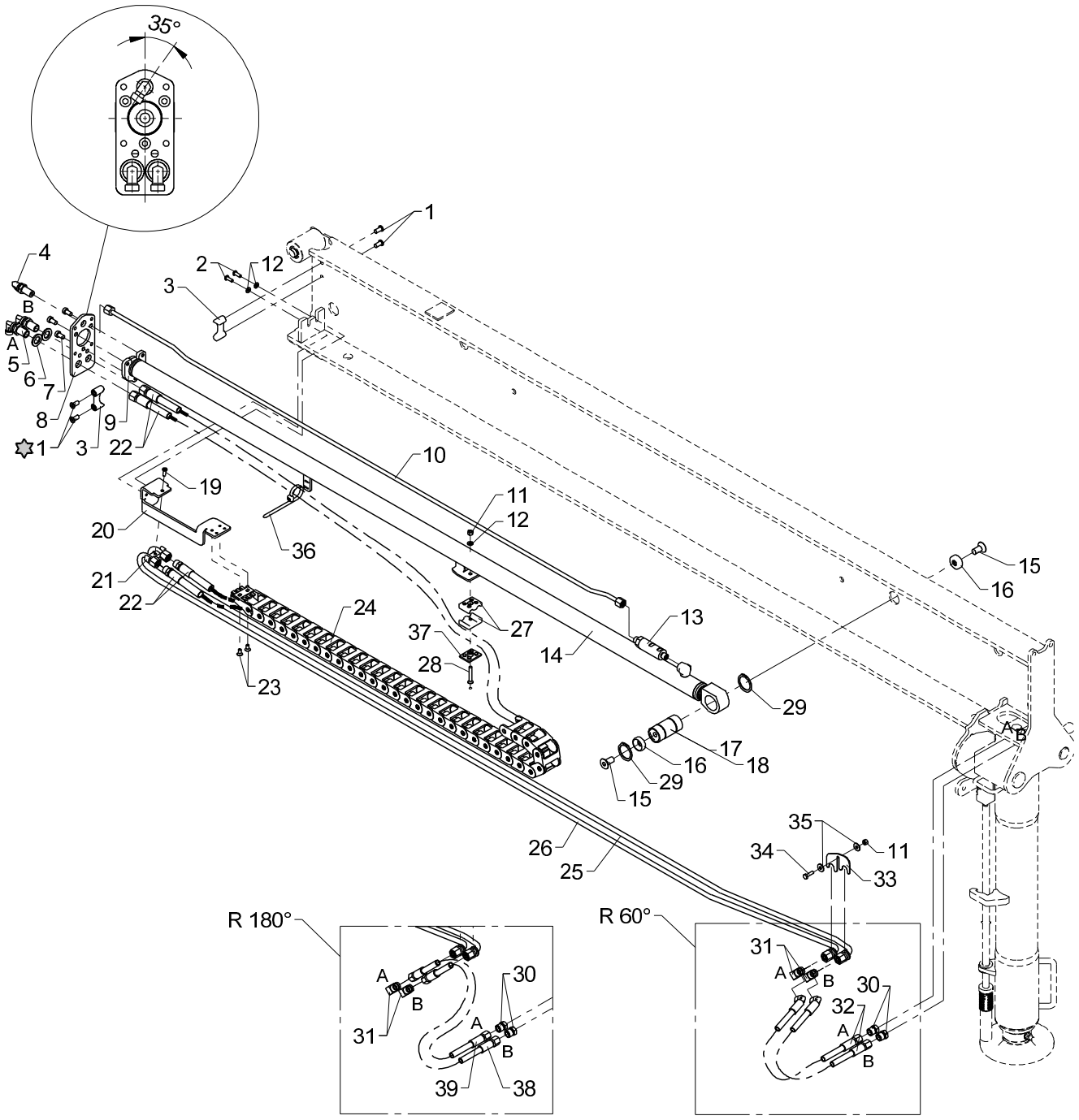

✡ Loctite 243

Hydraulic system, SH + SR-60°/180° - 5570, hydr. extension

Pos	Qty.	Part no.	Description	Remarks
		6342540	Hydraulic system, SH - 5570	1300/1500
		6346530	Hydraulic system, SH - 5570	1800/2200/2310S
		6343610	Hydr.system,SR180°, 5570 hydr	1300/1500
		6343740	Hydr.system,SR180°, 5570 hydr	1800/2200/2310S
1	4	32481	Screw	MCL8 x 16
2	2	32222	Button head screw	M6 x 16
3	2	63556	Guide	
4	1	26864	Elbow connection	WSS 8L
5	2	26894	Elbow connection	10mm - 90 gr.
6	2	31791	Washer M16, stainless	16 mm
7	3	32478	Screw	M8 x 16
8	1	6344097	End plate	
9	1	6344098	Bracket	
10	1	6344219	Pipe	
11	2	30884	Lock nut, stainless	M6
12	3	32302	Face washer, stainless	6 mm
13	1	55228	Sequence valve	
14	1	6344210	Beam cylinder	
15	2	30586	Countersunk screw	MK12 x 25
16	2	6306241	Mounting plate	
17	1	6340118	Pin	Serie 1300/1500
18	1	6344118	Pin	Serie 1800/2200
19	1	32490	Screw	MCL6 x 16
20	1	6344096	Clamp	
21	1	6306097	Clamp	
22	2	56364	Hose	5/16" x 2300 mm L/S - 10
23	2	30542	Counter-sunk screw	MK6 x 12
24	1	28886	Nylon drag chain	
25	1	6344234	Pipe	
26	1	6344233	Pipe	
27	2	64408	Clamp	
28	1	32352	Countersunk screw	MK6 x 40
29	2	33117	Circlip	35U
30	2	25635	Screw	VSK 10L
31	2	25125	Elbow connection	WV 10 L
32	2	56363	Hose	L=8mm / V=10 mm
33	1	6306164	Bracket	
34	1	30113	Set screw, stainless	M6 x 20
35	2	31134	Washer, stainless	6 mm
36	1	27275	Cable tie, black, 7.6x385mm	
37	1	6344106	Welding plate	

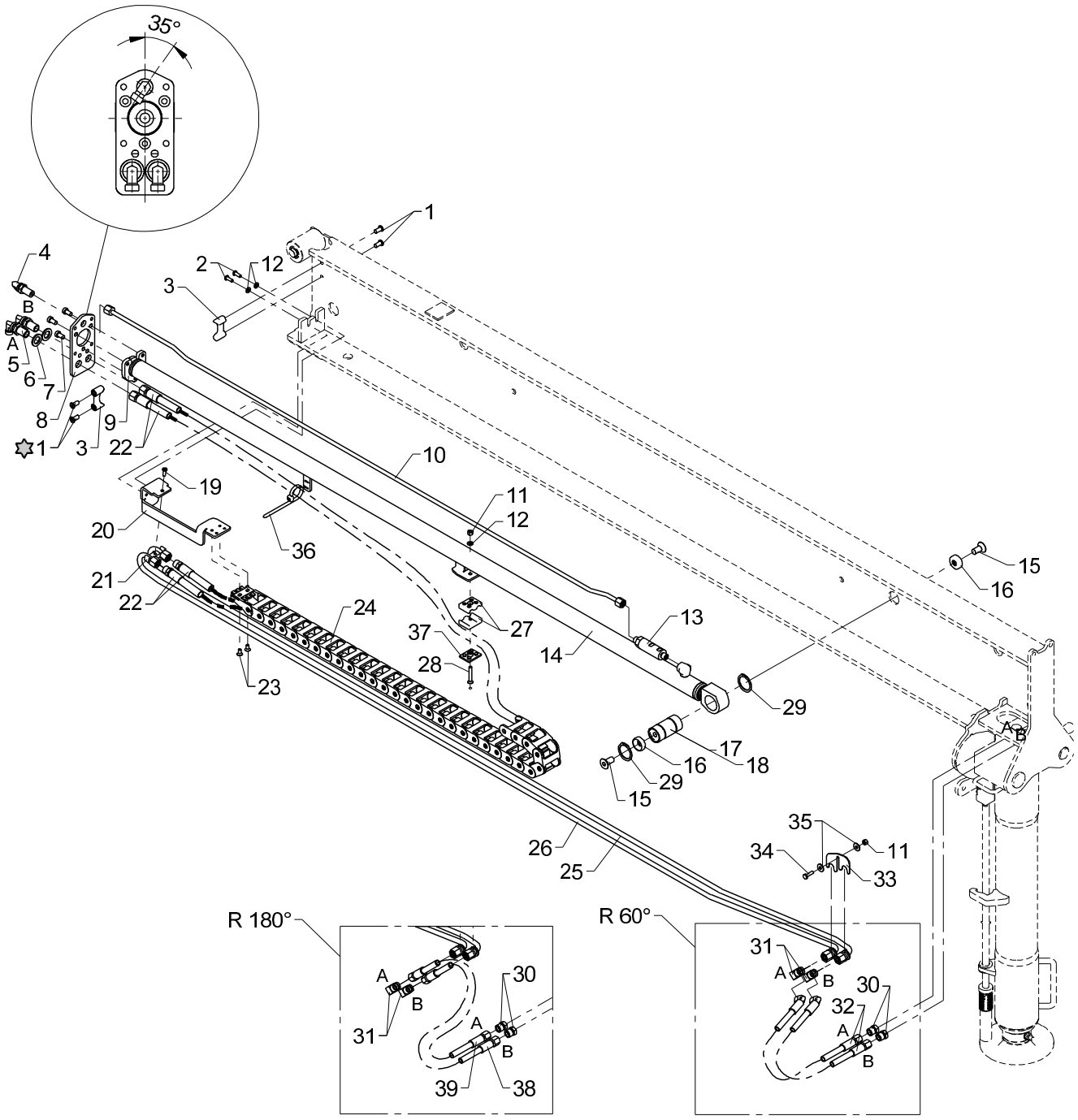

✡ Loctite 243

Hydraulic system, SH + SR-60°/180° - 5570, hydr. extension

Pos	Qty.	Part no.	Description	Remarks
38	1	56905	Hose 1/4 X 550 mm	L=8mm/L=10mm
39	1	56904	Hose 1/4 X 500 mm	L=8mm/L=10mm

18/129, 20/138, 22/153

Internal ref. 63 44 550

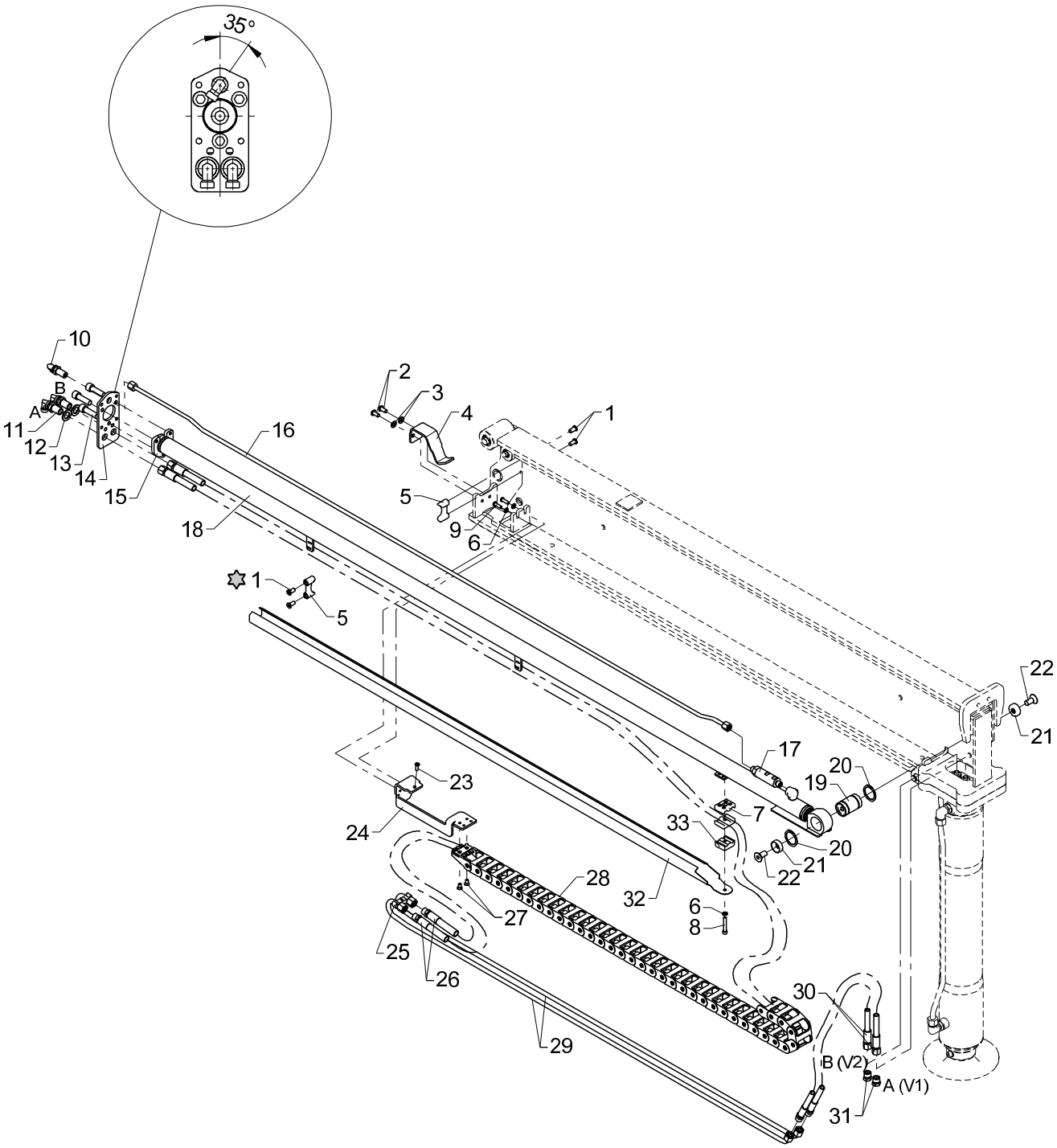

Loctite 243

Hydraulic system, DV (+ DR-20° -Obsolete) 21'2" (6450), hydr. extension

Pos	Qty.	Part no.	Description	Remarks
1	4	32481	Screw	MCL8 x 16
2	2	30925	Round-head screw	M8 x 16
3	2	31147	Face washer, 8 mm	
4	1	6306099	Spring holder	
5	2	63556	Guide	
6	3	32302	Face washer, stainless	6 mm
7	2	64408	Clamp	
8	1	32410	Screw	MC6 x 40
9	2	32491	Round-head screw	M6 x 20
10	1	26864	Elbow connection	WSS 8L
11	2	26894	Elbow connection	10mm - 90 gr.
12	2	31791	Washer M16, stainless	16 mm
13	3	30475	Screw	MC12 x 40
14	1	6344097	End plate	
15	1	6344098	Bracket	
16	1	6344229	Pipe	
17	1	55228	Sequence valve	
18	1	6344220	Beam cylinder	
19	1	6340119	Pin	
20	2	33117	Circlip	35U
21	2	6306241	Mounting plate	
22	2	30586	Countersunk screw	MK12 x 25
23	1	32490	Screw	MC6 x 16
24	1	6344096	Clamp	
25	1	6306097	Clamp	
26	2	56365	Hose	5/16" x 3340 mm L/S - 10
27	2	30542	Counter-sunk screw	MK6 x 12
28	1	28887	Nylon drag chain	
29	2	6344228	Pipe	
30	2	56366	Hose	1/4" x 260 mm L/S - 10
31	2	25635	Screw	VSK 10L
32	1	6342561	Guide rail	
33	1	31417	Clamp	

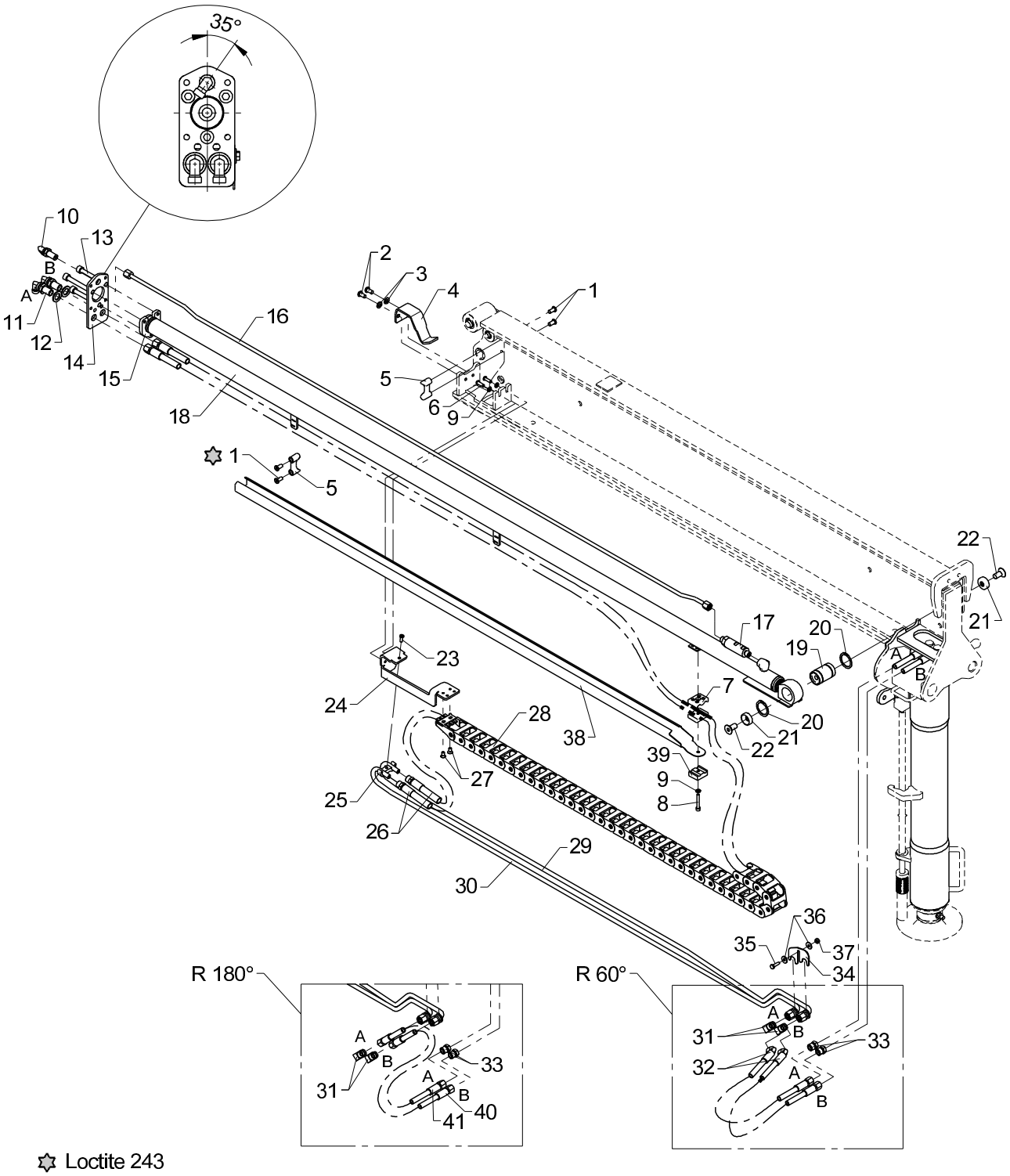
35°
10
13
B
A
11
12
14
15
16
18
2
3
4
1
5
6
9
1
5
22
21
17
20
19
A
B
23
24
7
28
38
20
21
22
39
9
8
27
25
26
29
30
36
35
37
34
R 180°
A
B
31
33
A
B
41
40
R 60°
A
B
31
33
32
A
B

Loctite 243

Hydraulic system, DH + DR-60°/180° - 21'2" (6450), hydr. extension

Pos	Qty.	Part no.	Description	Remarks
		6342560	Hydraulic system, DH - 21'2" (6450)	
		6343630	Hydr.system, DR180°, 21'2" (6450) hydr	
1	4	32481	Screw	MCL8 x 16
2	2	30925	Round-head screw	M8 x 16
3	2	31147	Face washer, 8 mm	
4	1	6306099	Spring holder	
5	2	63556	Guide	
6	2	32491	Round-head screw	M6 x 20
7	2	64408	Clamp	
8	1	32410	Screw	MC6 x 40
9	3	32302	Face washer, stainless	6 mm
10	1	26864	Elbow connection	WSS 8L
11	2	26894	Elbow connection	10mm - 90 gr.
12	2	31791	Washer M16, stainless	16 mm
13	3	32459	Screw	MC10 x 85
14	1	6344097	End plate	
15	1	6344098	Bracket	
16	1	6344229	Pipe	
17	1	55228	Sequence valve	
18	1	6344220	Beam cylinder	
19	1	6340119	Pin	
20	2	33117	Circlip	35U
21	2	6306241	Mounting plate	
22	2	30586	Countersunk screw	MK12 x 25
23	1	32490	Screw	MC6 x 16
24	1	6344096	Clamp	
25	1	6306097	Clamp	
26	2	56365	Hose	5/16" x 3340 mm L/S - 10
27	2	30542	Counter-sunk screw	MK6 x 12
28	1	28887	Nylon drag chain	
29	1	6344236	Pipe	
30	1	6344235	Pipe, stabilizers	
31	2	25125	Elbow connection	WV 10 L
32	2	56363	Hose	L=8mm / V=10 mm
33	2	25635	Screw	VSK 10L
34	1	6306164	Bracket	
35	1	30113	Set screw, stainless	M6 x 20
36	2	31134	Washer, stainless	
37	1	30884	Lock nut, stainless	M6
38	1	6342561	Guide rail	
39	1	31417	Clamp	

18/129, 20/138, 22/153

63 43 630
Internal ref. 63 42 560

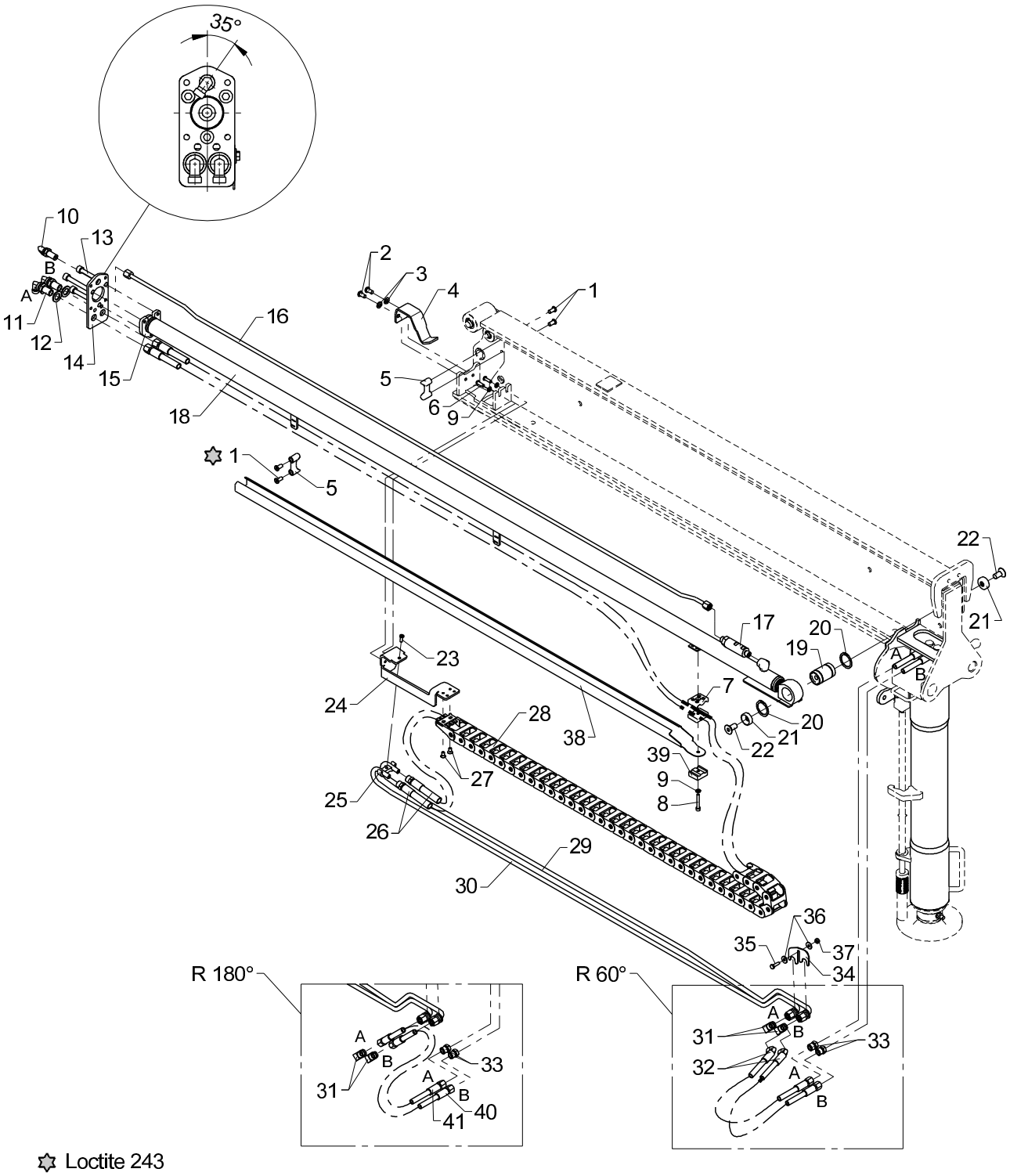

Hydraulic system, DH + DR-60°/180° - 21'2" (6450), hydr. extension

Pos	Qty.	Part no.	Description	Remarks
40	1	56905	Hose 1/4 X 550 mm	L=8mm/L=10mm
41	1	56904	Hose 1/4 X 500 mm	L=8mm/L=10mm

18/129, 20/138, 22/153

63 54 810
63 54 820
63 42 390
Internal ref. 63 42 410

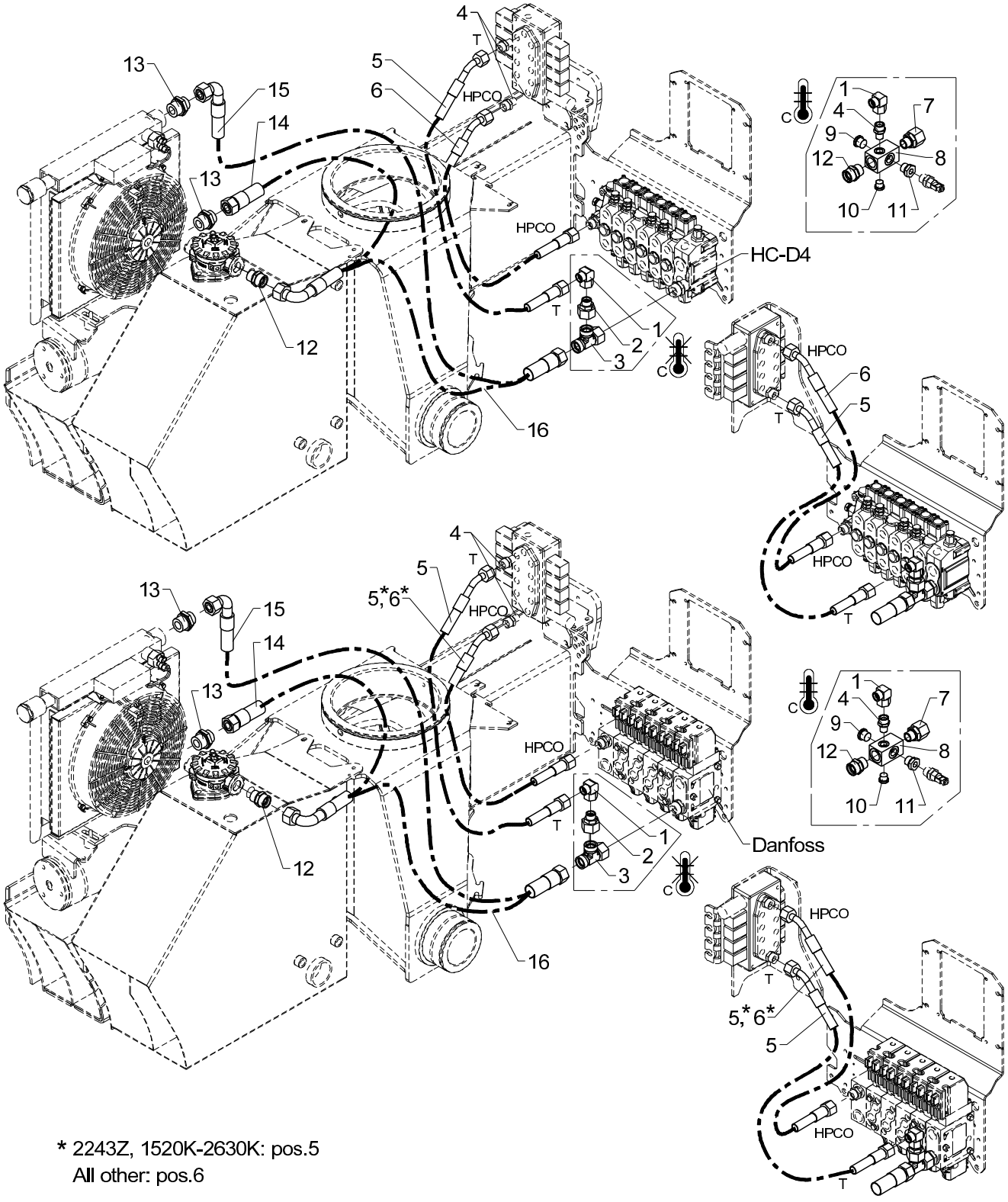

* 2243Z, 1520K-2630K: pos.5
All other: pos.6

Hydr. syst. pump + return hoses

Pos	Qty.	Part no.	Description	Remarks
		6342410	Pump+return hoses-Hydrocontrol	1300K-2210K, 1410T-2130T, 2310
		6342390	Pump+return hoses+temp.sensor	1300K-2210K, 1410T-2130T, 2310
		6354820		2243Z, 1520K-2630K
		6354810		2243Z, 1520K-2630K
1	1	25284	Elbow connection	EWSD 15 L
2	1	25298	Connection	REDSDN 22/15 L
3	1	26149	Connection	ELSD 22 L
4	3	25273	Connection	GES 15 LR 3-8 A3L
5	2	56503	Hose	1/2" x 1000mm v45/o
6	1	56504	Hose	1/2" x 600mm v45/o
7	1	25279	Connection	EGESD 22 LR-WD
8	1	59355	Return block	
9	1	25103	Plug	VS-R-1/2 WD
10	1	25277	Plug	VS-R-3/8 WD
11	1	25180	Reducing connection	RED-R 1/2-WD/R 1/4
12	1	25169	Connection	P-GEV 22 LR-WD
13	2	26122	Connection	P-GEV 22 LR 1-WD
14	1	56501	Hose	Til køler/tank
15	1	56502	Hose	Til køler
16	1	56395	Hose	Til tank

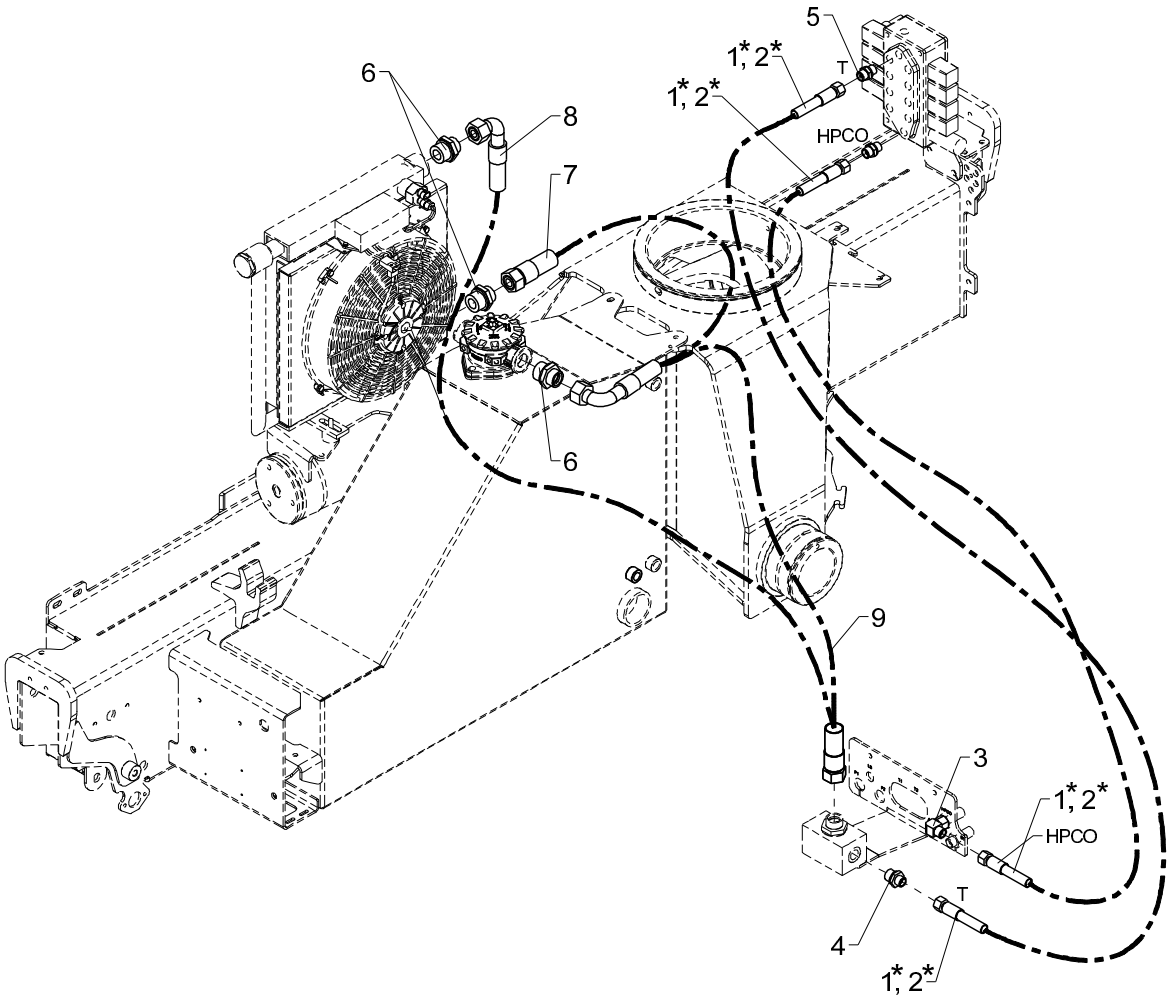

* 1300K-2630K: pos.1
1210L-2530L: pos.2

Hydr. syst. pump + return hoses (TS)

Pos	Qty.	Part no.	Description	Remarks
		6342420	Hydr.syst.pump+return hoses TS	1300K - 2630K
		6355150	Hydr.syst.pump+return pipingTS	1210L - 2530L
1	2	0015500	Hose	1300K - 2630K
2	2	0017650	Hose	1210L - 2530L
3	1	25242	Elbow connection	EWSD 12 L
4	1	25108	Connection	GES 12 LR 1/2-WD
5	2	25127	Connection	P-GEV 12 LR-WD
6	3	26122	Connection	P-GEV 22 LR 1-WD
7	1	56501	Hose	Til køler/tank
8	1	56502	Hose	Til køler
9	1	56395	Hose	Til tank

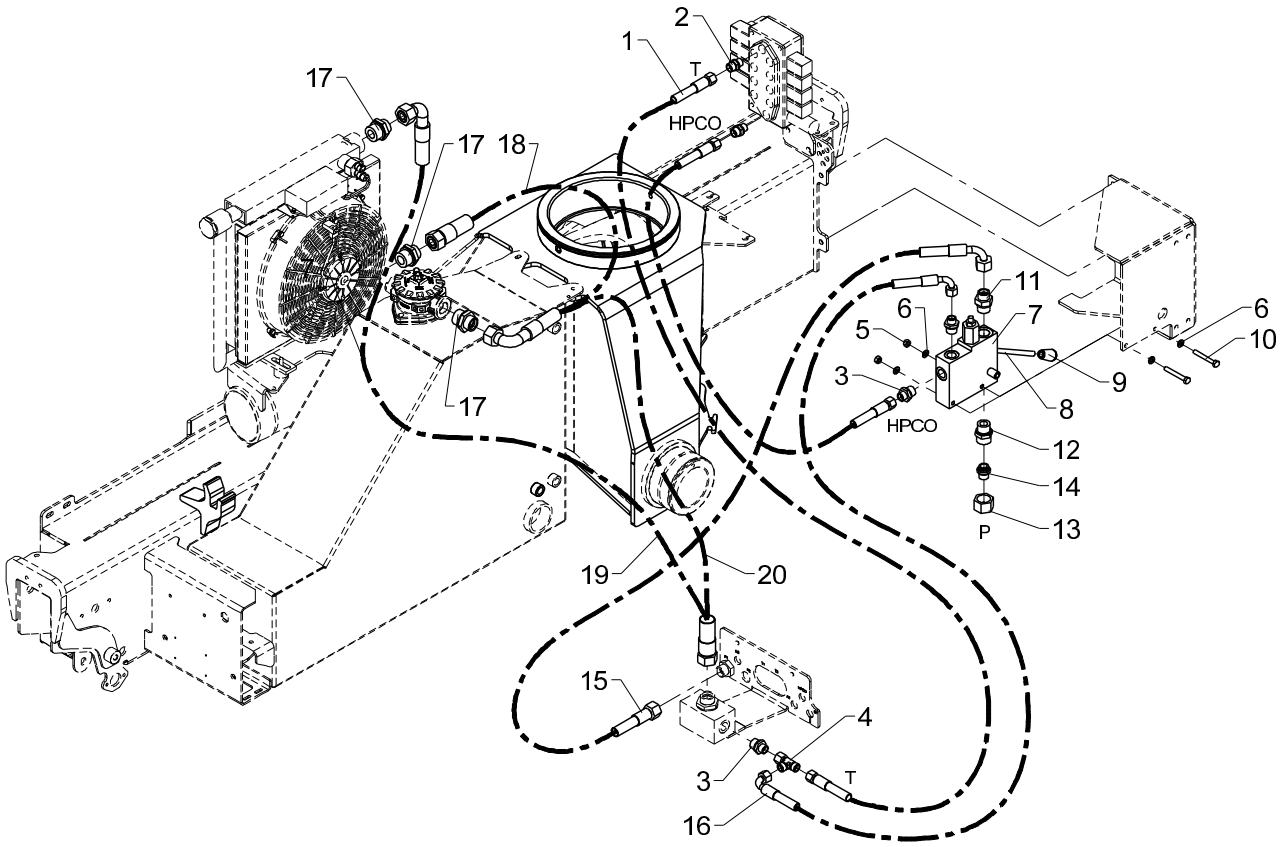
2
1
T
HPCO
17
17
18
17
11
6
7
5
6
10
3
9
8
HPCO
12
14
P
13
19
20
15
4
3
T
16

Hydraulic system, pump and return hoses (TS, excl. CE)

Pos	Qty.	Part no.	Description	Remarks
		6342400	Pump + return hoses - Danfoss	
1	2	0015500	Hose	
2	2	25127	Connection	P-GEV 12 LR-WD
3	3	25108	Connection	GES 12 LR 1/2-WD
4	1	25270	Connection	ELSD 12 L
5	2	30856	Nut, stainless	M8
6	4	31147	Face washer, 8 mm	8 mm
7	1	55292	Change-over valve+flowcontrol	
8	1	6340907	Lever	
9	1	64411	Knob for lever	
10	2	30141	Set screw, stainless	M8 x 60
11	1	26390	Connection	P-GEV 16 SR 3/4-WD
12	1	26197	Connection	P-GEV 20 SR-WD
13	1	26109	Coupling nut	M 20 S
14	1	26361	Blanking plug	VSD 20 S
15	1	56416	Hose	1/2 X 850 M24 X 1.5 L/90
16	1	0017460	Hose	
17	3	26122	Connection	P-GEV 22 LR 1-WD
18	1	56501	Hose	Til køler/tank
19	1	56502	Hose	Til køler
20	1	56395	Hose	Til tank

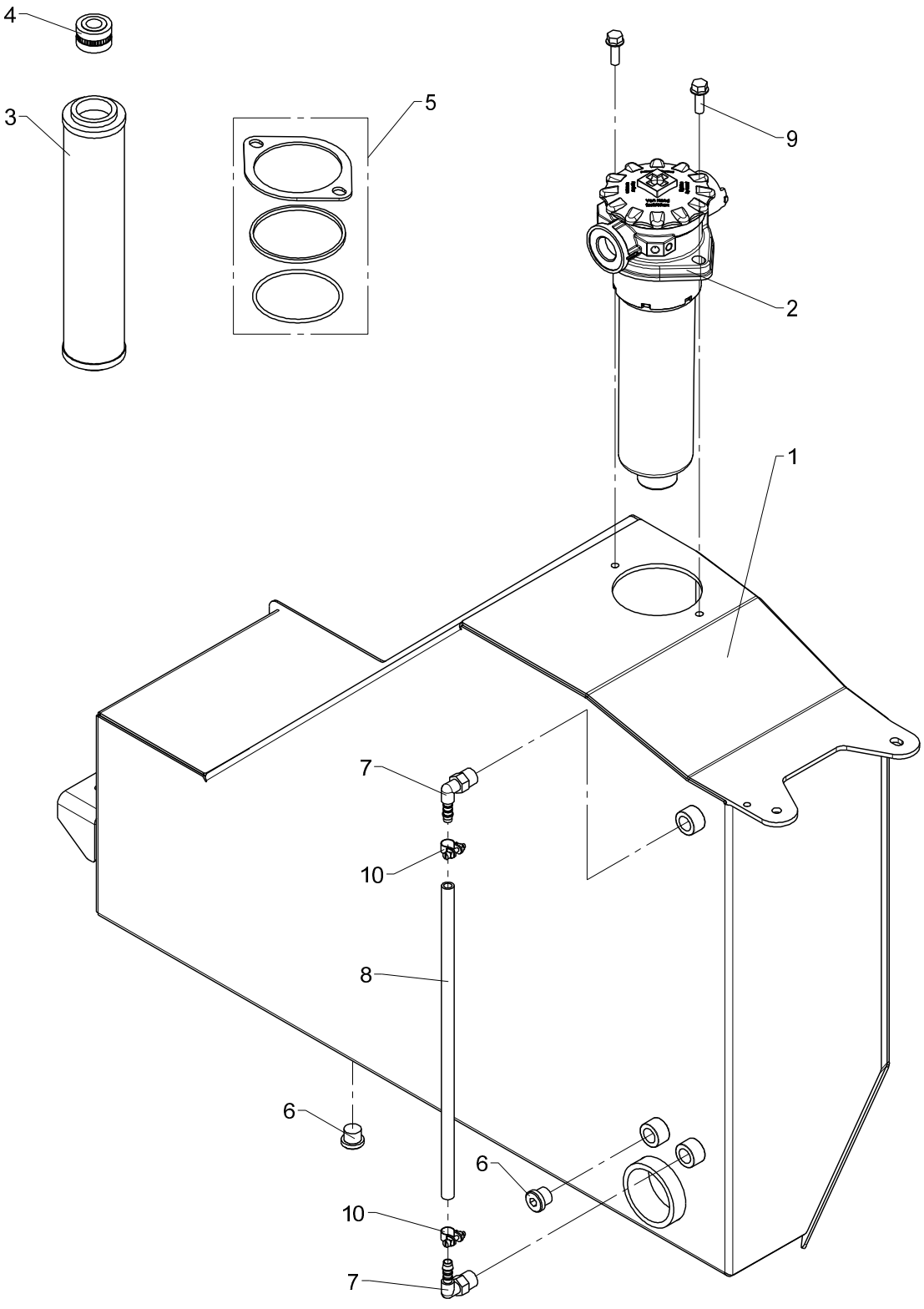
4
3
5
9
2
1
7
10
8
6
6
10
7

Tank, cpl.

From loader 1070001
To loader
Created 24-11-2008
Modified

Pos	Qty.	Part no.	Description	Remarks
1	1	6340531	Tank	
2	1	49405	Return filter	
3	1	49406	Filter	
4	1	49407	Air filter	
5	1	49418	Seal kit	
6	2	25277	Plug	VS-R-3/8 WD
7	2	64500	Elbow	WES 8/R-3/8"
8	1	62511	Plastic hose	
9	2	30996	Screw	M8 x 25
10	2	31452	Clamp	

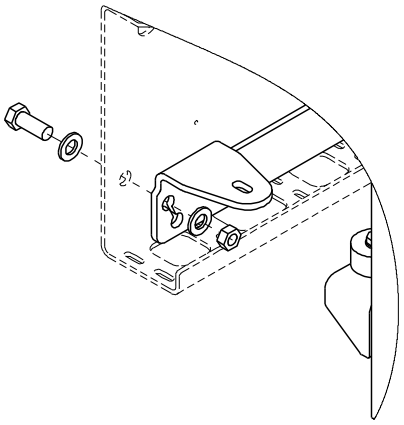

Placing of mounting bracket 6340537
13/88 - 17/117

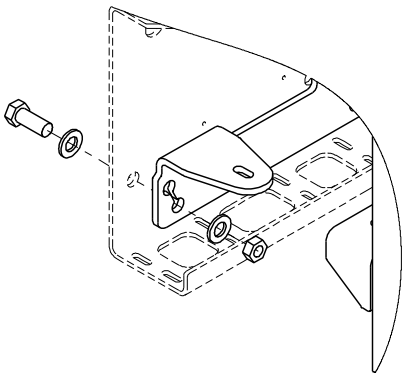

Placing of mounting bracket 6340537
18/124 - 26/160

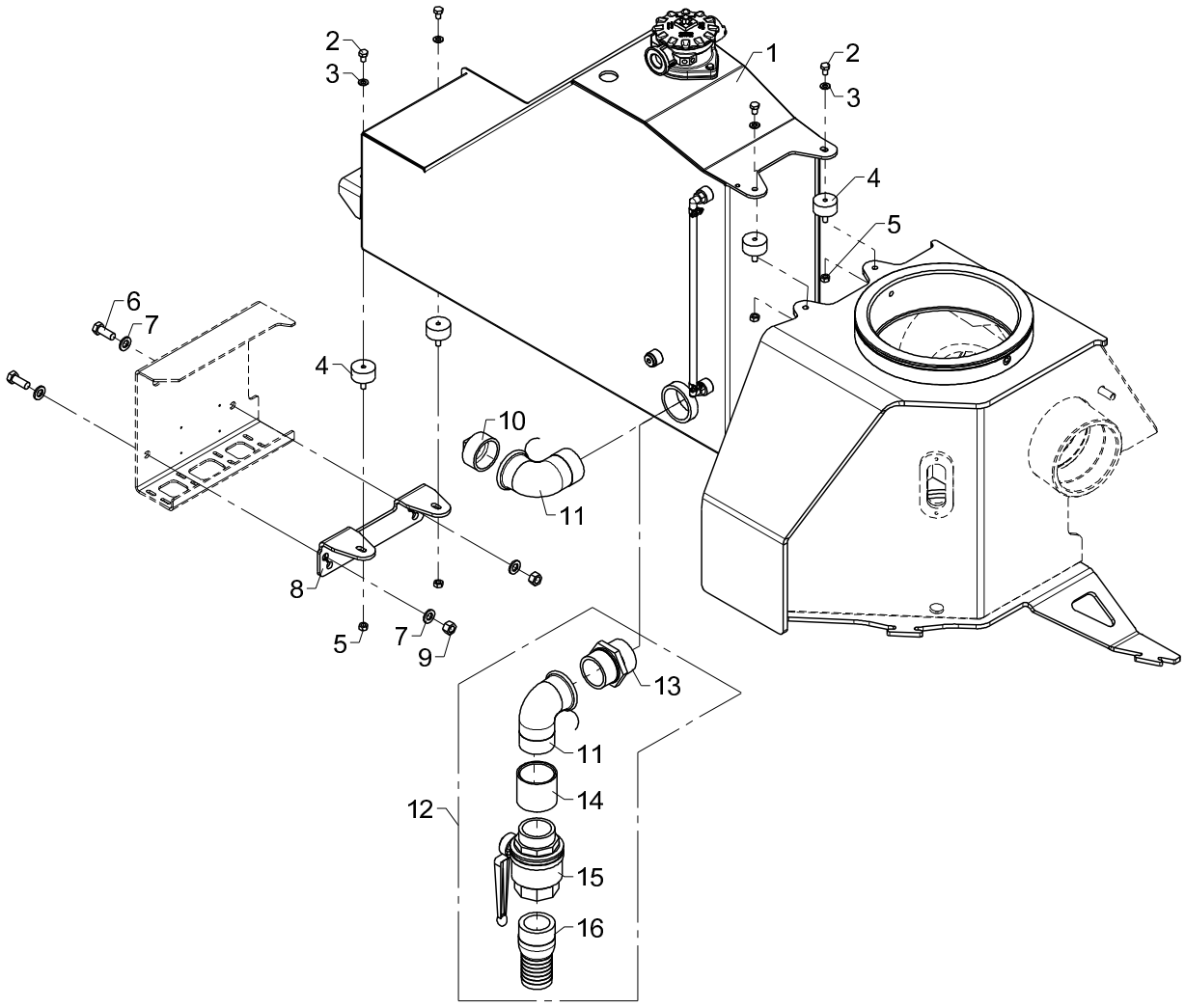

Tank incl. fittings

Pos	Qty.	Part no.	Description	Remarks
1	1	6341580	Tank with fittings	
2	4	30130	Set screw, stainless	M8 x 12
3	4	31147	Face washer, 8 mm	8 mm
4	4	62000	Torsion balancer	
5	4	30856	Nut, stainless	M8
6	2	30177	Set screw	M12 x 30
7	4	32338	Washer	12 mm
8	1	6340537	Mounting fittings	
9	2	30860	Nut, stainless	M12
10	1	25398	Plug	
11	1	25430	Elbow	
12	1	6395290		
13	1	25342	Nipple	2"
14	1	25490		2"
15	1	58787	3-way ball valve	2"
16	1	60991	Nipple	CN 200 / HMF

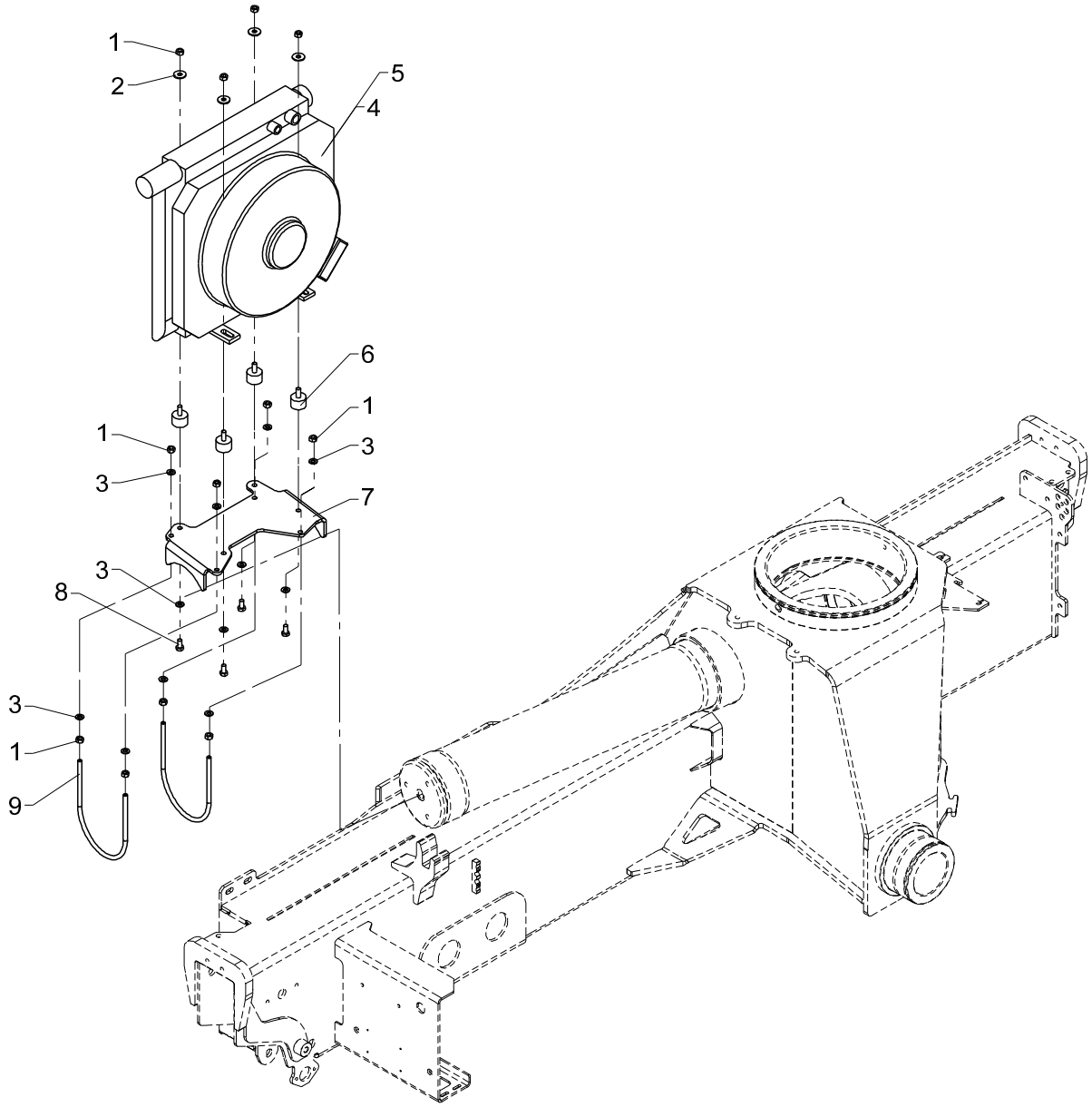
1
2
5
4
6
1
3
1
3
7
3
8
3
1
9

Oil cooler

Pos	Qty.	Part no.	Description	Remarks
		6346110	Oil cooler, complete	
		6346120	Oil cooler, complete. 12 V	
1	12	30856	Nut, stainless	M8
2	4	31136	Washer, stainless	8 mm
3	12	31147	Face washer, 8 mm	8 mm
4	1	50272	Oil cooler, 24 V + Smartdrive	24 V
5	1	50273	Oil cooler 12 V + Smartdrive	12 V
6	4	44263	Torsion balancer	
7	1	6344047	Cooler bracket	
8	4	30131	Set screw, stainless	M8 x 16
9	2	6344458	Clamp	

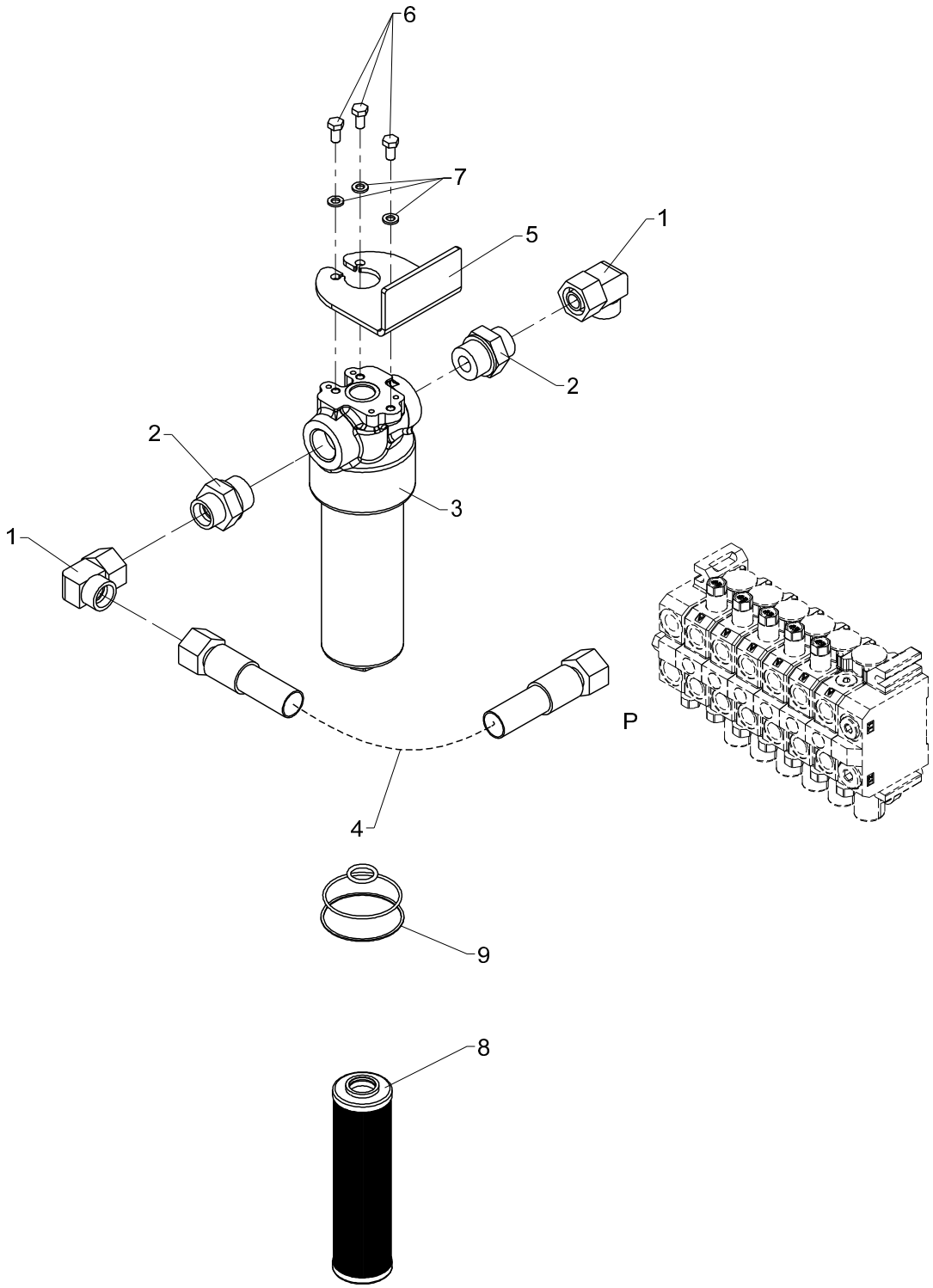
6
7
5
1
2
2
3
1
P
4
9
8

High-pressure filter

Pos	Qty.	Part no.	Description	Remarks
1	2	26198	Elbow connection	EWVD 20 S-SV
2	2	26851	Connection	GES 20 SR 1-WD
3	1	49401	High pressure filter	
4	1	62626	Hose	
5	1	6882974	Bracket, high pressure filter	
6	3	30131	Set screw, stainless	M8 x 16
7	3	31155	Spring washer	8 mm
8	1	49402	Filter	
9	1	49417	Seal kit	

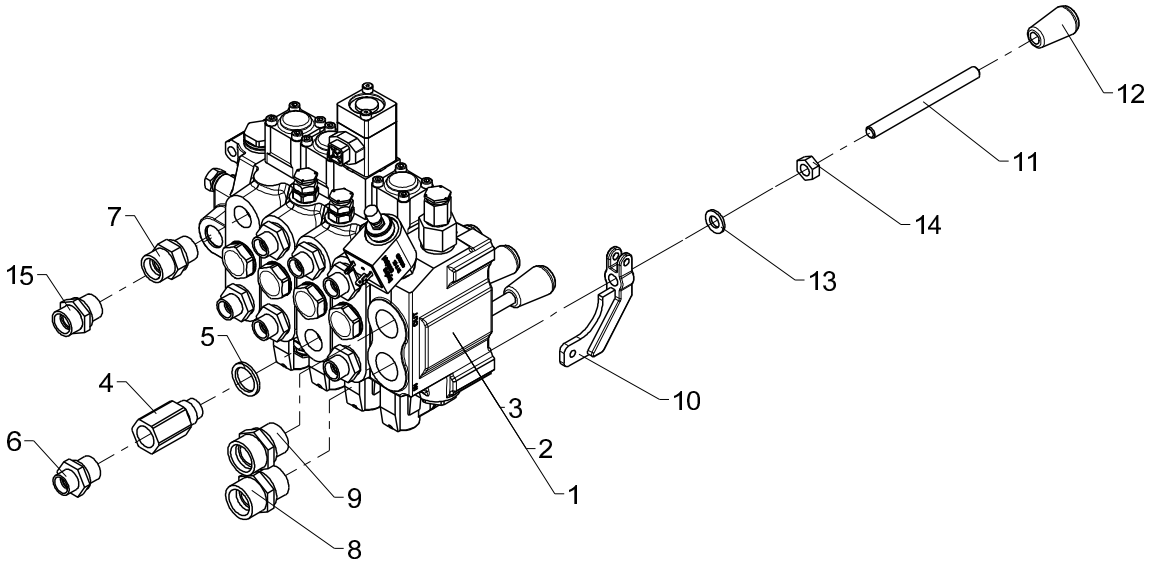
12
11
14
13
10
7
15
5
4
6
3
2
1
9
8

Valve block, 4 sects. HC-D4

Pos	Qty.	Part no.	Description	Remarks
		6651330	Valve block, 4 sect./HCD4-CE	
		6651360	Valve block, 4 sect./HCD4	
		6651390	Valve block, 4 sect./HCD4_2.1	
1	1	55256	Valve block, complete	6651330
2	1	55259	Valve block, complete	6651360
3	1	55274	Valve block, complete	6651390
4	1	60295	Flow-control valve	
5	1	21106	Seal washer	ø21,5 x 28,7 x 2,5
6	7	25108	Connection	GES 12 LR 1/2-WD
7	1	26334	Connection	P-GEV 16 SR-WD
8	1	26197	Connection	P-GEV 20 SR-WD
9	1	25169	Connection	P-GEV 22 LR-WD
10	4	63499	Adapter	
11	4	6340245	Control valve lever	
12	4	64411	Knob for lever	
13	4	31565	Washer, stainless	10 mm
14	4	30858	Nut	M10
15	1	25143	Connection	P-GEV 15 LR-WD

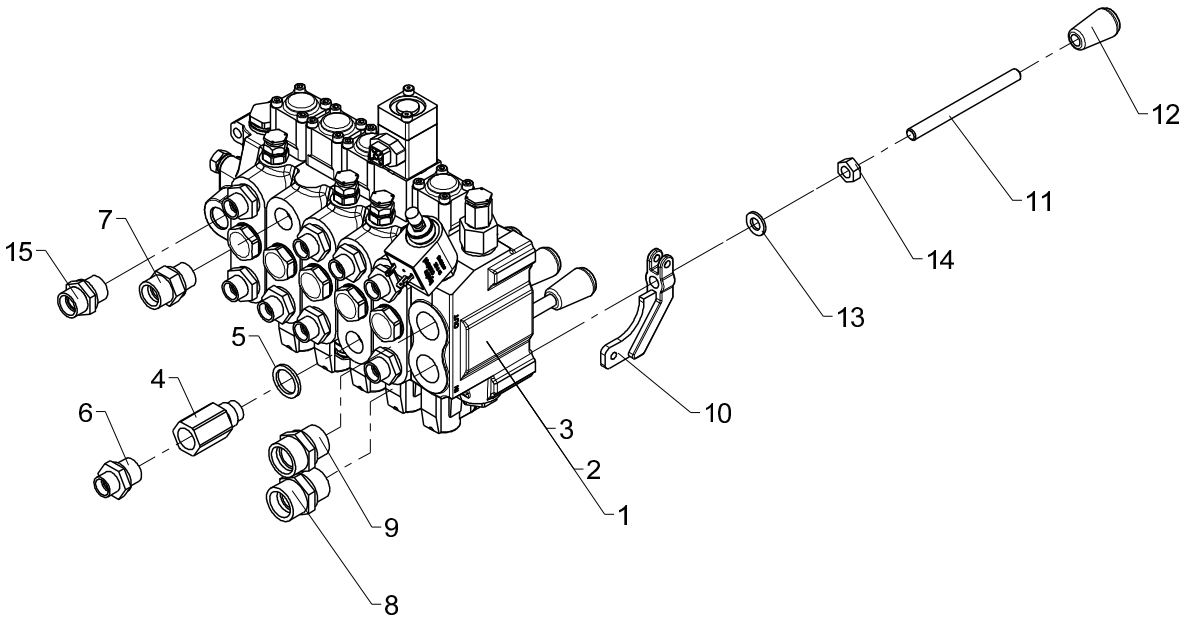
12
11
14
13
10
3
2
1
9
8
5
4
6
7
15

Valve block, 5 sects. HC-D4

Pos	Qty.	Part no.	Description	Remarks
		6651340	Valve block, 5 sect./HCD4-CE	
		6651370	Valve block, 5 sect./HCD4	
		6651400	Valve block,5 sect./HCD4-CE2.1	
1	1	55257	Valve block, complete	6651340
2	1	55260	Valve block, complete	6651370
3	1	55272	Valve block, complete	6651400
4	1	60295	Flow-control valve	
5	1	21106	Seal washer	ø21,5 x 28,7 x 2,5
6	9	25108	Connection	GES 12 LR 1/2-WD
7	1	26334	Connection	P-GEV 16 SR-WD
8	1	26197	Connection	P-GEV 20 SR-WD
9	1	25169	Connection	P-GEV 22 LR-WD
10	5	63499	Adapter	
11	5	6340245	Control valve lever	
12	5	64411	Knob for lever	
13	5	31565	Washer, stainless	10 mm
14	5	30858	Nut	M10
15	1	25143	Connection	P-GEV 15 LR-WD

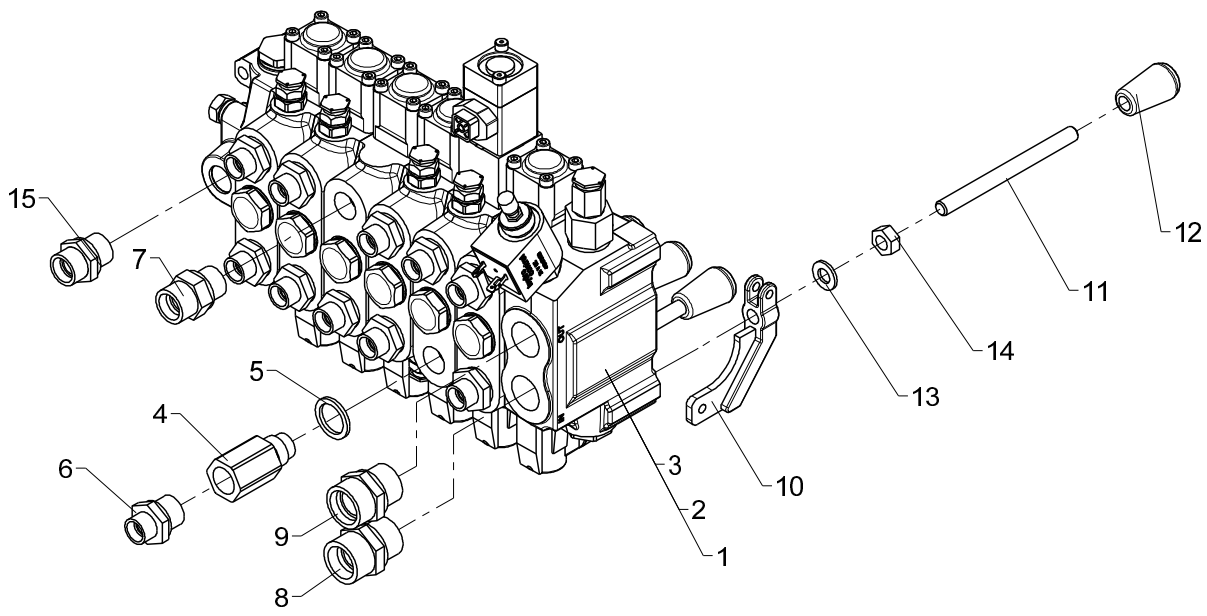
15
7
5
4
6
9
8
3
2
1
10
13
14
11
12

Valve block, 6 sects. HC-D4

Pos	Qty.	Part no.	Description	Remarks
		6651320	Valve block, 6 sect./HCD4-CE	
		6651350	Valve block, 6 sect./HCD4	
		6651380	Valve block,6 sect./HCD4-CE2.1	
1	1	55255	Valve block, complete	6651320
2	1	55258	Valve block, complete	6651350
3	1	55273	Valve block, complete	6651380
4	1	60295	Flow-control valve	
5	1	21106	Seal washer	ø21,5 x 28,7 x 2,5
6	11	25108	Connection	GES 12 LR 1/2-WD
7	1	26334	Connection	P-GEV 16 SR-WD
8	1	26197	Connection	P-GEV 20 SR-WD
9	1	25169	Connection	P-GEV 22 LR-WD
10	6	63499	Adapter	
11	6	6340245	Control valve lever	
12	6	64411	Knob for lever	
13	6	31565	Washer, stainless	10 mm
14	6	30858	Nut	M10
15	1	25143	Connection	P-GEV 15 LR-WD

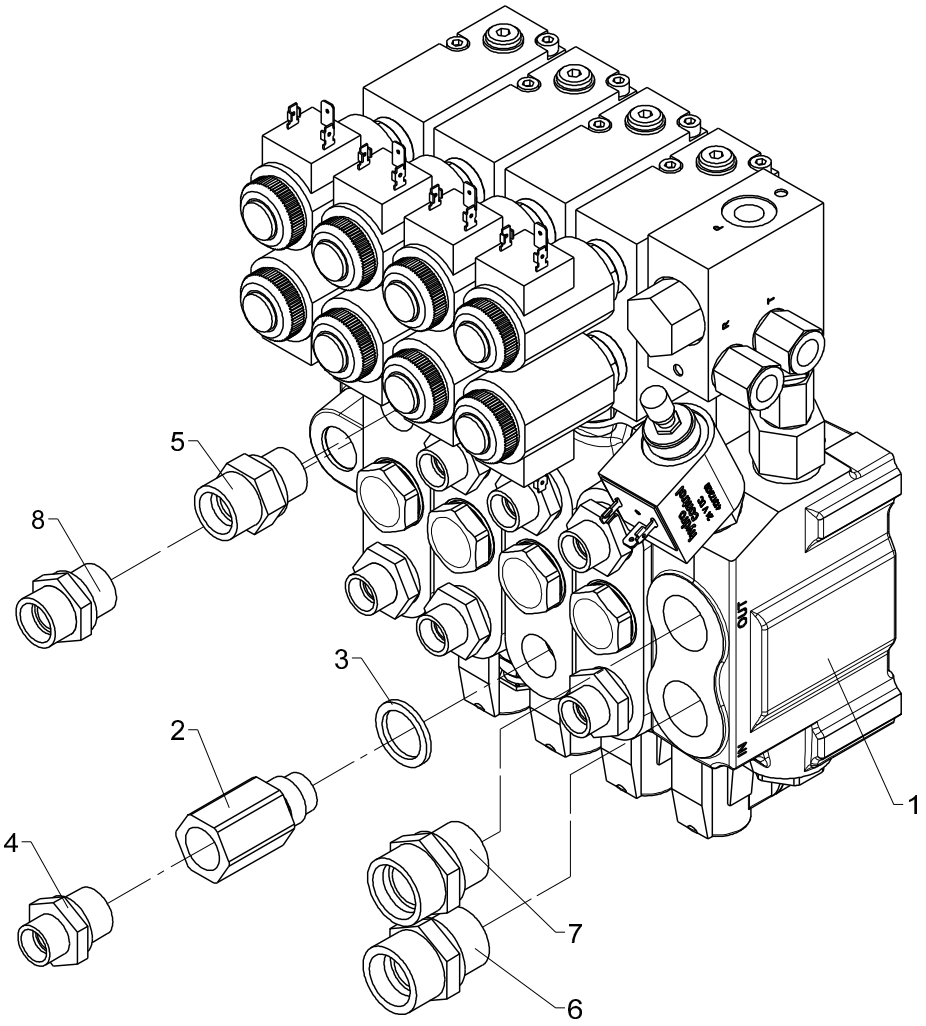
5
8
3
2
4
1
7
6

535 06 230

Valve block, 4 sects. HC-D4 NEM

From loader 1070001
To loader

Created 20-11-2008
Modified 08-02-2012

Pos	Qty.	Part no.	Description	Remarks
1	1	55266	Valve block, cpl. with NEM	
2	1	60295	Flow-control valve	
3	1	21106	Seal washer	ø21,5 x 28,7 x 2,5
4	7	25108	Connection	GES 12 LR 1/2-WD
5	1	26334	Connection	P-GEV 16 SR-WD
6	1	26197	Connection	P-GEV 20 SR-WD
7	1	25169	Connection	P-GEV 22 LR-WD
8	1	25143	Connection	P-GEV 15 LR-WD

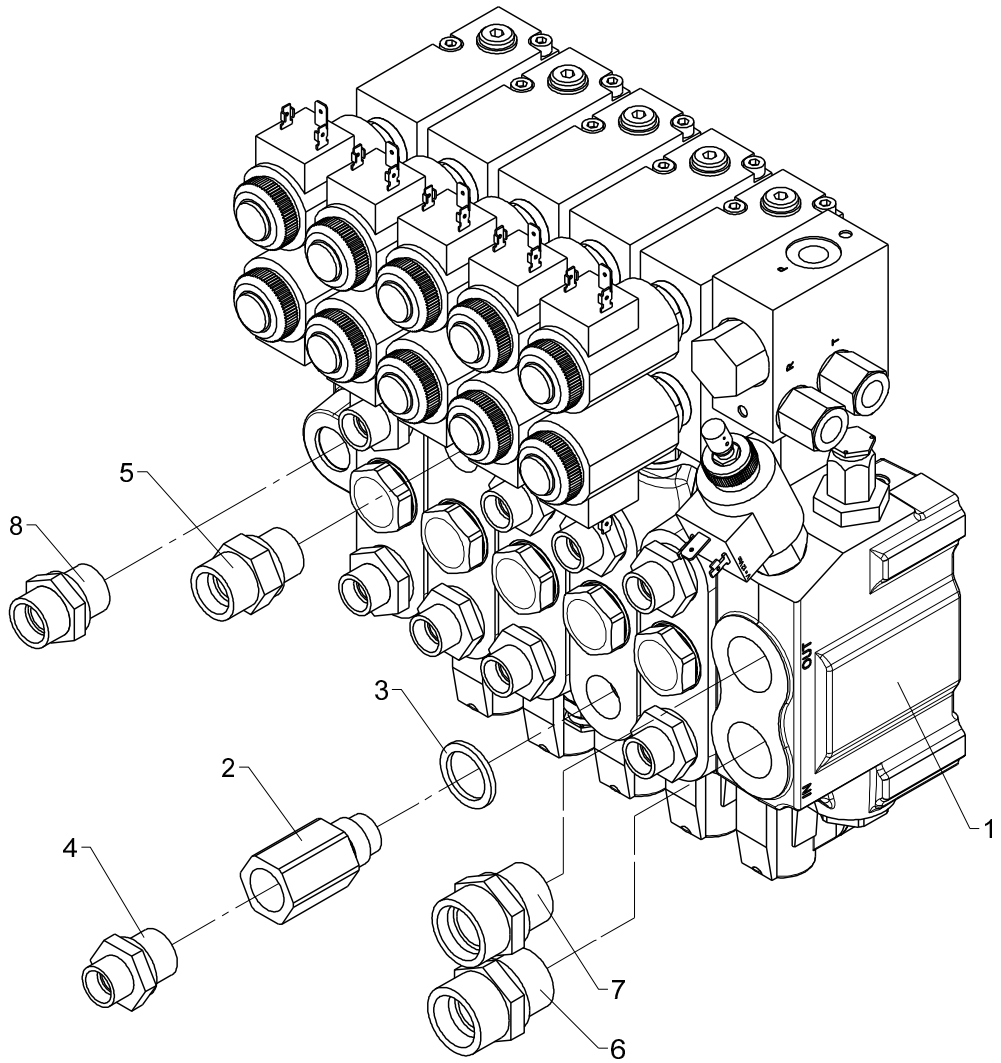
5
8
3
2
4
1
7
6

535 06 240

From loader 1070001
To loader

Created 20-11-2008
Modified 08-02-2012

Valve block, 5 sects. HC-D4 NEM

Pos	Qty.	Part no.	Description	Remarks
1	1	55267	Valve block, cpl. with NEM	
2	1	60295	Flow-control valve	
3	1	21106	Seal washer	ø21,5 x 28,7 x 2,5
4	9	25108	Connection	GES 12 LR 1/2-WD
5	1	26334	Connection	P-GEV 16 SR-WD
6	1	26197	Connection	P-GEV 20 SR-WD
7	1	25169	Connection	P-GEV 22 LR-WD
8	1	25143	Connection	P-GEV 15 LR-WD

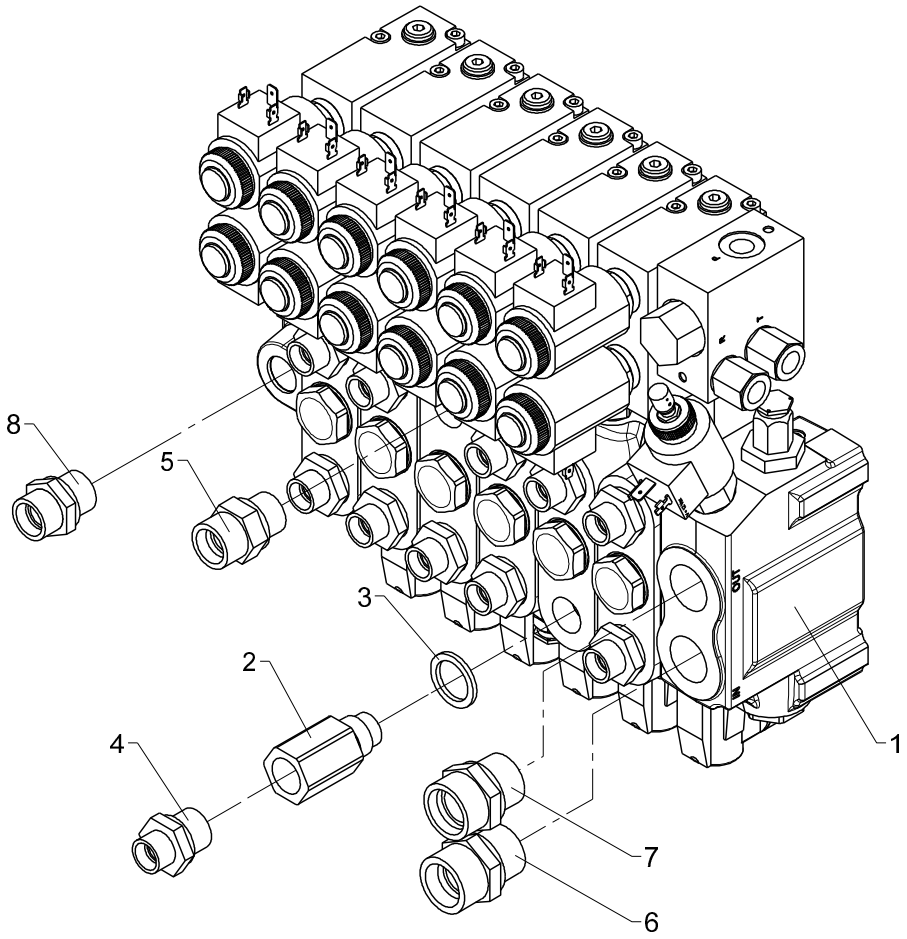
8
5
3
2
4
1
7
6

535 06 250

From loader 1070001
To loader

Created 20-11-2008
Modified 08-02-2012

Valve block, 6 sects. HC-D4 NEM

Pos	Qty.	Part no.	Description	Remarks
1	1	55265	Valve block, cpl. with NEM	
2	1	60295	Flow-control valve	
3	1	21106	Seal washer	ø21,5 x 28,7 x 2,5
4	11	25108	Connection	GES 12 LR 1/2-WD
5	1	26334	Connection	P-GEV 16 SR-WD
6	1	26197	Connection	P-GEV 20 SR-WD
7	1	25169	Connection	P-GEV 22 LR-WD
8	1	25143	Connection	P-GEV 15 LR-WD

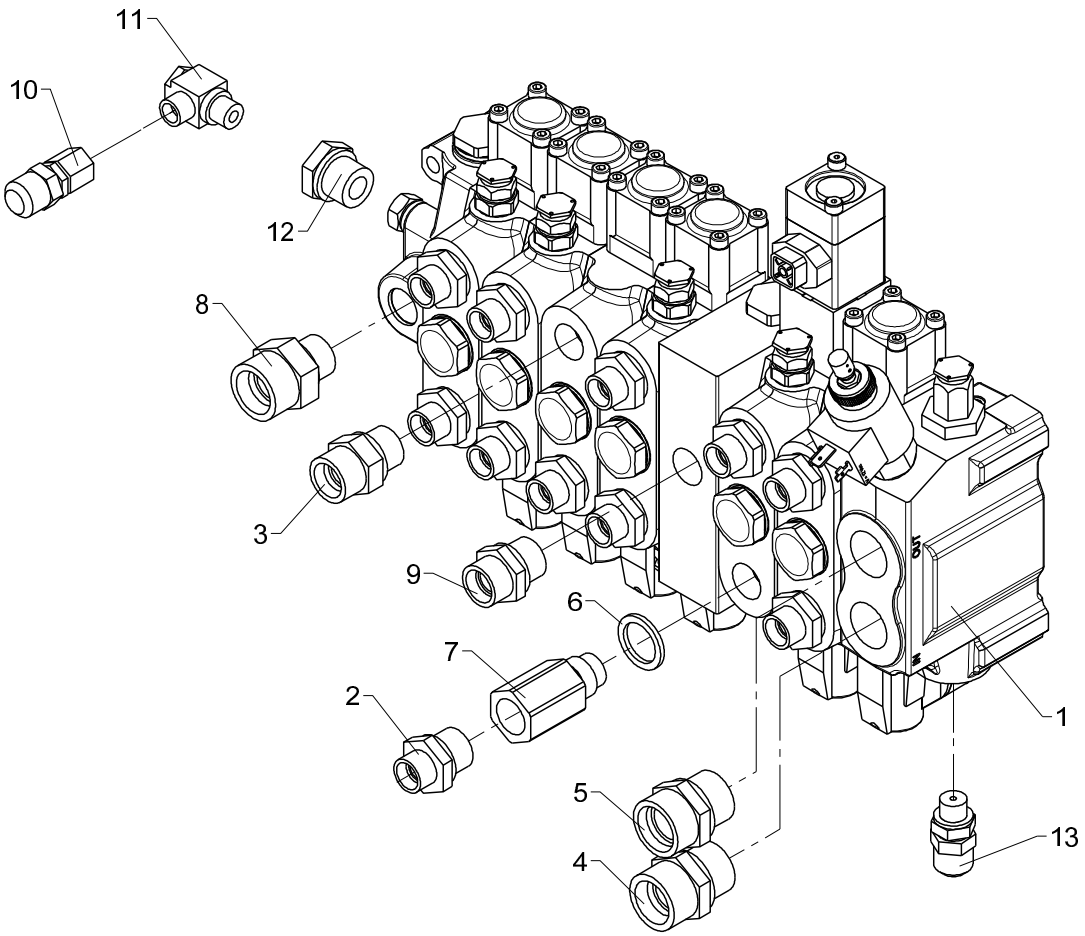
11
10
12
8
3
9
6
7
2
1
5
4
13

Valve block, 6 sect./HCD4/2+4 CE

Pos	Qty.	Part no.	Description	Remarks
1	1	55290	Valve black, dual circuit	
2	11	25108	Connection	GES 12 LR 1/2-WD
3	1	26334	Connection	P-GEV 16 SR-WD
4	1	26197	Connection	P-GEV 20 SR-WD
5	1	25169	Connection	P-GEV 22 LR-WD
6	1	21106	Seal washer	ø21,5 x 28,7 x 2,5
7	1	60295	Flow-control valve	
8	1	26221	Connection	P-GEV 20 SR 1/2-WD
9	1	25143	Connection	P-GEV 15 LR-WD
10	1	26148	Connection	
11	1	25113	Banjo connection	RSWV 8 LR
12	1	25180	Reducing connection	RED-R 1/2-WD/R 1/4
13	1	26103	Pressure-gauge connect.	

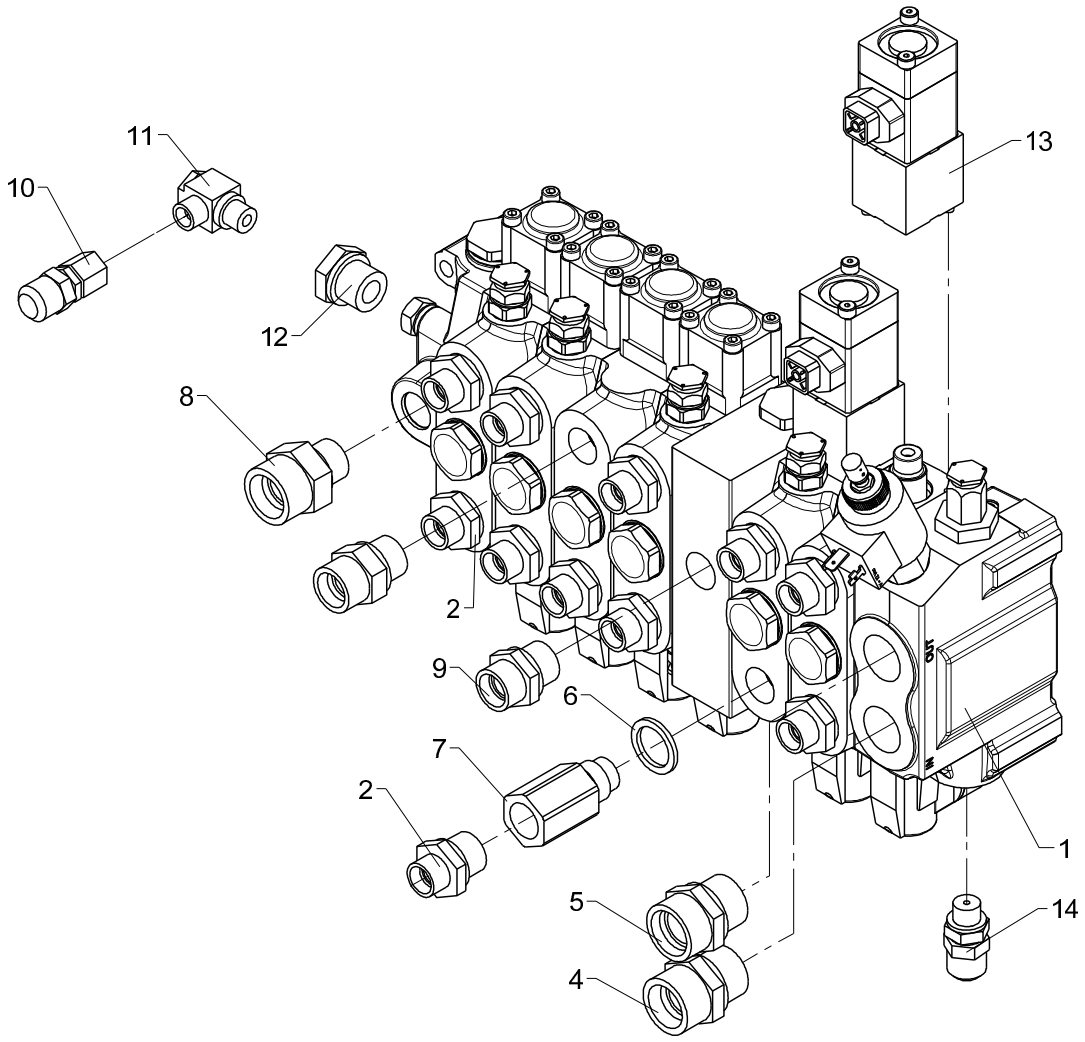
11
10
12
8
2
9
6
7
2
5
4
13
1
14

Valve block, 6 sect./HCD4/2+4 CE2.1

Pos	Qty.	Part no.	Description	Remarks
1	1	55290	Valve black, dual circuit	
2	11	25108	Connection	GES 12 LR 1/2-WD
3	1	26334	Connection	P-GEV 16 SR-WD
4	1	26197	Connection	P-GEV 20 SR-WD
5	1	25169	Connection	P-GEV 22 LR-WD
6	1	21106	Seal washer	ø21,5 x 28,7 x 2,5
7	1	60295	Flow-control valve	
8	1	26221	Connection	P-GEV 20 SR 1/2-WD
9	1	25143	Connection	P-GEV 15 LR-WD
10	1	26148	Connection	
11	1	25113	Banjo connection	RSWV 8 LR
12	1	25180	Reducing connection	RED-R 1/2-WD/R 1/4
13	1	55371	Spool sensor	
14	1	26103	Pressure-gauge connect.	

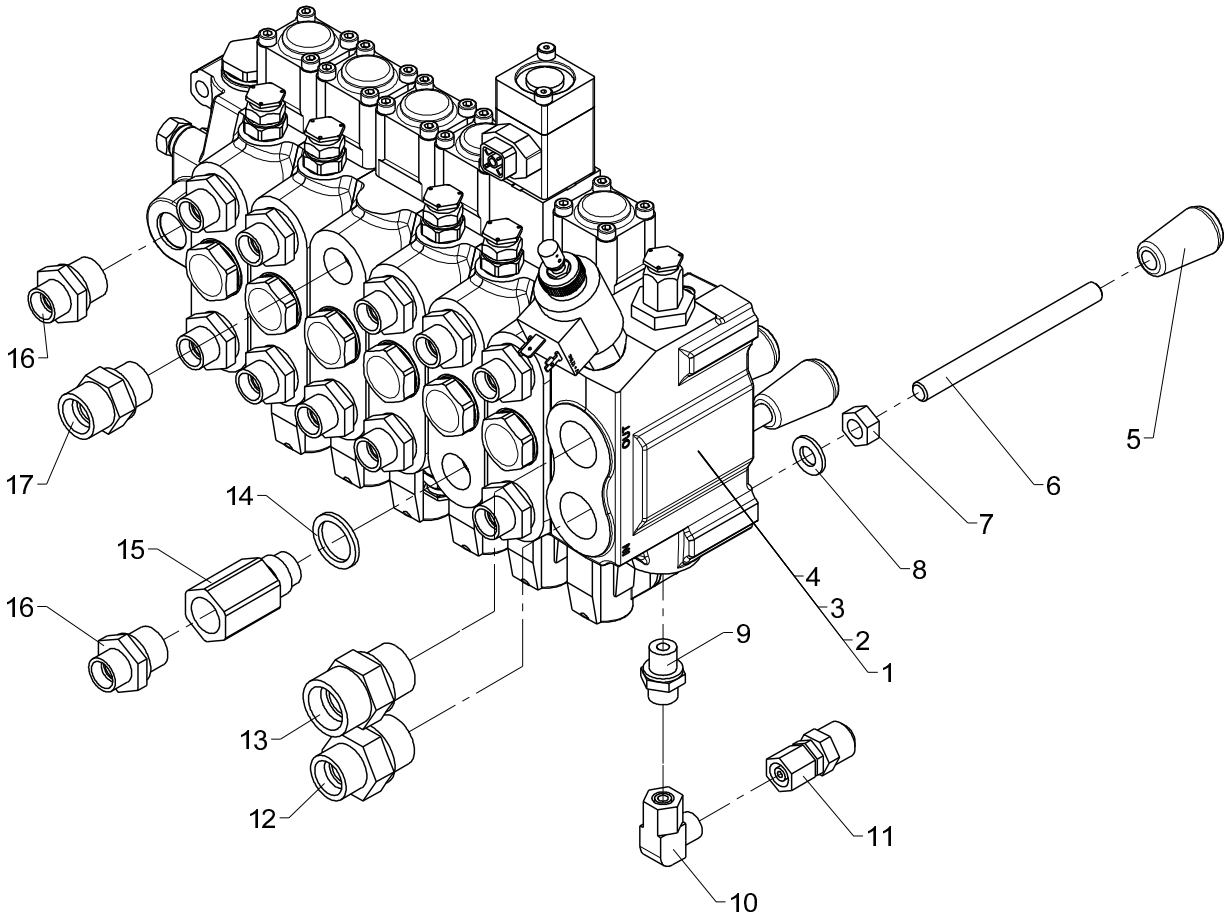
16
17
14
15
16
13
12
9
4
3
2
1
8
7
6
5
11
10

Valve block, 6 sect. HC-D4

Pos	Qty.	Part no.	Description	Remarks
		6651540	Valve block, 6 sect./HCD4-CE	
		6651550	Valve block, 6 sect./HCD4	
		6651560	Valve bl., 6 sec./HCD4-CE2.1	
		6652440		
1	1	55255	Valve block, complete	
2	1	55258	Valve block, complete	
3	1	55273	Valve block, complete	
4	1	55721	Valve block, complete	
5	6	64411	Knob for lever	
6	6	6340245	Control valve lever	
7	6	30858	Nut	M10
8	6	31565	Washer, stainless	10 mm
9	1	25109	Connection	GES 8 LR-WD
10	1	26170	Elbow connection	EWSD 8 L
11	1	26148	Connection	
12	1	26390	Connection	P-GEV 16 SR 3/4-WD
13	1	26197	Connection	P-GEV 20 SR-WD
14	1	21106	Seal washer	ø21,5 x 28,7 x 2,5
15	1	60295	Flow-control valve	
16	12	25108	Connection	GES 12 LR 1/2-WD
17	1	26334	Connection	P-GEV 16 SR-WD

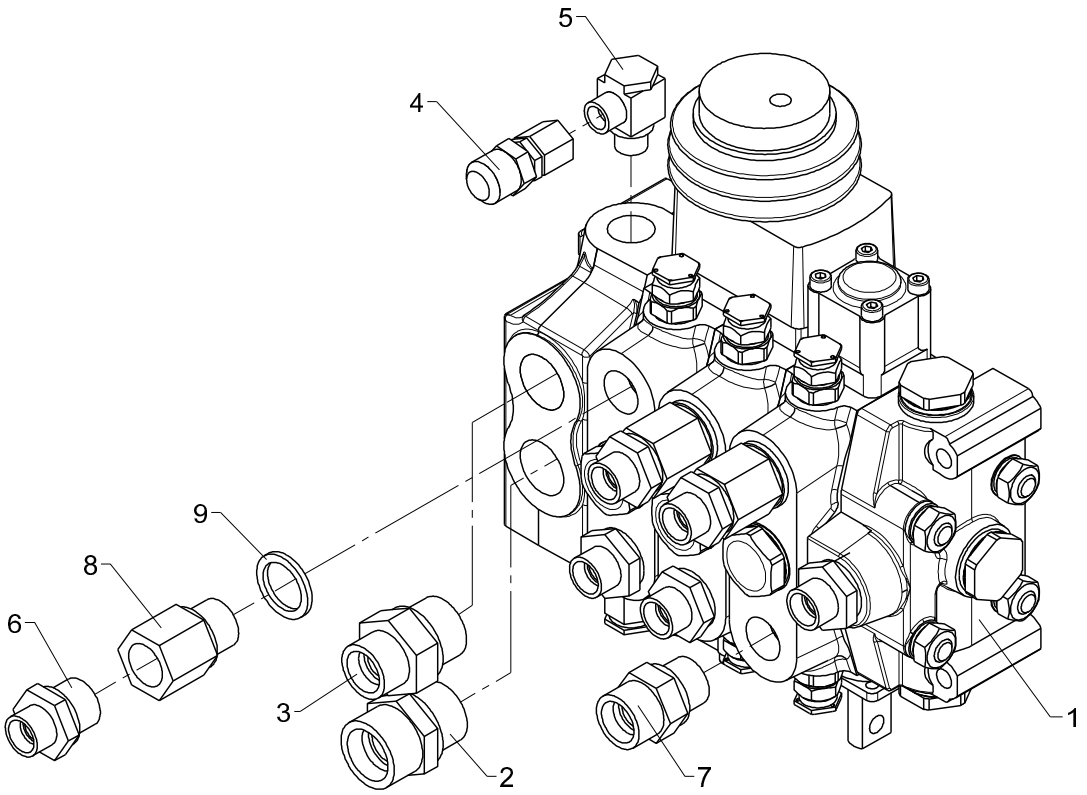
5
4
9
8
6
3
2
7
1

535 06 290

Valve block left, 3 sects. HC-D4 TS

From loader 1070001
To loader
Created
Modified

Pos	Qty.	Part no.	Description	Remarks
1	1	55280	Valve	
2	1	26197	Connection	P-GEV 20 SR-WD
3	1	26390	Connection	P-GEV 16 SR 3/4-WD
4	1	26148	Connection	
5	1	25113	Banjo connection	RSWV 8 LR
6	6	25108	Connection	GES 12 LR 1/2-WD
7	1	26334	Connection	P-GEV 16 SR-WD
8	3	26922	Reducing nipple	1/2 BSP x 1/" BSP
9	3	21106	Seal washer	ø21,5 x 28,7 x 2,5

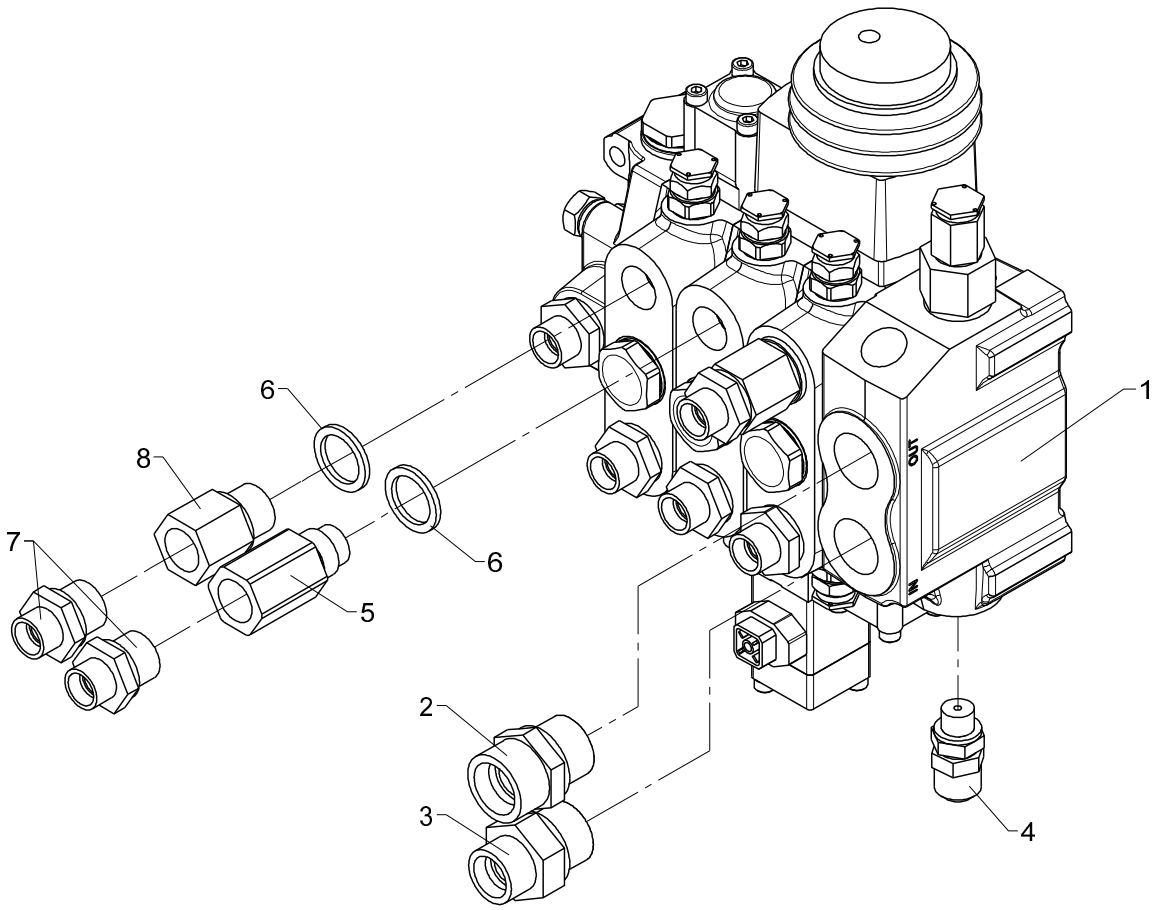
1
2
3
4
5
6
6
7
8

535 06 300

Valve block right, 3 sects. HC-D4 TS

From loader 1070001
To loader
Created
Modified

Pos	Qty.	Part no.	Description	Remarks
1	1	55279	Valve	
2	1	26197	Connection	P-GEV 20 SR-WD
3	1	26390	Connection	P-GEV 16 SR 3/4-WD
4	1	26103	Pressure-gauge connect.	
5	1	60295	Flow-control valve	
6	3	21106	Seal washer	ø21,5 x 28,7 x 2,5
7	7	25108	Connection	GES 12 LR 1/2-WD
8	2	26922	Reducing nipple	1/2 BSP x 1/" BSP

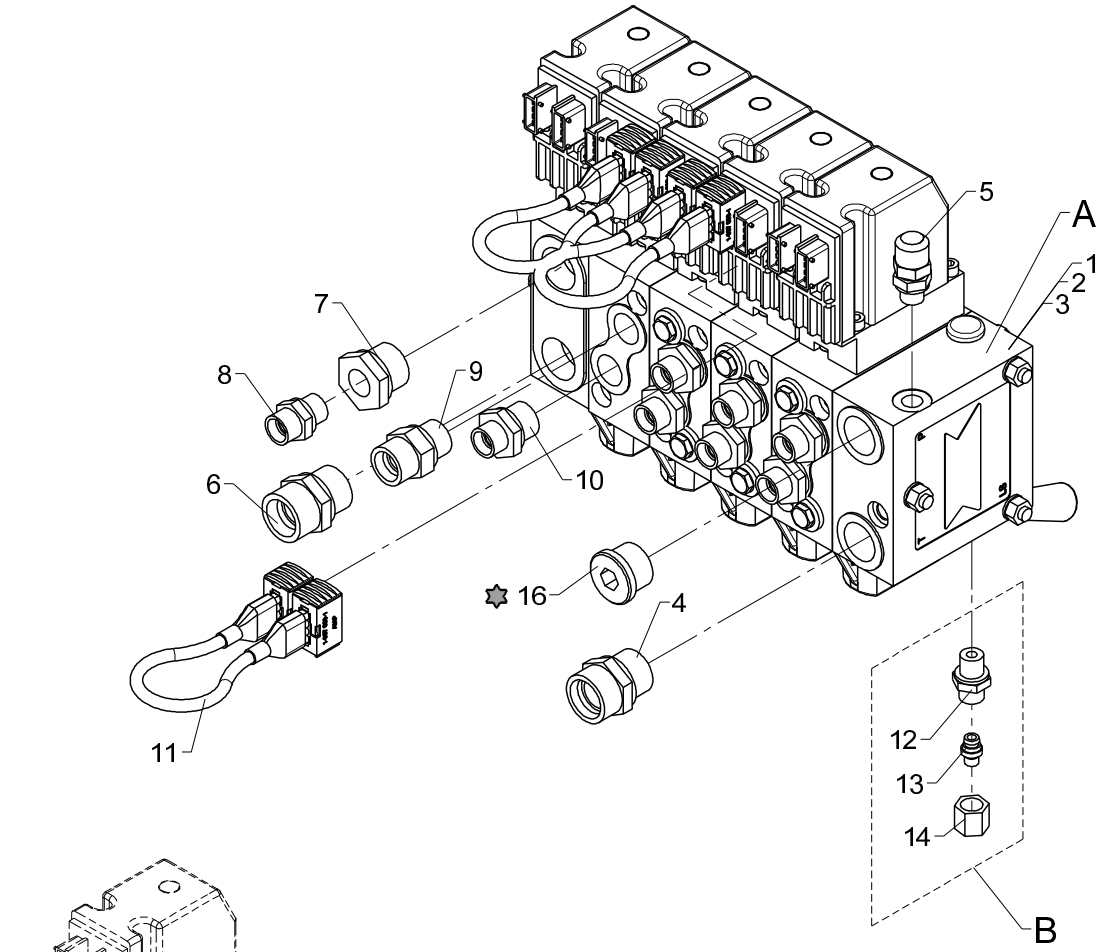

	A	B	C
66 50 420	63 301	X	
66 50 430	63 302		
66 50 560	63 301	X	X
66 50 570	63 319		

Loctite 542

Control valves, Danfoss, 4 sections, fixed/variable flow (std./QOPS)

Pos	Qty.	Part no.	Description	Remarks
		6650420	Valve block, 4 sect. variable	
		6650430	Valve block, 4 sect., fixed	
		6650560	Valve block, 4 sect.,var. QOPS	
		6650570	Valve block, 4 sect. fixedQOPS	
1	1	63301	Valve block	
2	1	63302	Valve block	
3	1	63319	Valve block	
4	1	25169	Connection	P-GEV 22 LR-WD
5	1	26103	Pressure-gauge connect.	
6	1	26197	Connection	P-GEV 20 SR-WD
7	1	26319	Reducing connection	RED-R 3/4-WD/R 3/8
8	1	25127	Connection	P-GEV 12 LR-WD
9	1	26334	Connection	P-GEV 16 SR-WD
10	7	25108	Connection	GES 12 LR 1/2-WD
11	3	62296	Cable	
12	1	25109	Connection	GES 8 LR-WD
13	1	26166	Blanking plug	VSD 8 L
14	1	25181	Coupling nut	M 8 L
15	1	59676	Sensor	
16	1	26355	Plug	VS-R-3/4 WD

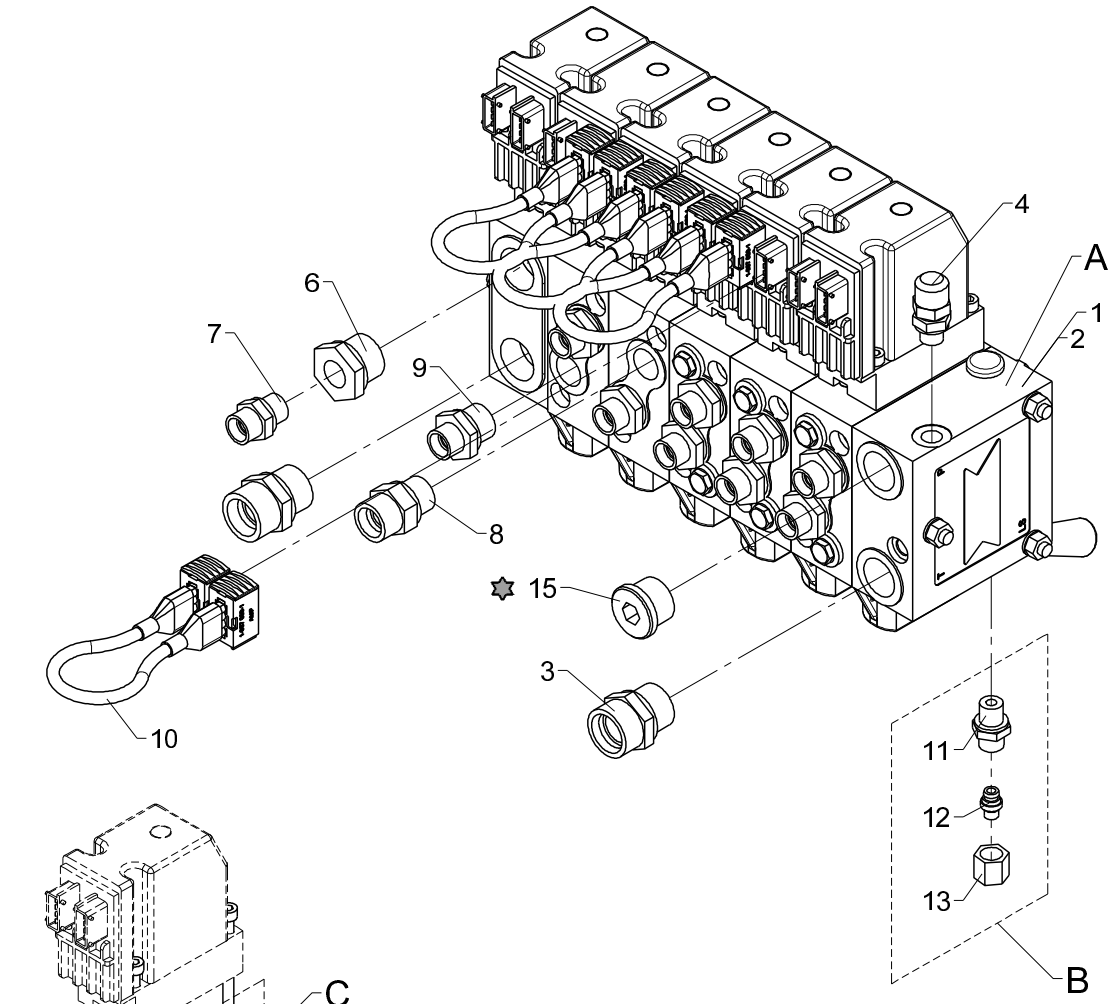

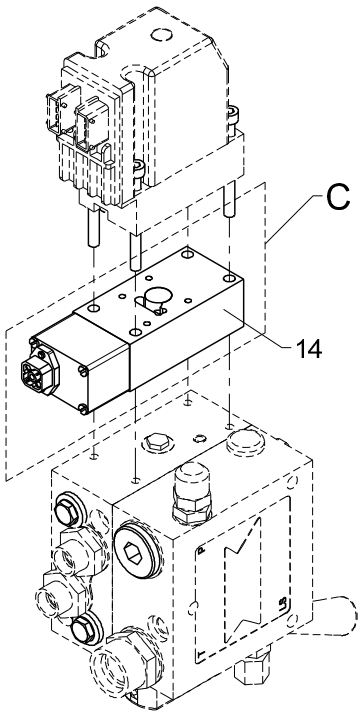

	A	B	C
66 50 440	63 303	X	
66 50 450	63 304		
66 50 580	63 303	X	X
66 50 590	63 304		X

Loctite 542

Control valves, Danfoss, 5 sections, fixed/variable flow with rotator (std./QOPS)

Pos	Qty.	Part no.	Description	Remarks
		6650440	Valve block, 5 sect., variable	
		6650450	Valve block, 5 sect., fixed	
		6650580	Valve block, 5 sect.,var. QOPS	
		6650590	Valve block, 5 sect.,fix. QOPS	
1	1	63303	Valve block	
2	1	63304	Valve block	
3	1	25169	Connection	P-GEV 22 LR-WD
4	1	26103	Pressure-gauge connect.	
5	1	26197	Connection	P-GEV 20 SR-WD
6	1	26319	Reducing connection	RED-R 3/4-WD/R 3/8
7	1	25127	Connection	P-GEV 12 LR-WD
8	1	26334	Connection	P-GEV 16 SR-WD
9	9	25108	Connection	GES 12 LR 1/2-WD
10	4	62296	Cable	
11	1	25109	Connection	GES 8 LR-WD
12	1	26166	Blanking plug	VSD 8 L
13	1	25181	Coupling nut	M 8 L
14	1	59676	Sensor	
15	1	26355	Plug	VS-R-3/4 WD

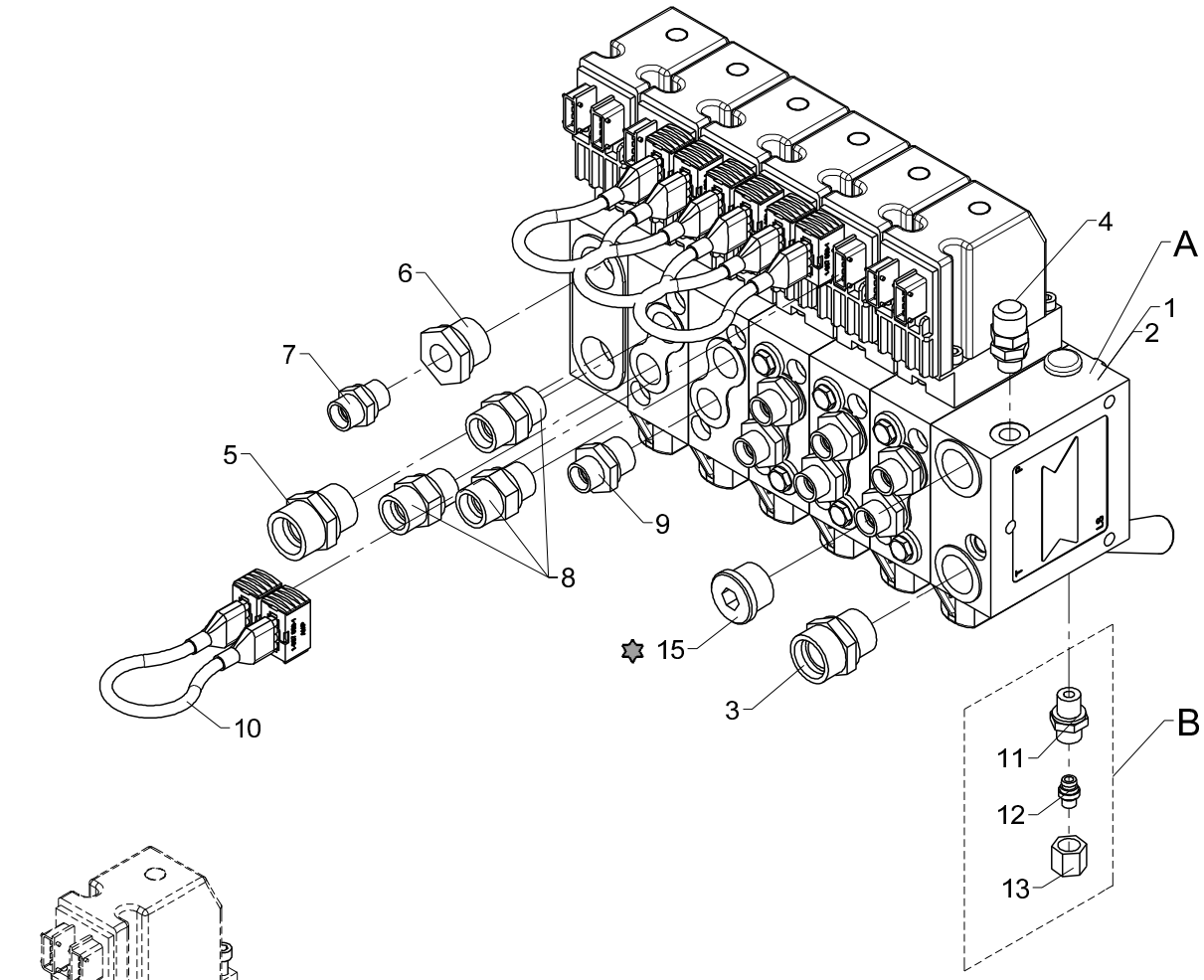

	A	B	C
66 50 460	63 305	X	
66 50 470	63 306		
66 50 600	63 305	X	X
66 50 610	63 306		X

✡ Loctite 542

Control valves, Danfoss, 5 sections, fixed/variable flow with winch (std./QOPS)

Pos	Qty.	Part no.	Description	Remarks
		6650460	Valve block, 5 sect., variable	
		6650470	Valve block, 5 sect., fixed	
		6650600	Valve block, 5 sect.,var.QOPS	
		6650610	Valve block, 5 sect.,fixedQOPS	
1	1	63305	Valve block	
2	1	63306	Valve block	
3	1	25169	Connection	P-GEV 22 LR-WD
4	1	26103	Pressure-gauge connect.	
5	1	26197	Connection	P-GEV 20 SR-WD
6	1	26319	Reducing connection	RED-R 3/4-WD/R 3/8
7	1	25127	Connection	P-GEV 12 LR-WD
8	3	26334	Connection	P-GEV 16 SR-WD
9	7	25108	Connection	GES 12 LR 1/2-WD
10	4	62296	Cable	
11	1	25109	Connection	GES 8 LR-WD
12	1	26166	Blanking plug	VSD 8 L
13	1	25181	Coupling nut	M 8 L
14	1	59676	Sensor	
15	1	26355	Plug	VS-R-3/4 WD

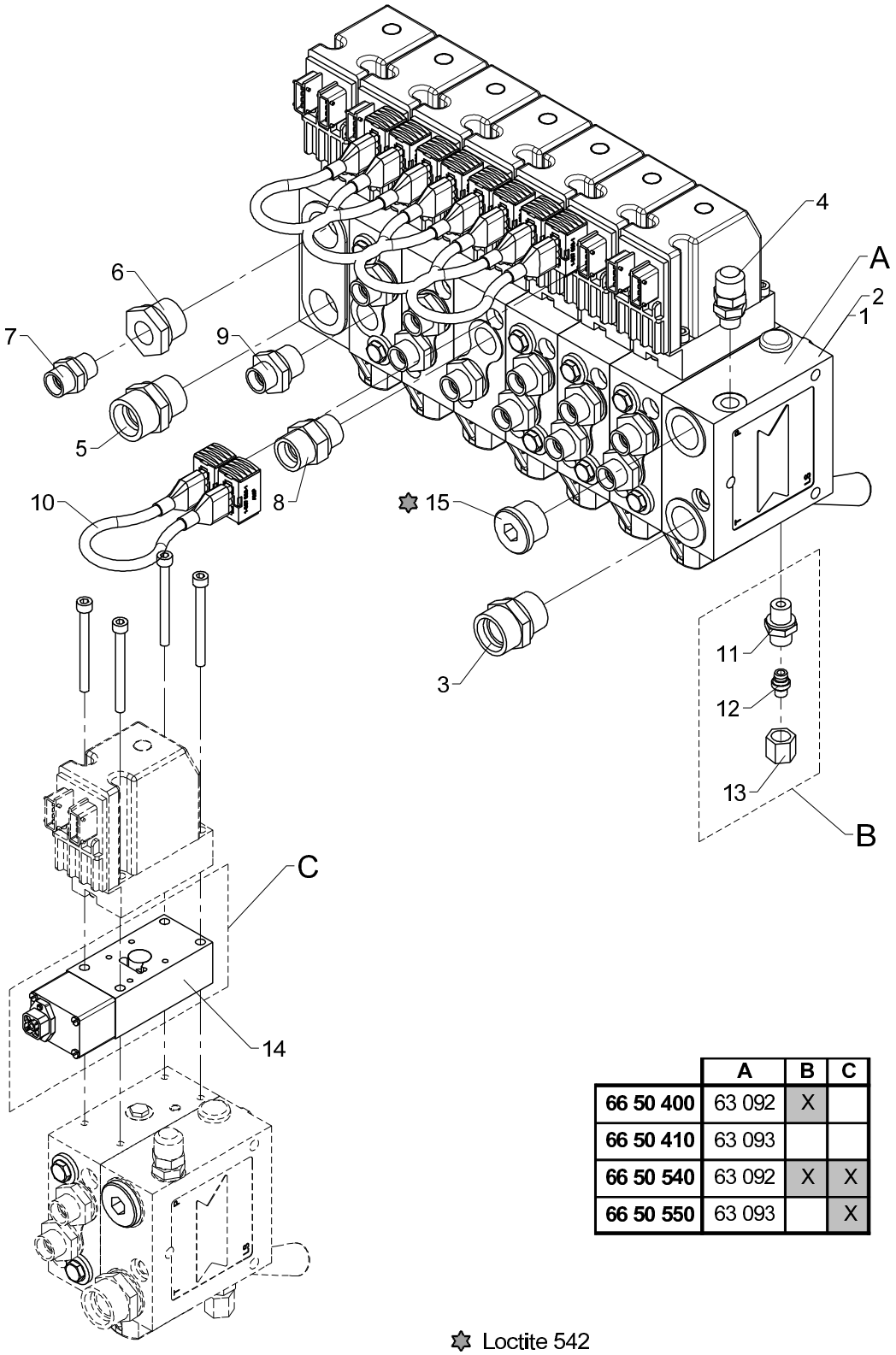

	A	B	C
66 50 400	63 092	X	
66 50 410	63 093		
66 50 540	63 092	X	X
66 50 550	63 093		X

✡ Loctite 542

Control valves, Danfoss, 6 sections, fixed/variable flow with rotator and grab

Pos	Qty.	Part no.	Description	Remarks
		6650400	Valve block, 6 sect., variable	
		6650410	Valve block, 6 sect., fixed	
		6650540	Valve block, 6 sect.,var.QOPS	
		6650550	Valve block, 6 sect.,fix.QOPS	
1	1	63092	Valve block	
2	1	63093	Valve block	
3	1	25169	Connection	P-GEV 22 LR-WD
4	1	26103	Pressure-gauge connect.	
5	1	26197	Connection	P-GEV 20 SR-WD
6	1	26319	Reducing connection	RED-R 3/4-WD/R 3/8
7	1	25127	Connection	P-GEV 12 LR-WD
8	1	26334	Connection	P-GEV 16 SR-WD
9	11	25108	Connection	GES 12 LR 1/2-WD
10	5	62296	Cable	
11	1	25109	Connection	GES 8 LR-WD
12	1	26166	Blanking plug	VSD 8 L
13	1	25181	Coupling nut	M 8 L
14	1	59676	Sensor	
15	1	26355	Plug	VS-R-3/4 WD

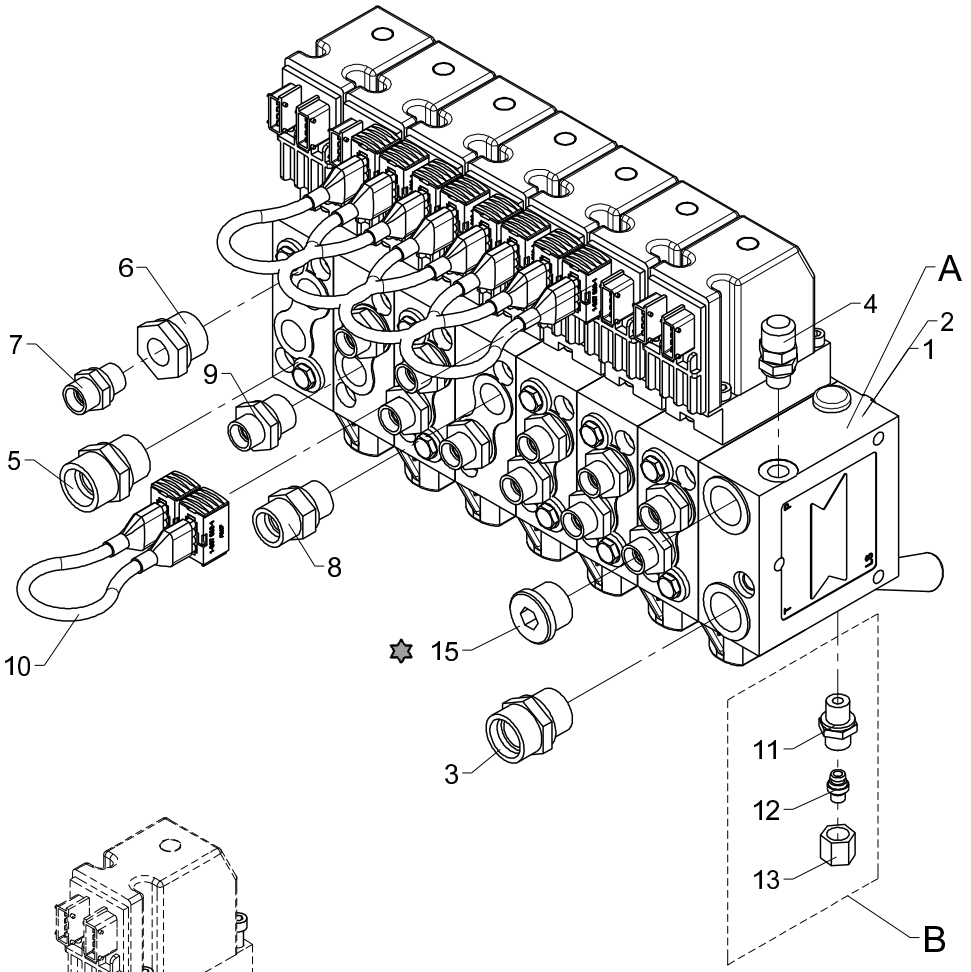

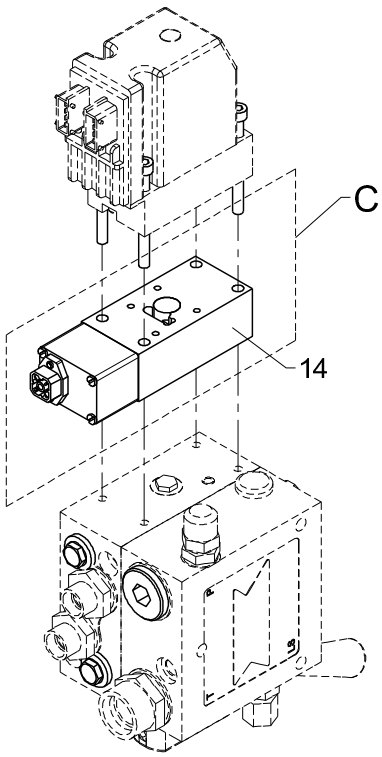

	A	B	C
66 50 480	63 307	X	
66 50 490	63 308		
66 50 620	63 307	X	X
66 50 630	63 308		X

Loctite 542

Control valves, Danfoss, 6 sections, fixed/variable flow with Fly-Jib (std./QOPS)

Pos	Qty.	Part no.	Description	Remarks
		6650480	Valve block, 6 sect., variable	
		6650490	Valve block, 6 sect., fixed	
		6650620	Valve block, 6 sect.,var. QOPS	
		6650630	Valve block, 6 sect.,fix.QOPS	
1	1	63307	Valve block	
2	1	63308	Valve block	
3	1	25169	Connection	P-GEV 22 LR-WD
4	1	26103	Pressure-gauge connect.	
5	1	26197	Connection	P-GEV 20 SR-WD
6	1	26319	Reducing connection	RED-R 3/4-WD/R 3/8
7	1	25127	Connection	P-GEV 12 LR-WD
8	1	26334	Connection	P-GEV 16 SR-WD
9	11	25108	Connection	GES 12 LR 1/2-WD
10	5	62296	Cable	
11	1	25109	Connection	GES 8 LR-WD
12	1	26166	Blanking plug	VSD 8 L
13	1	25181	Coupling nut	M 8 L
14	1	59676	Sensor	
15	1	26355	Plug	VS-R-3/4 WD

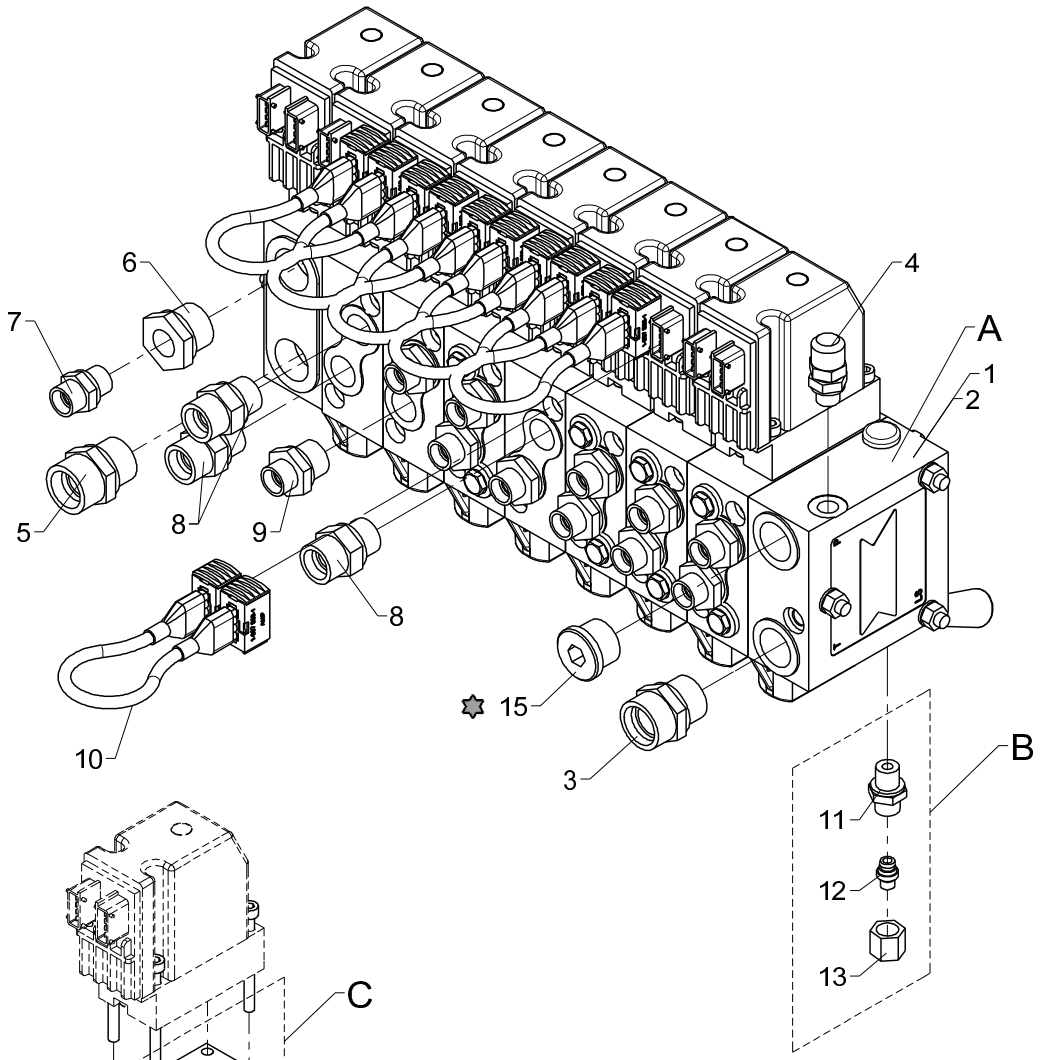

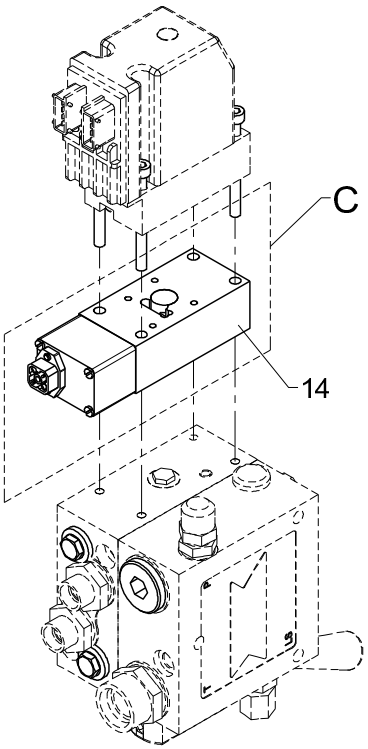

	A	B	C
66 50 500	63 309	X	
66 50 510	63 310		
66 50 640	63 309	X	X
66 50 650	63 310		X

✡ Loctite 542

Control valves, Danfoss, 7 sections, fixed/variable flow with winch and Fly-Jib

Pos	Qty.	Part no.	Description	Remarks
		6650500	Valve block, 7 sect., variable	
		6650510	Valve block, 7 sect., fixed	
		6650640	Valve block, 7 sect.,var.QOPS	
		6650650	Valve block, 7 sect.,fix.QOPS	
1	1	63309	Valve block	
2	1	63310	Valve block	
3	1	25169	Connection	P-GEV 22 LR-WD
4	1	26103	Pressure-gauge connect.	
5	1	26197	Connection	P-GEV 20 SR-WD
6	1	26319	Reducing connection	RED-R 3/4-WD/R 3/8
7	1	25127	Connection	P-GEV 12 LR-WD
8	3	26334	Connection	P-GEV 16 SR-WD
9	11	25108	Connection	GES 12 LR 1/2-WD
10	6	62296	Cable	
11	1	25109	Connection	GES 8 LR-WD
12	1	26166	Blanking plug	VSD 8 L
13	1	25181	Coupling nut	M 8 L
14	1	59676	Sensor	
15	1	26355	Plug	VS-R-3/4 WD

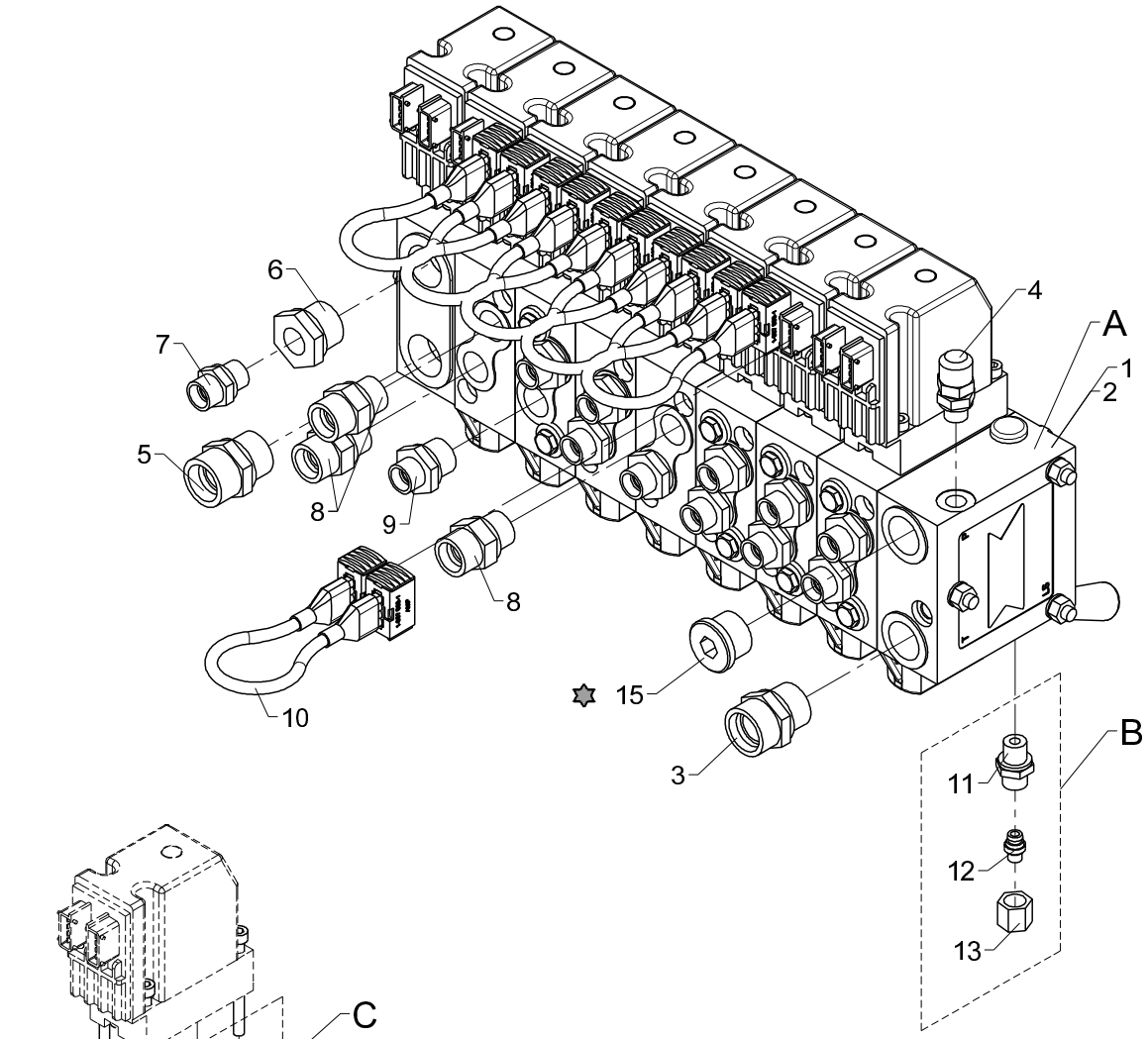

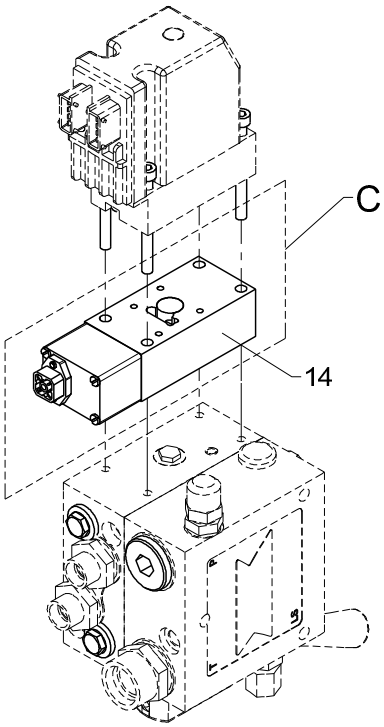

	A	B	C
66 50 520	63 311	X	
66 50 530	63 312		
66 50 660	63 311	X	X
66 50 670	63 312		X

Loctite 542

Control valves, Danfoss, 7 sections, fixed/variable flow with rotator, grab and winch

Pos	Qty.	Part no.	Description	Remarks
		6650520	Valve block, 7 sect., variable	
		6650530	Valve block, 7 sect., fixed	
		6650660	Valve block, 7 sect.,var.QOPS	
		6650670	Valve block, 7 sect.,fix.QOPS	
1	1	63311	Valve block	
2	1	63312	Valve block	
3	1	25169	Connection	P-GEV 22 LR-WD
4	1	26103	Pressure-gauge connect.	
5	1	26197	Connection	P-GEV 20 SR-WD
6	1	26319	Reducing connection	RED-R 3/4-WD/R 3/8
7	1	25127	Connection	P-GEV 12 LR-WD
8	3	26334	Connection	P-GEV 16 SR-WD
9	11	25108	Connection	GES 12 LR 1/2-WD
10	6	62296	Cable	
11	1	25109	Connection	GES 8 LR-WD
12	1	26166	Blanking plug	VSD 8 L
13	1	25181	Coupling nut	M 8 L
14	1	59676	Sensor	
15	1	26355	Plug	VS-R-3/4 WD

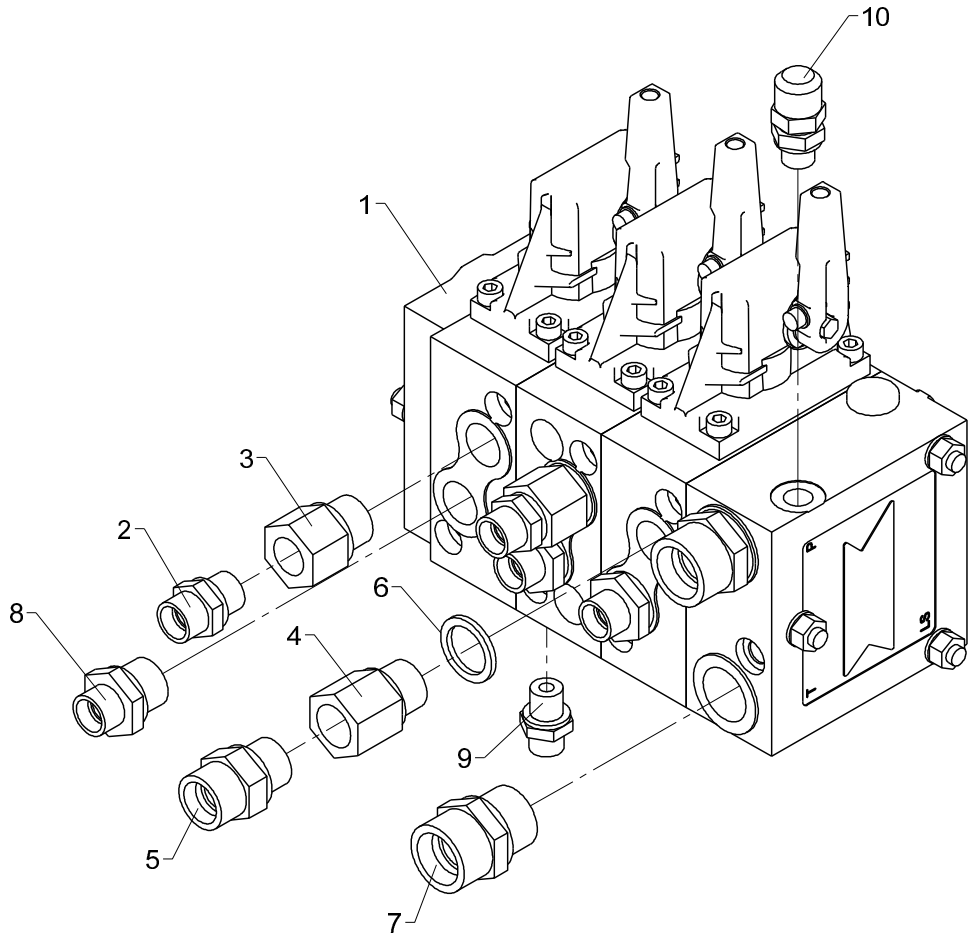
10
1
3
2
8
6
4
9
5
7

From loader 1070001
To loader

Created 08-01-2010
Modified

Control valve, Danfoss, 3 sections, 1 circuit, fixed flow, left

Pos	Qty.	Part no.	Description	Remarks
1	1	63391	Valve block	Manuel + V
2	2	25127	Connection	P-GEV 12 LR-WD
3	2	25243	Reducing connection	RED-R 1/2-WD/R 3/8
4	1	26922	Reducing nipple	
5	1	26334	Connection	P-GEV 16 SR-WD
6	1	21106	Seal washer	ø21,5 x 28,7 x 2,5
7	2	26197	Connection	P-GEV 20 SR-WD
8	3	25108	Connection	GES 12 LR 1/2-WD
9	1	25109	Connection	GES 8 LR-WD
10	1	26103	Pressure-gauge connect.	

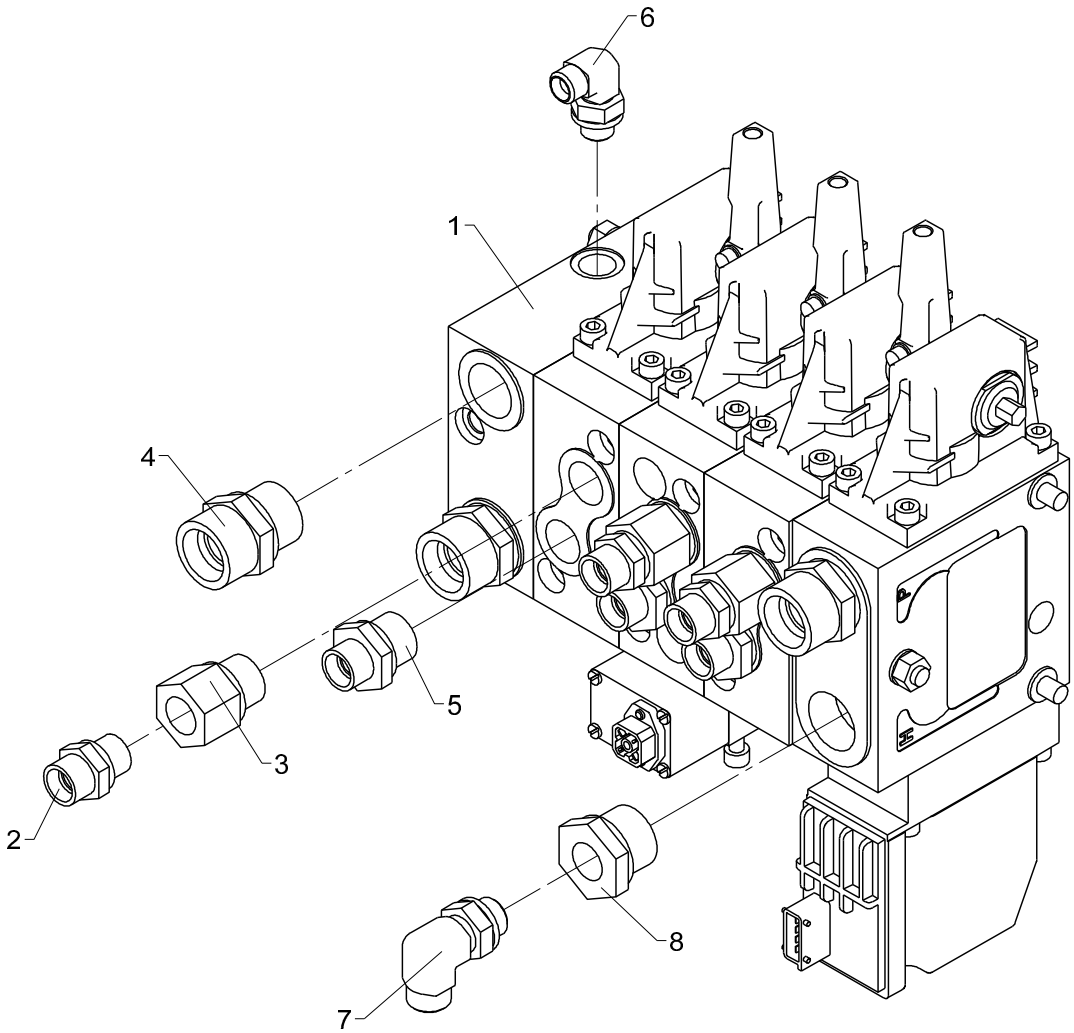
6
1
4
5
3
2
8
7

Control valve, Danfoss, 3 sections, 1 circuit, fixed flow, right

Pos	Qty.	Part no.	Description	Remarks
1	1	63392	Valve block	Manuel F
2	3	25127	Connection	P-GEV 12 LR-WD
3	3	25243	Reducing connection	RED-R 1/2-WD/R 3/8
4	3	26197	Connection	P-GEV 20 SR-WD
5	3	25108	Connection	GES 12 LR 1/2-WD
6	1	26898	Elbow connection	8 mm - 1/4"
7	1	26897	Elbow connection	12 mm - 3/8"
8	1	26319	Reducing connection	RED-R 3/4-WD/R 3/8

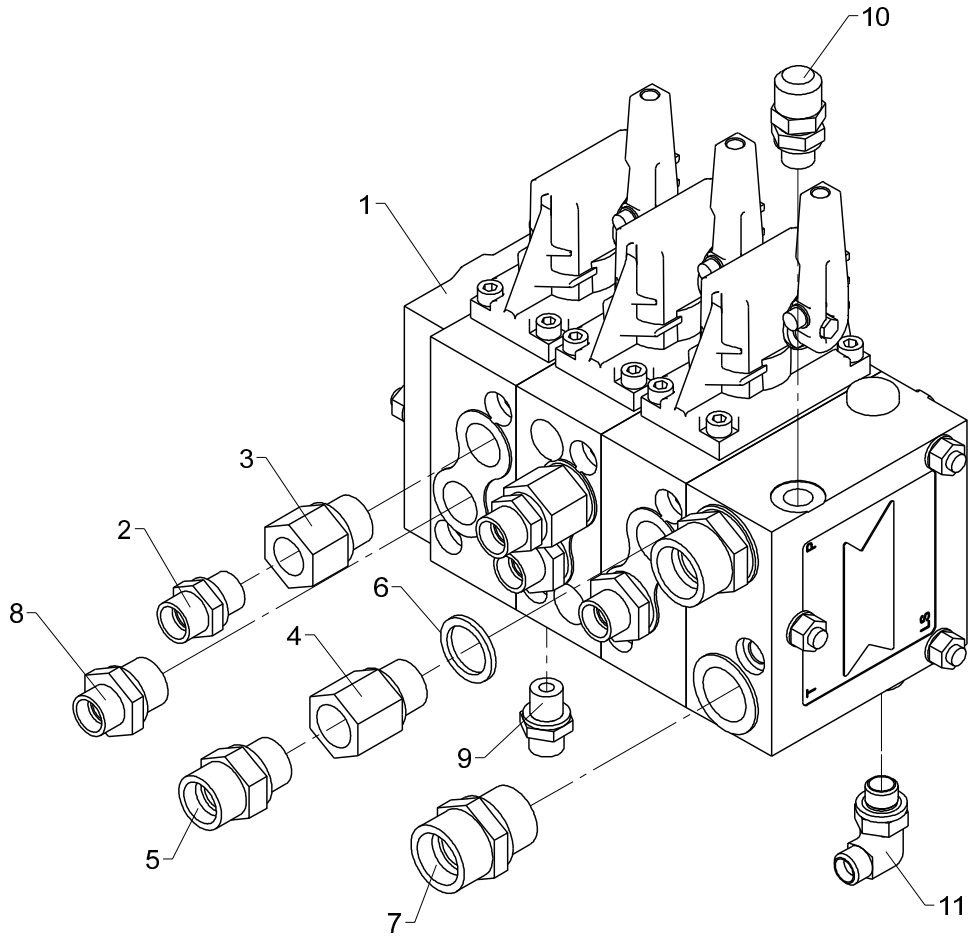
10
1
3
2
8
6
4
9
5
7
11

Control valve, Danfoss, 3 sections, 1 circuit, variable flow, left

Pos	Qty.	Part no.	Description	Remarks
1	1	63393	Valve block	Manuel + V
2	2	25127	Connection	P-GEV 12 LR-WD
3	2	25243	Reducing connection	RED-R 1/2-WD/R 3/8
4	1	26922	Reducing nipple	
5	1	26334	Connection	P-GEV 16 SR-WD
6	1	21106	Seal washer	ø21,5 x 28,7 x 2,5
7	2	26197	Connection	P-GEV 20 SR-WD
8	3	25108	Connection	GES 12 LR 1/2-WD
9	1	25109	Connection	GES 8 LR-WD
10	1	26103	Pressure-gauge connect.	
11	1	26898	Elbow connection	8 mm - 1/4"

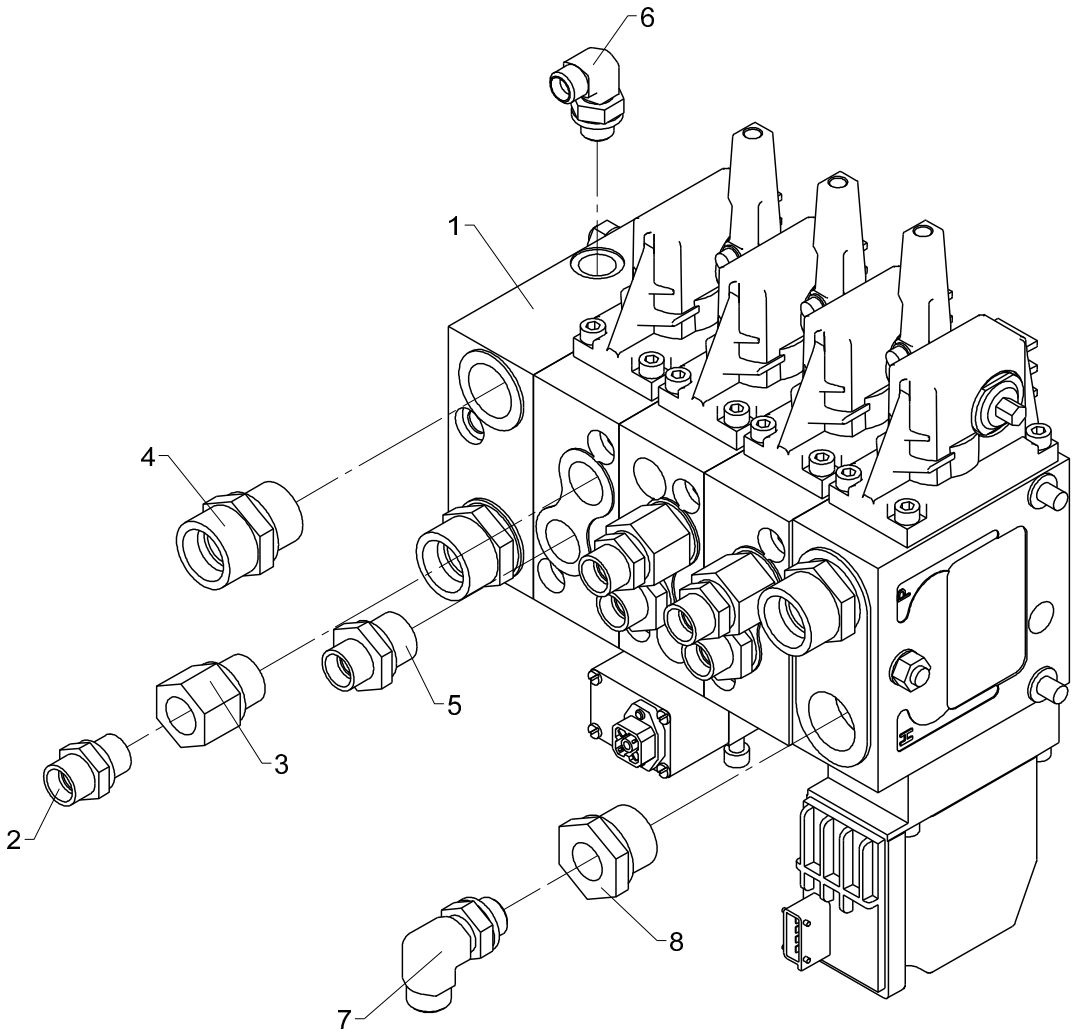
6
1
4
5
3
2
8
7

Control valve, Danfoss, 3 sections, 1 circuit, variable flow, right

Pos	Qty.	Part no.	Description	Remarks
1	1	63394	Valve block	Manuel F
2	3	25127	Connection	P-GEV 12 LR-WD
3	3	25243	Reducing connection	RED-R 1/2-WD/R 3/8
4	3	26197	Connection	P-GEV 20 SR-WD
5	3	25108	Connection	GES 12 LR 1/2-WD
6	1	26898	Elbow connection	8 mm - 1/4"
7	1	26897	Elbow connection	12 mm - 3/8"
8	1	26319	Reducing connection	RED-R 3/4-WD/R 3/8

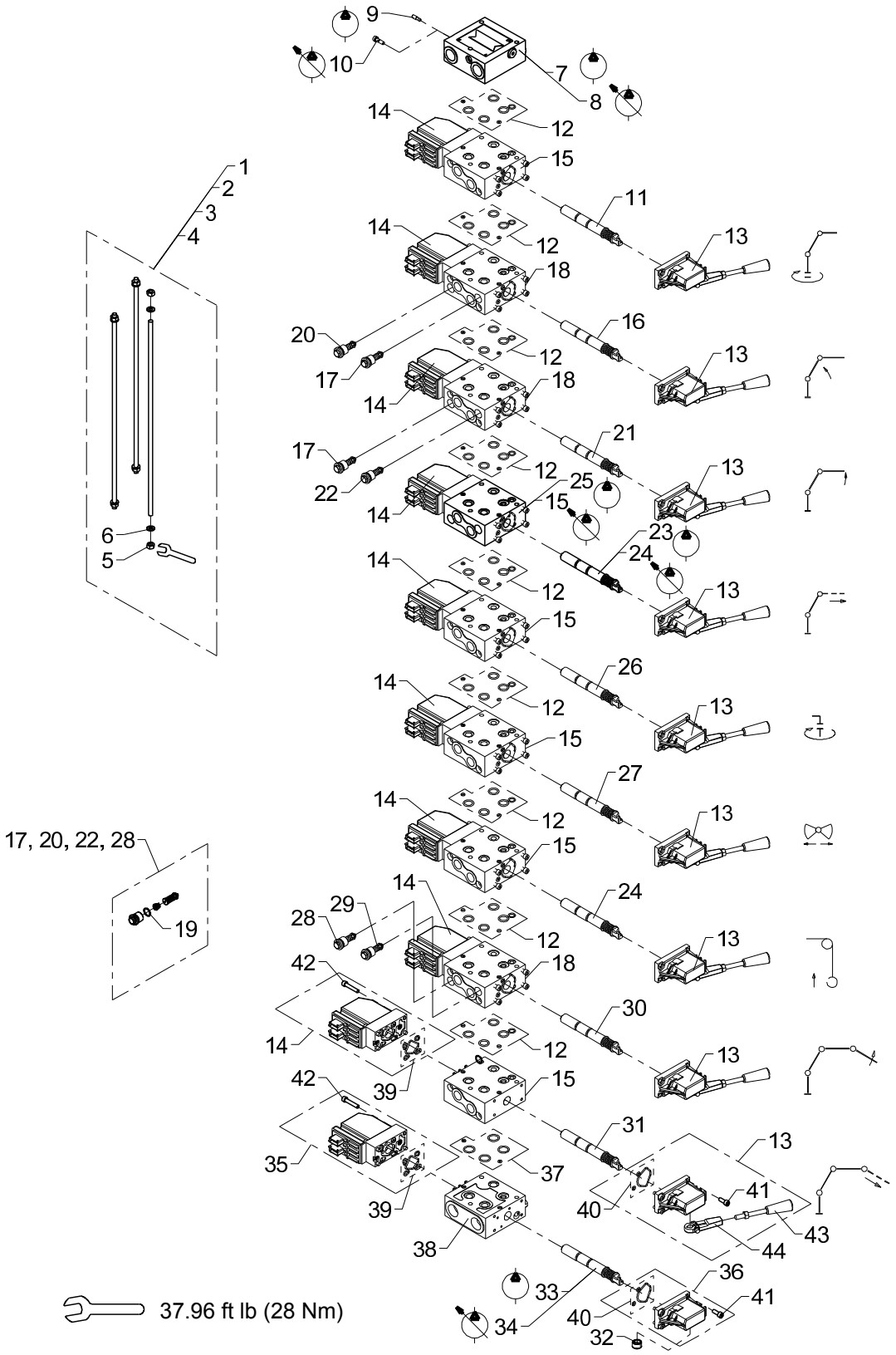
9
10
7
8
14
12
15
11
13
1
2
3
4
18
16
20
17
21
22
25
23
24
26
27
6
5
17, 20, 22, 28
19
29
28
42
30
39
35
37
31
41
40
43
44
38
36
33
34
32
37.96 ft lb (28 Nm)

Danfoss control valve PVG32, 4-7 sections

Pos	Qty.	Part no.	Description	Remarks
1		58965	Connecting kit, 4 sections	
2		58966	Connecting kit, 5 sections	
3		58967	Connecting kit, 6 sections	
4		58968	Connecting kit, 7 sections	
5		30856	Nut, stainless	M8
6		62044	Washer	
7		58955	Inlet section, OC	Fast pumpe
8		58956	Inlet section, CC	Variabel pumpe
9		58941	Open centre kit	
10		62065	Closed center kit	
11		62207	Spool	
12		62237	Seal kit	
13		58907	Lever module inkl. lever	
14		62295	Electric activation	
15		62225	Basic module	
16		62033	Spool	
17		58931	Port-relief valve	350 bar
18		62227	Basic module	
19		62052	O-ring	
20		62274	Port-relief valve	125 bar
21		62209	Spool	
22		62286	Port-relief valve	250 bar
23		61963	Spool	Fast pumpe
24		62055	Spool	Variabel pumpe
25		62224	Basic module	
26		58902	Spool	
27		62070	Spool	
28		62283	Port-relief valve	320 bar
29		62278	Port-relief valve	190 bar
30		61964	Spool	
31		58903	Spool	
32		64416	Cover for sealing	
33		58959	Spool, OC	Fast pumpe
34		58960	Spool, CC	Variabel pumpe
35		58962	Electric activation	
36		58919	Lever module	
37		58925	Seal kit	
38		58958	PVSK valve section	
39		62240	Seal kit	
40		62239	Seal kit	
41		30424	Screw	MC6 x 16

18/129, 20/138, 22/153

Internal ref. 99 99 540

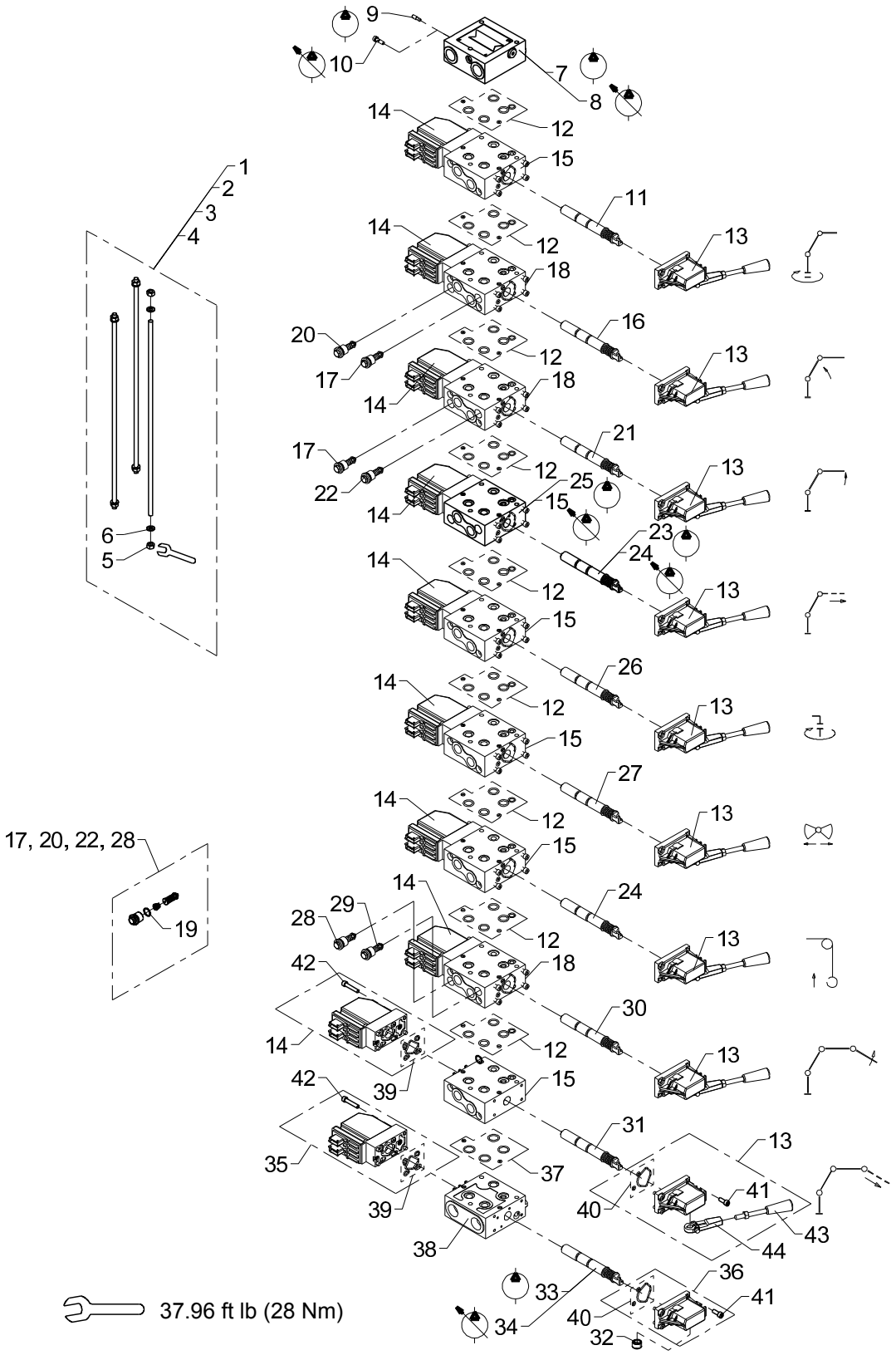

Danfoss control valve PVG32, 4-7 sections

Pos	Qty.	Part no.	Description	Remarks
42		62241	Screw	
43		62062	Lever	
44		59682	Foot for lever	

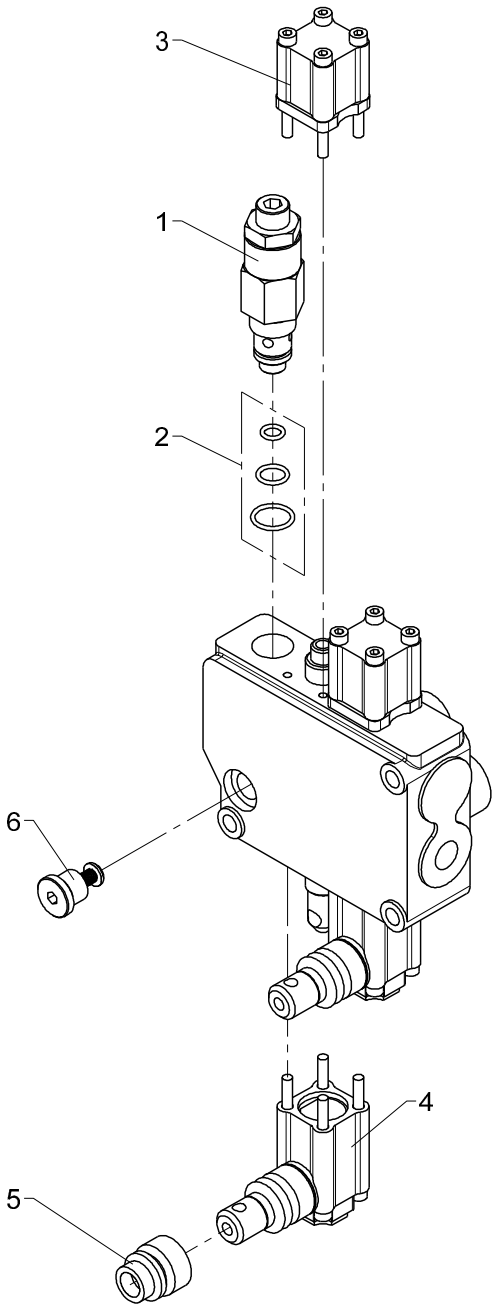
3
1
2
6
4
5

HC - M50 stabilizer valve section

From loader 1070001
To loader

Created 08-02-2012
Modified

Pos	Qty.	Part no.	Description	Remarks
1		55343	Main relief valve 190 bar	
2		55314	Seal kit cpl.	
3		55332	Return spring kit	
4		55334	Hand lever kit	
5		55389	Rubber bellows (M50)	
6		55339	Check valve kit	

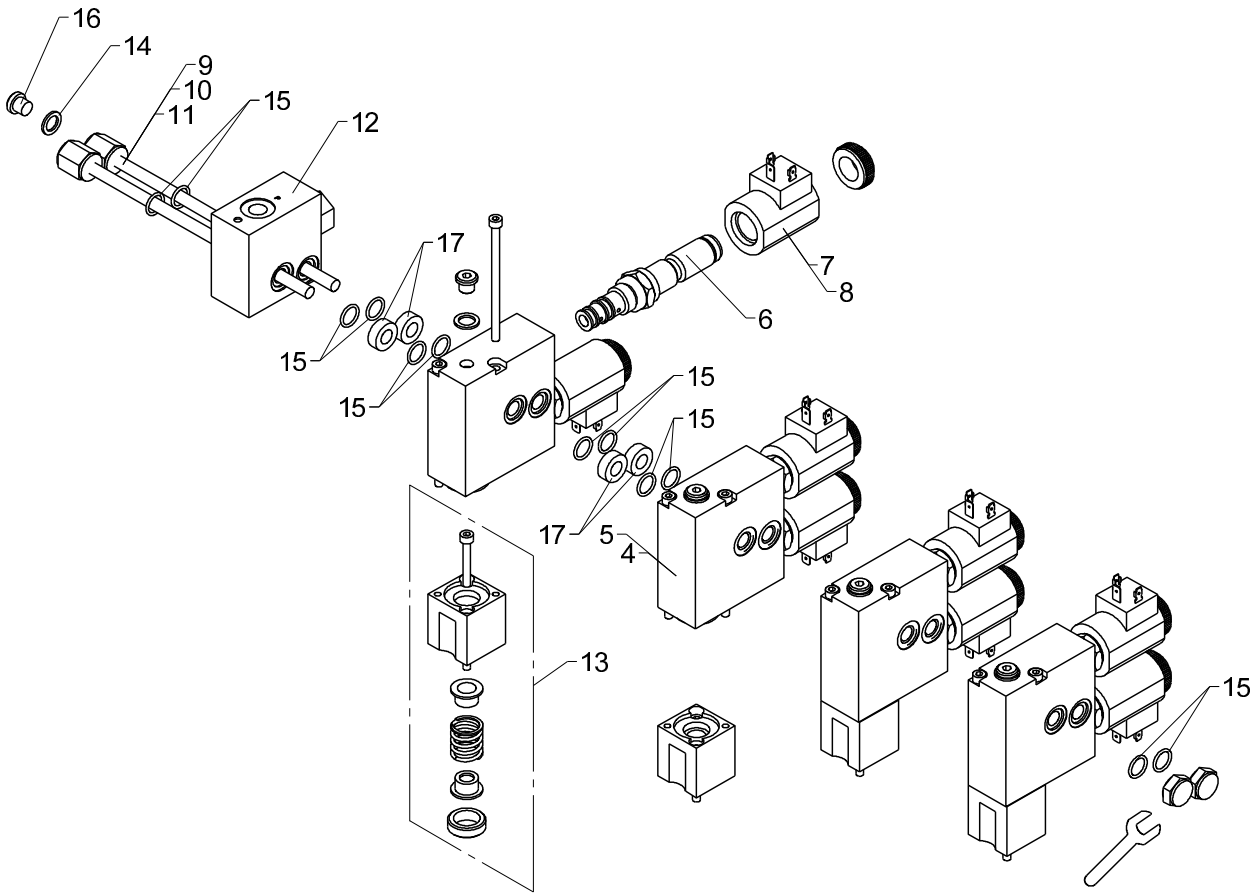

27.12 ft lb (20 Nm)

HC-D4 electro-hydraulic NEM-kit, NEM radio remote control

Pos	Qty.	Part no.	Description	Remarks
1		55360	El-hydr. NEM-kit, 4x24V, right	HC-D4, 4 sekt.
2		55361	El-hydr. NEM-kit, 5x24V, right	HC-D4, 5 sekt.
3		55362	El-hydr. NEM-kit, 6x24V, right	HC-D4, 6 sekt.
4		55324	Electro-hydr.module 12V	
5		55322	Electro-hydr. module 24V	
6		55320	Cartridge	
7		55323	Solenoid 12V	
8		55321	Solenoid, 24V	
9		55307	Kit of stay bolts NEM 4	
10		55312	Kit of stay bolts NEM 5	
11		55313	Kit of stay bolts NEM 6	
12		55325	Pressure reducing valve	
13		55306	Spring kit	
14		21115	Seal washer	ø10,7 x 16 x 1,5
15		20115	O-ring	OR 12,42 x 1,78
16		25187	Plug	VS-R-1/8 WD
17		55363	Centering washer	

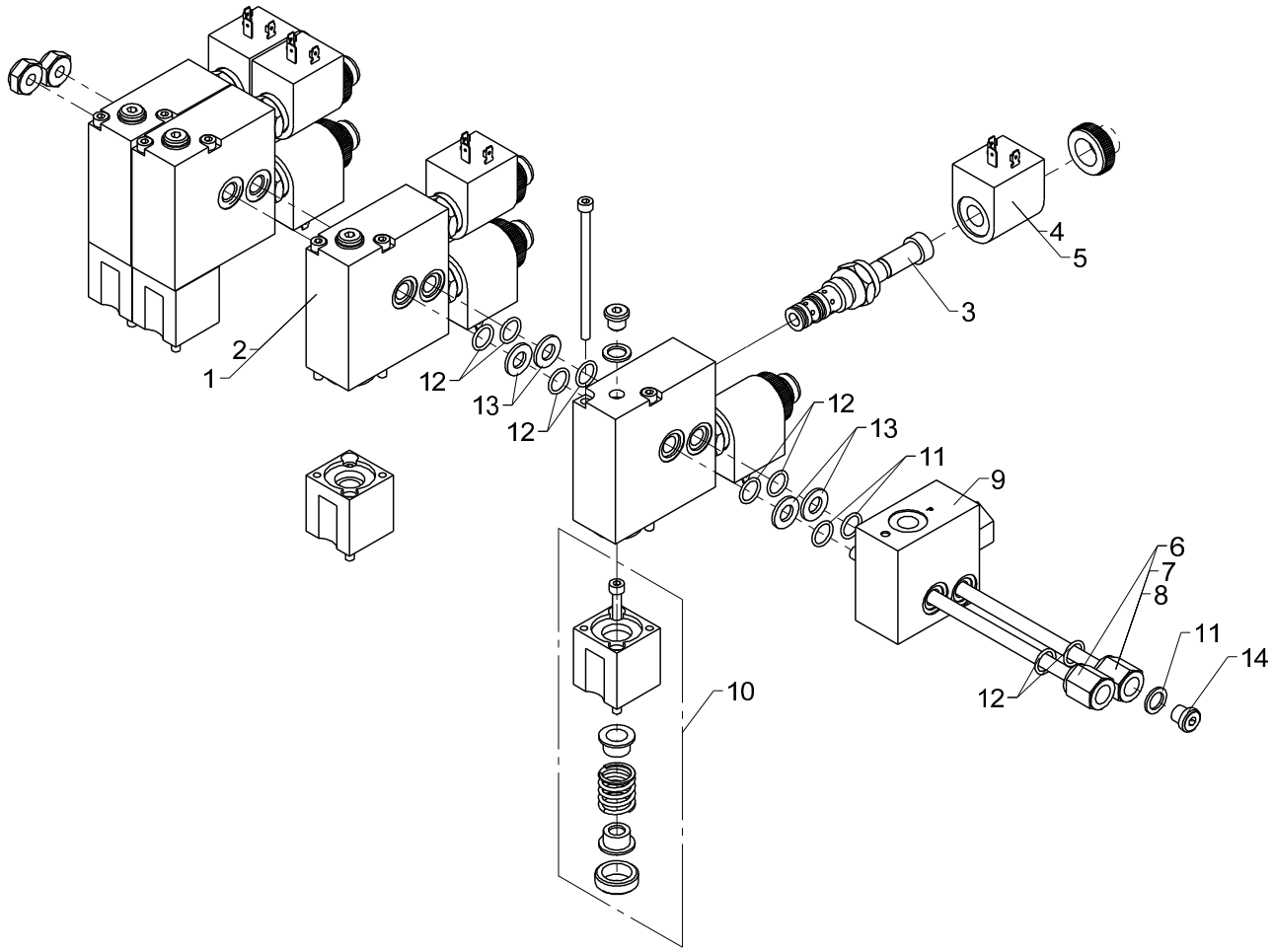
1
2
3
4
5
6
7
8
9
10
11
12
13
14

HC - M50 electro-hydraulic NEM-kit NEM radio remote control

Pos	Qty.	Part no.	Description	Remarks
1	3	55373	Electro-hydr.module 12V	
2	1	55372	Electro-hydr.module 24V	
3	1	55504	Cartridge for NEM ON/OFF	
4	1	55344	Solenoid, 12V	
5	1	55345	Solenoid, 26V	
6	1	55501	Stay bolt kit	3 sekt.
7	1	55328	Kit of stay bolts	4 sekt.
8	1	55327	Kit of stay bolts	5 sekt.
9	1	55325	Pressure reducing valve	
10	1	55319	Spring kit, electric activatio	
11	1	21115	Seal washer	ø10,7 x 16 x 1,5
12	6	20115	O-ring	OR 12,42 x 1,78
13	4	55317	Centering shim	
14	1	25187	Plug	VS-R-1/8 WD

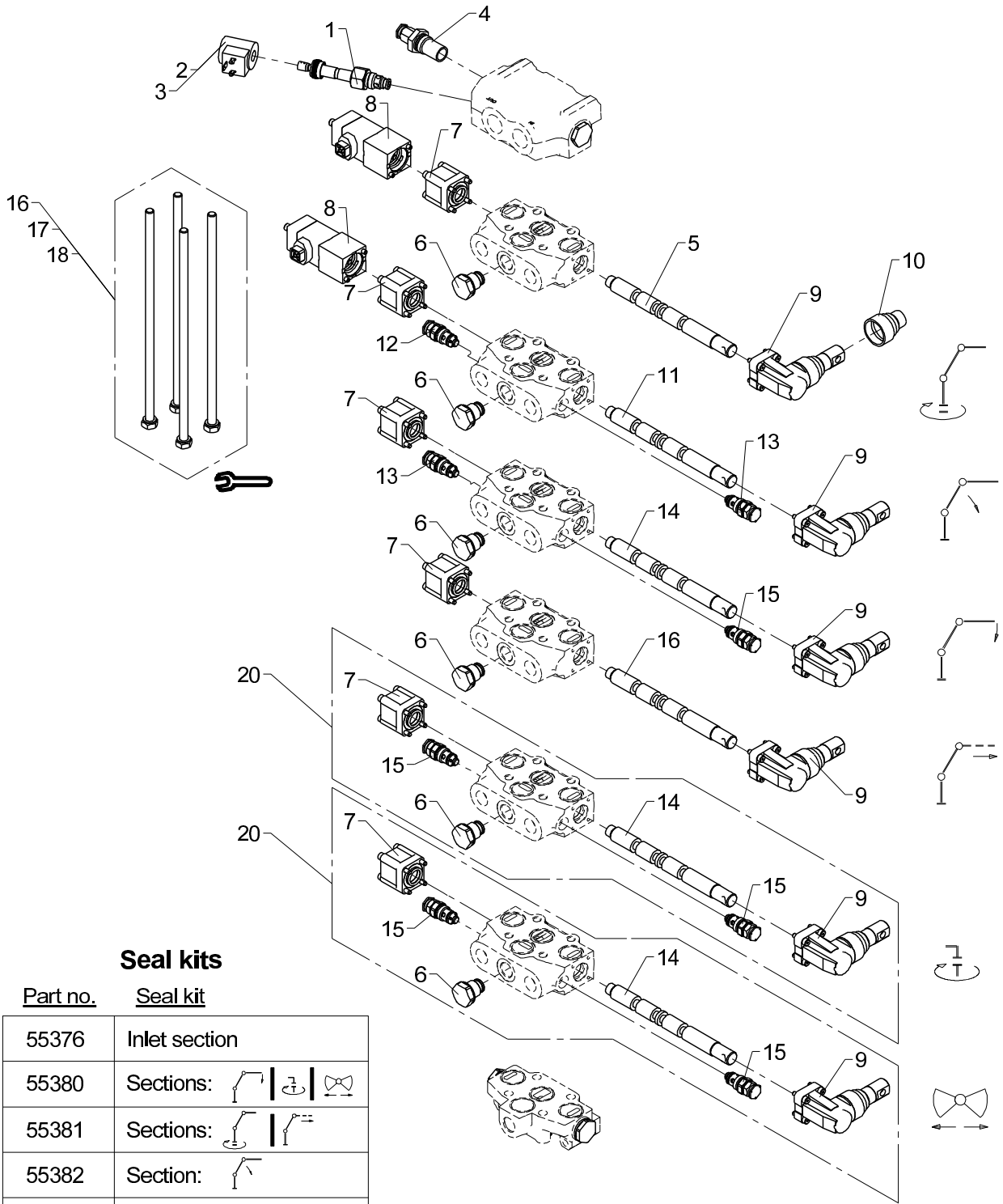

Seal kits

Part no.	Seal kit
55376	Inlet section
55380	Sections:
55381	Sections:
55382	Section:
55386	Relief valve (55375)
55387	Between each section

47.45 ft lb (35 Nm)

HC-D4 valve block, 4-6 sections

535 06 499

From loader 1070001
To loader

Created 08-02-2012
Modified

Pos	Qty.	Part no.	Description	Remarks
1	1	55346	Cartridge	
2	1	55344	Solenoid, 12V	
3	1	55345	Solenoid, 26V	
4	1	55375	Main relief valve 300 bar	
5	1	55367	Spool	
6	6	55379	Check valve	
7	6	55378	Spring center device	
8	2	55371	Spool sensor	
9	6	55377	Hand lever kit	
10	1	55340	Rubber bellows (HC-D4)	
11	1	55364	Spool	
12	1	55383	Relief valve	100 bar
13	2	55385	Relief valve	325 bar
14	3	55395	Spool, extension	
15	5	55384	Relief valve	200 bar
16	1	55388	Spool	
17	1	55397	Kit of stay bolts	4 sektioner
18	1	55398	Kit of stay bolts	5 sektioner
19	1	55399	Kit of stay bolts	6 sektioner
20	1	55510	Valve section, compl. HC-D4	

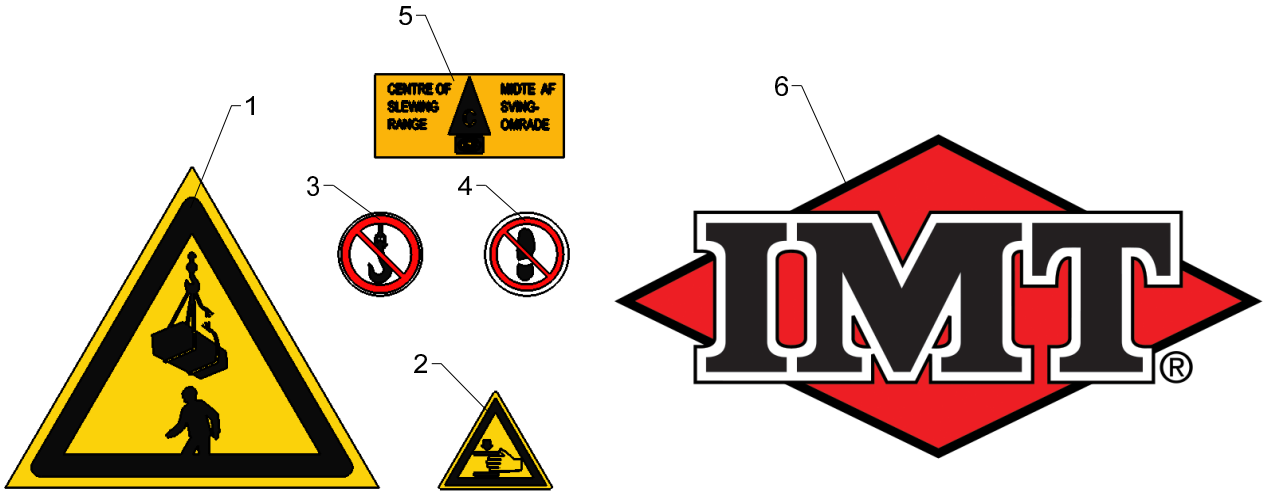
5
CENTRE OF SLEWING RANGE
MIDTE AF SVING-OMRADE
1
3
4
6
2

Standard labels

Pos	Qty.	Part no.	Description	Remarks
1	2	66462	"NEVER WALK UNDER LOAD"	
2	2	66469	Label - "Danger - squeezing"	
3	1	66466	Label, "HOOK FORBIDDEN"	
4	1	66464	Label "NO STEP"	
5	1	64702	Label for slewing	
6	2	64604	IMT label	

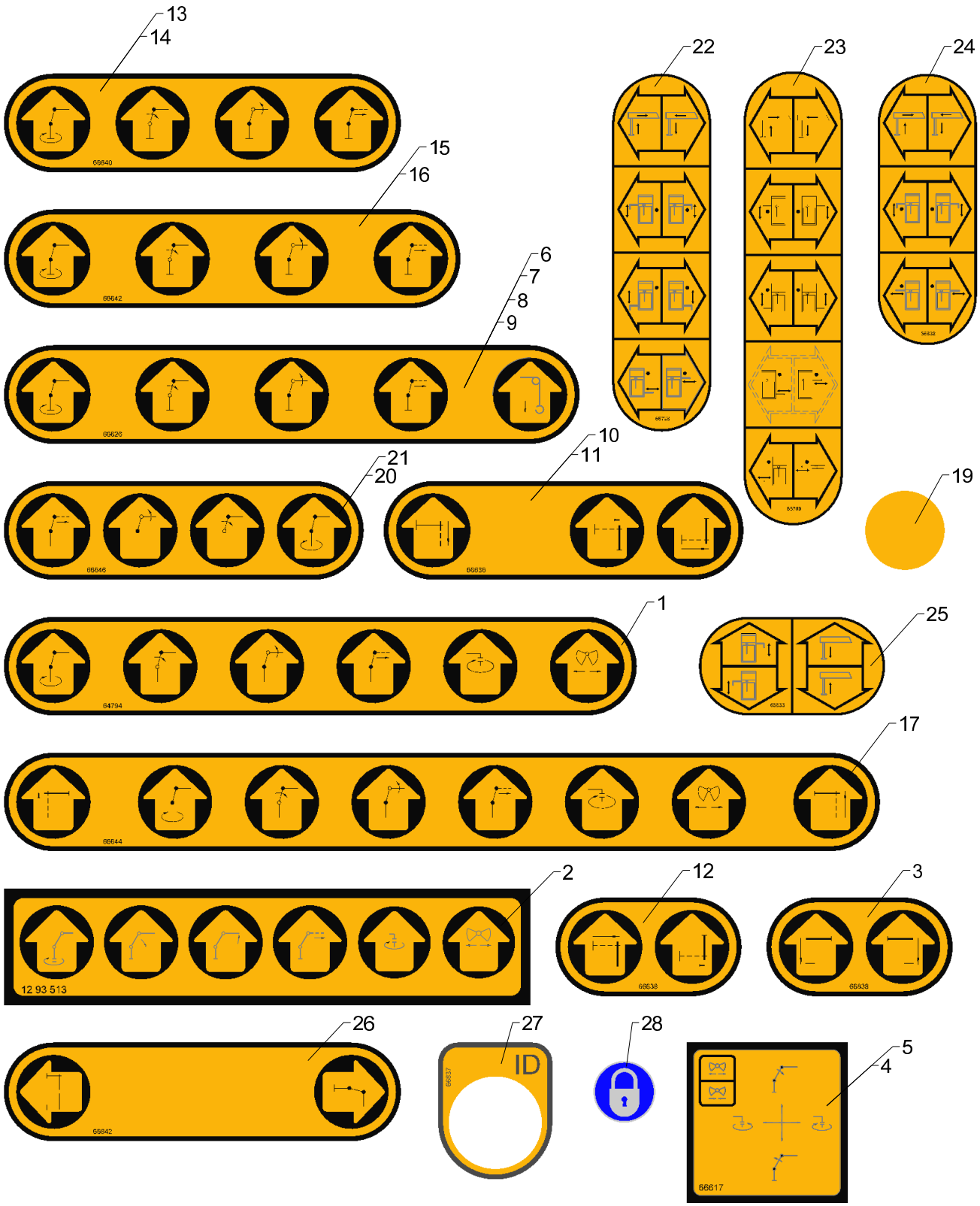
13
14
15
16
6
7
8
9
22
23
24
10
11
21
20
19
1
25
17
2
12
3
26
27
28
5
4
ID
12 93 513

Operating labels

Pos	Qty.	Part no.	Description	Remarks
1	1	64794	Operating label	
2	1	65763	Label, 680 Series	12 93 513
3	1	66838	Operating label	
4	1	66617	Operating label right	
5	1	66618	Operating label left	
6	1	66626	Operating label	
7	1	66627	Operating label	
8	1	66628	Operating label	
9	1	66629	Operating label	
10	1	66636	Stab. operation, valve bl.side	
11	1	66637	Stab. operation,dual ctrl side	
12	1	66638	Stab. operation, (HC-M50-2fcts	
13	1	66640	Stab. operation, (HC-4-4 fcts.	
14	1	66641	Operating label, (HC-4-6fcts.)	
15	1	66642	Operating label, (PVG 32-4fcts	
16	1	66643	Operating label, (PVG 32-6fcts	
17	1	66644	Operat. label, (HS,6fcts.+stab	
18	1	66840	Operating label	
19	1	66645	Label	
20	1	66646	Label,dual control (HC-4-4fcts	
21	1	66647	Label,dual control (HC-4-6fcts	
22	1	66798	Operating label,dual ctrl side	
23	1	66799	Operating label,valve bl. side	
24	1	66832	Label, emergency operation	
25	1	66833	Operating label	
26	1	66842	Operating label	
27	1	66837	Operating label	
28	1	66459	Label "LOCKING DEVICE CLOSED"	

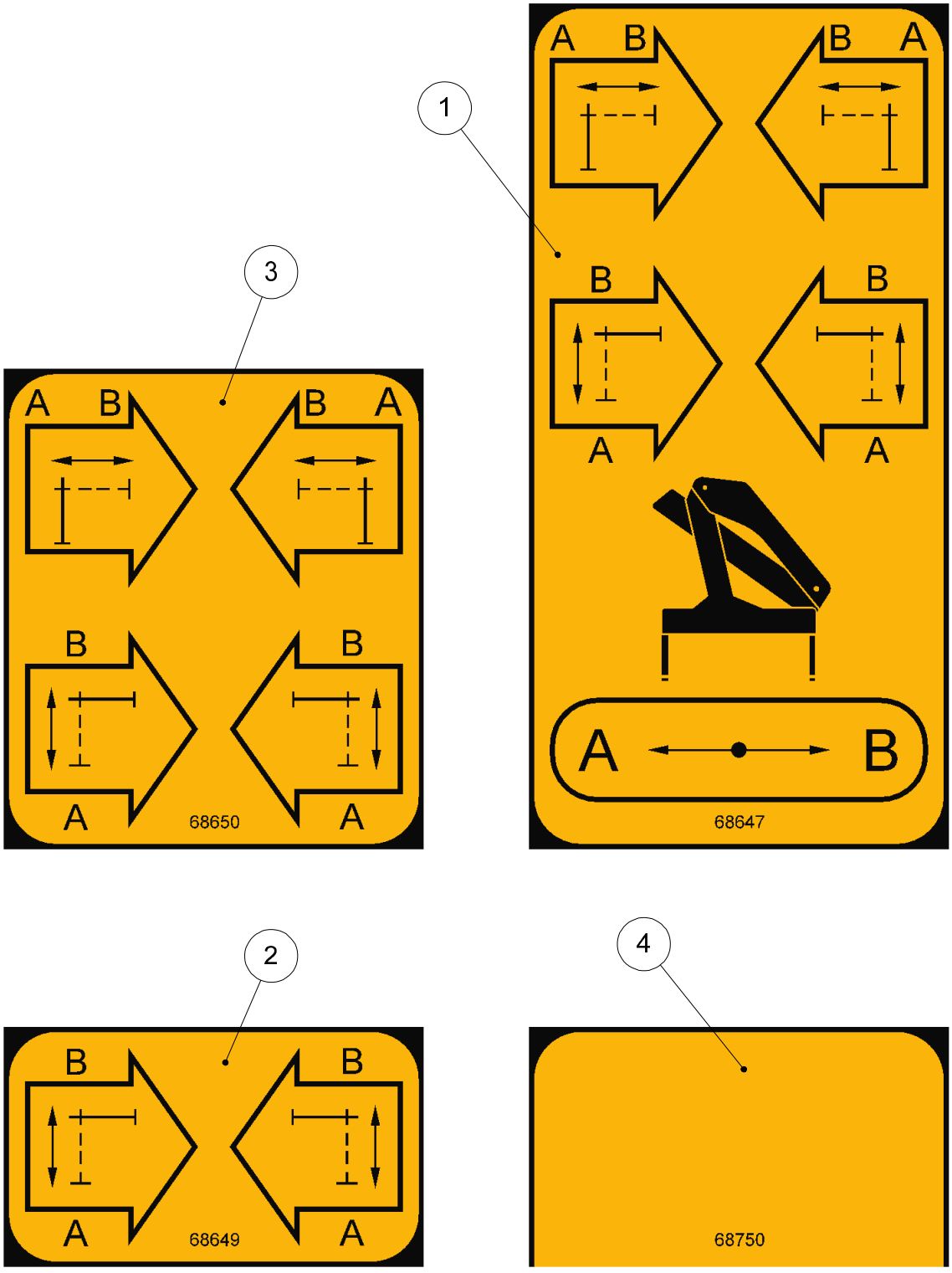
1
A B
B A
B
B
A
A
A B
68647
3
A B
B A
B
B
A
A
68650
2
B
B
A
A
68649
4
68750

Labels for emergency operation

Pos	Qty.	Part no.	Description	Remarks
1	1	68647	Label, emergency operation	
2	1	68649	Label, emergency operation	
3	1	68650	Label, emergency operation	
4	1	68750	Label, emergency operation	

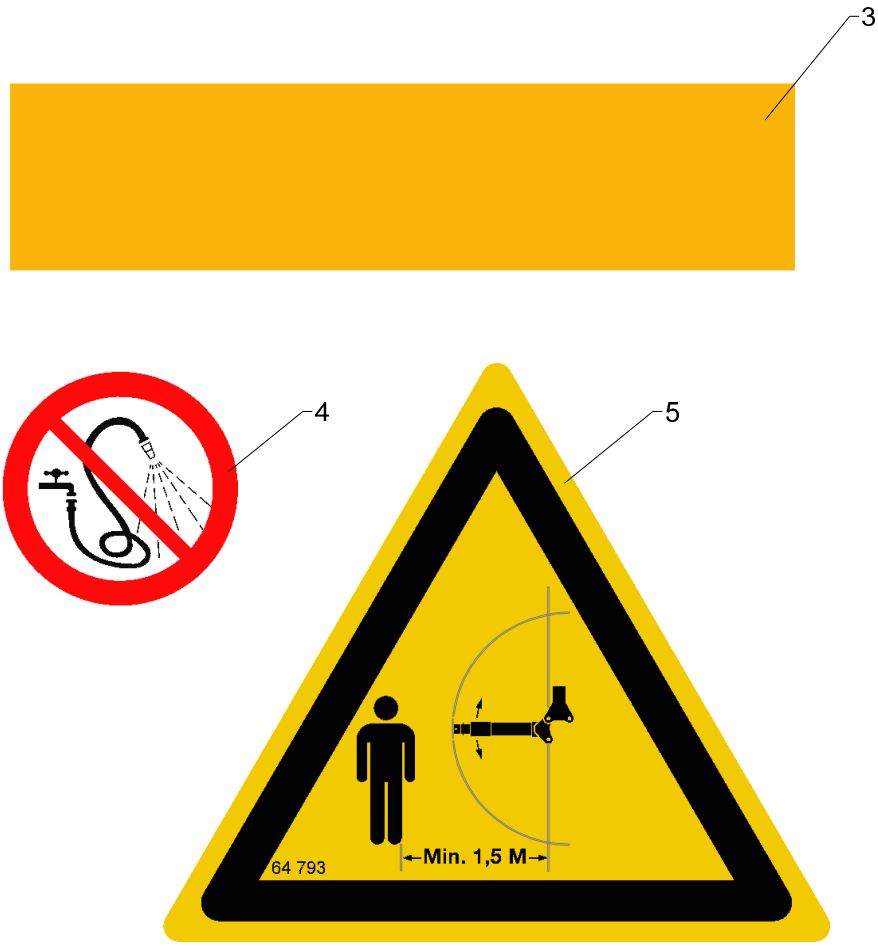
3
4
5
64 793
Min. 1,5 M

Type plates, marking tape, warning signs

Pos	Qty.	Part no.	Description	Remarks
1	1	64796	Type plate, excl. CE	
2	1	64797	Type plate, incl. CE	CE
3	1	66598	Marking tape - dark-yellow	
4	1	65770	Label-NO high pressure rinsing	
5	1	64793	Label, swing-up stabilizer leg	

18/129, 20/138, 22/153

Internal ref. 66 68 580

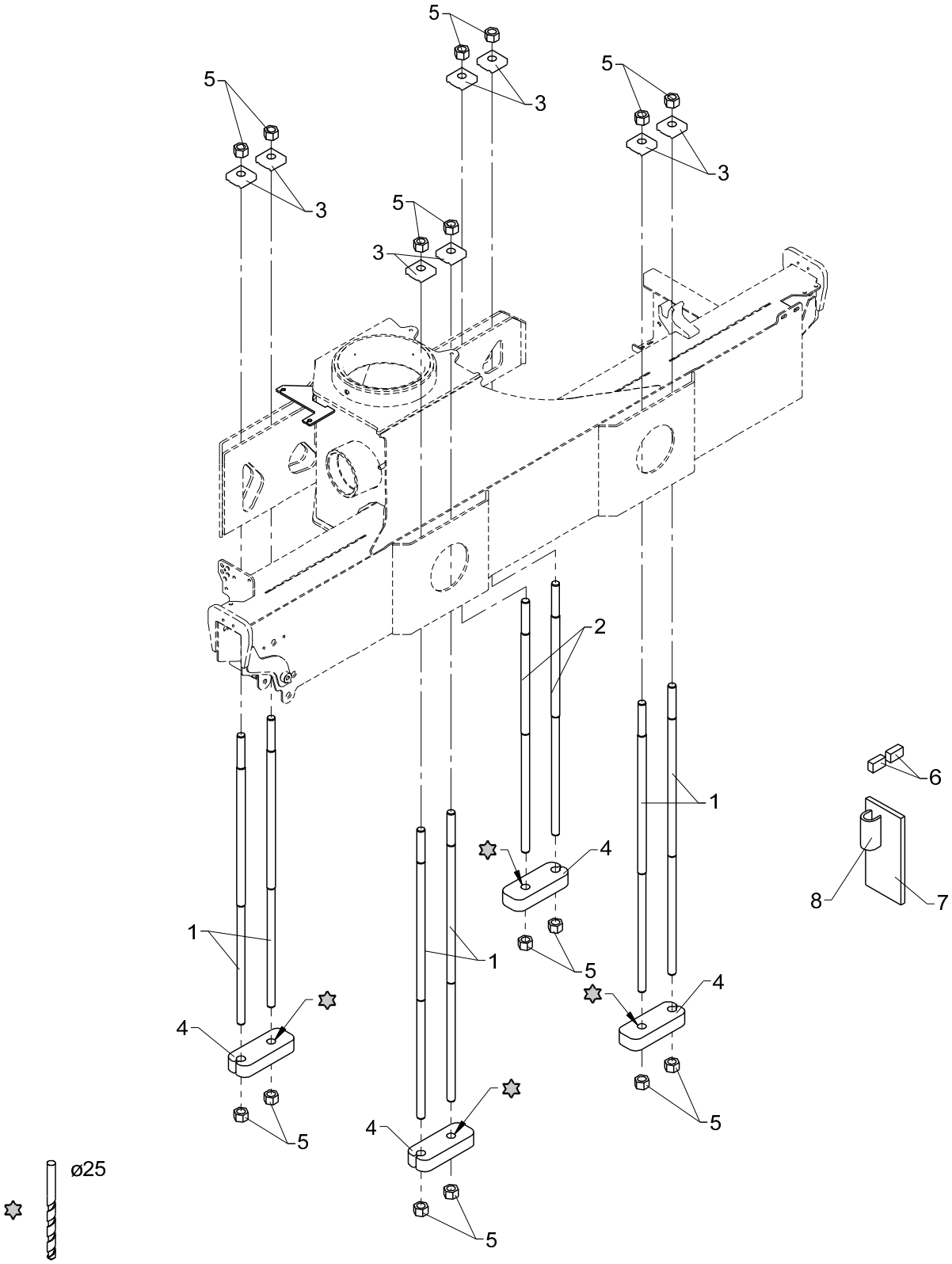

Mounting kit (8 M24 x 2 pins)

Pos	Qty.	Part no.	Description	Remarks
1	6	32916	Mounting bolt	
2	2	32917	Mounting bolt	
3	8	6340496	Mounting plate	
4	4	6887384	Clamp	
5	16	31051	Lock nut	M24 x 2
6	6	6644084	Stop block	
7	4	6659924	Spacer	
8	4	6659914	U-section	

18/129, 20/138, 22/153

Internal ref. 66 68 600

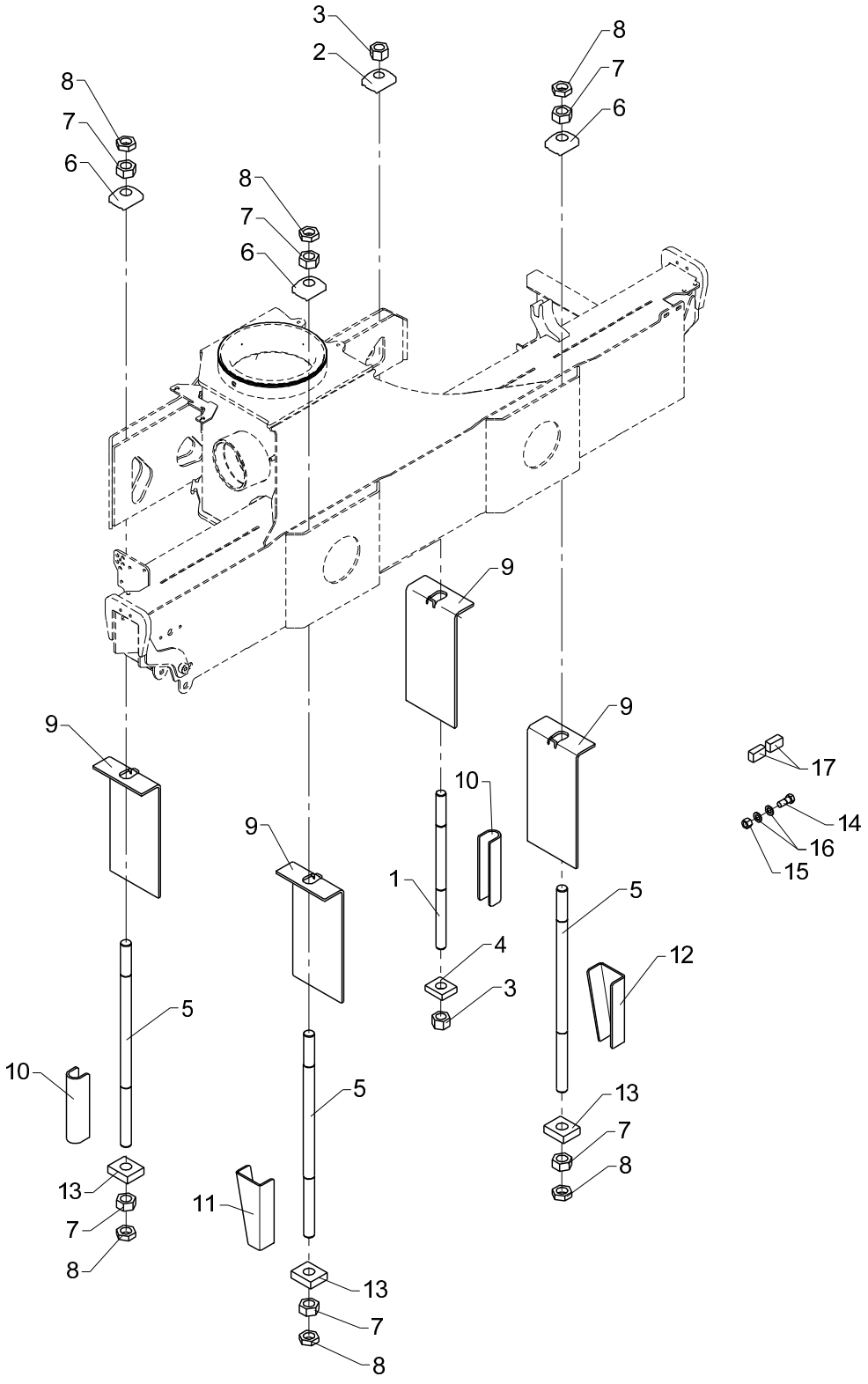

Mounting kit (3 M33 x 2 + 1 M30 x 2)

Pos	Qty.	Part no.	Description	Remarks
1	1	32919	Mounting bolt	
2	1	6340497	Mounting plate	
3	2	31086	Lock nut	M30 x 2
4	1	6658094	Washer	
5	3	32920	Mounting bolt	
6	3	6344497	Mounting plate	
7	6	32342	Nut	M33 x 2
8	6	31056	Counter nut	M33 x 2
9	4	6881704	Mounting plate	
10	2	6887354	U-profile	
11	1	6881684	Plate, left	
12	1	6881694	Plate, right	
13	3	6887374	Washer	
14	24	31496	Tight-fitting bolt	M16 x 40
15	24	30892	Lock nut	M16
16	48	31103	Washer, 16 mm	16 mm
17	6	6644084	Stop block	

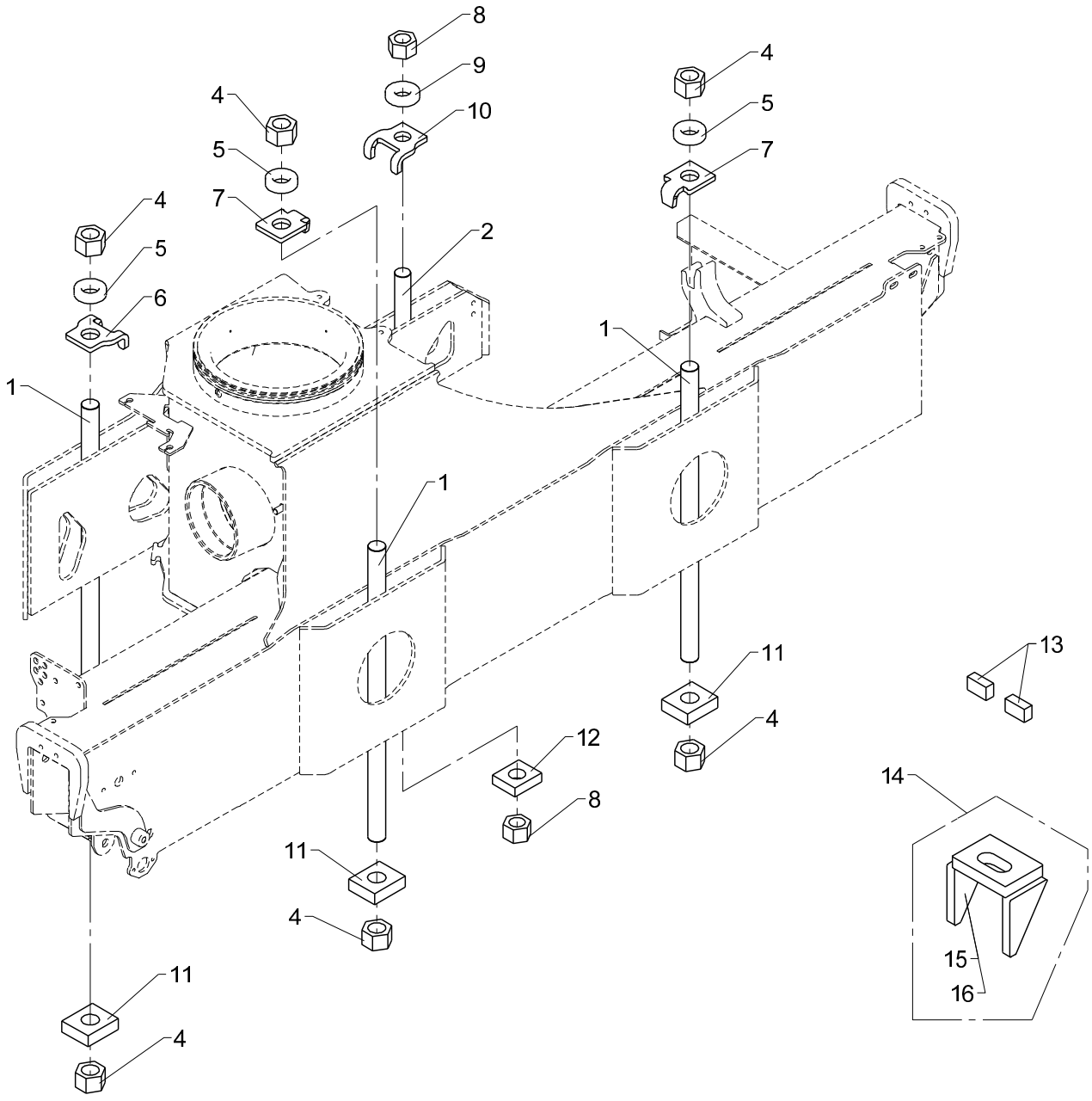
8
9
10
4
5
7
2
4
5
6
1
1
4
5
7
1
1
11
4
13
12
8
11
4
14
15
16
11
4

Mounting kit (3 M33 x 2 + 1 M30 x 2) - 50 mm.

Pos	Qty.	Part no.	Description	Remarks
		6888060	Kit of stay bolts, 4 pcs.,50mm	Pos. 1, 2, 3
		6888190	Fittings	Pos. 14
1	3	6888033	Mounting bolt, M33 x 2 x 665	
2	1	6888022	Monting bolt, M30 x 2 x 450	
3	1	6888140	Nut/washer/stop - kit	Pos. 4, 5, 6, 7, 8, 9, 10, 11, 12, 13
4	6	31087	Lock nut M33 x 2 hexagonal	M33 x 2
5	3	6394709	Mounting plate 33 mm	
6	1	6394707	Mounting plate 33 mm	
7	2	6394705	Mounting plate 33 mm	
8	2	31086	Lock nut	M30 x 2
9	1	6394701	Mounting plate 30 mm	
10	1	6394706	Mouting plate 30 mm	
11	3	6887374	Washer	
12	1	6658094	Washer	
13	6	6644084	Stop block	
14	1	6888190	Fittings	Pos. 15, 16
15	1	6668244	Bracket	
16	3	6668501	Bracket	

18/129, 20/138, 22/153

68 88 200
Internal ref. 68 88 070

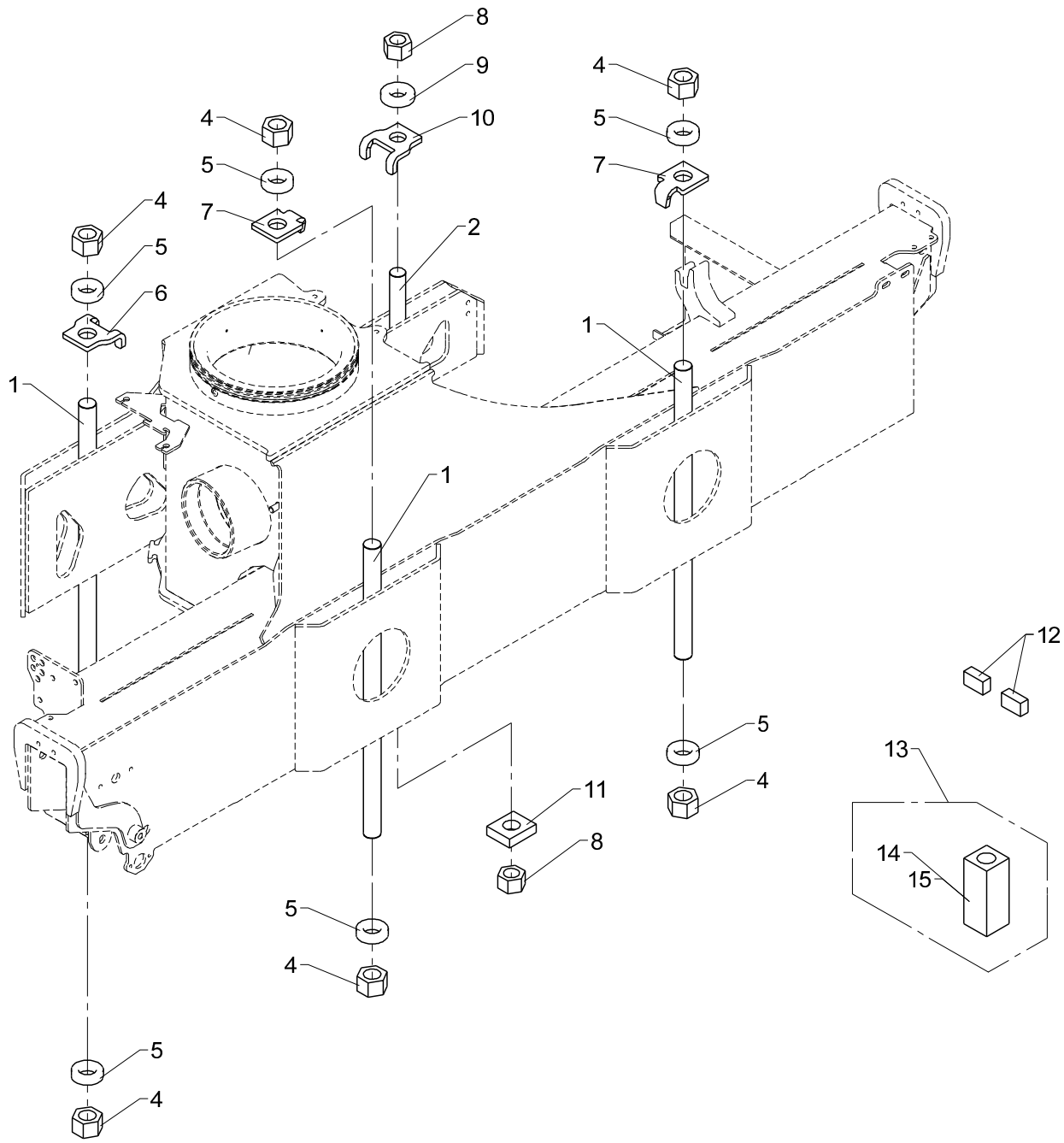

Mounting kit (3 M33 x 2 + 1 M30 x 2) - 150 mm.

From loader 1070001
To loader
Created 30-01-2014
Modified

Pos	Qty.	Part no.	Description	Remarks
		6888070	Kit of stay bolts,4 pcs.,150mm	Pos. 1, 2, 3
		6888200	Fittings	Pos. 13
1	3	6888033	Mounting bolt, M33 x 2 x 665	
2	1	6888023	Mounting bolt, M30 x 2 x 600	
3	1	6888150	Nut/washer/stop - kit	Pos. 4, 5, 6, 7, 8, 9, 10, 11, 12
4	6	31087	Lock nut M33 x 2 hexagonal	M33 x 2
5	6	6394709	Mounting plate 33 mm	
6	1	6394707	Mounting plate 33 mm	
7	2	6394705	Mounting plate 33 mm	
8	2	31086	Lock nut	M30 x 2
9	1	6394701	Mounting plate 30 mm	
10	1	6394706	Mouting plate 30 mm	
11	1	6658094	Washer	
12	6	6644084	Stop block	
13	1	6888200	Fittings	Pos. 14, 15
14	1	6887599	Mounting block	
15	3	6887601	Mounting block (M33 pin)	

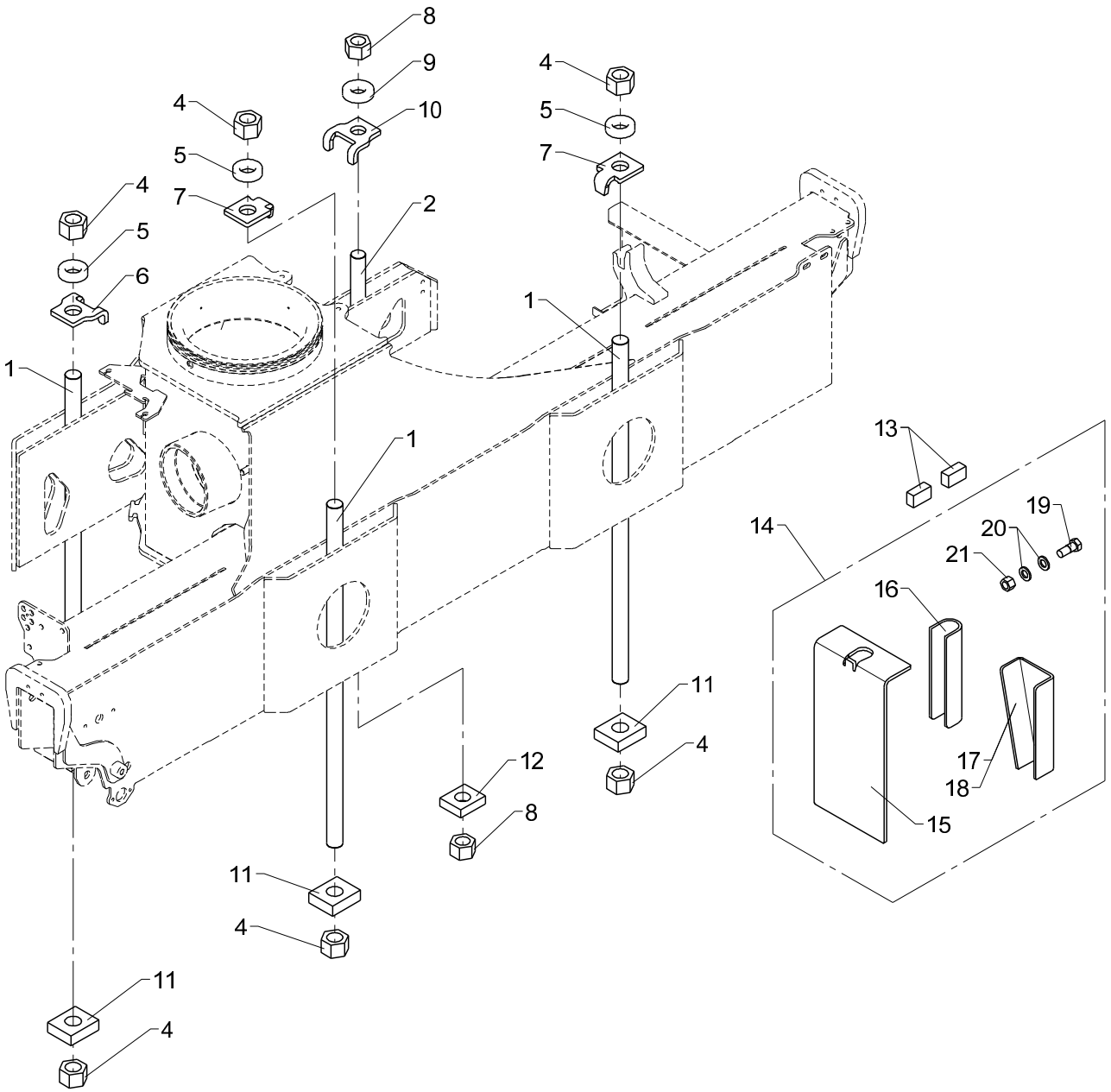
8
9
10
4
5
7
2
1
6
11
12
13
14
15
16
17
18
19
20
21

Mounting kit (3 M33 x 2 + 1 M30 x 2) - 250 mm.

535 07 130

From loader 1070001
To loader

Created 31-01-2014
Modified

Pos	Qty.	Part no.	Description	Remarks
		6888080	Kit of stay bolts,4 pcs.,250mm	Pos. 1, 2, 3
		6668980	Mouting brackets	Pos. 14
1	3	6888034	Mounting bolt, M33 x 2 x 850	
2	1	6888023	Mounting bolt, M30 x 2 x 600	
3	1	6888140	Nut/washer/stop - kit	Pos. 4, 5, 6, 7, 8, 9, 10, 11, 12, 13
4	6	31087	Lock nut M33 x 2 hexagonal	M33 x 2
5	3	6394709	Mounting plate 33 mm	
6	1	6394707	Mounting plate 33 mm	
7	2	6394705	Mounting plate 33 mm	
8	2	31086	Lock nut	M30 x 2
9	1	6394701	Mounting plate 30 mm	
10	1	6394706	Mouting plate 30 mm	
11	3	6887374	Washer	
12	1	6658094	Washer	
13	6	6644084	Stop block	
14	1	6668980	Mouting brackets	Pos. 15, 16, 17, 18, 19, 20, 21
15	4	6881704	Mounting plate	
16	2	6887354	U-profile	
17	1	6881684	Plate, left	
18	1	6881694	Plate, right	
19	24	31496	Tight-fitting bolt	M16 x 40
20	48	31103	Washer, 16 mm	16 mm
21	24	30892	Lock nut	M16

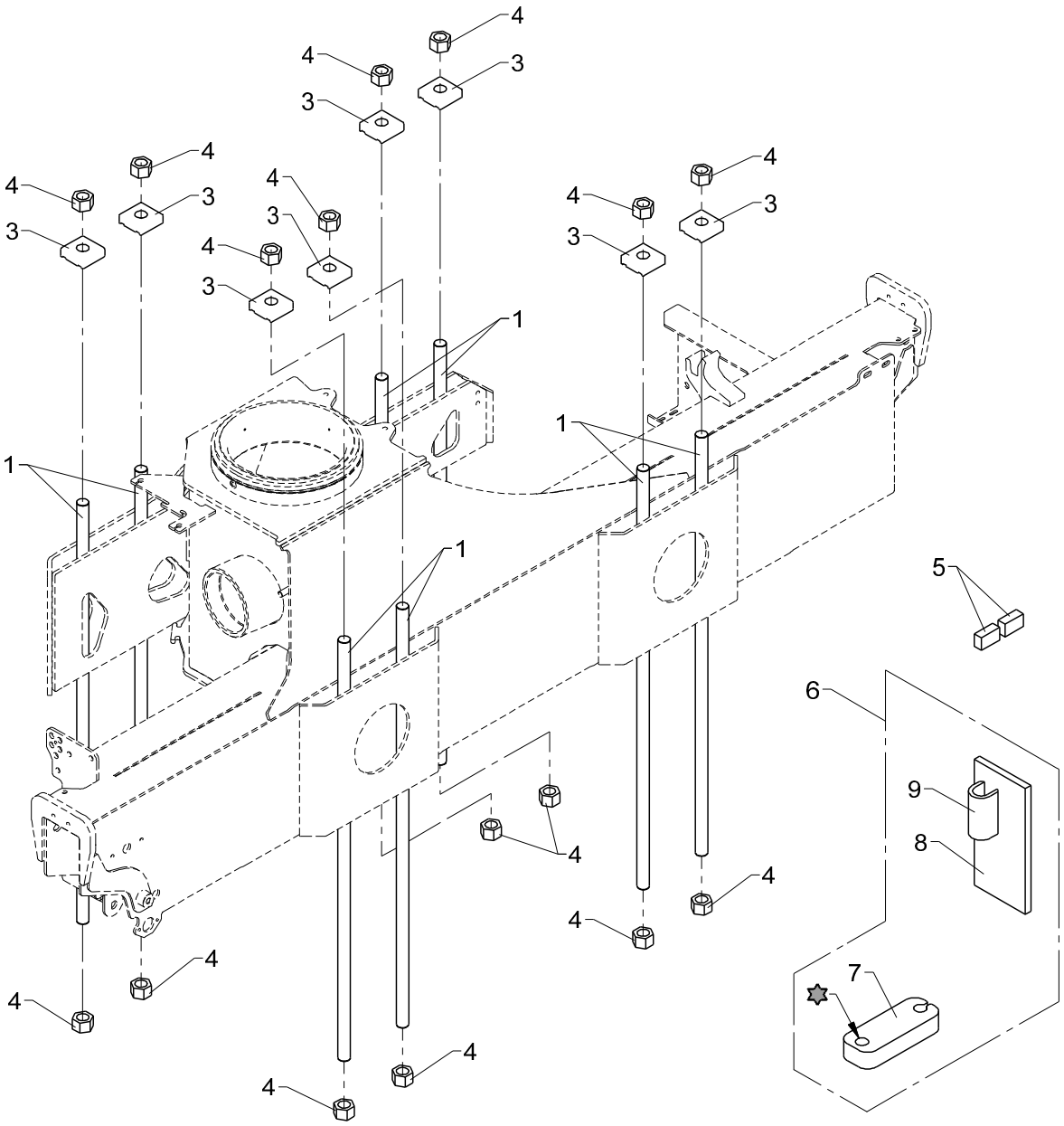
4
3
1
5
6
9
8
7
ø25

Mounting kit (8 M24 x 2 pins)

535 07 140

From loader 1070001
To loader

Created 03-02-2014
Modified

Pos	Qty.	Part no.	Description	Remarks
		6888030	Kit of stay bolts,8pcs.chassis	Pos. 1, 2
		6668960	Mounting bracket	Pos. 6
1	8	6888011	Mouting bolt, M24 x 2 x 1000	
2	1	6888130	Nut/washer/stop - kit	Pos. 3, 4, 5
3	8	6340496	Mounting plate	
4	16	31051	Lock nut	M24 x 2
5	6	6644084	Stop block	
6	1	6668960	Mounting bracket	Pos. 7, 8, 9
7	4	6887384	Clamp	
8	4	6659924	Spacer	
9	4	6659914	U-section	

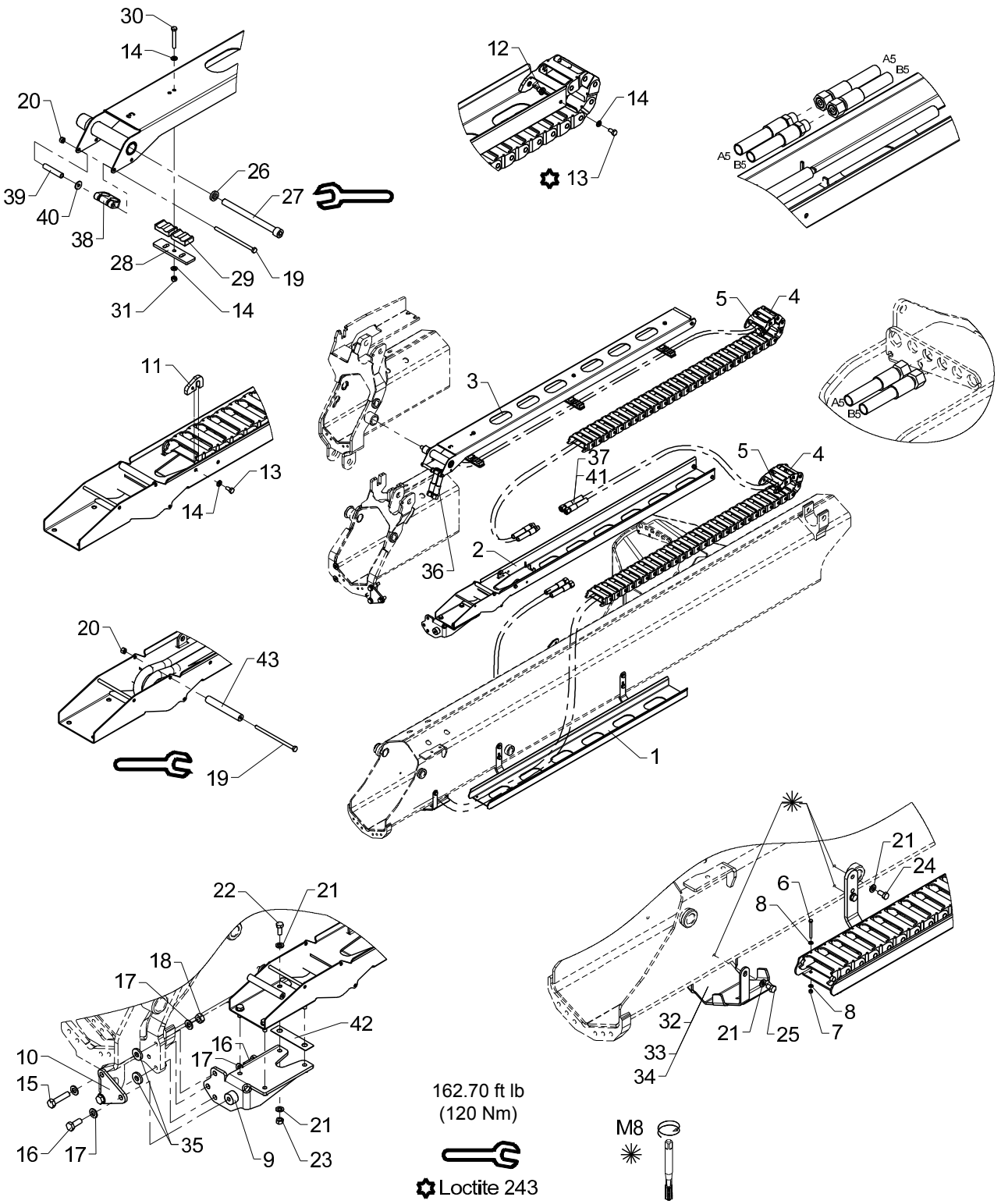
30
14
20
26
27
39
40
38
28
29
19
31
14
12
14
13
A5
B5
A5
B5
11
13
14
5
4
3
37
41
5
4
2
36
A5
B5
20
43
19
1
21
24
6
8
8
32
21
25
7
33
34
22
21
18
17
42
16
17
10
15
16
17
35
9
21
23
162.70 ft lb
(120 Nm)
Loctite 243
M8

Obsolete

Hose guides, K2-1EXV.

535 09 110

From loader 1070001
To loader 1070498

Created 16-03-2009
Modified 14-01-2013

Pos	Qty.	Part no.	Description	Remarks
		6342730	Hose guide, K2-1 EXV	
		6346730	Hose guide, K2-1 EXV	
		6365730	Hose guide, K2-1 EXV.	
		6363730	Hose guide, K2-1 EXV.	
1	1	6340721	Guide (jib)	
2	1	6340731	Guide (Extension I)	
3	1	6340748	Guide (extension K3)	
4	2	28712	Nylon drag chain, 30 links	
5	2	63400	End link for nylon drag chain	
6	2	30128	Set screw	M4 x 40
7	2	30857	Lock nut	M4
8	4	31188	Washer, stainless	4 mm
9	1	6340725	Mounting bracket	
10	1	6340729	Plate	
11	1	6340718	Bracket	
12	4	6340719	Nut	
13	5	30111	Set screw, stainless	
14	11	32302	Face washer, stainless	6 mm
15	2	30377	Set screw	M10 x 45
16	2	31513	Set screw, stainless	M10 x 25
17	6	31565	Washer, stainless	10 mm
18	2	30858	Nut	M10
19	2	30167	Steel bolt	M6 x 60
20	2	30884	Lock nut, stainless	M6
21	14	31147	Face washer, 8 mm	
22	4	30132	Set screw, stainless	
23	4	30856	Nut, stainless	M8
24	4	30131	Set screw, stainless	M8 x 16
25	2	30130	Set screw, stainless	M8 x 12
26	1	6340717	Washer	
27	1	32488	Screw	MC12 x 150
28	3	6340769	Adaptor	
29	6	63561	Clamp	
30	3	30118	Steel pin, stainless	M6 x 45
31	3	30854	Nut, stainless	M6
32	1	6340299	Protective guard	Serie 1300/1500
33	1	6344299	Protective guard	Serie 1800/2200
34	1	6365299	Hose shield	Serie 1100/1110
35	2	31756	Washer	Serie 900/910/1100/1110
36	2	56568	Hose	
37	2	56569	Hose	

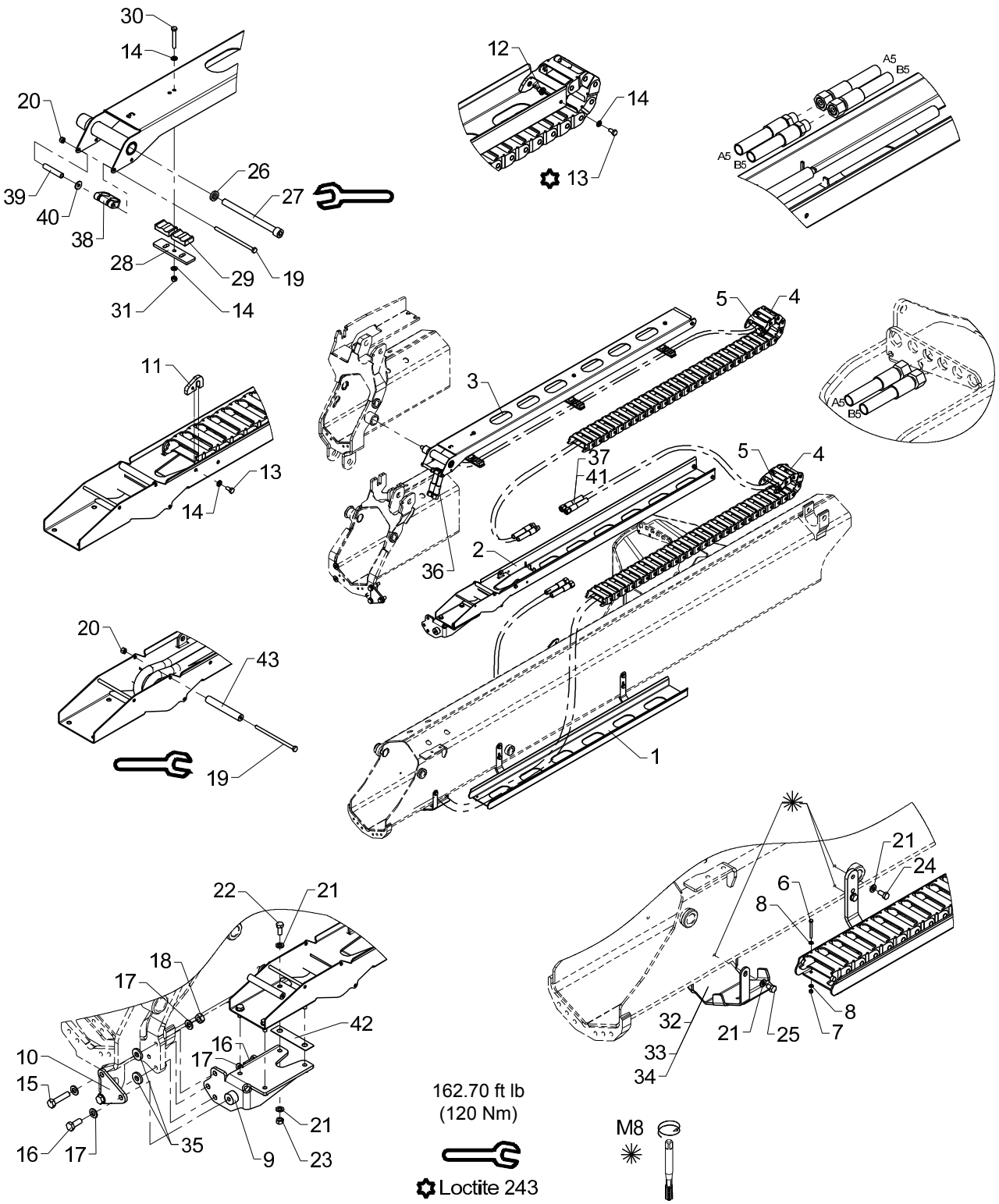
30
14
20
26
27
39
40
38
28
29
19
31
14
12
14
13
A5
B5
A5
B5
11
13
14
5
4
3
37
41
5
4
2
36
A5
B5
20
43
19
1
21
24
6
8
8
32
21
25
7
33
34
22
21
18
17
42
16
17
10
15
16
17
35
9
21
23
162.70 ft lb
(120 Nm)
Loctite 243
M8

Obsolete

Hose guides, K2-1EXV.

535 09 110

From loader 1070001
To loader 1070498

Created 16-03-2009
Modified 14-01-2013

Pos	Qty.	Part no.	Description	Remarks
38	1	68028	Clamp	
39	1	6340724	Distance pipe	
40	1	31134	Washer, stainless	
41	2	56458	Hose 3/8 x 3750 mm L/L	Serie 900/910
42	1	6340764	Shim	
43	1	56513	Hose	

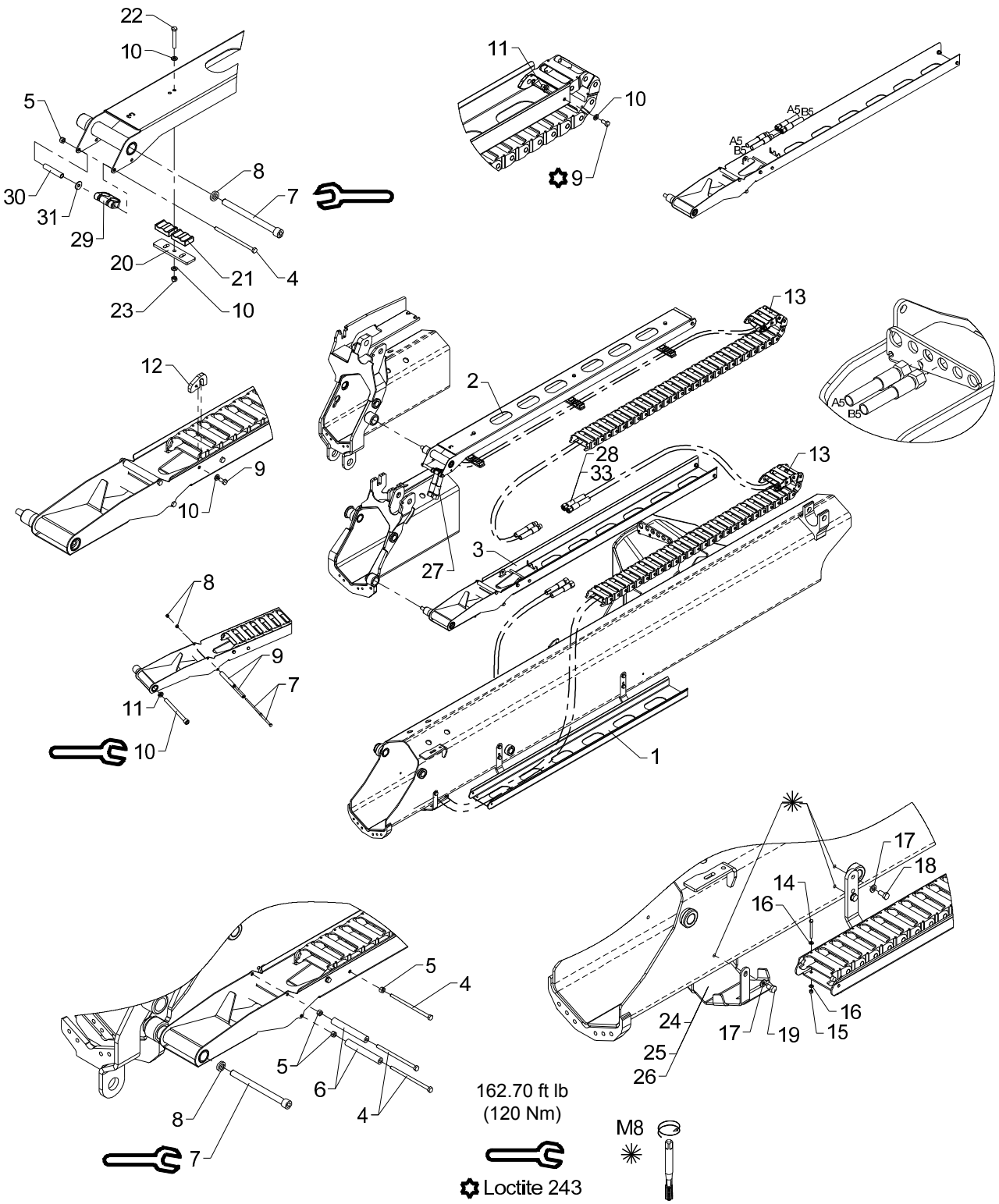
22
10
5
30
31
29
20
23
8
7
21
4
10
11
10
9
A5
B5
A5
B5
12
9
10
13
2
28
33
13
3
27
A5
B5
8
9
7
11
10
1
17
18
14
16
16
24
17
19
15
25
26
5
4
5
6
8
4
7
162.70 ft lb
(120 Nm)
Loctite 243
M8

Hose guides, K2-1EXV.

Pos	Qty.	Part no.	Description	Remarks
		6342730	Hose guide, K2-1 EXV	
		6346730	Hose guide, K2-1 EXV	
		6365730	Hose guide, K2-1 EXV.	
		6363730	Hose guide, K2-1 EXV.	
1	1	6340721	Guide (jib)	
2	1	6340748	Guide (extension K3)	
3	1	6341731	Guide (Extension I)	
4	4	30167	Steel bolt	M6 x 60
5	4	30884	Lock nut, stainless	M6
6	2	56513		
7	2	32488	Screw	MC12 x 150
8	2	6340717	Washer	
9	5	30111	Set screw, stainless	
10	11	32302	Face washer, stainless	6 mm
11	4	6340719	Nut	
12	1	6340718	Bracket	
13	2	28712	Nylon drag chain, 31 links	
14	2	30128	Set screw	M4 x 40
15	2	30857	Lock nut	M4
16	4	31188	Washer, stainless	4 mm
17	6	31147	Face washer, 8 mm	
18	4	30131	Set screw, stainless	M8 x 16
19	2	30130	Set screw, stainless	M8 x 12
20	3	6340769	Adaptor	
21	6	63561	Clamp	
22	3	30118	Steel pin, stainless	M6 x 45
23	3	30854	Nut, stainless	M6
24	1	6340299	Protective guard	Serie 1300/1500
25	1	6344299	Protective guard	Serie 1800/2200
26	1	6365299		Serie 1100/1110
27	2	56568	Hose	
28	2	56569	Hose	
29	1	68028		
30	1	6340724		
31	1	31134	Washer, stainless	
32	2	56458		Serie 900/910

Obsolete

18/129, 20/138, 22/153

535 09 120

63 63 740
63 65 740
63 46 740
Internal ref. 63 42 740

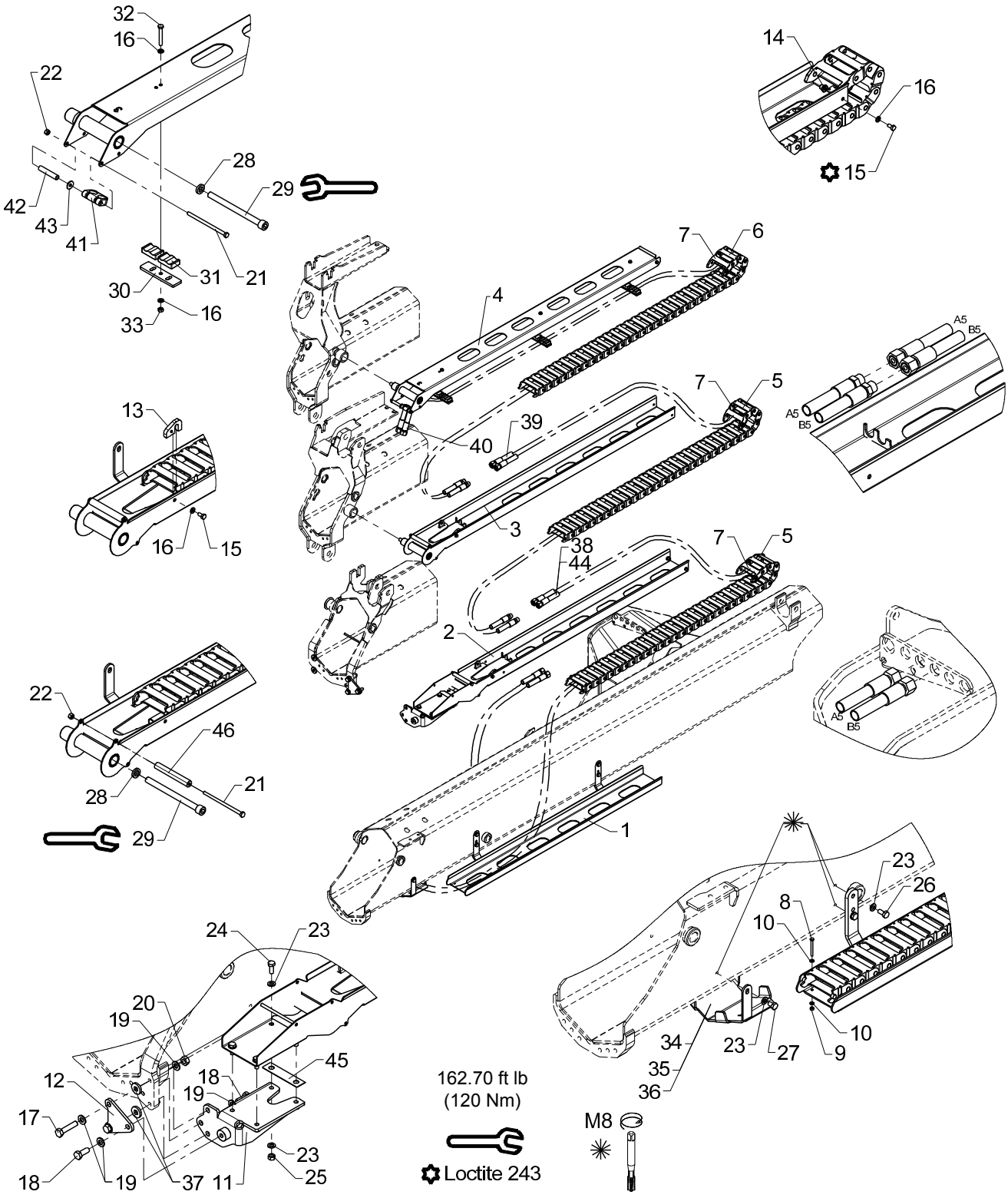

Obsolete

Hose guides, K3-1 EXV.

535 09 120

From loader 1070001
To loader 1070498

Created 16-03-2009
Modified 14-01-2013

Pos	Qty.	Part no.	Description	Remarks
		6342740	Hose guide, K3-1 EXV	
		6346740	Hose guide, K3-1 EXV	
		6365740	Hose guide, K3-1 EXV.	
		6363740	Hose guide, K3-1 EXV.	
1	1	6340721	Guide (jib)	
2	1	6340731	Guide (Extension I)	
3	1	6340741	Guide (Extension II)	
4	1	6340748	Guide (extension K3)	
5	2	28712	Nylon drag chain, 30 links	
6	1	28713	Nylon drag chain, 33 links	
7	3	63400	End link for nylon drag chain	
8	2	30128	Set screw	M4 x 40
9	2	30857	Lock nut	M4
10	4	31188	Washer, stainless	4 mm
11	1	6340725	Mounting bracket	
12	1	6340729	Plate	
13	2	6340718	Bracket	
14	6	6340719	Nut	
15	8	30111	Set screw, stainless	
16	14	32302	Face washer, stainless	6 mm
17	2	30377	Set screw	M10 x 45
18	2	31513	Set screw, stainless	M10 x 25
19	6	31565	Washer, stainless	10 mm
20	2	30858	Nut	M10
21	3	30167	Steel bolt	M6 x 60
22	3	30884	Lock nut, stainless	M6
23	14	31147	Face washer, 8 mm	
24	4	30132	Set screw, stainless	
25	4	30856	Nut, stainless	M8
26	4	30131	Set screw, stainless	M8 x 16
27	2	30130	Set screw, stainless	M8 x 12
28	2	6340717	Washer	
29	2	32488	Screw	MC12 x 150
30	3	6340769	Adaptor	
31	6	63561	Clamp	
32	3	30118	Steel pin, stainless	M6 x 45
33	3	30854	Nut, stainless	M6
34	1	6340299	Protective guard	Serie 1300/1500
35	1	6344299	Protective guard	Serie 1800/2200
36	1	6365299	Hose shield	Serie 1100/1110
37	2	31756	Washer	Serie 1100/1110

Obsolete

18/129, 20/138, 22/153

535 09 120

63 63 740
63 65 740
63 46 740
Internal ref. 63 42 740

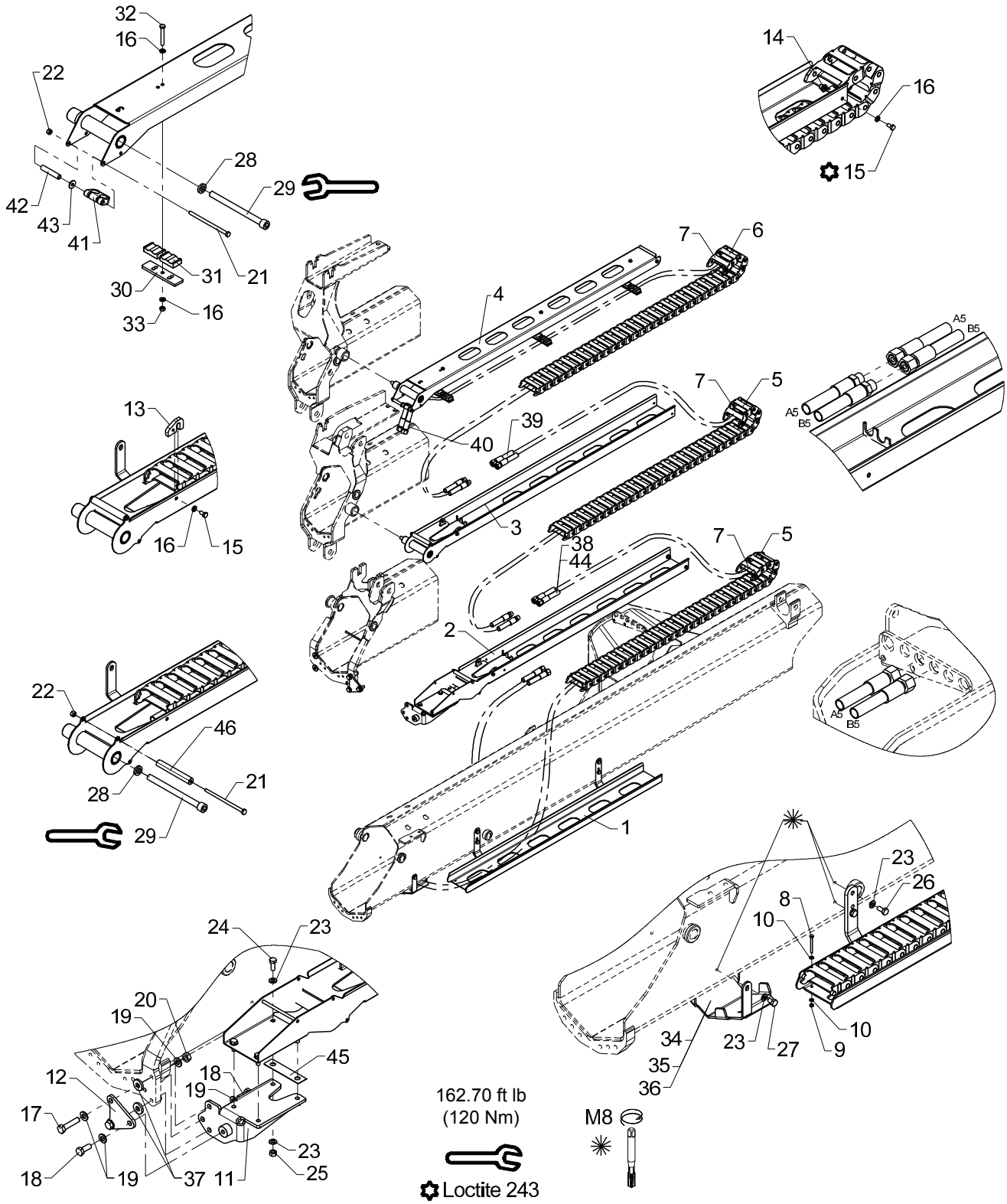

Obsolete

Hose guides, K3-1 EXV.

535 09 120

From loader 1070001
To loader 1070498

Created 16-03-2009
Modified 14-01-2013

Pos	Qty.	Part no.	Description	Remarks
38	2	56569	Hose	
39	2	56564	Hose	
40	2	56565	Hose	
41	1	68028	Clamp	
42	1	6340724	Distance pipe	
43	1	31134	Washer, stainless	
44	2	56458	Hose 3/8 x 3750 mm L/L	Serie 900/910
45	1	6340764	Shim	
46	2	56513	Hose	

18/129, 20/138, 22/153

63 63 740
63 65 740
63 46 740
Internal ref. 63 42 740

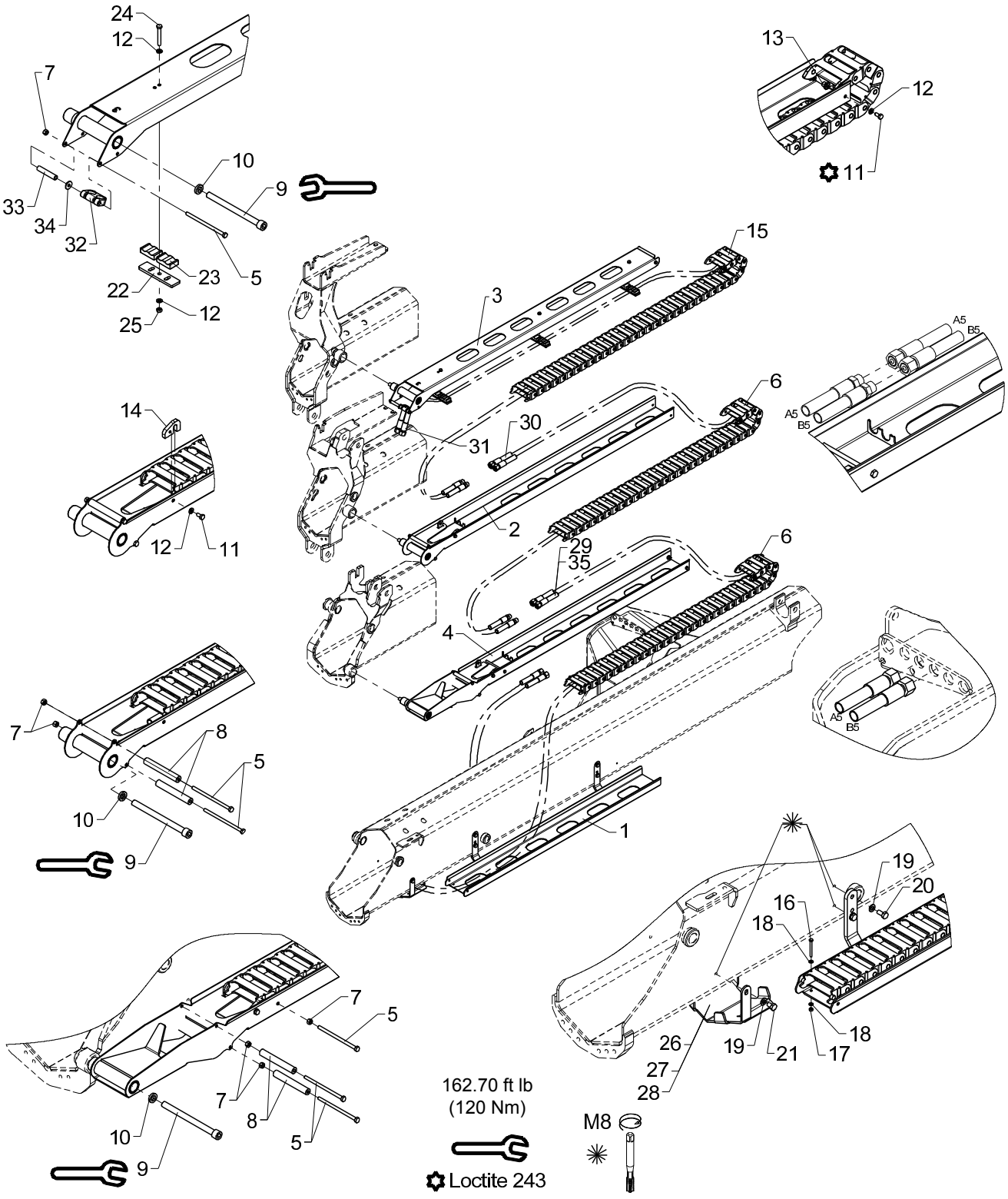

Hose guides, K3-1 EXV.

Pos	Qty.	Part no.	Description	Remarks
		6342740	Hose guide, K3-1 EXV	
		6346740	Hose guide, K3-1 EXV	
		6365740	Hose guide, K3-1 EXV.	
		6363740	Hose guide, K3-1 EXV.	
1	1	6340721	Guide (jib)	
2	1	6340741	Guide (Extension II)	
3	1	6340748	Guide (extension K3)	
4	1	6341731	Guide (Extension I)	
5	6	30167	Steel bolt	M6 x 60
6	2	28712	Nylon drag chain, 31 links	
7	6	30884	Lock nut, stainless	M6
8	4	56513		
9	3	32488	Screw	MC12 x 150
10	3	6340717	Washer	
11	8	30111	Set screw, stainless	
12	14	32302	Face washer, stainless	6 mm
13	6	6340719	Nut	
14	2	6340718	Bracket	
15	1	28713	Nylon drag chain, 34 links	
16	2	30128	Set screw	M4 x 40
17	2	30857	Lock nut	M4
18	4	31188	Washer, stainless	4 mm
19	6	31147	Face washer, 8 mm	
20	4	30131	Set screw, stainless	M8 x 16
21	2	30130	Set screw, stainless	M8 x 12
22	3	6340769	Adaptor	
23	6	63561	Clamp	
24	3	30118	Steel pin, stainless	M6 x 45
25	3	30854	Nut, stainless	M6
26	1	6340299	Protective guard	Serie 1300/1500
27	1	6344299	Protective guard	Serie 1800/2200
28	1	6365299		Serie 1100/1110
29	2	56569	Hose	
30	2	56564	Hose	
31	2	56565	Hose	
32	1	68028		
33	1	6340724		
34	1	31134	Washer, stainless	
35	2	56458		Serie 900/910

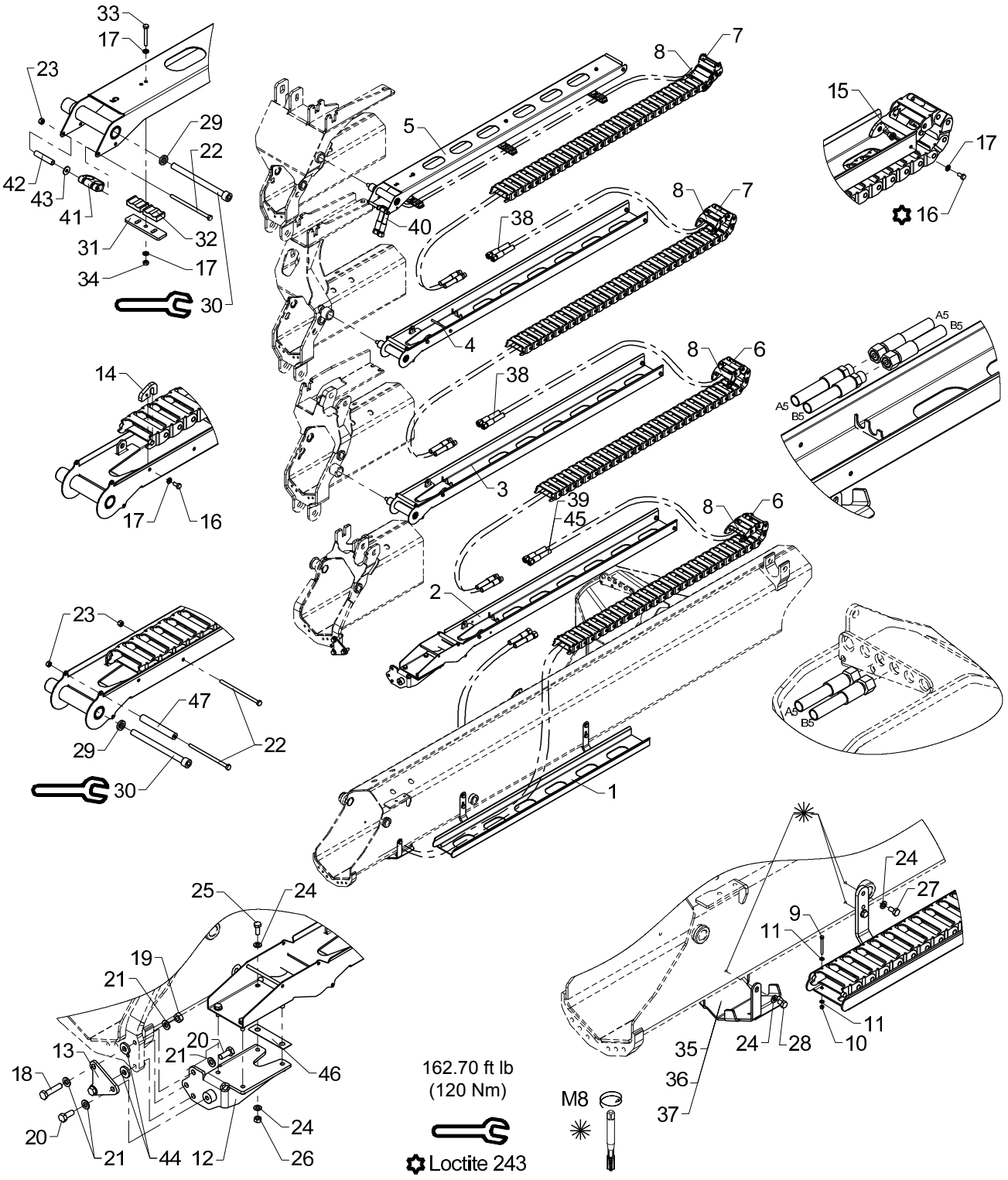
33
17
23
29
22
42
43
41
31
32
34
17
30
5
8
7
40
38
8
7
4
8
6
38
3
39
45
8
6
2
1
15
17
16
A5
B5
A5
B5
14
17
16
23
47
29
22
30
A5
B5
25
24
19
21
13
21
20
18
46
20
21
44
12
24
26
162.70 ft lb
(120 Nm)
Loctite 243
M8
24
27
9
11
11
35
24
28
10
36
37

Obsolete

Hose guides, K4-1 EXV.

535 09 130

From loader 1070001
To loader 1070498

Created 16-03-2009
Modified 14-01-2013

Pos	Qty.	Part no.	Description	Remarks
		6342750	Hose guides, K4-1 EXV	
		6346750	Hose guides, K4-1 EXV	
		6365750	Hose guide, K4-1 EXV.	
		6363750	Hose guide, K4-1 EXV.	
1	1	6340721	Guide (jib)	
2	1	6340731	Guide (Extension I)	
3	1	6340741	Guide (Extension II)	
4	1	6340751	Guide (Extension III)	
5	1	6340758	Guide (extension K5)	
6	2	28712	Nylon drag chain, 30 links	
7	2	28713	Nylon drag chain, 33 links	
8	4	63400	End link for nylon drag chain	
9	2	30128	Set screw	M4 x 40
10	2	30857	Lock nut	M4
11	4	31188	Washer, stainless	4 mm
12	1	6340725	Mounting bracket	
13	1	6340729	Plate	
14	3	6340718	Bracket	
15	8	6340719	Nut	
16	11	30111	Set screw, stainless	
17	17	32302	Face washer, stainless	6 mm
18	2	30377	Set screw	M10 x 45
19	2	30858	Nut	M10
20	2	31513	Set screw, stainless	M10 x 25
21	6	31565	Washer, stainless	10 mm
22	5	30167	Steel bolt	M6 x 60
23	5	30884	Lock nut, stainless	M6
24	14	31147	Face washer, 8 mm	
25	4	30132	Set screw, stainless	
26	4	30856	Nut, stainless	M8
27	4	30131	Set screw, stainless	M8 x 16
28	2	30130	Set screw, stainless	M8 x 12
29	3	6340717	Washer	
30	3	32488	Screw	MC12 x 150
31	3	6340769	Adaptor	
32	6	63561	Clamp	
33	3	30118	Steel pin, stainless	M6 x 45
34	3	30854	Nut, stainless	M6
35	1	6340299	Protective guard	Serie 1300/1500
36	1	6344299	Protective guard	Serie 1800/2200
37	1	6365299	Hose shield	Serie 1100/1110

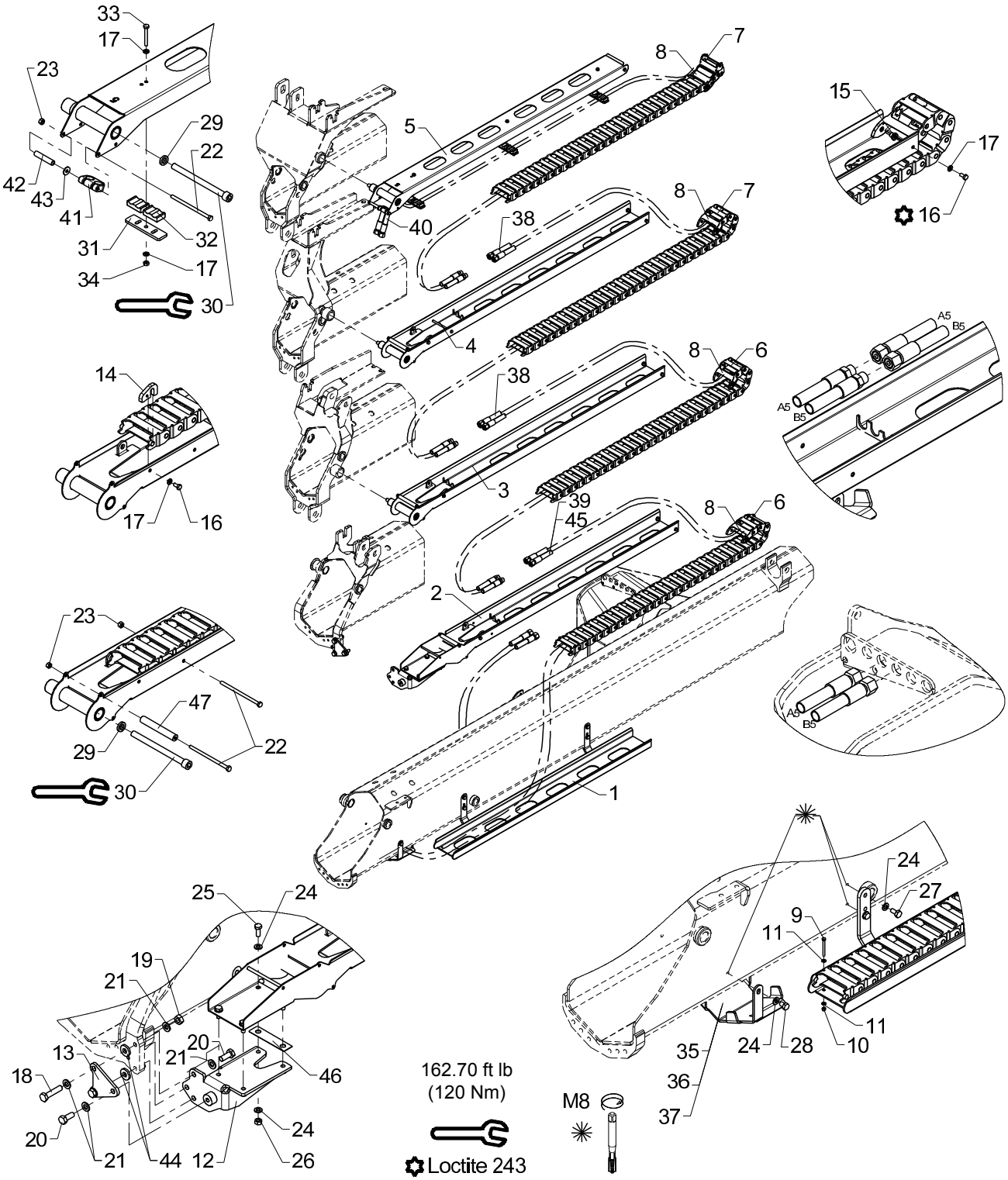
33
17
23
29
22
42
43
41
31
32
34
17
30
5
8
7
40
38
8
7
4
15
17
16
14
17
16
8
6
38
3
A5
B5
A5
B5
39
45
8
6
2
23
47
29
22
30
1
A5
B5
25
24
19
21
13
21
20
18
46
20
21
44
12
24
26
162.70 ft lb
(120 Nm)
Loctite 243
M8
24
27
9
11
11
35
24
28
10
36
37

Obsolete

Hose guides, K4-1 EXV.

535 09 130

From loader 1070001
To loader 1070498

Created 16-03-2009
Modified 14-01-2013

Pos	Qty.	Part no.	Description	Remarks
38	4	56564	Hose	
39	2	56569	Hose	
40	2	56565	Hose	
41	1	68028	Clamp	
42	1	6340724	Distance pipe	
43	1	31134	Washer, stainless	
44	2	31756	Washer	Serie 1100/1110
45	2	56458	Hose 3/8 x 3750 mm L/L	Serie 900/910
46	1	6340764	Shim	
47	3	56513	Hose	

18/129, 20/138, 22/153

63 63 750
63 65 750
63 46 750
Internal ref. 63 42 750

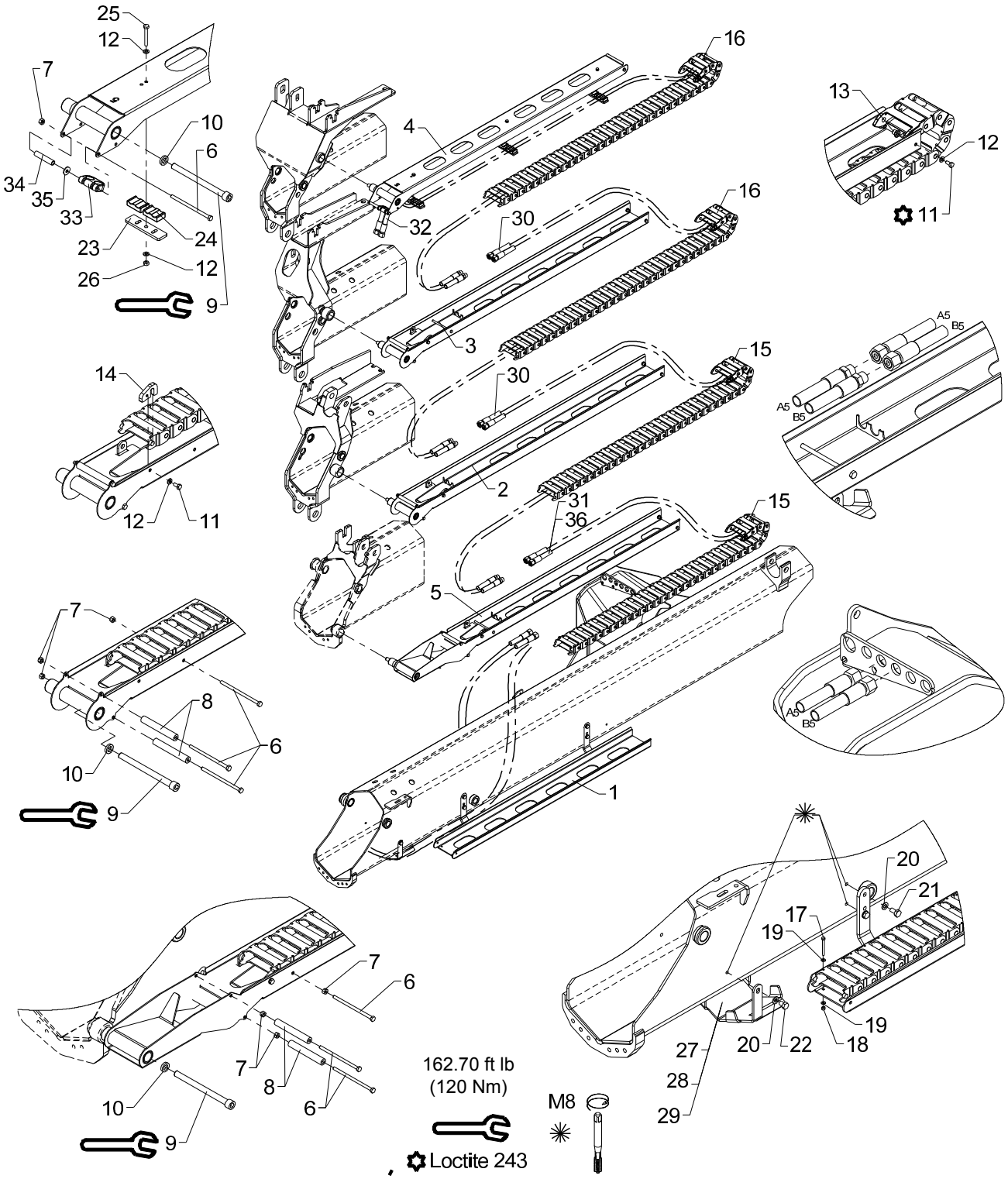

Hose guides, K4-1 EXV.

Pos	Qty.	Part no.	Description	Remarks
		6342750	Hose guides, K4-1 EXV	
		6346750	Hose guides, K4-1 EXV	
		6365750	Hose guide, K4-1 EXV.	
		6363750	Hose guide, K4-1 EXV.	
1	1	6340721	Guide (jib)	
2	1	6340741	Guide (Extension II)	
3	1	6340751	Guide (Extension III)	
4	1	6340758	Guide (extension K5)	
5	1	6341731	Guide (Extension I)	
6	9	30167	Steel bolt	M6 x 60
7	9	30884	Lock nut, stainless	M6
8	6	56513		
9	4	32488	Screw	MC12 x 150
10	4	6340717	Washer	
11	11	30111	Set screw, stainless	
12	17	32302	Face washer, stainless	6 mm
13	8	6340719	Nut	
14	3	6340718	Bracket	
15	2	28712	Nylon drag chain, 31 links	
16	2	28713	Nylon drag chain, 34 links	
17	2	30128	Set screw	M4 x 40
18	2	30857	Lock nut	M4
19	4	31188	Washer, stainless	4 mm
20	6	31147	Face washer, 8 mm	
21	4	30131	Set screw, stainless	M8 x 16
22	2	30130	Set screw, stainless	M8 x 12
23	3	6340769	Adaptor	
24	6	63561	Clamp	
25	3	30118	Steel pin, stainless	M6 x 45
26	3	30854	Nut, stainless	M6
27	1	6340299	Protective guard	Serie 1300/1500
28	1	6344299	Protective guard	Serie 1800/2200
29	1	6365299		Serie 1100/1110
30	4	56564	Hose	
31	2	56569	Hose	
32	2	56565	Hose	
33	1	68028		
34	1	6340724		
35	1	31134	Washer, stainless	
36	2	56458		Serie 900/910

Obsolete

18/129, 20/138, 22/153

535 09 140

63 63 760
63 65 760
63 46 760
Internal ref. 63 42 760

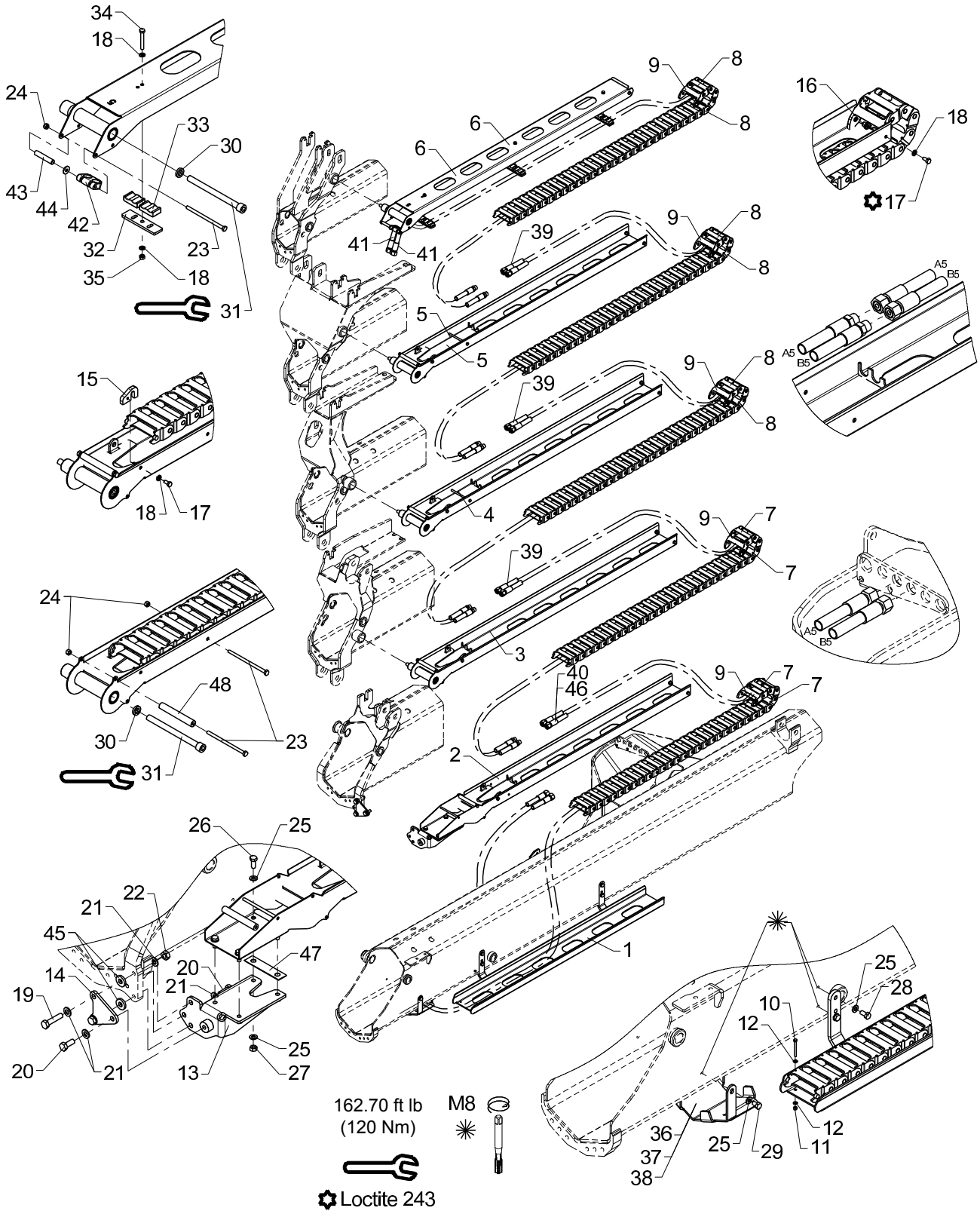

Obsolete

Hose guides, K5-1 EXV.

535 09 140

From loader 1070001
To loader 1070498

Created 17-03-2009
Modified 14-01-2013

Pos	Qty.	Part no.	Description	Remarks
		6342760	Hose guides, K5-1 EXV	
		6346760	Hose guides, K5-1 EXV	
		6365760	Hose guide, K5-1 EXV.	
		6363760	Hose guide, K5-1 EXV.	
1	1	6340721	Guide (jib)	
2	1	6340731	Guide (Extension I)	
3	1	6340741	Guide (Extension II)	
4	1	6340751	Guide (Extension III)	
5	1	6340755	Guide (Extension IV)	
6	1	6340758	Guide (extension K5)	
7	2	28712	Nylon drag chain, 30 links	
8	3	28713	Nylon drag chain, 33 links	
9	5	63400	End link for nylon drag chain	
10	2	30128	Set screw	M4 x 40
11	2	30857	Lock nut	M4
12	4	31188	Washer, stainless	4 mm
13	1	6340725	Mounting bracket	
14	1	6340729	Plate	
15	4	6340718	Bracket	
16	10	6340719	Nut	
17	14	30111	Set screw, stainless	
18	20	32302	Face washer, stainless	6 mm
19	2	30377	Set screw	M10 x 45
20	2	31513	Set screw, stainless	M10 x 25
21	6	31565	Washer, stainless	10 mm
22	2	30858	Nut	M10
23	7	30167	Steel bolt	M6 x 60
24	7	30884	Lock nut, stainless	M6
25	14	31147	Face washer, 8 mm	
26	4	30132	Set screw, stainless	
27	4	30856	Nut, stainless	M8
28	4	30131	Set screw, stainless	M8 x 16
29	2	30130	Set screw, stainless	M8 x 12
30	4	6340717	Washer	
31	4	32488	Screw	MC12 x 150
32	3	6340769	Adaptor	
33	6	63561	Clamp	
34	3	30118	Steel pin, stainless	M6 x 45
35	3	30854	Nut, stainless	M6
36	1	6340299	Protective guard	Serie 1300/1500
37	1	6344299	Protective guard	Serie 1800/2200

Obsolete

18/129, 20/138, 22/153

535 09 140

63 63 760
63 65 760
63 46 760
Internal ref. 63 42 760

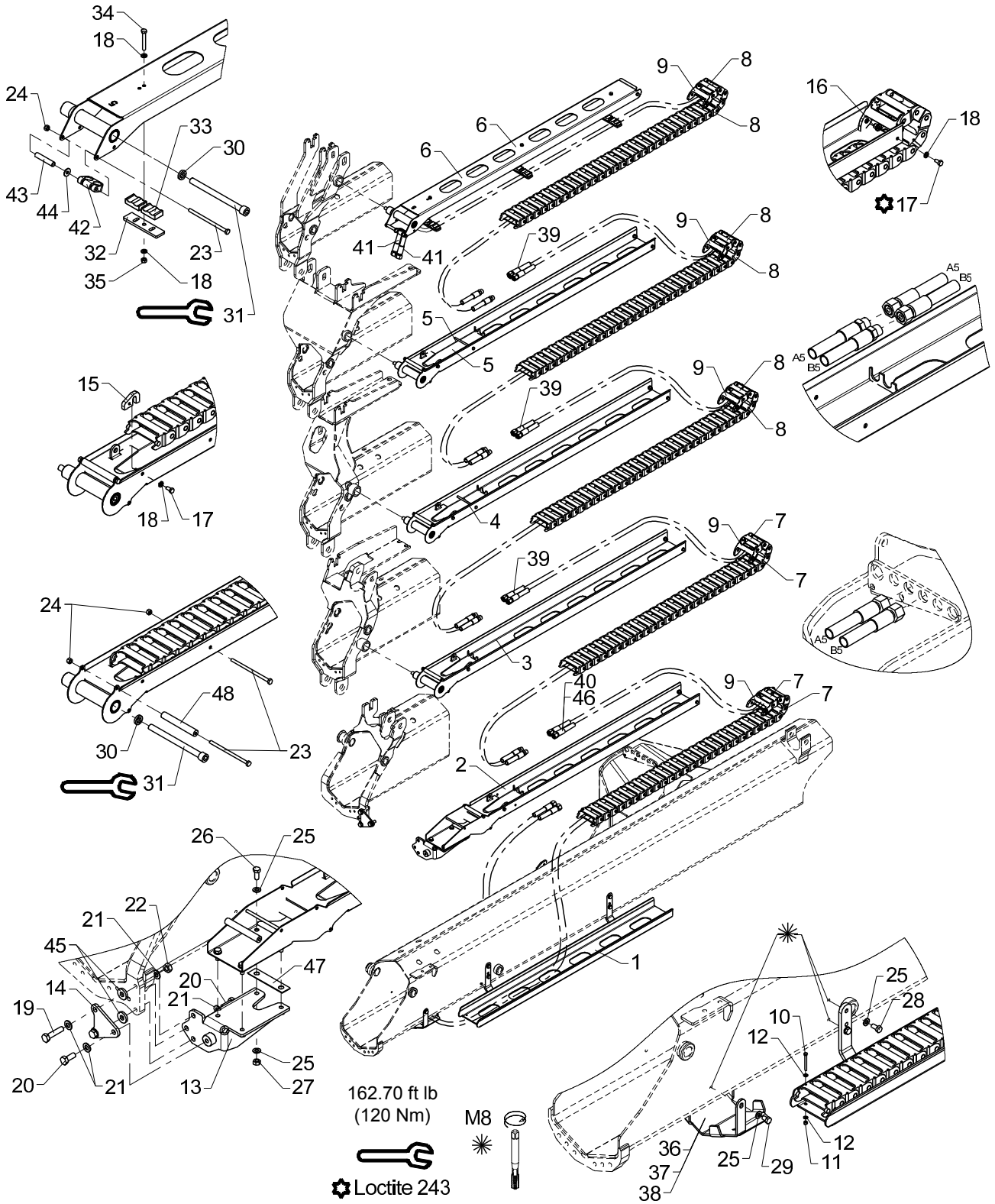

Obsolete

Hose guides, K5-1 EXV.

535 09 140

From loader 1070001
To loader 1070498

Created 17-03-2009
Modified 14-01-2013

Pos	Qty.	Part no.	Description	Remarks
38	1	6365299	Hose shield	Serie 1100/1110
39	6	56564	Hose	
40	2	56569	Hose	
41	2	56565	Hose	
42	1	68028	Clamp	
43	1	6340724	Distance pipe	
44	1	31134	Washer, stainless	
45	2	31756	Washer	Serie 1100/1110
46	2	56458	Hose 3/8 x 3750 mm L/L	Serie 900/910
47	1	6340764	Shim	
48	4	56513	Hose	

18/129, 20/138, 22/153

63 63 760
63 65 760
63 46 760
Internal ref. 63 42 760

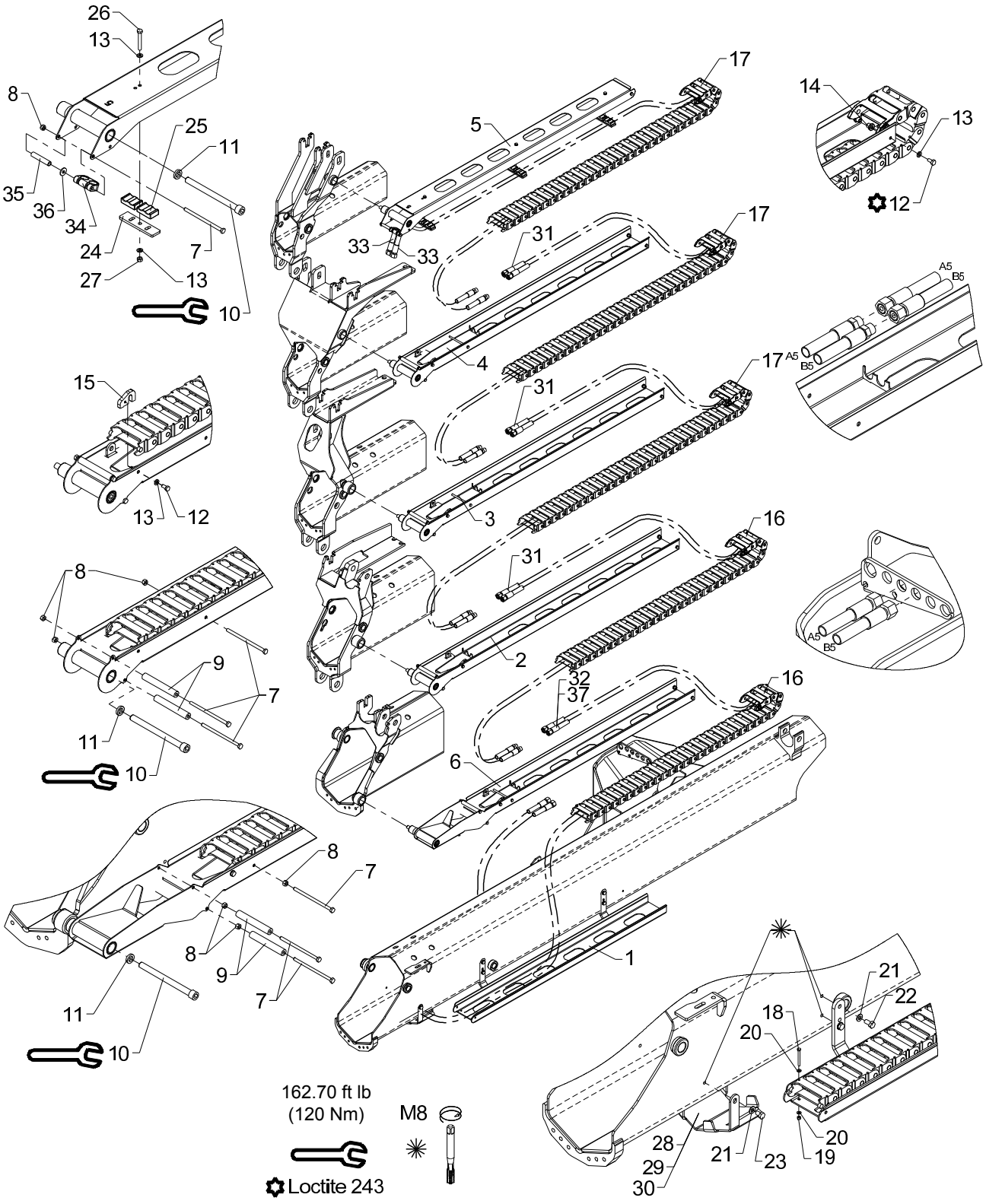

Hose guides, K5-1 EXV.

Pos	Qty.	Part no.	Description	Remarks
		6342760	Hose guides, K5-1 EXV	
		6346760	Hose guides, K5-1 EXV	
		6365760	Hose guide, K5-1 EXV.	
		6363760	Hose guide, K5-1 EXV.	
1	1	6340721	Guide (jib)	
2	1	6340741	Guide (Extension II)	
3	1	6340751	Guide (Extension III)	
4	1	6340755	Guide (Extension IV)	
5	1	6340758	Guide (extension K5)	
6	1	6341731	Guide (Extension I)	
7	12	30167	Steel bolt	M6 x 60
8	12	30884	Lock nut, stainless	M6
9	8	56513		
10	5	32488	Screw	MC12 x 150
11	5	6340717	Washer	
12	14	30111	Set screw, stainless	
13	20	32302	Face washer, stainless	6 mm
14	10	6340719	Nut	
15	4	6340718	Bracket	
16	2	28712	Nylon drag chain, 31 links	
17	3	28713	Nylon drag chain, 34 links	
18	2	30128	Set screw	M4 x 40
19	2	30857	Lock nut	M4
20	4	31188	Washer, stainless	4 mm
21	6	31147	Face washer, 8 mm	
22	4	30131	Set screw, stainless	M8 x 16
23	2	30130	Set screw, stainless	M8 x 12
24	3	6340769	Adaptor	
25	6	63561	Clamp	
26	3	30118	Steel pin, stainless	M6 x 45
27	3	30854	Nut, stainless	M6
28	1	6340299	Protective guard	Serie 1300/1500
29	1	6344299	Protective guard	Serie 1800/2200
30	1	6365299		Serie 1100/1110
31	6	56564	Hose	
32	2	56569	Hose	
33	2	56565	Hose	
34	1	68028		
35	1	6340724		
36	1	31134	Washer, stainless	
37	2	56458		Serie 900/910

Obsolete

18/129, 20/138, 22/153

535 09 150

63 46 770
Internal ref. 63 42 770

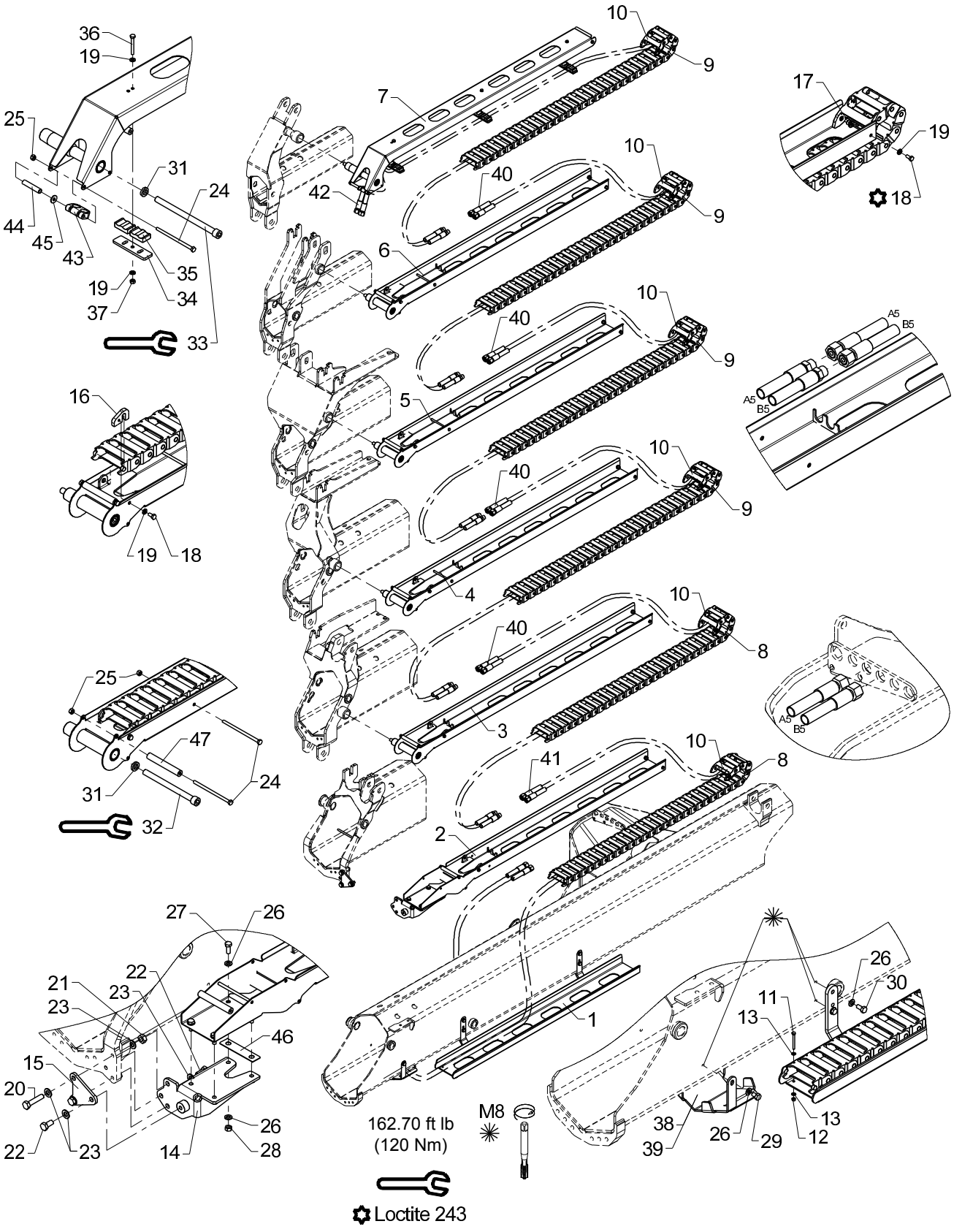

Obsolete

Hose guides, K6-1 EXV.

535 09 150

From loader 1070001
To loader 1070498

Created 17-03-2009
Modified 14-01-2013

Pos	Qty.	Part no.	Description	Remarks
		6342770	Hose guides, K6-1 EXV	
		6346770	Hose guides, K6-1 EXV	
1	1	6340721	Guide (jib)	
2	1	6340731	Guide (Extension I)	
3	1	6340741	Guide (Extension II)	
4	1	6340751	Guide (Extension III)	
5	1	6340755	Guide (Extension IV)	
6	1	6340761	Guide (Extension V)	
7	1	6340765	Guide (Extension VI)	
8	2	28712	Nylon drag chain, 30 links	
9	4	28713	Nylon drag chain, 33 links	
10	6	63400	End link for nylon drag chain	
11	2	30128	Set screw	M4 x 40
12	2	30857	Lock nut	M4
13	4	31188	Washer, stainless	4 mm
14	1	6340725	Mounting bracket	
15	1	6340729	Plate	
16	5	6340718	Bracket	
17	12	6340719	Nut	
18	17	30111	Set screw, stainless	
19	23	32302	Face washer, stainless	6 mm
20	2	30377	Set screw	M10 x 45
21	2	30858	Nut	M10
22	2	31517	Set screw, stainless	M10 x 20
23	6	31565	Washer, stainless	10 mm
24	9	30167	Steel bolt	M6 x 60
25	9	30884	Lock nut, stainless	M6
26	14	31147	Face washer, 8 mm	
27	4	30132	Set screw, stainless	
28	4	30856	Nut, stainless	M8
29	2	30130	Set screw, stainless	M8 x 12
30	4	30131	Set screw, stainless	M8 x 16
31	5	6340717	Washer	
32	4	32488	Screw	MC12 x 150
33	1	32489	Screw	MC12 x 180
34	3	6340769	Adaptor	
35	6	63561	Clamp	
36	3	30118	Steel pin, stainless	M6 x 45
37	3	30854	Nut, stainless	M6
38	1	6340299	Protective guard	Serie 1300/1500
39	1	6344299	Protective guard	Serie 1800/2200

Obsolete

18/129, 20/138, 22/153

535 09 150

63 46 770
Internal ref. 63 42 770

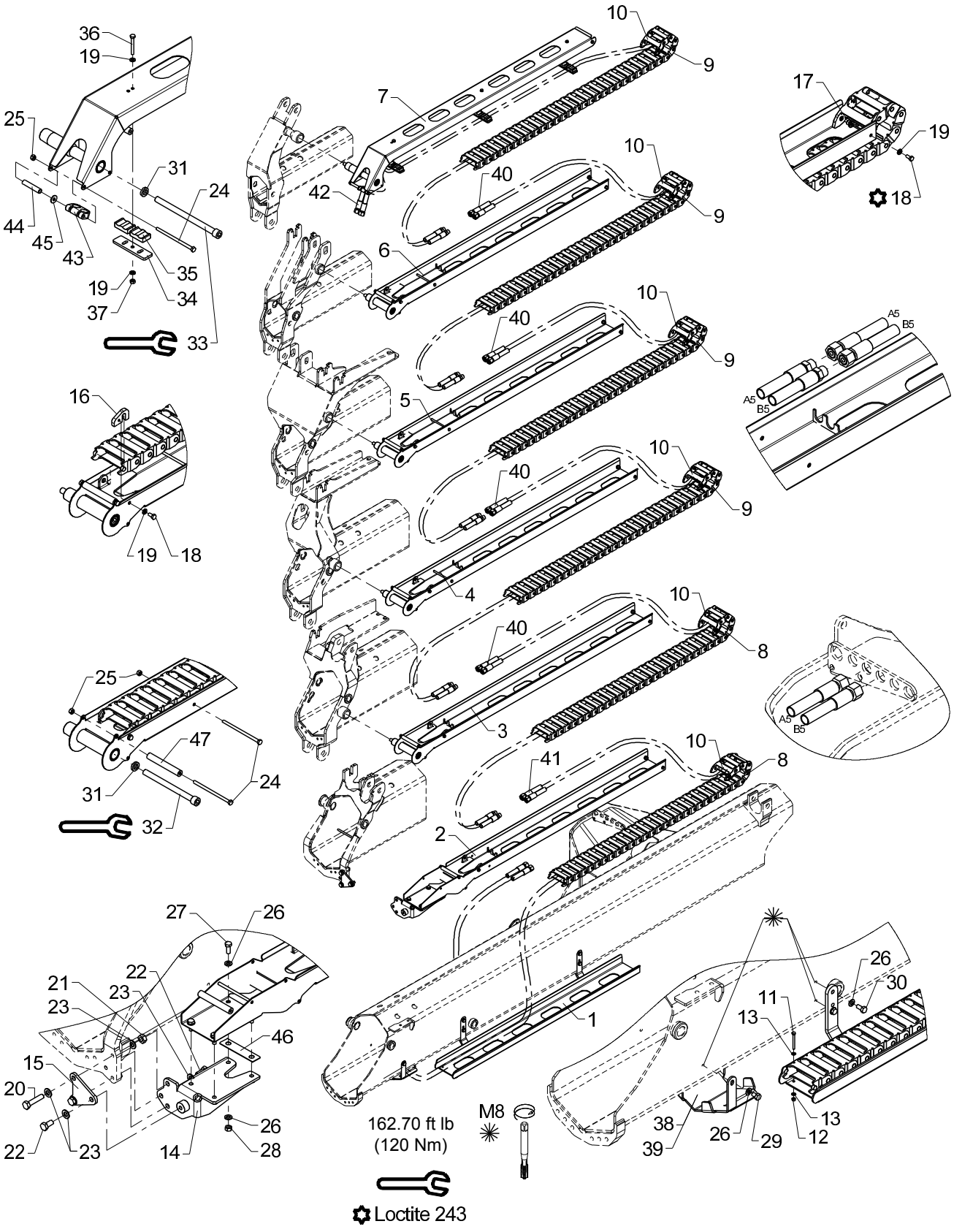

Obsolete

Hose guides, K6-1 EXV.

535 09 150

From loader 1070001
To loader 1070498

Created 17-03-2009
Modified 14-01-2013

Pos	Qty.	Part no.	Description	Remarks
40	8	56564	Hose	
41	2	56569	Hose	
42	2	56565	Hose	
43	1	68028	Clamp	
44	1	6340724	Distance pipe	
45	1	31134	Washer, stainless	
46	1	6340764	Shim	
47	5	56513	Hose	

18/129, 20/138, 22/153

63 46 770
Internal ref. 63 42 770

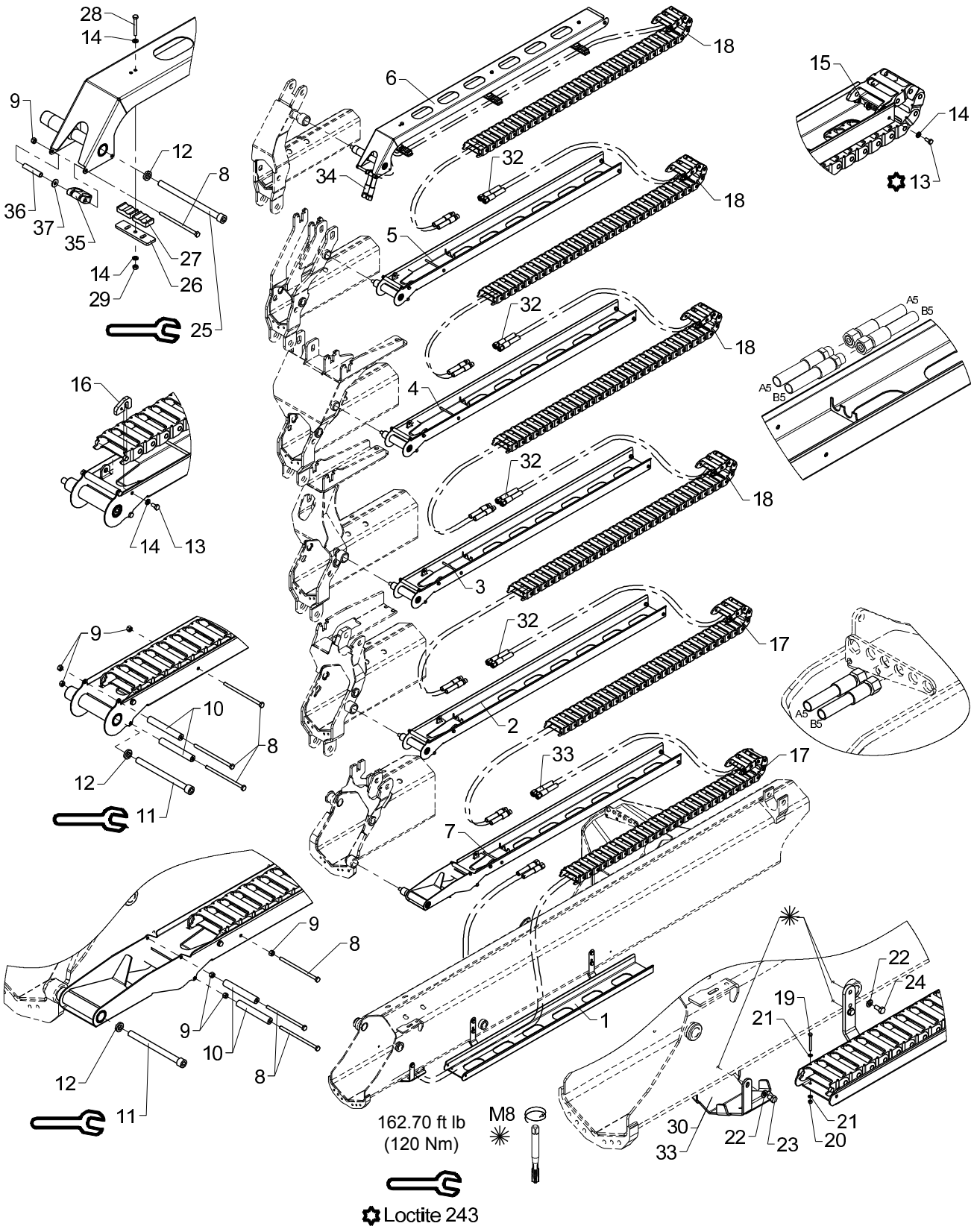

Hose guides, K6-1 EXV.

Pos	Qty.	Part no.	Description	Remarks
		6342770	Hose guides, K6-1 EXV	
		6346770	Hose guides, K6-1 EXV	
1	1	6340721	Guide (jib)	
2	1	6340741	Guide (Extension II)	
3	1	6340751	Guide (Extension III)	
4	1	6340755	Guide (Extension IV)	
5	1	6340761	Guide (Extension V)	
6	1	6340765	Guide (Extension VI)	
7	1	6341731	Guide (Extension I)	
8	15	30167	Steel bolt	M6 x 60
9	15	30884	Lock nut, stainless	M6
10	10	56513		
11	5	32488	Screw	MC12 x 150
12	6	6340717	Washer	
13	17	30111	Set screw, stainless	
14	23	32302	Face washer, stainless	6 mm
15	12	6340719	Nut	
16	5	6340718	Bracket	
17	2	28712	Nylon drag chain, 31 links	
18	4	28713	Nylon drag chain, 34 links	
19	2	30128	Set screw	M4 x 40
20	2	30857	Lock nut	M4
21	4	31188	Washer, stainless	4 mm
22	6	31147	Face washer, 8 mm	
23	2	30130	Set screw, stainless	M8 x 12
24	4	30131	Set screw, stainless	M8 x 16
25	1	32489	Screw	MC12 x 180
26	3	6340769	Adaptor	
27	6	63561	Clamp	
28	3	30118	Steel pin, stainless	M6 x 45
29	3	30854	Nut, stainless	M6
30	1	6340299	Protective guard	Serie 1300/1500
31	1	6344299	Protective guard	Serie 1800/2200
32	8	56564	Hose	
33	2	56569	Hose	
34	2	56565	Hose	
35	1	68028		
36	1	6340724		
37	1	31134	Washer, stainless	

Obsolete

18/129, 20/138, 22/153

535 09 210

63 63 830
63 65 830
63 45 730
Internal ref. 63 40 730

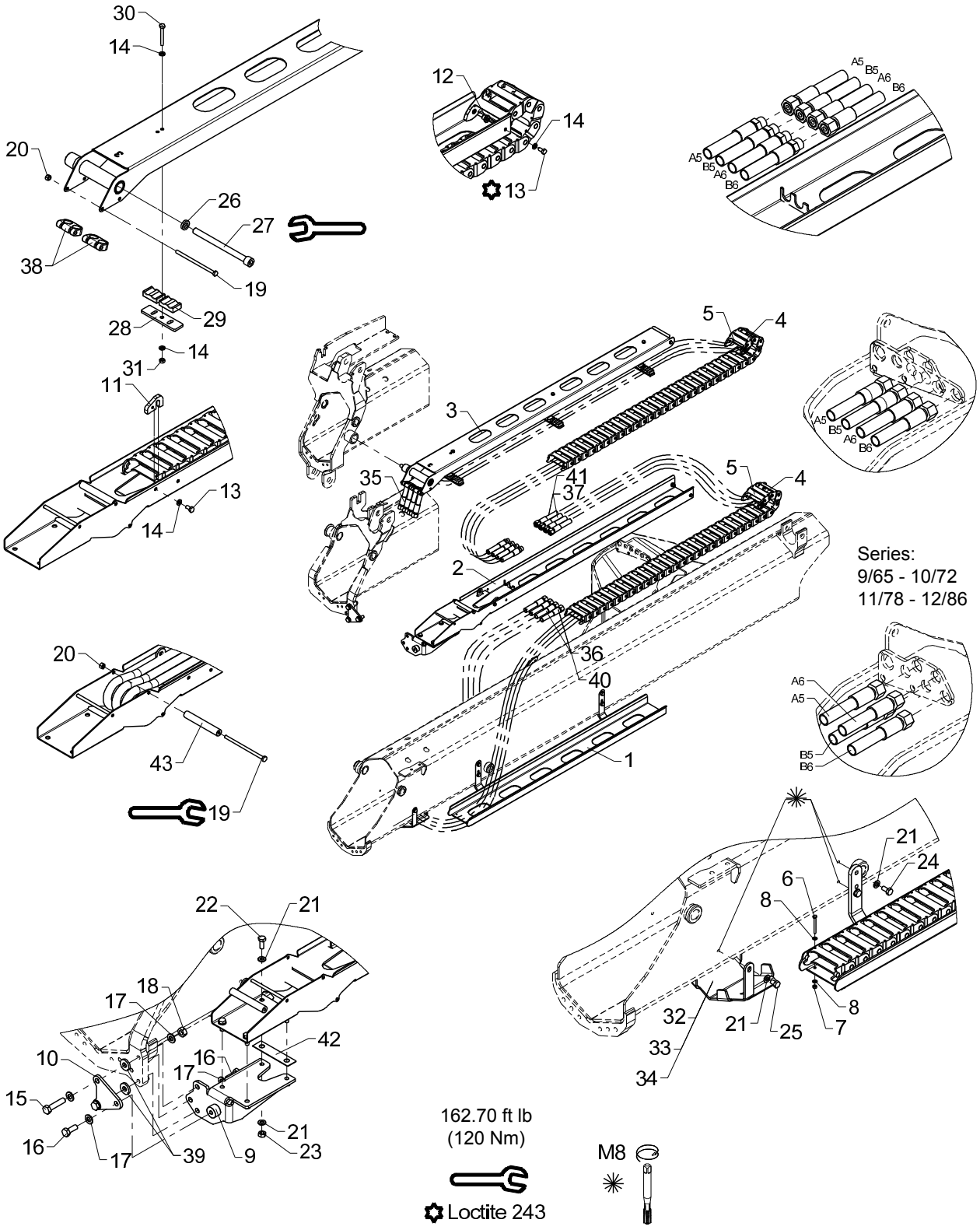

Obsolete

Hose guides, K2-2 EXV.

535 09 210

From loader 1070001
To loader 1070498

Created 17-03-2009
Modified 07-01-2013

Pos	Qty.	Part no.	Description	Remarks
		6340730	Hose guide, K2-1 EXV	
		6345730	Hose guide, K2-2 EXV	
		6365830	Hose guide, K2-2 EXV.	
		6363830	Hose guide, K2-2 EXV.	
1	1	6340721	Guide (jib)	
2	1	6340731	Guide (Extension I)	
3	1	6340748	Guide (extension K3)	
4	2	28712	Nylon drag chain, 30 links	
5	2	63400	End link for nylon drag chain	
6	2	30128	Set screw	M4 x 40
7	2	30857	Lock nut	M4
8	4	31188	Washer, stainless	4 mm
9	1	6340725	Mounting bracket	
10	1	6340729	Plate	
11	1	6340718	Bracket	
12	4	6340719	Nut	
13	5	30111	Set screw, stainless	
14	11	32302	Face washer, stainless	6 mm
15	2	30377	Set screw	M10 x 45
16	2	31513	Set screw, stainless	M10 x 25
17	6	31565	Washer, stainless	10 mm
18	2	30858	Nut	M10
19	2	30167	Steel bolt	M6 x 60
20	2	30884	Lock nut, stainless	M6
21	14	31147	Face washer, 8 mm	
22	4	30132	Set screw, stainless	
23	4	30856	Nut, stainless	M8
24	4	30131	Set screw, stainless	M8 x 16
25	2	30130	Set screw, stainless	M8 x 12
26	1	6340717	Washer	
27	1	32488	Screw	MC12 x 150
28	3	6340769	Adaptor	
29	6	63561	Clamp	
30	3	30118	Steel pin, stainless	M6 x 45
31	3	30854	Nut, stainless	M6
32	1	6340299	Protective guard	Serie 1300/1500
33	1	6344299	Protective guard	Serie 1800/2200
34	1	6365299	Hose shield	Serie 1100/1110
35	4	56568	Hose	
36	2	56563	Hose	
37	2	56569	Hose	

Obsolete

18/129, 20/138, 22/153

535 09 210

63 63 830
63 65 830
63 45 730
Internal ref. 63 40 730

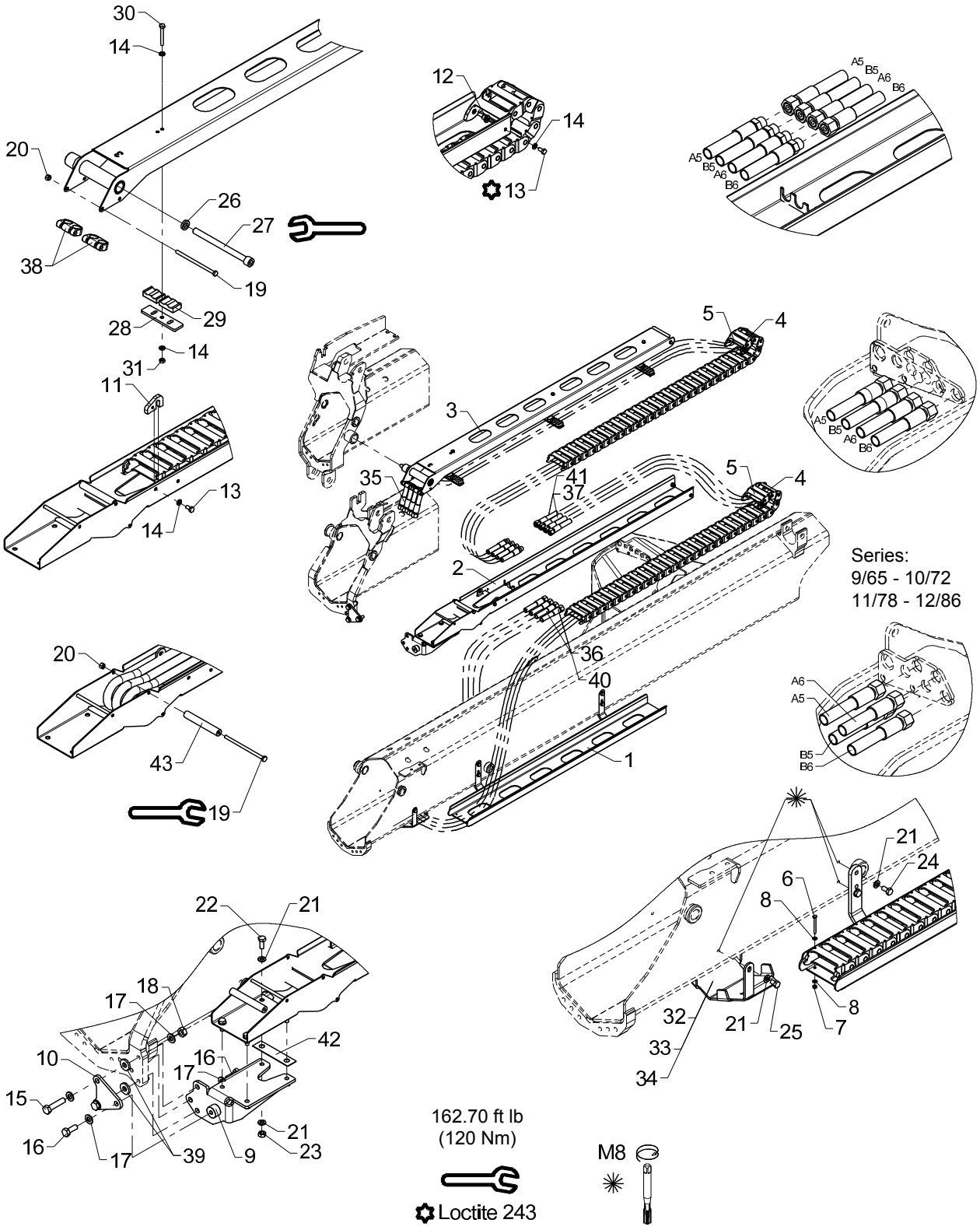

Obsolete

Hose guides, K2-2 EXV.

535 09 210

From loader 1070001
To loader 1070498

Created 17-03-2009
Modified 07-01-2013

Pos	Qty.	Part no.	Description	Remarks
38	2	68028	Clamp	
39	2	31756	Washer	Serie 1100/1110
40	2	56462	Hose 3/8 x 3850 mm	Serie 900/910
41	2	56458	Hose 3/8 x 3750 mm L/L	Serie 900/910
42	1	6340764	Shim	
43	1	56513	Hose	

18/129, 20/138, 22/153

63 63 830
63 65 830
63 45 730
Internal ref. 63 40 730

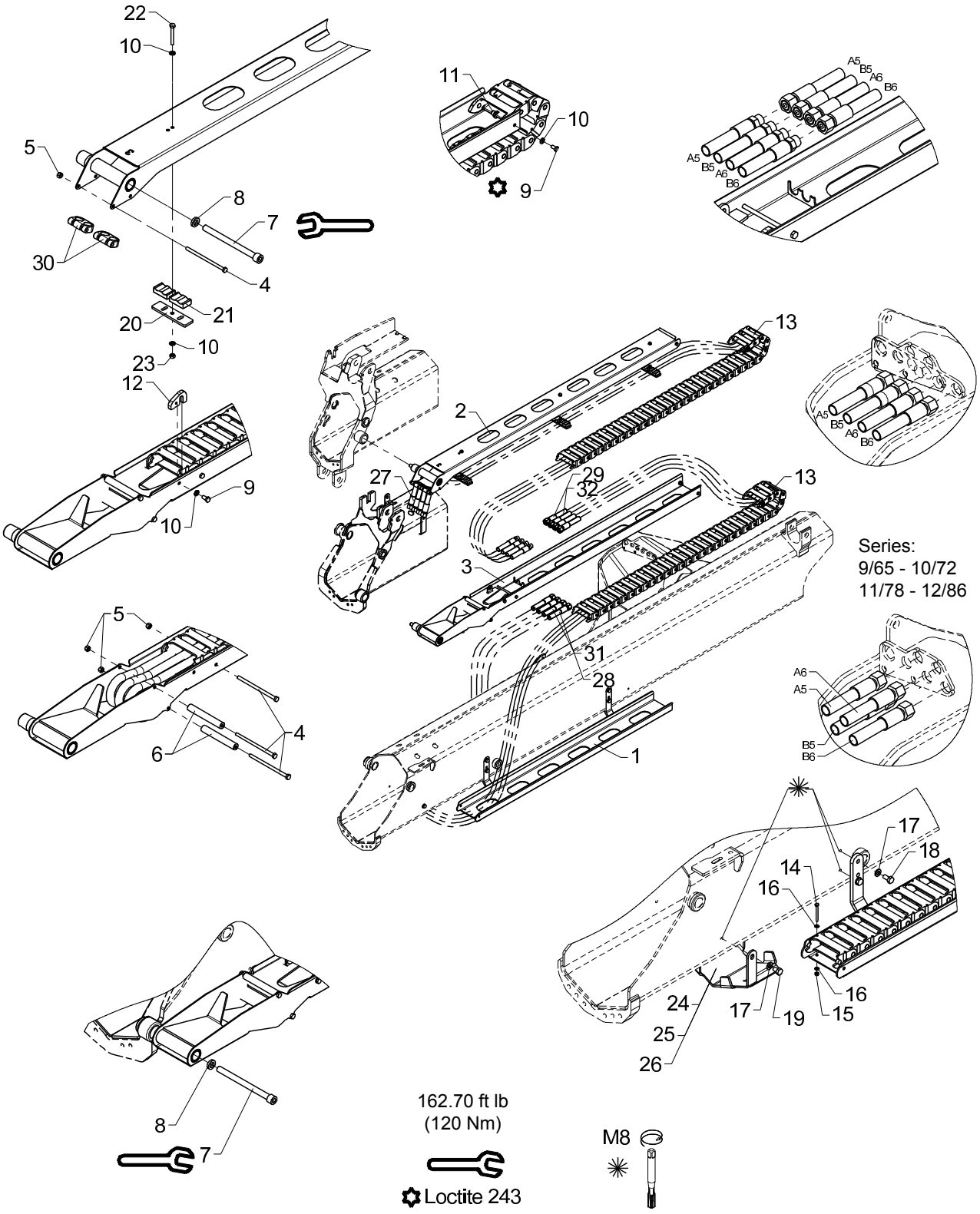

Hose guides, K2-2 EXV.

Pos	Qty.	Part no.	Description	Remarks
		6340730	Hose guide, K2-1 EXV	
		6345730	Hose guide, K2-2 EXV	
		6365830	Hose guide, K2-2 EXV.	
		6363830	Hose guide, K2-2 EXV.	
1	1	6340721	Guide (jib)	
2	1	6340748	Guide (extension K3)	
3	1	6341731	Guide (Extension I)	
4	4	30167	Steel bolt	M6 x 60
5	4	30884	Lock nut, stainless	M6
6	2	56513		
7	2	32488	Screw	MC12 x 150
8	2	6340717	Washer	
9	5	30111	Set screw, stainless	
10	11	32302	Face washer, stainless	6 mm
11	4	6340719	Nut	
12	1	6340718	Bracket	
13	2	28712	Nylon drag chain, 31 links	
14	2	30128	Set screw	M4 x 40
15	2	30857	Lock nut	M4
16	4	31188	Washer, stainless	4 mm
17	6	31147	Face washer, 8 mm	
18	4	30131	Set screw, stainless	M8 x 16
19	2	30130	Set screw, stainless	M8 x 12
20	3	6340769	Adaptor	
21	6	63561	Clamp	
22	3	30118	Steel pin, stainless	M6 x 45
23	3	30854	Nut, stainless	M6
24	1	6340299	Protective guard	Serie 1300/1500
25	1	6344299	Protective guard	Serie 1800/2200
26	1	6365299		Serie 1100/1110
27	4	56568	Hose	
28	2	56563	Hose	
29	2	56569	Hose	
30	2	68028		
31	2	56462		Serie 900/910
32	2	56458		Serie 900/910

Obsolete

18/129, 20/138, 22/153

535 09 220

63 63 840
63 65 840
63 45 740
Internal ref. 63 40 740

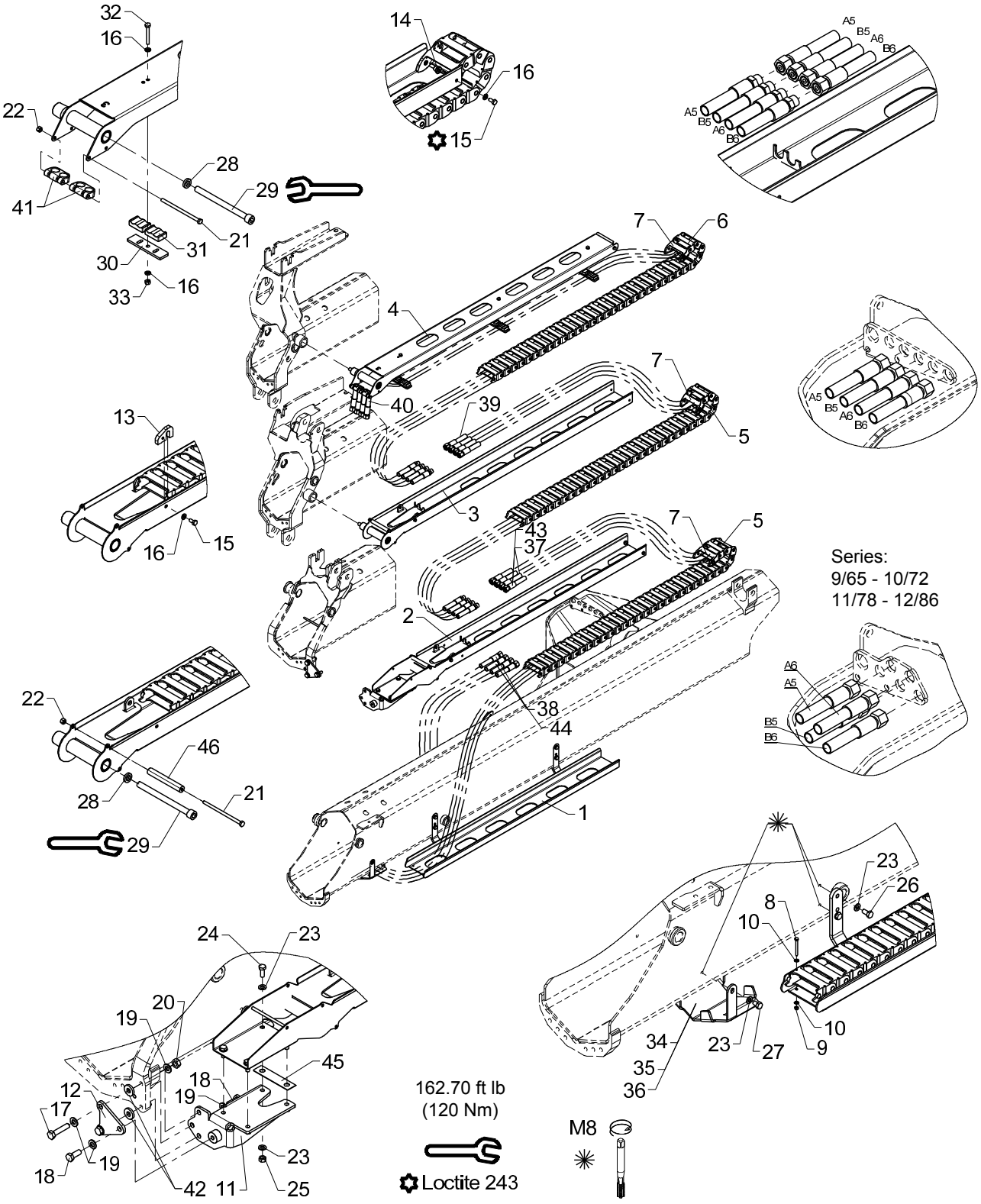

Obsolete

Hose guides, K3-2 EXV.

535 09 220

From loader 1070001
To loader 1070498

Created 17-03-2009
Modified 07-01-2013

Pos	Qty.	Part no.	Description	Remarks
		6340740	Hose guide, K3-2 EXV	
		6345740	Hose guides, K3-2 EXV	
		6365840	Hose guide, K3-2 EXV.	
		6363840	Hose guide, K3-2 EXV.	
1	1	6340721	Guide (jib)	
2	1	6340731	Guide (Extension I)	
3	1	6340741	Guide (Extension II)	
4	1	6340748	Guide (extension K3)	
5	2	28712	Nylon drag chain, 30 links	
6	1	28713	Nylon drag chain, 33 links	
7	3	63400	End link for nylon drag chain	
8	2	30128	Set screw	M4 x 40
9	2	30857	Lock nut	M4
10	4	31188	Washer, stainless	4 mm
11	1	6340725	Mounting bracket	
12	1	6340729	Plate	
13	2	6340718	Bracket	
14	6	6340719	Nut	
15	8	30111	Set screw, stainless	
16	14	32302	Face washer, stainless	6 mm
17	2	30377	Set screw	M10 x 45
18	2	31513	Set screw, stainless	M10 x 25
19	6	31565	Washer, stainless	10 mm
20	2	30858	Nut	M10
21	3	30167	Steel bolt	M6 x 60
22	3	30884	Lock nut, stainless	M6
23	14	31147	Face washer, 8 mm	
24	4	30132	Set screw, stainless	
25	4	30856	Nut, stainless	M8
26	4	30131	Set screw, stainless	M8 x 16
27	2	30130	Set screw, stainless	M8 x 12
28	2	6340717	Washer	
29	2	32488	Screw	MC12 x 150
30	3	6340769	Adaptor	
31	6	63561	Clamp	
32	3	30118	Steel pin, stainless	M6 x 45
33	3	30854	Nut, stainless	M6
34	1	6340299	Protective guard	Serie 1300/1500
35	1	6344299	Protective guard	Serie 1800/2200
36	1	6365299	Hose shield	Serie 1100/1110
37	2	56569	Hose	

Obsolete

18/129, 20/138, 22/153

535 09 220

63 63 840
63 65 840
63 45 740
Internal ref. 63 40 740

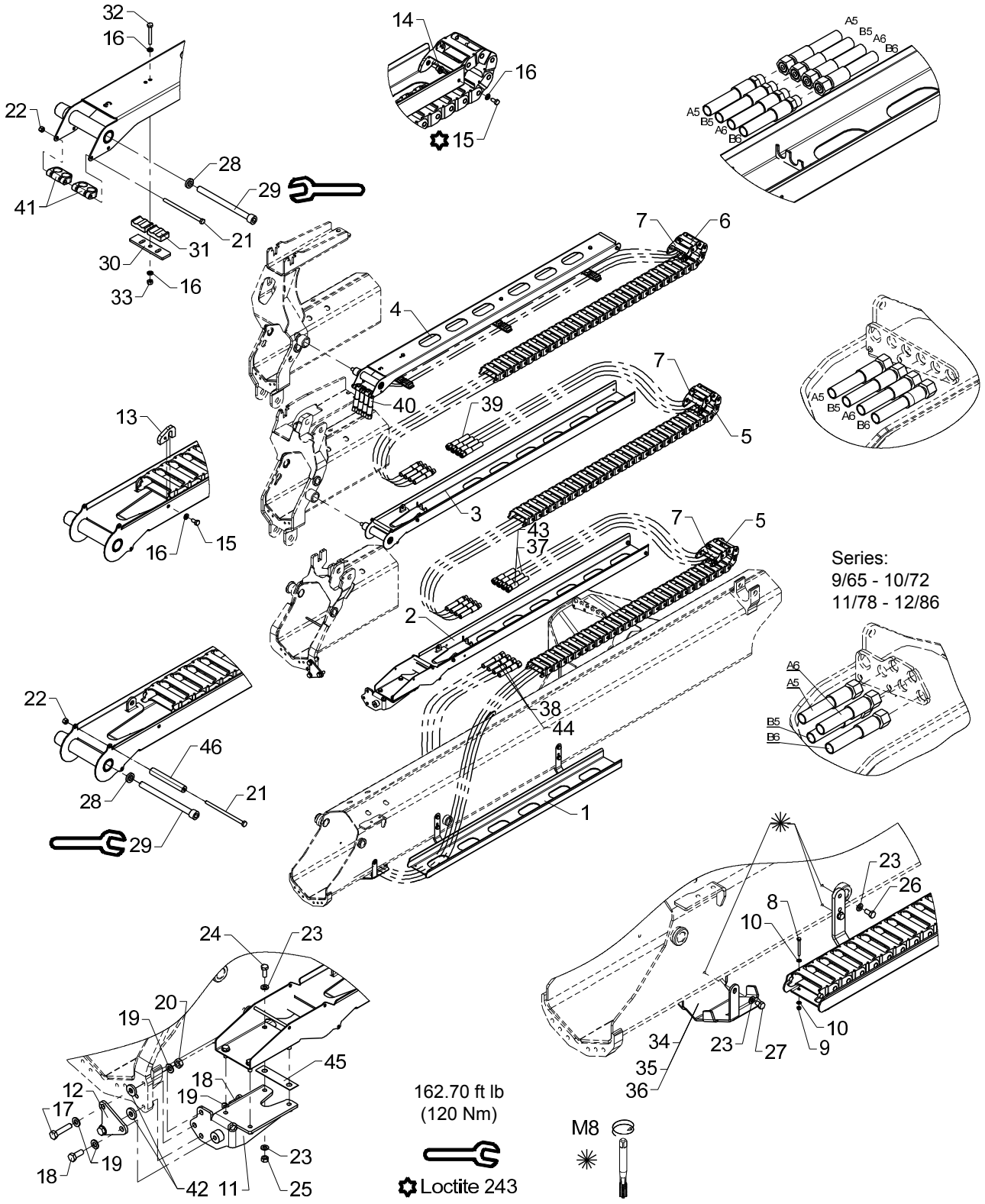

Obsolete

Hose guides, K3-2 EXV.

535 09 220

From loader 1070001
To loader 1070498

Created 17-03-2009
Modified 07-01-2013

Pos	Qty.	Part no.	Description	Remarks
38	2	56563	Hose	
39	4	56564	Hose	
40	4	56565	Hose	
41	2	68028	Clamp	
42	2	31756	Washer	Serie 1100/1110
43	2	56458	Hose 3/8 x 3750 mm L/L	Serie 900/910
44	2	56462	Hose 3/8 x 3850 mm	Serie 900/910
45	1	6340764	Shim	
46	2	56513	Hose	

18/129, 20/138, 22/153

63 63 840
63 65 840
63 45 530
63 45 740
Internal ref. 63 40 740

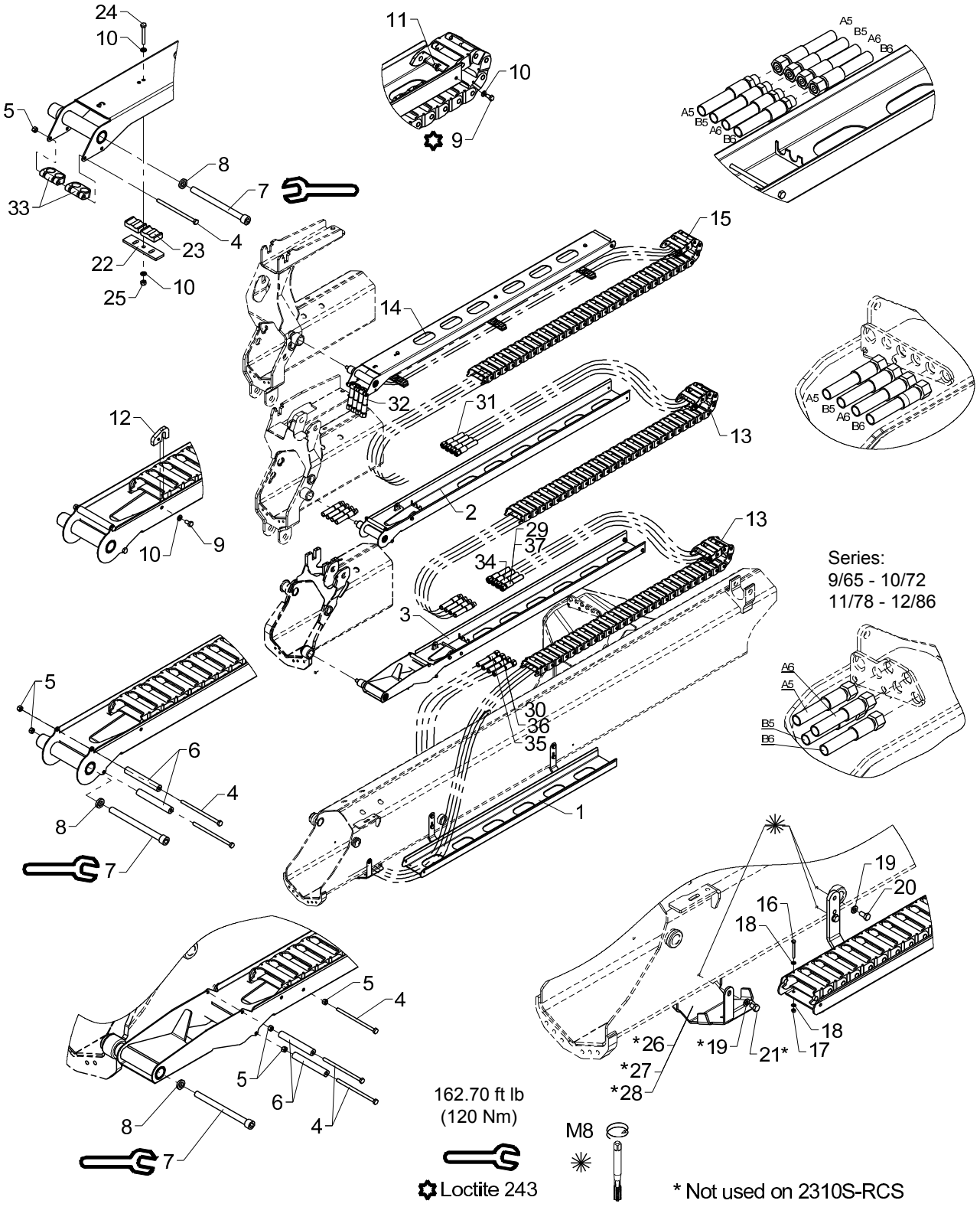

Hose guides, K3-2 EXV.

Pos	Qty.	Part no.	Description	Remarks
		6340740	Hose guide, K3-2 EXV	
		6345740	Hose guides, K3-2 EXV	
		6345530	Hose guide, K3-2 EXV.	
		6365840	Hose guide, K3-2 EXV.	
		6363840		
1	1	6340721	Guide (jib)	
2	1	6340741	Guide (Extension II)	
3	1	6341731	Guide (Extension I)	
4	6	30167	Steel bolt	M6 x 60
5	6	30884	Lock nut, stainless	M6
6	4	56513		
7	3	32488	Screw	MC12 x 150
8	3	6340717	Washer	
9	8	30111	Set screw, stainless	
10	14	32302	Face washer, stainless	6 mm
11	6	6340719	Nut	
12	2	6340718	Bracket	
13	2	28712	Nylon drag chain, 31 links	
14	1	6340748	Guide (extension K3)	
15	1	28713	Nylon drag chain, 34 links	
16	2	30128	Set screw	M4 x 40
17	2	30857	Lock nut	M4
18	4	31188	Washer, stainless	4 mm
19	6	31147	Face washer, 8 mm	
20	4	30131	Set screw, stainless	M8 x 16
21	2	30130	Set screw, stainless	M8 x 12
22	3	6340769	Adaptor	
23	6	63561	Clamp	
24	3	30118	Steel pin, stainless	M6 x 45
25	3	30854	Nut, stainless	M6
26	1	6340299	Protective guard	Serie 1300/1500
27	1	6344299	Protective guard	Serie 1800/2200
28	1	6365299		Serie 1100/1110
29	2	56569	Hose	
30	2	56563	Hose	
31	4	56564	Hose	
32	4	56565	Hose	
33	2	68028		
34	2	56458		
35	2	56462		
36	2	56906		Serie 2310S-RCS

18/129, 20/138, 22/153

63 63 840
63 65 840
63 45 530
63 45 740
Internal ref. 63 40 740

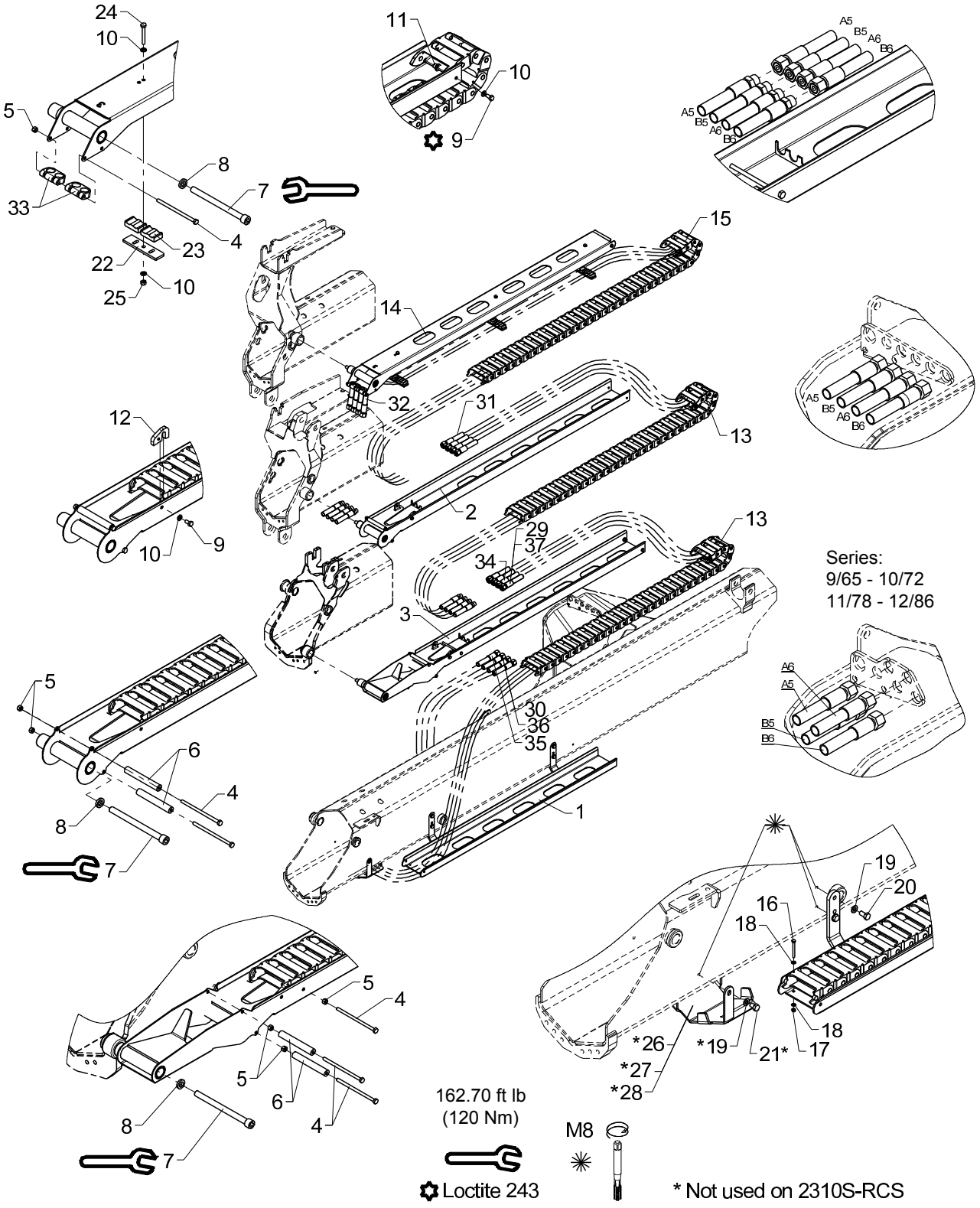

Hose guides, K3-2 EXV.

Pos	Qty.	Part no.	Description	Remarks
37	2	62595		Serie 2310S-RCS

Obsolete

18/129, 20/138, 22/153

535 09 230

63 63 850
63 65 850
63 45 750
Internal ref. 63 40 750

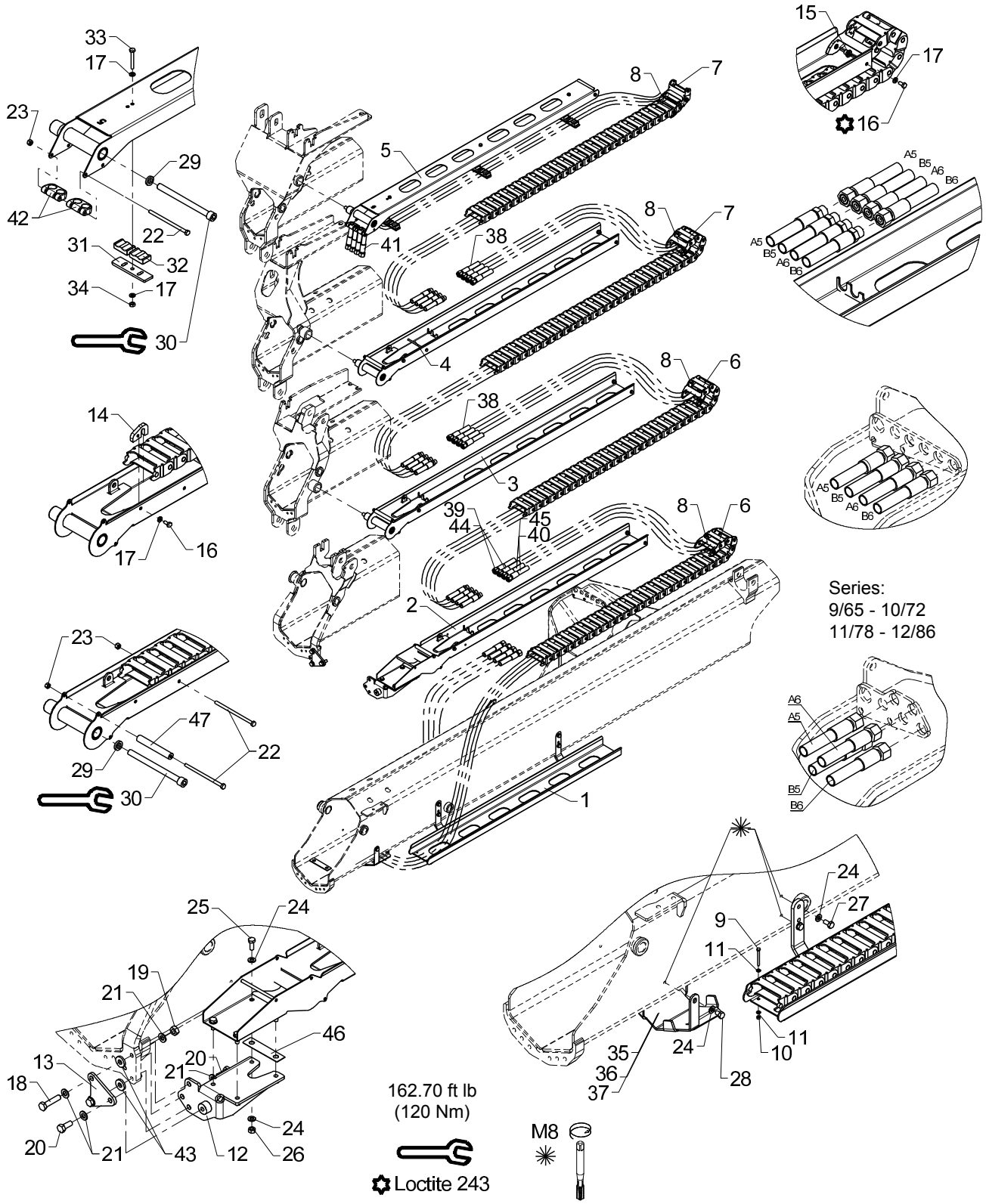

Obsolete

Hose guides, K4-2 EXV.

535 09 230

From loader 1070001
To loader 1070498

Created 17-03-2009
Modified 11-01-2013

Pos	Qty.	Part no.	Description	Remarks
		6340750	Hose guides, K4-2 EXV	
		6345750	Hose guides, K4-2 EXV	
		6365850	Hose guide, K4-2 EXV.	
		6363850	Hose guide, K4-2 EXV.	
1	1	6340721	Guide (jib)	
2	1	6340731	Guide (Extension I)	
3	1	6340741	Guide (Extension II)	
4	1	6340751	Guide (Extension III)	
5	1	6340758	Guide (extension K5)	
6	2	28712	Nylon drag chain, 30 links	
7	2	28713	Nylon drag chain, 33 links	
8	4	63400	End link for nylon drag chain	
9	2	30128	Set screw	M4 x 40
10	2	30857	Lock nut	M4
11	4	31188	Washer, stainless	4 mm
12	1	6340725	Mounting bracket	
13	1	6340729	Plate	
14	3	6340718	Bracket	
15	8	6340719	Nut	
16	11	30111	Set screw, stainless	
17	17	32302	Face washer, stainless	6 mm
18	2	30377	Set screw	M10 x 45
19	2	30858	Nut	M10
20	2	31513	Set screw, stainless	M10 x 25
21	6	31565	Washer, stainless	10 mm
22	5	30167	Steel bolt	M6 x 60
23	5	30884	Lock nut, stainless	M6
24	14	31147	Face washer, 8 mm	
25	4	30132	Set screw, stainless	
26	4	30856	Nut, stainless	M8
27	4	30131	Set screw, stainless	M8 x 16
28	2	30130	Set screw, stainless	M8 x 12
29	3	6340717	Washer	
30	3	32488	Screw	MC12 x 150
31	3	6340769	Adaptor	
32	6	63561	Clamp	
33	3	30118	Steel pin, stainless	M6 x 45
34	3	30854	Nut, stainless	M6
35	1	6340299	Protective guard	Serie 1300/1500
36	1	6344299	Protective guard	Serie 1800/2200
37	1	6365299	Hose shield	Serie 1100/1110

Obsolete

18/129, 20/138, 22/153

535 09 230

63 63 850
63 65 850
63 45 750
Internal ref. 63 40 750

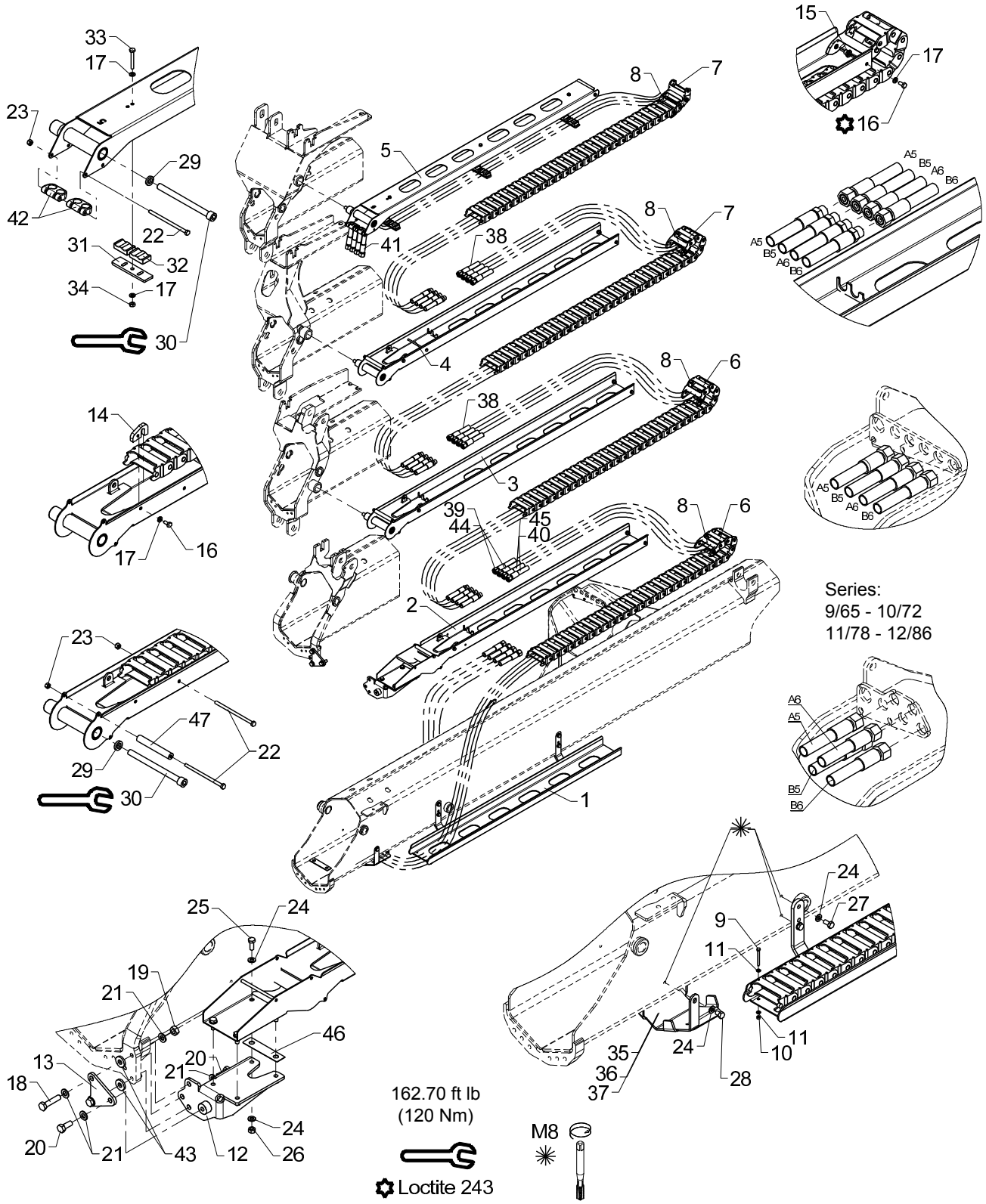

Obsolete

Hose guides, K4-2 EXV.

535 09 230

From loader 1070001
To loader 1070498

Created 17-03-2009
Modified 11-01-2013

Pos	Qty.	Part no.	Description	Remarks
38	8	56564	Hose	
39	2	56563	Hose	
40	2	56569	Hose	
41	4	56565	Hose	
42	2	68028	Clamp	
43	2	31756	Washer	Serie 1100/1110
44	2	56462	Hose 3/8 x 3850 mm	Serie 900/910
45	2	56458	Hose 3/8 x 3750 mm L/L	Serie 900/910
46	1	6340764	Shim	
47	3	56513	Hose	

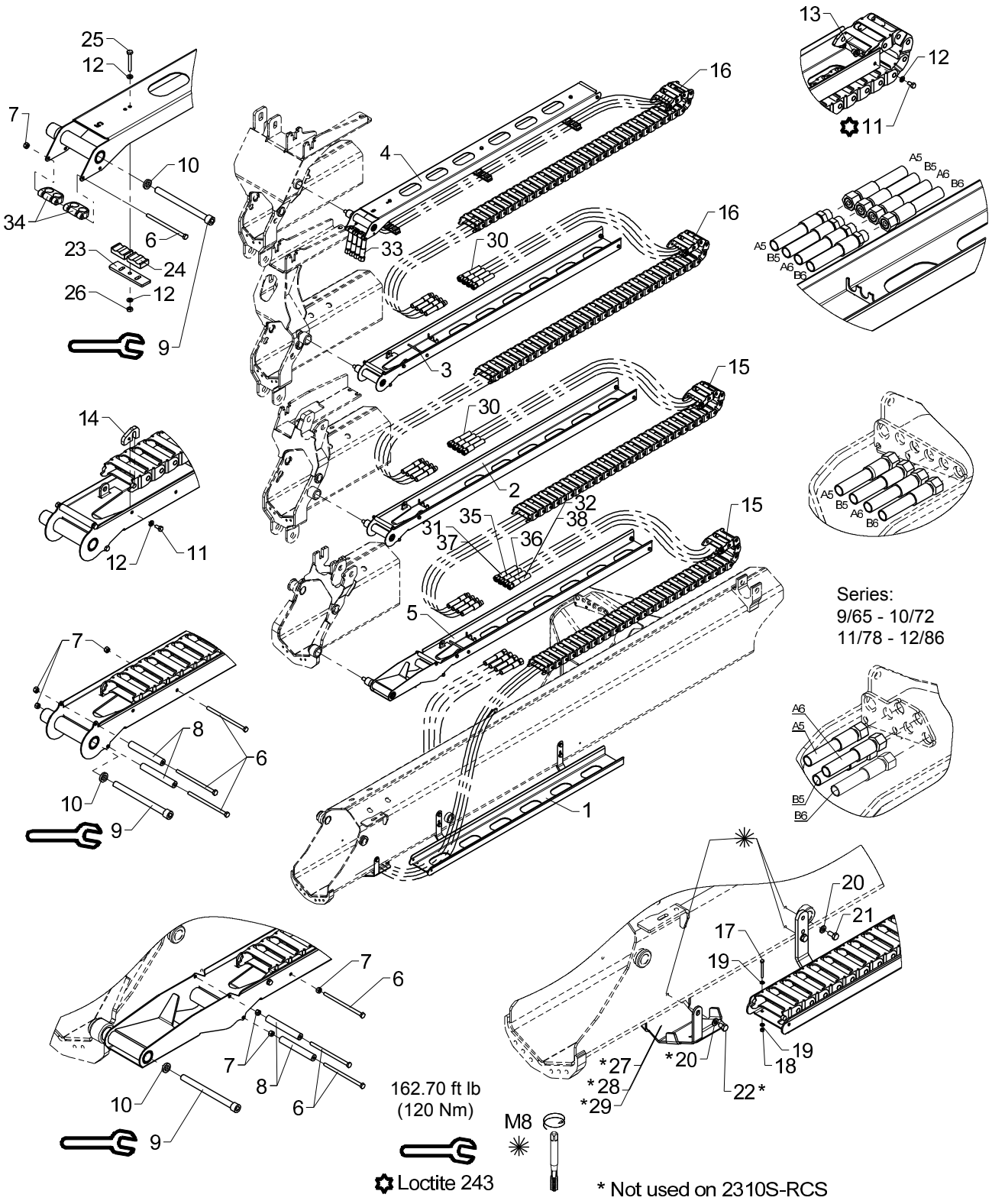
Series:
9/65 - 10/72
11/78 - 12/86
162.70 ft lb
(120 Nm)
M8
Loctite 243
* Not used on 2310S-RCS

Hose guides, K4-2 EXV.

Pos	Qty.	Part no.	Description	Remarks
		6340750	Hose guides, K4-2 EXV	
		6345750	Hose guides, K4-2 EXV	
		6345550	Hose guide, K4-2 EXV.	
		6365850	Hose guide, K4-2 EXV.	
		6363850		
1	1	6340721	Guide (jib)	
2	1	6340741	Guide (Extension II)	
3	1	6340751	Guide (Extension III)	
4	1	6340758	Guide (extension K5)	
5	1	6341731	Guide (Extension I)	
6	9	30167	Steel bolt	M6 x 60
7	9	30884	Lock nut, stainless	M6
8	6	56513		
9	4	32488	Screw	MC12 x 150
10	4	6340717	Washer	
11	11	30111	Set screw, stainless	
12	17	32302	Face washer, stainless	6 mm
13	8	6340719	Nut	
14	3	6340718	Bracket	
15	2	28712	Nylon drag chain, 31 links	
16	2	28713	Nylon drag chain, 34 links	
17	2	30128	Set screw	M4 x 40
18	2	30857	Lock nut	M4
19	4	31188	Washer, stainless	4 mm
20	6	31147	Face washer, 8 mm	
21	4	30131	Set screw, stainless	M8 x 16
22	2	30130	Set screw, stainless	M8 x 12
23	3	6340769	Adaptor	
24	6	63561	Clamp	
25	3	30118	Steel pin, stainless	M6 x 45
26	3	30854	Nut, stainless	M6
27	1	6340299	Protective guard	Serie 1300/1500
28	1	6344299	Protective guard	Serie 1800/2200
29	1	6365299		Serie 1100/1110
30	8	56564	Hose	
31	2	56563	Hose	
32	2	56569	Hose	
33	4	56565	Hose	
34	2	68028		
35	2	56462		
36	2	56458		

535 09 230 A

18/129, 20/138, 22/153

63 63 850
63 65 850
63 45 550
63 45 750
Internal ref. 63 40 750

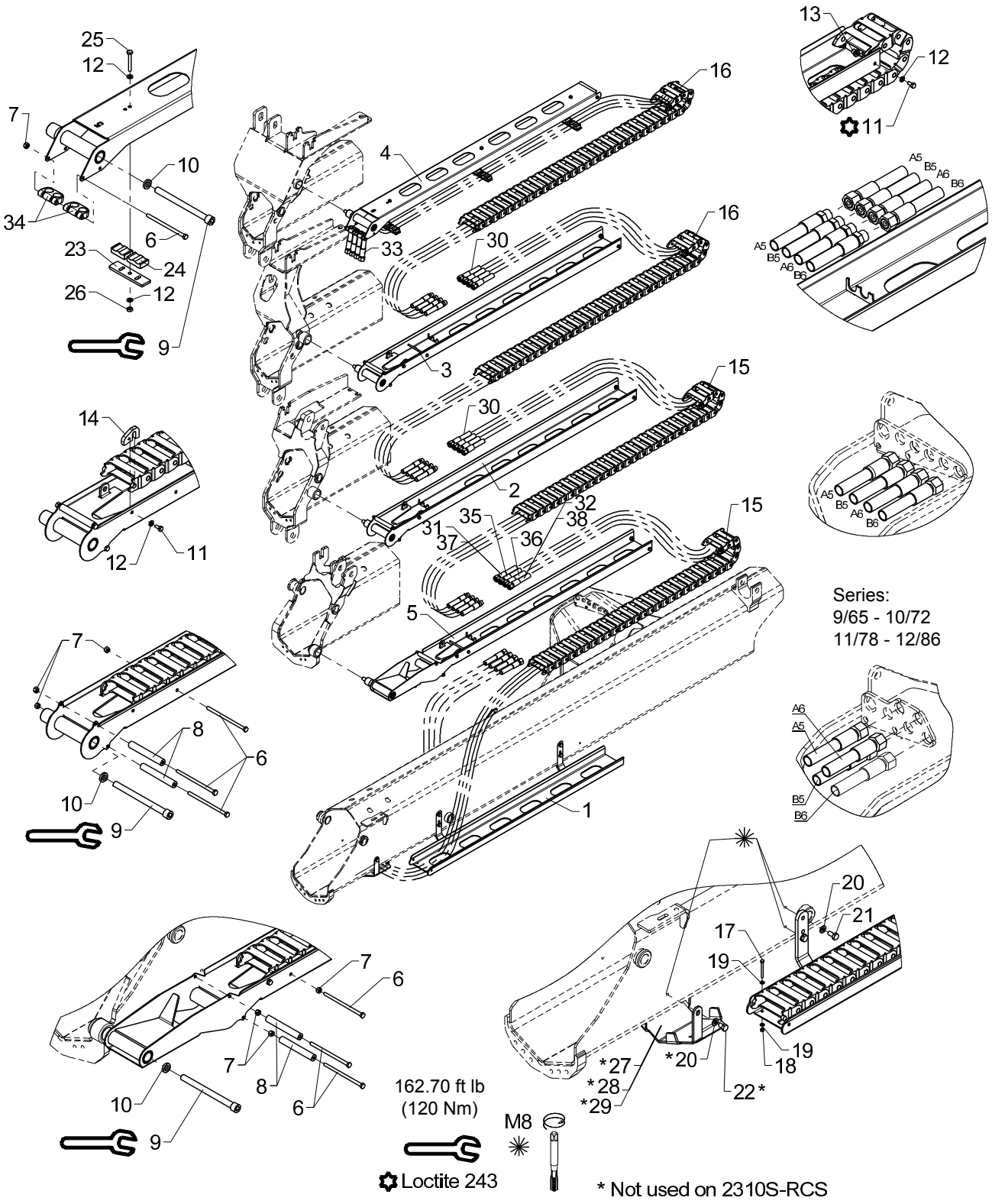

Hose guides, K4-2 EXV.

Pos	Qty.	Part no.	Description	Remarks
37	2	56906		Serie 2310S-RCS
38	2	62595		Serie 2310S-RCS

Obsolete

18/129, 20/138, 22/153

535 09 240

63 63 860
63 65 860
63 45 760
Internal ref. 63 40 760

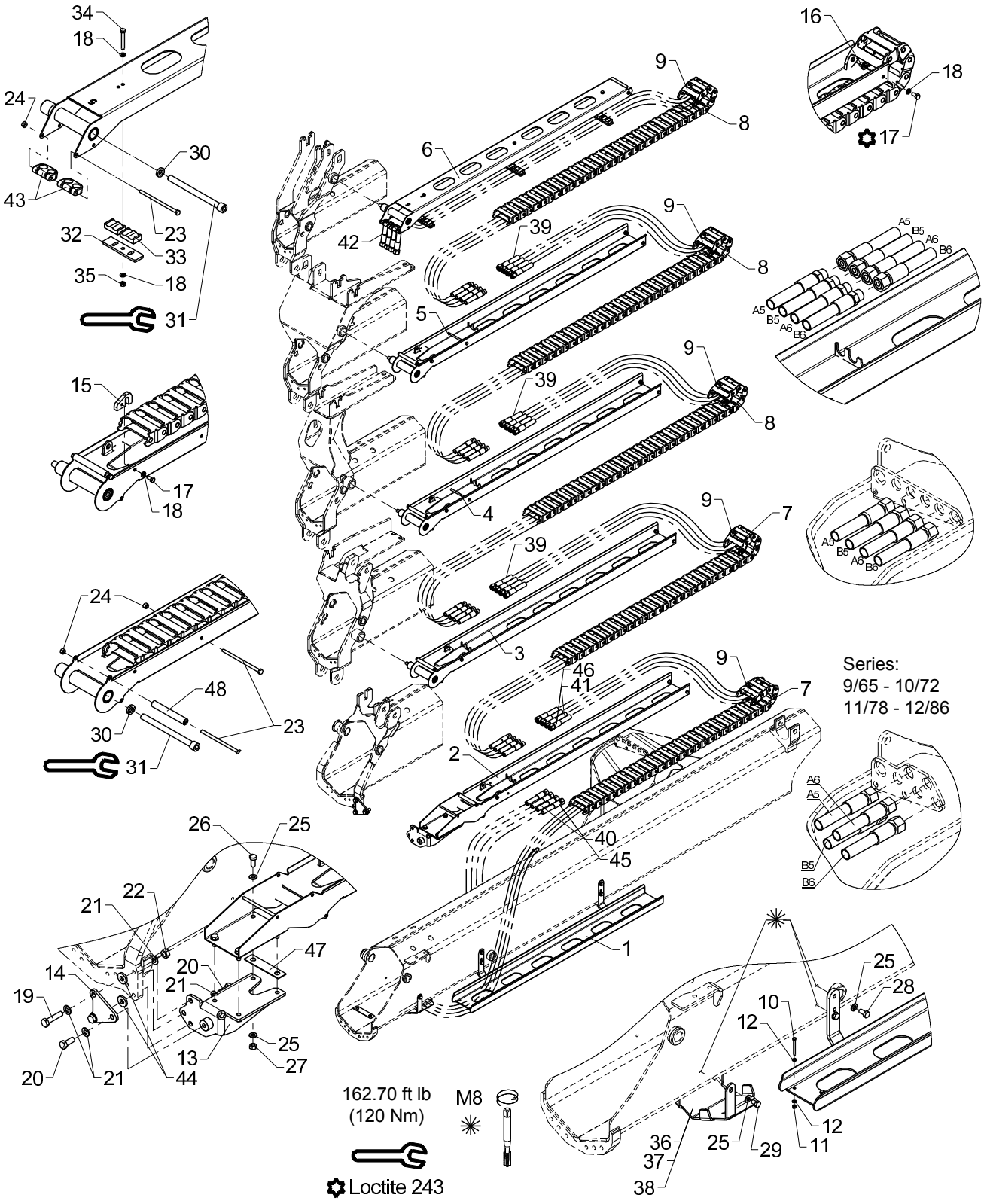

Obsolete

Hose guides, K5-2 EXV.

535 09 240

From loader 1070001
To loader 1070498

Created 19-03-2009
Modified 14-01-2013

Pos	Qty.	Part no.	Description	Remarks
		6340760	Hose guides, K5-2 EXV	
		6345760	Hose guides, K5-2 EXV	
		6365860	Hose guide, K5-2 EXV.	
		6363860	Hose guide, K5-2 EXV.	
1	1	6340721	Guide (jib)	
2	1	6340731	Guide (Extension I)	
3	1	6340741	Guide (Extension II)	
4	1	6340751	Guide (Extension III)	
5	1	6340755	Guide (Extension IV)	
6	1	6340758	Guide (extension K5)	
7	2	28712	Nylon drag chain, 30 links	
8	3	28713	Nylon drag chain, 33 links	
9	5	63400	End link for nylon drag chain	
10	2	30128	Set screw	M4 x 40
11	2	30857	Lock nut	M4
12	4	31188	Washer, stainless	4 mm
13	1	6340725	Mounting bracket	
14	1	6340729	Plate	
15	4	6340718	Bracket	
16	10	6340719	Nut	
17	14	30111	Set screw, stainless	
18	20	32302	Face washer, stainless	6 mm
19	2	30377	Set screw	M10 x 45
20	2	31513	Set screw, stainless	M10 x 25
21	6	31565	Washer, stainless	10 mm
22	2	30858	Nut	M10
23	7	30167	Steel bolt	M6 x 60
24	7	30884	Lock nut, stainless	M6
25	14	31147	Face washer, 8 mm	
26	4	30132	Set screw, stainless	
27	4	30856	Nut, stainless	M8
28	4	30131	Set screw, stainless	M8 x 16
29	2	30130	Set screw, stainless	M8 x 12
30	4	6340717	Washer	
31	4	32488	Screw	MC12 x 150
32	3	6340769	Adaptor	
33	6	63561	Clamp	
34	3	30118	Steel pin, stainless	M6 x 45
35	3	30854	Nut, stainless	M6
36	1	6340299	Protective guard	Serie 1300/1500
37	1	6344299	Protective guard	Serie 1800/2200

Obsolete

18/129, 20/138, 22/153

535 09 240

63 63 860
63 65 860
63 45 760
Internal ref. 63 40 760

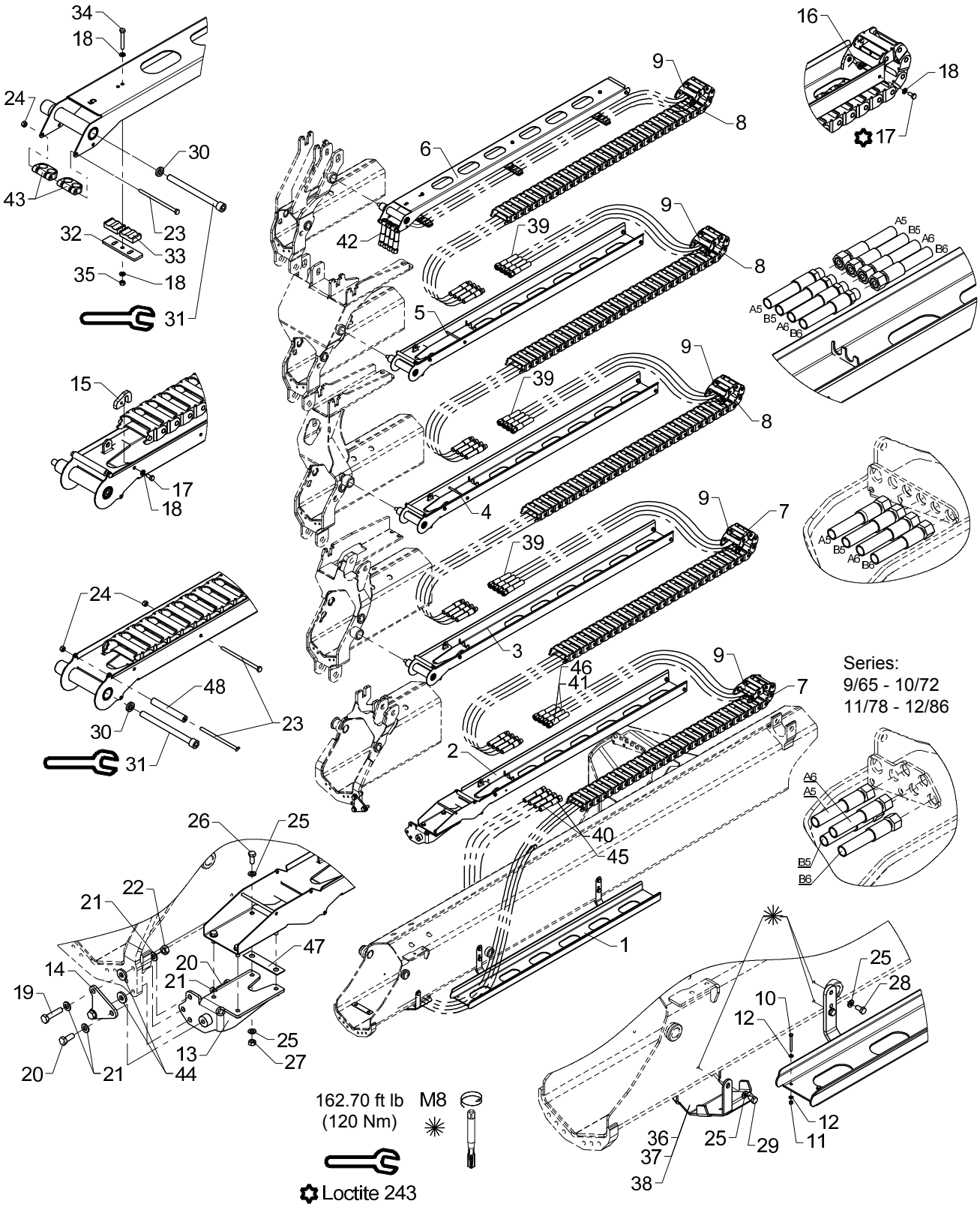

Obsolete

Hose guides, K5-2 EXV.

535 09 240

From loader 1070001
To loader 1070498

Created 19-03-2009
Modified 14-01-2013

Pos	Qty.	Part no.	Description	Remarks
38	1	6365299	Hose shield	Serie 1100/1110
39	12	56564	Hose	
40	2	56563	Hose	
41	2	56569	Hose	
42	4	56565	Hose	
43	2	68028	Clamp	
44	2	31756	Washer	Serie 1100/1110
45	2	56462	Hose 3/8 x 3850 mm	Serie 900/910
46	2	56458	Hose 3/8 x 3750 mm L/L	Serie 900/910
47	1	6340764	Shim	
48	4	56513	Hose	

18/129, 20/138, 22/153

63 63 860
63 65 860
63 45 760
Internal ref. 63 40 760

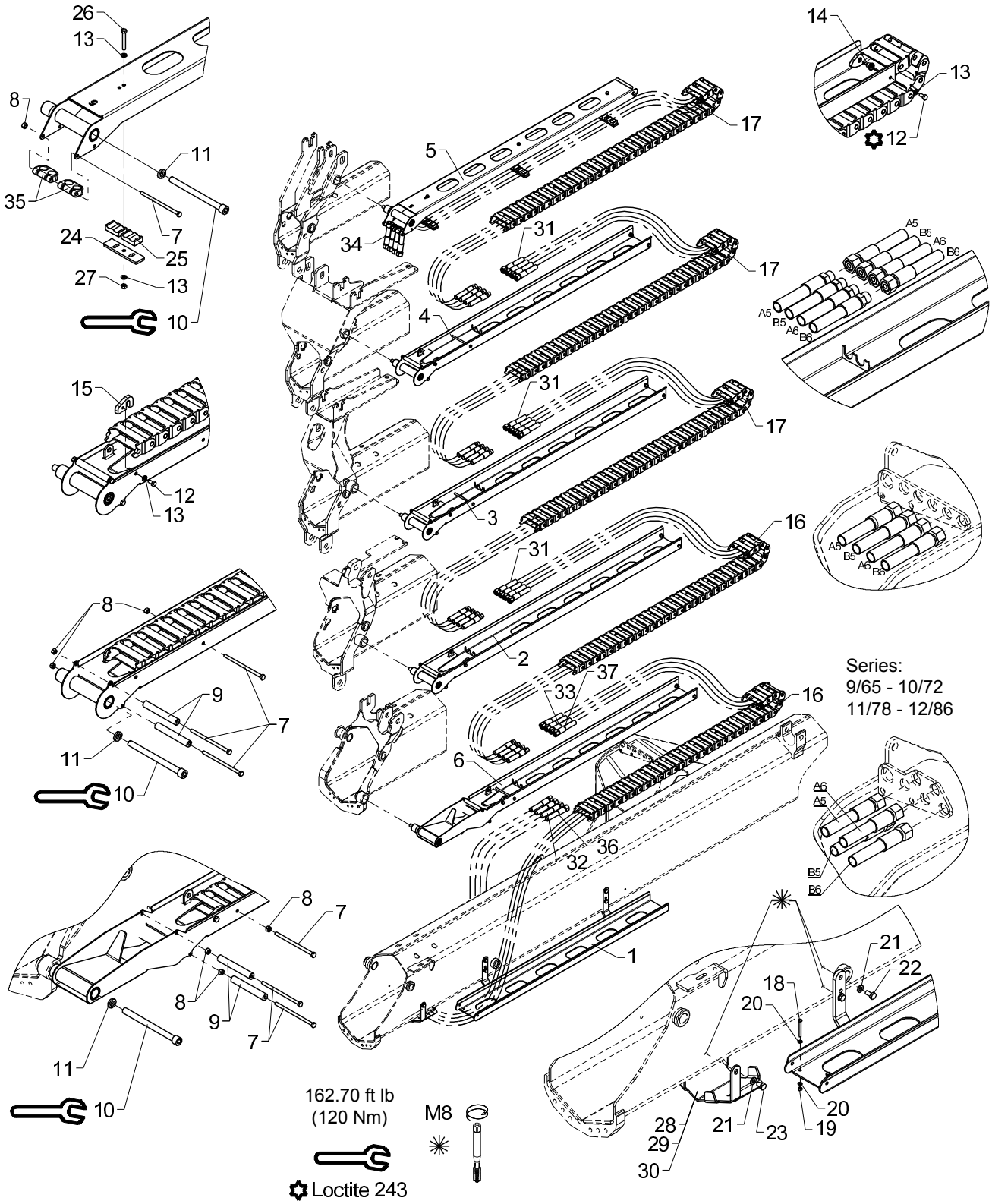

Hose guides, K5-2 EXV.

Pos	Qty.	Part no.	Description	Remarks
		6340760	Hose guides, K5-2 EXV	
		6345760	Hose guides, K5-2 EXV	
		6365860	Hose guide, K5-2 EXV.	
		6363860	Hose guide, K5-2 EXV.	
1	1	6340721	Guide (jib)	
2	1	6340741	Guide (Extension II)	
3	1	6340751	Guide (Extension III)	
4	1	6340755	Guide (Extension IV)	
5	1	6340758	Guide (extension K5)	
6	1	6341731	Guide (Extension I)	
7	12	30167	Steel bolt	M6 x 60
8	12	30884	Lock nut, stainless	M6
9	8	56513		
10	5	32488	Screw	MC12 x 150
11	5	6340717	Washer	
12	14	30111	Set screw, stainless	
13	20	32302	Face washer, stainless	6 mm
14	10	6340719	Nut	
15	4	6340718	Bracket	
16	2	28712	Nylon drag chain, 31 links	
17	3	28713	Nylon drag chain, 34 links	
18	2	30128	Set screw	M4 x 40
19	2	30857	Lock nut	M4
20	4	31188	Washer, stainless	4 mm
21	6	31147	Face washer, 8 mm	
22	4	30131	Set screw, stainless	M8 x 16
23	2	30130	Set screw, stainless	M8 x 12
24	3	6340769	Adaptor	
25	6	63561	Clamp	
26	3	30118	Steel pin, stainless	M6 x 45
27	3	30854	Nut, stainless	M6
28	1	6340299	Protective guard	Serie 1300/1500
29	1	6344299	Protective guard	Serie 1800/2200
30	1	6365299		Serie 1100/1110
31	12	56564	Hose	
32	2	56563	Hose	
33	2	56569	Hose	
34	4	56565	Hose	
35	2	68028		
36	2	56462		Serie 900/910
37	2	56458		Serie 900/910

Obsolete
18/129, 20/138, 22/153
535 09 250
63 45 770
Internal ref. 63 40 770

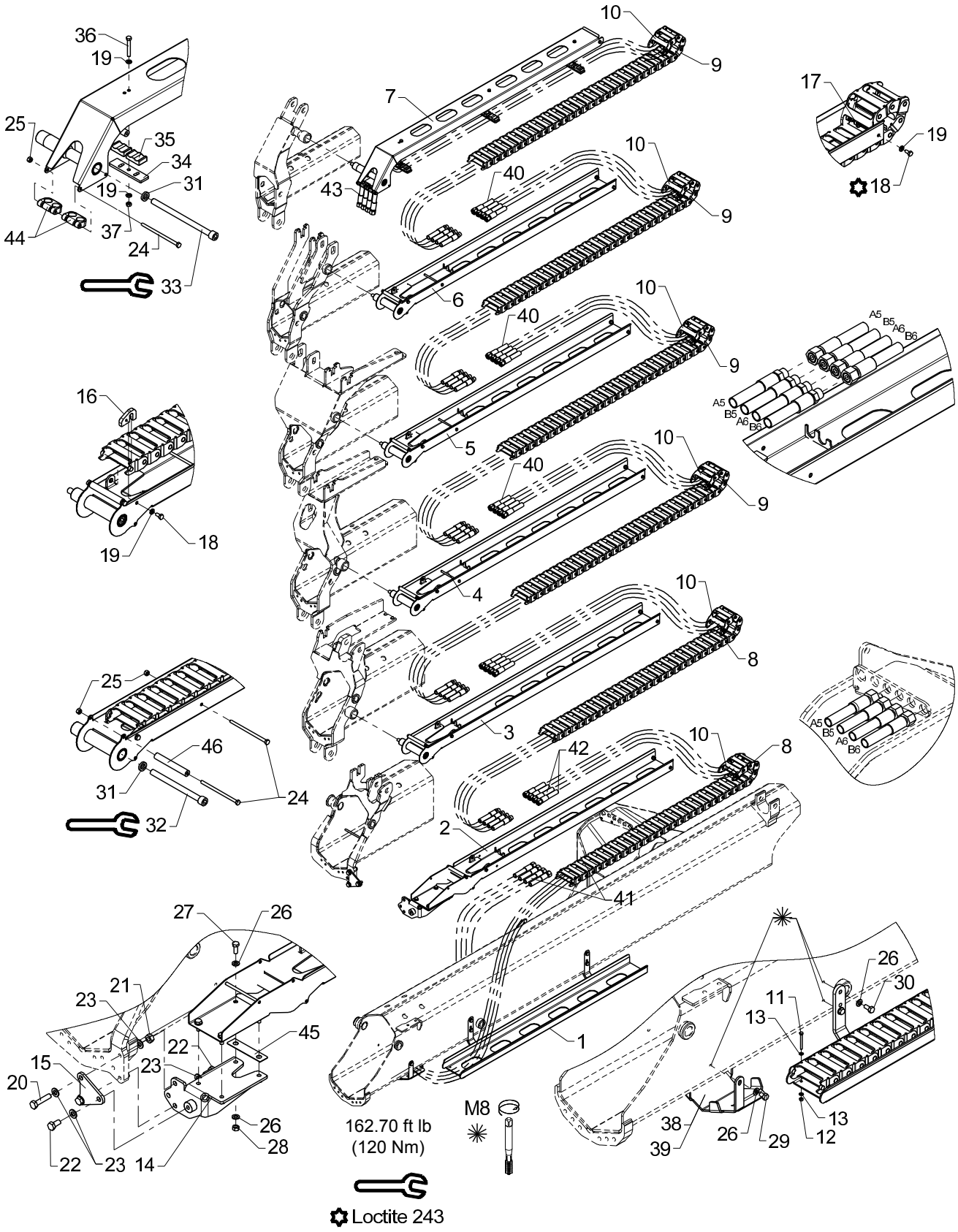

Obsolete

Hose guides, K6-2 EXV.

535 09 250

From loader 1070001
To loader 1070498

Created 19-03-2009
Modified 14-01-2013

Pos	Qty.	Part no.	Description	Remarks
		6340770	Hose guides, K6-2 EXV	
		6345770	Hose guides, K6-2 EXV	
1	1	6340721	Guide (jib)	
2	1	6340731	Guide (Extension I)	
3	1	6340741	Guide (Extension II)	
4	1	6340751	Guide (Extension III)	
5	1	6340755	Guide (Extension IV)	
6	1	6340761	Guide (Extension V)	
7	1	6340765	Guide (Extension VI)	
8	2	28712	Nylon drag chain, 30 links	
9	4	28713	Nylon drag chain, 33 links	
10	6	63400	End link for nylon drag chain	
11	2	30128	Set screw	M4 x 40
12	2	30857	Lock nut	M4
13	4	31188	Washer, stainless	4 mm
14	1	6340725	Mounting bracket	
15	1	6340729	Plate	
16	5	6340718	Bracket	
17	12	6340719	Nut	
18	17	30111	Set screw, stainless	
19	23	32302	Face washer, stainless	6 mm
20	2	30377	Set screw	M10 x 45
21	2	30858	Nut	M10
22	2	31517	Set screw, stainless	M10 x 20
23	6	31565	Washer, stainless	10 mm
24	9	30167	Steel bolt	M6 x 60
25	9	30884	Lock nut, stainless	M6
26	14	31147	Face washer, 8 mm	
27	4	30132	Set screw, stainless	
28	4	30856	Nut, stainless	M8
29	2	30130	Set screw, stainless	M8 x 12
30	4	30131	Set screw, stainless	M8 x 16
31	5	6340717	Washer	
32	4	32488	Screw	MC12 x 150
33	1	32489	Screw	MC12 x 180
34	3	6340769	Adaptor	
35	6	63561	Clamp	
36	3	30118	Steel pin, stainless	M6 x 45
37	3	30854	Nut, stainless	M6
38	1	6340299	Protective guard	Serie 1300/1500
39	1	6344299	Protective guard	Serie 1800/2200

Obsolete

18/129, 20/138, 22/153

535 09 250

63 45 770
Internal ref. 63 40 770

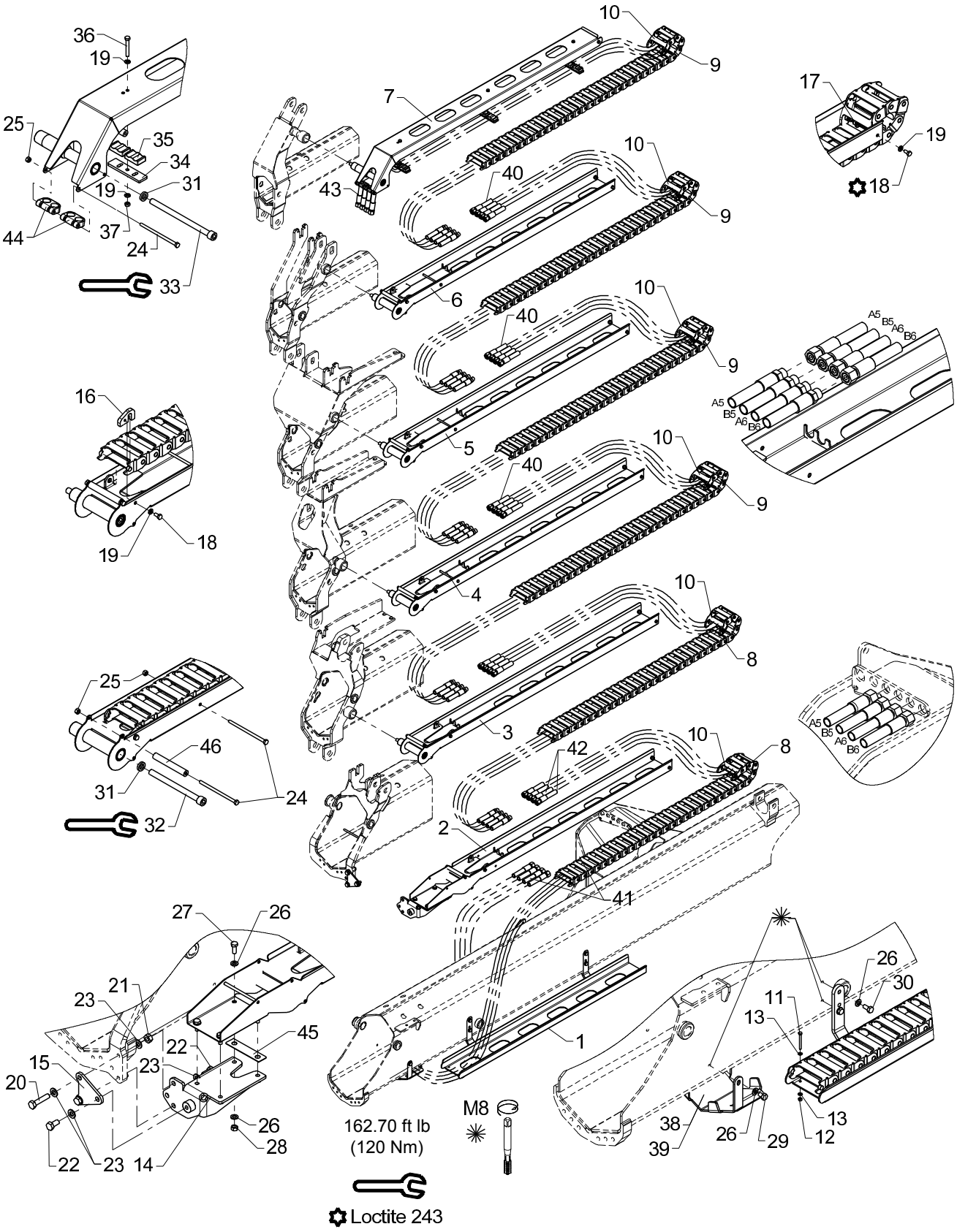

Obsolete

Hose guides, K6-2 EXV.

535 09 250

From loader 1070001
To loader 1070498

Created 19-03-2009
Modified 14-01-2013

Pos	Qty.	Part no.	Description	Remarks
40	16	56564	Hose	3/8 X 2900 mm L/S
41	2	56563	Hose	3/8 X 4170 mm L/L
42	2	56569	Hose	
43	4	56565	Hose	3/8 x 3420 mm L/S 12L
44	2	68028	Clamp	
45	1	6340764	Shim	
46	5	56513	Hose	

18/129, 20/138, 22/153

63 45 770
Internal ref. 63 40 770

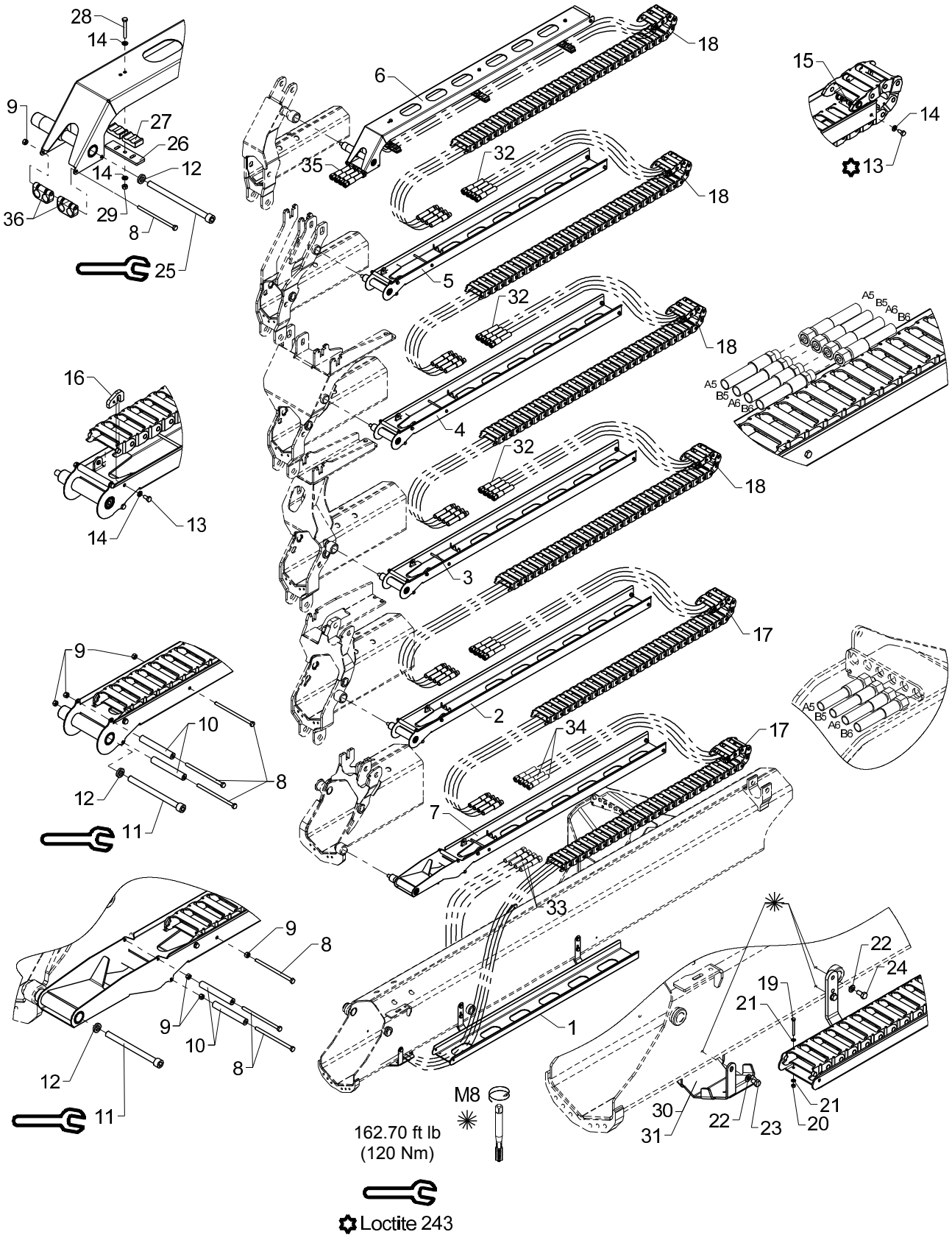

Hose guides, K6-2 EXV.

Pos	Qty.	Part no.	Description	Remarks
		6340770	Hose guides, K6-2 EXV	
		6345770	Hose guides, K6-2 EXV	
1	1	6340721	Guide (jib)	
2	1	6340741	Guide (Extension II)	
3	1	6340751	Guide (Extension III)	
4	1	6340755	Guide (Extension IV)	
5	1	6340761	Guide (Extension V)	
6	1	6340765	Guide (Extension VI)	
7	1	6341731	Guide (Extension I)	
8	15	30167	Steel bolt	M6 x 60
9	15	30884	Lock nut, stainless	M6
10	10	56513		
11	5	32488	Screw	MC12 x 150
12	6	6340717	Washer	
13	17	30111	Set screw, stainless	
14	23	32302	Face washer, stainless	6 mm
15	12	6340719	Nut	
16	5	6340718	Bracket	
17	2	28712	Nylon drag chain, 31 links	
18	4	28713	Nylon drag chain, 34 links	
19	2	30128	Set screw	M4 x 40
20	2	30857	Lock nut	M4
21	4	31188	Washer, stainless	4 mm
22	6	31147	Face washer, 8 mm	
23	2	30130	Set screw, stainless	M8 x 12
24	4	30131	Set screw, stainless	M8 x 16
25	1	32489	Screw	MC12 x 180
26	3	6340769	Adaptor	
27	6	63561	Clamp	
28	3	30118	Steel pin, stainless	M6 x 45
29	3	30854	Nut, stainless	M6
30	1	6340299	Protective guard	Serie 1300/1500
31	1	6344299	Protective guard	Serie 1800/2200
32	16	56564	Hose	3/8 X 2900 mm L/S
33	2	56563	Hose	3/8 X 4170 mm L/L
34	2	56569	Hose	
35	4	56565	Hose	3/8 x 3420 mm L/S 12L
36	2	68028		

18/129, 20/138, 22/153

63 47 730
Internal ref. 63 43 730

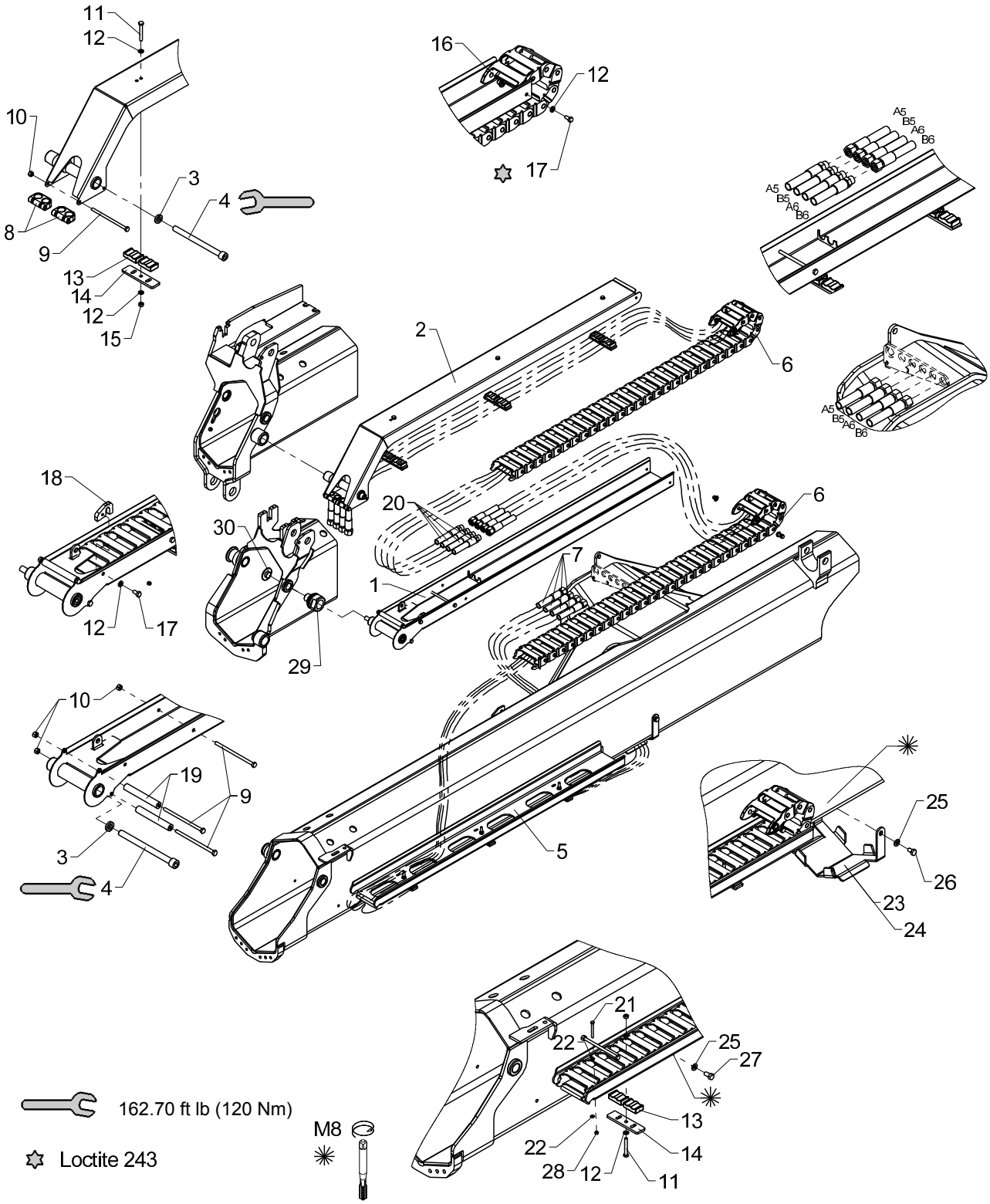

Hose guides, K2-2 EXV-raised

Created 21-03-2012
Modified 01-09-2015

Pos	Qty.	Part no.	Description	Remarks
		6343730	Hose guides, K2-2 EXV-raised	
		6347730	Hose guides, K2-2 EXV-raised	
1	1	6340746		
2	1	6340768		
3	2	6340717	Washer	
4	2	32488	Screw	MC12 x 150
5	1	6340705		
6	2	28712	Nylon drag chain, 31 links	
7	4	56569	Hose	
8	2	68028		
9	4	30167	Steel bolt	M6 x 60
10	4	30884	Lock nut, stainless	M6
11	6	30118	Steel pin, stainless	M6 x 45
12	17	32302	Face washer, stainless	6 mm
13	12	63561	Clamp	
14	6	6340769	Adaptor	
15	6	30854	Nut, stainless	M6
16	4	6340719	Nut	
17	5	30111	Set screw, stainless	
18	1	6340718	Bracket	
19	2	56513		
20	4	56568	Hose	
21	2	30128	Set screw	M4 x 40
22	4	31188	Washer, stainless	4 mm
23	1	6340299	Protective guard	Serie 1300/1500
24	1	6344299	Protective guard	Serie 1800/2200
25	6	31147	Face washer, 8 mm	
26	2	30130	Set screw, stainless	M8 x 12
27	4	30131	Set screw, stainless	M8 x 16
28	2	30857	Lock nut	M4
29	1	6340417		
30	1	6381484	Guide	

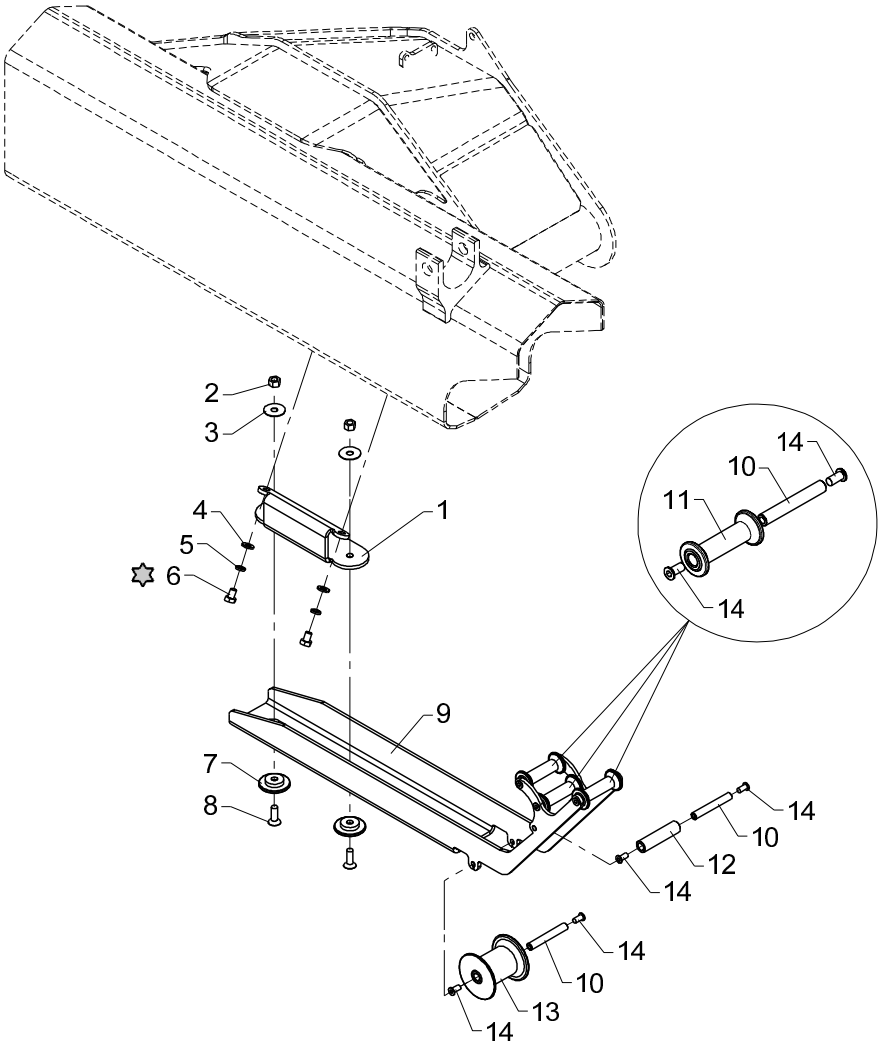
2
3
4
5
6
1
14
10
11
14
9
7
8
14
10
12
14
14
10
13
14

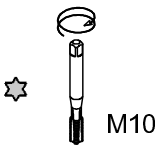
M10

Bracket for hose reel, cpl. (jib)

Pos	Qty.	Part no.	Description	Remarks
1	1	6340623	Bracket	
2	2	30888	Lock nut	M10
3	2	31141	Washer	10 mm
4	2	31565	Washer, stainless	10 mm
5	2	31156	Spring washer	10 mm
6	2	30152	Set screw	M10 x 14
7	2	6340624	Guide shoe	
8	2	30581	Counter-sunk screw	MK10 x 30
9	1	6340625	Bracket for guide roller	
10	5	6301042	Pin	
11	3	63579	Guide roller	
12	1	63578	Guide roller	
13	1	63547	Guide roller	
14	10	32481	Screw	MCL8 x 16

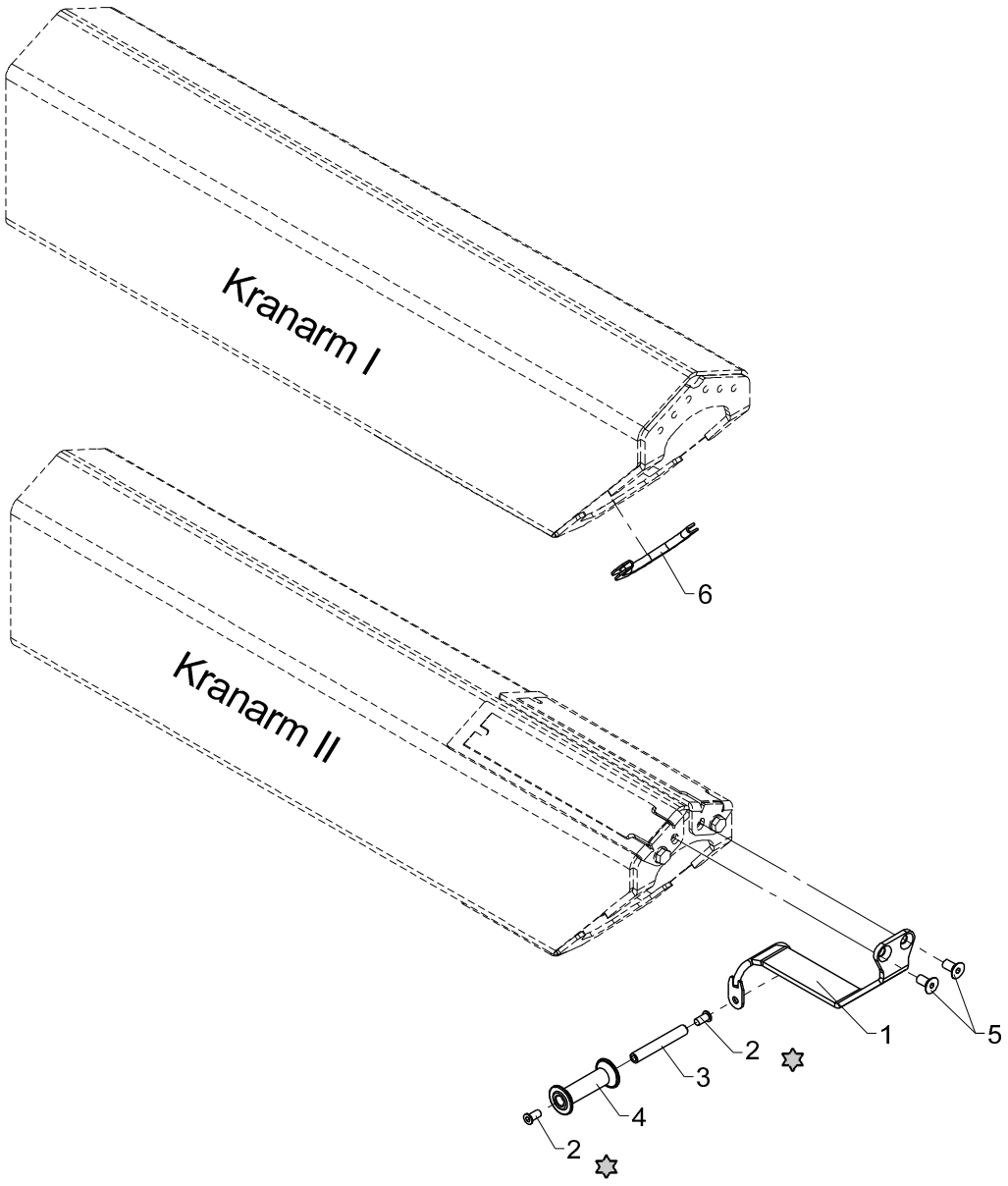

✡ Loctite 243

Attachment for hose reel, cpl. (extension 2)

Pos	Qty.	Part no.	Description	Remarks
1	1	6344635	Roller bracket (ext. 2)	
2	2	32481	Screw	MCL8 x 16
3	1	6301042	Pin	
4	1	63579	Guide roller	
5	2	30545	Countersunk screw	MK10 x 20
6	1	46596	Rubber protection	190 mm

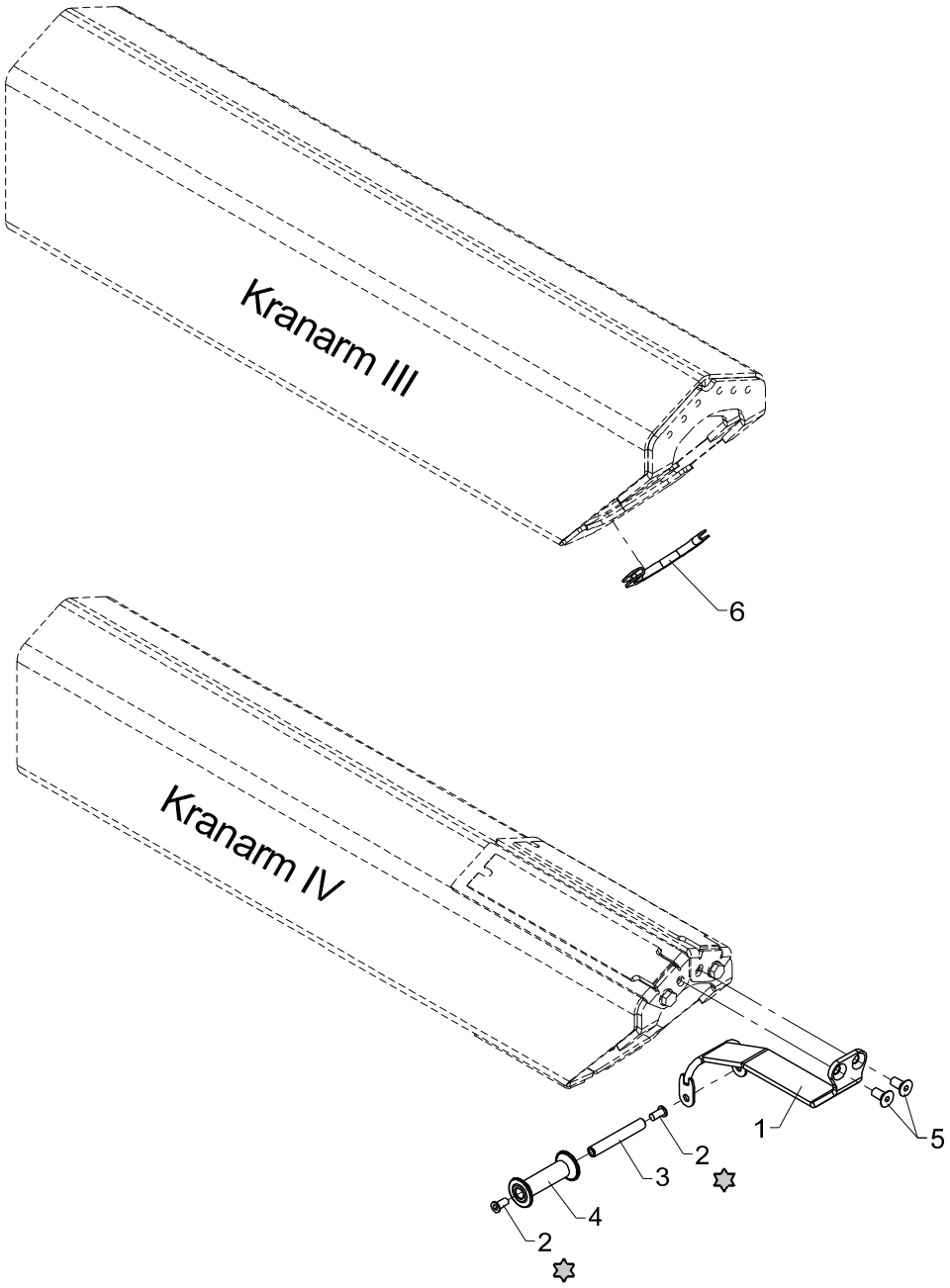

✡Loctite 243

Attachment for hose reel, cpl. (extension 4)

From loader 1070001
To loader
Created 24-04-2007
Modified

Pos	Qty.	Part no.	Description	Remarks
1	1	6344627	Roller bracket (extension 4)	
2	2	32481	Screw	MCL8 x 16
3	1	6301042	Pin	
4	1	63579	Guide roller	
5	2	30545	Countersunk screw	MK10 x 20
6	1	46596	Rubber protection	190 mm

18/129, 20/138, 22/153

63 45 930
Internal ref. 63 45 920

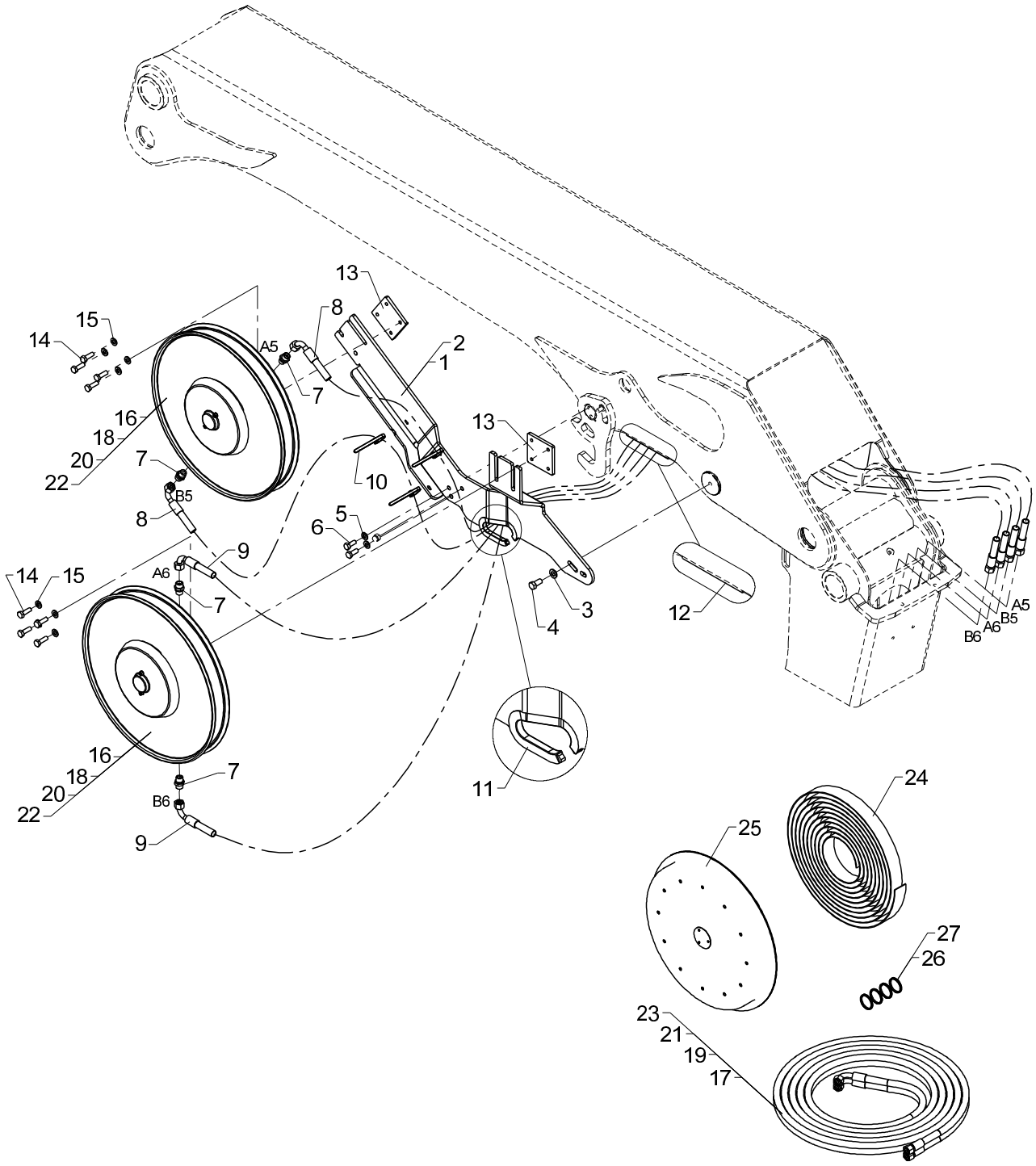

Hydr. system, hose reels, 2 EXV.

Created 12-01-2010
Modified 22-01-2015

Pos	Qty.	Part no.	Description	Remarks
		6345920	Hydr. syst. hose reels 2 EXV	1300K/1500K/1800K/2200K
		6345930	Hydr.syst., hose reels 2 EXV	1310K/1510K/1810K/2210K
1	1	6340621	Bracket for hose reel	1300K/1500K/1800K/2200K
2	1	6340622	Bracket for hose reel	1310K/1510K/1810K/2210K
3	1	31131	Washer	12 mm
4	1	30176	Set screw	M12 x 25
5	2	31177	Washer	10 mm
6	2	31513	Set screw, stainless	M10 x 25
7	4	25127	Connection	P-GEV 12 LR-WD
8	2	0017540	Hose	
9	2	0015020	Hose	
10	3	27275	Cable tie, black, 7.6x385mm	7,6 x 390mm
11	1	46587	Rubber protection	210 mm
12	1	46587	Rubber protection	150 mm
13	2	6352024	Threaded plate	
14	8	30156	Set screw, stainless	M10 x 30
15	8	31565	Washer, stainless	10 mm
16	2	56371	Hose reel	K1, K2, K3
17	1	56375	Double hose	(Til 56371)
18	2	56372	Hose reel	K4
19	1	56376	Double hose	(Til 56372)
20	2	56373	Hose reel	K5
21	1	56377	Double hose	(Til 56373)
22	2	56374	Hose reel	K6
23	1	56378	Double hose	(Til 56374)
24	1	56345	Spring	56371 - 56372 - 56373 - 53374
25	1	56486	Spring housing	56371 - 56372 - 56373 - 53374
26	1	56340	Seal kit	Slangerl. med serienr. før 51514
27	1	56336	Seal kit	Slangerl. med serienr. fra 51514

18/129, 20/138, 22/153

Internal ref. 63 40 910

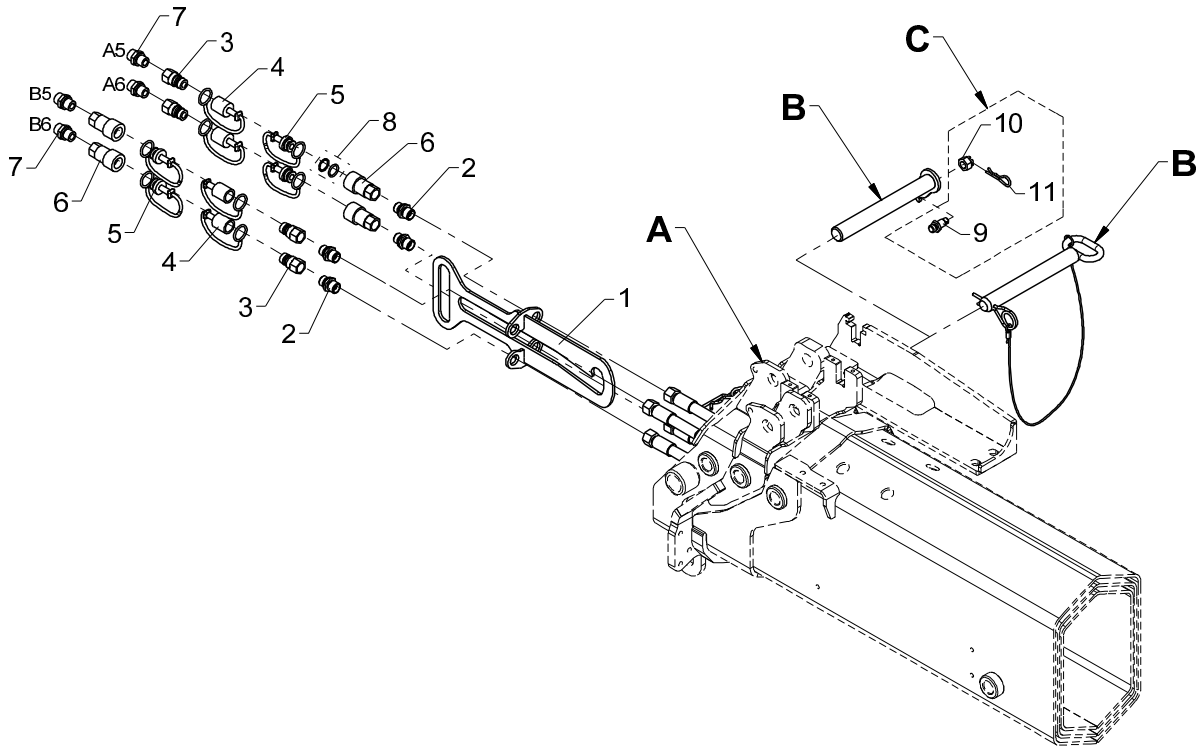

13/88, 14/14/98, 15/105, 17/117

A	B	C
K1	63 40 657	X
K2	63 40 677	X
K3	60 92 454	
K4	63 40 397	
K5	63 40 397	
K6	63 01 166	

18/124, 20/138, 22/153, 26/180

A	B	C
K2	63 40 657	X
K3	63 40 657	X
K4	60 92 454	
K5	63 40 397	
K6	63 40 397	

Kit, quick-release coupling for internal hose routing, 2 EXV.

Pos	Qty.	Part no.	Description	Remarks
		6340910	Quick-release coupl. int, 2EXV	
1	1	6340631	Bracket	
2	4	6661444	Socket	
3	4	60620	Quick-release coupling,M	3/8"
4	4	60622	Dust cap, F	3/8"
5	4	60621	Dust cap, M	3/8"
6	4	60619	Quick-release coupling,F	3/8"
7	4	25127	Connection	P-GEV 12 LR-WD
8	1	60635	Seal kit	
9	1	6340359	Lock pin	
10	1	32127	Nut	M12
11	1	33379	Spring	
12	1	6340657	Pin	
13	1	6340677	Pin	
14	1	6092454	Lock pin with chain	
15	1	6301166	Lock pin with split pin	
16	1	6340397	Lock pin with lock spring	

18/129, 20/138, 22/153

63 45 630
Internal ref. 63 45 620

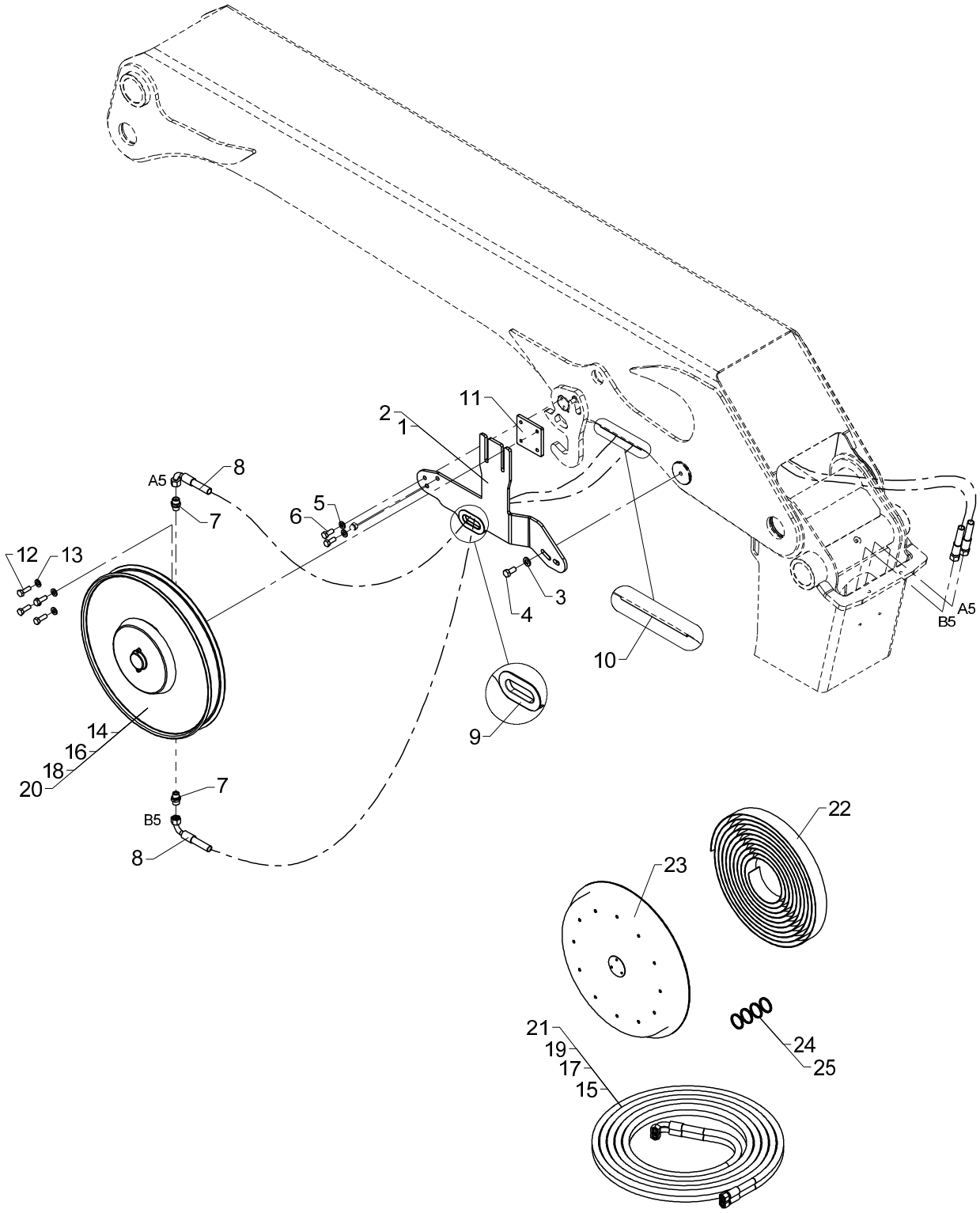

Hydr. system, hose reels, 1 EXV.

Pos	Qty.	Part no.	Description	Remarks
		6345620	Hydr. syst. hose reels 1 EXV	
		6345630	Hydr. syst. hose reels 1 EXV	
1	1	6340618	Bracket for hose reel (1EXV)	2 Ledarm
2	1	6340619	Bracket for hose reel (1EXV)	1 Ledarm
3	1	31131	Washer	12 mm
4	1	30176	Set screw	M12 x 25
5	2	31177	Washer	10 mm
6	2	31513	Set screw, stainless	M10 x 25
7	2	25127	Connection	P-GEV 12 LR-WD
8	2	0015020	Hose	
9	1	46587	Rubber protection	175 mm
10	1	46587	Rubber protection	150 mm
11	1	6352024	Threaded plate	
12	4	30156	Set screw, stainless	M10 x 30
13	4	31565	Washer, stainless	10 mm
14	1	56371	Hose reel	K1, K2, K3
15	1	56375	Double hose	(Til 5371)
16	1	56372	Hose reel	K4
17	1	56376	Double hose	(Til 5372)
18	1	56373	Hose reel	K5
19	1	56377	Double hose	(Til 5373)
20	1	56374	Hose reel	K6
21	1	56378	Double hose	(Til 5374)
22	1	56345	Spring	56371 - 56372 - 56373 - 56374
23	1	56486	Spring housing	56371 - 56372 - 56373 - 56374
24	1	56340	Seal kit	Slangerl. med serienr. før 51514
25	1	56336	Seal kit	Slangerl. med serienr. fra 51514

18/129, 20/138, 22/153

Internal ref. 63 40 610

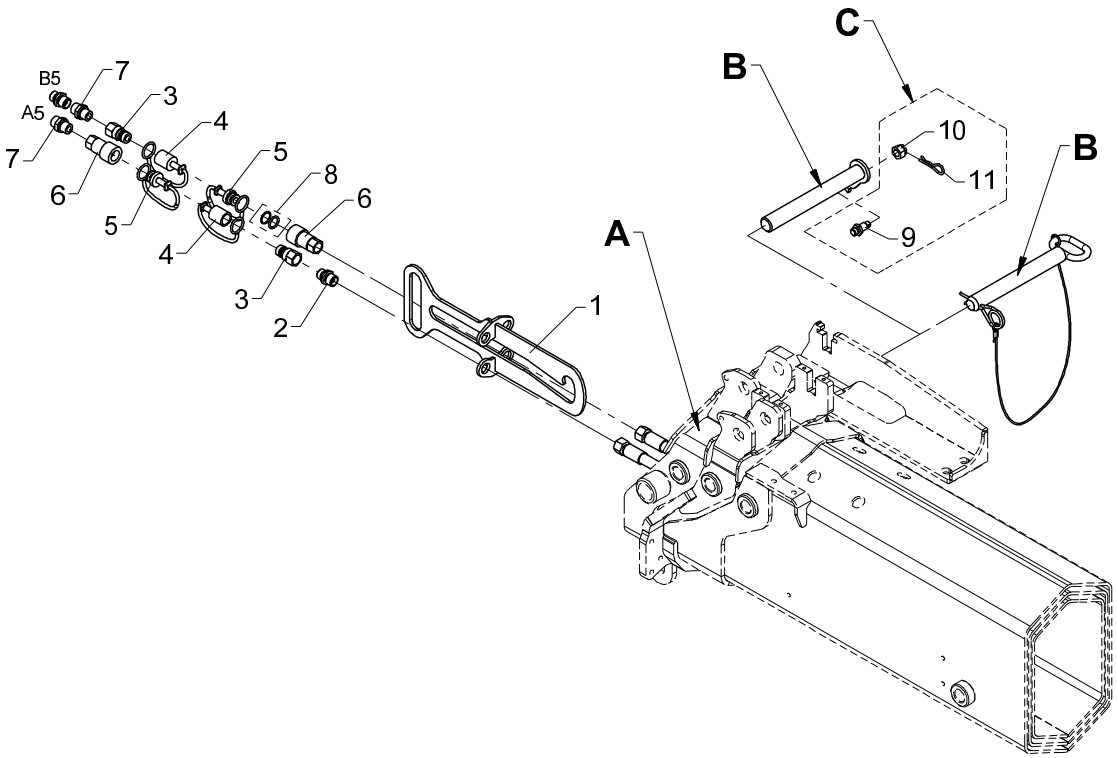

13/88, 14/14/98, 15/105, 17/117

A	B	C
K1	63 40 657	X
K2	63 40 677	X
K3	60 92 454	
K4	63 40 397	
K5	63 40 397	
K6	63 01 166	

18/124, 20/138, 22/153, 26/180

A	B	C
K2	63 40 657	X
K3	63 40 657	X
K4	60 92 454	
K5	63 40 397	
K6	63 40 397	

Kit, quick-release coupling for internal hose routing, 1 EXV.

Pos	Qty.	Part no.	Description	Remarks
		6340610	Kit, quick-release coupl.,1EXV	
1	1	6340631	Bracket	
2	2	6661444	Socket	
3	2	60620	Quick-release coupling,M	3/8"
4	2	60622	Dust cap, F	3/8"
5	2	60621	Dust cap, M	3/8"
6	2	60619	Quick-release coupling,F	3/8"
7	2	25127	Connection	P-GEV 12 LR-WD
8	1	60635	Seal kit	
9	1	6340359	Lock pin	
10	1	32127	Nut	M12
11	1	33379	Spring	
12	1	6340657	Pin	
13	1	6340677	Pin	
14	1	6092454	Lock pin with chain	
15	1	6301166	Lock pin with split pin	
16	1	6340397	Lock pin with lock spring	

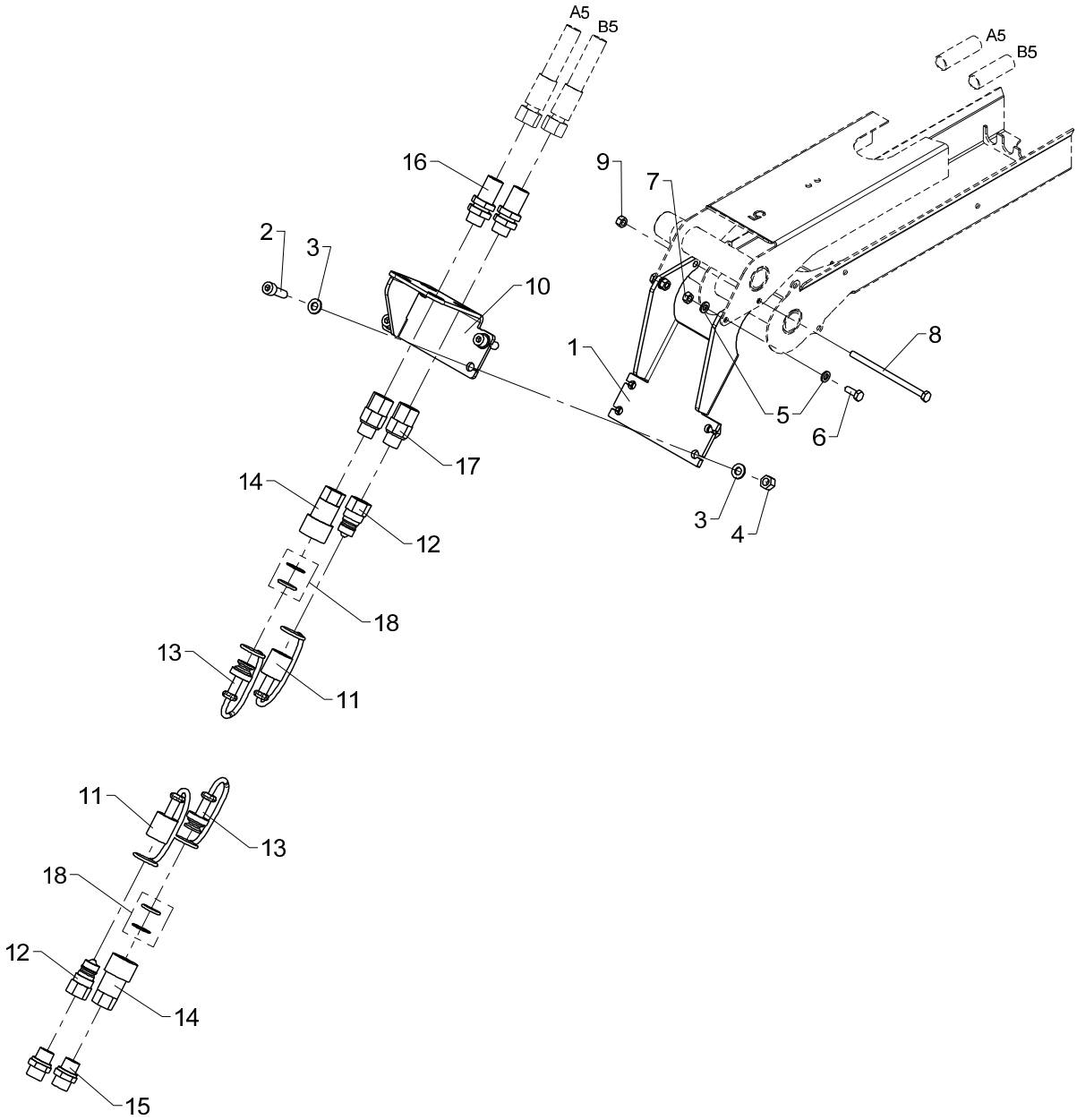
A5
B5
A5
B5
16
9
7
2
3
10
1
8
5
6
17
14
12
3
4
18
13
11
11
13
18
12
14
15

Quick-release coupling for 1 extra valve + bracket, K1-K5/T3-T4

Pos	Qty.	Part no.	Description	Remarks
1	1	6340771	Adapter	
2	4	30440	Screw	MC8 x 25
3	8	31147	Face washer, 8 mm	
4	4	30886	Lock nut, stainless	M8
5	4	32302	Face washer, stainless	6 mm
6	2	30112	Set screw, stainless	M6 x 16
7	2	30854	Nut, stainless	M6
8	1	30167	Steel bolt	M6 x 60
9	1	30884	Lock nut, stainless	M6
10	1	6394164	Bracket,quick-release coupling	
11	2	60622	Dust cap, F	3/8"
12	2	60620	Quick-release coupling,M	3/8"
13	2	60621	Dust cap, M	3/8"
14	2	60619	Quick-release coupling,F	3/8"
15	2	25127	Connection	P-GEV 12 LR-WD
16	2	25201	Bulkhead connection	
17	2	25240	Connection	EGESD 12 LR-WD
18	2	60635	Seal kit	

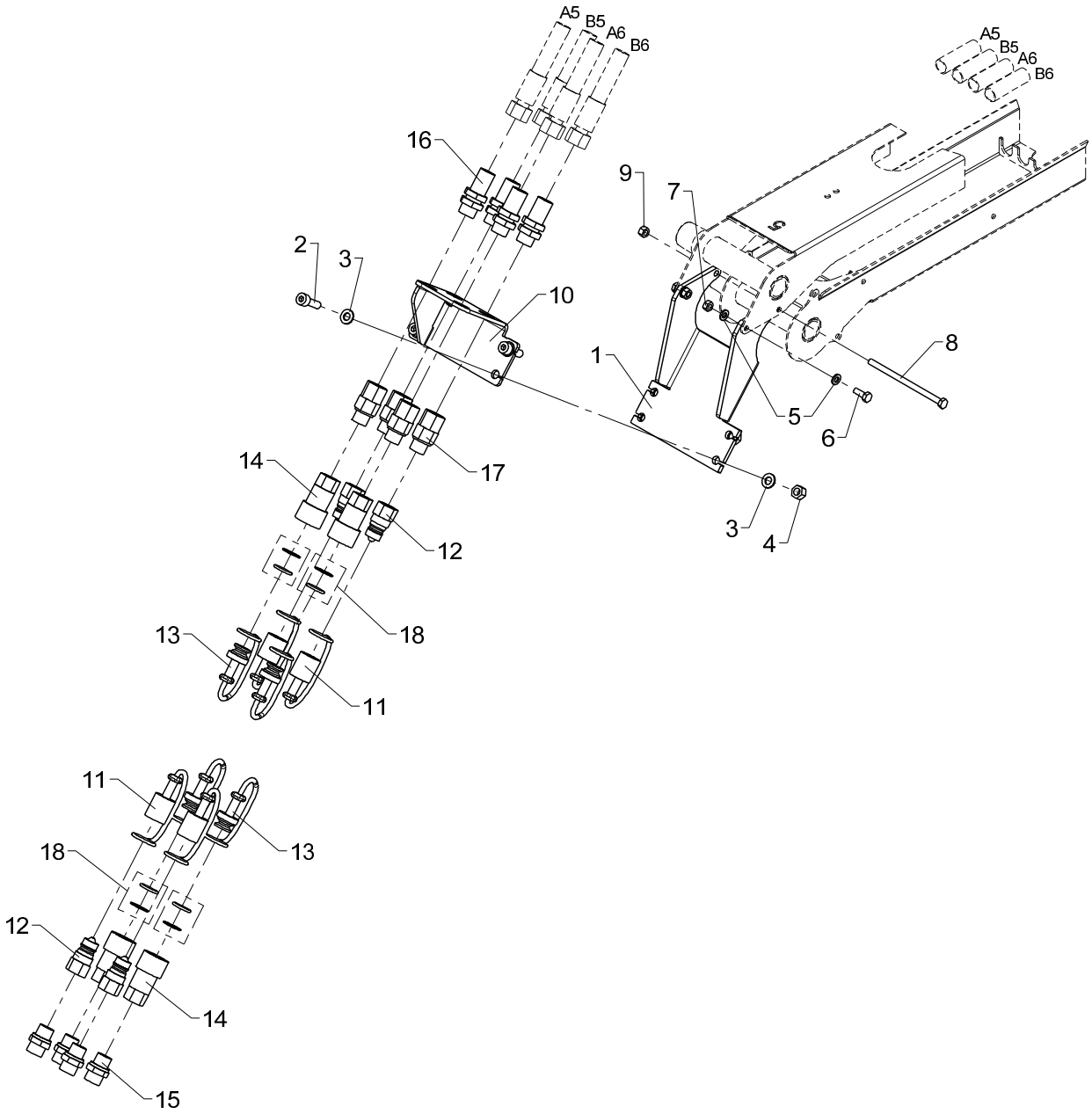
A5
B5
A6
B6
16
2
3
10
9
7
1
8
5
6
14
17
12
3
4
13
18
11
11
18
13
12
14
15

Quick-release coupling for 2 extra valves + bracket, K1-K5/T3-T4

Pos	Qty.	Part no.	Description	Remarks
1	1	6340771	Adapter	
2	4	30440	Screw	MC8 x 25
3	8	31147	Face washer, 8 mm	
4	4	30886	Lock nut, stainless	M8
5	4	32302	Face washer, stainless	6 mm
6	2	30112	Set screw, stainless	M6 x 16
7	2	30854	Nut, stainless	M6
8	1	30167	Steel bolt	M6 x 60
9	1	30884	Lock nut, stainless	M6
10	1	6394164	Bracket,quick-release coupling	
11	4	60622	Dust cap, F	3/8"
12	4	60620	Quick-release coupling,M	3/8"
13	4	60621	Dust cap, M	3/8"
14	4	60619	Quick-release coupling,F	3/8"
15	4	25127	Connection	P-GEV 12 LR-WD
16	4	25201	Bulkhead connection	
17	4	25240	Connection	EGESD 12 LR-WD
18	4	60635	Seal kit	

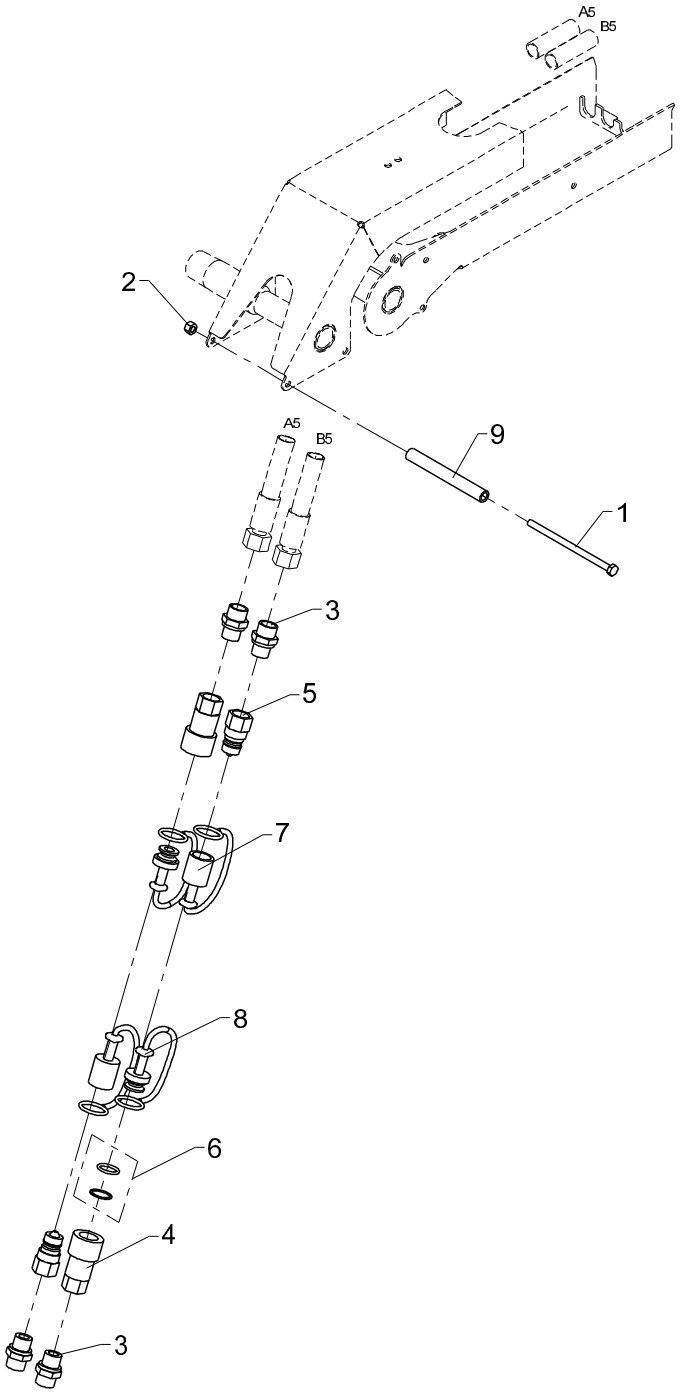
A5
B5
2
A5
B5
9
1
3
5
7
8
6
4
3

535 09 390

From loader 1070001
To loader

Created 23-09-2009
Modified 14-03-2011

Quick-release coupling for 1 extra valve

Pos	Qty.	Part no.	Description	Remarks
1	1	30167	Steel bolt	M6 x 60
2	1	30884	Lock nut, stainless	M6
3	4	25127	Connection	P-GEV 12 LR-WD
4	2	60619	Quick-release coupling,F	3/8"
5	2	60620	Quick-release coupling,M	3/8"
6	1	60635	Seal kit	
7	2	60622	Dust cap, F	3/8"
8	2	60621	Dust cap, M	3/8"
9	1	62511	Plastic hose	100 mm

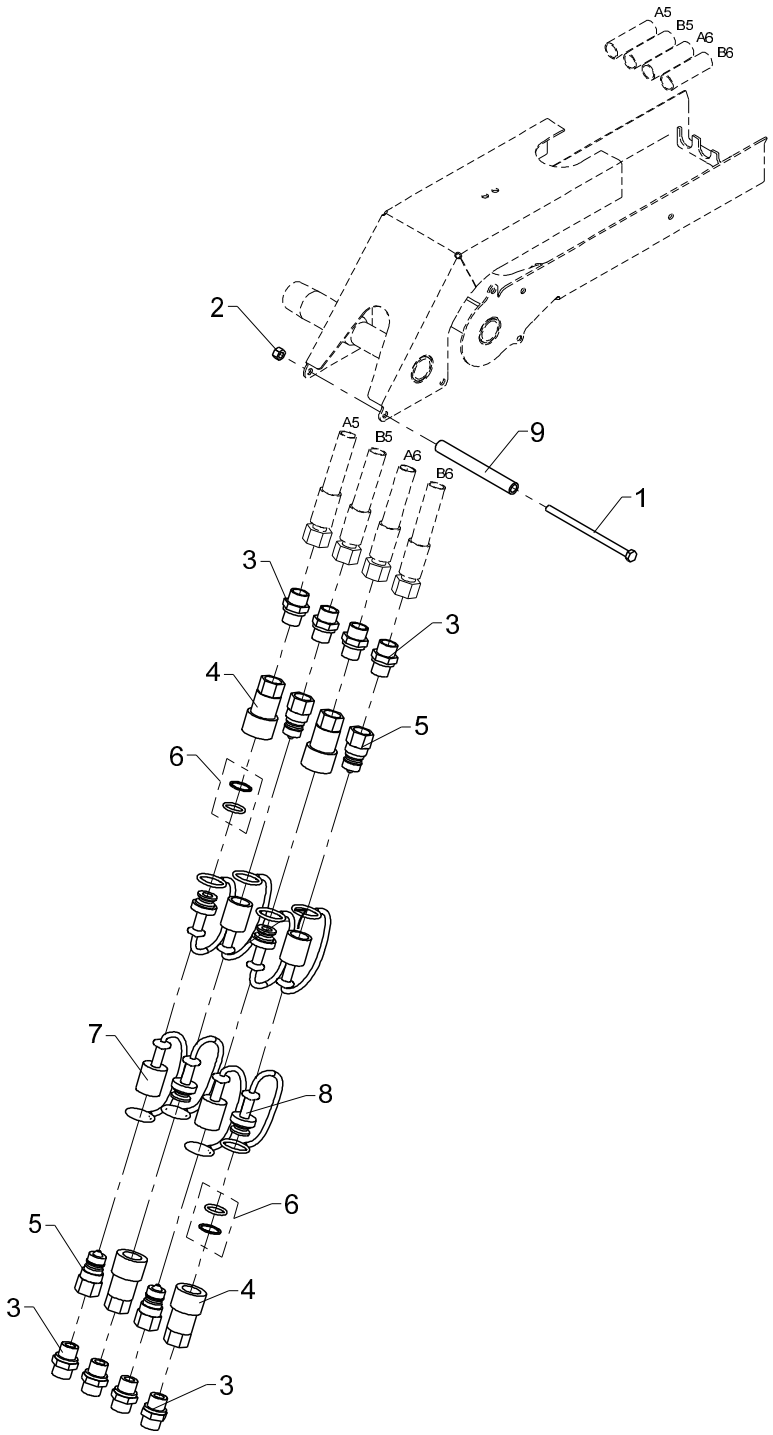
A5
B5
A6
B6
2
9
1
3
4
5
6
7
8

Quick-release coupling for 2 extra valves

Pos	Qty.	Part no.	Description	Remarks
1	1	30167	Steel bolt	M6 x 60
2	1	30884	Lock nut, stainless	M6
3	8	25127	Connection	P-GEV 12 LR-WD
4	4	60619	Quick-release coupling,F	3/8"
5	4	60620	Quick-release coupling,M	3/8"
6	2	60635	Seal kit	
7	4	60622	Dust cap, F	3/8"
8	4	60621	Dust cap, M	3/8"
9	1	62511	Plastic hose	100 mm

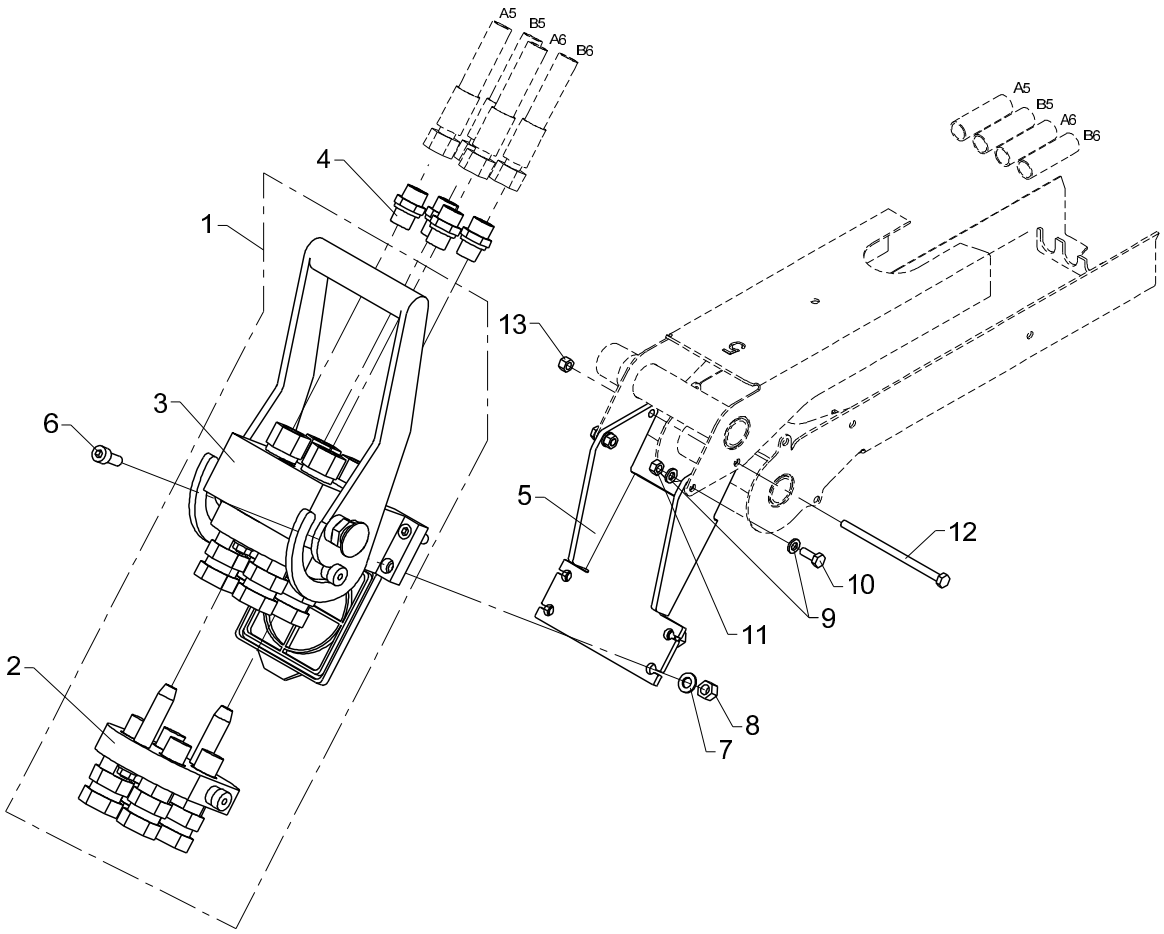
A5
B5
A6
B6
4
1
13
3
6
5
12
10
9
11
2
8
7

535 09 410

From loader 1070001
To loader

Created 12-01-2010
Modified 05-04-2011

Multi-coupling for 2 extra valves K1-K5/T3-T4

Pos	Qty.	Part no.	Description	Remarks
1	1	58430	Multifaster coupling	1/2"
2	1	58431	Multifaster coupling	
3	1	58432	Multifaster coupling	
4	4	25127	Connection	P-GEV 12 LR-WD
5	1	6340771	Adapter	
6	4	30438	Screw	MC8 x 20
7	4	31147	Face washer, 8 mm	8 mm
8	4	30886	Lock nut, stainless	M8
9	4	32302	Face washer, stainless	6 mm
10	2	30112	Set screw, stainless	M6 x 16
11	2	30854	Nut, stainless	M6
12	1	30167	Steel bolt	M6 x 60
13	1	30884	Lock nut, stainless	M6

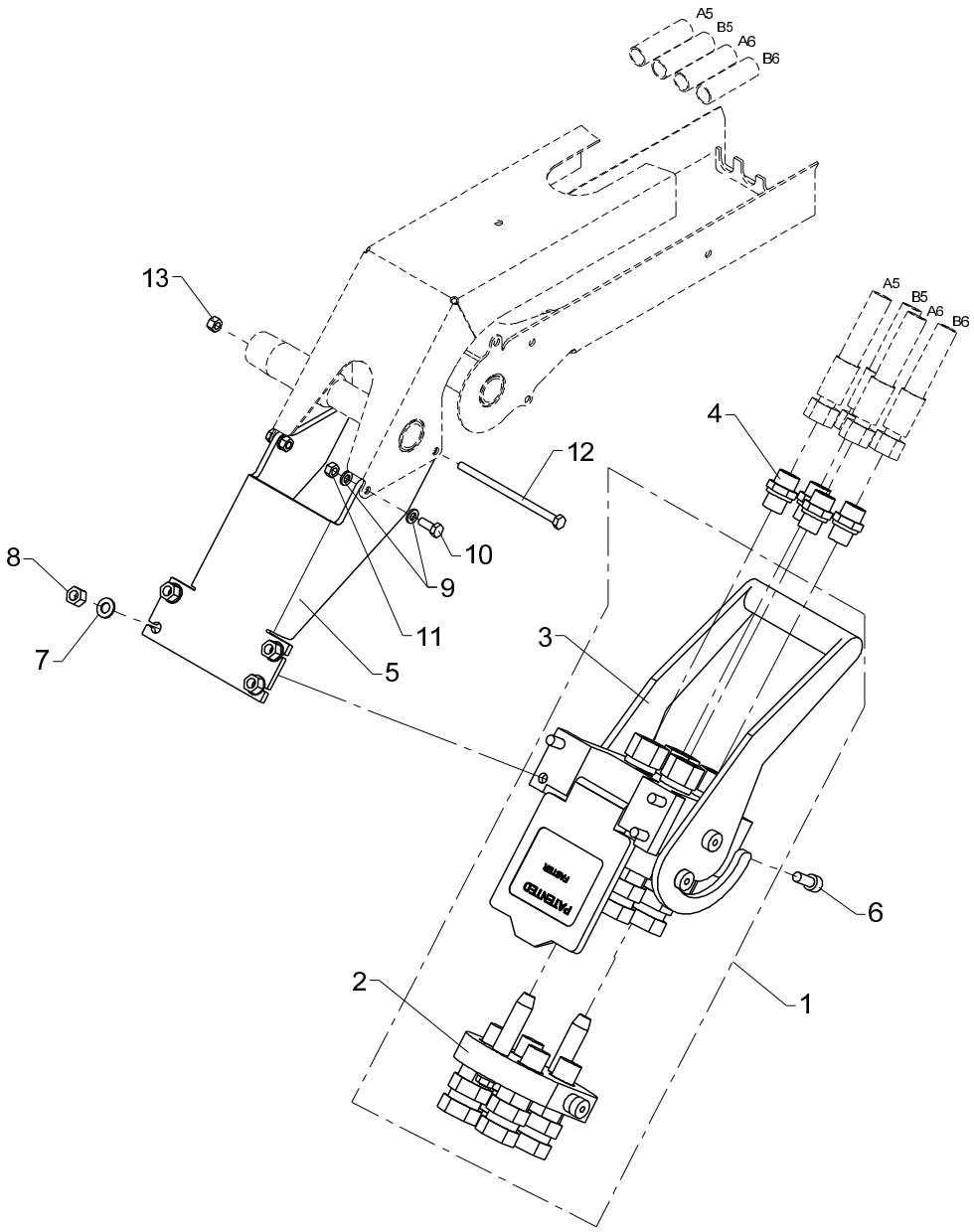
A5
B5
A6
B6
13
A5
B5
A6
B6
4
12
8
10
9
11
3
7
5
6
2
1

Multi-coupling for 2 extra valves K6/T5

535 09 420

From loader 1070001
To loader

Created 12-01-2010
Modified 05-04-2011

Pos	Qty.	Part no.	Description	Remarks
1	1	58430	Multifaster coupling	1/2"
2	1	58431	Multifaster coupling	
3	1	58432	Multifaster coupling	
4	4	25127	Connection	P-GEV 12 LR-WD
5	1	6340772	Adapter	
6	4	30438	Screw	MC8 x 20
7	4	31147	Face washer, 8 mm	8 mm
8	4	30886	Lock nut, stainless	M8
9	4	32302	Face washer, stainless	6 mm
10	2	30112	Set screw, stainless	M6 x 16
11	2	30854	Nut, stainless	M6
12	1	30167	Steel bolt	M6 x 60
13	1	30884	Lock nut, stainless	M6

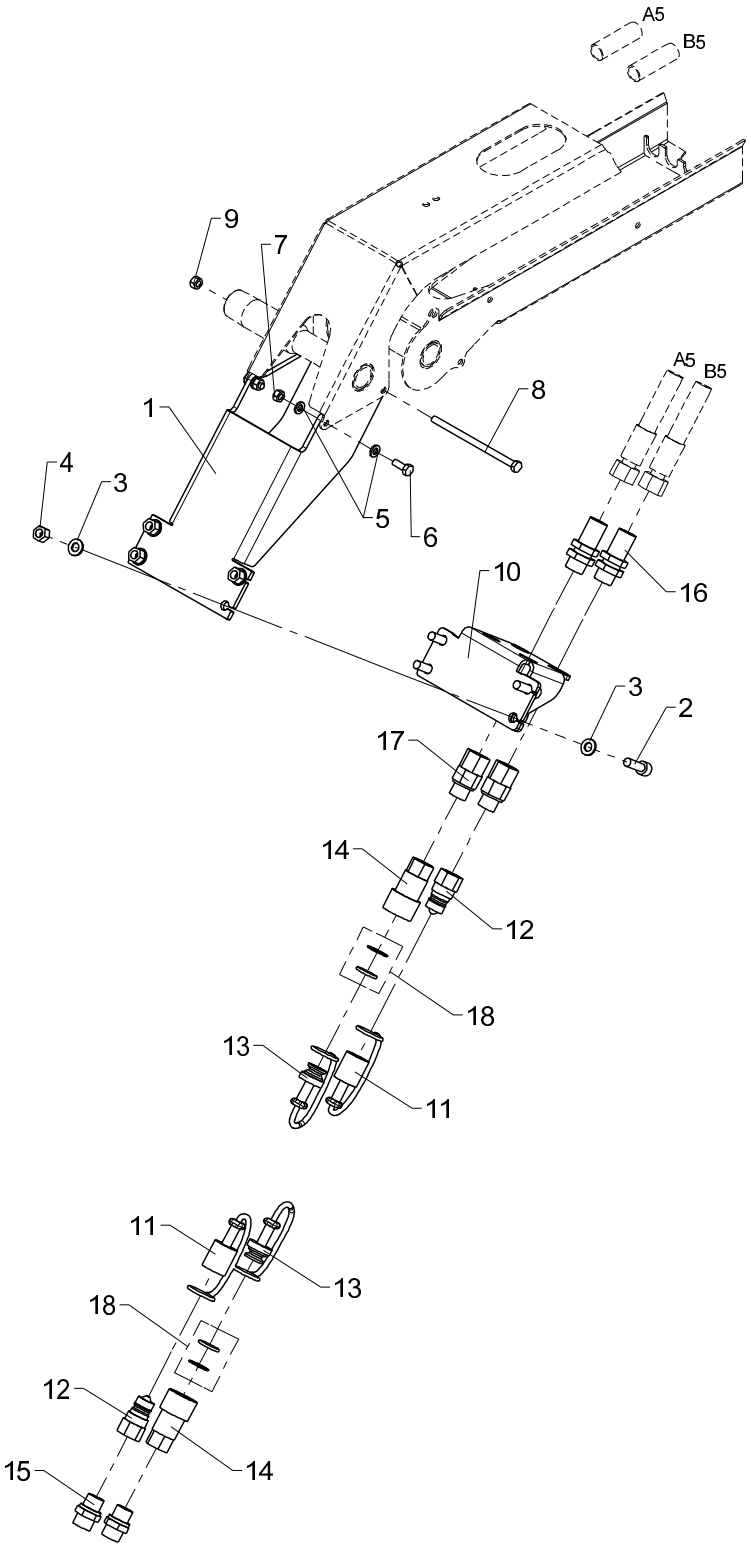
A5
B5
9
7
1
8
A5
B5
4
3
5
6
10
16
3
2
17
14
12
18
13
11
11
13
18
12
14
15

Quick-release coupling for 1 extra valve + bracket, K6/T5

Pos	Qty.	Part no.	Description	Remarks
1	1	6340772	Adapter	
2	4	30440	Screw	MC8 x 25
3	8	31147	Face washer, 8 mm	
4	4	30886	Lock nut, stainless	M8
5	4	32302	Face washer, stainless	6 mm
6	2	30112	Set screw, stainless	M6 x 16
7	2	30854	Nut, stainless	M6
8	1	30167	Steel bolt	M6 x 60
9	1	30884	Lock nut, stainless	M6
10	1	6394164	Bracket,quick-release coupling	
11	2	60622	Dust cap, F	3/8"
12	2	60620	Quick-release coupling,M	3/8"
13	2	60621	Dust cap, M	3/8"
14	2	60619	Quick-release coupling,F	3/8"
15	2	25127	Connection	P-GEV 12 LR-WD
16	2	25201	Bulkhead connection	
17	2	25240	Connection	EGESD 12 LR-WD
18	2	60635	Seal kit	

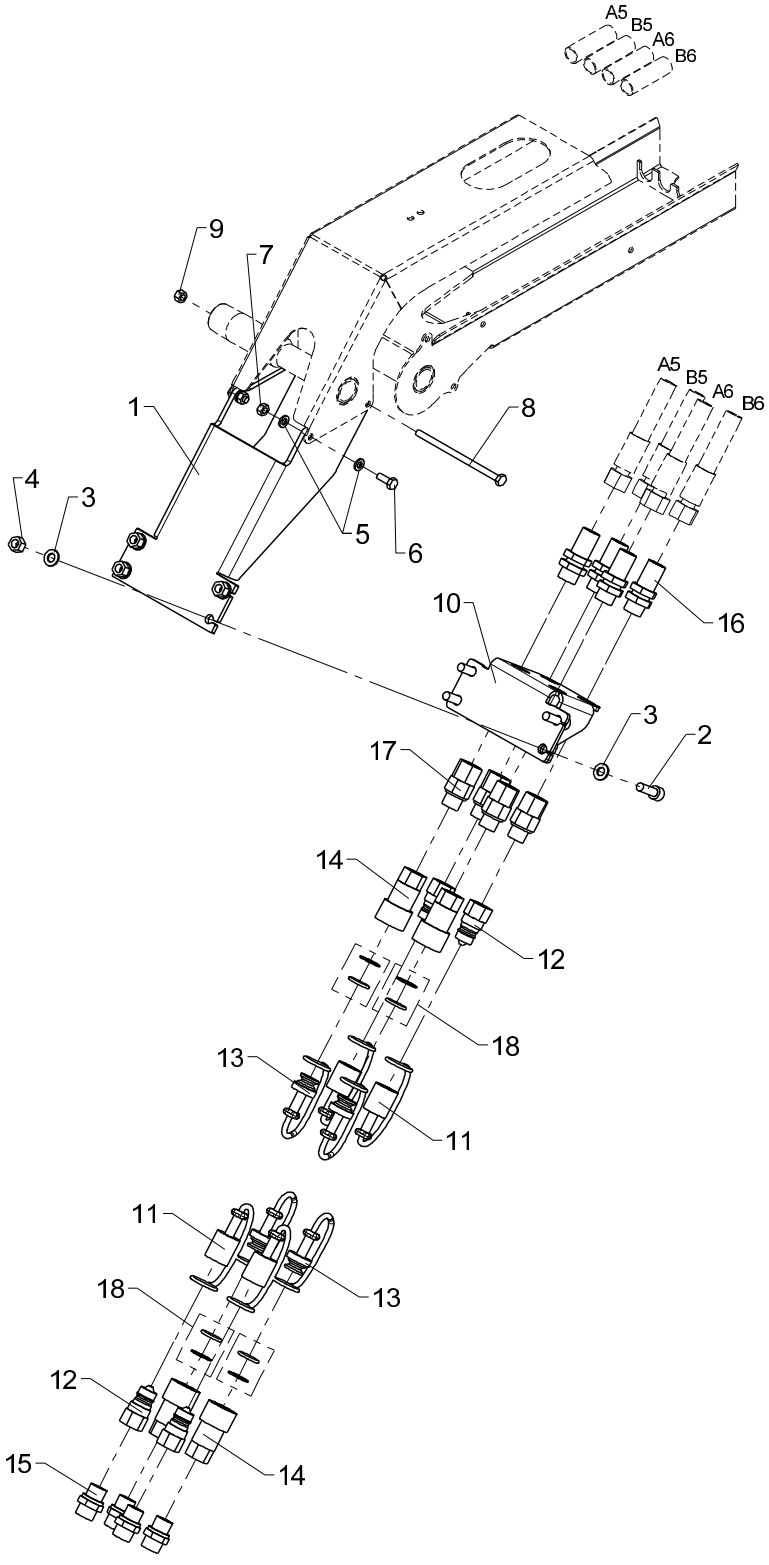
A5
B5
A6
B6
9
7
1
8
4
3
5
6
A5
B5
A6
B6
10
16
3
2
17
14
12
18
13
11
11
18
13
12
15
14

Quick-release coupling for 2 extra valves + bracket, K6/T5

Pos	Qty.	Part no.	Description	Remarks
1	1	6340772	Adapter	
2	4	30440	Screw	MC8 x 25
3	8	31147	Face washer, 8 mm	
4	4	30886	Lock nut, stainless	M8
5	4	32302	Face washer, stainless	6 mm
6	2	30112	Set screw, stainless	M6 x 16
7	2	30854	Nut, stainless	M6
8	1	30167	Steel bolt	M6 x 60
9	1	30884	Lock nut, stainless	M6
10	1	6394164	Bracket,quick-release coupling	
11	4	60622	Dust cap, F	3/8"
12	4	60620	Quick-release coupling,M	3/8"
13	4	60621	Dust cap, M	3/8"
14	4	60619	Quick-release coupling,F	3/8"
15	4	25127	Connection	P-GEV 12 LR-WD
16	4	25201	Bulkhead connection	
17	4	25240	Connection	EGESD 12 LR-WD
18	4	60635	Seal kit	

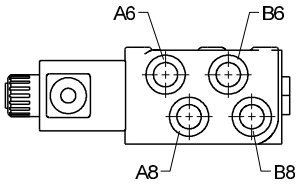
A6
B6
A8
B8

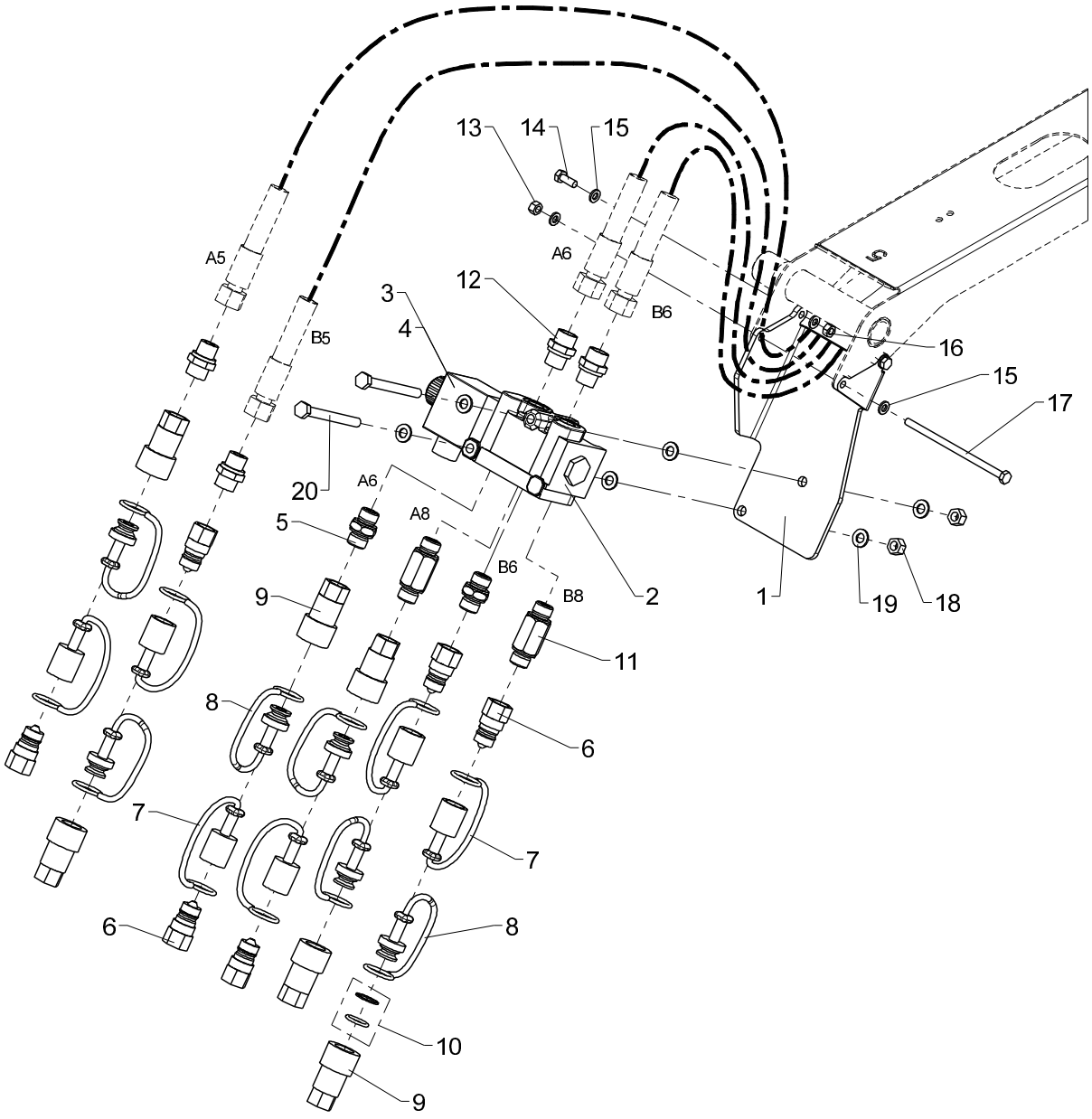
13
14
15
A5
A6
12
3
4
B5
B6
16
15
17
20
A6
A8
5
B6
B8
2
1
19
18
9
11
8
6
7
7
6
8
10
9

Kit for 3 extra valves (K1-K5)

535 09 460

From loader 1070001
To loader

Created 15-12-2008
Modified 31-08-2009

Pos	Qty.	Part no.	Description	Remarks
1	1	6340773	Adaptor	
2	1	59062	Change-over valve	
3	1	59063	Solenoid 24 V	
4	1	59078	Solenoid 12V	
5	2	6340775	Connection	
6	6	60620	Quick-release coupling,M	3/8"
7	6	60622	Dust cap, F	3/8"
8	6	60621	Dust cap, M	3/8"
9	6	60619	Quick-release coupling,F	3/8"
10	1	60635	Seal kit	
11	2	6340776	Connection	
12	4	25127	Connection	P-GEV 12 LR-WD
13	1	30884	Lock nut, stainless	M6
14	2	30112	Set screw, stainless	M6 x 16
15	6	32302	Face washer, stainless	6 mm
16	2	30854	Nut, stainless	M6
17	1	32107	Steel bolt, stainless	M6 x 120
18	2	30886	Lock nut, stainless	M8
19	6	31147	Face washer, 8 mm	8 mm
20	2	30143	Steel bolt, stainless	M8 x 80

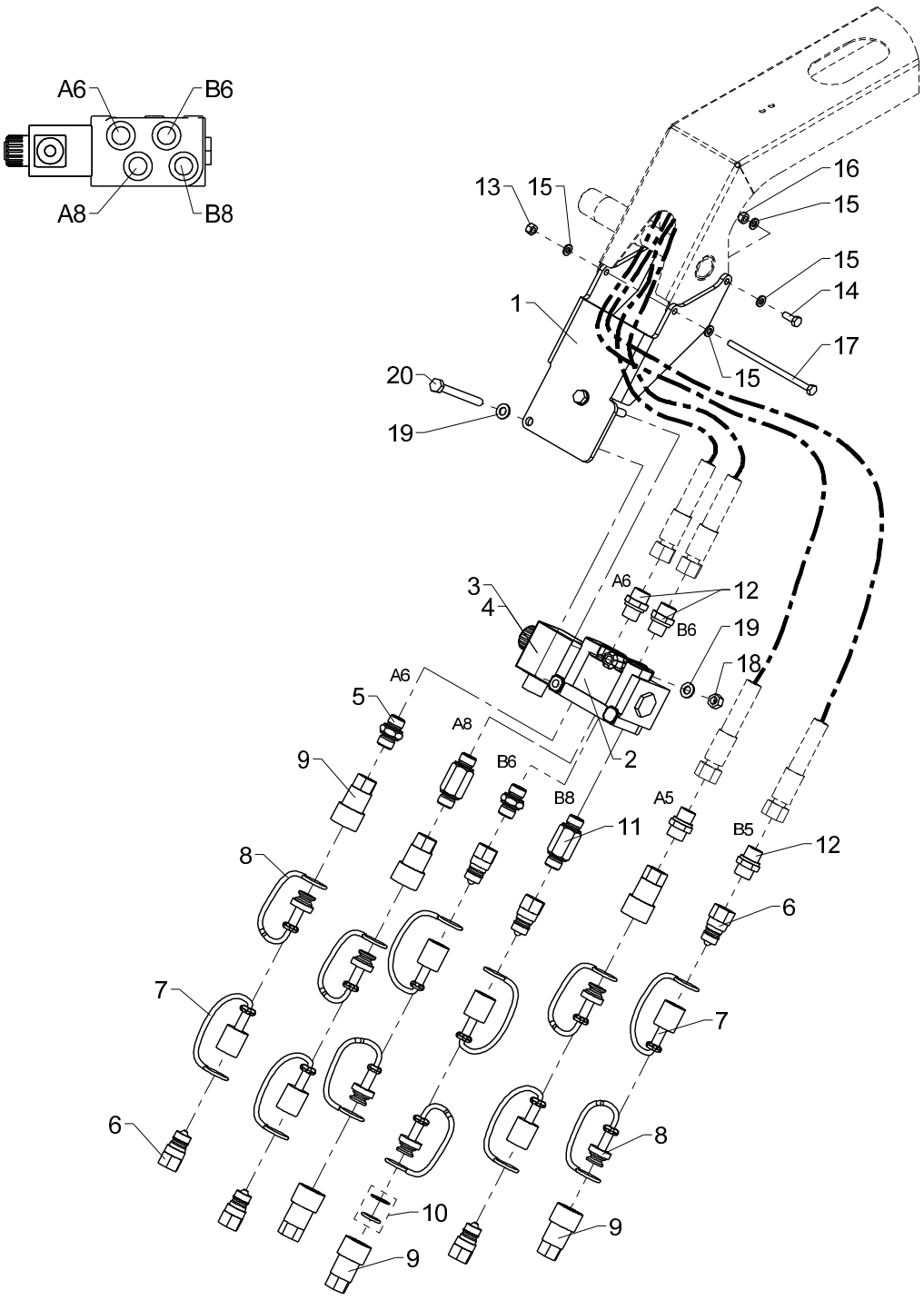
A6
B6
A8
B8
13
15
16
15
15
14
1
17
15
20
19
3
4
A6
12
B6
19
18
A6
5
A8
B6
B8
2
9
A5
11
B5
12
8
6
7
7
6
8
10
9
9

Kit for 3 extra valves (K6)

535 09 470

From loader 1070001
To loader

Created 11-03-2009
Modified 31-08-2009

Pos	Qty.	Part no.	Description	Remarks
1	1	6340774	Adapter (change-over valve K6)	
2	1	59062	Change-over valve	
3	1	59063	Solenoid 24 V	
4	1	59078	Solenoid 12V	
5	2	6340775	Connection	
6	6	60620	Quick-release coupling,M	3/8"
7	6	60622	Dust cap, F	3/8"
8	6	60621	Dust cap, M	3/8"
9	6	60619	Quick-release coupling,F	3/8"
10	1	60635	Seal kit	
11	2	6340776	Connection	
12	4	25127	Connection	P-GEV 12 LR-WD
13	1	30884	Lock nut, stainless	M6
14	2	30112	Set screw, stainless	M6 x 16
15	6	32302	Face washer, stainless	6 mm
16	2	30854	Nut, stainless	M6
17	1	32107	Steel bolt, stainless	M6 x 120
18	2	30886	Lock nut, stainless	M8
19	4	31147	Face washer, 8 mm	8 mm
20	2	30143	Steel bolt, stainless	M8 x 80

K2:

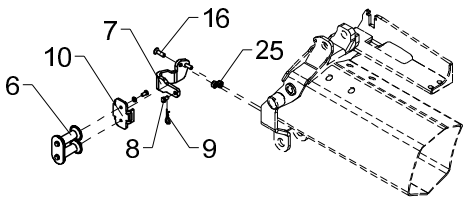
7
16
10
25
6
8
9

K4:

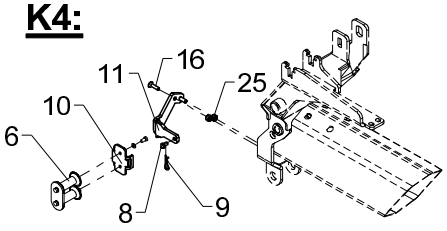
11
16
10
25
6
8
9

K6:

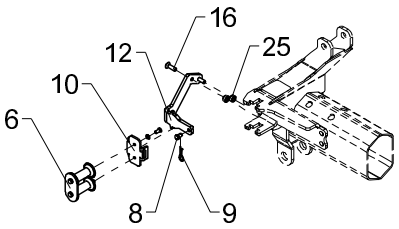
16
12
25
10
6
8
9

K7:

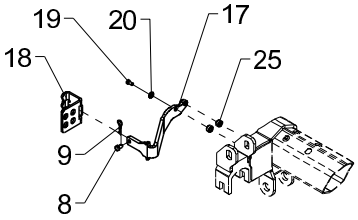
19
20
17
18
25
9
8

K8:

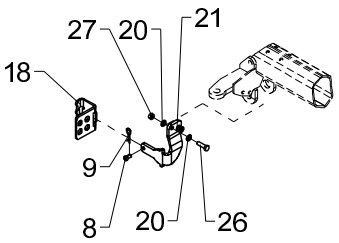
27
20
21
18
9
8
20
26

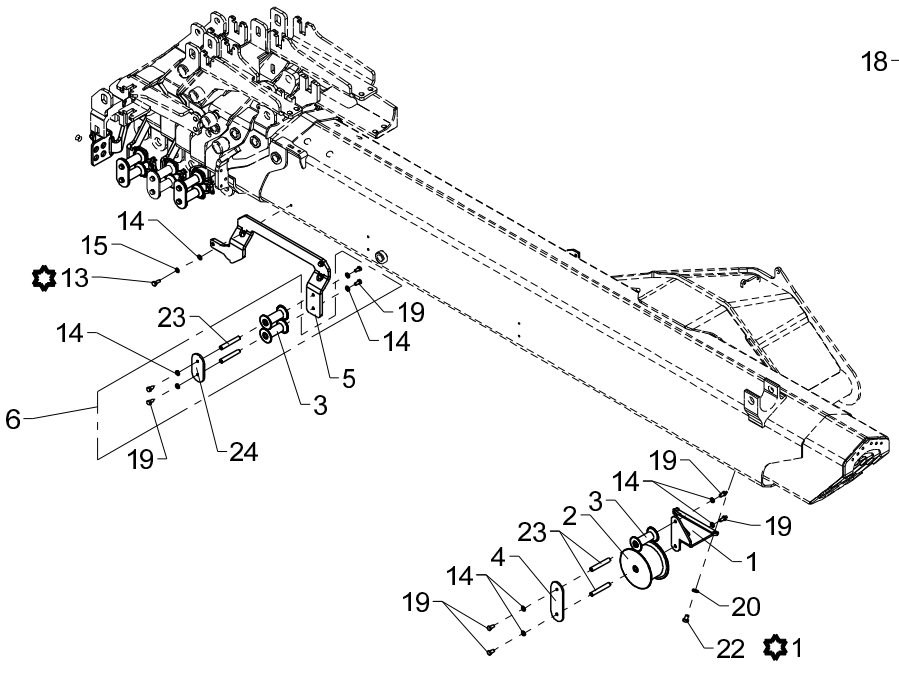
14
15
13
23
19
14
14
5
6
3
19
24

19
14
3
2
19
23
1
4
14
20
19
22
1

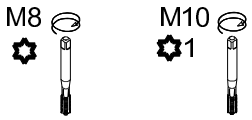
M8
M10
1

Hose clamps, complete (K7-K8)

Pos	Qty.	Part no.	Description	Remarks
		6345680	Clamp, complete (K7)	
		6345690	Clamp, complete (K8)	
1	1	6344742	Attachment (jib)	
2	1	63404	Roller	
3	3	63546	Guide roller	
4	1	6344743	End plate	
5	1	6344741	Attachment	
6	4	6345090	Guide rollers and pins	
7	1	6344744	Attachment (K2)	
8	4	6302896	Lock pin	
9	4	33379	Spring	
10	3	6302881	Plate	
11	1	6344745	Attachment (K4)	
12	1	6344746	Attachment (K6)	
13	3	30132	Set screw, stainless	M8 x 20
14	11	31147	Face washer, 8 mm	8 mm
15	3	31155	Spring washer	8 mm
16	6	30526	Countersunk screw	MK10 x 35
17	1	6344758	Adapter (K7)	
18	1	6370863	Bracket	
19	10	30131	Set screw, stainless	M8 x 16
20	6	31565	Washer, stainless	10 mm
21	1	6344759	Adapter (K8)	
22	2	30152	Set screw	M10 x 14
23	4	6301042	Pin	
24	1	6302882	End plate	
25	8	6344747	Spacer	
26	2	30157	Set screw	M10 x 35
27	2	31551	Nut, stainless	M10

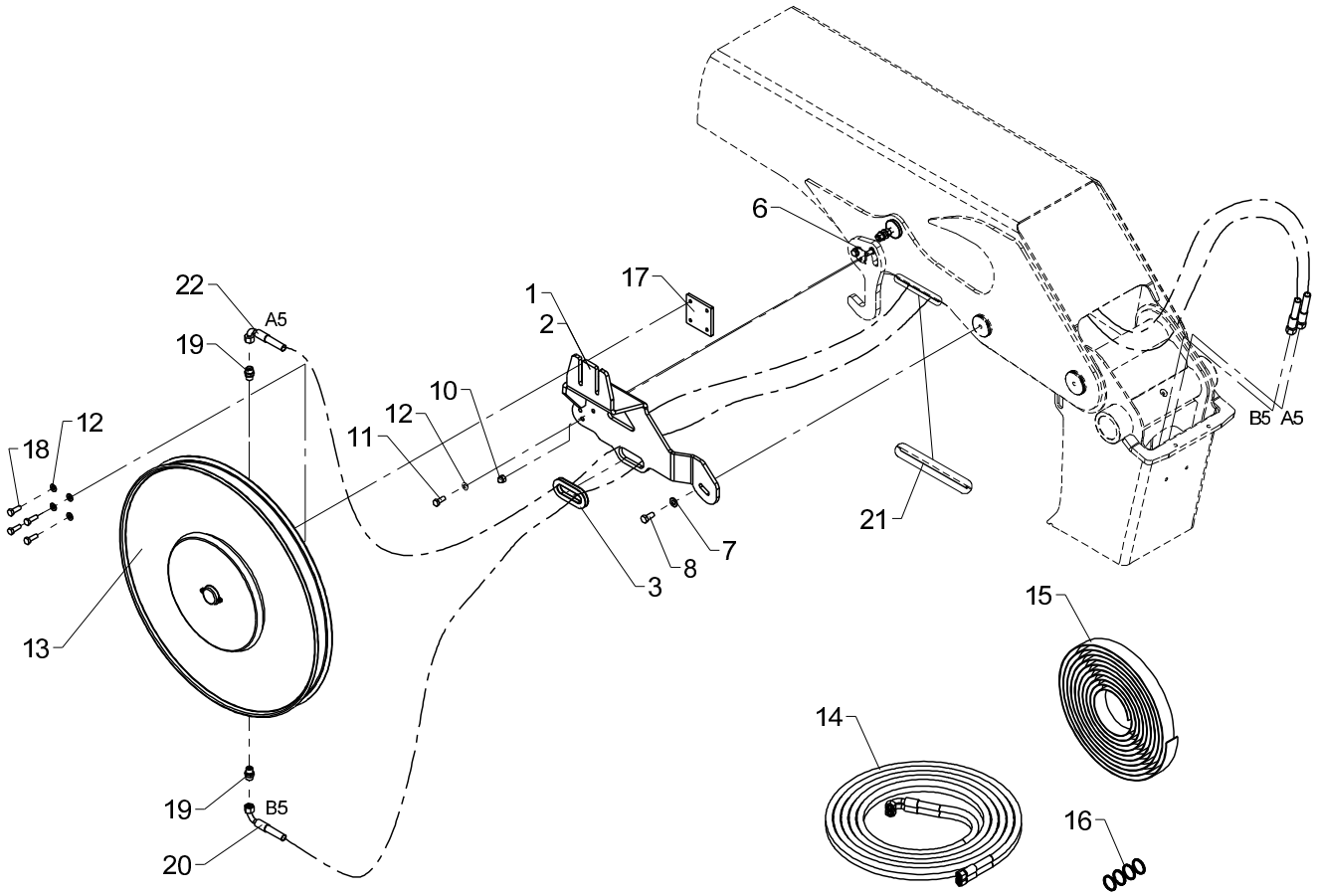

These ports will be delivered loose with the crane and must be installed after crane installation.

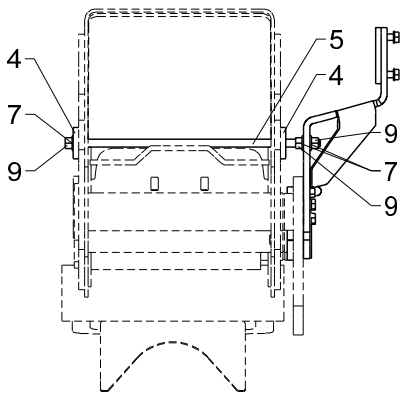

Hose reels (K7 - K8), 1 EXV.

Pos	Qty.	Part no.	Description	Remarks
		6345640	Hose reels (K7-K8), 1 EXV	
		6345660	Hose reels (K7-K8), 1 EXV	
1	1	6344751	Bracket for hose reel (K7/K8)	1800K / 2200K
2	1	6344752	Bracket for hose reel (K7/K8)	1810K / 2210K
3	1	47347	Rubber protection	360 mm
4	2	6344748	Spacer	
5	1	6344749	Threaded pin	
6	1	30451	Screw	MC10 x 20
7	4	32338	Washer	12 mm
8	1	30176	Set screw	M12 x 25
9	3	30860	Nut, stainless	M12
10	1	30902	Nut	M10
11	2	30155	Set screw	M10 x 25
12	6	31565	Washer, stainless	10 mm
13	1	56313	Hose reel	3/8" x 22000 mm
14	1	56314	Hose	
15	1	56335	Spring	
16	1	56336	Seal kit	
17	1	6352024	Threaded plate	
18	4	30156	Set screw, stainless	M10 x 30
19	2	25127	Connection	P-GEV 12 LR-WD
20	1	0015020	Hose	
21	1	46587	Rubber protection	150 mm
22	1	0017530	Hose	

18/129, 20/138, 22/153

63 45 670
Internal ref. 63 45 650

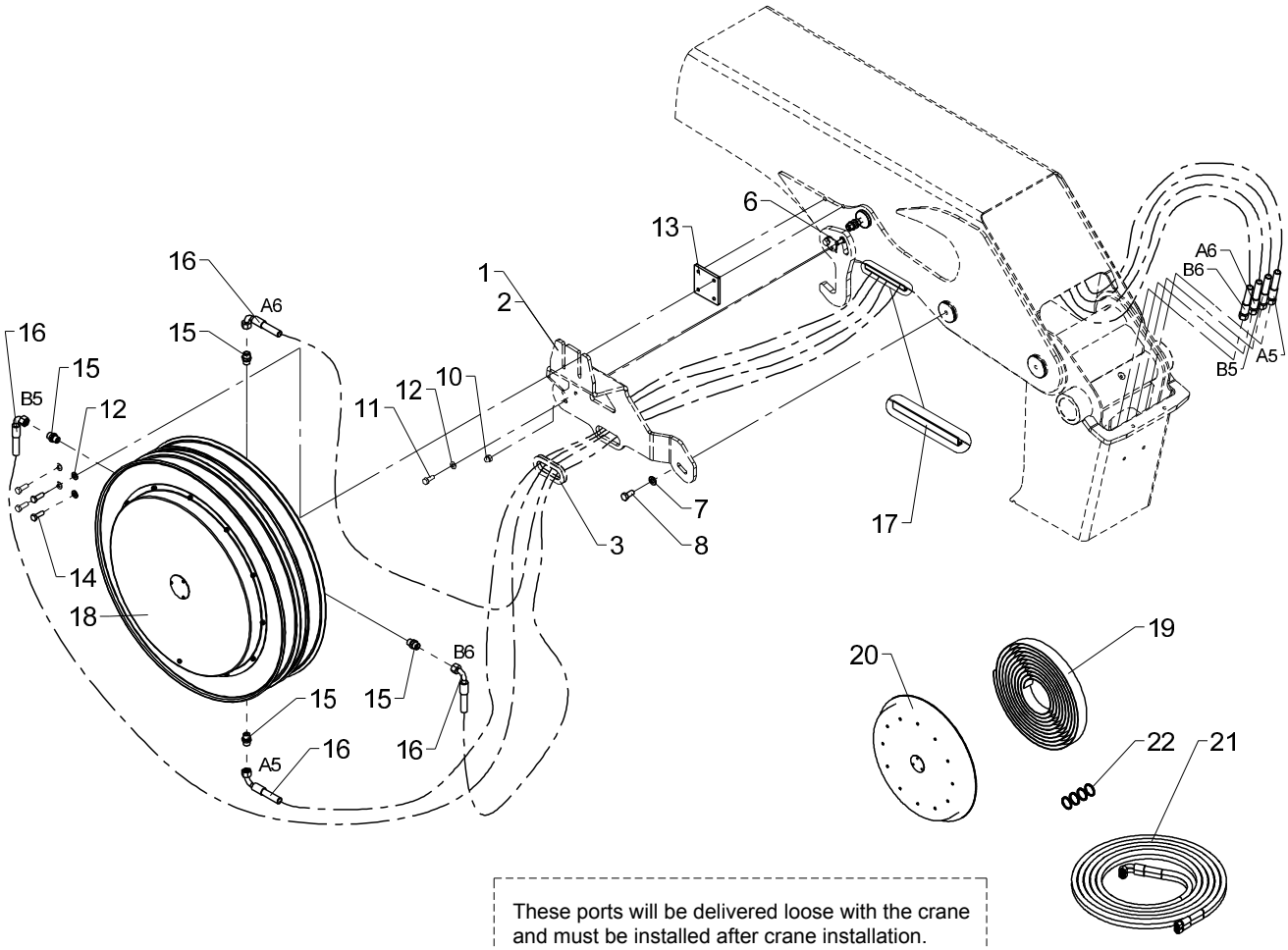

These ports will be delivered loose with the crane and must be installed after crane installation.

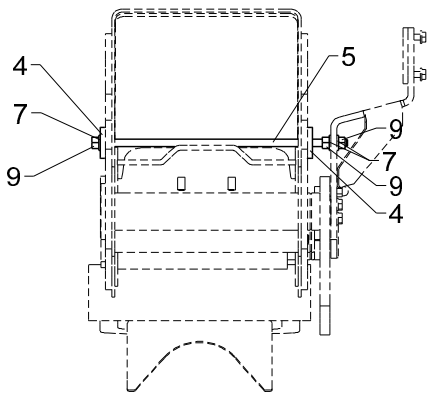

Hose reels (K7 - K8), 2 EXV.

Pos	Qty.	Part no.	Description	Remarks
		6345650	Hose reels (K7-K8), 2 EXV	
		6345670	Hose reels (K7-K8), 2 EXV	
1	1	6344751	Bracket for hose reel (K7/K8)	1800K / 2200K
2	1	6344752	Bracket for hose reel (K7/K8)	1810K / 2210K
3	1	47347	Rubber protection	360 mm
4	2	6344748	Spacer	
5	1	6344749	Threaded pin	
6	1	30451	Screw	MC10 x 20
7	4	32338	Washer	12 mm
8	1	30176	Set screw	M12 x 25
9	3	30860	Nut, stainless	M12
10	1	30902	Nut	M10
11	2	30155	Set screw	M10 x 25
12	6	31565	Washer, stainless	10 mm
13	1	6352024	Threaded plate	
14	4	30156	Set screw, stainless	M10 x 30
15	4	25127	Connection	P-GEV 12 LR-WD
16	4	0015020	Hose	
17	1	46587	Rubber protection	360 mm
18	1	56320	Hose reel, double	3/8" x 22000 mm
19	1	56335	Spring	
20	1	56481	Spring cover	
21	1	56314	Hose	
22	1	56482	Seal kit	

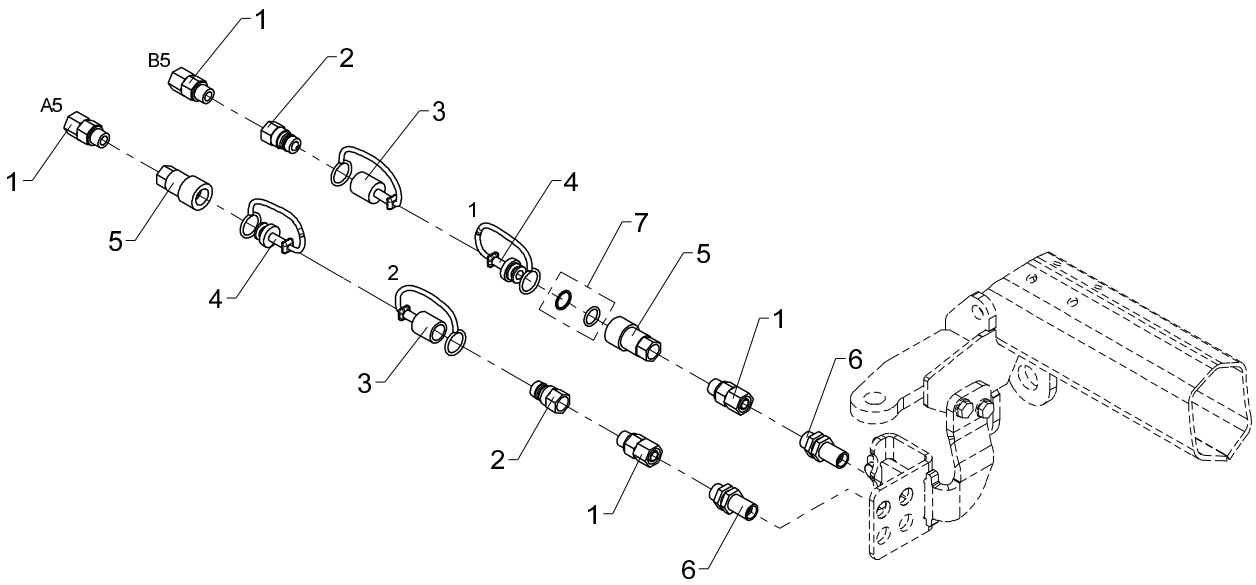
1
B5
2
3
A5
1
4
1
7
5
5
4
2
1
6
3
2
1
6

Kit, quick-release coupling for hose reel, (K7-K8), 1EXV

Pos	Qty.	Part no.	Description	Remarks
1	4	25240	Connection	EGESD 12 LR-WD
2	2	60620	Quick-release coupling,M	3/8"
3	2	60622	Dust cap, F	3/8"
4	2	60621	Dust cap, M	3/8"
5	2	60619	Quick-release coupling,F	3/8"
6	2	25201	Bulkhead connection	GSS 12 L
7	1	60635	Seal kit	

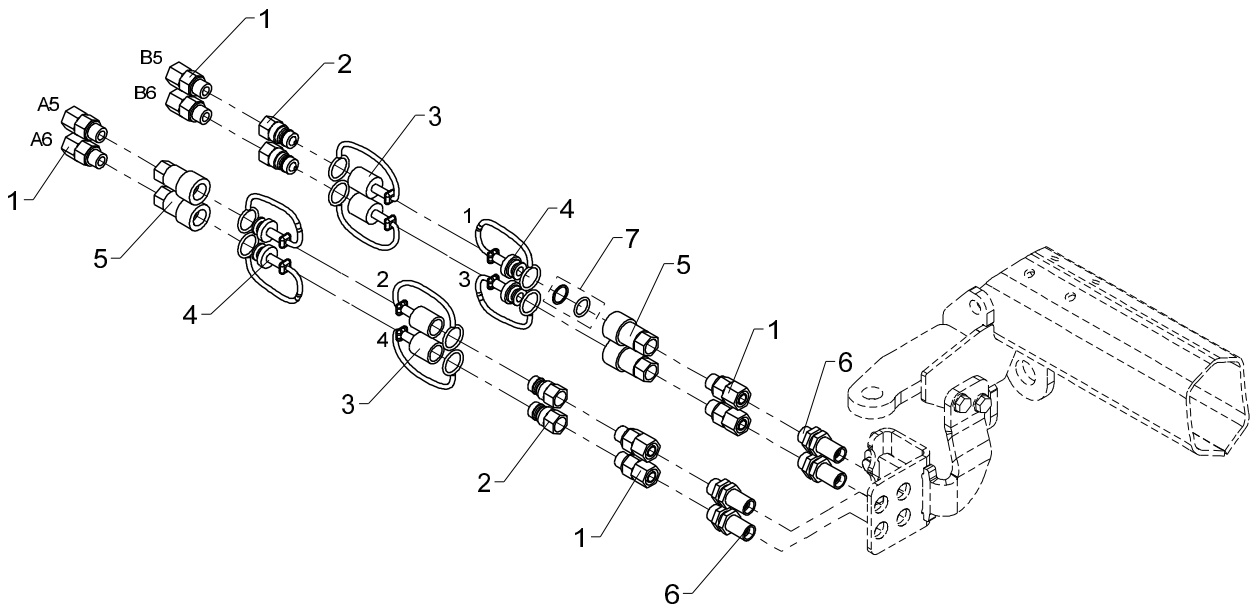
1
B5
2
B6
A5
3
A6
1
4
1
7
5
5
2
3
4
1
4
6
3
2
1
6

From loader 1070001
To loader

Created 15-09-2008
Modified

Kit, quick-release coupling for hose reel, (K7-K8) 2EXV

Pos	Qty.	Part no.	Description	Remarks
1	8	25240	Connection	EGESD 12 LR-WD
2	4	60620	Quick-release coupling,M	3/8"
3	4	60622	Dust cap, F	3/8"
4	4	60621	Dust cap, M	3/8"
5	4	60619	Quick-release coupling,F	3/8"
6	4	25201	Bulkhead connection	GSS 12 L
7	1	60635	Seal kit	

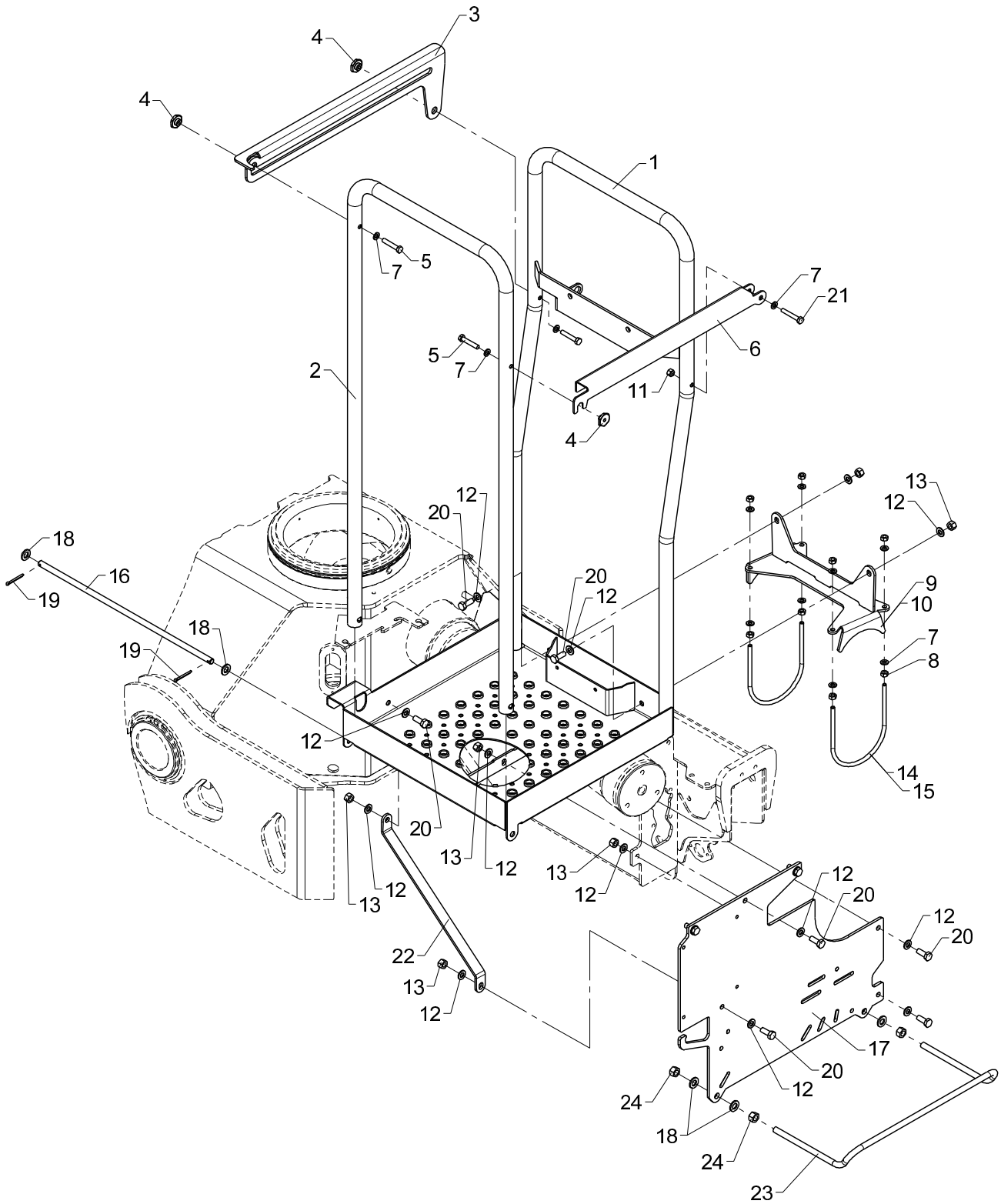
3
4
4
1
7
5
7
21
5
7
6
2
11
4
13
12
20
12
18
16
19
20
12
9
10
18
19
7
8
12
14
15
20
13
12
13
12
13
12
12
20
12
20
22
13
12
17
20
12
24
18
24
23

Obsolete

Stand-up controls, standard

535 10 010

From loader 1070001
To loader

Created 02-12-2008
Modified 24-04-2014

Pos	Qty.	Part no.	Description	Remarks
		6340470	Stand-up controls (standard)	1300K-1830K
		6344750	Stand-up controls (standard)	1800K-2630K + 1943Z/2243Z
1	1	6340461	Platform	
2	1	6340471	Safety guard	
3	1	6340474	Railing	
4	3	6340475	Nut	
5	3	31511	Set screw, stainless	M8 x 45
6	1	6340473	Railing	
7	12	31147	Face washer, 8 mm	8 mm
8	8	30856	Nut, stainless	M8
9	1	6340455	Mounting bracket	1300K-1830K
10	1	6344455	Mounting bracket	1800K-2630K + 1943Z/2243Z
11	1	30886	Lock nut, stainless	M8
12	18	31565	Washer, stainless	10 mm
13	9	31564	Lock nut, stainless	M10
14	2	6340458	Clamp	1300K-1830K
15	2	6344458	Clamp	1800K-2630K + 1943Z/2243Z
16	1	6340472	Pin	
17	1	6340459	Valve bracket	
18	6	32338	Washer	12 mm
19	2	31638	Split pin	ø4 x 40
20	9	31513	Set screw, stainless	M10 x 25
21	1	30139	Steel bolt, stainless	M8 x 50
22	1	6340469	Reinforcement plate	
23	1	6239973	Clamp	
24	4	30860	Nut, stainless	M12

18/129, 20/138, 22/153

63 44 750
Internal ref. 63 40 470

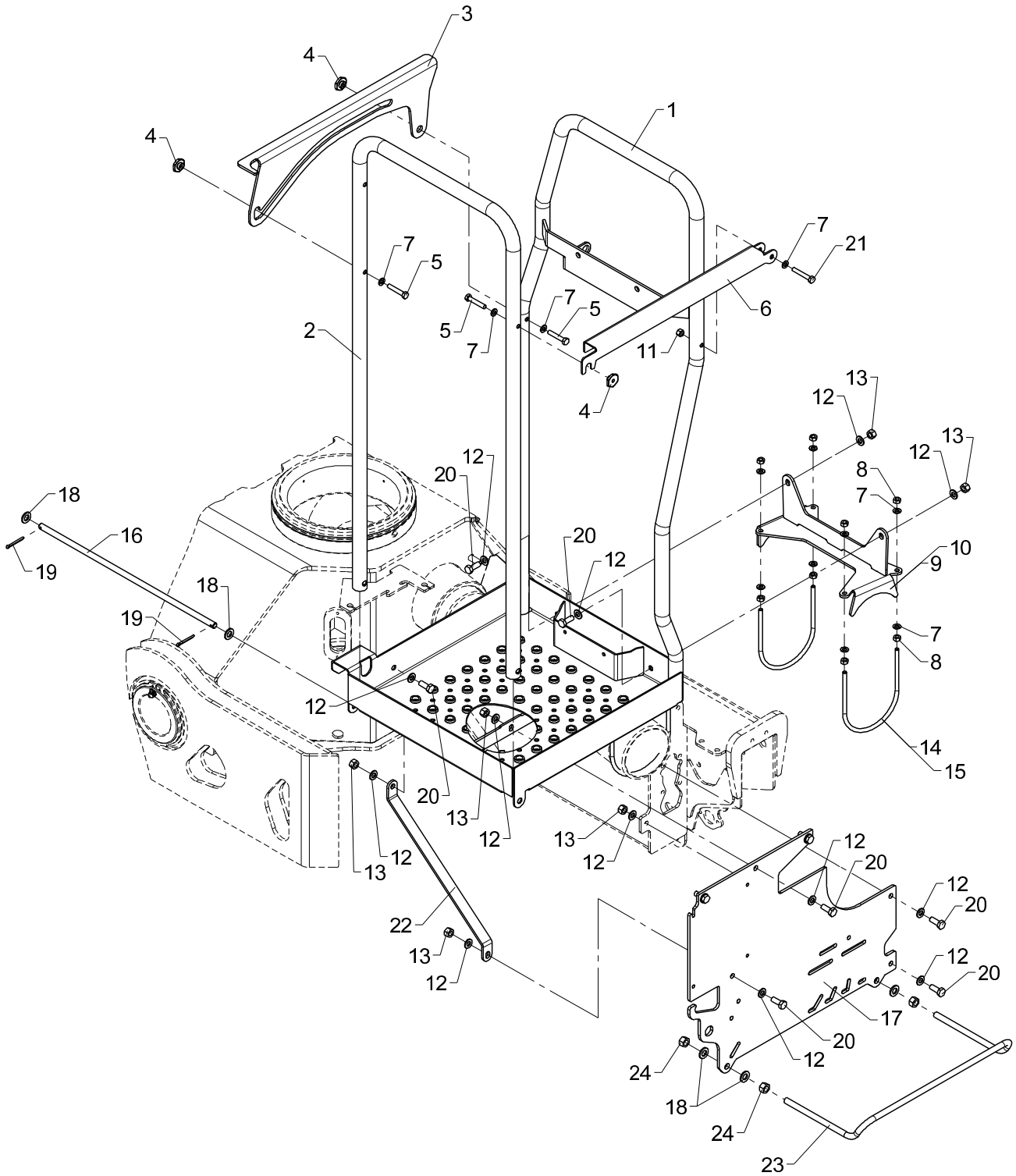

Stand-up controls, standard

Pos	Qty.	Part no.	Description	Remarks
		6340470	Stand-up controls (standard)	1300K-1830K
		6344750	Stand-up controls (standard)	1800K-2630K + 2243Z
1	1	6342461	Platform	
2	1	6340471	Safety guard	
3	1	6342474	Railing	
4	3	6340475	Nut	
5	3	31511	Set screw, stainless	M8 x 45
6	1	6340473	Railing	
7	12	31147	Face washer, 8 mm	8 mm
8	8	30856	Nut, stainless	M8
9	1	6340455	Mounting bracket	1300K-1830K
10	1	6344455	Mounting bracket	1800K-2630K + 2243Z
11	1	30886	Lock nut, stainless	M8
12	18	31565	Washer, stainless	10 mm
13	9	31564	Lock nut, stainless	M10
14	2	6340458	Clamp	1300K-1830K
15	2	6344458	Clamp	1800K-2630K + 2243Z
16	1	6340472	Pin	
17	1	6340459	Valve bracket	
18	6	32338	Washer	12 mm
19	2	31638	Split pin	ø4 x 40
20	9	31513	Set screw, stainless	M10 x 25
21	1	30139	Steel bolt, stainless	M8 x 50
22	1	6340469	Reinforcement plate	
23	1	6239973	Clamp	
24	4	30860	Nut, stainless	M12

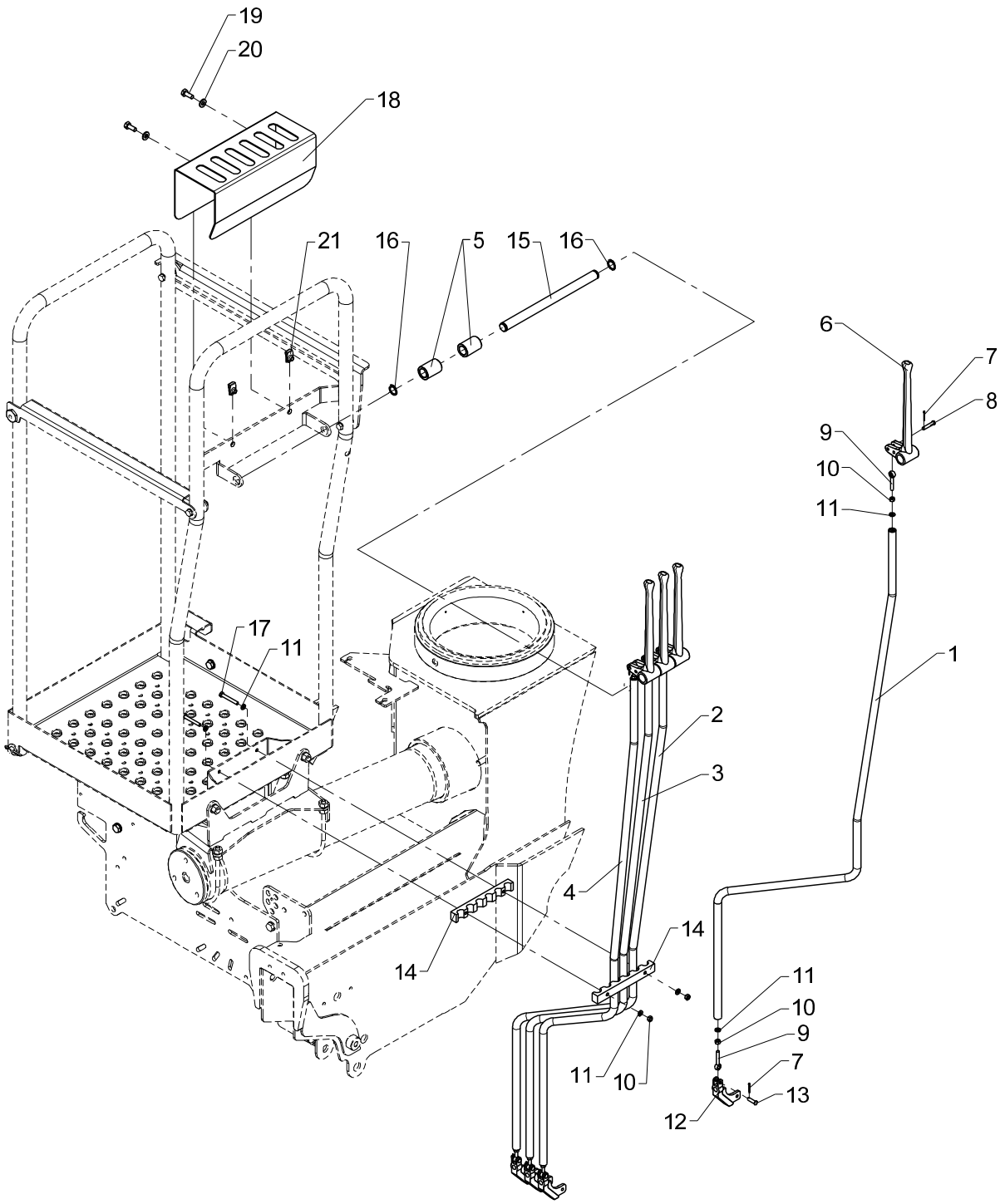
19
20
18
21
16
5
15
16
6
7
8
9
10
11
17
11
1
2
3
4
14
14
11
10
9
7
13
12
11
10

Rod control, HS std. - 4 functions

From loader 1070001
To loader
Created 11-02-2008
Modified

Pos	Qty.	Part no.	Description	Remarks
		6341450	Rod control, 4 functions	
1	1	6340481	Connecting rod (slew)	
2	1	6340482	Connecting rod (boom)	
3	1	6340483	Connecting rod (jib)	
4	1	6340484	Connecting rod (extension)	
5	2	64040	Nylon bushing	
6	4	63423	Lever for dual controls	
7	8	31601	Split pin, stainless	ø1,6 x 20
8	4	31274	Cotter bolt	ø6 x 30
9	8	32114	Pin	M6 x 40
10	10	30854	Nut, stainless	M6
11	12	32302	Face washer, stainless	6 mm
12	4	63499	Adapter	
13	4	31271	Cotter bolt	ø6 x 21
14	2	63599	Guide	
15	1	6660954	Pin for 5 levers	
16	2	33107	Circlip	19U
17	2	30118	Steel pin, stainless	M6 x 45
18	1	6340477	Protection	
19	2	30132	Set screw, stainless	M8 x 20
20	2	31754	Washer	8,4 x 18 x 2
21	2	31069	Clip	M8 1,5 - 5,5 mm.

18/129, 20/138, 22/153

Internal ref. 63 41 460

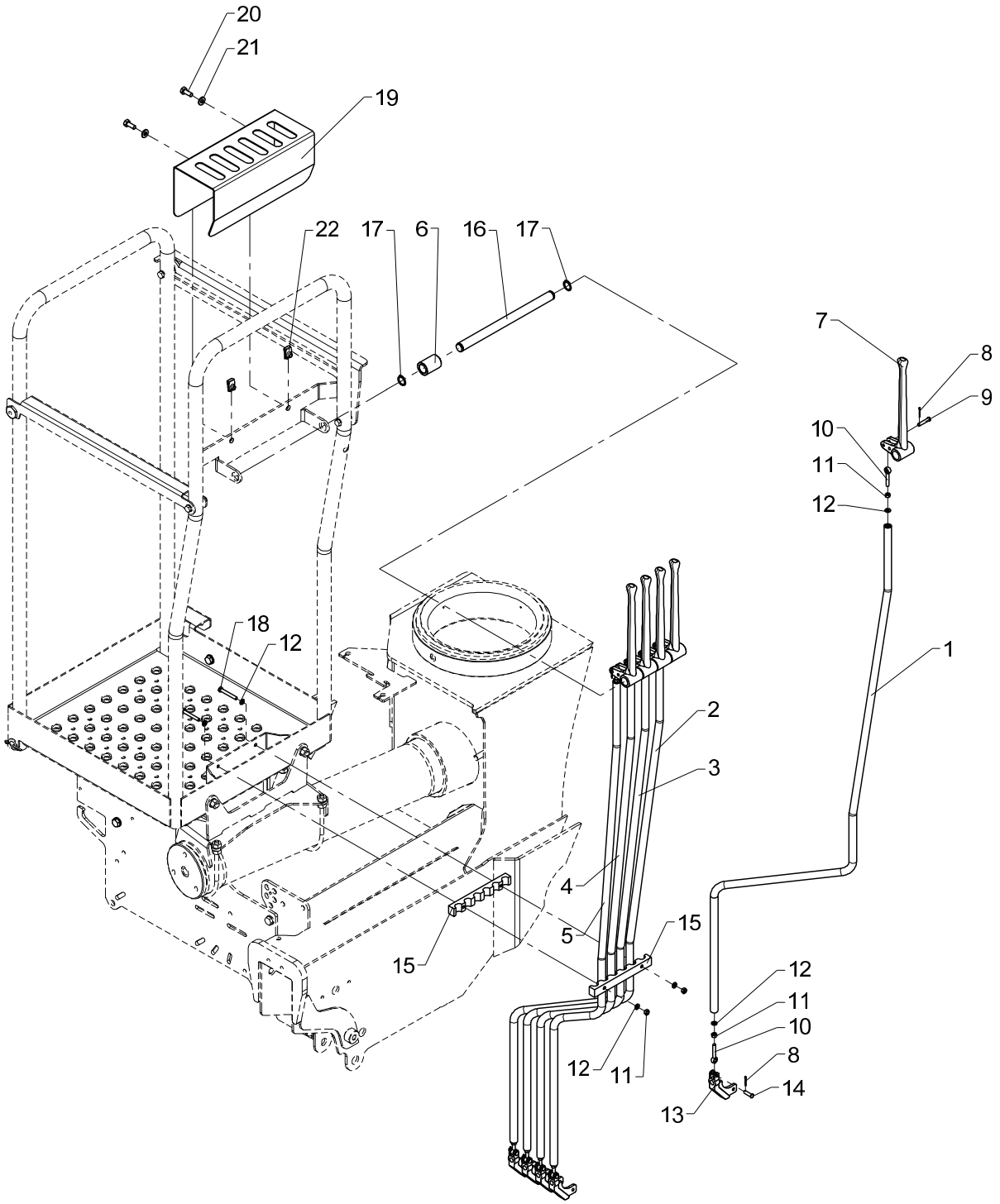

Rod control, HS std. - 5 functions

Pos	Qty.	Part no.	Description	Remarks
		6341460	Rod control	
1	1	6340481	Connecting rod (slew)	
2	1	6340482	Connecting rod (boom)	
3	1	6340483	Connecting rod (jib)	
4	1	6340484	Connecting rod (extension)	
5	1	6340485	Connecting rod (1 EXV)	
6	1	64040	Nylon bushing	
7	5	63423	Lever for dual controls	
8	10	31601	Split pin, stainless	ø1,6 x 20
9	5	31274	Cotter bolt	ø6 x 30
10	10	32114	Pin	M6 x 40
11	12	30854	Nut, stainless	M6
12	14	32302	Face washer, stainless	6 mm
13	5	63499	Adapter	
14	5	31271	Cotter bolt	ø6 x 21
15	2	63599	Guide	
16	1	6660954	Pin for 5 levers	
17	2	33107	Circlip	19U
18	2	30118	Steel pin, stainless	M6 x 45
19	1	6340477	Protection	
20	2	30132	Set screw, stainless	M8 x 20
21	2	31754	Washer	8,4 x 18 x 2
22	2	31069	Clip	M8 1,5 - 5,5 mm.

18/129, 20/138, 22/153

Internal ref. 63 40 480

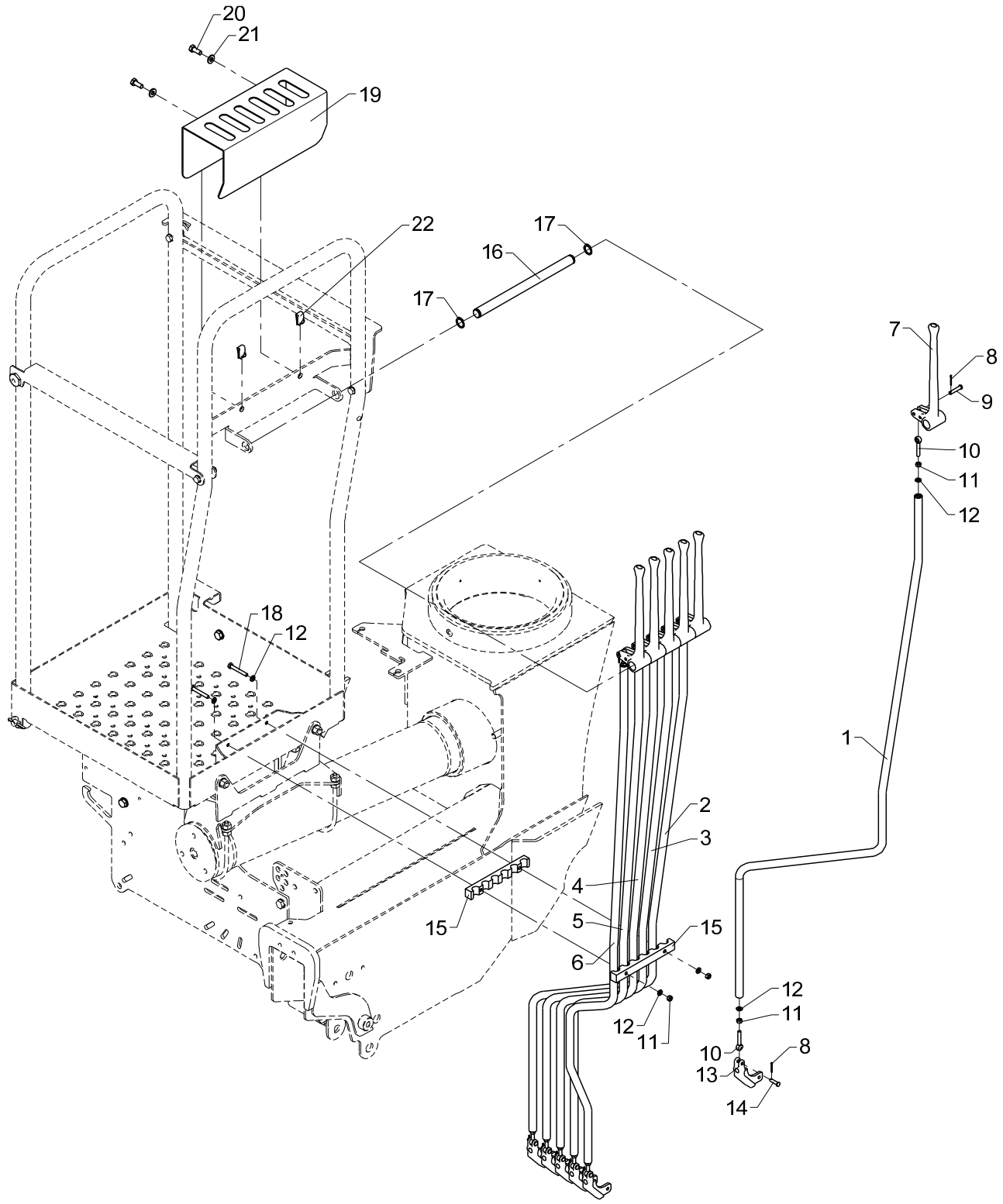

Rod control, HS std. - 6 functions

Pos	Qty.	Part no.	Description	Remarks
		6340480	Rod control 6 functions	
1	1	6340481	Connecting rod (slew)	
2	1	6340482	Connecting rod (boom)	
3	1	6340483	Connecting rod (jib)	
4	1	6340484	Connecting rod (extension)	
5	1	6340485	Connecting rod (1 EXV)	
6	1	6340486	Connecting rod (2 EXV)	
7	6	63423	Lever for dual controls	
8	12	31601	Split pin, stainless	ø1,6 x 20
9	6	31274	Cotter bolt	ø6 x 30
10	12	32114	Pin	M6 x 40
11	14	30854	Nut, stainless	M6
12	16	32302	Face washer, stainless	6 mm
13	6	63499	Adapter	
14	6	31271	Cotter bolt	ø6 x 21
15	2	63599	Guide	
16	1	6660954	Pin for 5 levers	
17	2	33107	Circlip	19U
18	2	30118	Steel pin, stainless	M6 x 45
19	1	6340477	Protection	
20	2	30132	Set screw, stainless	M8 x 20
21	2	31754	Washer	8,4 x 18 x 2
22	2	31069	Clip	M8 1,5 - 5,5 mm.

18/129, 20/138, 22/153

Internal ref. 63 40 490

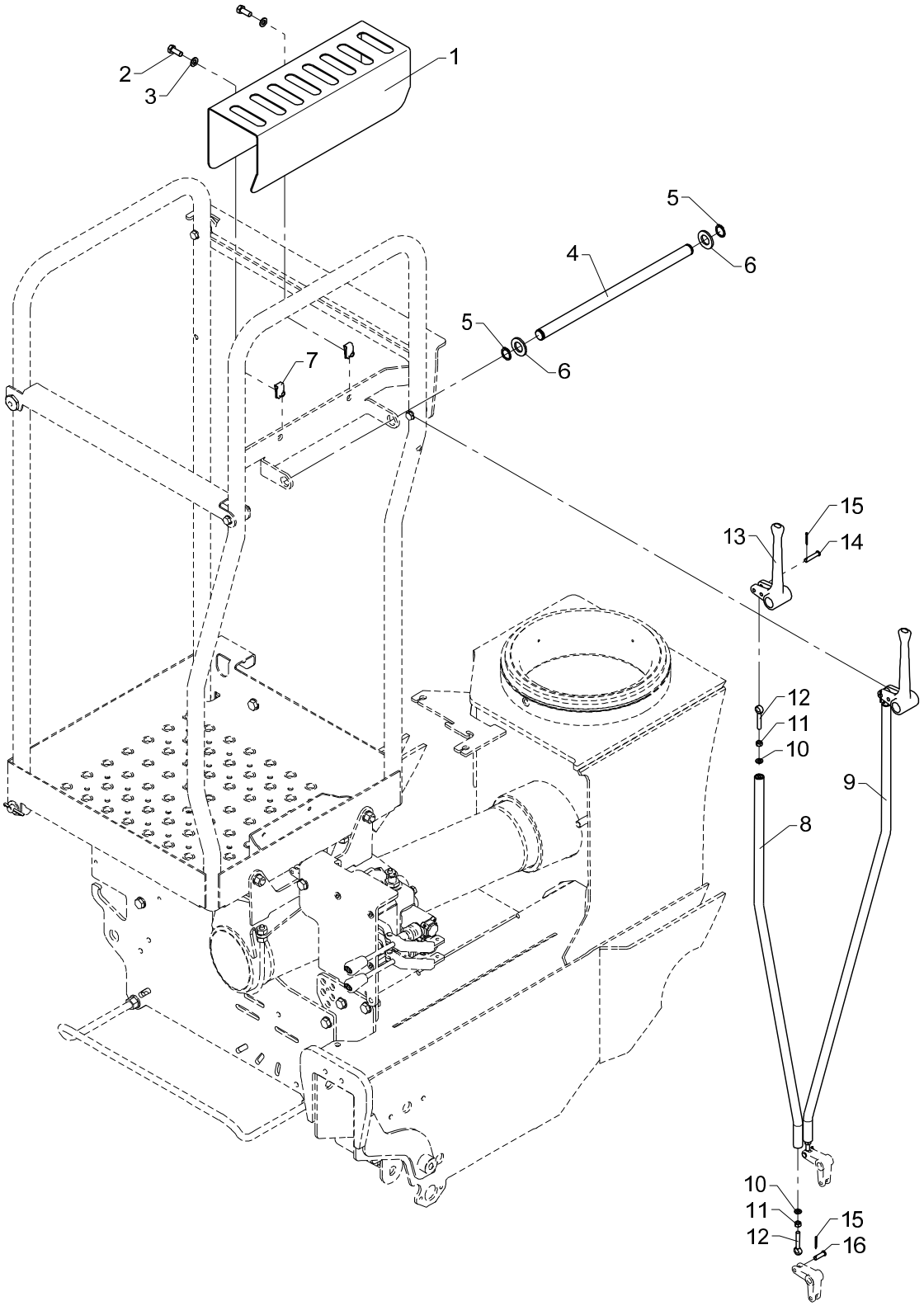

Stabilizer operation, HS std. - 2/4 fcts.

Pos	Qty.	Part no.	Description	Remarks
1	1	6340478	Protection	
2	2	30132	Set screw, stainless	M8 x 20
3	2	31147	Face washer, 8 mm	8 mm
4	1	6340476	Pin	
5	2	33107	Circlip	19U
6	2	31132	Washer	18 mm
7	2	31069	Clip	M8 1,5 - 5,5 mm.
8	1	6340487	Connecting rod, (stab.right)	
9	1	6340488	Connecting rod, (stab.left)	
10	4	32302	Face washer, stainless	6 mm
11	4	30854	Nut, stainless	M6
12	4	32114	Pin	M6 x 40
13	2	63422	Lever for dual controls	
14	2	31274	Cotter bolt	ø6 x 30
15	4	31601	Split pin, stainless	ø1,6 x 20
16	2	31271	Cotter bolt	ø6 x 21

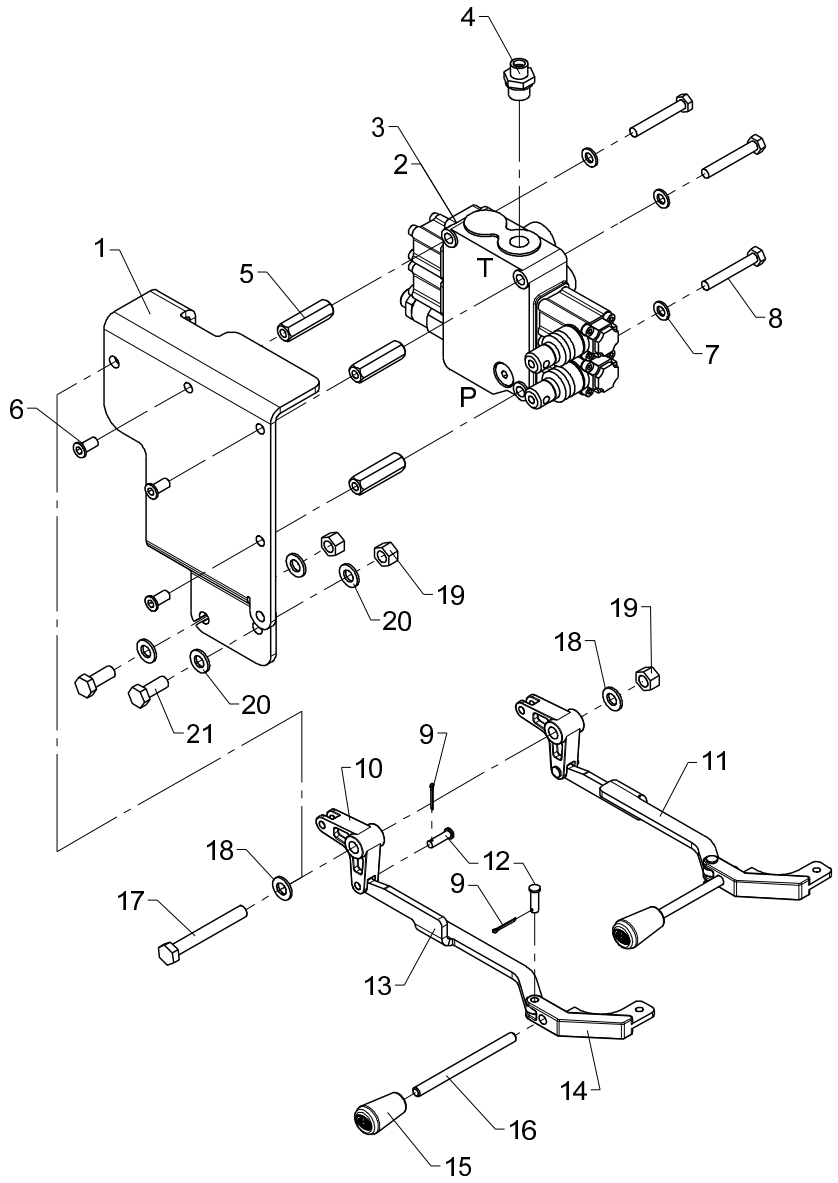
4
3
2
1
5
T
8
7
6
P
19
20
19
18
20
21
9
10
11
18
12
9
17
13
14
16
15

Valve bracket - HS 2 fcts./4 fcts. (oper. from HS)

Pos	Qty.	Part no.	Description	Remarks
		6341650	Valve bracket, HS 2 functions	
		6341660	Valve bracket, HS 4 functions	
1	1	6340492	Valve bracket (HS)	
2	1	55225	Stabilizer valve	HC-M50/2 PB 48926
3	1	55226	Stabilizer valve	HC-M50/4 PB-4 sekt 48925
4	1	25244	Connection	GES 8 LR 3/8-WD
5	3	6340222	Spacer	
6	3	32481	Screw	MCL8 x 16
7	3	31147	Face washer, 8 mm	8 mm
8	3	30140	Steel bolt, stainless	M8 x 55
9	4	31601	Split pin, stainless	ø1,6 x 20
10	2	63479	Bracket	
11	1	6340491	Link	
12	4	31271	Cotter bolt	
13	1	6340489	Link	
14	2	63478	Adapter	
15	2	59224	Knob for lever	
16	2	1330187	Control lever, long, straight	
17	1	30163	Steel bolt	M10 x 80
18	2	31565	Washer, stainless	10 mm
19	3	31564	Lock nut, stainless	M10
20	4	31177	Washer	10 mm
21	2	31513	Set screw, stainless	M10 x 25

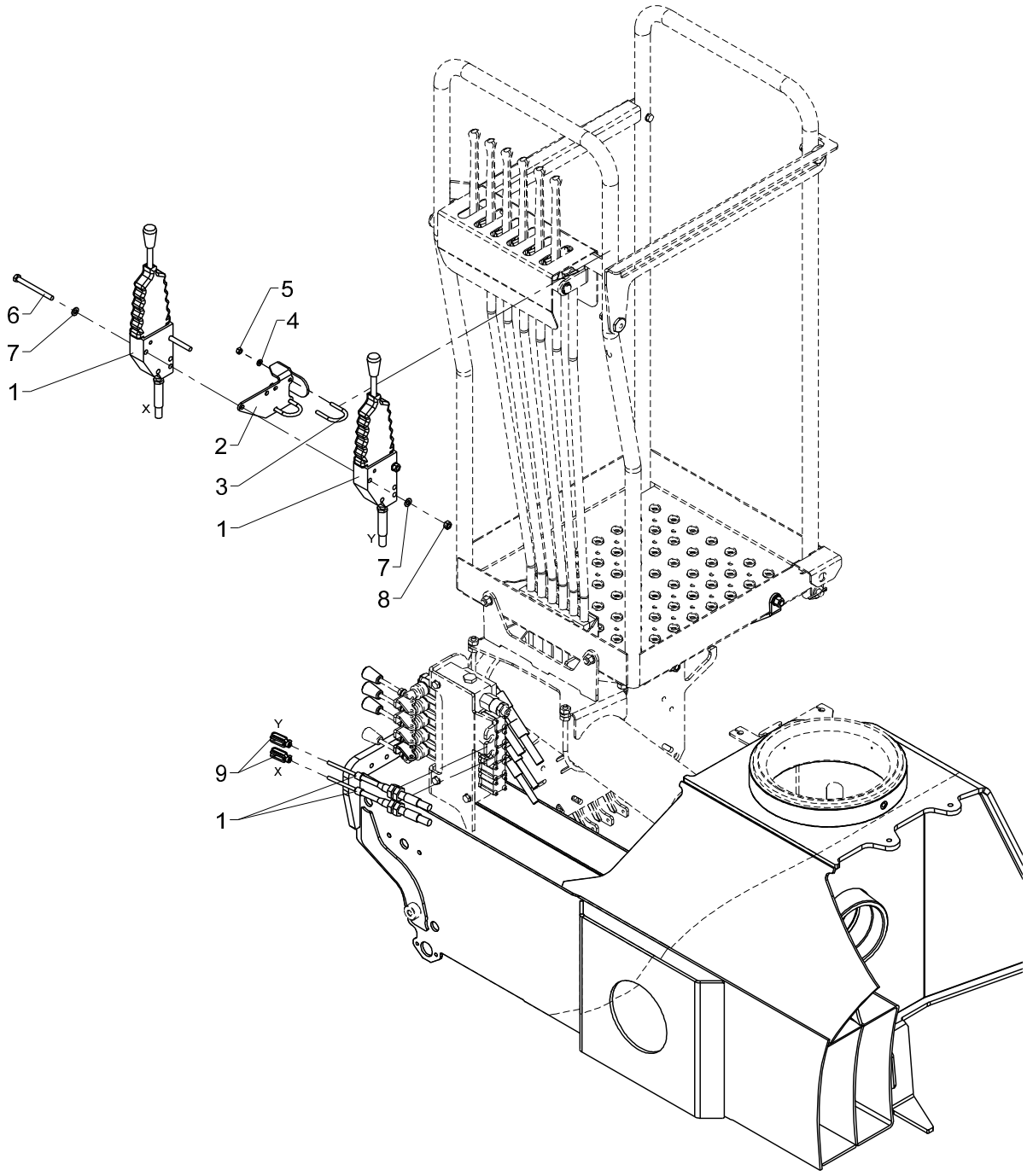
6
7
1
X
5
4
2
3
1
Y
7
8
9
Y
X
1

Stabilizer operation, HS std. - 4 fcts. + 4 available fcts.

Pos	Qty.	Part no.	Description	Remarks
1	2	48465	Push-pull cable incl. lever	1500 mm
2	1	6340499	Fittings	
3	2	6340903	Clamp	
4	4	32302	Face washer, stainless	6 mm
5	4	30854	Nut, stainless	M6
6	2	30144	Steel bolt, stainless	M8 x 90
7	4	31147	Face washer, 8 mm	8 mm
8	2	30856	Nut, stainless	M8
9	2	48414	Clevis	

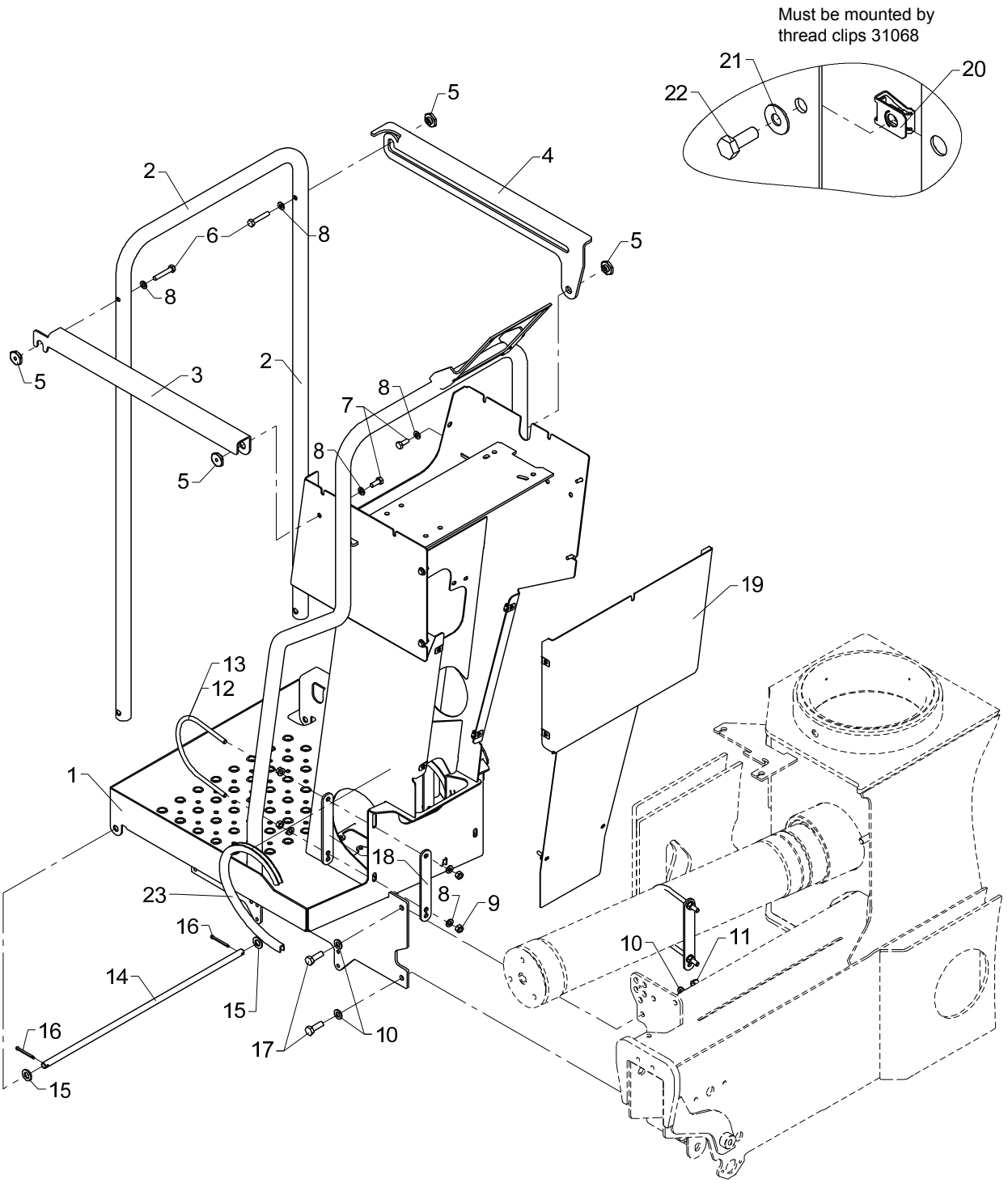
Must be mounted by
thread clips 31068
21
20
22
5
4
2
6
8
8
5
5
3
2
8
7
8
5
19
13
12
1
18
23
8
9
16
10
11
14
15
16
10
17
15

Obsolete

Stand-up controls, direct valve control

535 10 200

From loader 1070001
To loader

Created 12-01-2010
Modified 31-10-2013

Pos	Qty.	Part no.	Description	Remarks
		6341470	Stand-up control - direct ctrl	
		6345470	Stand-up control - direct ctrl	
1	1	6340851	Platform	
2	1	6340865	Safety guard	
3	1	6340867	Railing	
4	1	6340868	Railing	
5	4	6340475	Nut	
6	2	31511	Set screw, stainless	M8 x 45
7	2	30132	Set screw, stainless	M8 x 20
8	12	31147	Face washer, 8 mm	8 mm
9	8	30856	Nut, stainless	M8
10	4	31565	Washer, stainless	10 mm
11	2	31564	Lock nut, stainless	M10
12	2	6340878	Clamp	Serie 1300/1500
13	2	6344878	Clamp	Serie 1800/2200
14	1	6340866	Pin	
15	2	32338	Washer	12 mm
16	2	31638	Split pin	ø4 x 40
17	2	30156	Set screw, stainless	M10 x 30
18	4	6340864	Division plate	
19	1	6340869	End plate	
20	8	31068	Clip	M6 0,5 - 4,0 mm.
21	8	32306	Washer	6 mm
22	8	30112	Set screw, stainless	M6 x 16
23	2	22122	PVC protection	410 mm

18/129, 20/138, 22/153

63 46 640
Internal ref. 63 43 640

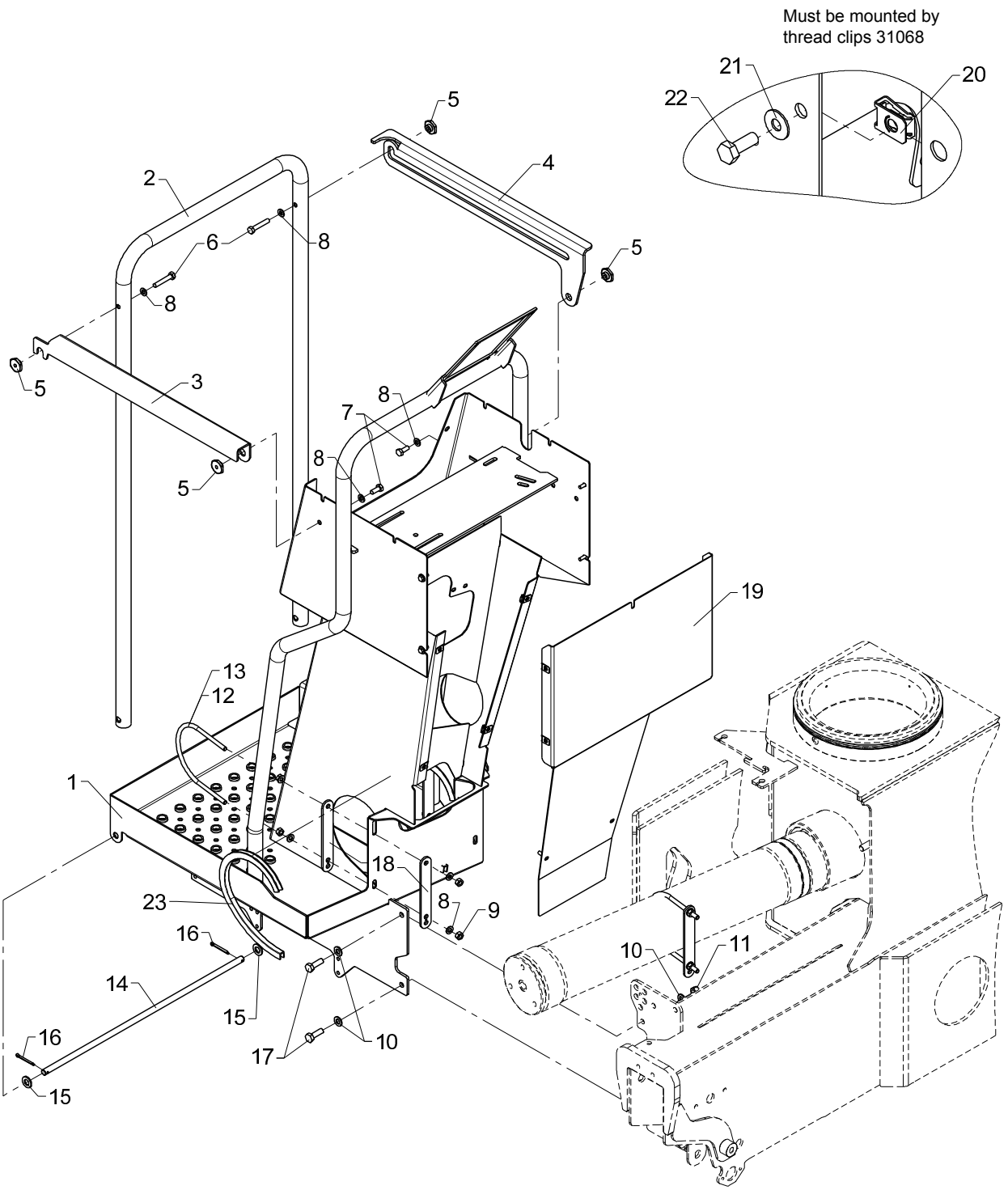

Stand-up controls, direct valve control

Pos	Qty.	Part no.	Description	Remarks
		6343640	Stand-up control - direct ctrl	Serie 1300/1500
		6346640	Stand-up control - direct ctrl	Serie 1800/2200/1943Z
1	1	6341851	Platform	
2	1	6340865	Safety guard	
3	1	6340867	Railing	
4	1	6340868	Railing	
5	4	6340475	Nut	
6	2	31511	Set screw, stainless	M8 x 45
7	2	30132	Set screw, stainless	
8	12	31147	Face washer, 8 mm	
9	8	30856	Nut, stainless	M8
10	4	31565	Washer, stainless	10 mm
11	2	31564	Lock nut, stainless	M10
12	2	6340878	Clamp	Serie 1300/1500
13	2	6344878	Clamp	Serie 1800/2200
14	1	6340866	Pin	
15	2	32338	Washer	12 mm
16	2	31638	Split pin	ø4 x 40
17	2	30156	Set screw, stainless	M10 x 30
18	4	6340864	Division plate	
19	1	6341869	End plate	
20	8	31068	Clip	M6 0,5 - 4,0 mm.
21	8	32306	Washer	6 mm
22	8	30112	Set screw, stainless	M6 x 16
23	2	22122	PVC protection	410 mm

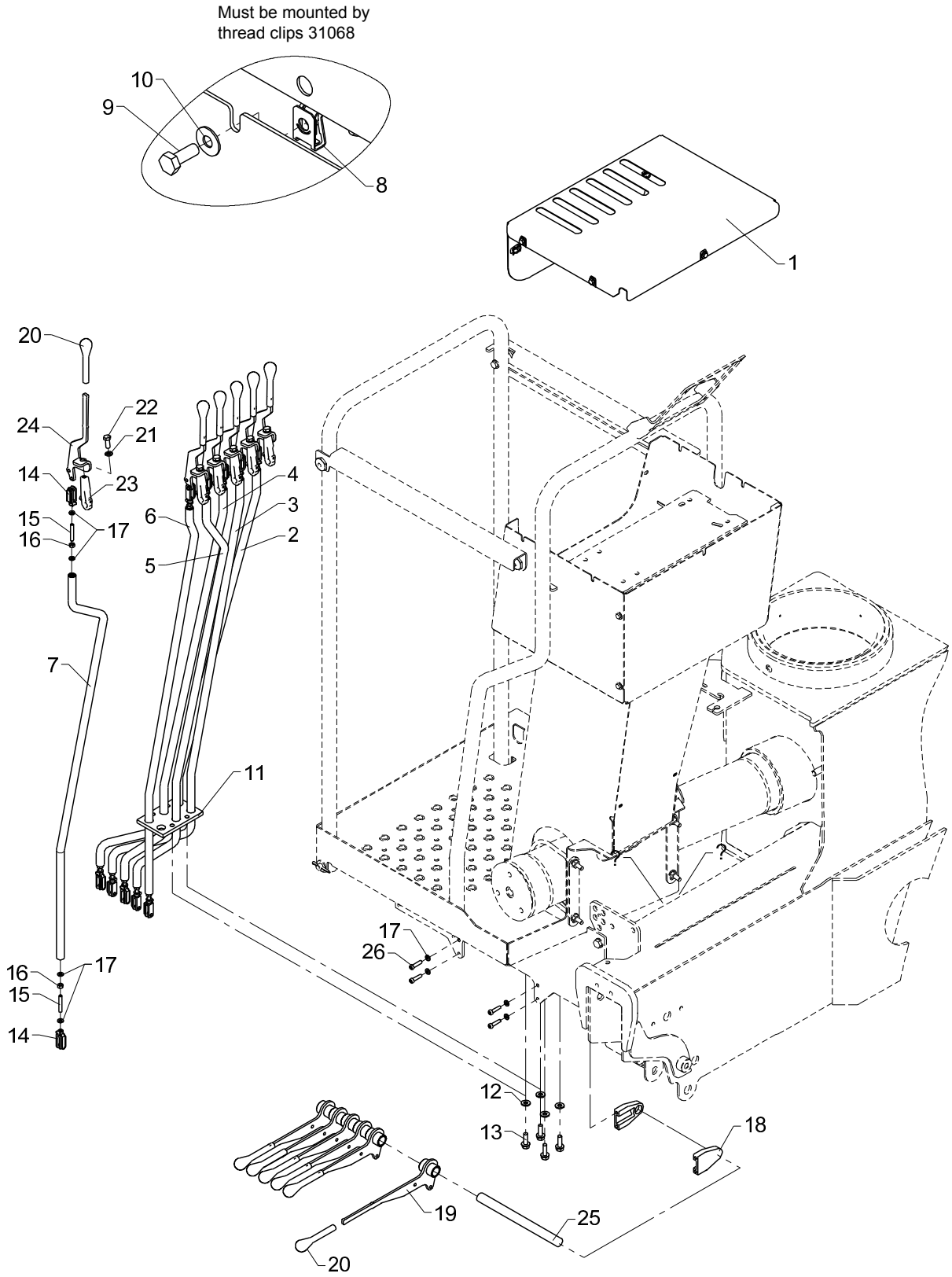
Must be mounted by
thread clips 31068
10
9
8
1
20
22
24
21
14
23
15
16
17
6
4
3
2
5
7
11
16
17
15
14
17
26
12
13
18
19
25
20

Obsolete

Rod control, HS, direct valve control (Danfoss)

535 10 210

From loader 1070001
To loader

Created 12-01-2010
Modified 31-10-2013

Pos	Qty.	Part no.	Description	Remarks
1	1	6340871	Protection plate (Danfoss)	
2	1	6340891	Connecting rod (slew)	
3	1	6340892	Connecting rod (boom)	
4	1	6340893	Connecting rod (jib)	
5	1	6340894	Connecting rod (extension)	
6	1	6340895	Connecting rod (EXV1)	
7	1	6340896	Connecting rod (EXV2)	
8	7	31068	Clip	M6 0,5 - 4,0 mm.
9	7	30112	Set screw, stainless	M6 x 16
10	7	32306	Washer	6 mm
11	1	64412	Guide	
12	4	31754	Washer	8,4 x 18 x 2
13	4	30996	Screw	M8 x 25
14	12	48414	Clevis	
15	12	31007	Pointed screw	MSP6 x 40
16	12	30854	Nut, stainless	M6
17	28	32302	Face washer, stainless	6 mm
18	2	63564	Bracket for pin	
19	6	6340875	Lever	
20	12	48406	Knob	
21	6	31155	Spring washer	8 mm
22	6	30132	Set screw, stainless	M8 x 20
23	6	59682	Foot for lever	
24	6	6306159	Control lever	
25	1	6340249	Pin	
26	4	30340	Screw, stainless	6,0 x 25

18/129, 20/138, 22/153

Internal ref. 63 43 650

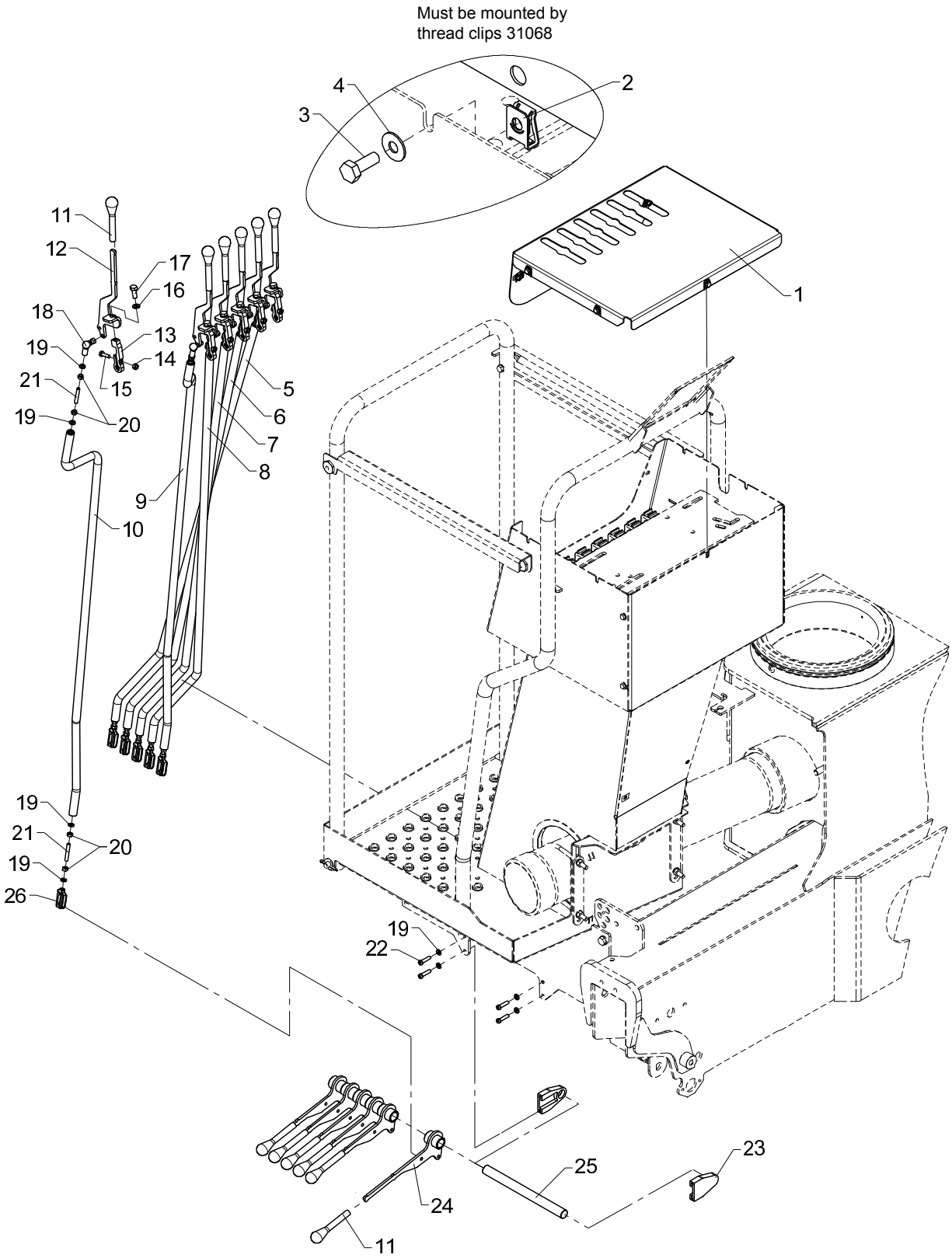

Rod control, HS, direct valve control (Danfoss)

Pos	Qty.	Part no.	Description	Remarks
1	1	6341861	Protection plate (Danfoss)	
2	7	31068	Clip	M6 0,5 - 4,0 mm.
3	7	30112	Set screw, stainless	M6 x 16
4	7	32306	Washer	6 mm
5	1	6341891	Connecting rod (slew - Danfoss	
6	1	6341892	Connecting rod (boom)	
7	1	6341893	Connecting rod (jib)	
8	1	6341894	Connecting rod (ext.Danfoss)	
9	1	6341895	Connecting rod (1EXV-Danfoss	
10	1	6341896	Connecting rod (2EXV-Danfoss	
11	12	48406	Knob	
12	6	6306159	Control lever	
13	6	6344475	Foot for lever	
14	6	30884	Lock nut, stainless	M6
15	6	30113	Set screw, stainless	M6 x 20
16	6	31155	Spring washer	8 mm
17	6	30132	Set screw, stainless	
18	6	24105	Toggle joint	
19	28	32302	Face washer, stainless	6 mm
20	24	30854	Nut, stainless	M6
21	12	31007	Pointed screw	MSP6 x 40
22	4	30340	Screw, stainless	6,0 x 25
23	2	63564	Bracket for pin	
24	6	6340875	Lever	
25	1	6340249	Pin	
26	6	48414	Clevis	

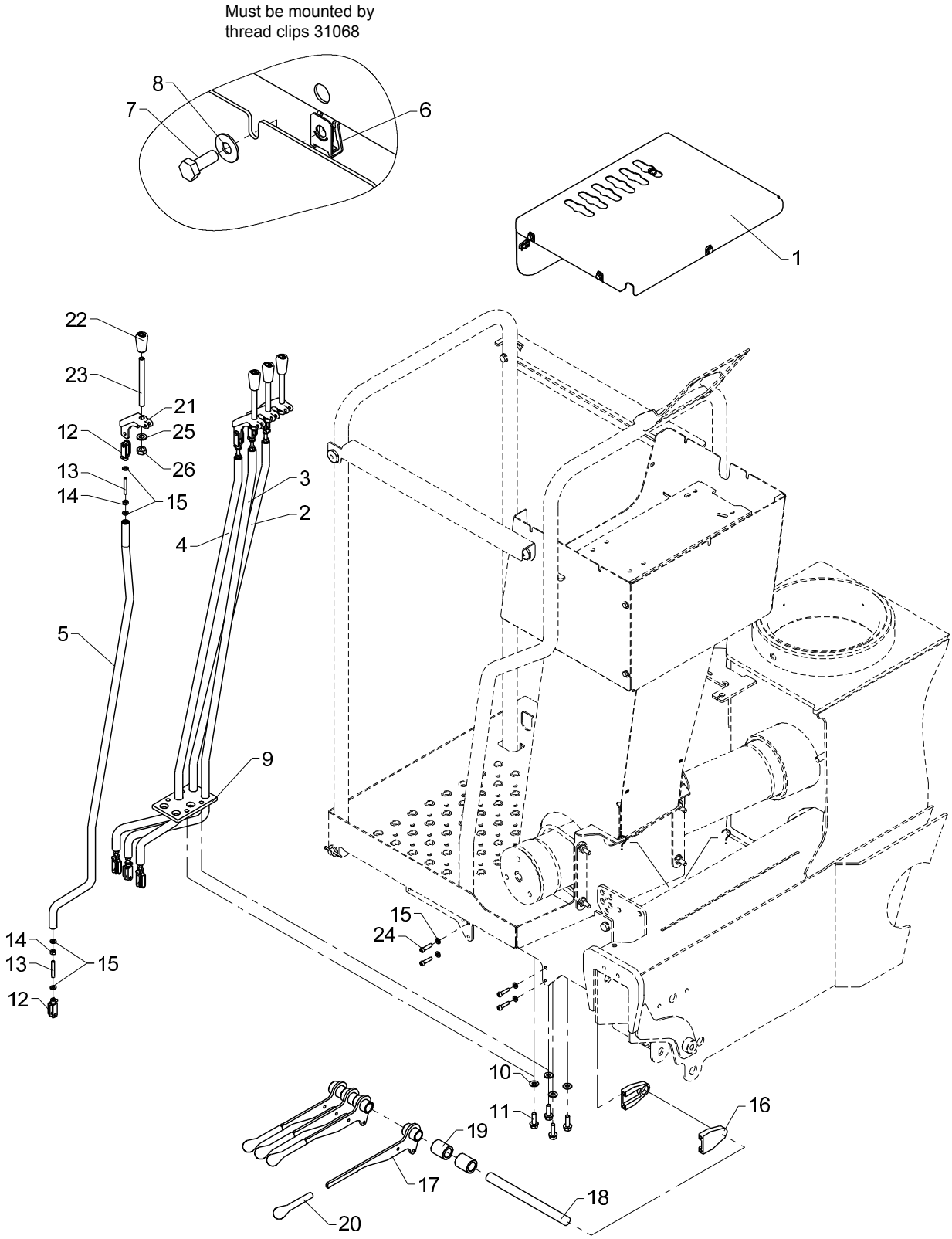
Must be mounted by
thread clips 31068
8
7
6
1
22
23
21
12
25
26
13
14
15
3
2
4
5
9
14
13
15
12
15
24
10
11
19
16
17
18
20

Obsolete

Rod control, HS, direct valve control (Hydrocontrol) - 4 fcts.

535 10 220

From loader 1070001
To loader

Created 12-01-2010
Modified

Pos	Qty.	Part no.	Description	Remarks
1	1	6340872	Protection plate (HC - 1 circ.	
2	1	6340881	Connecting rod (slew-HC)	
3	1	6340882	Connecting rod (boom-HC)	
4	1	6340883	Connecting rod (jib-HC)	
5	1	6340884	Connecting rod (extension-HC)	
6	7	31068	Clip	M6 0,5 - 4,0 mm.
7	7	30112	Set screw, stainless	M6 x 16
8	7	32306	Washer	6 mm
9	1	64412	Guide	
10	4	31754	Washer	8,4 x 18 x 2
11	4	30996	Screw	M8 x 25
12	8	48414	Clevis	
13	8	31007	Pointed screw	MSP6 x 40
14	8	30854	Nut, stainless	M6
15	20	32302	Face washer, stainless	6 mm
16	2	63564	Bracket for pin	
17	4	6340875	Lever	
18	1	6340249	Pin	
19	2	63598	Bushing	ø30/20x35
20	4	48406	Knob	
21	4	63499	Adapter	
22	4	64411	Knob for lever	
23	4	6340245	Control valve lever	
24	4	30340	Screw, stainless	6,0 x 25
25	4	31177	Washer	10 mm
26	4	30858	Nut	M10

18/129, 20/138, 22/153

Internal ref. 63 43 660

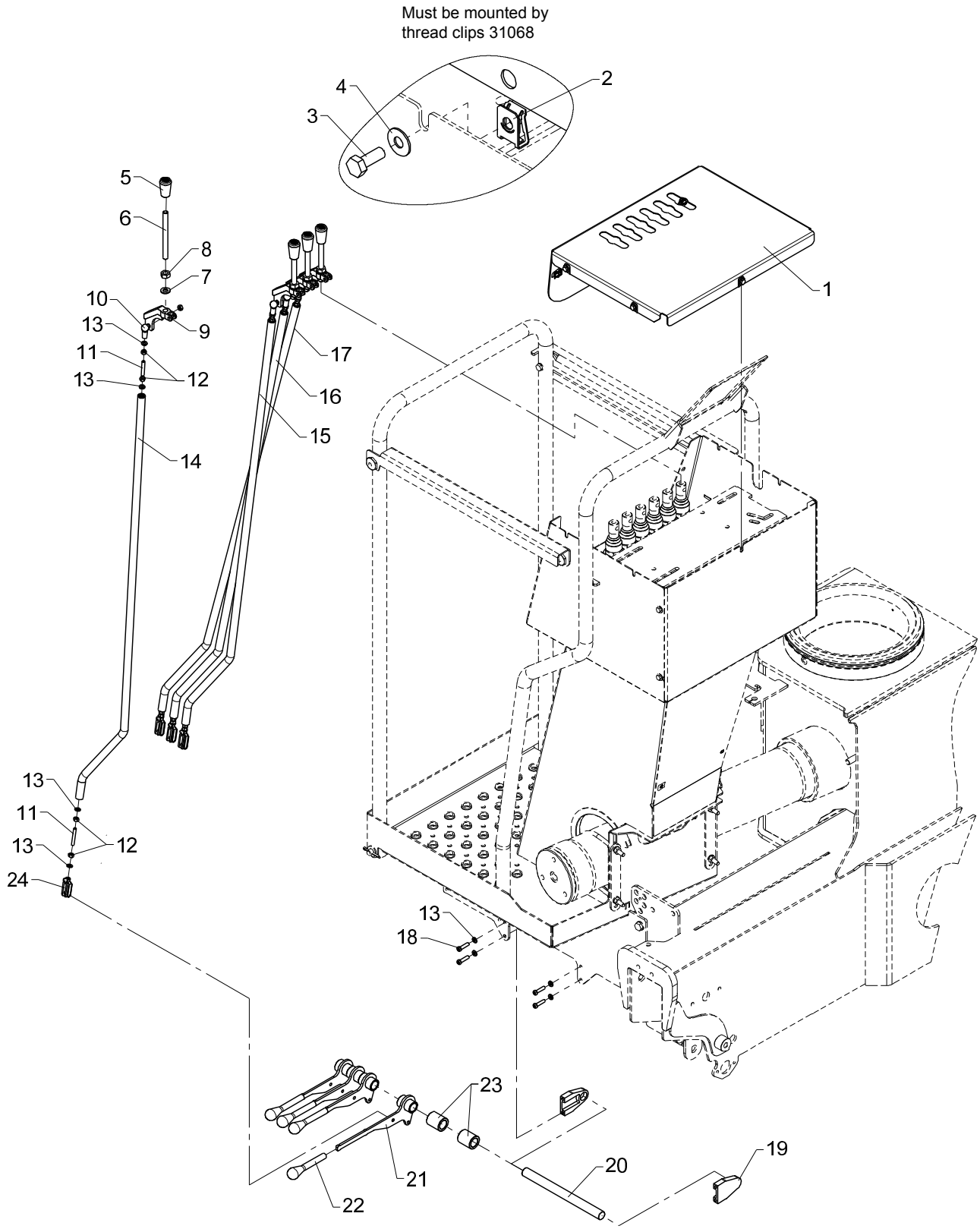

Rod control, HS, direct valve control (Hydrocontrol) - 4 fcts.

Pos	Qty.	Part no.	Description	Remarks
1	1	6341862	Protection plate (HC-1 circ.)	
2	7	31068	Clip	M6 0,5 - 4,0 mm.
3	7	30112	Set screw, stainless	M6 x 16
4	7	32306	Washer	6 mm
5	4	64411	Knob for lever	
6	4	6340245	Control valve lever	
7	4	31177	Washer	10 mm
8	4	30858	Nut	M10
9	4	63499	Adapter	
10	4	24105	Toggle joint	
11	8	31007	Pointed screw	MSP6 x 40
12	16	30854	Nut, stainless	M6
13	20	32302	Face washer, stainless	6 mm
14	1	6341884	Connecting rod (extensionHC)	
15	1	6341883	Connecting rod (jib HC)	
16	1	6341882	Connecting rod (boom HC)	
17	1	6341881	Connecting rod (slew HC)	
18	4	30340	Screw, stainless	6,0 x 25
19	2	63564	Bracket for pin	
20	1	6340249	Pin	
21	4	6340875	Lever	
22	4	48406	Knob	
23	2	63598	Bushing	ø30/ø20 x 35
24	4	48414	Clevis	

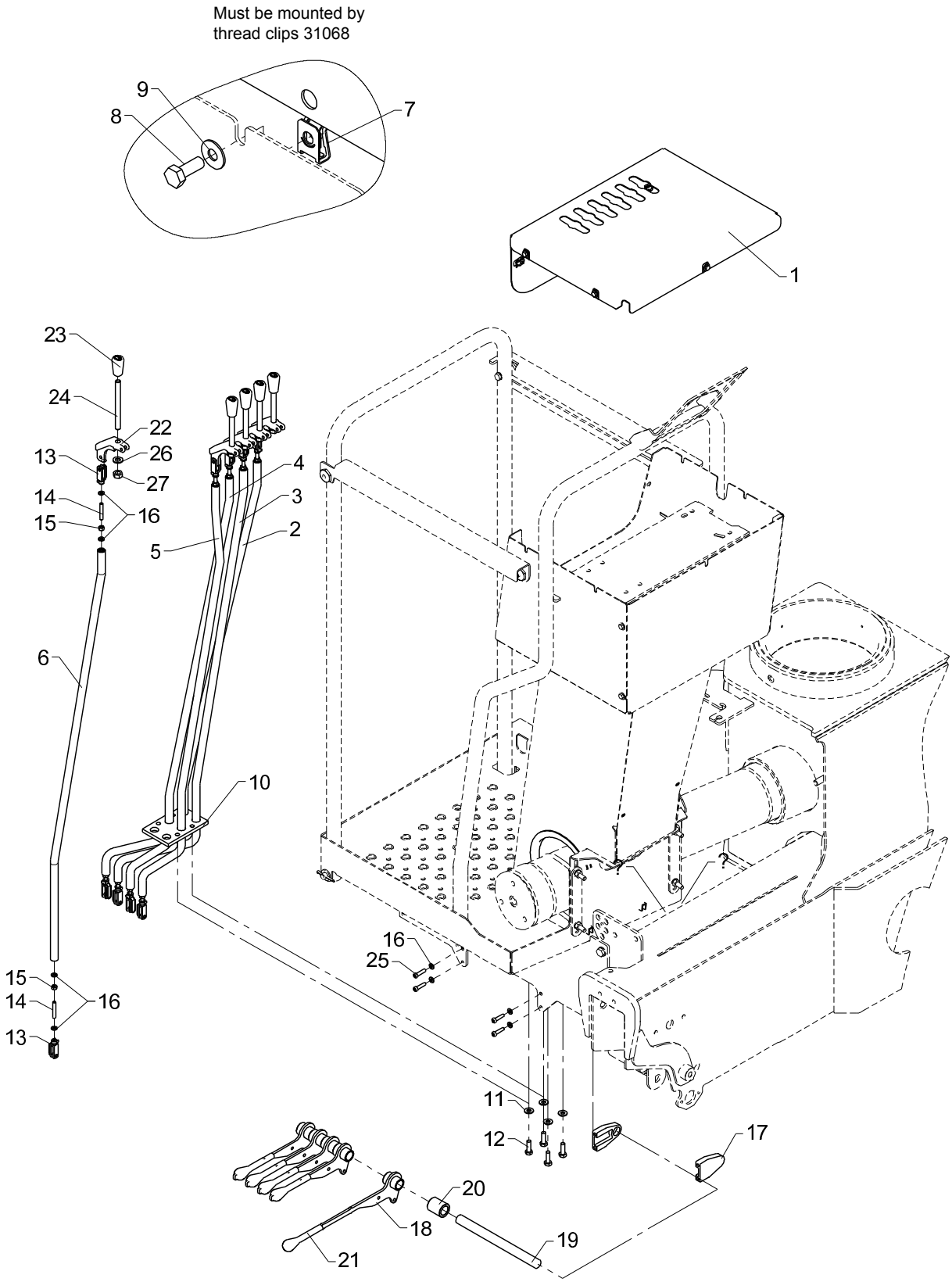
Must be mounted by
thread clips 31068
9
8
7
1
23
24
22
13
26
27
14
16
15
5
4
3
2
6
10
15
14
16
13
16
25
11
12
17
20
18
19
21

Obsolete

535 10 230

From loader 1070001
To loader

Created 12-01-2010
Modified

Rod control, HS, direct valve control (Hydrocontrol) - 5 fcts.

Pos	Qty.	Part no.	Description	Remarks
1	1	6340872	Protection plate (HC - 1 circ.	
2	1	6340881	Connecting rod (slew-HC)	
3	1	6340882	Connecting rod (boom-HC)	
4	1	6340883	Connecting rod (jib-HC)	
5	1	6340884	Connecting rod (extension-HC)	
6	1	6340885	Connecting rod (EXV1-HC)	
7	7	31068	Clip	M6 0,5 - 4,0 mm.
8	7	30112	Set screw, stainless	M6 x 16
9	7	32306	Washer	6 mm
10	1	64412	Guide	
11	4	31754	Washer	8,4 x 18 x 2
12	4	30996	Screw	M8 x 25
13	10	48414	Clevis	
14	10	31007	Pointed screw	MSP6 x 40
15	10	30854	Nut, stainless	M6
16	24	32302	Face washer, stainless	6 mm
17	2	63564	Bracket for pin	
18	5	6340875	Lever	
19	1	6340249	Pin	
20	1	63598	Bushing	ø30/20x35
21	5	48406	Knob	
22	5	63499	Adapter	
23	5	64411	Knob for lever	
24	5	6340245	Control valve lever	
25	4	30340	Screw, stainless	6,0 x 25
26	5	31177	Washer	10 mm
27	5	30858	Nut	M10

18/129, 20/138, 22/153

Internal ref. 63 43 670

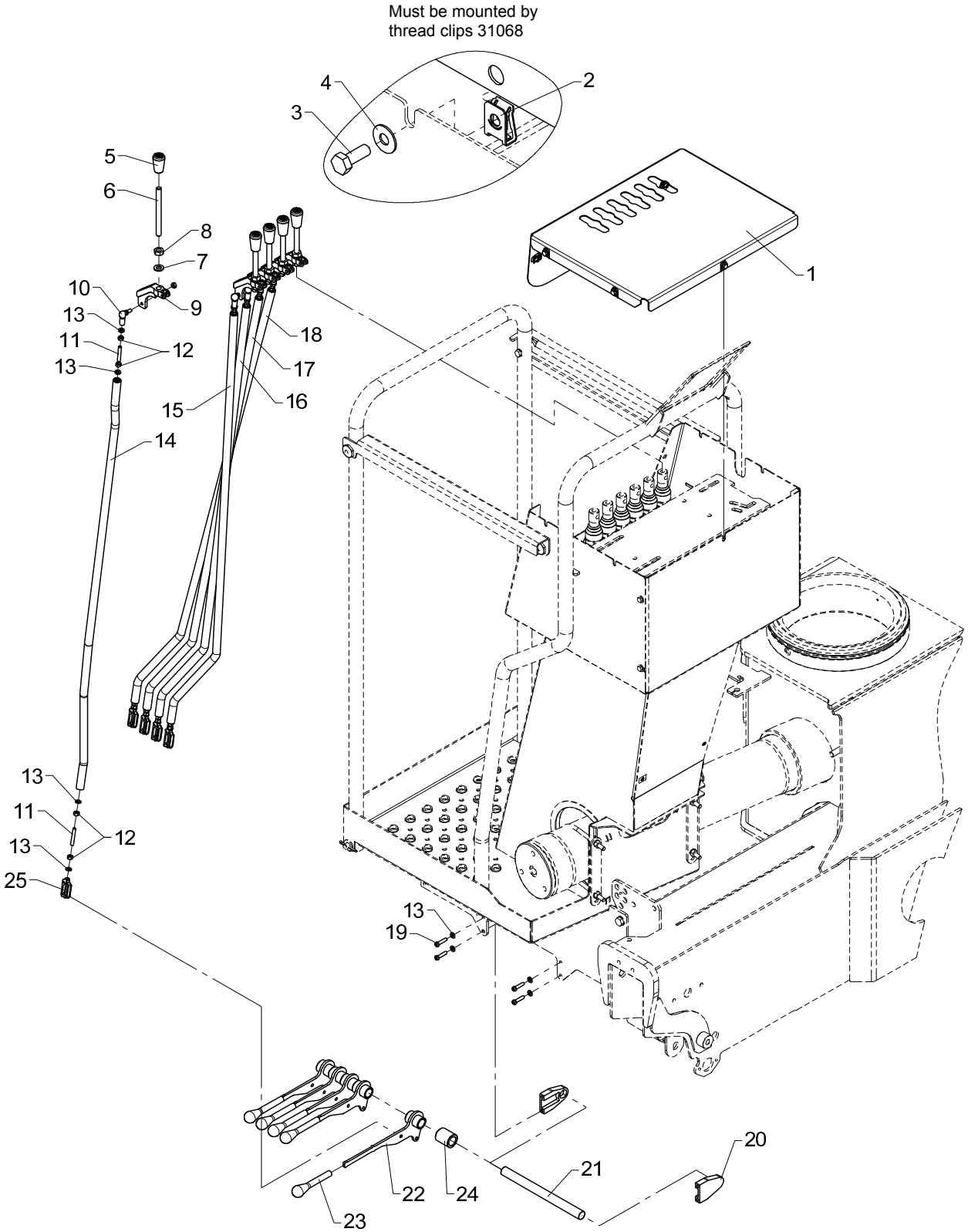

Rod control, HS, direct valve control (Hydrocontrol) - 5 fcts.

Pos	Qty.	Part no.	Description	Remarks
1	1	6341862	Protection plate (HC-1 circ.)	
2	7	31068	Clip	M6 0,5 - 4,0 mm.
3	7	30112	Set screw, stainless	M6 x 16
4	7	32306	Washer	6 mm
5	5	64411	Knob for lever	
6	5	6340245	Control valve lever	
7	5	31177	Washer	10 mm
8	5	30858	Nut	M10
9	5	63499	Adapter	
10	5	24105	Toggle joint	
11	10	31007	Pointed screw	MSP6 x 40
12	20	30854	Nut, stainless	M6
13	24	32302	Face washer, stainless	6 mm
14	1	6341885	Connecting rod (1EXV-HC	
15	1	6341884	Connecting rod (extensionHC)	
16	1	6341883	Connecting rod (jib HC)	
17	1	6341882	Connecting rod (boom HC)	
18	1	6341881	Connecting rod (slew HC)	
19	4	30340	Screw, stainless	6,0 x 25
20	2	63564	Bracket for pin	
21	1	6340249	Pin	
22	5	6340875	Lever	
23	5	48406	Knob	
24	1	63598	Bushing	ø30/ø20 x 35
25	5	48414	Clevis	

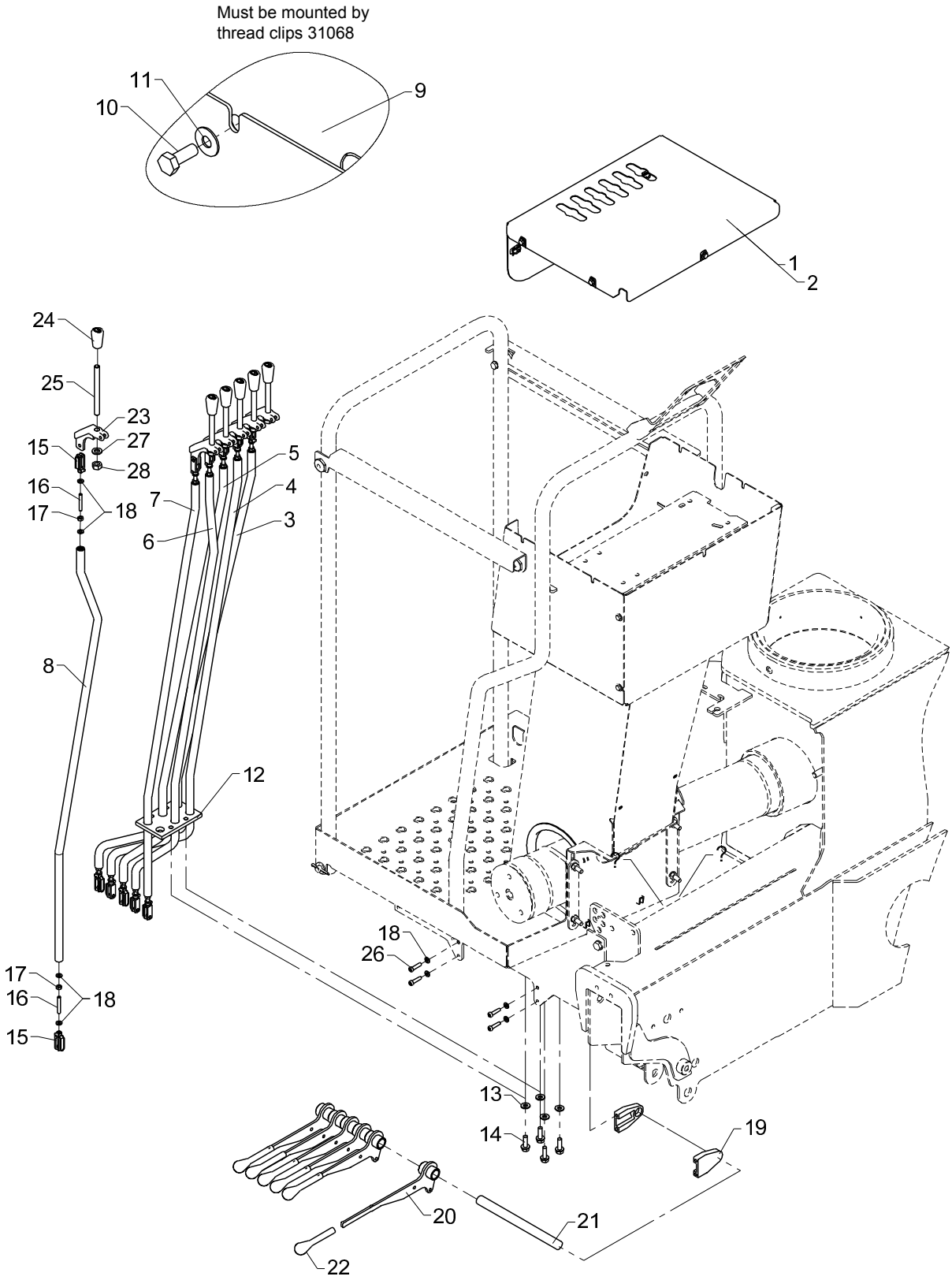
Must be mounted by
thread clips 31068
11
10
9
1
2
24
25
23
27
28
15
16
17
18
7
6
5
4
3
8
12
18
26
17
16
18
15
13
14
19
20
21
22

Obsolete

Rod control, HS, direct valve control (Hydrocontrol) - 6 fcts.

535 10 240

From loader 1070001
To loader

Created 12-01-2010
Modified

Pos	Qty.	Part no.	Description	Remarks
		6341490	Rod control, HS 6 functions	
		6341590	Rod control, 6 functions	
1	1	6340872	Protection plate (HC - 1 circ.	
2	1	6340873	Protection plate (HC-2circuits	
3	1	6340881	Connecting rod (slew-HC)	
4	1	6340882	Connecting rod (boom-HC)	
5	1	6340883	Connecting rod (jib-HC)	
6	1	6340884	Connecting rod (extension-HC)	
7	1	6340885	Connecting rod (EXV1-HC)	
8	1	6340886	Connecting rod (EXV2-HC)	
9	7	31068	Clip	M6 0,5 - 4,0 mm.
10	7	30112	Set screw, stainless	M6 x 16
11	7	32306	Washer	6 mm
12	1	64412	Guide	
13	4	31754	Washer	8,4 x 18 x 2
14	4	30996	Screw	M8 x 25
15	12	48414	Clevis	
16	12	31007	Pointed screw	MSP6 x 40
17	12	30854	Nut, stainless	M6
18	28	32302	Face washer, stainless	6 mm
19	2	63564	Bracket for pin	
20	6	6340875	Lever	
21	1	6340249	Pin	
22	6	48406	Knob	
23	6	63499	Adapter	
24	6	64411	Knob for lever	
25	6	6340245	Control valve lever	
26	4	30340	Screw, stainless	6,0 x 25
27	6	31177	Washer	10 mm
28	6	30858	Nut	M10

18/129, 20/138, 22/153

63 43 780
Internal ref. 63 43 680

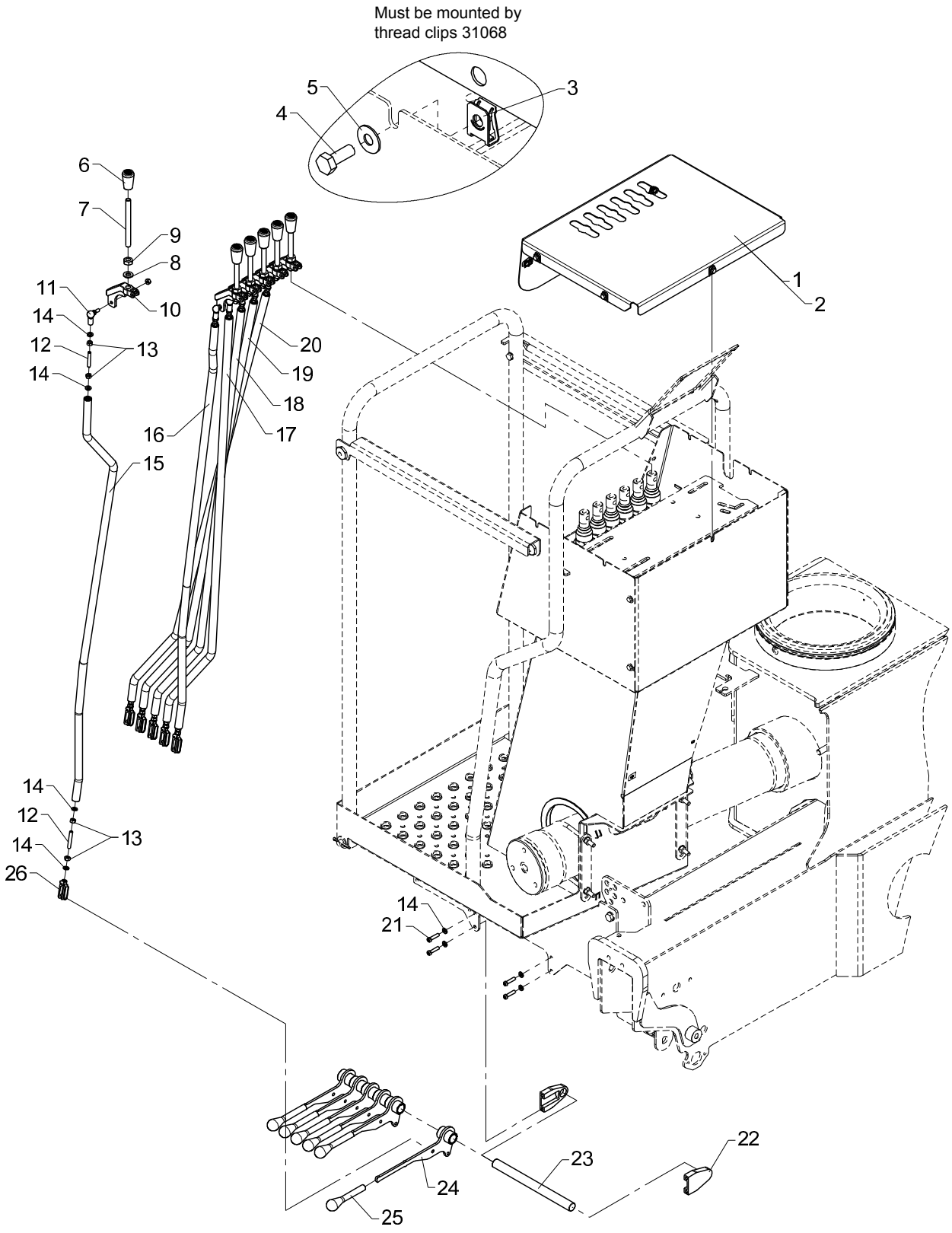

Rod control, HS, direct valve control (Hydrocontrol) - 6 fcts.

Pos	Qty.	Part no.	Description	Remarks
		6343680	Rod control, HS 6 fcts.	
		6343780	Rod control, HS 6 fcts, 2 circ	
1	1	6341862	Protection plate (HC-1 circ.)	
2	1	6341863	Protection plate (HC-2 circ.)	
3	7	31068	Clip	M6 0,5 - 4,0 mm.
4	7	30112	Set screw, stainless	M6 x 16
5	7	32306	Washer	6 mm
6	6	64411	Knob for lever	
7	6	6340245	Control valve lever	
8	6	31177	Washer	10 mm
9	6	30858	Nut	M10
10	6	63499	Adapter	
11	6	24105	Toggle joint	
12	12	31007	Pointed screw	MSP6 x 40
13	24	30854	Nut, stainless	M6
14	28	32302	Face washer, stainless	6 mm
15	1	6341886	Connecting rod (2EXV-HC)	
16	1	6341885	Connecting rod (1EXV-HC	
17	1	6341884	Connecting rod (extensionHC)	
18	1	6341883	Connecting rod (jib HC)	
19	1	6341882	Connecting rod (boom HC)	
20	1	6341881	Connecting rod (slew HC)	
21	4	30340	Screw, stainless	6,0 x 25
22	2	63564	Bracket for pin	
23	1	6340249	Pin	
24	6	6340875	Lever	
25	6	48406	Knob	
26	6	48414	Clevis	

18/129, 20/138, 22/153

Internal ref. 63 43 690

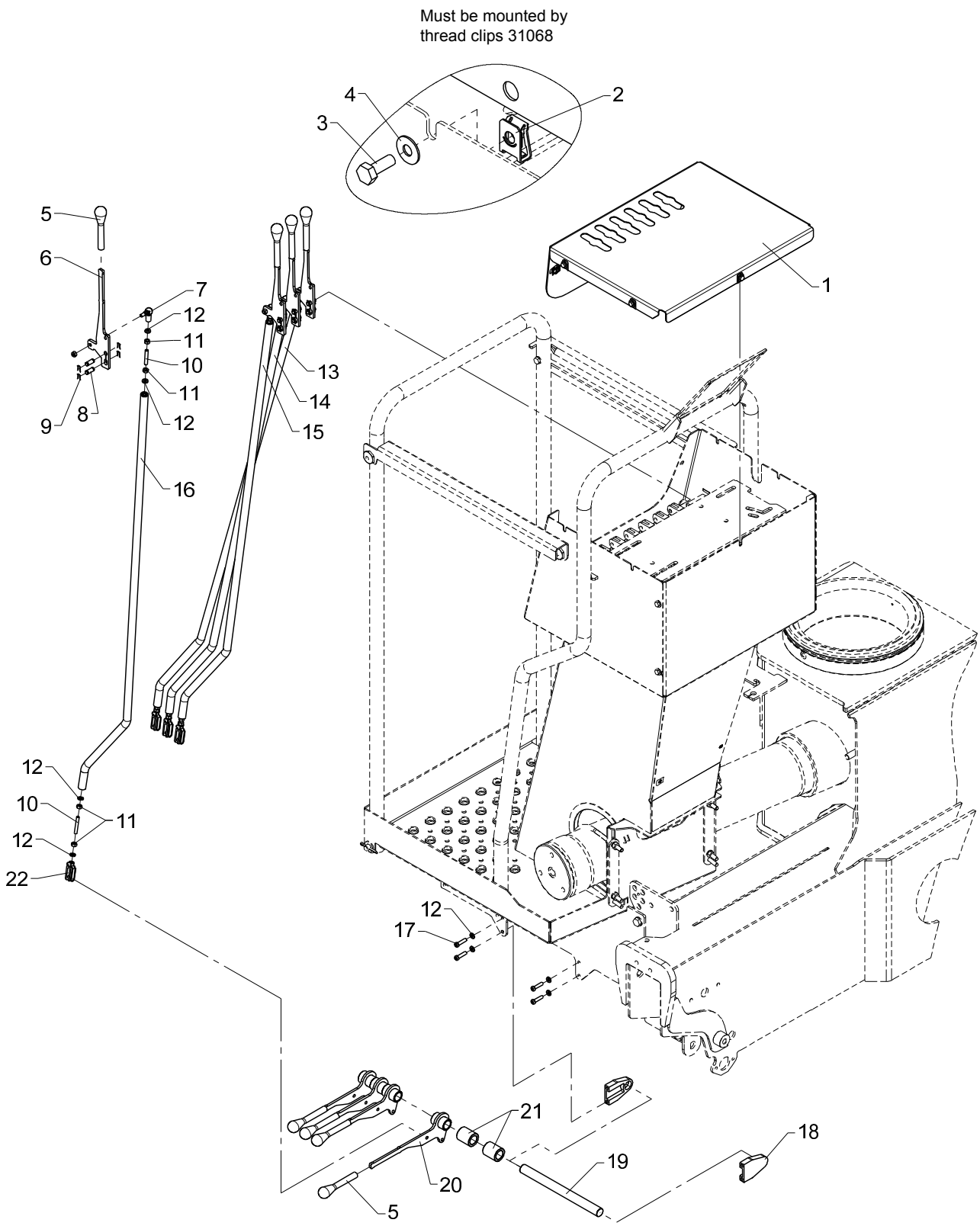

Rod control, HS, direct valve control (Nordhydraulik) - 4 fcts.

Pos	Qty.	Part no.	Description	Remarks
1	1	6341864	Protection plate (NH-1circuit)	
2	7	31068	Clip	M6 0,5 - 4,0 mm.
3	7	30112	Set screw, stainless	M6 x 16
4	7	32306	Washer	6 mm
5	8	48406	Knob	
6	4	6882053	Control lever, long	
7	4	24105	Toggle joint	
8	8	61364	Pin	
9	16	61320	Lock for pin	
10	8	31007	Pointed screw	MSP6 x 40
11	16	30854	Nut, stainless	M6
12	20	32302	Face washer, stainless	6 mm
13	1	6341911	Connecting rod (slew NH)	
14	1	6341912	Connecting rod (boom NH2)	
15	1	6341913	Connecting rod (jib NH2)	
16	1	6341914	Connecting rod (extension NH	
17	4	30340	Screw, stainless	6,0 x 25
18	2	63564	Bracket for pin	
19	1	6340249	Pin	
20	4	6340875	Lever	
21	2	63598	Bushing	ø30/ø20 x 35
22	4	48414	Clevis	

18/129, 20/138, 22/153

Internal ref. 63 43 700

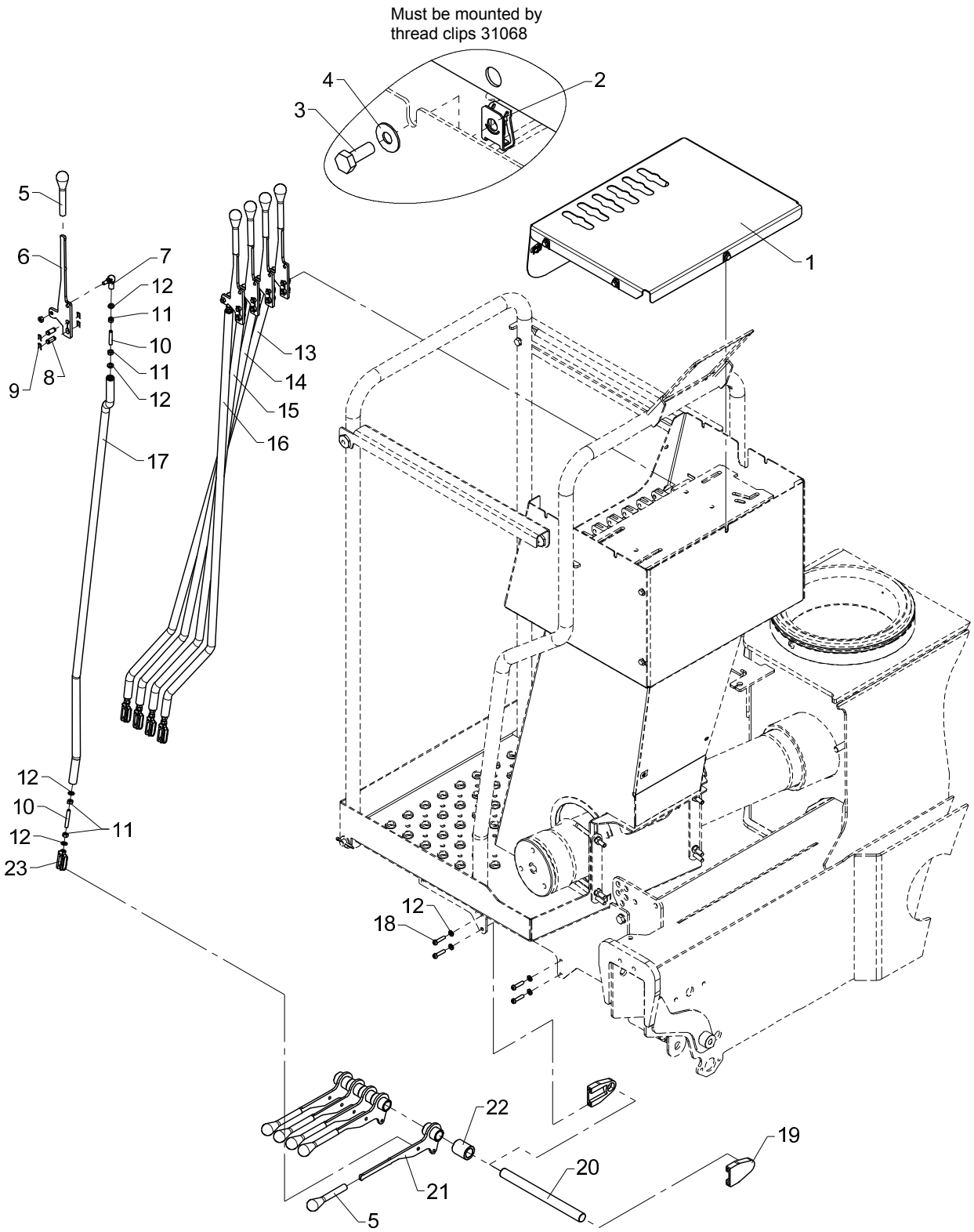

Rod control, HS, direct valve control (Nordhydraulik) - 5 fcts.

Pos	Qty.	Part no.	Description	Remarks
1	1	6341864	Protection plate (NH-1circuit)	
2	7	31068	Clip	M6 0,5 - 4,0 mm.
3	7	30112	Set screw, stainless	M6 x 16
4	7	32306	Washer	6 mm
5	10	48406	Knob	
6	5	6882053	Control lever, long	
7	5	24105	Toggle joint	
8	10	61364	Pin	
9	20	61320	Lock for pin	
10	10	31007	Pointed screw	MSP6 x 40
11	20	30854	Nut, stainless	M6
12	24	32302	Face washer, stainless	6 mm
13	1	6341911	Connecting rod (slew NH)	
14	1	6341912	Connecting rod (boom NH2)	
15	1	6341913	Connecting rod (jib NH2)	
16	1	6341914	Connecting rod (extension NH	
17	1	6341915	Connecting rod (1EXV-NH-2)	
18	4	30340	Screw, stainless	6,0 x 25
19	2	63564	Bracket for pin	
20	1	6340249	Pin	
21	5	6340875	Lever	
22	1	63598	Bushing	ø30/ø20 x 35
23	5	48414	Clevis	

18/129, 20/138, 22/153

Internal ref. 63 43 710

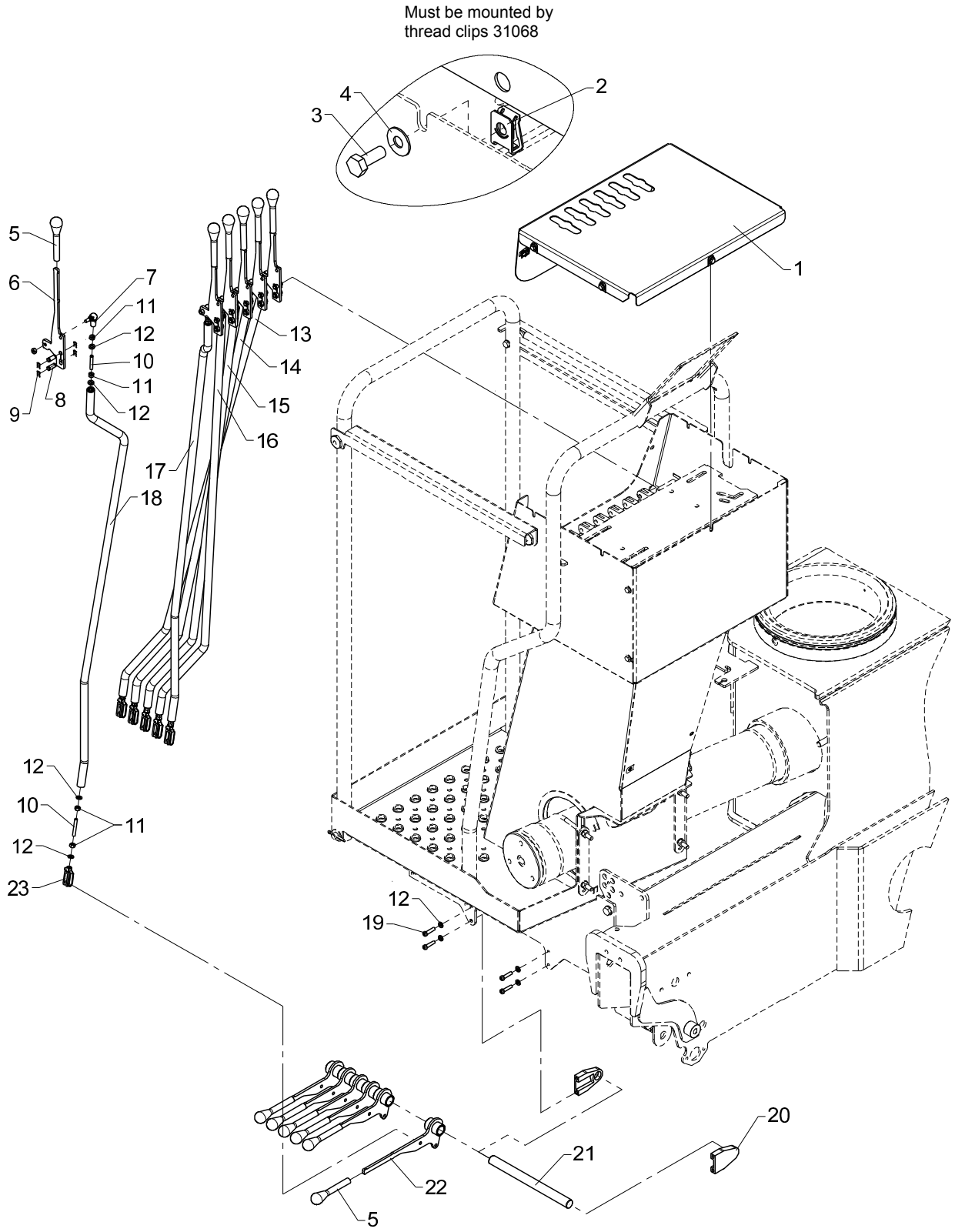

Rod control, HS, direct valve control (Nordhydraulik) - 6 fcts.

Pos	Qty.	Part no.	Description	Remarks
1	1	6341864	Protection plate (NH-1circuit)	
2	7	31068	Clip	M6 0,5 - 4,0 mm.
3	7	30112	Set screw, stainless	M6 x 16
4	7	32306	Washer	6 mm
5	12	48406	Knob	
6	6	6882053	Control lever, long	
7	6	24105	Toggle joint	
8	12	61364	Pin	
9	24	61320	Lock for pin	
10	12	31007	Pointed screw	MSP6 x 40
11	24	30854	Nut, stainless	M6
12	28	32302	Face washer, stainless	6 mm
13	1	6341911	Connecting rod (slew NH)	
14	1	6341912	Connecting rod (boom NH2)	
15	1	6341913	Connecting rod (jib NH2)	
16	1	6341914	Connecting rod (extension NH	
17	1	6341915	Connecting rod (1EXV-NH-2)	
18	1	6341916	Connecting rod (2EXV-NH-2)	
19	4	30340	Screw, stainless	6,0 x 25
20	2	63564	Bracket for pin	
21	1	6340249	Pin	
22	6	6340875	Lever	
23	6	48414	Clevis	

18/129, 20/138, 22/153

Internal ref. 63 43 720

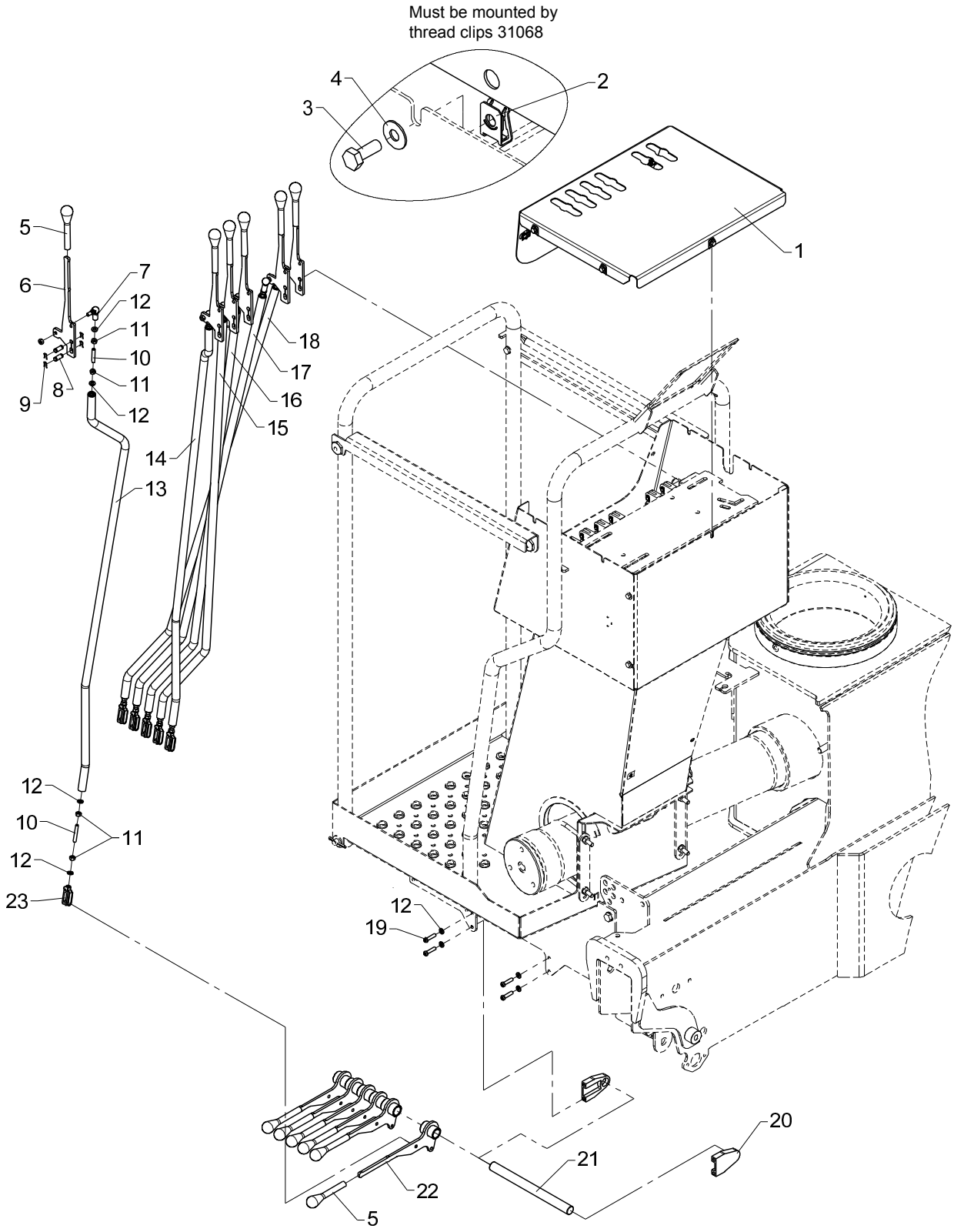

Rod control, HS, direct valve control (Nordhydraulik) - 6 fcts. - 2 circuits

Pos	Qty.	Part no.	Description	Remarks
1	1	6341865	Protection plate (NH-2circuit)	
2	7	31068	Clip	M6 0,5 - 4,0 mm.
3	7	30112	Set screw, stainless	M6 x 16
4	7	32306	Washer	6 mm
5	12	48406	Knob	
6	6	6882053	Control lever, long	
7	6	24105	Toggle joint	
8	12	61364	Pin	
9	24	61320	Lock for pin	
10	12	31007	Pointed screw	MSP6 x 40
11	24	30854	Nut, stainless	M6
12	28	32302	Face washer, stainless	6 mm
13	1	6341916	Connecting rod (2EXV-NH-2)	
14	1	6341915	Connecting rod (1EXV-NH-2)	
15	1	6341914	Connecting rod (extension NH	
16	1	6341913	Connecting rod (jib NH2)	
17	1	6341912	Connecting rod (boom NH2)	
18	1	6341911	Connecting rod (slew NH)	
19	4	30340	Screw, stainless	6,0 x 25
20	2	63564	Bracket for pin	
21	1	6340249	Pin	
22	6	6340875	Lever	
23	6	48414	Clevis	

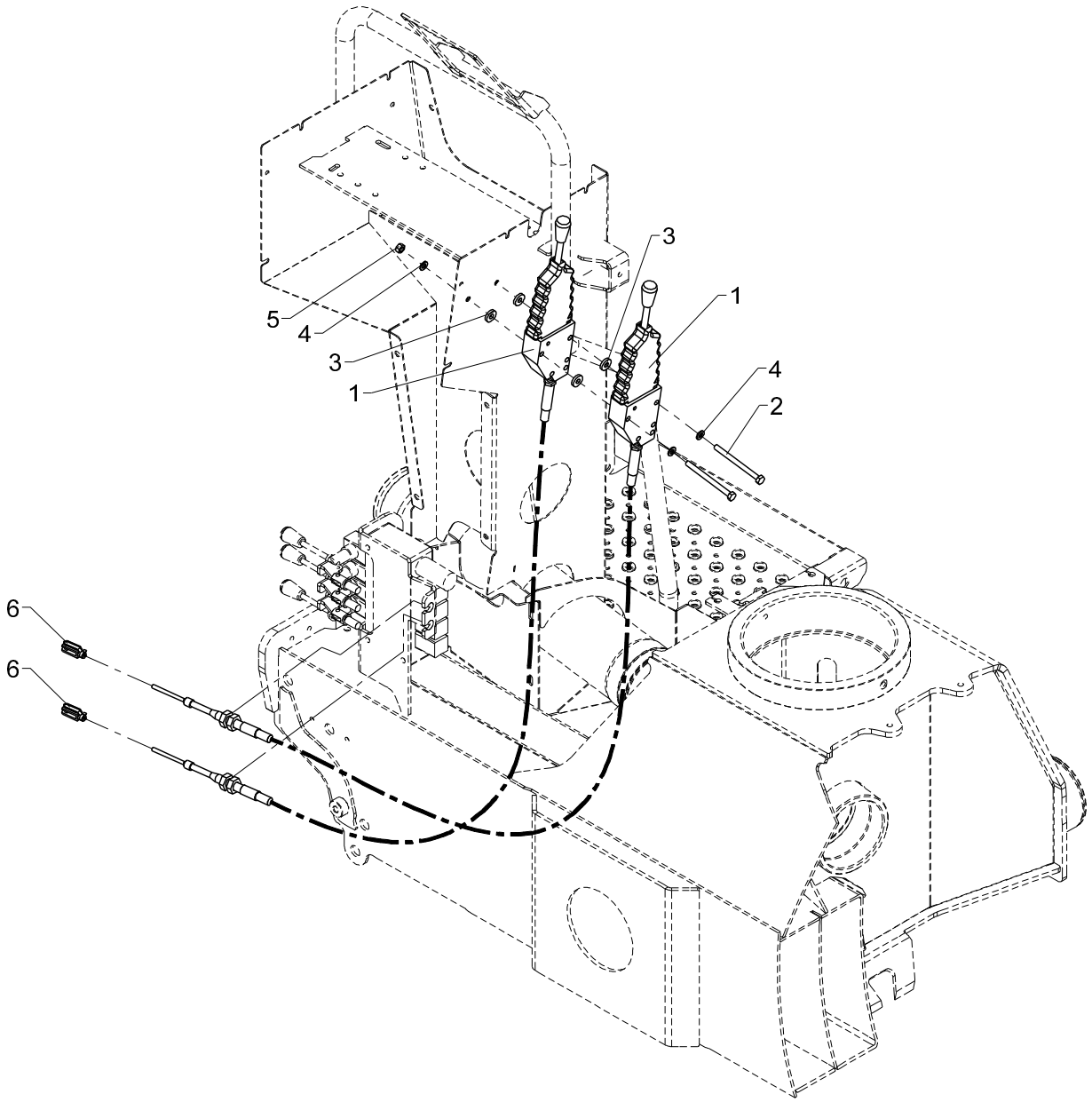
5
4
3
1
3
1
4
2
6
6

Stabilizer operation, HS, direct valve control

Pos	Qty.	Part no.	Description	Remarks
1	2	48465	Push-pull cable incl. lever	1500 mm
2	2	30145	Steel bolt, stainless	M8 x 100
3	4	31755	Washer	8 mm
4	4	31147	Face washer, 8 mm	8 mm
5	2	30856	Nut, stainless	M8
6	2	48414	Clevis	

18/129, 20/138, 22/153

Internal ref. 63 43 890

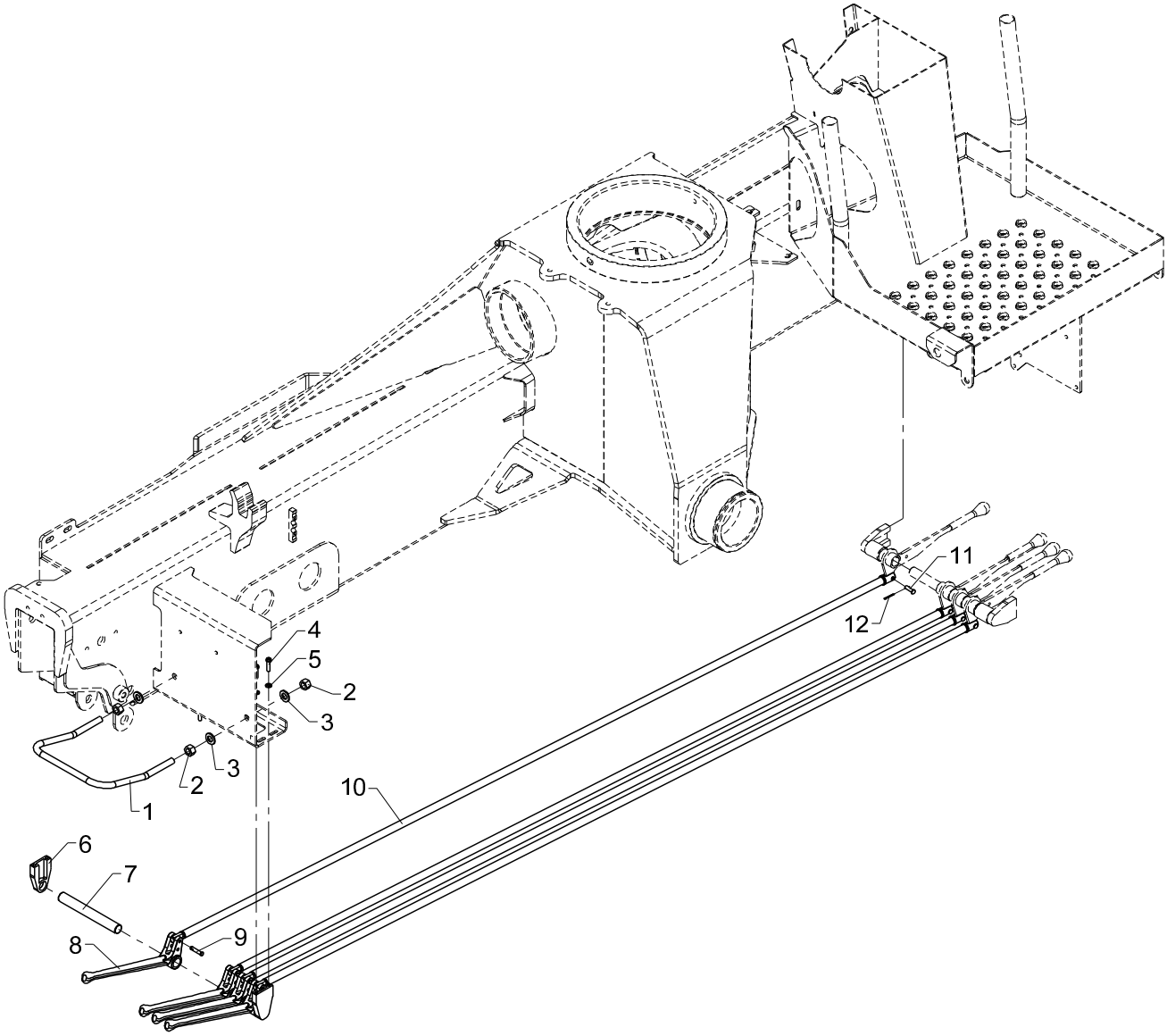

Dual control, HS, direct valve control - 4 fcts.

Pos	Qty.	Part no.	Description	Remarks
1	1	6340247	Safety guard	
2	4	30860	Nut, stainless	M12
3	4	32338	Washer	12 mm
4	4	30340	Screw, stainless	6,0 x 25
5	4	32302	Face washer, stainless	6 mm
6	2	63564	Bracket for pin	
7	1	6340248	Pin	
8	4	63443	Lever for dual controls	
9	4	63468	Split pin with spring lock	
10	4	6340889	Connecting rod	
11	4	31271	Cotter bolt	ø6 x 21
12	4	31601	Split pin, stainless	ø1,6 x 20

18/129, 20/138, 22/153

Internal ref. 63 43 900

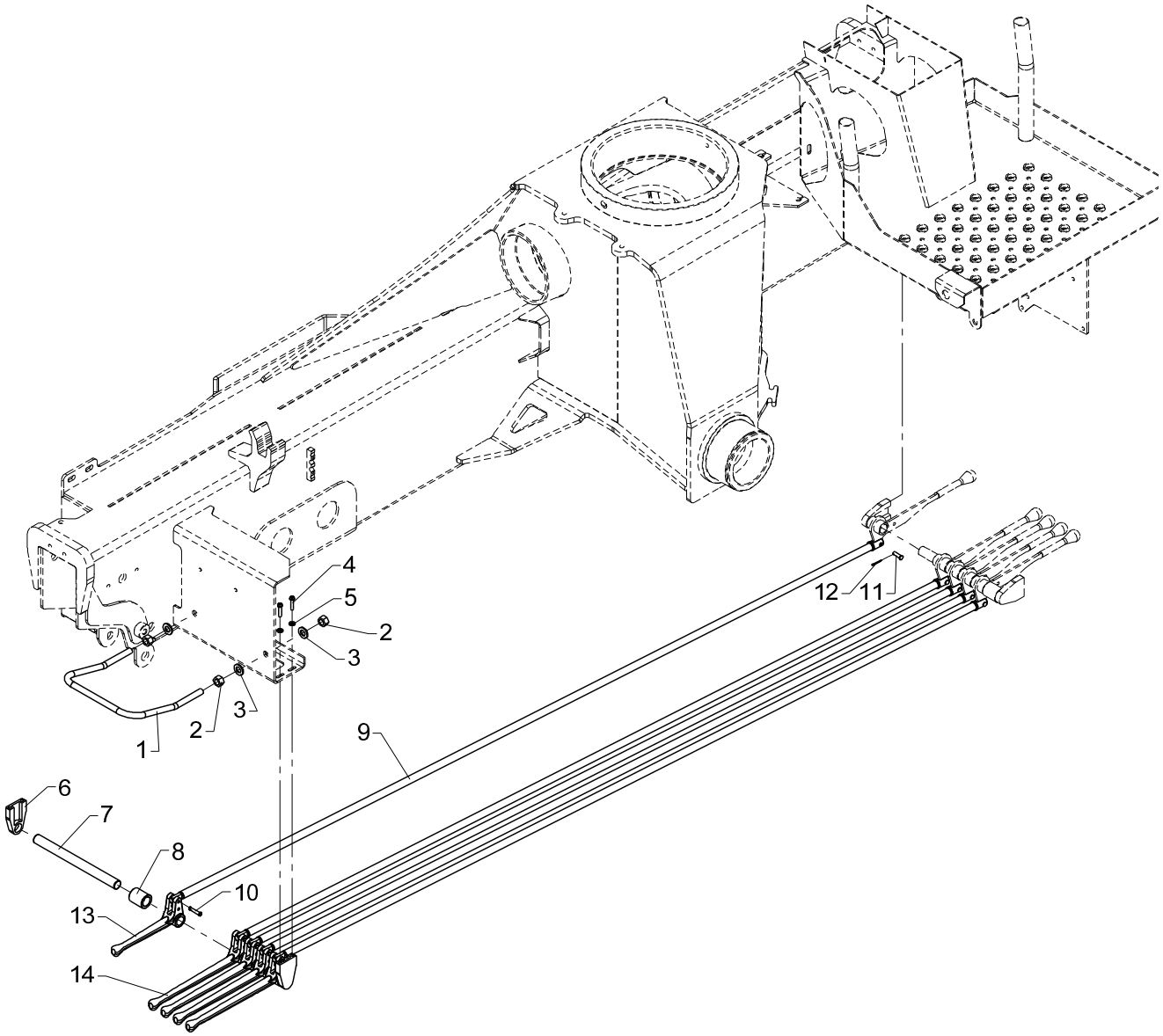

Dual control, HS, direct valve control - 5 fcts.

Pos	Qty.	Part no.	Description	Remarks
1	1	6340247	Safety guard	
2	4	30860	Nut, stainless	M12
3	4	32338	Washer	12 mm
4	4	30340	Screw, stainless	6,0 x 25
5	4	32302	Face washer, stainless	6 mm
6	2	63564	Bracket for pin	
7	1	6340249	Pin	
8	1	63598	Bushing	
9	5	6340889	Connecting rod	
10	5	63468	Split pin with spring lock	
11	5	31271	Cotter bolt	ø6 x 21
12	5	31601	Split pin, stainless	ø1,6 x 20
13	1	63444	Lever for dual controls	
14	4	63443	Lever for dual controls	

18/129, 20/138, 22/153

Internal ref. 63 43 910

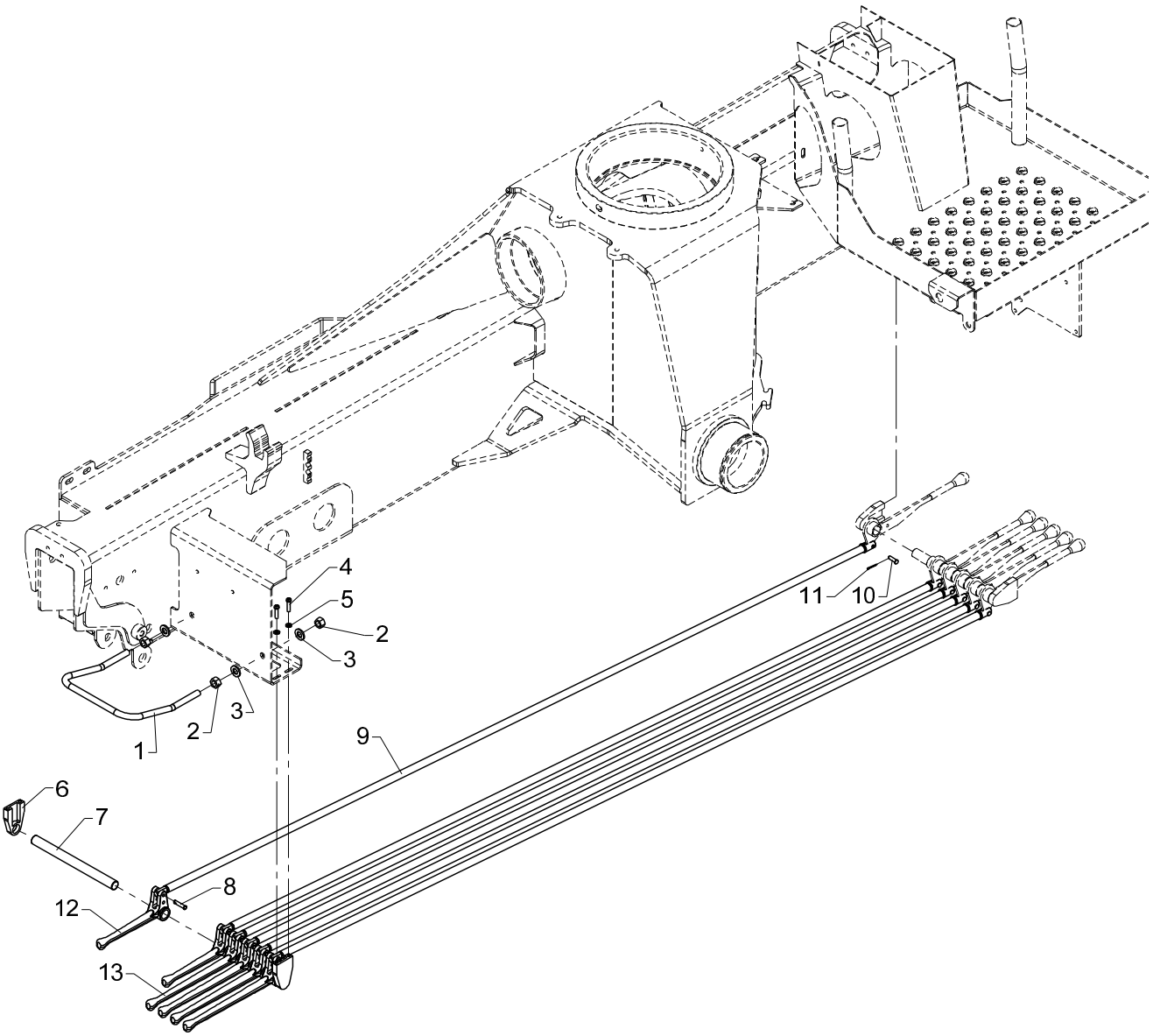

Dual control, HS, direct valve control - 6 fcts.

Pos	Qty.	Part no.	Description	Remarks
1	1	6340247	Safety guard	
2	4	30860	Nut, stainless	M12
3	4	32338	Washer	12 mm
4	4	30340	Screw, stainless	6,0 x 25
5	4	32302	Face washer, stainless	6 mm
6	2	63564	Bracket for pin	
7	1	6340249	Pin	
8	6	63468	Split pin with spring lock	
9	6	6340889	Connecting rod	
10	6	31271	Cotter bolt	ø6 x 21
11	6	31601	Split pin, stainless	ø1,6 x 20
12	2	63444	Lever for dual controls	
13	4	63443	Lever for dual controls	

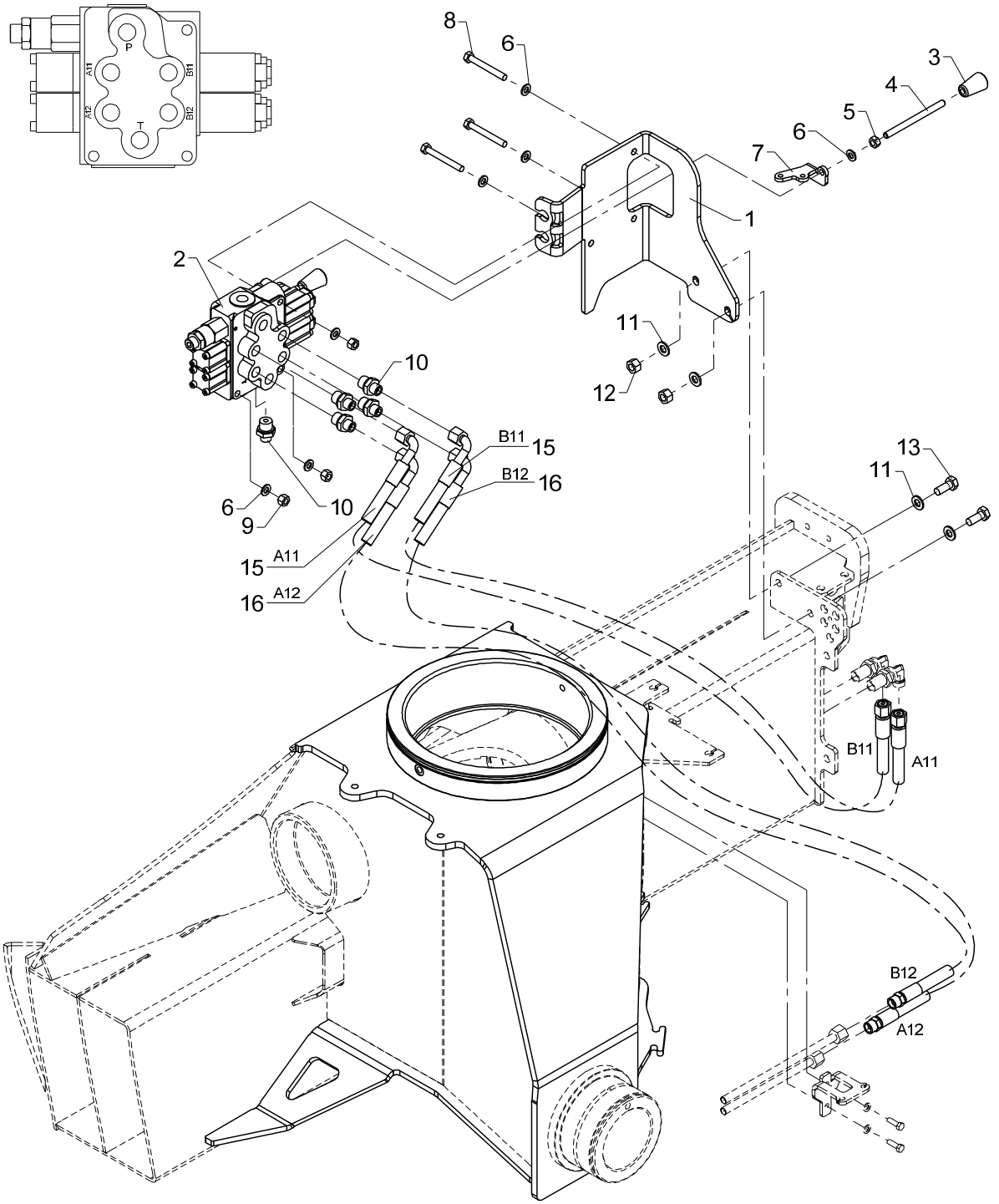
P
A11
B11
A12
B12
T
8
6
3
4
5
6
7
1
2
11
12
10
B11
15
B12
16
6
9
10
15
A11
16
A12
13
11
B11
A11
B12
A12

Valve bracket, cpl., direct valve control - 2 fcts.

Pos	Qty.	Part no.	Description	Remarks
		6341280	Valve bracket, cpl. 2 fcts.HS	
		6341640	Hose kit, 2 functions, HS	
1	1	6340227	Valve bracket (TS - 2 fcts.)	
2	1	55225	Stabilizer valve	
3	2	59224	Knob for lever	
4	2	1330187	Control lever, long, straight	
5	2	30856	Nut, stainless	M8
6	8	31147	Face washer, 8 mm	8 mm
7	2	6340229	Adapter	
8	3	30259	Steel bolt, stainless	M8 x 65
9	3	30886	Lock nut, stainless	M8
10	5	25244	Connection	GES 8 LR 3/8-WD
11	4	31565	Washer, stainless	10 mm
12	2	31564	Lock nut, stainless	M10
13	2	31513	Set screw, stainless	M10 x 25
14	1	6341640	Hose kit, 2 functions, HS	
15	2	56515	Hose	5/16 X 1250 mm 90/L 10Let
16	2	56516	Hose	5/16 X 600 mm 90/S

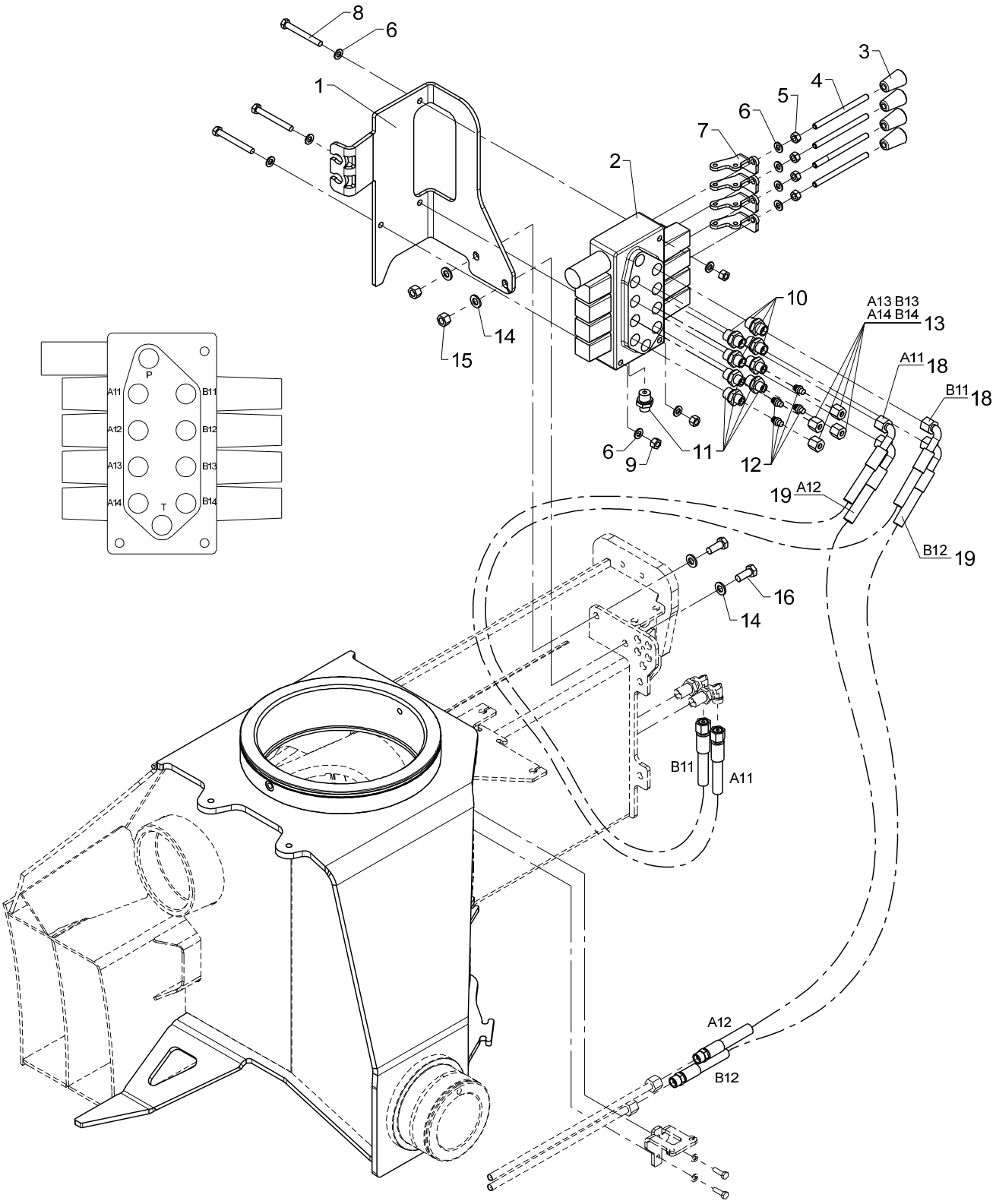
8
6
1
3
4
5
6
7
2
10
A13 B13
A14 B14
13
A11
18
B11
18
6
9
11
12
19
A12
B12
19
16
14
B11
A11
A12
B12
15
14
P
A11
B11
A12
B12
A13
B13
A14
B14
T

Valve bracket, cpl., direct valve control - 2 fcts. + 2 available fcts.

Pos	Qty.	Part no.	Description	Remarks
		6341290	Valve br., cpl.2fcts.+2 avail.	
		6341640	Hose kit, 2 functions, HS	
1	1	6340228	Valve bracket (TS - 4 fcts.)	
2	1	55281	Stabilizer valve	
3	4	59224	Knob for lever	
4	4	1330187	Control lever, long, straight	
5	4	30856	Nut, stainless	M8
6	10	31147	Face washer, 8 mm	
7	4	6340229	Adapter	
8	3	30142	Steel bolt, stainless	M8 x 70
9	3	30886	Lock nut, stainless	M8
10	4	25253	Connection	P-GEV 10 LR 3/8-WD
11	5	25244	Connection	GES 8 LR 3/8-WD
12	4	26166	Blanking plug	VSD 8 L
13	4	25181	Coupling nut	M 8 L
14	4	31565	Washer, stainless	10 mm
15	2	31564	Lock nut, stainless	M10
16	2	31513	Set screw, stainless	M10 x 25
17	1	6341640	Hose kit, 2 functions, HS	
18	2	56515	Hose	5/16"x1250mm V/O
19	2	56516	Hose	5/16"x1250mm V/O

18/129, 20/138, 22/153

63 41 630
Internal ref. 63 41 300

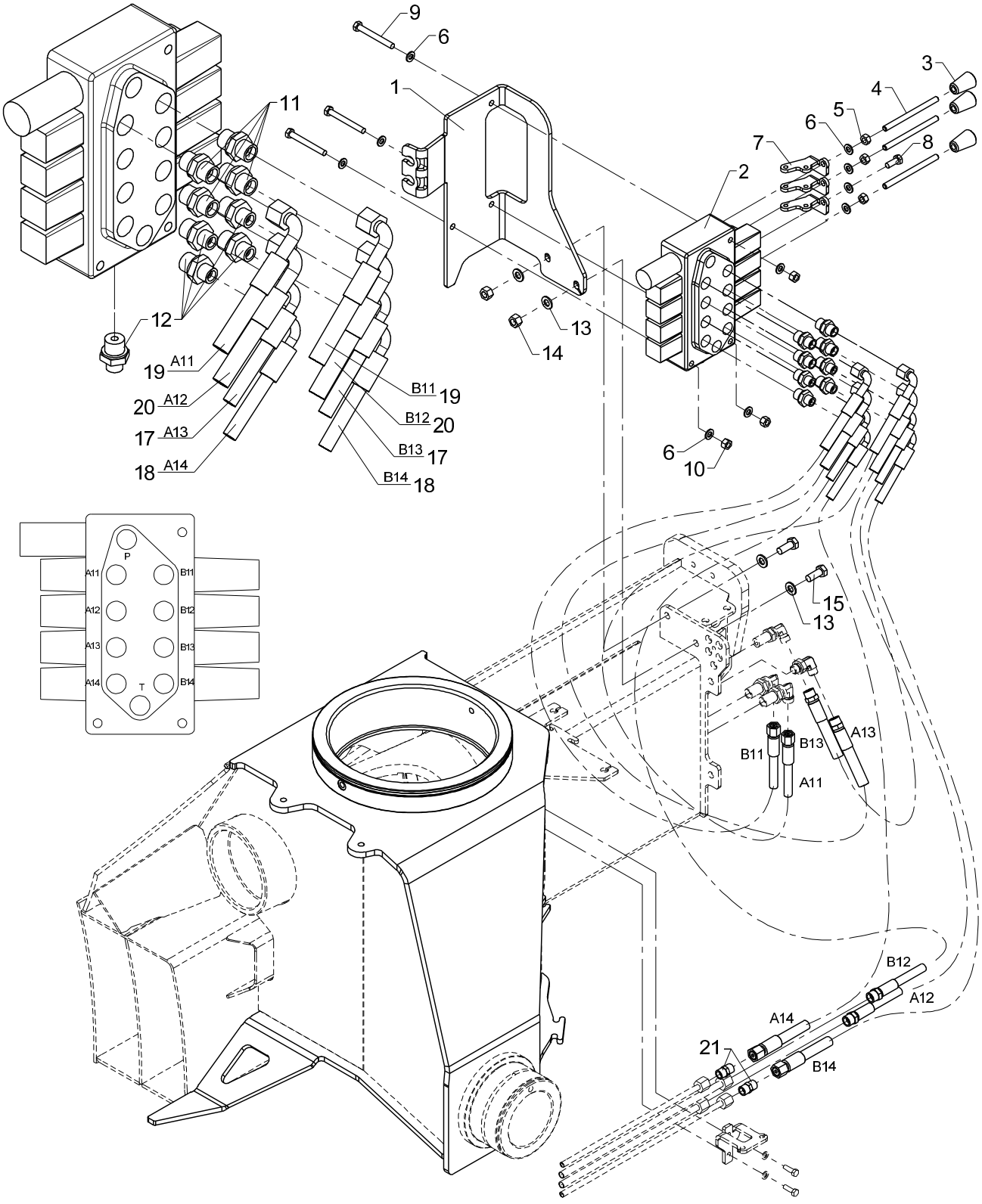

Valve bracket, cpl., direct valve control - 4 fcts.

Pos	Qty.	Part no.	Description	Remarks
		6341300	Valve bracket, cpl. 4 fcts.HS	
		6341630	Hose kit, 4 functions, HS	
1	1	6340228	Valve bracket (TS - 4 fcts.)	
2	1	55281	Stabilizer valve	
3	3	59224	Knob for lever	
4	3	1330187	Control lever, long, straight	
5	3	30856	Nut, stainless	M8
6	10	31147	Face washer, 8 mm	8 mm
7	3	6340229	Adapter	
8	1	30132	Set screw, stainless	M8 x 20
9	3	30142	Steel bolt, stainless	M8 x 70
10	3	30886	Lock nut, stainless	M8
11	4	25253	Connection	P-GEV 10 LR 3/8-WD
12	5	25244	Connection	GES 8 LR 3/8-WD
13	4	31565	Washer, stainless	10 mm
14	2	31564	Lock nut, stainless	M10
15	2	31513	Set screw, stainless	M10 x 25
16	1	6341630	Hose kit, 4 functions, HS	
17	2	62620	Hose	1/4 X 1100 M14X1.5 L/90
18	2	62525	Hose	1/4 X 400 M14 X 1.5 L/90
19	2	56515	Hose	5/16 X 1250 mm 90/L 10Let
20	2	56516	Hose	5/16 X 600 mm 90/S
21	2	25246	Double connection	P-GV 8 L

18/129, 20/138, 22/153

63 41 670
Internal ref. 63 41 320

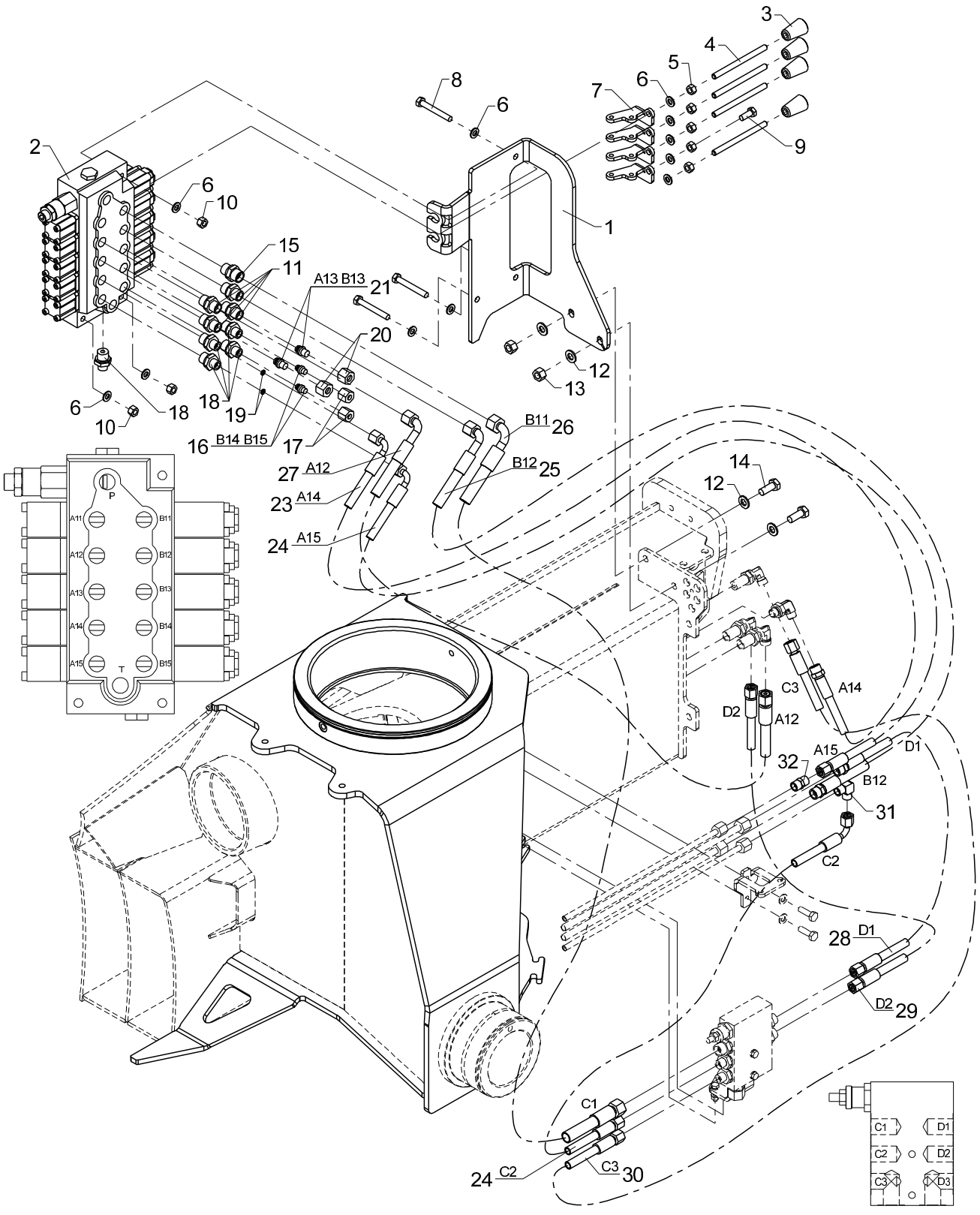

Valve bracket, cpl., direct valve control - 4 fcts. + 4 available fcts.

Pos	Qty.	Part no.	Description	Remarks
		6341320	Valve br., cpl.4fcts.+4 avail.	
		6341670	Hose kit, 4 fcts + 4 avail.,HS	
1	1	6340226	Valve bracket (TS - 4 fcts.)	
2	1	55277	Valve block, complete	
3	4	59224	Knob for lever	
4	4	1330187	Control lever, long, straight	
5	5	30856	Nut, stainless	M8
6	11	31147	Face washer, 8 mm	8 mm
7	4	6340229	Adapter	
8	3	30141	Set screw, stainless	M8 x 60
9	1	30132	Set screw, stainless	M8 x 20
10	3	30886	Lock nut, stainless	M8
11	4	25253	Connection	P-GEV 10 LR 3/8-WD
12	4	31565	Washer, stainless	10 mm
13	2	31564	Lock nut, stainless	M10
14	2	31513	Set screw, stainless	M10 x 25
15	1	25127	Connection	P-GEV 12 LR-WD
16	2	26166	Blanking plug	VSD 8 L
17	2	25181	Coupling nut	M 8 L
18	5	25244	Connection	GES 8 LR 3/8-WD
19	2	60963	Washer	
20	2	25182	Coupling nut	M 10 L
21	2	25202	Blanking plug	VSD 10 L
22	1	6341670	Hose kit, 4 fcts + 4 avail.,HS	
23	1	62620	Hose	1/4 X 1100 M14X1.5 L/90
24	2	62525	Hose	1/4 X 400 M14 X 1.5 L/90
25	1	56516	Hose	5/16 X 600 mm 90/S
26	1	0017300	Hose	
27	1	56515	Hose	5/16 X 1250 mm 90/L 10Let
28	1	56460	Hose	1/4" x 550mm L/S-10mm
29	1	56510	Hose	1/4 X 600 mm L/L 10Let
30	1	62569	Hose	1/4 X 800 M14 X 1.5 L/L
31	1	25247	Elbow connection	WV 8 L
32	1	25246	Double connection	P-GV 8 L

18/129, 20/138, 22/153

Internal ref. 63 41 390

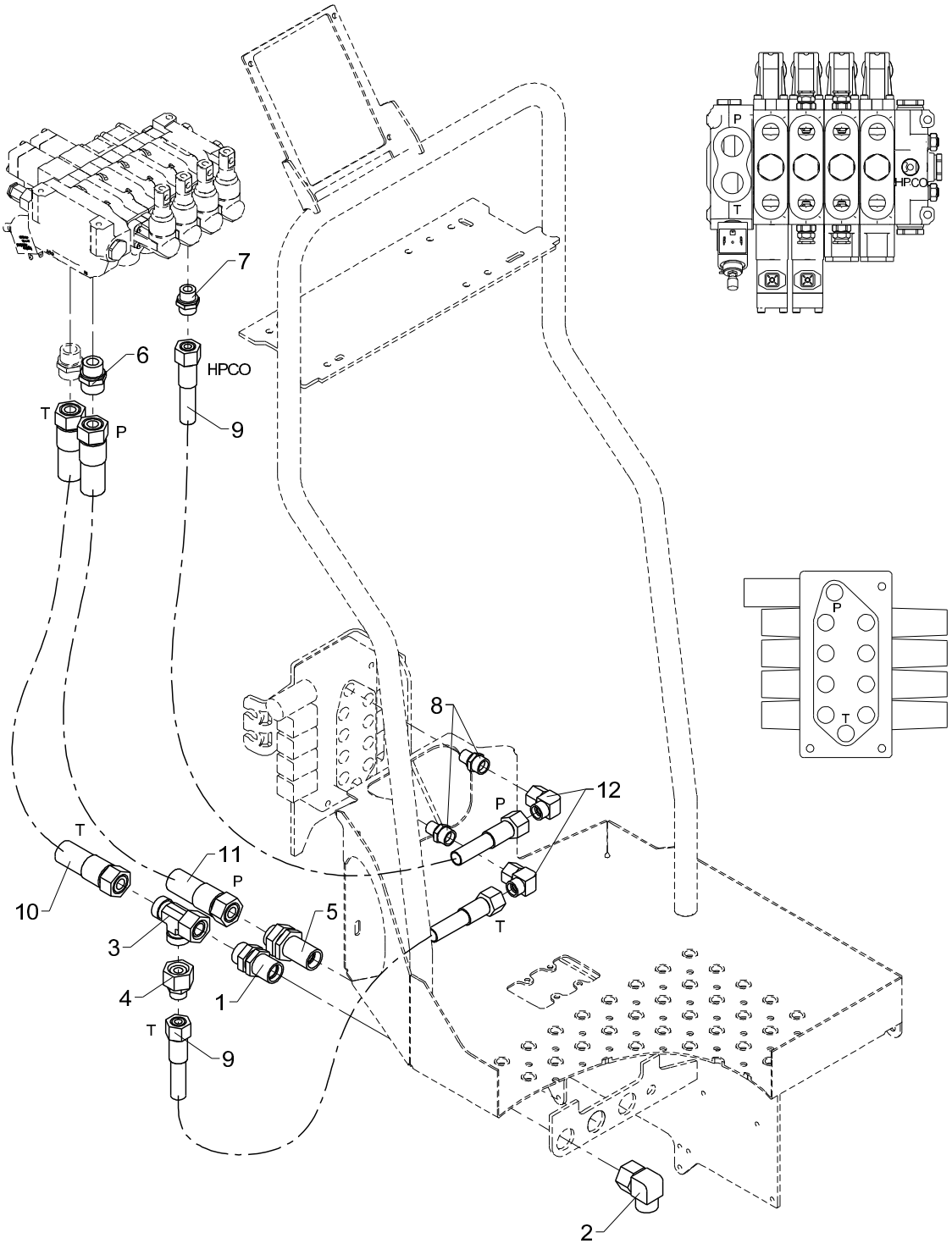

Pump and return hoses - HC - 1-circuit - HS direct valve control

Pos	Qty.	Part no.	Description	Remarks
1	1	25266	Bulkhead connection	P-GSV 22 L
2	1	25209	Elbow connection	EWSD 22 L
3	1	26149	Connection	ELSD 22 L
4	1	25298	Connection	REDSDN 22/15 L
5	1	26369	Bulkhead connection	GSS 12 L
6	1	26197	Connection	P-GEV 20 SR-WD
7	1	25143	Connection	P-GEV 15 LR-WD
8	2	25273	Connection	GES 15 LR 3-8 A3L
9	2	56509	Hose	1/2 X 1100 mm L/L M22
10	1	62574	Hose	3/4 X 1300 M30 X 2 L/L
11	1	56456	Hose	5/8 x 1400 mm 20S O/O
12	2	25284	Elbow connection	EWSD 15 L

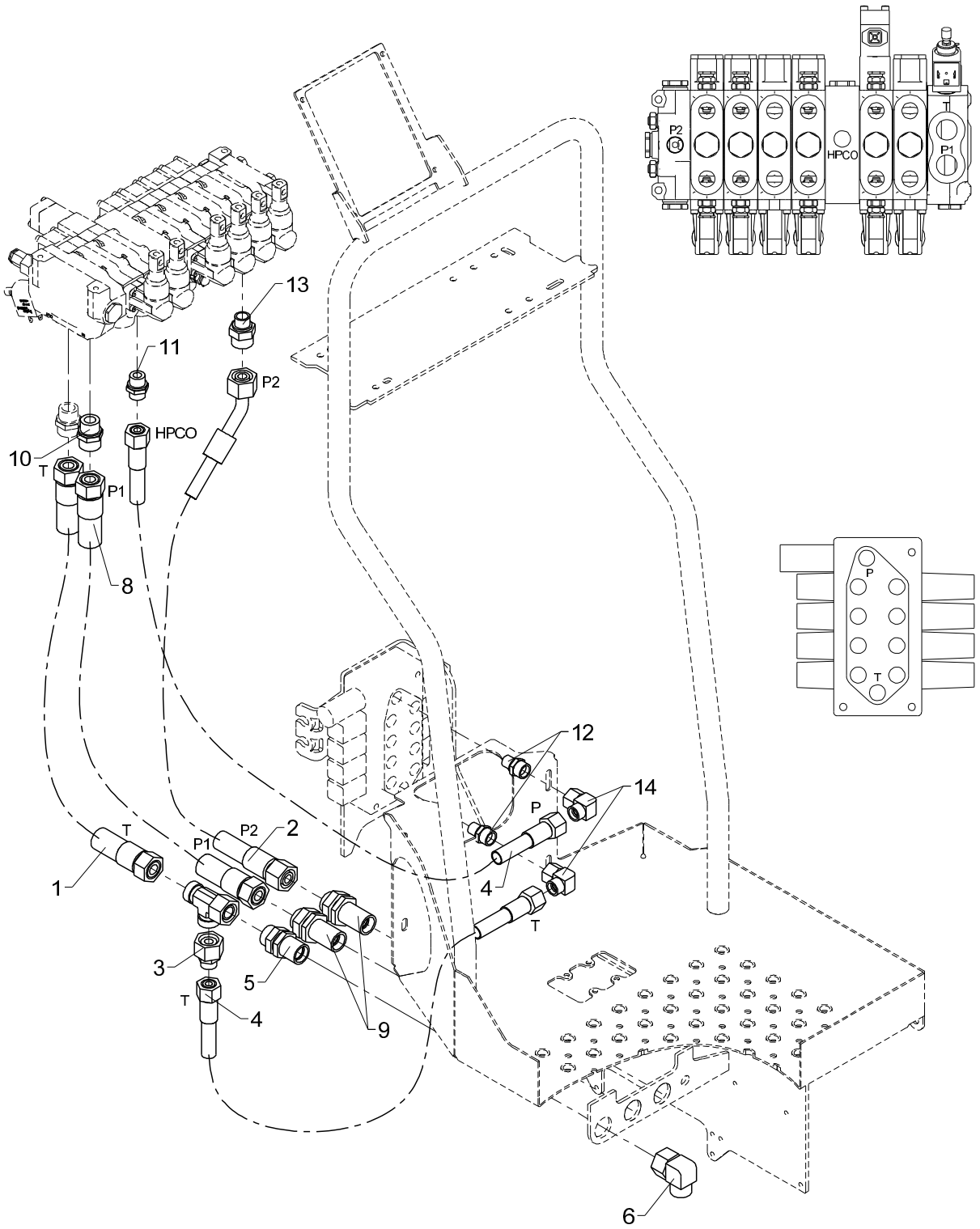
P2
HPCO
T
P1
13
11
P2
HPCO
10
T
P1
8
P
T
12
14
P
4
T
T
P1
P2
2
1
3
T
5
4
9
6

Pump and return hoses - HC - 2-circuit - HS direct valve control

Pos	Qty.	Part no.	Description	Remarks
1	1	62574	Hose	3/4 X 1300 M30 X 2 L/L
2	1	56523	Hose	5/8 X 1400 mm L/45 20Svær
3	1	25298	Connection	REDSDN 22/15 L
4	2	56509	Hose	1/2 X 1100 mm L/L M22
5	1	25266	Bulkhead connection	P-GSV 22 L
6	1	25209	Elbow connection	EWSD 22 L
7	1	26149	Connection	ELSD 22 L
8	1	56456	Hose	5/8 x 1400 mm 20S O/O
9	2	26369	Bulkhead connection	GSS 12 L
10	1	26197	Connection	P-GEV 20 SR-WD
11	1	25143	Connection	P-GEV 15 LR-WD
12	2	25273	Connection	GES 15 LR 3-8 A3L
13	1	26221	Connection	P-GEV 20 SR 1/2-WD
14	2	25284	Elbow connection	EWSD 15 L

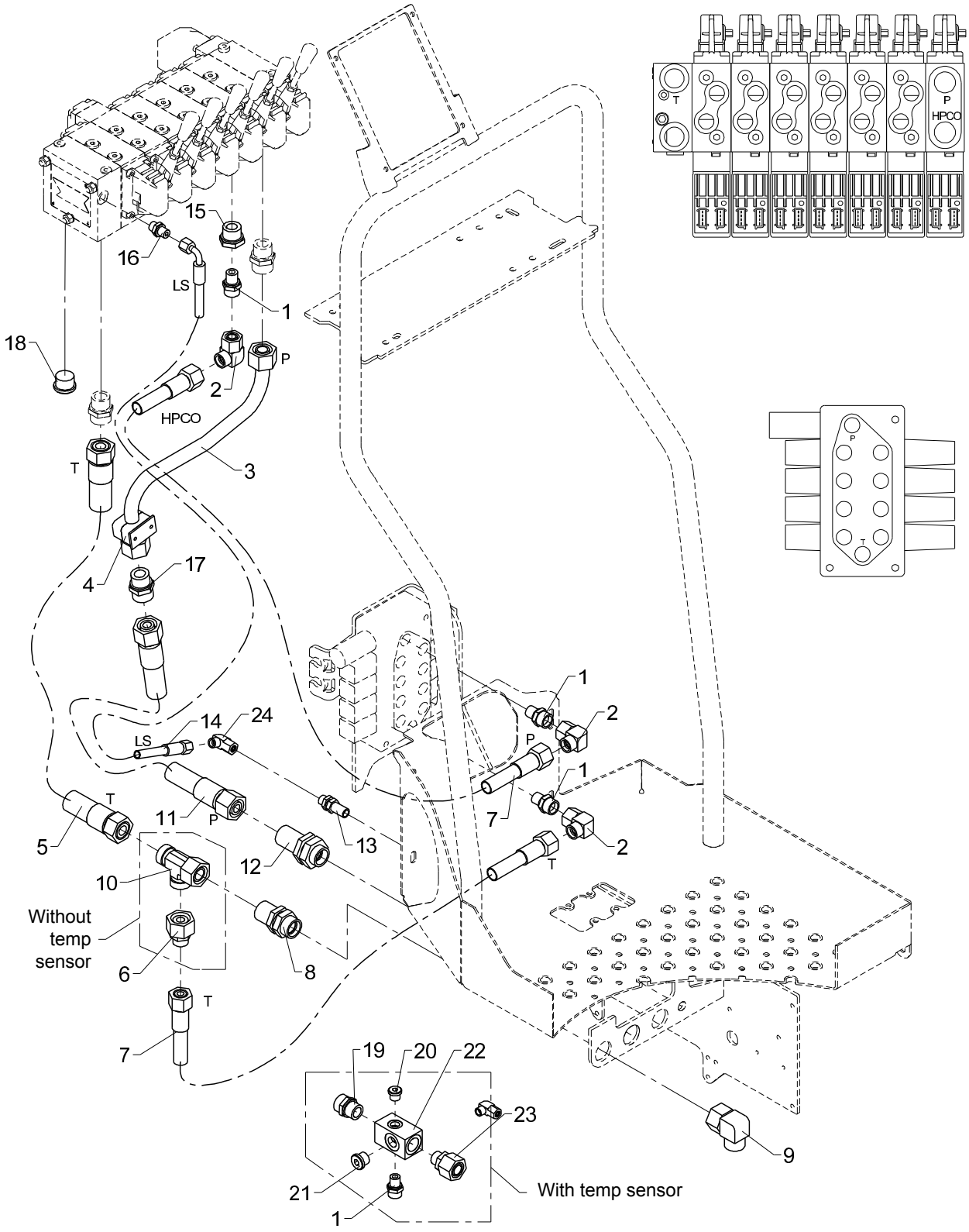
15
16
LS
1
18
P
2
HPCO
T
3
4
17
14
24
LS
1
2
P
1
7
2
T
11
P
5
13
12
10
Without
temp
sensor
6
8
T
7
19
20
22
23
9
21
1
With temp sensor
T
P
HPCO
P
T

Pump and return hoses - Danfoss - HS - direct valve control

Pos	Qty.	Part no.	Description	Remarks
		6341420	Pump + return hoses, DanfossHS	
		6343420		
1	4	25273	Connection	GES 15 LR 3-8 A3L
2	3	25284	Elbow connection	EWSD 15 L
3	1	6340879	Connection pipe	
4	1	31830	Clamp	
5	1	62574	Hose	3/4 X 1300 M30 X 2 L/L
6	1	25298	Connection	REDSDN 22/15 L
7	2	56509	Hose	1/2 X 1100 mm L/L M22
8	1	25266	Bulkhead connection	P-GSV 22 L
9	1	25209	Elbow connection	EWSD 22 L
10	1	26149	Connection	ELSD 22 L
11	1	56457	Hose	5/8 x 1200 mm 20S O/O
12	1	26369	Bulkhead connection	GSS 20 S
13	1	25261	Bulkhead connection	P-GSV 8 L
14	1	56506	Hose	1/4 X 1530 mm M14x1,5 L/90
15	1	26319	Reducing connection	RED-R 3/4-WD/R 3/8
16	1	25109	Connection	GES 8 LR-WD
17	1	26197	Connection	P-GEV 20 SR-WD
18	1	26355	Plug	VS-R-3/4 WD
19	1	25169	Connection	P-GEV 22 LR-WD
20	1	25277	Plug	VS-R-3/8 WD
21	1	25103	Plug	VS-R-1/2 WD
22	1	59355	Return block	
23	1	25279	Connection	EGESD 22 LR-WD
24	1	26170	Elbow connection	EWSD 8 L

18/129, 20/138, 22/153

Internal ref. 63 42 640

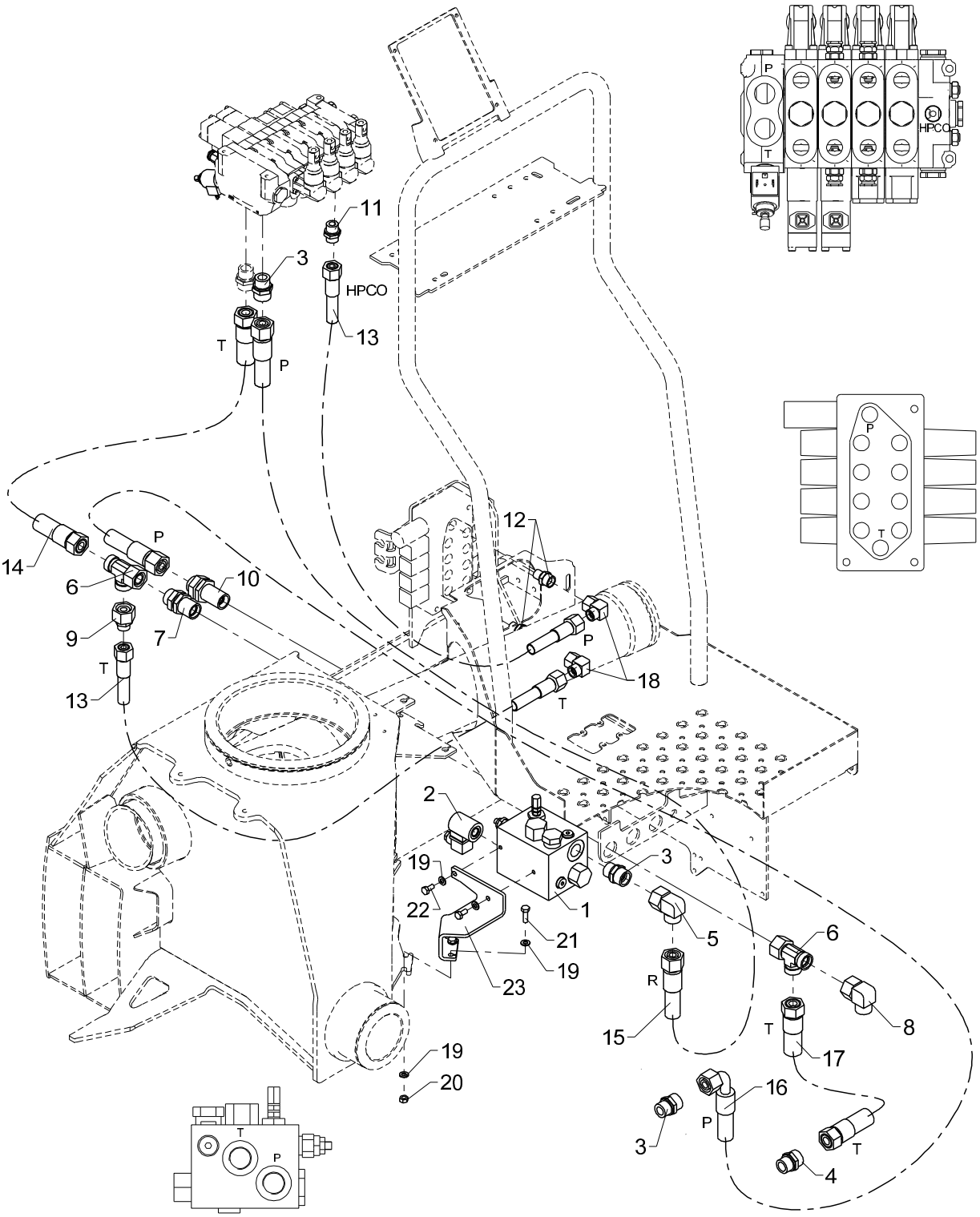

Kit for HDL - HS direct valve control

Pos	Qty.	Part no.	Description	Remarks
		6342640	Kit for HDL - HS10	
1	1	59018	HDL-2 valve	
2	1	59904	Solenoid	
3	3	26197	Connection	P-GEV 20 SR-WD
4	1	25169	Connection	P-GEV 22 LR-WD
5	1	26198	Elbow connection	EWVD 20 S-SV
6	2	26149	Connection	ELSD 22 L
7	1	25266	Bulkhead connection	P-GSV 22 L
8	1	25209	Elbow connection	EWSD 22 L
9	1	25298	Connection	REDSDN 22/15 L
10	1	26369	Bulkhead connection	GSS 20 S
11	1	25143	Connection	P-GEV 15 LR-WD
12	2	25273	Connection	GES 15 LR 3-8 A3L
13	2	56509	Hose	1/2 X 1100 mm L/L M22
14	1	62574	Hose	3/4 X 1300 M30 X 2 L/L
15	1	62626	Hose	5/8 X 1600 M30X2L/L SS
16	1	62668	Hose	5/8 X 650 M30X2 L/90 SS
17	1	62559	Hose	3/4 X 550 M30 X 2 L/L
18	2	25284	Elbow connection	EWSD 15 L
19	6	31147	Face washer, 8 mm	8 mm
20	2	30856	Nut, stainless	M8
21	2	30134	Set screw, stainless	M8 x 25
22	2	30131	Set screw, stainless	M8 x 16
23	1	6340848	Bracket (HDL-2)	

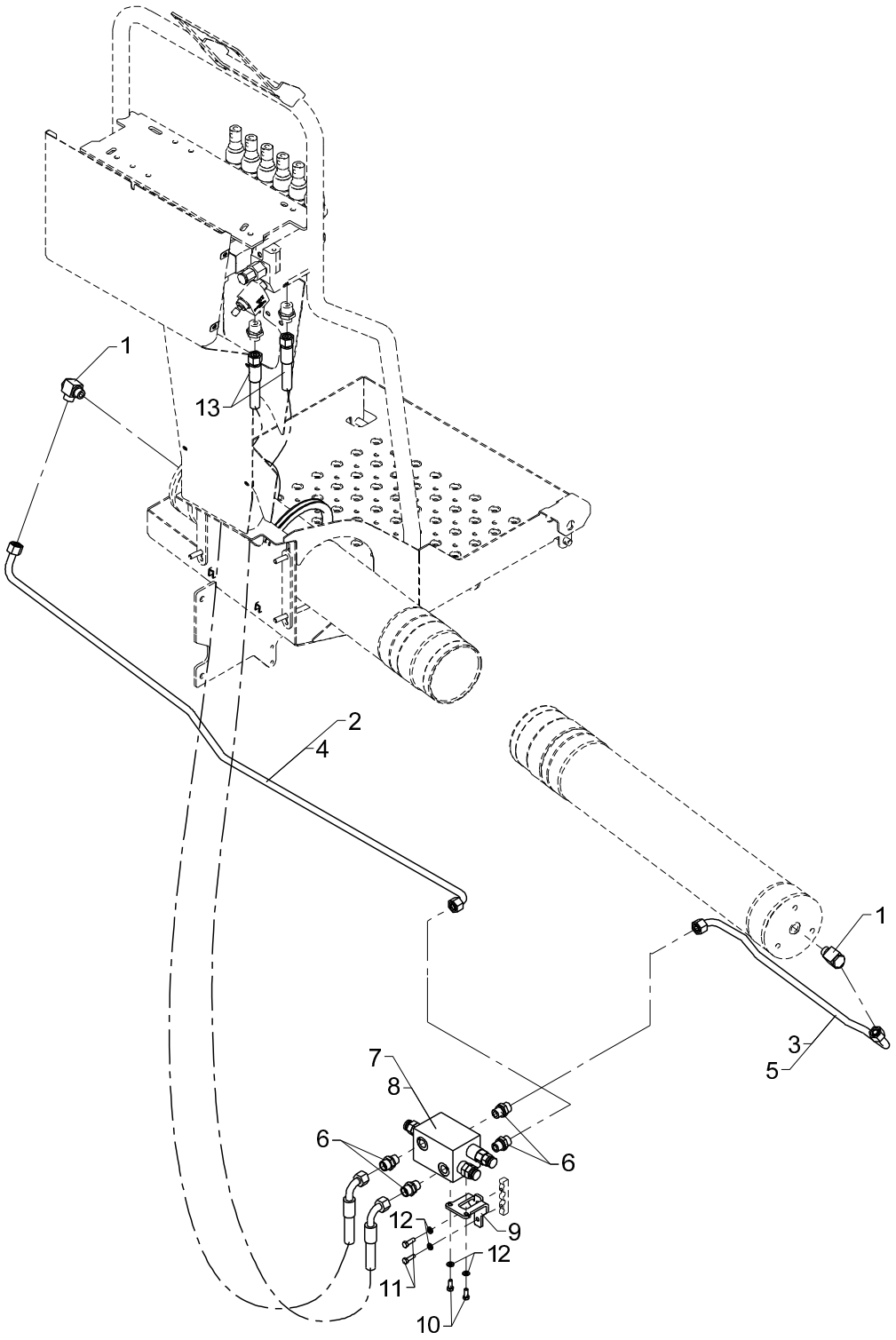
1
13
2
4
1
3
5
7
8
6
6
12
9
12
11
10

Obsolete

Hydraulic system, slewing, HS, direct valve control

535 10 490

From loader 1070001
To loader 1070562

Created 12-01-2010
Modified 25-10-2013

Pos	Qty.	Part no.	Description	Remarks
		6341410	Hydraulic system, slewing HS10	
		6345410	Hydraulic system, slewing HS10	
		6346410	Hydraulic system, slewing HS10	
1	2	25130	Banjo connection	RSWV 12 LR
2	1	6340279	Pipe	1300/1730
3	1	6340278	Pipe	1300/1730
4	1	6344279	Pipe	1800/22/153SL
5	1	6344278	Pipe	1800/22/153SL
6	4	25127	Connection	P-GEV 12 LR-WD
7	1	55262	Load-holding valve	1300/2030
8	1	55261	Load-holding valve	2200/22/153SL
9	1	6340237	Bracket for load-holding valve	
10	2	30112	Set screw, stainless	M6 x 16
11	2	30113	Set screw, stainless	M6 x 20
12	4	32302	Face washer, stainless	6 mm
13	2	0017310	Hose	

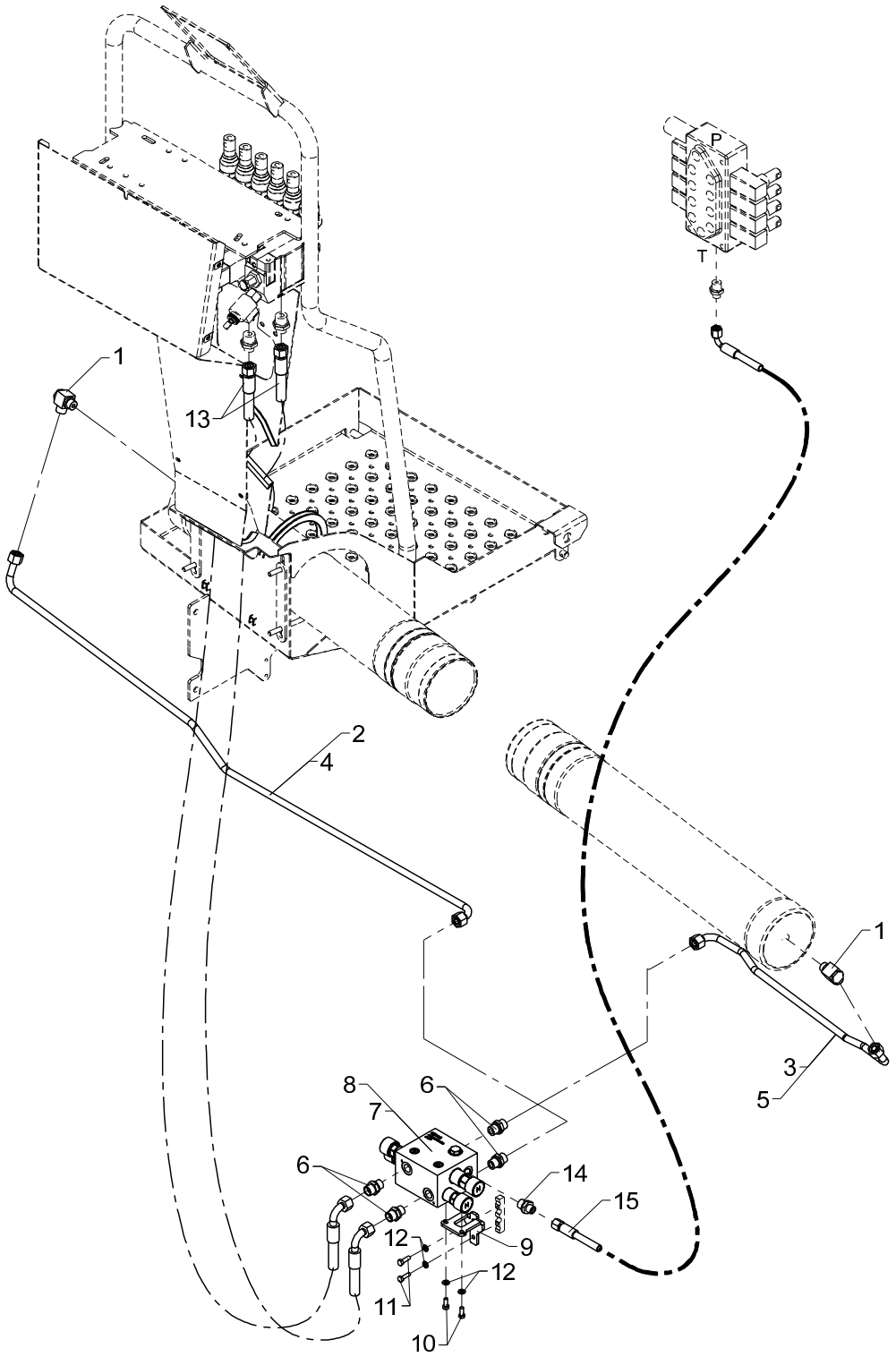
P
T
1
13
2
4
1
3
5
8
6
7
6
14
15
12
9
12
11
10

Hydraulic system, slewing, HS, direct valve control

Pos	Qty.	Part no.	Description	Remarks
		6341410	Hydraulic system, slewing HS10	
		6345410	Hydraulic system, slewing HS10	
		6346410	Hydraulic system, slewing HS10	
1	2	25130	Banjo connection	RSWV 12 LR
2	1	6340279	Pipe	1300/1730
3	1	6340278	Pipe	1300/1730
4	1	6344279	Pipe	1800/22/153SL
5	1	6344278	Pipe	1800/22/153SL
6	4	25127	Connection	P-GEV 12 LR-WD
7	1	55711	Load-holding valve	1300/2030
8	1	55710	Load-holding valve	2200/22/153SL
9	1	6340237	Bracket for load-holding valve	
10	2	30112	Set screw, stainless	M6 x 16
11	2	30113	Set screw, stainless	M6 x 20
12	4	32302	Face washer, stainless	6 mm
13	2	0017310	Hose	
14	1	25244	Connection	GES 8 LR 3/8-WD
15	1	62526	Hose	1/4 X 550 M14 X 1.5 L/90

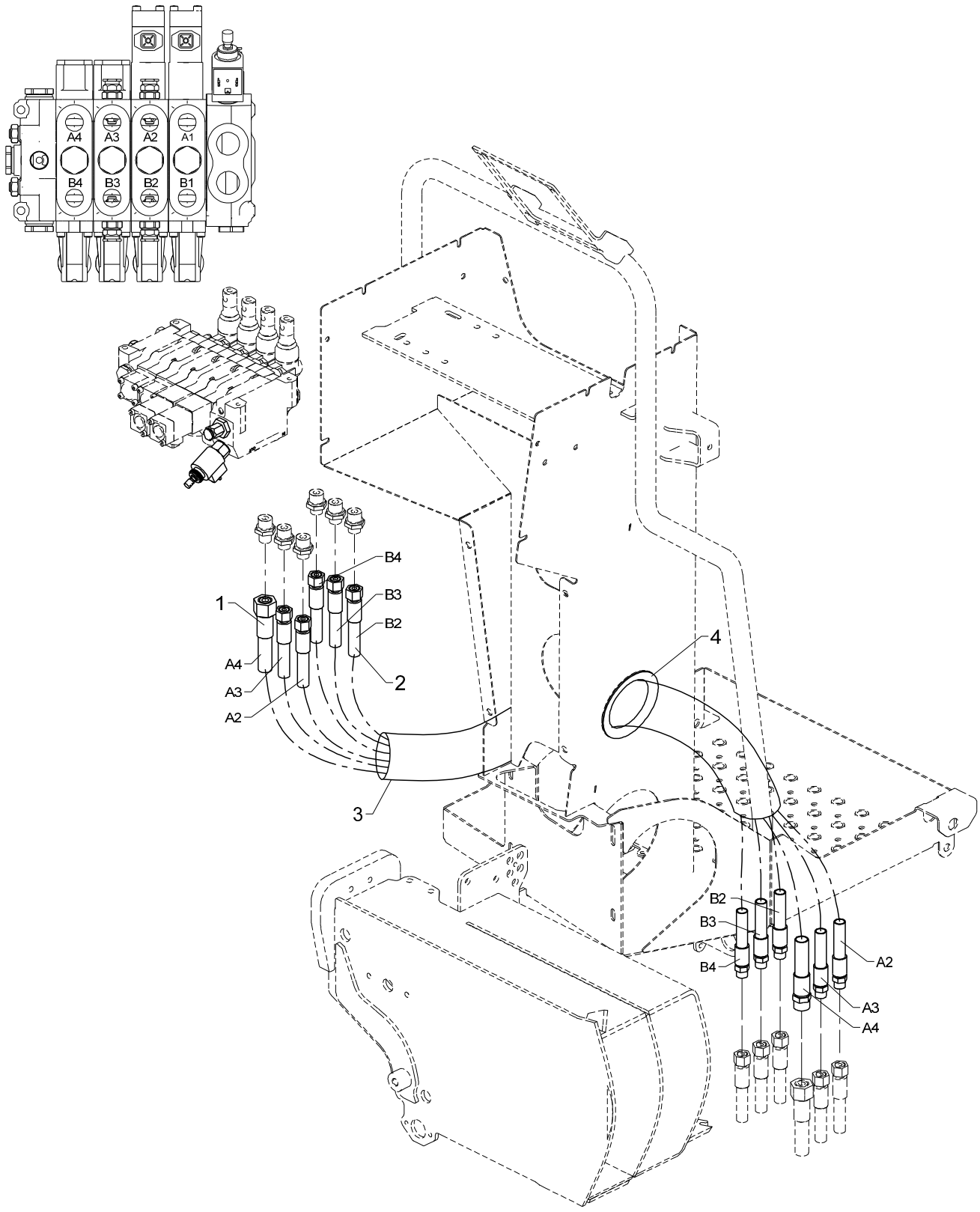
A4
A3
A2
A1
B4
B3
B2
B1
1
2
3
4
B4
B3
B2
A4
A3
A2
B2
B3
B4
A2
A3
A4

Hose kit, 4 fcts. Hydrocontrol

535 10 500

From loader 1070001
To loader

Created 12-01-2010
Modified

Pos	Qty.	Part no.	Description	Remarks
1	1	56505	Hose	1/2 X 1000 mm L/S
2	5	0015180	Hose	
3	1	62634	Protective cover	
4	1	22122	PVC protection	320 mm

18/129, 20/138, 22/153

Internal ref. 63 41 370

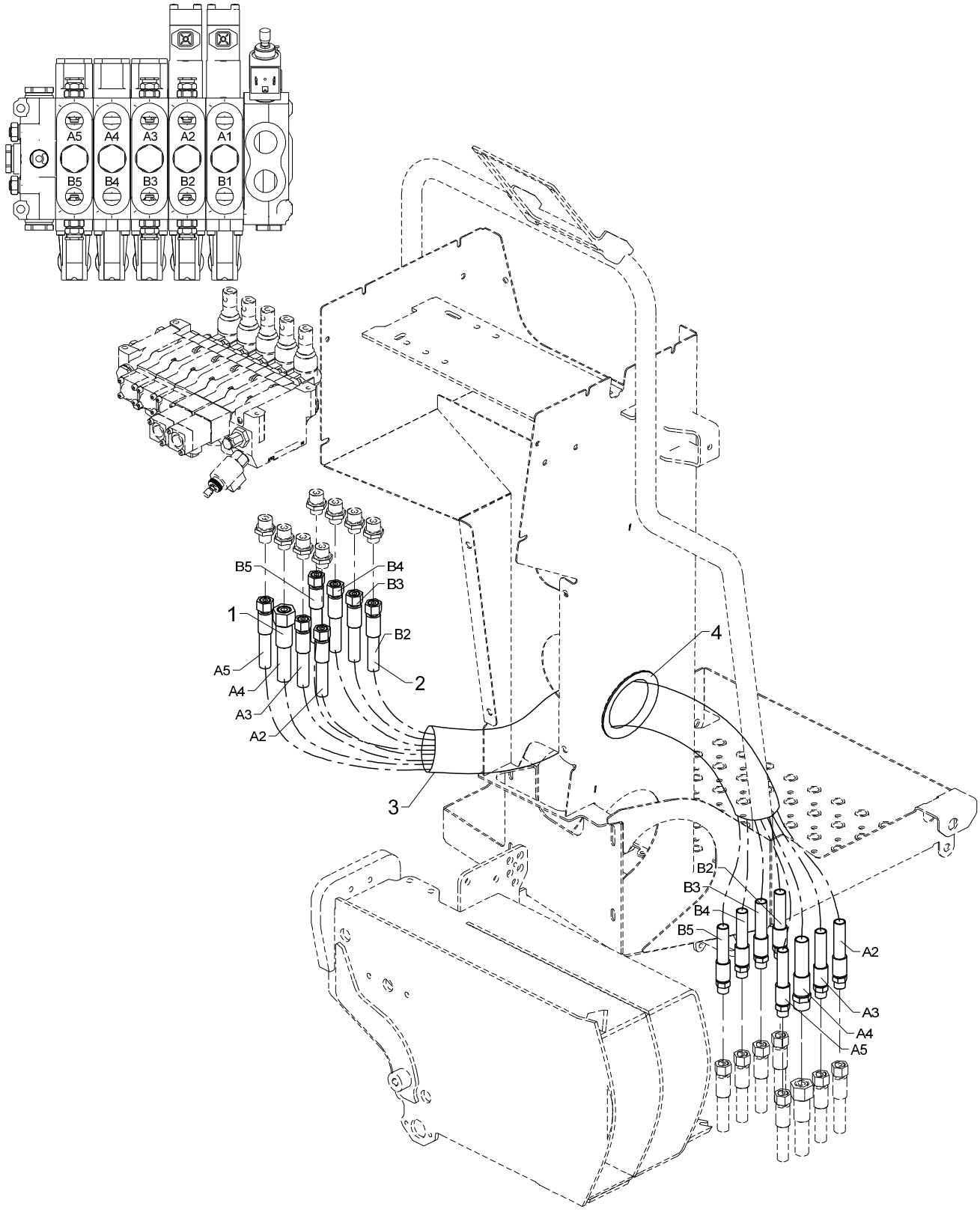

Hose kit, 5 fcts. Hydrocontrol

535 10 510

From loader 1070001
To loader

Created 12-01-2010
Modified

Pos	Qty.	Part no.	Description	Remarks
1	1	56505	Hose	1/2 X 1000 mm L/S
2	7	0015180	Hose	
3	1	62634	Protective cover	
4	1	22122	PVC protection	320 mm

18/129, 20/138, 22/153

Internal ref. 63 41 380

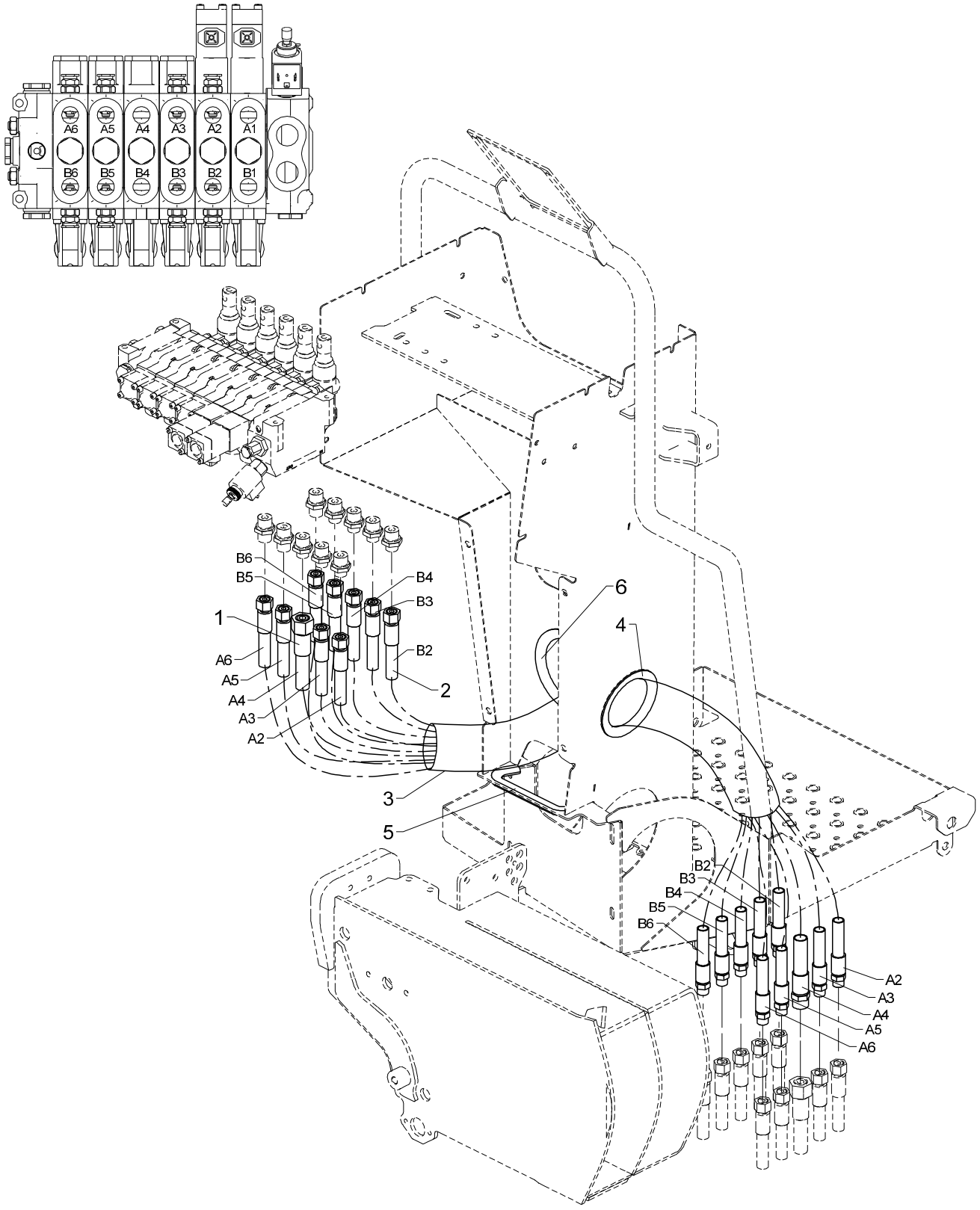

Hose kit, HS dir. valve ctrl. (HC 6 fcts.)

Pos	Qty.	Part no.	Description	Remarks
1	1	56505	Hose	1/2 X 1000 mm L/S
2	9	0015180	Hose	
3	1	62634	Protective cover	
4	1	22122	PVC protection	320 mm
5	1	22122	PVC protection	260 mm
6	1	22122	PVC protection	410 mm

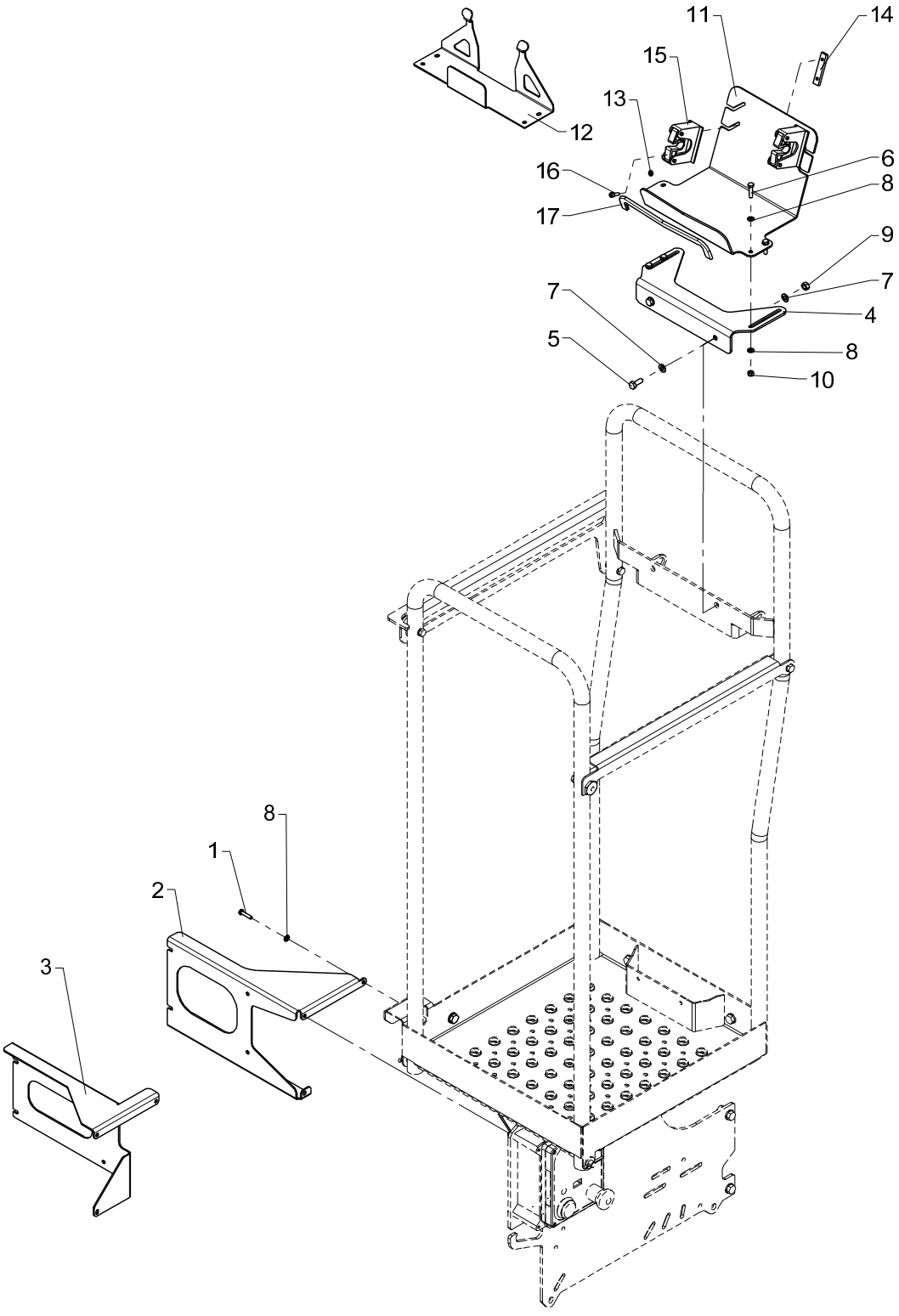
11
14
15
13
12
6
16
8
17
9
7
7
4
5
8
10
8
1
2
3

Obsolete

Mounting fittings, HSRC

535 10 800

From loader 1070001
To loader

Created 24-02-2009
Modified

Pos	Qty.	Part no.	Description	Remarks
		6341430	Fittings, HSRC (Scanreco)	
		6341440	Fittings, HSRC (Hetronic)	
1	4	30340	Screw, stainless	6,0 x 25
2	1	6340494	Mounting bracket (RC 400 - HS)	
3	1	6340495	Mounting bracket,Scanreco/Hetr	
4	1	6340498	Fitting	
5	2	30132	Set screw, stainless	M8 x 20
6	4	30114	Set screw, stainless	M6 x 25
7	4	31147	Face washer, 8 mm	8 mm
8	12	32302	Face washer, stainless	6 mm
9	2	30856	Nut, stainless	M8
10	4	30854	Nut, stainless	M6
11	1	6340901	Bracket, Scanreco RC box	
12	1	6340902	Bracket(HETR.remote ctrl. box)	
13	4	31189	Washer	5 mm
14	2	8507104	Threaded plate	
15	2	46453	Bracket	
16	4	30433	Screw	MC5 x 16
17	1	46596	Rubber protection	0,3 m.

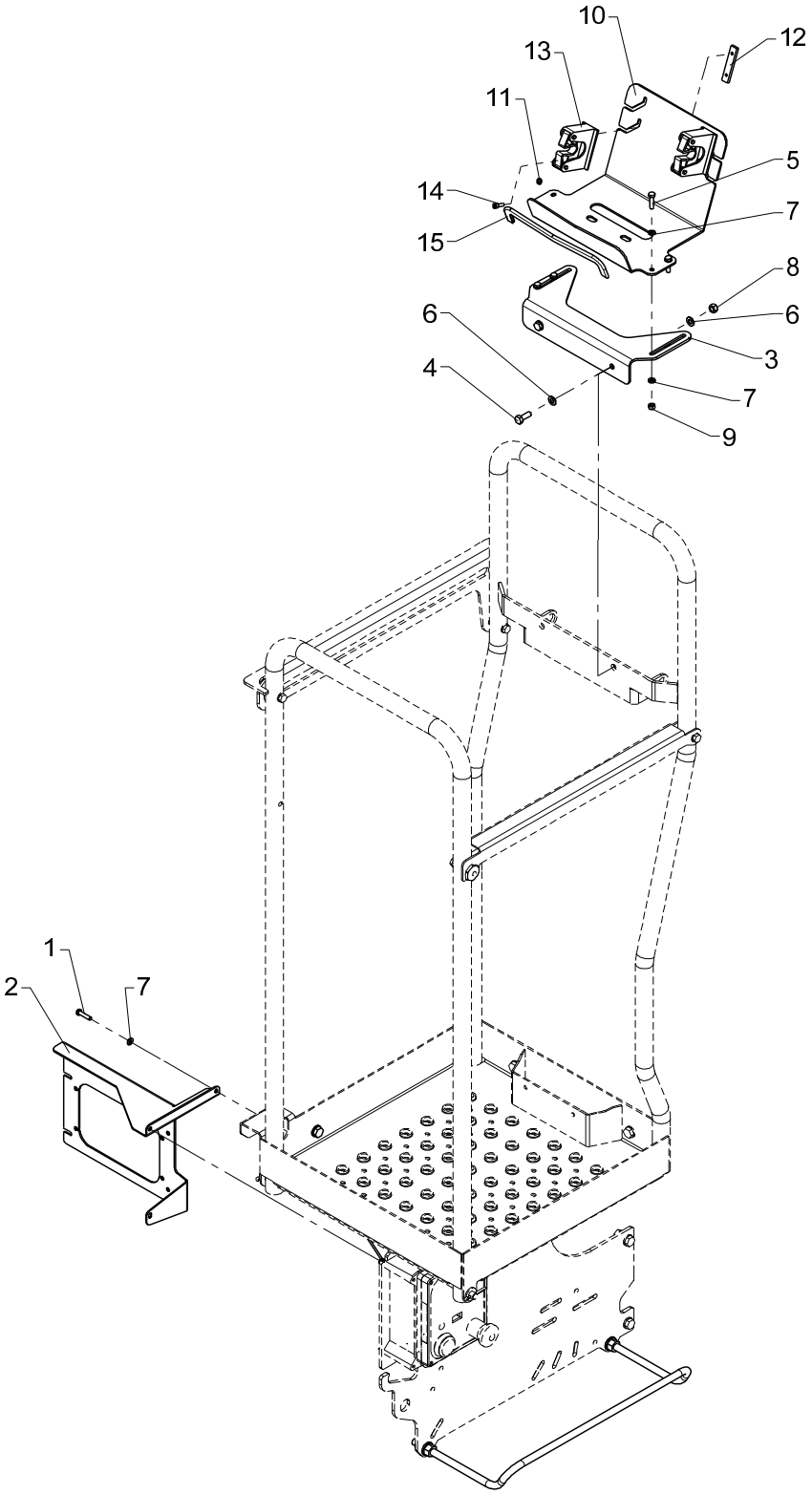
10
12
13
11
5
14
7
15
8
6
6
3
4
7
9
1
2
7

Mounting fittings, HSRC

Pos	Qty.	Part no.	Description	Remarks
		6343140	Mouting fittings, HSRC (SR-G2)	
1	4	30340	Screw, stainless	6,0 x 25
2	1	6340495	Mounting bracket,Scanreco/Hetr	
3	1	6340498	Fitting	
4	2	30133	Set screw, stainless	
5	4	30114	Set screw, stainless	M6 x 25
6	4	31147	Face washer, 8 mm	
7	12	32302	Face washer, stainless	6 mm
8	2	30856	Nut, stainless	M8
9	4	30854	Nut, stainless	M6
10	1	6340901	Bracket, Scanreco RC box	
11	4	31189	Washer	5 mm
12	2	8507104	Threaded plate	
13	2	46453	Bracket	
14	4	30433	Screw	MC5 x 16
15	1	46596	Rubber protection	0,3 m.

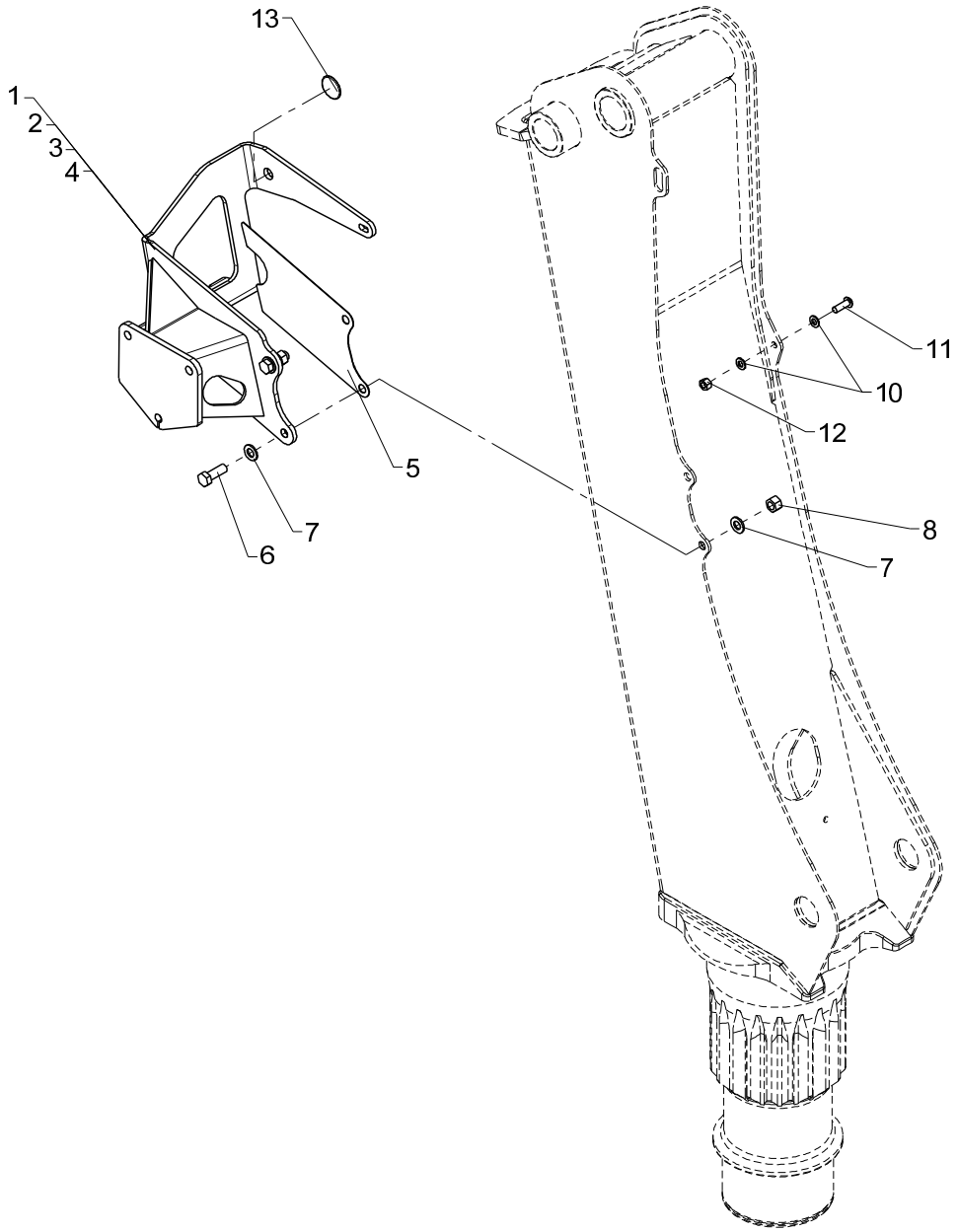
13
1
2
3
4
5
6
7
7
8
10
11
12

Obsolete

Mounting fittings, TS

535 11 010

From loader 1070001
To loader

Created 24-02-2009
Modified 17-06-2010

Pos	Qty.	Part no.	Description	Remarks
		6341980	Fittings, TS 1300/1500	
		6341990	Fittings, TS 1310/1510	
		6344760	Fittings, TS, 1800/2200	
		6344990	Fittings, TS, 1810/2210	
1	1	6340081	Bracket	1300/1500
2	1	6340085	Bracket	1310/1510
3	1	6344081	Bracket	1800/2200
4	1	6344085	Bracket	1810/2210/1710L/2030L/2110L/25
5	1	6340087	Division plate	
6	2	30207	Set screw	M14 x 40
7	4	31178	Washer	14 mm
8	2	30891	Lock nut	M14
10	2	31177	Washer	10 mm
11	1	30649	Screw	M10 x 30
12	1	30888	Lock nut	M10
13	1	6381484	Guide	

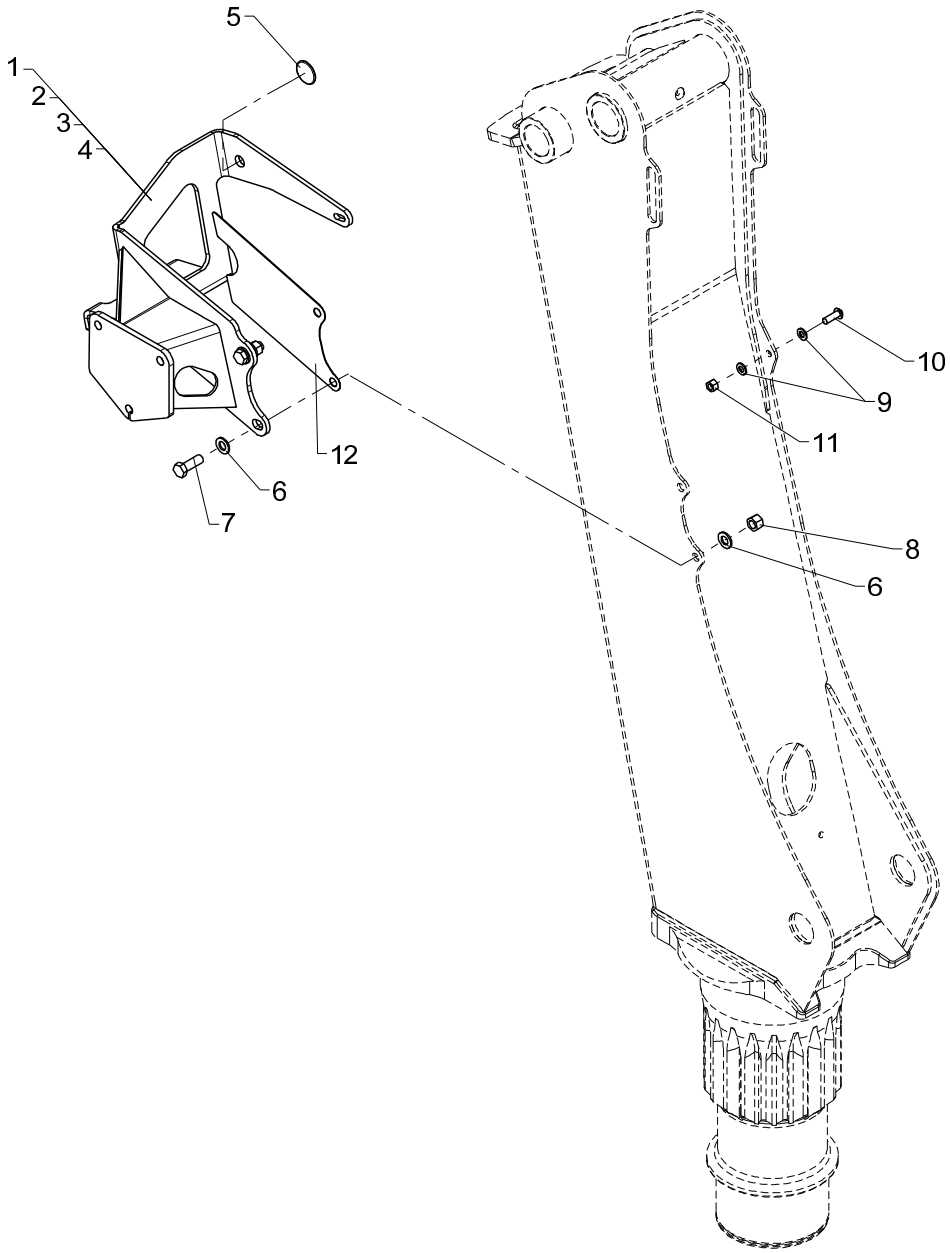
5
1
2
3
4
12
6
7
10
9
11
8
6

Mounting fittings, TS

Pos	Qty.	Part no.	Description	Remarks
		6341980	Fittings, TS 1300/1500	
		6341990	Fittings, TS 1310/1510	
		6344760	Fittings, TS, 1800/2200	
		6344990	Fittings, TS, 1810/2210	
1	1	6340685	Top seat bracket (TS)	1300/1500
2	1	6340687	TS bracket	1310/1510
3	1	6344685	TS bracket	1800/2200
4	1	6344687	TS bracket	1810/2210/1710L/2030L/2110L/25
5	1	6381484	Guide	
6	4	31178	Washer	14 mm
7	2	30207	Set screw	M14 x 40
8	2	30891	Lock nut	M14
9	2	31177	Washer	10 mm
10	1	30649	Screw	M10 x 30
11	1	30888	Lock nut	M10
12	1	6340087	Division plate	

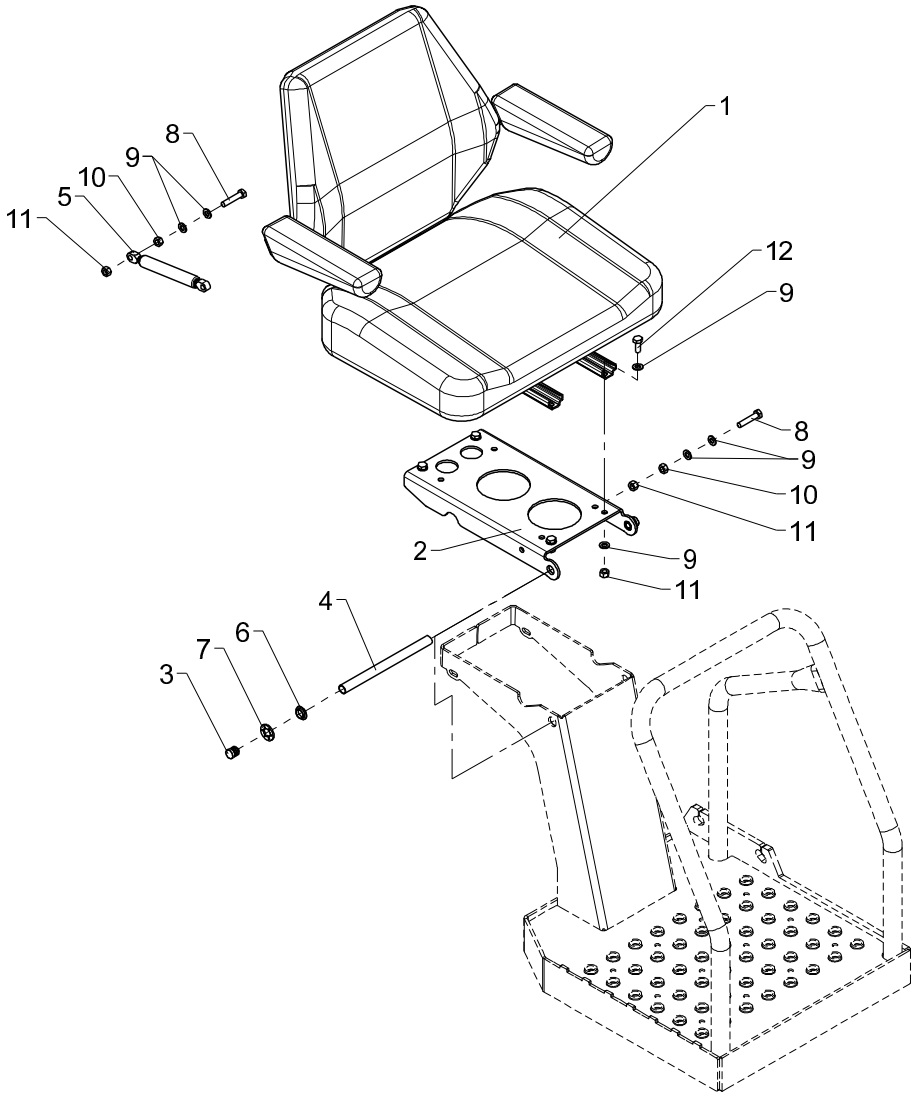
1
2
3
4
5
6
7
8
9
10
11
12
8
9
10
11
9
11
8
9
10
11

Seat, cpl.

Pos	Qty.	Part no.	Description	Remarks
1	1	24134	Seat	
2	1	6306638	Plate, seat	
3	2	64520	Stopper	
4	1	6306649	Pin	
5	1	48460	Gas spring	
6	2	23416	Composite bearing	BB 1504,5
7	2	32279	Clamping ring sleeve	15 mm
8	2	30137	Set screw, stainless	M8 x 40
9	12	31147	Face washer, 8 mm	8 mm
10	2	30856	Nut, stainless	M8
11	6	30886	Lock nut, stainless	M8
12	4	30132	Set screw, stainless	M8 x 20

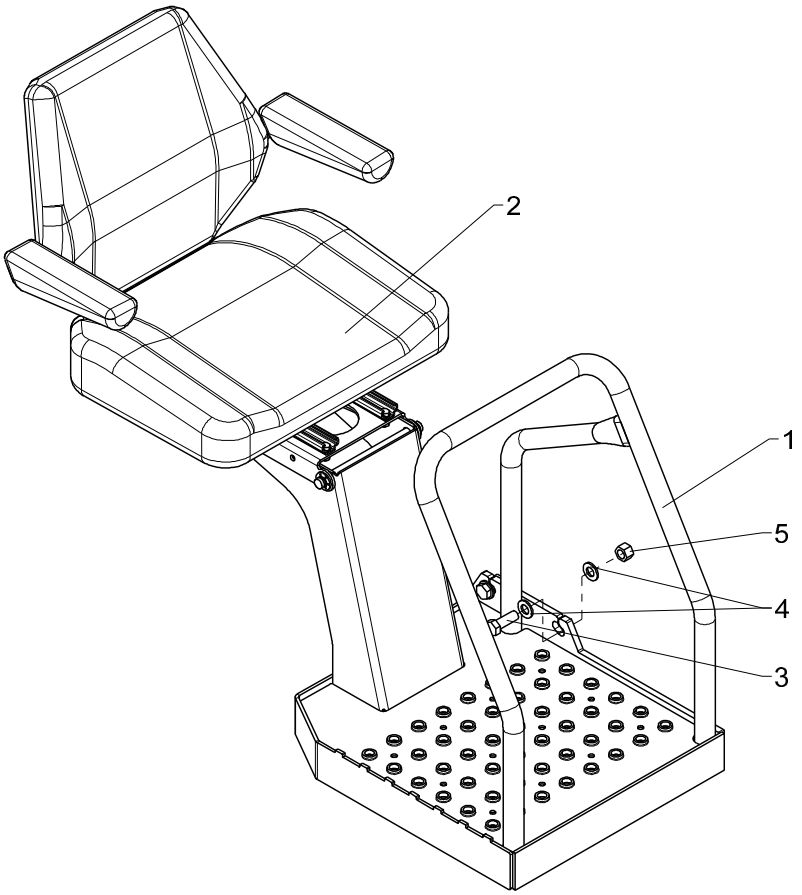
2
1
5
4
3

Top seat (RC), cpl.

Pos	Qty.	Part no.	Description	Remarks
1	1	6340911	Platform, (TSRC)	
2	1	6341950	Seat, complete	
3	3	32248	Set screw	M14 x 40
4	6	31178	Washer	14 mm
5	3	32317	Lock nut	M14

18/129, 20/138, 22/153

63 41 970
Internal ref. 63 41 960

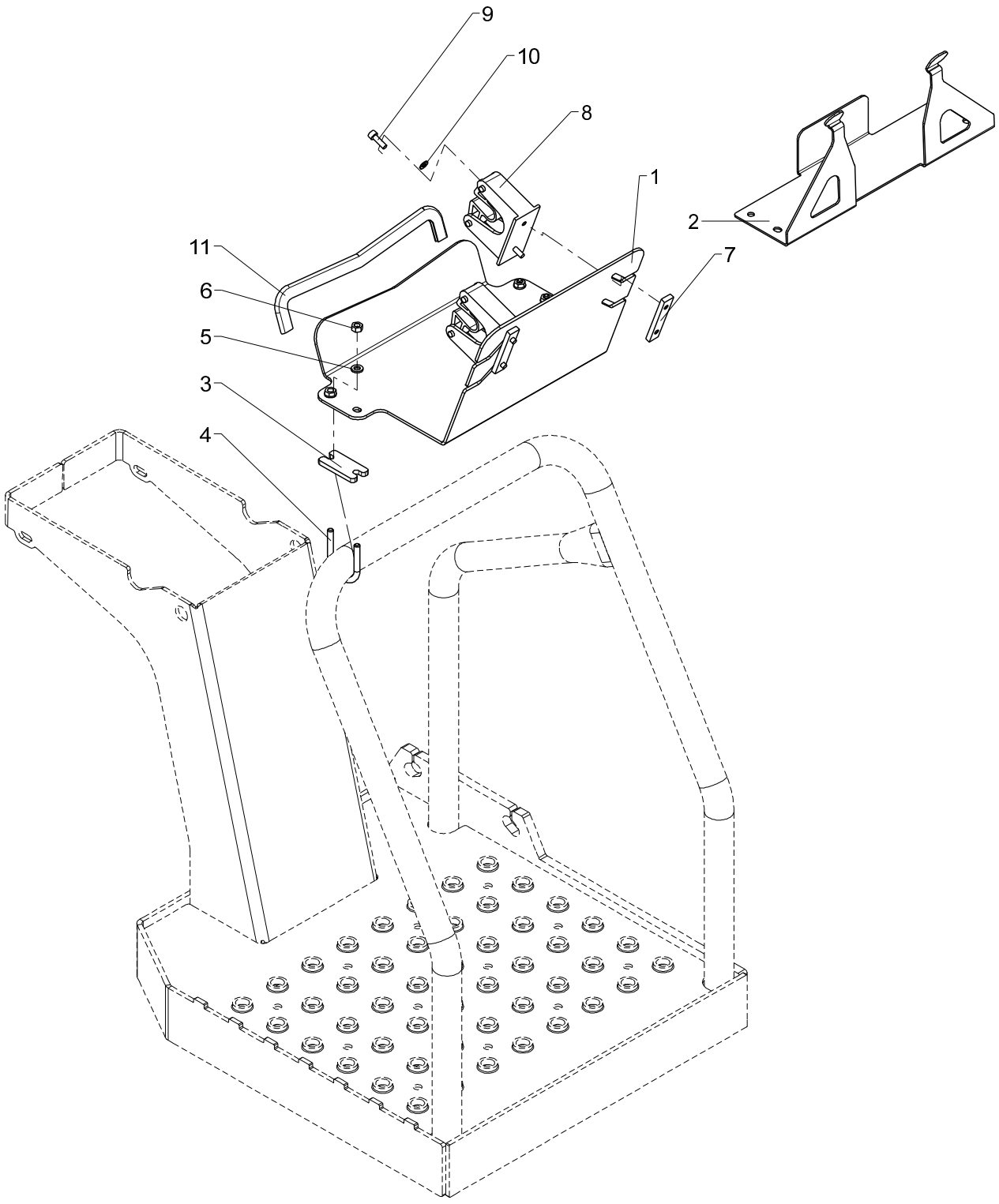

Mounting fittings, TS RC

Pos	Qty.	Part no.	Description	Remarks
		6341960	Fittings, TS RC (SR)	
		6341970	Fittings, TS RC (HETR)	
1	1	6340901	Bracket, Scanreco RC box	
2	1	6340902	Bracket(HETR.remote ctrl. box)	
3	2	6340904	Division plate	
4	2	6340903	Clamp	
5	4	32302	Face washer, stainless	6 mm
6	4	30854	Nut, stainless	M6
7	2	8507104	Threaded plate	
8	2	46453	Bracket	
9	4	30433	Screw	MC5 x 16
10	4	31189	Washer	5 mm
11	1	46596	Rubber protection	0,3 m.

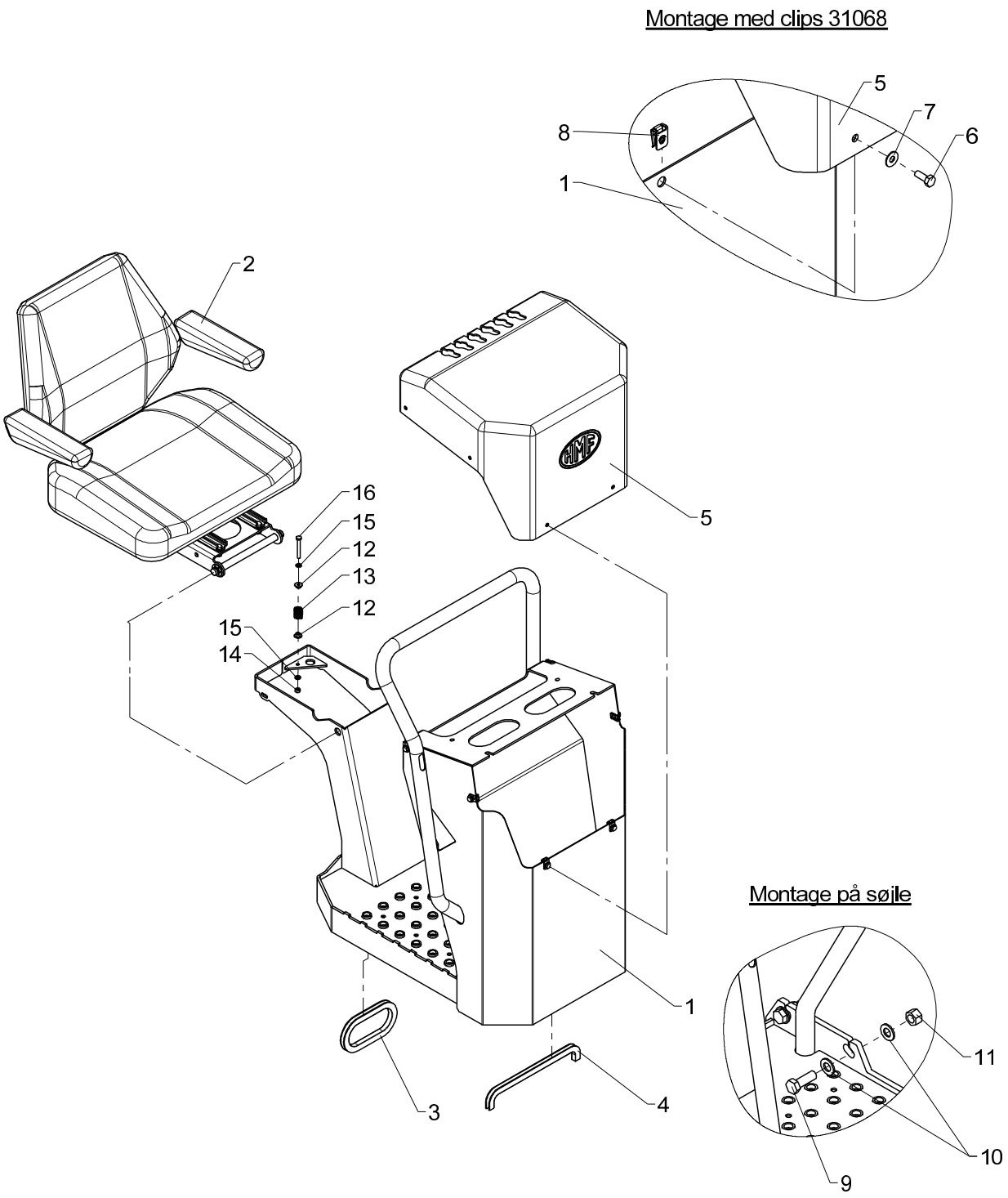
Montage med clips 31068
5
7
6
8
1
2
16
15
12
13
12
15
14
5
1
3
4
Montage på søjle
11
10
9

Top seat (HC linear), cpl.

535 11 050

From loader 1070001
To loader

Created 24-02-2009
Modified

Pos	Qty.	Part no.	Description	Remarks
1	1	6340921	Platform (TS)	
2	1	6341950	Seat, complete	
3	3	46587	Rubber protection	370 mm
4	1	46587	Rubber protection	300 mm
5	1	42163	Protection	
6	6	30112	Set screw, stainless	M6 x 16
7	6	32306	Washer	6 mm
8	6	31068	Clip	M6 0,5 - 4,0 mm.
9	3	32248	Set screw	M14 x 40
10	6	31178	Washer	14 mm
11	3	32317	Lock nut	M14
12	2	64382	Nylon bushing	
13	1	33367	Spring	6884924
14	1	30884	Lock nut, stainless	M6
15	2	32302	Face washer, stainless	6 mm
16	1	30119	Steel pin, stainless	M6 x 50

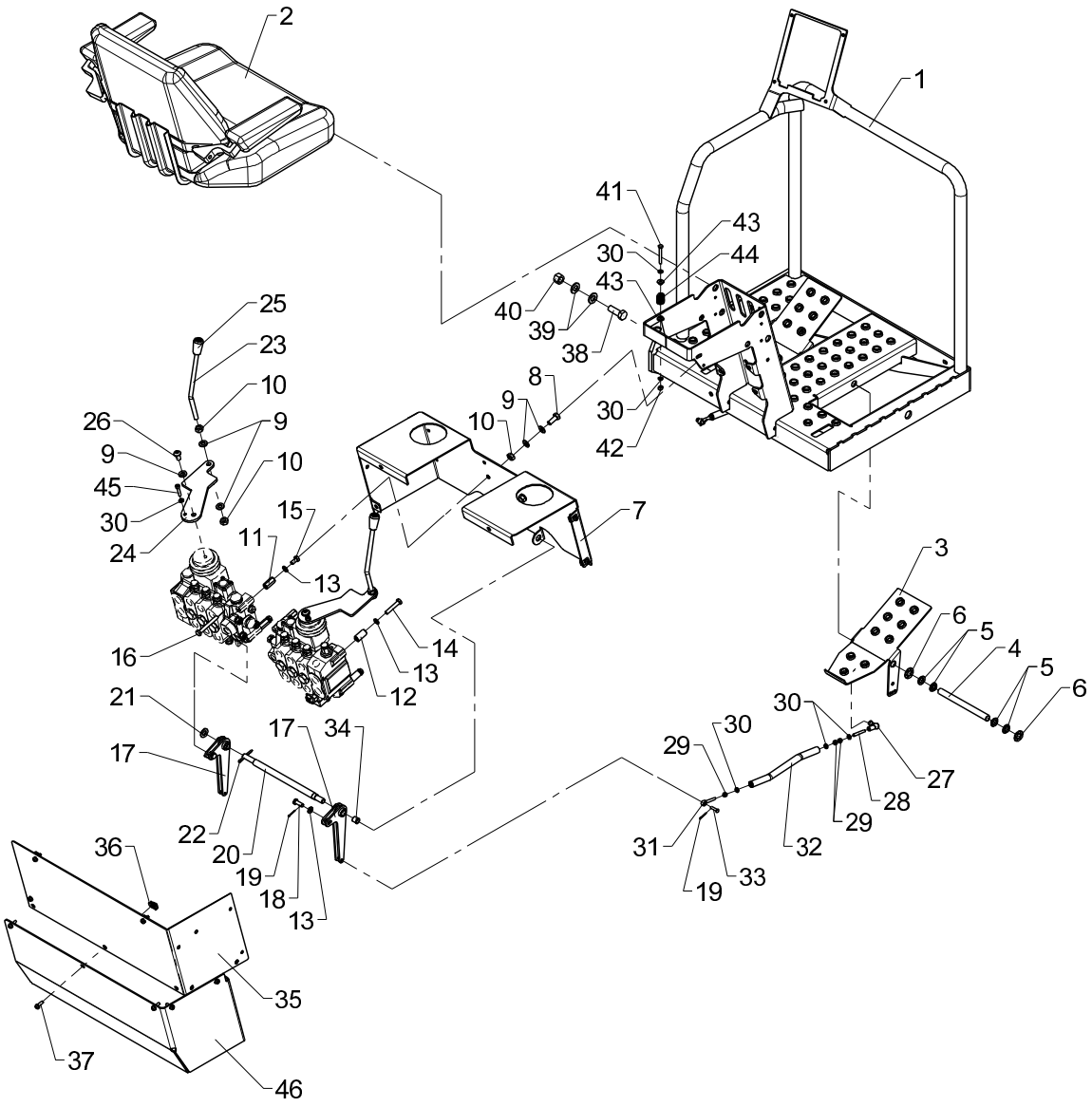
2
1
41
43
30
44
43
40
39
38
8
9
10
30
42
25
23
10
26
9
9
10
45
30
24
15
11
13
7
3
6
5
4
5
6
16
14
13
12
21
17
34
30
30
29
27
28
29
17
22
20
19
18
13
36
31
32
19
33
35
37
46

Top seat (HC X), cpl.

Pos	Qty.	Part no.	Description	Remarks
1	1	6306621	Platform (TS)	
2	1	6341950	Seat, complete	
3	2	6306632	Foot lever	
4	2	6306633	Pin	
5	8	23416	Composite bearing	BB 1504,5
6	4	32279	Clamping ring sleeve	15 mm
7	1	6341031	Valve bracket	
8	4	31513	Set screw, stainless	M10 x 25
9	14	31565	Washer, stainless	10 mm
10	8	31551	Nut, stainless	M10
11	4	6341034	Spacer	
12	4	6341035	Spacer	
13	8	31147	Face washer, 8 mm	8 mm
14	4	31511	Set screw, stainless	M8 x 45
15	2	30131	Set screw, stainless	M8 x 16
16	2	32250	Set screw	M8 x 65
17	2	6341036	Bracket	
18	2	31276	Cotter bolt	ø8 x 23
19	4	31601	Split pin, stainless	ø1,6 x 20
20	1	6341033	Pin	
21	1	32338	Washer	12 mm
22	1	31638	Split pin	ø4 x 40
23	2	6341039	Control lever	
24	2	6341041	Guide plate	
25	2	64411	Knob for lever	
26	2	30926	Steel bolt	M10 x 20
27	2	24105	Toggle joint	
28	2	31007	Pointed screw	MSP6 x 40
29	6	30854	Nut, stainless	M6
30	10	32302	Face washer, stainless	6 mm
31	2	32114	Pin	M6 x 40
32	2	6341042	Connecting rod	
33	2	31271	Cotter bolt	ø6 x 21
34	4	23456	Composite bearing	ø12/14 x 12
35	1	6341032	Protection	
36	10	31068	Clip	M6 0,5 - 4,0 mm.
37	10	32480	Screw	M6 x 18
38	3	32248	Set screw	M14 x 40
39	6	31178	Washer	14 mm
40	3	32317	Lock nut	M14
41	1	30119	Steel pin, stainless	M6 x 50

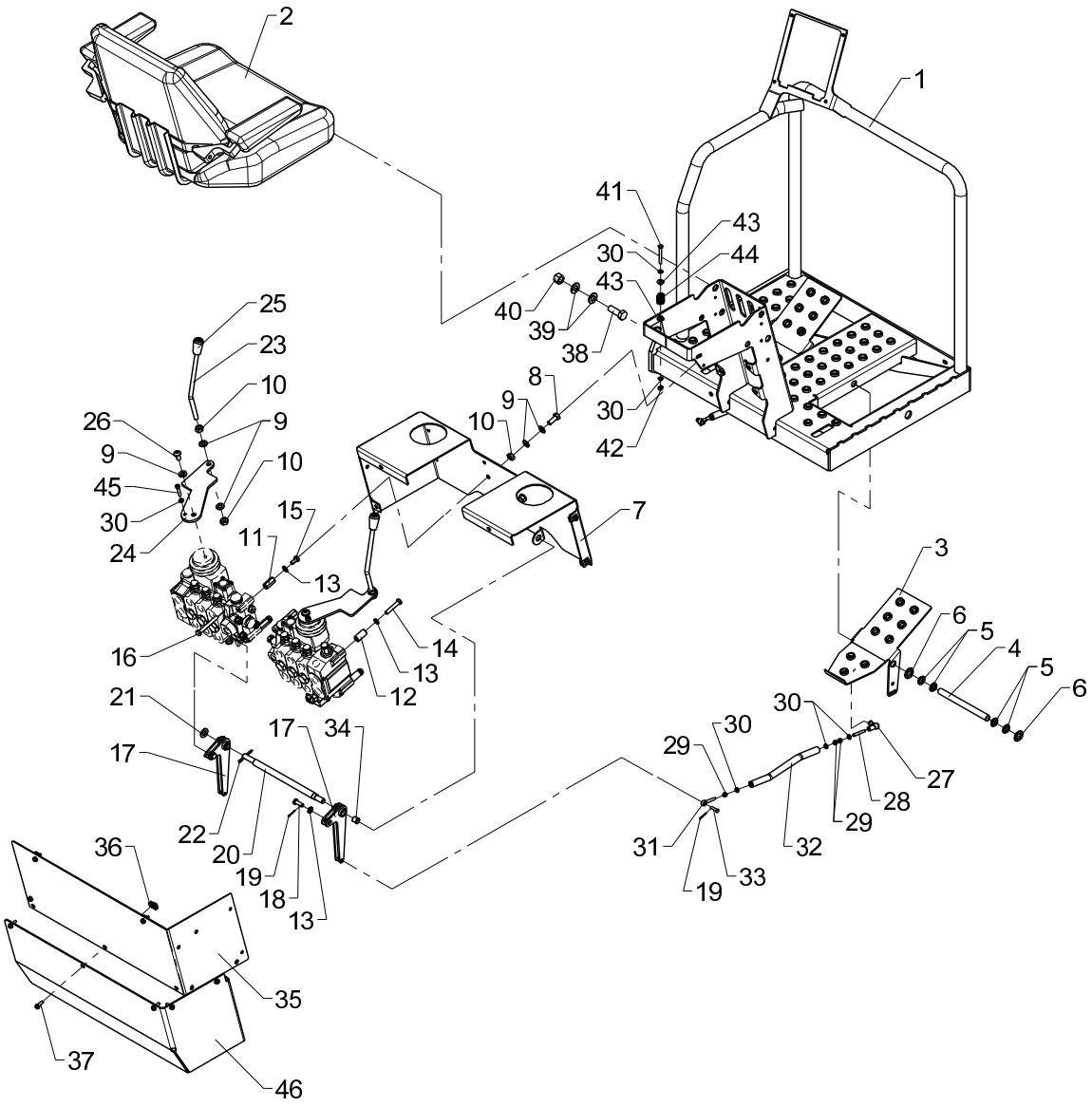
2
1
41
43
30
44
43
40
39
38
8
9
10
30
42
25
23
10
26
9
9
10
45
30
24
15
11
13
7
3
6
5
4
5
6
16
14
13
12
21
17
34
30
30
29
27
28
29
17
22
20
19
18
13
36
35
37
46
31
19
33
32

Top seat (HC X), cpl.

Pos	Qty.	Part no.	Description	Remarks
42	1	30884	Lock nut, stainless	M6
43	2	64382	Nylon bushing	
44	1	33367	Spring	6884924
45	2	30961	Screw	MC6 x 30
46	1	6341049	Shielding. HC joysticks	

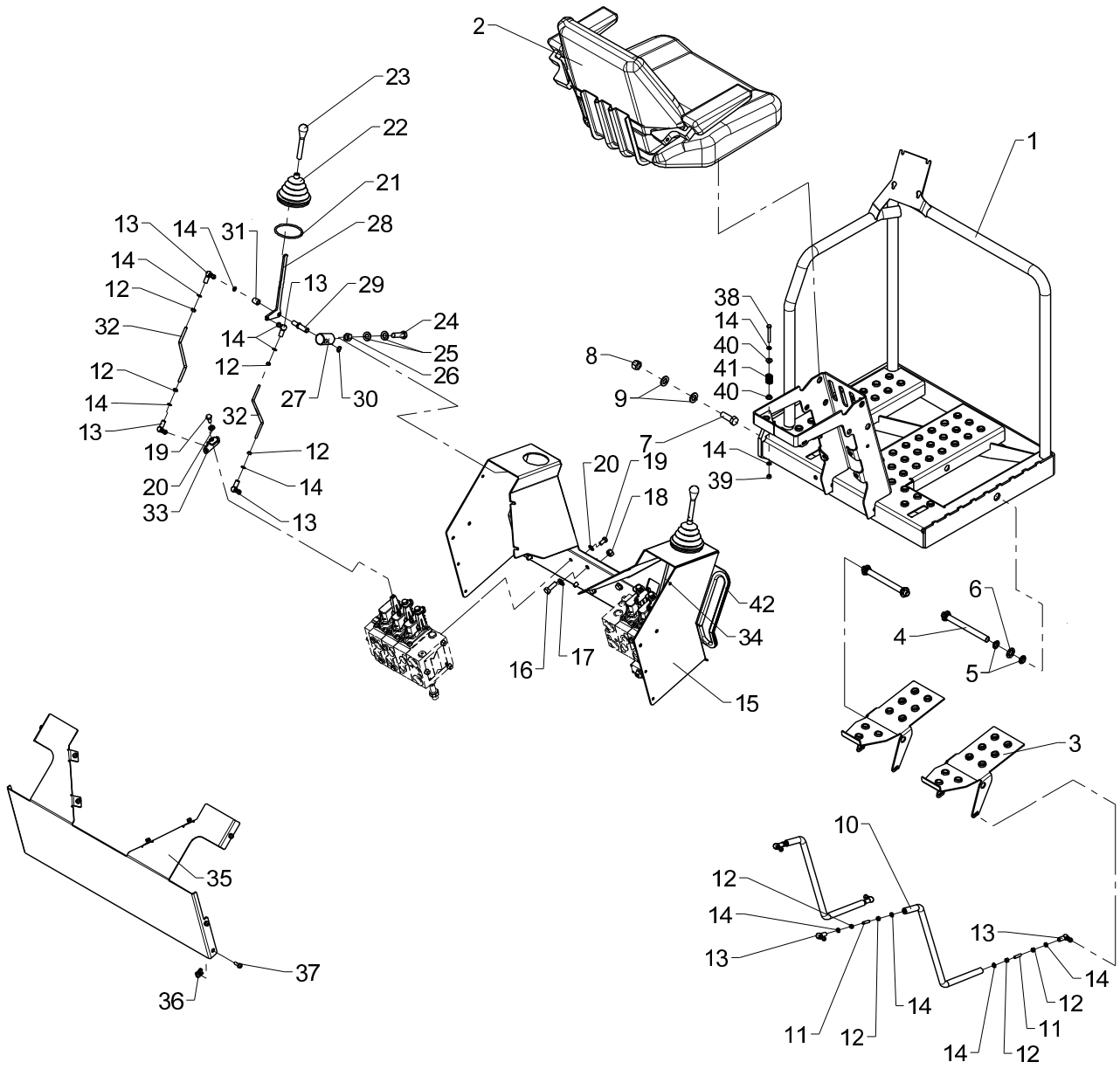
2
23
22
21
28
13
14
31
14
12
13
29
32
24
14
25
12
26
12
27
30
14
13
32
19
12
20
14
33
13
1
38
14
40
41
40
8
9
7
14
39
20
19
18
42
34
16
17
15
6
4
5
3
10
12
14
13
13
14
12
11
12
14
11
14
12
35
37
36

Obsolete

Top seat (Danfoss X), cpl.

535 11 070

From loader 1070001
To loader

Created 12-01-2010
Modified

Pos	Qty.	Part no.	Description	Remarks
1	1	6306621	Platform (TS)	
2	1	6341950	Seat, complete	
3	2	6306632	Foot lever	
4	2	6306633	Pin	
5	8	23416	Composite bearing	BB 1504,5
6	4	32279	Clamping ring sleeve	15 mm
7	3	32248	Set screw	M14 x 40
8	3	32317	Lock nut	M14
9	6	31178	Washer	14 mm
10	2	6306645	Connecting rod	
11	4	30560	Pointed screw	MSP6 x 25
12	16	30854	Nut, stainless	M6
13	12	24105	Toggle joint	
14	23	32302	Face washer, stainless	6 mm
15	1	6341051	Valve bracket	
16	4	30156	Set screw, stainless	M10 x 30
17	8	31565	Washer, stainless	10 mm
18	4	31564	Lock nut, stainless	M10
19	14	30131	Set screw, stainless	M8 x 16
20	14	31147	Face washer, 8 mm	8 mm
21	2	20268	O-ring	OR 70 x 4
22	2	64390	Bellows	
23	2	48406	Knob	
24	2	31533	Set screw, stainless	M12 x 40
25	4	32338	Washer	12 mm
26	2	30890	Lock nut	M12
27	2	64064	Universal joint	
28	2	6306648	Control lever	
29	2	6306647	Pin	
30	2	33102	Circlip	12U
31	2	6302048	Spacer	
32	2	6306652	Threaded pin	
33	6	6306646	Adapter, Danfoss	
34	2	6306653	Threaded pin	
35	1	6341054	Protection	
36	10	31068	Clip	M6 0,5 - 4,0 mm.
37	10	32480	Screw	M6 x 18
38	1	30119	Steel pin, stainless	M6 x 50
39	1	30884	Lock nut, stainless	M6
40	2	64382	Nylon bushing	
41	1	33367	Spring	6884924

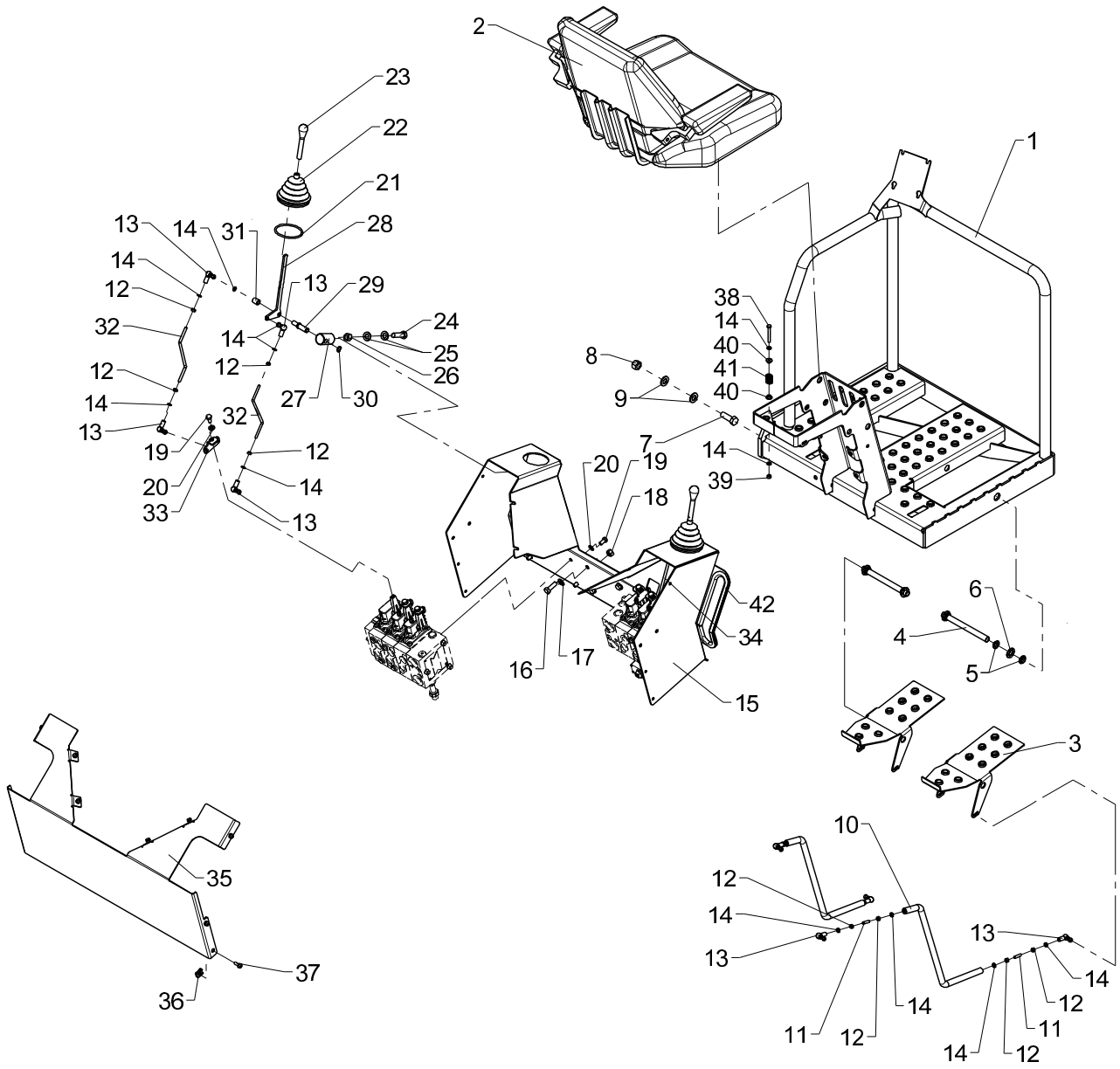
2
23
22
21
28
13
14
31
14
12
32
12
14
13
13
29
24
25
26
14
12
27
30
32
19
20
33
12
14
13
1
38
14
40
41
40
8
9
7
14
39
20
19
18
42
34
16
17
15
6
4
5
3
10
12
14
13
13
14
14
12
11
11
12
14
12
35
37
36

Obsolete

Top seat (Danfoss X), cpl.

535 11 070

From loader 1070001
To loader

Created 12-01-2010
Modified

Pos	Qty.	Part no.	Description	Remarks
42	2	46596	Rubber protection	L = 510

18/129, 20/138, 22/153

Internal ref. 63 41 890

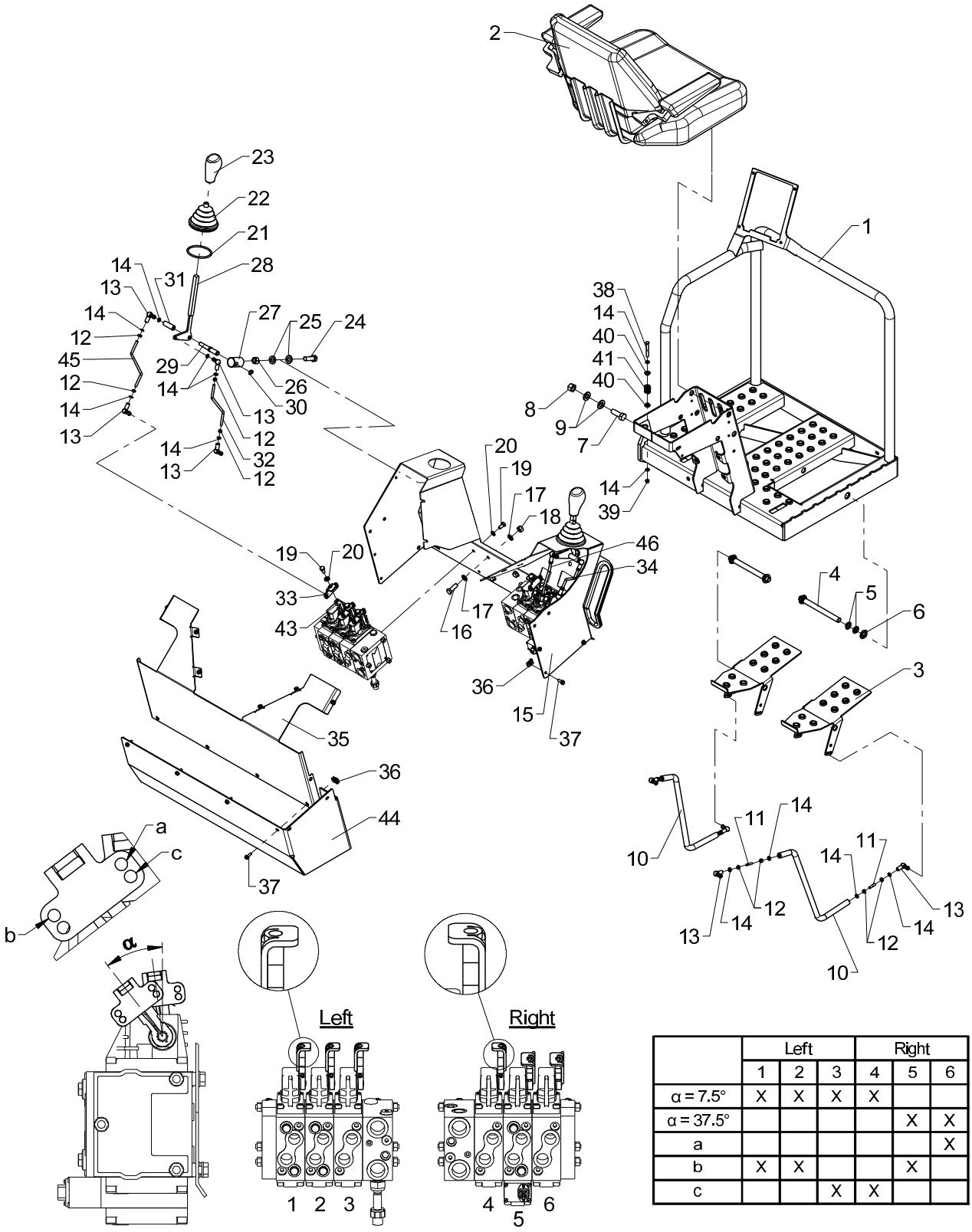

	Left			Right		
	1	2	3	4	5	6
α = 7.5°	X	X	X	X		
α = 37.5°					X	X
a						X
b	X	X			X	
c			X	X		

Top seat (Danfoss X), cpl.

Pos	Qty.	Part no.	Description	Remarks
1	1	6306621	Platform (TS)	
2	1	6341950	Seat, complete	
3	2	6306632	Foot lever	
4	2	6306633	Pin	
5	8	23416	Composite bearing	BB 1504,5
6	4	32279	Clamping ring sleeve	15 mm
7	3	32248	Set screw	M14 x 40
8	3	32317	Lock nut	M14
9	6	31178	Washer	14 mm
10	2	6306645	Connecting rod	
11	4	30560	Pointed screw	MSP6 x 25
12	16	30854	Nut, stainless	M6
13	12	24105	Toggle joint	
14	22	32302	Face washer, stainless	6 mm
15	1	6341051	Valve bracket	
16	4	30156	Set screw, stainless	M10 x 30
17	8	31565	Washer, stainless	10 mm
18	4	31564	Lock nut, stainless	M10
19	14	30131	Set screw, stainless	M8 x 16
20	14	31147	Face washer, 8 mm	
21	2	20268	O-ring	OR 70 x 4
22	2	64390	Bellows	
23	2	50236	Lever	
24	2	31533	Set screw, stainless	M12 x 40
25	4	32338	Washer	12 mm
26	2	30890	Lock nut	M12
27	2	64064	Universal joint	
28	2	6306849	Welded lever for joystick	
29	2	6306845	Pin	
30	2	33102	Circlip	12U
31	2	6306846	Distance pipe	
32	1	6306861	Threaded pin	
33	6	6306646	Adapter, Danfoss	
34	1	6306843	Threaded pin	
35	1	6341054	Protection	
36	15	31068	Clip	M6 0,5 - 4,0 mm.
37	15	32480	Screw	M6 x 18
38	1	30119	Steel pin, stainless	M6 x 50
39	1	30884	Lock nut, stainless	M6
40	2	64382	Nylon bushing	
41	1	33367	Spring	6884924

18/129, 20/138, 22/153

Internal ref. 63 41 890

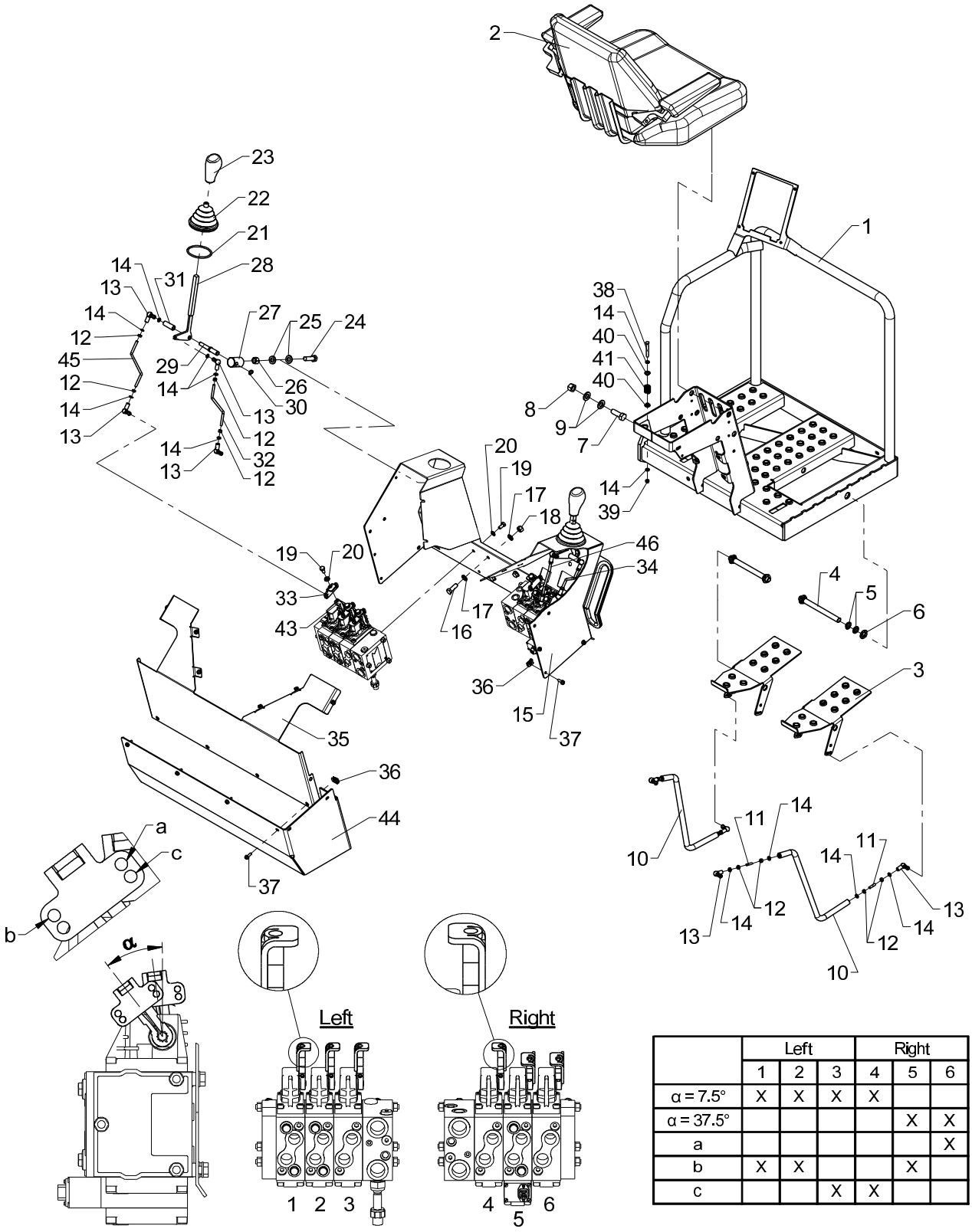

	Left			Right		
	1	2	3	4	5	6
α = 7.5°	X	X	X	X		
α = 37.5°					X	X
a						X
b	X	X			X	
c			X	X		

Top seat (Danfoss X), cpl.

Pos	Qty.	Part no.	Description	Remarks
42	2	46596	Rubber protection	L = 510
43	6	6344475	Foot for lever	
44	1	6341044	Shielding	
45	1	6306844	Threaded pin	
46	1	6306841	Threaded pin	

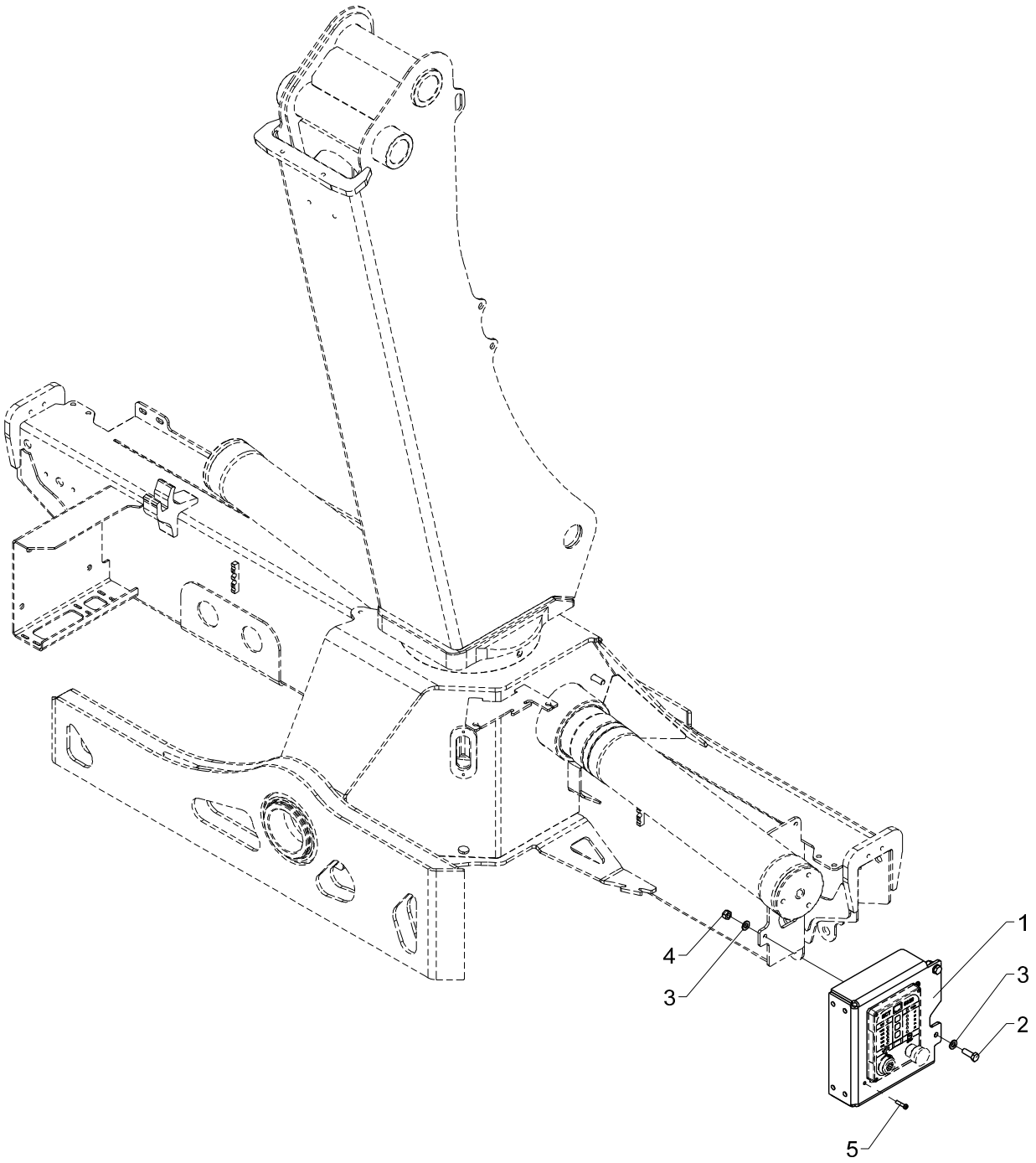
1
3
2
4
3
5

Bracket, complete (ECT 5320 - TS)

Pos	Qty.	Part no.	Description	Remarks
1	1	6340909	Bracket, (ECT5320 - TS)	
2	2	30156	Set screw, stainless	M10 x 30
3	4	31177	Washer	10 mm
4	2	31564	Lock nut, stainless	M10
5	3	30340	Screw, stainless	6,0 x 25

18/129, 20/138, 22/153

Internal ref. 63 41 860

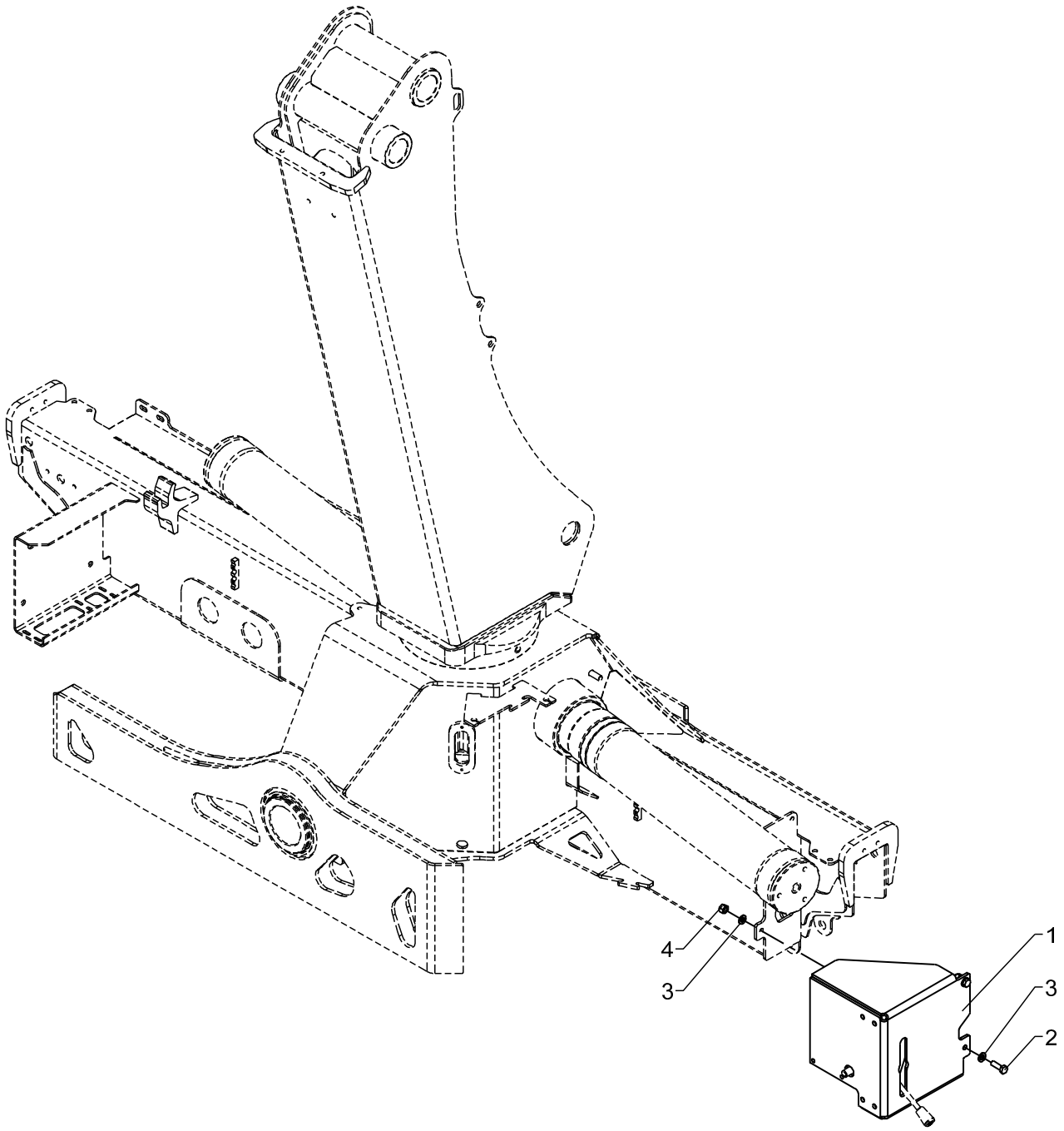

From loader 1070001
To loader

Created 16-06-2009
Modified

Bracket, complete (change-over valve, TS, excl. CE)

Pos	Qty.	Part no.	Description	Remarks
1	1	6340908	Bracket	
2	2	30156	Set screw, stainless	M10 x 30
3	4	31177	Washer	10 mm
4	2	31564	Lock nut, stainless	M10

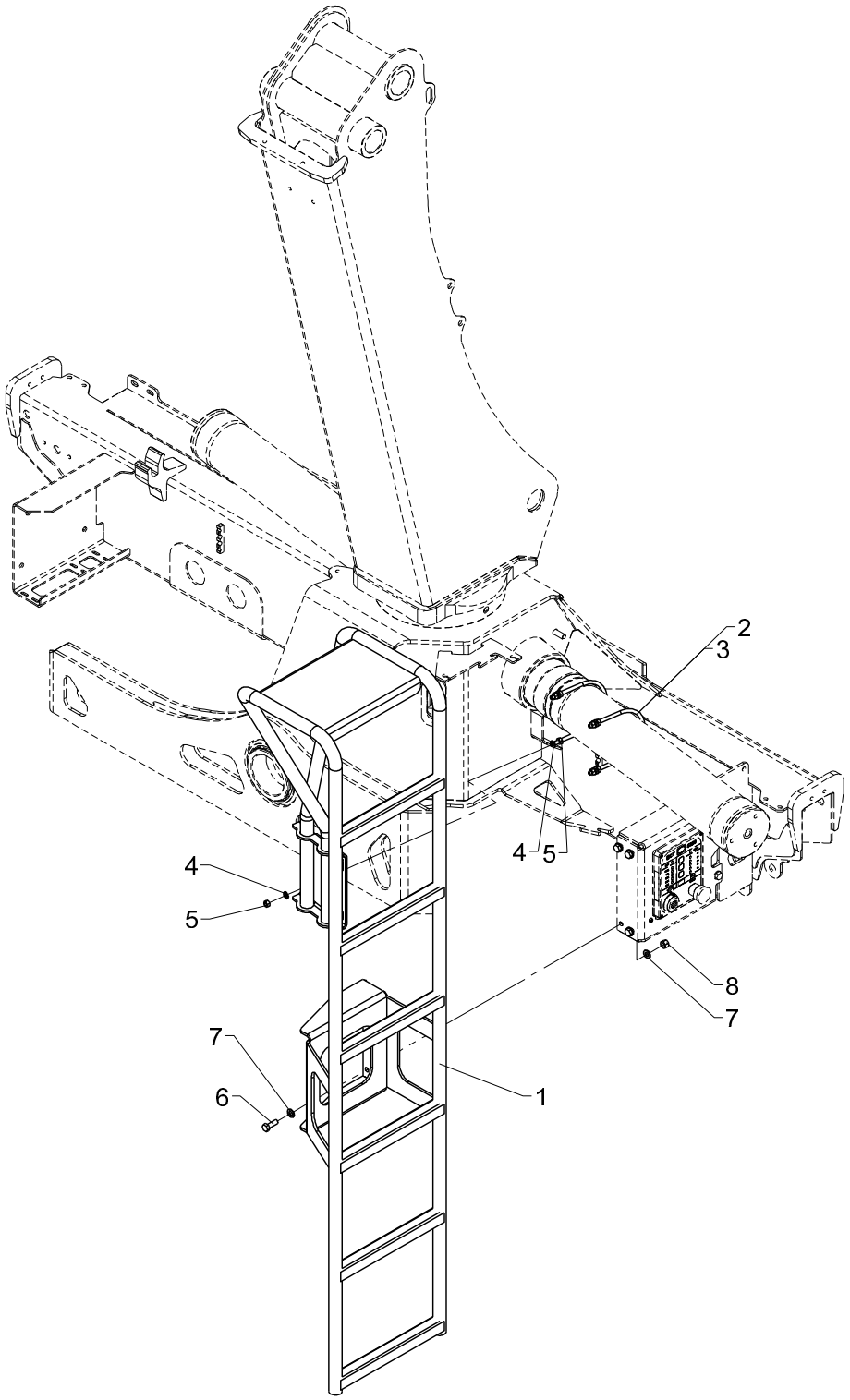
2
3
4
5
4
5
8
7
7
6
1

Ladder for TS, cpl.

Pos	Qty.	Part no.	Description	Remarks
		6341540	Ladder, TS, cpl. (1300-1730)	
		6345540	Ladder, TS, cpl. (1800-22/153SL)	
1	1	6340931	Ladder (TS)	
2	2	6340878	Clamp	1300/1730
3	2	6344878	Clamp	1800/22/153SL
4	8	31147	Face washer, 8 mm	8 mm
5	8	30856	Nut, stainless	M8
6	4	30156	Set screw, stainless	M10 x 30
7	8	31565	Washer, stainless	10 mm
8	4	31564	Lock nut, stainless	M10

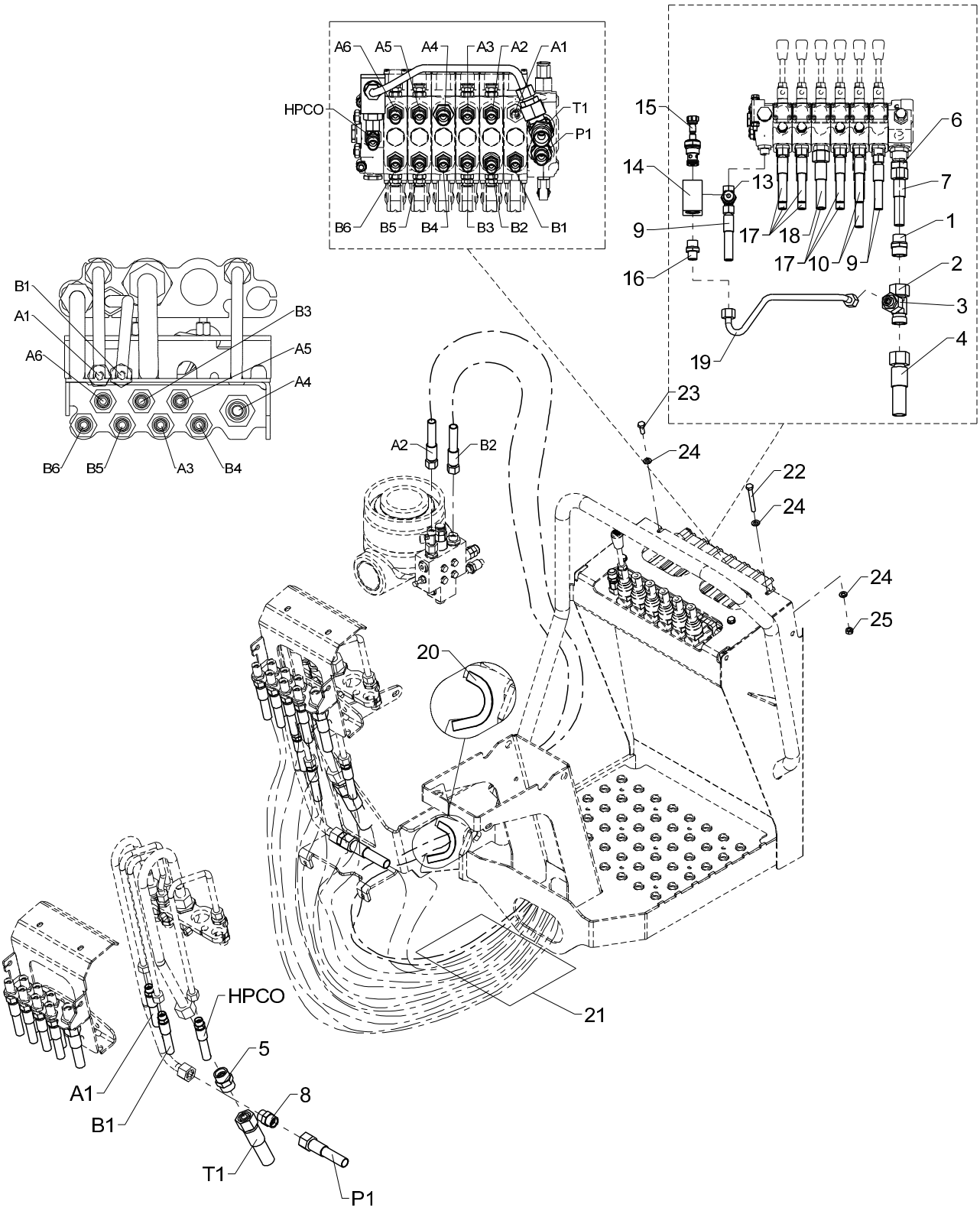
A6
A5
A4
A3
A2
A1
HPCO
T1
P1
B6
B5
B4
B3
B2
B1
15
14
9
16
13
17
18
6
7
1
17
10
9
2
3
4
19
23
24
22
24
24
25
B1
A1
A6
B3
A5
A4
B6
B5
A3
B4
A2
B2
20
21
HPCO
5
A1
8
B1
T1
P1

Hose kit, 6 fcts., (TSHC linear)

Pos	Qty.	Part no.	Description	Remarks
1	1	26197	Connection	P-GEV 20 SR-WD
2	1	26362	Connection	ELSD 20 S
3	1	26873	Reducing connection	REDSDN 20/12 S
4	1	62626	Hose	
5	1	26140	Double connection	GS 20 S
6	1	26390	Connection	P-GEV 16 SR 3/4-WD
7	1	62696	Hose	
8	1	26145	Double connection	GS 16 S
9	3	0017200	Hose	
10	1	26106	Connection	P-MAV 8 LR
11	2	0017520	Hose	
12	1	25270	Connection	ELSD 12 L
13	1	26388	Connection	EGESD 12 LR 1/2-WD
14	1	59939	Valve housing	
15	1	59617	Cartridge	
16	1	25194	Straight connection	GES 12 SR 1-2-WD
17	7	0015370	Hose	
18	1	62676	Hose	
19	1	6340838	Pipe	
20	2	46587	Rubber protection	130 mm
21	1	59500	Protective cover	
22	2	30259	Steel bolt, stainless	M8 x 65
23	2	30132	Set screw, stainless	M8 x 20
24	6	31147	Face washer, 8 mm	8 mm
25	2	30856	Nut, stainless	M8

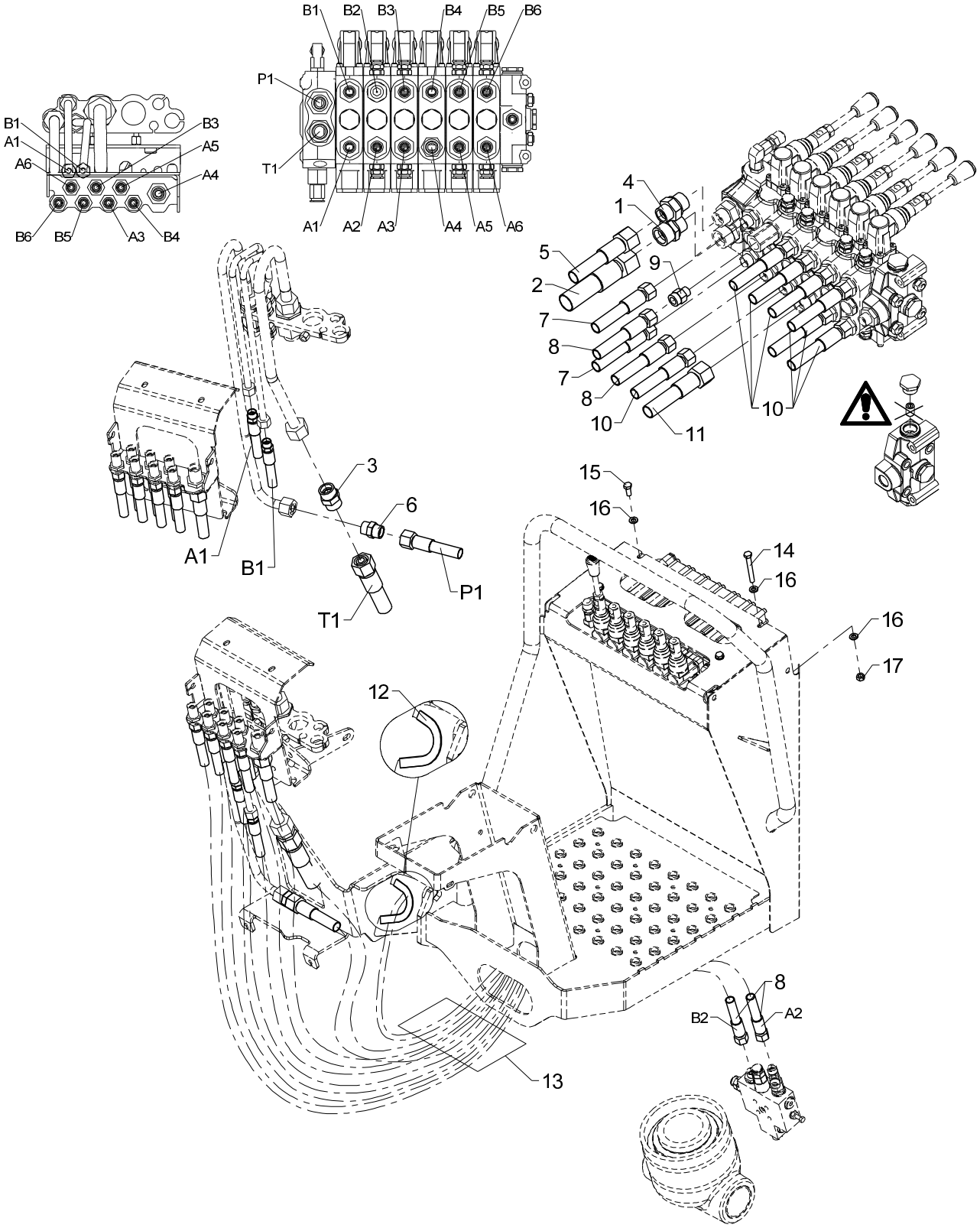
B1
B2
B3
B4
B5
B6
P1
T1
A1
A2
A3
A4
A5
A6
4
1
5
2
9
7
8
7
8
10
10
11
3
6
A1
B1
T1
P1
15
16
14
16
16
17
12
13
8
B2
A2

Hose kit, 6 functions (TSHC, linear, excl. CE)

Pos	Qty.	Part no.	Description	Remarks
1	1	26197	Connection	P-GEV 20 SR-WD
2	1	62626	Hose	
3	1	26140	Double connection	GS 20 S
4	1	26390	Connection	P-GEV 16 SR 3/4-WD
5	1	62696	Hose	
6	1	26145	Double connection	GS 16 S
7	2	0017200	Hose	
8	2	0017520	Hose	
9	1	26106	Connection	P-MAV 8 LR
10	7	0015370	Hose	
11	1	62676	Hose	
12	2	46587	Rubber protection	130 mm
13	1	59500	Protective cover	
14	2	30259	Steel bolt, stainless	M8 x 65
15	2	30132	Set screw, stainless	M8 x 20
16	6	31147	Face washer, 8 mm	8 mm
17	2	30856	Nut, stainless	M8

18/129, 20/138, 22/153

Internal ref. 63 42 600

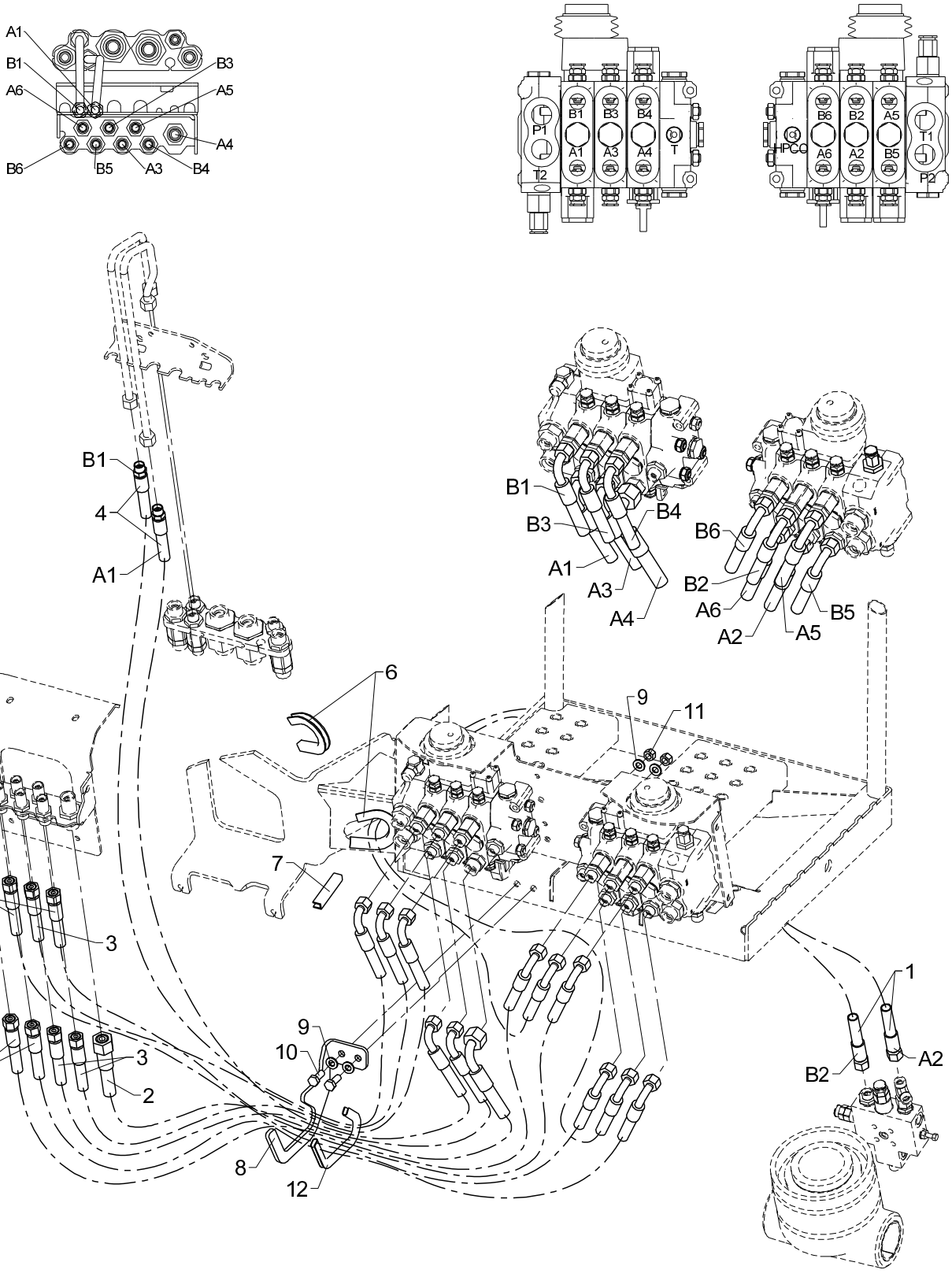

Hose kit, loader functions (TS HC joystick)

Pos	Qty.	Part no.	Description	Remarks
1	2	0017540	Hose	
2	1	62686	Hose	1/2 X 1100 M24X1.5 L/90
3	3	0017120	Hose	
4	2	0017010	Hose	
5	4	0015030	Hose	
6	2	46587	Rubber protection	75 mm
7	1	46587	Rubber protection	130 mm
8	1	6341043	Hose clamp	
9	4	31565	Washer, stainless	10 mm
10	2	30155	Set screw	M10 x 25
11	2	31564	Lock nut, stainless	M10
12	1	46596	Rubber protection	250 mm

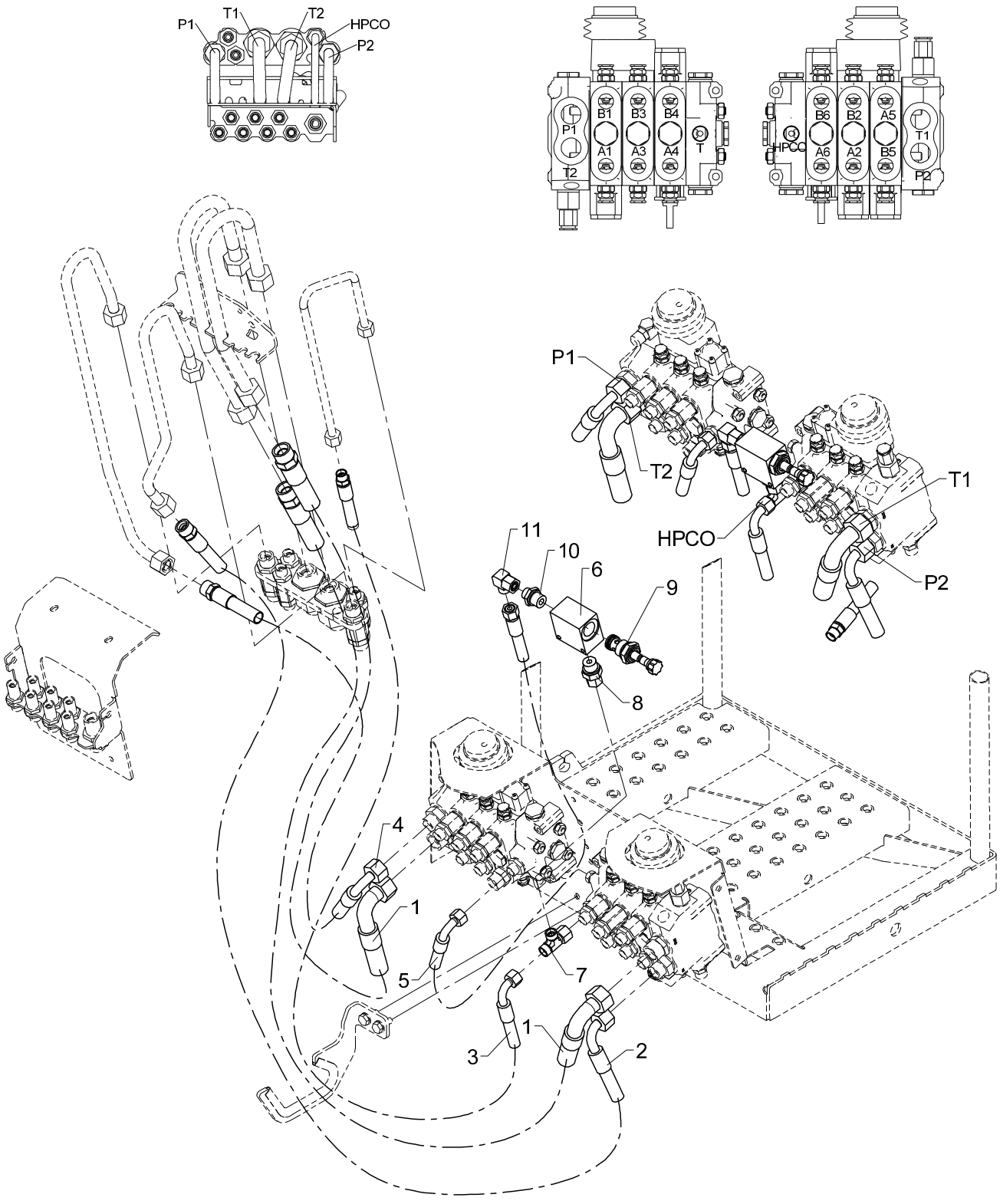
P1
T1
T2
HPCO
P2
B1
B3
B4
A1
A3
A4
T
T2
B6
B2
A5
HPCO
A6
A2
B5
T1
P2
P1
T2
T1
HPCO
P2
11
10
6
9
8
4
1
5
7
1
3
2

Hose kit for pump and tank, (TS HC joystick)

Pos	Qty.	Part no.	Description	Remarks
1	2	56527	Hose	3/4 X 1200 mm M30x2 S/90 20S
2	1	56526	Hose	1/2 X 1100 mm S/90 16S
3	1	0017010	Hose	
4	1	56525	Hose	1/2 X 750 mm M24x1,5 S/90 16S
5	1	0017710	Hose	
6	1	59939	Valve housing	
7	1	25270	Connection	ELSD 12 L
8	1	26388	Connection	EGESD 12 LR 1/2-WD
9	1	59617	Cartridge	
10	1	25108	Connection	GES 12 LR 1/2-WD
11	1	25242	Elbow connection	EWSD 12 L

18/129, 20/138, 22/153

Internal ref. 63 42 620

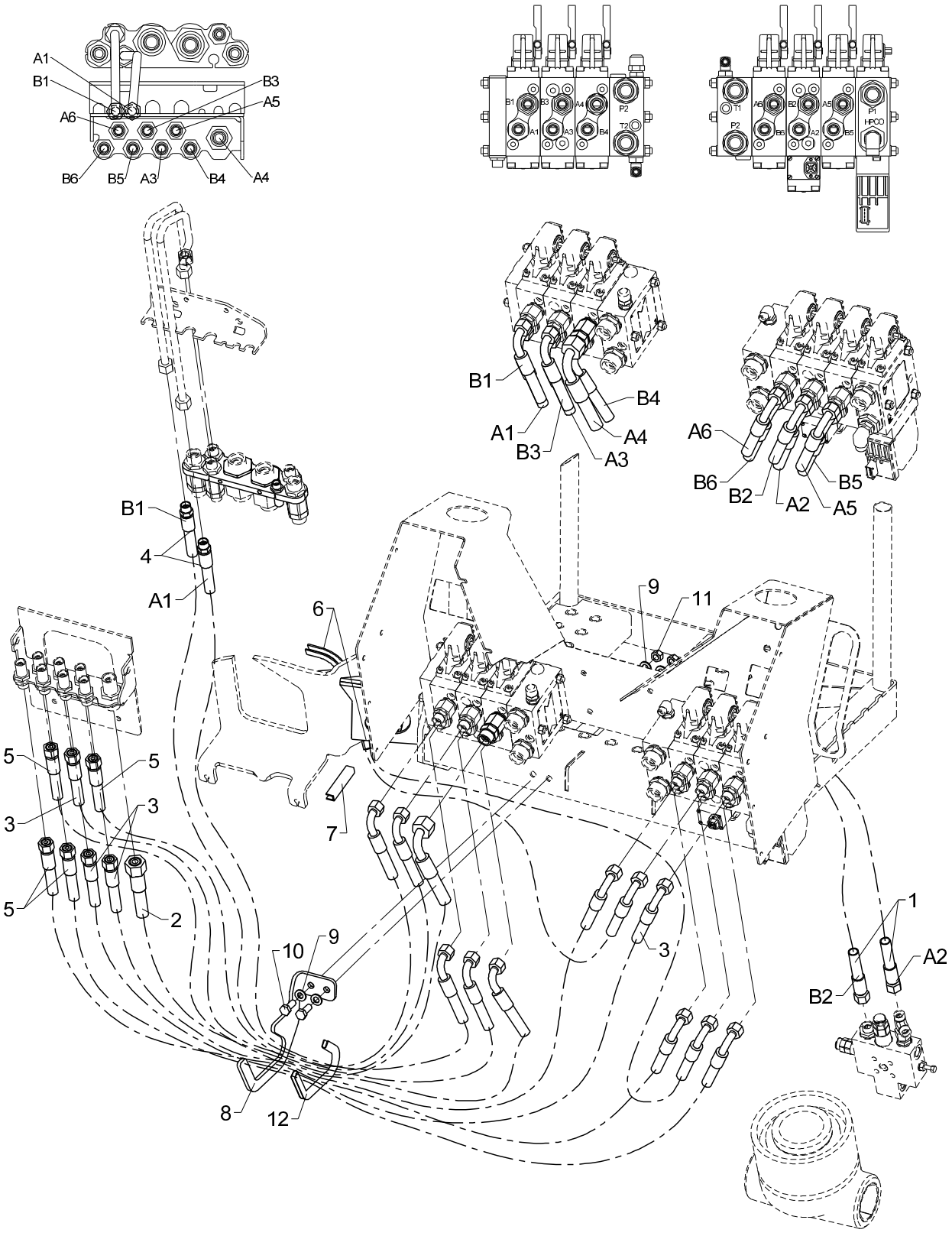

Hose kit, loader functions (TS Danfoss 1 circuit, fixed and variable flow)

Pos	Qty.	Part no.	Description	Remarks
1	2	0017540	Hose	
2	1	62686	Hose	1/2 X 1100 M24X1.5 L/90
3	3	0017120	Hose	
4	2	0017010	Hose	
5	4	0015030	Hose	
6	2	46587	Rubber protection	130 mm
7	1	46587	Rubber protection	75 mm
8	1	6341043	Hose clamp	
9	4	31565	Washer, stainless	10 mm
10	2	30155	Set screw	M10 x 25
11	2	31564	Lock nut, stainless	M10
12	1	46596	Rubber protection	250 mm

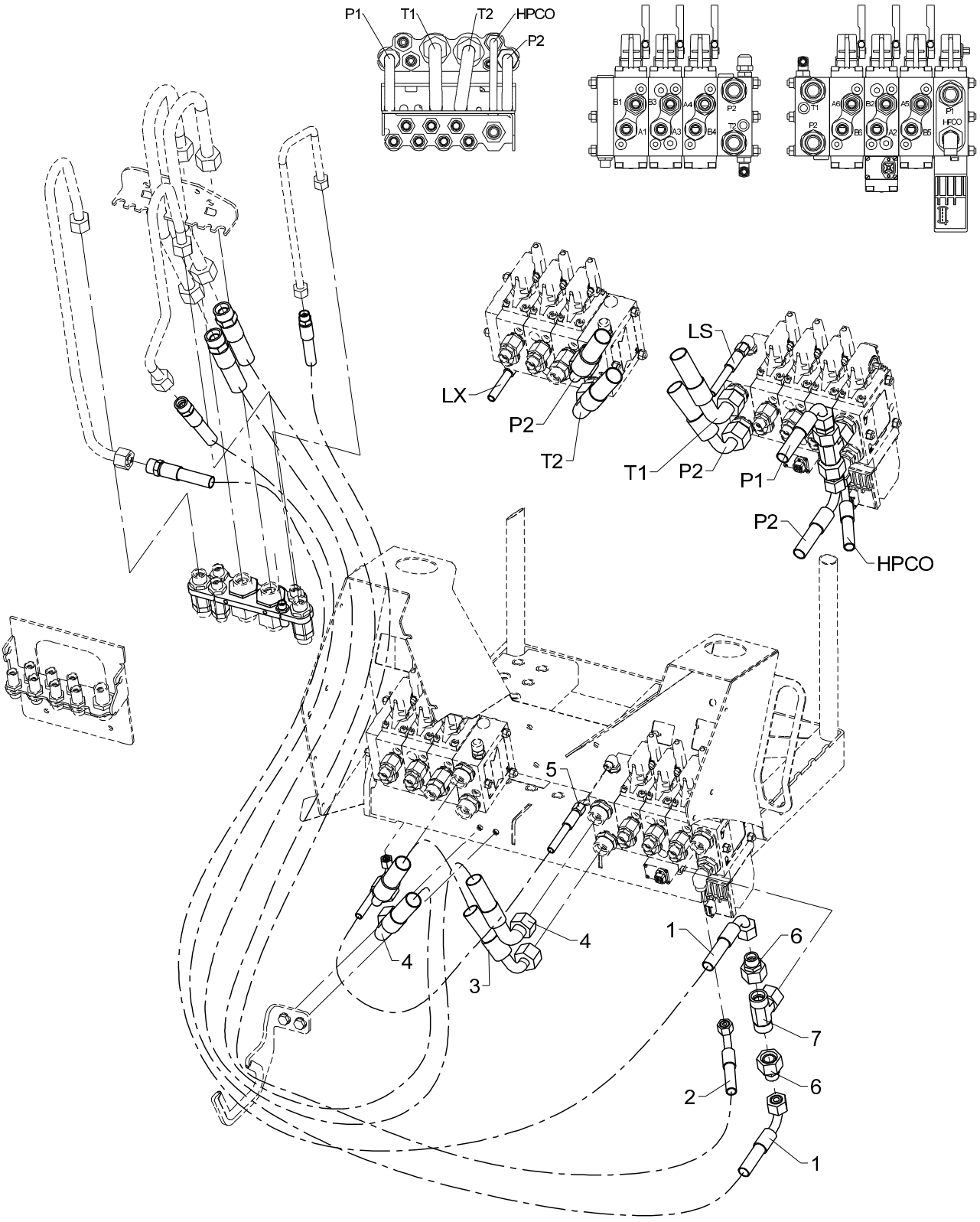
P1
T1
T2
HPCO
P2
LX
P2
T2
LS
T1
P2
P1
P2
HPCO
5
4
4
3
1
6
7
6
2
1

Hose kit for pump and tank (TS, Danfoss 1 circuit, fixed flow)

From loader 1070001
To loader
Created 01-06-2009
Modified

Pos	Qty.	Part no.	Description	Remarks
1	2	56526	Hose	1/2 X 1100 mm S/90 16S
2	1	0017370	Hose	
3	1	56369	Hose	5/8 X 500 M30X2 90/90 SS
4	2	56527	Hose	3/4 X 1200 mm M30x2 S/90 20S
5	1	56520	Hose	1/4 X 900 M14X1.5 L/90 (350 bar)
6	2	26306	Reducing connection	REDSDN 20/16 S
7	1	26360	Connection	ETVD 20 S

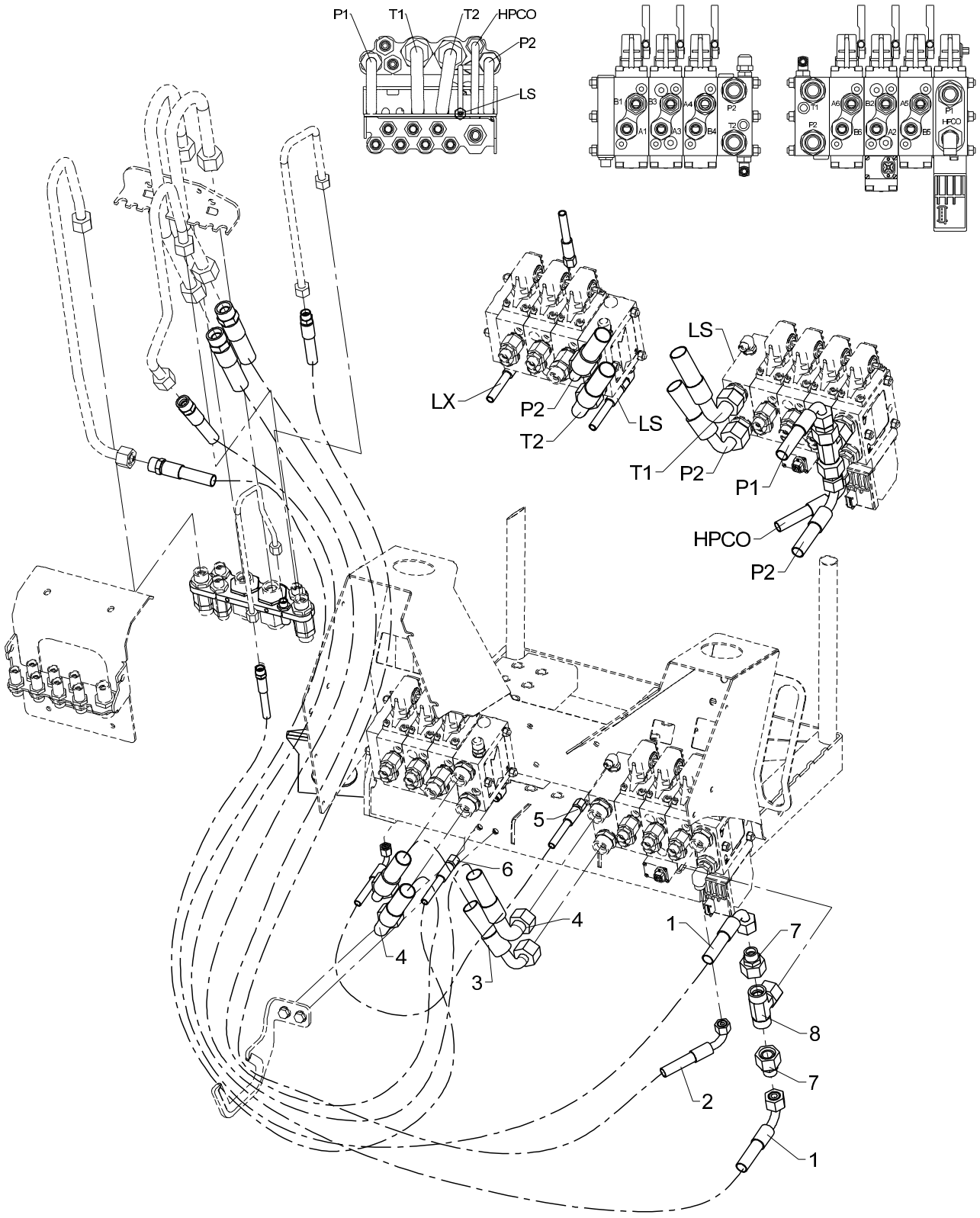
P1
T1
T2
HPCO
P2
LS
LX
P2
T2
LS
LS
T1
P2
P1
HPCO
P2
5
6
4
4
3
1
7
8
7
2
1

Hose kit for pump and tank (TS, Danfoss 1 circuit, variable flow)

Pos	Qty.	Part no.	Description	Remarks
1	2	56526	Hose	1/2 X 1100 mm S/90 16S
2	1	0017370	Hose	
3	1	56953	Hose	5/8 X 300 M30X2 90/90 SS
4	2	56527	Hose	3/4 X 1200 mm M30x2 S/90 20S
5	1	56954	Hose	1/4 X 500 M14X1.5 L/90 (350 bar)
6	1	56528	Hose	1/4 X 1000 mm S/L 8Let
7	2	26306	Reducing connection	REDSDN 20/16 S
8	1	26360	Connection	ETVD 20 S

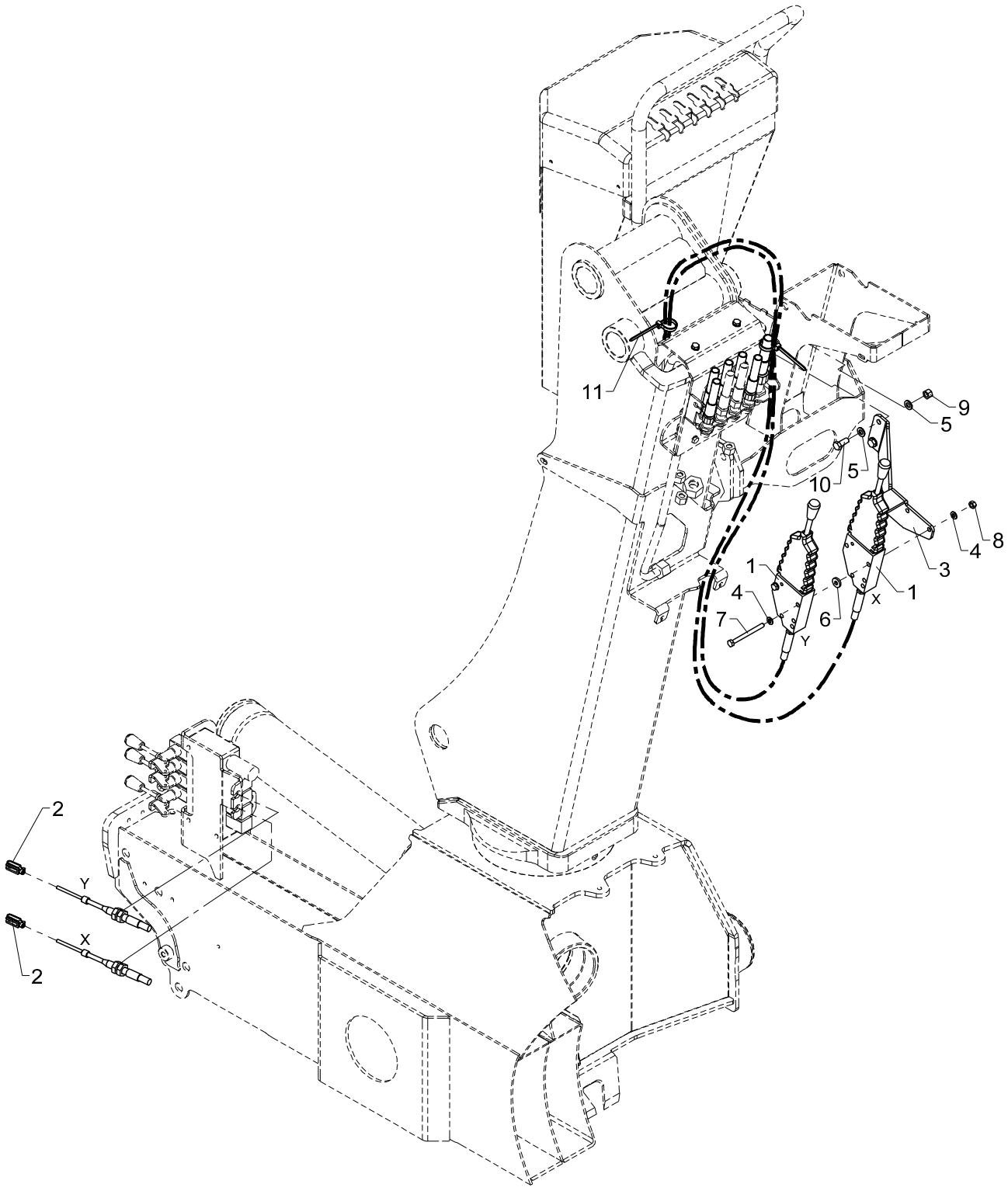
11
9
5
5
10
8
4
3
1
1
4
7
6
X
Y
2
Y
X
2

Stabilizer operation (TS HC linear)

Pos	Qty.	Part no.	Description	Remarks
1	2	48482	Push-pull cable incl. lever	
2	2	48414	Clevis	
3	1	6340905	Fittings (TS stabilizer oper.)	
4	4	31147	Face washer, 8 mm	8 mm
5	4	31565	Washer, stainless	10 mm
6	2	31755	Washer	
7	2	30144	Steel bolt, stainless	M8 x 90
8	2	30856	Nut, stainless	M8
9	2	31564	Lock nut, stainless	M10
10	2	31513	Set screw, stainless	M10 x 25
11	2	27275	Cable tie, black, 7.6x385mm	

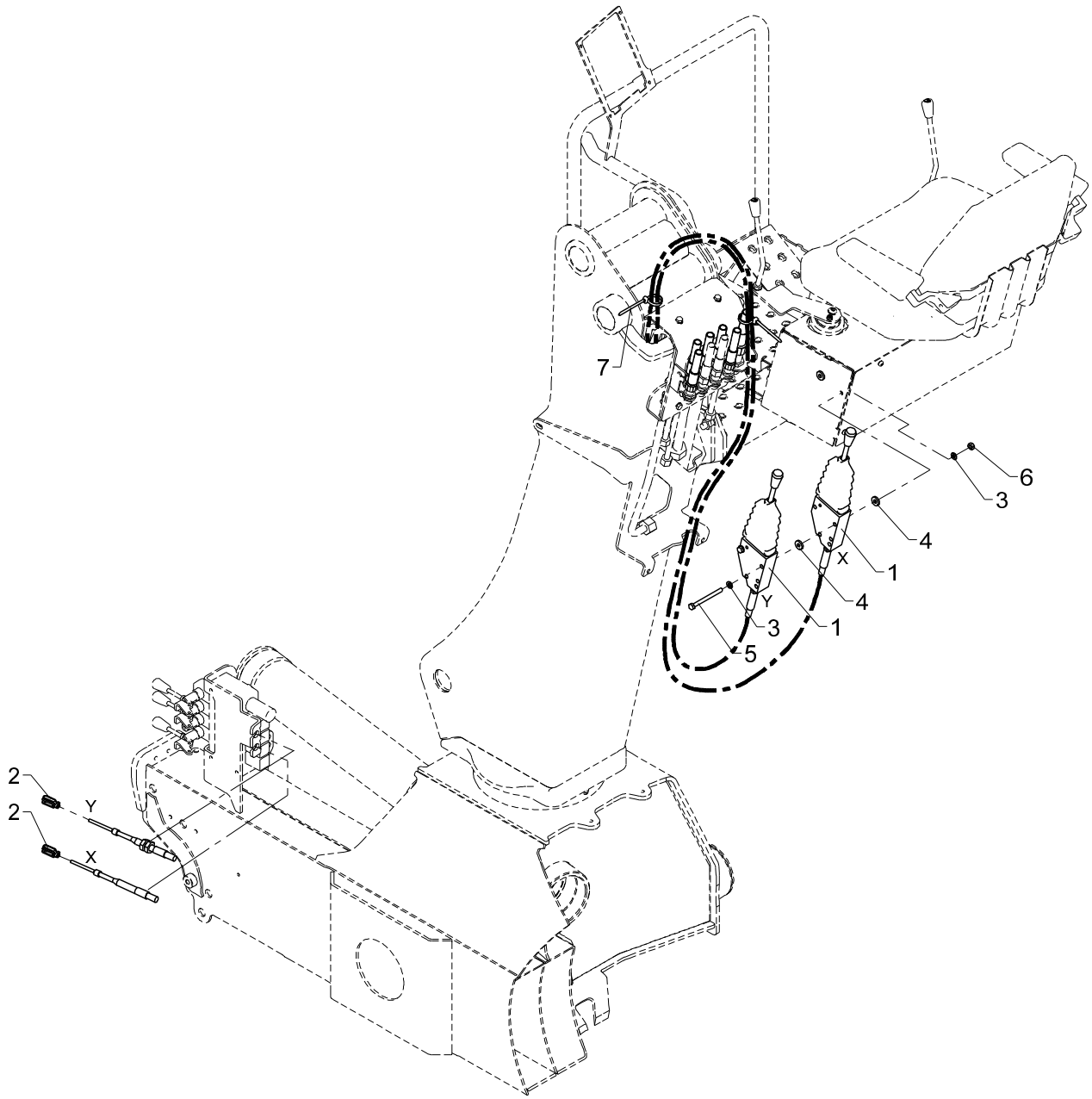
7
6
3
4
X
1
Y
4
3
1
5
2
2
Y
X

Stabilizer operation (TS joystick)

Pos	Qty.	Part no.	Description	Remarks
1	2	48482	Push-pull cable incl. lever	
2	2	48414	Clevis	
3	4	31147	Face washer, 8 mm	8 mm
4	4	31755	Washer	
5	2	30144	Steel bolt, stainless	M8 x 90
6	2	30856	Nut, stainless	M8
7	2	27275	Cable tie, black, 7.6x385mm	

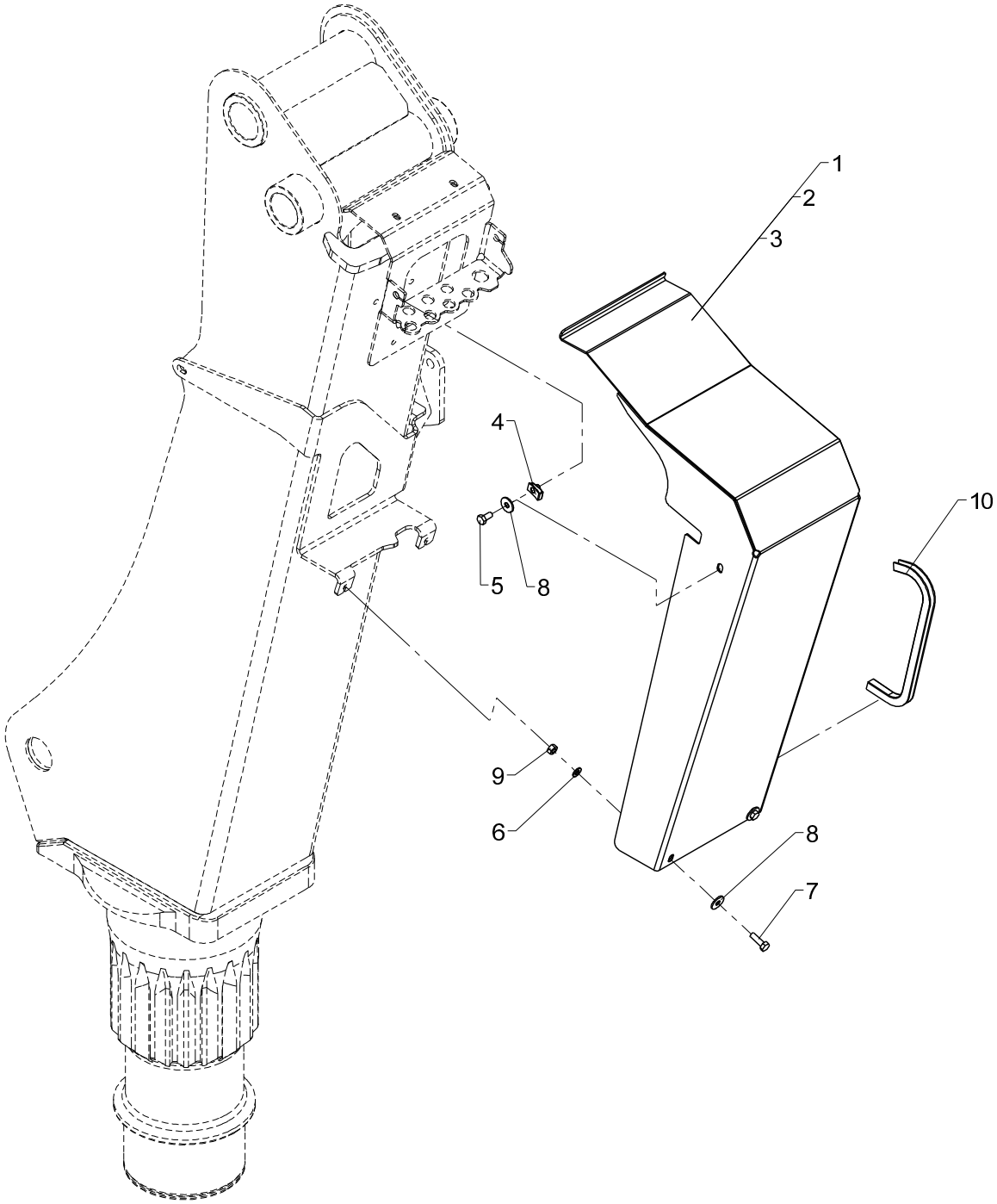
1
2
3
4
5
8
10
9
6
8
7

Obsolete

Hose shield (TS), cpl.

535 11 200

From loader 1070001
To loader

Created 24-02-2009
Modified

Pos	Qty.	Part no.	Description	Remarks
		6341070	Hose shield (TS), cpl.	
		6341080	Hose shield (TS), cpl.	
		6345080	Hose shield (TS), cpl.	
1	1	6340078	Hose shield (TS)	1310/1510/1810/2210
2	1	6340088	Hose shield (TS)	1300/1500
3	1	6344088	Hose shield (TS)	1800/2200
4	2	31069	Clip	M8 1,5 - 5,5 mm.
5	2	30131	Set screw, stainless	M8 x 16
6	2	31147	Face washer, 8 mm	8 mm
7	2	30134	Set screw, stainless	M8 x 25
8	4	31136	Washer, stainless	
9	2	30856	Nut, stainless	M8
10	1	22122	PVC protection	360 mm

18/129, 20/138, 22/153

63 45 080
63 41 080
Internal ref. 63 41 070

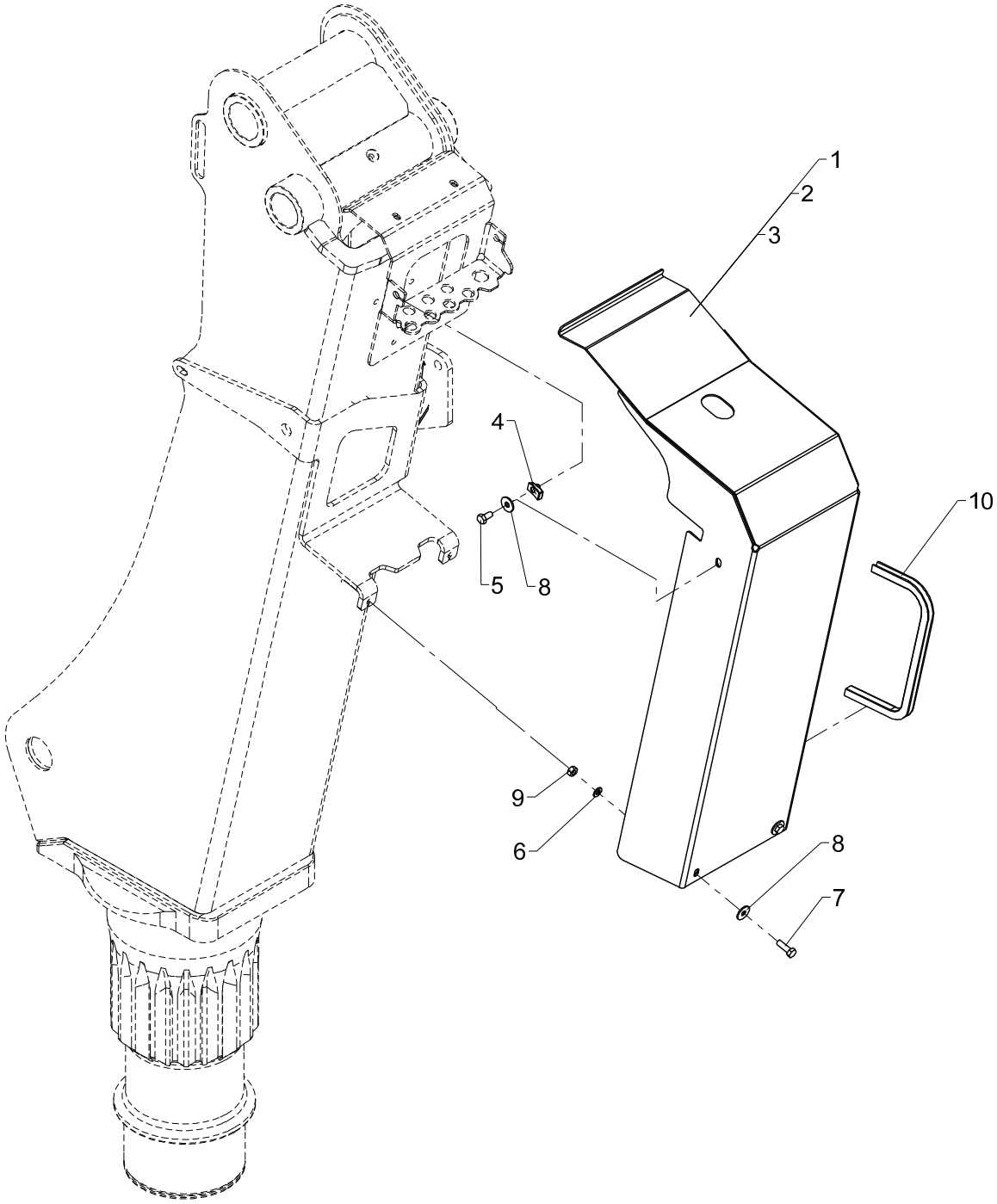

Hose shield (TS), cpl.

Pos	Qty.	Part no.	Description	Remarks
		6341070	Hose shield (TS), cpl.	
		6341080	Hose shield (TS), cpl.	
		6345080	Hose shield (TS), cpl.	
1	1	6340696	Hose shield (TS)	1310/1510/1810/2210
2	1	6340697	Hose shield (TS)	1300/1500
3	1	6344696	Hose shield (TS)	1800/2200
4	2	31069	Clip	M8 1,5 - 5,5 mm.
5	2	30131	Set screw, stainless	M8 x 16
6	2	31147	Face washer, 8 mm	8 mm
7	2	30134	Set screw, stainless	M8 x 25
8	4	31136	Washer, stainless	
9	2	30856	Nut, stainless	M8
10	1	22122	PVC protection	449 mm

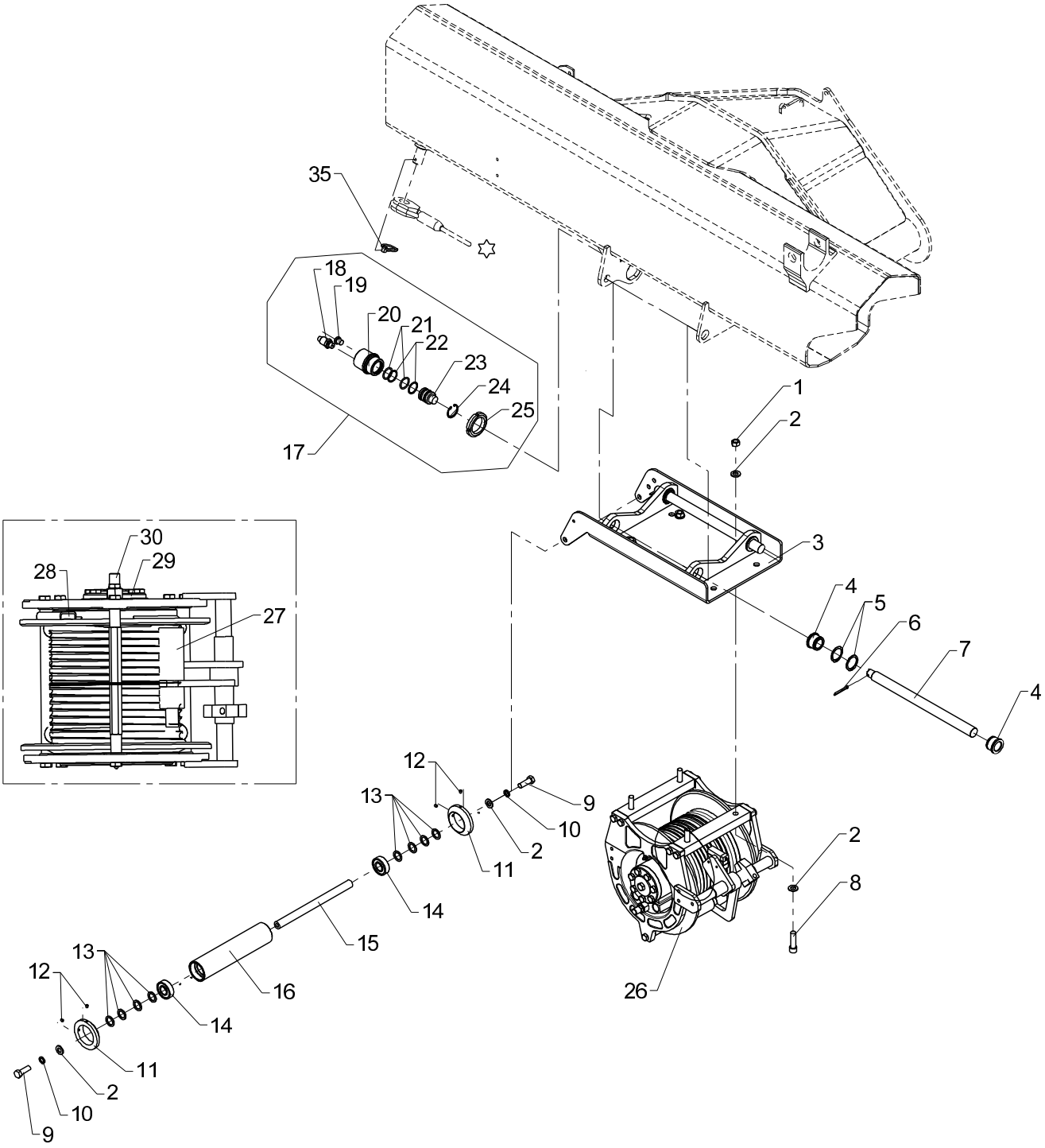

☆ 63 193 Wire Rope

Obsolete

Winch 1.5 T + mounting fittings and weighing cell

535 13 020

From loader 1070001
To loader 1070672

Created 21-08-2007
Modified

Pos	Qty.	Part no.	Description	Remarks
		6342360	Winch1.5t, fittings/weigh.cell	
1	4	32372	Nut	M12
2	10	31131	Washer	12 mm
3	1	6340977	Winch bracket	
4	4	63485	Slide bearing	
5	4	33117	Circlip	35U
6	2	31638	Split pin	ø4 x 40
7	2	6340987	Pin	
8	4	30428	Sockethead screw	MC12 x 45
9	2	30178	Set screw	M12 x 35
10	2	31158	Spring washer	12 mm
11	2	6886764	Guide roller	
12	4	31548	Pointed screw, stainless	MSP6 x 6
13	8	33227	Back ring	SS 20 x 28 x 2
14	2	23178	Ball bearing	
15	1	6371254	Pin	
16	1	6290984	Guide roller	
17	1	6342350	Weighing cell, complete	
18	1	28850	Pressure transducer	
19	1	25197	Plug	VS-R-1/4 WD
20	1	6340988	Housing	
21	2	20175	O-ring	OR 26,2 x 3
22	2	20898	Back ring	STR 27 x 32 x 1,3
23	1	6340989	Piston	
24	1	33103	Circlip	34 I
25	1	23163	Nut	M45 x 1,5
26	1	58284	Winch	
27	1	58588	Wire guide	905201800
28	1	58589	Thimble	241000100
29	1	59398	Motor	MGLR 200/9000143
30	1	59399	Load-holding valve	438002300
31	1	58591	Seal kit for brake	600008400
32	1	58413	Seal kit for P9 motor	6000094
33	1	58238	Washers	10x02941060 + 9x02941061 + 2x4
34	1	58592	Kit for motor	600453100
35	1	33386	Ring split	ø6 x 45

18/129, 20/138, 22/153

Internal ref. 63 42 360

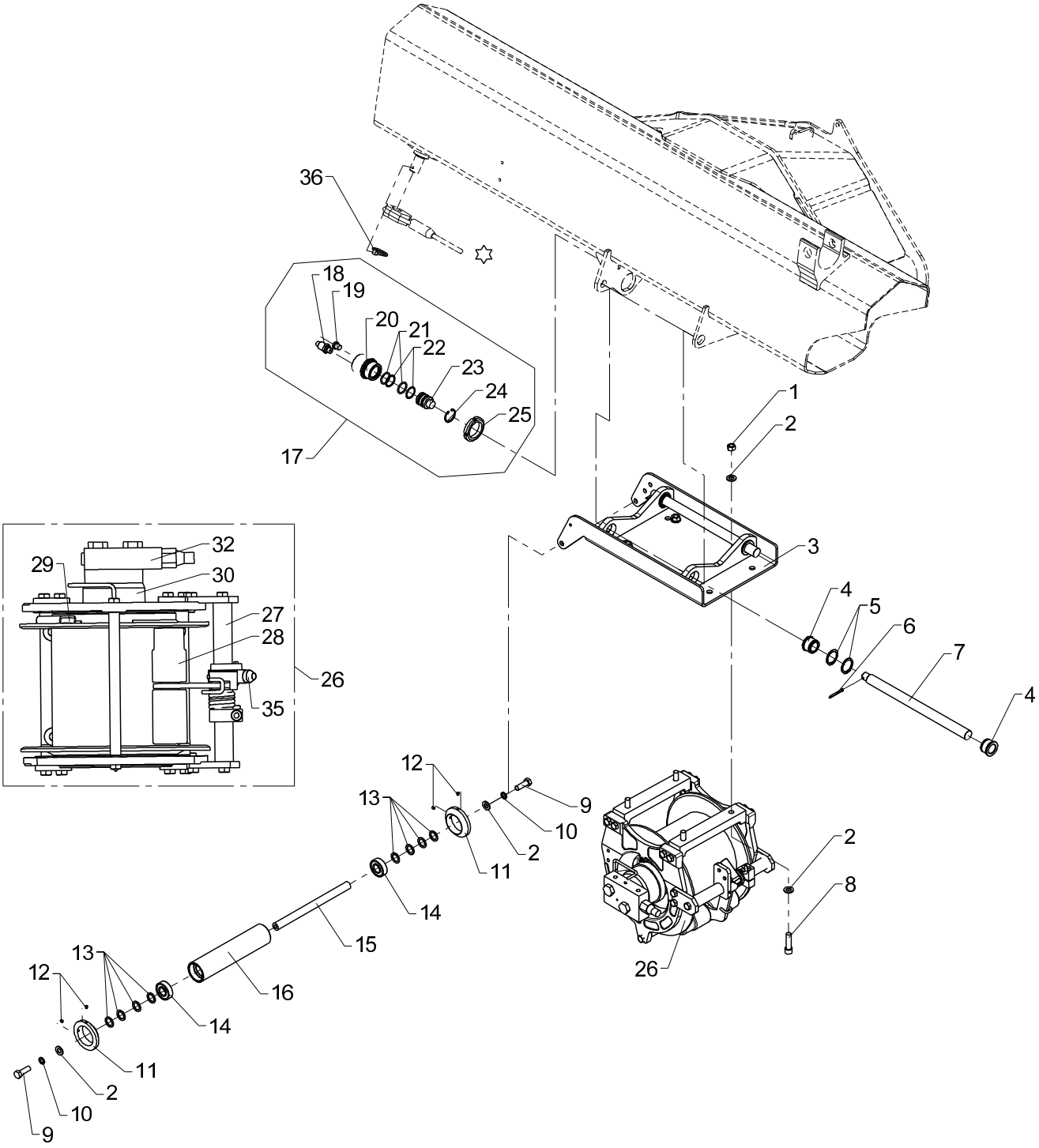

☆ 63 193 Wire Rope

Winch 1.5 T + mounting fittings and weighing cell

Pos	Qty.	Part no.	Description	Remarks
		6342360	Winch1.5t, fittings/weigh.cell	
1	4	32372	Nut	M12
2	10	31131	Washer	12 mm
3	1	6340977	Winch bracket	
4	4	63485	Slide bearing	
5	4	33117	Circlip	35U
6	2	31638	Split pin	ø4 x 40
7	2	6340987	Pin	
8	4	30428	Sockethead screw	MC12 x 45
9	2	30178	Set screw	M12 x 35
10	2	31158	Spring washer	12 mm
11	2	6886764	Guide roller	
12	4	31548	Pointed screw, stainless	MSP6 x 6
13	8	33227	Back ring	SS 20 x 28 x 2
14	2	23178	Ball bearing	
15	1	6371254	Pin	
16	1	6290984	Guide roller	
17	1	6342350	Weighing cell, complete	
18	1	28850	Pressure transducer	
19	1	25197	Plug	VS-R-1/4 WD
20	1	6340988	Housing	
21	2	20175	O-ring	OR 26,2 x 3
22	2	20898	Back ring	STR 27 x 32 x 1,3
23	1	6340989	Piston	
24	1	33103	Circlip	34 I
25	1	23163	Nut	M45 x 1,5
26	1	56607	Winch	
27	1	58593	Wire guide	9052023DX
28	1	58594	Complete arm for P9 winch	02981320D
29	1	58589	Thimble	241000100
30	1	58596	Motor	425046200
	1	58598	Seal kit for motor	600008200
32	1	58597	Valve	438046400
	1	58238	Washers	10x02941060 + 9x02941061 + 2x4
	1	61288	Seal kit P9E	600010800
35	1	49298	Micro switch 6000	
36	1	33386	Ring split	ø6 x 45

18/129, 20/138, 22/153

Internal ref. 63 42 340

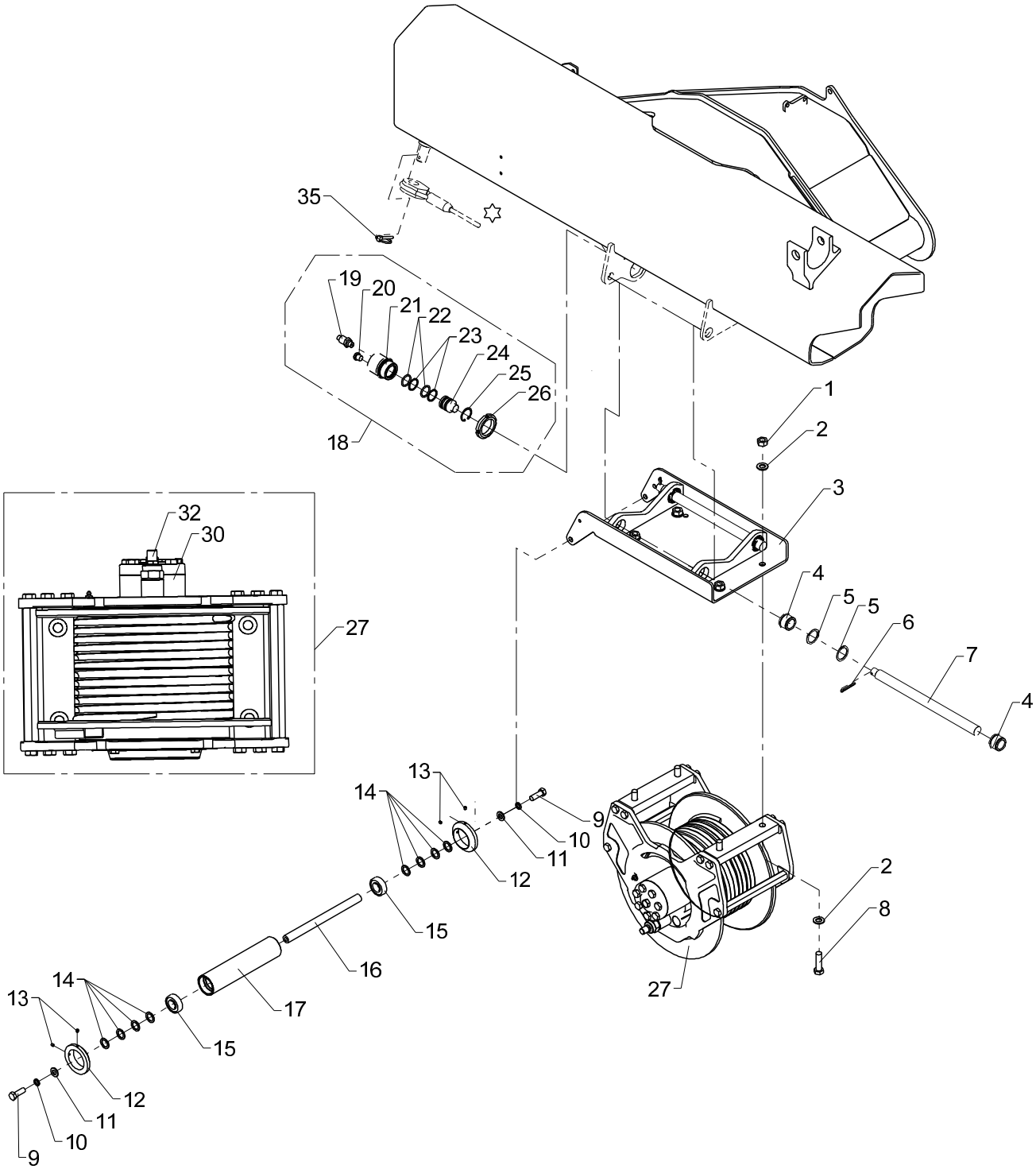

☆ 63 193 Wire Rope

Winch 2.5 T + mounting fittings and weighing cell

Pos	Qty.	Part no.	Description	Remarks
		6342340	Winch2.5t, fittings/weigh.cell	
1	4	30862	Nut	M14
2	8	31178	Washer	14 mm
3	1	6340977	Winch bracket	
4	4	63485	Slide bearing	
5	4	33117	Circlip	35U
6	2	31638	Split pin	ø4 x 40
7	2	6340987	Pin	
8	4	30210	Steel bolt	M14 x 50
9	2	30178	Set screw	M12 x 35
10	2	31158	Spring washer	12 mm
11	2	31131	Washer	12 mm
12	2	6886764	Guide roller	
13	4	31548	Pointed screw, stainless	MSP6 x 6
14	8	33227	Back ring	SS 20 x 28 x 2
15	2	23178	Ball bearing	
16	1	6371254	Pin	
17	1	6290984	Guide roller	
18	1	6342350	Weighing cell, complete	
19	1	28850	Pressure transducer	
20	1	25197	Plug	VS-R-1/4 WD
21	1	6340988	Housing	
22	2	20175	O-ring	OR 26,2 x 3
23	2	20898	Back ring	STR 27 x 32 x 1,3
24	1	6340989	Piston	
25	1	33103	Circlip	34 I
26	1	23163	Nut	M45 x 1,5
27	1	58285	Winch	
	1	56606	Complete arm for P15/P15Ewinch	9052110D00
	1	69251	Thimble	241000000
30	1	69252	Motor	900016300
	1	69253	Seal kit for motor	600008100
32	1	59397	Load-holding valve	4380029
	1	58237	Strips	10x02941061 + 11x02941060 + 2x
	1	58262	Seal kit P15	600010600
35	1	33386	Ring split	ø6 x 45

18/129, 20/138, 22/153

Internal ref. 63 42 300

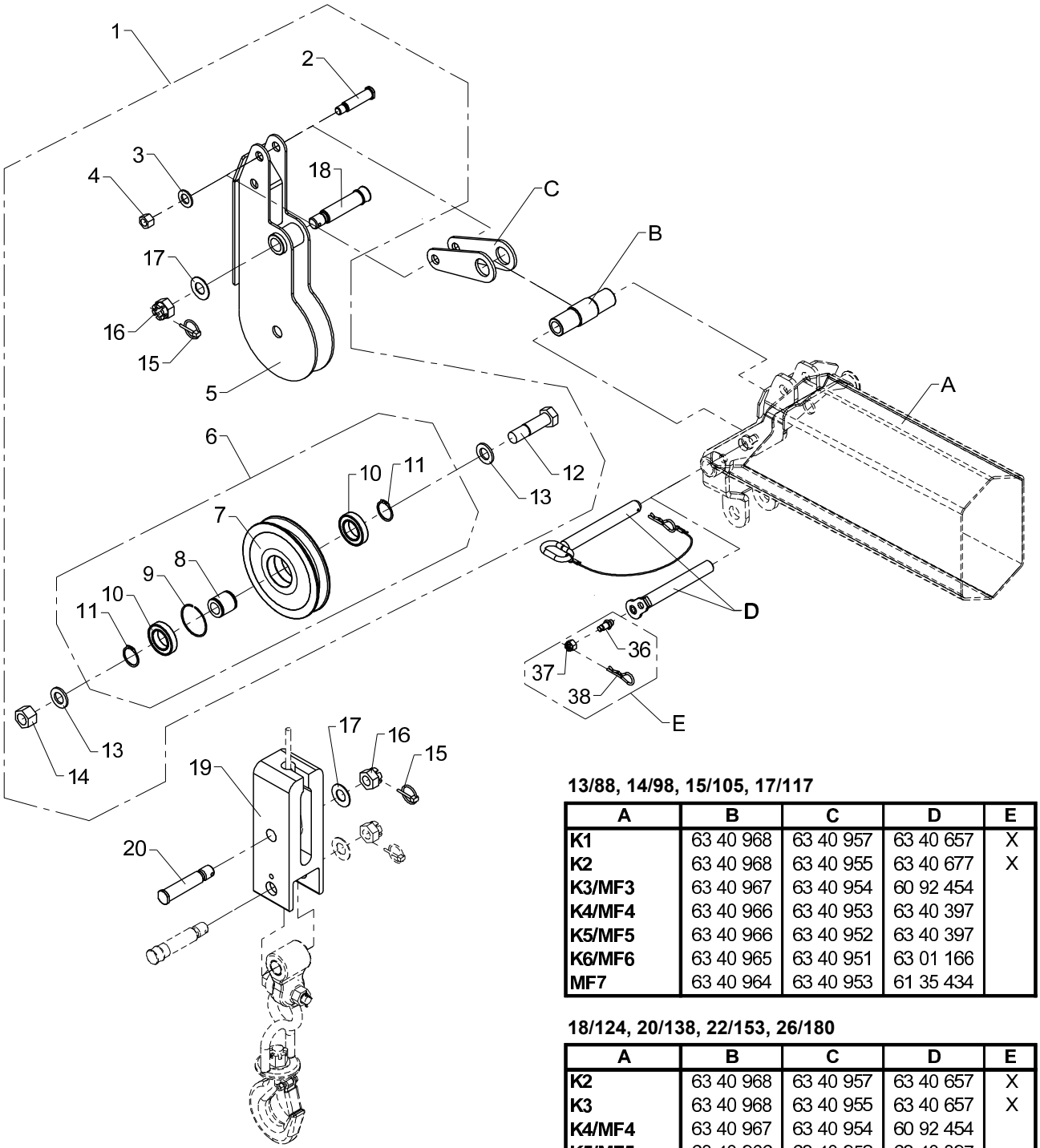

13/88, 14/98, 15/105, 17/117

A	B	C	D	E
K1	63 40 968	63 40 957	63 40 657	X
K2	63 40 968	63 40 955	63 40 677	X
K3/MF3	63 40 967	63 40 954	60 92 454	
K4/MF4	63 40 966	63 40 953	63 40 397	
K5/MF5	63 40 966	63 40 952	63 40 397	
K6/MF6	63 40 965	63 40 951	63 01 166	
MF7	63 40 964	63 40 953	61 35 434	

18/124, 20/138, 22/153, 26/180

A	B	C	D	E
K2	63 40 968	63 40 957	63 40 657	X
K3	63 40 968	63 40 955	63 40 657	X
K4/MF4	63 40 967	63 40 954	60 92 454	
K5/MF5	63 40 966	63 40 952	63 40 397	
K6/MF6	63 40 966	63 40 951	63 40 397	
K7	63 40 965	63 40 951	63 44 727	X
MF7	63 40 965	63 40 951	63 01 166	
K8/MF8	63 40 964	63 40 953	61 35 434	
MF9	—	63 40 956	61 35 434	

Wire pulley, single snatch block

Pos	Qty.	Part no.	Description	Remarks
1	1	6342310	Wire sheave	
2	1	6340982	Pin	
3	1	31179	Washer	20 mm
4	1	30892	Lock nut	M16
5	1	6340991	Wire pulley	
6	1	6342290	Wire sheave with bearing	
7	1	63484	Wire sheave	
8	1	6887304	Hub	
9	1	23904	Spring ring	BR 68
10	2	23150	Ball bearing	
11	2	33121	Circlip	40U
12	1	32476	Steel bolt	M24 x 95
13	2	31133	Washer	24 mm
14	1	30897	Lock nut	M24
15	2	31967	Ring split	ø4,5 x 40
16	2	30837	Nut	M24
17	2	31128	Washer	24 mm
18	1	6304458	Pin for suspension	
19	1	6340958	Counterweight	
20	1	6340959	Pin	
21	2	6340957	Link	
22	2	6340955	Link	
23	2	6340954	Link	
24	2	6340953	Link	
25	2	6340952	Link	
26	2	6340951	Link	
27	2	6340956	Link	
28	1	6340968	Hub	
29	1	6340967	Hub	
30	1	6340966	Hub	
31	1	6340965	Hub	
32	1	6340964	Hub	
33	1	6340657	Pin	
34	1	6340677	Pin	
35	1	6344727	Pin	
36	1	6340359	Lock pin	
37	1	32127	Nut	M12
38	1	33399	Lock spring	
39	1	6092454	Lock pin with chain	
40	1	6340397	Lock pin with lock spring	
41	1	6301166	Lock pin with split pin	

18/129, 20/138, 22/153

Internal ref. 63 42 300

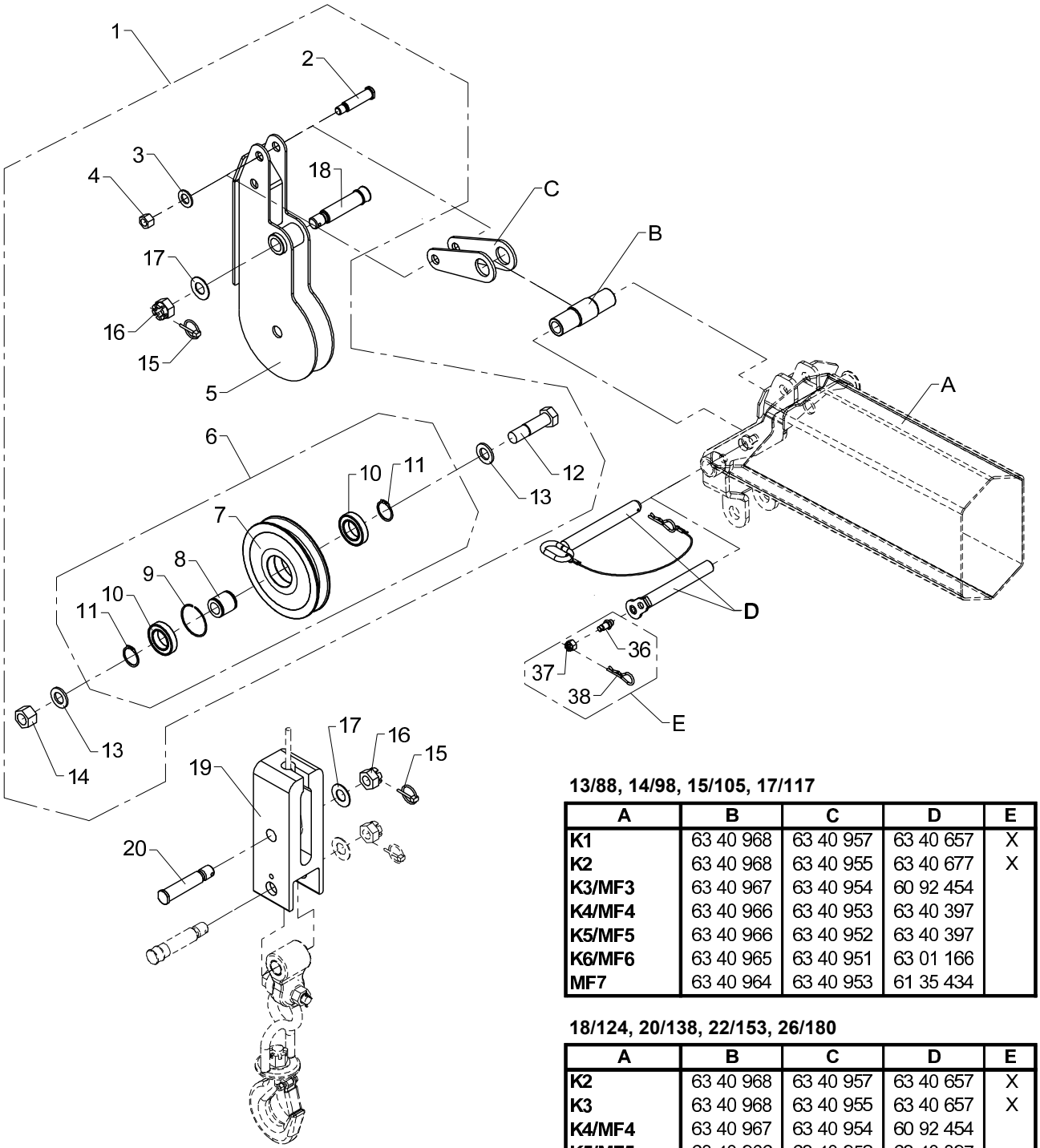

13/88, 14/98, 15/105, 17/117

A	B	C	D	E
K1	63 40 968	63 40 957	63 40 657	X
K2	63 40 968	63 40 955	63 40 677	X
K3/MF3	63 40 967	63 40 954	60 92 454	
K4/MF4	63 40 966	63 40 953	63 40 397	
K5/MF5	63 40 966	63 40 952	63 40 397	
K6/MF6	63 40 965	63 40 951	63 01 166	
MF7	63 40 964	63 40 953	61 35 434	

18/124, 20/138, 22/153, 26/180

A	B	C	D	E
K2	63 40 968	63 40 957	63 40 657	X
K3	63 40 968	63 40 955	63 40 657	X
K4/MF4	63 40 967	63 40 954	60 92 454	
K5/MF5	63 40 966	63 40 952	63 40 397	
K6/MF6	63 40 966	63 40 951	63 40 397	
K7	63 40 965	63 40 951	63 44 727	X
MF7	63 40 965	63 40 951	63 01 166	
K8/MF8	63 40 964	63 40 953	61 35 434	
MF9	—	63 40 956	61 35 434	

Wire pulley, single snatch block

Pos	Qty.	Part no.	Description	Remarks
42	1	6135434	Lock pin	

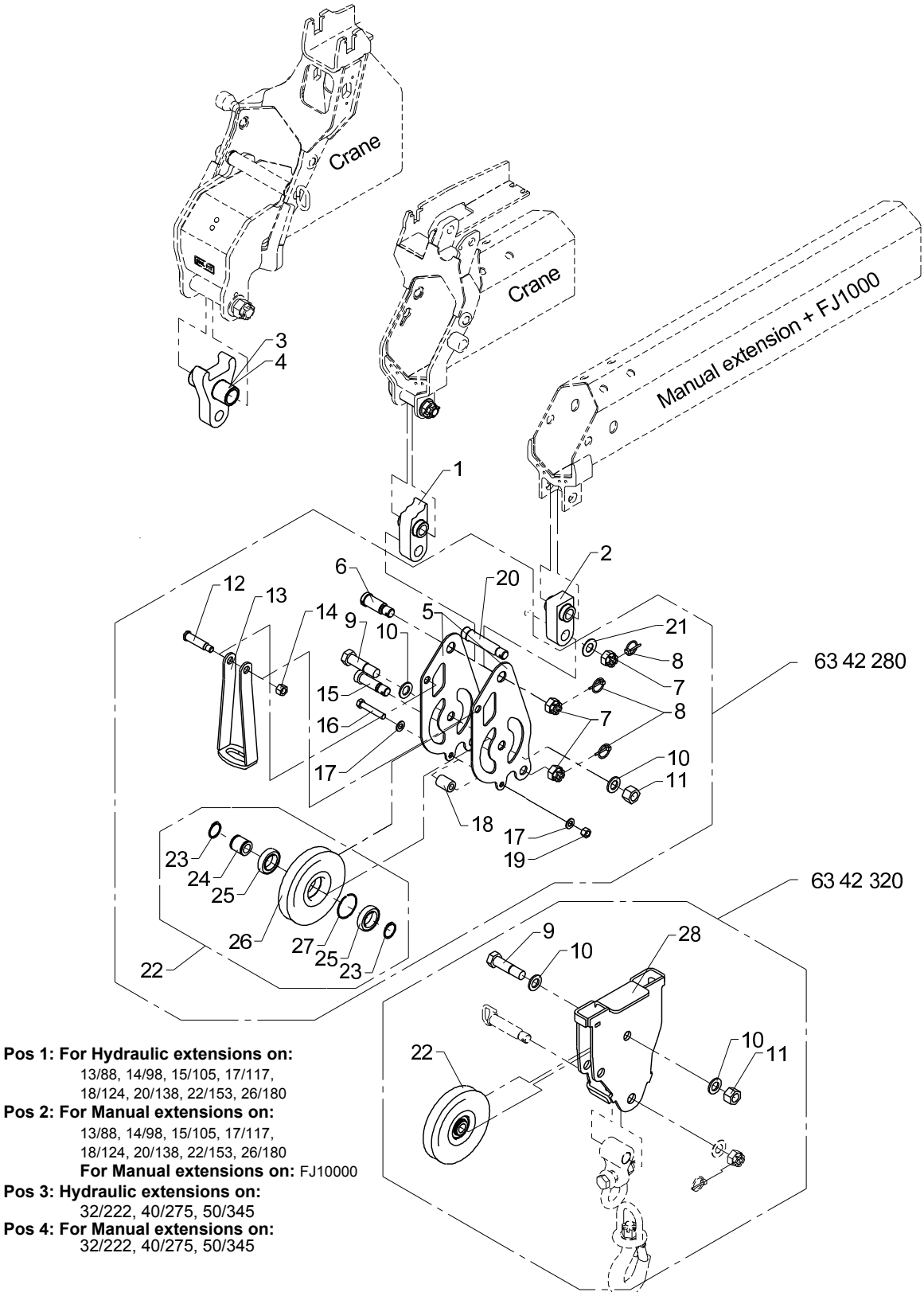

Pos 1: For Hydraulic extensions on:
13/88, 14/98, 15/105, 17/117, 18/124, 20/138, 22/153, 26/180

Pos 2: For Manual extensions on:
13/88, 14/98, 15/105, 17/117, 18/124, 20/138, 22/153, 26/180
For Manual extensions on: FJ10000

Pos 3: Hydraulic extensions on:
32/222, 40/275, 50/345

Pos 4: For Manual extensions on:
32/222, 40/275, 50/345

Wire pulley, double snatch block

Pos	Qty.	Part no.	Description	Remarks
		6342280	Wire sheave	
		6342320	Snatch block	
1	1	6304414	Wire pulley	Til kranarme
2	1	6340995	Wire pulley	Til man. forlængerarme
3	1	6302615	Wire pulley	
4	1	6394891	Wire pulley, manual extension	
5	2	6340981	Side plate	
6	1	6256324	Pin	
7	3	30837	Nut	M24
8	3	31967	Ring split	ø4,5 x 40
9	2	32476	Steel bolt	M24 x 95
10	4	31133	Washer	24 mm
11	2	30897	Lock nut	M24
12	1	6340982	Pin	
13	1	6340983	Wire safety device	
14	1	30892	Lock nut	M16
15	1	6300558	Pin	
16	1	30214	Steel bolt	M14 x 80
17	2	31178	Washer	14 mm
18	1	6885504	Distance pipe	
19	1	30891	Lock nut	M14
20	1	6304458	Pin for suspension	
21	1	31128	Washer	24 mm
22	2	6342290	Wire sheave with bearing	
23	2	33121	Circlip	40U
24	1	6887304	Hub	
25	2	23150	Ball bearing	
26	1	63484	Wire sheave	
27	1	23904	Spring ring	BR 68
28	1	6340997	Snatch block	

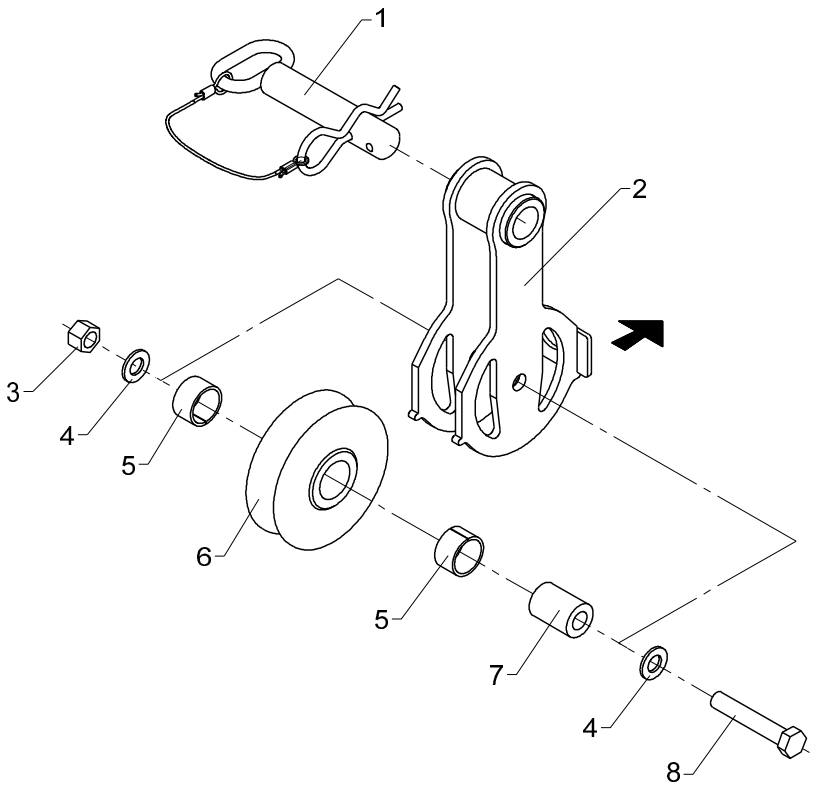

Orientering i forhold til last.
Orientation in relation to the load.
Orientierung im Verhältnis zur Last.
L`orientation par rapport á la charge.
Orientación en relación con la carga.

Wire roller guide

Pos	Qty.	Part no.	Description	Remarks
1	1	6304266	Lock pin with split pin	
2	1	6304411	Suspension for roller guide	
3	1	30891	Lock nut	M14
4	2	31178	Washer	14 mm
5	2	23302	Bushing	MB 3020 DU
6	1	63513	Wire roller guide	
7	1	6885504	Distance pipe	
8	1	30214	Steel bolt	M14 x 80

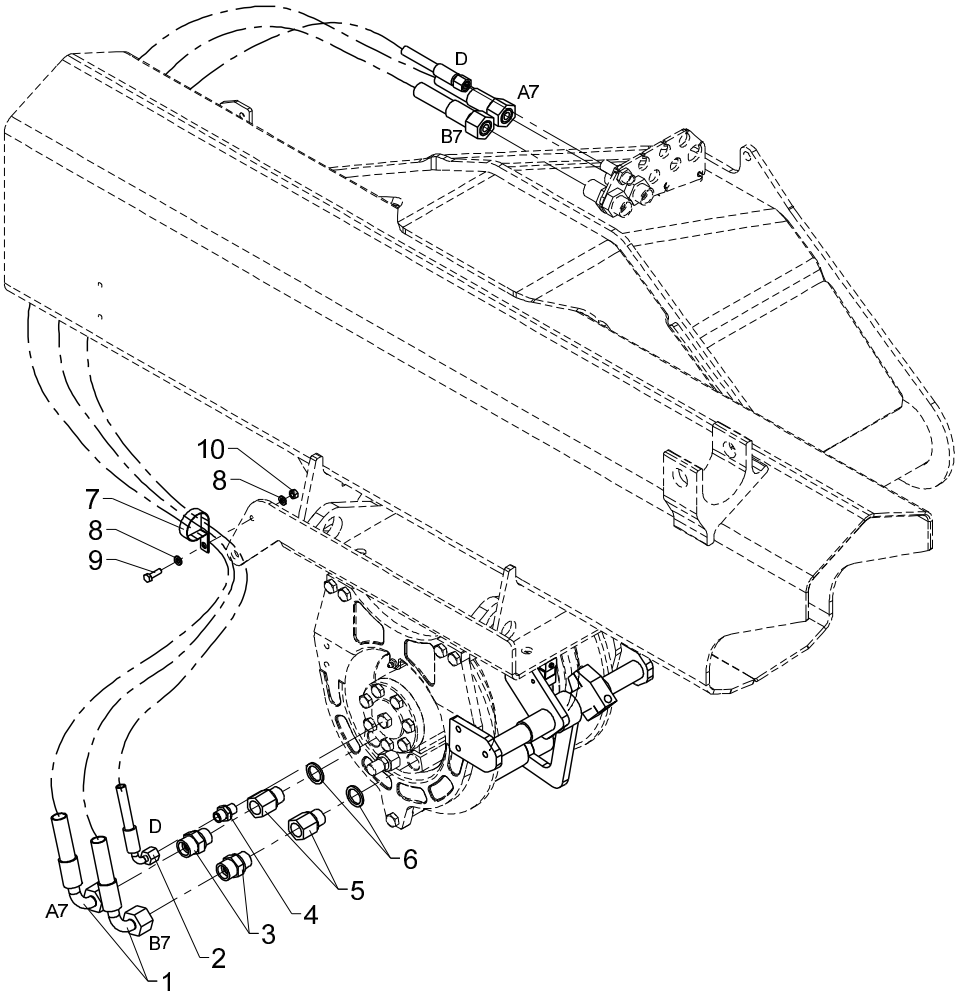
D
A7
B7
10
8
7
8
9
D
A7
B7
1
2
3
4
5
6

Obsolete

Hydraulic system, winch

535 13 100

From loader 1070001
To loader 1070672

Created 24-02-2009
Modified 16-02-2011

Pos	Qty.	Part no.	Description	Remarks
1	2	62687	Hose	1/2 X 1600 M24X1.5 L/90
2	1	62501	Hose	1/4X1600M14X1.5L/90RUSTF
3	2	26334	Connection	P-GEV 16 SR-WD
4	1	25109	Connection	GES 8 LR-WD
5	2	26922	Reducing nipple	
6	2	21106	Seal washer	ø21,5 x 28,7 x 2,5
7	1	31869	Rubber clip Ø 38 mm	
8	2	32302	Face washer, stainless	6 mm
9	1	30113	Set screw, stainless	M6 x 20
10	1	30854	Nut, stainless	M6

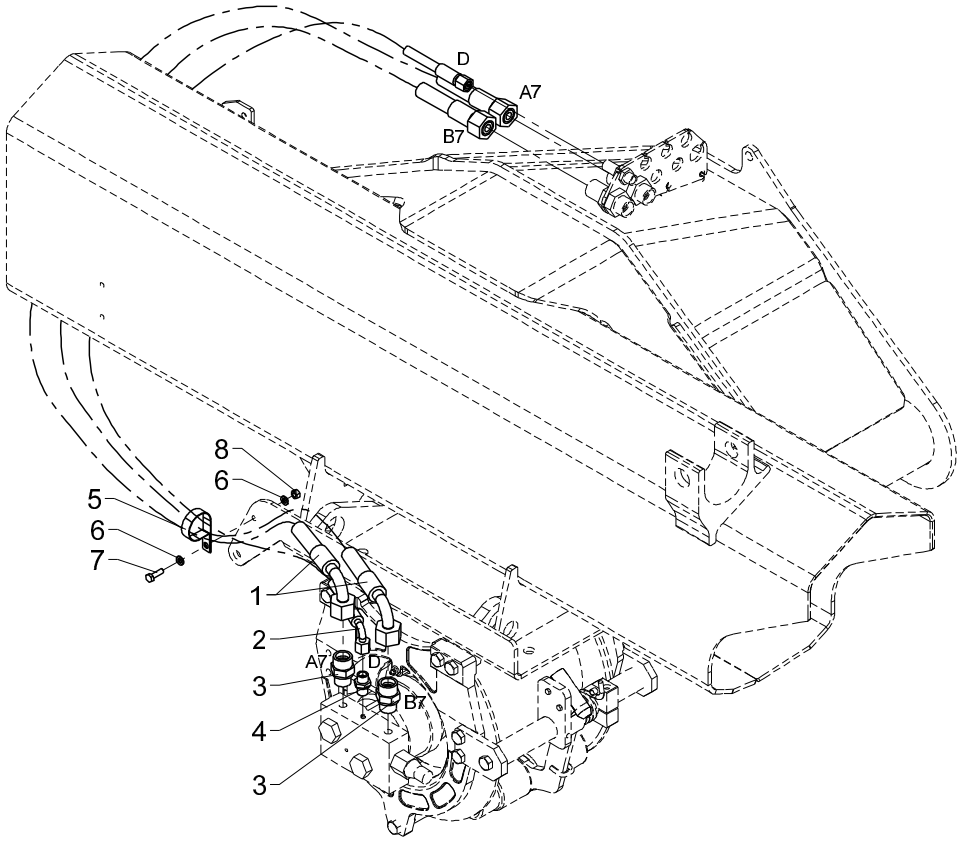
D
A7
B7
8
6
5
6
7
1
2
A7
D
3
B7
4
3

Hydraulic system, winch

Pos	Qty.	Part no.	Description	Remarks
1	2	62687	Hose	1/2 X 1600 M24X1.5 L/90
2	1	62501	Hose	1/4X1600M14X1.5L/90RUSTF
3	2	26334	Connection	P-GEV 16 SR-WD
4	1	25109	Connection	GES 8 LR-WD
5	1	31869	Rubber clip Ø 38 mm	
6	2	32302	Face washer, stainless	6 mm
7	1	30113	Set screw, stainless	M6 x 20
8	1	30854	Nut, stainless	M6

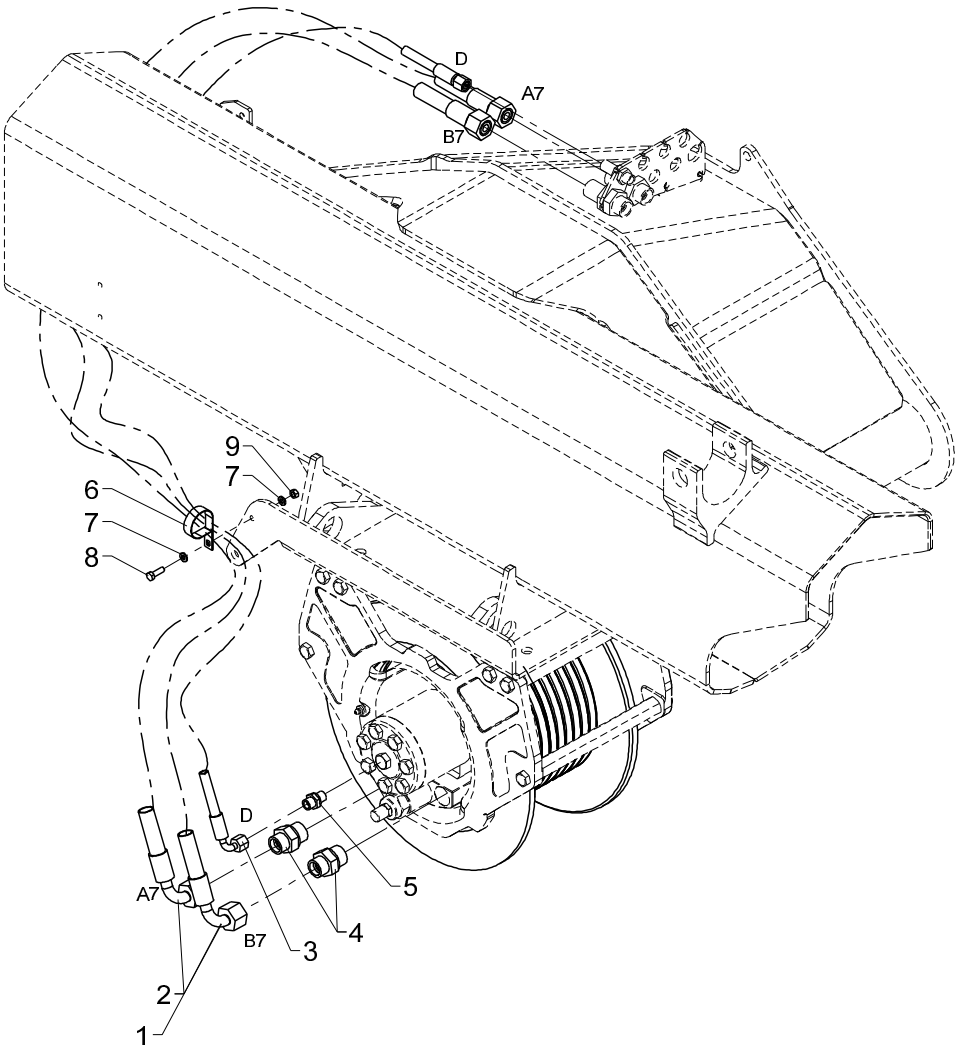
D
A7
B7
9
7
6
7
8
D
A7
B7
5
4
3
2
1

Hydraulic system, P15E

Pos	Qty.	Part no.	Description	Remarks
		6342380	Hydraulic system, P15E	1300K - 1730K
		6345380	Hydraulic system, P15E	1800K - 2430K
1	2	62687	Hose	1/2" x 1600 1300K - 1730K
2	2	62682	Hose	1/2" x 1700 1800K - 2430K
3	1	62501	Hose	1/4X1600M14X1.5L/90RUSTF
4	2	26390	Connection	P-GEV 16 SR 3/4-WD
5	1	25109	Connection	GES 8 LR-WD
6	1	31869	Rubber clip Ø 38 mm	
7	2	32302	Face washer, stainless	6 mm
8	1	30113	Set screw, stainless	M6 x 20
9	1	30854	Nut, stainless	M6

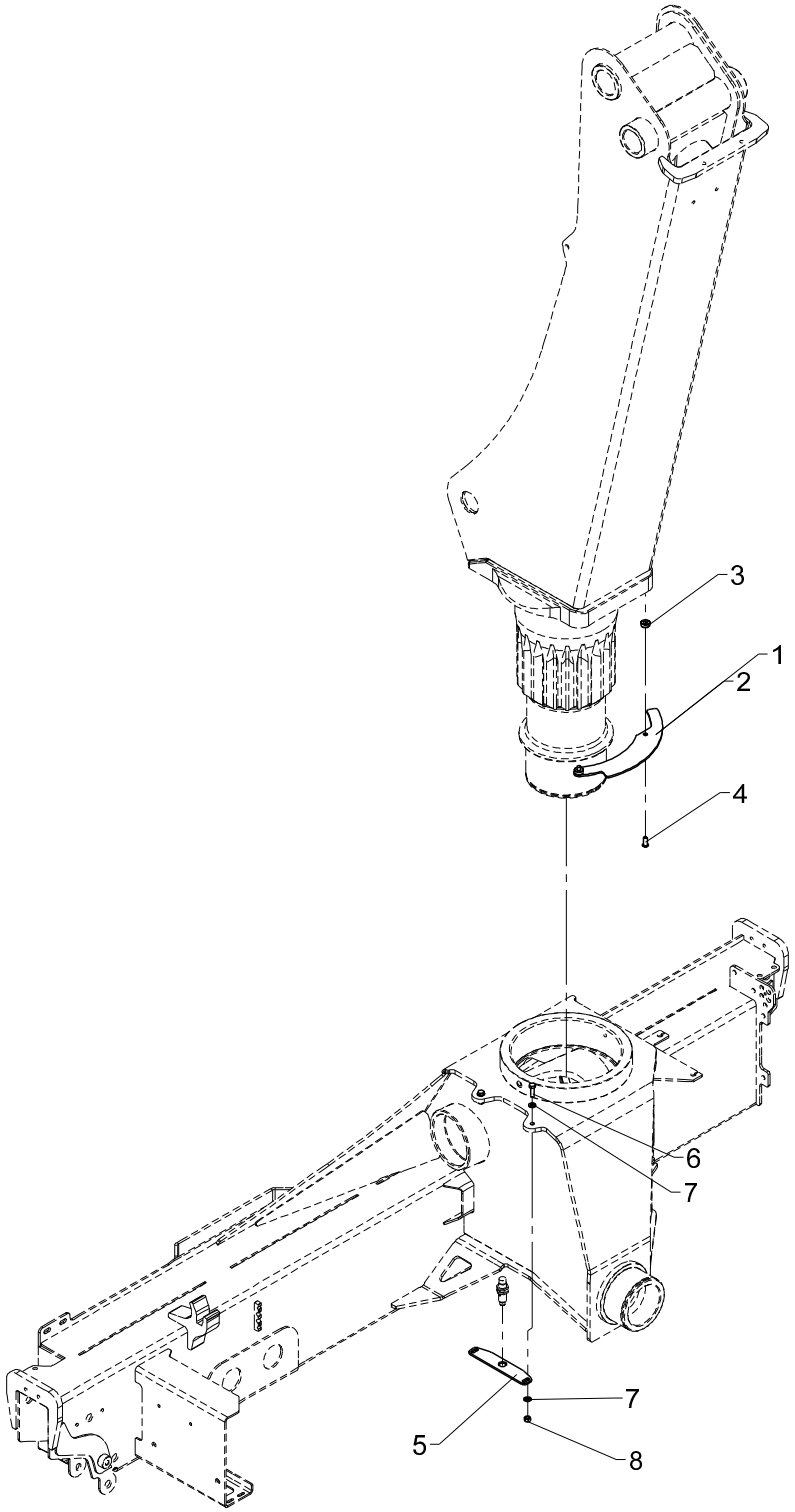
3
1
2
4
6
7
7
5
8

Cam disc kit (Stand-up controls)

From loader 1070001
To loader
Created 13-01-2010
Modified

Pos	Qty.	Part no.	Description	Remarks
		6341340	Cam disc kit (stand-up ctrls)	
		6345340	Cam disc kit (stand-up ctrls)	
1	1	6341998	Cam disc (stand-up controls)	1300K/1500K
2	1	6345998	Cam disc (stand-up controls)	1800K/2200K
3	2	6871754	Spacer	
4	2	32486	Screw	MCL8 x 20
5	1	6341997	Sensor fittings (cam disc)	
6	2	30134	Set screw, stainless	M8 x 25
7	4	31147	Face washer, 8 mm	8 mm
8	2	30856	Nut, stainless	M8

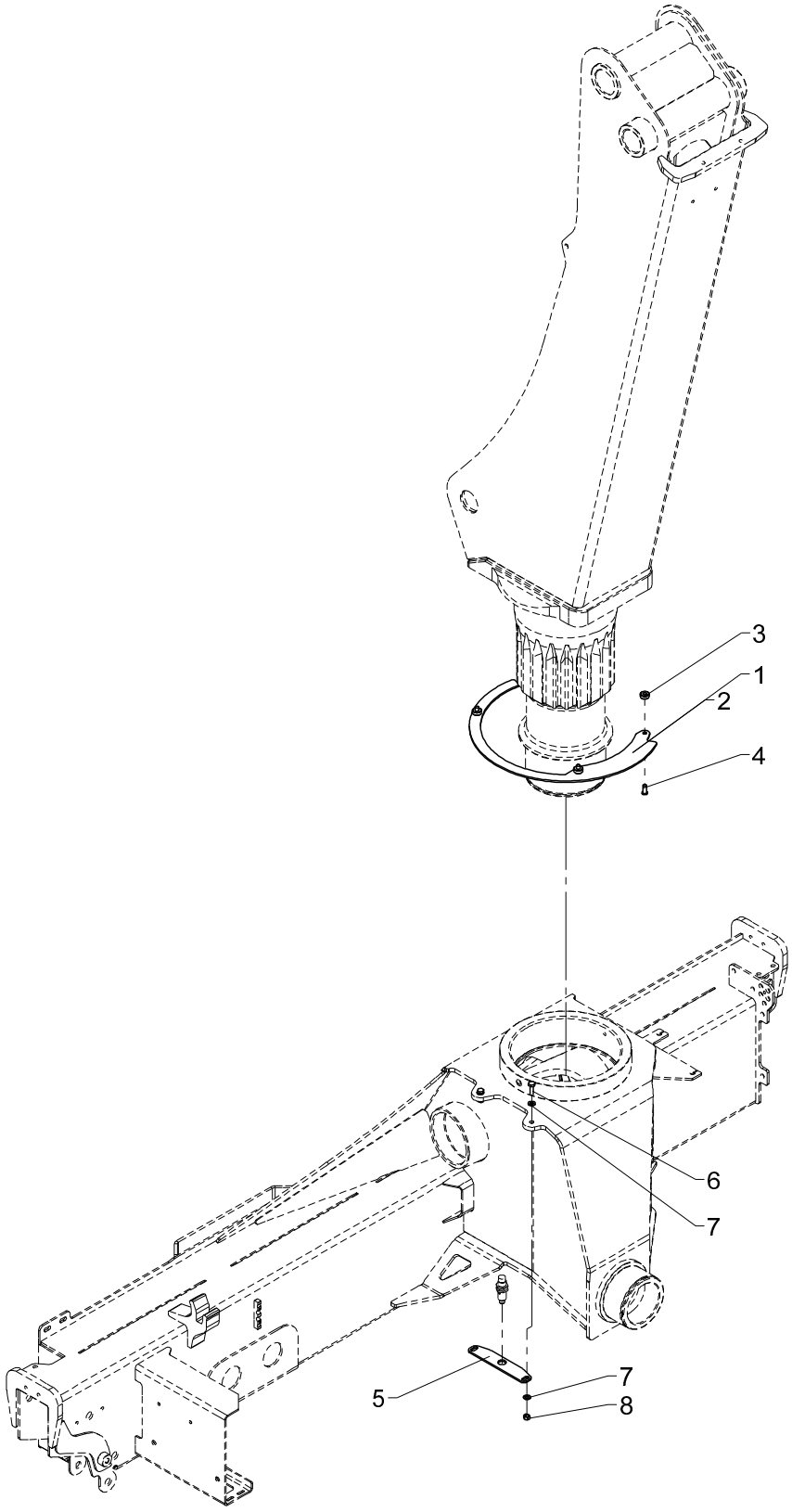
3
1
2
4
6
7
5
7
8

Cam disc kit (2-stage LMB)

Pos	Qty.	Part no.	Description	Remarks
		6341330	Cam disc kit (2-stage LMB)	
		6345330	Cam disc kit (2-stage LMB)	
1	1	6341999	Cam disc (2 stage LMB)	1300K/1500K
2	1	6345999	Cam disc (2 stage LMB)	1800K/2200K
3	3	6871754	Spacer	
4	3	32486	Screw	MCL8 x 20
5	1	6341997	Sensor fittings (cam disc)	
6	2	30134	Set screw, stainless	M8 x 25
7	4	31147	Face washer, 8 mm	8 mm
8	2	30856	Nut, stainless	M8

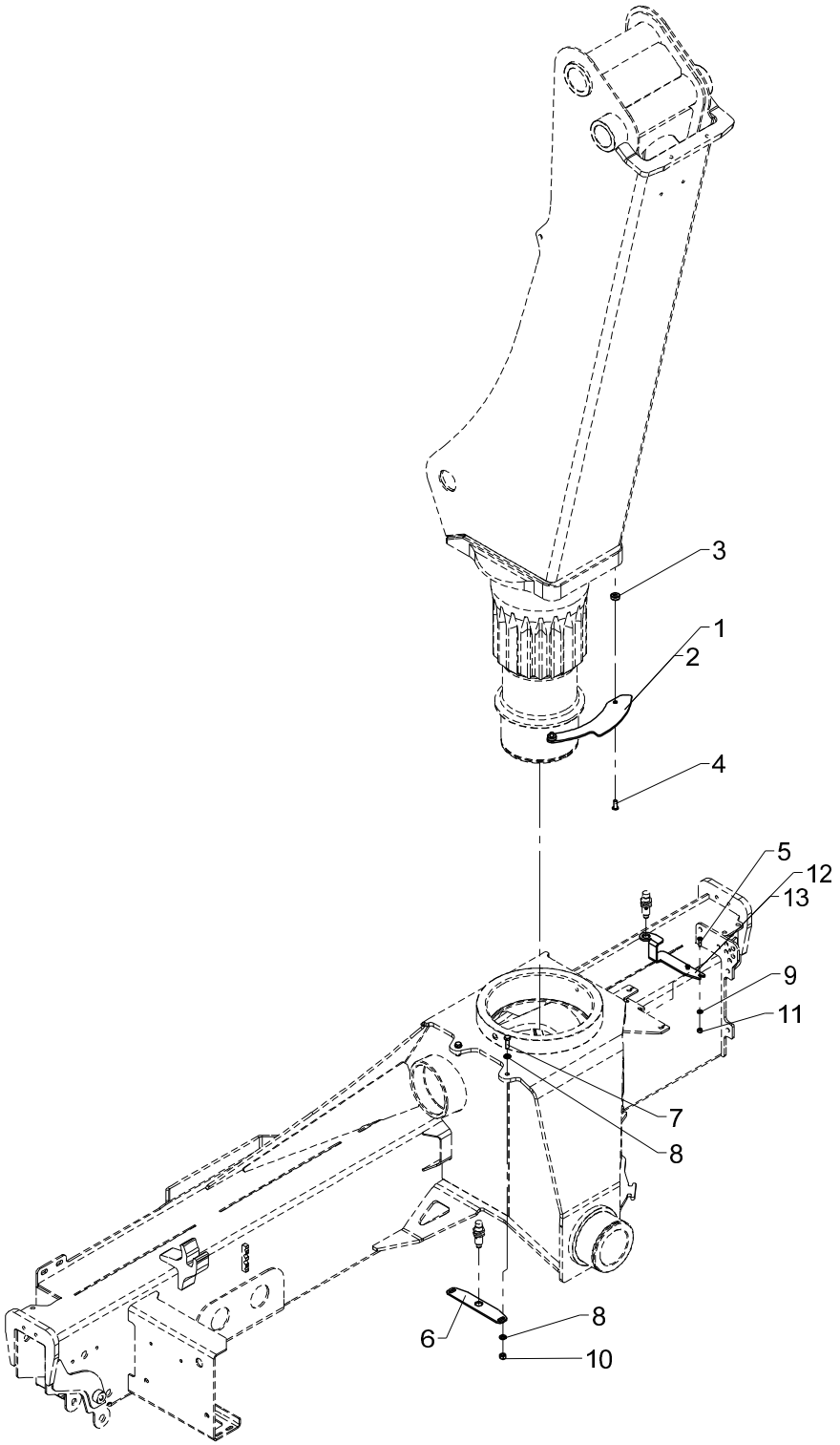
3
1
2
4
5
12
13
9
11
7
8
6
8
10

Cam disc kit (QOPS, std.), cpl.

535 16 030

From loader 1070001
To loader

Created 13-01-2010
Modified

Pos	Qty.	Part no.	Description	Remarks
		6341840	Cam disc kit (QOPS, std.)	
		6345840	Cam disc kit (QOPS, std.)	
1	1	6341996	Cam disc (QOPS, std.)	1300K/1500K
2	1	6345996	Cam dis (QOPS, std.)	1800K/2200K
3	2	6871754	Spacer	
4	2	32486	Screw	MCL8 x 20
5	2	32483	Screw	MCL6 x 20
6	1	6341997	Sensor fittings (cam disc)	
7	2	30134	Set screw, stainless	M8 x 25
8	4	31147	Face washer, 8 mm	8 mm
9	2	32302	Face washer, stainless	6 mm
10	2	30886	Lock nut, stainless	M8
11	2	30884	Lock nut, stainless	M6
12	1	6341995	Sensor fittings (QOPS)	1300K/1500K
13	1	6345995	Sensor fittings (QOPS)	1800K/2200K

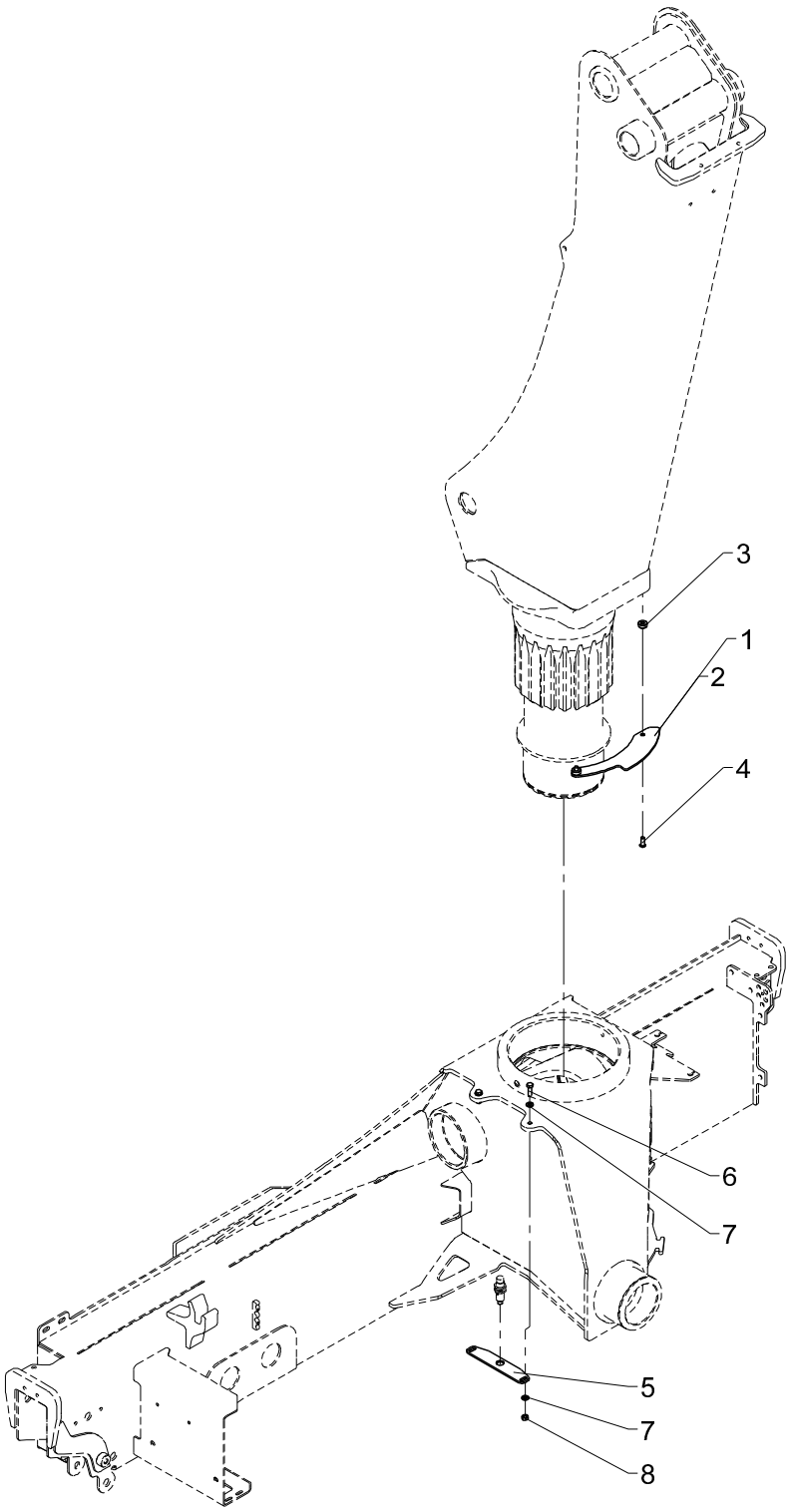
3
1
2
4
6
7
5
7
8

Cam disc kit (QOPS, RC), cpl.

From loader 1070001
To loader
Created 13-01-2010
Modified

Pos	Qty.	Part no.	Description	Remarks
		6341850	Cam disc kit (QOPS, RC)	
		6345850	Cam disc kit (QOPS, RC)	
1	1	6341996	Cam disc (QOPS, std.)	1300K/1500K
2	1	6345996	Cam dis (QOPS, std.)	1800K/2200K
3	2	6871754	Spacer	
4	2	32486	Screw	MCL8 x 20
5	1	6341997	Sensor fittings (cam disc)	
6	2	30134	Set screw, stainless	M8 x 25
7	4	31147	Face washer, 8 mm	8 mm
8	2	30856	Nut, stainless	M8

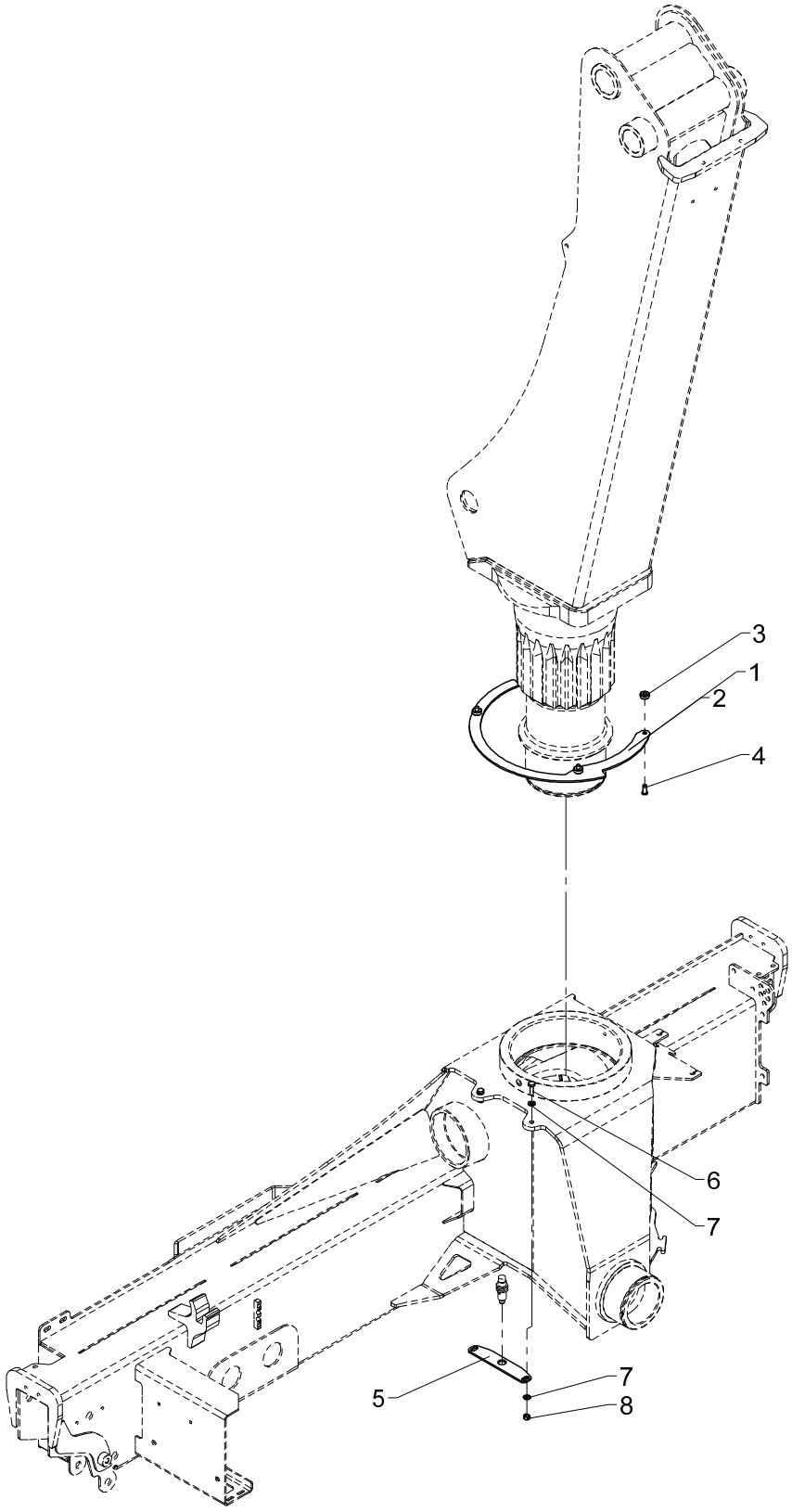
3
1
2
4
6
7
5
7
8

Cam disc kit (HS + 2-stage LMB)

535 16 050

From loader 1070001
To loader

Created 13-01-2010
Modified

Pos	Qty.	Part no.	Description	Remarks
		6341790	Cam disc kit (HS+2-stage LMB)	
		6345790	Cam disc kit (HS+2-stage LMB)	
1	1	6341994	Cam disc (HS+2-stage LMB)	1300/1310/1500/1510
2	1	6345994	Cam disc (HS+2-stage LMB)	1800/1810/2200/2210
3	3	6871754	Spacer	
4	3	32486	Screw	MCL8 x 20
5	1	6341997	Sensor fittings (cam disc)	
6	2	30134	Set screw, stainless	M8 x 25
7	4	31147	Face washer, 8 mm	8 mm
8	2	30856	Nut, stainless	M8

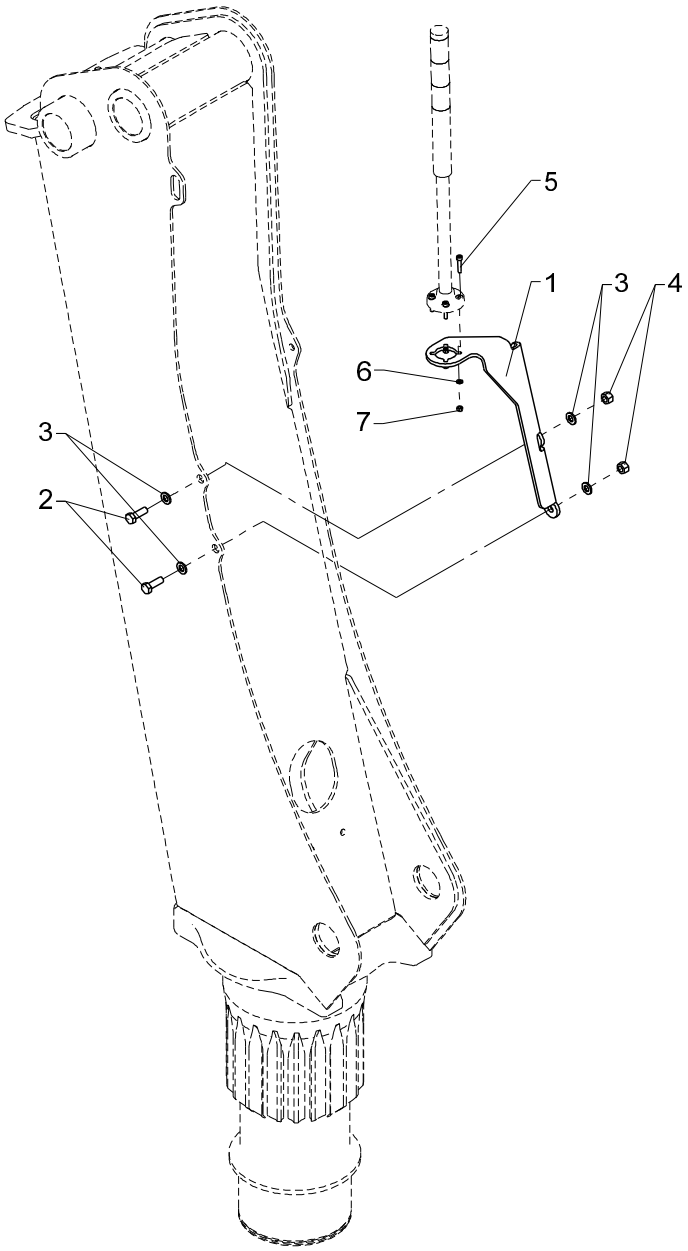
5
1
3
4
6
7
3
2

Obsolete

Mounting fittings, light tower

535 16 060

From loader 1070001
To loader

Created 04-01-2010
Modified 13-01-2014

Pos	Qty.	Part no.	Description	Remarks
1	1	6340069	Bracket (light tower)	
2	2	30156	Set screw, stainless	M10 x 30
3	4	31565	Washer, stainless	10 mm
4	2	31564	Lock nut, stainless	M10
5	4	30481	Screw	
6	4	32308	Washer	5 mm
7	4	30859	Lock nut, stainless	M5

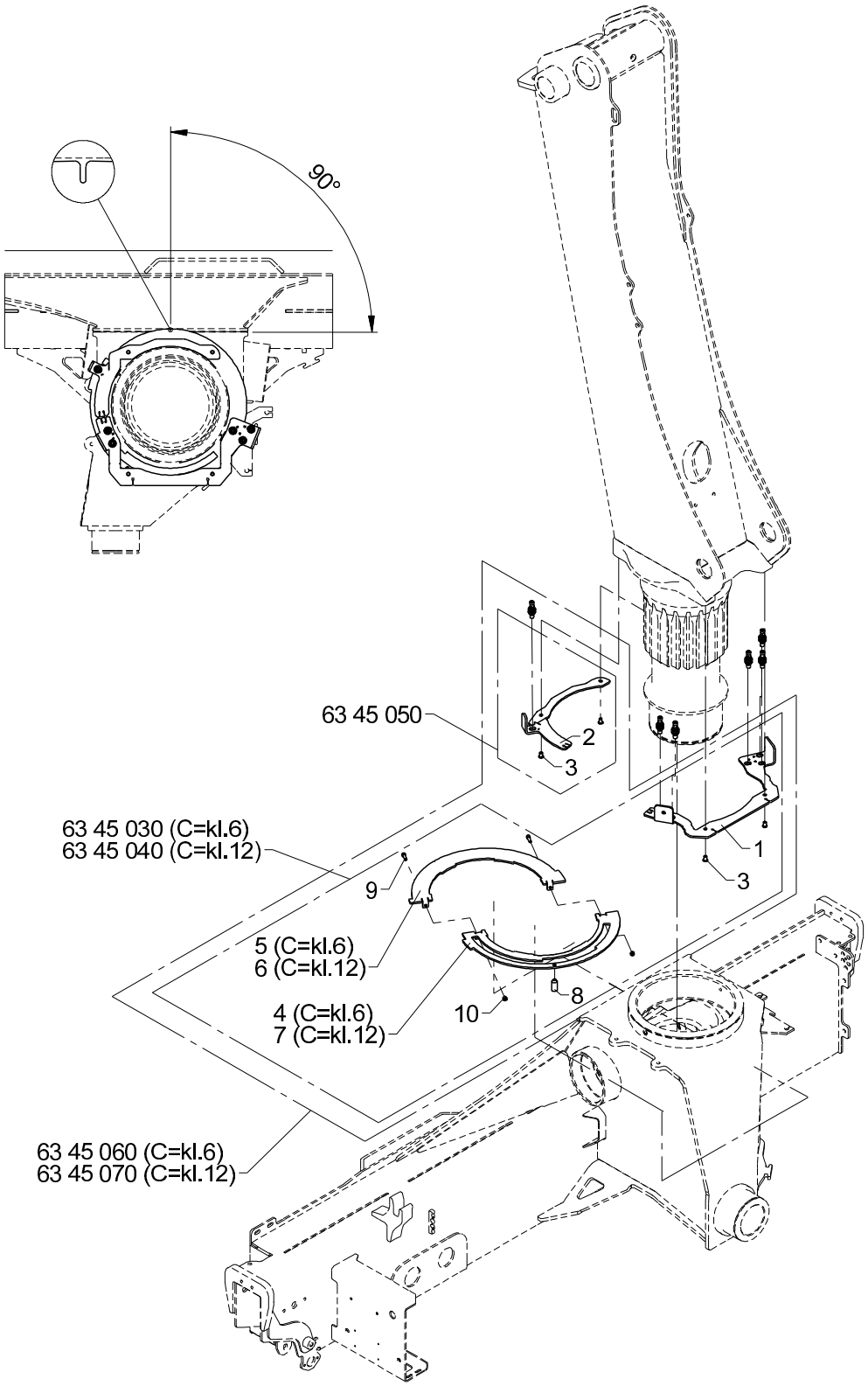
90°
63 45 050
2
3
1
3
63 45 030 (C=kl.6)
63 45 040 (C=kl.12)
9
5 (C=kl.6)
6 (C=kl.12)
4 (C=kl.6)
7 (C=kl.12)
10
8
63 45 060 (C=kl.6)
63 45 070 (C=kl.12)

Cam disc kit

Pos	Qty.	Part no.	Description	Remarks
		6345030	Cam disc kit	(2LMB,HS,QOPS,CBS)
		6345040	Cam disc kit	(2LMB,HS,QOPS,CBS, C=12)
		6345050	Cam disc kit	(+2CYBEL)
		6345060	Cam disc kit	(2CYBEL)
		6345070	Cam disc kit	(2CYBEL, C=12)
1	1	6345081	Sensor bracket	
2	1	6345082	Sensor bracket	
3	4	32507	Cylinder screw 8 x 12	MC8 x 12
4	1	6345076	Cam disc, part 1/2	
5	1	6345077	Cam disc, part 2/2	
6	1	6345078	Cam disc, part 1/2 C=12o'clock	
7	1	6345079	Cam disc, part 2/2 C=12o'clock	
8	1	68058	Spacer	
9	2	31538	Screw, stainless	MC6 x 20
10	2	30884	Lock nut, stainless	M6

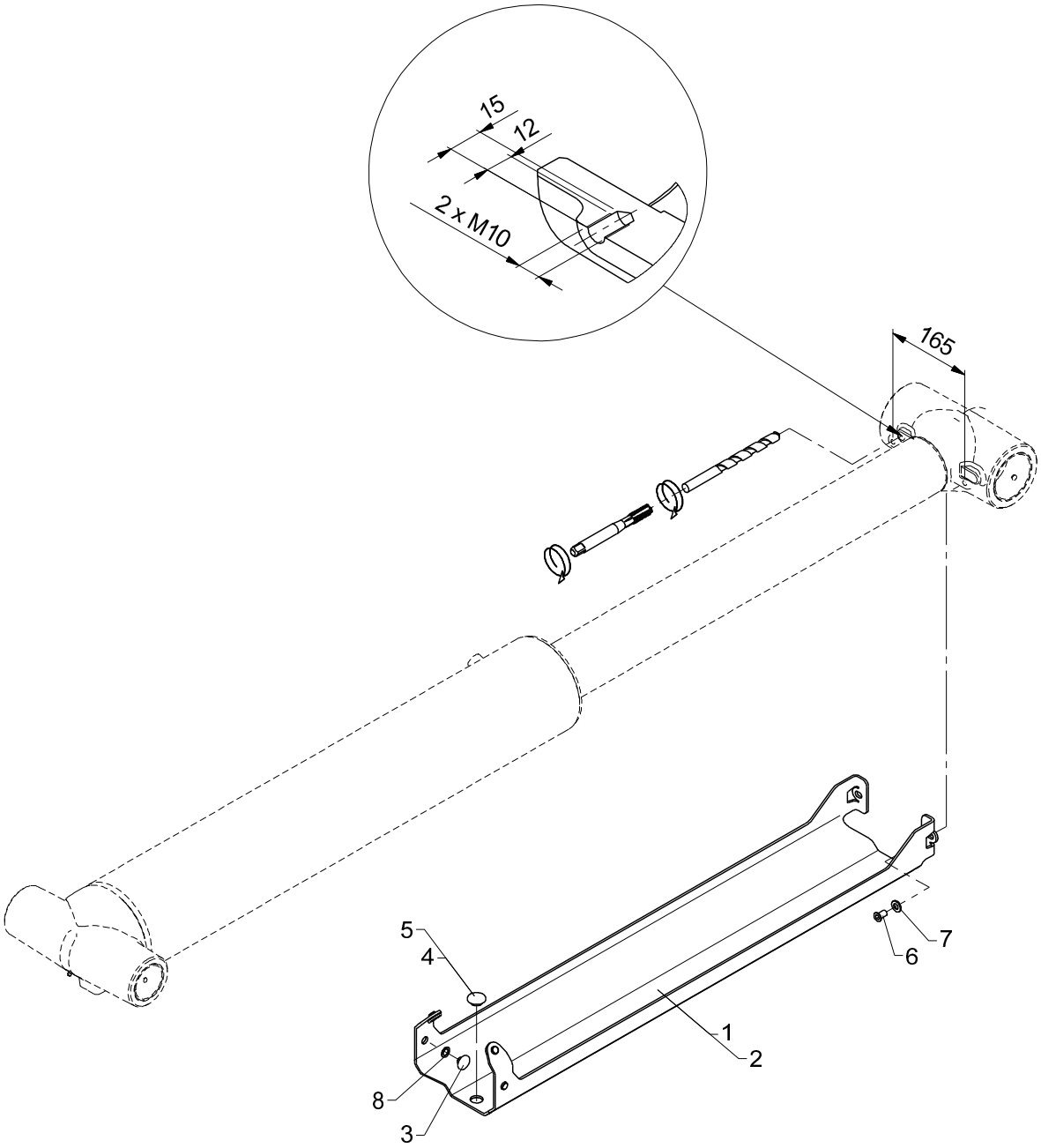
15
12
2 x M10
165
5
4
1
2
8
3
6
7

Protective guard, jib cylinder, cpl.

Pos	Qty.	Part no.	Description	Remarks
		6344890	Protective guard, jib cylinder	
		6346890	Protective guard, jib cylinder	
1	1	6344159	Protective guard	Serie 1800
2	1	6346159	Protective guard	Serie 2200
3	4	63569	Guide shoe	3 mm
4	1	63429	Guide	ø30 x 3 mm
5	1	63460	Spacer	5 mm
6	2	32423	Sockethead screw	MC10 x 16
7	2	31565	Washer, stainless	10 mm
8	4	33219	Back ring	PS 12 x 18 x 1,0

18/129, 20/138, 22/153

Internal ref. 63 41 050

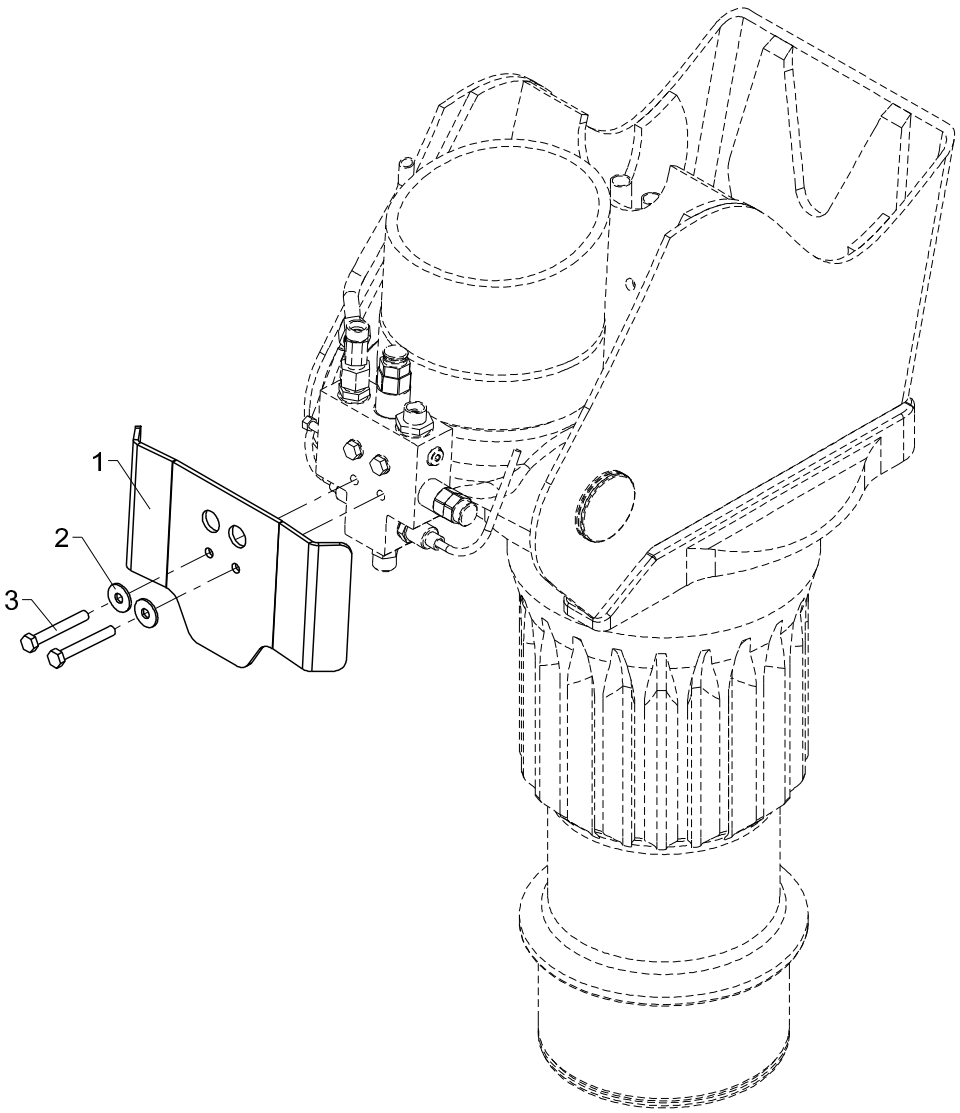

Protective guard (LHV boom), cpl.

Pos	Qty.	Part no.	Description	Remarks
1	1	6340949	Protective guard (LHV boom)	
2	2	31136	Washer, stainless	8 mm
3	2	30141	Set screw, stainless	M8 x 60

18/129, 20/138, 22/153

85 02 960
Internal ref. 85 02 910

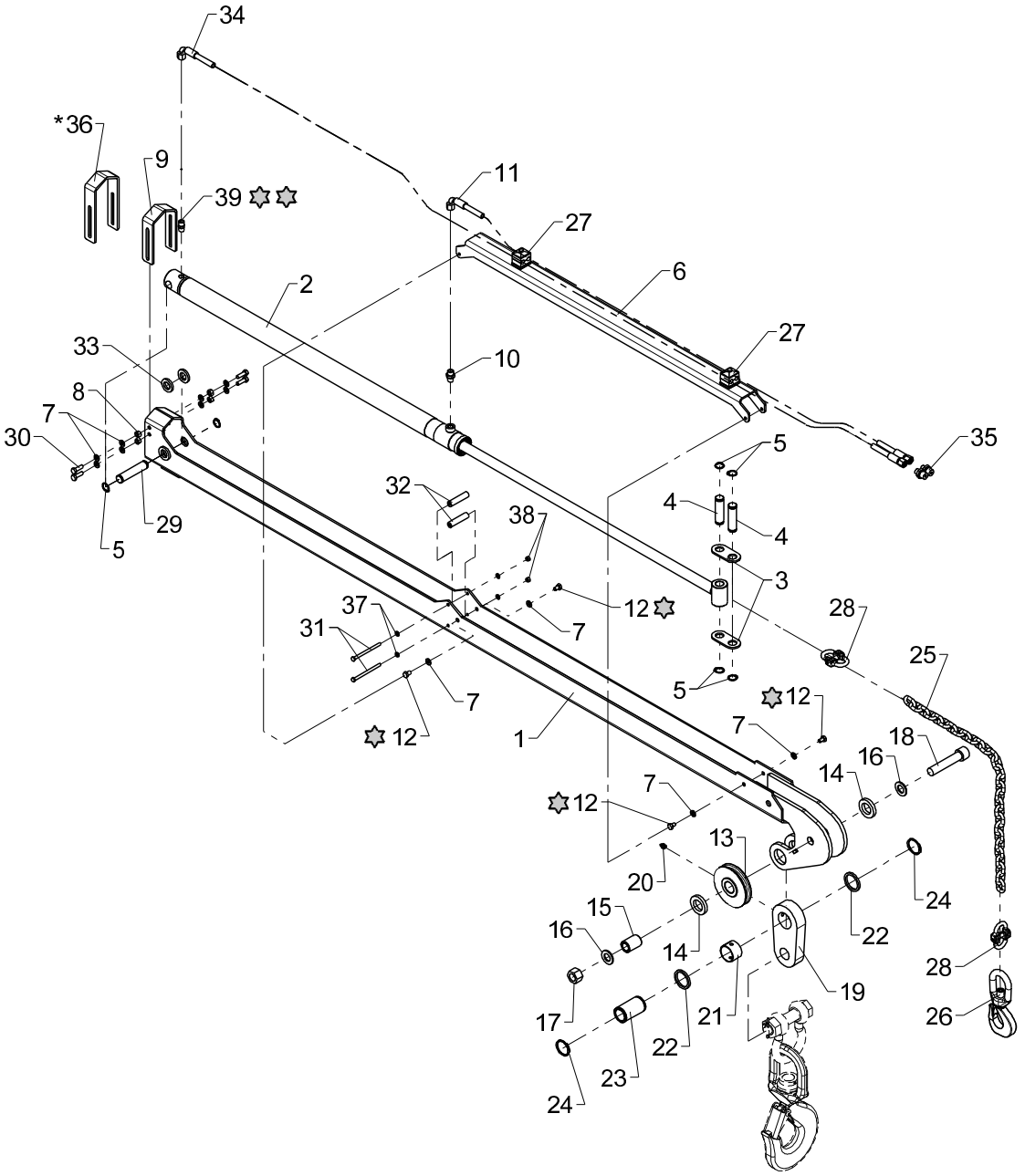

Loctite 243

Loctite 577

* K3 - 18/124 - 26/180

Pos	Qty.	Part no.	Description	Remarks
		8502910		
		8502960		K3 - 1800K/2630K
1	1	8502842	Boom,bottle contain.handl.syst	
2	1	1243204	Telescopic cylinder	
3	2	8502874	Fitting	
4	2	8502804	Bolt	Ø20 x 75
5	6	33108	Circlip	20U
6	1	8502934	End plate	
7	12	31147	Face washer, 8 mm	
8	4	30886	Lock nut, stainless	M8
9	1	8502894	Bracket	
10	1	25109	Connection	GES 8 LR-WD
11	1	62579	Hose	1/4X1800
12	4	30130	Set screw, stainless	M8 x 12
13	1	64074	Wire sheave	
14	2	64556	Distance ring ø50x10	Ø50/30,3 x 8
15	1	8502794	Hub	Ø30/20,5 x 41,5
16	2	31179	Washer	20 mm
17	1	30894	Lock nut	M20
18	1	30474	Sockethead screw	MC20 x 100
19	1	8502784	Hook suspension	
20	1	31318	Lubricator	1/8" RG
21	1	23333	Bushing	PM 4030 DX
22	2	64557	Distance ring ø50x5	Ø50/40,03 x 4,5
23	1	8502774	Hub	Ø40/30,5 x 70
24	2	33121	Circlip	40U
25	1	62177	Steel chain	KL 7-8 (mtr.) 1 1/2 meter pr.enhe
26	1	62128	Hook	
27	2	31418	Clamp, double	2 x 12 mm
28	2	62178	Connection for steel chain	
29	1	8502864	Bolt	Ø20 x 91
30	4	31009	Set screw	M8 x 25
31	2	30124	Steel bolt, stainless	M6 x 90
32	2	56513	Hose	
33	2	8502954	Spacer	Ø35/20,5 x 5
34	1	62552	Hose	1/4" x 2650 V/O
35	2	25244	Connection	GES 8 LR 3/8-WD
36	1	8502884	Profile	K3 - 1800K/2630K
37	4	32302	Face washer, stainless	6 mm
38	2	30884	Lock nut, stainless	M6
39	1	25112	Connection	GES 8 LRK - 25112

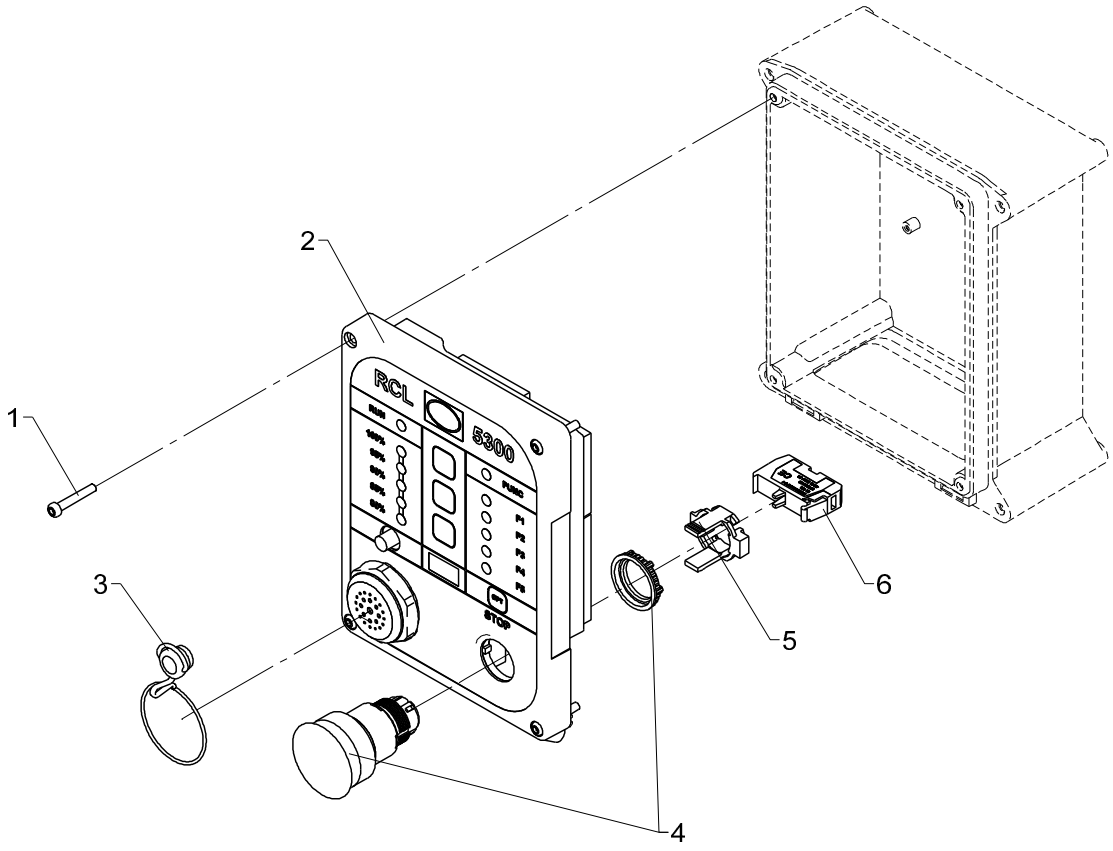
1
2
3
4
5
6
RCL
5300
STOP

RCL 5300

Pos	Qty.	Part no.	Description	Remarks
1	4	30347	Screw, stainless	4,0 x 25
2	1	29301	Front complete, RCL 5300	
3	1	29306	Plug	
4	1	29196	Stop button	
5	1	29198	Attachment, stop button	
6	1	29197	Switch element, stop button	

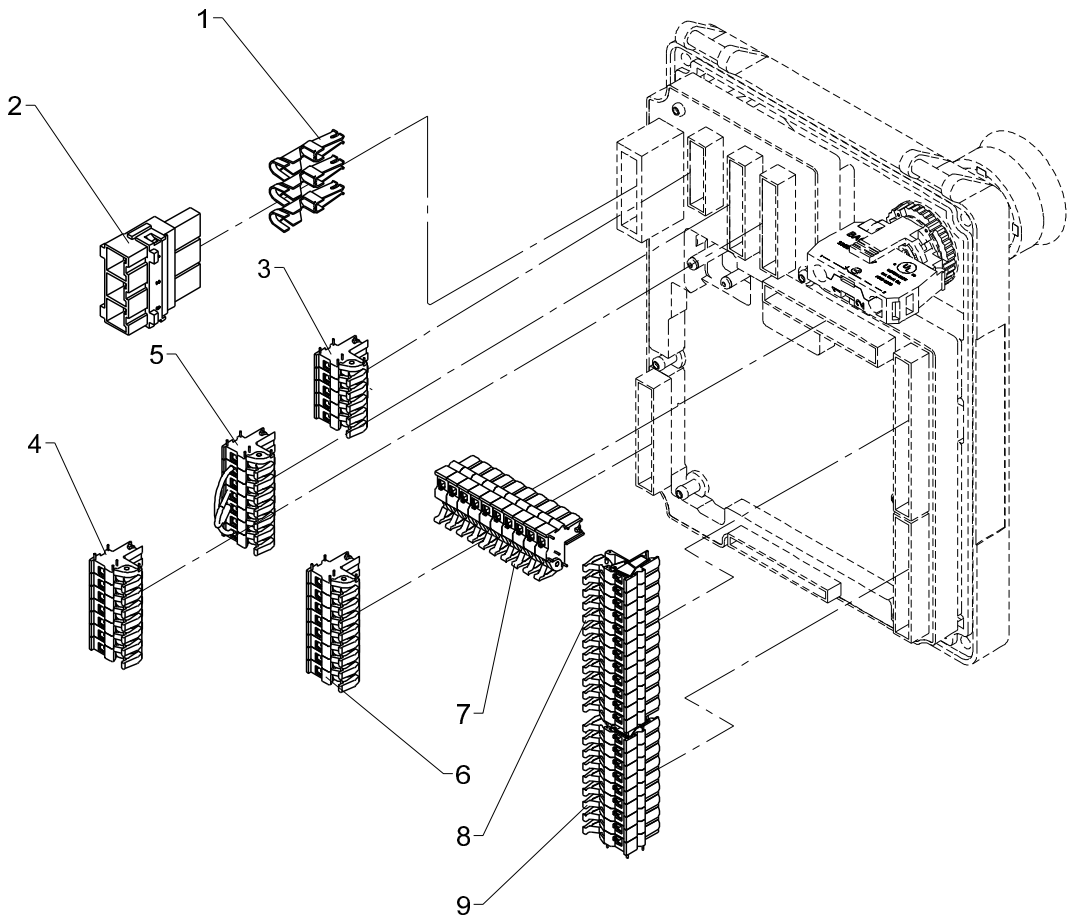
1
2
3
5
4
7
6
8
9

Plugs in RCL

Pos	Qty.	Part no.	Description	Remarks
1	3	29316	Pin	
2	1	29315	Plug, 3-polar for RCL 53XX	
3	1	29317	Plug, 5-polar for RCL 53XX	
4	1	29318	Plug, 7-polar for RCL 53XX	
5	1	29340	CAN termination/RCL53xx	
6	1	29319	Plug, 8-polar for RCL 53XX	
7	1	29321	Plug, 10-polar for RCL 53XX	
8	1	29322	Plug, 12-polar for RCL 53XX	
9	1	29320	Plug, 9-polar for RCL 53XX	

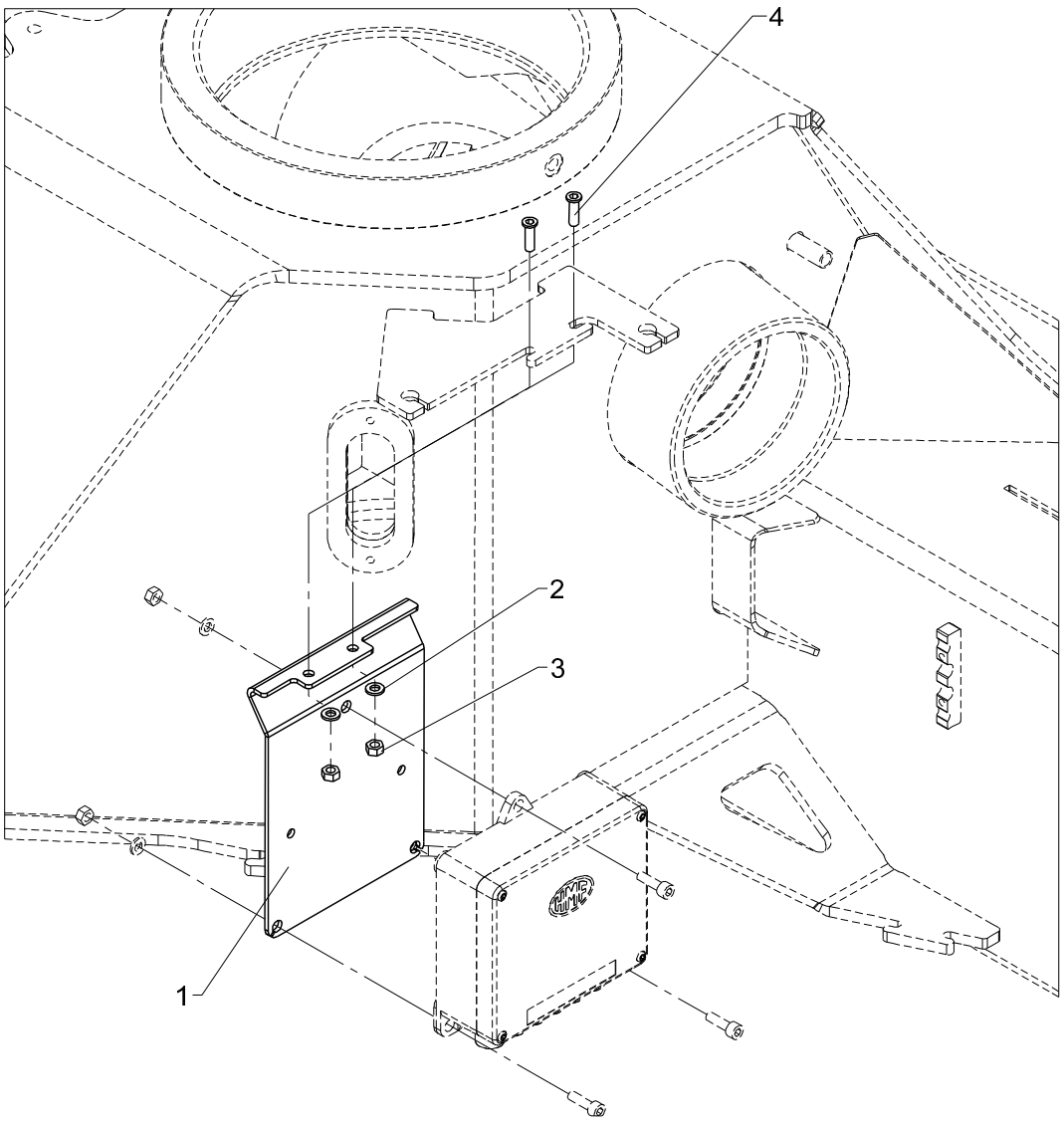
4
2
3
1

Mounting fittings for junction box (FJC 5330)

Pos	Qty.	Part no.	Description	Remarks
1	1	6340899	Mounting fittings (FJC 5330)	
2	2	32302	Face washer, stainless	6 mm
3	2	30854	Nut, stainless	M6
4	2	32483	Screw	MCL6 x 20

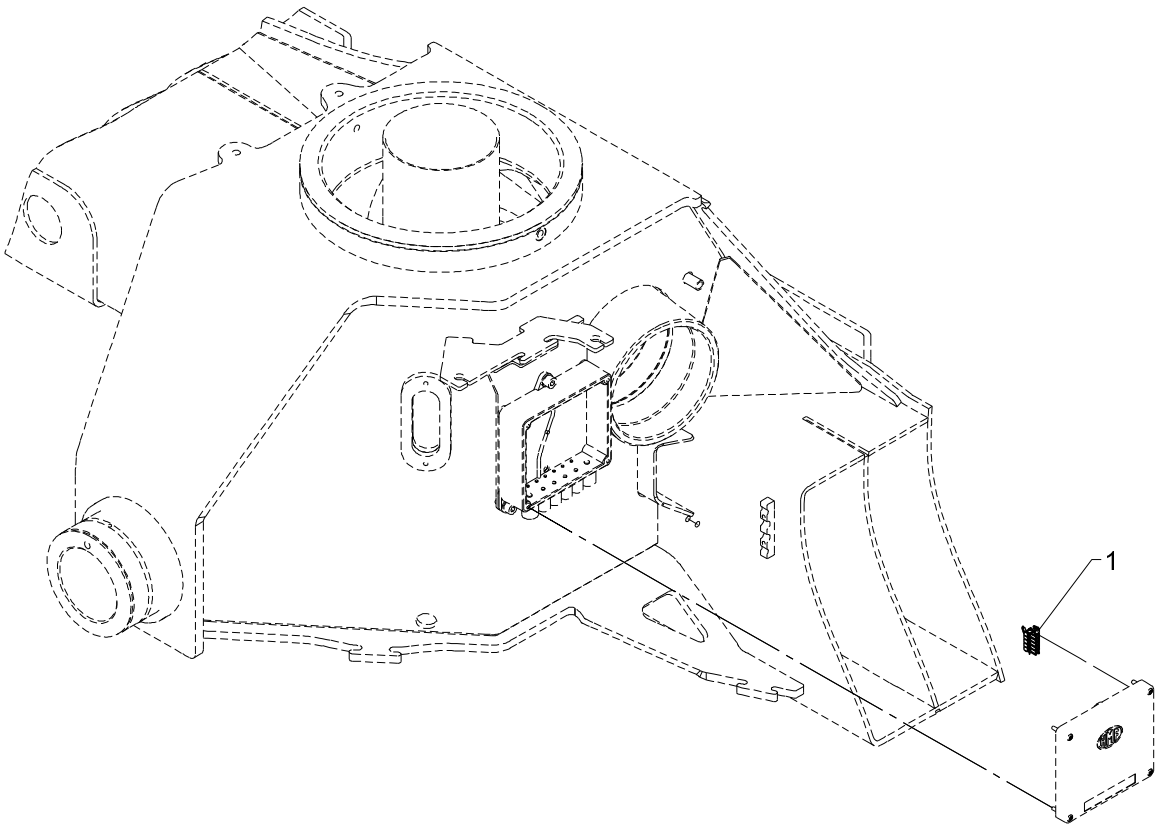
1

CAN termination, CIO5376

535 20 040

From loader 1070001
To loader

Created 13-02-2013
Modified

Pos	Qty.	Part no.	Description	Remarks
1	1	29341	CAN termination FJC	

Obsolete

18/129, 20/138, 22/153

535 20 049

Internal ref. 70 06 302

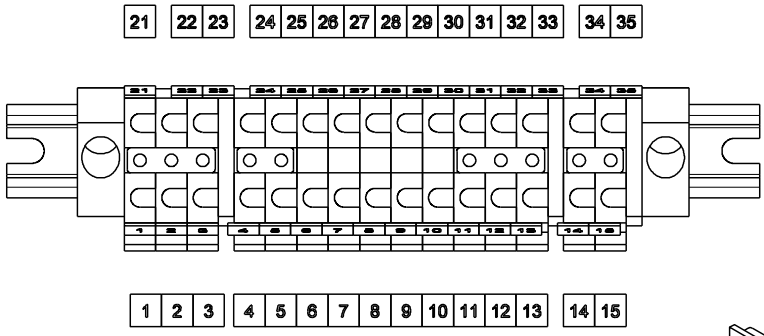

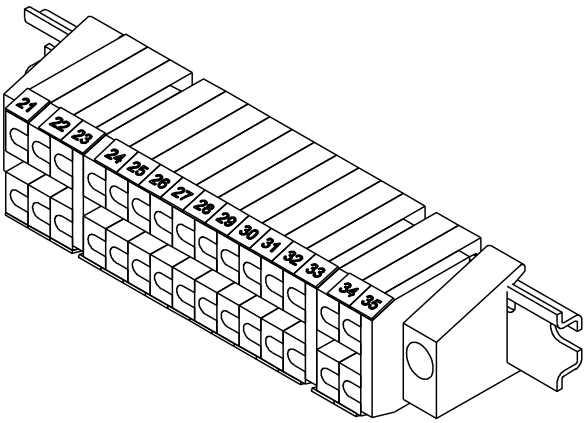

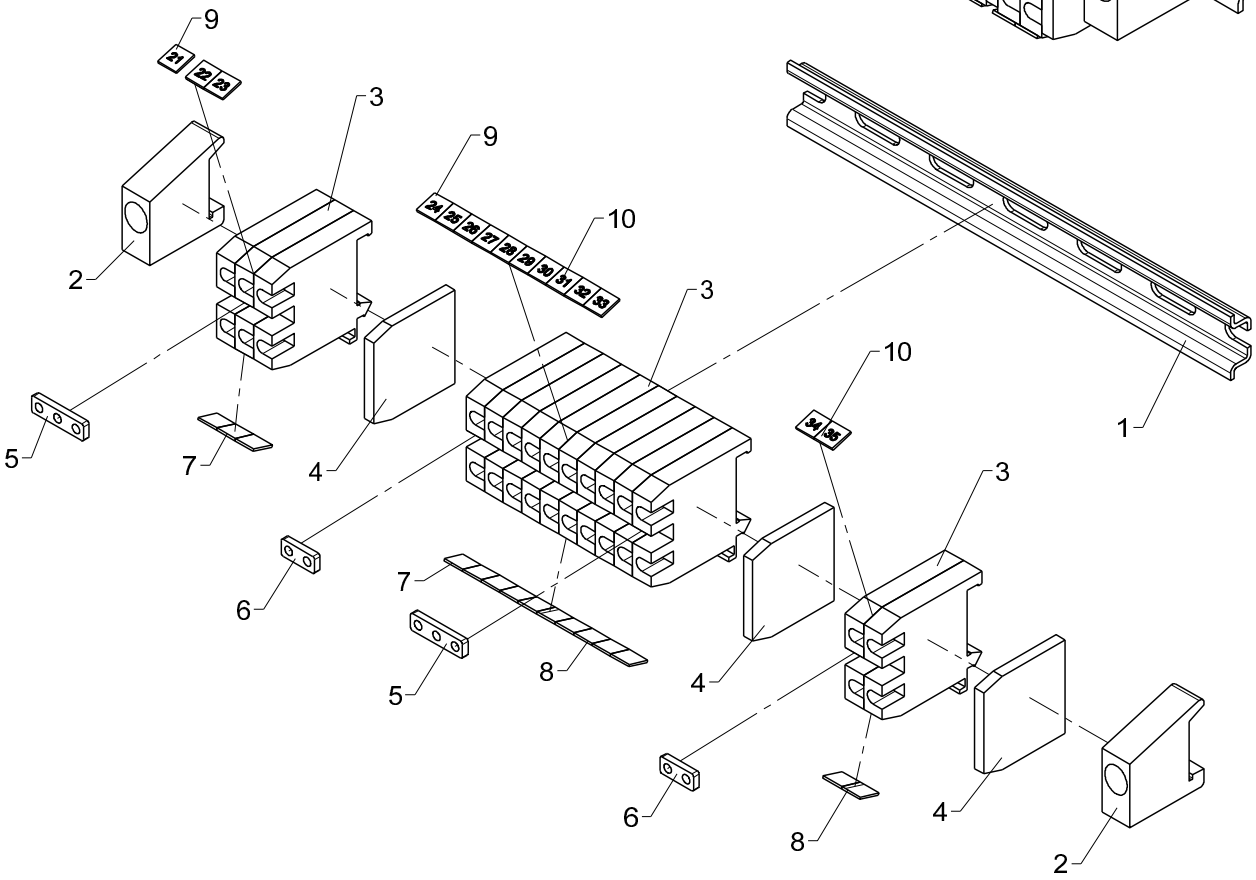

Obsolete

535 20 049

From loader 1070001
To loader

Created 09-07-2012
Modified

Terminal block, Box 1

Pos	Qty.	Part no.	Description	Remarks
1	1	28013	Guide rail	120 mm.
2	2	28012	End angle	
3	15	28010	Terminal	
4	3	28011	End plate	
5	2	28014	Fish plate	
6	2	28208	Fish plate	
7	1	28019	Labels nos. 1-10	
8	1	28020	Labels nos. 11-20	
9	1	28965	Dekafix labels 21-30	
10	1	29427	Dekafix marker 31-40	

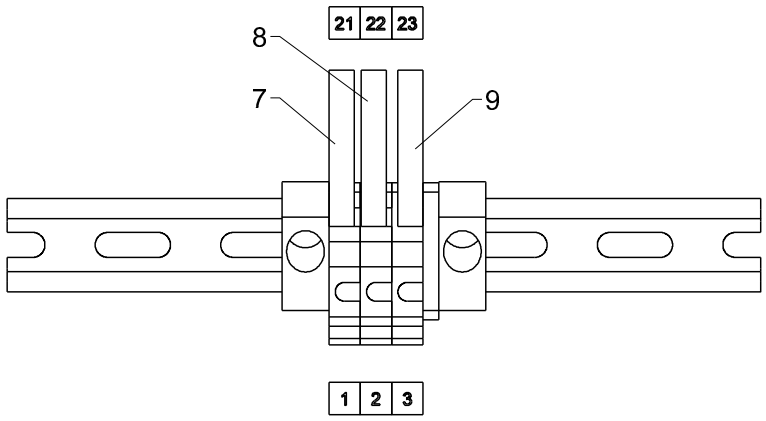
21 22 23
8
7
9
1 2 3

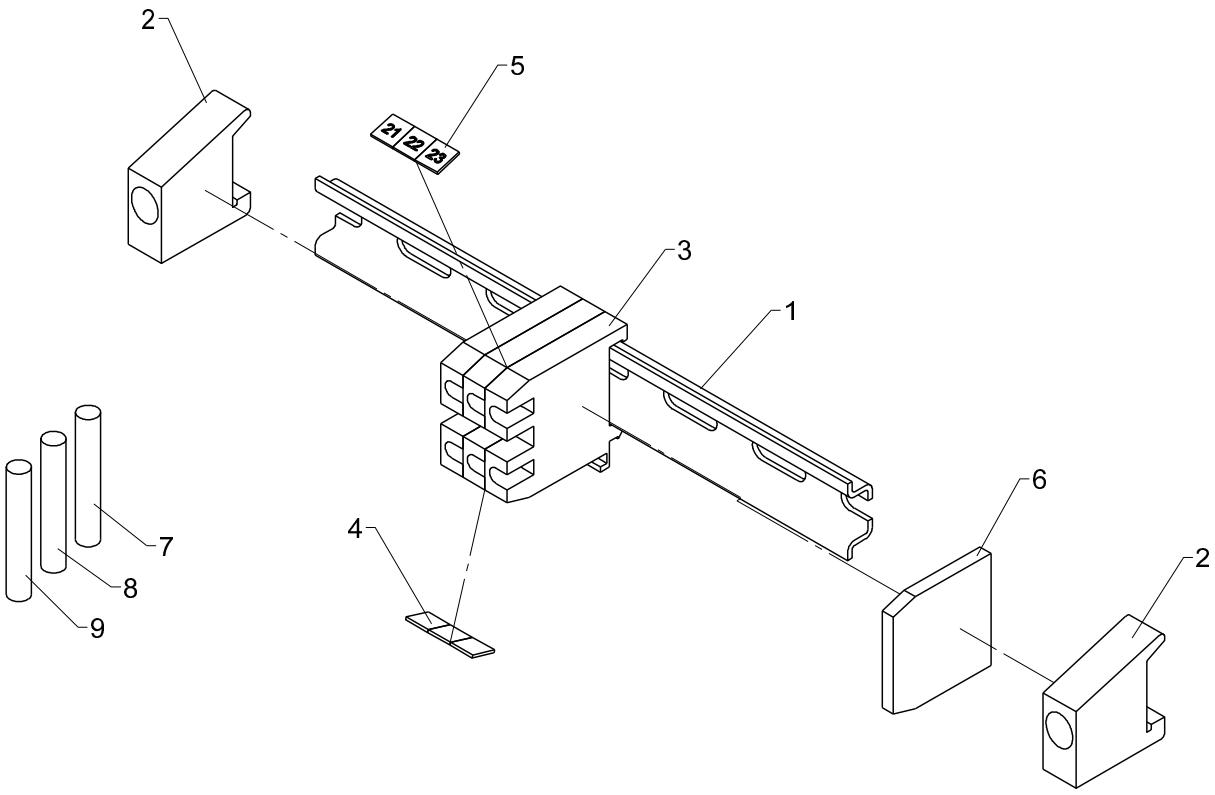
2
5
21 22 23
3
1
6
2
4
7
8
9

Terminal block for RCL box with RC

535 20 050

From loader 1070001
To loader

Created 17-04-2013
Modified 08-07-2014

Pos	Qty.	Part no.	Description	Remarks
1	1	28013	Guide rail	120 mm.
2	2	28012	End angle	
3	3	28010	Terminal	
4	1	28019	Labels nos. 1-10	
5	1	28965	Dekafix labels 21-30	
6	1	28011	End plate	
7	1	27202	Cable	0,3 m
8	1	27204	Wire, 1 x1.5mm2	0,3 m
9	1	27120	Cable	0,3 m

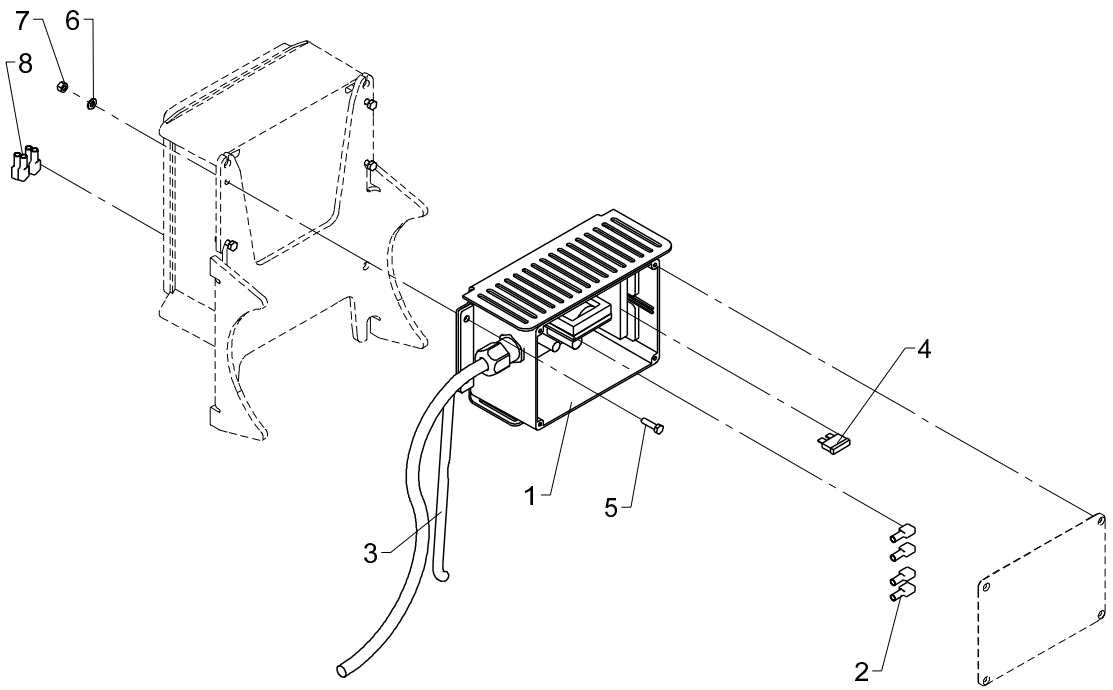
7
6
8
4
1
5
3
2

12 V converter

Pos	Qty.	Part no.	Description	Remarks
1	1	29478	Converter, 12-24 V, complete	
2	4	27428	Clip	
3	1	28278	Cable 4 x 2.5	
4	1	27378	Fuse 25 Amp	
5	4	30125	Set screw	M4 x 16
6	4	31188	Washer, stainless	4 mm
7	4	30857	Lock nut	M4
8	4	27428	Clip	

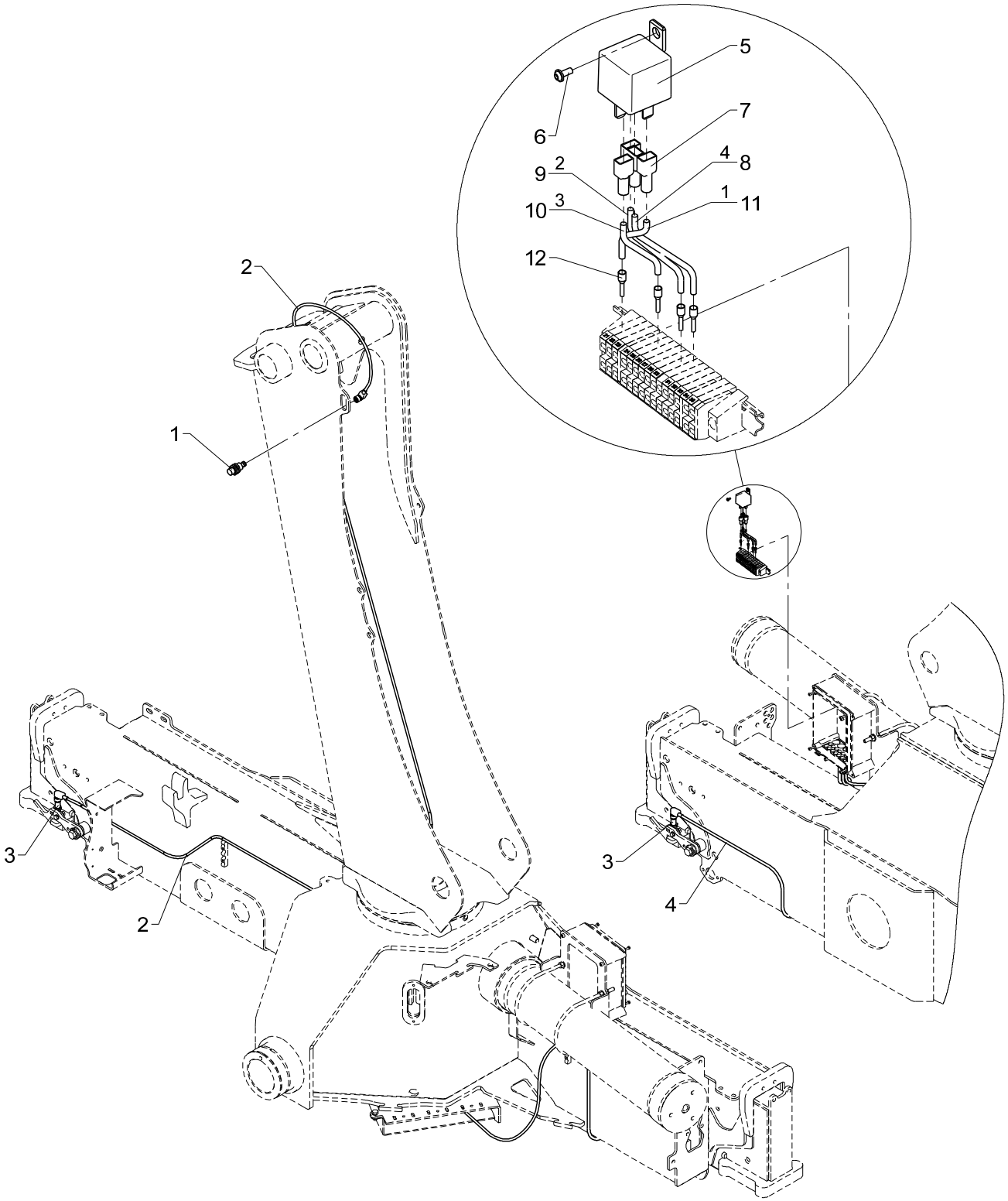
5
6
7
4
8
9
2
1
11
10
3
12
2
1
3
2
3
4

Obsolete

535 20 060

From loader 1070001
To loader

Created 08-12-2011
Modified 14-11-2012

BEHEW

Pos	Qty.	Part no.	Description	Remarks
1	1	28980	Proximity switch	
2	2	28077	Cable with plug	
3	2	29257	Proximity switch M12x44, 4mm	
4	1	28117	Cable with plug	
5	1	27342	Relay, 24V	
6	1	30361	Screw, stainless	3,0 x 8
7	4	27429	Clamp	
8	1	27209	Wire 1 x 1,5 mm2	300 mm
9	1	27206	Wire, 1 x 1.5mm2	300 mm
10	1	27204	Wire, 1 x1.5mm2	300 mm
11	1	27202	Cable	300 mm
12	4	27715	Cable end	

18/129, 20/138, 22/153

Internal ref. 70 06 310

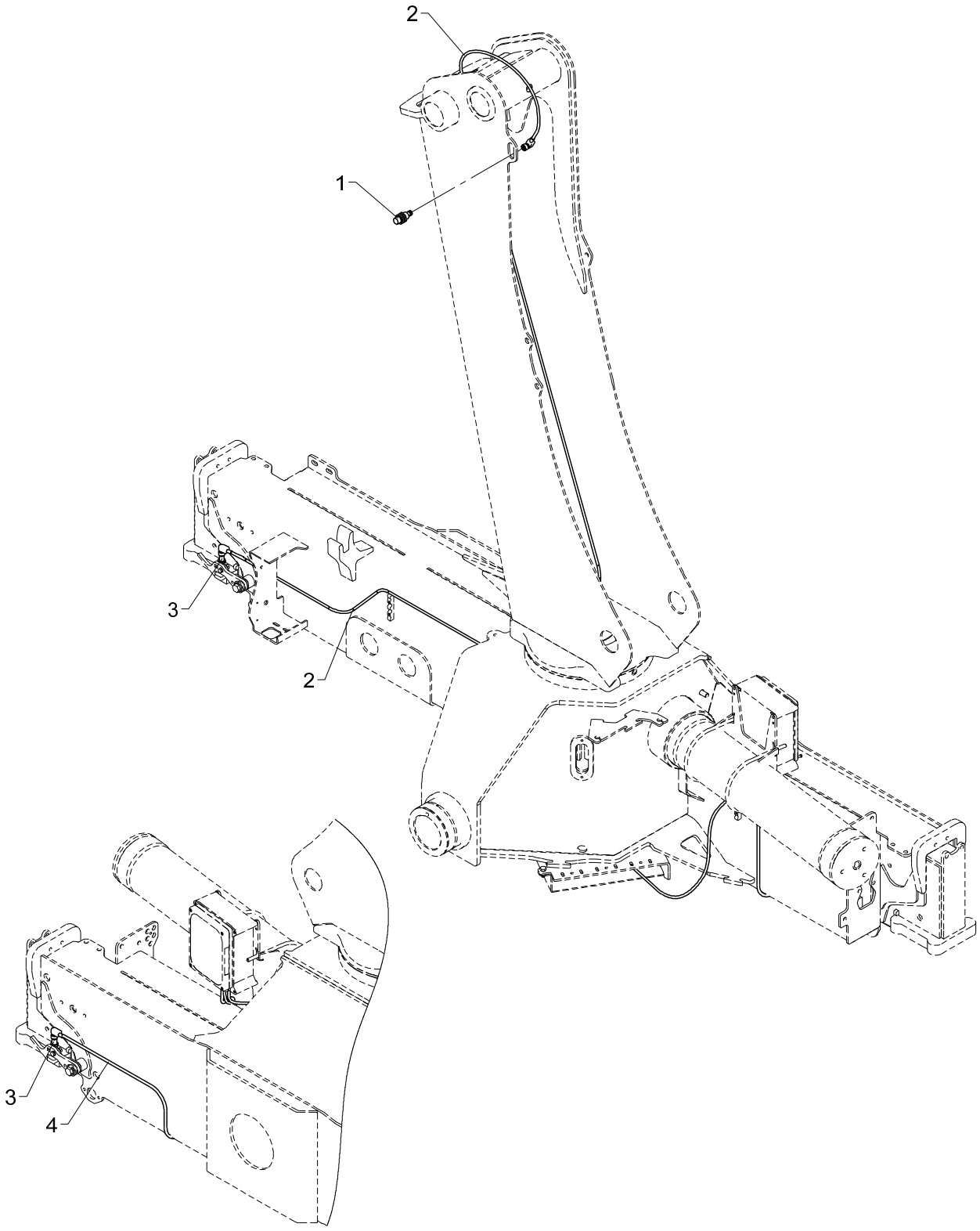

BEHEW

Pos	Qty.	Part no.	Description	Remarks
1	1	28980	Proximity switch	
2	2	28077	Cable with plug	
3	2	29257	Proximity switch M12x44, 4mm	
4	1	28117	Cable with plug	

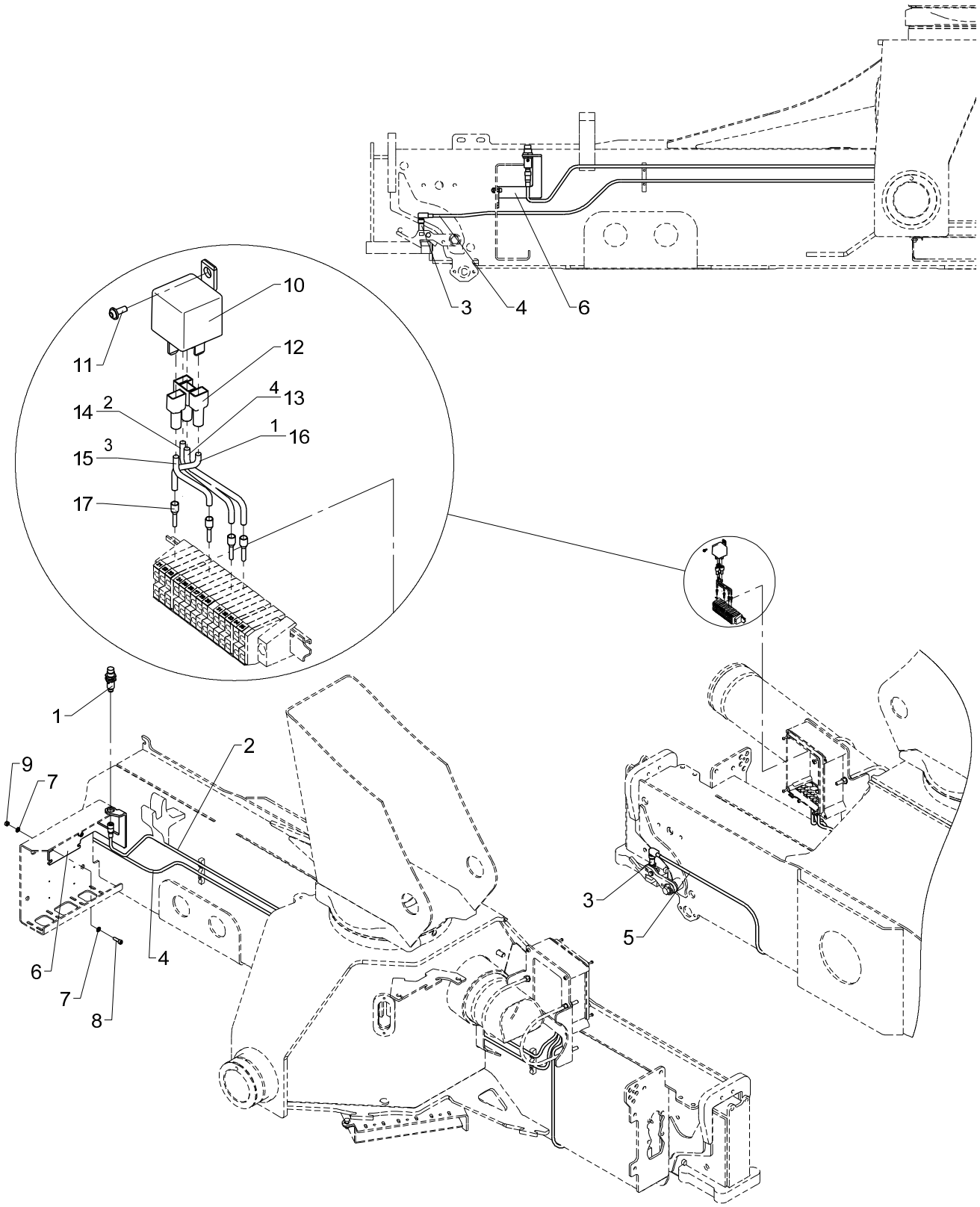
10
11
12
4
13
14
2
1
16
15
3
17
3
4
6
1
2
9
7
6
7
8
4
3
5

Obsolete

535 20 070

From loader 1070001
To loader

Created 03-10-2012
Modified

BEPAW, 12_23

Pos	Qty.	Part no.	Description	Remarks
1	1	28210	Proximity switch	
2	1	29224	Cable with socket, 5 m	
3	2	29257	Proximity switch M12x44, 4mm	
4	1	28077	Cable with plug	
5	1	28117	Cable with plug	
6	1	6340947	Mounting fittings, trans.alarm	
7	4	32302	Face washer, stainless	6 mm
8	2	30427	Screw	MC6 x 20
9	2	30854	Nut, stainless	M6
10	1	27342	Relay, 24V	
11	1	30361	Screw, stainless	3,0 x 8
12	4	27429	Clamp	
13	1	27209	Wire 1 x 1,5 mm2	300 mm
14	1	27206	Wire, 1 x 1.5mm2	300 mm
15	1	27204	Wire, 1 x1.5mm2	300 mm
16	1	27202	Cable	300 mm
17	4	27715	Cable end	

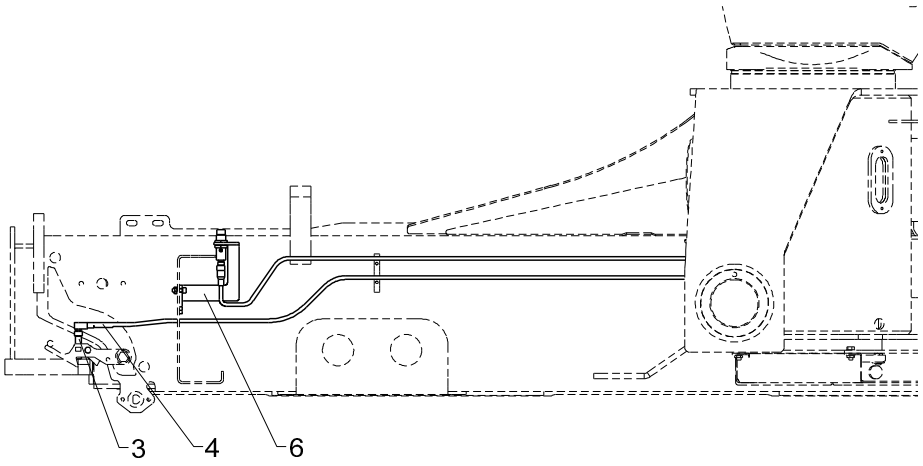
3
4
6

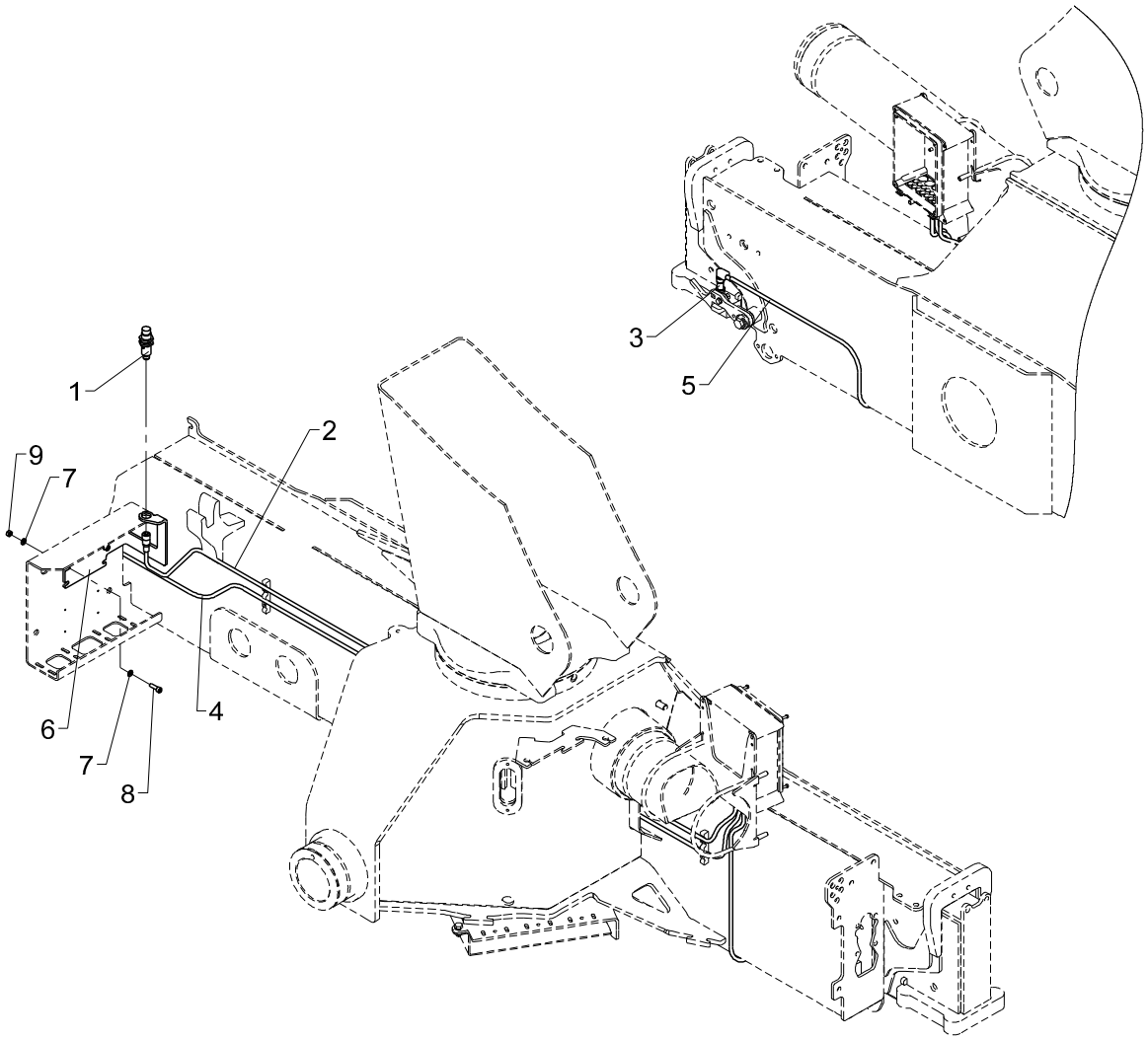
1
2
3
4
5
6
7
7
8
9

BEPAW, 12_23

Pos	Qty.	Part no.	Description	Remarks
1	1	28210	Proximity switch	
2	1	29224	Cable with socket, 5 m	
3	2	29257	Proximity switch M12x44, 4mm	
4	1	28077	Cable with plug	
5	1	28117	Cable with plug	
6	1	6340947	Mounting fittings, trans.alarm	
7	4	32302	Face washer, stainless	6 mm
8	2	30427	Screw	MC6 x 20
9	2	30854	Nut, stainless	M6

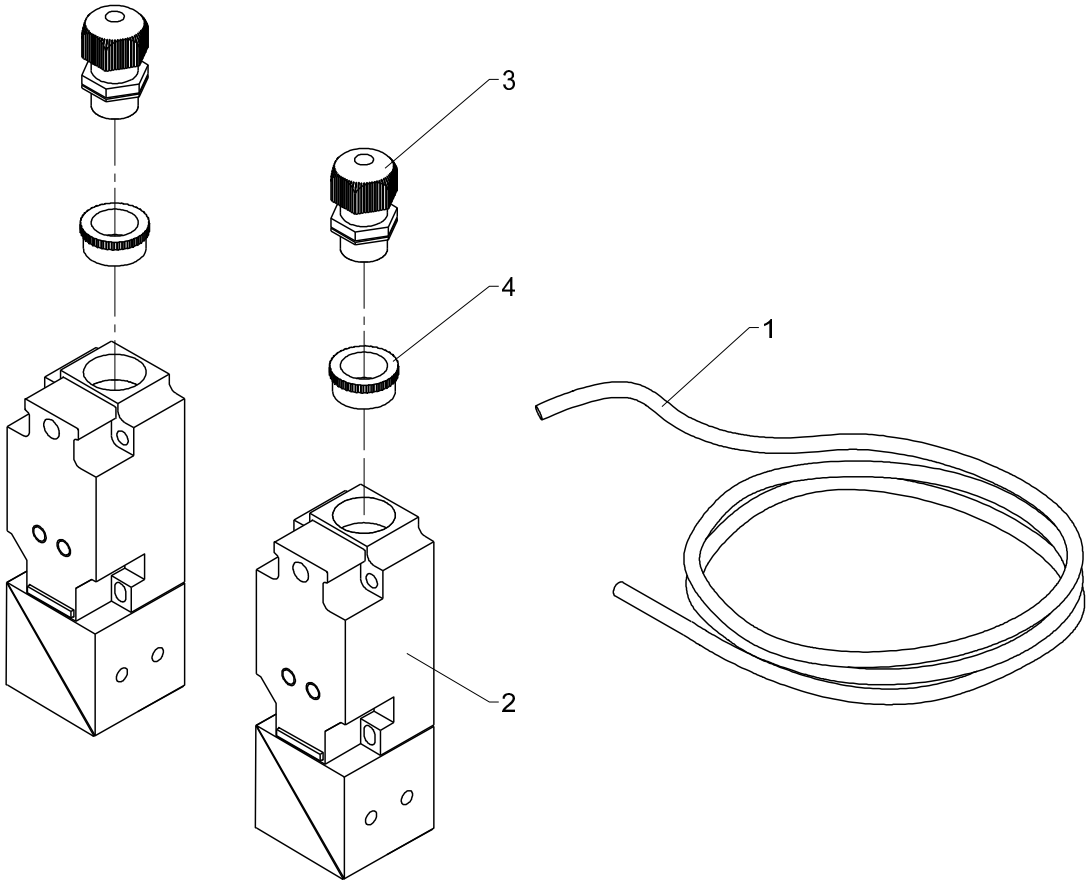
3
4
1
2

Obsolete

535 20 080

From loader 1070001
To loader

Created 16-07-2012
Modified

CYW

Pos	Qty.	Part no.	Description	Remarks
1	1	28262	Cable 4 x 0.75	8 m
2	2	27598	Proximity switch	
3	2	28246	Bushing	
4	2	27866	Socket	

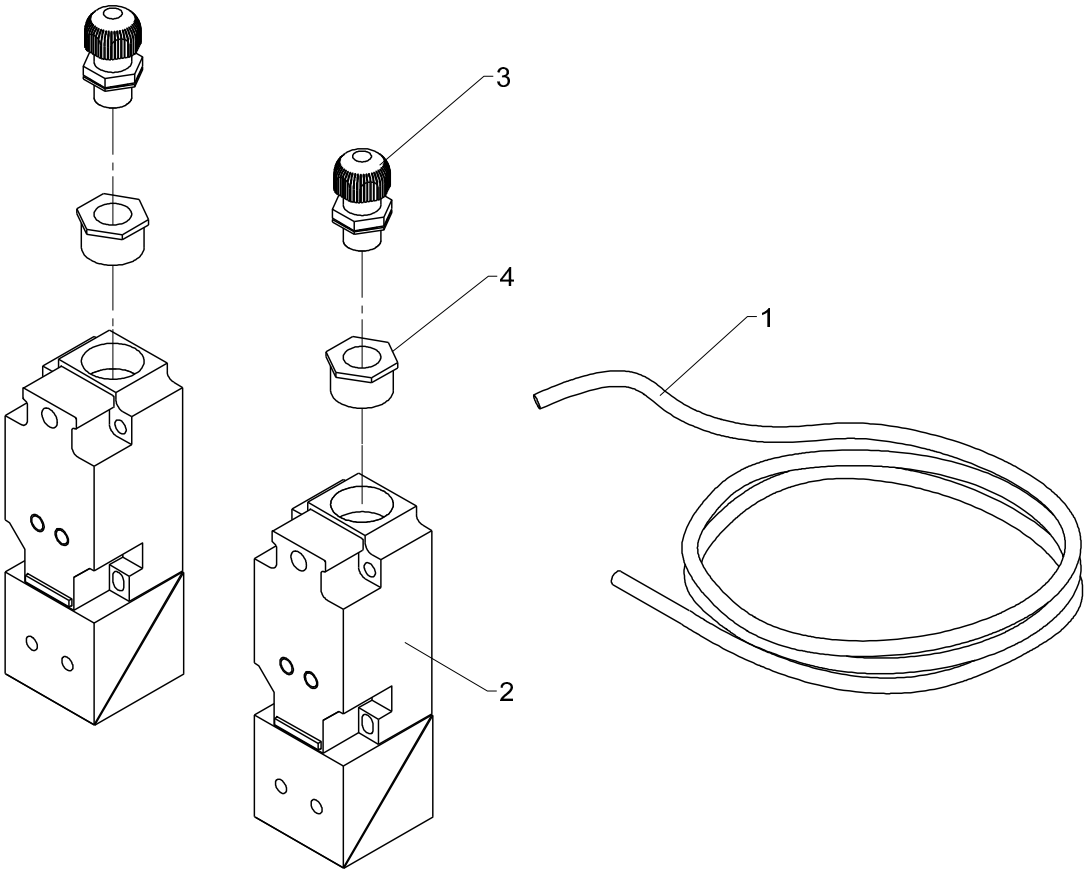
3
4
1
2

CYW

Pos	Qty.	Part no.	Description	Remarks
1	1	28262	Cable 4 x 0.75	8 m
2	2	27598	Proximity switch	
3	2	28459	Connection	
4	2	29200	Socket M12/M20	

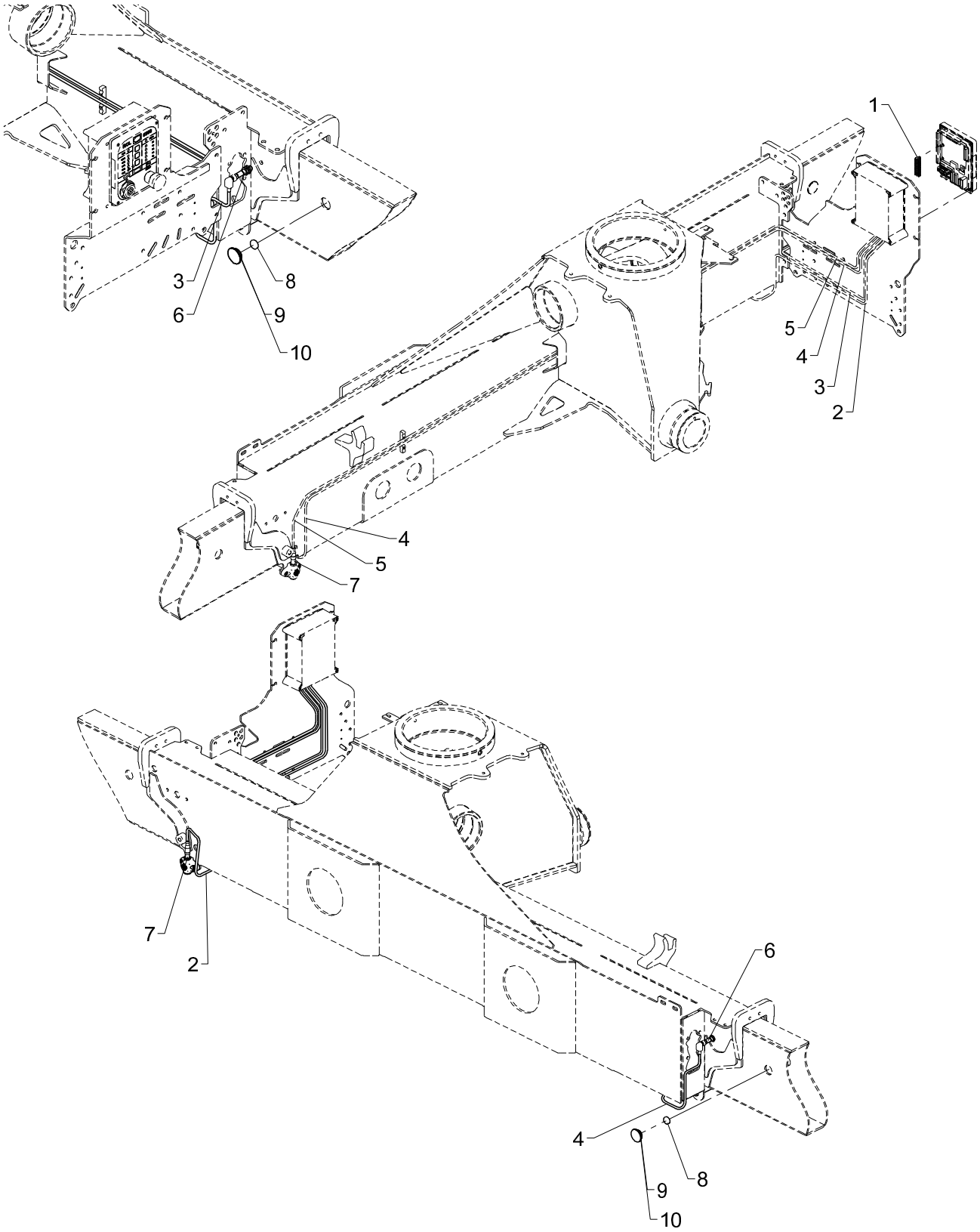
1
2
3
4
5
6
7
8
9
10
2
3
4
5
6
7
8
9
10

CYBEL, single extension

Pos	Qty.	Part no.	Description	Remarks
1	1	29322	Plug, 12-polar for RCL 53XX	
2	1	29223	Cable with socket, 2 m	1,4
3	1	28117	Cable with plug	
4	1	28077	Cable with plug	3,3
5	1	29224	Cable with socket, 5 m	2,7
6	2	29259	Magnet proximity switch M12	
7	2	29257	Proximity switch M12x44, 4mm	
8	2	29262	Solenoid Ø22x5	
9	2	64424	Slide block	2 mm
10	2	63681	Slide block	3 mm

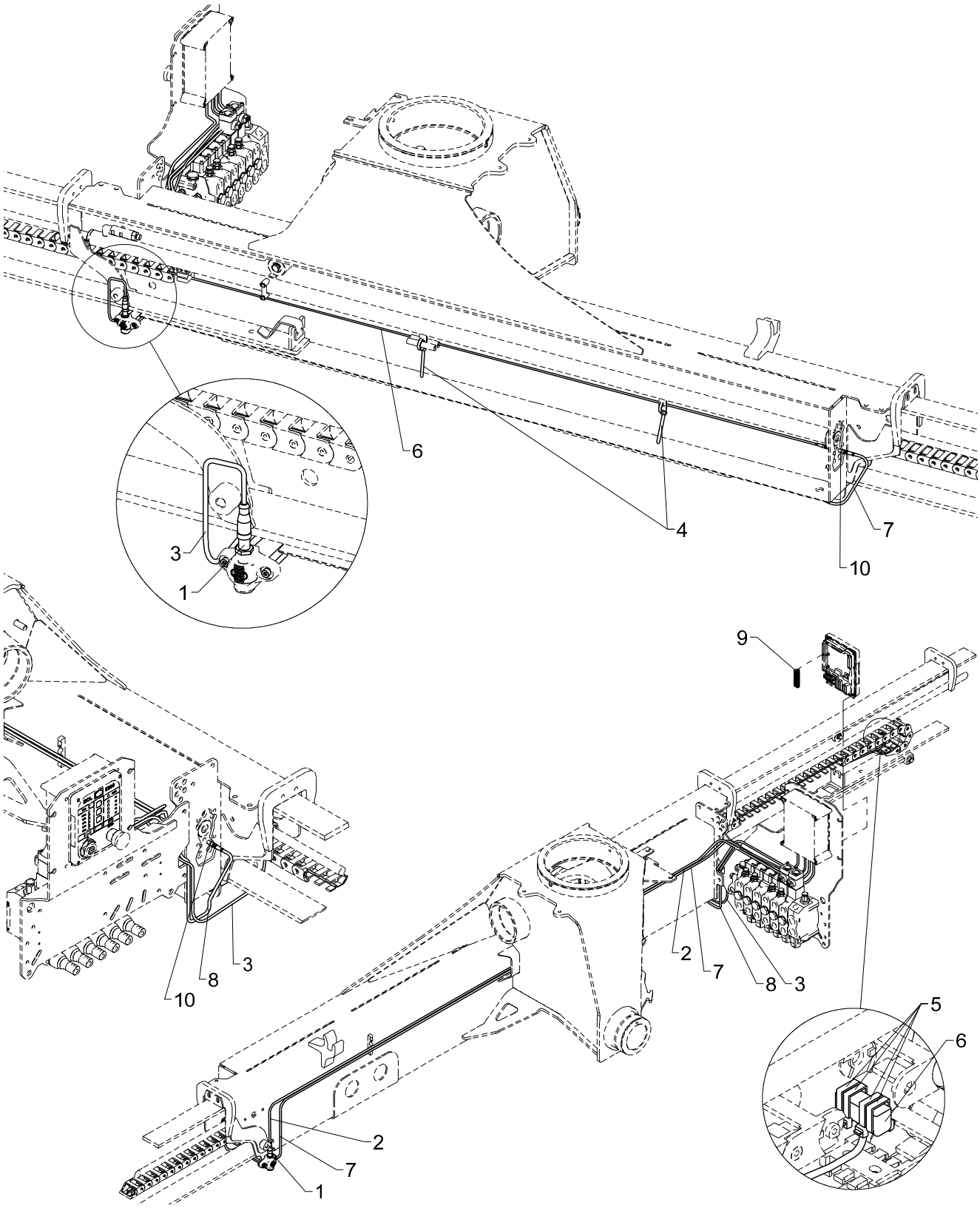
6
4
7
10
3
1
9
2
7
8
3
5
6
10
8
3
2
7
1

CYBEL double extension

Pos	Qty.	Part no.	Description	Remarks
1	2	29257	Proximity switch M12x44, 4mm	
2	1	29224	Cable with socket, 5 m	
3	1	29223	Cable with socket, 2 m	
4	4	27275	Cable tie, black, 7.6x385mm	
5	8	27274	Clip	
6	2	29253	Tilt sensor, nylon drag chain	
7	1	29264	Cable 5 m, M8 socket	
8	1	29265	Cable 2 m, M8 socket	
9	1	29322	Plug, 12-polar for RCL 53XX	
10	2	29443	Panel lead-in M8 - 3-polar	

18/129, 20/138, 22/153

Internal ref. 70 06 210

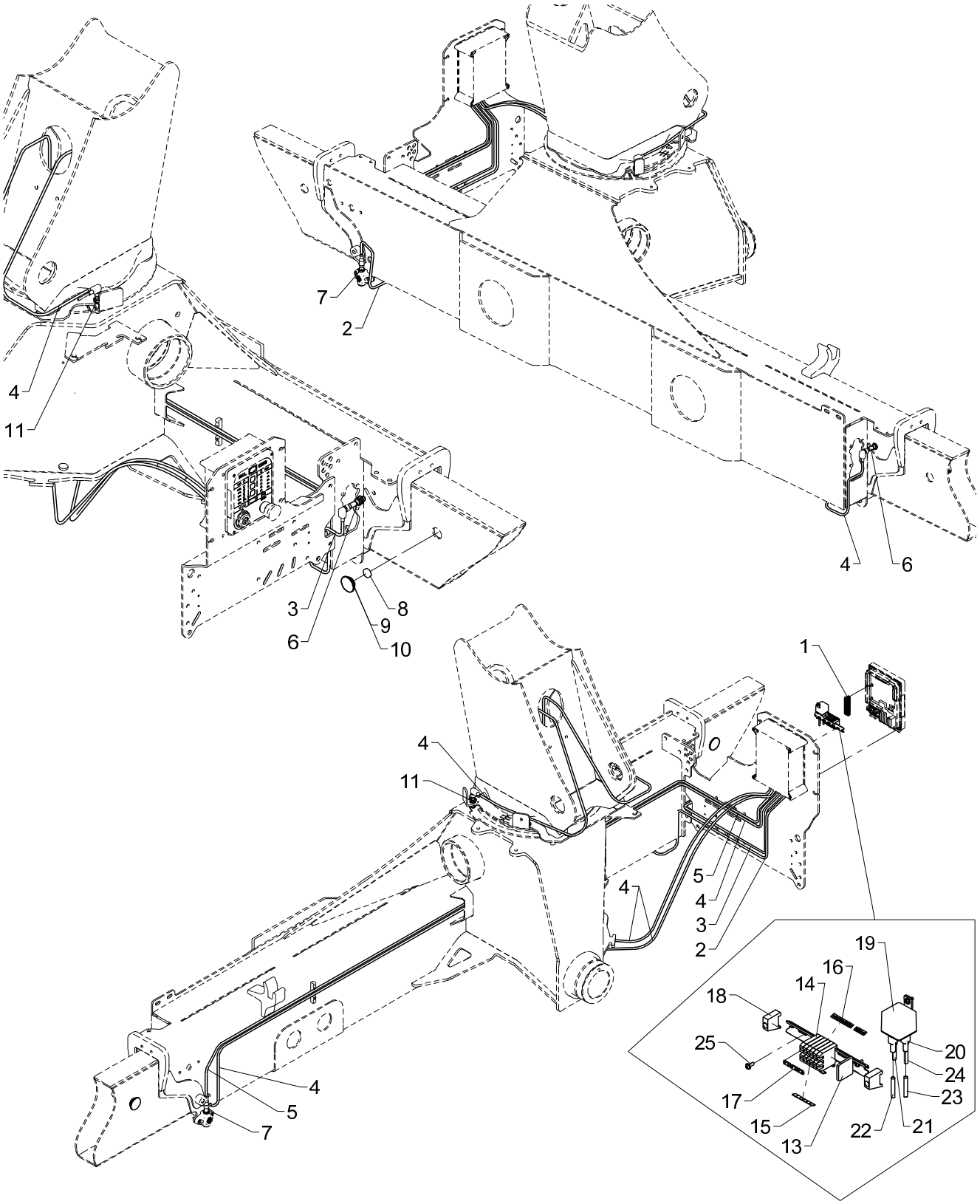

2CYBEL, single extension (2LMB)

Pos	Qty.	Part no.	Description	Remarks
1	1	29322	Plug, 12-polar for RCL 53XX	
2	1	29223	Cable with socket, 2 m	1,4
3	1	28117	Cable with plug	
4	3	28077	Cable with plug	2,7 m
5	1	29224	Cable with socket, 5 m	2,7
6	2	29259	Magnet proximity switch M12	
7	2	29257	Proximity switch M12x44, 4mm	
8	2	29262	Solenoid Ø22x5	
9	2	64424	Slide block	2 mm
10	2	63681	Slide block	3 mm
11	2	29447	Proximity switchM12 8mm PNP-NO	
12	1	28013	Guide rail	120 mm.
13	1	28011	End plate	
14	6	28010	Terminal	
15	1	28020	Labels nos. 11-20	
16	1	29427	Dekafix marker 31-40	
17	3	28208	Fish plate	
18	2	28012	End angle	
19	1	27342	Relay, 24V	
20	4	27429	Clamp	
21	1	27202	Cable	0,3 m
22	1	27203	Cable	0,3 m
23	1	27206	Wire, 1 x 1.5mm2	0,3 m
24	1	27209	Wire 1 x 1,5 mm2	0,3 m
25	3	30361	Screw, stainless	3,0 x 8

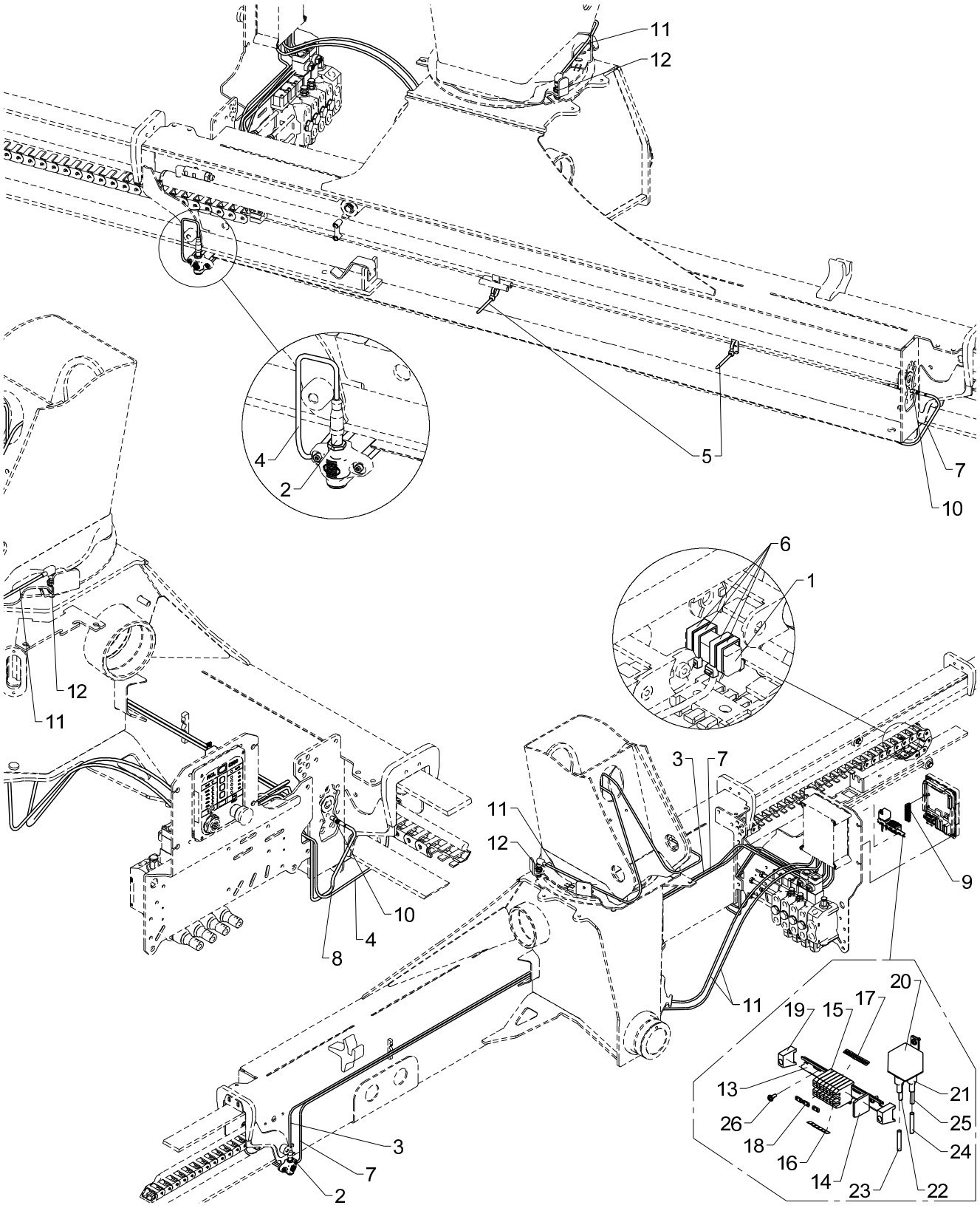
11
12
5
7
10
4
2
6
1
12
11
3
7
11
12
9
10
4
8
11
20
19
15
17
13
21
26
25
18
24
16
14
23
22
3
7
2

2CYBEL, double extension (2LMB)

Pos	Qty.	Part no.	Description	Remarks
1	2	29253	Tilt sensor, nylon drag chain	
2	2	29257	Proximity switch M12x44, 4mm	
3	1	29224	Cable with socket, 5 m	
4	1	29223	Cable with socket, 2 m	
5	4	27275	Cable tie, black, 7.6x385mm	
6	8	27274	Clip	
7	1	29264	Cable 5 m, M8 socket	
8	1	29265	Cable 2 m, M8 socket	
9	1	29322	Plug, 12-polar for RCL 53XX	
10	2	29443	Panel lead-in M8 - 3-polar	
11	2	28077	Cable with plug	
12	2	29447	Proximity switchM12 8mm PNP-NO	
13	1	28013	Guide rail	120 mm.
14	1	28011	End plate	
15	7	28010	Terminal	
16	1	28020	Labels nos. 11-20	
17	1	29427	Dekafix marker 31-40	
18	3	28208	Fish plate	
19	2	28012	End angle	
20	1	27342	Relay, 24V	
21	4	27429	Clamp	
22	1	27202	Cable	0,3 m
23	1	27203	Cable	0,3 m
24	1	27206	Wire, 1 x 1.5mm2	0,3 m
25	1	27209	Wire 1 x 1,5 mm2	0,3 m
26	3	30361	Screw, stainless	3,0 x 8

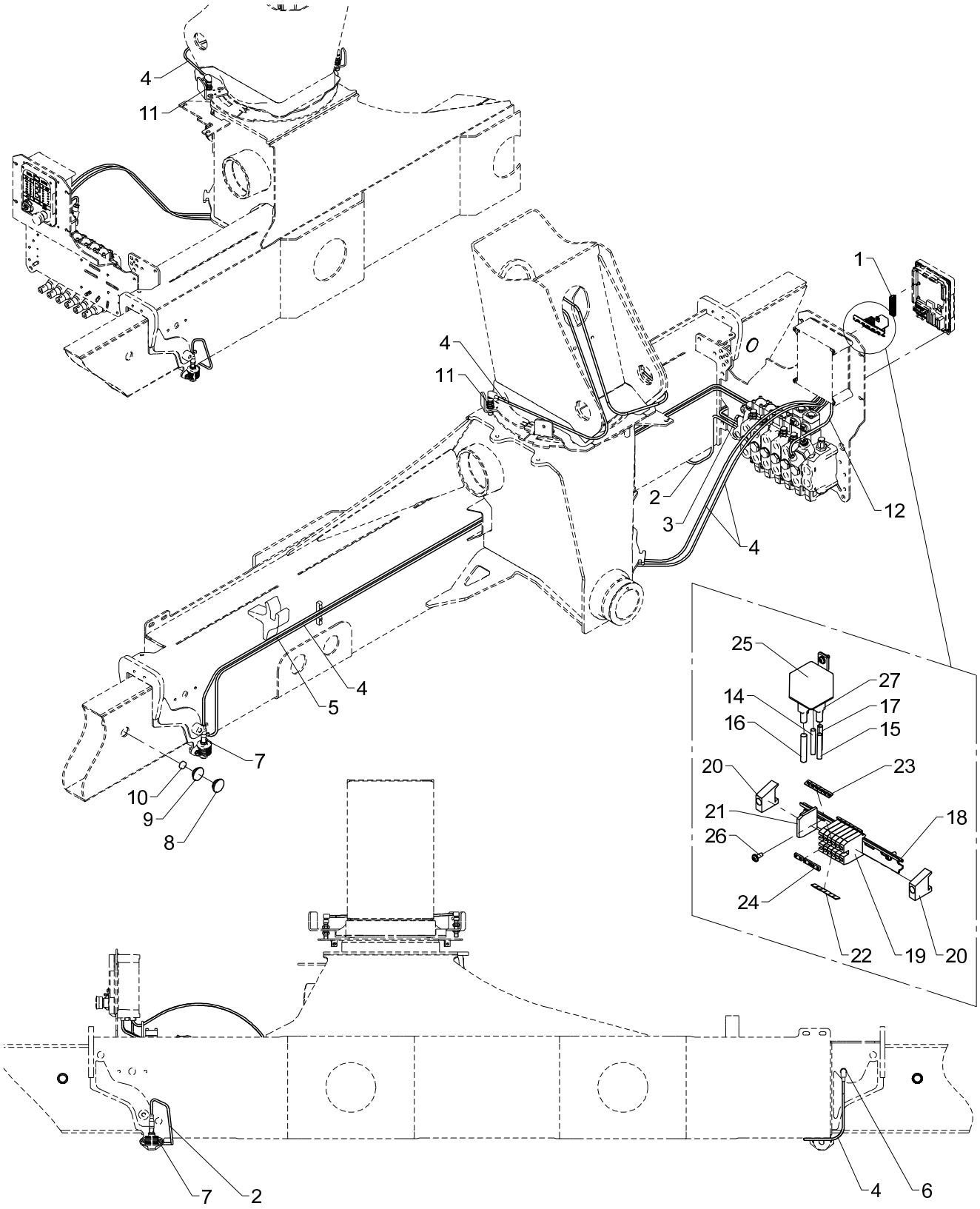
4
11
1
4
11
2
3
4
12
4
5
7
10
9
8
25
27
14
17
16
15
20
23
21
18
26
24
22
19
20
7
2
4
6

2CYBEL, single extension (manual)

Pos	Qty.	Part no.	Description	Remarks
1	1	29322	Plug, 12-polar for RCL 53XX	
2	1	29223	Cable with socket, 2 m	1,4
3	1	28117	Cable with plug	
4	3	28077	Cable with plug	
5	1	29224	Cable with socket, 5 m	2,7
6	2	29259	Magnet proximity switch M12	
7	2	29257	Proximity switch M12x44, 4mm	
8	2	63681	Slide block	3 mm
9	2	64424	Slide block	2 mm
10	2	29262	Solenoid Ø22x5	
11	2	29447	Proximity switchM12 8mm PNP-NO	
12	1	28294	Cable, spool sensor	
13	1	27202	Cable	0,3 m
14	1	27203	Cable	0,3 m
15	1	27209	Wire 1 x 1,5 mm2	0,3 m
16	1	27205	Wire, 1 x 1.5mm2	0,3 m
17	1	27206	Wire, 1 x 1.5mm2	0,3 m
18	1	28013	Guide rail	120 mm.
19	6	28010	Terminal	
20	2	28012	End angle	
21	1	28011	End plate	
22	1	29427	Dekafix marker 31-40	
23	1	28020	Labels nos. 11-20	
24	3	28208	Fish plate	
25	1	27342	Relay, 24V	
26	3	30361	Screw, stainless	3,0 x 8
27	4	27429	Clamp	

18/129, 20/138, 22/153

Internal ref. 70 06 220

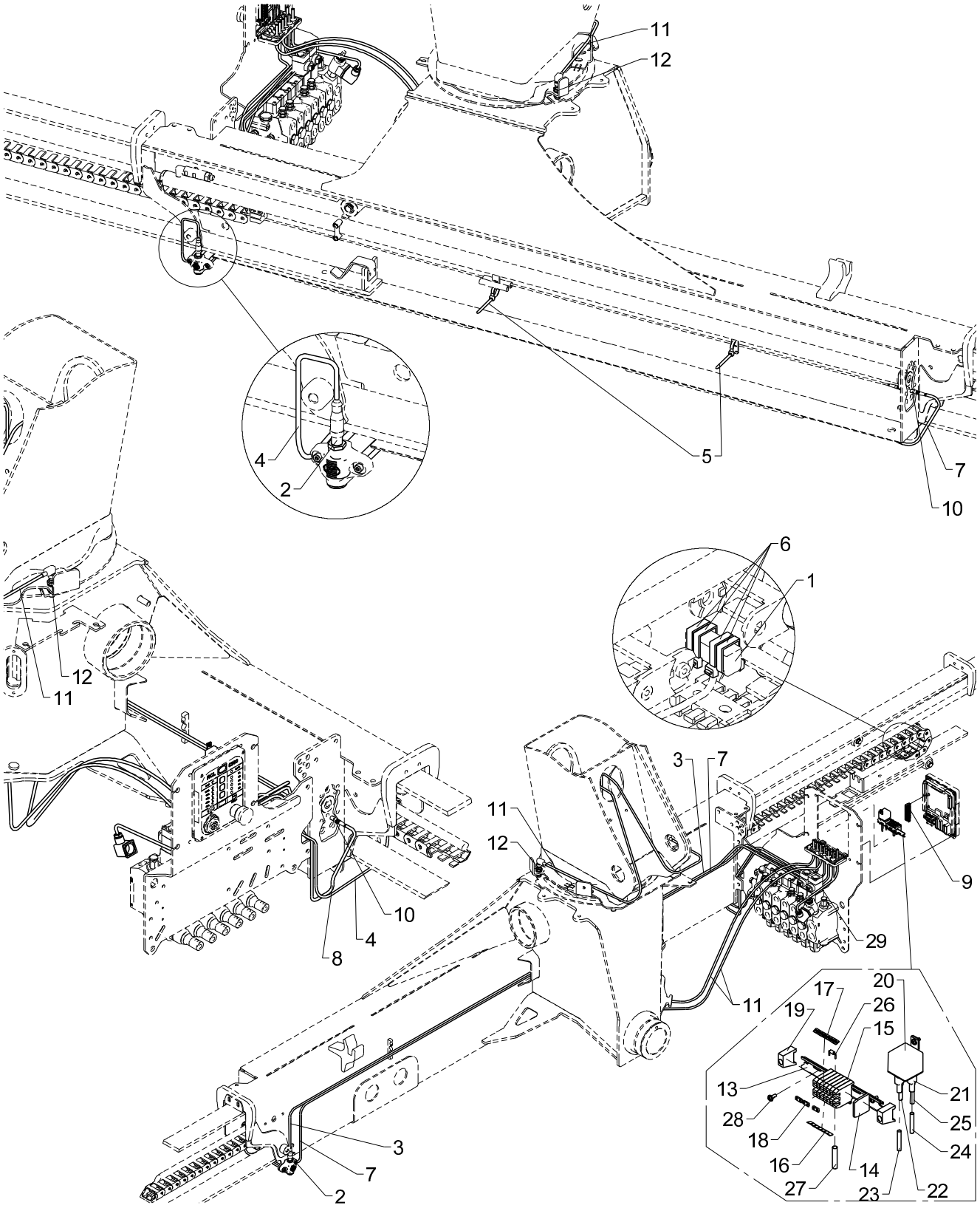

2CYBEL, double extension (man.)

Pos	Qty.	Part no.	Description	Remarks
1	2	29253	Tilt sensor, nylon drag chain	
2	2	29257	Proximity switch M12x44, 4mm	
3	1	29224	Cable with socket, 5 m	
4	1	29223	Cable with socket, 2 m	
5	4	27275	Cable tie, black, 7.6x385mm	
6	8	27274	Clip	
7	1	29264	Cable 5 m, M8 socket	
8	1	29265	Cable 2 m, M8 socket	
9	1	29322	Plug, 12-polar for RCL 53XX	
10	2	29443	Panel lead-in M8 - 3-polar	
11	2	28077	Cable with plug	
12	2	29447	Proximity switchM12 8mm PNP-NO	
13	1	28013	Guide rail	120 mm.
14	1	28011	End plate	
15	7	28010	Terminal	
16	1	28020	Labels nos. 11-20	
17	1	29427	Dekafix marker 31-40	
18	3	28208	Fish plate	
19	2	28012	End angle	
20	1	27342	Relay, 24V	
21	4	27429	Clamp	
22	1	27202	Cable	0,3 m
23	1	27203	Cable	0,3 m
24	1	27206	Wire, 1 x 1.5mm2	0,3 m
25	1	27209	Wire 1 x 1,5 mm2	0,3 m
26	1	27944	Diode	
27	1	27205	Wire, 1 x 1.5mm2	0,3 m
28	3	30361	Screw, stainless	3,0 x 8
29	1	28294	Cable, spool sensor	

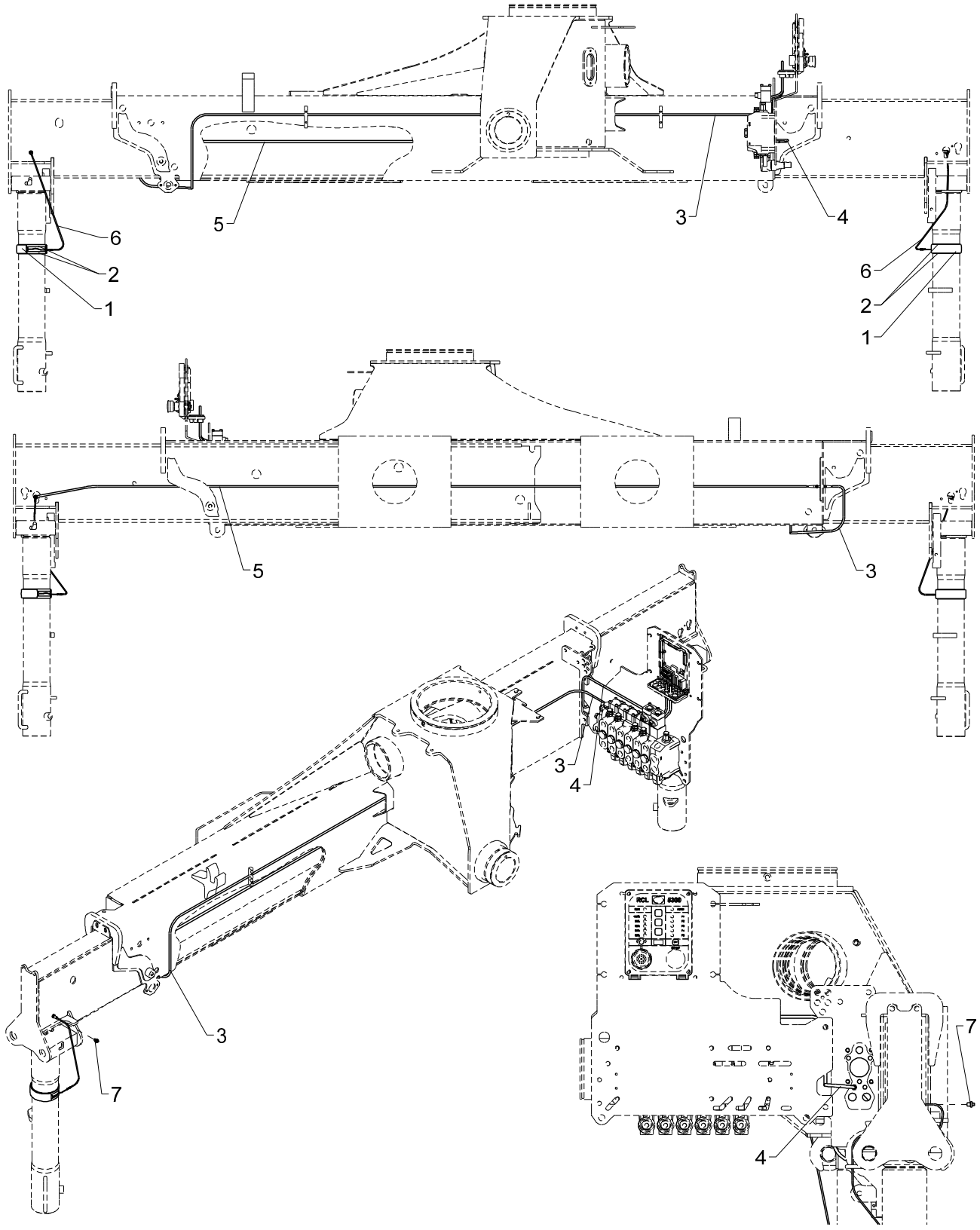
5
3
4
6
2
1
6
2
1
5
3
3
4
3
7
7
4

Alarm flash on stabilizer legs

535 20 140

From loader 1070001
To loader

Created 18-02-2013
Modified

Pos	Qty.	Part no.	Description	Remarks
1	2	29432	Alarm flash, yellow 24V, 24 cm	
2	4	27275	Cable tie, black, 7.6x385mm	
3	1	29483	Cable M8, 5 m, female, 3 polar	
4	1	29482	Cable M8, 2 m, female, 3 polar	
5	2	29436	Cable M8, socket and plug 6.3m	
6	2	29444	Cable M8 - 3-polar	
7	2	29437	Safety plug M8x1, socket	

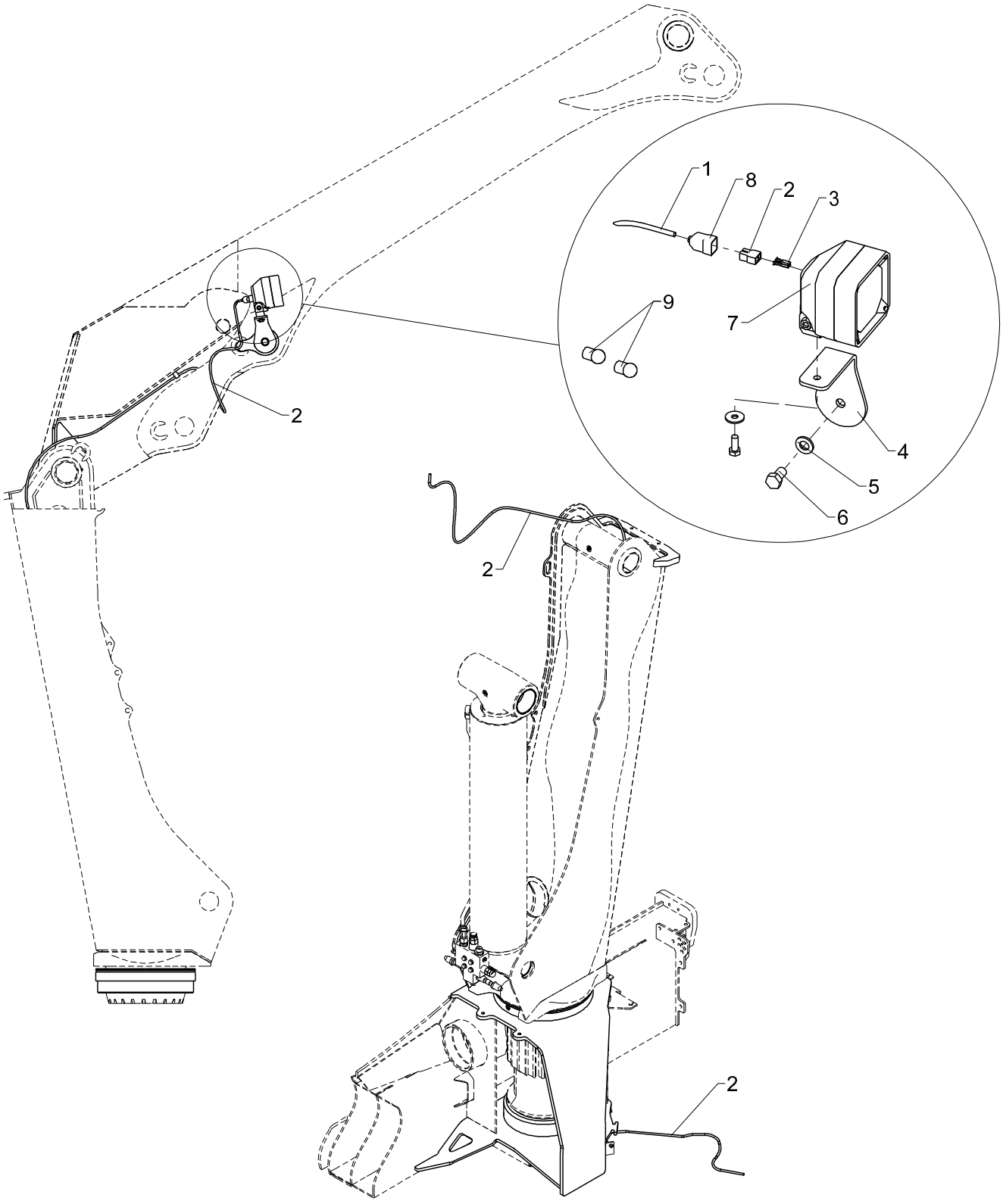
1
8
2
3
9
7
4
5
6
2
2
2

Obsolete

Spotlight, boom

535 20 150

From loader 1070001
To loader

Created 20-06-2012
Modified

Pos	Qty.	Part no.	Description	Remarks
1	1	27447	Multisocket - male	
2	1	27215	Wire 2 x 1.5	7,0 m
3	2	27422	Plug	
4	1	6340219	Fittings	
5	1	32338	Washer	12 mm
6	1	30175	Set screw	M12 x 20
7	1	27138	Spotlight	
8	1	29182	Cable lead-in	
9	2	27828	Bulb 24V, 70W	

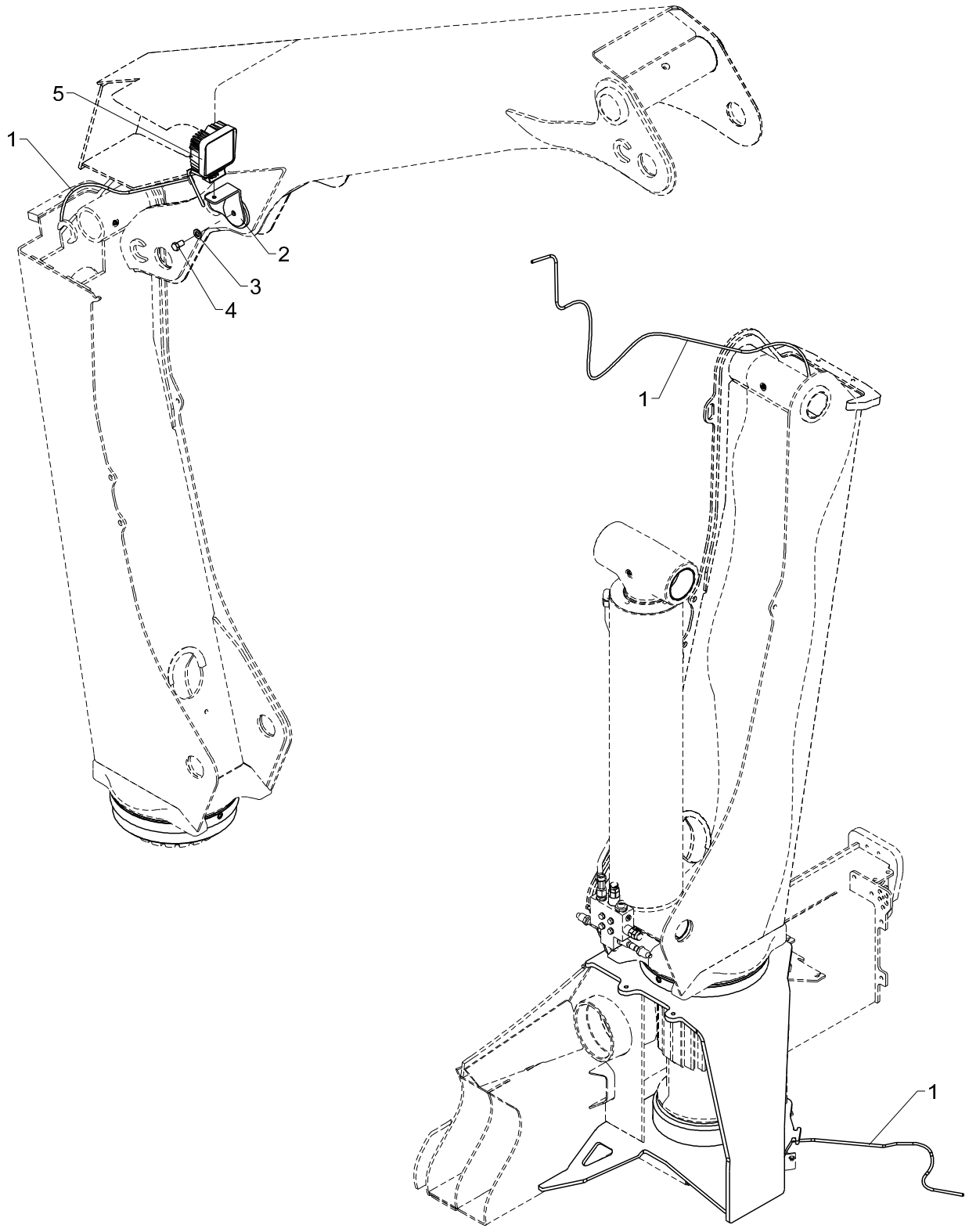
5
1
2
3
4
1
1

Spotlight, boom

Pos	Qty.	Part no.	Description	Remarks
1	1	29462	Cable, LED spotlight, 9.0m	
2	1	6340219	Fittings	
3	1	32338	Washer	12 mm
4	1	30175	Set screw	M12 x 20
5	1	29400	Spotlight LED 27 W	

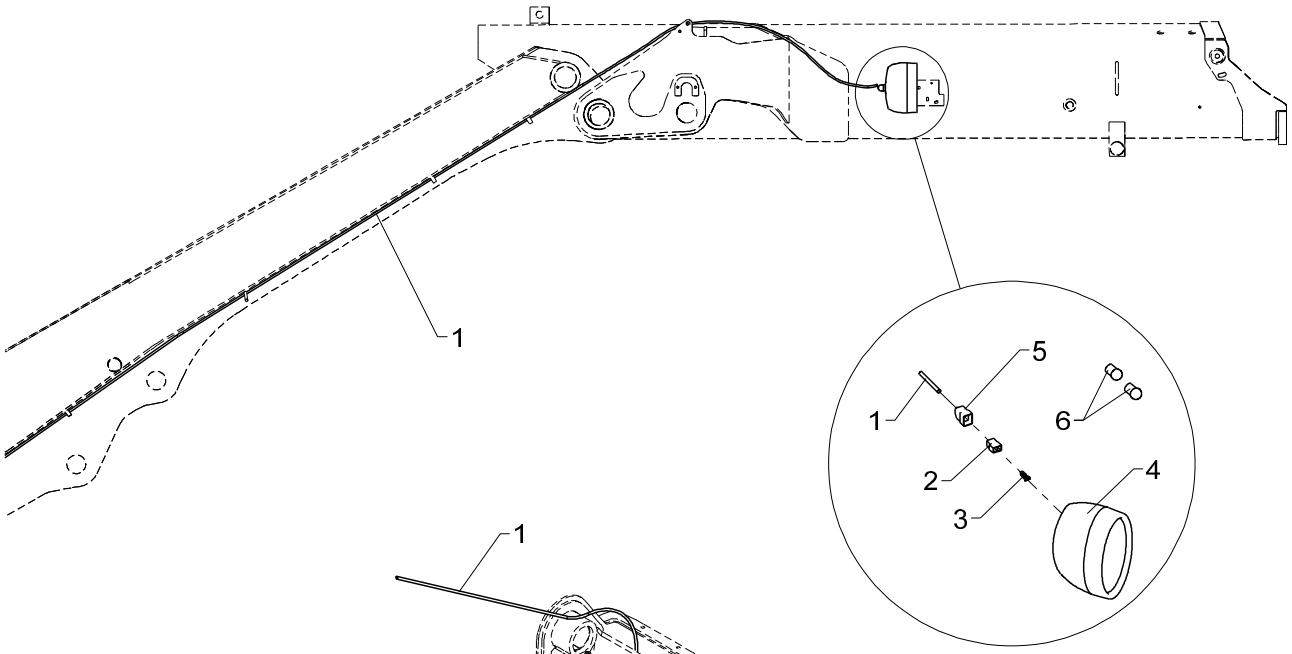
1
5
1
6
2
4
3

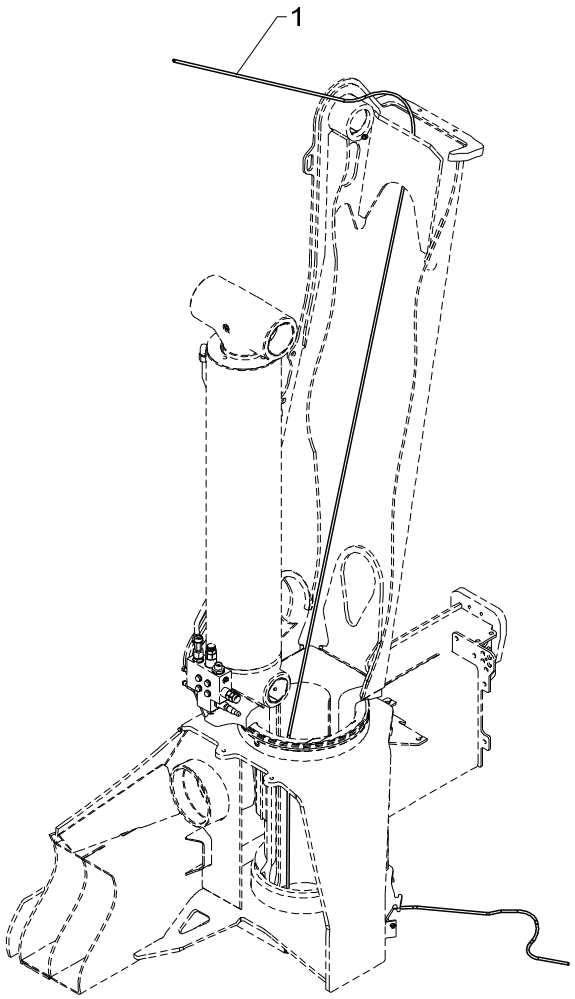
1

Obsolete

Spotlight, jib

535 20 160

From loader 1070001
To loader

Created 20-06-2012
Modified

Pos	Qty.	Part no.	Description	Remarks
1	1	27215	Wire 2 x 1.5	9,0 m
2	1	27447	Multisocket - male	
3	2	27422	Plug	
4	1	28308	Working lamp, Twinpower 2x70W	
5	1	29182	Cable lead-in	
6	2	27835	Bulb 24V, 5W	

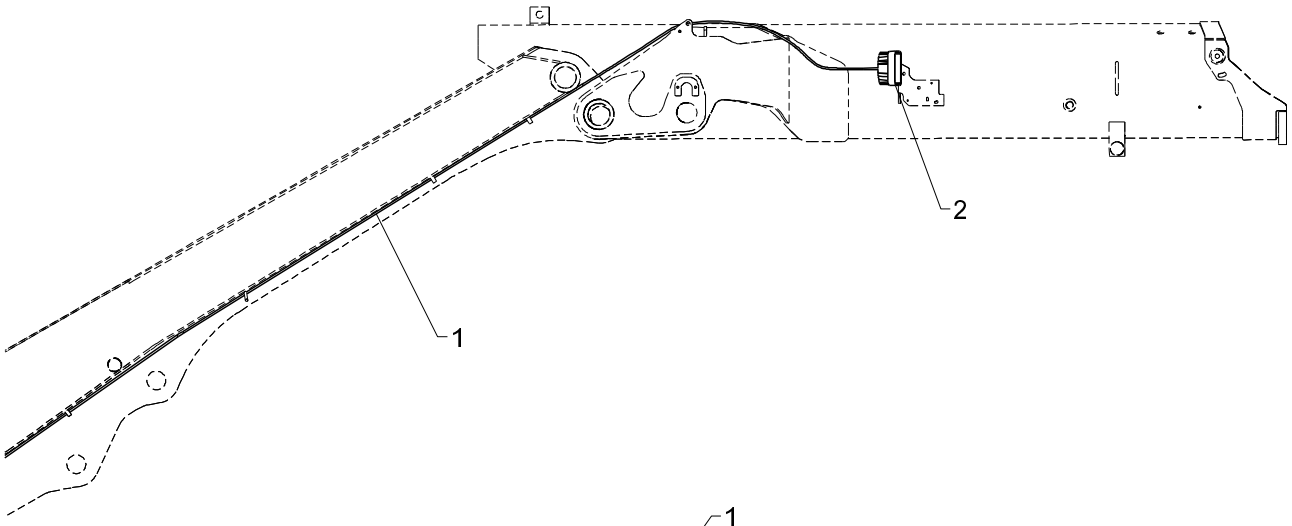
1
2

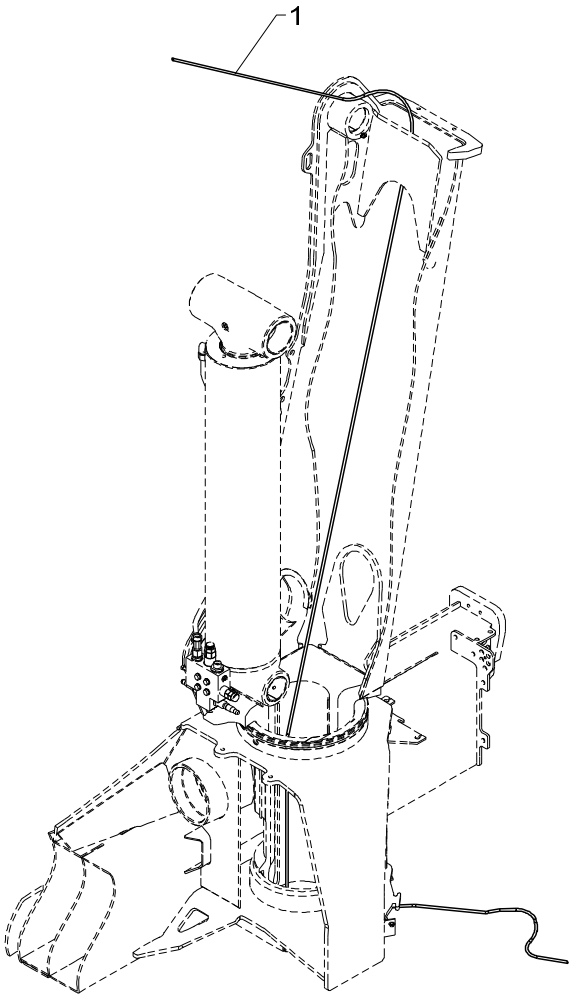
1

Spotlight, jib

Pos	Qty.	Part no.	Description	Remarks
1	1	29462	Cable, LED spotlight, 9.0m	
2	1	29400	Spotlight LED 27 W	

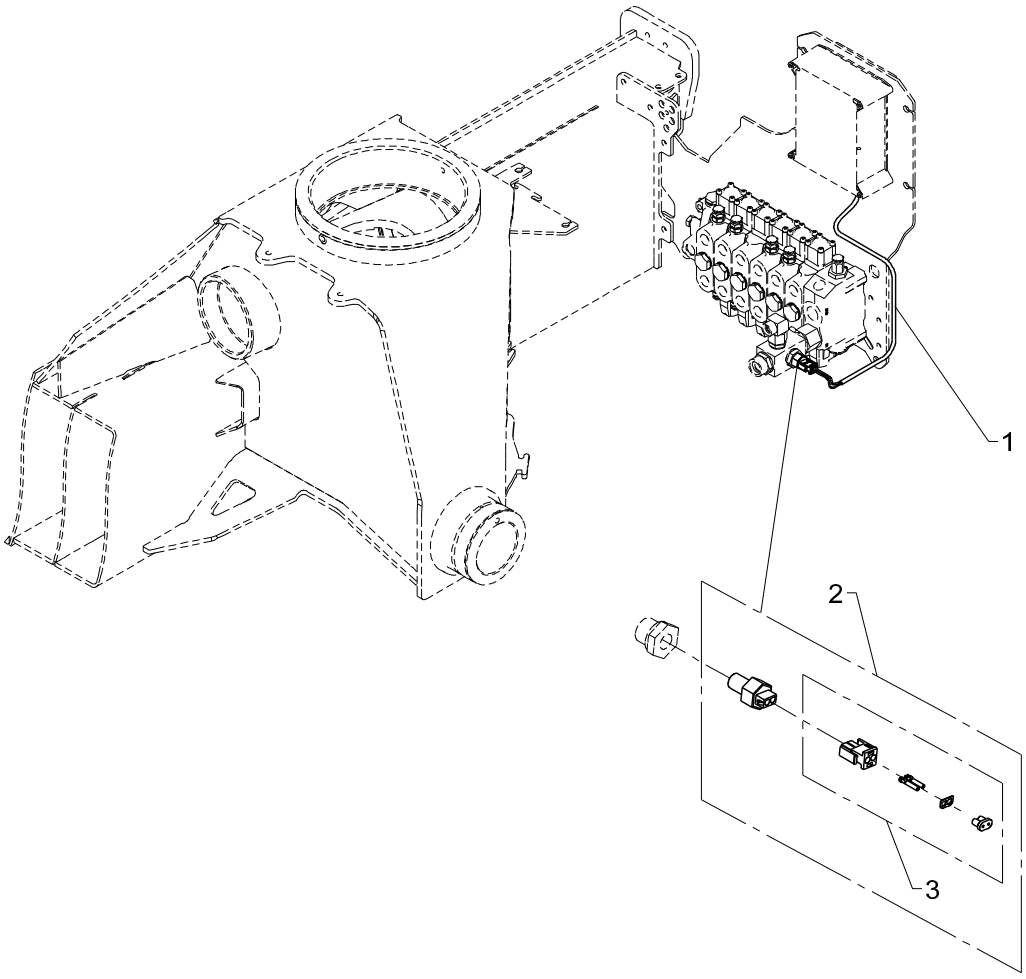
1
2
3

Temperature monitoring without oil cooler

From loader 1070001
To loader
Created 20-02-2013
Modified

Pos	Qty.	Part no.	Description	Remarks
1	1	28249	Cable 2 x 0.75	2 m
2	1	50290	Temperature sensor, oil cooler	
3	1	50293	Plug for oil cooler	

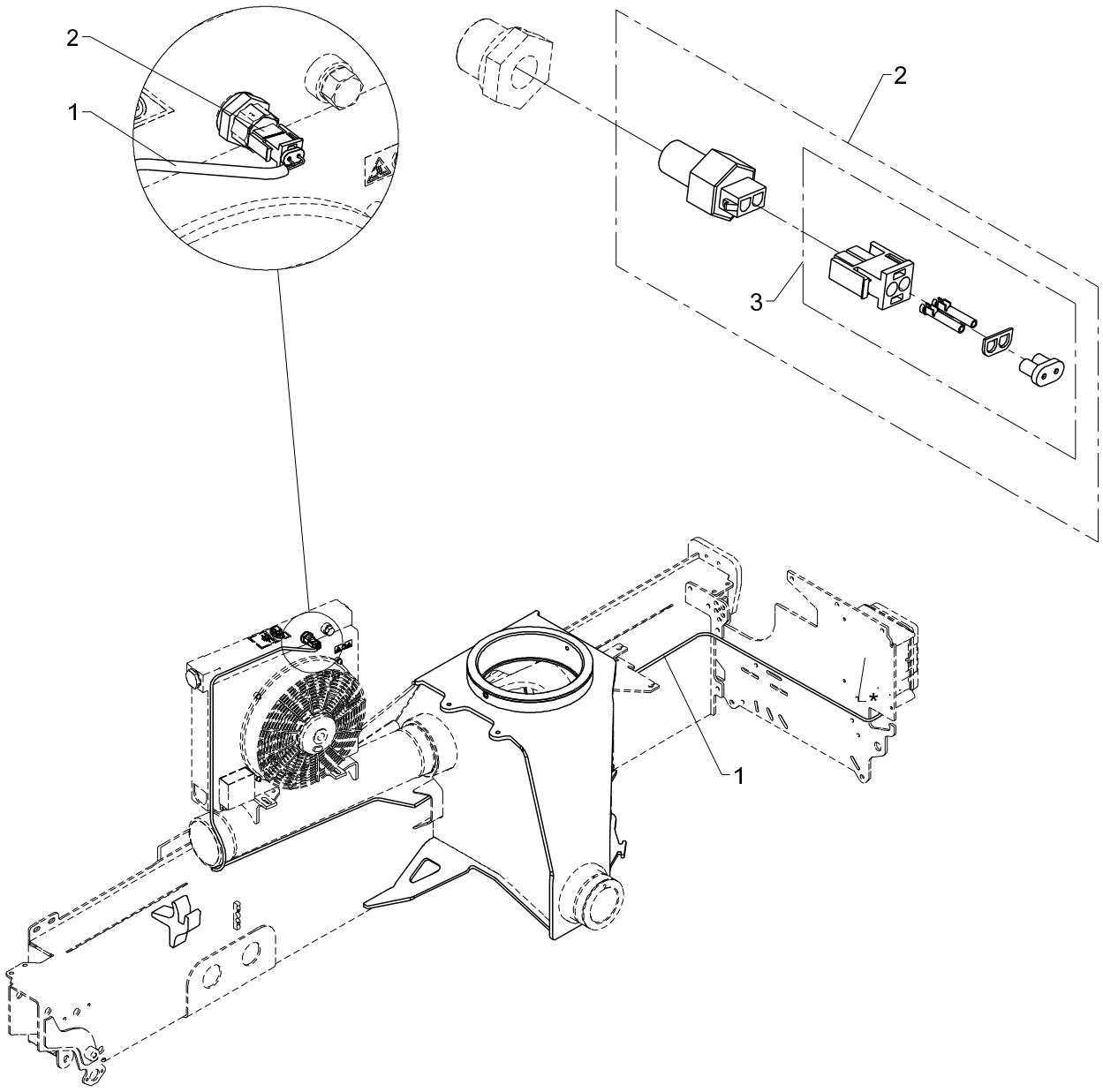
2
1
2
3
1

Temperature monitoring for oil cooler

From loader 1070001
To loader

Created 16-03-2010
Modified

Pos	Qty.	Part no.	Description	Remarks
1	1	28249	Cable 2 x 0.75	3 m
2	1	50290	Temperature sensor, oil cooler	
3	1	50293	Plug for oil cooler	

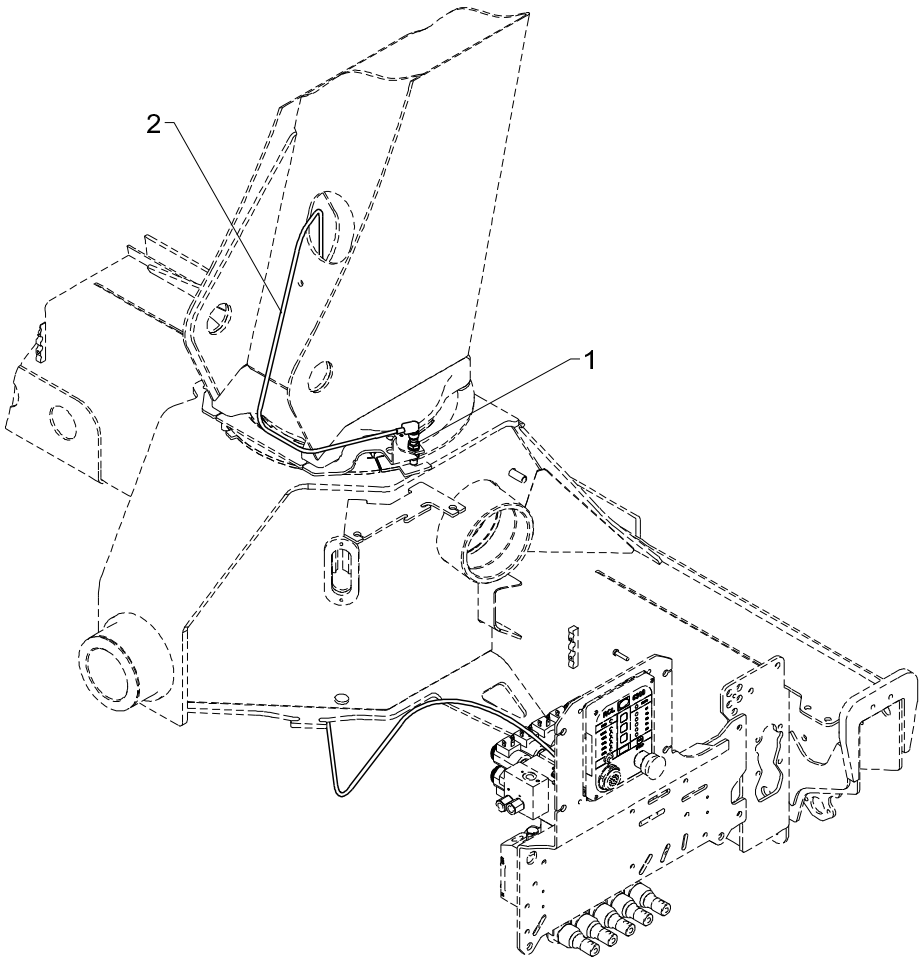
2
1

CBS - Calibrate Bypass Sensor

Pos	Qty.	Part no.	Description	Remarks
1	1	29447	Proximity switchM12 8mm PNP-NO	
2	1	28077	Cable with plug	2,7 m

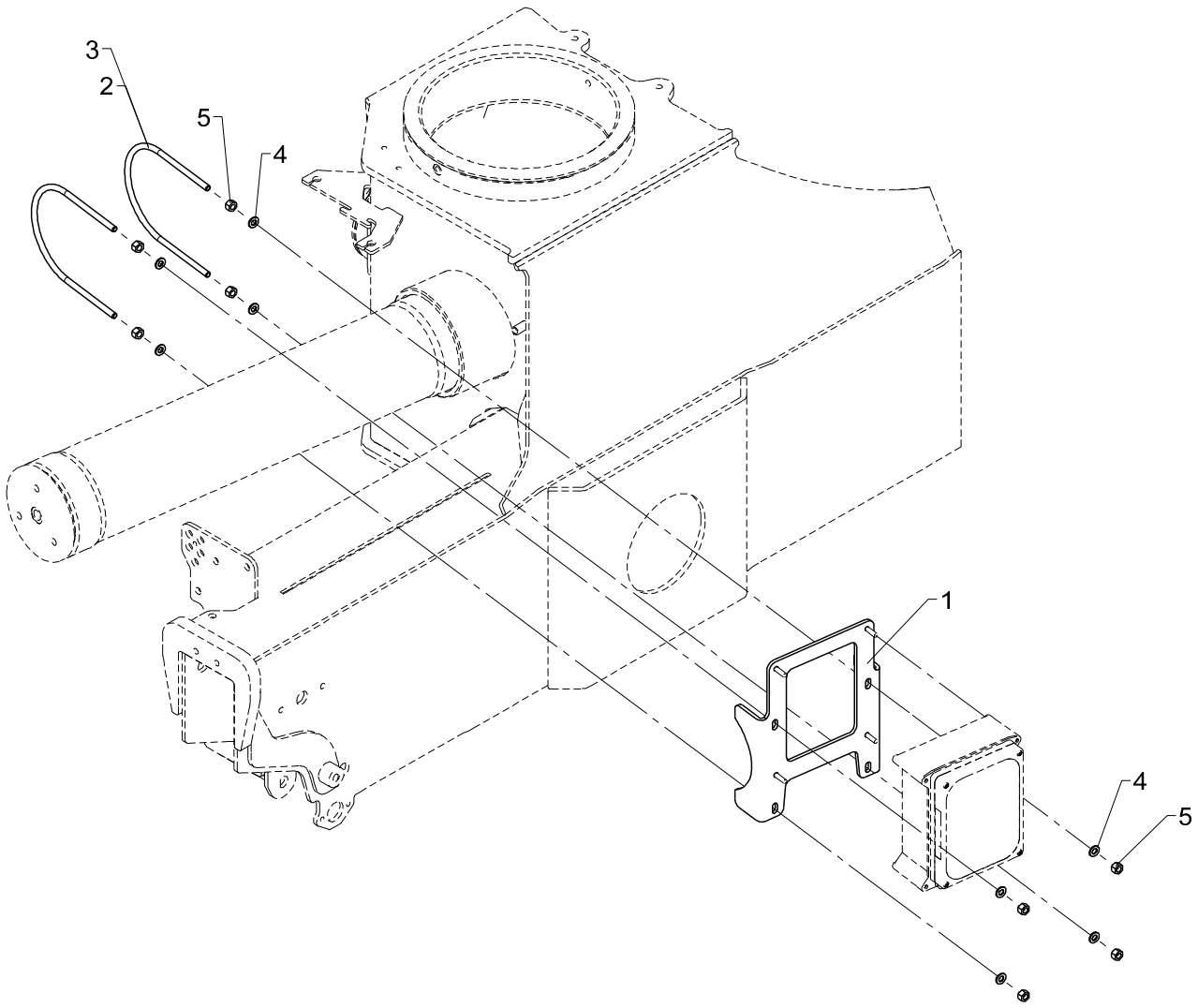
3
2
5
4
1
4
5

Mounting fittings for junction box

Created 20-06-2011
Modified 05-08-2011

Pos	Qty.	Part no.	Description	Remarks
1	1	6353267	Bracket for connection box	
2	2	6344458	Clamp	1910T
3	2	6340458	Clamp	1410T
4	8	31147	Face washer, 8 mm	
5	8	30886	Lock nut, stainless	M8

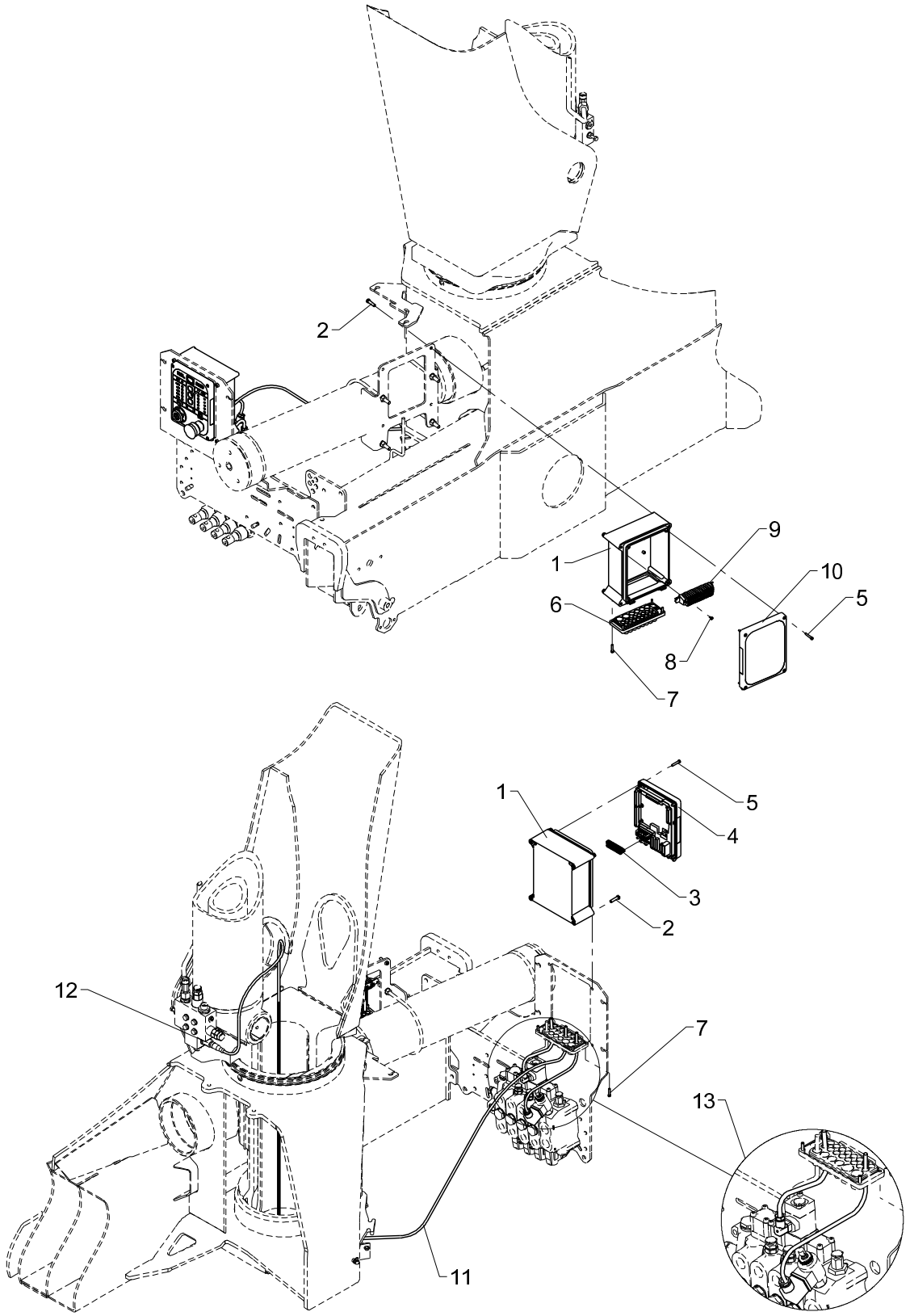
2
1
9
10
5
6
8
7
1
5
4
3
2
12
7
13
11

Obsolete

Basic electronic parts, crane without RC

535 20 510

From loader 1070001
To loader

Created 25-02-2013
Modified 17-05-2013

Pos	Qty.	Part no.	Description	Remarks
1	2	29304	Bottom f. RCL-box incl. hinge	
2	8	30340	Screw, stainless	6,0 x 25
3	1	29321	Plug, 10-polar for RCL 53XX	
4	1	29301	Front complete, RCL 5300	
5	8	30347	Screw, stainless	4,0 x 25
6	1	29307	Cable lead-in	
7	8	30346	Screw, stainless	4,0 x 20
8	2	30361	Screw, stainless	3,0 x 8
9	1	7006302	Terminal block, Box1	
10	1	29347	RCL 5300 indicator panel	
11	1	29224	Cable with socket, 5 m	
12	1	28850	Pressure transducer	
13	1	28719	Wiring, standard	

18/129, 20/138, 22/153

70 07 940
70 07 930
Internal ref. 70 06 400

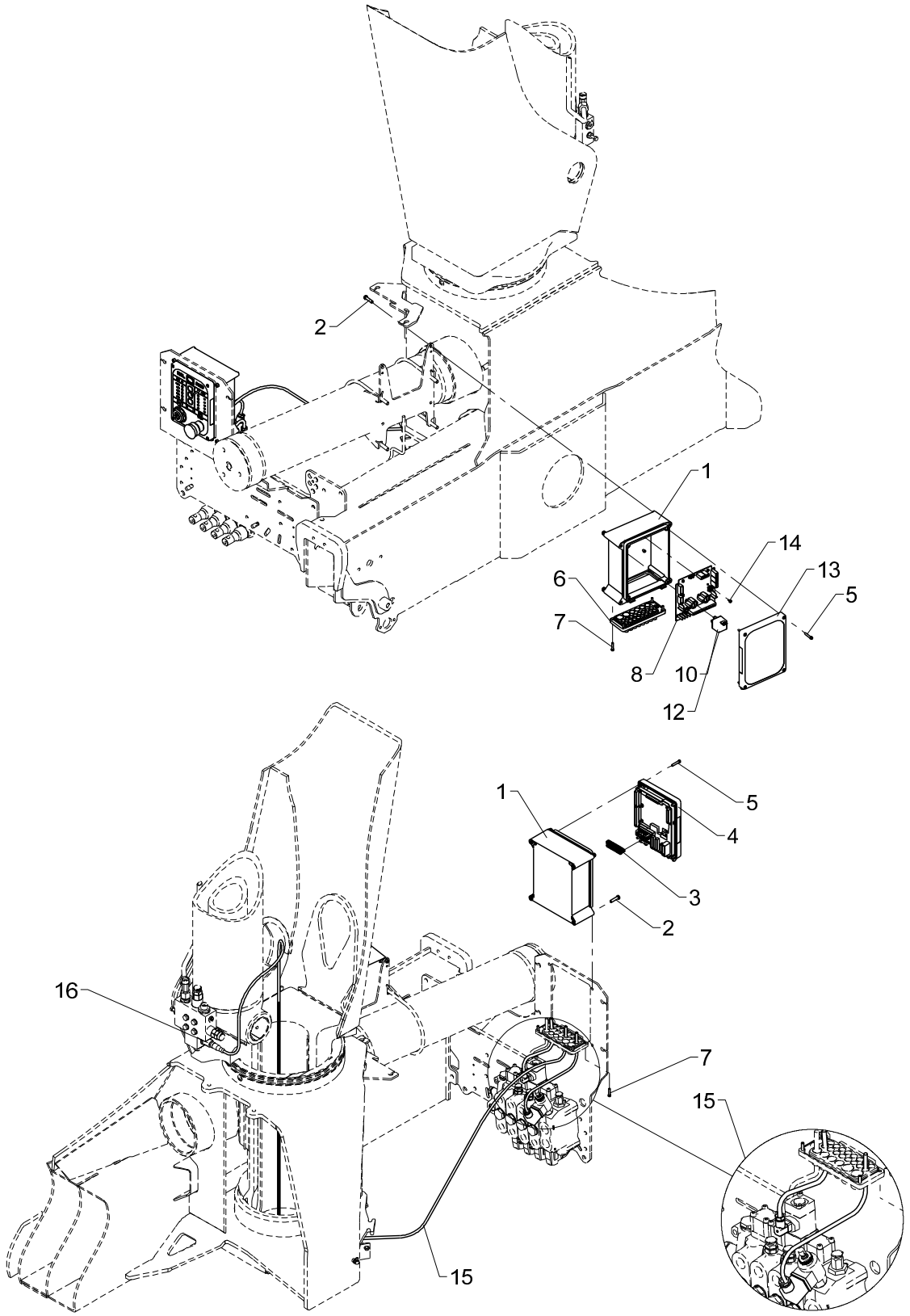

Basic electronic parts, crane without RC

Pos	Qty.	Part no.	Description	Remarks
		7006400	Basic parts,crane withoutRC+CE	
		7007930	Relay, 12 V	
		7007940	Relay, 24 V	
1	2	29304	Bottom f. RCL-box incl. hinge	
2	8	30340	Screw, stainless	6,0 x 25
3	1	29321	Plug, 10-polar for RCL 53XX	
4	1	29301	Front complete, RCL 5300	
5	8	30347	Screw, stainless	4,0 x 25
6	1	29307	Cable lead-in	
7	8	30346	Screw, stainless	4,0 x 20
8	1	29473	EJB5380	
9	1	7007930	Relay, 12 V	
10	1	27340	Relay, 12 V	
11	1	7007940	Relay, 24 V	
12	1	27342	Relay, 24V	
13	1	29347	RCL 5300 indicator panel	
14	6	30361	Screw, stainless	3,0 x 8
15	1	29224	Cable with socket, 5 m	
16	1	28850	Pressure transducer	
17	1	28719	Wiring, standard	

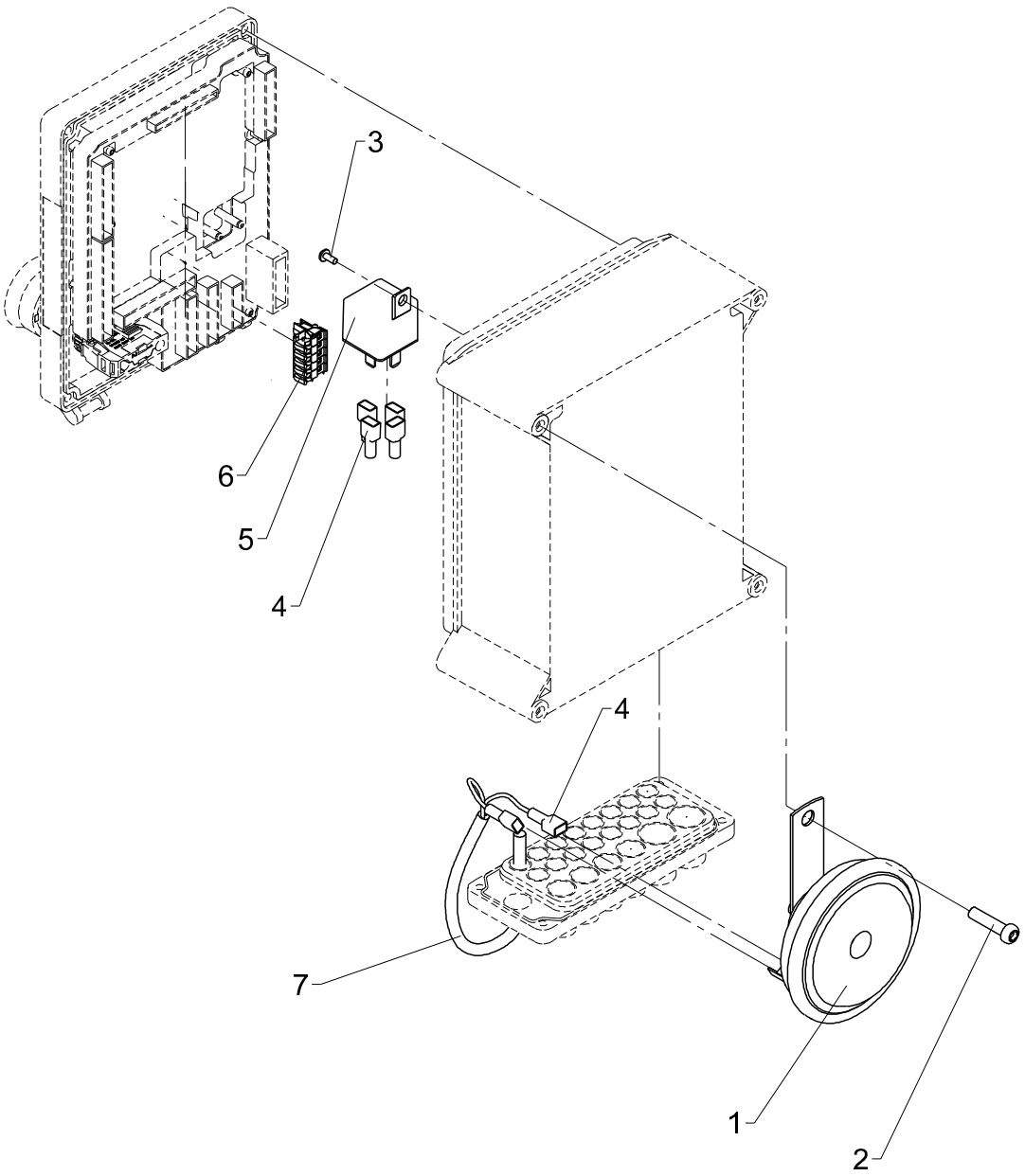
3
6
5
4
4
7
1
2

Horn, no RC

Pos	Qty.	Part no.	Description	Remarks
1	1	28971	Horn, 24 V, 2.5 Amp.	
2	1	30340	Screw, stainless	6,0 x 25
3	1	30361	Screw, stainless	3,0 x 8
4	6	27429	Clamp	
5	1	27342	Relay, 24V	
6	1	29317	Plug, 5-polar for RCL 53XX	
7	1	28249	Cable 2 x 0.75	0,8 m

18/129, 20/138, 22/153

70 04 340
70 04 220
Internal ref. 70 05 310

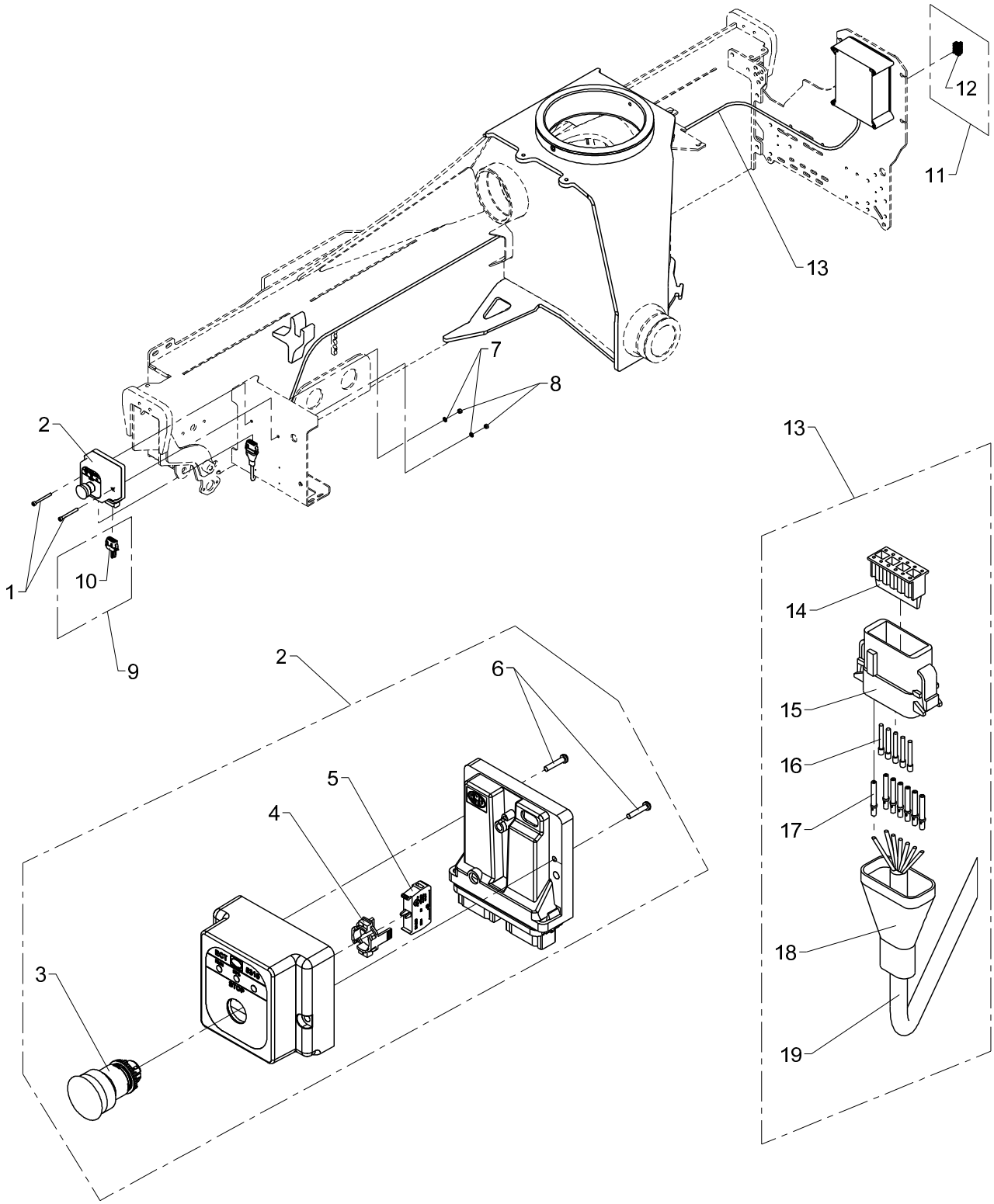

Pos	Qty.	Part no.	Description	Remarks
		7005310	ECT 5310, opposite valve block	
		7004220	CAN termination ECT5310	
		7004340	Plug, 7-polar for RCL	
1	2	30441	Screw	MC6 x 60
2	1	29335	ECT5310 external stop button	
3	1	29196	Stop button	
4	1	29198	Attachment, stop button	
5	1	29197	Switch element, stop button	
6	2	30346	Screw, stainless	4,0 x 20
7	2	32302	Face washer, stainless	6 mm
8	2	30884	Lock nut, stainless	M6
9	1	7004220	CAN termination ECT5310	
10	1	29342	CAN termination ECT	
11	1	7004340	Plug, 7-polar for RCL	
12	1	29318	Plug, 7-polar for RCL 53XX	
13	1	7003030	3.5 m CAN+STOP cable ECT5310	
14	1	29328	Lock for plug for ECT5310	
15	1	29326	Plug, type A for ECT5310	
16	5	29339	Sealing for plug for ECT5310	
17	7	29329	Pin for plug for ECT5310	
18	1	28566	Insulation, black	10 cm
19	1	28263	CAN BUS cable	3,5 m

18/129, 20/138, 22/153

63 42 120
Internal ref. 63 40 130

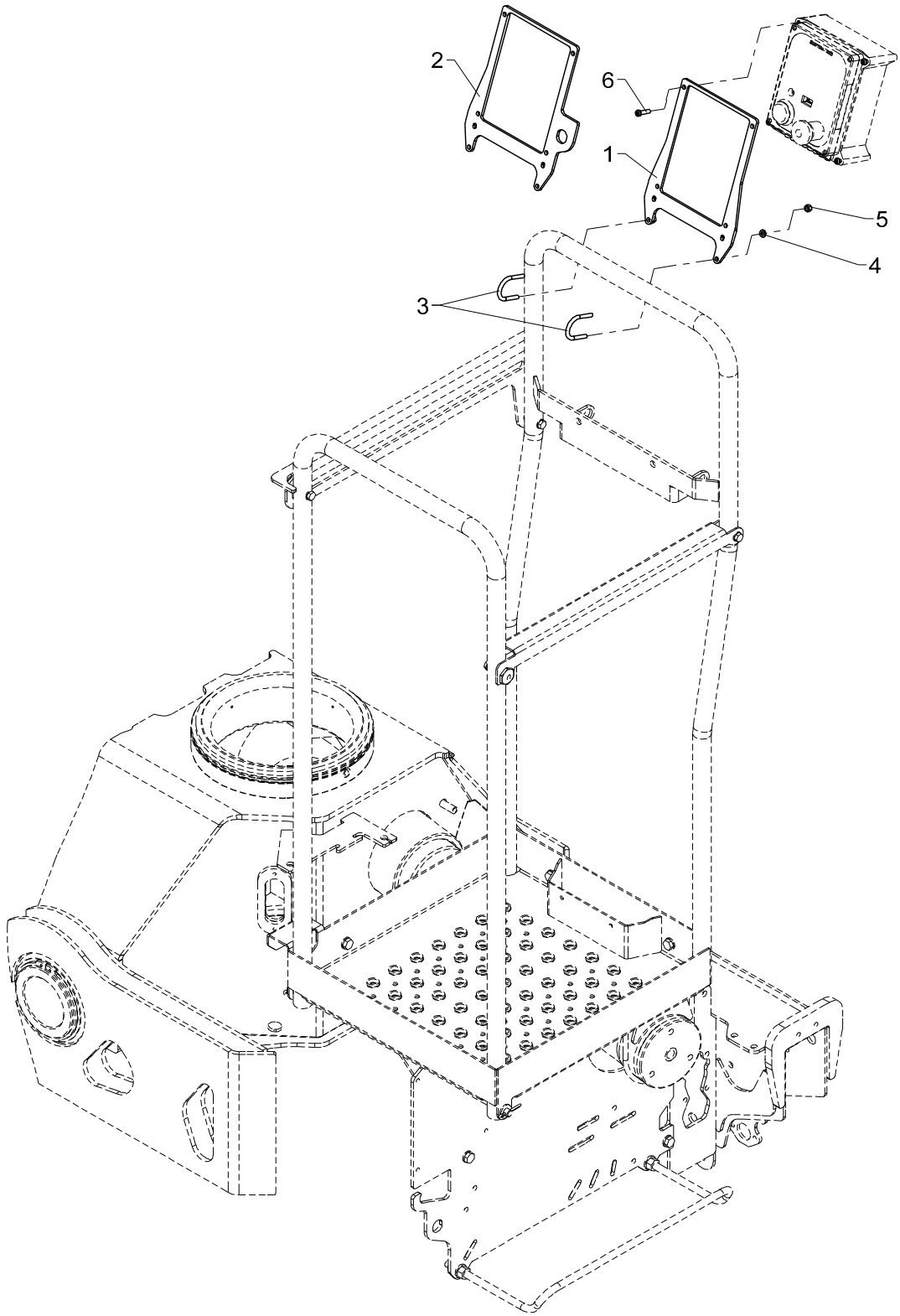

Mounting fittings for ECT 5320 (HS std.)

Pos	Qty.	Part no.	Description	Remarks
		6340130	Fittings for ECT 5320	
		6342120	Fittings ECT5320(HSL-Q,dual c)	
1	1	6340479	Bracket for ECT 5320	(HS, std.)
2	1	6340579	Mounting fittings (ECT 5320)	(HSL-Q, dobb.styring)
3	2	6340903	Clamp	
4	4	32302	Face washer, stainless	6 mm
5	4	30884	Lock nut, stainless	M6
6	4	30340	Screw, stainless	6,0 x 25

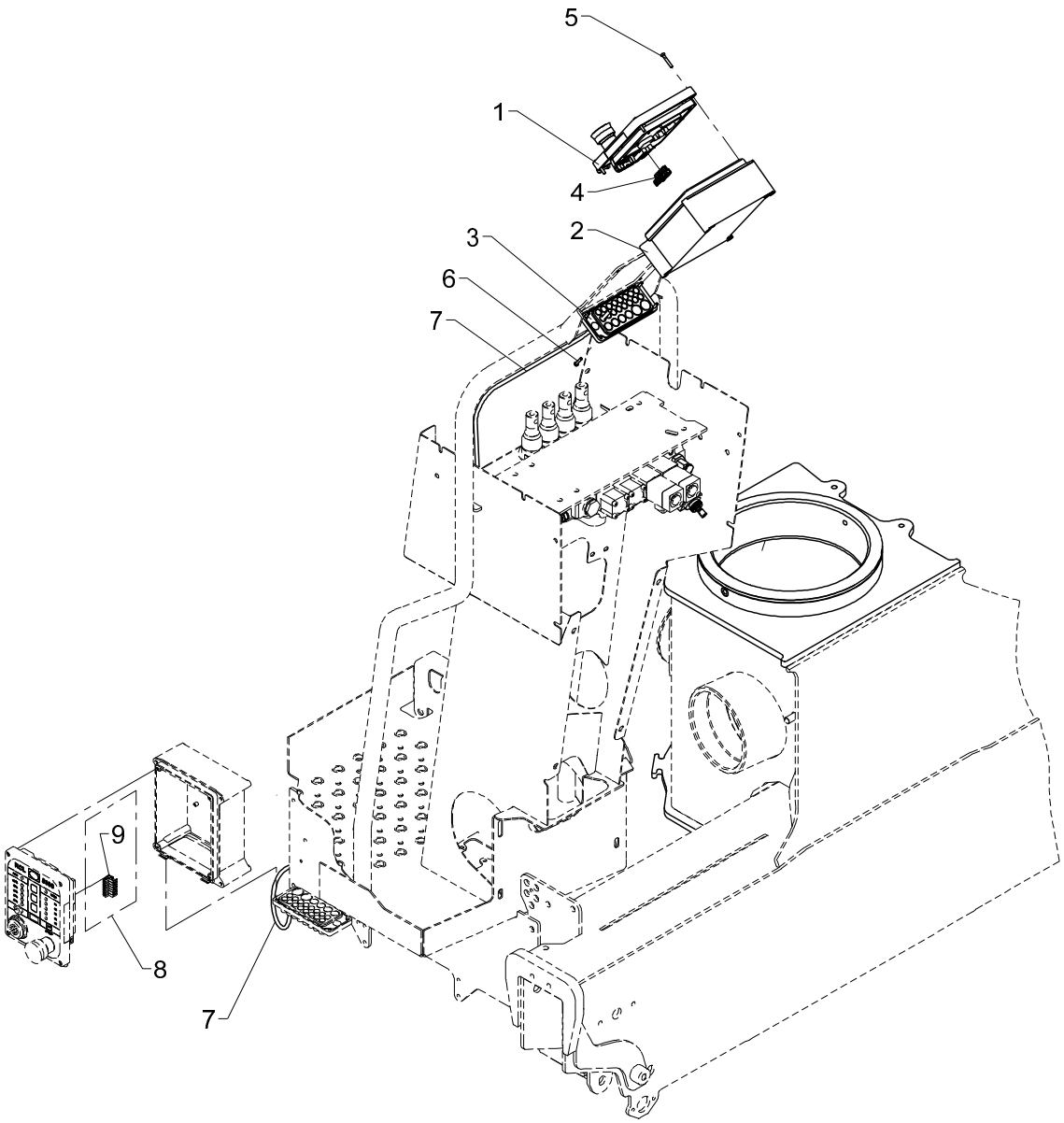
5
1
4
2
3
6
7
9
8
7

ECT 5320 on stand-up platform (HS)

Pos	Qty.	Part no.	Description	Remarks
1	1	29303	Front complete, ECT5320	
2	1	29304	Bottom f. RCL-box incl. hinge	
3	1	29307	Cable lead-in	
4	1	29318	Plug, 7-polar for RCL 53XX	
5	4	30347	Screw, stainless	4,0 x 25
6	4	30346	Screw, stainless	4,0 x 20
7	1	28263	CAN BUS cable	4,5 m
8	1	7004340	Plug, 7-polar for RCL	
9	1	29318	Plug, 7-polar for RCL 53XX	

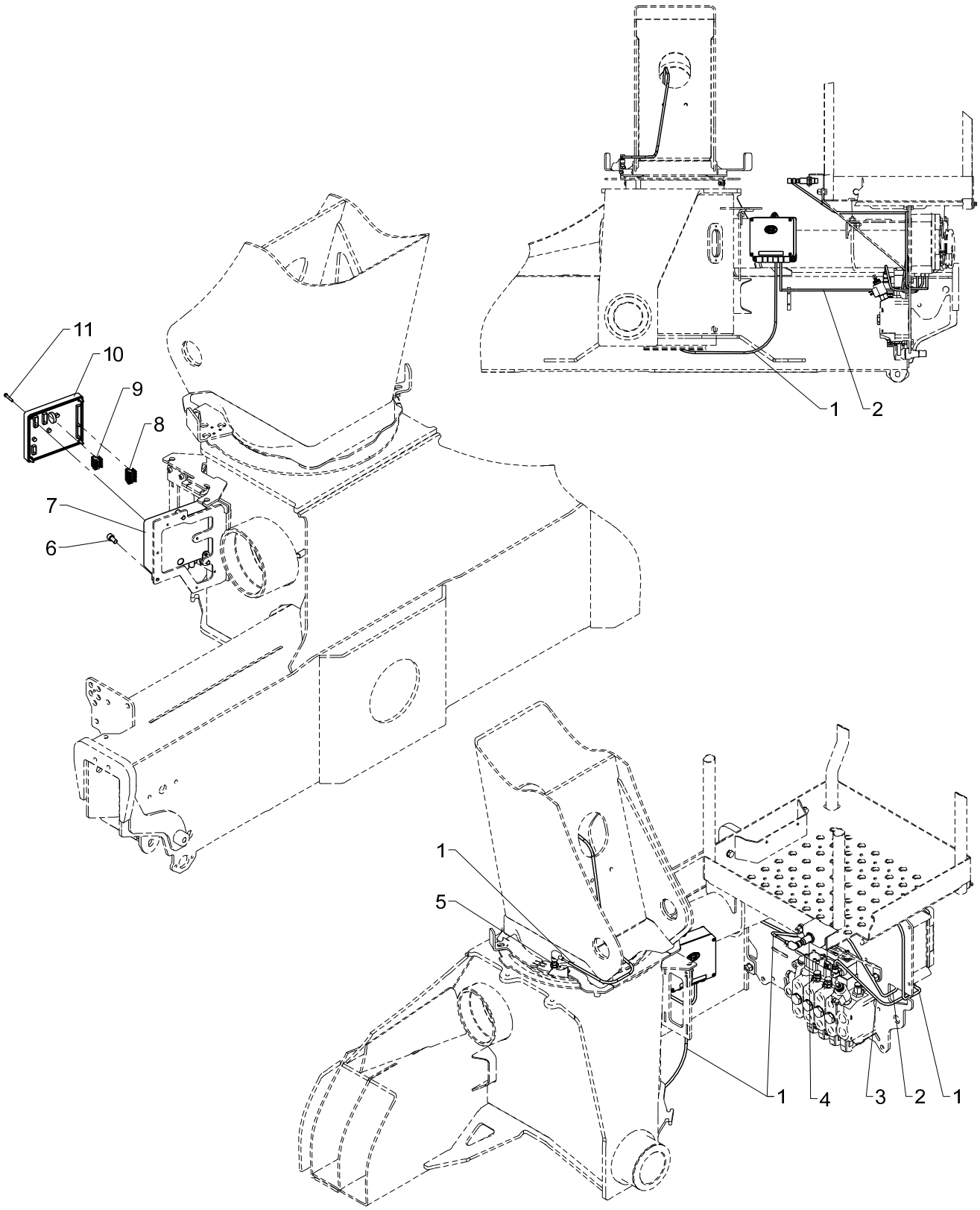
11
10
9
8
7
6
1
2
1
5
1
4
3
2
1

HSL

Pos	Qty.	Part no.	Description	Remarks
1	2	28117	Cable with plug	
2	1	28263	CAN BUS cable	2 m
3	1	28294	Cable, spool sensor	
4	1	28210	Proximity switch	
5	1	29447	Proximity switchM12 8mm PNP-NO	
6	3	30449	Screw	MC8 x 16
7	1	29313	Bottom f. Fly-Jib box	
8	1	29324	Plug, 6-polar for RCL 53XX	
9	1	29317	Plug, 5-polar for RCL 53XX	
10	1	29346	CIO5376 controller cover cpl.	
11	4	30347	Screw, stainless	4,0 x 25

18/129, 20/138, 22/153

Internal ref. 70 06 700

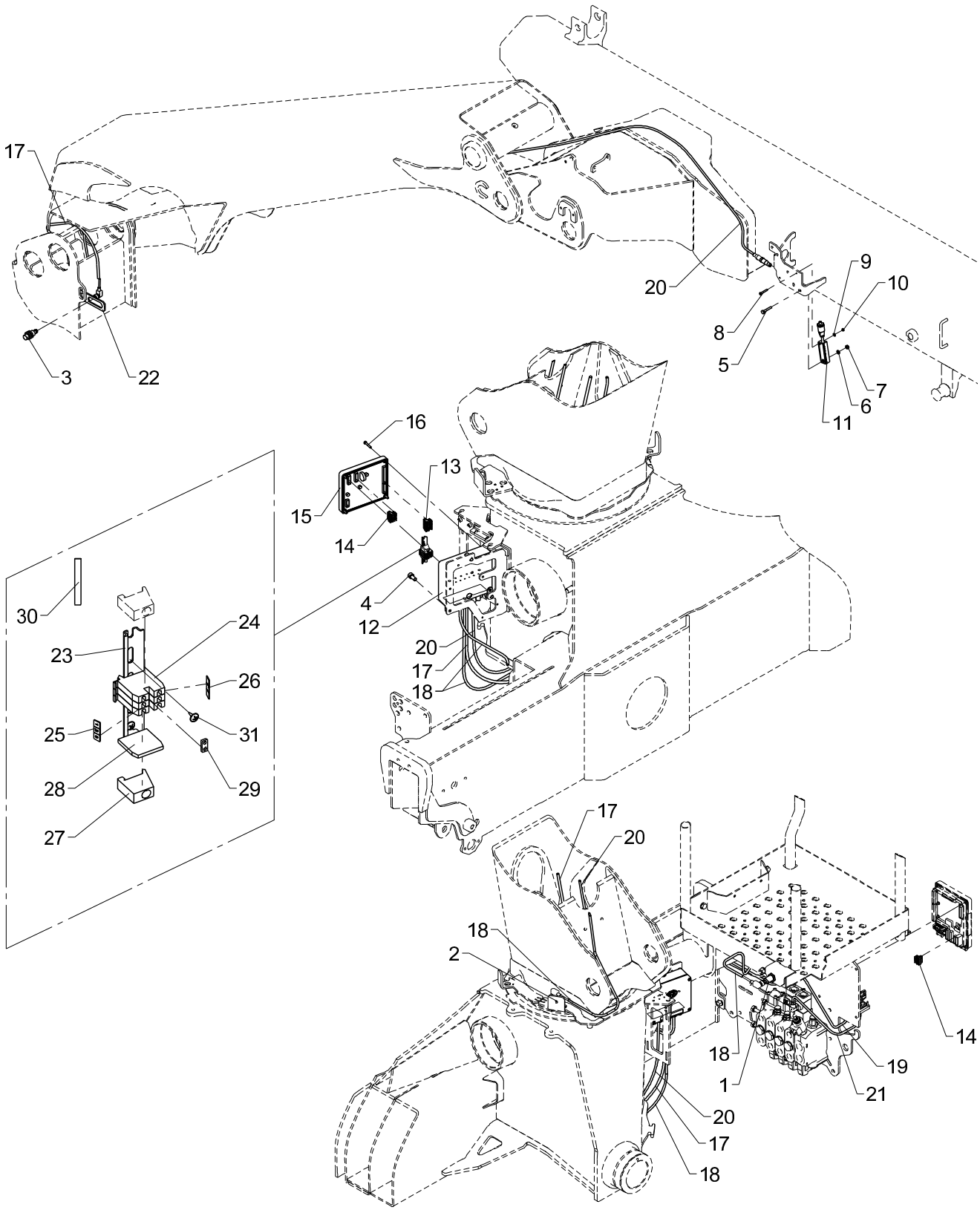

HSL-E

Pos	Qty.	Part no.	Description	Remarks
1	1	28210	Proximity switch	
2	1	29447	Proximity switchM12 8mm PNP-NO	
3	1	28980	Proximity switch	
4	3	30449	Screw	MC8 x 16
5	1	30116	Steel pin, stainless	M6 x 35
6	1	32302	Face washer, stainless	6 mm
7	1	30884	Lock nut, stainless	M6
8	1	31790	Set screw M4 x 30	M4 x 30
9	1	31188	Washer, stainless	4 mm
10	1	30857	Lock nut	M4
11	1	29295	Tilt sensor + 0.25 m cable	
12	1	29313	Bottom f. Fly-Jib box	
13	1	29324	Plug, 6-polar for RCL 53XX	
14	2	29317	Plug, 5-polar for RCL 53XX	
15	1	29346	CIO5376 controller cover cpl.	
16	4	30347	Screw, stainless	4,0 x 25
17	1	28077	Cable with plug	
18	2	28117	Cable with plug	
19	1	28263	CAN BUS cable	2 m
20	1	28730	Cable + socket, 10 m	9,0 m
21	1	28294	Cable, spool sensor	
22	1	6306803	Bracket for proximity switch	
23	1	28013	Guide rail	80 mm
24	3	28010	Terminal	
25	1	28019	Labels nos. 1-10	
26	1	28965	Dekafix labels 21-30	
27	1	28012	End angle	
28	1	28011	End plate	
29	1	28208	Fish plate	
30	1	27202	Cable	0,3 m
31	2	28693	Screw	Ø2.9 x 6.5

18/129, 20/138, 22/153

Internal ref. 70 06 710

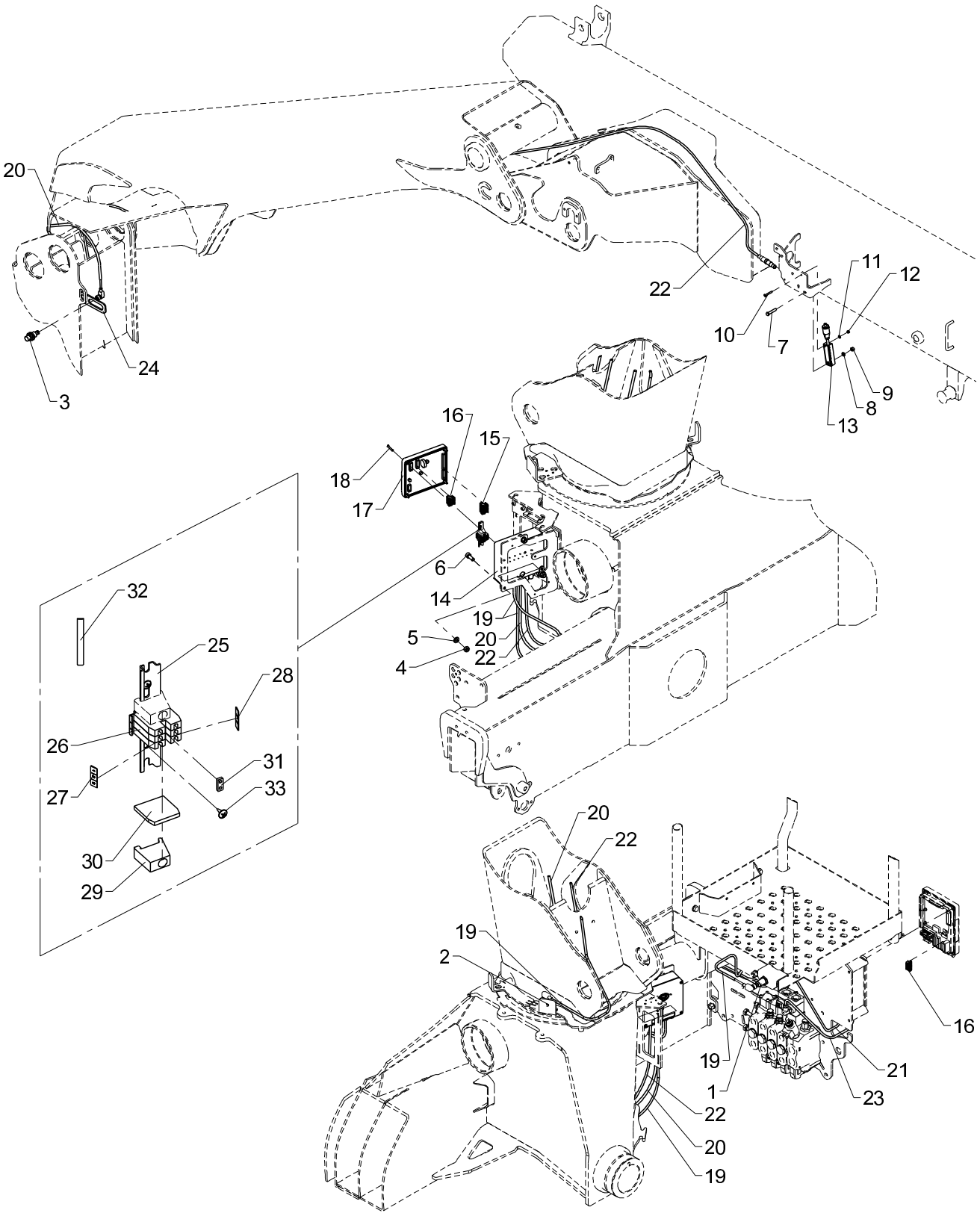

HSL-Q, single

Pos	Qty.	Part no.	Description	Remarks
1	1	28210	Proximity switch	
2	1	29447	Proximity switchM12 8mm PNP-NO	
3	1	28980	Proximity switch	
4	3	30856	Nut, stainless	M8
5	3	31147	Face washer, 8 mm	
6	3	30438	Screw	MC8 x 20
7	1	30116	Steel pin, stainless	M6 x 35
8	1	32302	Face washer, stainless	6 mm
9	1	30884	Lock nut, stainless	M6
10	1	31790	Set screw M4 x 30	M4 x 30
11	1	31188	Washer, stainless	4 mm
12	1	30857	Lock nut	M4
13	1	29295	Tilt sensor + 0.25 m cable	
14	1	29313	Bottom f. Fly-Jib box	
15	1	29324	Plug, 6-polar for RCL 53XX	
16	2	29317	Plug, 5-polar for RCL 53XX	
17	1	29346	CIO5376 controller cover cpl.	
18	4	30347	Screw, stainless	4,0 x 25
19	2	28117	Cable with plug	
20	1	28077	Cable with plug	
21	1	28263	CAN BUS cable	2 m
22	1	28730	Cable + socket, 10 m	9,0 m
23	1	28294	Cable, spool sensor	
24	1	6306803	Bracket for proximity switch	
25	1	28013	Guide rail	80 mm
26	3	28010	Terminal	
27	1	28019	Labels nos. 1-10	
28	1	28965	Dekafix labels 21-30	
29	1	28012	End angle	
30	1	28011	End plate	
31	1	28208	Fish plate	
32	1	27202	Cable	0,3 m
33	2	28693	Screw	Ø2.9 x 6.5

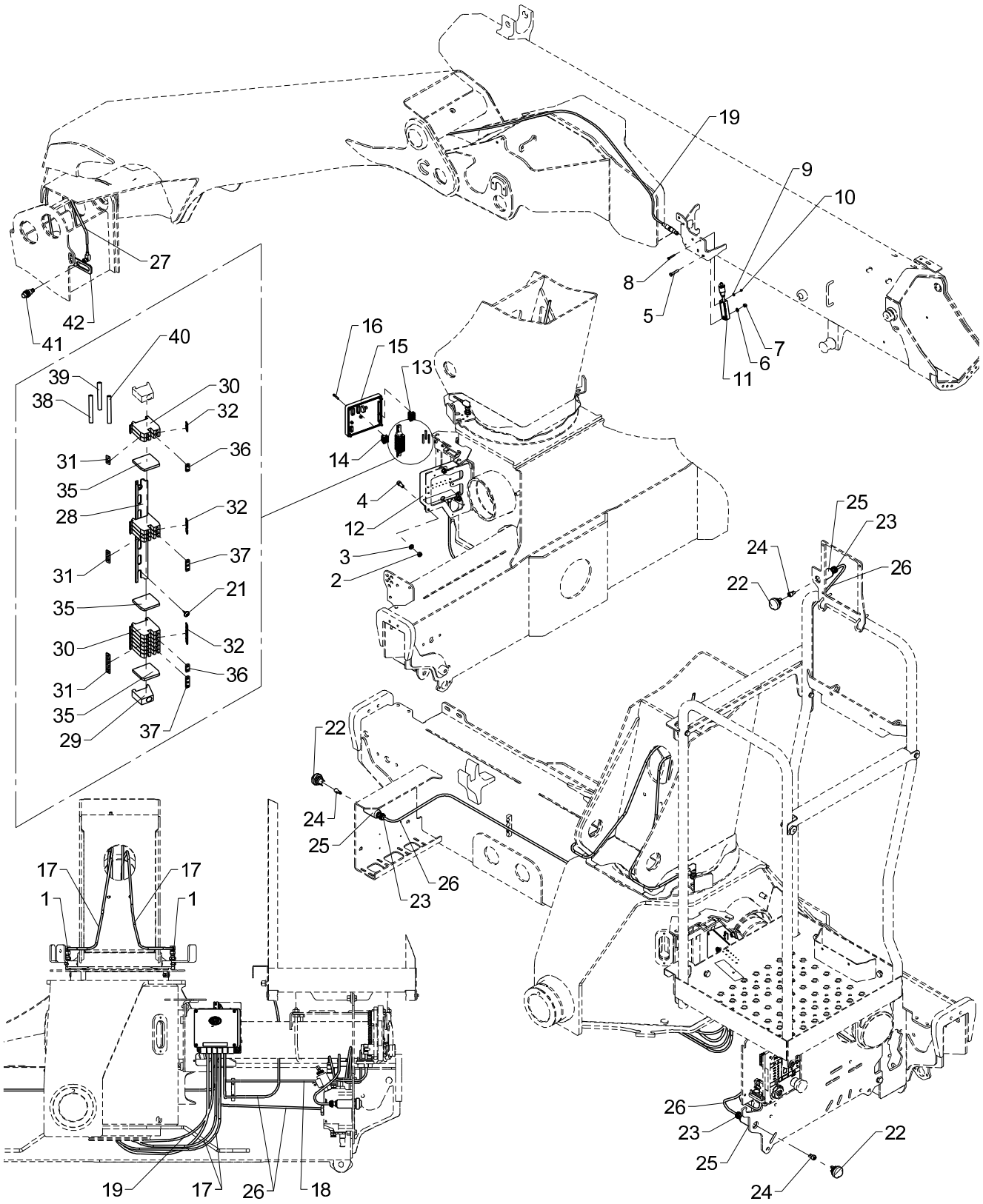
19
9
10
27
8
5
7
6
11
42
41
40
16
15
13
39
38
30
32
14
31
36
35
4
28
32
12
37
3
31
2
21
35
30
32
31
36
35
29
37
25
23
24
22
26
22
24
25
26
23
17
17
1
1
19
17
26
18
26
23
25
22
24

HSL-Q, double

Pos	Qty.	Part no.	Description	Remarks
1	2	29447	Proximity switchM12 8mm PNP-NO	
2	3	30856	Nut, stainless	M8
3	3	31147	Face washer, 8 mm	
4	3	30438	Screw	MC8 x 20
5	1	30116	Steel pin, stainless	M6 x 35
6	1	32302	Face washer, stainless	6 mm
7	1	30884	Lock nut, stainless	M6
8	1	31790	Set screw M4 x 30	M4 x 30
9	1	31188	Washer, stainless	4 mm
10	1	30857	Lock nut	M4
11	1	29295	Tilt sensor + 0.25 m cable	
12	1	29313	Bottom f. Fly-Jib box	
13	1	29324	Plug, 6-polar for RCL 53XX	
14	2	29317	Plug, 5-polar for RCL 53XX	
15	1	29346	CIO5376 controller cover cpl.	
16	4	30347	Screw, stainless	4,0 x 25
17	2	28117	Cable with plug	
18	1	28263	CAN BUS cable	2 m
19	1	28730	Cable + socket, 10 m	9,0 m
20	1	28294	Cable, spool sensor	
21	2	28693	Screw	Ø2.9 x 6.5
22	3	27333	Push button	
23	3	28459	Connection	
24	6	27429	Clamp	
25	3	64574	Housing	
26	1	28148	Cable	6 m
27	1	28077	Cable with plug	
28	1	28013	Guide rail	110 mm.
29	1	28012	End angle	
30	11	28010	Terminal	
31	1	28019	Labels nos. 1-10	
32	1	28965	Dekafix labels 21-30	
33	1	29427	Dekafix marker 31-40	
34	1	28020	Labels nos. 11-20	
35	3	28011	End plate	
36	2	28208	Fish plate	
37	2	28014	Fish plate	
38	1	27202	Cable	0,3 m
39	1	27209	Wire 1 x 1,5 mm2	0,3 m
40	1	27204	Wire, 1 x1.5mm2	0,3 m
41	1	28980	Proximity switch	

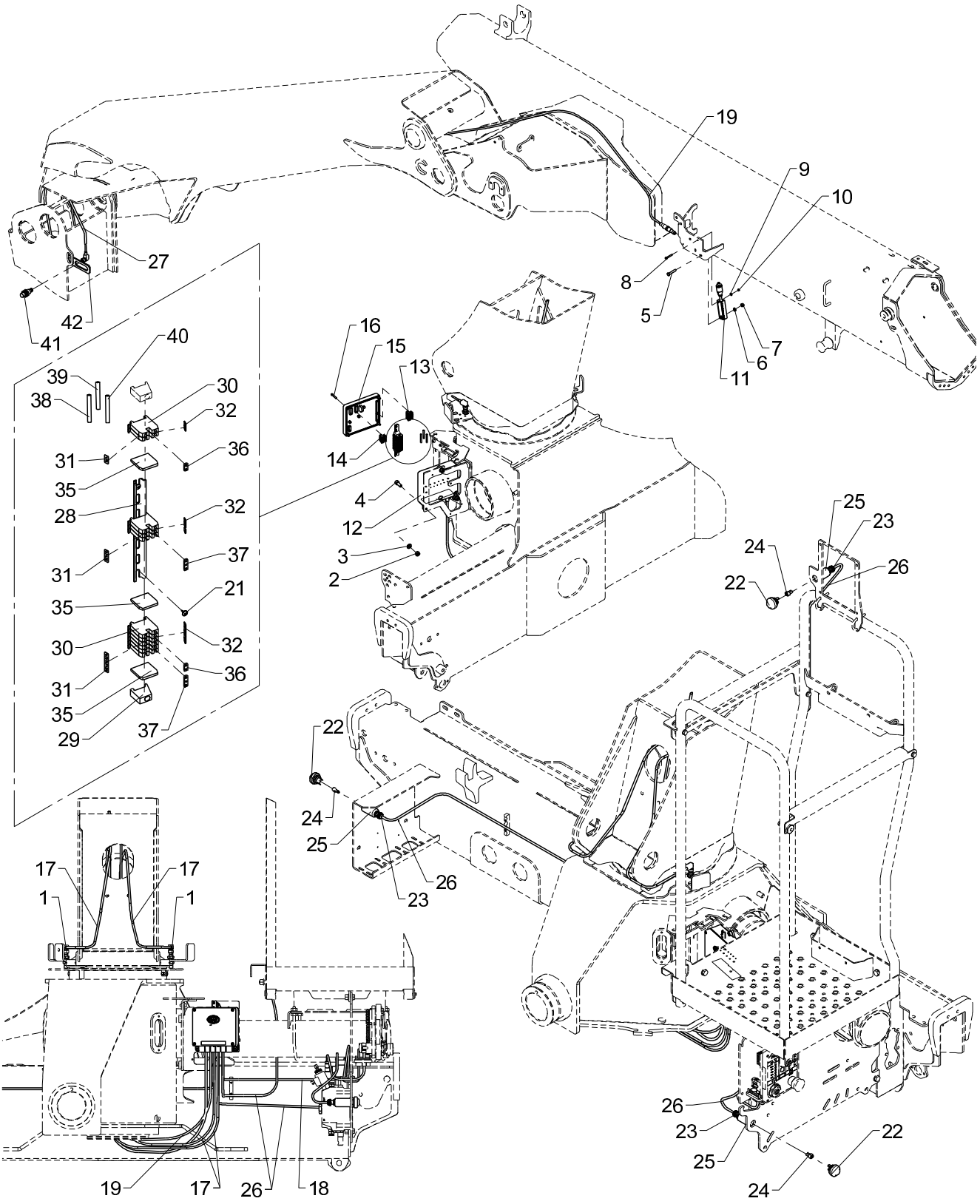
19
9
10
27
8
5
7
6
11
42
41
40
16
15
13
39
38
30
32
14
31
36
35
4
28
32
12
37
3
31
2
21
35
30
32
31
36
35
29
37
25
23
24
22
26
22
24
25
26
23
17
17
1
1
19
17
26
18
26
23
25
22
24

Obsolete

HSL-Q, double

535 20 580

From loader 1070001
To loader

Created 22-10-2012
Modified 01-01-2014

Pos	Qty.	Part no.	Description	Remarks
42	1	6306803	Bracket for proximity switch	

18/129, 20/138, 22/153

Internal ref. 70 06 720

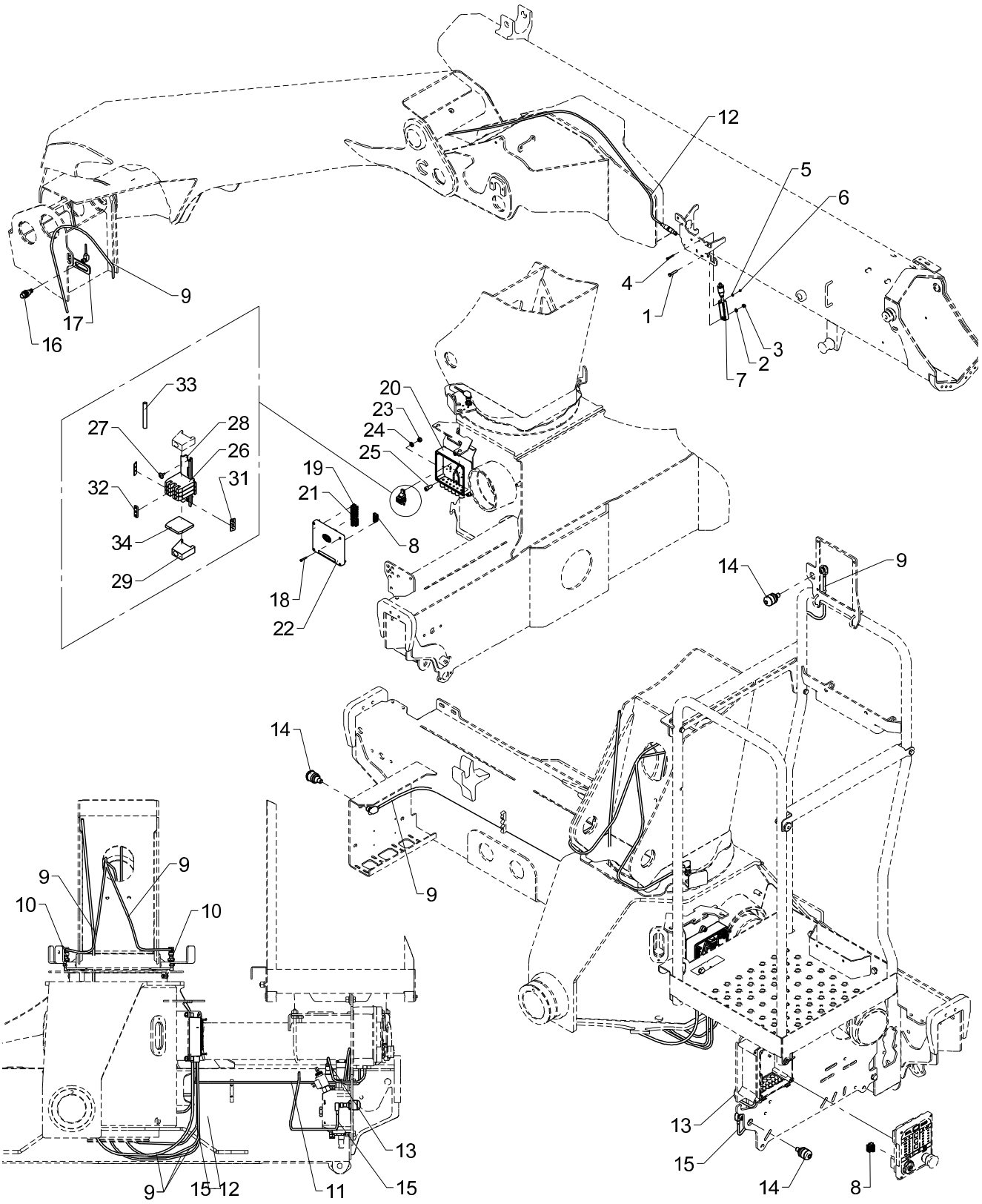

HSL-Q, double

Pos	Qty.	Part no.	Description	Remarks
1	1	30116	Steel pin, stainless	M6 x 35
2	1	32302	Face washer, stainless	6 mm
3	1	30884	Lock nut, stainless	M6
4	1	31790	Set screw M4 x 30	M4 x 30
5	1	31188	Washer, stainless	4 mm
6	1	30857	Lock nut	M4
7	1	29295	Tilt sensor + 0.25 m cable	
8	2	29317	Plug, 5-polar for RCL 53XX	
9	5	28077	Cable with plug	
10	2	29447	Proximity switchM12 8mm PNP-NO	
11	1	28263	CAN BUS cable	2 m
12	1	28730	Cable + socket, 10 m	
13	1	28294	Cable, spool sensor	
14	3	29498	Touch button with light	
15	1	28117	Cable with plug	0,45 m
16	1	28980	Proximity switch	
17	1	6306803	Bracket for proximity switch	
18	4	30347	Screw, stainless	4,0 x 25
19	1	29321	Plug, 10-polar for RCL 53XX	
20	1	29313	Bottom f. Fly-Jib box	
21	1	29324	Plug, 6-polar for RCL 53XX	
22	1	29346	CIO5376 controller cover cpl.	
23	3	30856	Nut, stainless	M8
24	3	31147	Face washer, 8 mm	
25	3	30438	Screw	MC8 x 20
26	3	28010	Terminal	
27	2	28693	Screw	Ø2.9 x 6.5
28	1	28013	Guide rail	60 mm.
29	1	28012	End angle	
30	1	28019	Labels nos. 1-10	
31	1	28965	Dekafix labels 21-30	
32	1	28014	Fish plate	
33	1	27209	Wire 1 x 1,5 mm2	0,3 m
34	1	28011	End plate	

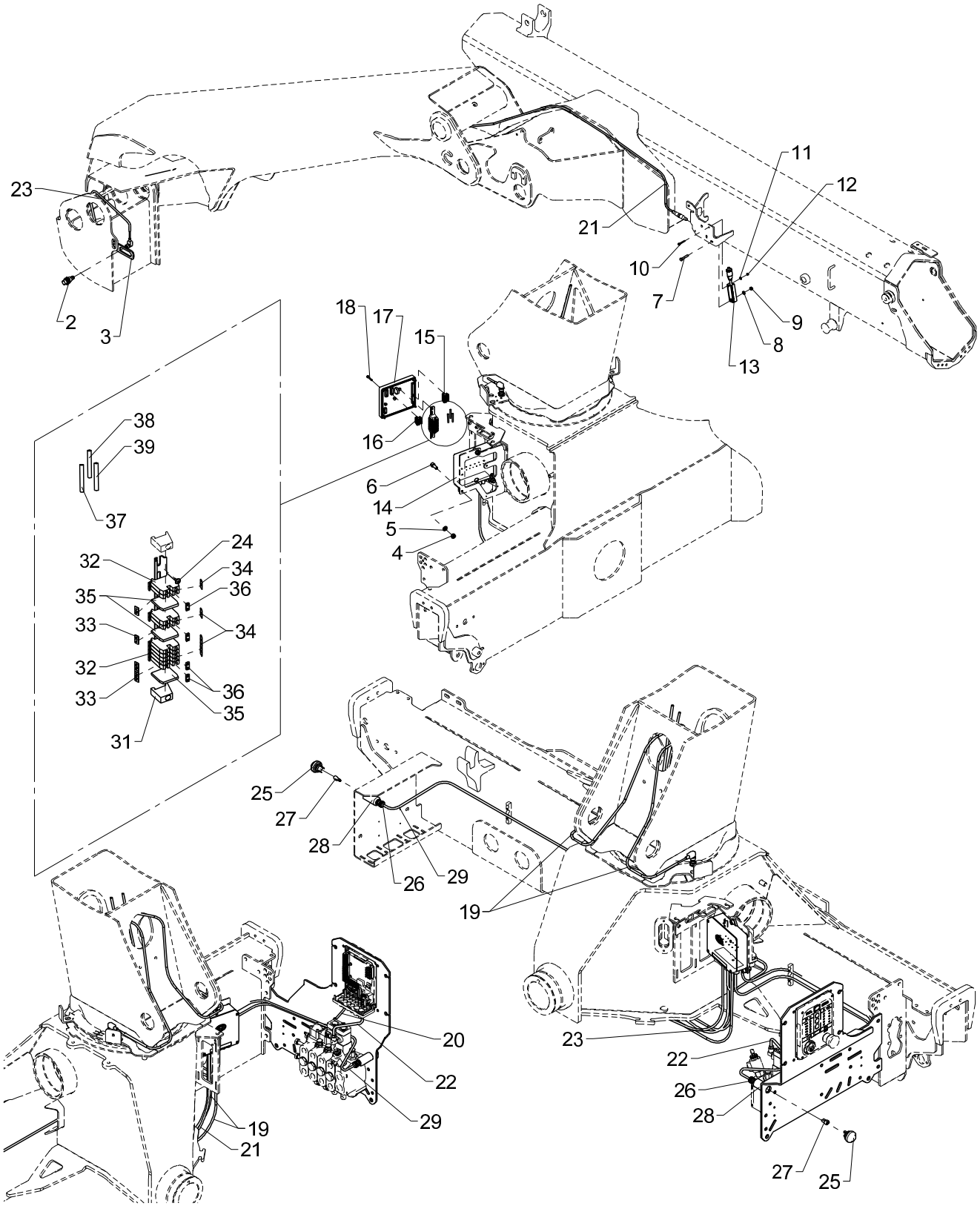
23
2
3
21
11
12
10
7
9
8
13
18
17
15
16
6
14
5
4
38
39
37
24
32
34
35
36
33
34
32
36
33
35
31
25
27
28
26
29
19
20
22
29
19
21
23
22
26
28
27
25

QOPS, STD.

Pos	Qty.	Part no.	Description	Remarks
1	2	29447	Proximity switchM12 8mm PNP-NO	
2	1	28980	Proximity switch	
3	1	6306803	Bracket for proximity switch	
4	3	30856	Nut, stainless	M8
5	3	31147	Face washer, 8 mm	
6	3	30438	Screw	MC8 x 20
7	1	30116	Steel pin, stainless	M6 x 35
8	1	32302	Face washer, stainless	6 mm
9	1	30884	Lock nut, stainless	M6
10	1	31790	Set screw M4 x 30	M4 x 30
11	1	31188	Washer, stainless	4 mm
12	1	30857	Lock nut	M4
13	1	29295	Tilt sensor + 0.25 m cable	
14	1	29313	Bottom f. Fly-Jib box	
15	1	29324	Plug, 6-polar for RCL 53XX	
16	2	29317	Plug, 5-polar for RCL 53XX	
17	1	29346	CIO5376 controller cover cpl.	
18	4	30347	Screw, stainless	4,0 x 25
19	2	28117	Cable with plug	
20	1	28263	CAN BUS cable	2 m
21	1	28730	Cable + socket, 10 m	9,0 m
22	1	28294	Cable, spool sensor	
23	1	28077	Cable with plug	
24	2	28693	Screw	Ø2.9 x 6.5
25	2	27333	Push button	
26	2	28459	Connection	
27	4	27429	Clamp	
28	2	64574	Housing	
29	2	28148	Cable	4 m
30	1	28013	Guide rail	110 mm.
31	1	28012	End angle	
32	9	28010	Terminal	
33	1	28019	Labels nos. 1-10	
34	1	28965	Dekafix labels 21-30	
35	3	28011	End plate	
36	4	28208	Fish plate	
37	1	27202	Cable	0,3 m
38	1	27209	Wire 1 x 1,5 mm2	0,3 m
39	1	27204	Wire, 1 x1.5mm2	0,3 m

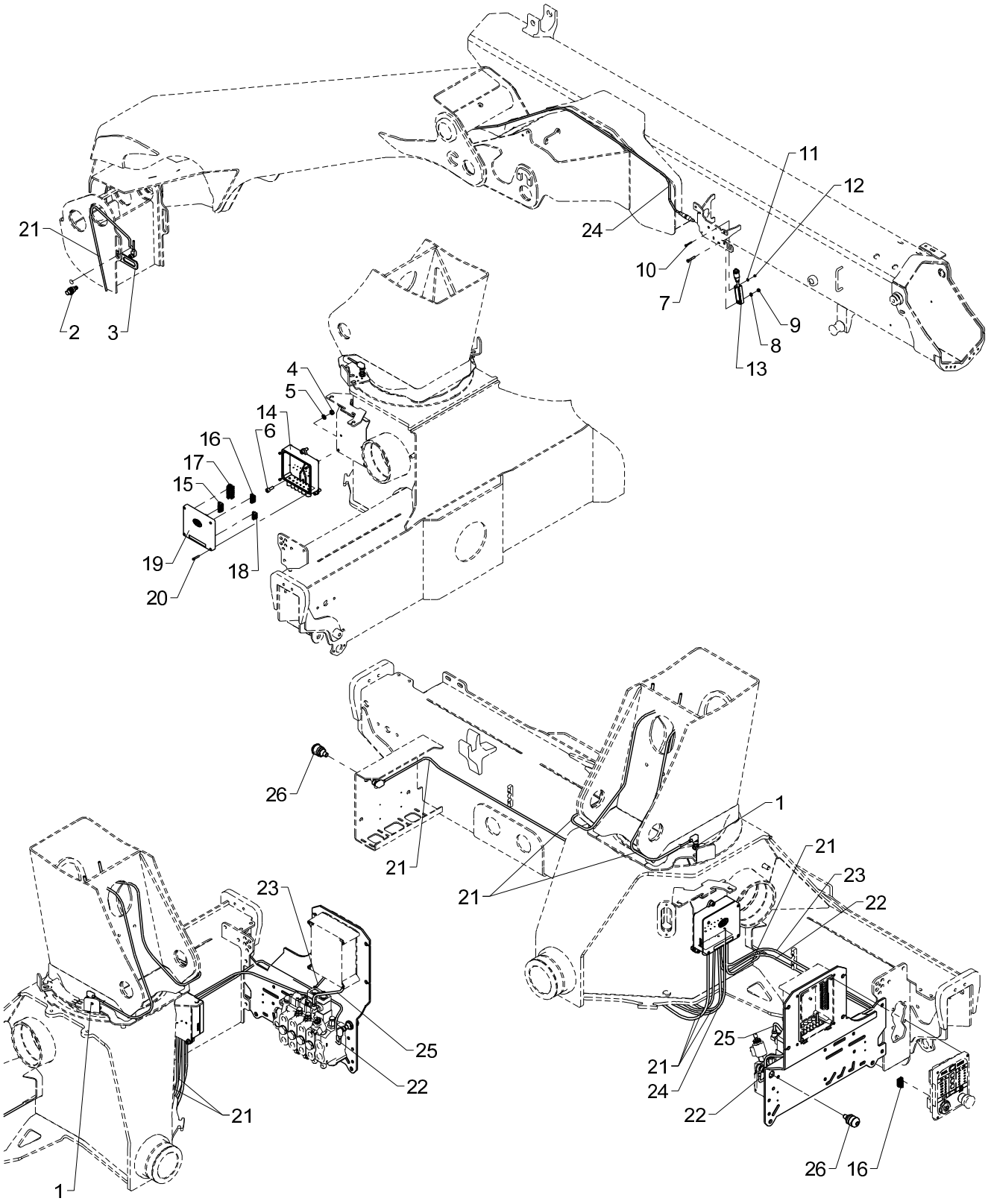
21
2
3
24
11
12
10
7
9
8
13
4
5
14
6
16
17
15
19
20
18
26
21
21
1
21
23
22
25
21
24
22
26
16
23
25
22
21
1

QOPS, STD.

Pos	Qty.	Part no.	Description	Remarks
1	2	29447	Proximity switchM12 8mm PNP-NO	
2	1	28980	Proximity switch	
3	1	6306803	Bracket for proximity switch	
4	3	30856	Nut, stainless	M8
5	3	31147	Face washer, 8 mm	
6	3	30438	Screw	MC8 x 20
7	1	30116	Steel pin, stainless	M6 x 35
8	1	32302	Face washer, stainless	6 mm
9	1	30884	Lock nut, stainless	M6
10	1	31790	Set screw M4 x 30	M4 x 30
11	1	31188	Washer, stainless	4 mm
12	1	30857	Lock nut	M4
13	1	29295	Tilt sensor + 0.25 m cable	
14	1	29313	Bottom f. Fly-Jib box	
15	1	29324	Plug, 6-polar for RCL 53XX	
16	2	29317	Plug, 5-polar for RCL 53XX	
17	1	29321	Plug, 10-polar for RCL 53XX	
18	1	29323	Plug, 4-polar for RCL 53XX	
19	1	29346	CIO5376 controller cover cpl.	
20	4	30347	Screw, stainless	4,0 x 25
21	4	28077	Cable with plug	
22	1	28117	Cable with plug	
23	1	28263	CAN BUS cable	2 m
24	1	28730	Cable + socket, 10 m	
25	1	28294	Cable, spool sensor	
26	2	29498	Touch button with light	

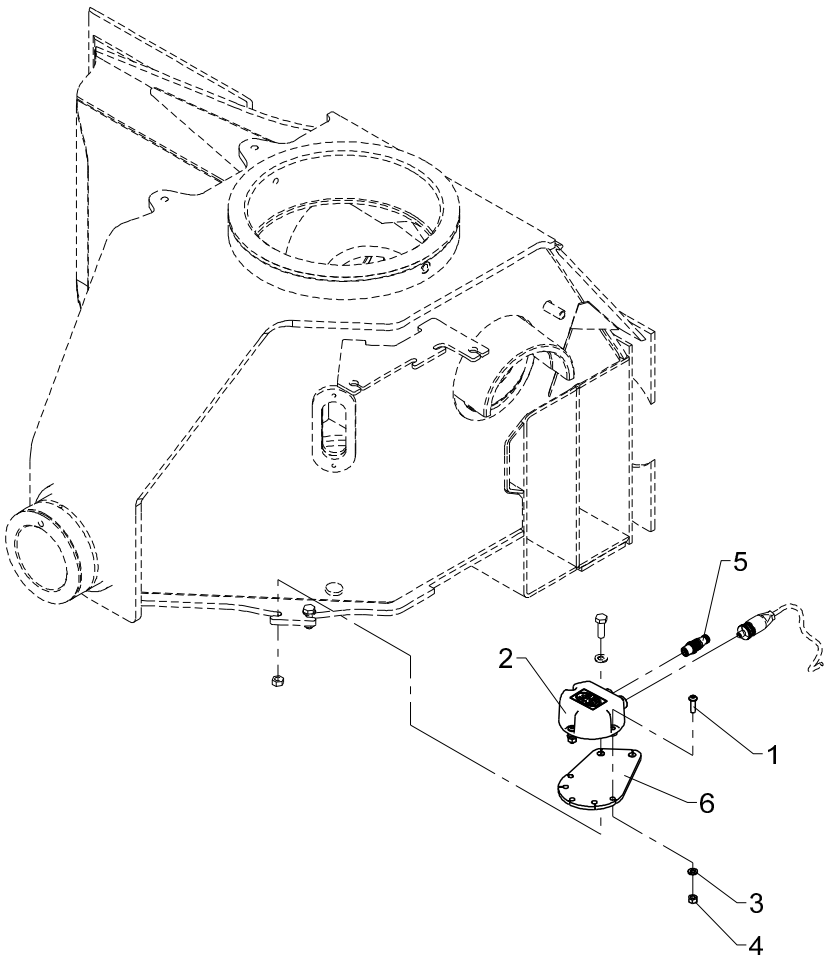
5
2
1
6
3
4

EVS, G2 + HDL

Pos	Qty.	Part no.	Description	Remarks
1	3	32491	Round-head screw	M6 x 20
2	1	29426	Electronic inclinometer,single	
3	3	32302	Face washer, stainless	6 mm
4	3	30884	Lock nut, stainless	M6
5	1	29486	Plug M12, termination	
6	1	6340274	Mounting fittings (AIC 5062)	

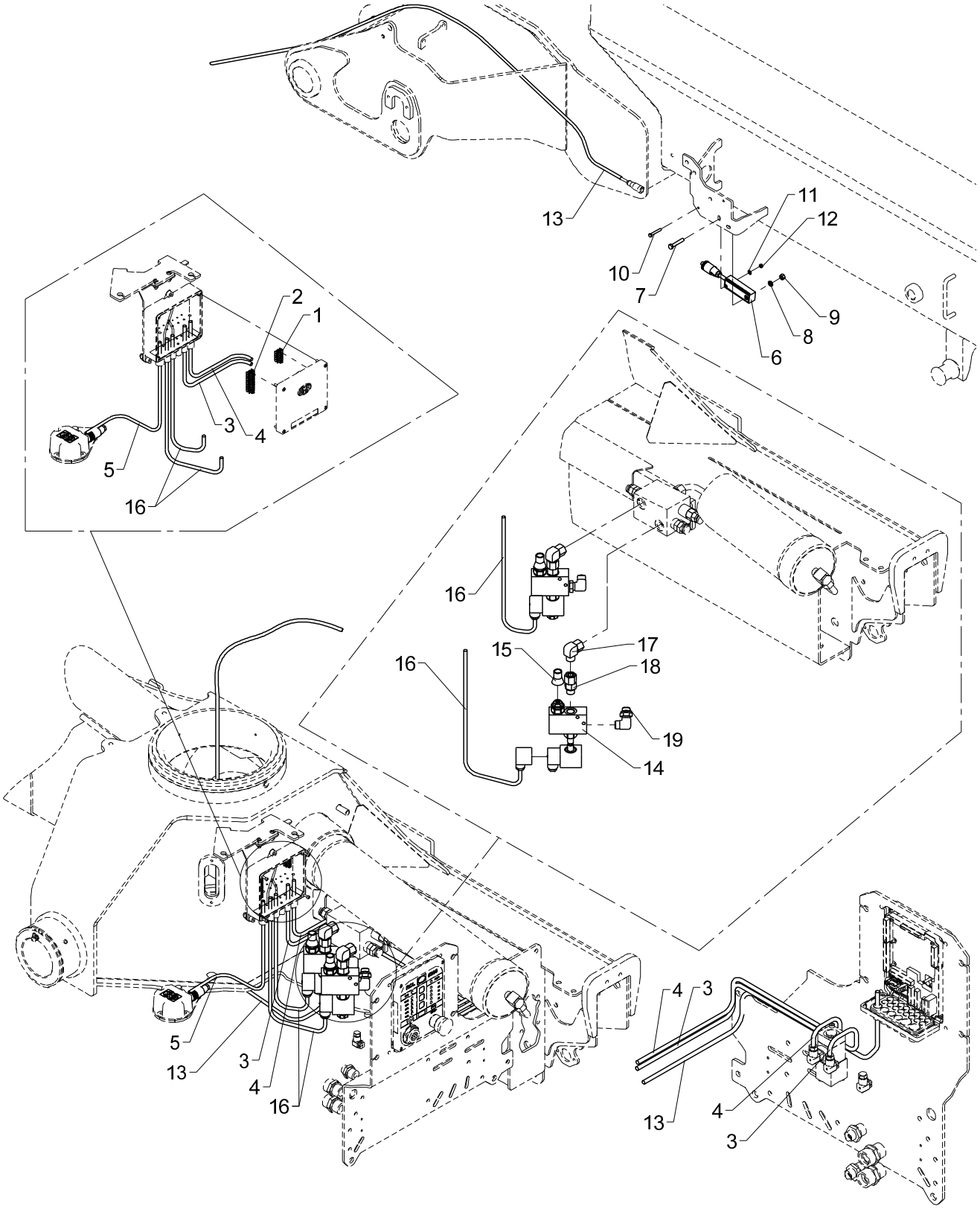
13
11
12
10
7
9
8
6
2
1
3
4
5
16
16
15
17
18
16
19
14
5
13
3
4
16
4
3
13
4
3

EVS, knuckle boom crane without RC with HS or QOPS

Pos	Qty.	Part no.	Description	Remarks
1	1	29317	Plug, 5-polar for RCL 53XX	
2	1	29321	Plug, 10-polar for RCL 53XX	
3	1	28268	Cable, spool sensor, jib	
4	1	28269	Cable, spool sensor, extension	
5	1	29456	CAN cable, M12, 2 m, female	
6	1	29295	Tilt sensor + 0.25 m cable	
7	1	30116	Steel pin, stainless	M6 x 35
8	1	32302	Face washer, stainless	6 mm
9	1	30884	Lock nut, stainless	M6
10	1	31790	Set screw M4 x 30	M4 x 30
11	1	31188	Washer, stainless	4 mm
12	1	30857	Lock nut	M4
13	1	28730	Cable + socket, 10 m	
14	2	50517	Valve	
15	2	50518	Cover for sealing	
16	2	28265	Cable, dump valve, 1.35 m	
17	2	25242	Elbow connection	EWSD 12 L
18	2	25240	Connection	EGESD 12 LR-WD
19	2	26897	Elbow connection	12 mm - 3/8"

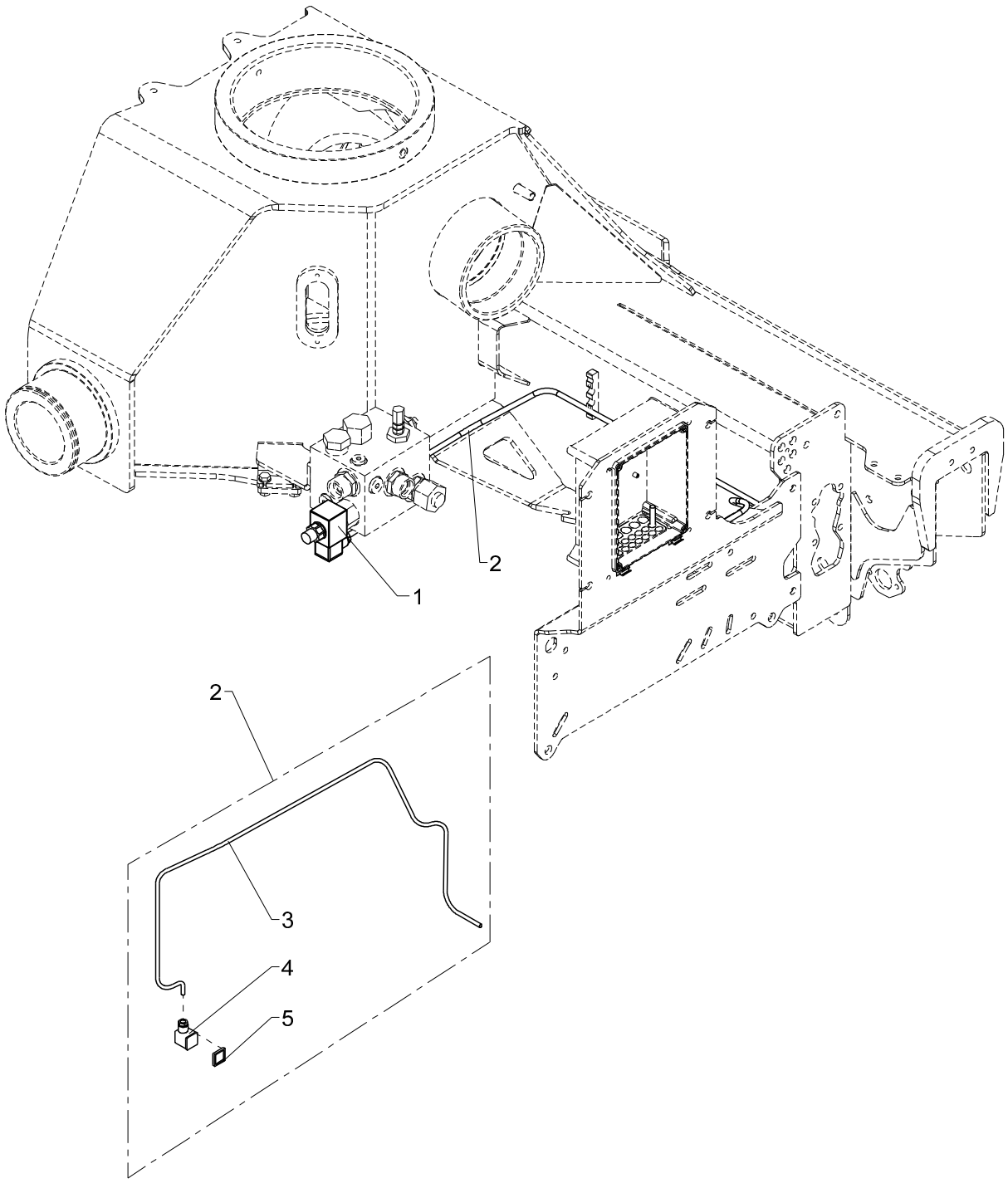
1
2
2
3
4
5

HDL without RC

Pos	Qty.	Part no.	Description	Remarks
1	1	61778	Solenoid	
2	1	28265	Cable, dump valve, 1.35 m	
3	1	28249	Cable 2 x 0.75	
4	1	28258	Plug, solenoid valve	
5	1	28840	Seal	

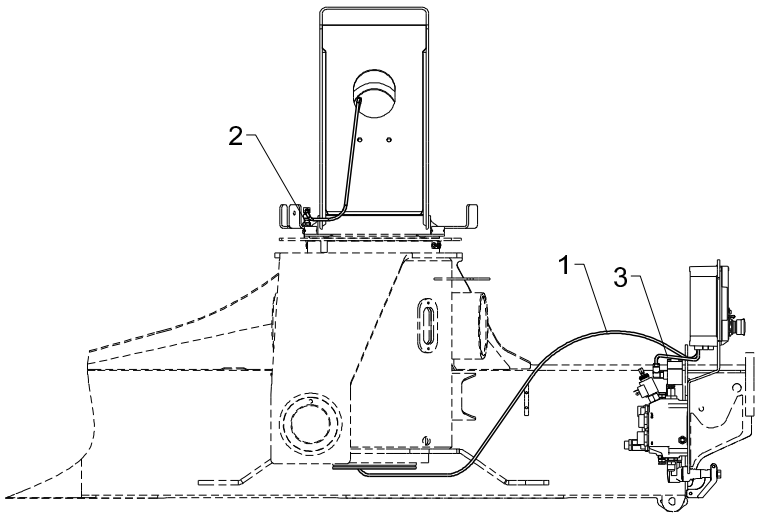
2
1
3

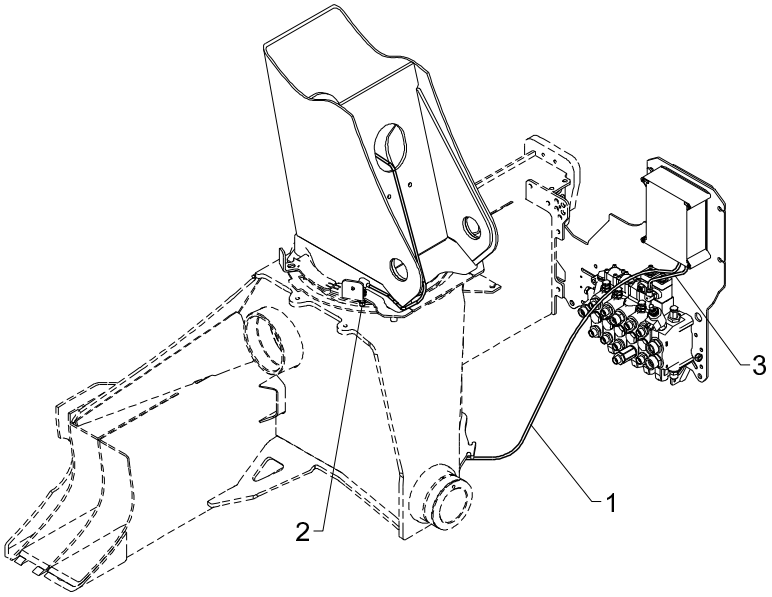
3
1
2

2-stage LMB, without RC

Pos	Qty.	Part no.	Description	Remarks
1	1	28077	Cable with plug	2,7 m
2	1	29447	Proximity switchM12 8mm PNP-NO	
3	1	28294	Cable, spool sensor	

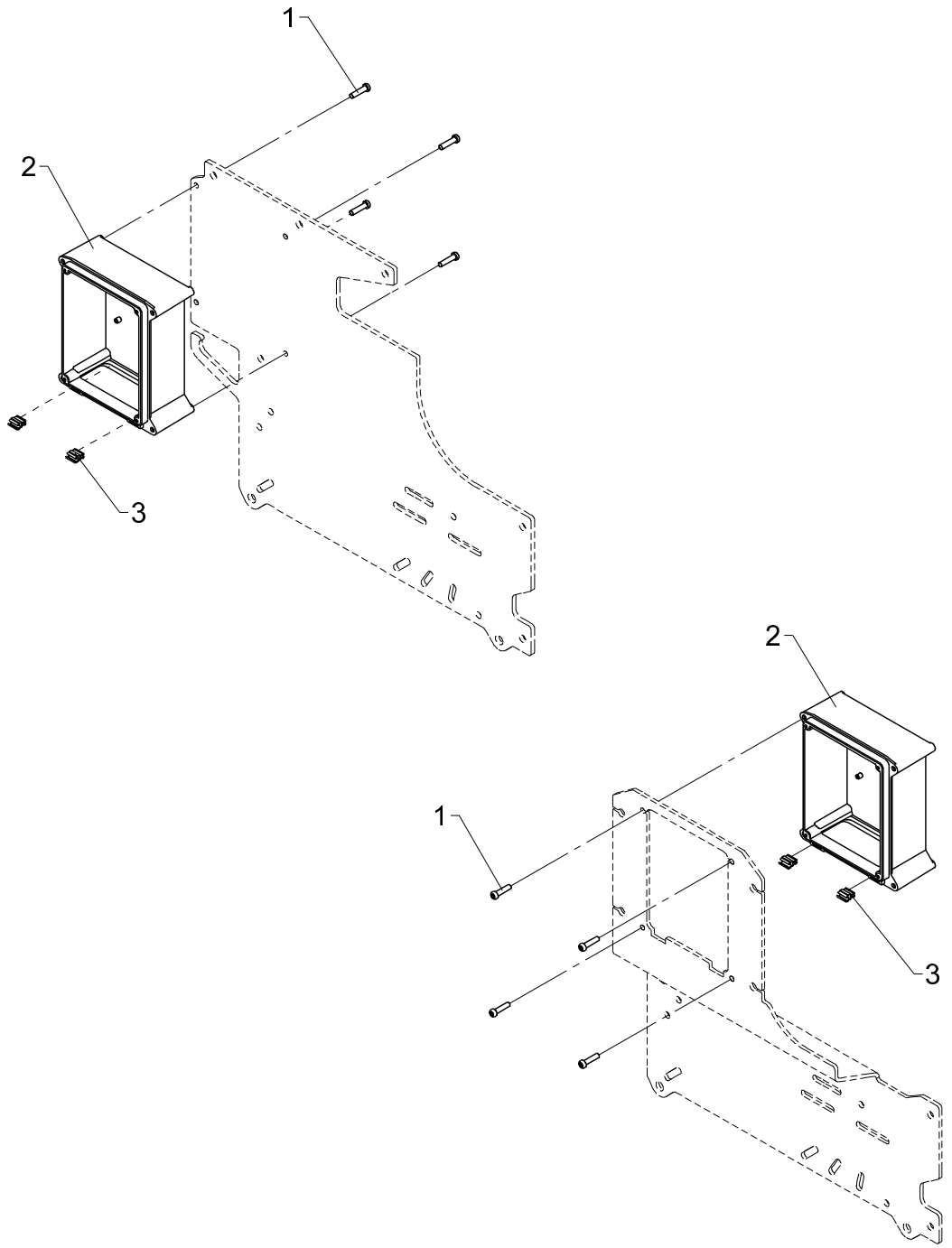
1
2
3
2
1
3

Bottom for RCL box, no RC

535 21 040

From loader 1070001
To loader

Created 12-03-2009
Modified 13-03-2009

Pos	Qty.	Part no.	Description	Remarks
1	4	30340	Screw, stainless	6,0 x 25
2	1	29304	Bottom f. RCL-box incl. hinge	
3	2	29305	Hinge	

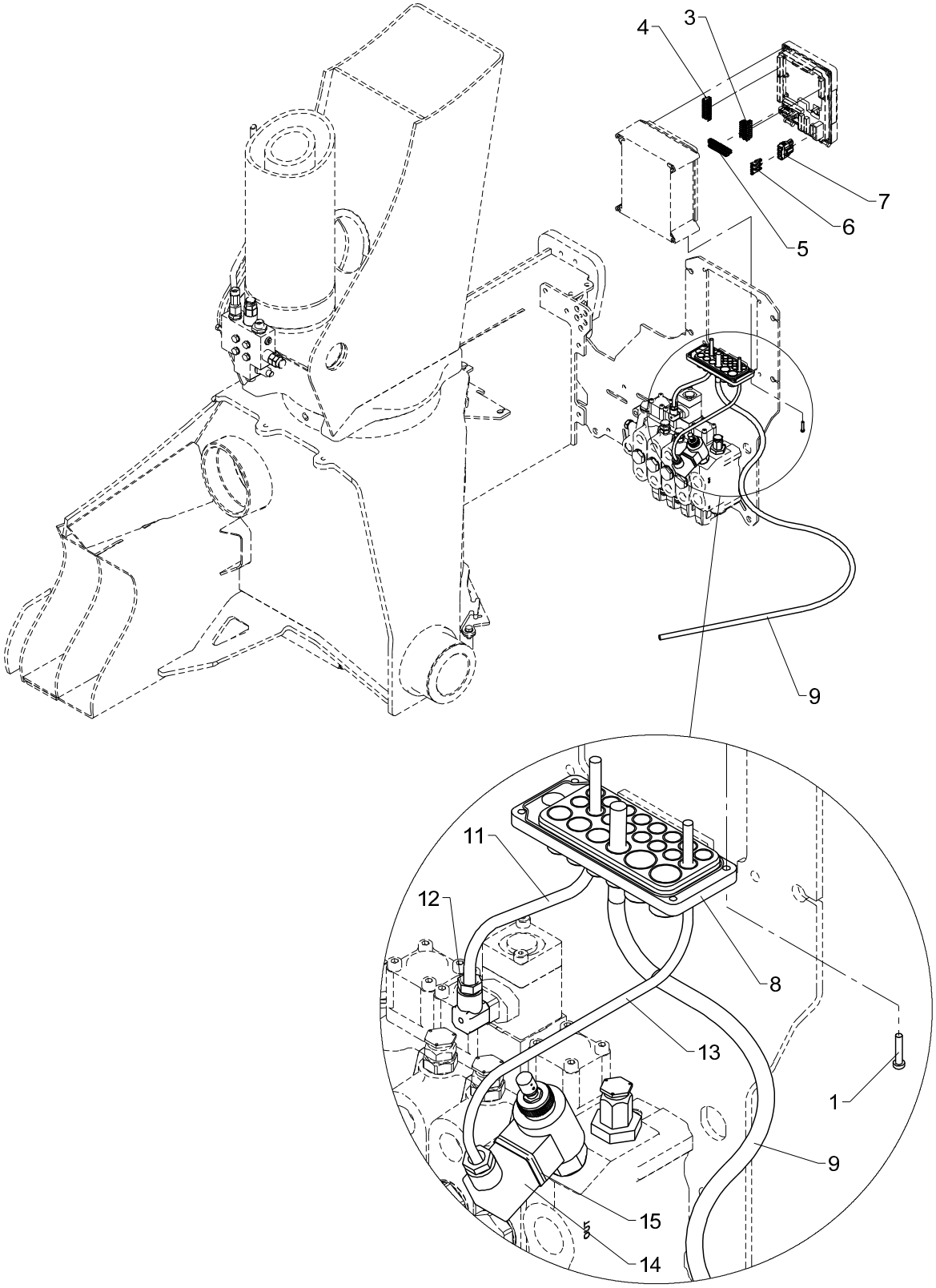
4
3
7
6
5
9
11
12
8
13
1
9
15
14

Wiring, base, standard

Pos	Qty.	Part no.	Description	Remarks
1	4	30346	Screw, stainless	4,0 x 20
2	1	28719	Wiring, standard	
3	1	29319	Plug, 8-polar for RCL 53XX	
4	1	29320	Plug, 9-polar for RCL 53XX	
5	1	29321	Plug, 10-polar for RCL 53XX	
6	3	29316	Pin	
7	1	29315	Plug, 3-polar for RCL 53XX	
8	1	29307	Cable lead-in	
9	1	28278	Cable 4 x 2.5	3,5 m
11	1	28252	Cable	1,3 m
12	1	28257	Plug, spool sensor	
13	1	28249	Cable 2 x 0.75	1,3 m
14	1	28258	Plug, solenoid valve	
15	1	28840	Seal	

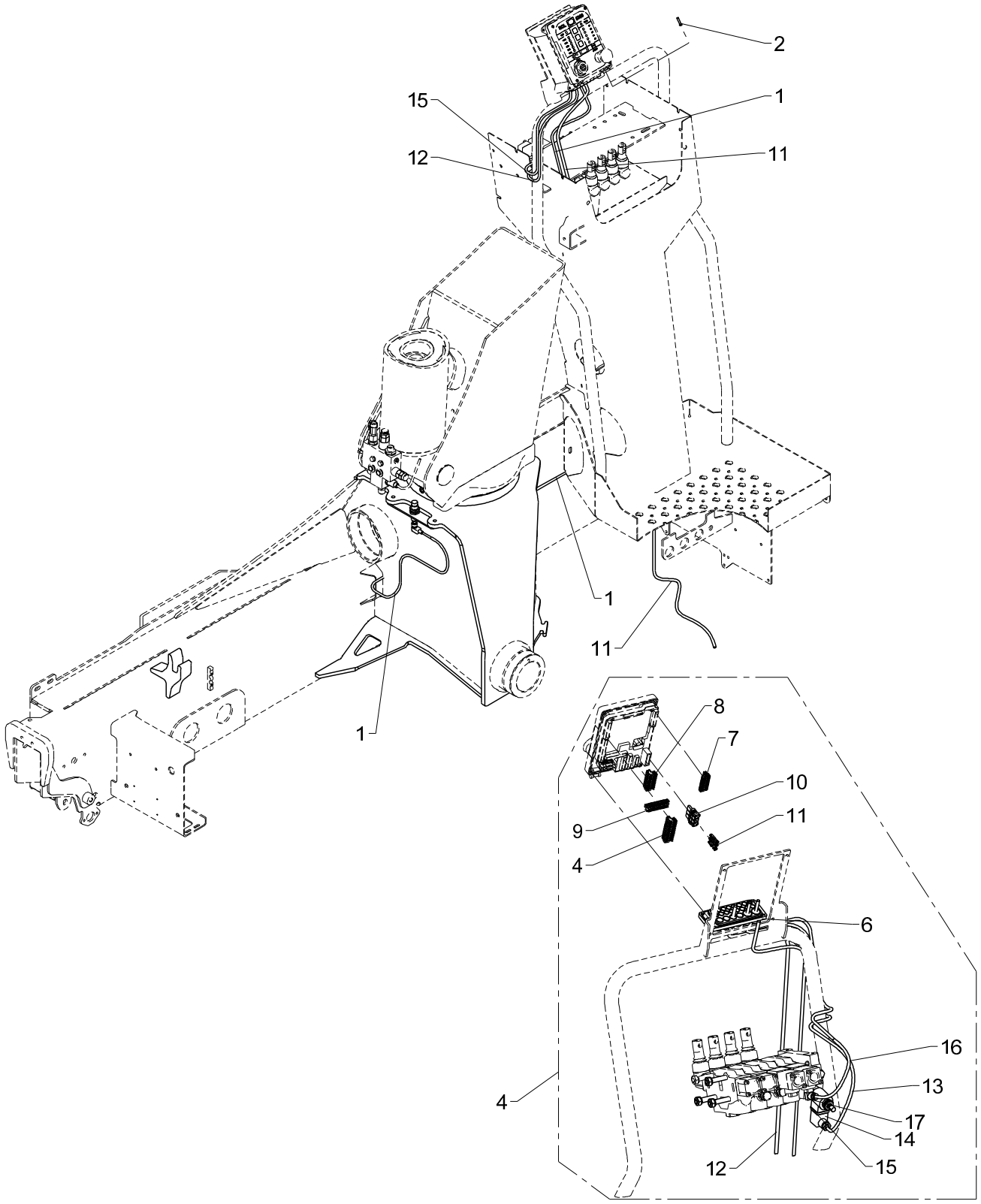
2
15
1
12
11
1
11
1
8
7
10
9
11
4
6
16
13
4
17
14
12
15

Base, warning over stand-up controls (HS10)

Pos	Qty.	Part no.	Description	Remarks
1	1	28077	Cable with plug	
2	4	30346	Screw, stainless	4,0 x 20
3	1	29322	Plug, 12-polar for RCL 53XX	
4	1	28719	Wiring, standard	
5	1	29307	Cable lead-in	
6	1	29319	Plug, 8-polar for RCL 53XX	
7	1	29320	Plug, 9-polar for RCL 53XX	
8	1	29321	Plug, 10-polar for RCL 53XX	
9	1	29315	Plug, 3-polar for RCL 53XX	
10	3	29316	Pin	
11	1	28278	Cable 4 x 2.5	3,5 m
12	1	28249	Cable 2 x 0.75	1,3 m
13	1	28258	Plug, solenoid valve	
14	1	28840	Seal	
15	1	28252	Cable	1,3 m
16	1	28257	Plug, spool sensor	

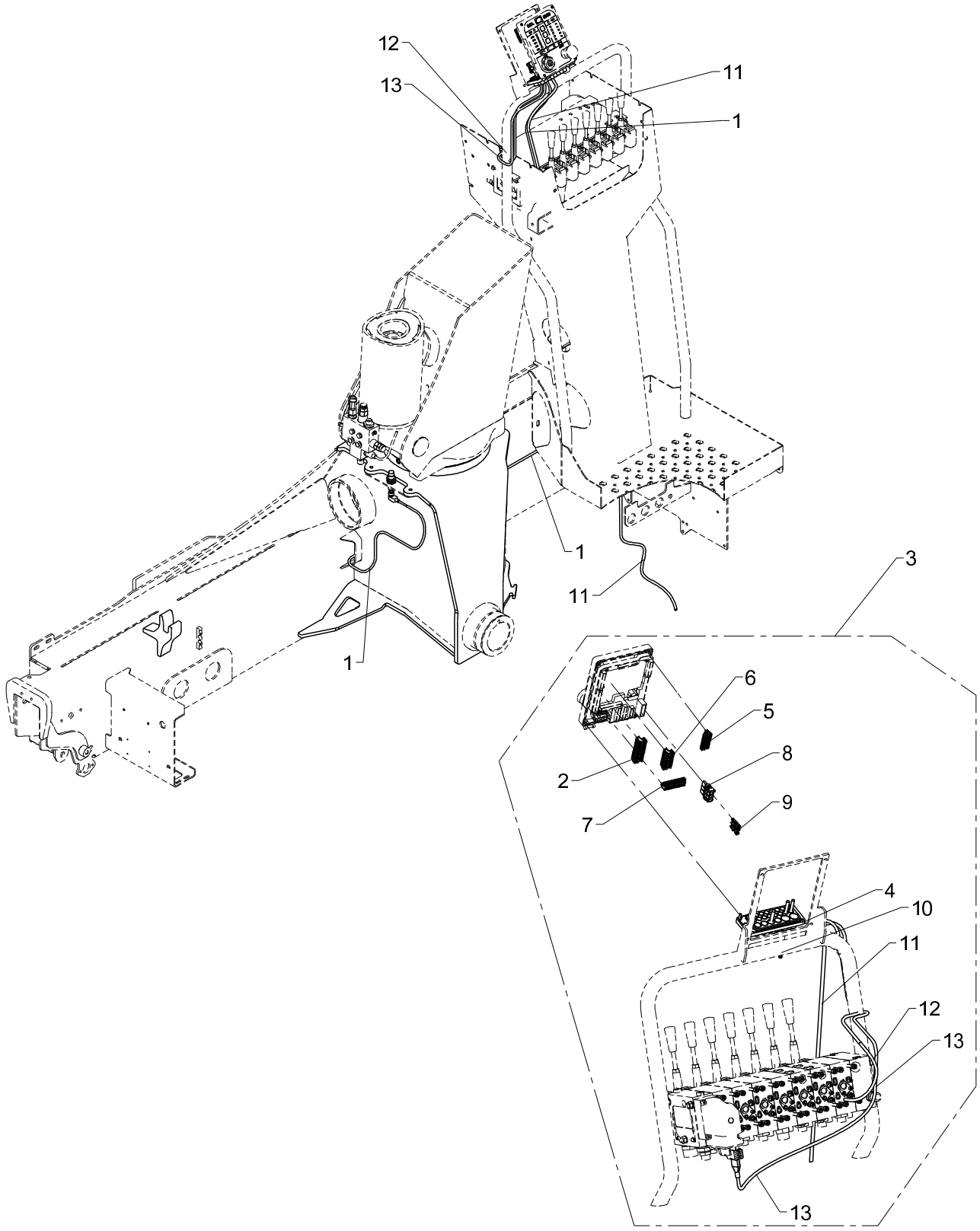
12
13
11
1
1
11
1
3
6
5
8
2
9
7
4
10
11
12
13
13

Base, warning over stand-up controls (HS10), variable flow pump

Pos	Qty.	Part no.	Description	Remarks
1	1	28077	Cable with plug	
2	1	29322	Plug, 12-polar for RCL 53XX	
3	1	7004730	Wiring, base HS, variable pump	
4	1	29307	Cable lead-in	
5	1	29319	Plug, 8-polar for RCL 53XX	
6	1	29320	Plug, 9-polar for RCL 53XX	
7	1	29321	Plug, 10-polar for RCL 53XX	
8	1	29315	Plug, 3-polar for RCL 53XX	
9	3	29316	Pin	
10	4	30346	Screw, stainless	4,0 x 20
11	1	28278	Cable 4 x 2.5	3,5 m
12	1	28267	Cable, spool sensor, boom	1,3 m
13	1	58951	Cable, AMP grey	

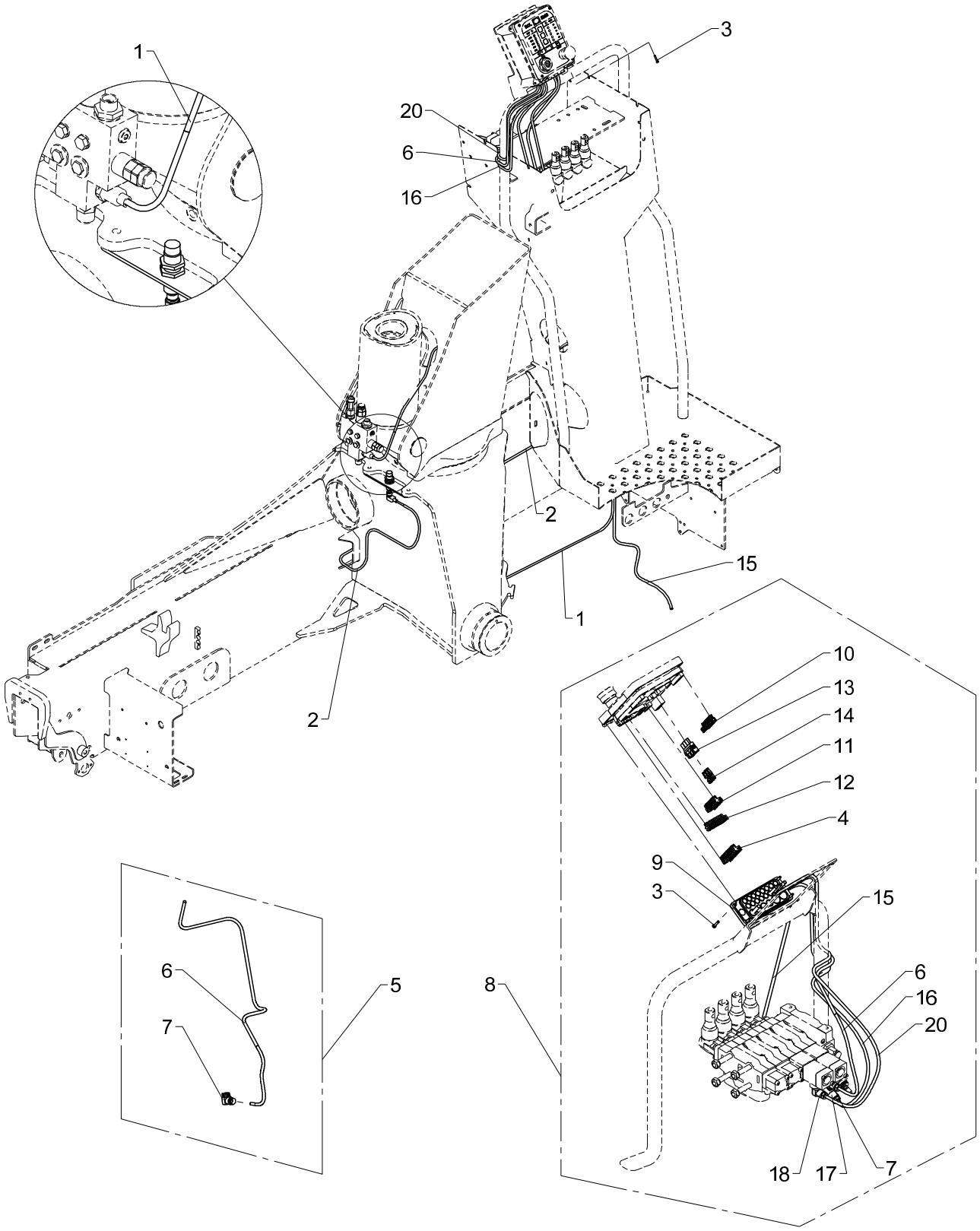
1
3
20
6
16
2
15
1
2
10
13
14
11
12
4
9
3
15
6
16
20
8
5
6
7
18
17
7

Base, electronic slewing limitation (HS10)

Pos	Qty.	Part no.	Description	Remarks
1	1	29224	Cable with socket, 5 m	
2	1	28077	Cable with plug	
3	4	30346	Screw, stainless	4,0 x 20
4	1	29322	Plug, 12-polar for RCL 53XX	
5	1	28294	Cable, spool sensor	
6	1	28252	Cable	1,3 m
7	1	28257	Plug, spool sensor	
8	1	28719	Wiring, standard	
9	1	29307	Cable lead-in	
10	1	29319	Plug, 8-polar for RCL 53XX	
11	1	29320	Plug, 9-polar for RCL 53XX	
12	1	29321	Plug, 10-polar for RCL 53XX	
13	1	29315	Plug, 3-polar for RCL 53XX	
14	3	29316	Pin	
15	1	28278	Cable 4 x 2.5	3,5 m
16	1	28249	Cable 2 x 0.75	1,3 m
17	1	28258	Plug, solenoid valve	
18	1	28257	Plug, spool sensor	
19	1	28840	Seal	
20	1	28252	Cable	1,3 m

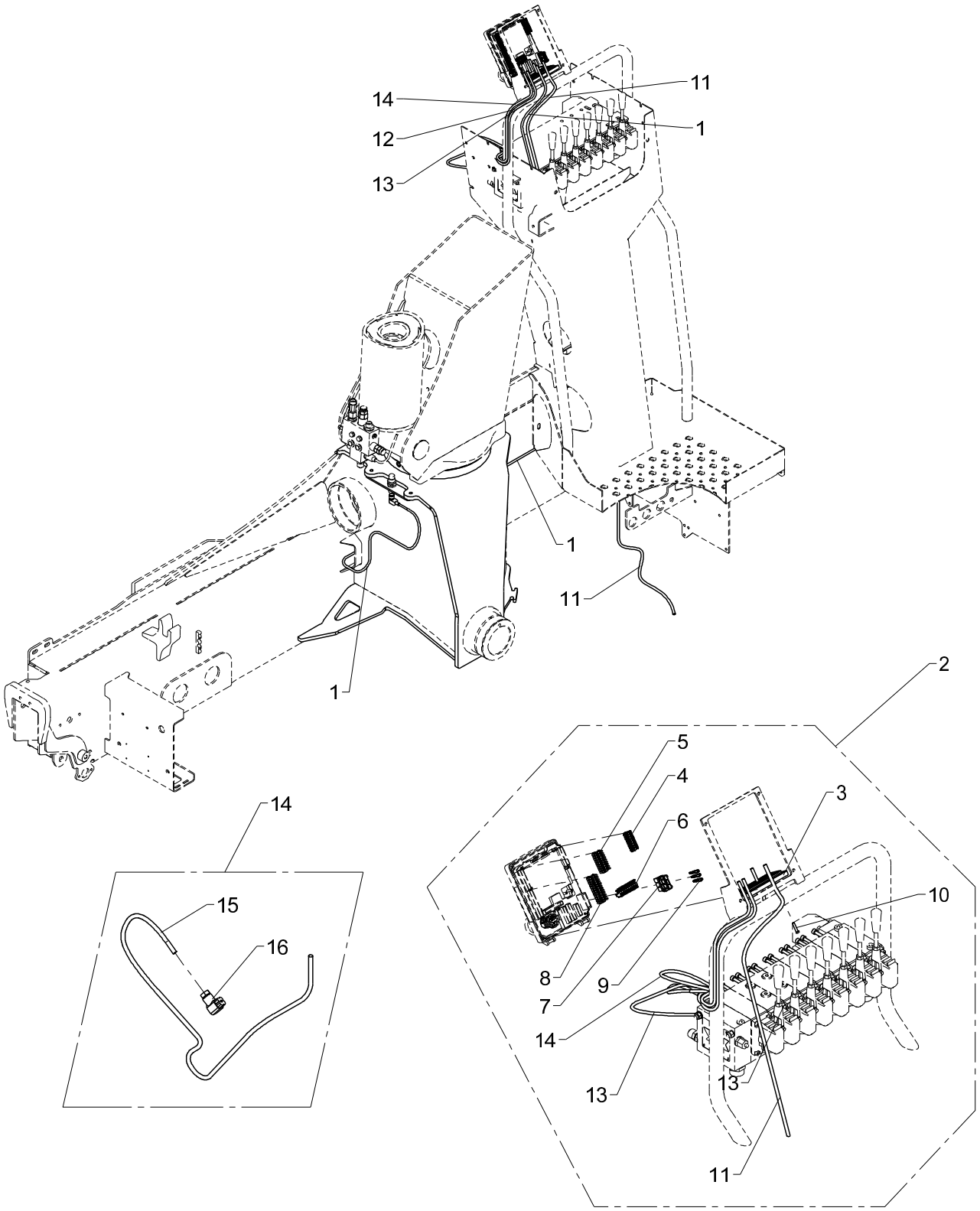
14
12
13
11
1
1
11
1
2
5
4
6
3
10
8
9
7
14
13
13
11
14
15
16

Base, electronic slewing limitation (HS10), variable flow pump

Pos	Qty.	Part no.	Description	Remarks
1	1	28077	Cable with plug	
2	1	7004730	Wiring, base HS, variable pump	
3	1	29307	Cable lead-in	
4	1	29319	Plug, 8-polar for RCL 53XX	
5	1	29320	Plug, 9-polar for RCL 53XX	
6	1	29321	Plug, 10-polar for RCL 53XX	
7	1	29315	Plug, 3-polar for RCL 53XX	
8	1	29322	Plug, 12-polar for RCL 53XX	
9	3	29316	Pin	
10	4	30346	Screw, stainless	4,0 x 20
11	1	28278	Cable 4 x 2.5	3,5 m
12	1	28267	Cable, spool sensor, boom	1,3 m
13	1	58951	Cable, AMP grey	
14	1	28294	Cable, spool sensor	1,3 m
15	1	28252	Cable	1,3 m
16	1	28257	Plug, spool sensor	

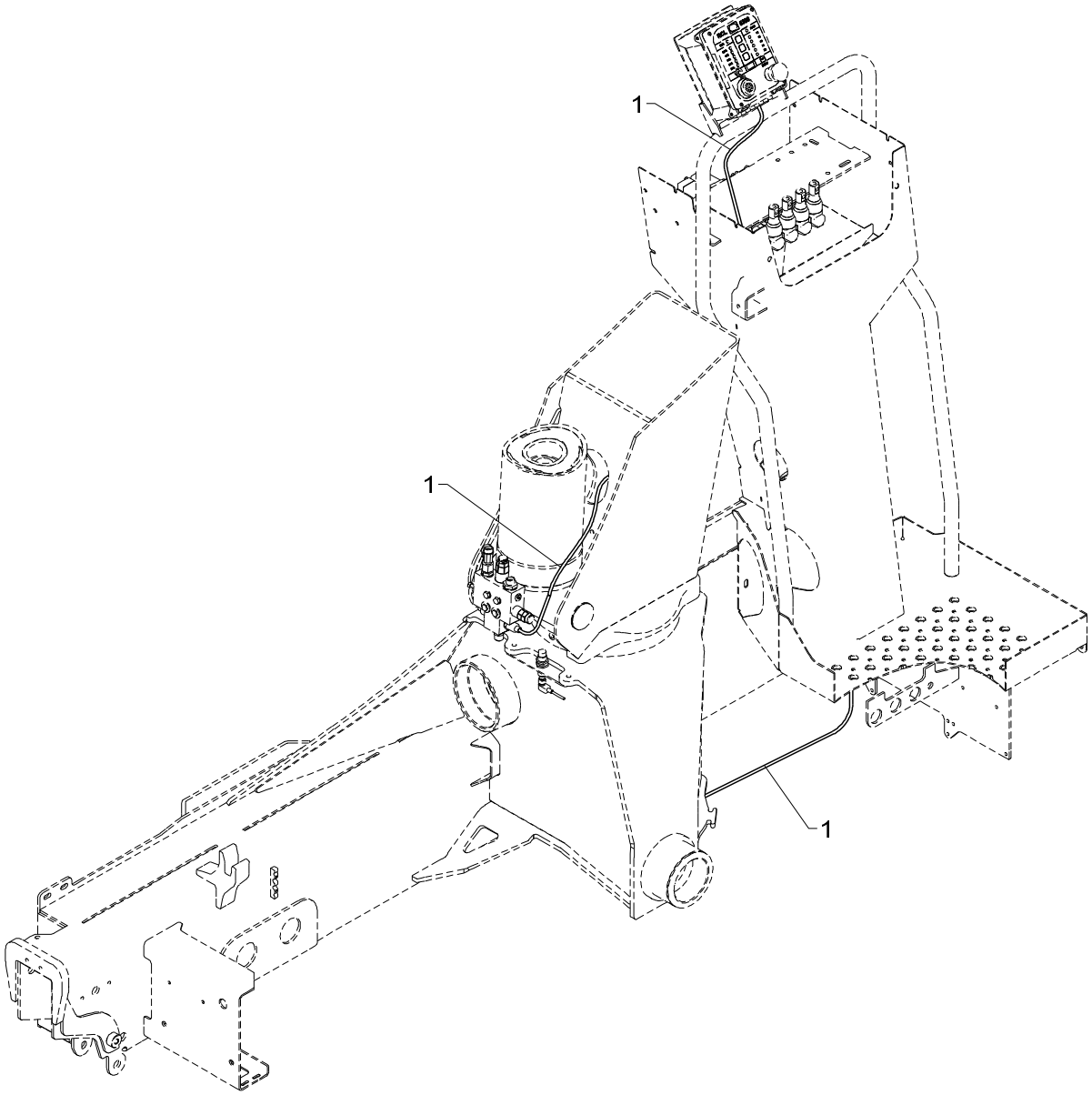
1
1
1

Column, HS10

Pos	Qty.	Part no.	Description	Remarks
1	1	29224	Cable with socket, 5 m	

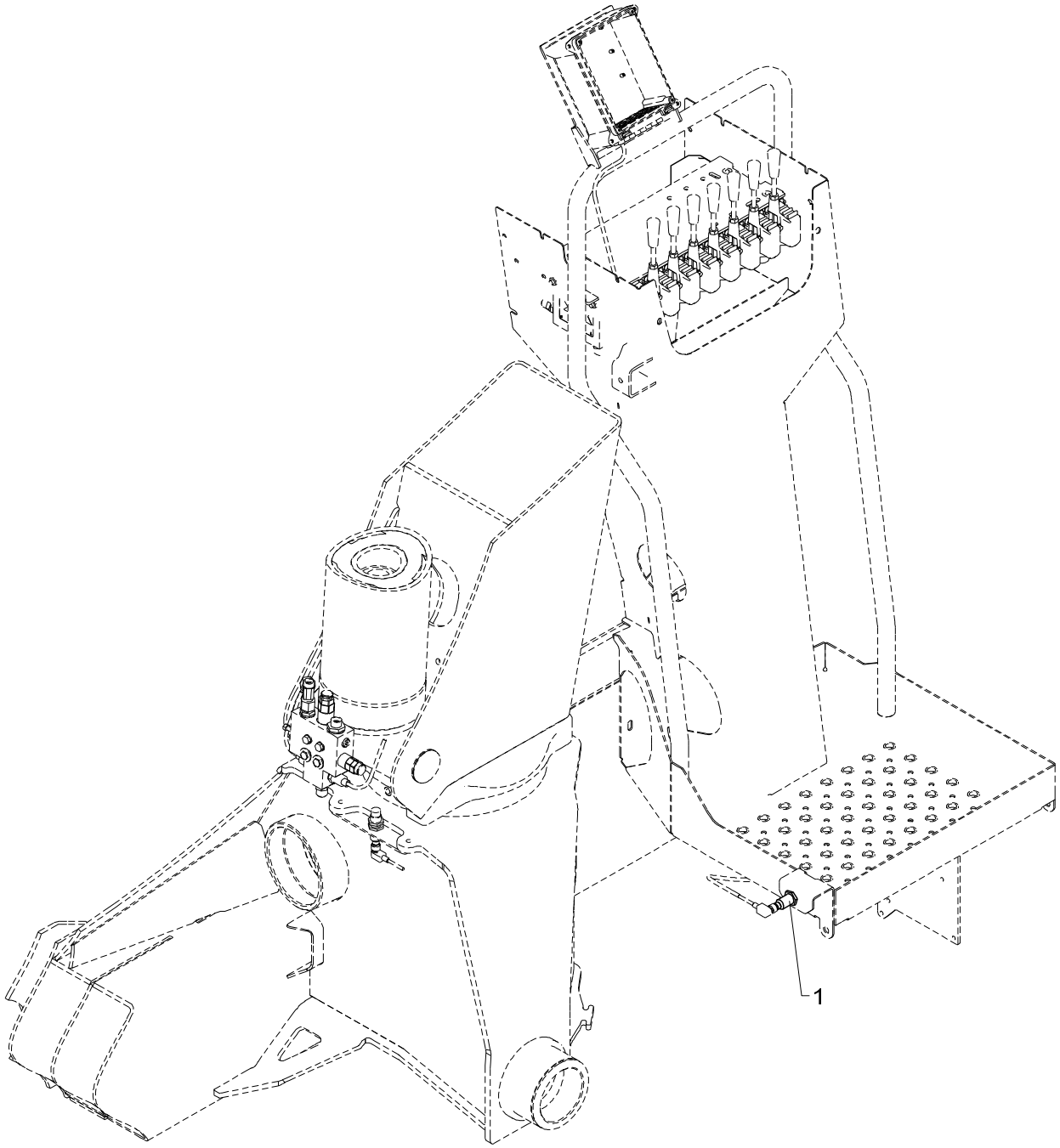
1

HS10 sensor on platform

From loader 1070001
To loader

Created 01-05-2009
Modified

Pos	Qty.	Part no.	Description	Remarks
1	1	28210	Proximity switch	

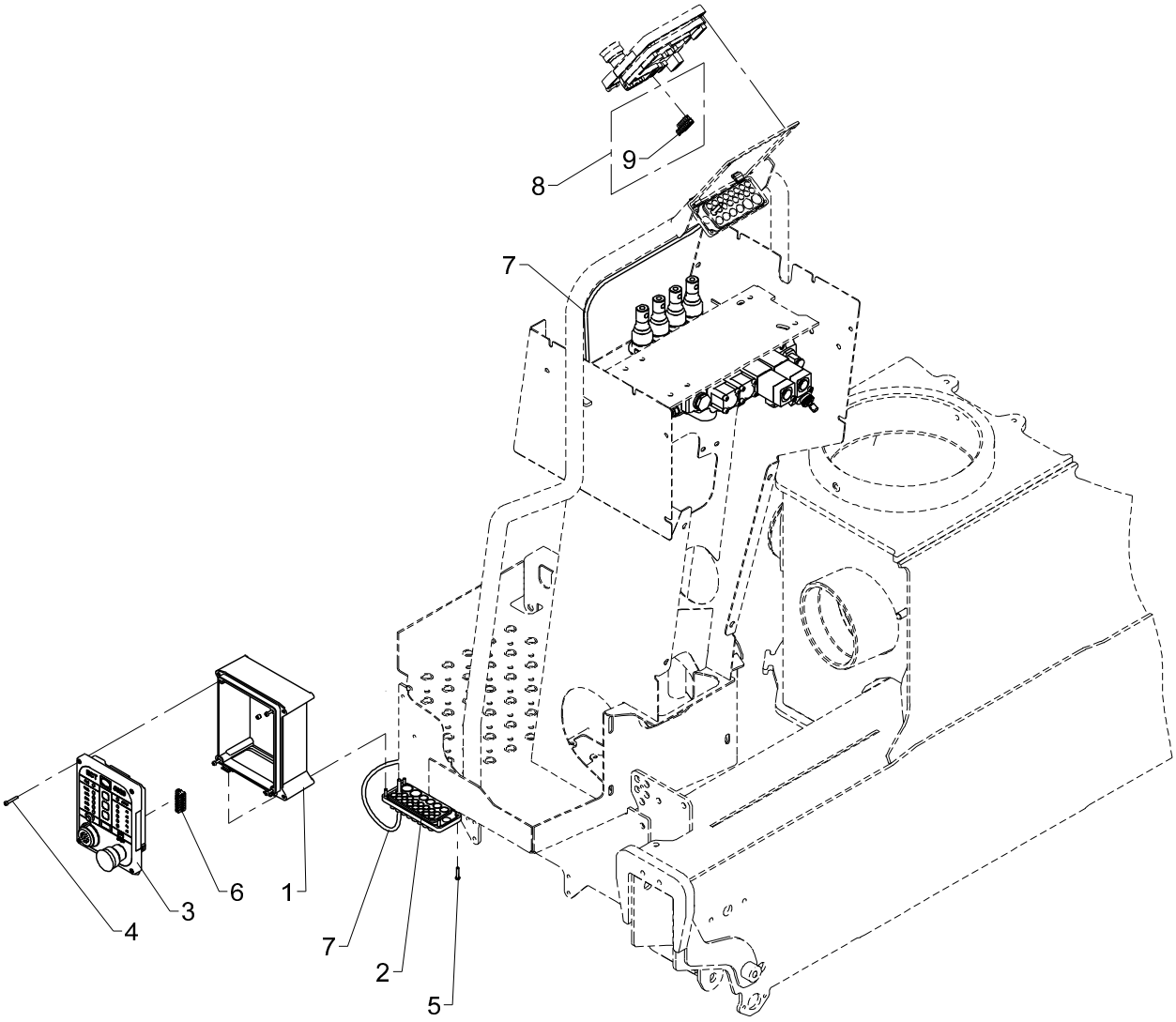
9
8
7
4
3
6
1
7
2
5

ECT 5320 compl. + 3.5m cable

Pos	Qty.	Part no.	Description	Remarks
1	1	29304	Bottom f. RCL-box incl. hinge	
2	1	29307	Cable lead-in	
3	1	29303	Front complete, ECT5320	
4	4	30347	Screw, stainless	4,0 x 25
5	4	30346	Screw, stainless	4,0 x 20
6	1	29318	Plug, 7-polar for RCL 53XX	
7	1	28263	CAN BUS cable	3,5 m
8	1	7004340	Plug, 7-polar for RCL	
9	1	29318	Plug, 7-polar for RCL 53XX	

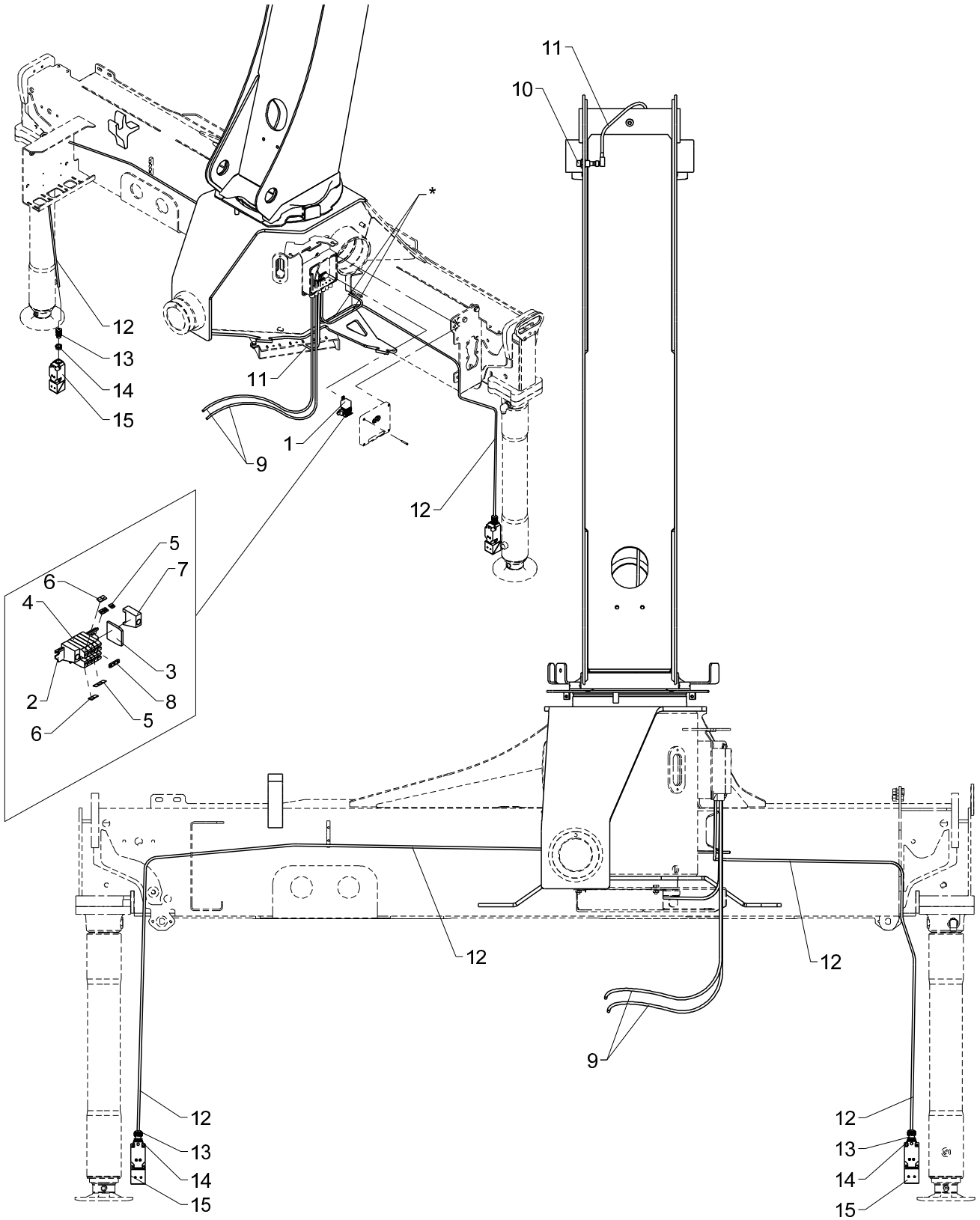
11
10
*
12
13
14
15
11
1
9
12
5
7
6
4
3
2
8
5
6
12
12
9
12
13
14
15
12
13
14
15

CYBEW Transport alarm stabilizer leg and beam

Pos	Qty.	Part no.	Description	Remarks
1	1	27342	Relay, 24V	
2	1	28013	Guide rail	60 mm.
3	1	28011	End plate	
4	5	28010	Terminal	
5	2	28020	Labels nos. 11-20	
6	2	28211	Labels, "-"	
7	2	28012	End angle	
8	1	28014	Fish plate	
9	1	28249	Cable 2 x 0.75	8 m
10	1	28980	Proximity switch	
11	1	28077	Cable with plug	
12	1	28262	Cable 4 x 0.75	8 m
13	2	28246	Bushing	
14	2	27866	Socket	
15	2	27598	Proximity switch	

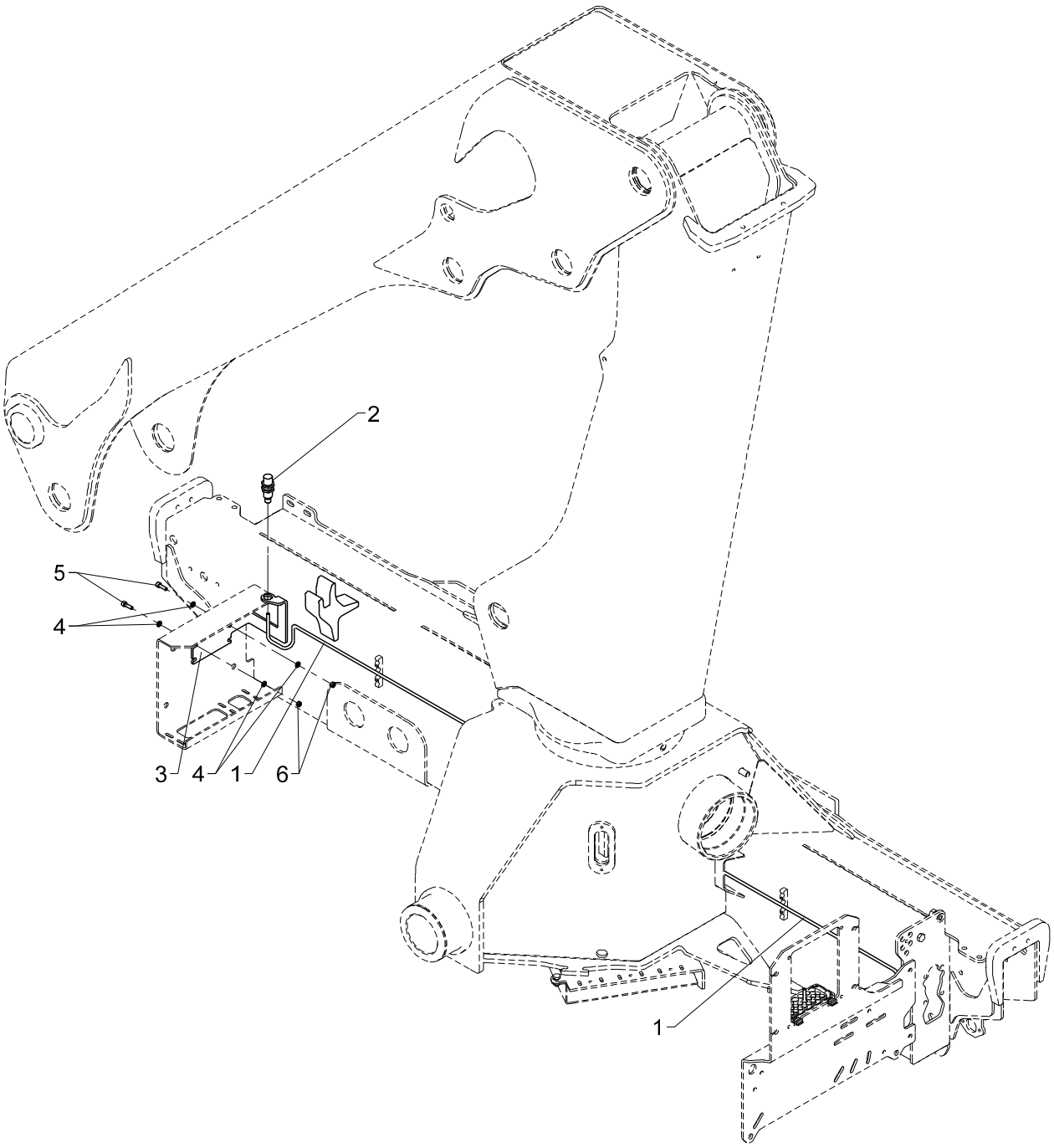
2
5
4
3
4
1
6
1

PAW, transport alarm - stowing of loader

Pos	Qty.	Part no.	Description	Remarks
1	1	28902	Cable with plug, 10 m.	
2	1	29124	Proximity switch	
3	1	6340947	Mounting fittings, trans.alarm	
4	4	32302	Face washer, stainless	6 mm
5	2	30427	Screw	MC6 x 20
6	2	30854	Nut, stainless	M6

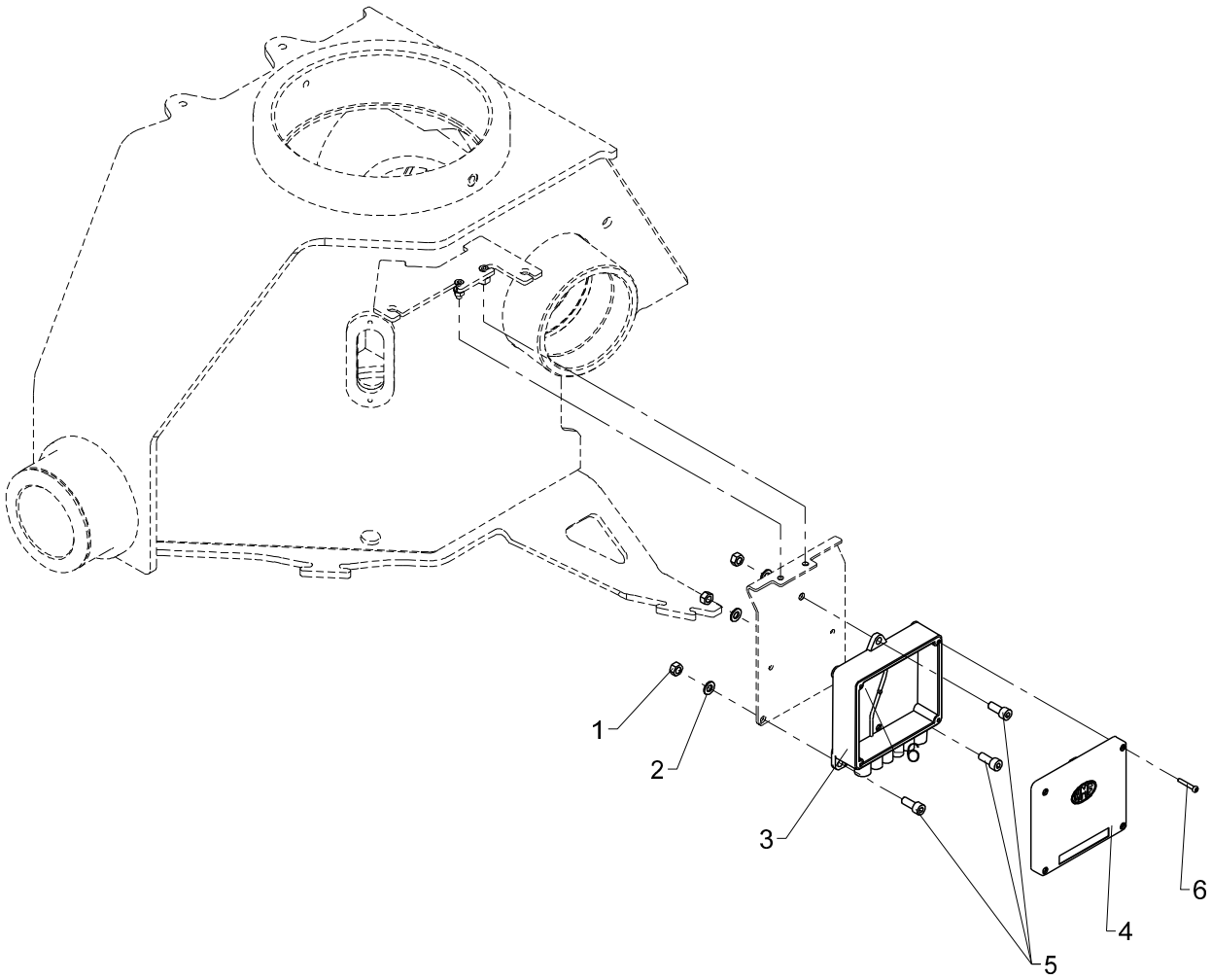
1
2
3
6
5
4
6

Junction box, various electric parts

Pos	Qty.	Part no.	Description	Remarks
1	3	30856	Nut, stainless	M8
2	3	31147	Face washer, 8 mm	
3	1	29313	Bottom f. Fly-Jib box	
4	1	29314	Cover for Fly-Jib box	
5	3	30438	Screw	MC8 x 20
6	4	30347	Screw, stainless	4,0 x 25

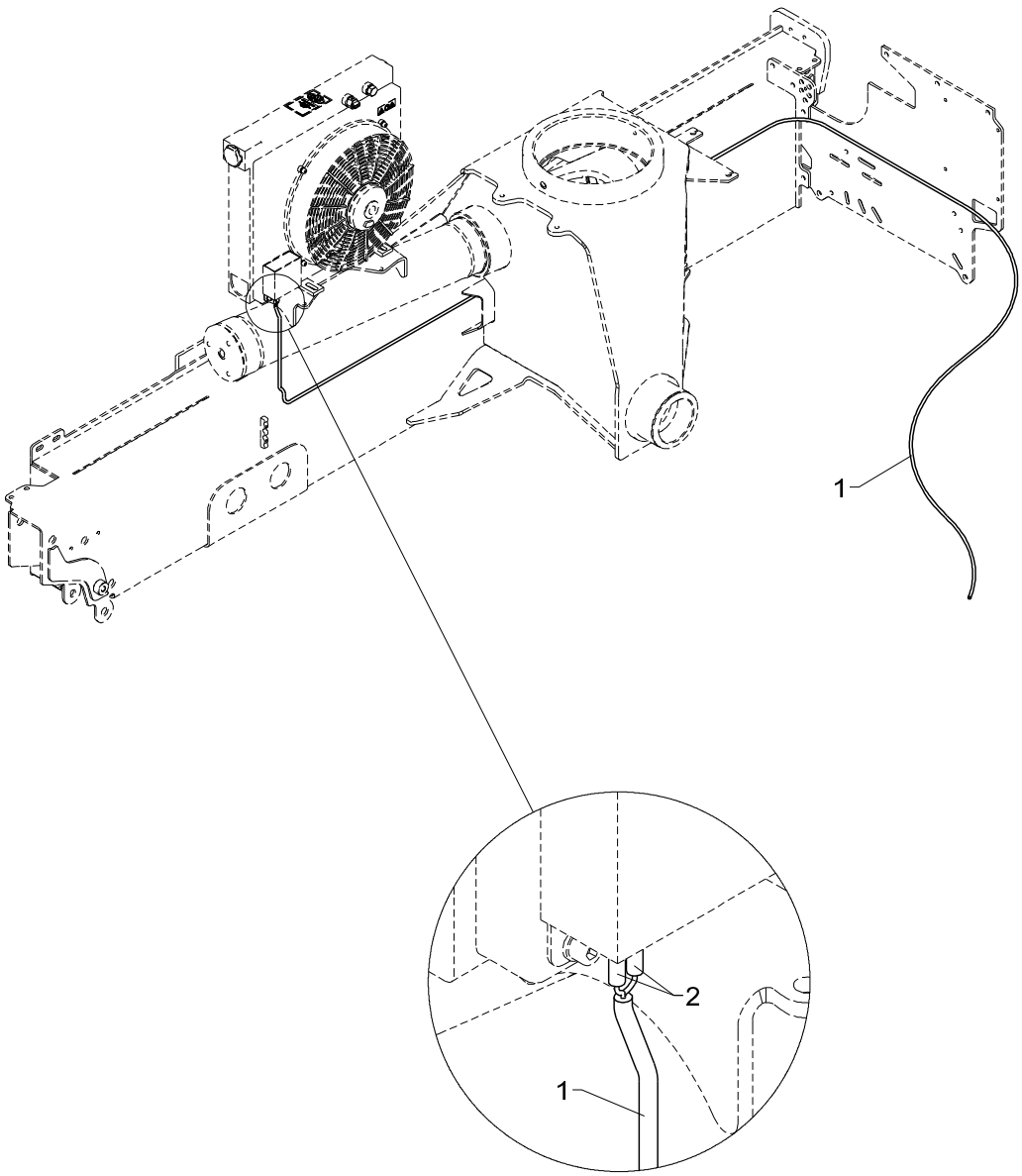
1
2
1

Oil cooler supply

535 21 360

From loader 1070001
To loader

Created 01-03-2013
Modified

Pos	Qty.	Part no.	Description	Remarks
1	1	27215	Wire 2 x 1.5	5,0 m
2	2	27429	Clamp	

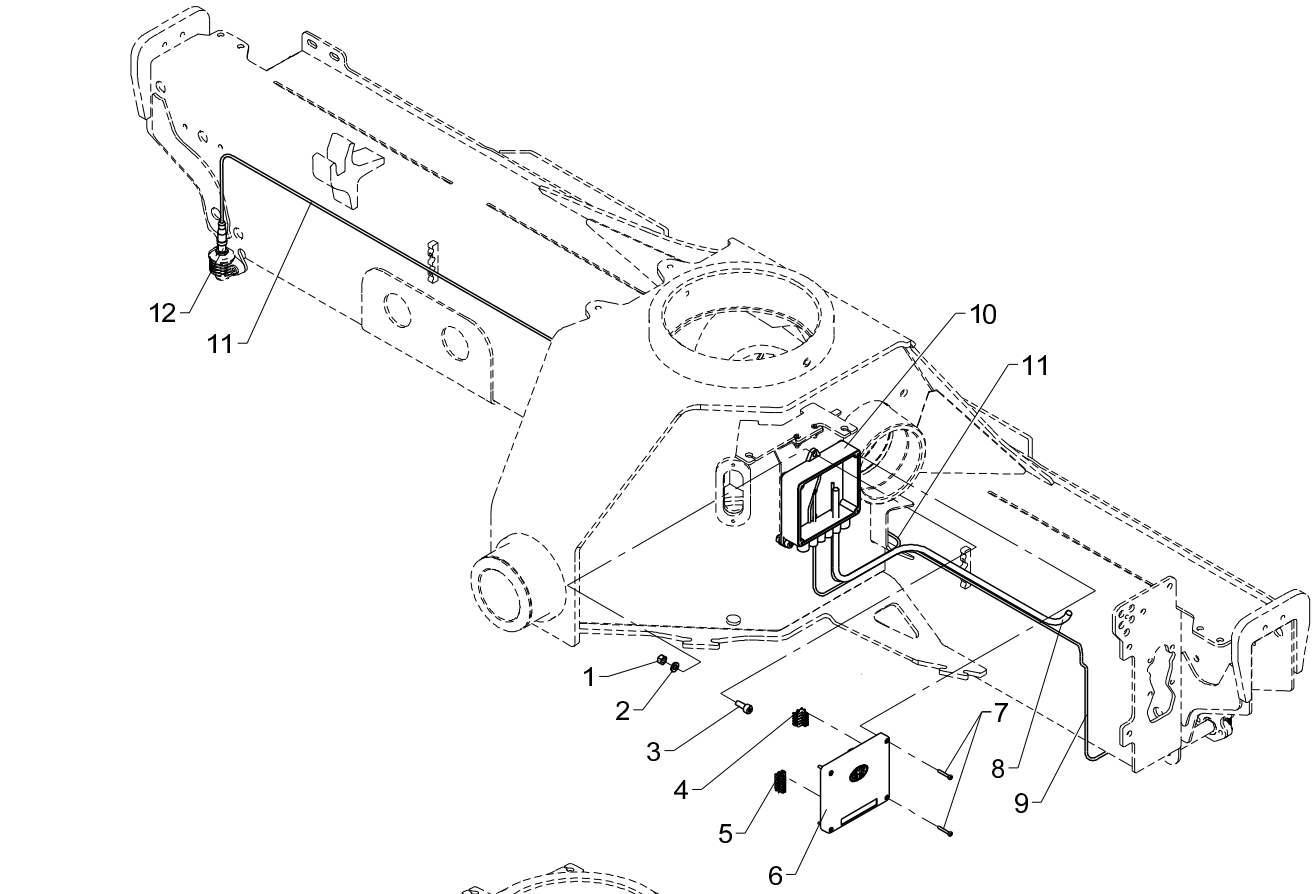
12
11
10
11
1
2
3
4
5
6
7
8
9

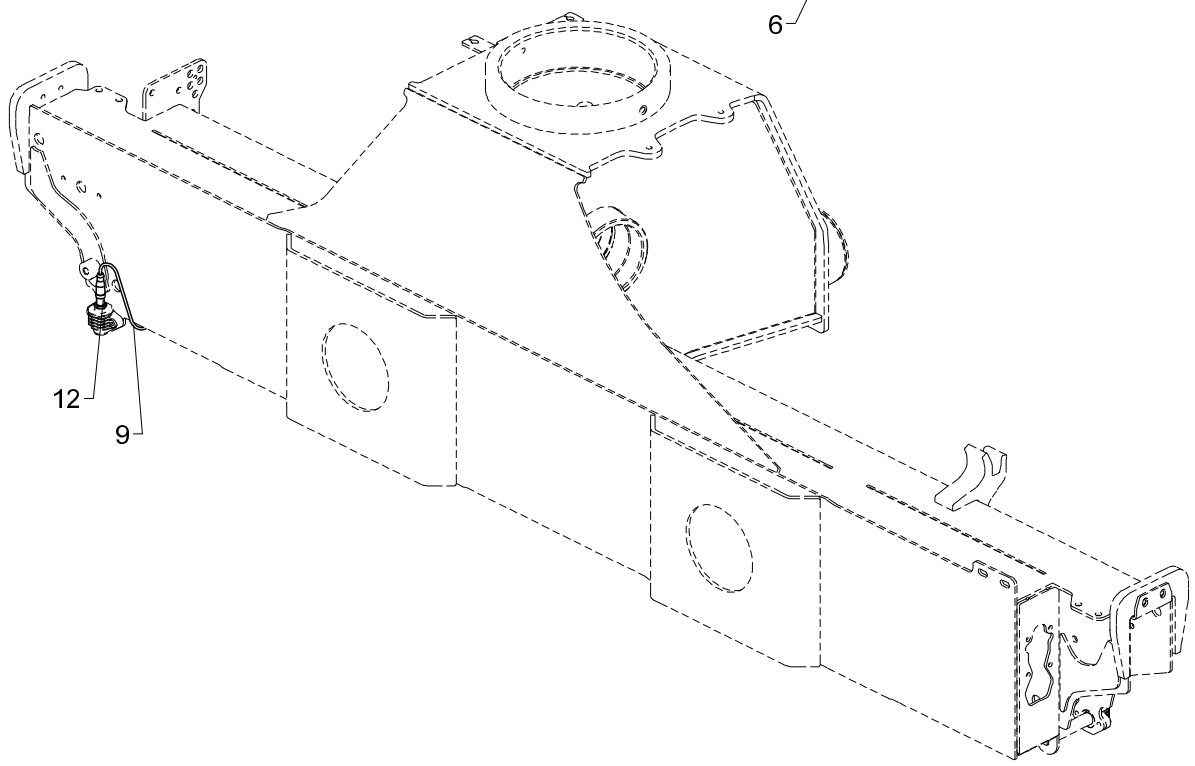
12
9

CYL, 12-23

Pos	Qty.	Part no.	Description	Remarks
1	3	30856	Nut, stainless	M8
2	3	31147	Face washer, 8 mm	
3	3	30438	Screw	MC8 x 20
4	1	29317	Plug, 5-polar for RCL 53XX	
5	1	29324	Plug, 6-polar for RCL 53XX	
6	1	29346	CIO5376 controller cover cpl.	
7	4	30347	Screw, stainless	4,0 x 25
8	1	28263	CAN BUS cable	1.5 m
9	1	29223	Cable with socket, 2 m	
10	1	29313	Bottom f. Fly-Jib box	
11	1	29224	Cable with socket, 5 m	
12	2	29257	Proximity switch M12x44, 4mm	

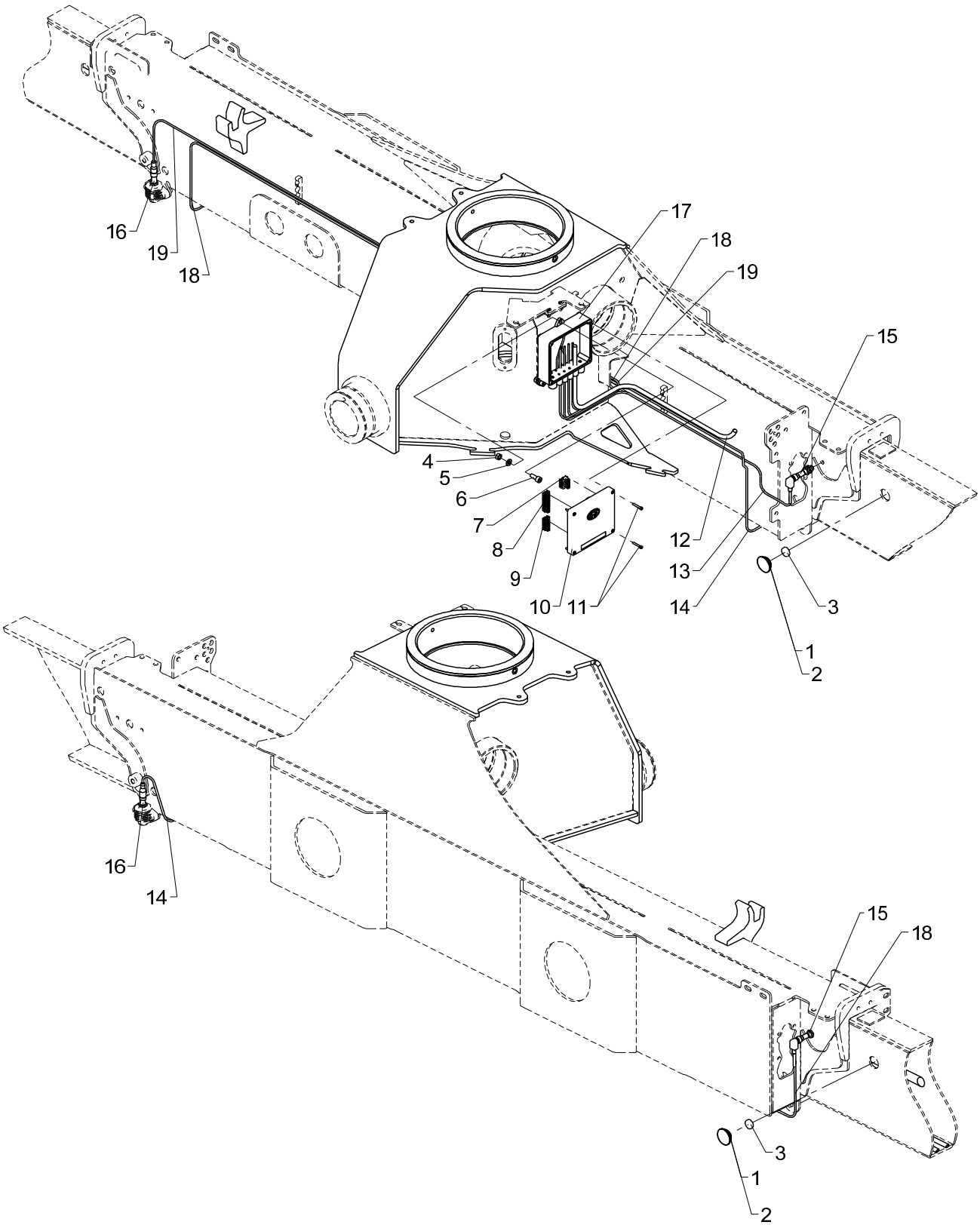
16
19
18
17
18
19
15
4
5
6
7
8
9
10
11
12
13
14
3
1
2
16
14
15
18
3
1
2

CYBEL, single extension, 12-23

Pos	Qty.	Part no.	Description	Remarks
1	2	64424	Slide block	2 mm
2	2	63681	Slide block	3 mm
3	2	29262	Solenoid Ø22x5	
4	3	30856	Nut, stainless	M8
5	3	31147	Face washer, 8 mm	
6	3	30438	Screw	MC8 x 20
7	1	29317	Plug, 5-polar for RCL 53XX	
8	1	29321	Plug, 10-polar for RCL 53XX	
9	1	29324	Plug, 6-polar for RCL 53XX	
10	1	29346	CIO5376 controller cover cpl.	
11	4	30347	Screw, stainless	4,0 x 25
12	1	28263	CAN BUS cable	2 m
13	1	28117	Cable with plug	
14	1	29223	Cable with socket, 2 m	
15	2	29259	Magnet proximity switch M12	
16	2	29257	Proximity switch M12x44, 4mm	
17	1	29313	Bottom f. Fly-Jib box	
18	1	28077	Cable with plug	
19	1	29224	Cable with socket, 5 m	

18/129, 20/138, 22/153

Internal ref. 70 05 480

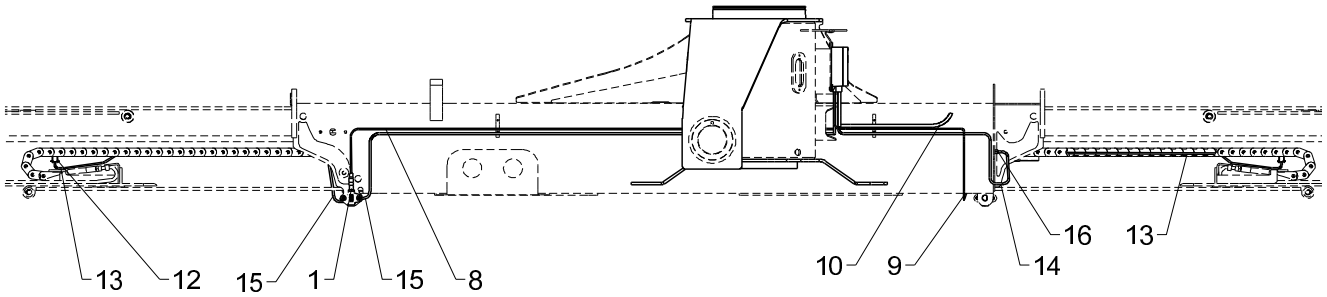

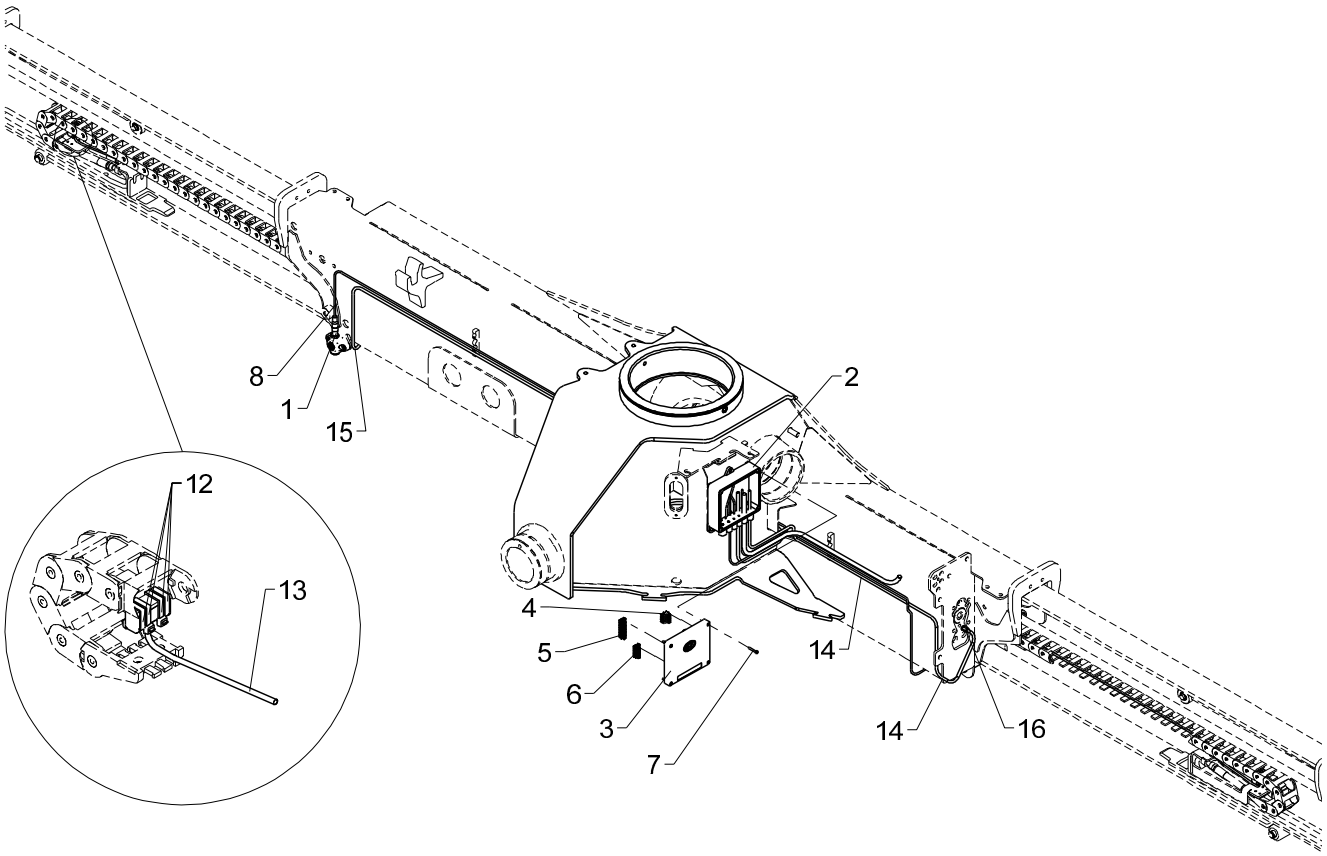

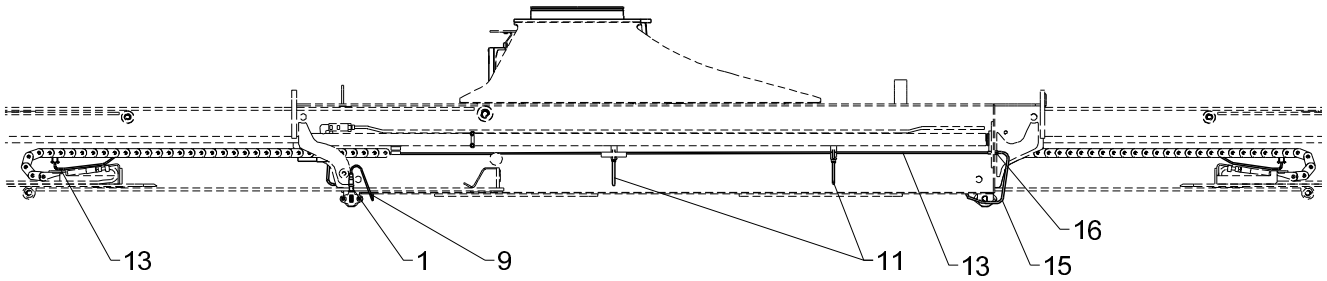

CYBEL double extension 12-23

Pos	Qty.	Part no.	Description	Remarks
1	2	29257	Proximity switch M12x44, 4mm	
2	1	29313	Bottom f. Fly-Jib box	
3	1	29346	CIO5376 controller cover cpl.	
4	1	29317	Plug, 5-polar for RCL 53XX	
5	1	29321	Plug, 10-polar for RCL 53XX	
6	1	29324	Plug, 6-polar for RCL 53XX	
7	4	30347	Screw, stainless	4,0 x 25
8	1	29224	Cable with socket, 5 m	
9	1	29223	Cable with socket, 2 m	
10	1	28263	CAN BUS cable	
11	2	27275	Cable tie, black, 7.6x385mm	
12	8	27274	Clip	
13	2	29253	Tilt sensor, nylon drag chain	
14	1	29265	Cable 2 m, M8 socket	
15	1	29264	Cable 5 m, M8 socket	
16	2	29443	Panel lead-in M8 - 3-polar	

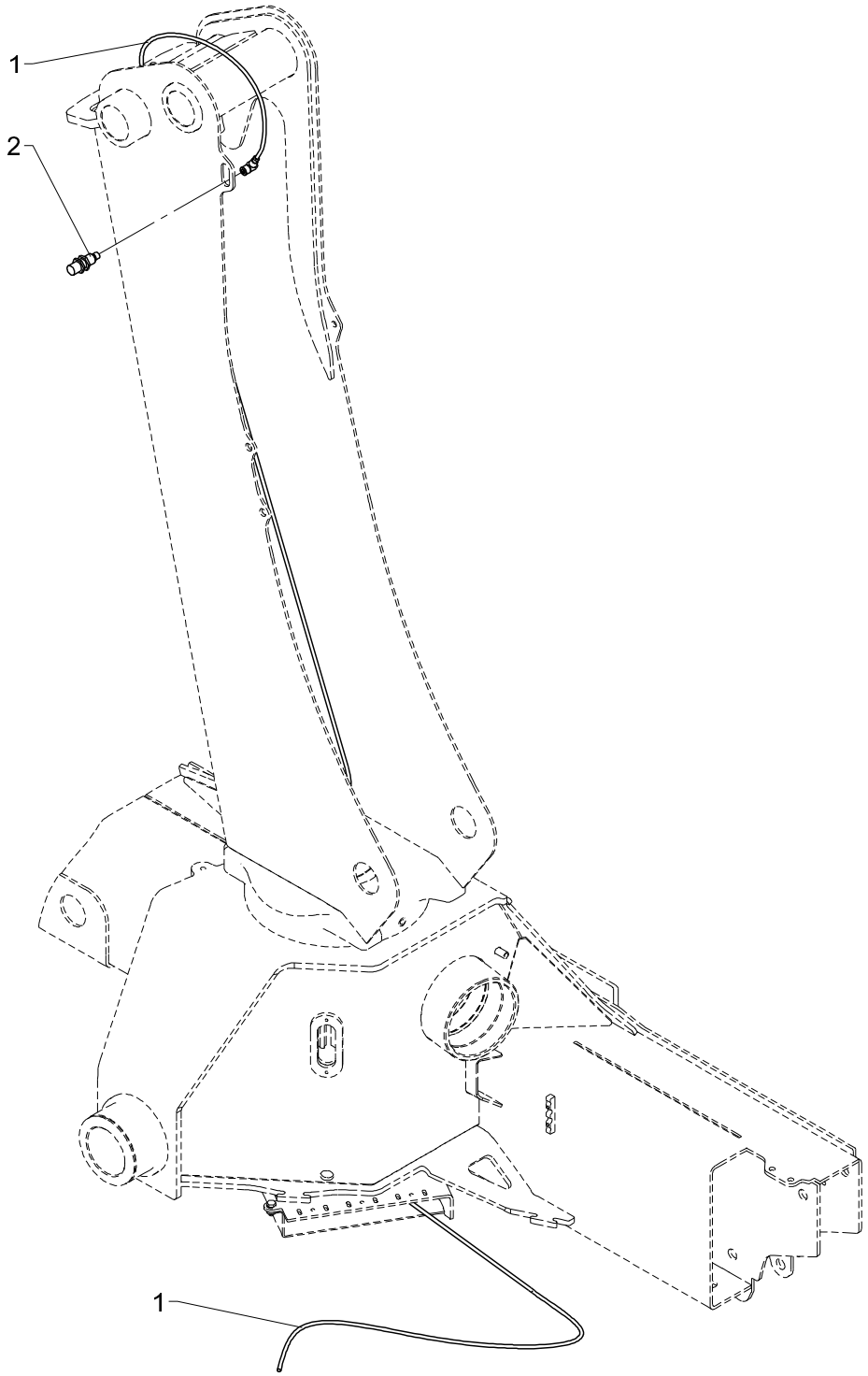
1
2
1

Height indicateur

Pos	Qty.	Part no.	Description	Remarks
1	1	28902	Cable with plug, 10 m.	
2	1	29124	Proximity switch	

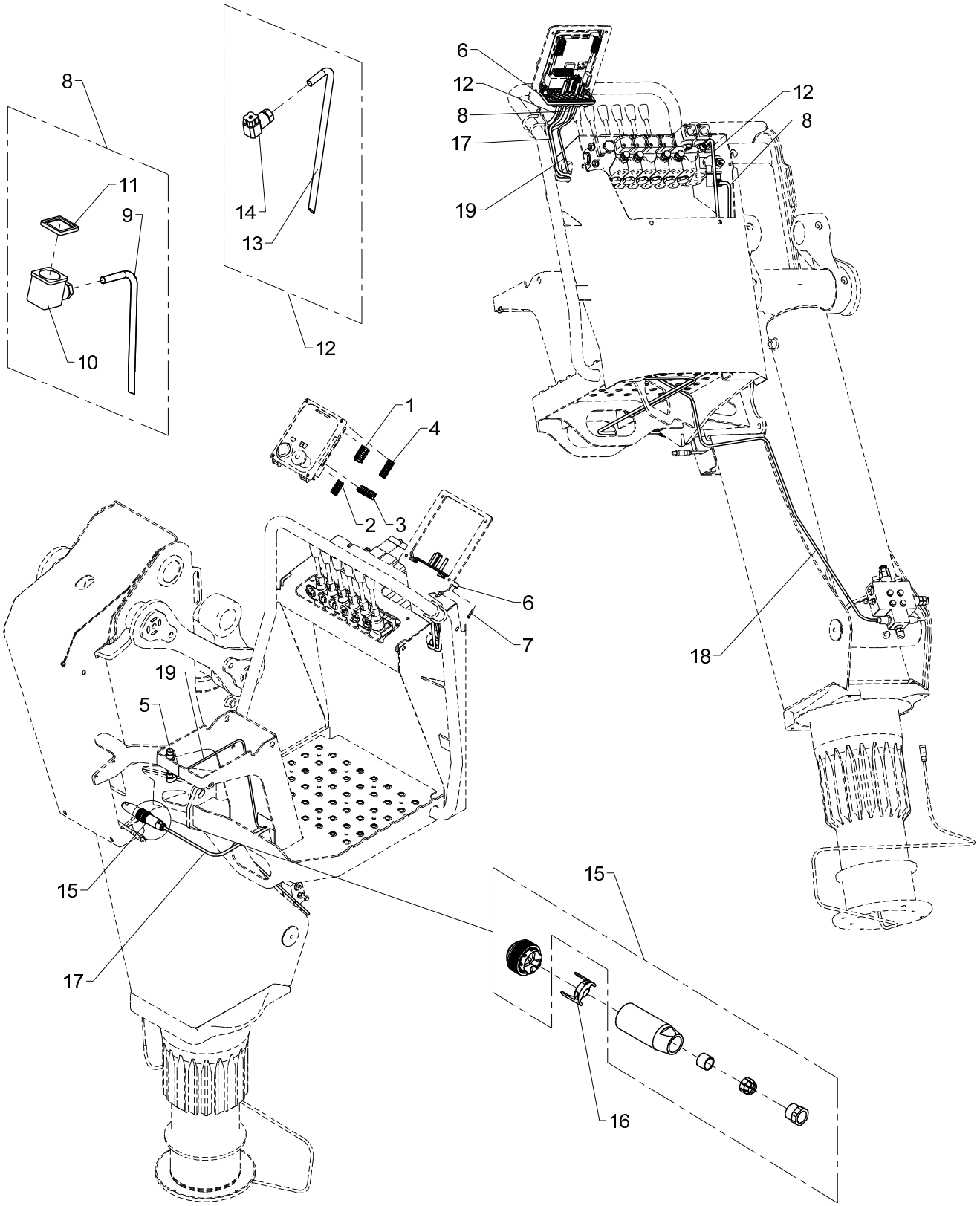
8
11
9
10
14
13
12
6
12
8
17
19
12
8
18
1
4
2
3
6
7
19
5
15
17
15
16

TS platform, 1-circuit fixed flow pump

Created 31-03-2010
Modified 16-06-2010

Pos	Qty.	Part no.	Description	Remarks
1	1	29319	Plug, 8-polar for RCL 53XX	
2	1	29318	Plug, 7-polar for RCL 53XX	
3	1	29321	Plug, 10-polar for RCL 53XX	
4	1	29320	Plug, 9-polar for RCL 53XX	
5	1	28210	Proximity switch	
6	1	29307	Cable lead-in	
7	4	30346	Screw, stainless	4,0 x 20
8	1	28265	Cable, dump valve, 1.35 m	
9	1	28249	Cable 2 x 0.75	1,4 m
10	1	28258	Plug, solenoid valve	
11	1	28840	Seal	
12	1	28294	Cable, spool sensor	1,3 m
13	1	28252	Cable	1,3 m
14	1	28257	Plug, spool sensor	
15	1	29230	Plug	
16	1	29236	Cable clamp	
17	1	28263	CAN BUS cable	2,5 m
18	1	29224	Cable with socket, 5 m	
19	1	28117	Cable with plug	

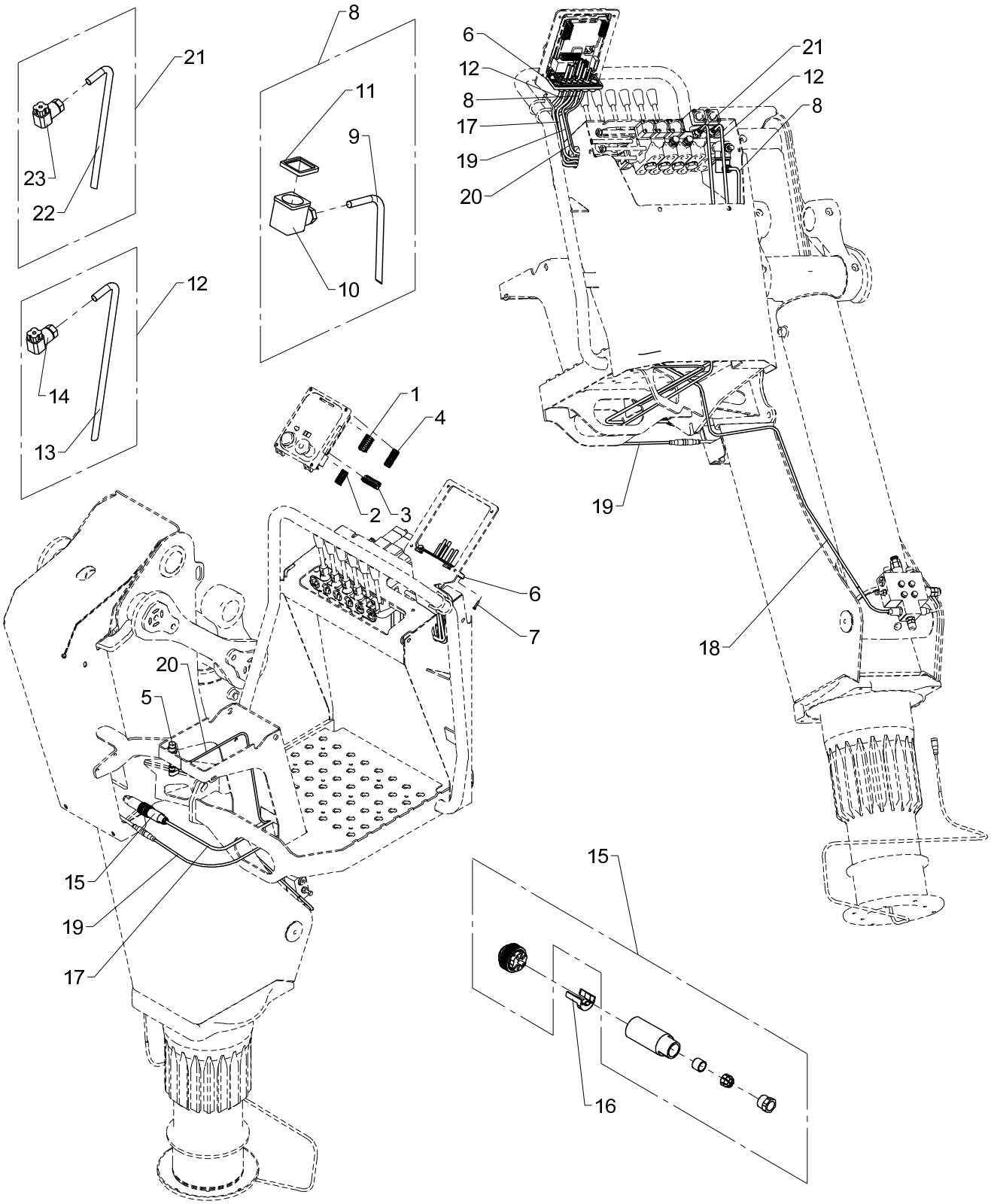
8
21
11
9
23
22
10
12
14
13
6
12
8
17
19
20
21
12
8
1
4
2
3
19
6
7
18
20
5
15
19
17
15
16

TS platform, 1-circuit fixed flow pump, 2-stage LMB

Pos	Qty.	Part no.	Description	Remarks
1	1	29319	Plug, 8-polar for RCL 53XX	
2	1	29318	Plug, 7-polar for RCL 53XX	
3	1	29321	Plug, 10-polar for RCL 53XX	
4	1	29320	Plug, 9-polar for RCL 53XX	
5	1	28210	Proximity switch	
6	1	29307	Cable lead-in	
7	4	30346	Screw, stainless	4,0 x 20
8	1	28265	Cable, dump valve, 1.35 m	
9	1	28249	Cable 2 x 0.75	1,4 m
10	1	28258	Plug, solenoid valve	
11	1	28840	Seal	
12	1	28294	Cable, spool sensor	1,3 m
13	1	28252	Cable	1,3 m
14	1	28257	Plug, spool sensor	
15	1	29230	Plug	
16	1	29236	Cable clamp	
17	1	28263	CAN BUS cable	2,5 m
18	1	29224	Cable with socket, 5 m	
19	1	29223	Cable with socket, 2 m	
20	1	28117	Cable with plug	
21	1	28267	Cable, spool sensor, boom	1,3 m
22	1	28252	Cable	1,3 m
23	1	28257	Plug, spool sensor	

18/129, 20/138, 22/153

Internal ref. 70 04 830

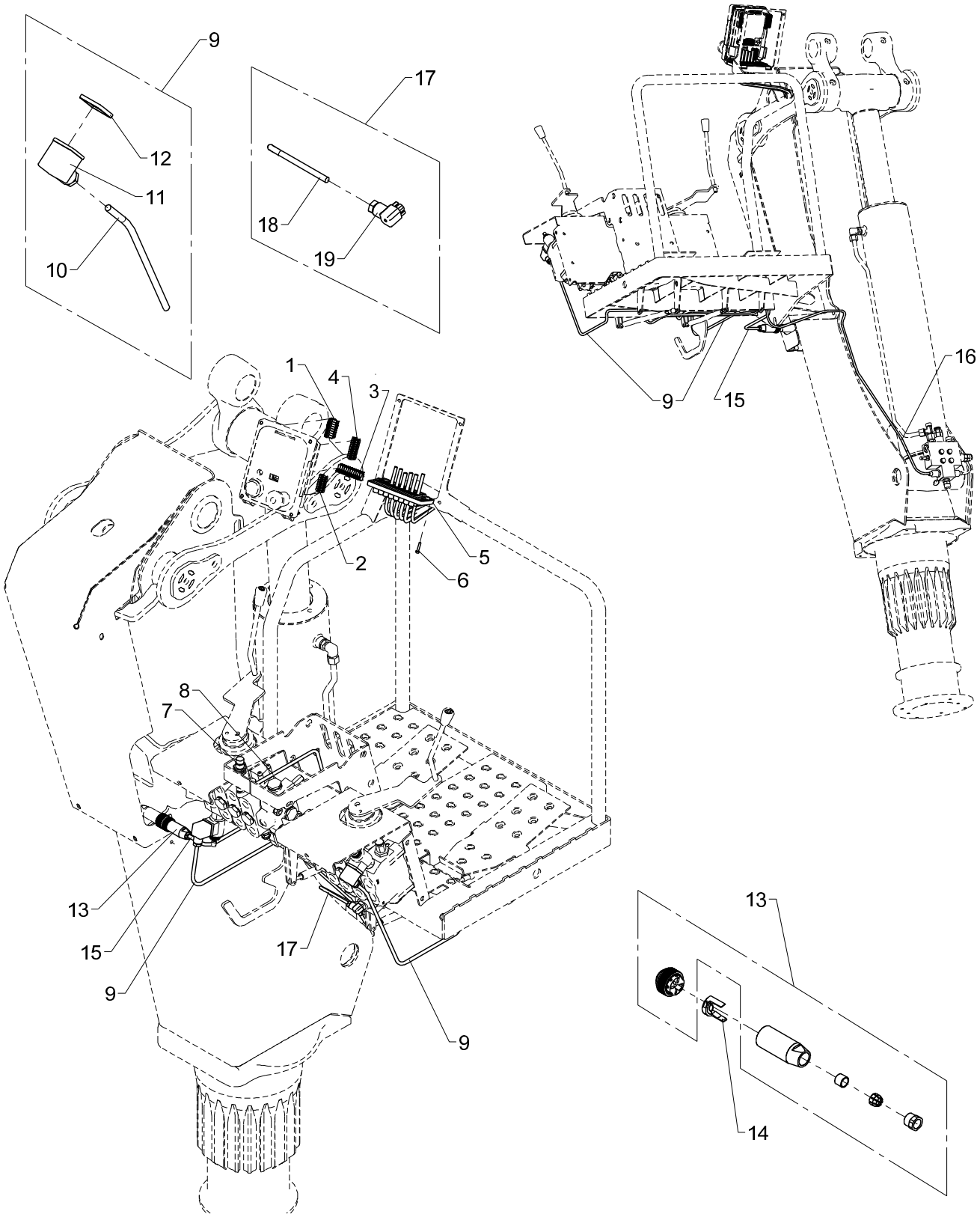

TS platform, 2-circuit fixed flow pump, CE basic system

Pos	Qty.	Part no.	Description	Remarks
1	1	29319	Plug, 8-polar for RCL 53XX	
2	1	29318	Plug, 7-polar for RCL 53XX	
3	1	29322	Plug, 12-polar for RCL 53XX	
4	1	29320	Plug, 9-polar for RCL 53XX	
5	1	29307	Cable lead-in	
6	4	30346	Screw, stainless	4,0 x 20
7	1	28210	Proximity switch	
8	1	28117	Cable with plug	
9	2	28286	Cable, dump valve	
10	2	28249	Cable 2 x 0.75	3 m
11	2	28258	Plug, solenoid valve	
12	2	28840	Seal	
13	1	29230	Plug	
14	1	29236	Cable clamp	
15	1	28263	CAN BUS cable	2 m
16	1	29224	Cable with socket, 5 m	
17	1	28819	Cable, spool sensor	
18	1	28252	Cable	3 m
19	1	28257	Plug, spool sensor	

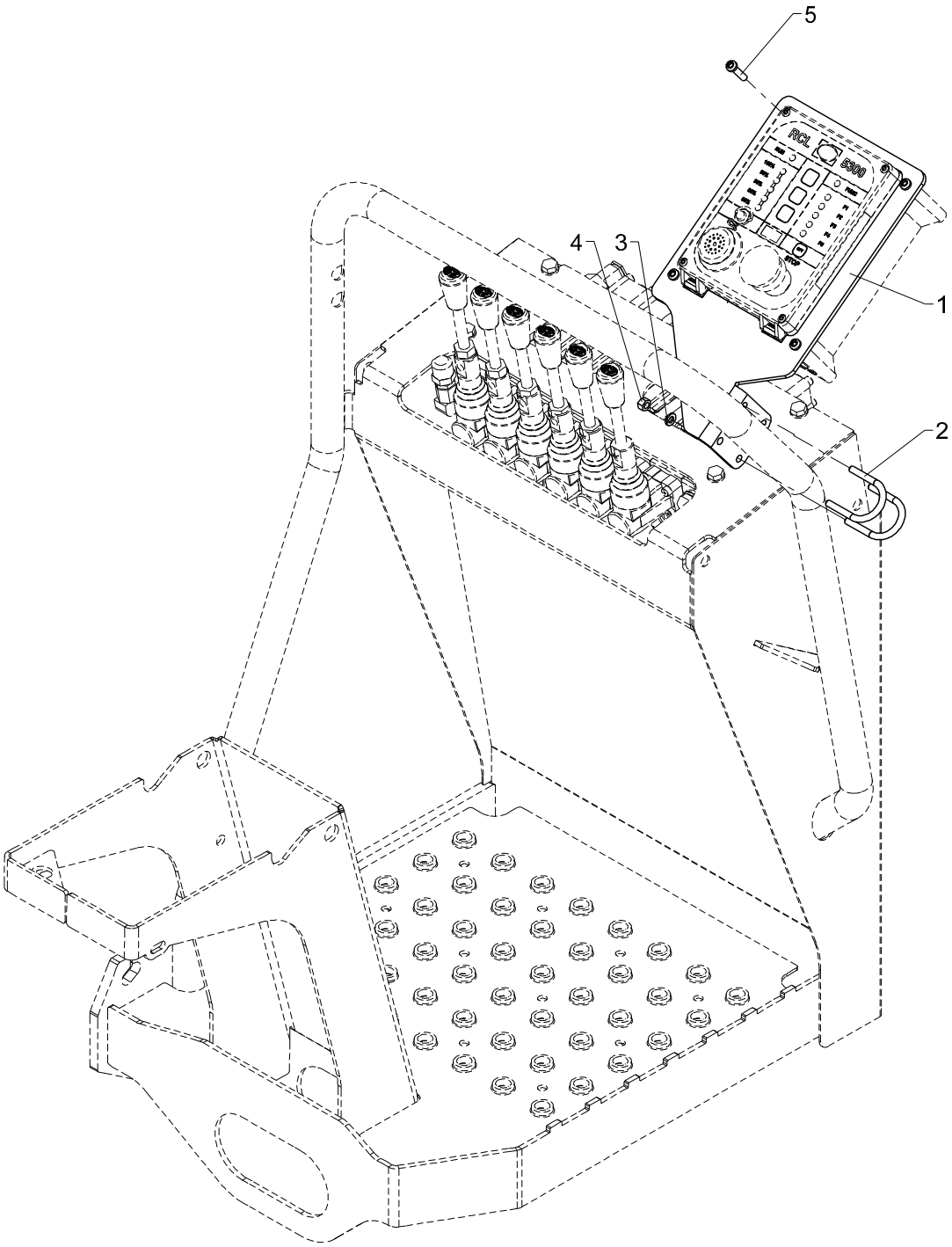
5
4
3
1
2
RCL
SOS

Mounting fittings RCL 5300 (TSRC linear)

Pos	Qty.	Part no.	Description	Remarks
1	1	6340906	Fittings for RCL 5300 (TS)	
2	2	6340903	Clamp	
3	4	32302	Face washer, stainless	6 mm
4	4	30884	Lock nut, stainless	M6
5	4	30340	Screw, stainless	6,0 x 25

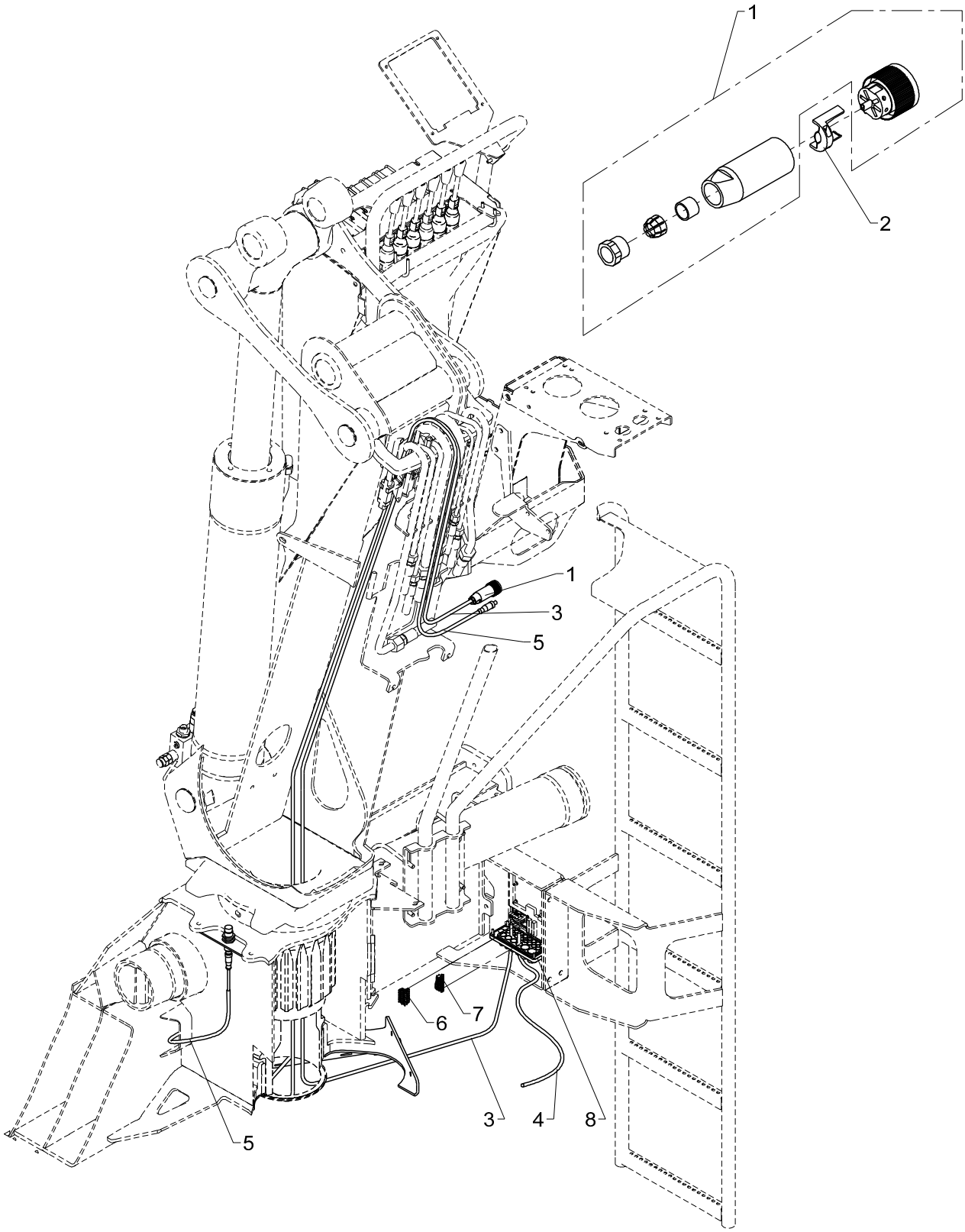
1
2
1
3
5
6
7
3
4
8
5

Column, TS incl. CE

Pos	Qty.	Part no.	Description	Remarks
1	1	29231	Socket for cable	
2	1	29236	Cable clamp	
3	1	28263	CAN BUS cable	6 m
4	1	28278	Cable 4 x 2.5	3,5 m
5	1	29235	Extension cable, 5 m	
6	1	29318	Plug, 7-polar for RCL 53XX	
7	1	29340	CAN termination/RCL53xx	
8	1	29307	Cable lead-in	

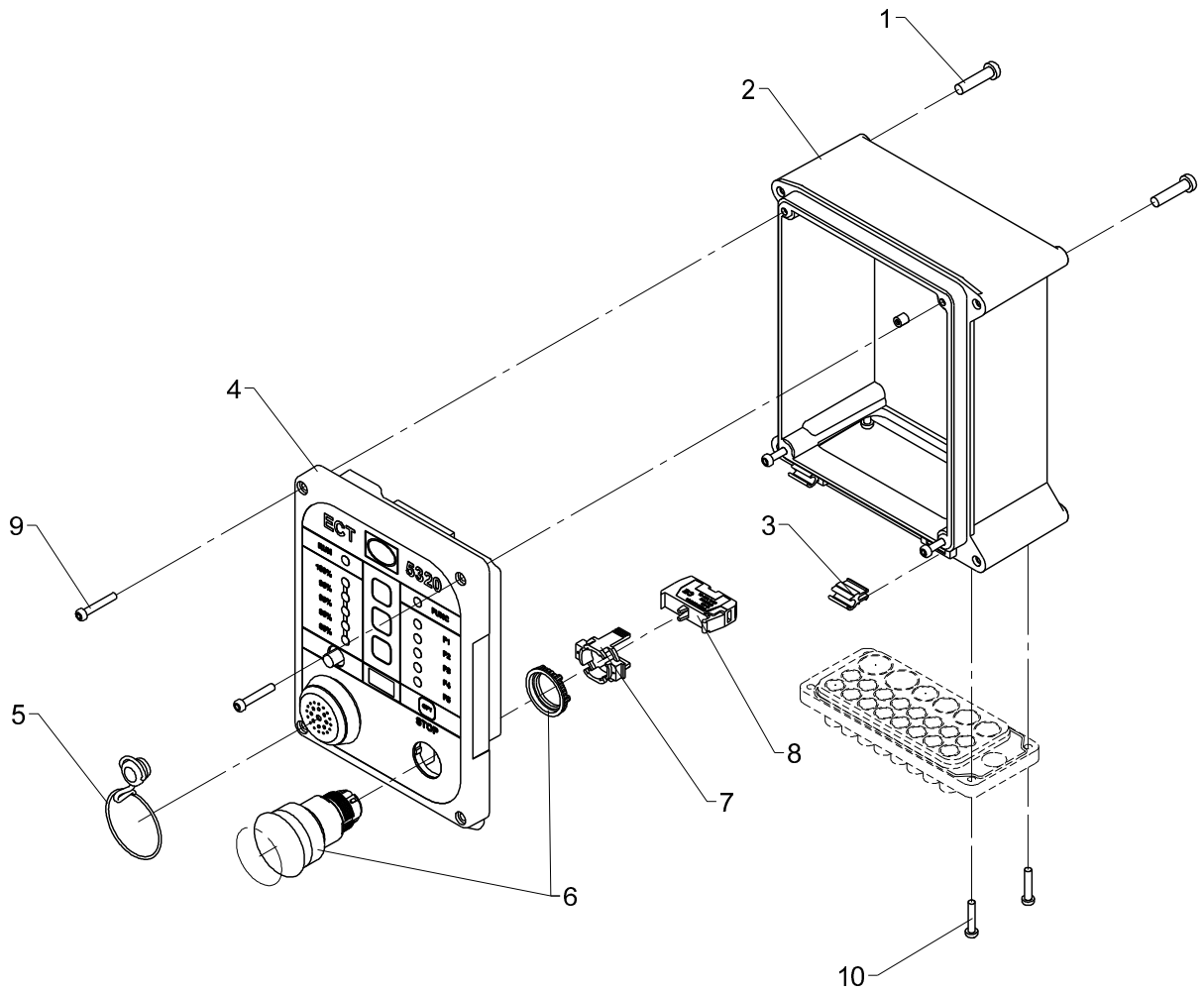
1
2
4
9
3
5
8
7
6
10
ECT

ECT 5320 in the valve block side, TS

Pos	Qty.	Part no.	Description	Remarks
1	4	30340	Screw, stainless	6,0 x 25
2	1	29304	Bottom f. RCL-box incl. hinge	
3	1	29305	Hinge	
4	1	29303	Front complete, ECT5320	
5	1	29306	Plug	
6	1	29196	Stop button	
7	1	29198	Attachment, stop button	
8	1	29197	Switch element, stop button	
9	4	30347	Screw, stainless	4,0 x 25
10	4	30346	Screw, stainless	4,0 x 20

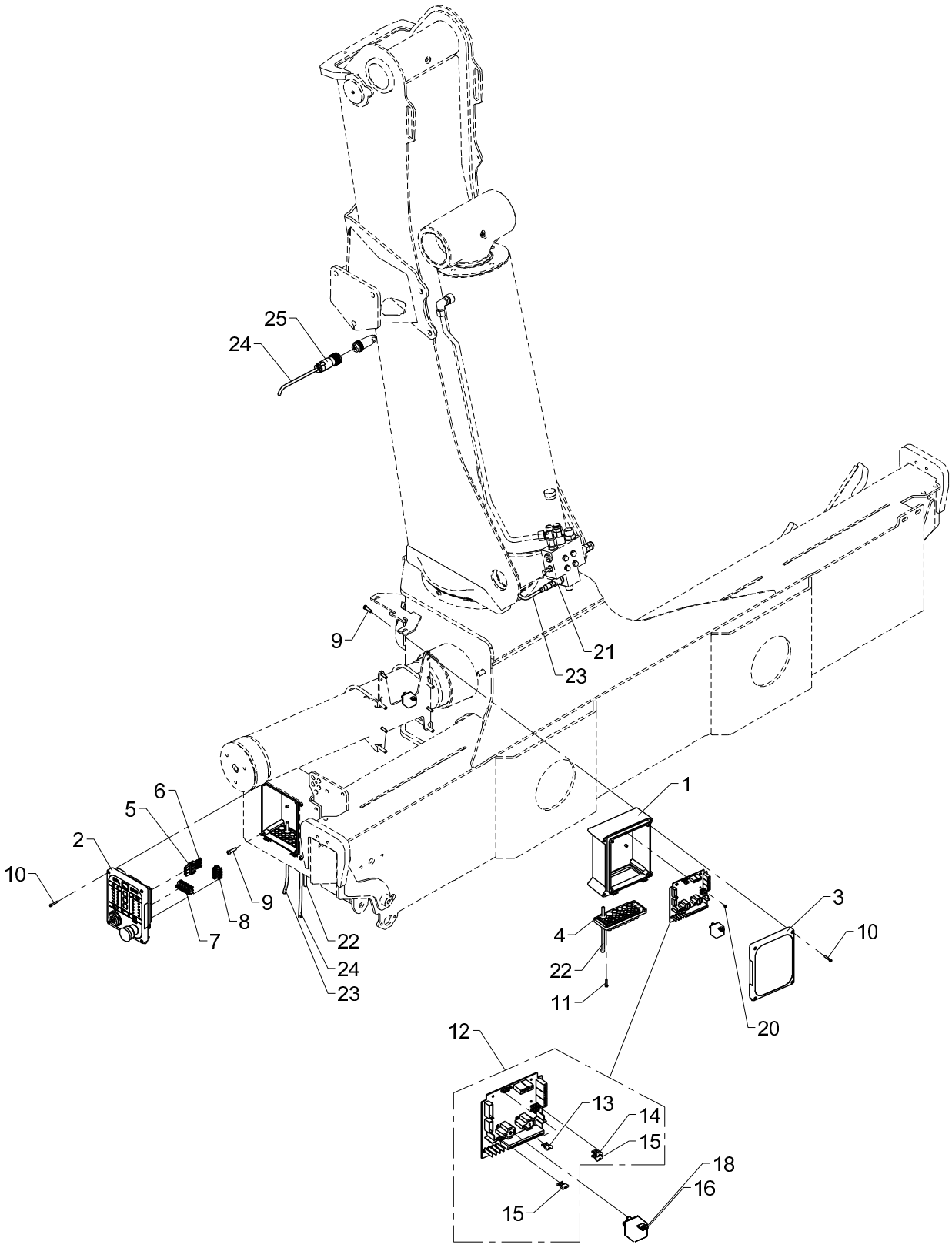
25
24
9
21
23
1
6
5
2
10
9
8
7
22
24
23
4
22
11
3
10
20
12
13
14
15
18
16
15

Electronic parts, TS, base

Pos	Qty.	Part no.	Description	Remarks
		7008420	Basic electronic parts,TS base	
		7007940	Relay, 24 V	
		7007930	Relay, 12 V	
1	2	29304	Bottom f. RCL-box incl. hinge	
2	1	29301	Front complete, RCL 5300	
3	1	29347	RCL 5300 indicator panel	
4	2	29307	Cable lead-in	
5	1	29315	Plug, 3-polar for RCL 53XX	
6	3	29316	Pin	
7	1	29321	Plug, 10-polar for RCL 53XX	
8	1	29318	Plug, 7-polar for RCL 53XX	
9	8	30340	Screw, stainless	6,0 x 25
10	8	30347	Screw, stainless	4,0 x 25
11	8	30346	Screw, stainless	4,0 x 20
12	1	29473	EJB5380	
13	1	29369	Fuse 2A MINI	
14	1	29370	Fuse 15A MINI	
15	2	27822	Fuse 10A MINI	
16	1	7007940	Relay, 24 V	
17	1	27342	Relay, 24V	
18	1	7007930	Relay, 12 V	
19	1	27340	Relay, 12 V	
20	6	30361	Screw, stainless	3,0 x 8
21	1	28850	Pressure transducer	
22	1	28278	Cable 4 x 2.5	2 m
23	1	29224	Cable with socket, 5 m	
24	1	28263	CAN BUS cable	5 m
25	1	29275	Cable socket 7-polar 10 A	

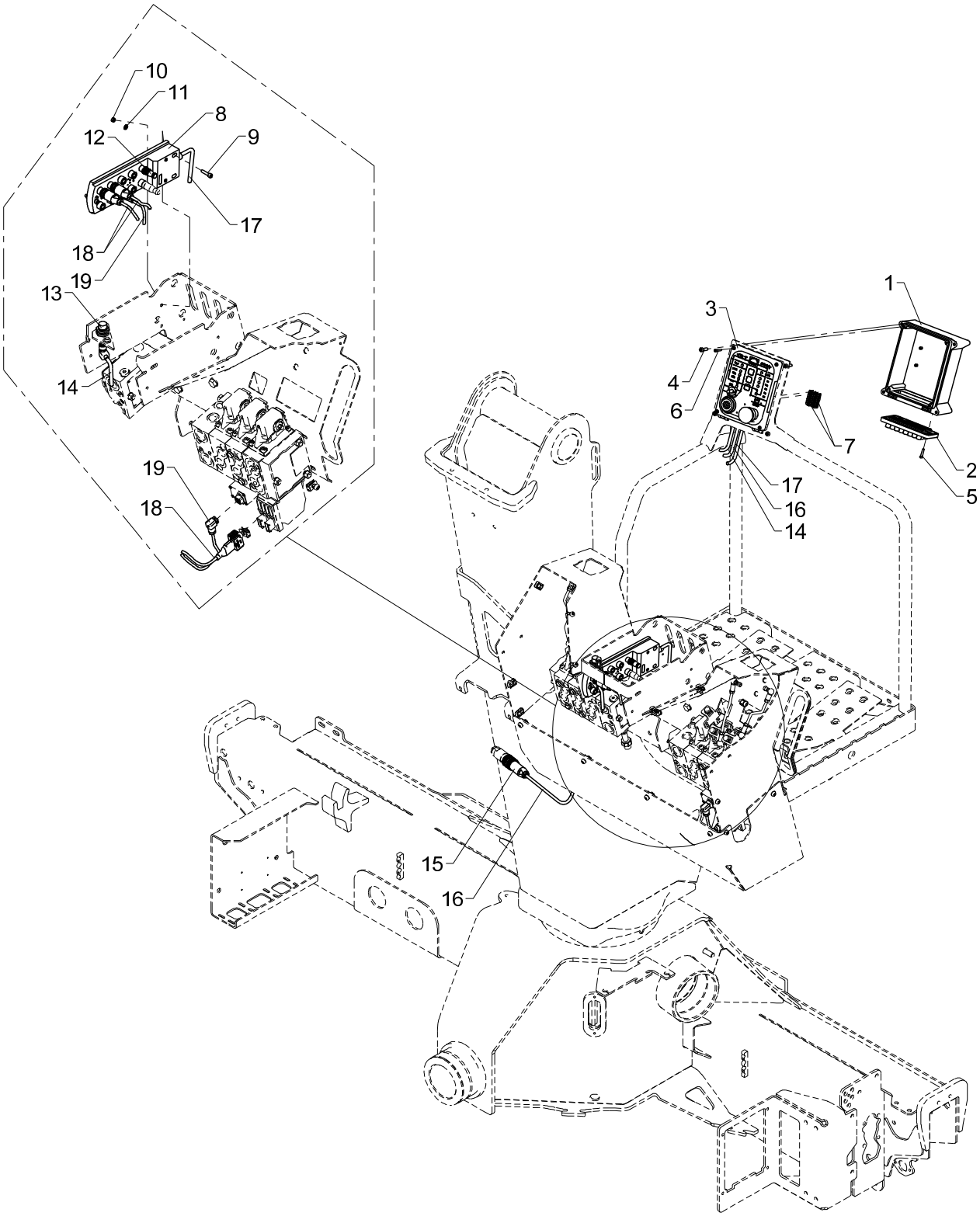
10
11
8
12
9
17
18
19
13
14
19
18
1
3
4
6
7
2
5
17
16
14
15
16

Electronic parts, TS, Danfoss

Pos	Qty.	Part no.	Description	Remarks
1	1	29304	Bottom f. RCL-box incl. hinge	
2	1	29307	Cable lead-in	
3	1	29303	Front complete, ECT5320	
4	4	30340	Screw, stainless	6,0 x 25
5	4	30346	Screw, stainless	4,0 x 20
6	4	30347	Screw, stainless	4,0 x 25
7	2	29318	Plug, 7-polar for RCL 53XX	
8	1	29470	IO module CR2033	
9	3	30425	Screw	MC5 x 30
10	3	30853	Nut, stainless	M5
11	3	32308	Washer	5 mm
12	1	29486	Plug M12, termination	
13	1	28980	Proximity switch	
14	1	28077	Cable with plug	
15	1	29285	Cable plug, 7-polar, 10 A	
16	1	28263	CAN BUS cable	3 m
17	1	28263	CAN BUS cable	2,5 m
18	1	29388	Cable PVED - 2 x M12	
19	1	29386	Cable M12 spool sensor 0,7m	

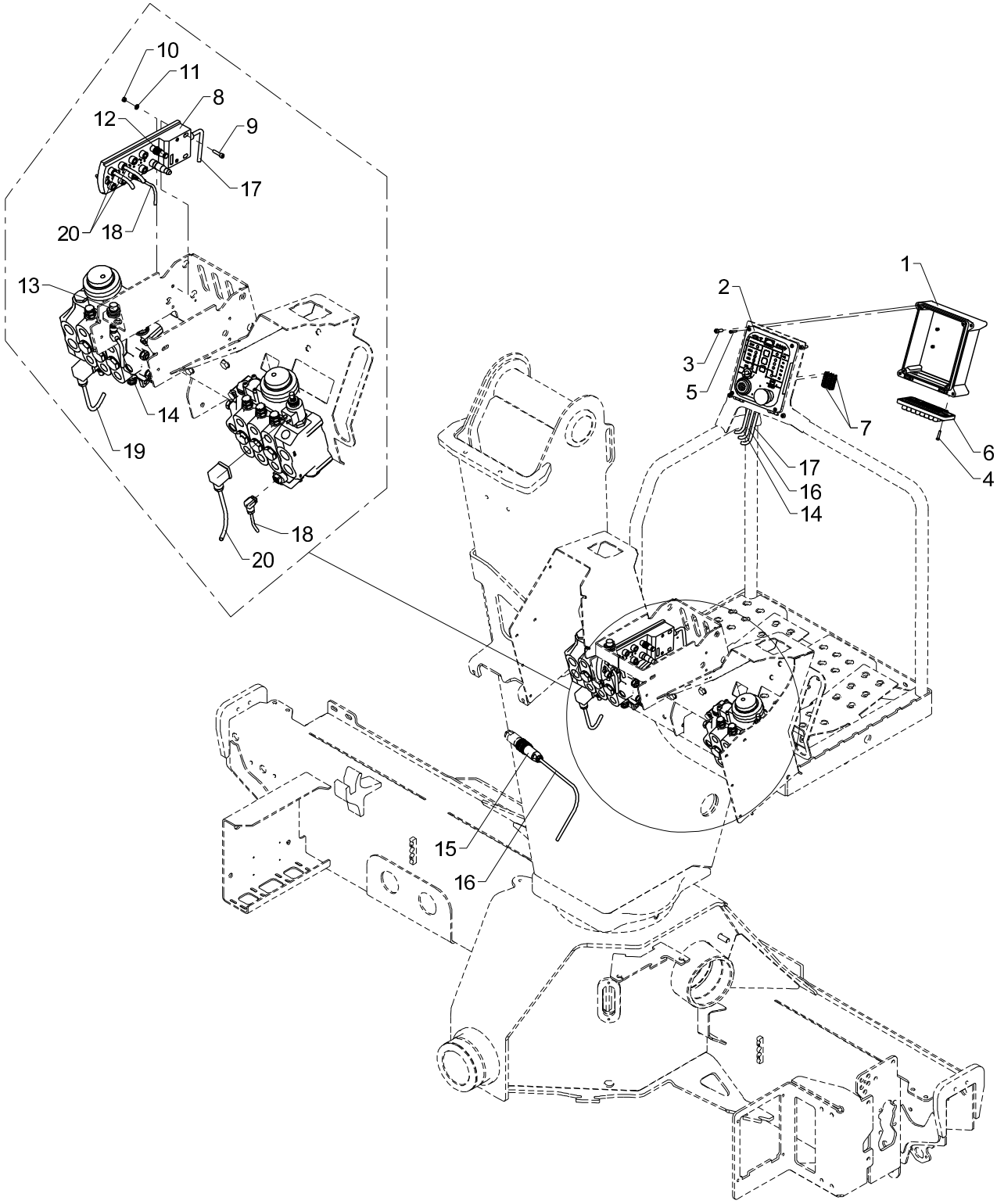
10
11
8
12
9
17
20
18
13
14
19
18
20
1
2
3
5
7
6
4
17
16
14
15
16

Pos	Qty.	Part no.	Description	Remarks
1	1	29304	Bottom f. RCL-box incl. hinge	
2	1	29303	Front complete, ECT5320	
3	4	30340	Screw, stainless	6,0 x 25
4	4	30346	Screw, stainless	4,0 x 20
5	4	30347	Screw, stainless	4,0 x 25
6	1	29307	Cable lead-in	
7	2	29318	Plug, 7-polar for RCL 53XX	
8	1	29470	IO module CR2033	
9	3	30425	Screw	MC5 x 30
10	3	30853	Nut, stainless	M5
11	3	32308	Washer	5 mm
12	1	29486	Plug M12, termination	
13	1	28980	Proximity switch	
14	1	28077	Cable with plug	
15	1	29285	Cable plug, 7-polar, 10 A	
16	1	28263	CAN BUS cable	3 m
17	1	28263	CAN BUS cable	2 m
18	1	29568	Cable M12, spool sensor 0.7 m	
19	1	29391	Cable M12, solenoid valve,0,6m	
20	1	29391	Cable M12, solenoid valve,0,6m	

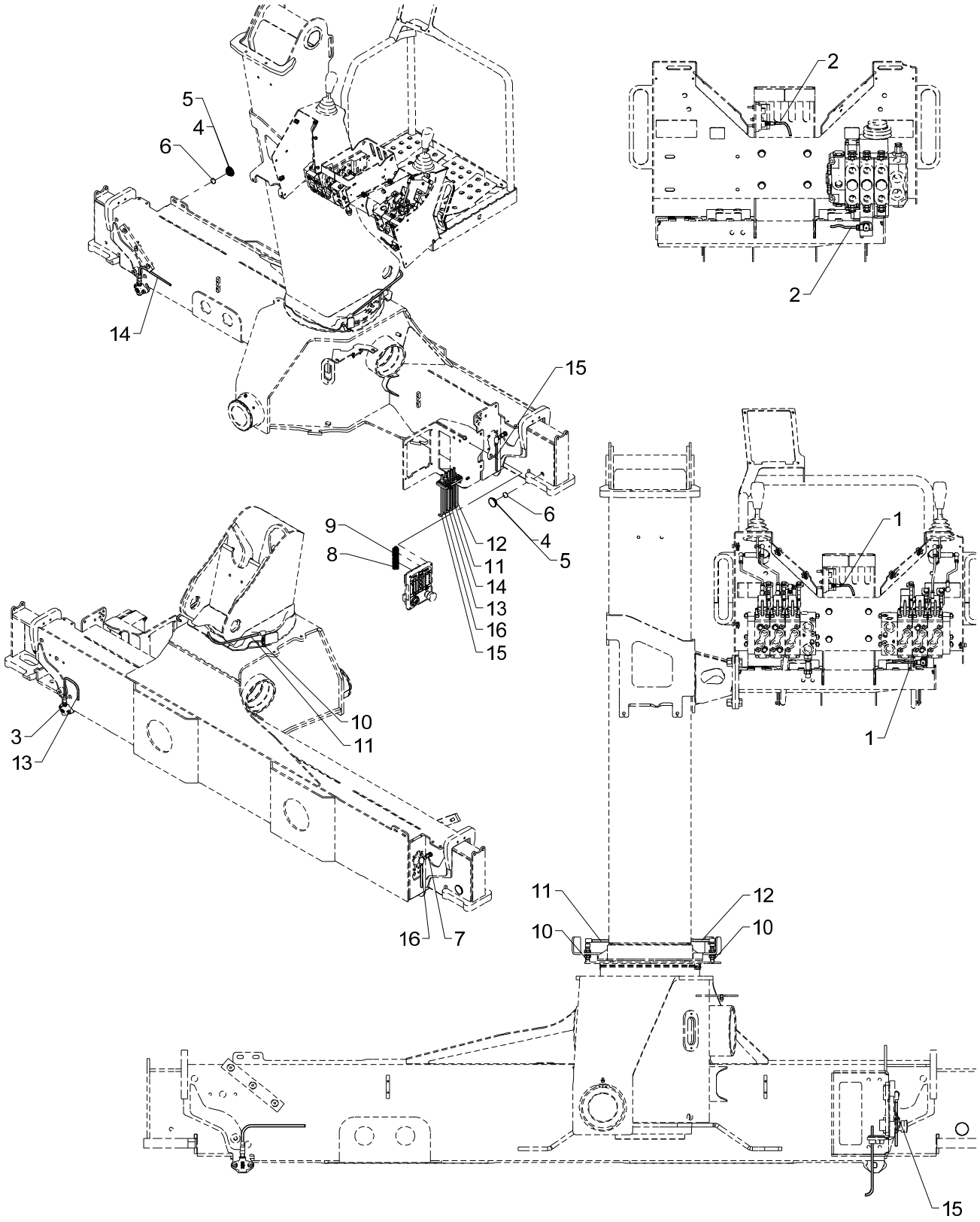
5
4
6
14
15
9
8
12
11
14
13
16
15
6
4
5
2
2
1
1
3
13
10
11
16
7
11
10
12
10
15

2CYBEL, single extension, TS

Pos	Qty.	Part no.	Description	Remarks
		7008510	2CYBEL, beam, single ext., TS	
		7008490	2CYBEL, beam, single ext., TS	
		7008500		
1	1	29386	Cable M12 spool sensor 0,7m	70 08 490 (Danfoss)
2	1	29568	Cable M12, spool sensor 0.7 m	70 08 500 (hydroconntrol)
3	2	29257	Proximity switch M12x44, 4mm	
4	2	64424	Slide block	2 mm
5	2	63681	Slide block	3 mm
6	2	29262	Solenoid Ø22x5	
7	2	29259	Magnet proximity switch M12	
8	1	29322	Plug, 12-polar for RCL 53XX	
9	1	29320	Plug, 9-polar for RCL 53XX	
10	2	29447	Proximity switchM12 8mm PNP-NO	
11	1	28077	Cable with plug	
12	1	28077	Cable with plug	
13	1	29223	Cable with socket, 2 m	
14	1	29224	Cable with socket, 5 m	
15	1	28117	Cable with plug	
16	1	28077	Cable with plug	

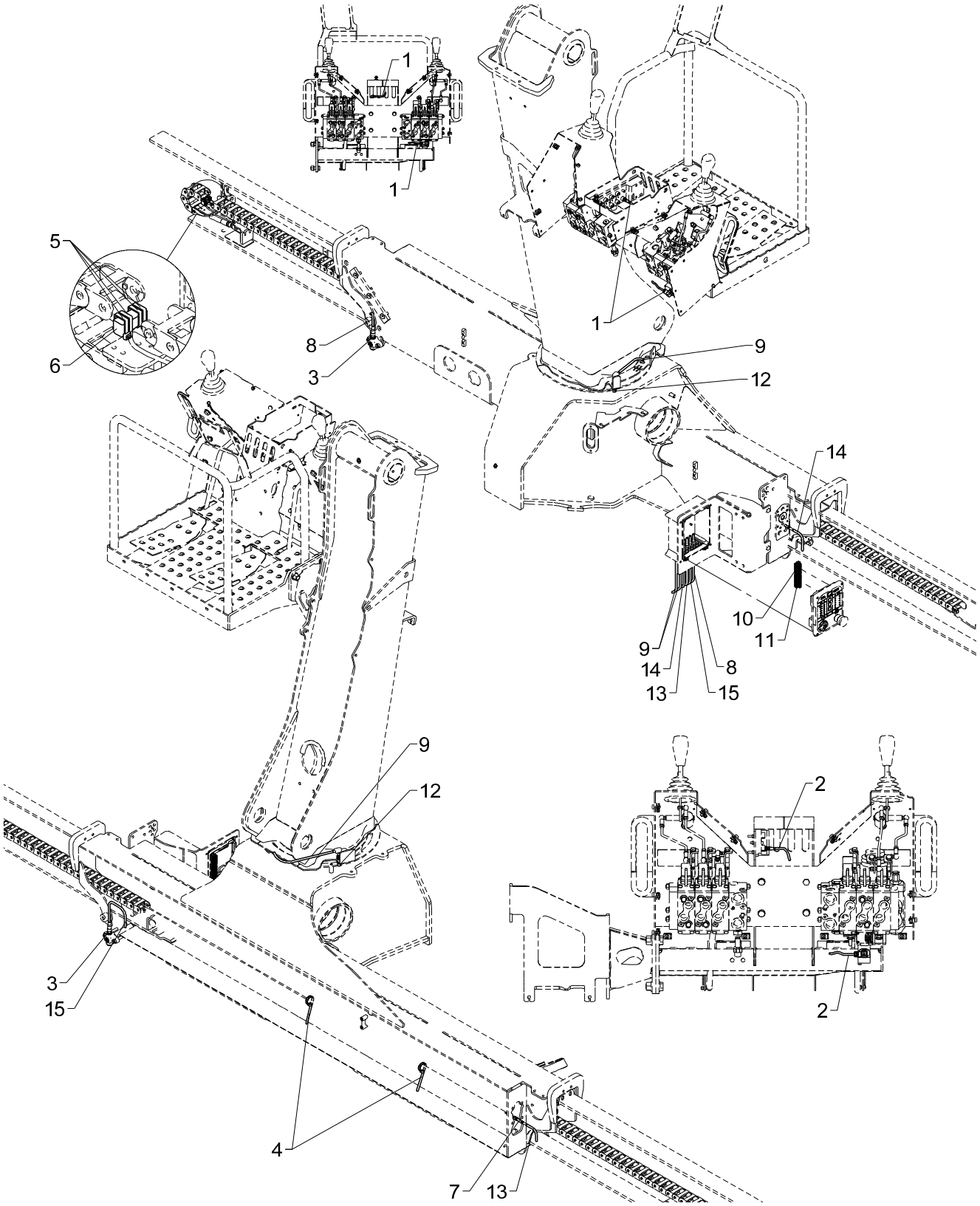
1
1
5
6
8
3
1
9
12
14
10
11
9
14
13
8
15
9
12
3
15
4
7
13
2
2

2CYBEL, double extension, TS

Pos	Qty.	Part no.	Description	Remarks
		7008540	2CYBEL, beam, double ext., TS	
		7008520	2CYBEL, beam, double ext., TS	
		7008530		
1	1	29386	Cable M12 spool sensor 0,7m	70 08 520 (Danfoss)
2	1	29568	Cable M12, spool sensor 0.7 m	70 08 530 (hydroconntrol)
3	2	29257	Proximity switch M12x44, 4mm	
4	4	27275	Cable tie, black, 7.6x385mm	
5	8	27274	Clip	
6	2	29253	Tilt sensor, nylon drag chain	
7	2	29443	Panel lead-in M8 - 3-polar	
8	1	29224	Cable with socket, 5 m	
9	2	28077	Cable with plug	
10	1	29320	Plug, 9-polar for RCL 53XX	
11	1	29322	Plug, 12-polar for RCL 53XX	
12	2	29447	Proximity switchM12 8mm PNP-NO	
13	1	29264	Cable 5 m, M8 socket	
14	1	29265	Cable 2 m, M8 socket	
15	1	29223	Cable with socket, 2 m	

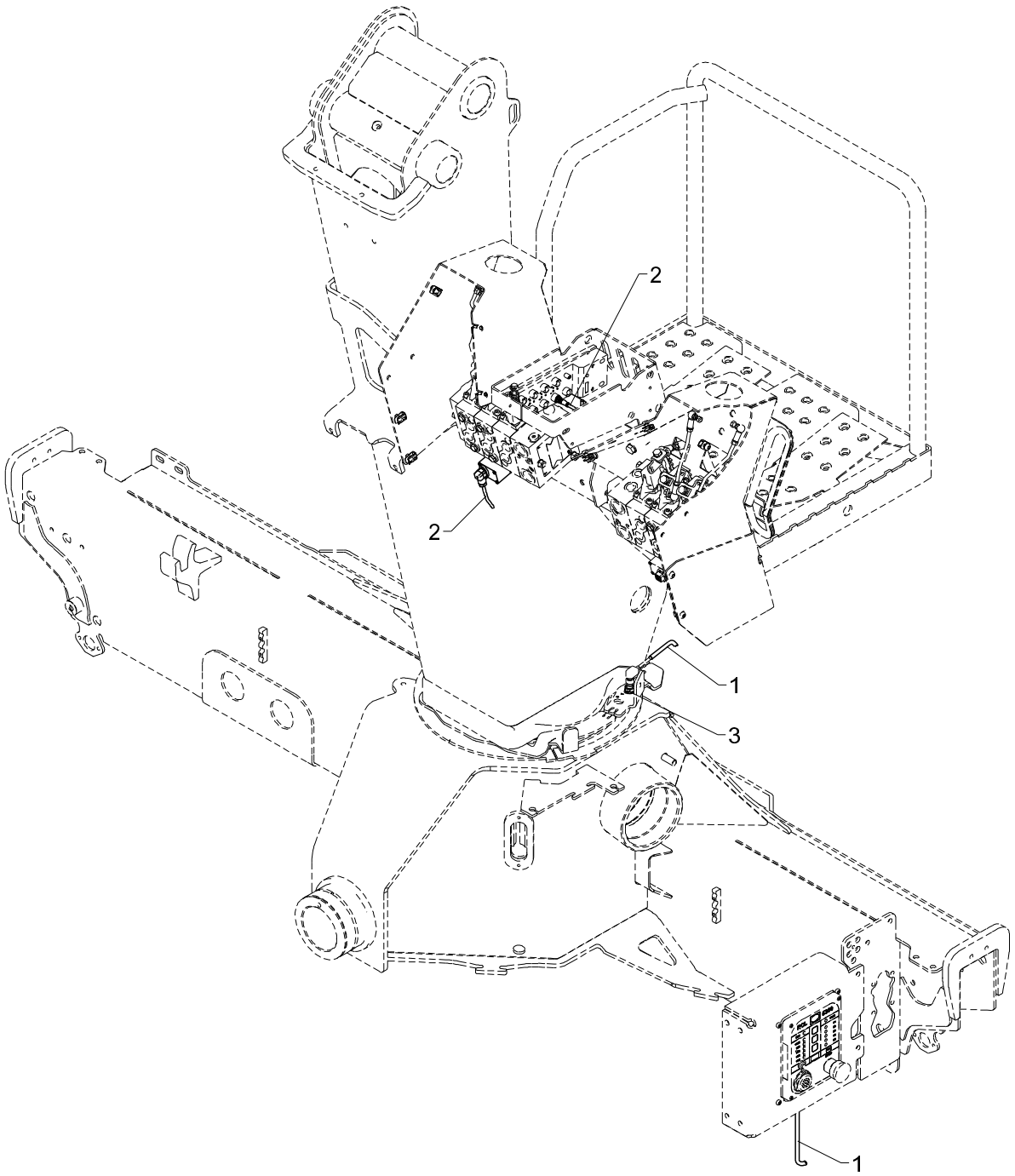
2
2
1
3
1

2-stage LMB, TS, Danfoss

Pos	Qty.	Part no.	Description	Remarks
1	1	28077	Cable with plug	
2	1	29386	Cable M12 spool sensor 0,7m	
3	1	29447	Proximity switchM12 8mm PNP-NO	

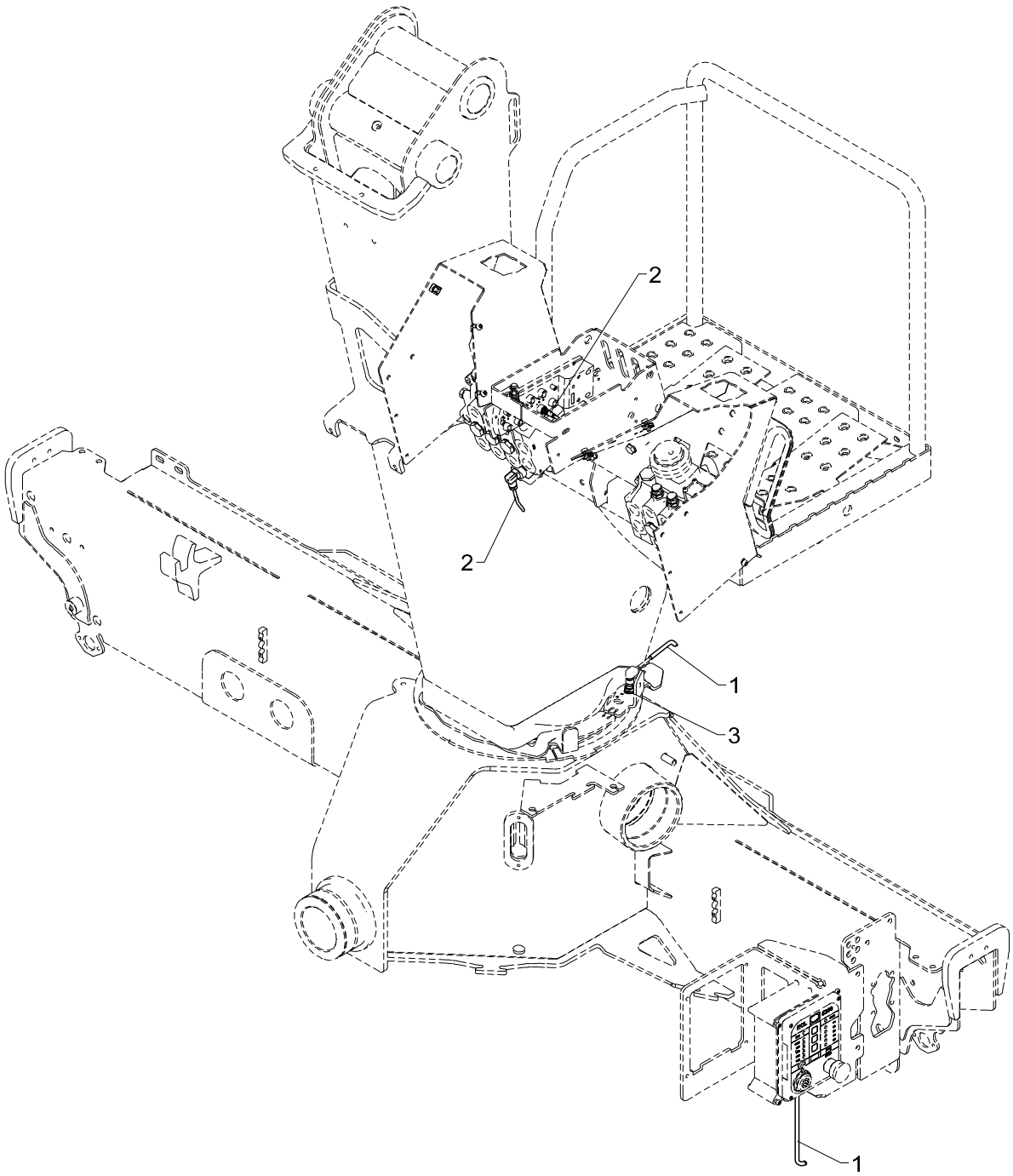
2
2
1
3
1

2-stage LMB, TS, hydrocontrol

Pos	Qty.	Part no.	Description	Remarks
1	1	28077	Cable with plug	
2	1	29568	Cable M12, spool sensor 0.7 m	
3	1	29447	Proximity switchM12 8mm PNP-NO	

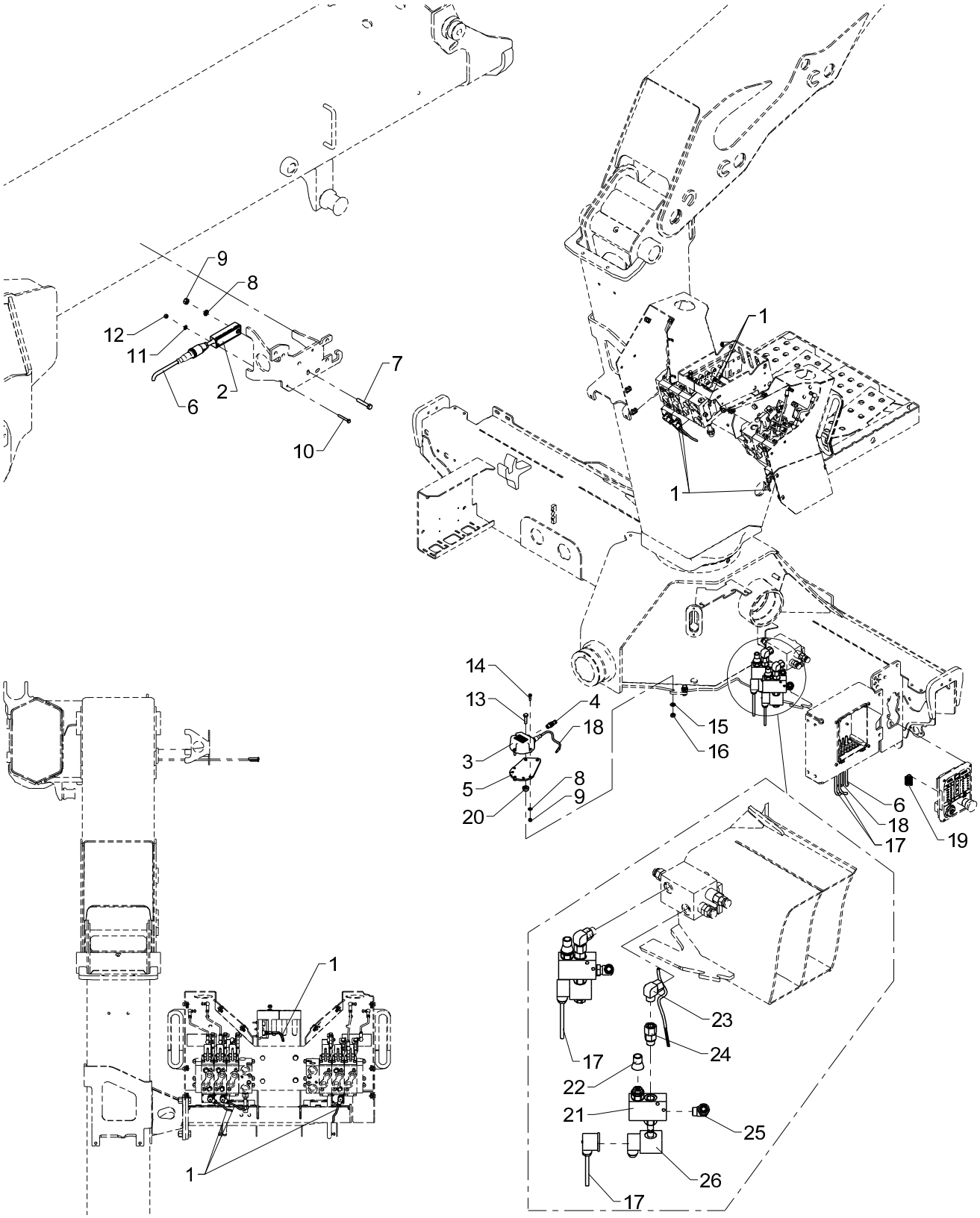
9
8
12
11
6
2
7
10
1
1
14
13
4
18
3
5
20
8
9
15
16
6
18
17
19
1
1
23
24
17
22
21
25
26
17

EVS-H, TS, Danfoss

Pos	Qty.	Part no.	Description	Remarks
1	3	29386	Cable M12 spool sensor 0,7m	
2	1	29295	Tilt sensor + 0.25 m cable	
3	1	29426	Electronic inclinometer,single	
4	1	29486	Plug M12, termination	
5	1	6340274	Mounting fittings (AIC 5062)	
6	1	28730	Cable + socket, 10 m	
7	1	30116	Steel pin, stainless	M6 x 35
8	4	32302	Face washer, stainless	6 mm
9	4	30884	Lock nut, stainless	M6
10	1	31790	Set screw M4 x 30	M4 x 30
11	1	31188	Washer, stainless	4 mm
12	1	30857	Lock nut	M4
13	2	30135	Set screw, stainless	M8 x 30
14	3	32491	Round-head screw	M6 x 20
15	2	31147	Face washer, 8 mm	
16	2	30856	Nut, stainless	M8
17	2	28265	Cable, dump valve, 1.35 m	
18	1	29456	CAN cable, M12, 2 m, female	
19	1	29318	Plug, 7-polar for RCL 53XX	
20	2	6871754	Spacer	
21	2	50517	Valve	
22	2	50518	Cover for sealing	
23	2	25242	Elbow connection	EWSD 12 L
24	2	25240	Connection	EGESD 12 LR-WD
25	2	26897	Elbow connection	12 mm - 3/8"
26	2	61778	Solenoid	

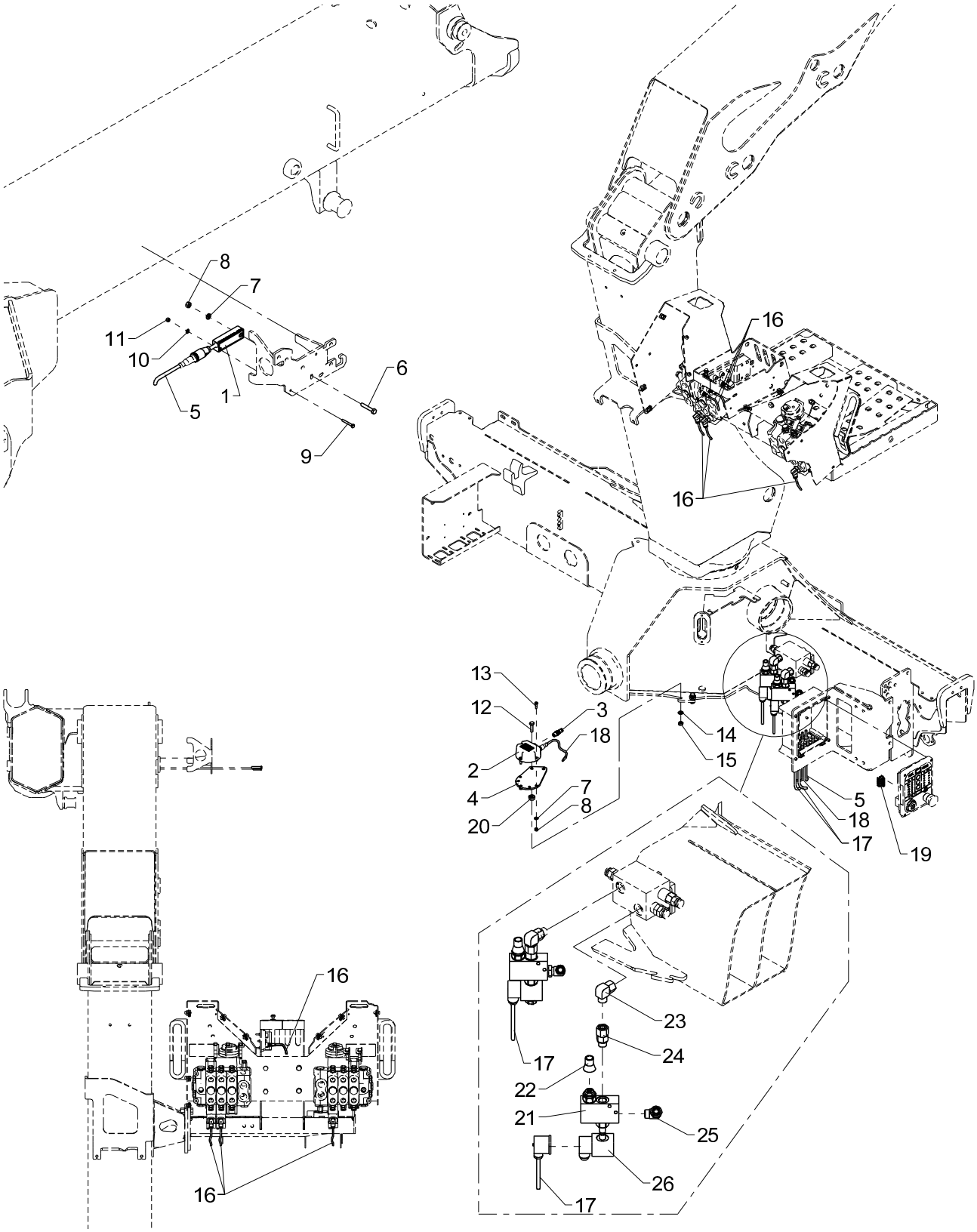
8
7
11
10
1
5
6
9
16
16
13
12
3
18
2
4
20
7
8
14
15
5
18
17
19
16
16
23
24
17
22
21
25
26
17

EVS-H, TS, Hydrocontrol

Pos	Qty.	Part no.	Description	Remarks
1	1	29295	Tilt sensor + 0.25 m cable	
2	1	29426	Electronic inclinometer,single	
3	1	29486	Plug M12, termination	
4	1	6340274	Mounting fittings (AIC 5062)	
5	1	28730	Cable + socket, 10 m	
6	1	30116	Steel pin, stainless	M6 x 35
7	4	32302	Face washer, stainless	6 mm
8	4	30884	Lock nut, stainless	M6
9	1	31790	Set screw M4 x 30	M4 x 30
10	1	31188	Washer, stainless	4 mm
11	1	30857	Lock nut	M4
12	2	30135	Set screw, stainless	M8 x 30
13	3	32491	Round-head screw	M6 x 20
14	2	31147	Face washer, 8 mm	
15	2	30856	Nut, stainless	M8
16	3	29568	Cable M12, spool sensor 0.7 m	
17	2	28265	Cable, dump valve, 1.35 m	
18	1	29456	CAN cable, M12, 2 m, female	
19	1	29318	Plug, 7-polar for RCL 53XX	
20	2	6871754	Spacer	
21	2	50517	Valve	
22	2	50518	Cover for sealing	
23	2	25242	Elbow connection	EWSD 12 L
24	2	25240	Connection	EGESD 12 LR-WD
25	2	26897	Elbow connection	12 mm - 3/8"
26	2	61778	Solenoid	

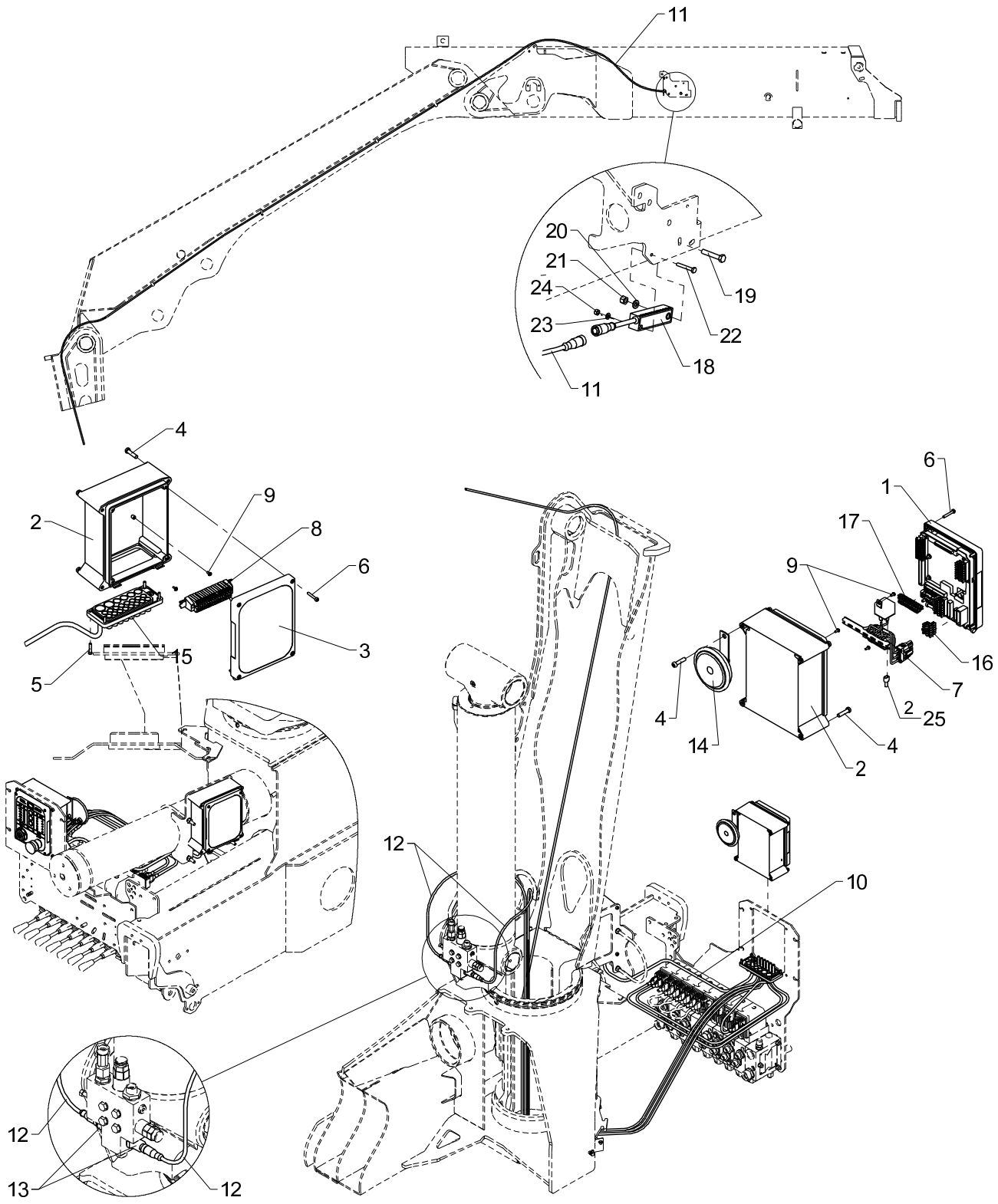
11
20
21
24
23
19
22
18
11
4
2
9
8
6
3
5
15
6
1
17
9
16
7
2
25
4
14
4
2
12
10
12
13
12

Obsolete

Basic electronic parts, crane with RC

535 22 010

From loader 1070001
To loader

Created 16-07-2012
Modified

Pos	Qty.	Part no.	Description	Remarks
1	1	29301	Front complete, RCL 5300	
2	2	29304	Bottom f. RCL-box incl. hinge	
3	1	29347	RCL 5300 indicator panel	
4	9	30340	Screw, stainless	6,0 x 25
5	8	30346	Screw, stainless	4,0 x 20
6	8	30347	Screw, stainless	4,0 x 25
7	1	7006301	Terminal block for RC 24 V	
8	1	7006302	Terminal block, Box1	
9	5	30361	Screw, stainless	3,0 x 8
10	1	28722	Wiring, RC base	
11	1	28730	Cable + socket, 10 m	10 m
12	2	29224	Cable with socket, 5 m	5 m
13	2	28850	Pressure transducer	
14	1	28971	Horn, 24 V, 2.5 Amp.	
15	1	29307	Cable lead-in	
16	1	29341	CAN termination FJC	
17	1	29321	Plug, 10-polar for RCL 53XX	
18	1	29295	Tilt sensor + 0.25 m cable	
19	1	30116	Steel pin, stainless	M6 x 35
20	1	32302	Face washer, stainless	6 mm
21	1	30884	Lock nut, stainless	M6
22	1	31790	Set screw M4 x 30	M4 x 30
23	1	31188	Washer, stainless	4 mm
24	1	30857	Lock nut	M4
25	1	27428	Clip	

18/129, 20/138, 22/153

70 07 940
70 07 930
Internal ref. 70 06 300

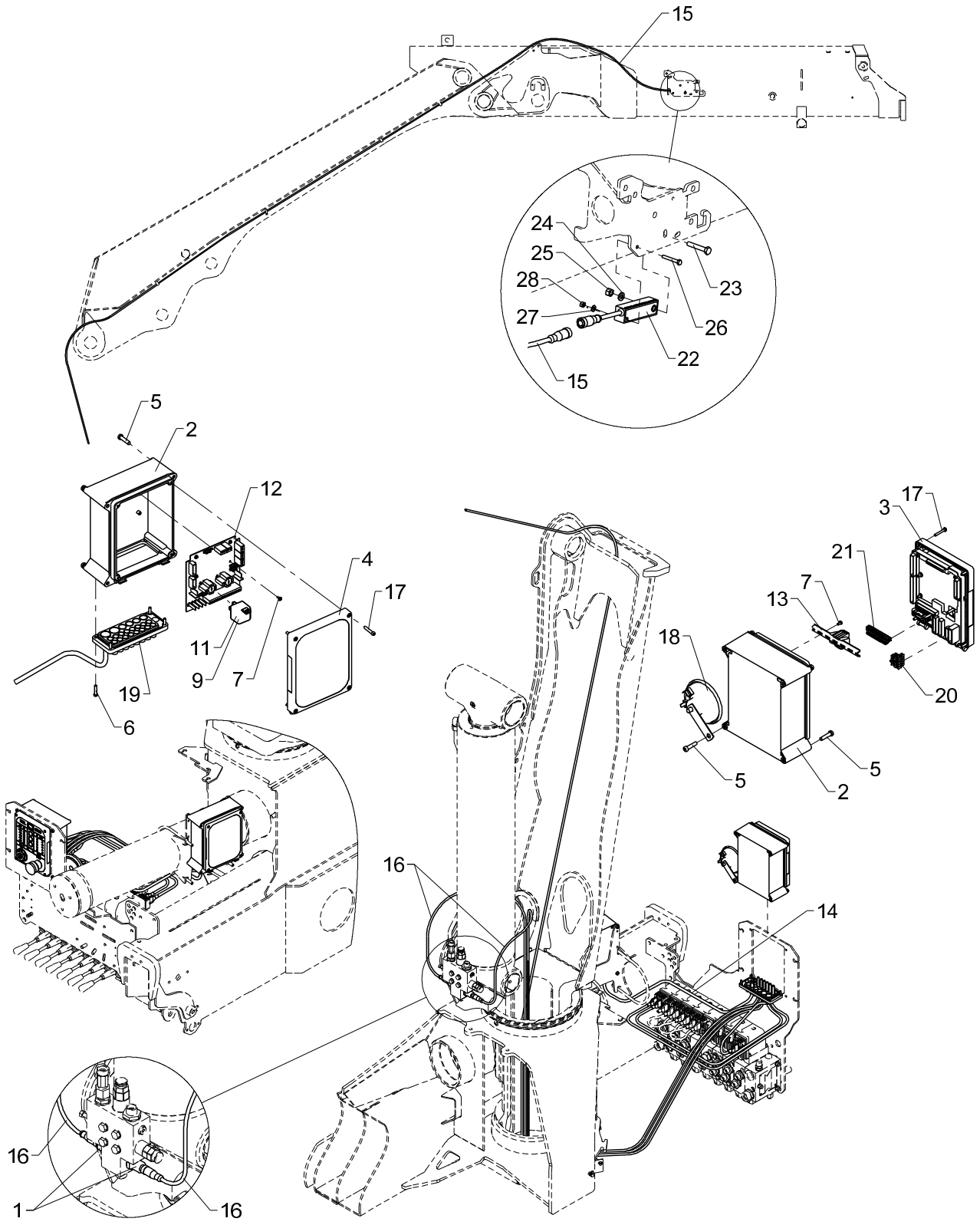

Basic electronic parts, crane with RC

Pos	Qty.	Part no.	Description	Remarks
		7006300	Basic parts, crane + RC	
		7007930	Relay, 12 V	
		7007940	Relay, 24 V	
1	2	28850	Pressure transducer	
2	2	29304	Bottom f. RCL-box incl. hinge	
3	1	29301	Front complete, RCL 5300	
4	1	29347	RCL 5300 indicator panel	
5	9	30340	Screw, stainless	6,0 x 25
6	8	30346	Screw, stainless	4,0 x 20
7	8	30361	Screw, stainless	3,0 x 8
8	1	7007940	Relay, 24 V	
9	1	27342	Relay, 24V	
10	1	7007930	Relay, 12 V	
11	1	27340	Relay, 12 V	
12	1	29473	EJB5380	
13	1	7006306	Terminal block for RCL + RC	
14	1	28722	Wiring, RC base	
15	1	28730	Cable + socket, 10 m	10 m
16	2	29224	Cable with socket, 5 m	5 m
17	8	30347	Screw, stainless	4,0 x 25
18	1	28971	Horn, 24 V, 2.5 Amp.	
19	1	29307	Cable lead-in	
20	1	29341	CAN termination FJC	
21	1	29321	Plug, 10-polar for RCL 53XX	
22	1	29295	Tilt sensor + 0.25 m cable	
23	1	30116	Steel pin, stainless	M6 x 35
24	1	32302	Face washer, stainless	6 mm
25	1	30884	Lock nut, stainless	M6
26	1	31790	Set screw M4 x 30	M4 x 30
27	1	31188	Washer, stainless	4 mm
28	1	30857	Lock nut	M4

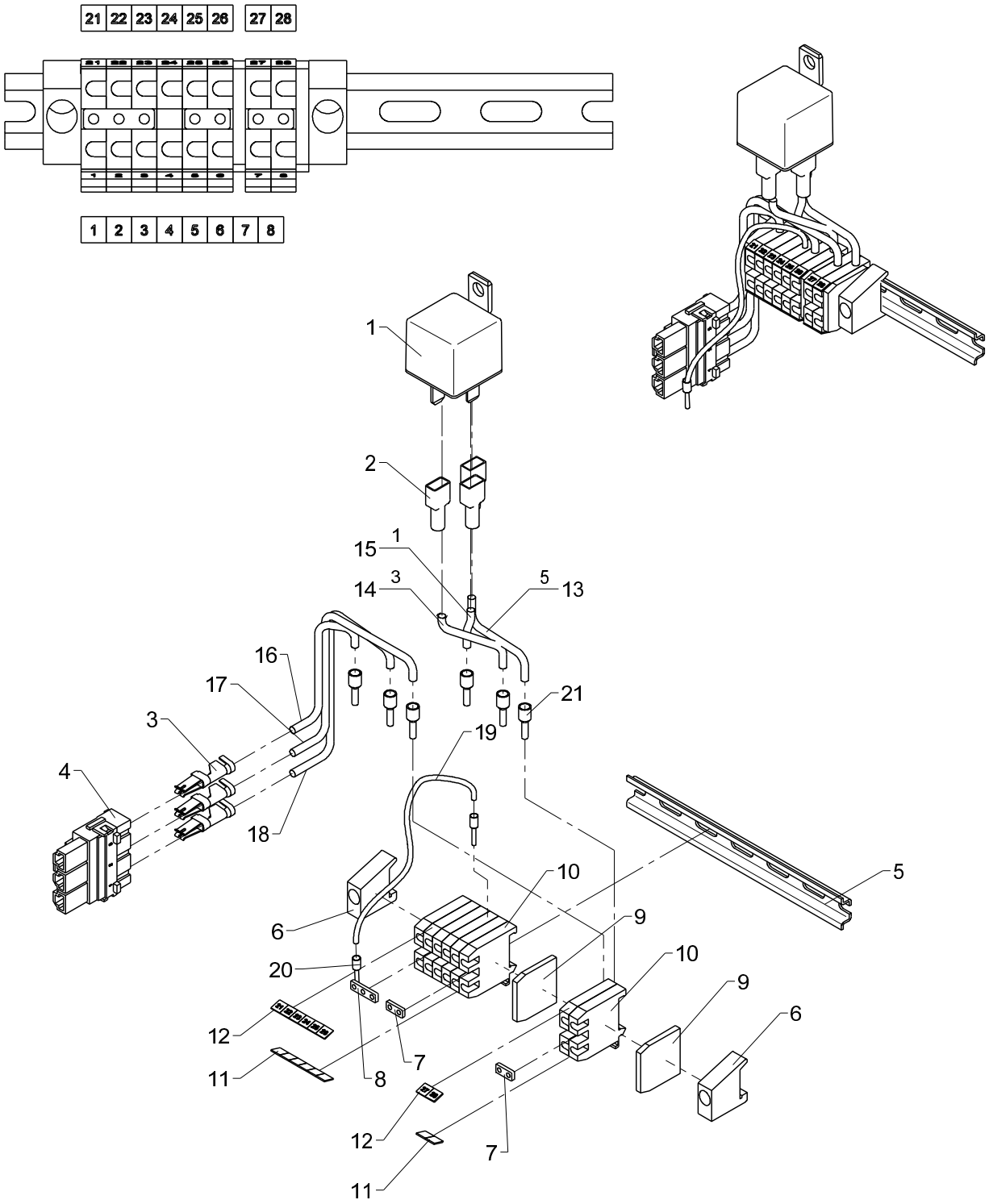
21 22 23 24 25 26 27 28
1 2 3 4 5 6 7 8
1
2
15
1
14
3
5
13
16
17
21
3
19
4
18
10
5
6
9
20
10
9
6
12
7
11
8
12
7
11

Obsolete

Terminal block for RC, 24 V

535 22 015

From loader 1070001
To loader

Created 24-11-2011
Modified

Pos	Qty.	Part no.	Description	Remarks
1	1	27342	Relay, 24V	
2	3	27428	Clip	
3	3	29316	Pin	
4	1	29315	Plug, 3-polar for RCL 53XX	
5	1	28013	Guide rail	120 mm.
6	2	28012	End angle	
7	2	28208	Fish plate	
8	1	28014	Fish plate	
9	2	28011	End plate	
10	8	28010	Terminal	
11	1	28019	Labels nos. 1-10	
12	1	28965	Dekafix labels 21-30	
13	1	29460	Wire 1 x 2.5 mm2	150 mm
14	1	28594	Wire - green	150 mm
15	1	28445	Cable	150 mm
16	1	28445	Cable	250 mm
17	1	29460	Wire 1 x 2.5 mm2	250 mm
18	1	28594	Wire - green	250 mm
19	1	27120	Cable	300 mm
20	2	27762	Cable end	
21	6	27776	Cable lead-in	

18/129, 20/138, 22/153

Internal ref. 70 06 470

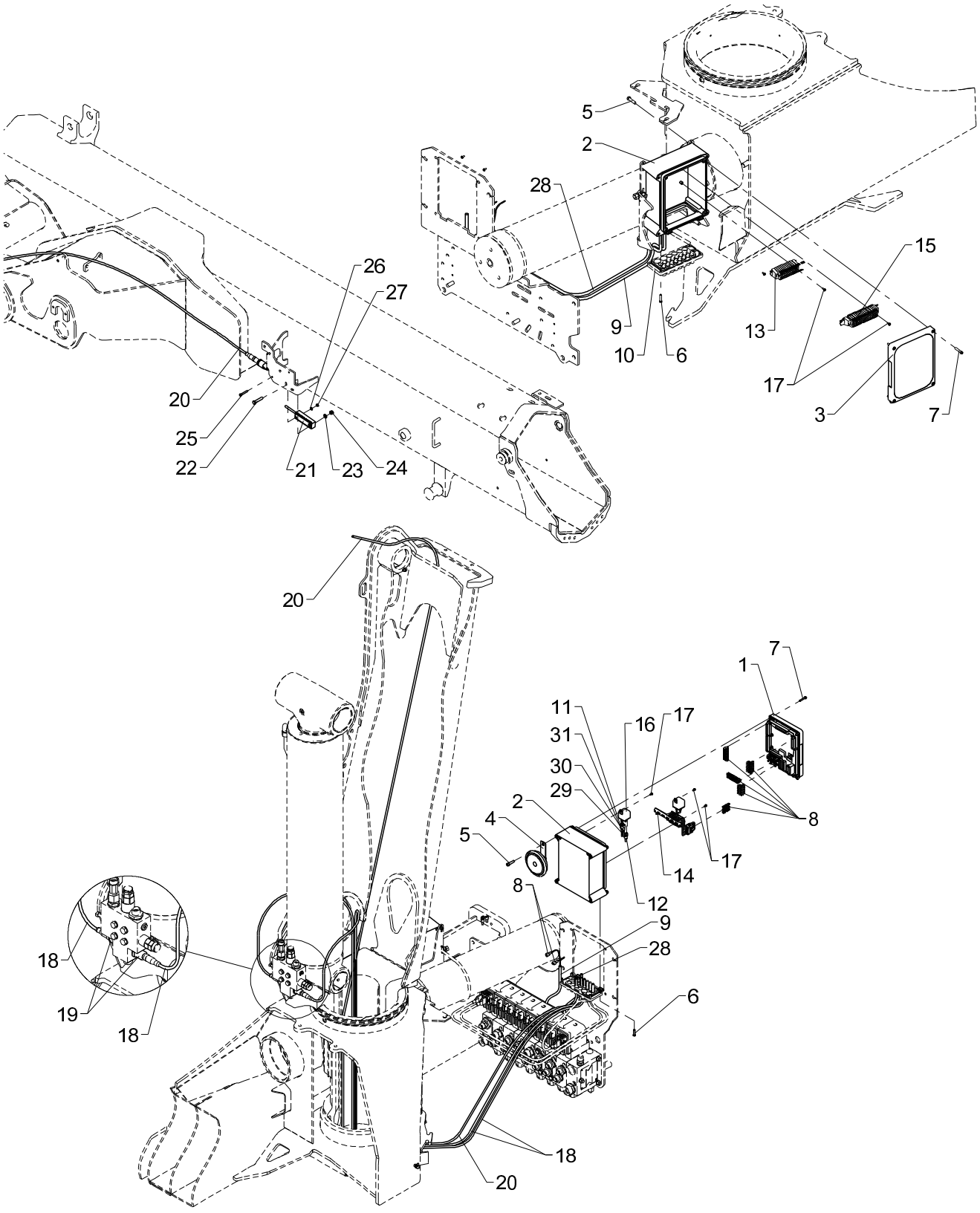

Basic electronic parts, RC, BMS-1

Pos	Qty.	Part no.	Description	Remarks
1	1	29301	Front complete, RCL 5300	
2	2	29304	Bottom f. RCL-box incl. hinge	
3	1	29347	RCL 5300 indicator panel	
4	1	28971	Horn, 24 V, 2.5 Amp.	
5	9	30340	Screw, stainless	6,0 x 25
6	8	30346	Screw, stainless	4,0 x 20
7	8	30347	Screw, stainless	4,0 x 25
8	1	28722	Wiring, RC base	
9	1	28249	Cable 2 x 0.75	2 m
10	1	29307	Cable lead-in	
11	5	27429	Clamp	
12	2	27428	Clip	
13	1	7006304	Terminal block, Box 1, BMS-1	
14	1	7006301	Terminal block for RC 24 V	
15	1	7006302	Terminal block, Box1	
16	1	27342	Relay, 24V	
17	8	30361	Screw, stainless	3,0 x 8
18	2	29224	Cable with socket, 5 m	
19	2	28850	Pressure transducer	
20	1	28730	Cable + socket, 10 m	9,0 m
21	1	29295	Tilt sensor + 0.25 m cable	
22	1	30116	Steel pin, stainless	M6 x 35
23	1	32302	Face washer, stainless	6 mm
24	1	30884	Lock nut, stainless	M6
25	1	31790	Set screw M4 x 30	M4 x 30
26	1	31188	Washer, stainless	4 mm
27	1	30857	Lock nut	M4
28	1	28148	Cable	2 m
29	1	27202	Cable	0,3 m
30	1	27203	Cable	0,3 m
31	1	27204	Wire, 1 x1.5mm2	0,3 m

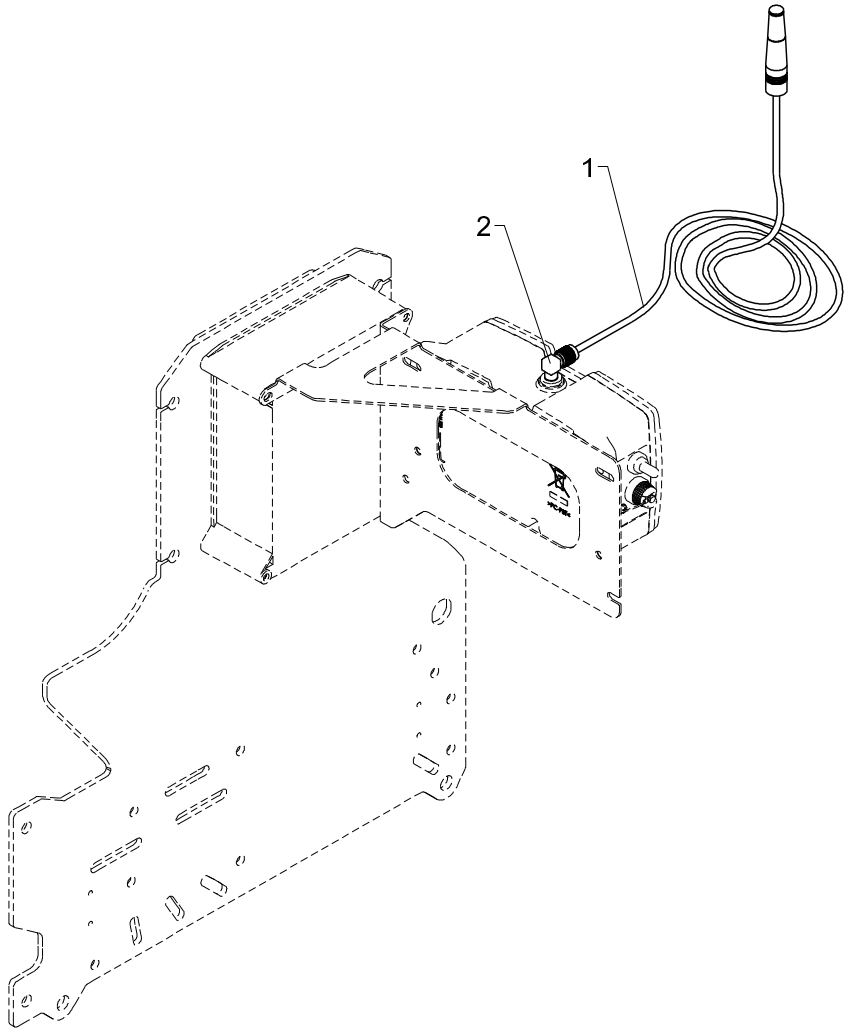
1
2

535 22 030

From loader 1070001
To loader

Created 13-02-2013
Modified

Antenna extension, Hetronic HSRC

Pos	Qty.	Part no.	Description	Remarks
1	1	57335	Cable - 3 m for antenna BMS-2	8 m
2	1	57348	Coax angle adapter	

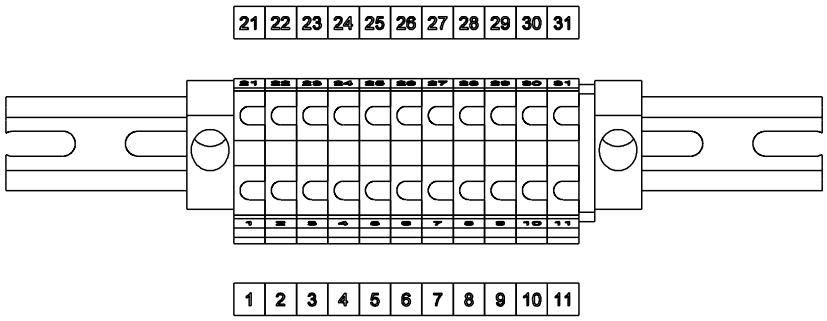
21 22 23 24 25 26 27 28 29 30 31
1 2 3 4 5 6 7 8 9 10 11

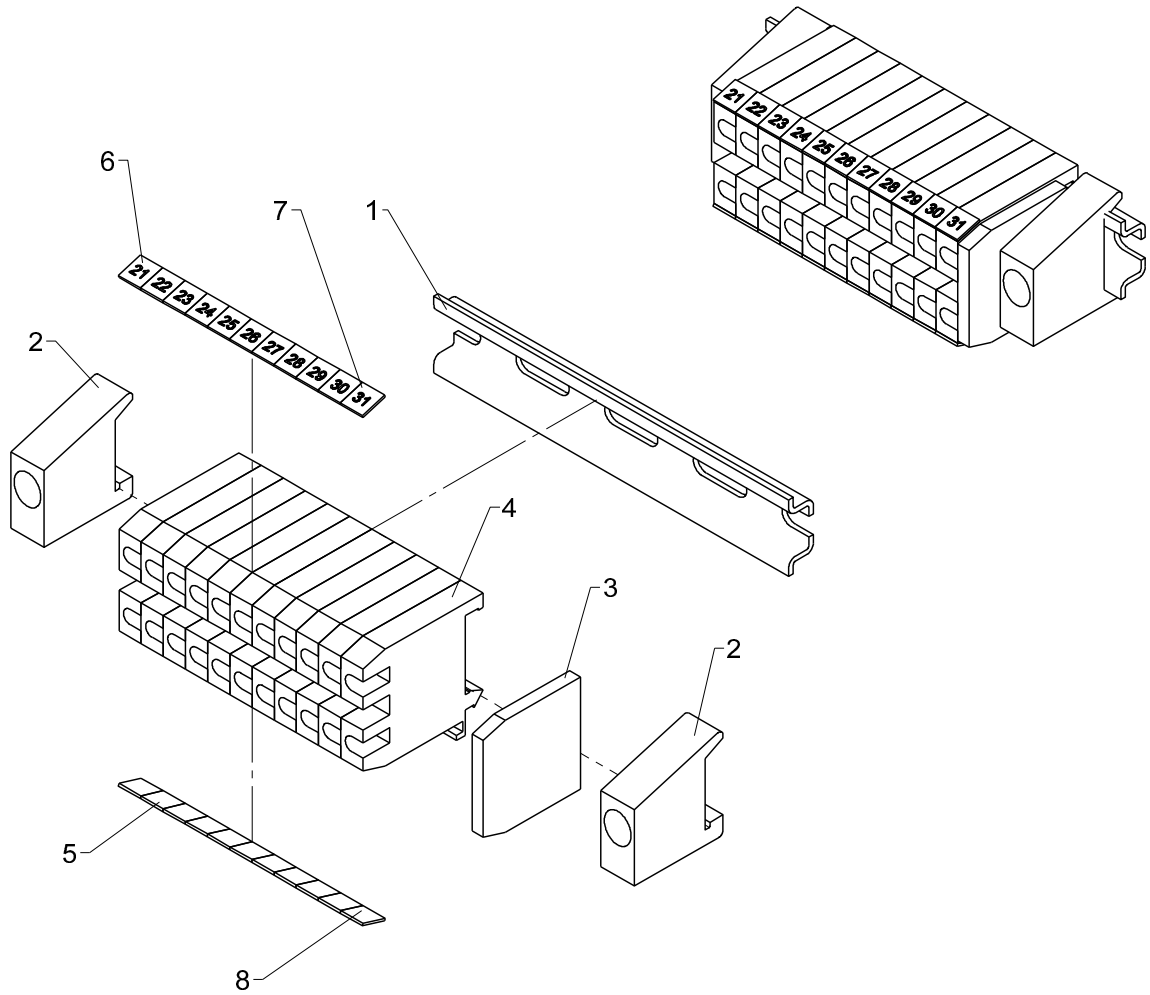
6
7
1
2
4
3
2
5
8

Obsolete

Terminal block, Box1, BMS-1

535 22 040

From loader 1070001
To loader

Created 13-07-2012
Modified

Pos	Qty.	Part no.	Description	Remarks
1	1	28013	Guide rail	110 mm.
2	2	28012	End angle	
3	1	28011	End plate	
4	11	28010	Terminal	
5	1	28019	Labels nos. 1-10	
6	1	28965	Dekafix labels 21-30	
7	1	29427	Dekafix marker 31-40	
8	1	28020	Labels nos. 11-20	

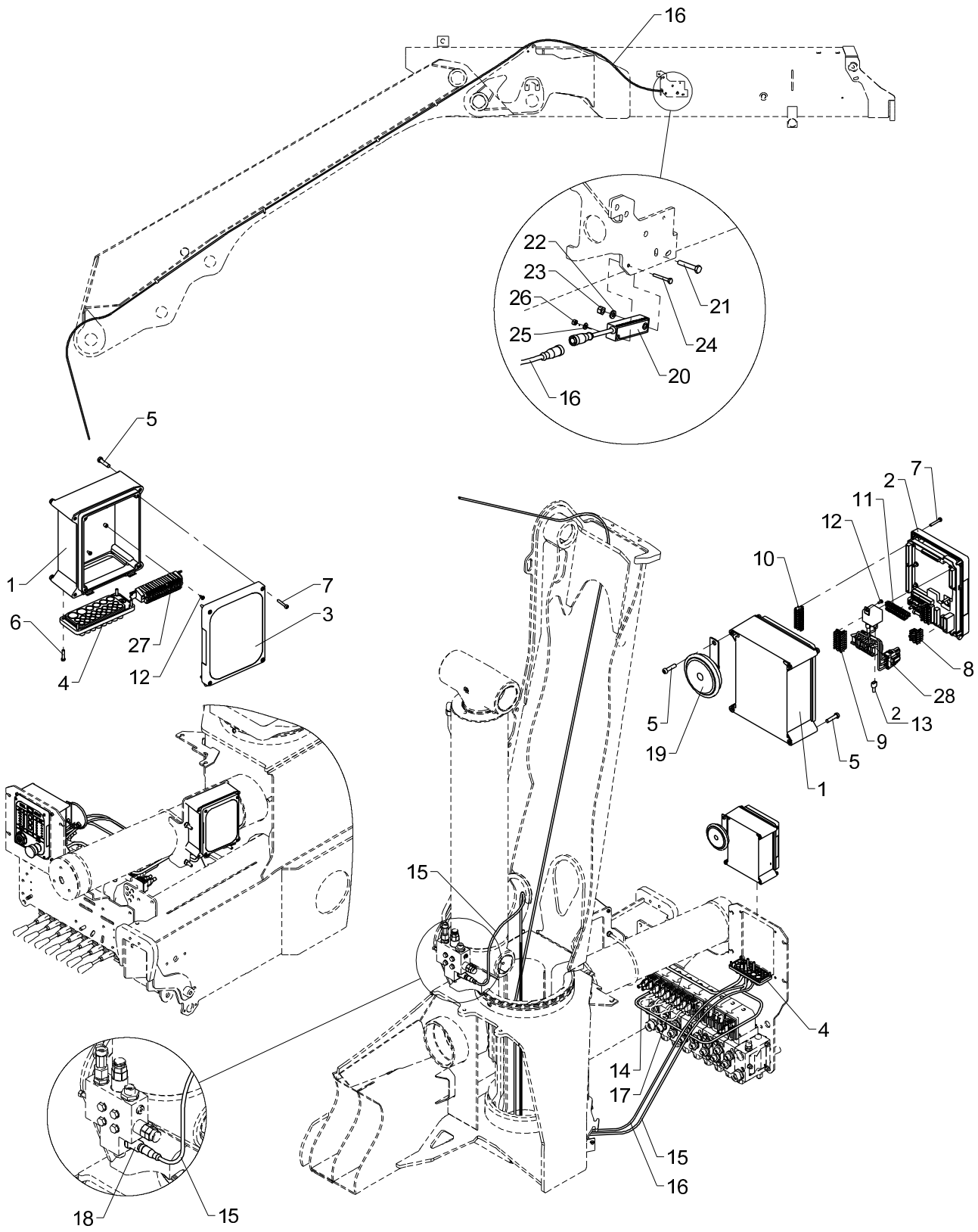
16
22
23
26
25
21
24
20
16
5
1
6
4
27
12
7
3
2
7
11
12
10
8
28
2
13
5
19
9
5
1
15
4
14
17
15
16
18
15

Obsolete

Basic electronic parts, NEMRC with CE

535 22 045

From loader 1070001
To loader

Created 21-03-2013
Modified

Pos	Qty.	Part no.	Description	Remarks
1	2	29304	Bottom f. RCL-box incl. hinge	
2	1	29301	Front complete, RCL 5300	
3	1	29347	RCL 5300 indicator panel	
4	2	29307	Cable lead-in	
5	9	30340	Screw, stainless	6,0 x 25
6	8	30346	Screw, stainless	4,0 x 20
7	8	30347	Screw, stainless	4,0 x 25
8	1	29341	CAN termination FJC	
9	1	29319	Plug, 8-polar for RCL 53XX	
10	1	29320	Plug, 9-polar for RCL 53XX	
11	1	29321	Plug, 10-polar for RCL 53XX	
12	5	30361	Screw, stainless	3,0 x 8
13	1	27428	Clip	
14	1	28265	Cable, dump valve, 1.35 m	
15	1	29224	Cable with socket, 5 m	
16	1	28730	Cable + socket, 10 m	9,0 m
17	1	28278	Cable 4 x 2.5	2 m
18	1	28850	Pressure transducer	
19	1	28971	Horn, 24 V, 2.5 Amp.	
20	1	29295	Tilt sensor + 0.25 m cable	
21	1	30116	Steel pin, stainless	M6 x 35
22	1	32302	Face washer, stainless	6 mm
23	1	30884	Lock nut, stainless	M6
24	1	31790	Set screw M4 x 30	M4 x 30
25	1	31188	Washer, stainless	4 mm
26	1	30857	Lock nut	M4
27	1	7006302	Terminal block, Box1	
28	1	7006301	Terminal block for RC 24 V	

18/129, 20/138, 22/153

70 07 940
70 07 930
Internal ref. 70 06 420

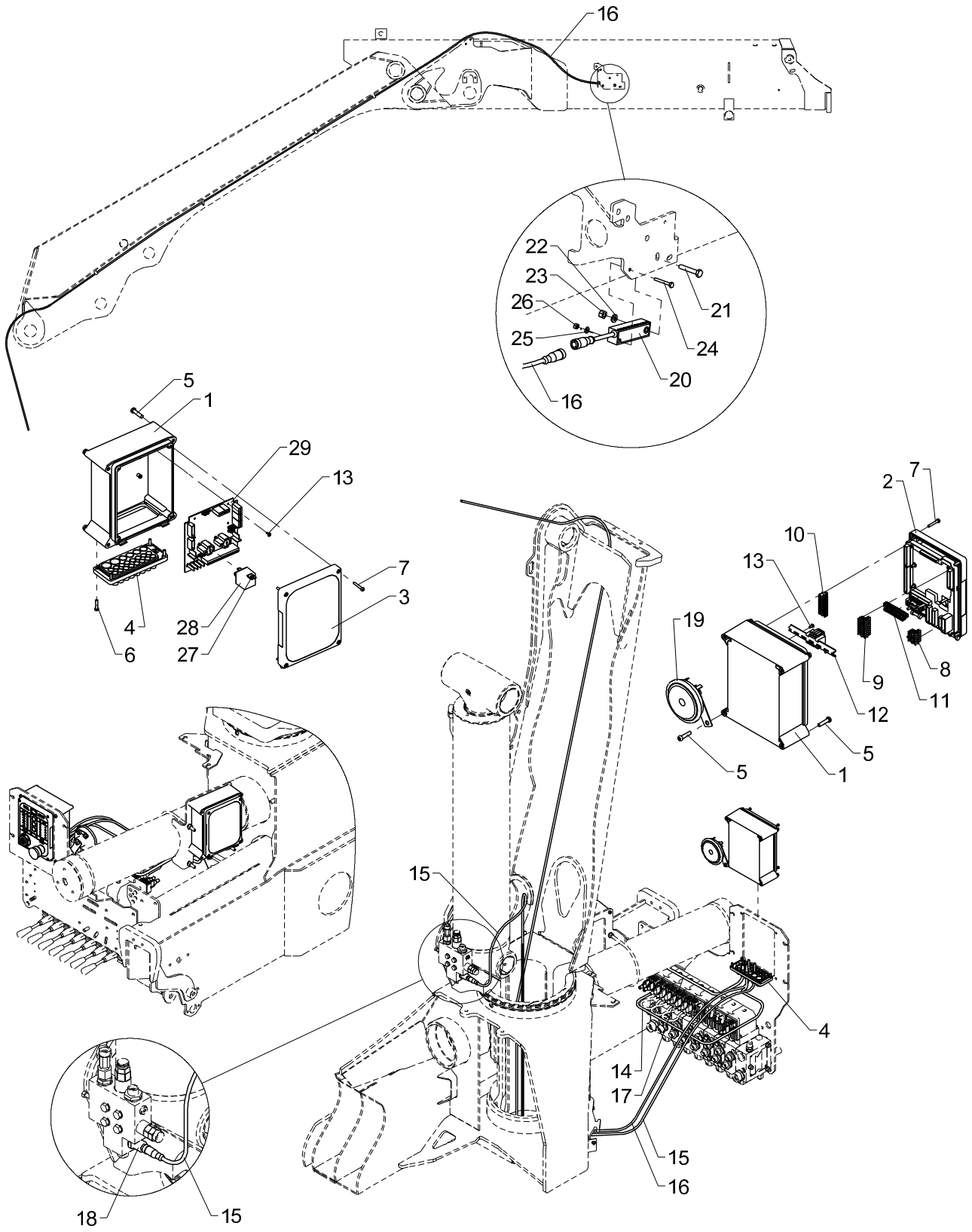

Basic electronic parts, NEMRC with CE

Pos	Qty.	Part no.	Description	Remarks
		7006420	Basic parts, NEMRC with CE	
		7007930	Relay, 12 V	
		7007940	Relay, 24 V	
1	2	29304	Bottom f. RCL-box incl. hinge	
2	1	29301	Front complete, RCL 5300	
3	1	29347	RCL 5300 indicator panel	
4	2	29307	Cable lead-in	
5	9	30340	Screw, stainless	6,0 x 25
6	8	30346	Screw, stainless	4,0 x 20
7	8	30347	Screw, stainless	4,0 x 25
8	1	29341	CAN termination FJC	
9	1	29319	Plug, 8-polar for RCL 53XX	
10	1	29320	Plug, 9-polar for RCL 53XX	
11	1	29321	Plug, 10-polar for RCL 53XX	
12	1	7006306	Terminal block for RCL + RC	
13	8	30361	Screw, stainless	3,0 x 8
14	1	28265	Cable, dump valve, 1.35 m	
15	1	29224	Cable with socket, 5 m	
16	1	28730	Cable + socket, 10 m	9,0 m
17	1	28278	Cable 4 x 2.5	2 m
18	1	28850	Pressure transducer	
19	1	28971	Horn, 24 V, 2.5 Amp.	
20	1	29295	Tilt sensor + 0.25 m cable	
21	1	30116	Steel pin, stainless	M6 x 35
22	1	32302	Face washer, stainless	6 mm
23	1	30884	Lock nut, stainless	M6
24	1	31790	Set screw M4 x 30	M4 x 30
25	1	31188	Washer, stainless	4 mm
26	1	30857	Lock nut	M4
27	1	27340	Relay, 12 V	
28	1	27342	Relay, 24V	
29	1	29473	EJB5380	

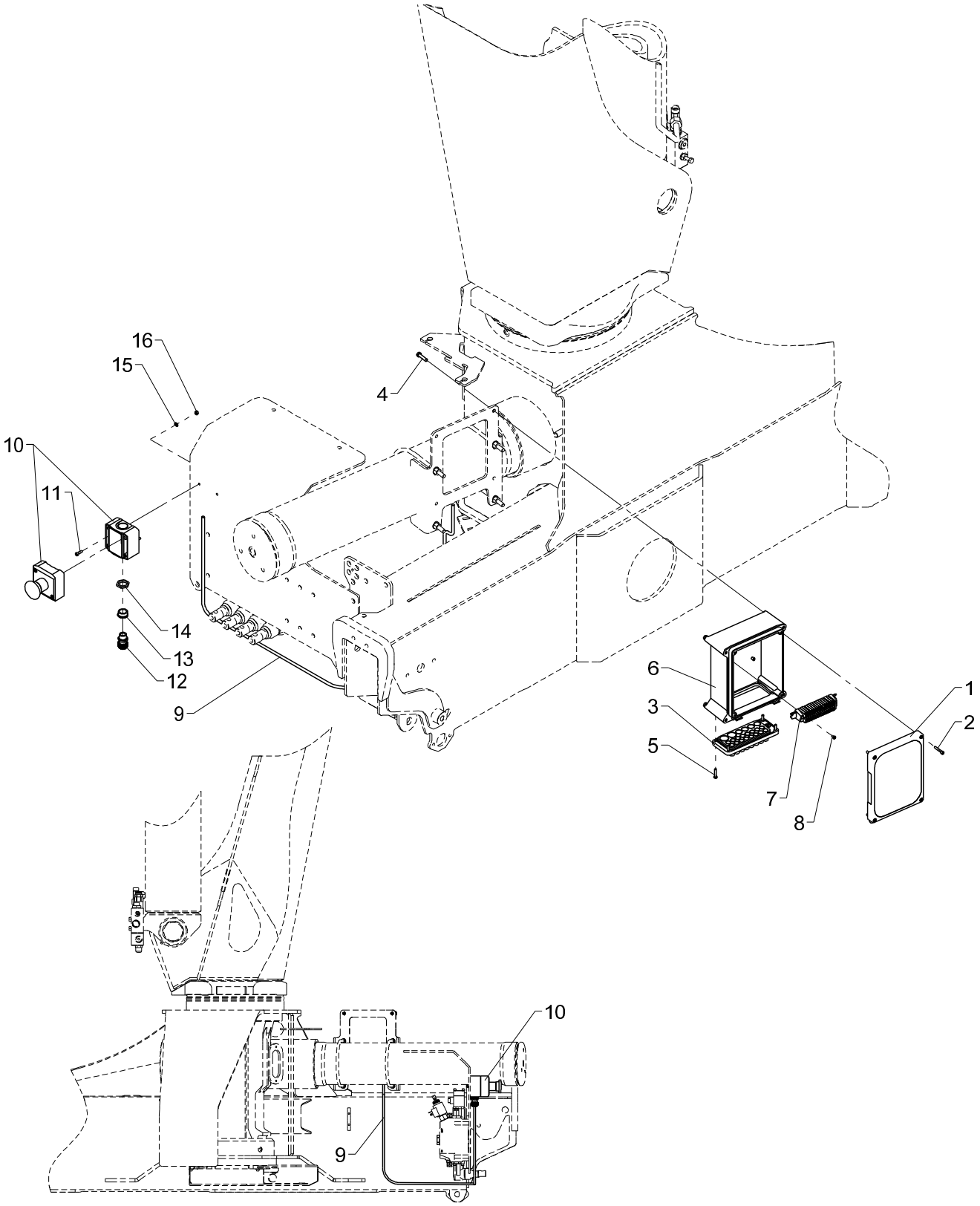
16
15
4
10
11
14
13
12
9
6
3
5
1
2
7
8
10
9

Obsolete

Basic electronic parts, NEMRC without CE

535 22 050

From loader 1070001
To loader

Created 31-05-2012
Modified 17-05-2013

Pos	Qty.	Part no.	Description	Remarks
1	1	29347	RCL 5300 indicator panel	
2	4	30347	Screw, stainless	4,0 x 25
3	1	29307	Cable lead-in	
4	4	30340	Screw, stainless	6,0 x 25
5	4	30346	Screw, stainless	4,0 x 20
6	1	29304	Bottom f. RCL-box incl. hinge	
7	1	7006302	Terminal block, Box1	
8	2	30361	Screw, stainless	3,0 x 8
9	1	27215	Wire 2 x 1.5	2 m
10	1	28992	Emergency stop box	
11	2	32406	Sockethead screw	MC4 x 12
12	1	28246	Bushing	
13	1	27866	Socket	
14	1	28081	Plastic nut	PG13,5
15	2	31188	Washer, stainless	4 mm
16	2	30857	Lock nut	M4

18/129, 20/138, 22/153

70 07 940
70 07 930
Internal ref. 70 06 410

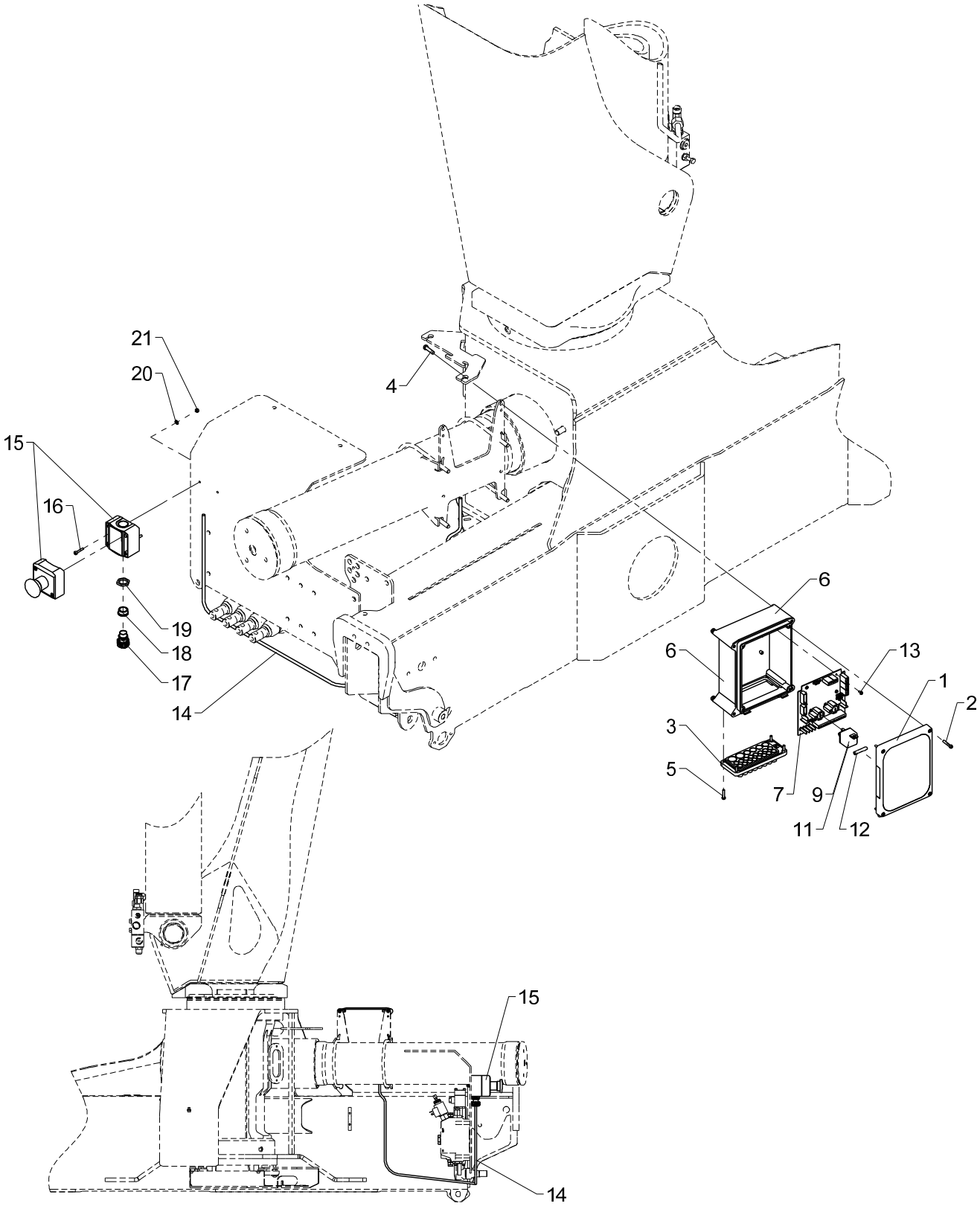

Basic electronic parts, NEMRC without CE

Pos	Qty.	Part no.	Description	Remarks
		7006410	Basic parts, NEMRC without CE	
		7007930	Relay, 12 V	
		7007940	Relay, 24 V	
1	1	29347	RCL 5300 indicator panel	
2	4	30347	Screw, stainless	4,0 x 25
3	1	29307	Cable lead-in	
4	4	30340	Screw, stainless	6,0 x 25
5	4	30346	Screw, stainless	4,0 x 20
6	1	29304	Bottom f. RCL-box incl. hinge	
7	1	29473	EJB5380	
8	1	7007930	Relay, 12 V	
9	1	27340	Relay, 12 V	
10	1	7007940	Relay, 24 V	
11	1	27342	Relay, 24V	
12	1	27497	Insulation joint, blue	
13	6	30361	Screw, stainless	3,0 x 8
14	1	27215	Wire 2 x 1.5	2 m
15	1	28992	Emergency stop box	
16	2	30700	Screw, stainless	MC4 x 20
17	1	28246	Bushing	
18	1	27866	Socket	
19	1	28081	Plastic nut	PG13,5
20	2	31188	Washer, stainless	4 mm
21	2	30857	Lock nut	M4

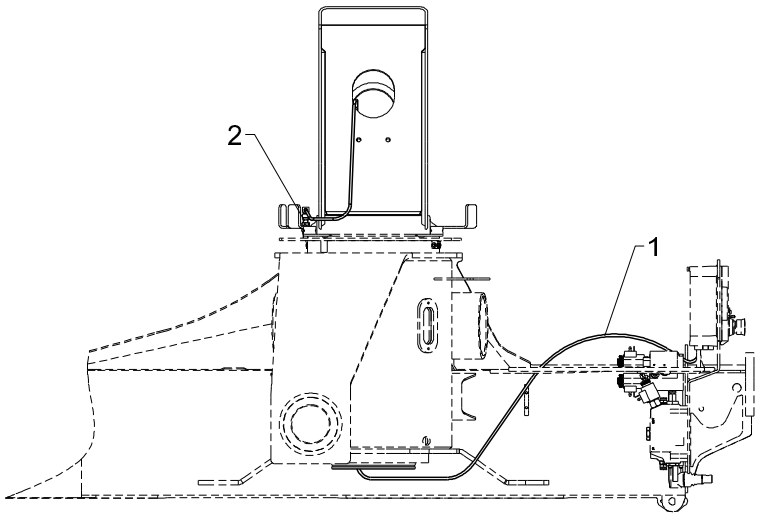
2
1

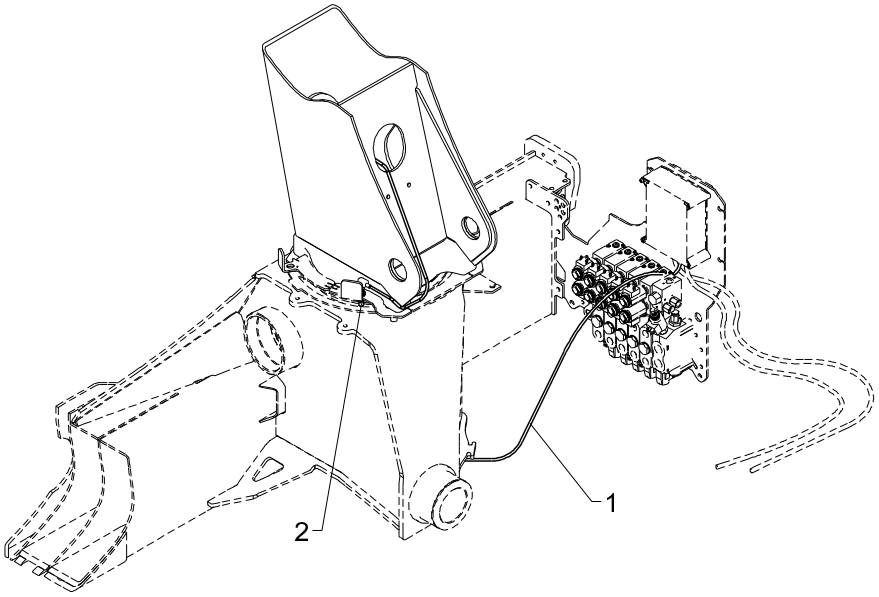
1
2

2-stage LMB, RC

Pos	Qty.	Part no.	Description	Remarks
1	1	28077	Cable with plug	2,7 m
2	1	29447	Proximity switchM12 8mm PNP-NO	

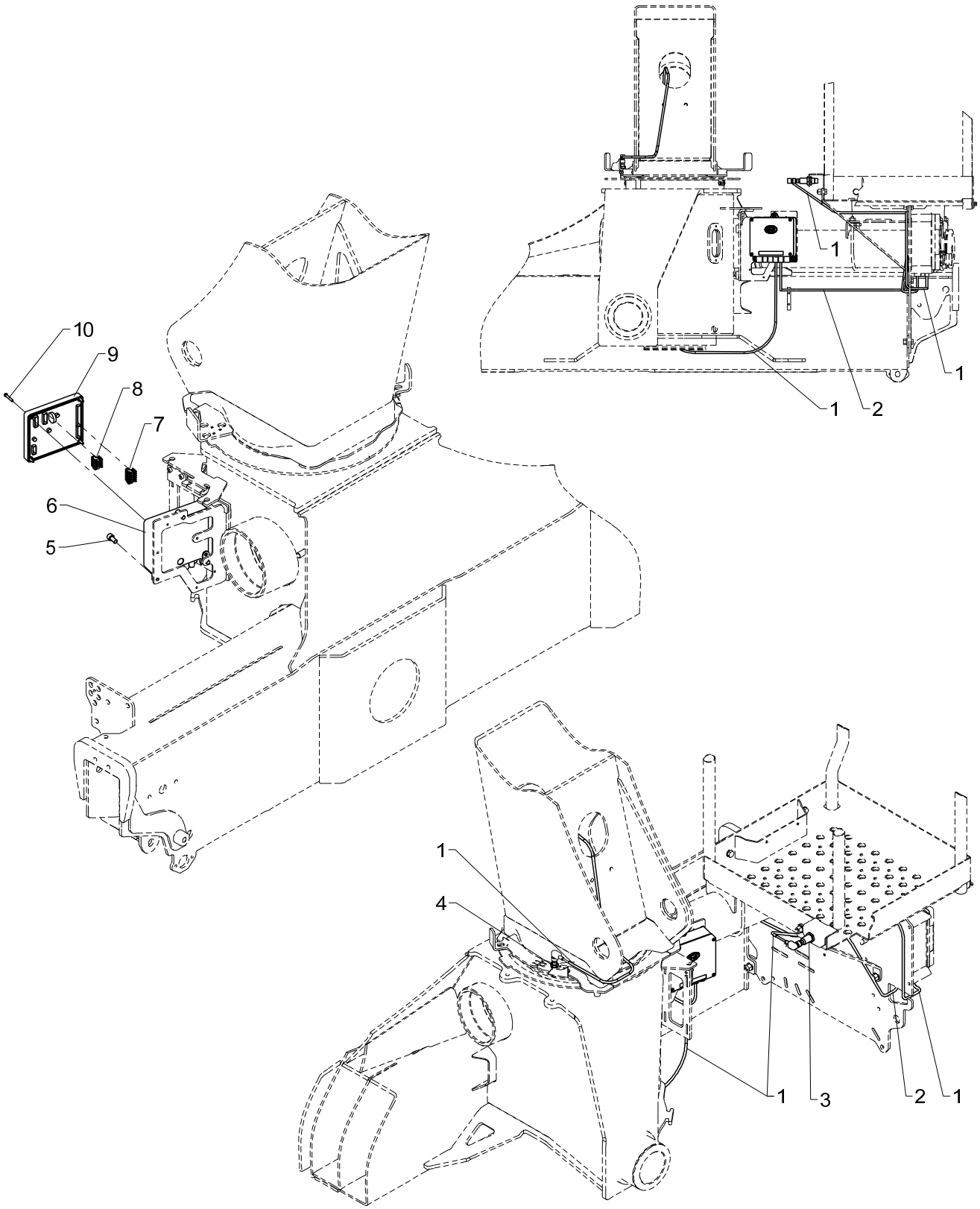
10
9
8
7
6
5
1
1
2
1
1
4
1
3
2
1

HSL, HSRC

Pos	Qty.	Part no.	Description	Remarks
1	2	28117	Cable with plug	
2	1	28263	CAN BUS cable	2 m
3	1	28210	Proximity switch	
4	1	29447	Proximity switchM12 8mm PNP-NO	
5	3	30449	Screw	MC8 x 16
6	1	29313	Bottom f. Fly-Jib box	
7	1	29324	Plug, 6-polar for RCL 53XX	
8	1	29317	Plug, 5-polar for RCL 53XX	
9	1	29346	CIO5376 controller cover cpl.	
10	4	30347	Screw, stainless	4,0 x 25

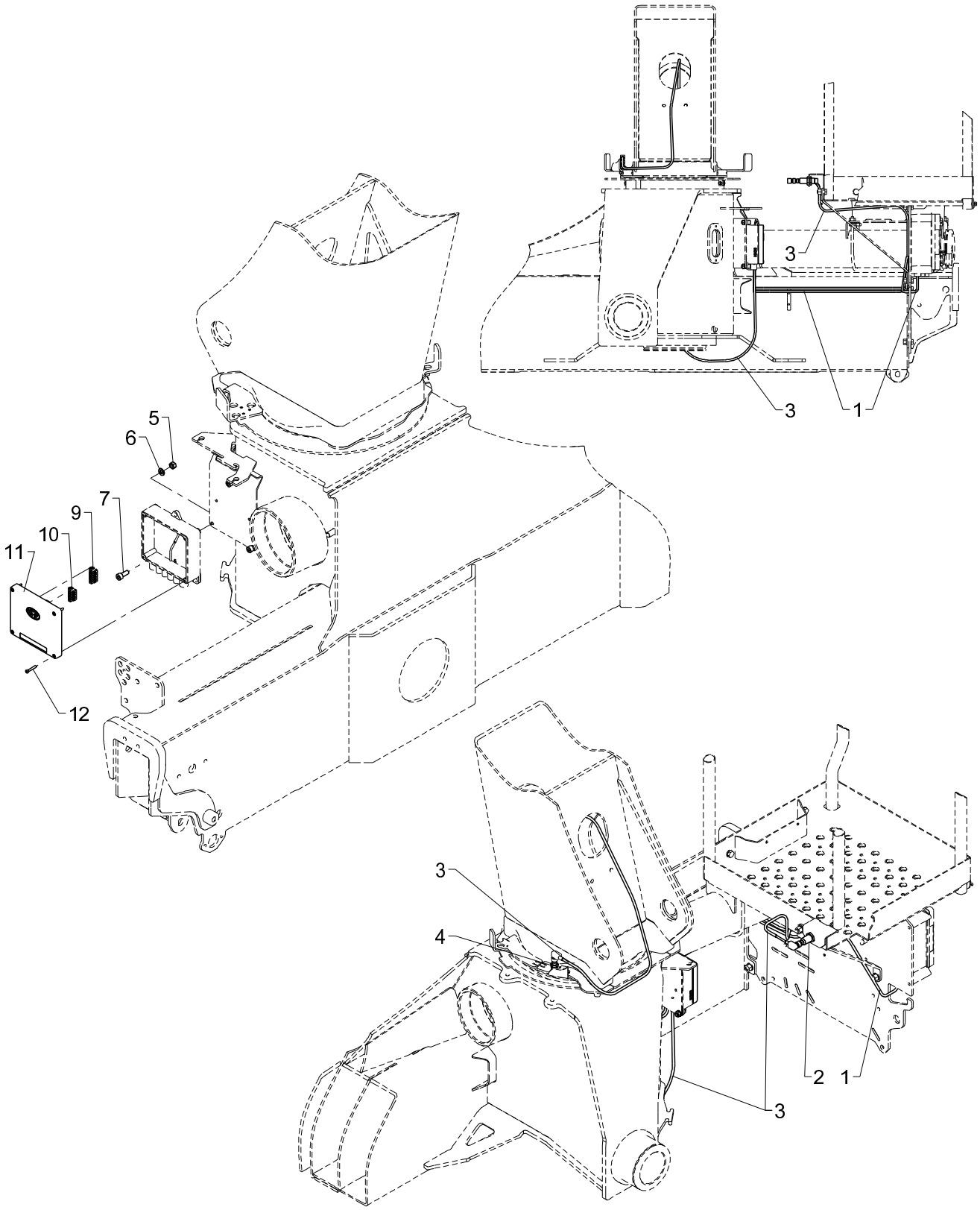
3
3
1
5
6
7
9
10
11
12
3
4
2
1
3

HSL, HS NEMRC

Pos	Qty.	Part no.	Description	Remarks
1	1	28263	CAN BUS cable	2 m
2	1	28210	Proximity switch	
3	2	28117	Cable with plug	
4	1	29447	Proximity switchM12 8mm PNP-NO	
5	3	30856	Nut, stainless	M8
6	3	31147	Face washer, 8 mm	
7	3	30438	Screw	MC8 x 20
8	1	29313	Bottom f. Fly-Jib box	
9	1	29324	Plug, 6-polar for RCL 53XX	
10	1	29317	Plug, 5-polar for RCL 53XX	
11	1	29346	CIO5376 controller cover cpl.	
12	4	30347	Screw, stainless	4,0 x 25

18/129, 20/138, 22/153

Internal ref. 70 06 740

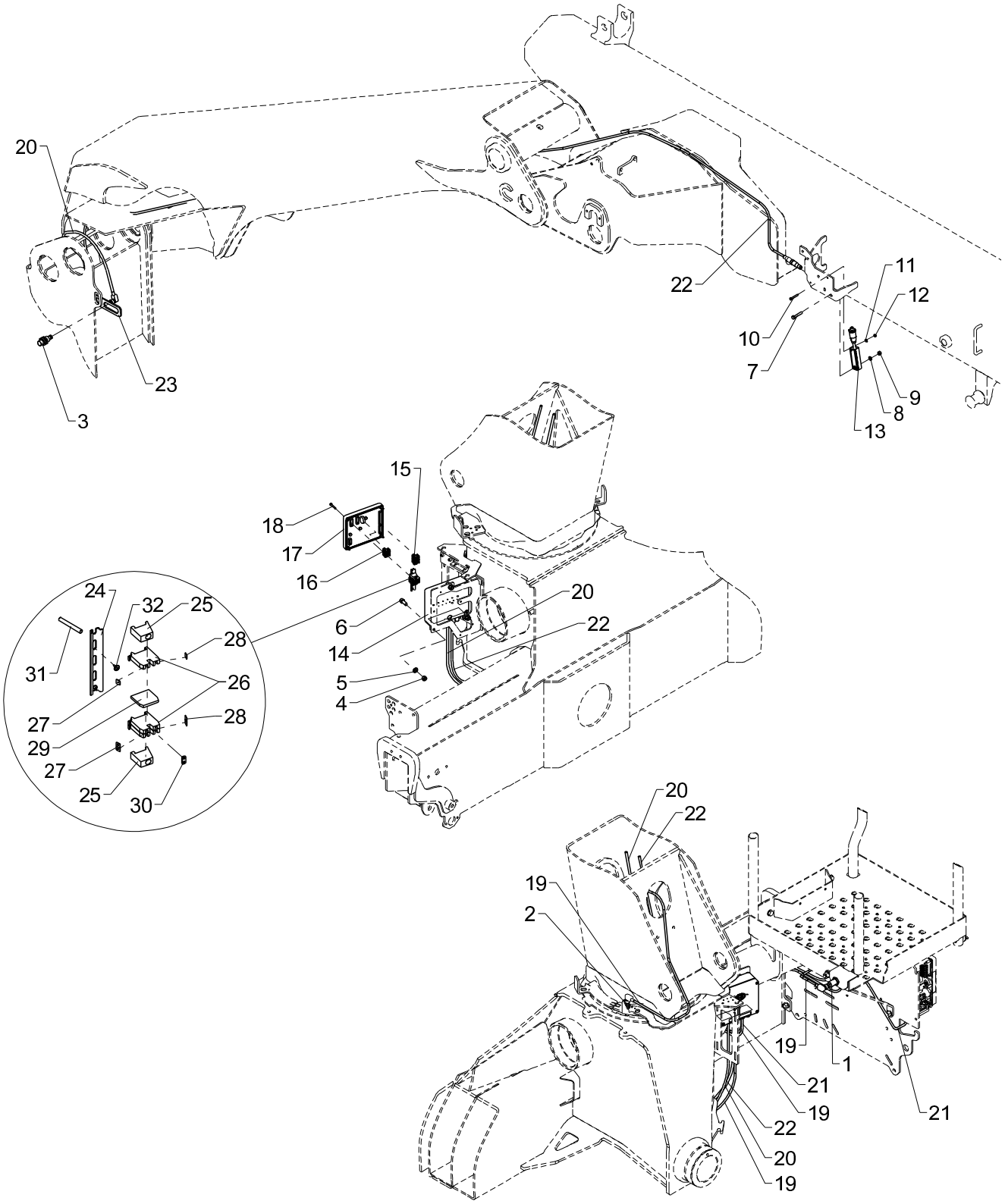

HSL-E, HS NEMRC

Pos	Qty.	Part no.	Description	Remarks
1	1	28210	Proximity switch	
2	1	29447	Proximity switchM12 8mm PNP-NO	
3	1	28980	Proximity switch	
4	3	30856	Nut, stainless	M8
5	3	31147	Face washer, 8 mm	
6	3	30438	Screw	MC8 x 20
7	1	30116	Steel pin, stainless	M6 x 35
8	1	32302	Face washer, stainless	6 mm
9	1	30884	Lock nut, stainless	M6
10	1	31790	Set screw M4 x 30	M4 x 30
11	1	31188	Washer, stainless	4 mm
12	1	30857	Lock nut	M4
13	1	29295	Tilt sensor + 0.25 m cable	
14	1	29313	Bottom f. Fly-Jib box	
15	1	29324	Plug, 6-polar for RCL 53XX	
16	1	29317	Plug, 5-polar for RCL 53XX	
17	1	29346	CIO5376 controller cover cpl.	
18	4	30347	Screw, stainless	4,0 x 25
19	2	28117	Cable with plug	
20	1	28077	Cable with plug	
21	1	28263	CAN BUS cable	2 m
22	1	28730	Cable + socket, 10 m	9,0 m
23	1	6306803	Bracket for proximity switch	
24	1	28013	Guide rail	80 mm
25	2	28012	End angle	
26	3	28010	Terminal	
27	1	28019	Labels nos. 1-10	
28	1	28965	Dekafix labels 21-30	
29	1	28011	End plate	
30	1	28208	Fish plate	
31	1	27202	Cable	0,3 m
32	2	28693	Screw	Ø2.9 x 6.5

18/129, 20/138, 22/153

Internal ref. 70 06 530

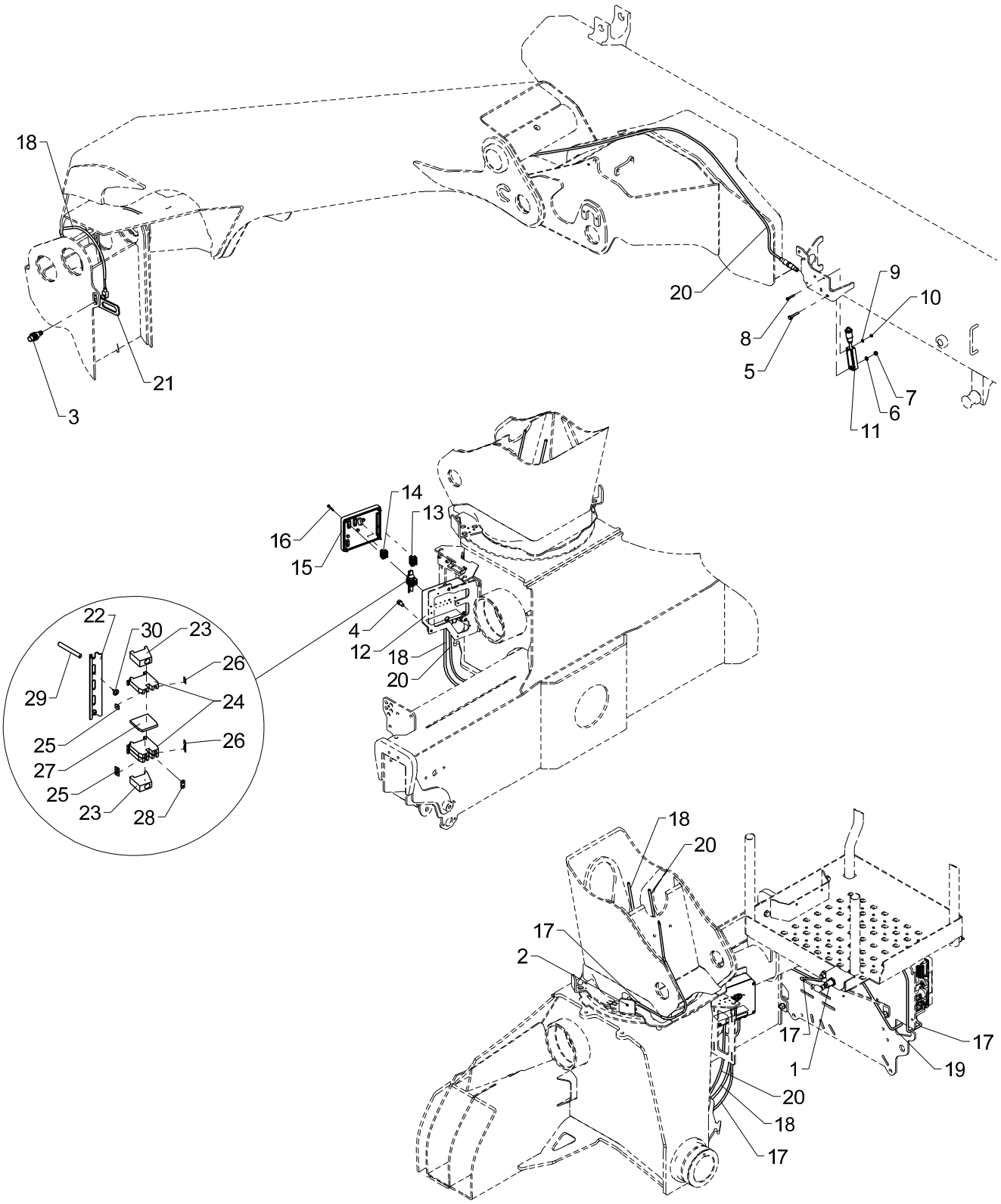

HSL-E, HSRC

Pos	Qty.	Part no.	Description	Remarks
1	1	28210	Proximity switch	
2	1	29447	Proximity switchM12 8mm PNP-NO	
3	1	28980	Proximity switch	
4	3	30449	Screw	MC8 x 16
5	1	30116	Steel pin, stainless	M6 x 35
6	1	32302	Face washer, stainless	6 mm
7	1	30884	Lock nut, stainless	M6
8	1	31790	Set screw M4 x 30	M4 x 30
9	1	31188	Washer, stainless	4 mm
10	1	30857	Lock nut	M4
11	1	29295	Tilt sensor + 0.25 m cable	
12	1	29313	Bottom f. Fly-Jib box	
13	1	29324	Plug, 6-polar for RCL 53XX	
14	1	29317	Plug, 5-polar for RCL 53XX	
15	1	29346	CIO5376 controller cover cpl.	
16	4	30347	Screw, stainless	4,0 x 25
17	2	28117	Cable with plug	
18	1	28077	Cable with plug	
19	1	28263	CAN BUS cable	2 m
20	1	28730	Cable + socket, 10 m	9,0 m
21	1	6306803	Bracket for proximity switch	
22	1	28013	Guide rail	80 mm
23	2	28012	End angle	
24	3	28010	Terminal	
25	1	28019	Labels nos. 1-10	
26	1	28965	Dekafix labels 21-30	
27	1	28011	End plate	
28	1	28208	Fish plate	
29	1	27202	Cable	0,3 m
30	2	28693	Screw	Ø2.9 x 6.5

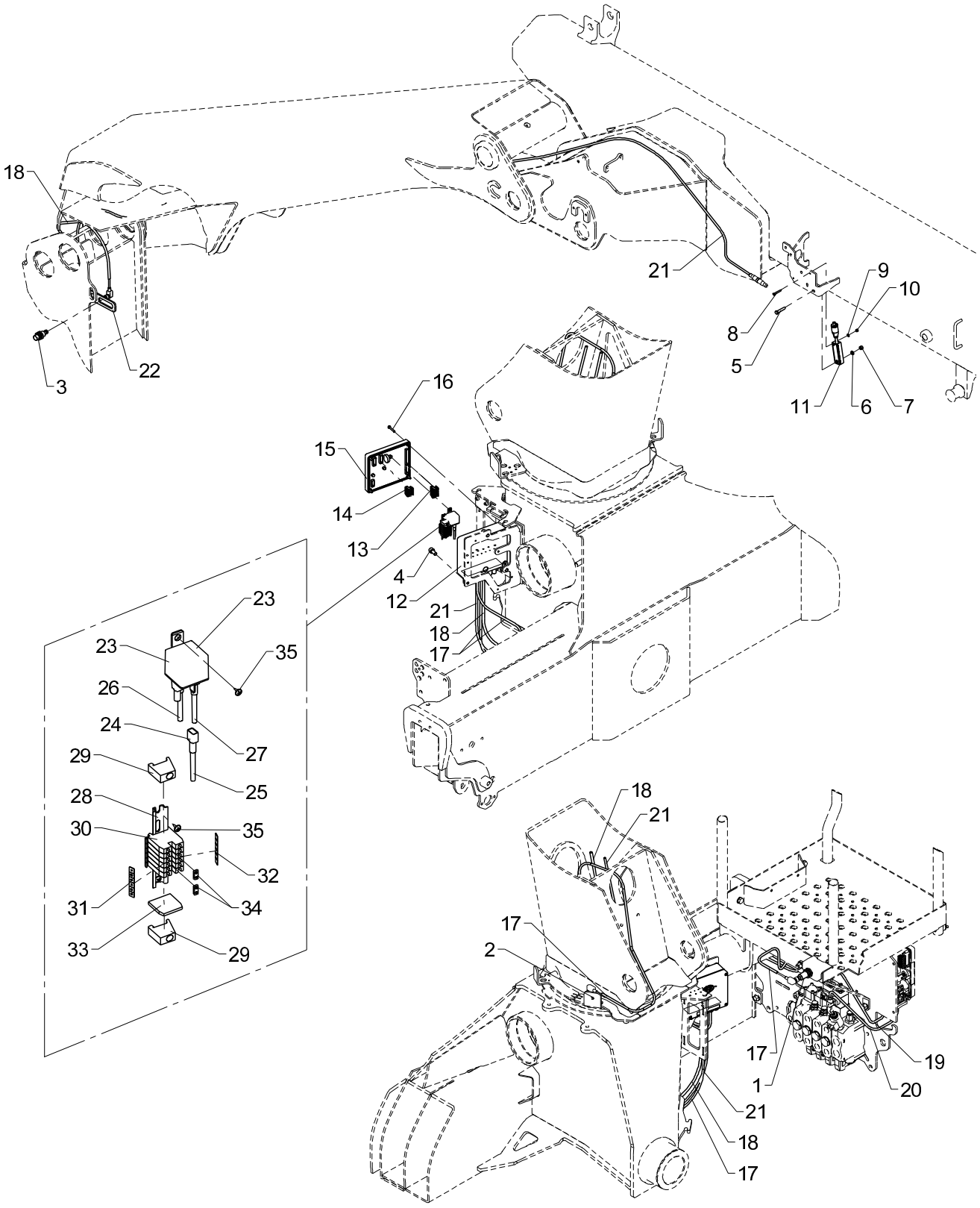
18
3
22
21
9
10
8
5
11
6
7
16
15
14
13
4
12
21
18
17
23
23
35
26
24
27
29
25
28
30
35
32
31
34
33
29
18
21
17
2
17
19
1
20
21
18
17

Obsolete

HSL-Q, HSRC

535 22 100

From loader 1070001
To loader

Created 22-10-2012
Modified 23-06-2014

Pos	Qty.	Part no.	Description	Remarks
1	1	28210	Proximity switch	
2	1	29447	Proximity switchM12 8mm PNP-NO	
3	1	28980	Proximity switch	
4	3	30449	Screw	MC8 x 16
5	1	30116	Steel pin, stainless	M6 x 35
6	1	32302	Face washer, stainless	6 mm
7	1	30884	Lock nut, stainless	M6
8	1	31790	Set screw M4 x 30	M4 x 30
9	1	31188	Washer, stainless	4 mm
10	1	30857	Lock nut	M4
11	1	29295	Tilt sensor + 0.25 m cable	
12	1	29313	Bottom f. Fly-Jib box	
13	1	29324	Plug, 6-polar for RCL 53XX	
14	1	29317	Plug, 5-polar for RCL 53XX	
15	1	29346	CIO5376 controller cover cpl.	
16	4	30347	Screw, stainless	4,0 x 25
17	2	28117	Cable with plug	
18	1	28077	Cable with plug	
19	1	28263	CAN BUS cable	2 m
20	1	28294	Cable, spool sensor	
21	1	28730	Cable + socket, 10 m	9,0 m
22	1	6306803	Bracket for proximity switch	
23	1	27342	Relay, 24V	
24	4	27429	Clamp	
25	1	27202	Cable	0,2 m
26	1	27204	Wire, 1 x1.5mm2	0,3 m
27	1	27203	Cable	0,2 m
28	1	28013	Guide rail	80 mm
29	2	28012	End angle	
30	6	28010	Terminal	
31	2	28019	Labels nos. 1-10	
32	2	28965	Dekafix labels 21-30	
33	1	28011	End plate	
34	2	28208	Fish plate	
35	3	28693	Screw	Ø2.9 x 6.5

18/129, 20/138, 22/153

Internal ref. 70 06 540

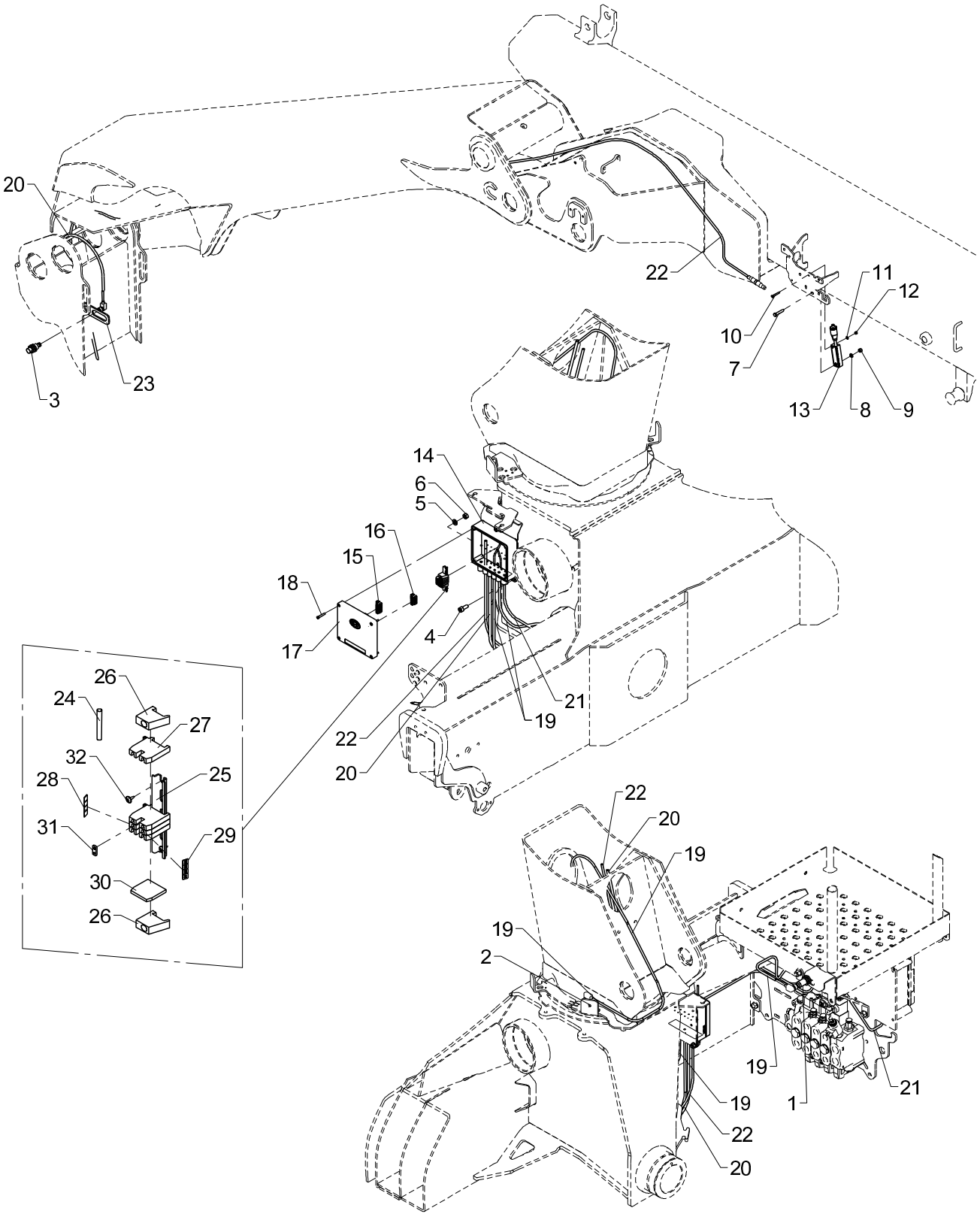

HSL-Q, HSRC

Pos	Qty.	Part no.	Description	Remarks
1	1	28210	Proximity switch	
2	1	29447	Proximity switchM12 8mm PNP-NO	
3	1	28980	Proximity switch	
4	3	30438	Screw	MC8 x 20
5	3	31147	Face washer, 8 mm	
6	3	30856	Nut, stainless	M8
7	1	30116	Steel pin, stainless	M6 x 35
8	1	32302	Face washer, stainless	6 mm
9	1	30884	Lock nut, stainless	M6
10	1	31790	Set screw M4 x 30	M4 x 30
11	1	31188	Washer, stainless	4 mm
12	1	30857	Lock nut	M4
13	1	29295	Tilt sensor + 0.25 m cable	
14	1	29313	Bottom f. Fly-Jib box	
15	1	29324	Plug, 6-polar for RCL 53XX	
16	1	29317	Plug, 5-polar for RCL 53XX	
17	1	29346	CIO5376 controller cover cpl.	
18	4	30347	Screw, stainless	4,0 x 25
19	2	28117	Cable with plug	
20	1	28077	Cable with plug	
21	1	28263	CAN BUS cable	2 m
22	1	28730	Cable + socket, 10 m	9,0 m
23	1	6306803	Bracket for proximity switch	
24	1	27202	Cable	0,3 m
25	1	28013	Guide rail	80 mm
26	2	28012	End angle	
27	4	28010	Terminal	
28	1	28019	Labels nos. 1-10	
29	1	28965	Dekafix labels 21-30	
30	1	28011	End plate	
31	1	28208	Fish plate	
32	2	28693	Screw	Ø2.9 x 6.5

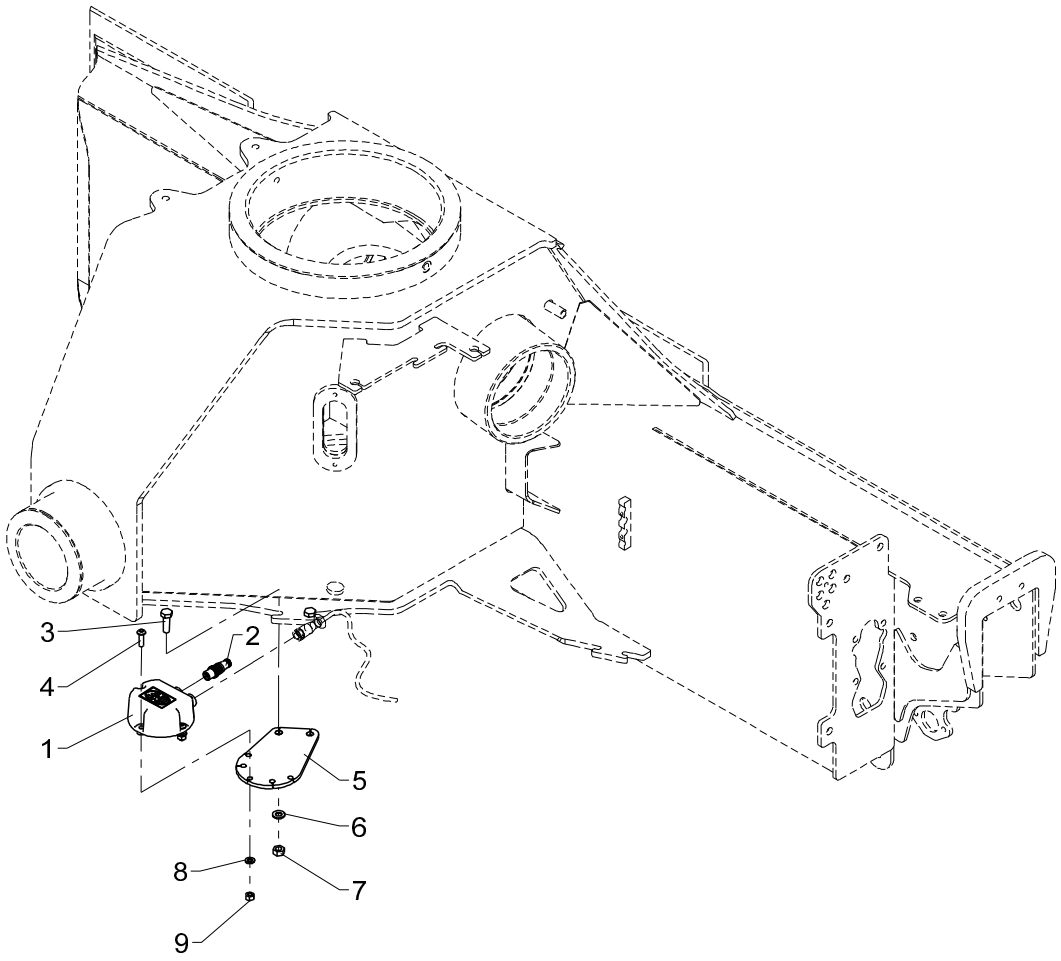
3
2
4
1
5
6
8
7
9

EVS, G2

Pos	Qty.	Part no.	Description	Remarks
1	1	29426	Electronic inclinometer,single	
2	1	29486	Plug M12, termination	
3	2	30134	Set screw, stainless	M8 x 25
4	3	32491	Round-head screw	M6 x 20
5	1	6340274	Mounting fittings (AIC 5062)	
6	2	31147	Face washer, 8 mm	
7	2	30856	Nut, stainless	M8
8	3	32302	Face washer, stainless	6 mm
9	3	30884	Lock nut, stainless	M6

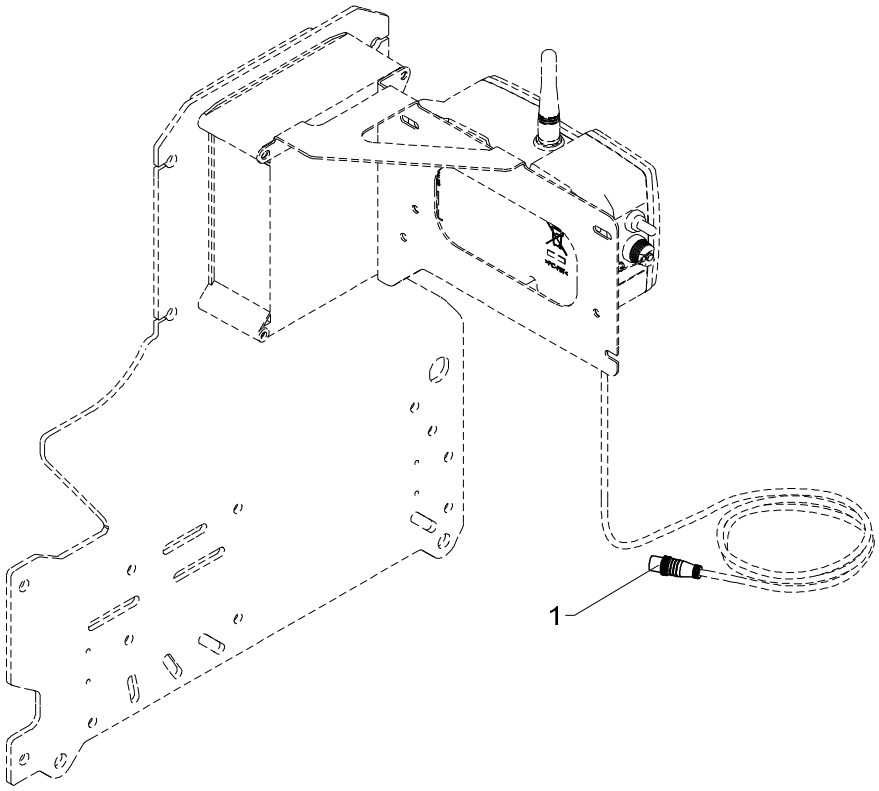
1

Termination, G2

535 22 120

From loader 1070001
To loader

Created 03-09-2012
Modified

Pos	Qty.	Part no.	Description	Remarks
1	1	29486	Plug M12, termination	

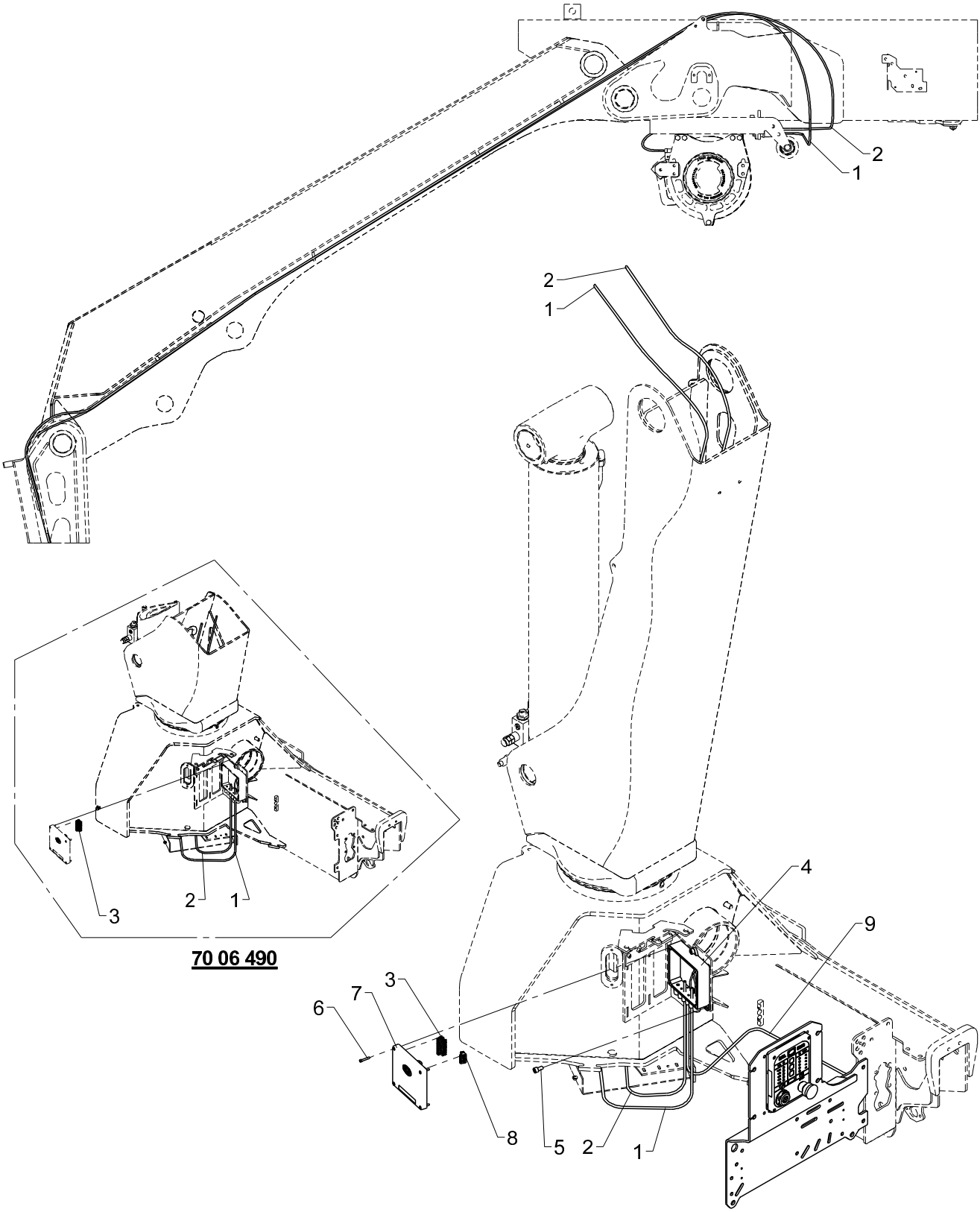
2
1
2
1
3
2
1
70 06 490
4
9
3
7
6
8
5
2
1

Winch, electric parts

Pos	Qty.	Part no.	Description	Remarks
1	1	28249	Cable 2 x 0.75	10 m
2	1	28730	Cable + socket, 10 m	
3	1	29321	Plug, 10-polar for RCL 53XX	
4	1	29313	Bottom f. Fly-Jib box	
5	3	30449	Screw	MC8 x 16
6	4	30347	Screw, stainless	4,0 x 25
7	1	29346	CIO5376 controller cover cpl.	
8	1	29317	Plug, 5-polar for RCL 53XX	
9	1	28263	CAN BUS cable	1,5 m

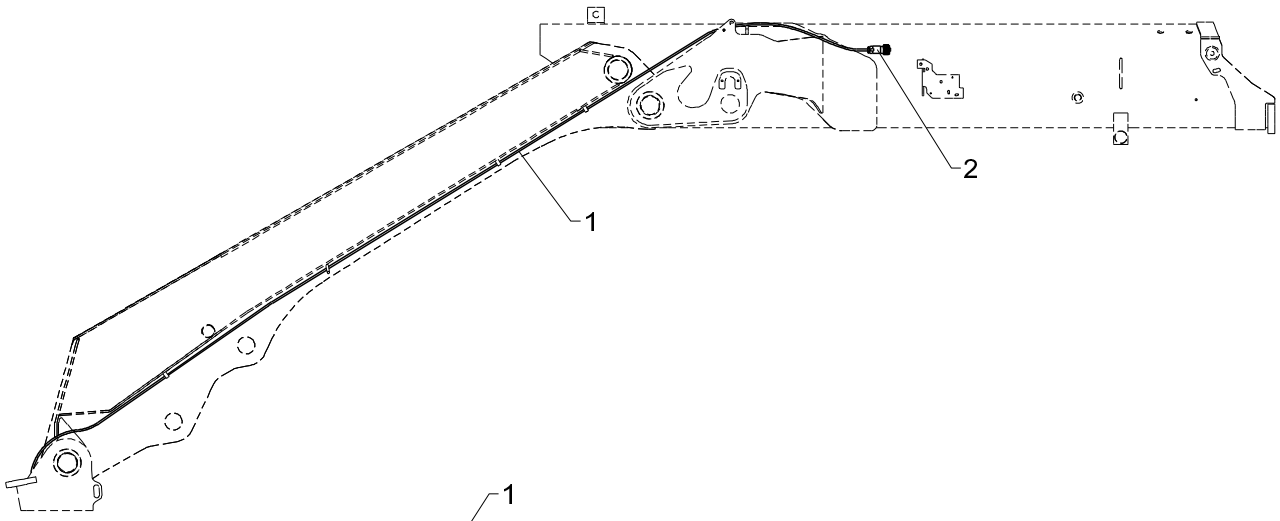
1
2

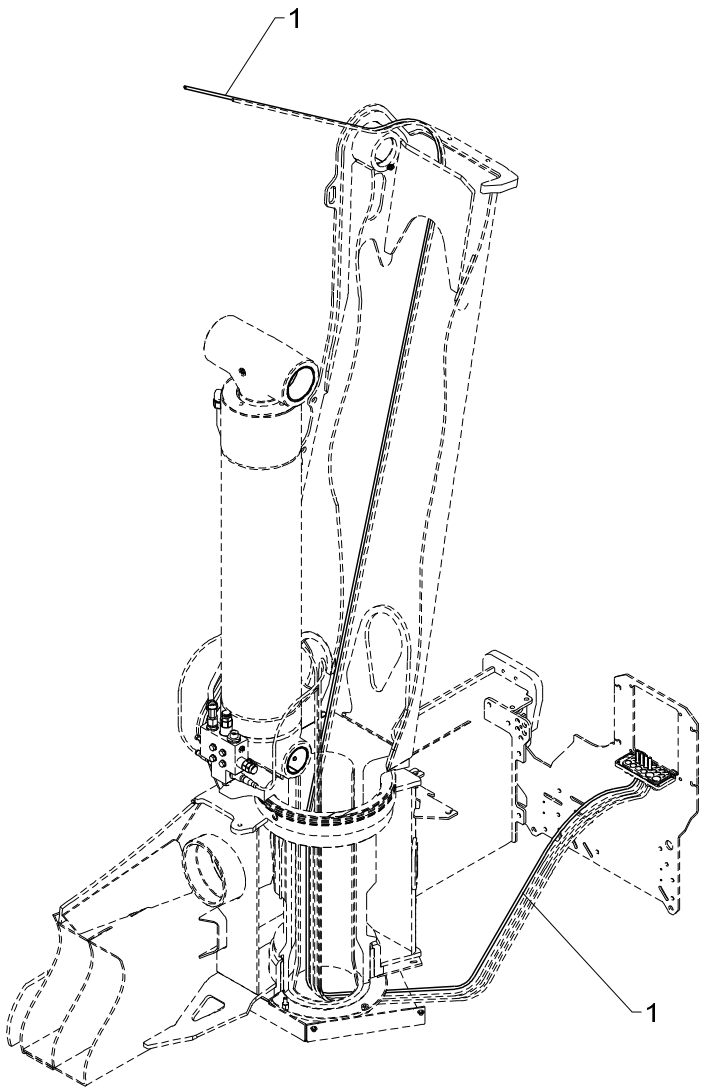
1
1

Column, Fly-Jib

Pos	Qty.	Part no.	Description	Remarks
1	1	28263	CAN BUS cable	9 m
2	1	29275	Cable socket 7-polar 10 A	

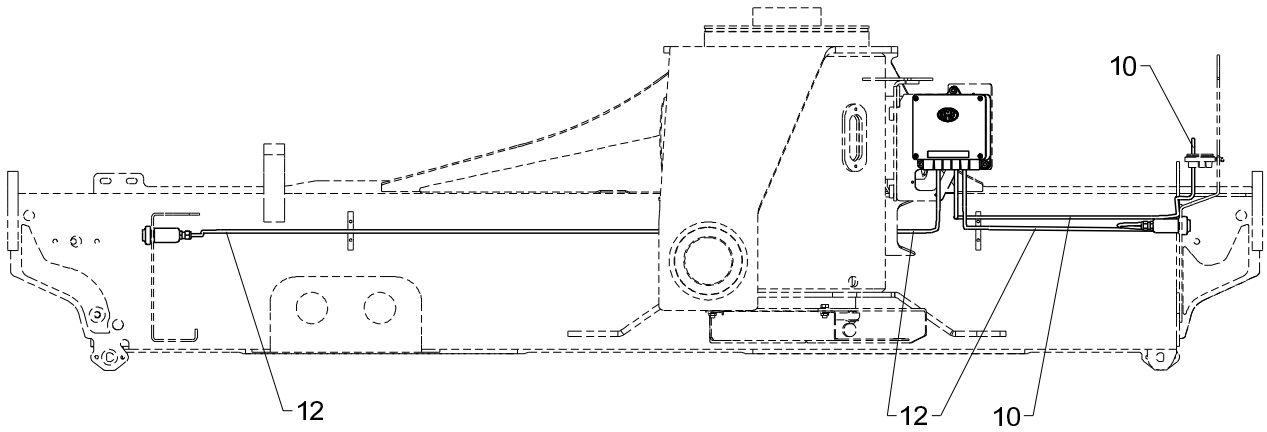
10
12
12
10

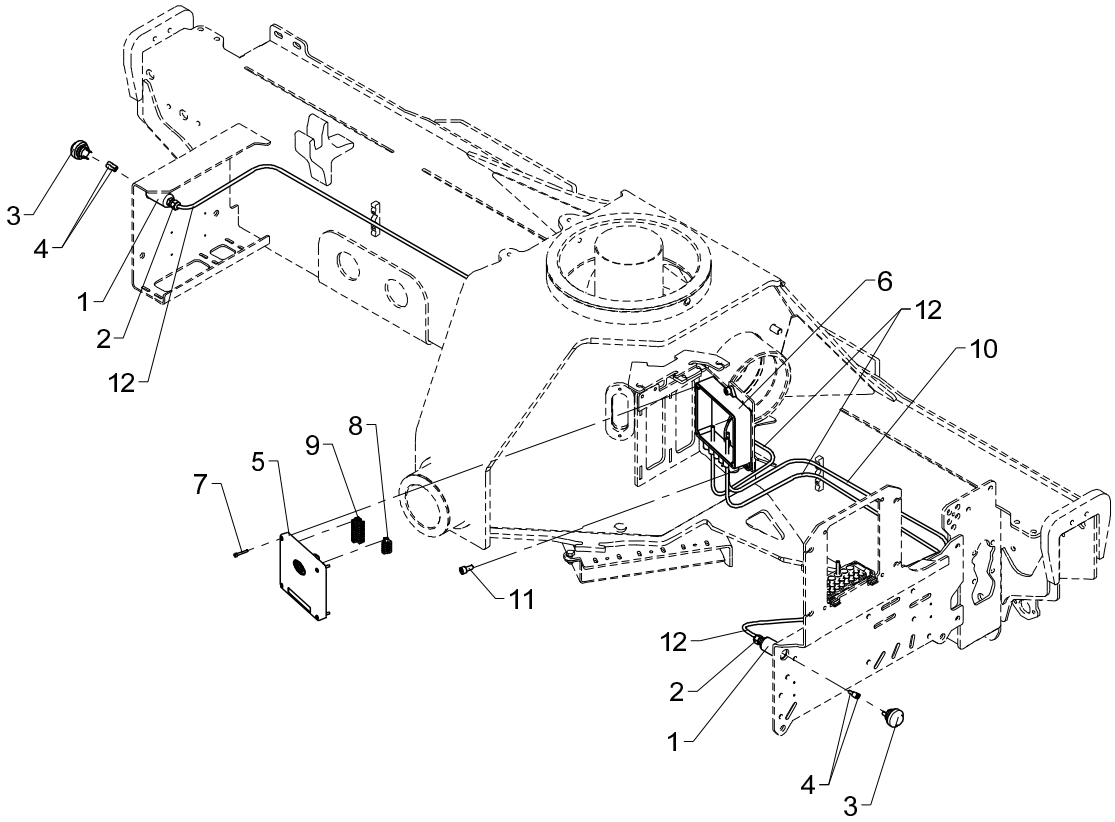
3
4
1
2
12
6
12
10
8
9
5
7
11
12
2
1
4
3

Obsolete

Stabilizer operation via RC

535 22 150

From loader 1070001
To loader

Created 14-06-2012
Modified 01-01-2014

Pos	Qty.	Part no.	Description	Remarks
1	2	64574	Housing	
2	2	28459	Connection	M12 x 1,5
3	2	27333	Push button	
4	4	27429	Clamp	
5	1	29346	CIO5376 controller cover cpl.	
6	1	29313	Bottom f. Fly-Jib box	
7	4	30347	Screw, stainless	4,0 x 25
8	1	29317	Plug, 5-polar for RCL 53XX	
9	1	29321	Plug, 10-polar for RCL 53XX	
10	1	28263	CAN BUS cable	1,5 m
11	3	30449	Screw	MC8 x 16
12	2	28249	Cable 2 x 0.75	3,5 m

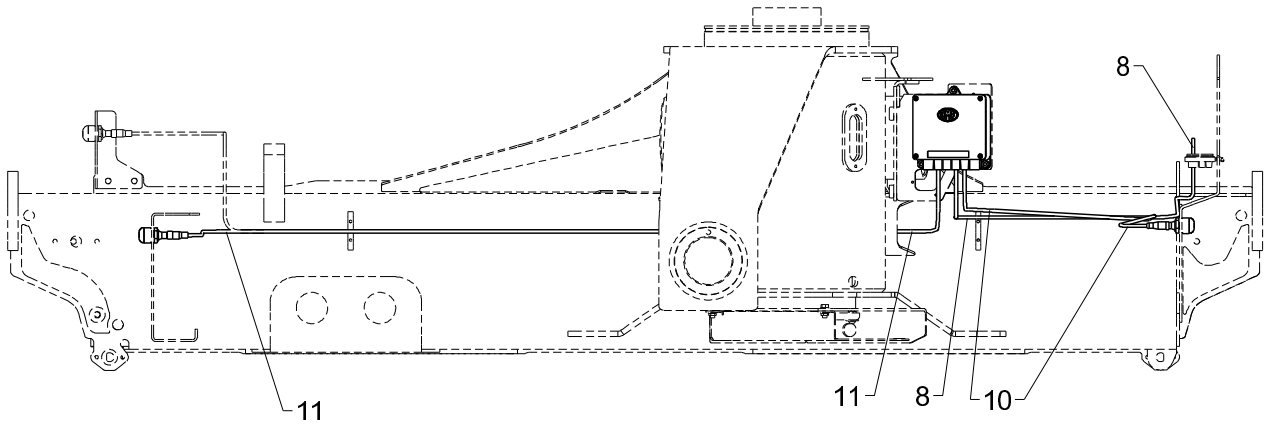
8
11
11
8
10

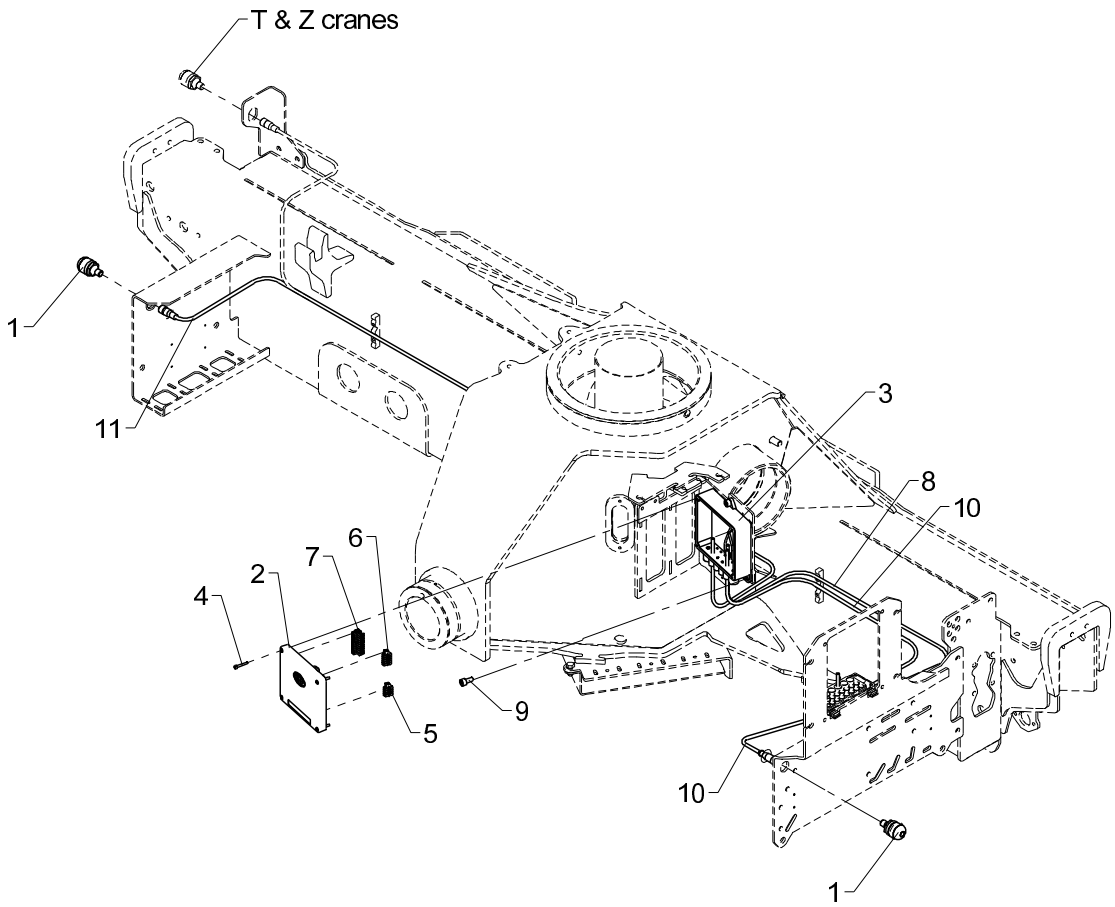
T & Z cranes
1
11
3
8
10
6
7
2
4
9
5
10
1

Stabilizer operation via RC

Pos	Qty.	Part no.	Description	Remarks
1	2	29498	Touch button with light	
2	1	29346	CIO5376 controller cover cpl.	
3	1	29313	Bottom f. Fly-Jib box	
4	4	30347	Screw, stainless	4,0 x 25
5	1	29323	Plug, 4-polar for RCL 53XX	
6	1	29317	Plug, 5-polar for RCL 53XX	
7	1	29321	Plug, 10-polar for RCL 53XX	
8	1	28263	CAN BUS cable	1,5 m
9	3	30449	Screw	MC8 x 16
10	1	29223	Cable with socket, 2 m	
11	1	29224	Cable with socket, 5 m	

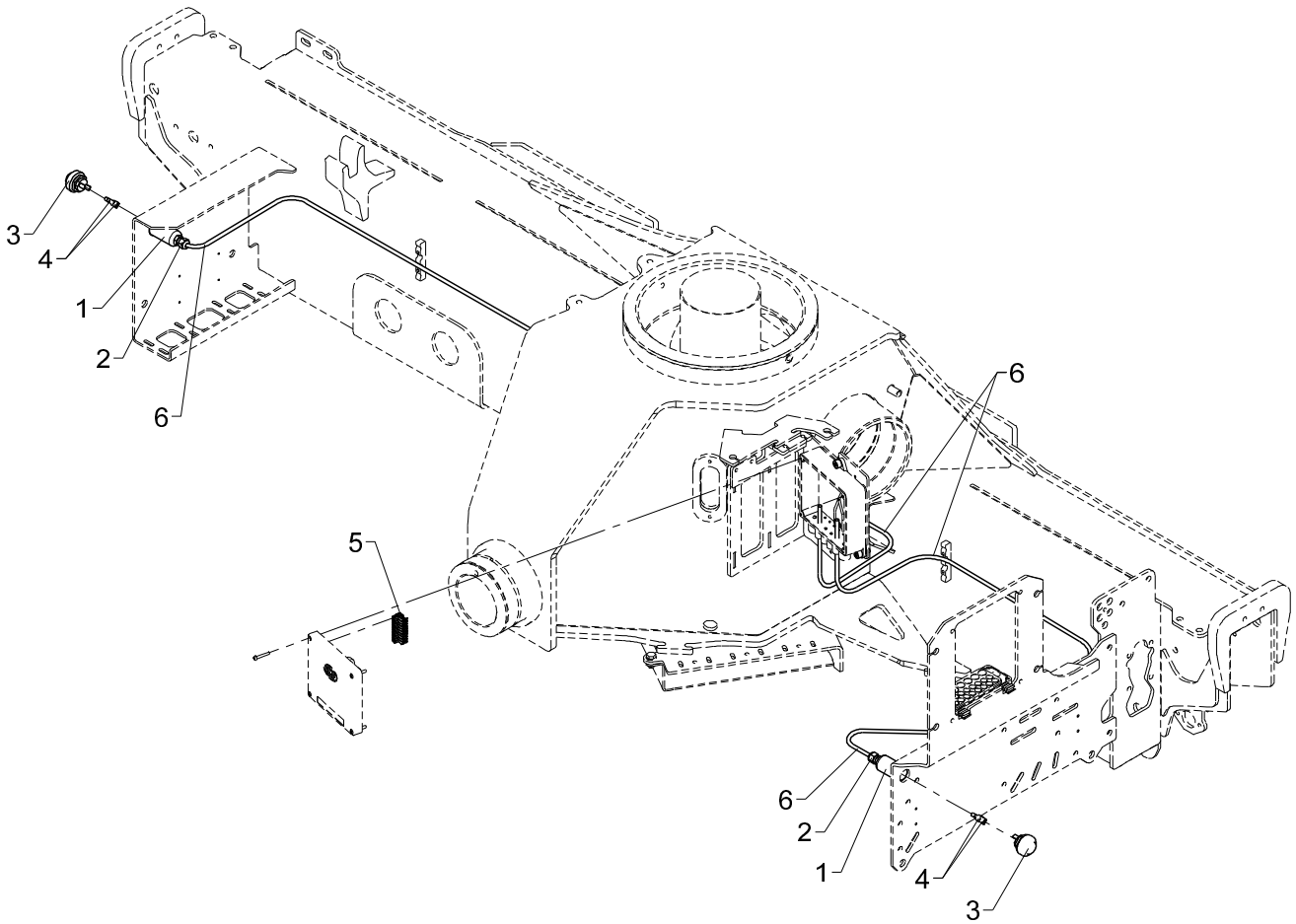
3
4
1
2
6
5
6
6
2
1
4
3

Obsolete

Stabilizer operation via RC (without CIO)

535 22 154

From loader 1070001
To loader

Created 01-02-2013
Modified 01-01-2014

Pos	Qty.	Part no.	Description	Remarks
1	2	64574	Housing	
2	2	28459	Connection	M12 x 1,5
3	2	27333	Push button	
4	4	27429	Clamp	
5	1	29321	Plug, 10-polar for RCL 53XX	
6	2	28249	Cable 2 x 0.75	3,5 m

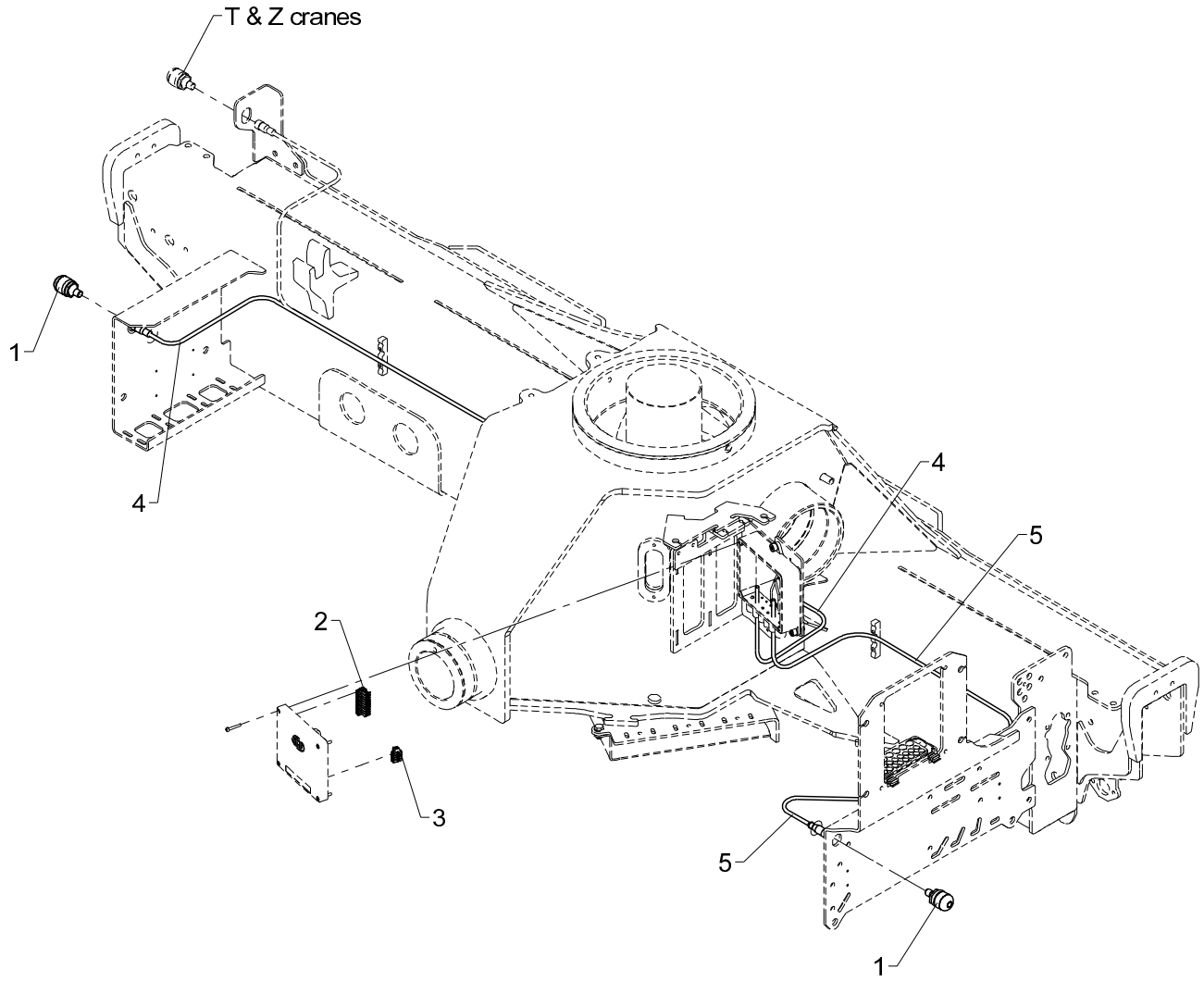
T & Z cranes
1
4
2
3
4
5
5
1

Stabilizer operation via RC (without CIO)

Pos	Qty.	Part no.	Description	Remarks
1	2	29498	Touch button with light	
2	1	29321	Plug, 10-polar for RCL 53XX	
3	1	29323	Plug, 4-polar for RCL 53XX	
4	1	29224	Cable with socket, 5 m	
5	1	29223	Cable with socket, 2 m	

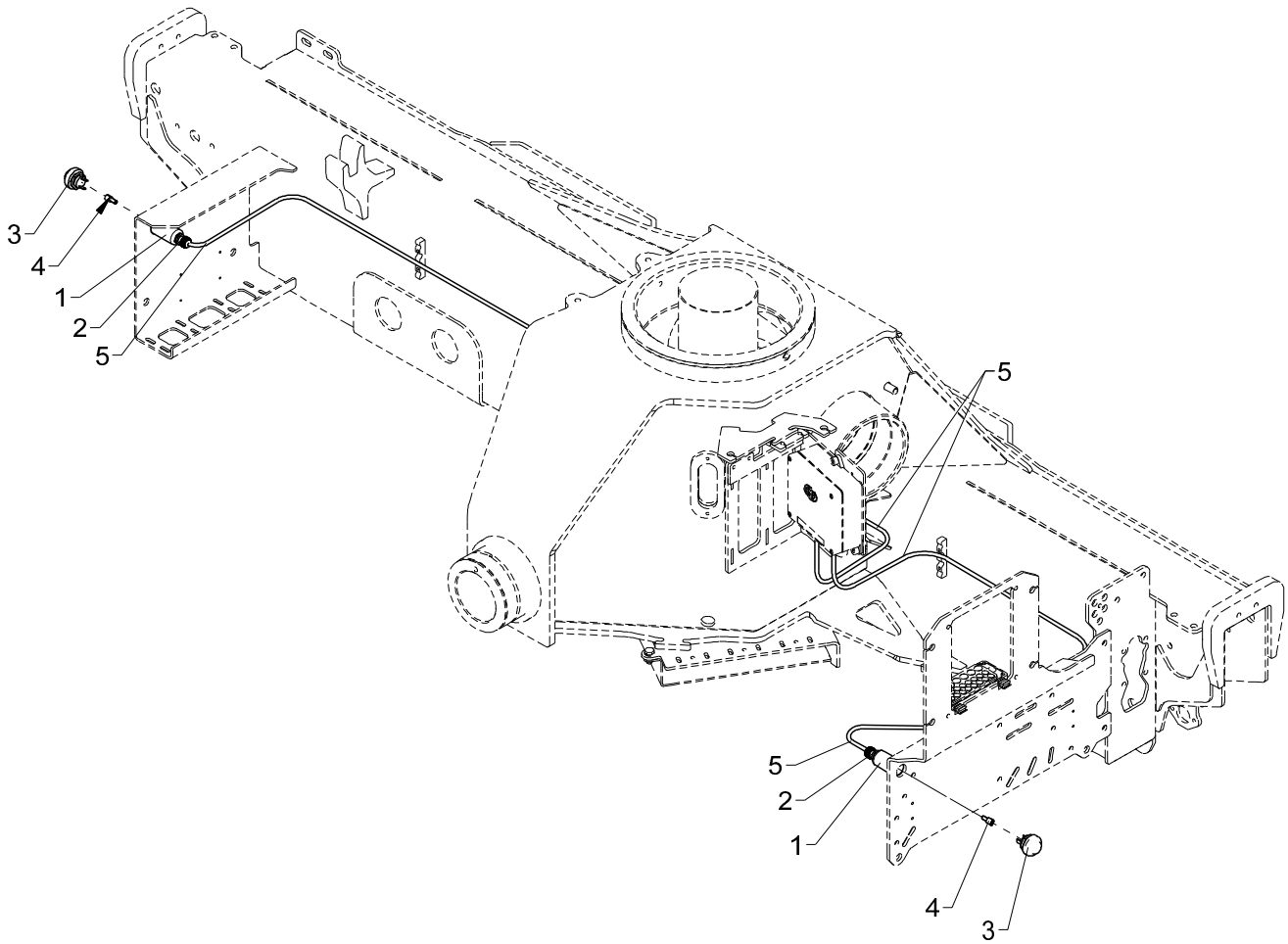
3
4
1
2
5
5
5
2
1
4
3

Obsolete

Stabilizer operation via RC (with winch)

535 22 156

From loader 1070001
To loader

Created 01-03-2013
Modified 01-01-2014

Pos	Qty.	Part no.	Description	Remarks
1	2	64574	Housing	
2	2	28459	Connection	
3	2	27333	Push button	
4	4	27429	Clamp	
5	2	28249	Cable 2 x 0.75	3 m

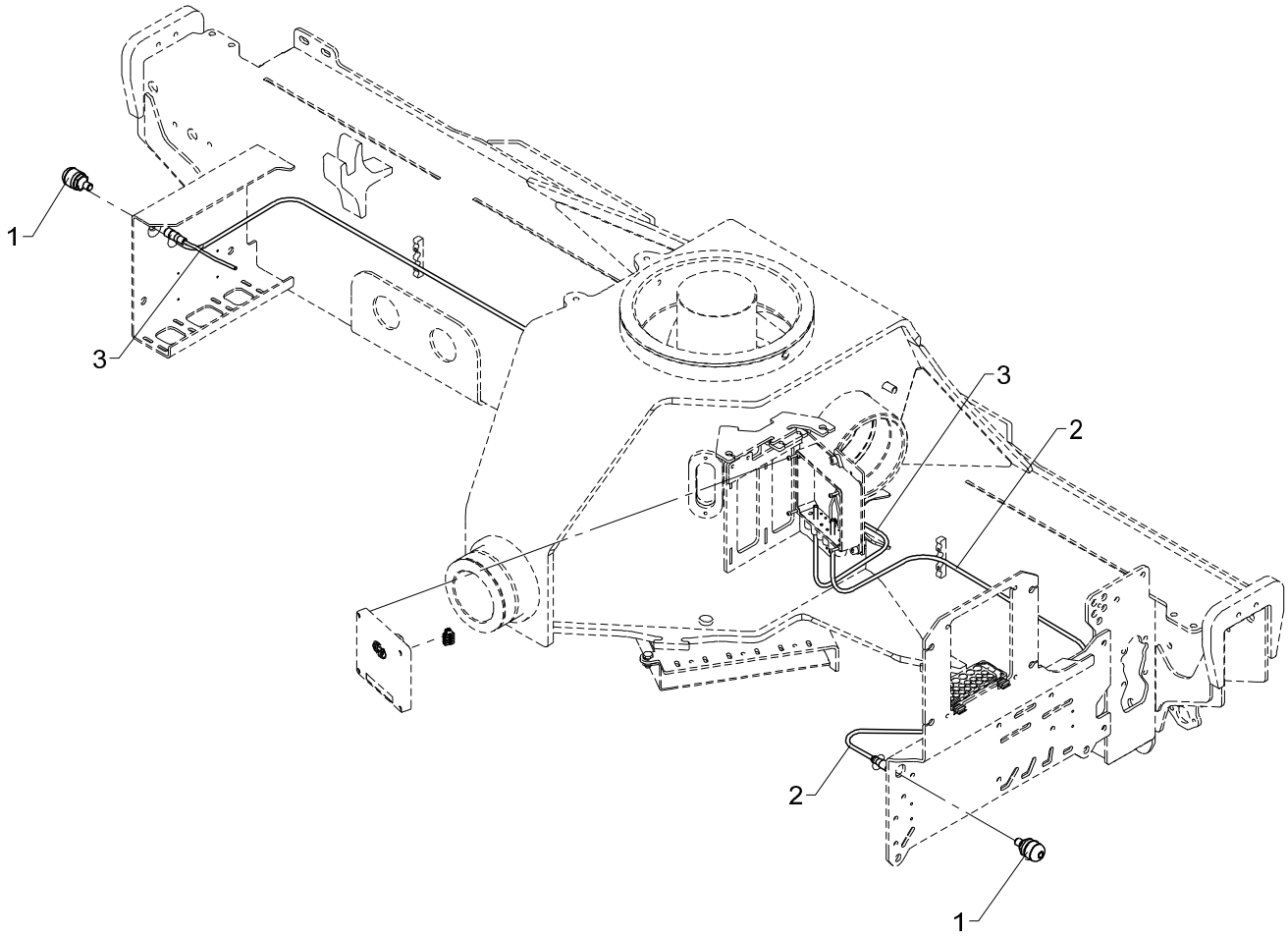
1
3
3
2
2
1

Stabilizer operation via RC (with winch)

Pos	Qty.	Part no.	Description	Remarks
1	2	29498	Touch button with light	
2	1	29223	Cable with socket, 2 m	
3	1	29224	Cable with socket, 5 m	
4	1	29323	Plug, 4-polar for RCL 53XX	

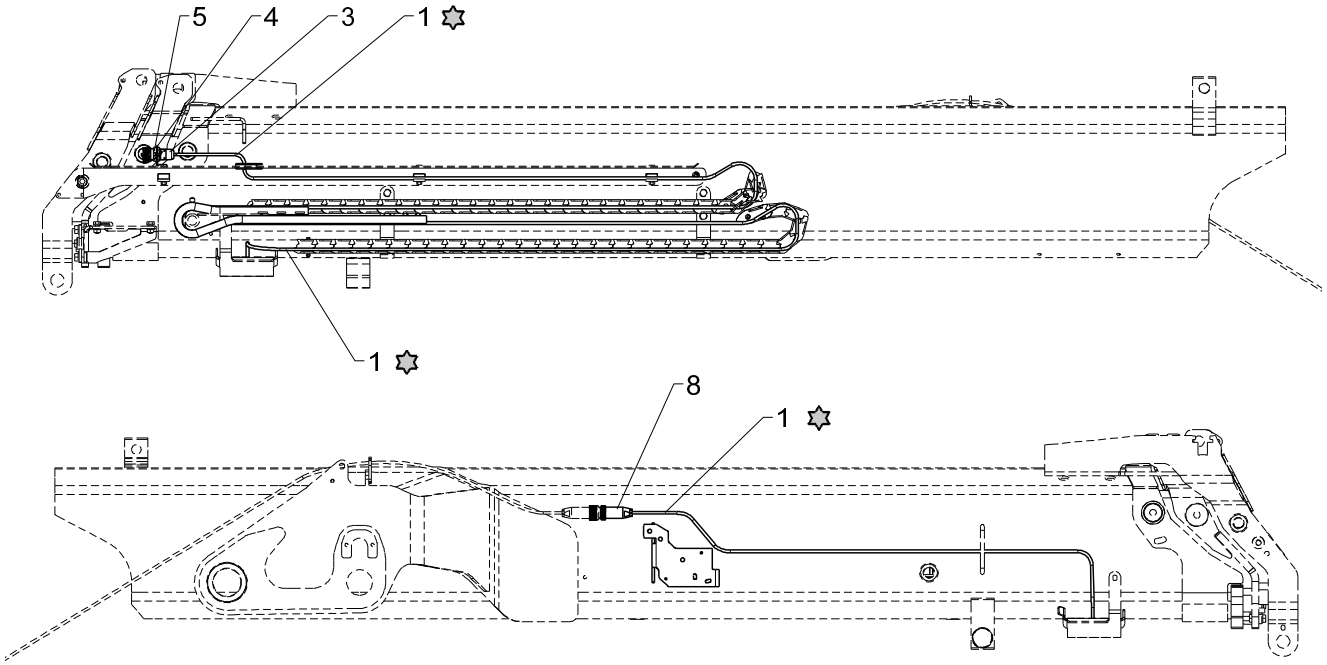

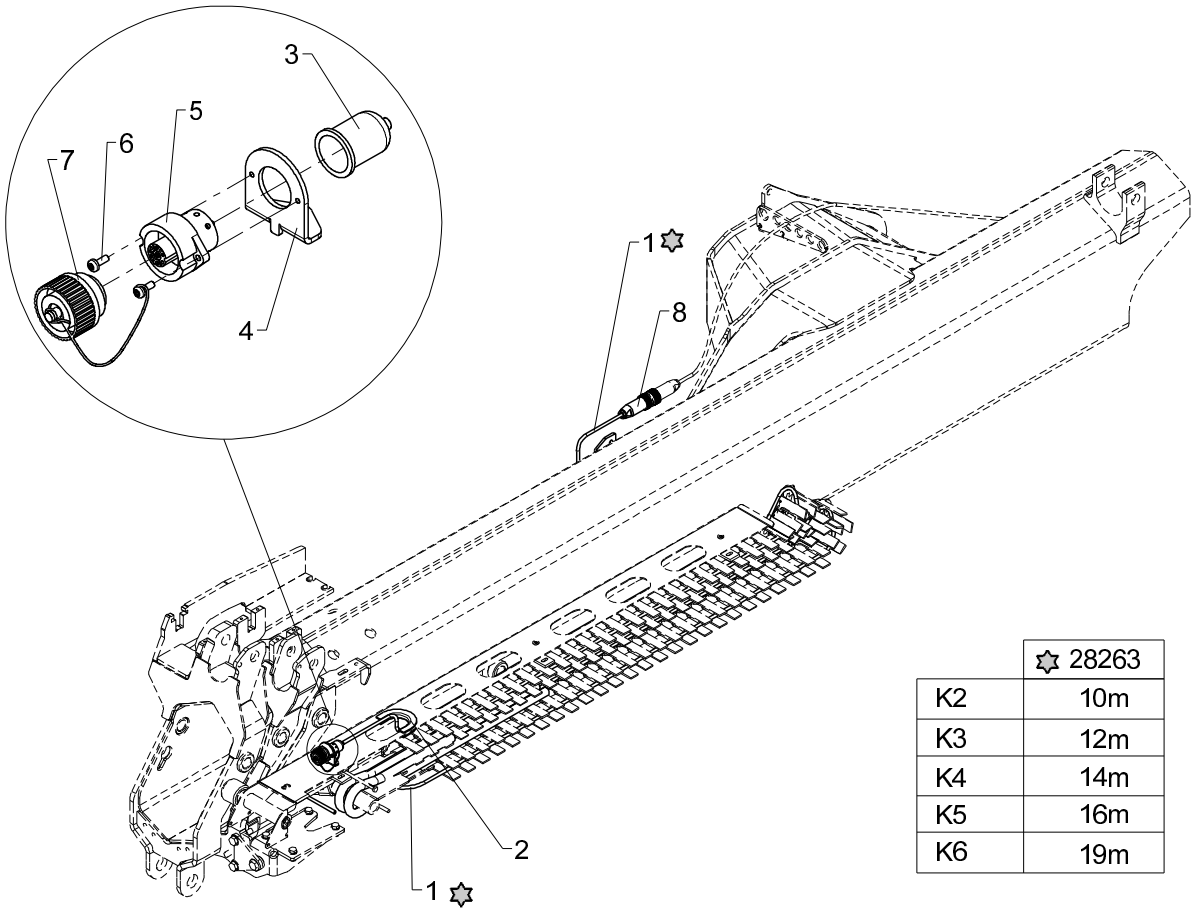

	✡ 28263
K2	10m
K3	12m
K4	14m
K5	16m
K6	19m

Fly-Jib supply, K2

Pos	Qty.	Part no.	Description	Remarks
		7004290	Electric cable, FJ K2	
		7004300	Electric cable, FJ K3	
		7004310	Electric cable, FJ K4	
		7004320	Electric cable, FJ K5	
		7004330	Electric cable, FJ K6	
1	1	28263	CAN BUS cable	
2	1	22122	PVC protection	
3	1	29233	Protection	
4	1	6340779	Adapter	
5	1	29232	Socket, 7-polar, 10 A	
6	2	31030	Screw	M3 x 8
7	1	58103	Cover	
8	1	29285	Cable plug, 7-polar, 10 A	

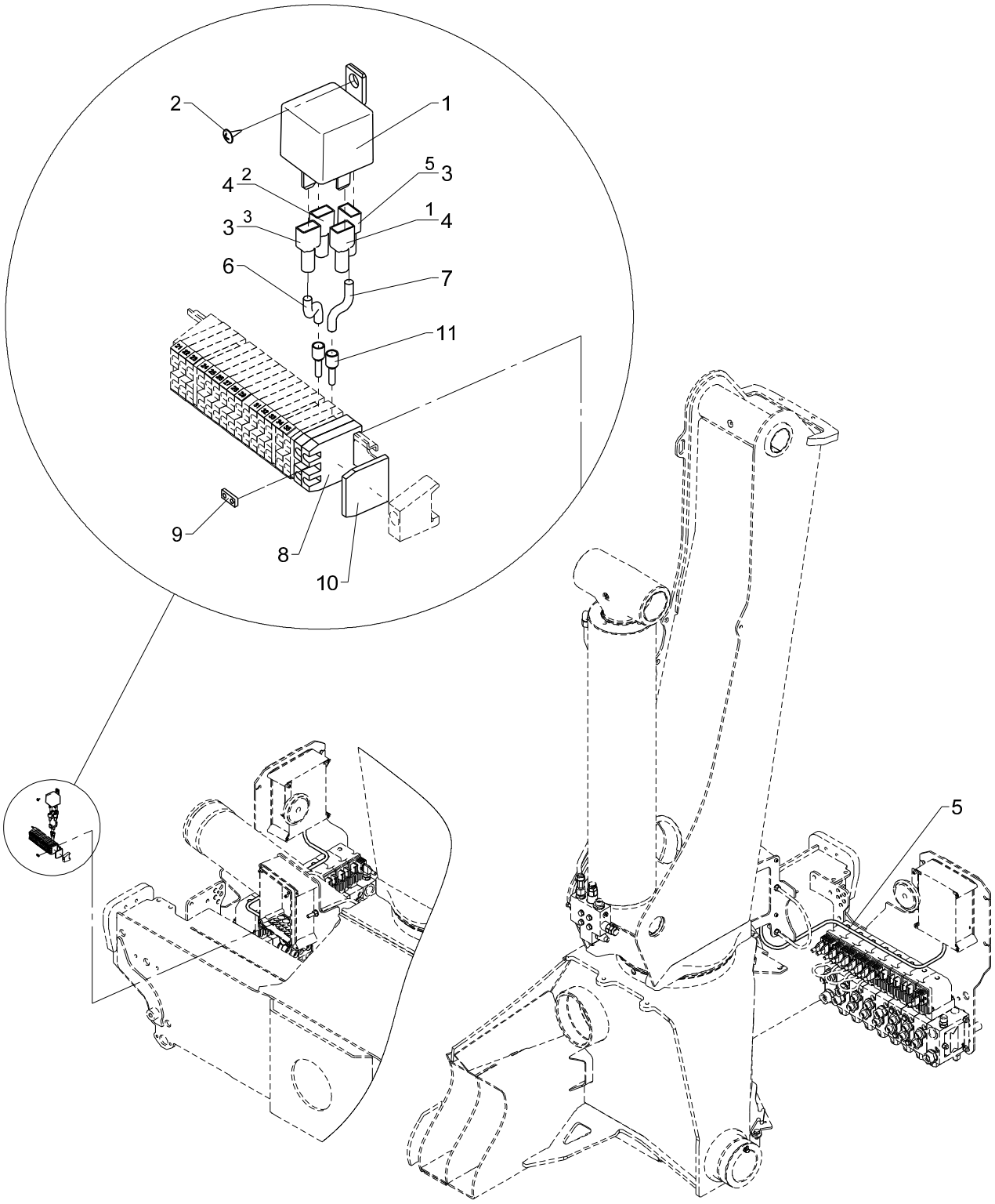
2
1
4
2
5
3
3
3
1
4
6
7
11
9
8
10
5

Obsolete

Spotlight, radio remote controlled.

535 22 170

From loader 1070001
To loader

Created 14-12-2011
Modified

Pos	Qty.	Part no.	Description	Remarks
1	1	27342	Relay, 24V	
2	1	28693	Screw	Ø2.9 x 6.5
3	2	27428	Clip	
4	2	27429	Clamp	
5	1	28262	Cable 4 x 0.75	2 m
6	1	27212	Wire 1 x 2.5 mm2	150 mm
7	1	29460	Wire 1 x 2.5 mm2	150 mm
8	2	28010	Terminal	
9	1	28208	Fish plate	
10	1	28011	End plate	
11	2	27776	Cable lead-in	

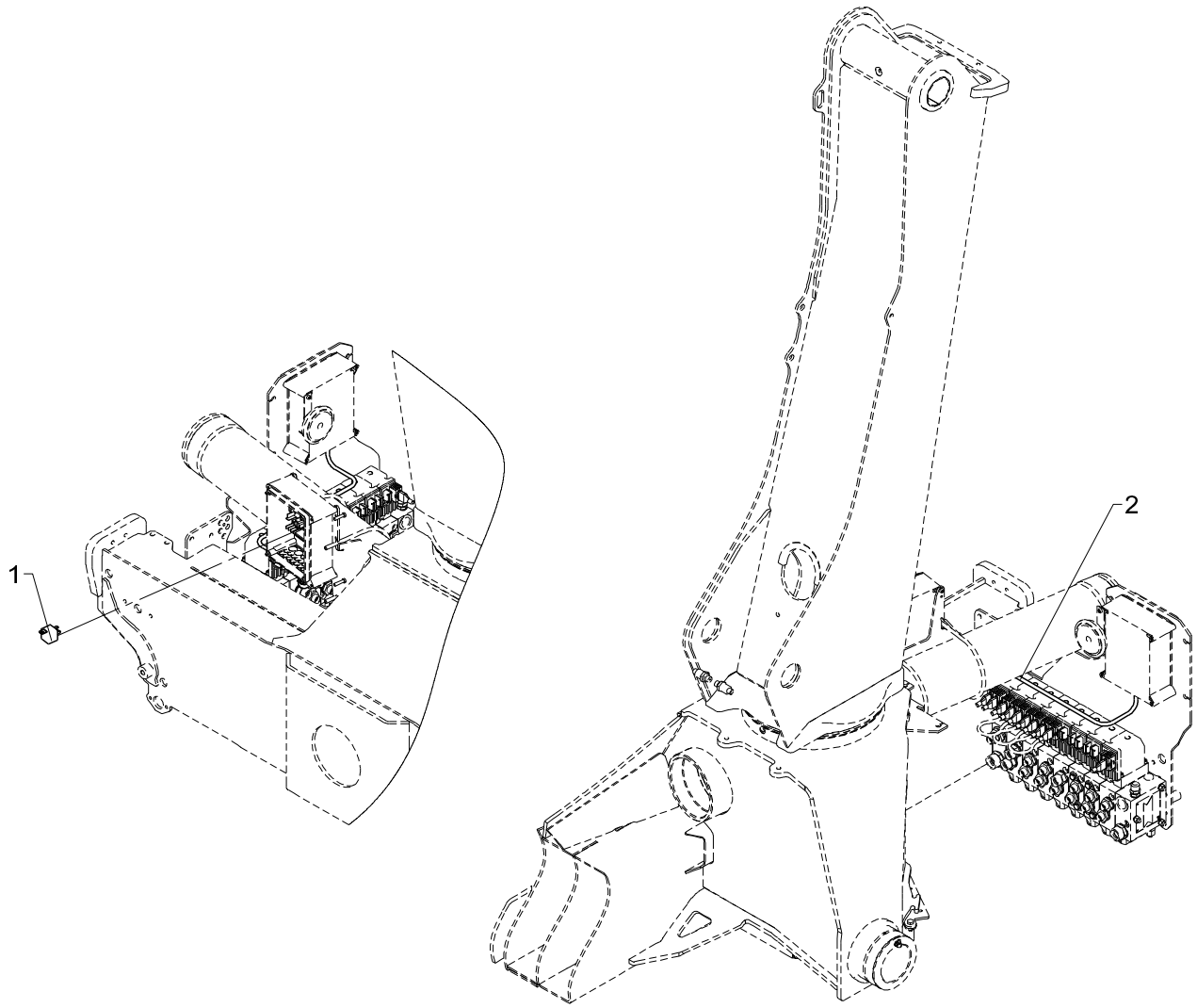
1
2

Spotlight, radio remote controlled.

Pos	Qty.	Part no.	Description	Remarks
1	1	27342	Relay, 24V	
2	1	28262	Cable 4 x 0.75	2 m

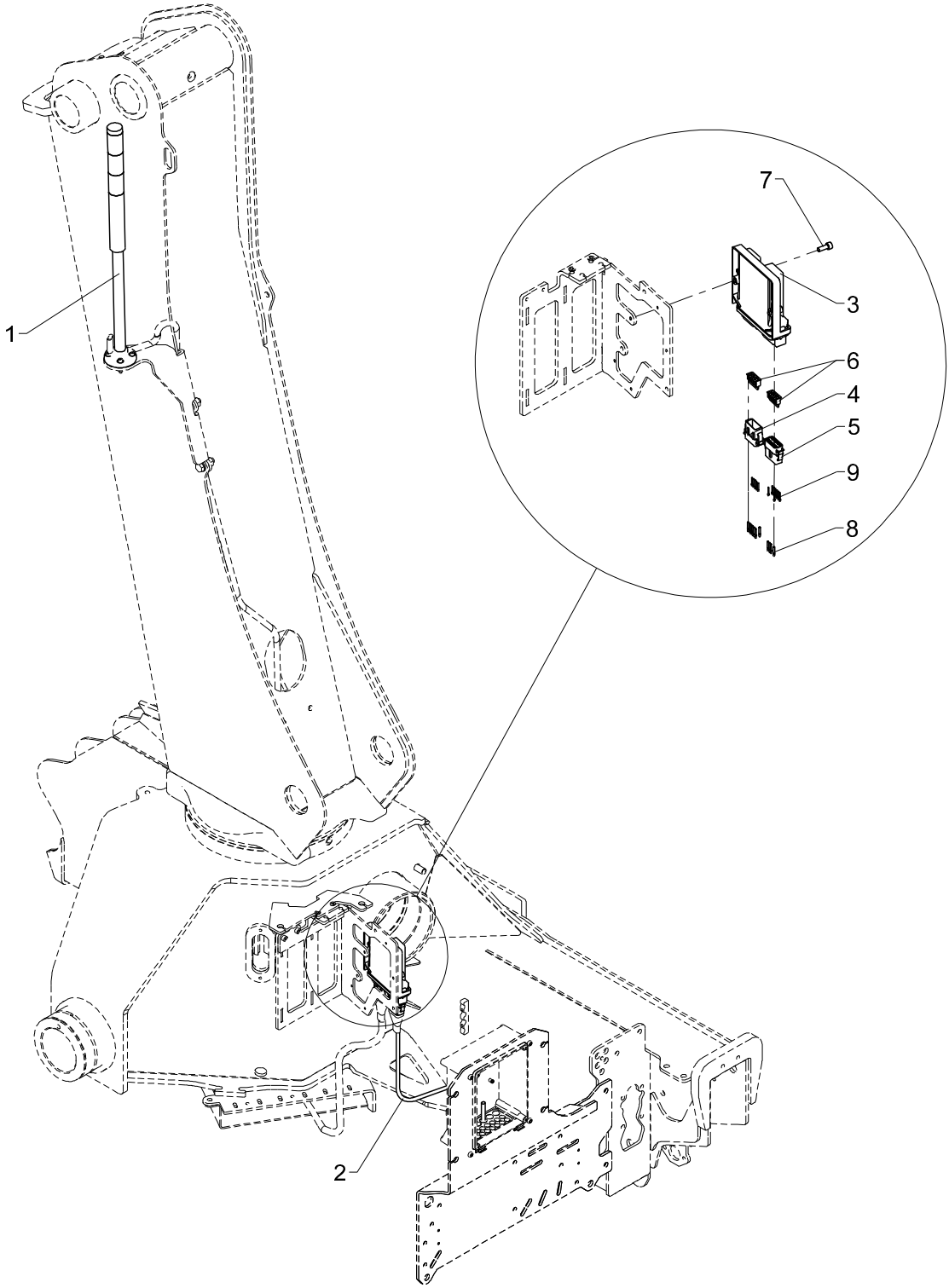
1
2
3
4
5
6
7
8
9

Light tower for BMS-1

Pos	Qty.	Part no.	Description	Remarks
1	1	29195	Light tower incl. foot + cable	
2	1	28263	CAN BUS cable	2 m
3	1	29345	CIO5374 controller excl. cable	
4	1	29326	Plug, type A for ECT5310	
5	1	29327	Plug, type B for ECT5310	
6	2	29328	Lock for plug for ECT5310	
7	2	30424	Screw	MC6 x 16
8	11	29329	Pin for plug for ECT5310	
9	13	29339	Sealing for plug for ECT5310	

18/129, 20/138, 22/153

Internal ref. 70 05 240

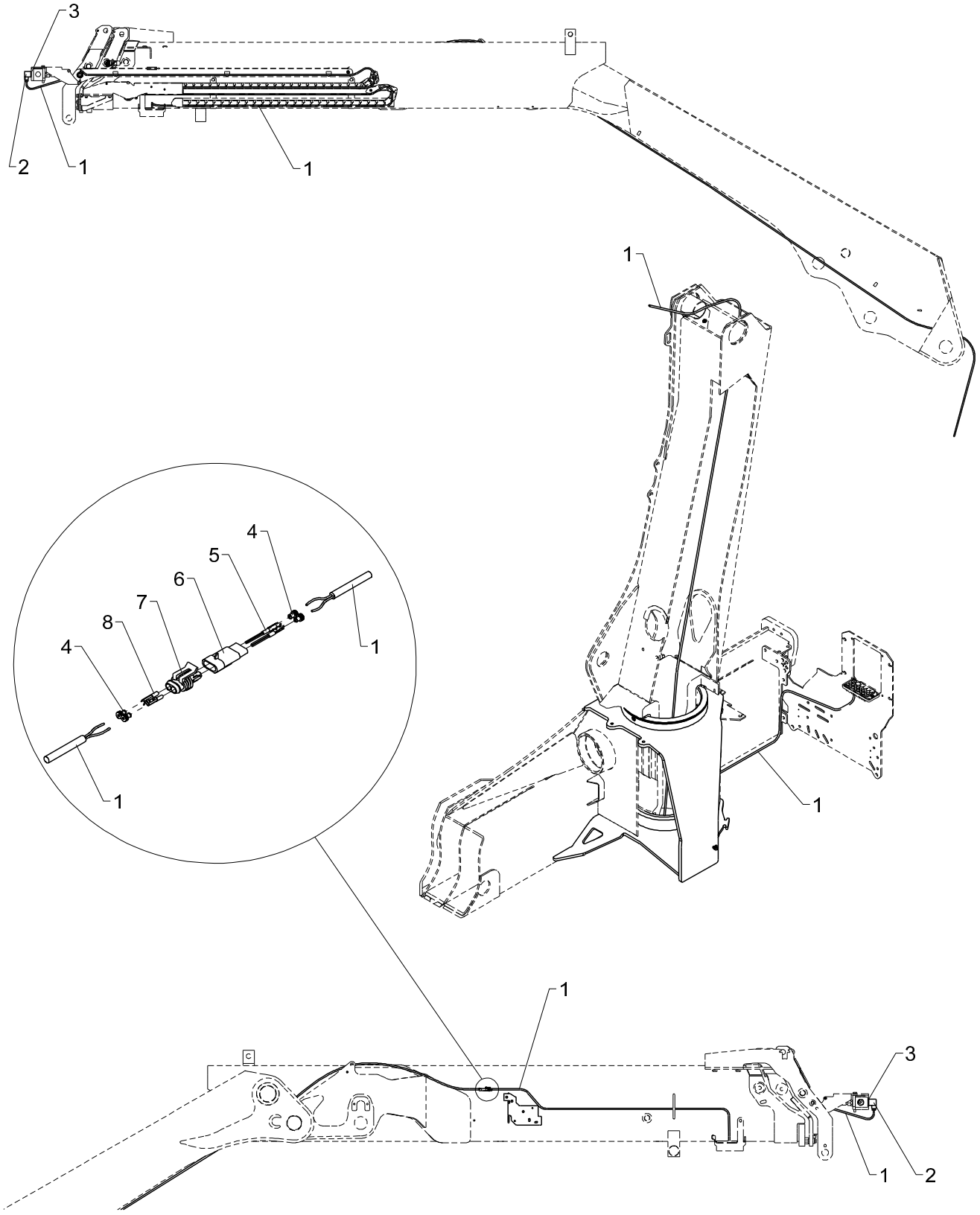

3rd extra valve

Pos	Qty.	Part no.	Description	Remarks
1	1	28249	Cable 2 x 0.75	25 m
2	1	28258	Plug, solenoid valve	
3	1	28840	Seal	
4	4	29159	Cable lead-in, AMP	
5	2	29161	Plug, AMP	
6	1	29160	Socket, 2-polar, AMP	
7	1	28843	Bipolar socket, AMP	
8	2	28844	Socket, AMP	

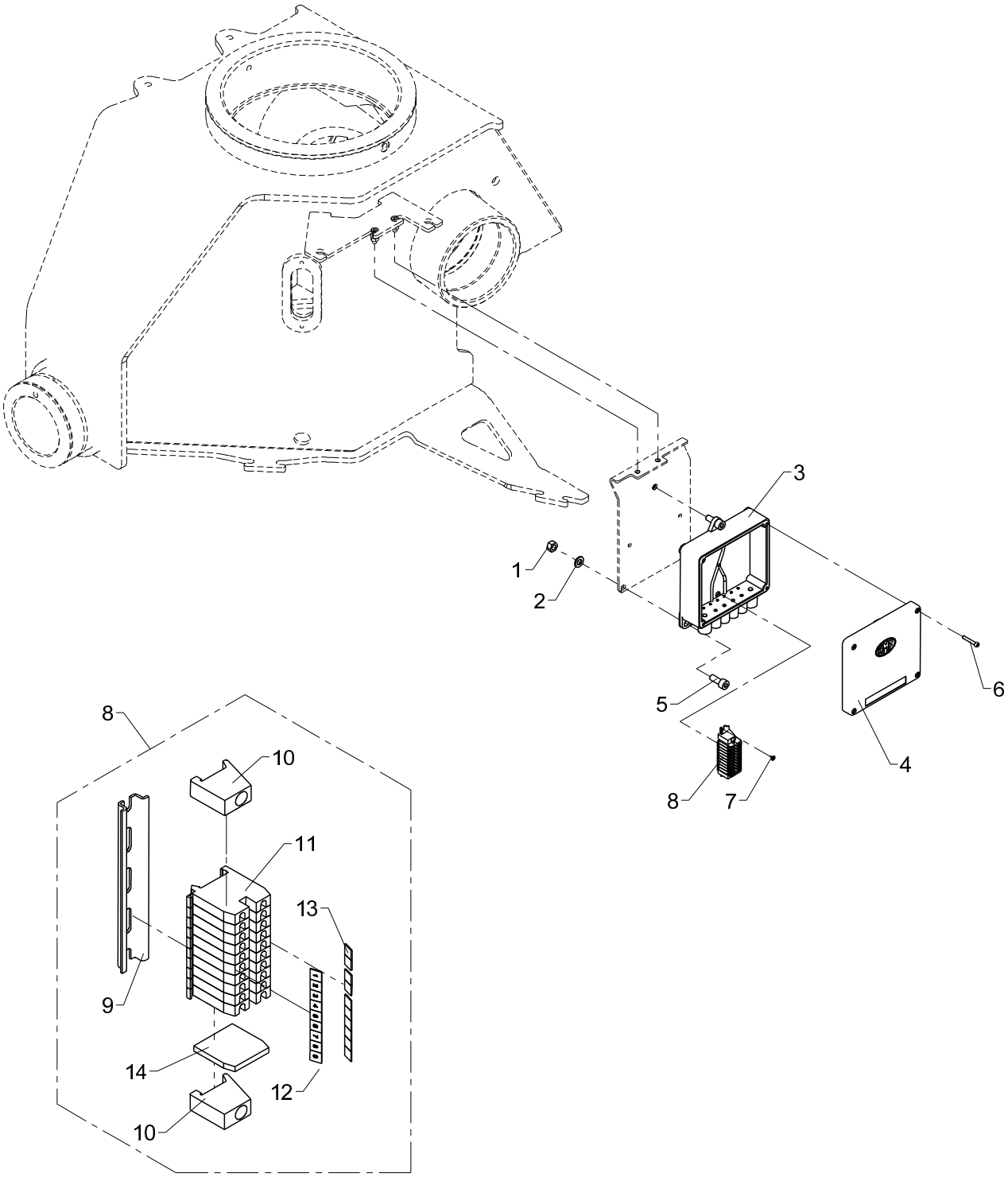
1
2
3
4
5
6
7
8
8
9
10
10
11
12
13
14

Junction box 2, G2

Pos	Qty.	Part no.	Description	Remarks
1	3	30856	Nut, stainless	M8
2	3	31147	Face washer, 8 mm	
3	1	29313	Bottom f. Fly-Jib box	
4	1	29314	Cover for Fly-Jib box	
5	3	30438	Screw	MC8 x 20
6	4	30347	Screw, stainless	4,0 x 25
7	2	28693	Screw	Ø2.9 x 6.5
8	1	7006303	Terminal block,junction box II	
9	1	28013	Guide rail	120 mm.
10	2	28012	End angle	
11	10	28010	Terminal	
12	1	28019	Labels nos. 1-10	
13	1	28965	Dekafix labels 21-30	
14	1	28011	End plate	

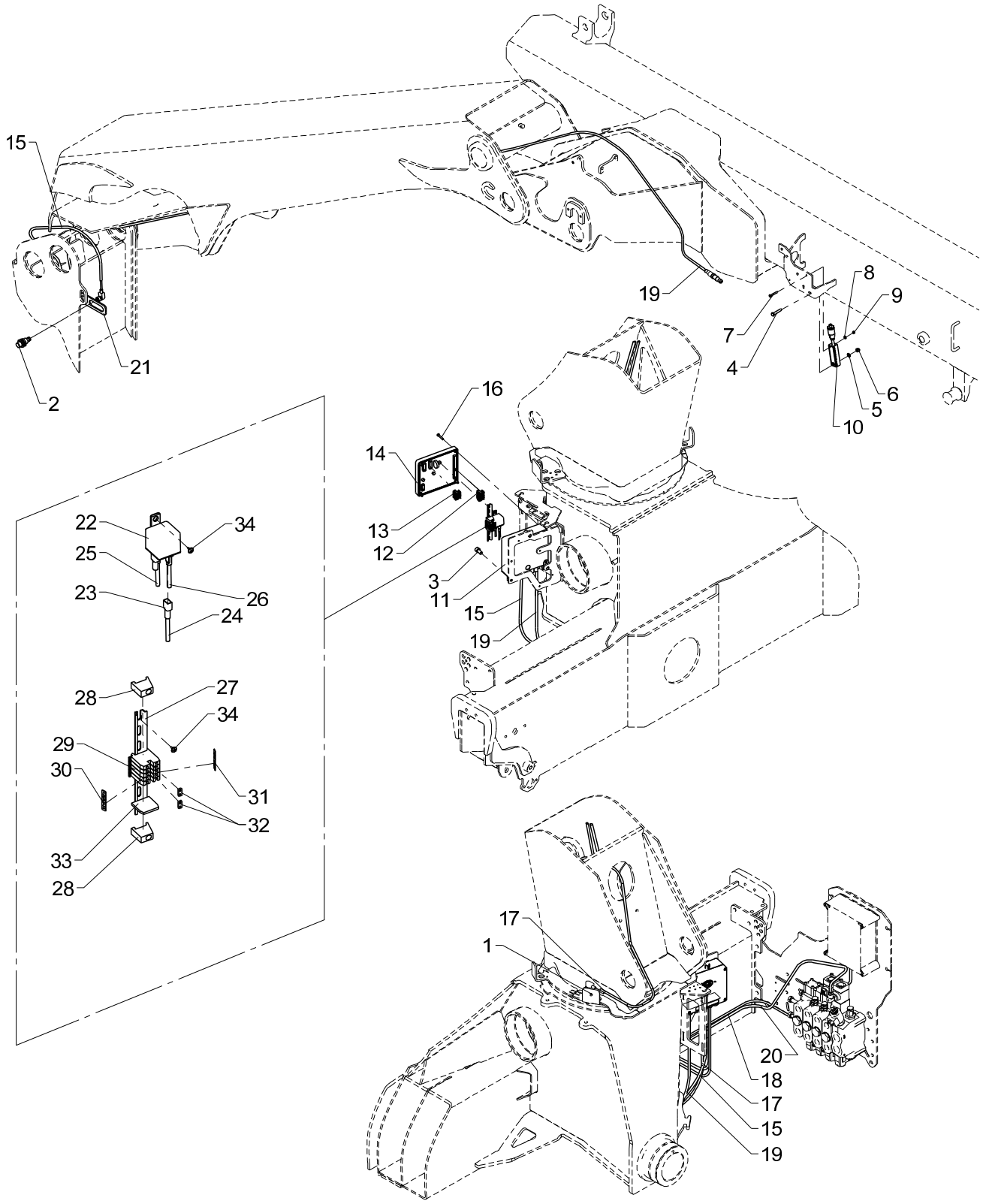
15
21
2
19
8
9
7
4
6
5
10
16
14
13
12
3
11
15
19
22
34
25
23
26
24
28
27
34
29
30
31
32
33
28
17
1
20
18
17
15
19

Obsolete

535 22 220

From loader 1070001
To loader

Created 22-10-2012
Modified 23-06-2014

QOPS, STDRC

Pos	Qty.	Part no.	Description	Remarks
1	1	29447	Proximity switchM12 8mm PNP-NO	
2	1	28980	Proximity switch	
3	3	30449	Screw	MC8 x 16
4	1	30116	Steel pin, stainless	M6 x 35
5	1	32302	Face washer, stainless	6 mm
6	1	30884	Lock nut, stainless	M6
7	1	31790	Set screw M4 x 30	M4 x 30
8	1	31188	Washer, stainless	4 mm
9	1	30857	Lock nut	M4
10	1	29295	Tilt sensor + 0.25 m cable	
11	1	29313	Bottom f. Fly-Jib box	
12	1	29324	Plug, 6-polar for RCL 53XX	
13	1	29317	Plug, 5-polar for RCL 53XX	
14	1	29346	CIO5376 controller cover cpl.	
15	1	28077	Cable with plug	
16	4	30347	Screw, stainless	4,0 x 25
17	1	28117	Cable with plug	
18	1	28263	CAN BUS cable	2 m
19	1	28730	Cable + socket, 10 m	
20	1	28294	Cable, spool sensor	
21	1	6306803	Bracket for proximity switch	
22	1	27342	Relay, 24V	
23	4	27429	Clamp	
24	1	27202	Cable	0,2 m
25	1	27204	Wire, 1 x1.5mm2	0,3 m
26	1	27203	Cable	0,2 m
27	1	28013	Guide rail	110 mm.
28	2	28012	End angle	
29	5	28010	Terminal	
30	2	28019	Labels nos. 1-10	
31	2	28965	Dekafix labels 21-30	
32	2	28208	Fish plate	
33	1	28011	End plate	
34	3	28693	Screw	Ø2.9 x 6.5

18/129, 20/138, 22/153

Internal ref. 70 06 550

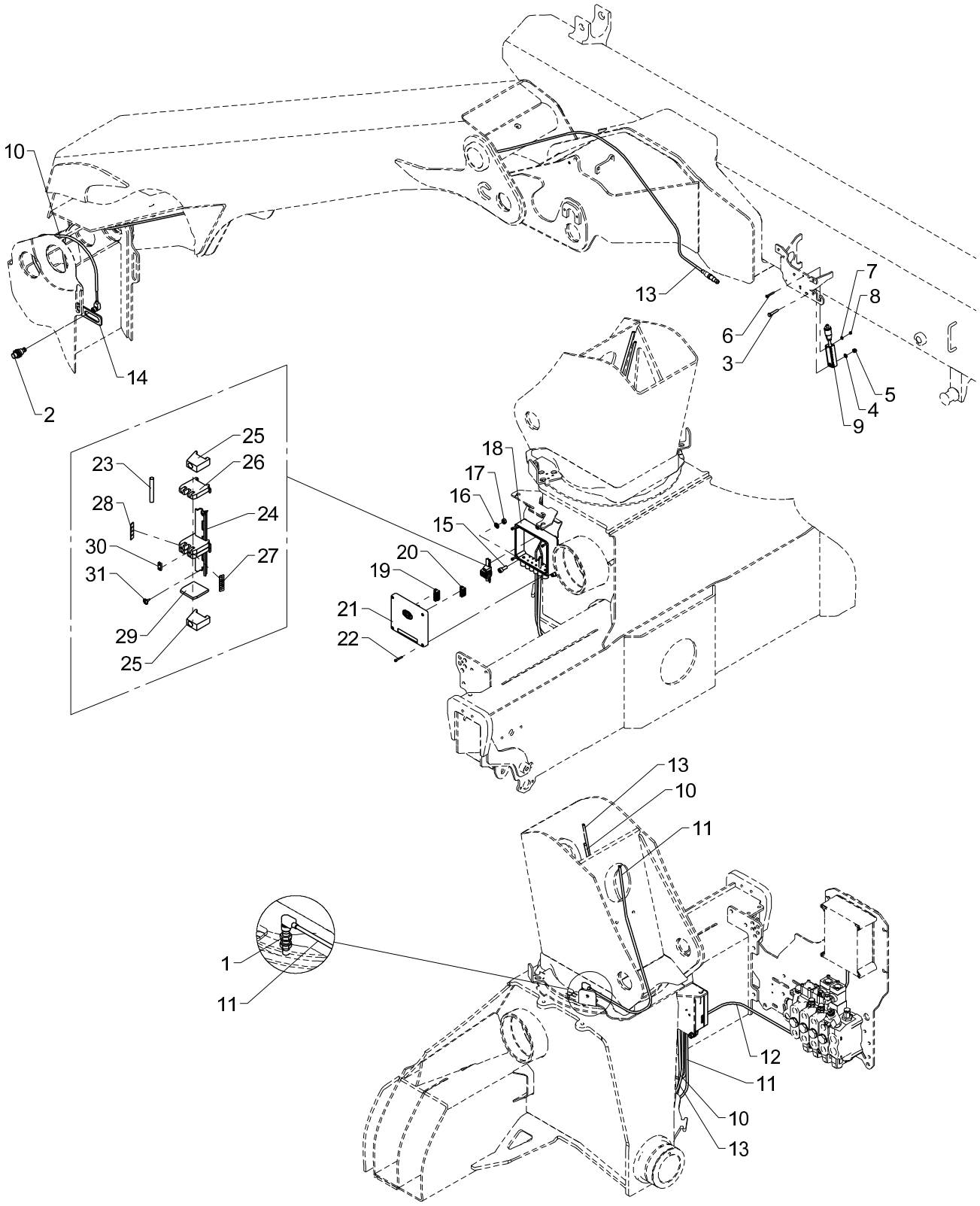

QOPS, STDRC

Pos	Qty.	Part no.	Description	Remarks
1	1	29447	Proximity switchM12 8mm PNP-NO	
2	1	28980	Proximity switch	
3	1	30116	Steel pin, stainless	M6 x 35
4	1	32302	Face washer, stainless	6 mm
5	1	30884	Lock nut, stainless	M6
6	1	31790	Set screw M4 x 30	M4 x 30
7	1	31188	Washer, stainless	4 mm
8	1	30857	Lock nut	M4
9	1	29295	Tilt sensor + 0.25 m cable	
10	1	28077	Cable with plug	
11	1	28117	Cable with plug	
12	1	28263	CAN BUS cable	2 m
13	1	28730	Cable + socket, 10 m	
14	1	6306803	Bracket for proximity switch	
15	3	30438	Screw	MC8 x 20
16	3	31147	Face washer, 8 mm	
17	3	30856	Nut, stainless	M8
18	1	29313	Bottom f. Fly-Jib box	
19	1	29324	Plug, 6-polar for RCL 53XX	
20	1	29317	Plug, 5-polar for RCL 53XX	
21	1	29346	CIO5376 controller cover cpl.	
22	4	30347	Screw, stainless	4,0 x 25
23	1	27202	Cable	0,3 m
24	1	28013	Guide rail	80 mm
25	2	28012	End angle	
26	3	28010	Terminal	
27	1	28019	Labels nos. 1-10	
28	1	28965	Dekafix labels 21-30	
29	1	28011	End plate	
30	1	28208	Fish plate	
31	2	28693	Screw	Ø2.9 x 6.5

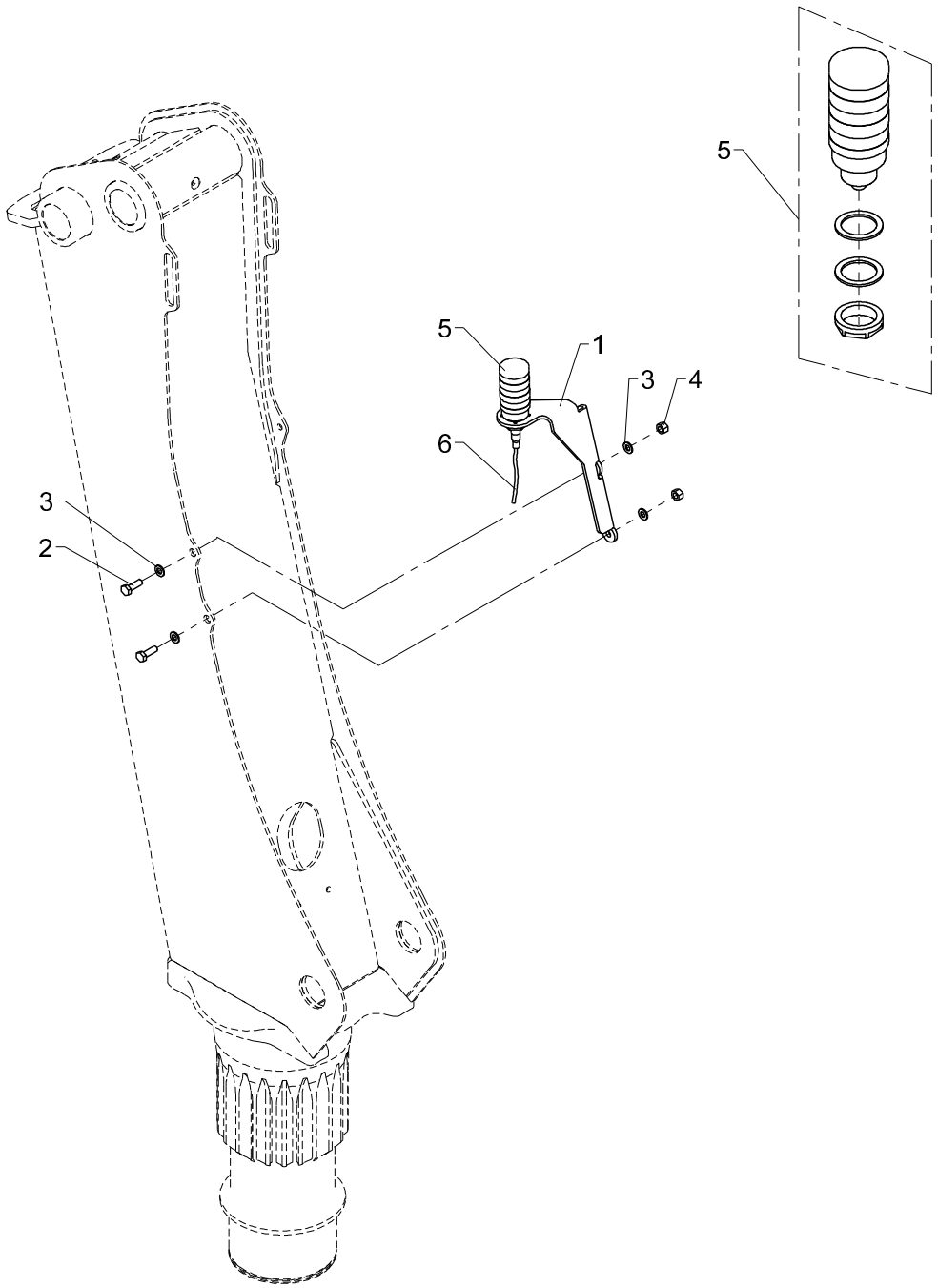
5
5
1
3
4
6
3
2

Light tower

Pos	Qty.	Part no.	Description	Remarks
1	1	6340069	Bracket (light tower)	
2	2	30156	Set screw, stainless	M10 x 30
3	4	31565	Washer, stainless	10 mm
4	2	31564	Lock nut, stainless	M10
5	1	29542	Light tower	
6	1	29224	Cable with socket, 5 m	

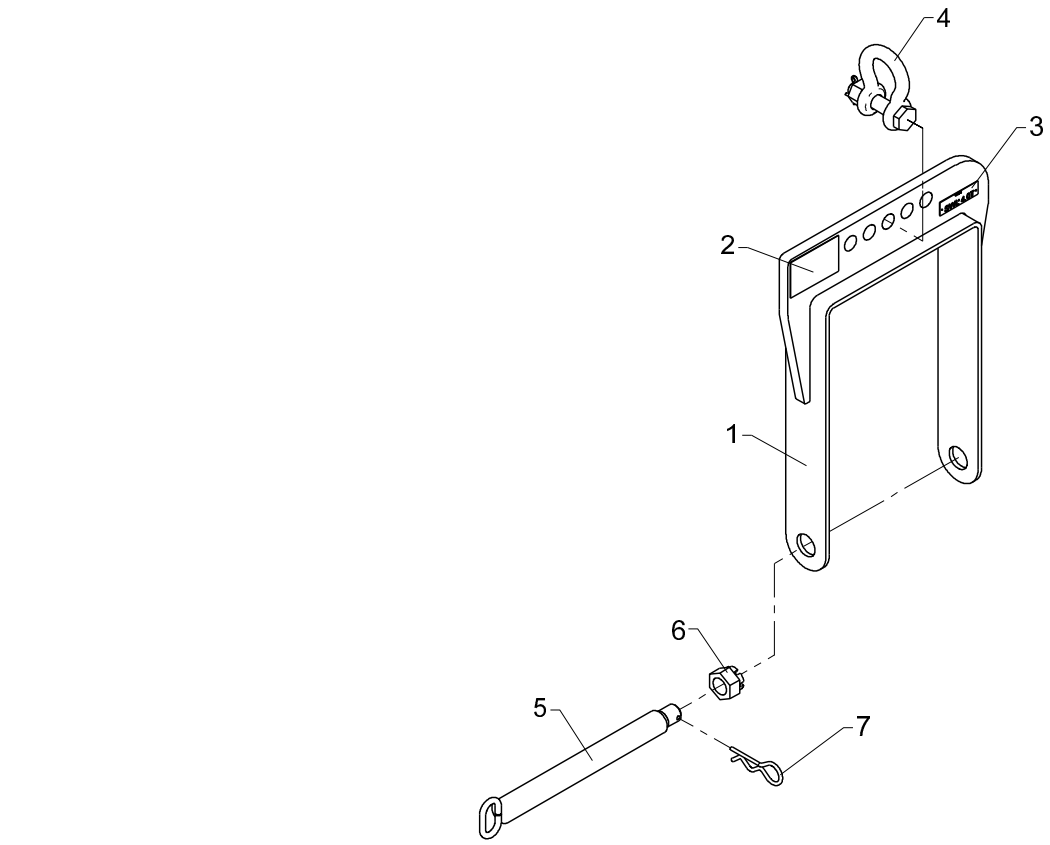
4
3
2
1
6
5
7

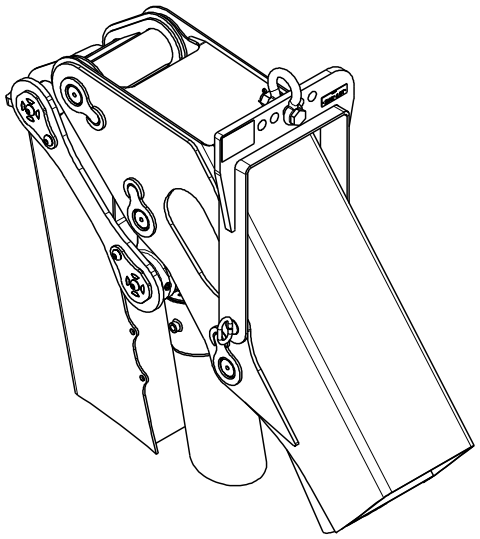

Lifting yoke, cpl.

535 25 010

From loader 1070001
To loader

Created 25-02-2009
Modified

Pos	Qty.	Part no.	Description	Remarks
1	1	8200011	Lifting yoke	
2	1	64797	Type plate, incl. CE	
3	1	64835	Brass label SWL 4.0 t	
4	1	62117	Shackle	
5	1	8200015	Pin	
6	1	30839	Nut	M30
7	1	33383	Lock spring	

18/129, 20/138, 22/153

Internal ref. 82 00 000

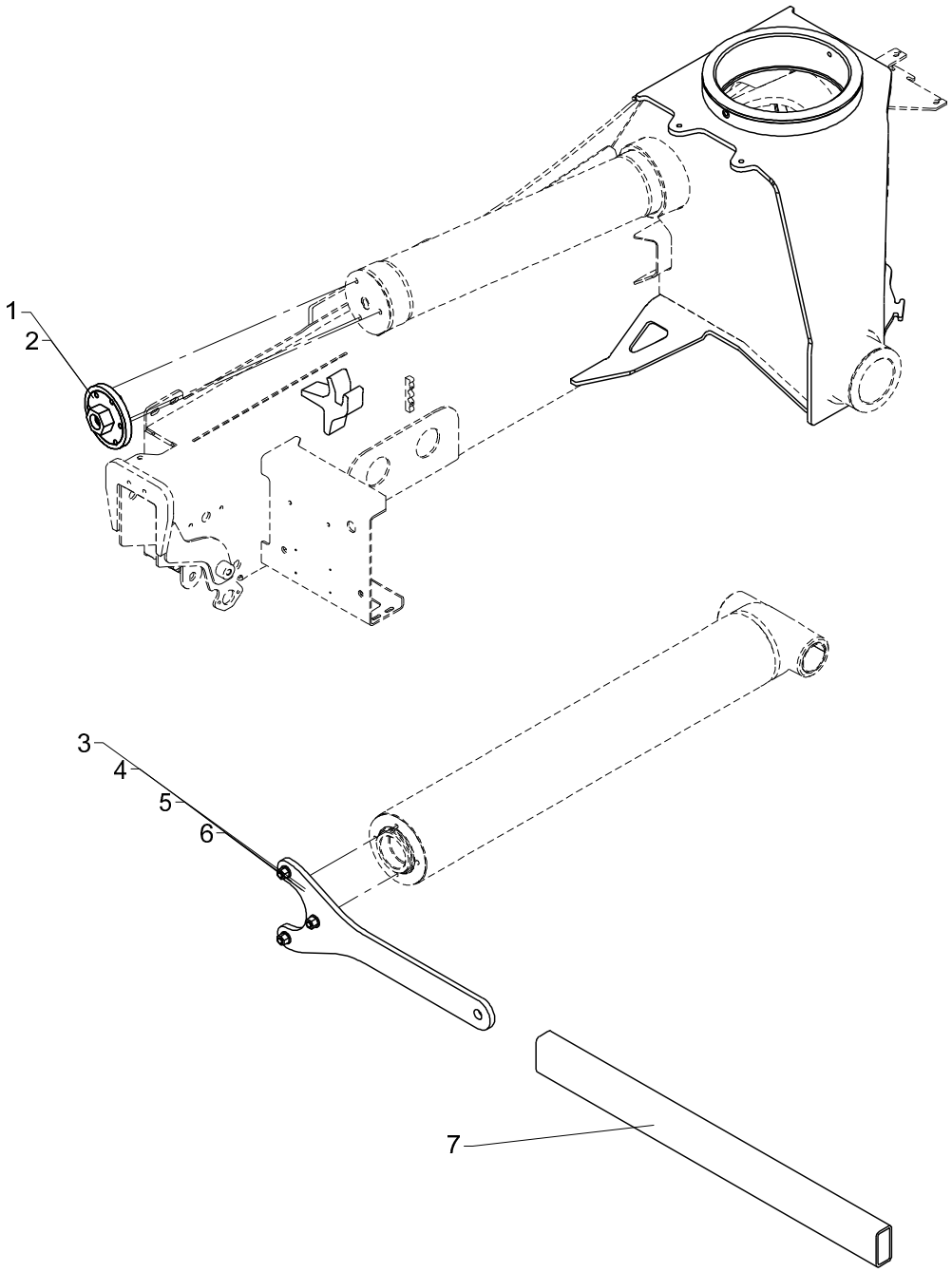

Hydraulic accessories

Pos	Qty.	Part no.	Description	Remarks
1	1	8200001	Mounting tool,slewing cylinder	DC = 90
2	1	8200004	Mounting tool,slewing cylinder	DC = 100
3	1	8200045	Spanner wrench (DC 110 - Ø8)	Cylinder ø125
4	1	8200046	Spanner wrench (DC 120 - Ø10	Cylinder ø140
5	1	8200047	Spanner wrench (DC 130 - Ø10	Cylinder ø150 + ø160
6	1	8200048	Spanner wrench (DC 150 - Ø10	Cylinder ø180
7	1	8200037	Square tube	

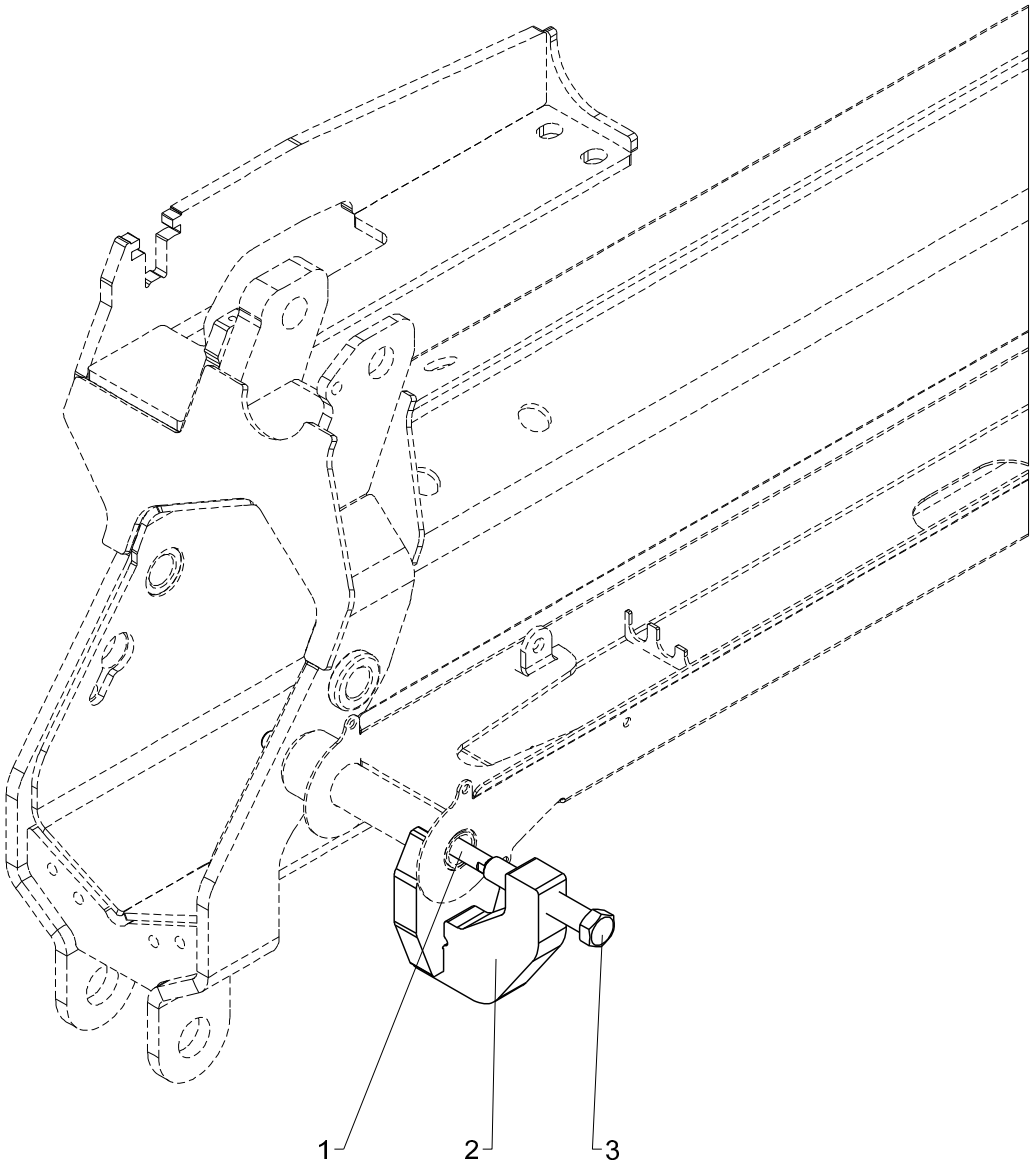
1
2
3

Dismounting tools, cpl.(EXV)

Pos	Qty.	Part no.	Description	Remarks
1	1	8200054	Rod	
2	1	8200051	Dismounting tool	
3	1	8200055	Pin	

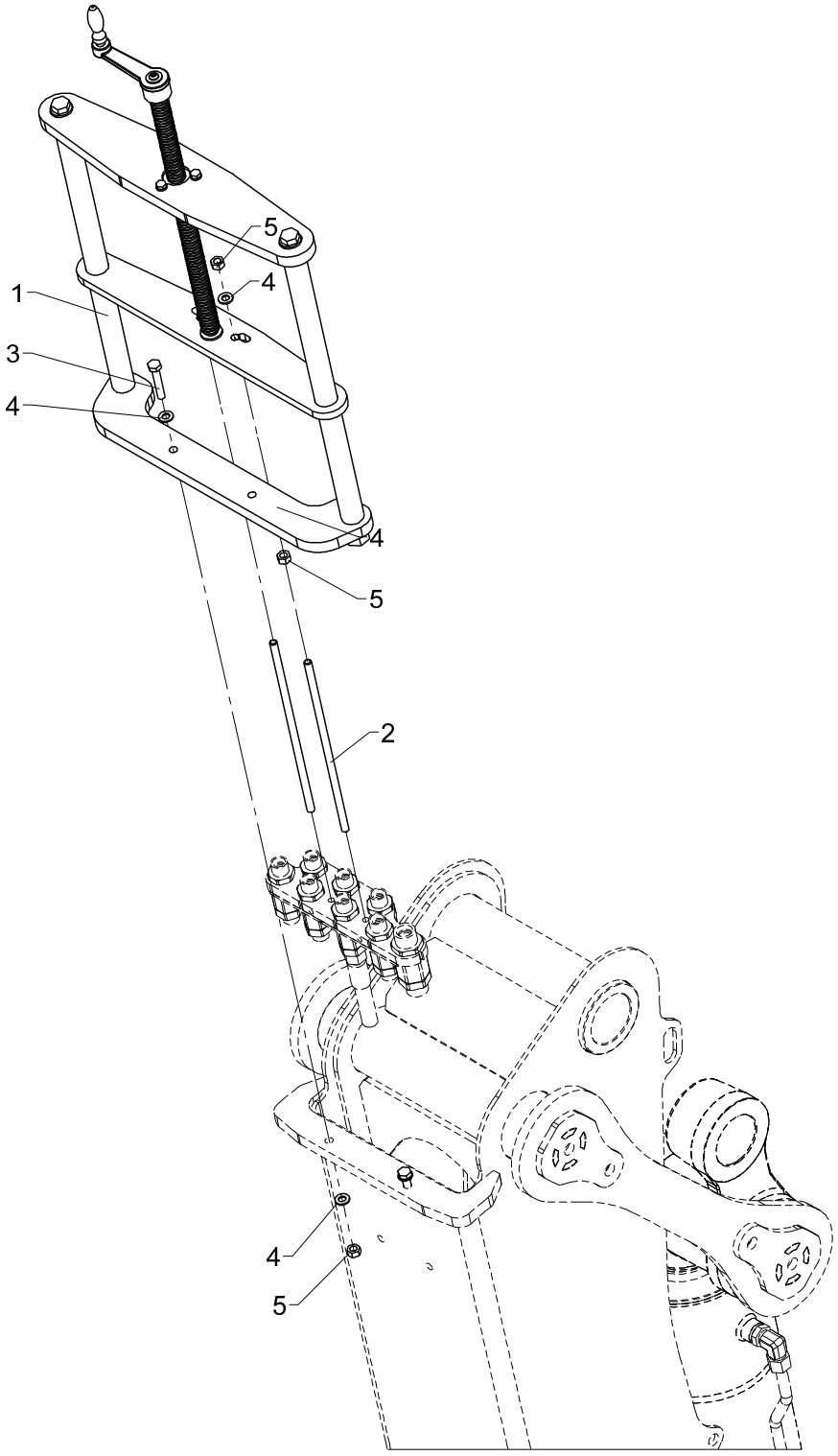
5
4
1
3
4
4
5
2
4
5

Lifting tools cpl. (Change of hoses inside the column)

Pos	Qty.	Part no.	Description	Remarks
1	1	8200020	Lifting tool (change of hoses	
2	2	8200035	Threaded pin	
3	2	30138	Steel bolt, stainless	M8 x 45
4	8	31147	Face washer, 8 mm	8 mm
5	6	30856	Nut, stainless	M8

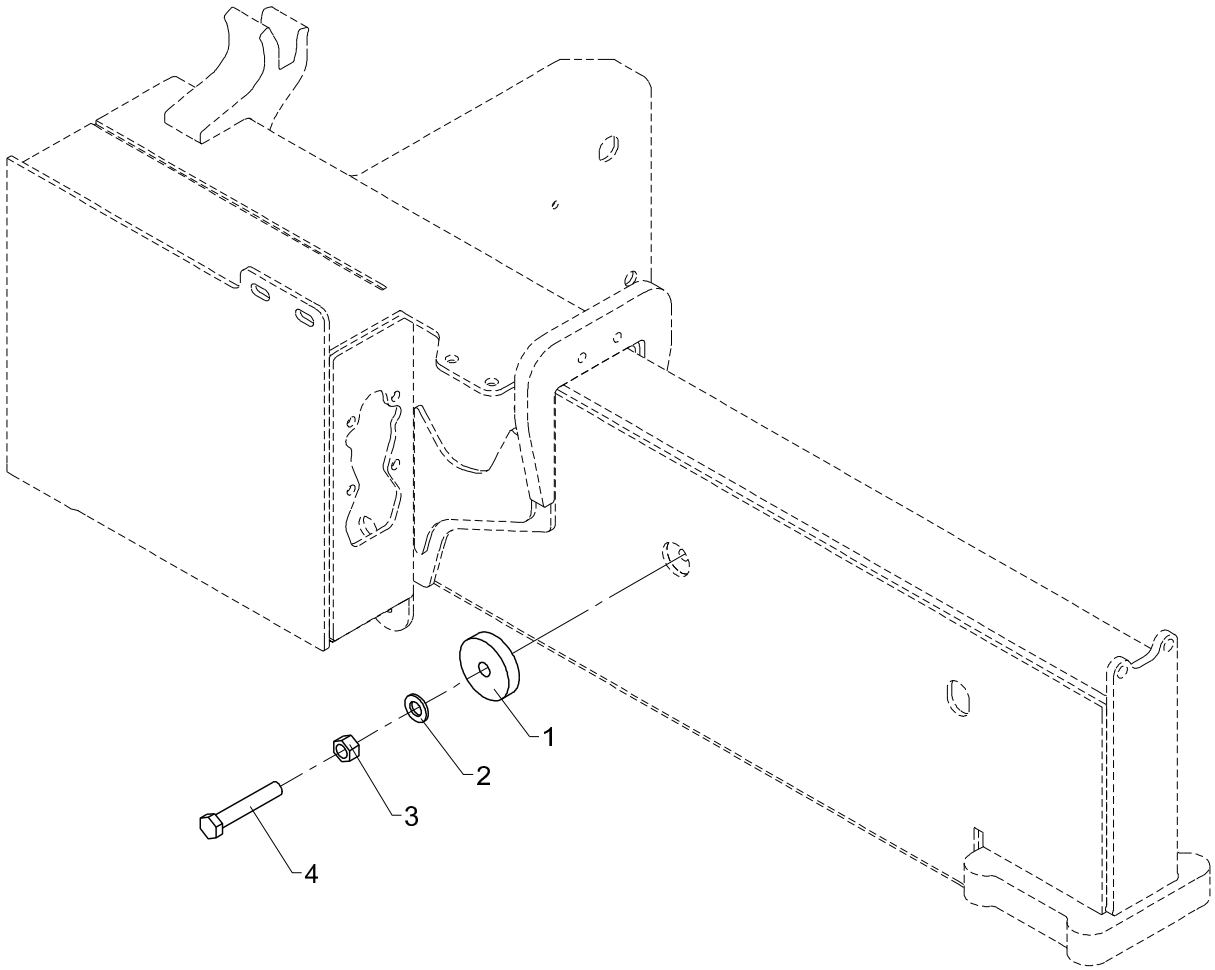
1
2
3
4

Holding kit (pin in hydr. extension)

535 25 050

From loader 1070001
To loader

Created 13-01-2010
Modified

Pos	Qty.	Part no.	Description	Remarks
1	1	6340617	Shim	
2	1	31131	Washer	12 mm
3	1	30860	Nut, stainless	M12
4	1	30190	Set screw	M12 x 70

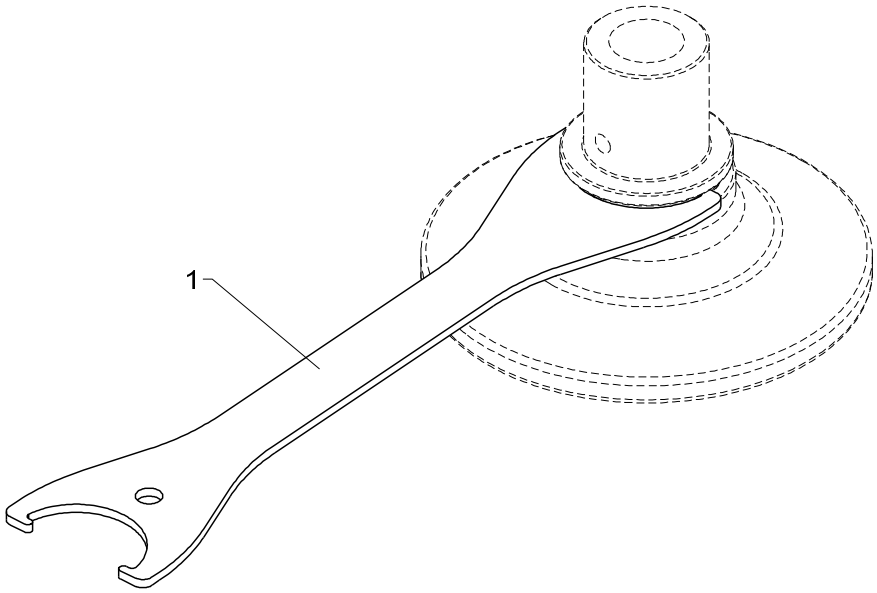
1

Spanner wrench, footplate + ball joint

535 25 060

From loader 1070001
To loader

Created 09-05-2014
Modified

Pos	Qty.	Part no.	Description	Remarks
1	1	8200058	Spanner wrench (DC 50 - Ø4)	

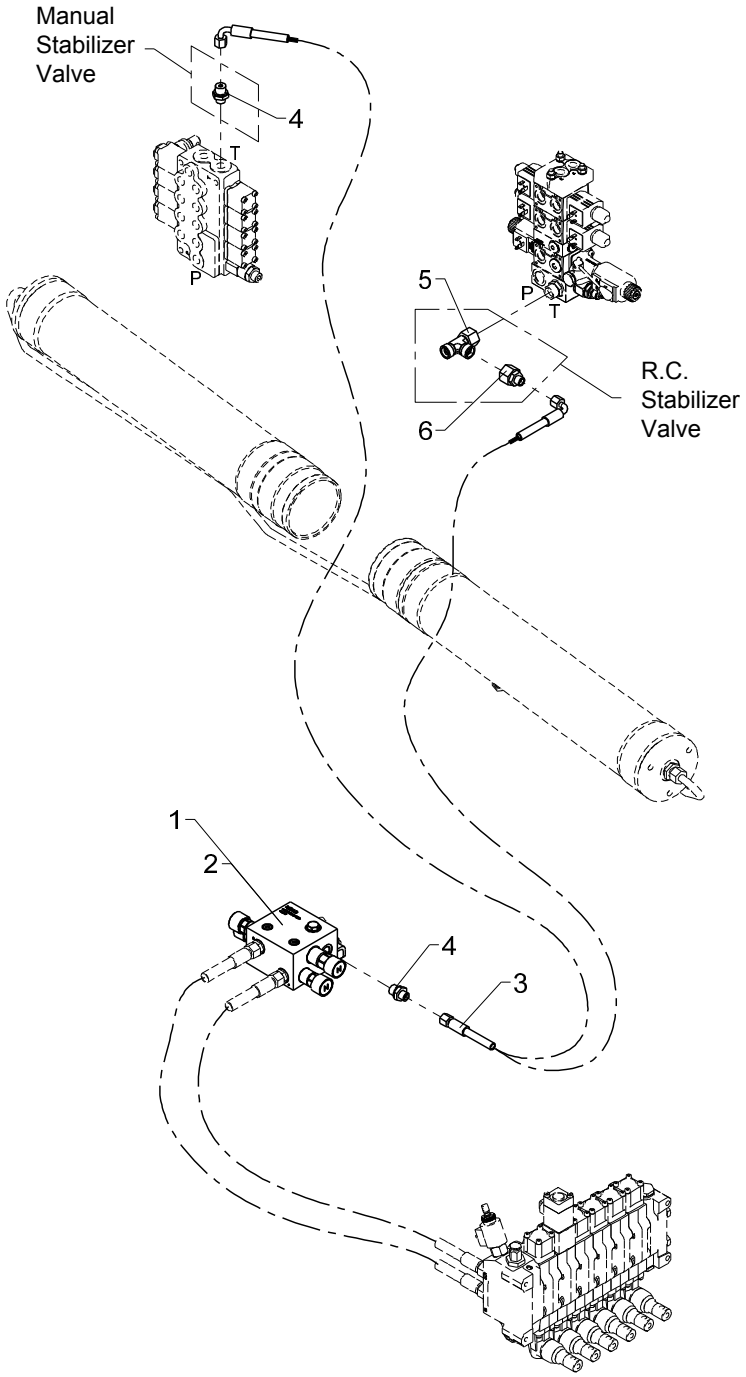
Manual
Stabilizer
Valve
4
T
P
5
P
T
R.C.
Stabilizer
Valve
6
1
2
4
3

535 25 080

From loader 1070001
To loader

Created 26-09-2014
Modified

Kit for replacement of load-holding valve

Pos	Qty.	Part no.	Description	Remarks
		8200110		fra 55261 til 55710
		8200120		fra 55262 til 55711
1	1	55710	Load-holding valve	
2	1	55711	Load-holding valve	
3	1	62526	Hose	1/4 X 550 M14 X 1.5 L/90
4	2	25244	Connection	GES 8 LR 3/8-WD
5	1	26142	Connection	ELSD 15 L
6	1	25285	Connection	REDSDN 15/8 L



IOWA MOLD TOOLING CO., INC.

P.O. Box 189 Garner, IA 50438
Tel: 641.923.3711
Fax: 641.923.2424
www.imt.com

IMT reserves the right to make changes in engineering, design, specifications, add improvements or discontinue manufacturing at any time without notice or obligation.
IMT and IMT LOGO are registered trademarks of Iowa Mold Tooling Co., Inc., Garner, IA, USA.
© 2016 Iowa Mold Tooling Co., Inc. All Right Reserved.