Spare Parts Manual

15/105 & 17/117 SL & DL Parts

IMT MANUAL # 99904589

IOWA MOLD TOOLING CO., INC.
PO Box 189
Garner, IA 50438
Tel: 641-923-3711 FAX: 641-923-2424
Website: http://www.imt.com

Copyright © 2009 Iowa Mold Tooling Co., Inc. All rights reserved.
No part of this publication may be reproduced, stored in a retrieval system, or transmitted in any form or by any means, electronic, mechanical, photocopying, recording or otherwise without the prior written permission of Iowa Mold Tooling Co., Inc.

Iowa Mold Tooling Co., Inc. is an Oshkosh Corporation company.

15/105 - 17/117 SL & DL Parts

Description	Page no.	From loader	To loader
Basic loader			
Base, complete	534 01 010	1060001	
Protection plate, cpl. (std.)	534 01 050	1060001	
Protection plate, complete (TS)	534 01 060	1060001	
Central lubrication and lubricating brush	534 01 080	1060001	
Central lubrication and lubricating brush	534 01 080 A	1060001	
Slewing system, 400°	534 01 100	1060001	
Column, cpl. for link arm system, boom	534 01 300	1060001	1060386
Column, cpl. for link arm system, boom	534 01 300 A	1060387	
Column, cpl. excl. link arm system, boom	534 01 350	1060001	1060386
Column, cpl. excl. link arm system, boom	534 01 350 A	1060387	
Main boom, cpl. for link arm system, boom	534 01 400	1060001	1060386
Main boom, cpl. for link arm system, boom	534 01 400 A	1060387	
Main boom, cpl., no link arm system, boom	534 01 420	1060001	1060386
Main boom, cpl., no link arm system, boom	534 01 420 A	1060387	
Stowing hook, complete	534 01 450	1060001	
Boom cylinder C150 x 722 (1500K, 1720K)	534 01 480	1060001	1060386
Boom cylinder C150 x 722 (1500K, 1720K)	534 01 480 A	1060387	
Boom cylinder C150 x 722 with LHV (1500K, 1720K)	534 01 490	1060001	
Boom cylinder C140 x 726 (1510K, 1730K)	534 01 500	1060001	
Boom cylinder C140 x 726 (1510K, 1730K)	534 01 500 A	1060387	
Boom cylinder C140 x 726 with LHV (1510K, 1730K)	534 01 510	1060001	
Jib cylinder C140 x 848	534 01 600	1060001	1060386
Jib cylinder C140 x 848	534 01 600 A	1060387	
Jib cylinder with LHV	534 01 610	1060001	
Link arm system, boom	534 01 700	1060001	
Mounting fittings, basic loader incl. link arm system	534 01 720	1060001	

15/105 - 17/117 SL & DL Parts

Description	Page no.	From loader	To loader
Mounting fittings, basic loader excl. link arm system	534 01 750	1060001	
Hose shield, cpl.	534 01 760	1060001	
Link arm system, jib	534 01 800	1060001	1060386
Link arm system, jib	534 01 800 A	1060001	
Stabilizers			
Stabilizer beam, type SV - 5570	534 02 010	1060001	1060305
Stabilizer beam, type SV - 5570	534 02 010 A	1060306	
Stabilizer beam, type SR-20° - 5570	534 02 020	1060001	1060233
Stabilizer beam, type SR-60°, 5570	534 02 021	1060234	1060275
Stabilizer beam, type SR-60°, 5570	534 02 021 A	1060276	
Stabilizer beam, type SH - 5570	534 02 030	1060001	1060275
Stabilizer beam, type SH - 5570	534 02 030 A	1060276	
Stabilizer beam, type DV - 6450	534 02 040	1060001	1060275
Stabilizer beam, type DV - 6450	534 02 040 A	1060276	
Stabilizer beam, type DR-20° - 6450	534 02 050	1060001	1060233
Stabilizer beam, type DR-60°, 6450	534 02 051	1060234	1060275
Stabilizer beam, type DR-60°, 6450	534 02 051 A	1060276	
Stabilizer beam, type DH - 6450	534 02 060	1060001	1060275
Stabilizer beam, type DH - 6450	534 02 060 A	1060276	
Stabilizer beam, type SV - 4600	534 02 070	1060001	1060275
Stabilizer beam, type SV - 4600	534 02 070 A	1060276	
Stabilizer beam, type SR-20° - 4600	534 02 080	1060001	1060233
Stabilizer beam, type SR-60°, 4600	534 02 081	1060234	1060275
Stabilizer beam, type SR-60°, 4600	534 02 081 A	1060276	
Stabilizer beam, type SH - 4600	534 02 090	1060001	1060275
Stabilizer beam, type SH - 4600	534 02 090 A	1060276	
Detection, stabilizer down (CYL/CYBEL)	534 02 130	1060001	

15/105 - 17/117 SL & DL Parts

Description	Page no.	From loader	To loader
Stabilizer lock and lever	534 02 140	1060001	
Safety lock	534 02 150	1060001	
Safety lock (CE, manual extension)	534 02 160	1060001	
Stabilizer cylinder, C80-520, type V	534 02 200	1060001	
Stabilizer cylinder with check valve, C80-520, type V	534 02 210	1060001	
Stabilizer cylinder C80-520, type R-20°	534 02 220	1060001	1060233
Stabilizer cylinder C80-520, type R-60°	534 02 221	1060234	
Stabilizer cylinder with check valve, type R-20°	534 02 230	1060001	1060233
Stabilizer cylinder with check valve, type R-60°	534 02 231	1060234	
Foot plate with ball joint, cpl. (ø160)	534 02 235	1060001	
Stabilizer cylinder, C80-520, type HR	534 02 240	1060001	
Stabilizer cylinder incl. swing-up mechanism, type HR	534 02 245	1060001	
Stabilizer cylinder, C80-440, type V	534 02 260	1060001	
Stabilizer cylinder with check valve, C80-440, type V	534 02 270	1060001	
Beam cylinder C32 - 1625	534 02 300	1060001	
Beam cylinder C32 - 2065	534 02 310	1060001	
Beam cylinder C32 - 1137	534 02 320	1060001	
Boom System			
Jib, complete	534 03 010	1060001	1060386
Jib, complete	534 03 010 A	1060001	
Jib, complete (winch)	534 03 020	1060001	1060386
Jib, complete (winch)	534 03 020 A	1060387	
Fitting of jib and jib cylinder	534 03 030	1060001	
Jib extension I incl. fittings	534 03 100	1060001	
Jib extension K1 incl. fittings	534 03 105	1060001	
Jib extension K2 incl. fittings	534 03 110	1060001	
Jib extension K3 incl. fittings	534 03 120	1060001	

15/105 - 17/117 SL & DL Parts

Description	Page no.	From loader	To loader
Jib extension K4 incl. fittings	534 03 130	1060001	
Jib extension K5 incl. fittings	534 03 140	1060001	
Jib extension K6 incl. fittings	534 03 150	1060001	
Hook suspension	534 03 290	1060001	
Extension cylinder I (C63/50 x 1935)	534 03 300	1060001	
Extension cylinder II (C63/45 x 2000)	534 03 310	1060001	
Extension cylinder III (C63/45 x 2100)	534 03 320	1060001	
Extension cylinder IV (C60/40 x 2200)	534 03 330	1060001	
Extension cylinder V (C60/40 x 2150)	534 03 340	1060001	
Extension cylinder VI (C55/35S x 2200)	534 03 350	1060001	
Extension cylinder I incl. fittings	534 03 500	1060001	
Extension cylinder II incl. fittings	534 03 510	1060001	
Extension cylinder III incl. fittings	534 03 520	1060001	
Extension cylinder IV incl. fittings	534 03 530	1060001	
Extension cylinder V incl. fittings	534 03 540	1060001	
Extension cylinder VI incl. fittings	534 03 550	1060001	
Manual extension, F3	534 03 720	1060001	
Manual extension, F4	534 03 730	1060001	
Manual extension, F5	534 03 740	1060001	
Manual extension, F6	534 03 750	1060001	
Manual extension, F7	534 03 760	1060001	
Hydraulic systems, valve brackets and dual controls			
Valve brackets	534 05 010	1060001	
Valve brackets (excl. CE)	534 05 015	1060001	
NEM-RC kit	534 05 110	1060001	
NEM-RC kit (for external tank)	534 05 115	1060001	
Dual control, 4 functions	534 05 120	1060001	

15/105 - 17/117 SL & DL Parts

Description	Page no.	From loader	To loader
Dual control, 5 functions	534 05 130	1060001	
Dual control, 6 functions	534 05 140	1060001	
Counter-balance valve	534 05 190	1060001	
Valve bracket, cpl. 2 fcts.	534 05 200	1060001	
Valve bracket, cpl., 2 fcts. + 2 available fcts.	534 05 205	1060001	
Valve bracket, cpl. 4 fcts.	534 05 210	1060001	
Valve bracket, cpl. 4 fcts. + 4 available	534 05 220	1060001	
Valve bracket, cpl. 4 fcts. - RC	534 05 230	1060001	
Valve bracket, cpl. 4 fcts. + 2 available fcts. - RC	534 05 235	1060001	
Valve bracket, cpl. 4 fcts. + 4 available - RC	534 05 240	1060001	
Pilot controlled oil supply for NEM/stabilizer valve block	534 05 250	1060001	
Dual control, 2 fcts. std.	534 05 270	1060001	
Dual control, 4 fcts. std.	534 05 280	1060001	
Dual control, 4 fcts., hydr. swing-up stabilizer legs	534 05 290	1060001	
Dual control.4 fcts. + 4 available functions (std.)	534 05 300	1060001	
Dual control, 4 fcts. + 4 available fcts. (hydr. swing-up stabilizer legs)	534 05 310	1060001	
Kit for HDL-2 (std.)	534 05 350	1060001	
Hydraulic systems, loader functions			
Hose kit, loader functions, std.	534 05 400	1060001	
Hose kit, loader functions, 1 EXV.	534 05 410	1060001	
Hose kit, loader functions, 2 EXV.	534 05 420	1060001	
Hose kit, loader functions, std./winch	534 05 430	1060001	
Hose kit, loader functions, 2 EXV/winch	534 05 440	1060001	
Hose kit, loader functions, TS (1-circuit fixed)	534 05 450	1060001	
Hose kit, loader functions TS (HC, 1 circuit, fixed flow, excl. CE)	534 05 455	1060001	
Hose kit, loader functions, TS (1-circuit variable)	534 05 460	1060001	
Hose kit, loader functions, TS (2-circuits, fixed)	534 05 470	1060001	

15/105 - 17/117 SL & DL Parts

Description	Page no.	From loader	To loader
Hydraulic system, slewing	534 05 500	1060001	
Hydraulic systems, stabilizer beams			
Hydr. syst., stabilizers, manual extension	534 05 700	1060001	
Hydr. syst., stabilizers, hydr. extension	534 05 710	1060001	
Hydraulic system, SV + SR-20° - 4600, manual extension	534 05 750	1060001	
Hydraulic system, SR-60°, 4600, manual extension	534 05 755	1060001	
Hydraulic system, SV + SR-20° - 4600, hydr. extension	534 05 760	1060001	
Hydraulic system, SH + SR-60° - 4600, hydr. extension	534 05 770	1060001	
Hydraulic system, SV + SR-20° - 5570, manual extension	534 05 780	1060001	
Hydraulic system, SR-60°, 5570, manual extension	534 05 785	1060001	
Hydraulic system, SV + SR-20° - 5570, hydr. extension	534 05 790	1060001	
Hydraulic system, SH + SR-60° - 5570, hydr. extension	534 05 800	1060001	
Hydraulic system, DV + DR-20° - 6450, hydr. extension	534 05 810	1060001	
Hydraulic system, DH + DR-60° - 6450, hydr. extension	534 05 820	1060001	
Hydraulic systems, pump and tank			
Hydr. syst. pump + return hoses	534 06 020	1060001	
Hydr. syst. pump + return hoses (TS)	534 06 030	1060001	
Hydraulic system, pump and return hoses (TS, excl. CE)	534 06 040	1060001	
Tank, cpl.	534 06 070	1060001	
Tank incl. fittings	534 06 080	1060001	
Oil cooler	534 06 100	1060001	
High-pressure filter	534 06 120	1060001	
Hydraulic systems, valve blocks			
Valve block, 4 sects. HC-D4	534 06 200	1060001	
Valve block, 5 sects. HC-D4	534 06 210	1060001	
Valve block, 6 sects. HC-D4	534 06 220	1060001	
Valve block, 4 sects. HC-D4 NEM	534 06 230	1060001	
Valve block, 5 sects. HC-D4 NEM	534 06 240	1060001	

15/105 - 17/117 SL & DL Parts

Description	Page no.	From loader	To loader
Valve block, 6 sects. HC-D4 NEM	534 06 250	1060001	
Valve block, 6 sect./HCD4/2+4 CE	534 06 260	1060001	
Valve block, 6 sect./HCD4/2+4 CE2.1	534 06 270	1060001	
Valve block, 6 sect. HC-D4	534 06 280	1060001	
Valve block left, 3 sects. HC-D4 TS	534 06 290	1060001	
Valve block right, 3 sects. HC-D4 TS	534 06 300	1060001	
Control valves, Danfoss, 4 sections, fixed/variable flow (std./QOPS)	534 06 310	1060001	
Control valves, Danfoss, 5 sections, fixed/variable flow with rotator (std./QOPS)	534 06 320	1060001	
Control valves, Danfoss, 5 sections, fixed/variable flow with winch (std./QOPS)	534 06 330	1060001	
Control valves, Danfoss, 6 sections, fixed/variable flow with rotator and grab (std./QOPS)	534 06 340	1060001	
Control valves, Danfoss, 6 sections, fixed/variable flow with Fly-Jib (std./QOPS)	534 06 350	1060001	
Control valves, Danfoss, 7 sections, fixed/variable flow with winch and Fly-Jib (std./QOPS)	534 06 360	1060001	
Control valves, Danfoss, 7 sections, fixed/variable flow with rotator, grab and winch (std./QOPS)	534 06 370	1060001	
Control valve, Danfoss, 3 sections, 1 circuit, fixed flow, left	534 06 450	1060001	
Control valve, Danfoss, 3 sections, 1 circuit, fixed flow, right	534 06 460	1060001	
Control valve, Danfoss, 3 sections, 1 circuit, variable flow, left	534 06 470	1060001	
Control valve, Danfoss, 3 sections, 1 circuit, variable flow, right	534 06 480	1060001	
Danfoss control valve PVG32, 4-7 sections	534 06 490	1060001	
HC - M50 stabilizer valve section	534 06 493	1060001	
HC-D4 electro-hydraulic NEM-kit, NEM radio remote control	534 06 495	1060001	
HC - M50 electro-hydraulic NEM-kit NEM radio remote control	534 06 497	1060001	
HC-D4 valve block, 4-6 sections	534 06 499	1060001	
Labels and mounting kits			
Standard labels	534 07 010	1060001	
Operating labels	534 07 020	1060001	
Type plates, marking tape, warning signs	534 07 030	1060001	
Lifting capacity diagrams	534 07 040	1060001	

15/105 - 17/117 SL & DL Parts

Description	Page no.	From loader	To loader
Mounting kit (8 M24 x 2 pins)	534 07 100	1060001	
Mounting kit (4 M30 x 2 pins)	534 07 110	1060001	
Accessories, extra valves			
Hose guides, K1-1EXV.	534 09 100	1060001	
Hose guides, K2-1EXV.	534 09 110	1060001	
Hose guides, K3-1 EXV.	534 09 120	1060001	
Hose guides, K4-1 EXV.	534 09 130	1060001	
Hose guides, K5-1 EXV.	534 09 140	1060001	
Hose guides, K6-1 EXV.	534 09 150	1060001	
Hose guides, K1-2 EXV.	534 09 200	1060001	
Hose guides, K2-2 EXV.	534 09 210	1060001	
Hose guides, K3-2 EXV.	534 09 220	1060001	
Hose guides, K4-2 EXV.	534 09 230	1060001	
Hose guides, K5-2 EXV.	534 09 240	1060001	
Hose guides, K6-2 EXV.	534 09 250	1060001	
Bracket for hose reel, cpl. (jib)	534 09 280	1060001	
Attachment for hose reel, cpl. (extension 2)	534 09 290	1060001	
Attachment for hose reel, cpl. (extension 4)	534 09 300	1060001	
Hydr. system, hose reels, 2 EXV.	534 09 310	1060001	
Kit, quick-release coupling for internal hose routing, 2 EXV.	534 09 320	1060001	
Hydr. system, hose reels, 1 EXV.	534 09 330	1060001	
Kit, quick-release coupling for internal hose routing, 1 EXV.	534 09 340	1060001	
Quick-release coupling for 1 extra valve	534 09 390	1060001	
Quick-release coupling for 2 extra valves	534 09 400	1060001	
Multi-coupling for 2 extra valves K1-K5	534 09 410	1060001	
Multi-coupling for 2 extra valves K6	534 09 420	1060001	
Kit for 3 extra valves (K1-K5)	534 09 460	1060001	

15/105 - 17/117 SL & DL Parts

Description	Page no.	From loader	To loader
Kit for 3 extra valves (K6)	534 09 470	1060001	
Accessories, stand-up controls, HS			
Stand-up controls, standard	534 10 010	1060001	
Rod control, HS std. - 4 functions	534 10 020	1060001	
Rod control, HS std. - 5 functions	534 10 030	1060001	
Rod control, HS std. - 6 functions	534 10 040	1060001	
Stabilizer operation, HS std. - 2/4 fcts.	534 10 060	1060001	
Valve bracket - HS 2 fcts./4 fcts. (oper. from HS)	534 10 070	1060001	
Stabilizer operation, HS std. - 4 fcts. + 4 available fcts.	534 10 090	1060001	
Stand-up controls, direct valve control	534 10 200	1060001	
Rod control, HS, direct valve control (Danfoss)	534 10 210	1060001	
Rod control, HS, direct valve control (Hydrocontrol) - 4 fcts.	534 10 220	1060001	
Rod control, HS, direct valve control (Hydrocontrol) - 5 fcts.	534 10 230	1060001	
Rod control, HS, direct valve control (Hydrocontrol) - 6 fcts.	534 10 240	1060001	
Stabilizer operation, HS, direct valve control	534 10 250	1060001	
Dual control, HS, direct valve control - 4 fcts.	534 10 300	1060001	
Dual control, HS, direct valve control - 5 fcts.	534 10 310	1060001	
Dual control, HS, direct valve control - 6 fcts.	534 10 320	1060001	
Valve bracket, cpl., direct valve control - 2 fcts.	534 10 350	1060001	
Valve bracket, cpl., direct valve control - 4 fcts.	534 10 360	1060001	
Valve bracket, cpl., direct valve control - 4 fcts. + 4 available fcts.	534 10 370	1060001	
Pump and return hoses - HC - 1-circuit - HS direct valve control	534 10 460	1060001	
Pump and return hoses - HC - 2-circuit - HS direct valve control	534 10 470	1060001	
Pump and return hoses - Danfoss - HS - direct valve control	534 10 480	1060001	
Kit for HDL - HS direct valve control	534 10 485	1060001	
Hydraulic system, slewing, HS, direct valve control	534 10 490	1060001	
Hose kit, 4 fcts. Hydrocontrol	534 10 500	1060001	

15/105 - 17/117 SL & DL Parts

Description	Page no.	From loader	To loader
Hose kit, 5 fcts. Hydrocontrol	534 10 510	1060001	
Hose kit, HS dir. valve ctrl. (HC 6 fcts.)	534 10 520	1060001	
Mounting fittings, HSRC	534 10 800	1060001	
Accessories, top seat, TS			
Mounting fittings, TS	534 11 010	1060001	
Seat, cpl.	534 11 020	1060001	
Top seat (RC), cpl.	534 11 030	1060001	
Mounting fittings, TS RC	534 11 040	1060001	
Top seat (HC linear), cpl.	534 11 050	1060001	
Top seat (HC X), cpl.	534 11 060	1060001	
Top seat (Danfoss X), cpl.	534 11 070	1060001	
Bracket, complete (ECT 5320 - TS)	534 11 080	1060001	
Bracket, complete (change-over valve, TS, excl. CE)	534 11 085	1060001	
Ladder for TS, cpl.	534 11 090	1060001	
Hose kit, 6 fcts., (TSHC linear)	534 11 100	1060001	
Hose kit, 6 functions (TSHC, linear, excl. CE)	534 11 105	1060001	
Hose kit, loader functions (TS HC joystick)	534 11 110	1060001	
Hose kit for pump and tank, (TS HC joystick)	534 11 120	1060001	
Hose kit, loader functions (TS Danfoss 1 circuit, fixed and variable flow)	534 11 130	1060001	
Hose kit for pump and tank (TS, Danfoss 1 circuit, fixed flow)	534 11 140	1060001	
Hose kit for pump and tank (TS, Danfoss 1 circuit, variable flow)	534 11 150	1060001	
Stabilizer operation (TS HC linear)	534 11 180	1060001	
Stabilizer operation (TS joystick)	534 11 190	1060001	
Hose shield (TS), cpl.	534 11 200	1060001	
Accessories, winch			
Winch. 1.5 tm, mounting fittings and weighing cell	534 13 020	1060001	
Winch. 2.5 tm, mounting fittings and weighing cell	534 13 030	1060001	
Wire pulley, single snatch block	534 13 040	1060001	

15/105 - 17/117 SL & DL Parts

Description	Page no.	From loader	To loader
Wire pulley, double snatch block	534 13 050	1060001	
Wire roller guide	534 13 060	1060001	
Hydraulic system, winch	534 13 100	1060001	
Hydraulic system, P15E	534 13 110	1060001	
Accessories, miscellaneous			
Cam disc kit (Stand-up controls)	534 16 010	1060001	
Cam disc kit (2-stage LMB)	534 16 020	1060001	
Cam disc kit (QOPS, std.), cpl.	534 16 030	1060001	
Cam disc kit (QOPS, RC), cpl.	534 16 040	1060001	
Cam disc kit (HS + 2-stage LMB)	534 16 050	1060001	
Mounting fittings, light tower	534 16 060	1060001	
Protective guard, jib cylinder, cpl.	534 16 090	1060001	
Protective guard (LHV boom), cpl.	534 16 100	1060001	
Electric parts			
RCL 5300	534 20 010	1060001	
Plugs in RCL	534 20 015	1060001	
Bottom for RCL box, no RC	534 20 030	1060001	
24 V bottom for RCL box with RC	534 20 050	1060001	
Wiring, base, standard	534 20 080	1060001	
Base, standard incl. 2-stage LMB	534 20 085	1060001	
Base, warning over stand-up controls (HS)	534 20 090	1060001	
Base, electronic slewing limitation (HS)	534 20 095	1060001	
Wiring, base, NEMRC excl. CE	534 20 100	1060001	
Base, NEMRC incl. CE	534 20 105	1060001	
Base, NEMRC + 2-stage LMB	534 20 110	1060001	
Base, HS - NEMRC	534 20 112	1060001	
Base, RC	534 20 115	1060001	
Base, HS - RC	534 20 130	1060001	

15/105 - 17/117 SL & DL Parts

Description	Page no.	From loader	To loader
Base, warning over stand-up controls (HS10)	534 20 140	1060001	
Base, warning over stand-up controls (HS10), variable flow pump	534 20 145	1060001	
Base, electronic slewing limitation (HS10)	534 20 150	1060001	
Base, electronic slewing limitation (HS10), variable flow pump	534 20 155	1060001	
Stabilizer control via RC, 4 functions	534 20 180	1060001	
Stabilizer control via RC, 4+2 functions	534 20 190	1060001	
Stabilizer control via RC, 4+4 functions	534 20 195	1060001	
Column, std. + HS	534 20 205	1060001	
Column, HS10	534 20 207	1060001	
Column, TS incl. CE	534 20 215	1060001	
Column NEMRC	534 20 220	1060001	
Wiring, column, RC	534 20 225	1060001	
Column, RC + winch	534 20 230	1060001	
Column, RC + Fly-Jib	534 20 235	1060001	
Column, RC + winch + fly-jib	534 20 240	1060001	
HS10 sensor on platform	534 20 270	1060001	
TS platform, 1-circuit fixed flow pump	534 20 295	1060001	
TS platform, 1-circuit fixed flow pump, 2-stage LMB	534 20 300	1060001	
TS platform, 2-circuit fixed flow pump, CE basic system	534 20 305	1060001	
Mounting fittings for ECT 5310	534 20 320	1060001	
Mounting fittings for ECT 5320 (HS std.)	534 20 325	1060001	
Mounting fittings RCL 5300 (TSRC linear)	534 20 330	1060001	
Horn, no RC	534 20 350	1060001	
Horn, RC	534 20 360	1060001	
Horizontal sensor + screws	534 20 370	1060001	
ECT 5310 on the side of the dual controls	534 20 390	1060001	
ECT 5310 on stand-up platform (HS)	534 20 420	1060001	

15/105 - 17/117 SL & DL Parts

Description	Page no.	From loader	To loader
ECT 5320 on stand-up platform (HS)	534 20 430	1060001	
ECT 5320 compl. + 3.5m cable	534 20 440	1060001	
ECT 5320 in the valve block side, TS	534 20 450	1060001	
HDL without RC	534 20 540	1060001	
Mounting fittings for EVS	534 20 565	1060001	
EVS	534 20 570	1060001	
Slewing, electric parts	534 20 610	1060001	
Spotlight, main boom + jib (cable)	534 20 625	1060001	
Height indicateur	534 20 650	1060001	
CYBEW, Transport alarm - stabilizer leg and beam	534 20 655	1060001	
PAW, transport alarm - stowing of loader	534 20 670	1060001	
Fly-Jib supply, K2	534 20 755	1060001	
Mounting fittings for junction box (FJC 5330)	534 20 810	1060001	
Junction box, various electric parts	534 20 811	1060001	
Oil cooler supply	534 20 820	1060001	
Winch module	534 20 830	1060001	
Temperature monitoring for oil cooler	534 20 840	1060001	
3rd extra valve, std. with CE	534 20 855	1060001	
3rd extra valve	534 20 860	1060001	
Mounting fittings, light tower	534 20 865	1060001	
Light tower incl. CIO 5374	534 20 870	1060001	
Light tower via Scanreco	534 20 880	1060001	
Spotlight, jib	534 20 900	1060001	
Spotlight, jib (cable)	534 20 905	1060001	
Spotlight, main boom	534 20 910	1060001	
Spotlight, main boom (cable)	534 20 915	1060001	
Spotlight via RC	534 20 940	1060001	

15/105 - 17/117 SL & DL Parts

Description	Page no.	From loader	To loader
Spotlight via RC, 24V, NEMRC excl. CE	534 20 950	1060001	
CYL, 12-23	534 20 970	1060001	
CYBEL, single extension, 12-23	534 20 975	1060001	
CYBEL double extension 12-23	534 20 980	1060001	
CAN termination, Fly-Jib	534 20 990	1060001	
Electric parts, remote control			
Radio remote control RC 400-CAN, complete	534 21 010	1060001	
Remote control box, 6 linear functions	534 21 020	1060001	
Radio remote control RC 400-CAN, 6 joysticks	534 21 030	1060001	
Remote control box, 3x2 proportional	534 21 040	1060001	
Hydraulic accessories			
Lifting yoke, cpl.	534 25 010	1060001	
Hydraulic accessories	534 25 020	1060001	
Dismounting tools, cpl.(EXV)	534 25 030	1060001	
Lifting tools cpl. (Change of hoses inside the column)	534 25 040	1060001	
Holding kit (pin in hydr. extension)	534 25 050	1060001	
Spanner wrench, footplate + ball joint	534 25 060	1060001	

15/105 - 17/117 SL & DL Parts

Internal ref. 63 40 000

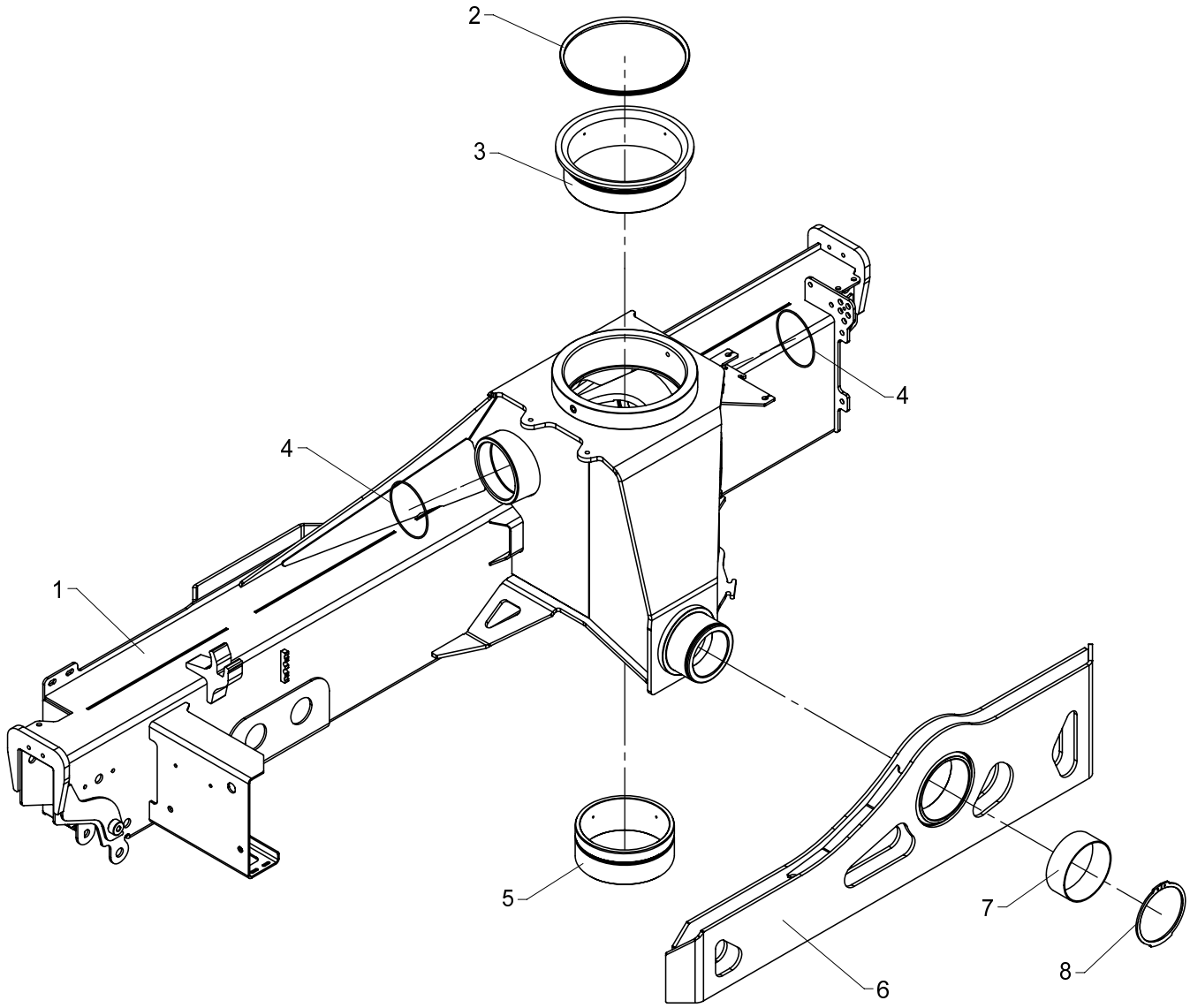

534 01 010

From loader 1060001
To loader

Created 12-03-2009
Modified

Base, complete

Pos	Qty.	Part no.	Description	Remarks
1	1	6340010	Base	6340001
2	1	21937	V-ring	VL-0275
3	1	63557	Top bearing	
4	2	20197	O-ring	OR 118 x 3
5	1	63558	Bottom bearing	
6	1	6306135	Suspension traverse	
7	1	23406	Composite bearing	ø130 x 50
8	1	33151	Circlip	130U

15/105 - 17/117 SL & DL Parts

Internal ref. 63 40 260

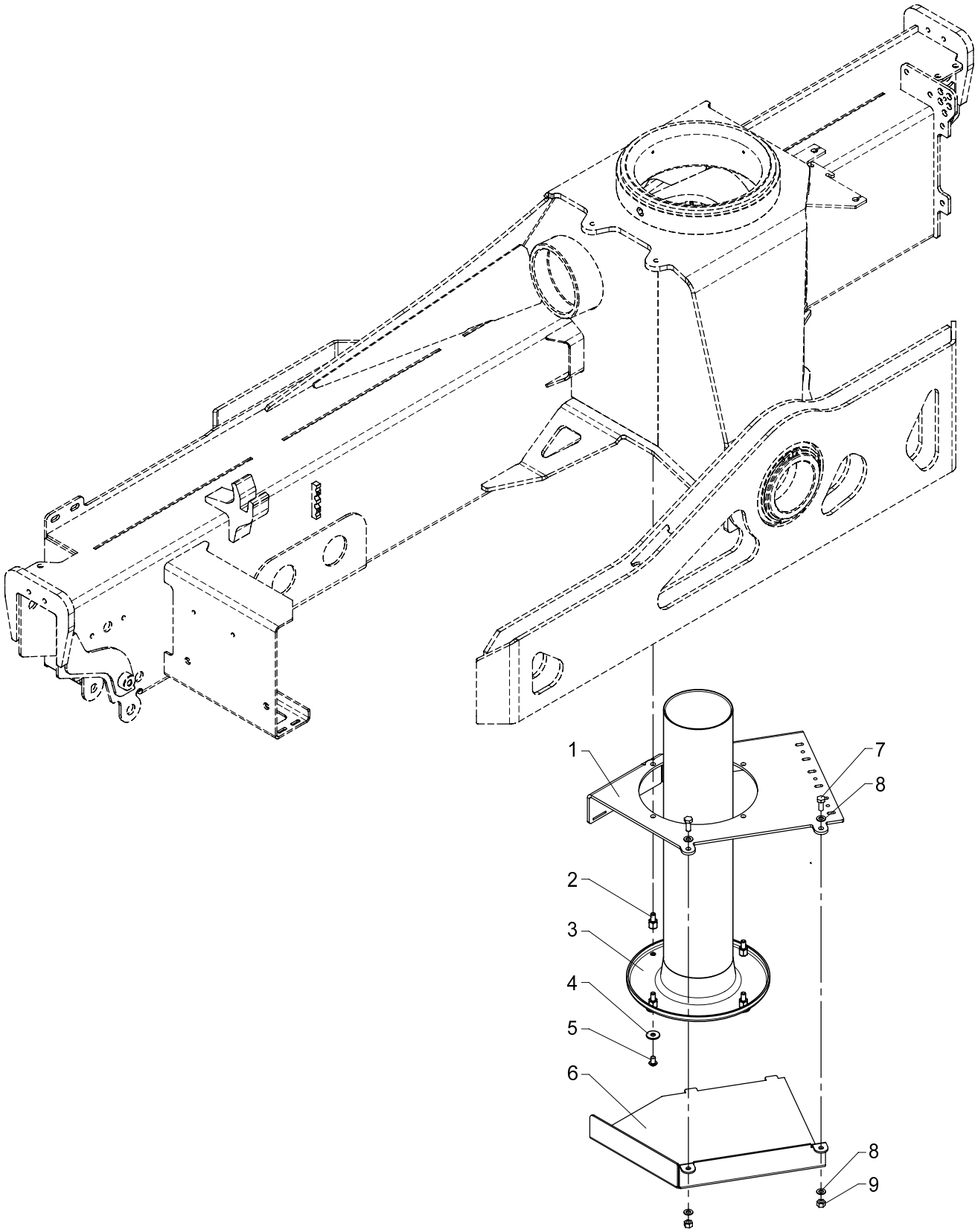

Protection plate, cpl. (std.)

534 01 050

From loader 1060001
To loader

Created 11-11-2008
Modified

Pos	Qty.	Part no.	Description	Remarks
1	1	6340231	Cover	
2	4	6340223	Spacer	
3	1	63490	Bushing	
4	4	31136	Washer, stainless	8 mm
5	4	30924	Screw	M8 x 12
6	1	6340233	Hose shield	
7	2	30132	Set screw, stainless	M8 x 20
8	4	31147	Washer, stainless	8 mm
9	2	30886	Lock nut, stainless	M8

15/105 - 17/117 SL & DL Parts

Internal ref. 63 41 570

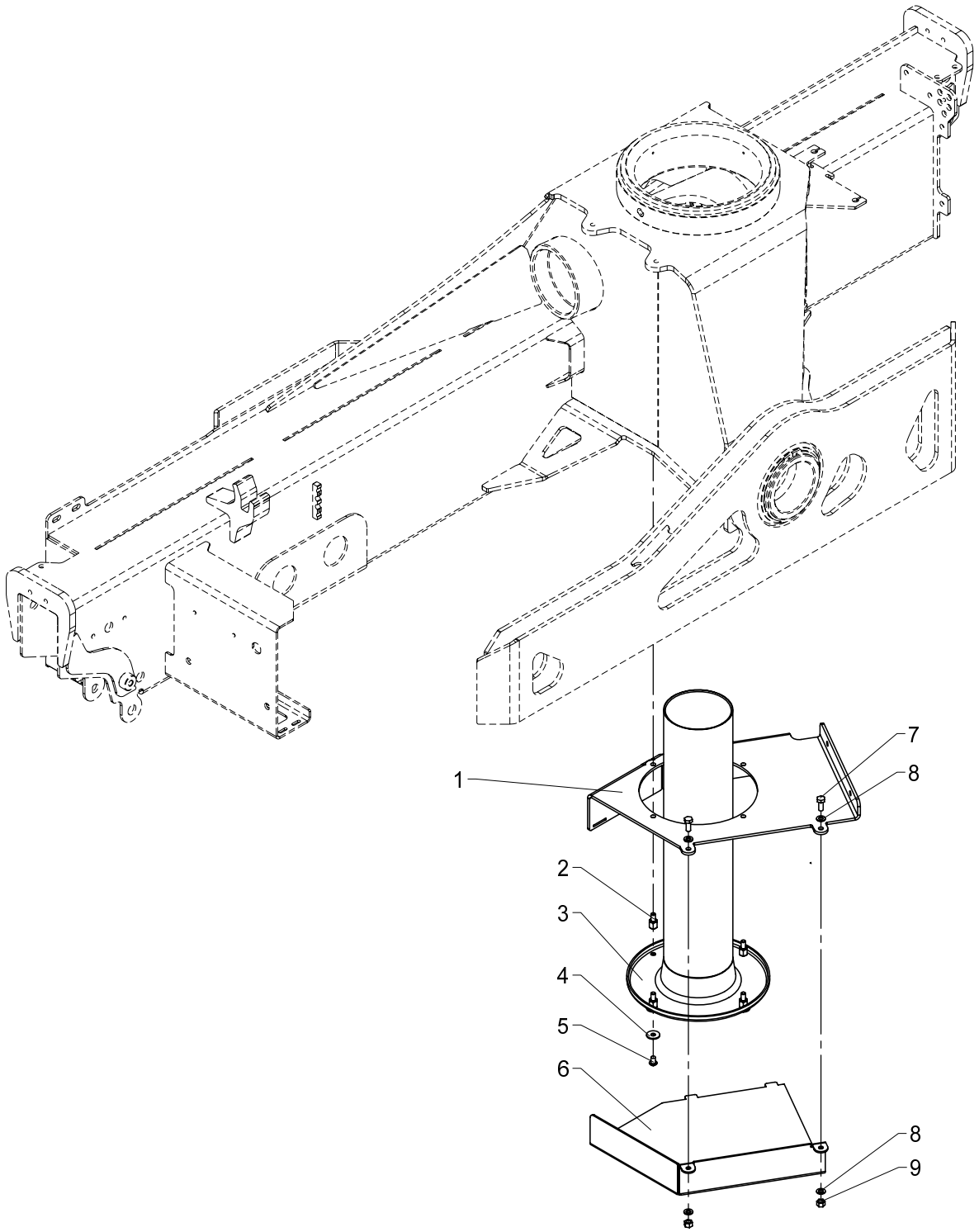

Protection plate, complete (TS)

534 01 060

From loader 1060001
To loader

Created 21-11-2008
Modified

Pos	Qty.	Part no.	Description	Remarks
1	1	6340841	Cover (TS)	
2	4	6340223	Spacer	
3	1	63490	Bushing	
4	4	31136	Washer, stainless	8 mm
5	4	30924	Screw	M8 x 12
6	1	6340843	Protection plate (TS)	
7	2	30132	Set screw, stainless	M8 x 20
8	4	31147	Washer, stainless	8 mm
9	2	30886	Lock nut, stainless	M8

15/105 - 17/117 SL & DL Parts

Internal ref. 63 40 020

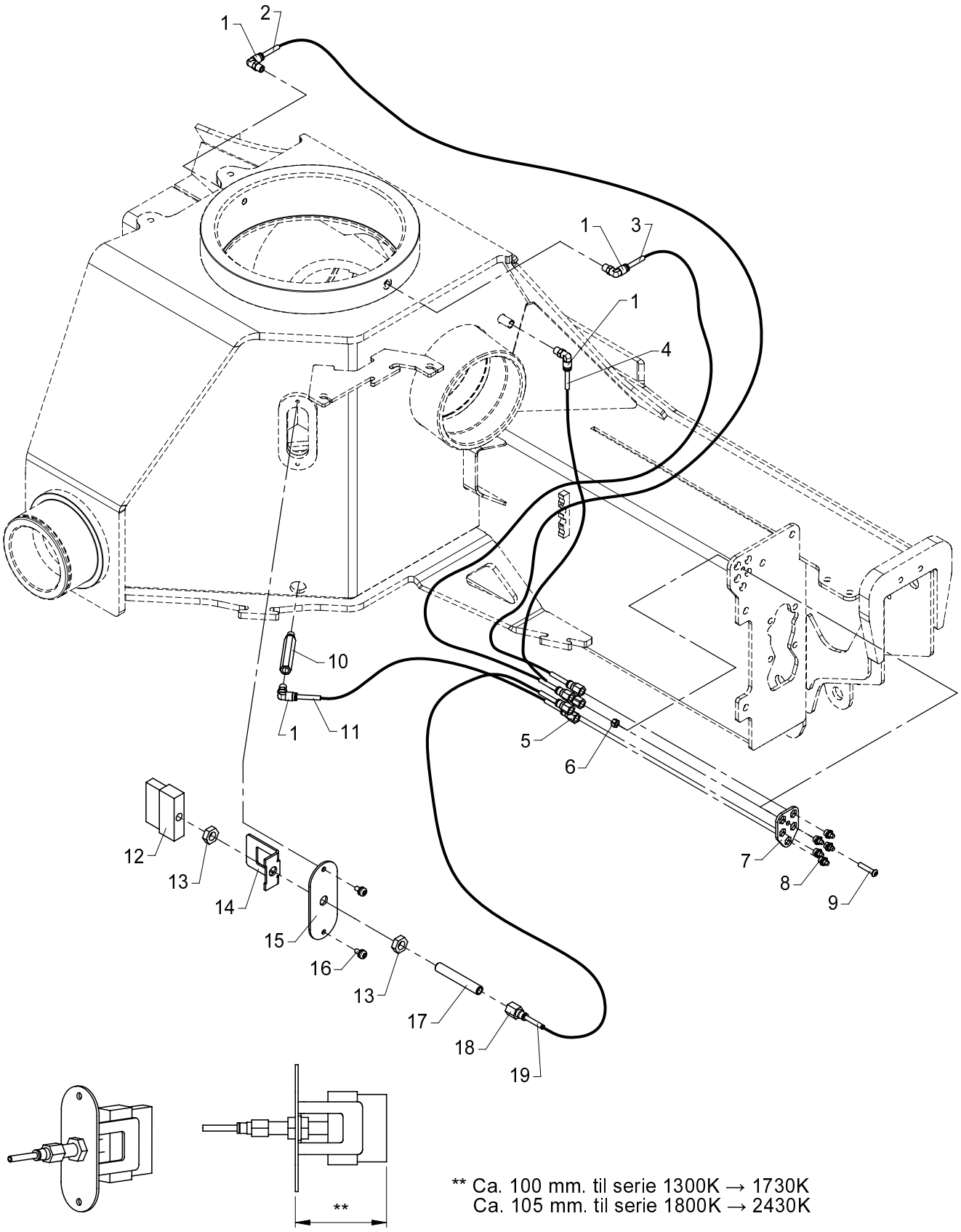

** Ca. 100 mm. til serie 1300K → 1730K
Ca. 105 mm. til serie 1800K → 2430K

Central lubrication and lubricating brush

534 01 080

From loader 1060001
To loader

Created 11-11-2008
Modified

Pos	Qty.	Part no.	Description	Remarks
1	4	25532	Elbow connection	
2	1	41712	Cable lead-in	1260 mm
3	1	41712	Cable lead-in	970 mm
4	1	41712	Cable lead-in	640 mm
5	5	25579	Union nut	
6	1	30884	Lock nut, stainless	M6
7	1	6306038	Lock plate	
8	5	31318	Lubricator	1/8" RG
9	1	32458	Screw	M6 x 30
10	1	6340046	Nipple (1/8" RG - 90 mm)	
11	1	41712	Cable lead-in	880 mm
12	1	31395	Brush	
13	2	25354	Counter nut	1/4"
14	1	6306047	Safety device, lubrica. brush	
15	1	6306046	Cover for lubricating brush	
16	2	32479	Screw	M6 x 12
17	1	6306048	Threaded pipe	
18	1	25580	Union nut	
19	1	41712	Cable lead-in	1200 mm

15/105 - 17/117 SL & DL Parts

Internal ref. 63 40 020

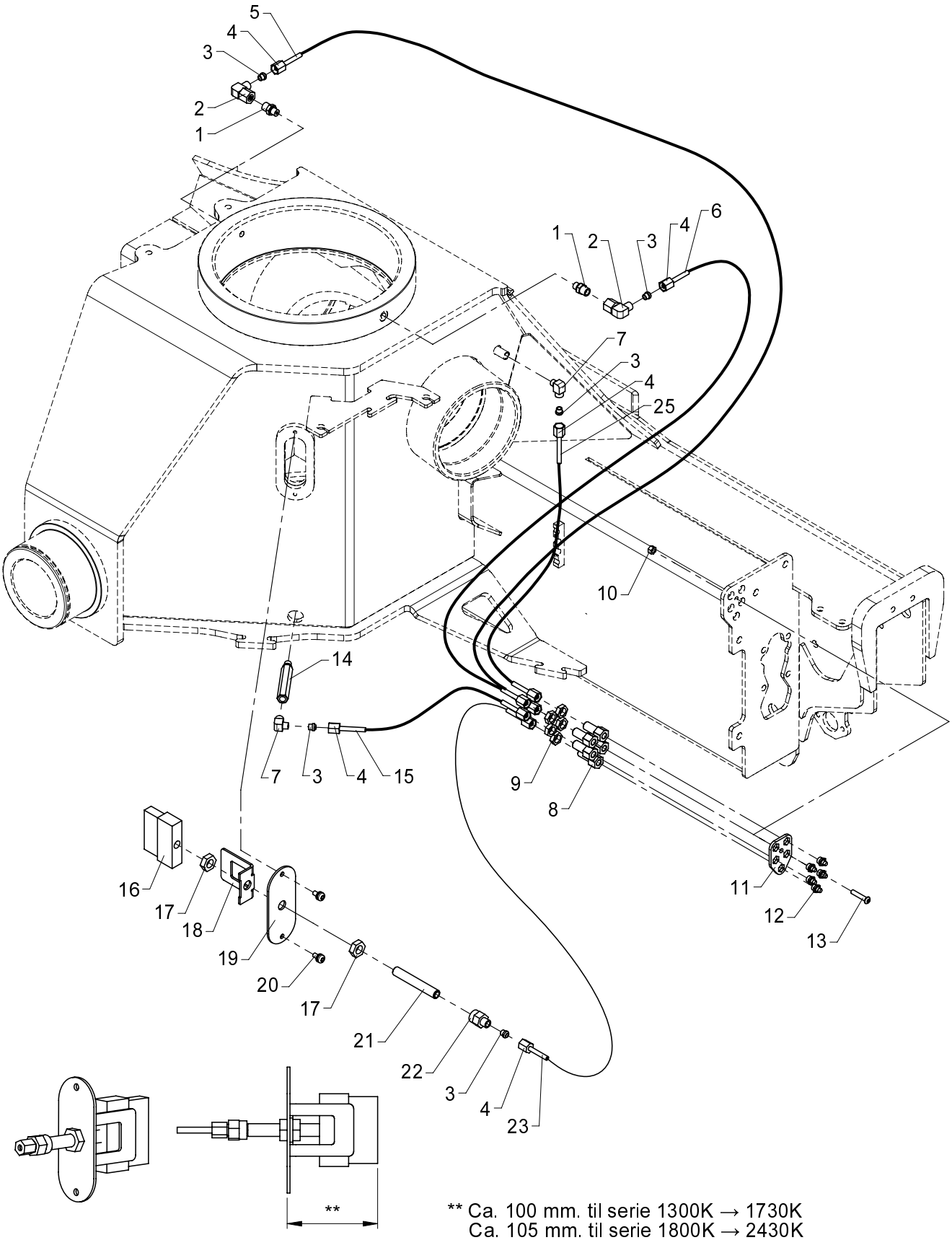

** Ca. 100 mm. til serie 1300K → 1730K
Ca. 105 mm. til serie 1800K → 2430K

534 01 080 A

From loader 1060001
To loader

Central lubrication and lubricating brush

Created 11-11-2008
Modified 09-11-2010

Pos	Qty.	Part no.	Description	Remarks
1	2	26189	Connection	P-GEV 6 LR-WD
2	2	26174	Elbow connection	EWSD 6 L
3	10	26114		P-R 6 L/S
4	10	26164	Coupling nut	M 6 L
5	1	62821	Nylon pipe	1260 mm
6	1	62821	Nylon pipe	970 mm
7	2	26186	Elbow connection	WEV 6 LRK
8	5	26891		
9	5	26890		M12 x 1,5
10	1	30884	Lock nut, stainless	M6
11	1	6306038	Lock plate	
12	5	31318	Lubricator	1/8" RG
13	1	32458	Screw	M6 x 30
14	1	6340046	Nipple (1/8" RG - 90 mm)	
15	1	62821	Nylon pipe	880 mm
16	1	31395	Brush	
17	2	25354	Counter nut	1/4"
18	1	6306047	Safety device, lubrica. brush	
19	1	6306046	Cover for lubricating brush	
20	2	32479	Screw	M6 x 12
21	1	6306048	Threaded pipe	
22	1	26372	Pressure gauge connection	P-MAV 6 LR
23	1	62821	Nylon pipe	1200 mm
25	1	62821	Nylon pipe	640 mm

15/105 - 17/117 SL & DL Parts

Internal ref. 63 40 030

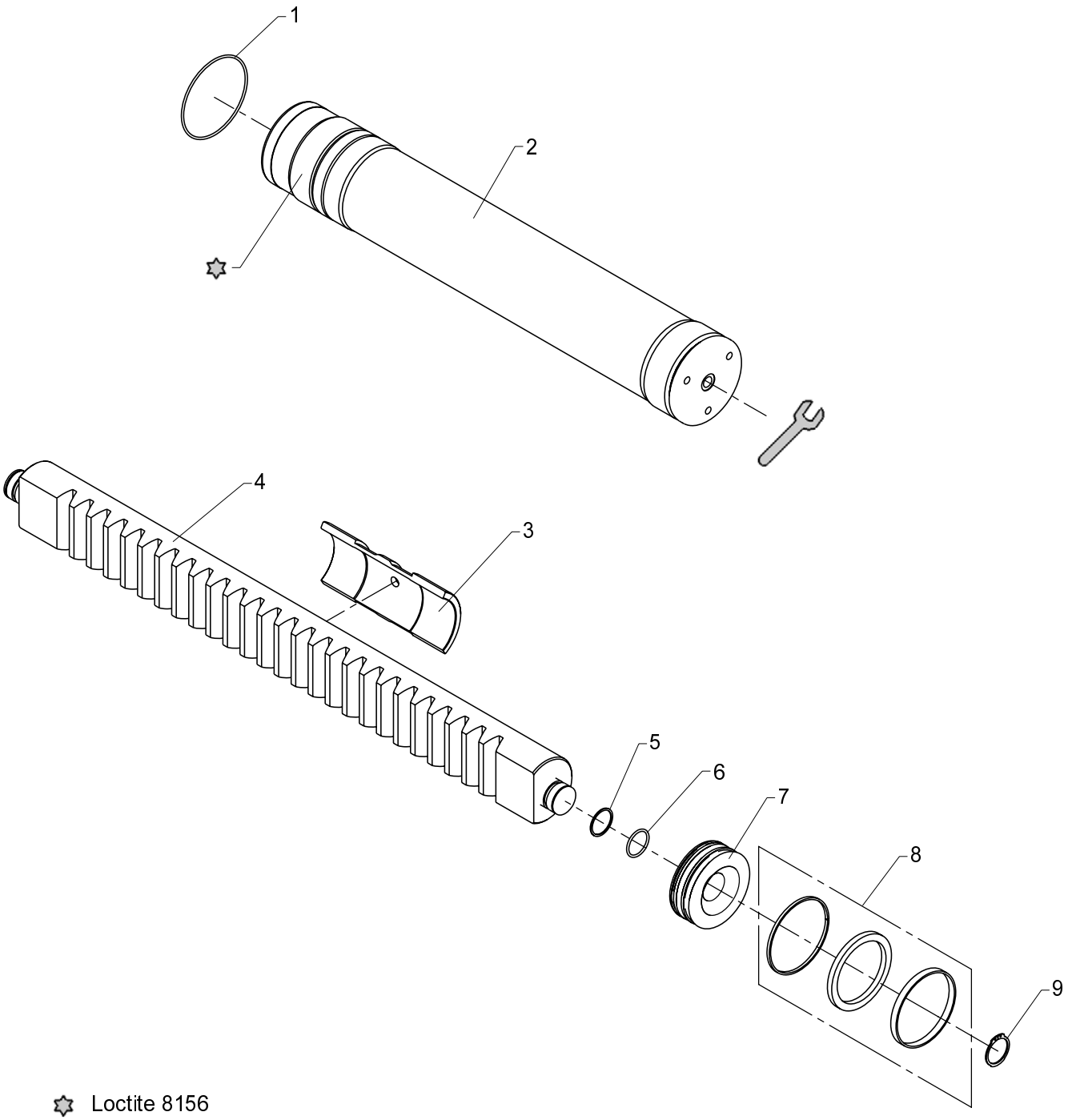

534 01 100

From loader 1060001
To loader

Created 11-11-2008
Modified

Slewing system, 400°

Pos	Qty.	Part no.	Description	Remarks
1	2	20208	O-ring	OR 114,5 x 3
2	2	6340041	Slewing cylider	
3	1	63559	Guide block	
4	1	6340044	Rack (ø95-M10-400)	
5	2	20705	Back ring	STR 35 x 40 x 1,3
6	2	20177	O-ring	OR 34,2 x 3
7	2	6340045	Piston	
8	2	6894250	Seal kit	
9	2	33121	Circlip	40U

15/105 - 17/117 SL & DL Parts

Internal ref. 63 42 050

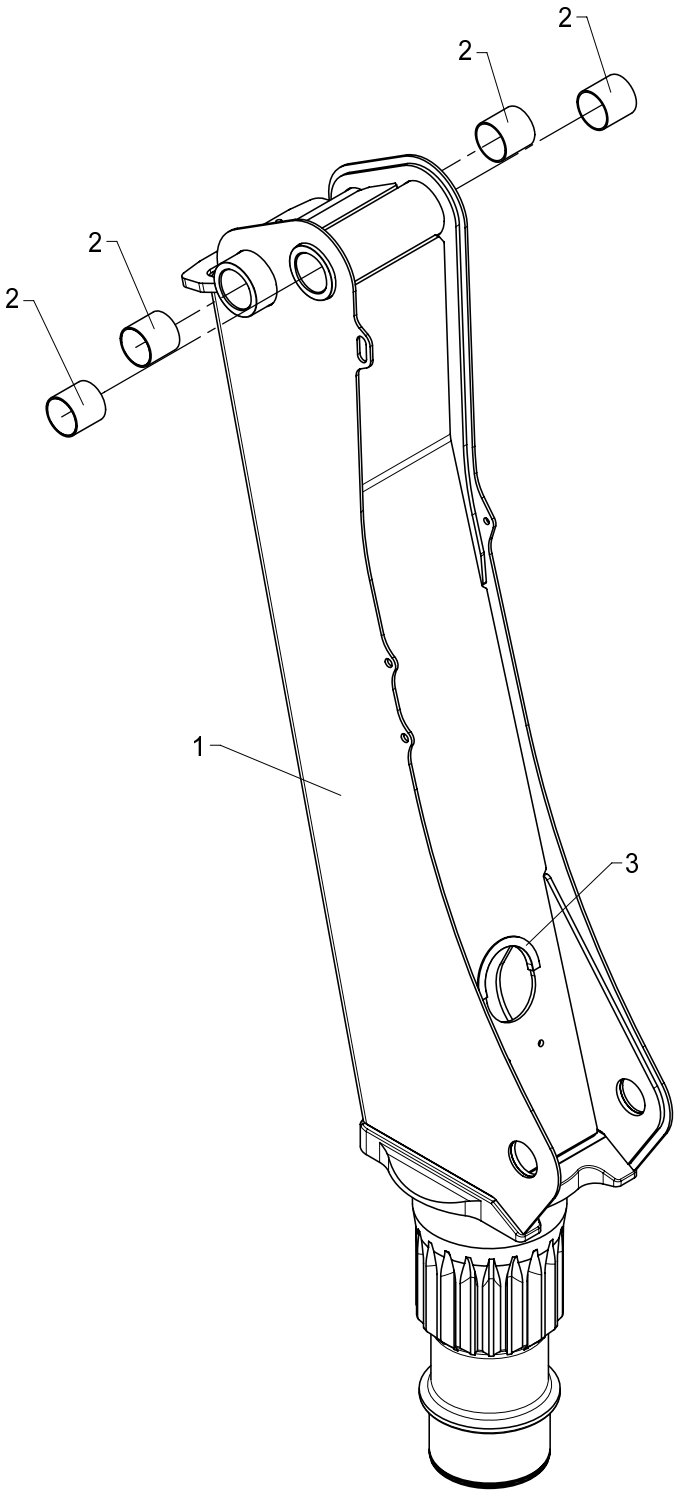

Column, cpl. for link arm system, boom

534 01 300

From loader 1060001
To loader 1060386

Created 14-11-2008
Modified

Pos	Qty.	Part no.	Description	Remarks
1	1	6342040	Column, painted	6342051
2	4	23431	Composite bearing	ø60/65 x 60
3	1	46587	Rubber protection	180 mm

15/105 - 17/117 SL & DL Parts

Internal ref. 63 42 050

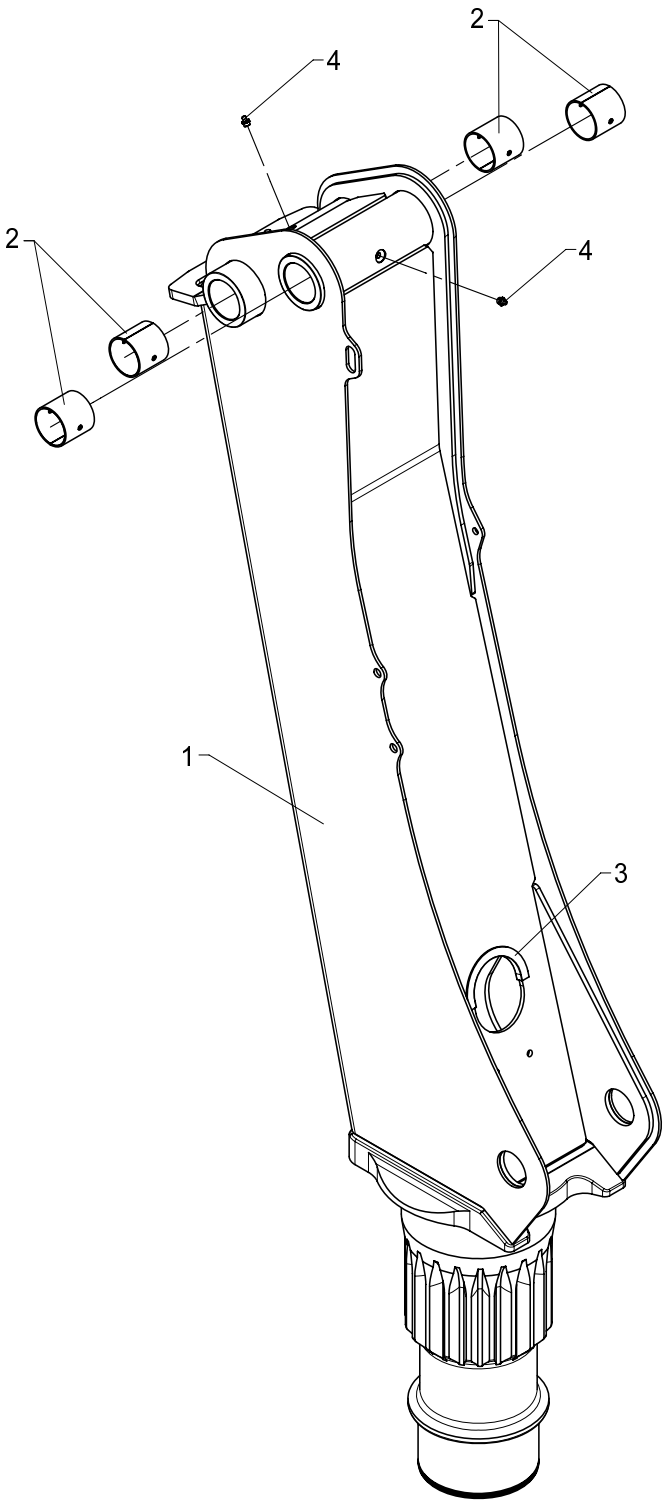

534 01 300 A

From loader 1060387
To loader

Created 19-07-2010
Modified

Column, cpl. for link arm system, boom

Pos	Qty.	Part no.	Description	Remarks
1	1	6342040	Column, painted	6342051
2	4	23330	Bushing	PM 6060 DX
3	1	46587	Rubber protection	180 mm
4	2	31318	Lubricator	1/8" RG

15/105 - 17/117 SL & DL Parts

Internal ref. 63 42 070

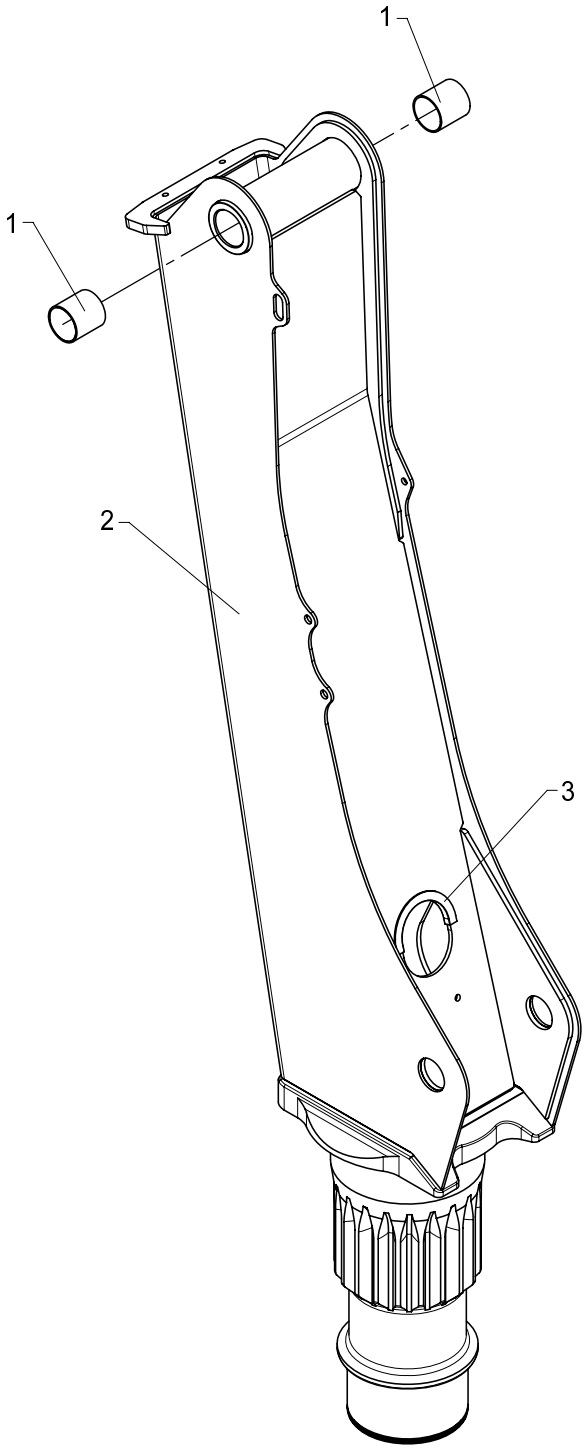

Column, cpl. excl. link arm system, boom

534 01 350

From loader 1060001
To loader 1060386

Created 14-11-2008
Modified

Pos	Qty.	Part no.	Description	Remarks
1	2	23410	Composite bearing	ø55/60 x 60
2	1	6342080	Column, painted	6342071
3	1	46587	Rubber protection	180 mm

15/105 - 17/117 SL & DL Parts

Internal ref. 63 42 070

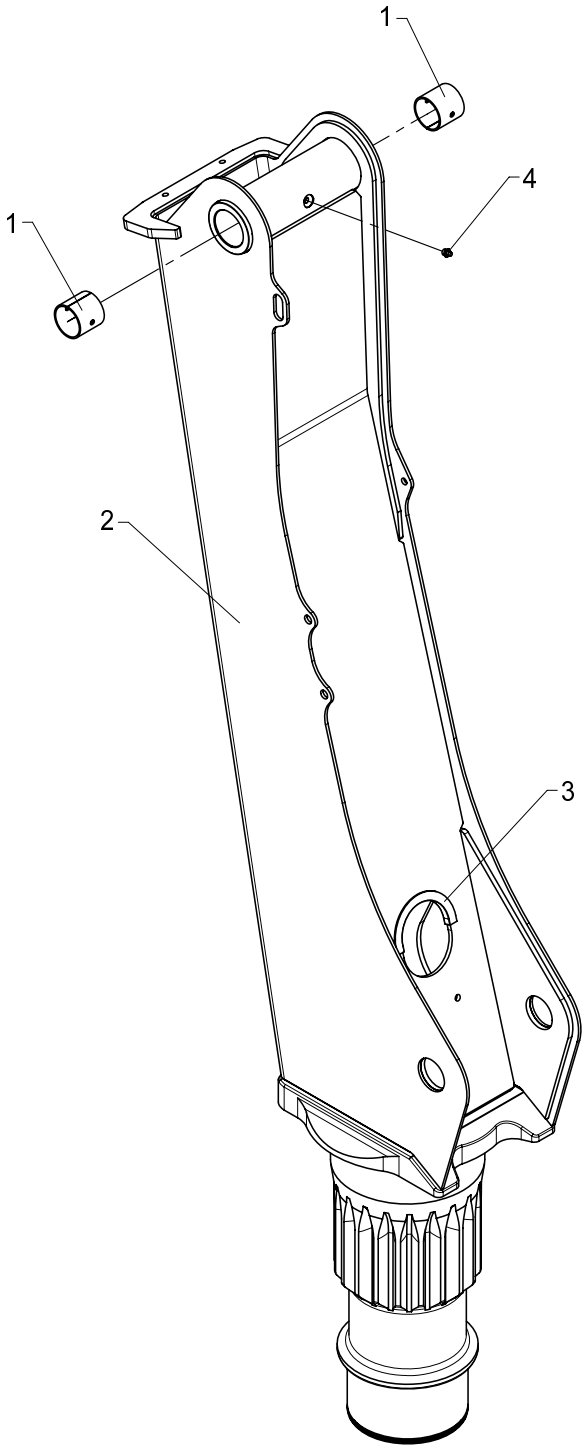

534 01 350 A

From loader 1060387
To loader

Created 19-07-2010
Modified

Column, cpl. excl. link arm system, boom

Pos	Qty.	Part no.	Description	Remarks
1	2	23324	Bushing	PM 5060 DX
2	1	6342080	Column, painted	6342071
3	1	46587	Rubber protection	180 mm
4	1	31318	Lubricator	1/8" RG

15/105 - 17/117 SL & DL Parts

Internal ref. 63 42 180

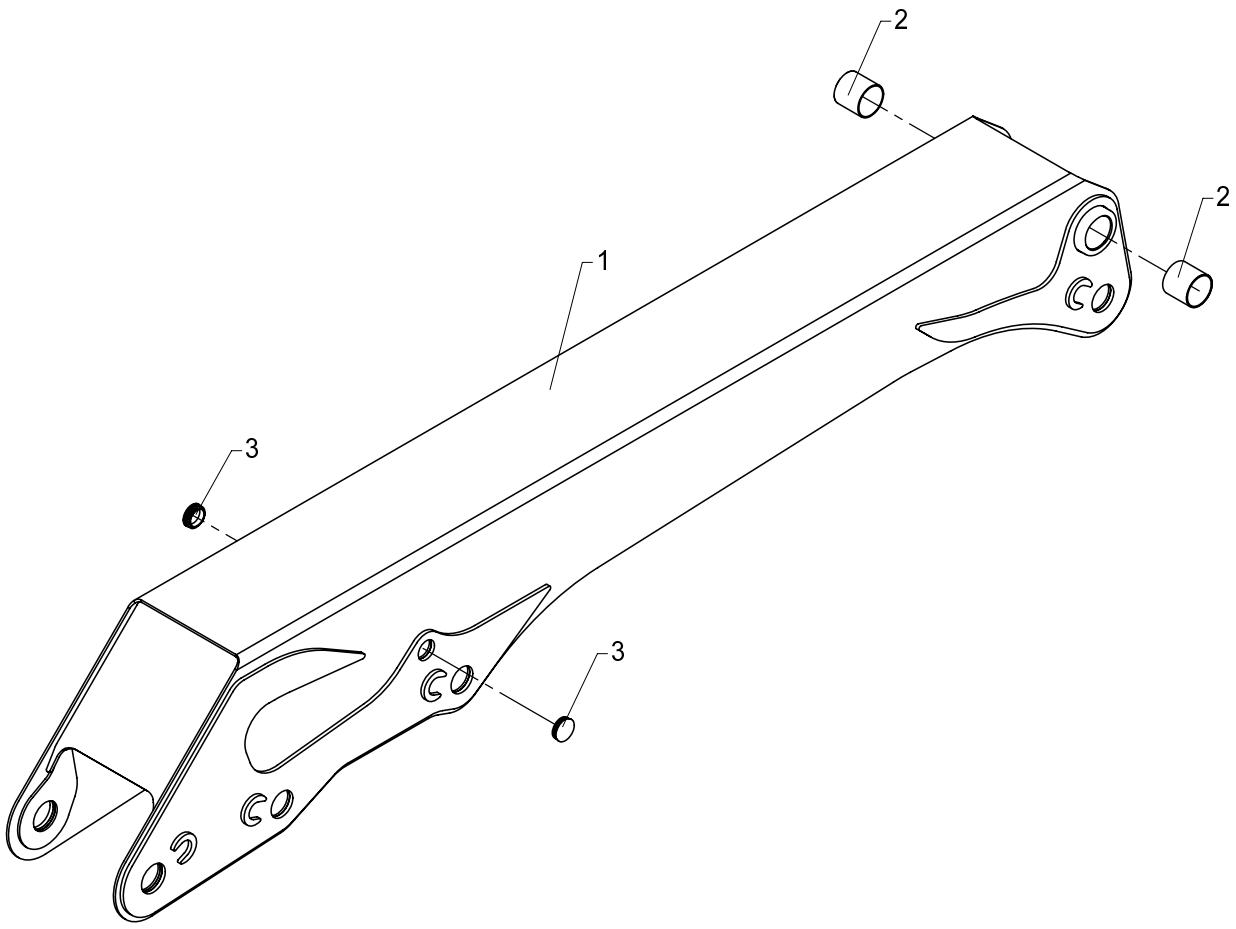

534 01 400

From loader 1060001
To loader 1060386

Created 14-11-2008
Modified

Main boom, cpl. for link arm system, boom

Pos	Qty.	Part no.	Description	Remarks
1	1	6342230	Main boom, painted	6342181
2	2	23431	Composite bearing	ø60/65 x 60
3	2	64381	Ferrule	

15/105 - 17/117 SL & DL Parts

Internal ref. 63 42 180

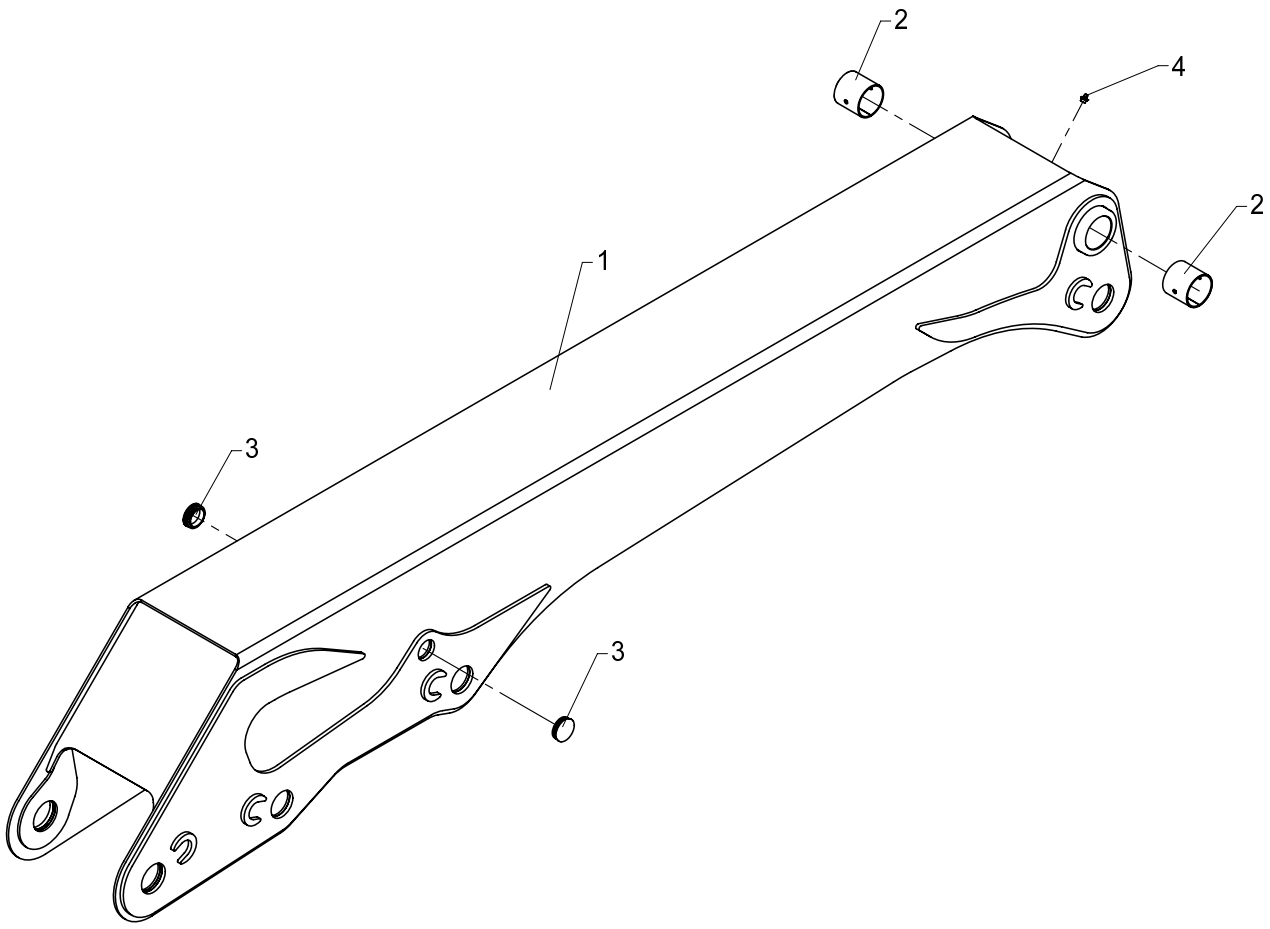

534 01 400 A

From loader 1060387
To loader

Created 19-07-2010
Modified

Main boom, cpl. for link arm system, boom

Pos	Qty.	Part no.	Description	Remarks
1	1	6342230	Main boom, painted	6342181
2	2	23330	Bushing	PM 6060 DX
3	2	64381	Ferrule	
4	1	31318	Lubricator	1/8" RG

15/105 - 17/117 SL & DL Parts

Internal ref. 63 42 190

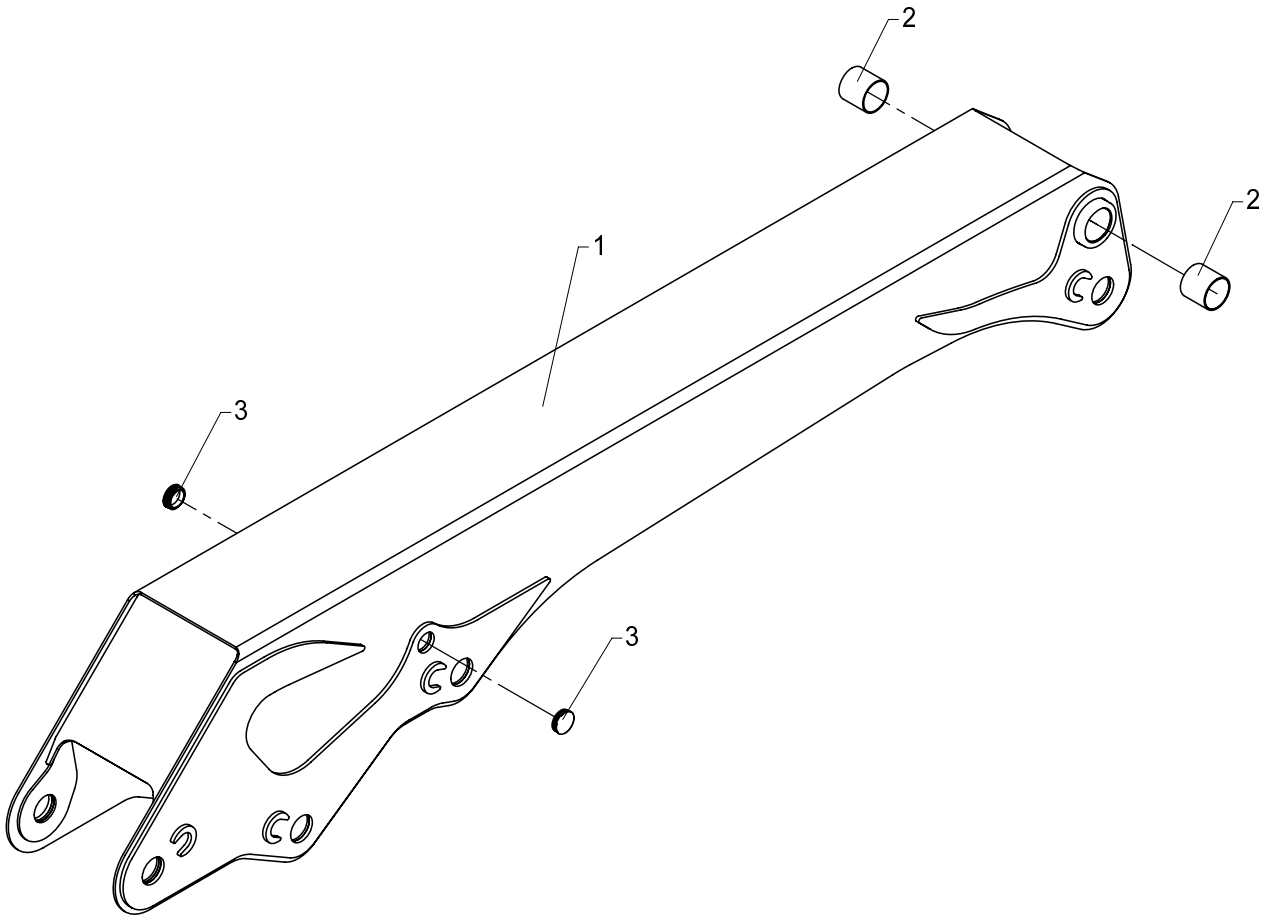

Main boom, cpl., no link arm system, boom

534 01 420

From loader 1060001
To loader 1060386

Created 14-11-2008
Modified

Pos	Qty.	Part no.	Description	Remarks
1	1	6342240	Main boom, painted	6342191
2	2	23431	Composite bearing	ø60/65 x 60
3	2	64381	Ferrule	

15/105 - 17/117 SL & DL Parts

Internal ref. 63 42 190

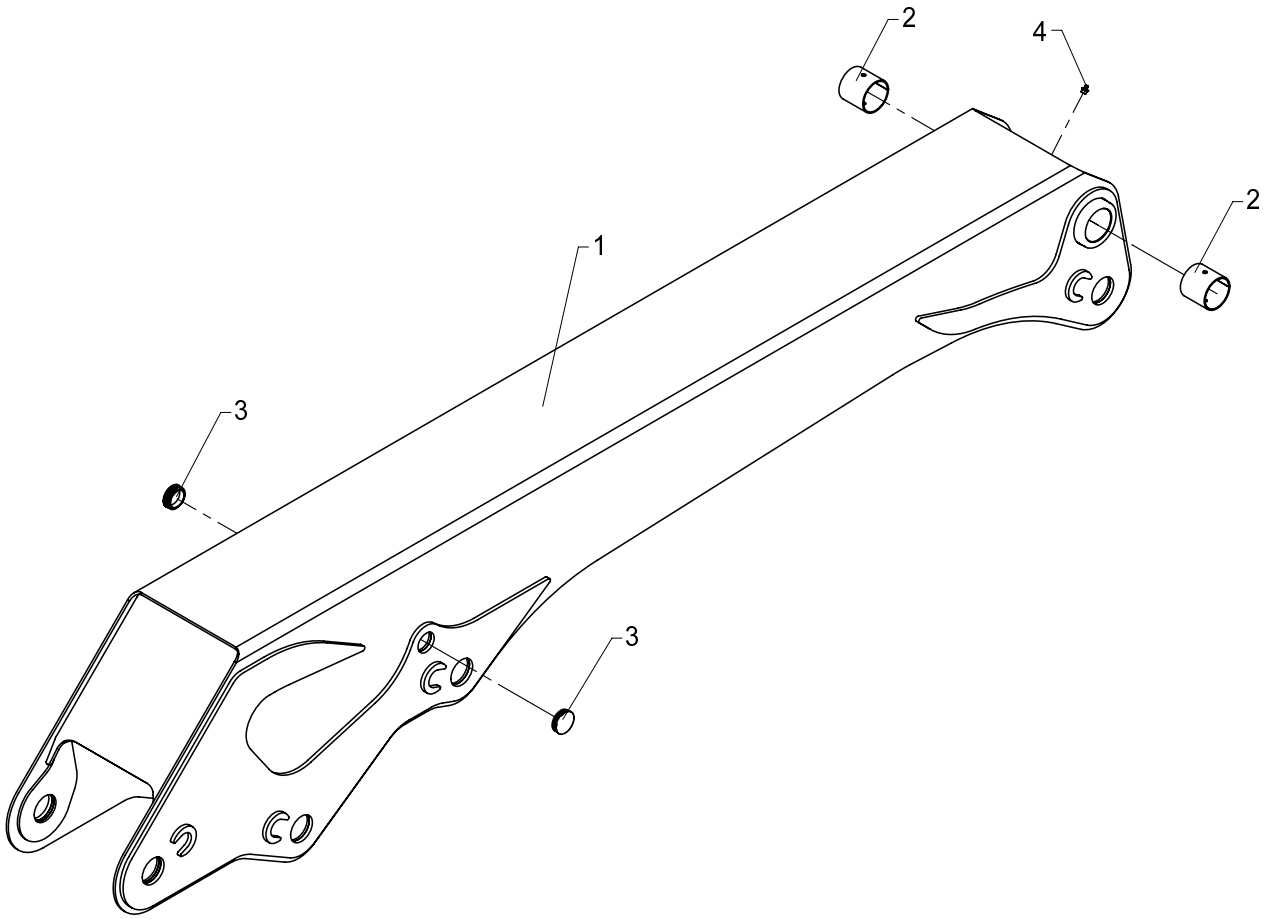

534 01 420 A

From loader 1060387
To loader

Created 19-07-2010
Modified

Main boom, cpl., no link arm system, boom

Pos	Qty.	Part no.	Description	Remarks
1	1	6342240	Main boom, painted	6342191
2	2	23330	Bushing	PM 6060 DX
3	2	64381	Ferrule	
4	1	31318	Lubricator	1/8" RG

15/105 - 17/117 SL & DL Parts

63 42 210
Internal ref. 63 40 210

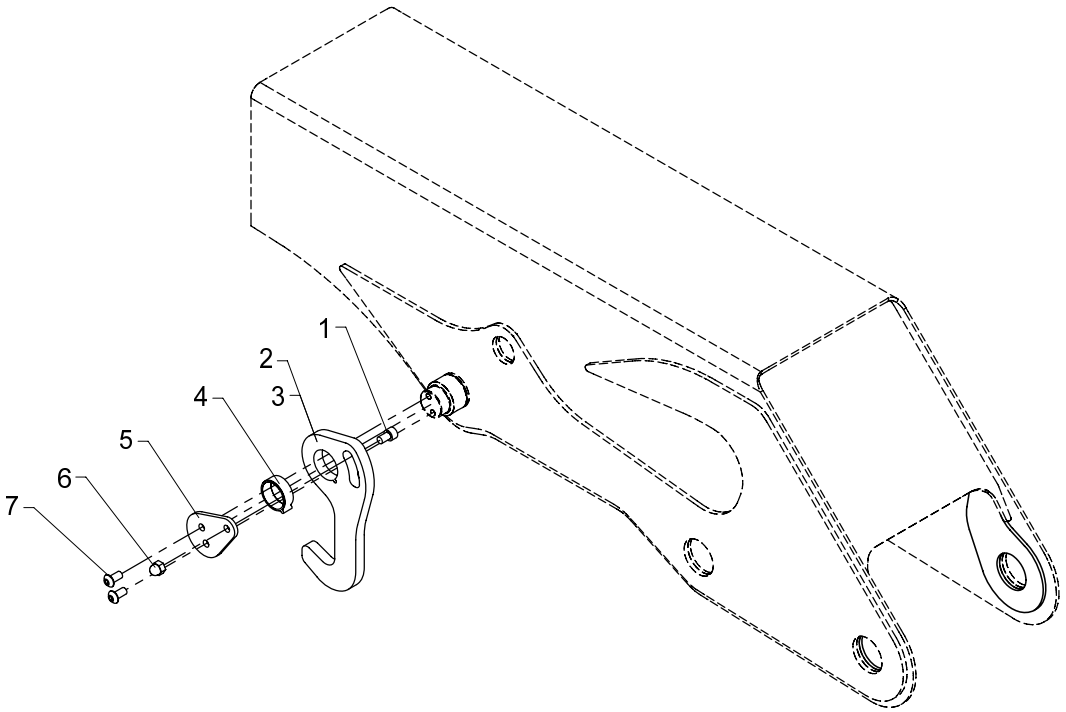

534 01 450

From loader 1060001
To loader

Created 11-11-2008
Modified 11-03-2009

Stowing hook, complete

Pos	Qty.	Part no.	Description	Remarks
		6340210	Stowing hook	
		6342210	Stowing hook, cpl. (+FJ)	
1	1	30964	Screw	MC10 x 16
2	1	6340208	Stowing hook	
3	1	6340948	Stowing hook (loader + FJ)	
4	1	63565	Bearing	
5	1	6340209	End plate	
6	1	30902	Nut	M10
7	2	30926	Steel bolt	M10 x 20

534 01 480

15/105 - 17/117 SL & DL Parts

Internal ref. 63 42 140

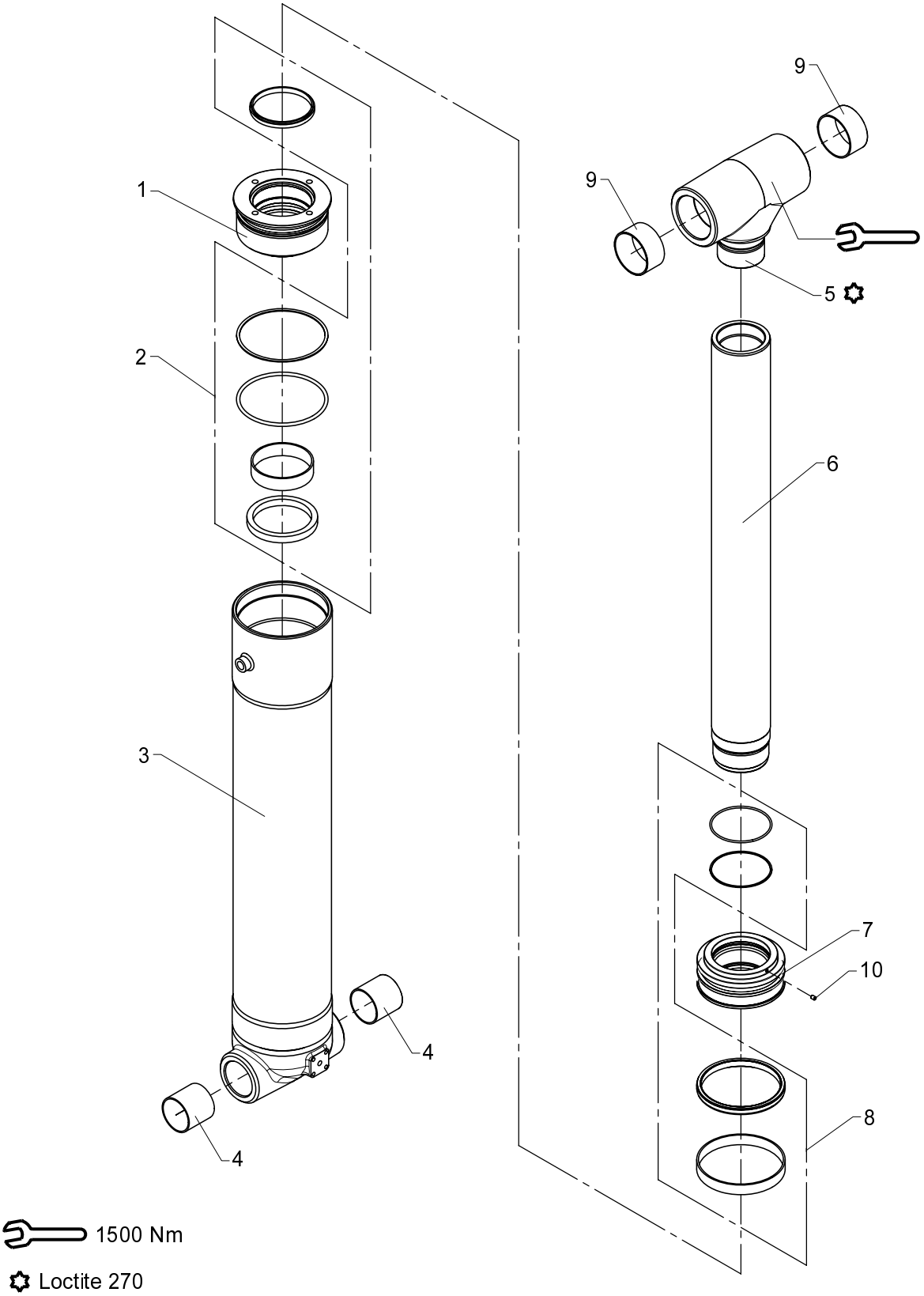

1500 Nm

Loctite 270

Boom cylinder C150 x 722 (1500K, 1720K)

534 01 480

From loader 1060001
To loader 1060386

Created 14-11-2008
Modified

Pos	Qty.	Part no.	Description	Remarks
1	1	6342146	Guide	
2	1	6894070	Seal kit	
3	1	6342141	Cylinder tube	
4	2	23431	Composite bearing	ø60/65 x 60
5	1	6342147	Piston rod head	
6	1	6342144	Piston rod	
7	1	6342145	Piston	
8	1	6894020	Seal kit	
9	2	23413	Composite bearing	ø75/80 x 40
10	1	30903	Screw	MSP6 x 8

534 01 480 A

15/105 - 17/117 SL & DL Parts

Internal ref. 63 42 140

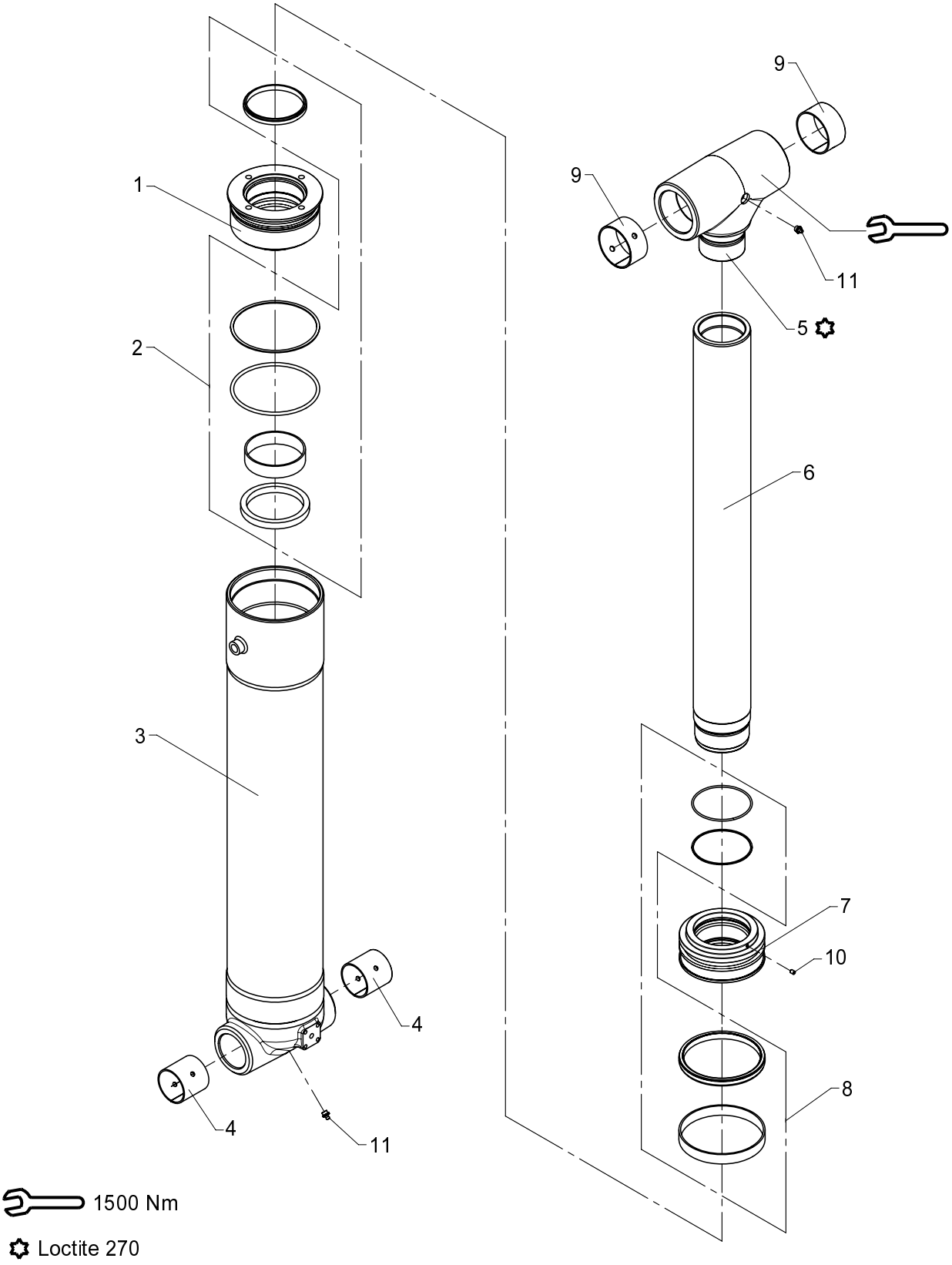

1500 Nm

Loctite 270

534 01 480 A

From loader 1060387
To loader

Created 16-07-2010
Modified 01-11-2010

Boom cylinder C150 x 722 (DL Models)

Pos	Qty.	Part no.	Description	Remarks
1	1	6342146	Guide	
2	1	6894070	Seal kit	
3	1	6342141	Cylinder tube	
4	2	23330	Bushing	PM 6060 DX
5	1	6342147	Piston rod head	
6	1	6342144	Piston rod	
7	1	6342145	Piston	
8	1	6894020	Seal kit	
9	2	23341	Bushing	PM 7540 DX
10	1	30903	Screw	MSP6 x 8
11	2	31318	Lubricator	1/8" RG

15/105 - 17/117 SL & DL Parts

Internal ref. 63 42 440

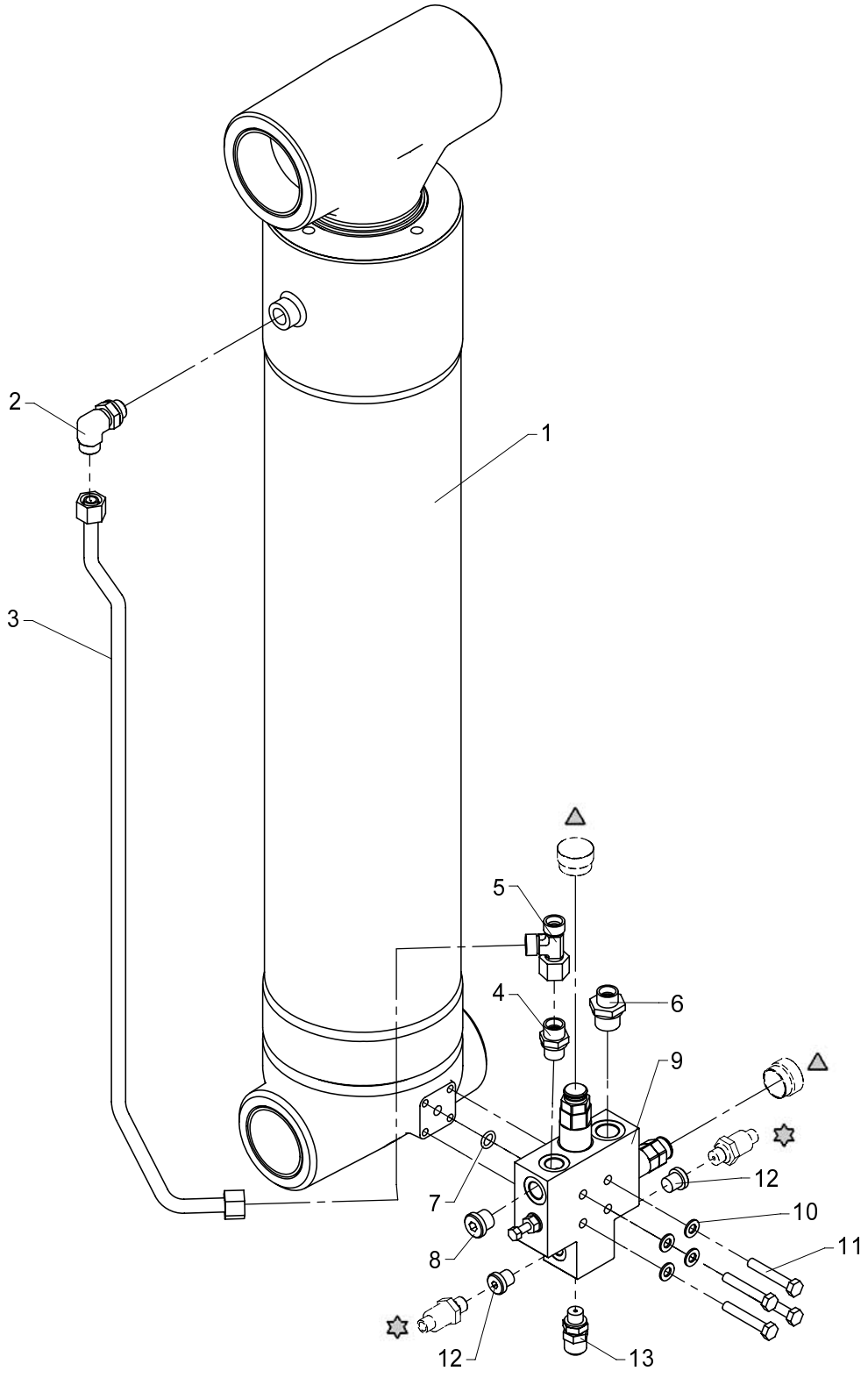

△ 55369
✡ 28850

534 01 490

From loader 1060001
To loader

Created 14-11-2008
Modified

Boom cylinder C150 x 722 with LHV (DL models)

Pos	Qty.	Part no.	Description	Remarks
1	1	6342140	Boom cylinder	
2	1	26897	Elbow connection	12 mm - 3/8"
3	1	6342148	Pipe, boom retract	
4	1	25127	Connection	P-GEV 12 LR-WD
5	1	25270	Connection	ELSD 12 L
6	1	25108	Connection	GES 12 LR 1/2-WD
7	1	20138	O-ring	OR 10,77 x 2,62
8	1	25277	Plug	VS-R-3/8 WD
9	1	55227	Valve	
10	4	31147	Washer, stainless	8 mm
11	4	30139	Steel bolt, stainless	M8 x 50
12	2	25197	Plug	VS-R-1/4 WD
13	1	26103	Pressure-gauge connect.	

15/105 - 17/117 SL & DL Parts

Internal ref. 63 42 200

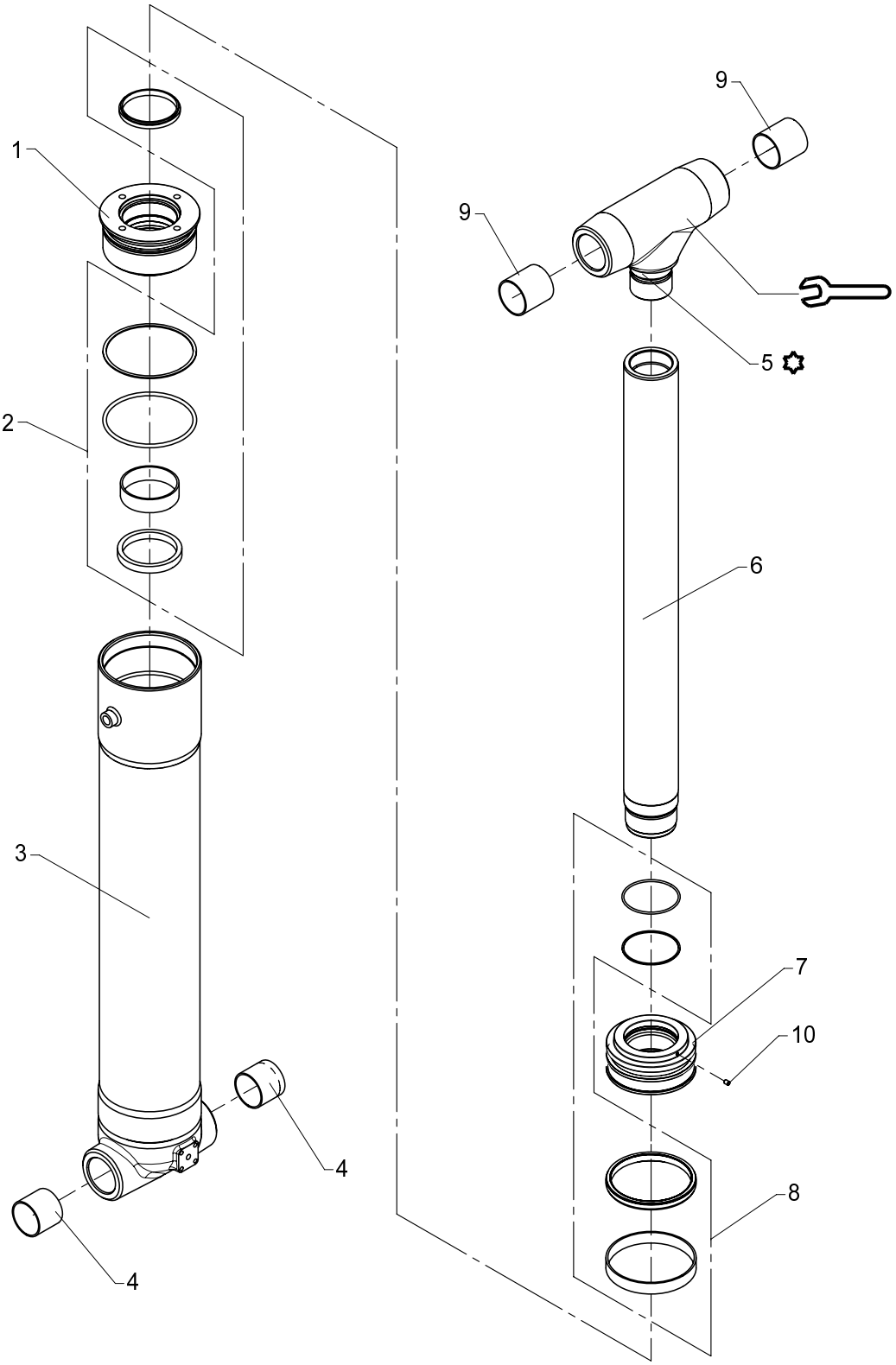

1500 Nm

Loctite 270

Boom cylinder C140 x 726 (SL Models)

534 01 500

From loader 1060001
To loader

Created 21-07-2010
Modified 21-07-2010

Pos	Qty.	Part no.	Description	Remarks
1	1	6340146	Guide (ø140/85)	
2	1	6894060	Seal kit f. guide	
3	1	6342195	Cylinder tube	
4	2	23409	Composite bearing	ø55/60 x 50
5	1	6340199	Piston rod head	
6	1	6342198	Piston rod	
7	1	6340145	Piston	
8	1	6894010	Seal kit f. piston	
9	2	23410	Composite bearing	ø55/60 x 60
10	1	30903	Screw	MSP6 x 8

534 01 500 A

15/105 - 17/117 SL & DL Parts

Internal ref. 63 42 200

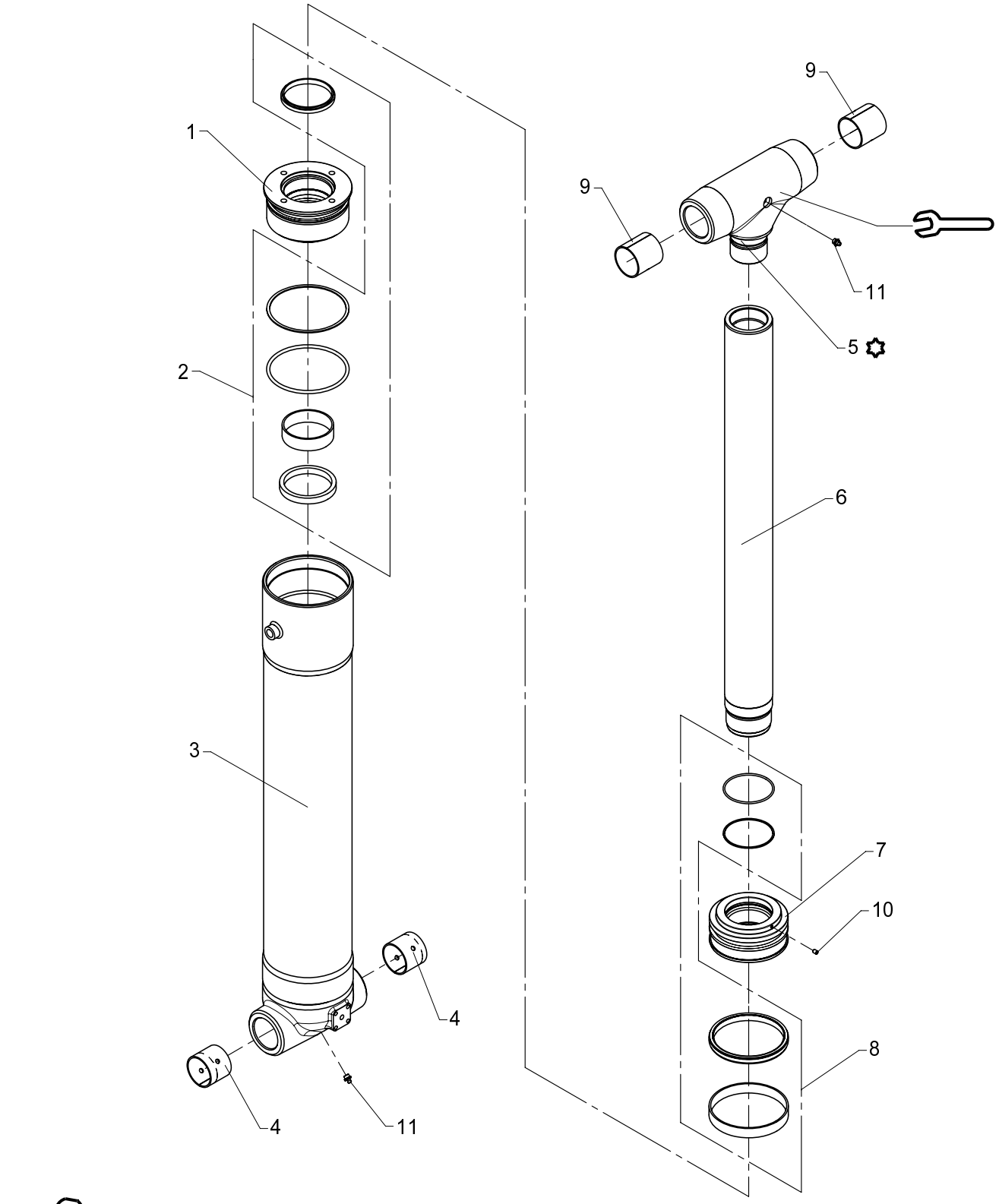

1500 Nm

Loctite 270

534 01 500 A

From loader 1060387
To loader

Boom cylinder C140 x 726 (SL Models)

Created 21-07-2010
Modified 02-11-2010

Pos	Qty.	Part no.	Description	Remarks
1	1	6340146	Guide (ø140/85)	
2	1	6894060	Seal kit f. guide	
3	1	6342195	Cylinder tube	
4	2	23424	Bushing	PM 5550 DX
5	1	6340199	Piston rod head	
6	1	6342198	Piston rod	
7	1	6340145	Piston	
8	1	6894010	Seal kit f. piston	
9	2	23419		PM 5560 DX
10	1	30903	Screw	MSP6 x 8
11	2	31318	Lubricator	1/8" RG

15/105 - 17/117 SL & DL Parts

Internal ref. 63 42 450

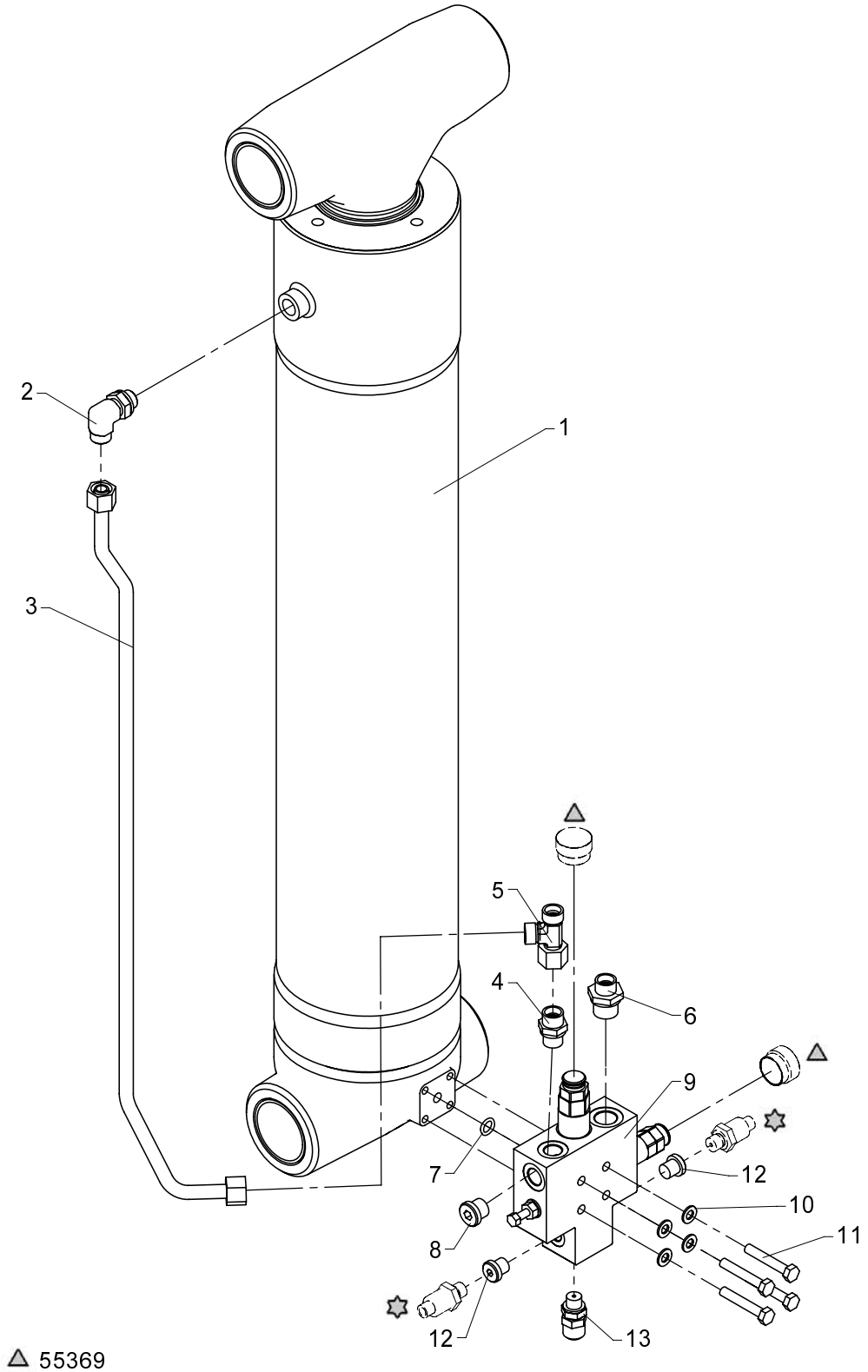

△ 55369
✡ 28850

534 01 510

From loader 1060001
To loader

Created 14-11-2008
Modified

Boom cylinder C140 x 726 with LHV (SL Models)

Pos	Qty.	Part no.	Description	Remarks
1	1	6342200	Boom cylinder	
2	1	26897	Elbow connection	12 mm - 3/8"
3	1	6342176	Pipe, boom retract	
4	1	25127	Connection	P-GEV 12 LR-WD
5	1	25270	Connection	ELSD 12 L
6	1	25108	Connection	GES 12 LR 1/2-WD
7	1	20138	O-ring	OR 10,77 x 2,62
8	1	25277	Plug	VS-R-3/8 WD
9	1	55227	Valve	
10	4	31147	Washer, stainless	8 mm
11	4	30139	Steel bolt, stainless	M8 x 50
12	2	25197	Plug	VS-R-1/4 WD
13	1	26103	Pressure-gauge connect.	

15/105 - 17/117 SL & DL Parts

Internal ref. 63 42 150

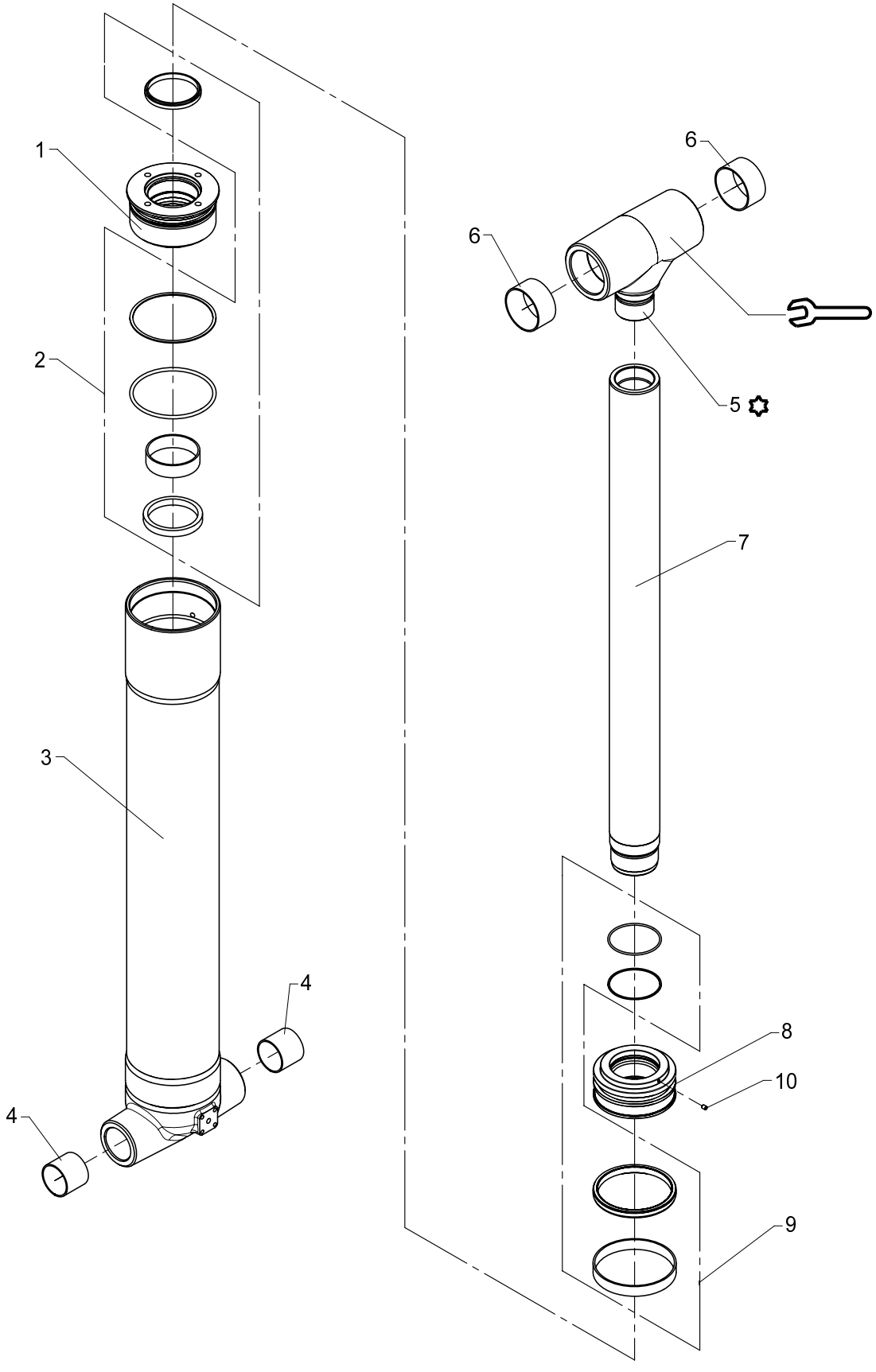

1500 Nm

Loctite 270

534 01 600

From loader 1060001
To loader 1060386

Created 11-10-2008
Modified

Jib cylinder C140 x 848

Pos	Qty.	Part no.	Description	Remarks
1	1	6340146	Guide (ø140/85)	
2	1	6894060	Seal kit f. guide	
3	1	6342151	Cylinder tube	
4	2	23409	Composite bearing	ø55/60 x 50
5	1	6342157	Piston rod head	
6	2	23413	Composite bearing	ø75/80 x 40
7	1	6342154	Piston rod	
8	1	6340145	Piston	
9	1	6894010	Seal kit f. piston	
10	1	30903	Screw	MSP6 x 8

534 01 600 A

15/105 - 17/117 SL & DL Parts

Internal ref. 63 42 150

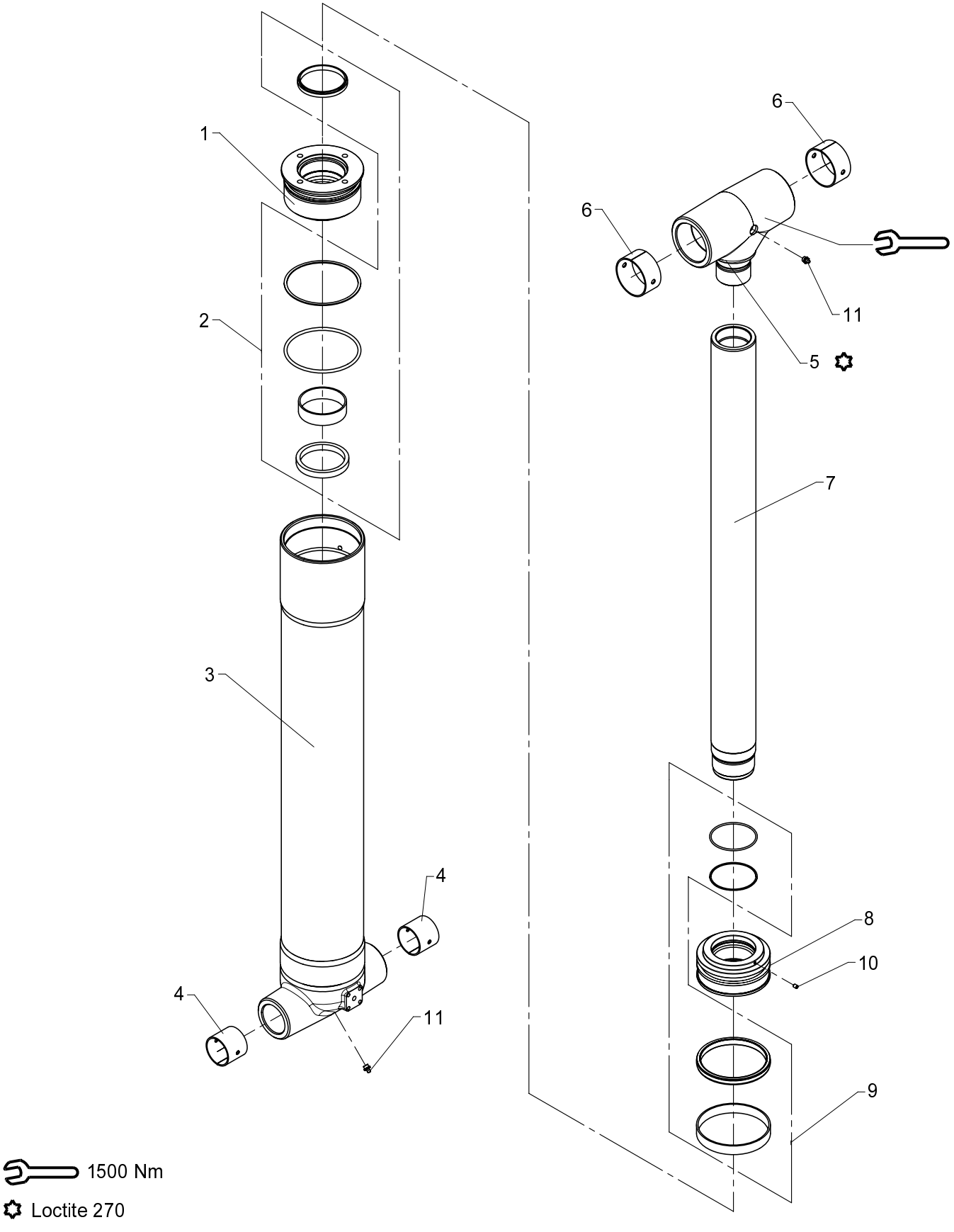

1500 Nm

Loctite 270

534 01 600 A

From loader 1060387
To loader

Jib cylinder C140 x 848

Created 11-08-2010
Modified 14-09-2010

Pos	Qty.	Part no.	Description	Remarks
1	1	6340146	Guide (ø140/85)	
2	1	6894060	Seal kit f. guide	
3	1	6342151	Cylinder tube	
4	2	23424	Bushing	PM 5540 DX
5	1	6342157	Piston rod head	
6	2	23341	Bushing	PM 7540 DX
7	1	6342154	Piston rod	
8	1	6340145	Piston	
9	1	6894010	Seal kit f. piston	
10	1	30903	Screw	MSP6 x 8
11	2	31318	Lubricator	1/8" RG

15/105 - 17/117 SL & DL Parts

Internal ref. 63 42 270

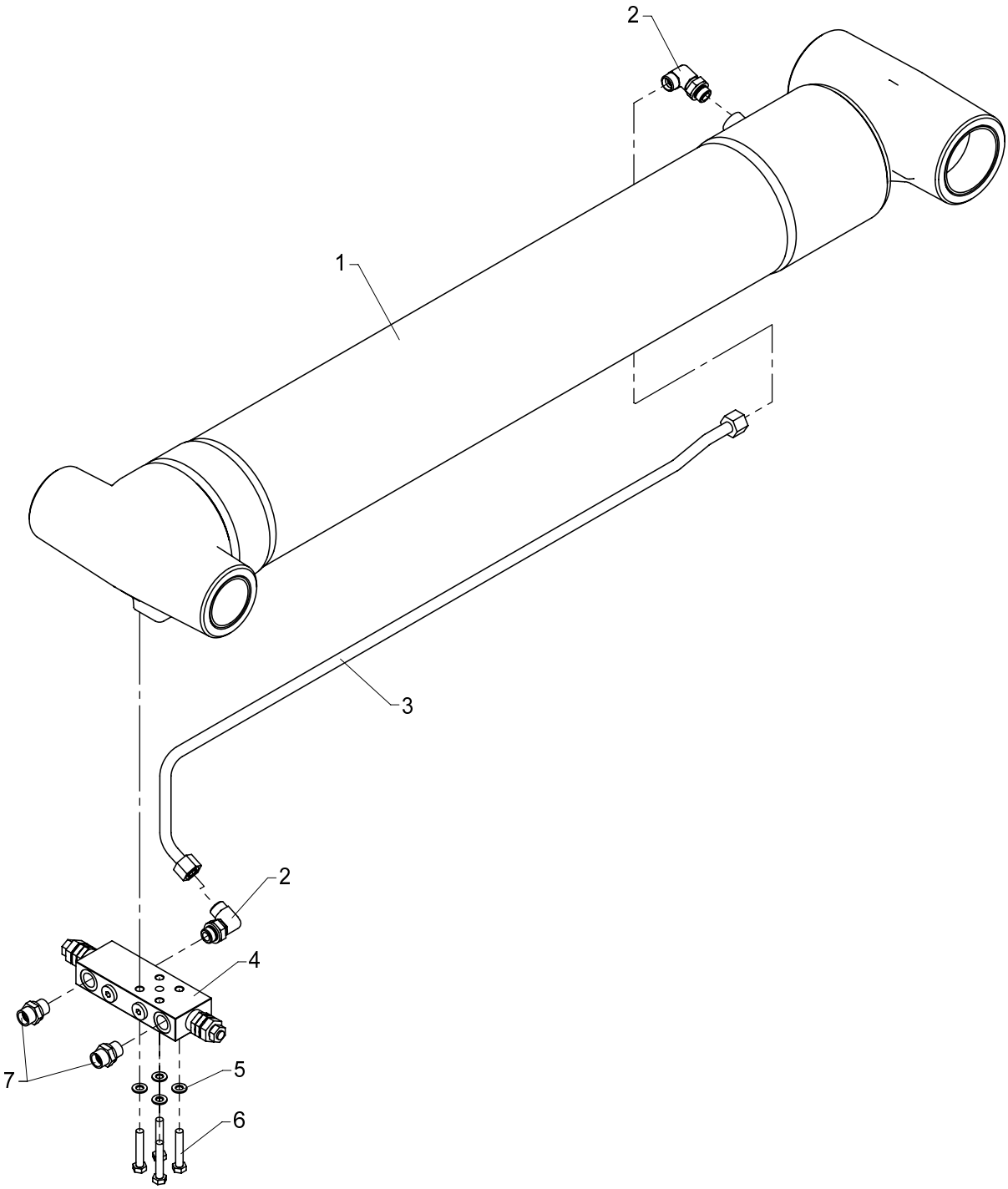

534 01 610

From loader 1060001
To loader

Created 14-11-2008
Modified

Jib cylinder with LHV

Pos	Qty.	Part no.	Description	Remarks
1	1	6342150	Jib cylinder	
2	2	26897	Elbow connection	12 mm - 3/8"
3	1	6342158	Pipe	
4	1	59027	Load-holding valve	
5	4	31147	Washer, stainless	8 mm
6	4	31511	Set screw, stainless	M8 x 45
7	2	25127	Connection	P-GEV 12 LR-WD

15/105 - 17/117 SL & DL Parts

Internal ref. 63 42 060

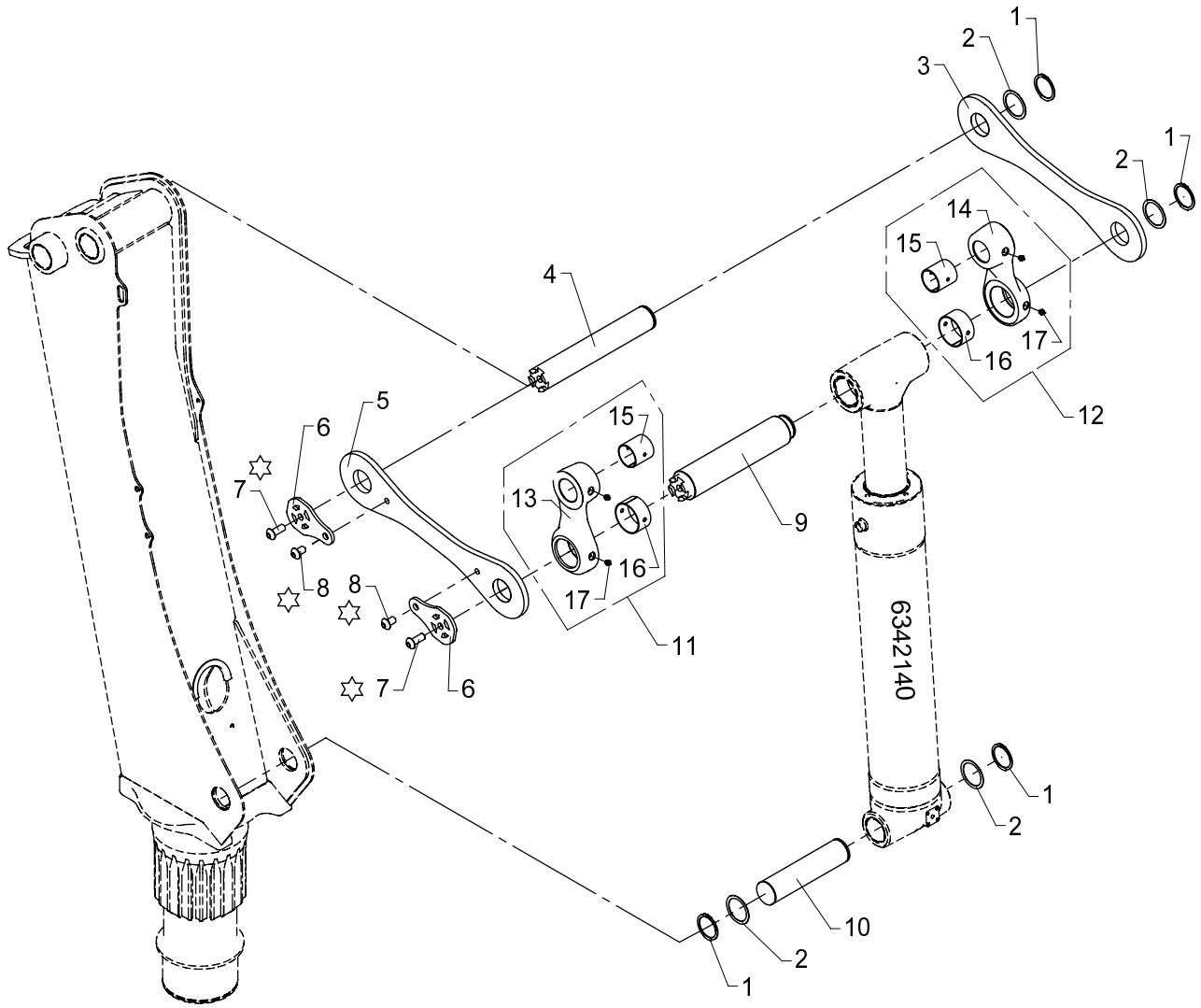

☆ Loctite 243

Link arm system, boom

534 01 700

From loader 1060001
To loader

Created 14-11-2008
Modified 12-08-2009

Pos	Qty.	Part no.	Description	Remarks
1	4	33135	Circlip	60U
2	4	33266	Washer	PS 60 x 75 x 1,0
3	1	6340178	Link arm, left	
4	1	6340167	Link arm pin	
5	1	6340177	Link arm, right	
6	2	6340179	Lock plate	
7	2	32371	Screw	M16 x 40
8	2	32370	Screw	M16 x 25
9	1	6342166	Pin	
10	1	6342149	Pin	
11	1	6342160	Push rod, right	
12	1	6342460	Push rod, left	
13	1	6342161	Push rod, right	
14	1	6342162	Push rod, left	
15	2	23419	Bushing	PM 5560 DX
16	2	23341	Bushing	PM 7540 DX
17	4	31318	Lubricator	1/8" RG

15/105 - 17/117 SL & DL Parts

Internal ref. 63 42 090

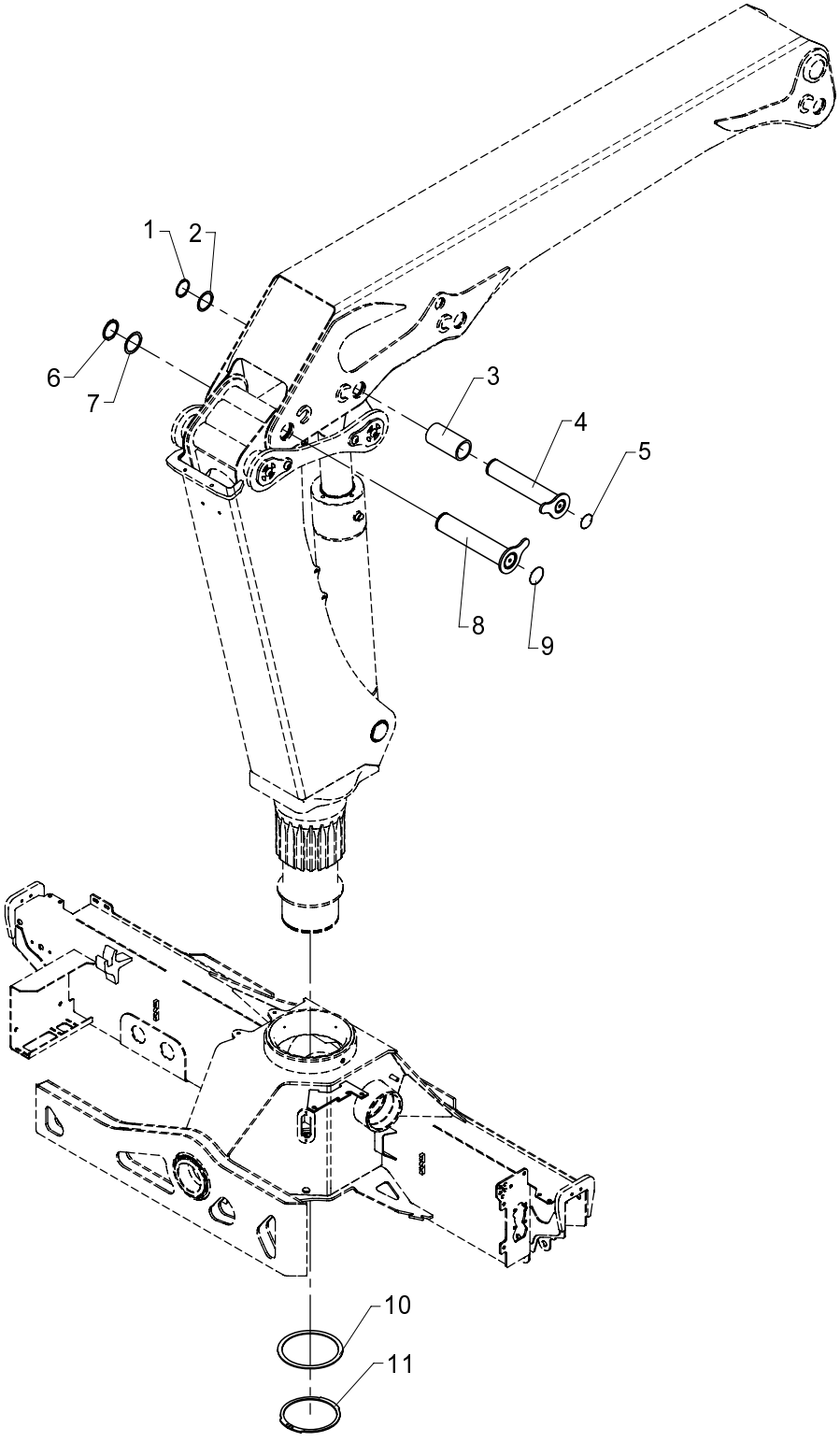

534 01 720

From loader 1060001
To loader

Created 14-11-2008
Modified

Mounting fittings, basic loader incl. link arm system

Pos	Qty.	Part no.	Description	Remarks
1	1	33132	Circlip Din 471	55U
2	1	33277	Washer	PS 55 x 68 x 1,0
3	1	63480	Distance pipe	
4	1	6340201	Pin	
5	1	63472	Plug	
6	1	33135	Circlip	60U
7	1	33266	Washer	PS 60 x 75 x 1,0
8	1	6342201	Pin	
9	1	63473	Plug	
10	1	6340049	Supporting washer	
11	1	33275	Circlip	180U

15/105 - 17/117 SL & DL Parts

Internal ref. 63 42 100

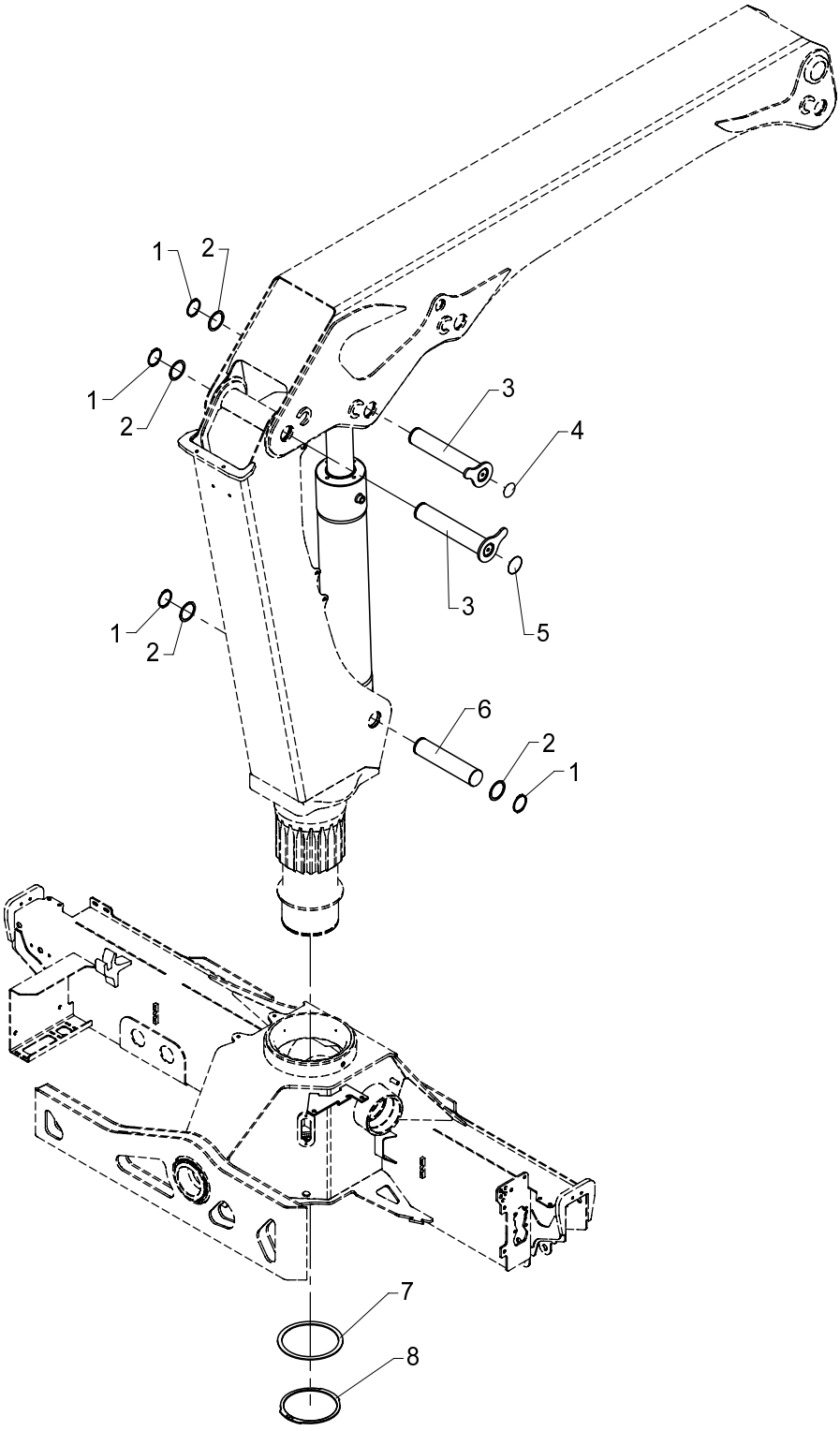

534 01 750

From loader 1060001
To loader

Created 14-11-2008
Modified

Mounting fittings, basic loader excl. link arm system

Pos	Qty.	Part no.	Description	Remarks
1	4	33132	Circlip Din 471	55U
2	4	33277	Washer	PS 55 x 68 x 1,0
3	2	6340201	Pin	
4	1	63472	Plug	
5	1	63473	Plug	
6	1	6340149	Pin	
7	1	6340049	Supporting washer	
8	1	33275	Circlip	180U

15/105 - 17/117 SL & DL Parts

63 43 230
63 43 210
Internal ref. 63 43 200

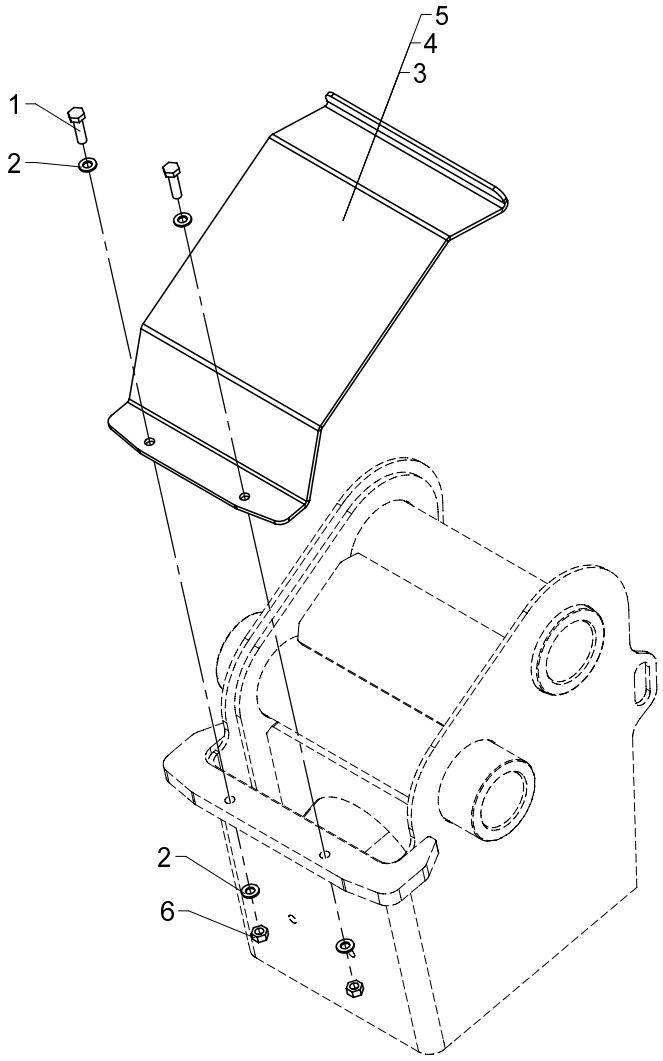

Hose shield, cpl.

534 01 760

From loader 1060001
To loader

Created 14-11-2008
Modified

Pos	Qty.	Part no.	Description	Remarks
		6343200	Protective plate	
		6343210	Protective plate	
		6343230	Protective plate	
1	2	30135	Set screw, stainless	M8 x 30
2	4	31147	Washer, stainless	8 mm
3	1	6340089	Hose shield	1300K
4	1	6342089	Hose shield	1500K
5	1	6340079	Hose shield	1310K/1510K
6	2	30856	Nut, stainless	M8

15/105 - 17/117 SL & DL Parts

Internal ref. 63 42 250

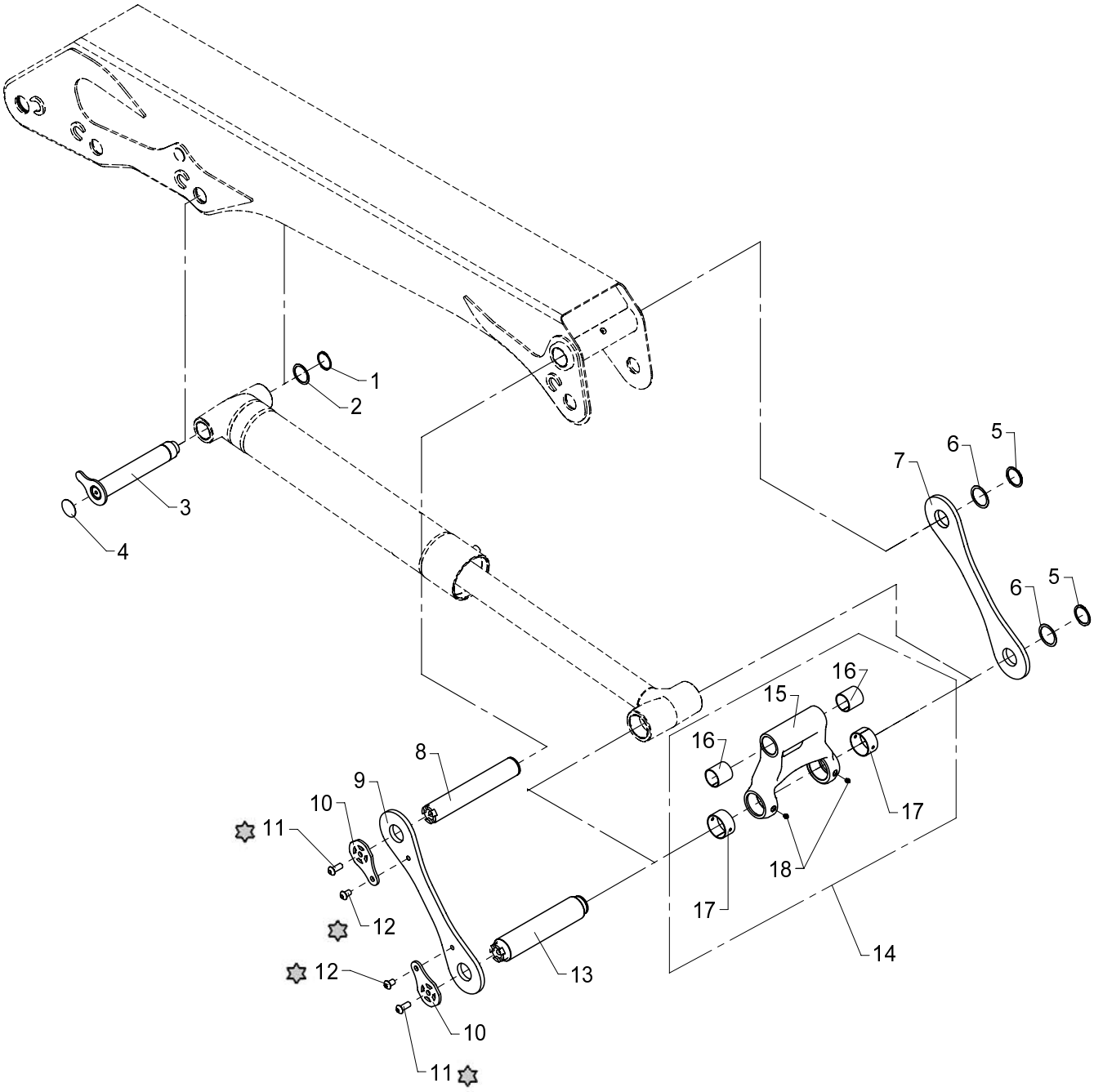

Loctite 243

534 01 800

Link arm system, jib

From loader 1060001
To loader 1060386

Created 14-11-2008
Modified 12-08-2009

Pos	Qty.	Part no.	Description	Remarks
1	1	33132	Circlip Din 471	55U
2	1	33277	Washer	PS 55 x 68 x 1,0
3	1	6342204	Pin	
4	1	63473	Plug	
5	2	33135	Circlip	60U
6	2	33266	Washer	PS 60 x 75 x 1,0
7	1	6340178	Link arm, left	
8	1	6340167	Link arm pin	
9	1	6340177	Link arm, right	
10	2	6340179	Lock plate	
11	2	32371	Screw	M16 x 40
12	2	32370	Screw	M16 x 25
13	1	6342166	Pin	
14	1	6342170	Push rod	
15	1	6342171	Push rod	
16	2	23410	Composite bearing	ø55/60 x 60
17	2	23341	Bushing	PM 7540 DX
18	2	31318	Lubricator	1/8" RG

15/105 - 17/117 SL & DL Parts

Internal ref. 63 42 250

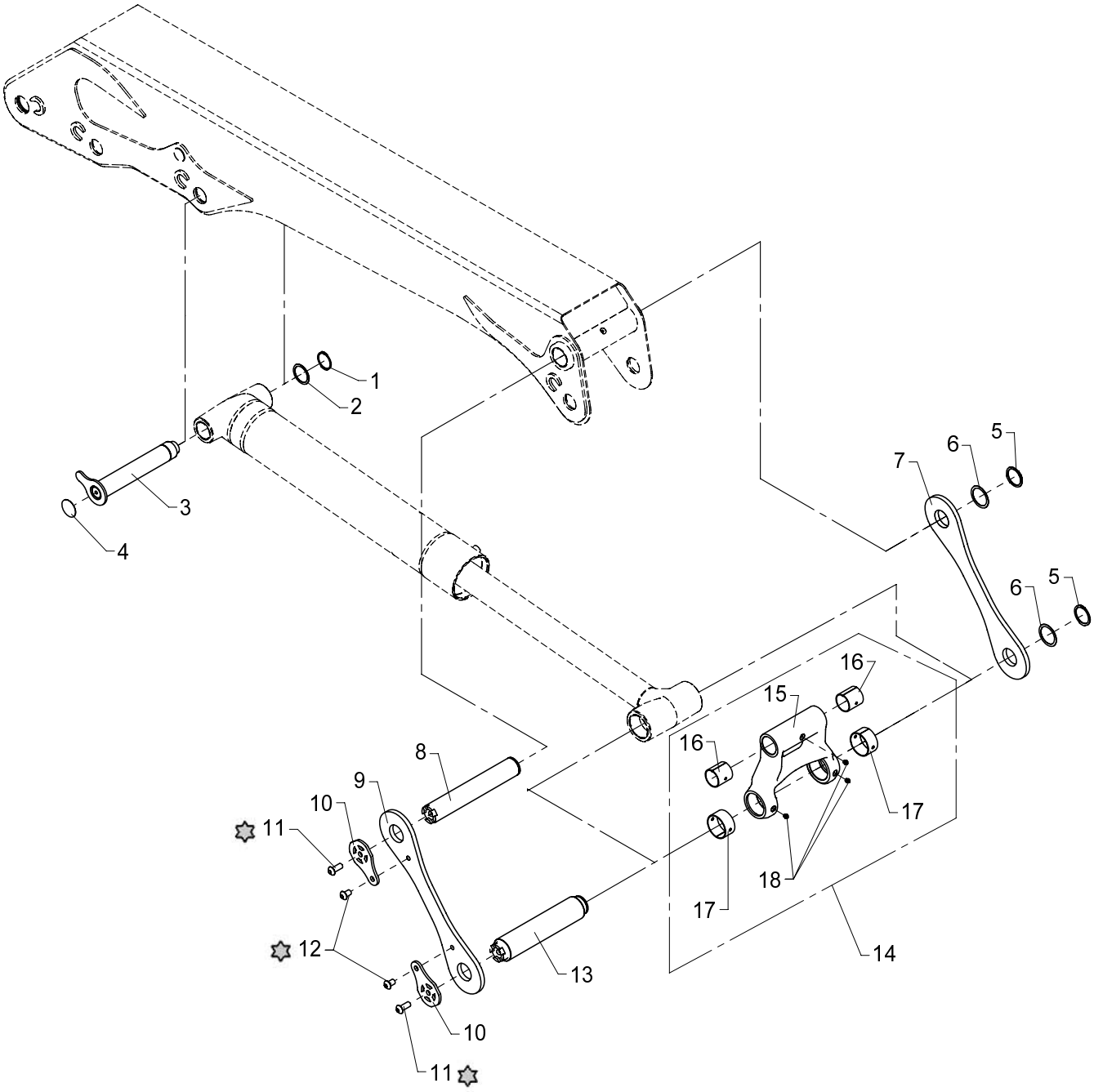

Loctite 243

534 01 800 A

From loader 1060001
To loader

Created 13-07-2010
Modified

Link arm system, jib

Pos	Qty.	Part no.	Description	Remarks
1	1	33132	Circlip Din 471	55U
2	1	33277	Washer	PS 55 x 68 x 1,0
3	1	6342204	Pin	
4	1	63473	Plug	
5	2	33135	Circlip	60U
6	2	33266	Washer	PS 60 x 75 x 1,0
7	1	6340178	Link arm, left	
8	1	6340167	Link arm pin	
9	1	6340177	Link arm, right	
10	2	6340179	Lock plate	
11	2	32371	Screw	M16 x 40
12	2	32370	Screw	M16 x 25
13	1	6342166	Pin	
14	1	6342170	Push rod	
15	1	6342171	Push rod	
16	2	23419	Bushing	PM 5560 DX
17	2	23341	Bushing	PM 7540 DX
18	3	31318	Lubricator	1/8" RG

15/105 - 17/117 SL & DL Parts

Internal ref. 63 41 100

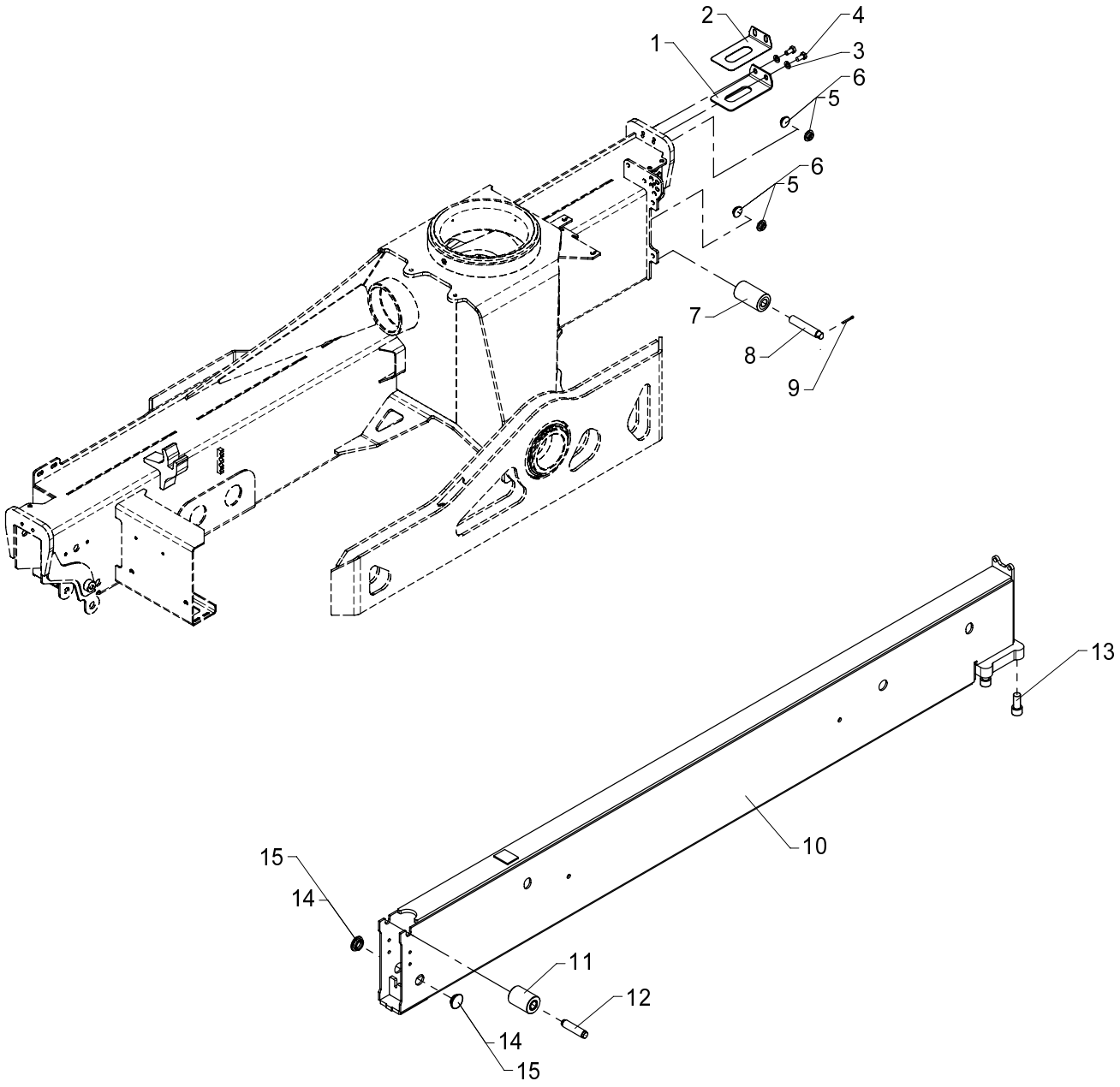

Stabilizer beam, type SV - 5570

534 02 010

From loader 1060001
To loader 1060305

Created 14-11-2008
Modified

Pos	Qty.	Part no.	Description	Remarks
1	1	6306156	Spacer	
2	1	6306722	Adjusting plate	
3	2	31565	Washer, stainless	10 mm
4	2	31517	Set screw, stainless	M10 x 20
5	4	63429	Guide	ø30 x 3 mm
6	4	63430	Guide	ø30 x 2 mm
7	1	63470	Guide roller	
8	1	6340048	Pin for guide roller	
9	1	31615	Split pin	ø4 x 32
10	1	6340121	Stabilizer beam I	
11	1	63469	Guide roller	
12	1	6340098	Pin for guide roller	
13	4	30339	Cylinder screw	MC18 x 40
14	2	63681	Slide block	3 mm
15	2	64424	Slide block	3 mm

15/105 - 17/117 SL & DL Parts

63 42 030
Internal ref. 63 41 100

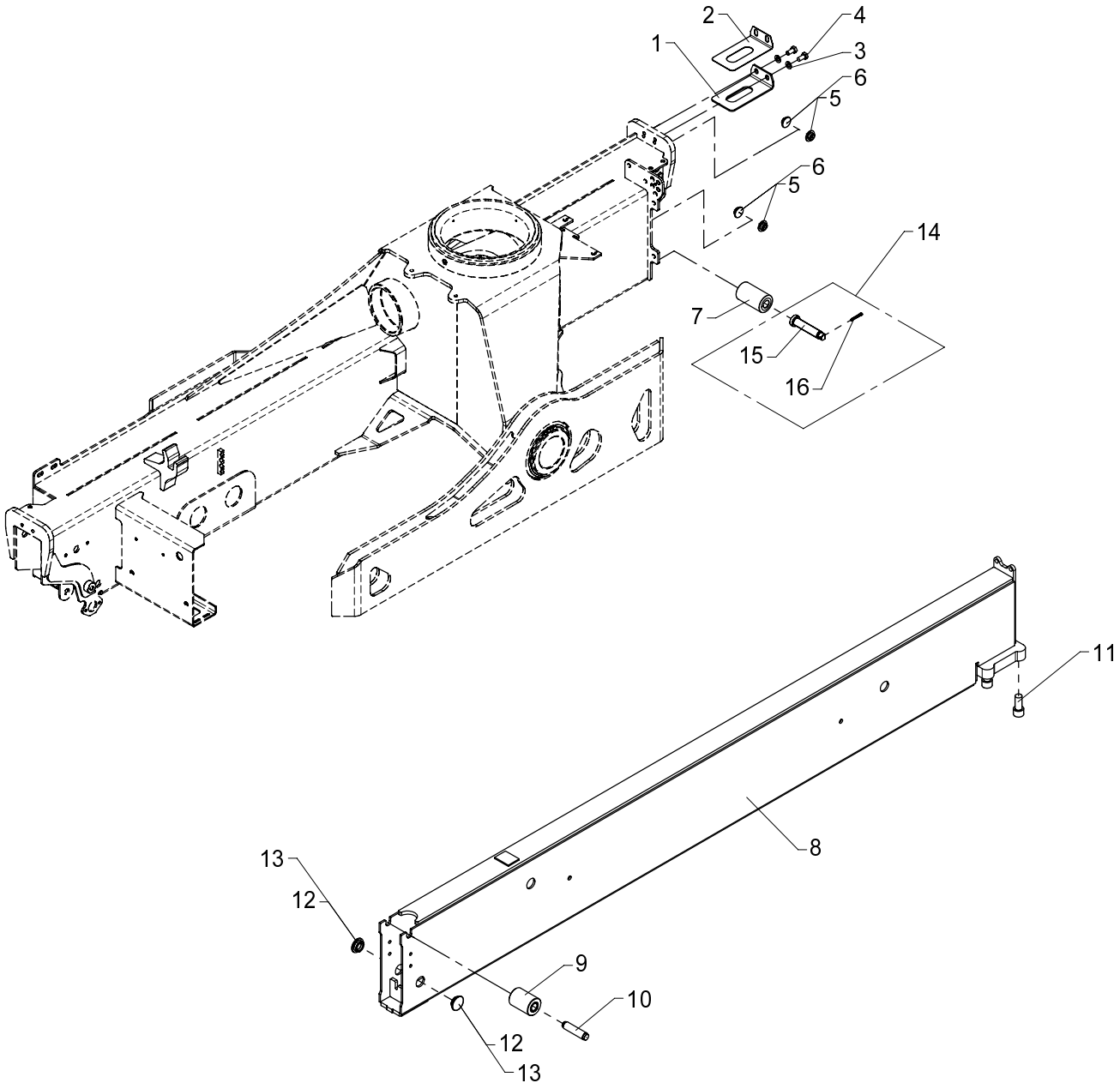

Stabilizer beam, type SV - 5570

Pos	Qty.	Part no.	Description	Remarks
		6341100	Stabilizer beam, type SV	
		6342030	No detection, legs down	
1	1	6306156	Spacer	
2	1	6306722	Adjusting plate	
3	2	31565	Washer, stainless	10 mm
4	2	31517	Set screw, stainless	M10 x 20
5	4	63429	Guide	ø30 x 3 mm
6	4	63430	Guide	ø30 x 2 mm
7	1	63470	Guide roller	
8	1	6340121	Stabilizer beam I	
9	1	63469	Guide roller	
10	1	6340098	Pin for guide roller	
11	4	30339	Cylinder screw	MC18 x 40
12	2	63681	Slide block	3 mm
13	2	64424	Slide block	3 mm
14	1	6342030	No detection, legs down	
15	1	6341982	Pin for guide roller	
16	1	31615	Split pin	ø4 x 32

15/105 - 17/117 SL & DL Parts

Internal ref. 63 41 110

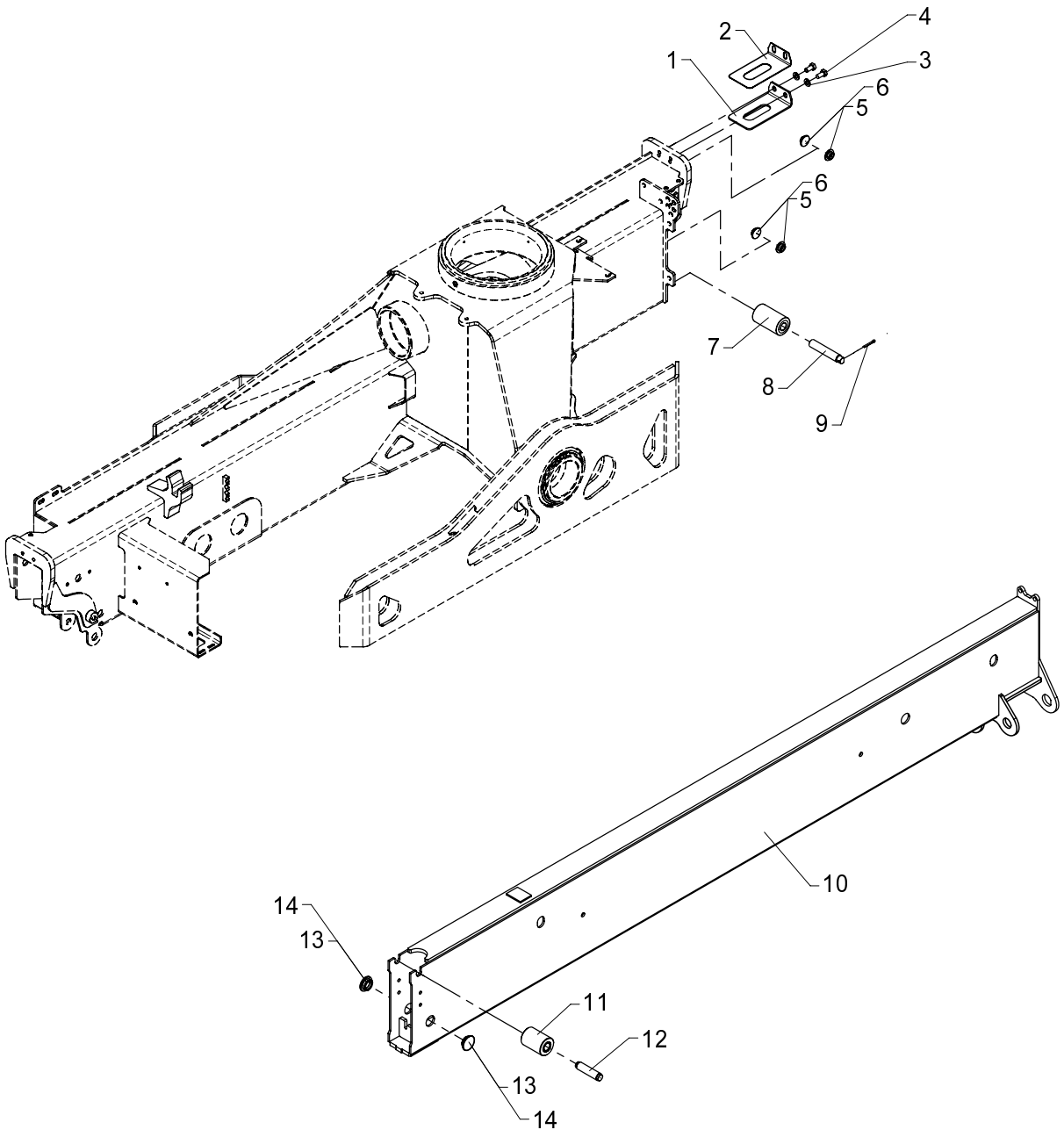

Stabilizer beam, type SR-20° - 5570

534 02 020

From loader 1060001
To loader 1060233

Created 14-11-2008
Modified 06-07-2009

Pos	Qty.	Part no.	Description	Remarks
1	1	6306156	Spacer	
2	1	6306722	Adjusting plate	
3	2	31565	Washer, stainless	10 mm
4	2	31517	Set screw, stainless	M10 x 20
5	4	63429	Guide	ø30 x 3 mm
6	4	63430	Guide	ø30 x 2 mm
7	1	63470	Guide roller	
8	1	6340048	Pin for guide roller	
9	1	31615	Split pin	ø4 x 32
10	1	6340131	Stabilizer beam	
11	1	63469	Guide roller	
12	1	6340098	Pin for guide roller	
13	2	63681	Slide block	3 mm
14	2	64424	Slide block	3 mm

15/105 - 17/117 SL & DL Parts

Internal ref. 63 43 820

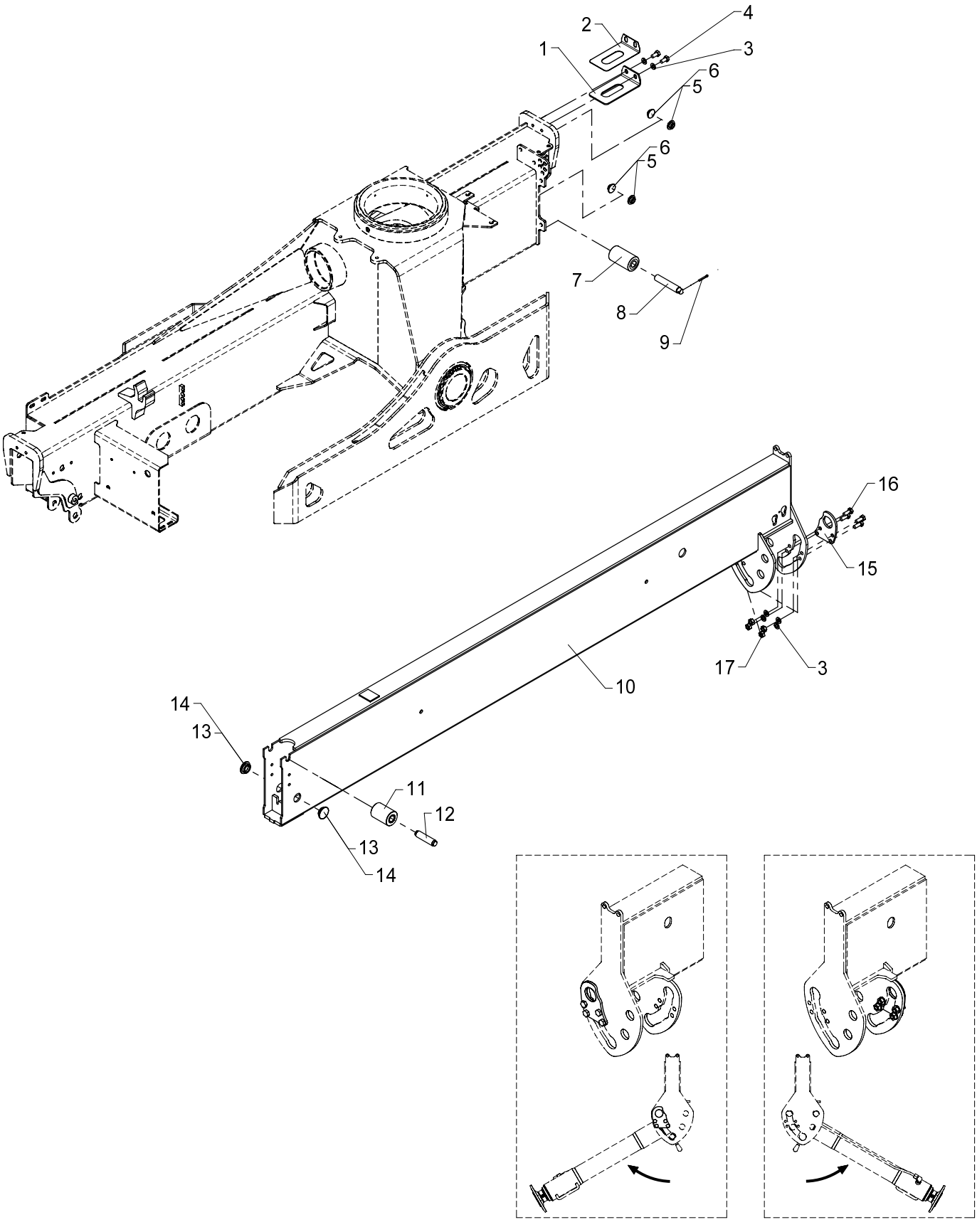

Stabilizer beam, type SR-60°, 5570

534 02 021

From loader 1060234
To loader 1060275

Created 10-07-2009
Modified

Pos	Qty.	Part no.	Description	Remarks
1	1	6306156	Spacer	
2	1	6306722	Adjusting plate	
3	6	31565	Washer, stainless	10 mm
4	2	31517	Set screw, stainless	M10 x 20
5	4	63429	Guide	ø30 x 3 mm
6	4	63430	Guide	ø30 x 2 mm
7	1	63470	Guide roller	
8	1	6340048	Pin for guide roller	
9	1	31615	Split pin	ø4 x 32
10	1	6342861	Stabilizer beam, SR	
11	1	63469	Guide roller	
12	1	6340098	Pin for guide roller	
13	2	63681	Slide block	3 mm
14	2	64424	Slide block	3 mm
15	1	6342855	Plate	
16	4	30155	Set screw	M10 x 25
17	4	31551	Nut, stainless	M10

534 02 021 A

15/105 - 17/117 SL & DL Parts

63 42 030
Internal ref. 63 43 820

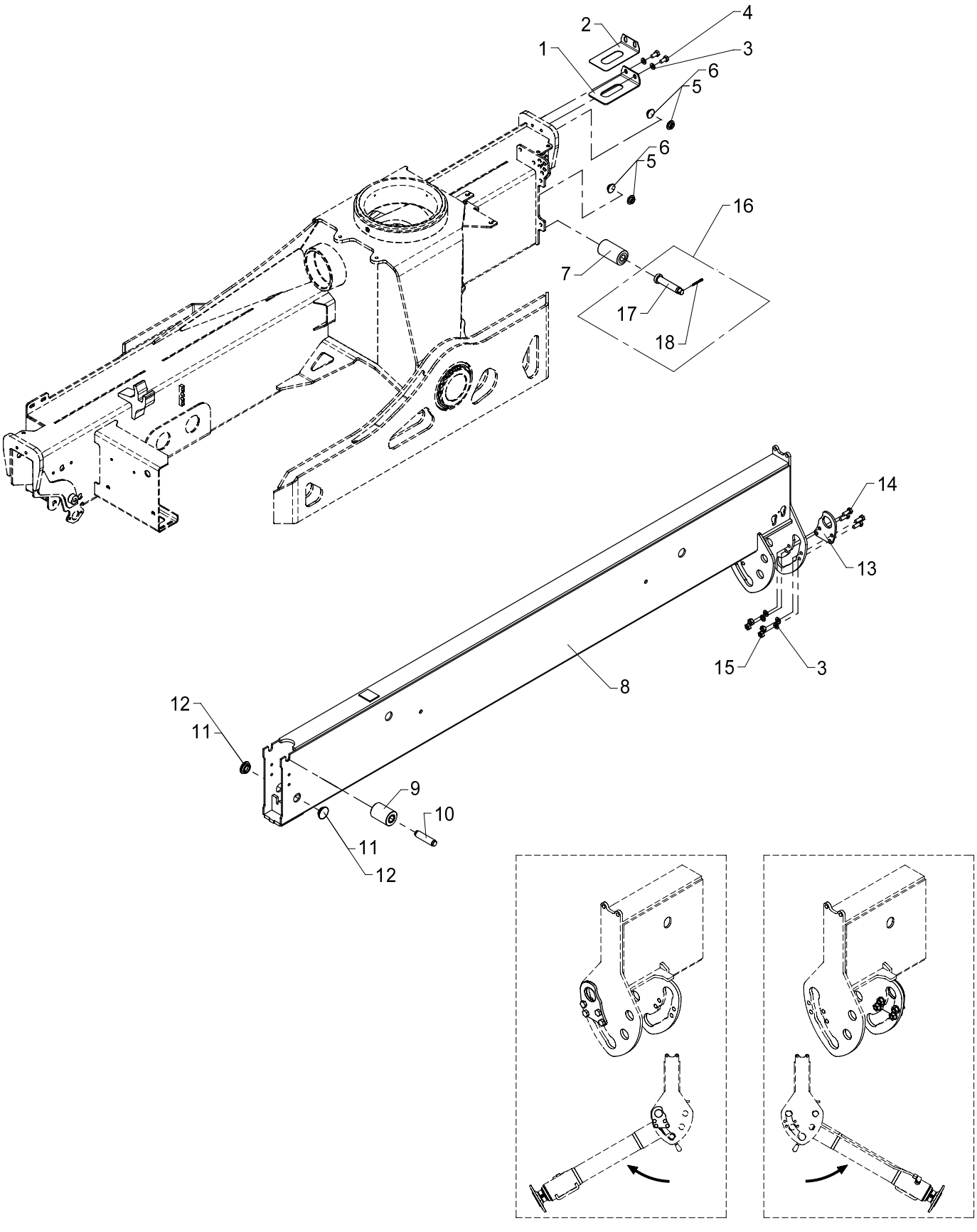

534 02 021 A

From loader 1060276
To loader

Stabilizer beam, type SR-60°, 5570

Created 10-07-2009
Modified 13-11-2009

Pos	Qty.	Part no.	Description	Remarks
		6343820	Stabilizer beam, type SR-60°	
		6342030	No detection, legs down	
1	1	6306156	Spacer	
2	1	6306722	Adjusting plate	
3	6	31565	Washer, stainless	10 mm
4	2	31517	Set screw, stainless	M10 x 20
5	4	63429	Guide	ø30 x 3 mm
6	4	63430	Guide	ø30 x 2 mm
7	1	63470	Guide roller	
8	1	6342861	Stabilizer beam, SR	
9	1	63469	Guide roller	
10	1	6340098	Pin for guide roller	
11	2	63681	Slide block	3 mm
12	2	64424	Slide block	3 mm
13	1	6342855	Plate	
14	4	30155	Set screw	M10 x 25
15	4	31551	Nut, stainless	M10
16	1	6342030	No detection, legs down	
17	1	6341982	Pin for guide roller	
18	1	31615	Split pin	ø4 x 32

15/105 - 17/117 SL & DL Parts

Internal ref. 63 41 120

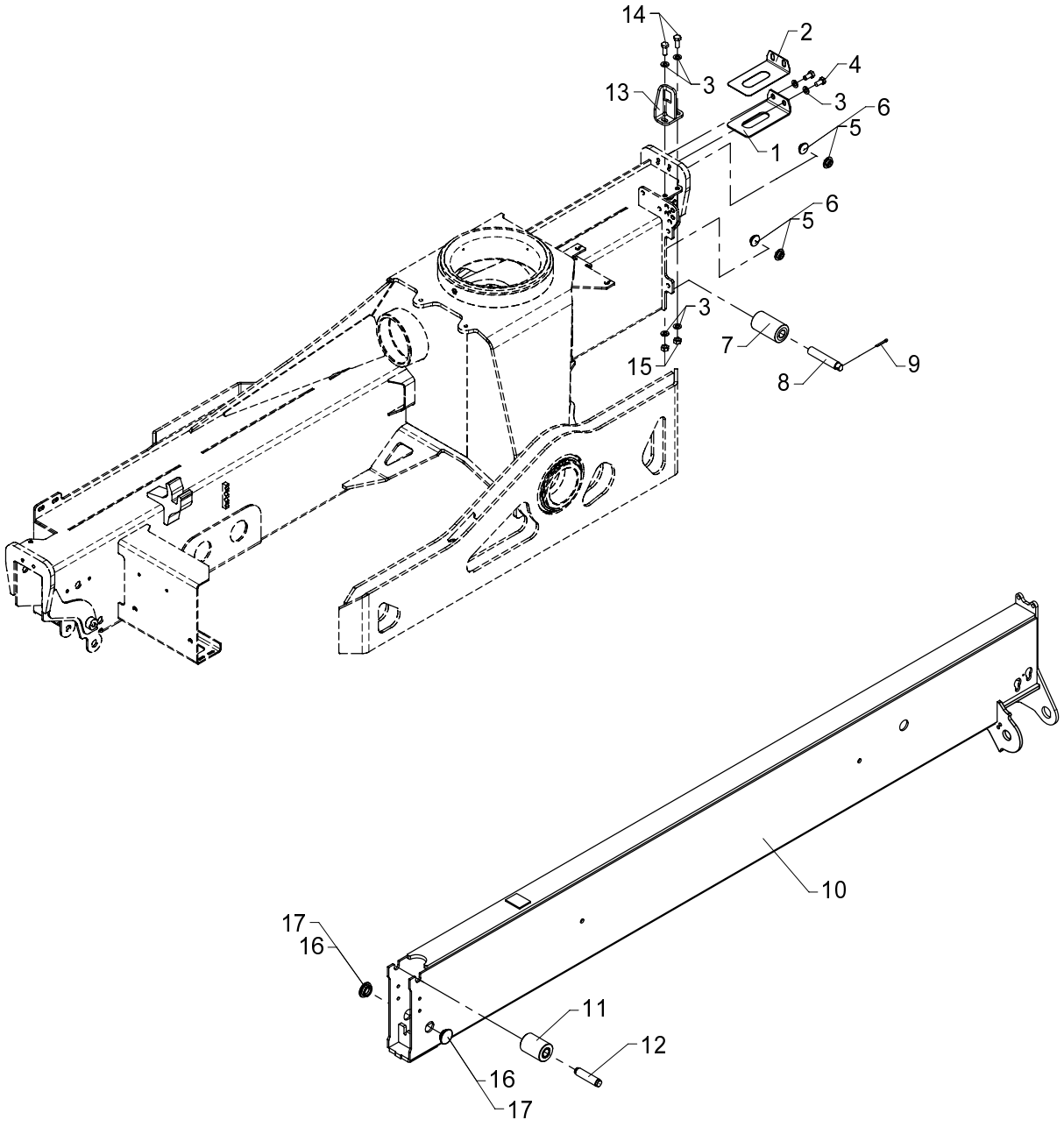

Stabilizer beam, type SH - 5570

534 02 030

From loader 1060001
To loader 1060275

Created 14-11-2008
Modified

Pos	Qty.	Part no.	Description	Remarks
1	1	6306156	Spacer	
2	1	6306722	Adjusting plate	
3	6	31565	Washer, stainless	10 mm
4	2	31517	Set screw, stainless	M10 x 20
5	4	63429	Guide	ø30 x 3 mm
6	4	63430	Guide	ø30 x 2 mm
7	1	63470	Guide roller	
8	1	6340048	Pin for guide roller	
9	1	31615	Split pin	ø4 x 32
10	1	6340135	Stabilizer beam	
11	1	63469	Guide roller	
12	1	6340098	Pin for guide roller	
13	1	6340817	Bracket	
14	2	30155	Set screw	M10 x 25
15	3	30858	Nut	M10
16	2	63681	Slide block	3 mm
17	2	64424	Slide block	3 mm

15/105 - 17/117 SL & DL Parts

63 42 030
Internal ref. 63 41 120

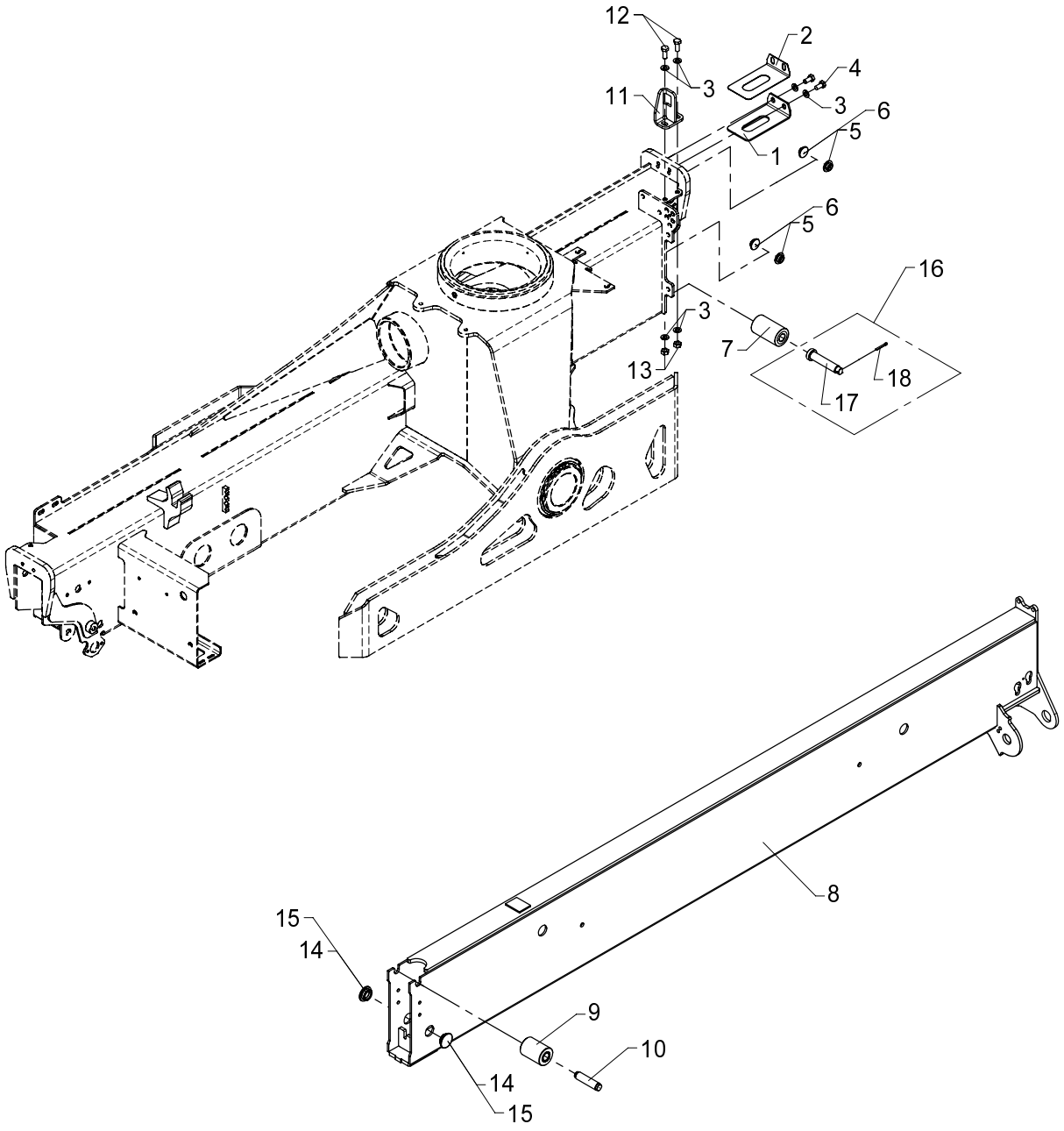

534 02 030 A

From loader 1060276
To loader

Created 14-11-2008
Modified 16-11-2009

Stabilizer beam, type SH - 5570

Pos	Qty.	Part no.	Description	Remarks
		6341120	Stabilizer beam, type SH	
		6342030	No detection, legs down	
1	1	6306156	Spacer	
2	1	6306722	Adjusting plate	
3	6	31565	Washer, stainless	10 mm
4	2	31517	Set screw, stainless	M10 x 20
5	4	63429	Guide	ø30 x 3 mm
6	4	63430	Guide	ø30 x 2 mm
7	1	63470	Guide roller	
8	1	6340135	Stabilizer beam	
9	1	63469	Guide roller	
10	1	6340098	Pin for guide roller	
11	1	6340817	Bracket	
12	2	30155	Set screw	M10 x 25
13	3	30858	Nut	M10
14	2	63681	Slide block	3 mm
15	2	64424	Slide block	3 mm
16	1	6342030	No detection, legs down	
17	1	6341982	Pin for guide roller	
18	1	31615	Split pin	ø4 x 32

15/105 - 17/117 SL & DL Parts

Internal ref. 63 41 130

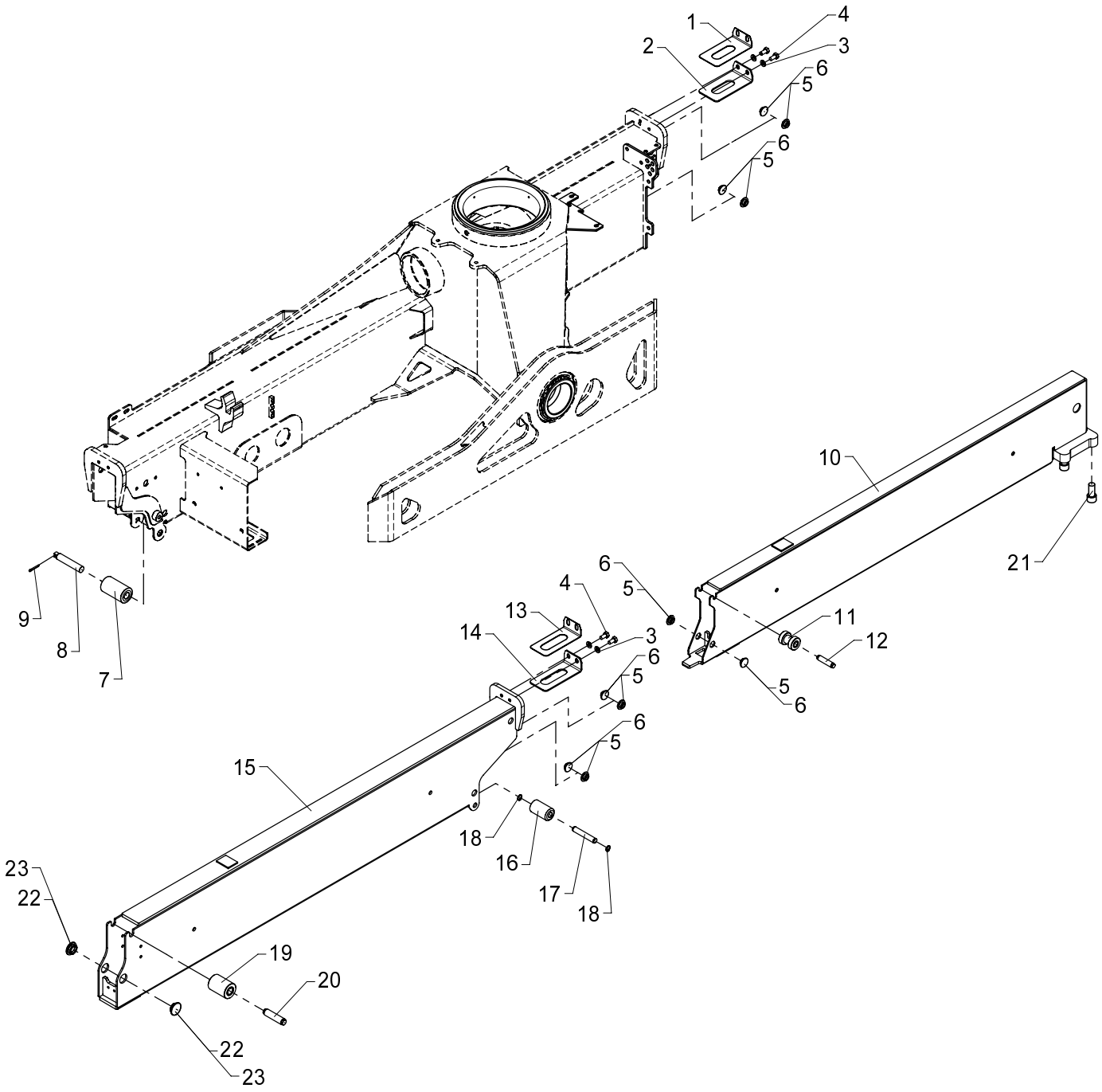

Stabilizer beam, type DV - 6450

534 02 040

From loader 1060001
To loader 1060275

Created 13-11-2008
Modified

Pos	Qty.	Part no.	Description	Remarks
1	1	6306722	Adjusting plate	
2	1	6306156	Spacer	
3	4	31565	Washer, stainless	10 mm
4	4	31517	Set screw, stainless	M10 x 20
5	10	63429	Guide	ø30 x 3 mm
6	10	63430	Guide	ø30 x 2 mm
7	1	63470	Guide roller	
8	1	6340048	Pin for guide roller	
9	1	31615	Split pin	ø4 x 32
10	1	6340101	Stabilizer beam II	
11	1	63426	Guide roller	
12	1	6306168	Pin for guide roller	
13	1	6306721	Adjusting plate	
14	1	6306157	Spacer	
15	1	6340091	Stabilizer beam I	
16	1	63471	Guide roller	
17	1	6340097	Pin for guide roller	
18	2	33104	Circlip	15U
19	1	63469	Guide roller	
20	1	6340098	Pin for guide roller	
21	4	30339	Cylinder screw	MC18 x 40
22	2	63681	Slide block	3 mm
23	2	64424	Slide block	3 mm

15/105 - 17/117 SL & DL Parts

63 42 030
Internal ref. 63 41 130

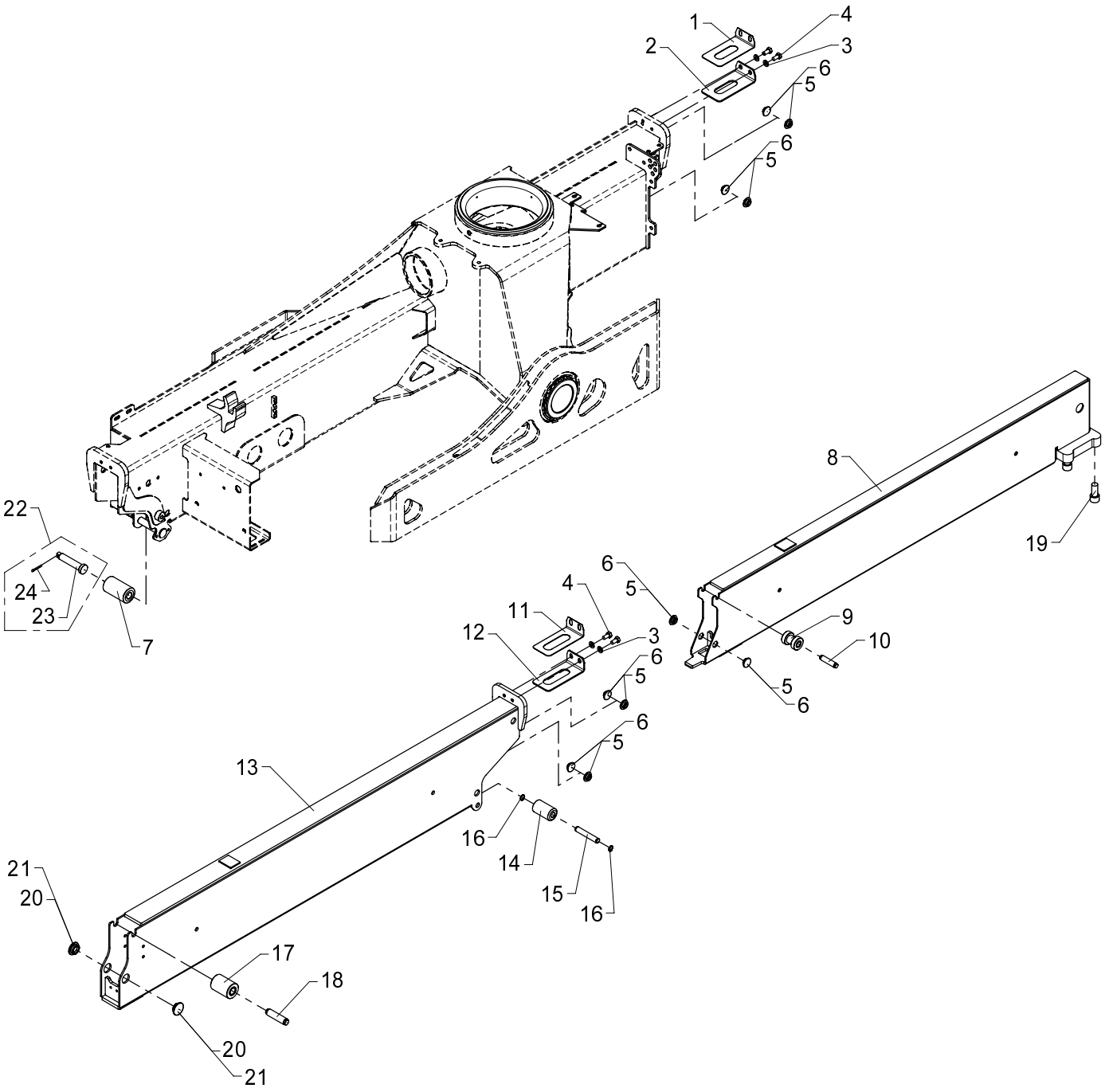

534 02 040 A

From loader 1060276
To loader

Created 13-11-2008
Modified 16-11-2009

Stabilizer beam, type DV - 6450

Pos	Qty.	Part no.	Description	Remarks
		6341130	Stabilizer beam, type DV	
		6342030	No detection, legs down	
1	1	6306722	Adjusting plate	
2	1	6306156	Spacer	
3	4	31565	Washer, stainless	10 mm
4	4	31517	Set screw, stainless	M10 x 20
5	10	63429	Guide	ø30 x 3 mm
6	10	63430	Guide	ø30 x 2 mm
7	1	63470	Guide roller	
8	1	6340101	Stabilizer beam II	
9	1	63426	Guide roller	
10	1	6306168	Pin for guide roller	
11	1	6306721	Adjusting plate	
12	1	6306157	Spacer	
13	1	6340091	Stabilizer beam I	
14	1	63471	Guide roller	
15	1	6340097	Pin for guide roller	
16	2	33104	Circlip	15U
17	1	63469	Guide roller	
18	1	6340098	Pin for guide roller	
19	4	30339	Cylinder screw	MC18 x 40
20	2	63681	Slide block	3 mm
21	2	64424	Slide block	3 mm
22	1	6342030	No detection, legs down	
23	1	6341982	Pin for guide roller	
24	1	31615	Split pin	ø4 x 32

15/105 - 17/117 SL & DL Parts

Internal ref. 63 41 140

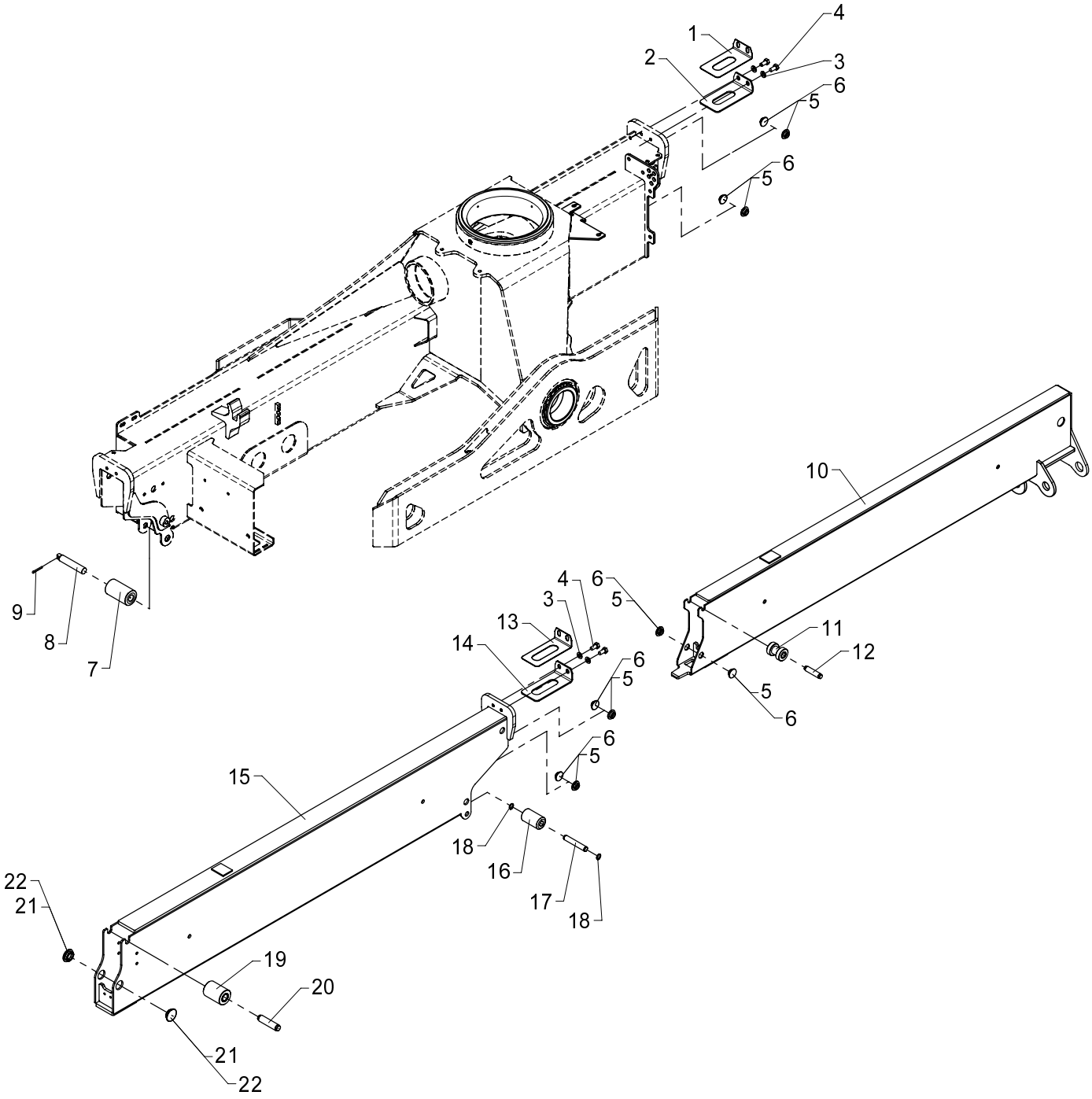

534 02 050

From loader 1060001
To loader 1060233

Created 13-11-2008
Modified 07-07-2009

Stabilizer beam, type DR-20° - 6450

Pos	Qty.	Part no.	Description	Remarks
1	1	6306722	Adjusting plate	
2	1	6306156	Spacer	
3	4	31565	Washer, stainless	10 mm
4	4	31517	Set screw, stainless	M10 x 20
5	10	63429	Guide	ø30 x 3 mm
6	10	63430	Guide	ø30 x 2 mm
7	1	63470	Guide roller	
8	1	6340048	Pin for guide roller	
9	1	31615	Split pin	ø4 x 32
10	1	6340111	Stabilizer beam	
11	1	63426	Guide roller	
12	1	6306168	Pin for guide roller	
13	1	6306721	Adjusting plate	
14	1	6306157	Spacer	
15	1	6340091	Stabilizer beam I	
16	1	63471	Guide roller	
17	1	6340097	Pin for guide roller	
18	2	33104	Circlip	15U
19	1	63469	Guide roller	
20	1	6340098	Pin for guide roller	
21	2	63681	Slide block	3 mm
22	2	64424	Slide block	3 mm

15/105 - 17/117 SL & DL Parts

Internal ref. 63 43 830

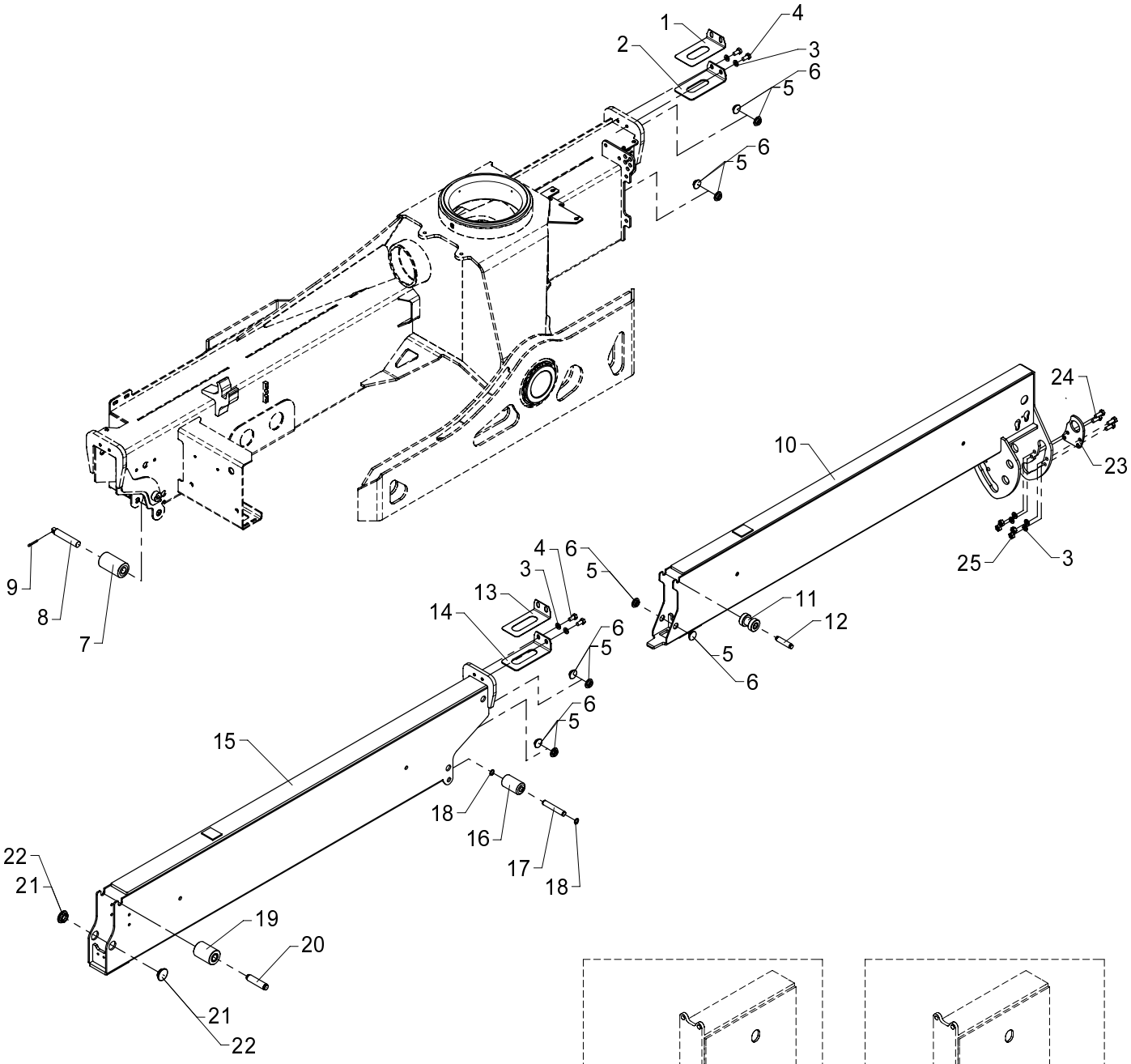

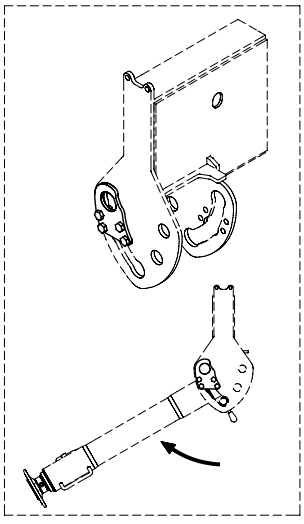

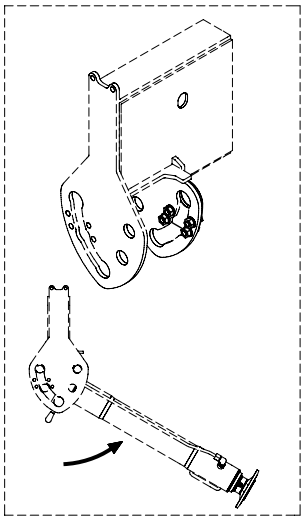

534 02 051

Stabilizer beam, type DR-60°, 6450

From loader 1060234
To loader 1060275

Created 10-07-2009
Modified

Pos	Qty.	Part no.	Description	Remarks
1	1	6306722	Adjusting plate	
2	1	6306156	Spacer	
3	8	31565	Washer, stainless	10 mm
4	4	31517	Set screw, stainless	M10 x 20
5	10	63429	Guide	ø30 x 3 mm
6	10	63430	Guide	ø30 x 2 mm
7	1	63470	Guide roller	
8	1	6340048	Pin for guide roller	
9	1	31615	Split pin	ø4 x 32
10	1	6342851	Stabilizer beam, DR	
11	1	63426	Guide roller	
12	1	6306168	Pin for guide roller	
13	1	6306721	Adjusting plate	
14	1	6306157	Spacer	
15	1	6340091	Stabilizer beam I	
16	1	63471	Guide roller	
17	1	6340097	Pin for guide roller	
18	2	33104	Circlip	15U
19	1	63469	Guide roller	
20	1	6340098	Pin for guide roller	
21	2	63681	Slide block	3 mm
22	2	64424	Slide block	3 mm
23	1	6342855	Plate	
24	4	30155	Set screw	M10 x 25
25	4	31551	Nut, stainless	M10

534 02 051 A

15/105 - 17/117 SL & DL Parts

63 42 030
Internal ref. 63 43 830

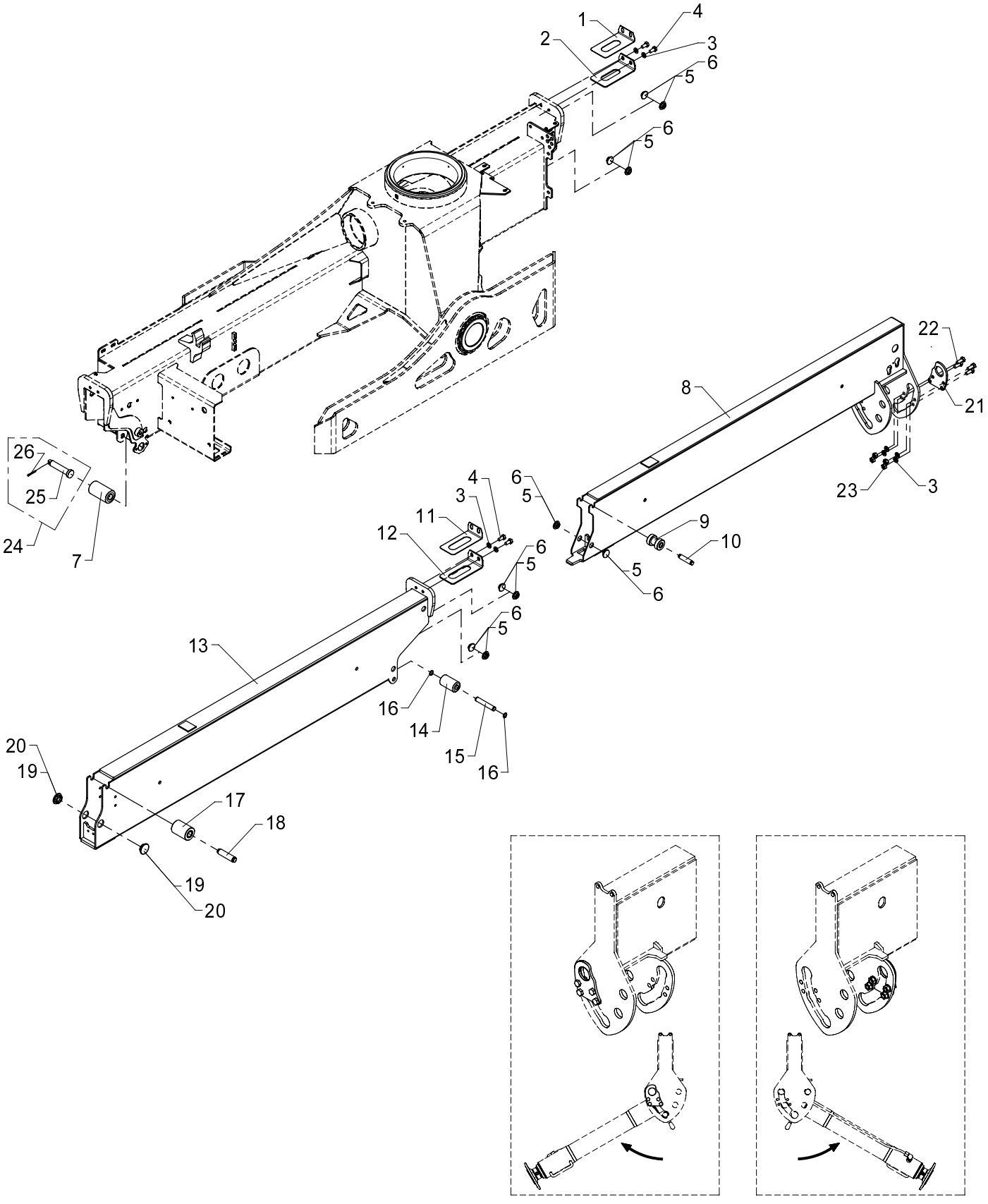

534 02 051 A

From loader 1060276
To loader

Created 10-07-2009
Modified 13-11-2009

Stabilizer beam, type DR-60°, 6450

Pos	Qty.	Part no.	Description	Remarks
		6343830	Stabilizer beam, type DR-60°	
		6342030	No detection, legs down	
1	1	6306722	Adjusting plate	
2	1	6306156	Spacer	
3	8	31565	Washer, stainless	10 mm
4	4	31517	Set screw, stainless	M10 x 20
5	10	63429	Guide	ø30 x 3 mm
6	10	63430	Guide	ø30 x 2 mm
7	1	63470	Guide roller	
8	1	6342851	Stabilizer beam, DR	
9	1	63426	Guide roller	
10	1	6306168	Pin for guide roller	
11	1	6306721	Adjusting plate	
12	1	6306157	Spacer	
13	1	6340091	Stabilizer beam I	
14	1	63471	Guide roller	
15	1	6340097	Pin for guide roller	
16	2	33104	Circlip	15U
17	1	63469	Guide roller	
18	1	6340098	Pin for guide roller	
19	2	63681	Slide block	3 mm
20	2	64424	Slide block	3 mm
21	1	6342855	Plate	
22	4	30155	Set screw	M10 x 25
23	4	31551	Nut, stainless	M10
24	1	6342030	No detection, legs down	
25	1	6341982	Pin for guide roller	
26	1	31615	Split pin	ø4 x 32

15/105 - 17/117 SL & DL Parts

Internal ref. 63 41 150

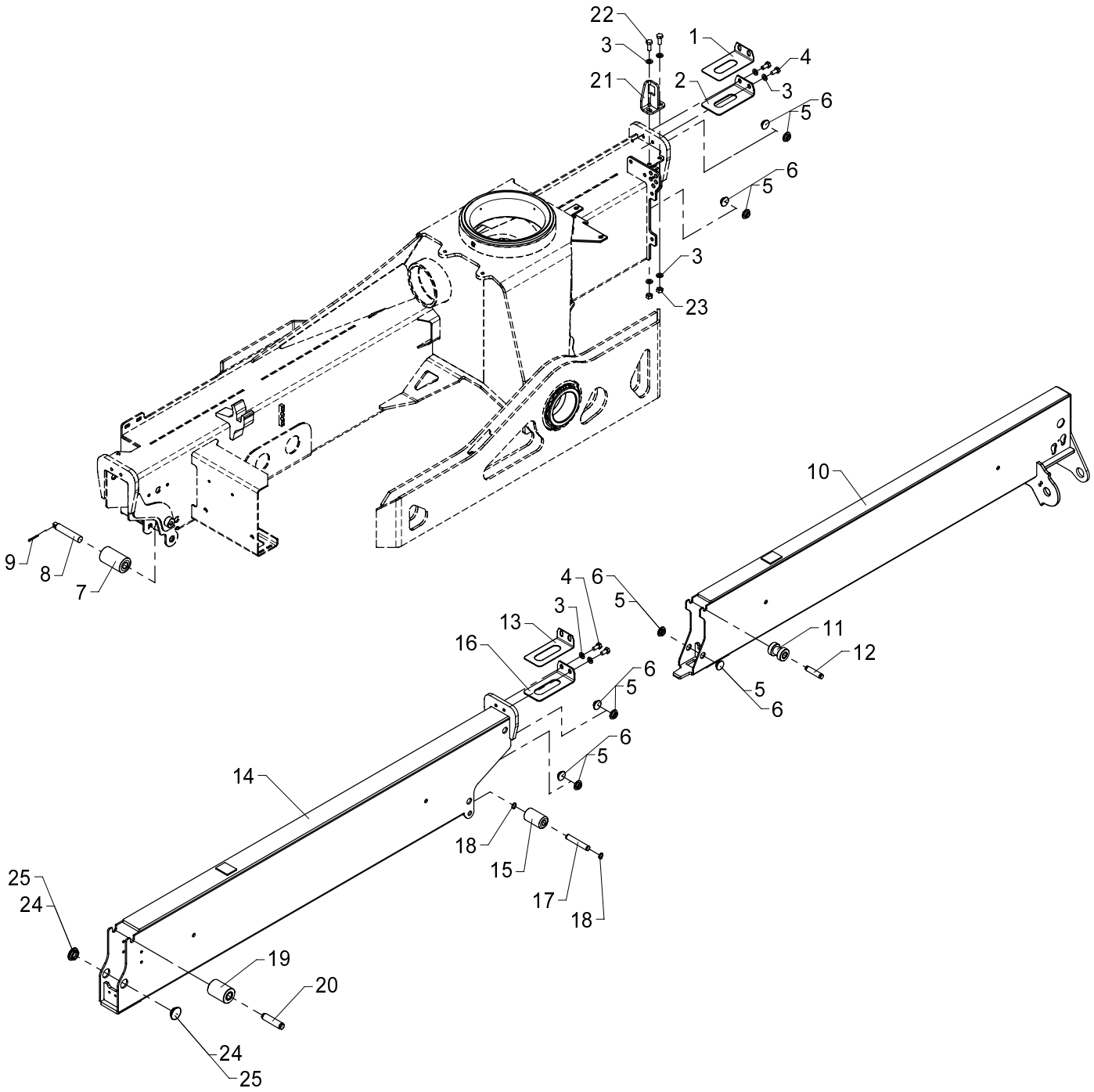

Stabilizer beam, type DH - 6450

534 02 060

From loader 1060001
To loader 1060275

Created 13-11-2008
Modified

Pos	Qty.	Part no.	Description	Remarks
1	1	6306722	Adjusting plate	
2	1	6306156	Spacer	
3	8	31565	Washer, stainless	10 mm
4	4	31517	Set screw, stainless	M10 x 20
5	10	63429	Guide	ø30 x 3 mm
6	10	63430	Guide	ø30 x 2 mm
7	1	63470	Guide roller	
8	1	6340048	Pin for guide roller	
9	1	31615	Split pin	ø4 x 32
10	1	6340115	Stabilizer beam II	
11	1	63426	Guide roller	
12	1	6306168	Pin for guide roller	
13	1	6306721	Adjusting plate	
14	1	6340091	Stabilizer beam I	
15	1	63471	Guide roller	
16	1	6306157	Spacer	
17	1	6340097	Pin for guide roller	
18	2	33104	Circlip	15U
19	1	63469	Guide roller	
20	1	6340098	Pin for guide roller	
21	1	6340817	Bracket	
22	2	30155	Set screw	M10 x 25
23	2	30858	Nut	M10
24	2	63681	Slide block	3 mm
25	2	64424	Slide block	3 mm

15/105 - 17/117 SL & DL Parts

63 42 030
Internal ref. 63 41 150

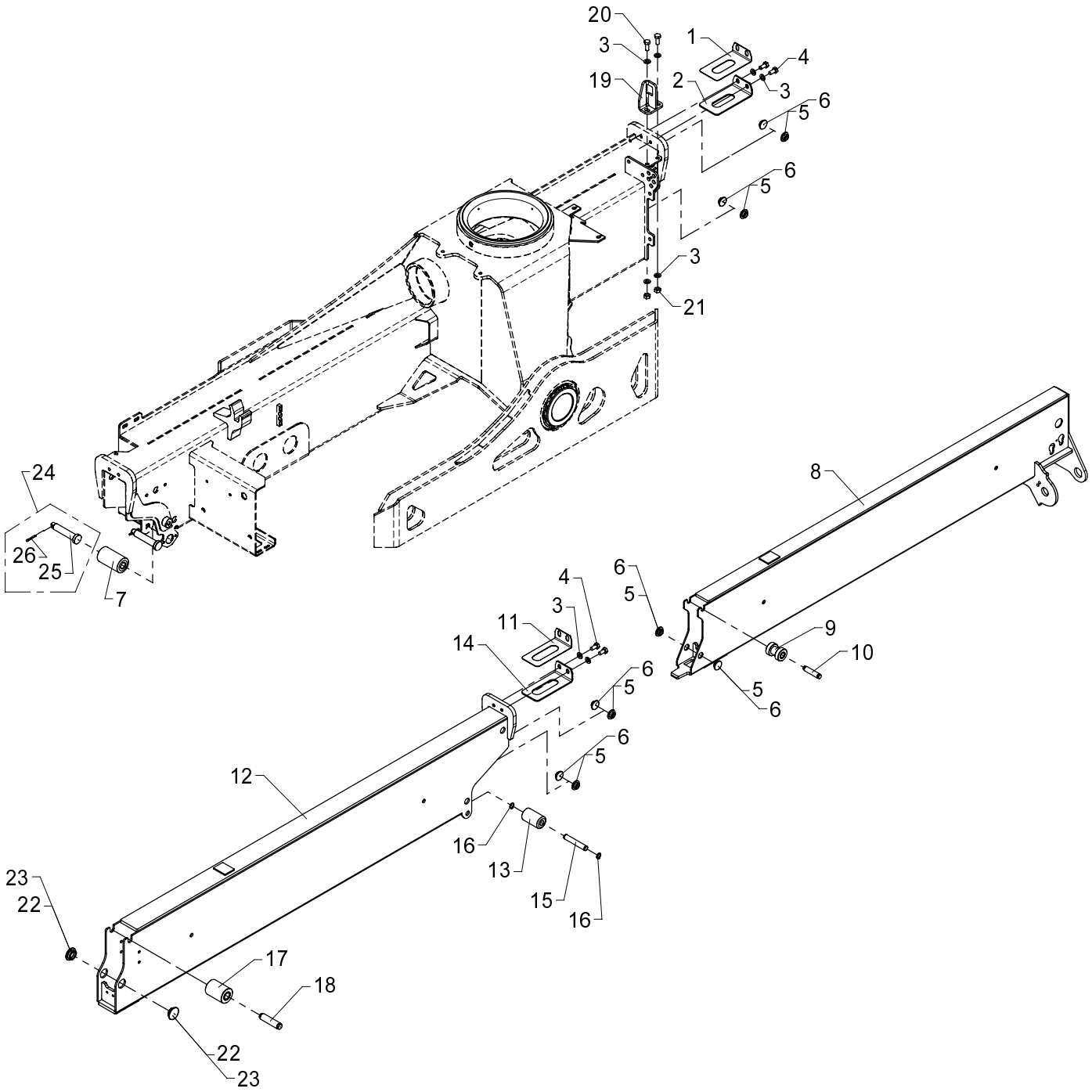

534 02 060 A

From loader 1060276
To loader

Created 13-11-2008
Modified 16-11-2009

Stabilizer beam, type DH - 6450

Pos	Qty.	Part no.	Description	Remarks
		6341150	Stabilizer beam, type DH	
		6342030	No detection, legs down	
1	1	6306722	Adjusting plate	
2	1	6306156	Spacer	
3	8	31565	Washer, stainless	10 mm
4	4	31517	Set screw, stainless	M10 x 20
5	10	63429	Guide	ø30 x 3 mm
6	10	63430	Guide	ø30 x 2 mm
7	1	63470	Guide roller	
8	1	6340115	Stabilizer beam II	
9	1	63426	Guide roller	
10	1	6306168	Pin for guide roller	
11	1	6306721	Adjusting plate	
12	1	6340091	Stabilizer beam I	
13	1	63471	Guide roller	
14	1	6306157	Spacer	
15	1	6340097	Pin for guide roller	
16	2	33104	Circlip	15U
17	1	63469	Guide roller	
18	1	6340098	Pin for guide roller	
19	1	6340817	Bracket	
20	2	30155	Set screw	M10 x 25
21	2	30858	Nut	M10
22	2	63681	Slide block	3 mm
23	2	64424	Slide block	3 mm
24	1	6342030	No detection, legs down	
25	1	6341982	Pin for guide roller	
26	1	31615	Split pin	ø4 x 32

15/105 - 17/117 SL & DL Parts

Internal ref. 63 41 160

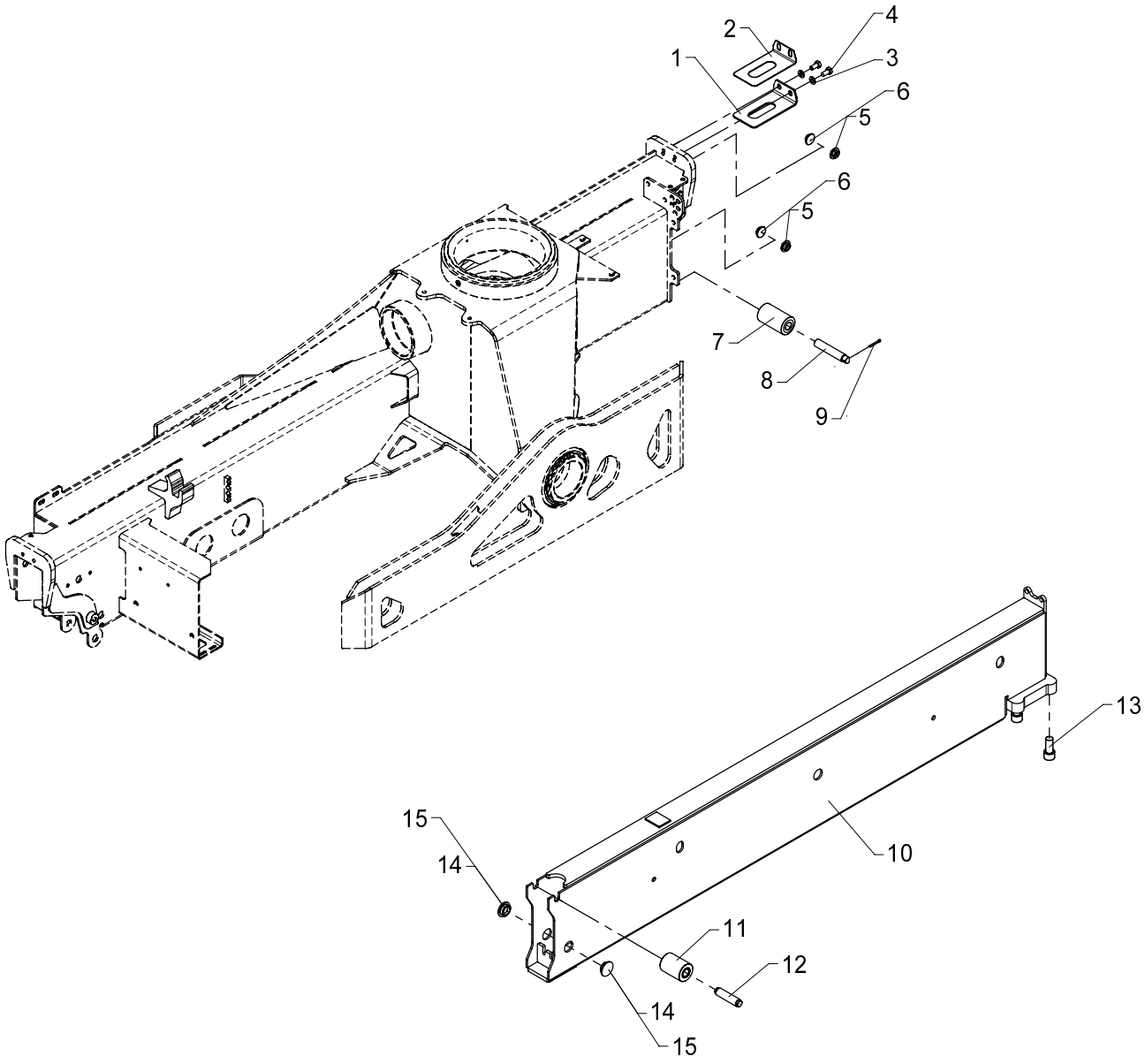

Stabilizer beam, type SV - 4600

534 02 070

From loader 1060001
To loader 1060275

Created 19-11-2008
Modified

Pos	Qty.	Part no.	Description	Remarks
1	1	6306156	Spacer	
2	1	6306722	Adjusting plate	
3	2	31565	Washer, stainless	10 mm
4	2	31517	Set screw, stainless	M10 x 20
5	4	63429	Guide	ø30 x 3 mm
6	4	63430	Guide	ø30 x 2 mm
7	1	63470	Guide roller	
8	1	6340048	Pin for guide roller	
9	1	31615	Split pin	ø4 x 32
10	1	6340781	Stabilizer beam I	
11	1	63469	Guide roller	
12	1	6340098	Pin for guide roller	
13	4	30339	Cylinder screw	MC18 x 40
14	2	63681	Slide block	3 mm
15	2	64424	Slide block	3 mm

15/105 - 17/117 SL & DL Parts

63 42 030
Internal ref. 63 41 160

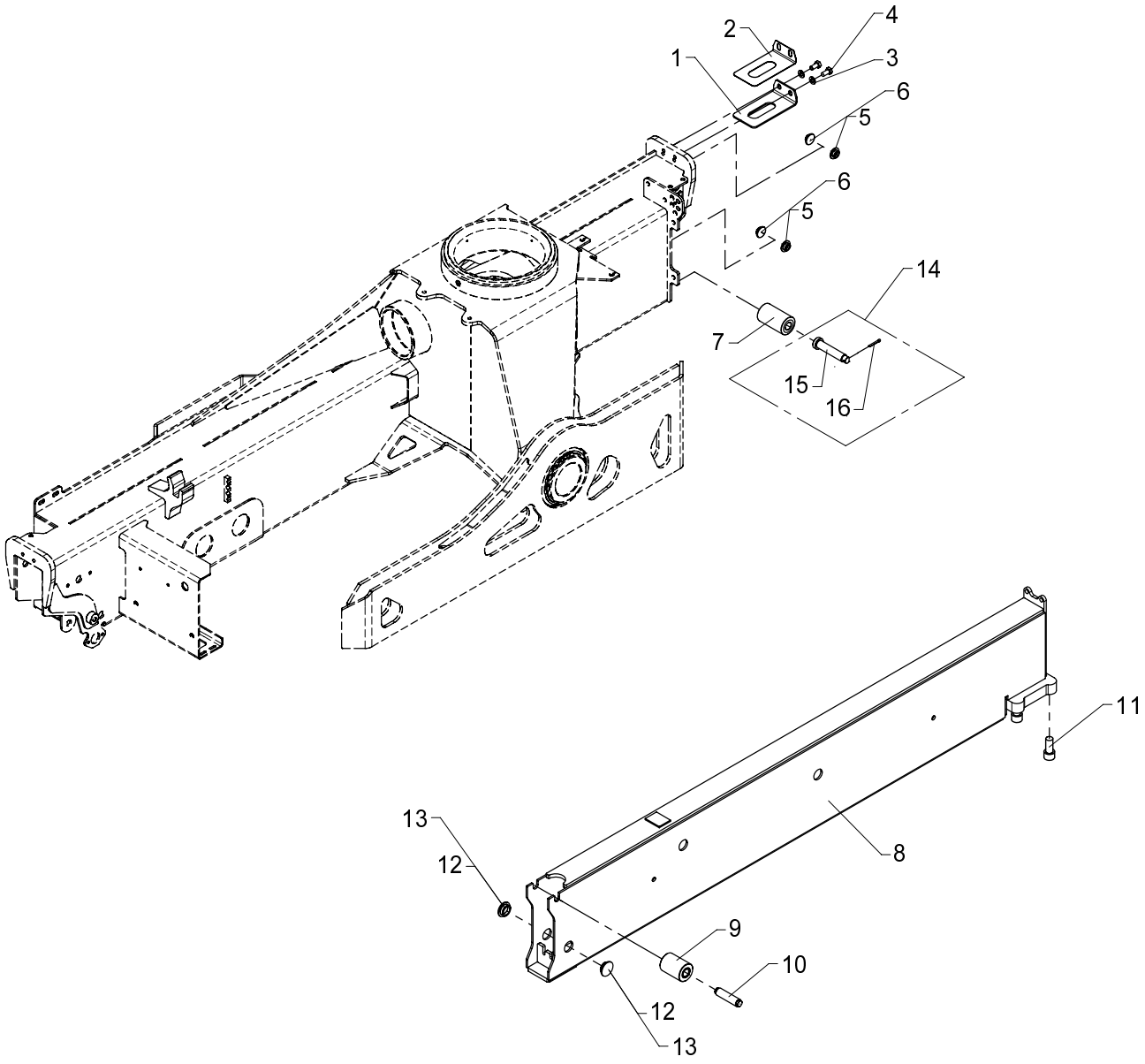

534 02 070 A

From loader 1060276
To loader

Created 19-11-2008
Modified 16-11-2009

Stabilizer beam, type SV - 4600

Pos	Qty.	Part no.	Description	Remarks
		6341160	Stabilizer beam, type SV	
		6342030	No detection, legs down	
1	1	6306156	Spacer	
2	1	6306722	Adjusting plate	
3	2	31565	Washer, stainless	10 mm
4	2	31517	Set screw, stainless	M10 x 20
5	4	63429	Guide	ø30 x 3 mm
6	4	63430	Guide	ø30 x 2 mm
7	1	63470	Guide roller	
8	1	6340781	Stabilizer beam l	
9	1	63469	Guide roller	
10	1	6340098	Pin for guide roller	
11	4	30339	Cylinder screw	MC18 x 40
12	2	63681	Slide block	3 mm
13	2	64424	Slide block	3 mm
14	1	6342030	No detection, legs down	
15	1	6341982	Pin for guide roller	
16	1	31615	Split pin	ø4 x 32

15/105 - 17/117 SL & DL Parts

Internal ref. 63 41 170

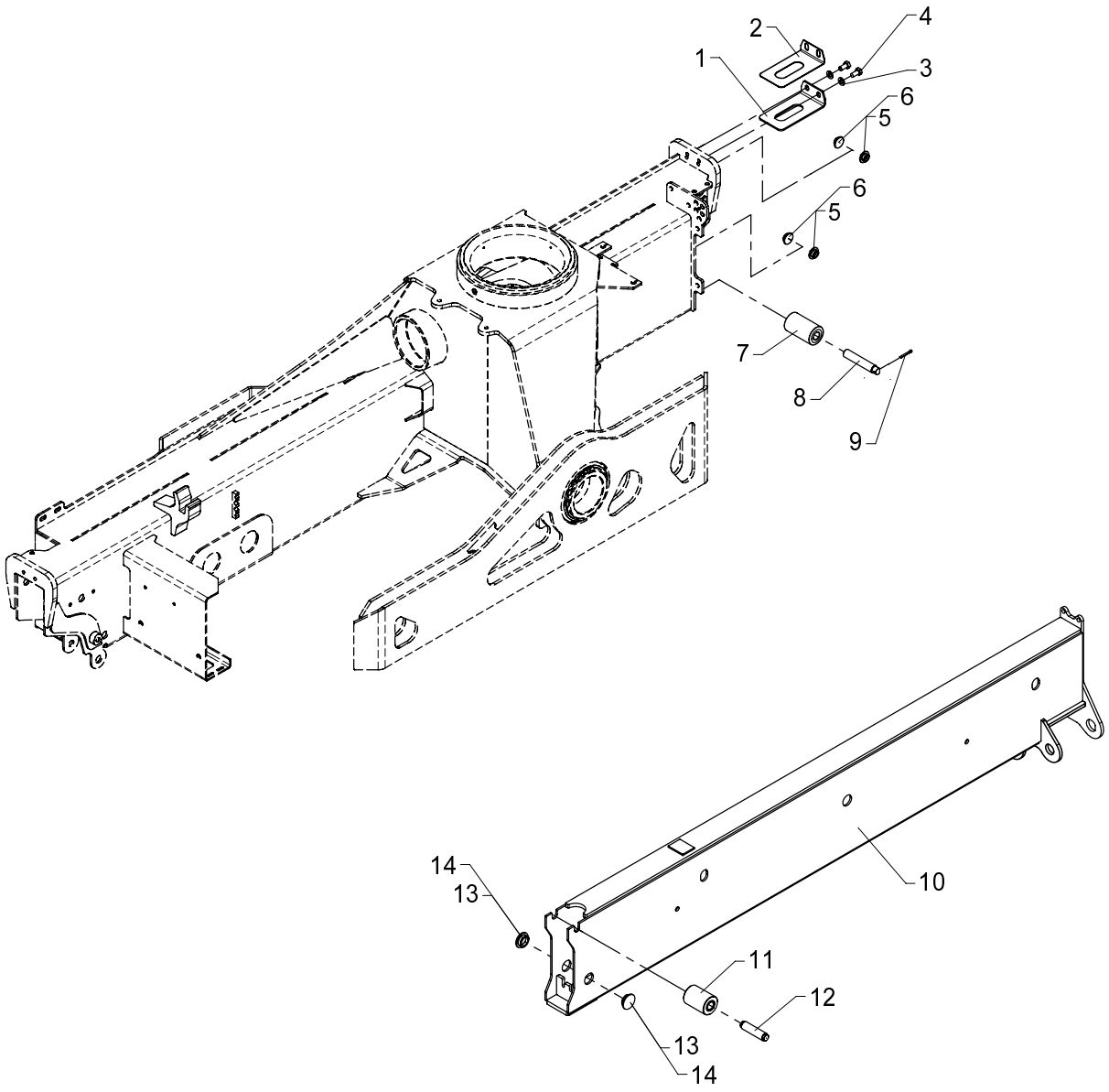

534 02 080

From loader 1060001
To loader 1060233

Created 19-11-2008
Modified 07-07-2009

Stabilizer beam, type SR-20° - 4600

Pos	Qty.	Part no.	Description	Remarks
1	1	6306156	Spacer	
2	1	6306722	Adjusting plate	
3	2	31565	Washer, stainless	10 mm
4	2	31517	Set screw, stainless	M10 x 20
5	4	63429	Guide	ø30 x 3 mm
6	4	63430	Guide	ø30 x 2 mm
7	1	63470	Guide roller	
8	1	6340048	Pin for guide roller	
9	1	31615	Split pin	ø4 x 32
10	1	6340788	Stabilizer beam	
11	1	63469	Guide roller	
12	1	6340098	Pin for guide roller	
13	2	63681	Slide block	3 mm
14	2	64424	Slide block	3 mm

15/105 - 17/117 SL & DL Parts

Internal ref. 63 43 840

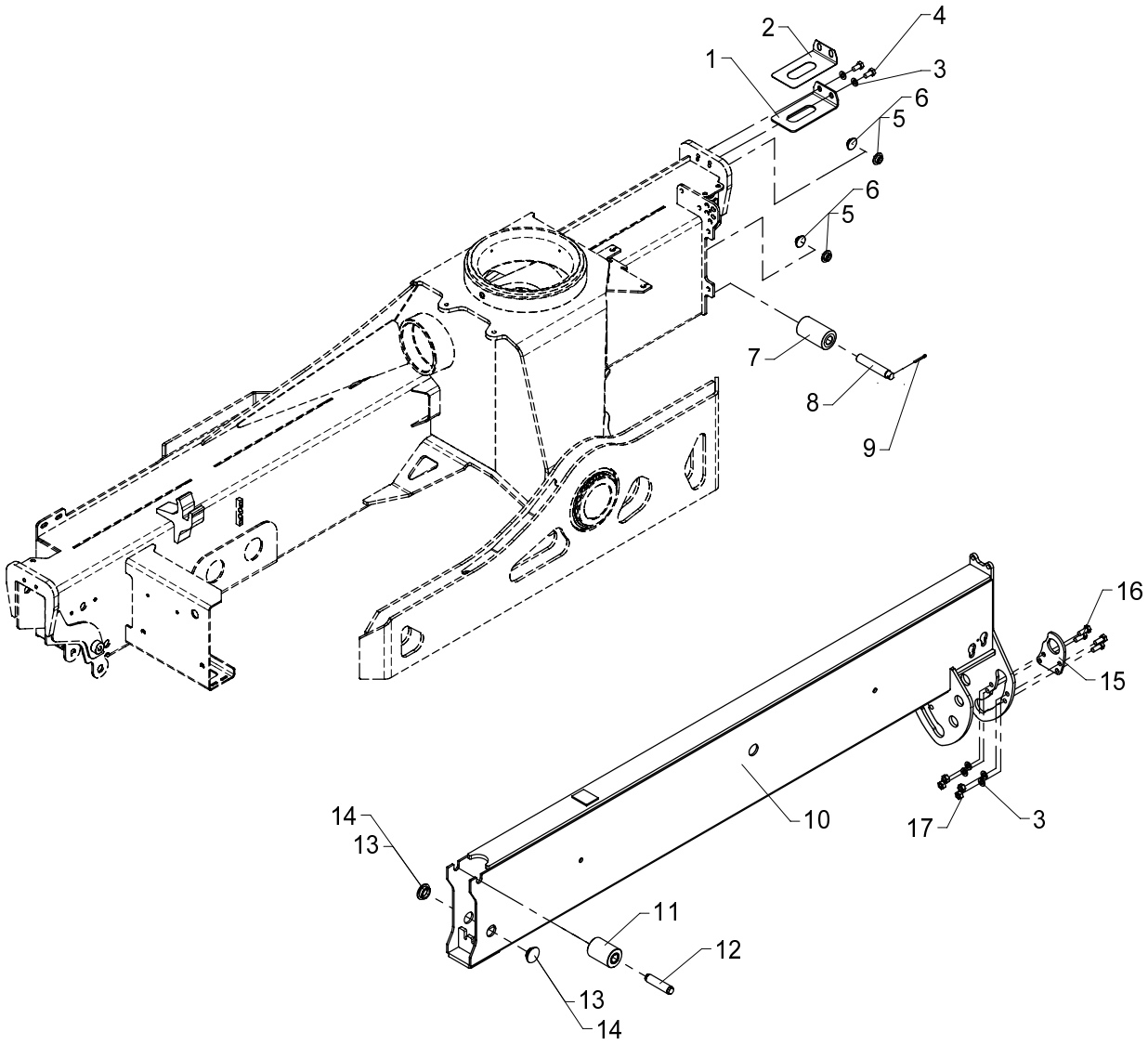

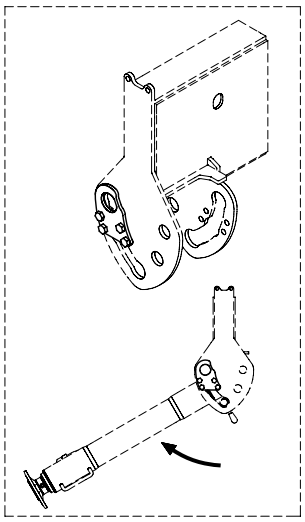

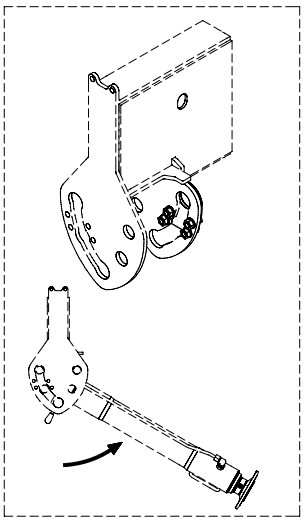

Stabilizer beam, type SR-60°, 4600

534 02 081

From loader 1060234
To loader 1060275

Created 10-07-2009
Modified

Pos	Qty.	Part no.	Description	Remarks
1	1	6306156	Spacer	
2	1	6306722	Adjusting plate	
3	6	31565	Washer, stainless	10 mm
4	2	31517	Set screw, stainless	M10 x 20
5	4	63429	Guide	ø30 x 3 mm
6	4	63430	Guide	ø30 x 2 mm
7	1	63470	Guide roller	
8	1	6340048	Pin for guide roller	
9	1	31615	Split pin	ø4 x 32
10	1	6342871	Stabilizer beam, SR,reversible	
11	1	63469	Guide roller	
12	1	6340098	Pin for guide roller	
13	2	63681	Slide block	3 mm
14	2	64424	Slide block	3 mm
15	1	6342855	Plate	
16	4	30155	Set screw	M10 x 25
17	4	31551	Nut, stainless	M10

15/105 - 17/117 SL & DL Parts

63 42 030
Internal ref. 63 43 840

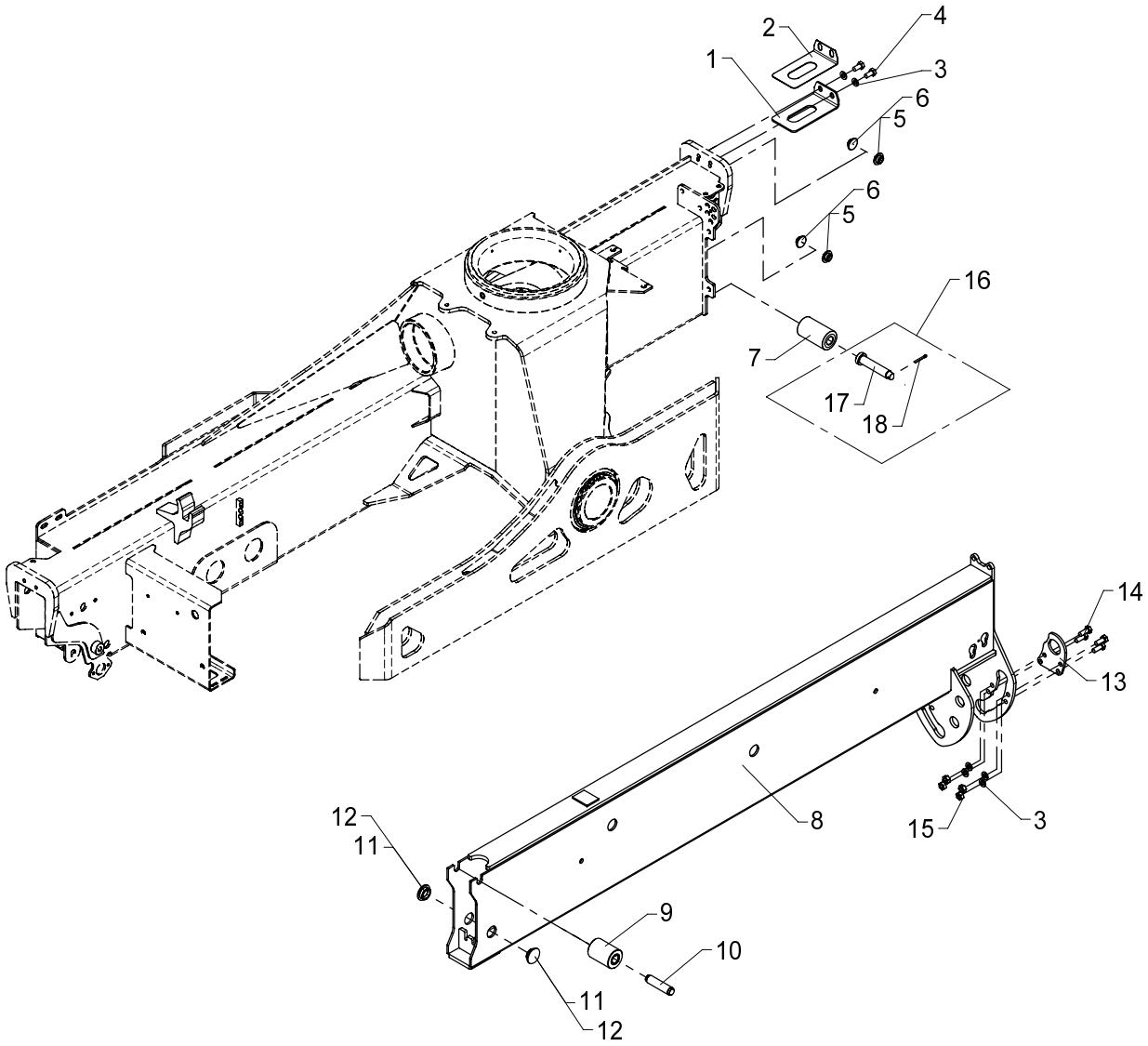

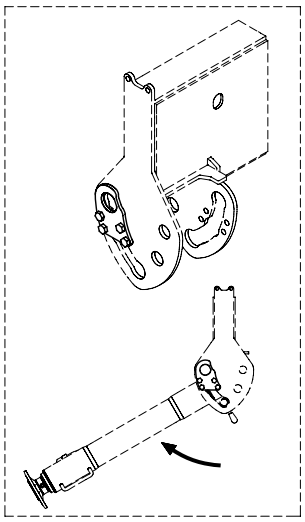

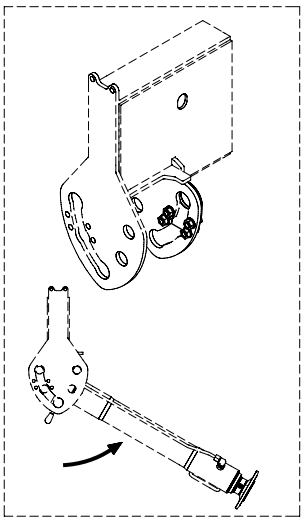

534 02 081 A

From loader 1060276
To loader

Stabilizer beam, type SR-60°, 4600

Created 10-07-2009
Modified 16-11-2009

Pos	Qty.	Part no.	Description	Remarks
		6343840	Stabilizer beam, type SR-60°	
		6342030	No detection, legs down	
1	1	6306156	Spacer	
2	1	6306722	Adjusting plate	
3	6	31565	Washer, stainless	10 mm
4	2	31517	Set screw, stainless	M10 x 20
5	4	63429	Guide	ø30 x 3 mm
6	4	63430	Guide	ø30 x 2 mm
7	1	63470	Guide roller	
8	1	6342871	Stabilizer beam, SR,reversible	
9	1	63469	Guide roller	
10	1	6340098	Pin for guide roller	
11	2	63681	Slide block	3 mm
12	2	64424	Slide block	3 mm
13	1	6342855	Plate	
14	4	30155	Set screw	M10 x 25
15	4	31551	Nut, stainless	M10
16	1	6342030	No detection, legs down	
17	1	6341982	Pin for guide roller	
18	1	31615	Split pin	ø4 x 32

15/105 - 17/117 SL & DL Parts

Internal ref. 63 41 180

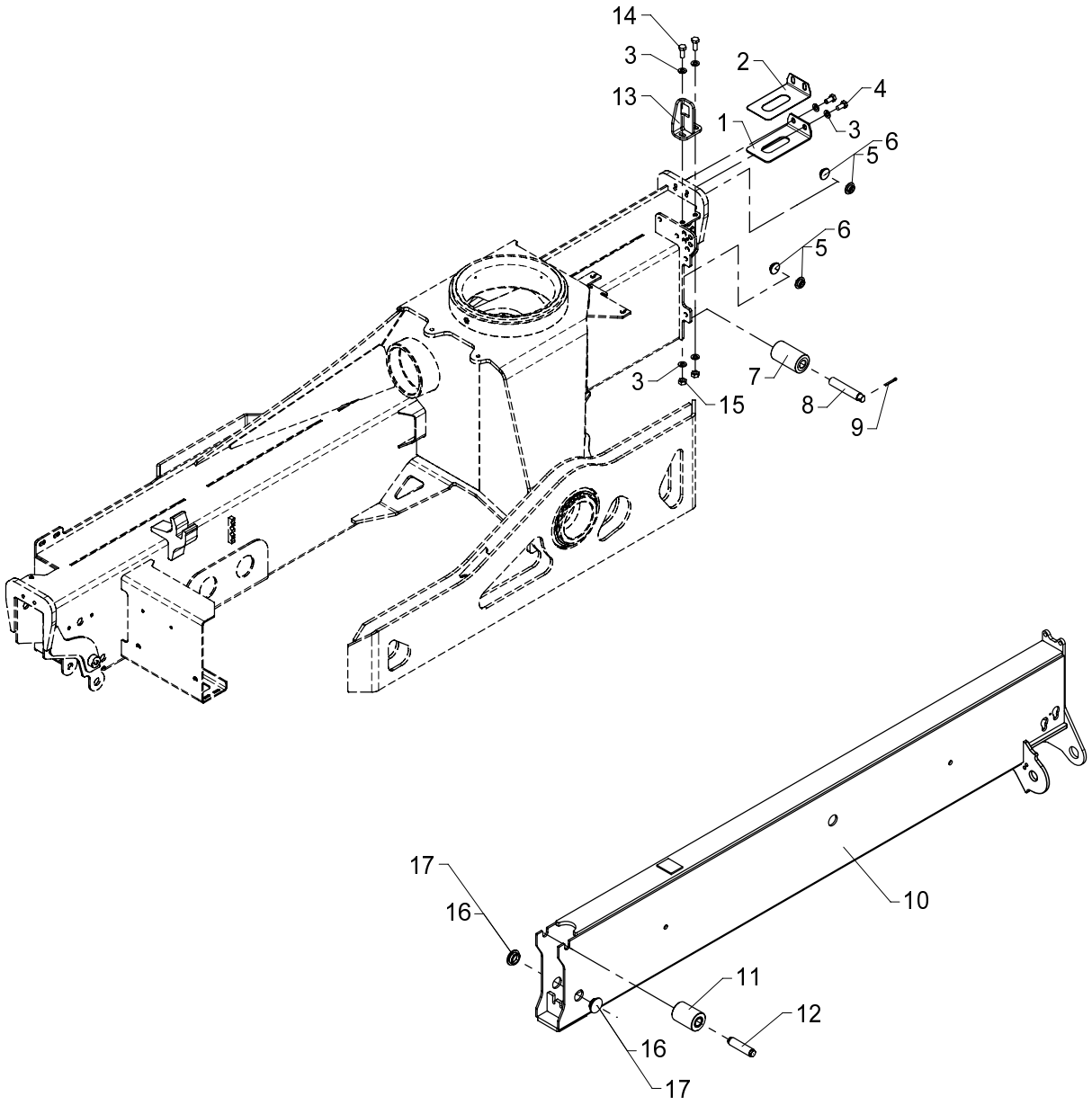

Stabilizer beam, type SH - 4600

534 02 090

From loader 1060001
To loader 1060275

Created 19-11-2008
Modified

Pos	Qty.	Part no.	Description	Remarks
1	1	6306156	Spacer	
2	1	6306722	Adjusting plate	
3	6	31565	Washer, stainless	10 mm
4	2	31517	Set screw, stainless	M10 x 20
5	4	63429	Guide	ø30 x 3 mm
6	4	63430	Guide	ø30 x 2 mm
7	1	63470	Guide roller	
8	1	6340048	Pin for guide roller	
9	1	31615	Split pin	ø4 x 32
10	1	6340789	Stabilizer beam	
11	1	63469	Guide roller	
12	1	6340098	Pin for guide roller	
13	1	6340817	Bracket	
14	2	30155	Set screw	M10 x 25
15	2	30858	Nut	M10
16	2	63681	Slide block	3 mm
17	2	64424	Slide block	3 mm

15/105 - 17/117 SL & DL Parts

63 42 030
Internal ref. 63 41 180

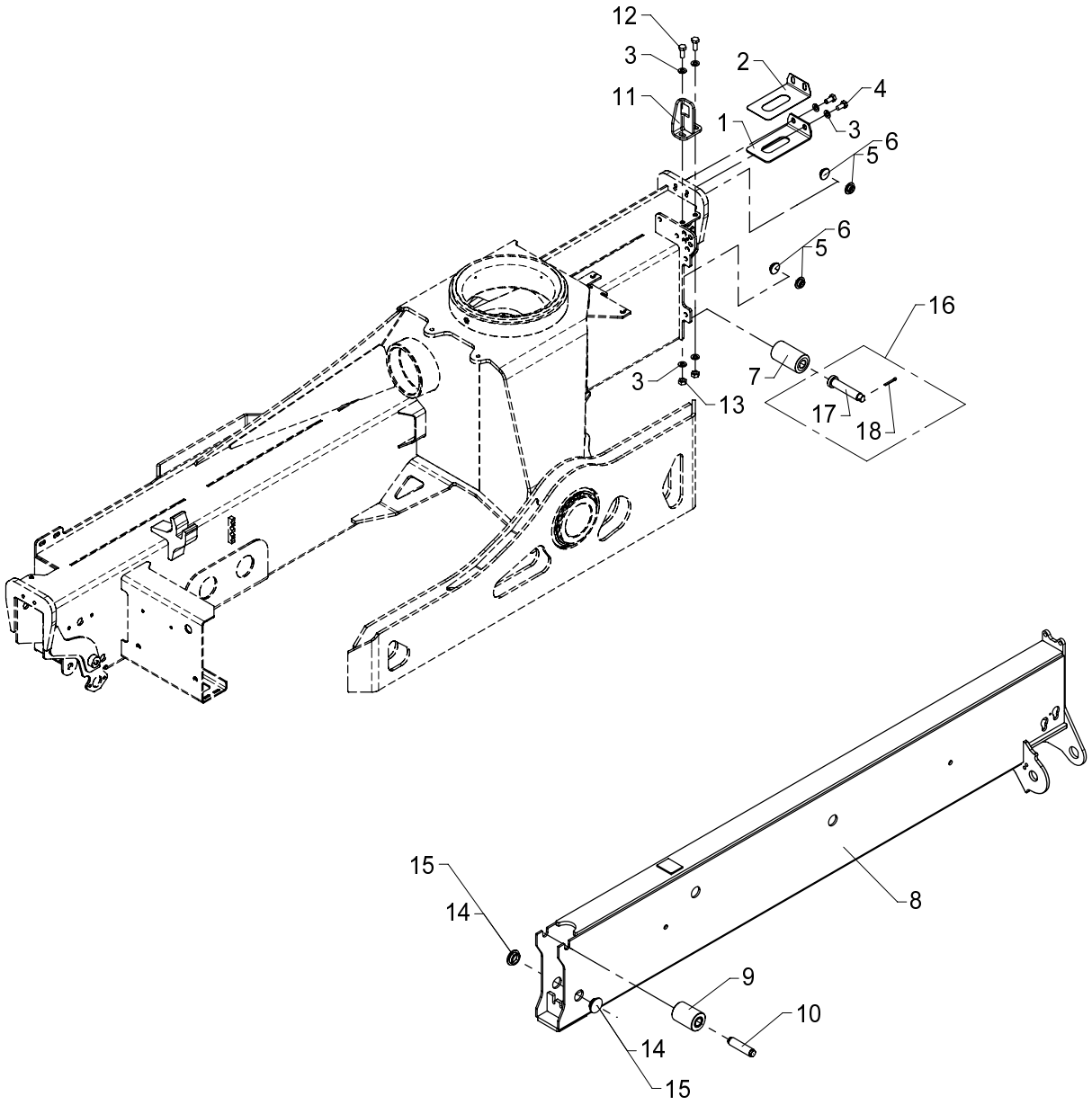

534 02 090 A

From loader 1060276
To loader

Created 19-11-2008
Modified 16-11-2009

Stabilizer beam, type SH - 4600

Pos	Qty.	Part no.	Description	Remarks
		6341180	Stabilizer beam, type SH	
		6342030	No detection, legs down	
1	1	6306156	Spacer	
2	1	6306722	Adjusting plate	
3	6	31565	Washer, stainless	10 mm
4	2	31517	Set screw, stainless	M10 x 20
5	4	63429	Guide	ø30 x 3 mm
6	4	63430	Guide	ø30 x 2 mm
7	1	63470	Guide roller	
8	1	6340789	Stabilizer beam	
9	1	63469	Guide roller	
10	1	6340098	Pin for guide roller	
11	1	6340817	Bracket	
12	2	30155	Set screw	M10 x 25
13	2	30858	Nut	M10
14	2	63681	Slide block	3 mm
15	2	64424	Slide block	3 mm
16	1	6342030	No detection, legs down	
17	1	6341982	Pin for guide roller	
18	1	31615	Split pin	ø4 x 32

15/105 - 17/117 SL & DL Parts

63 46 020
Internal ref. 63 42 020

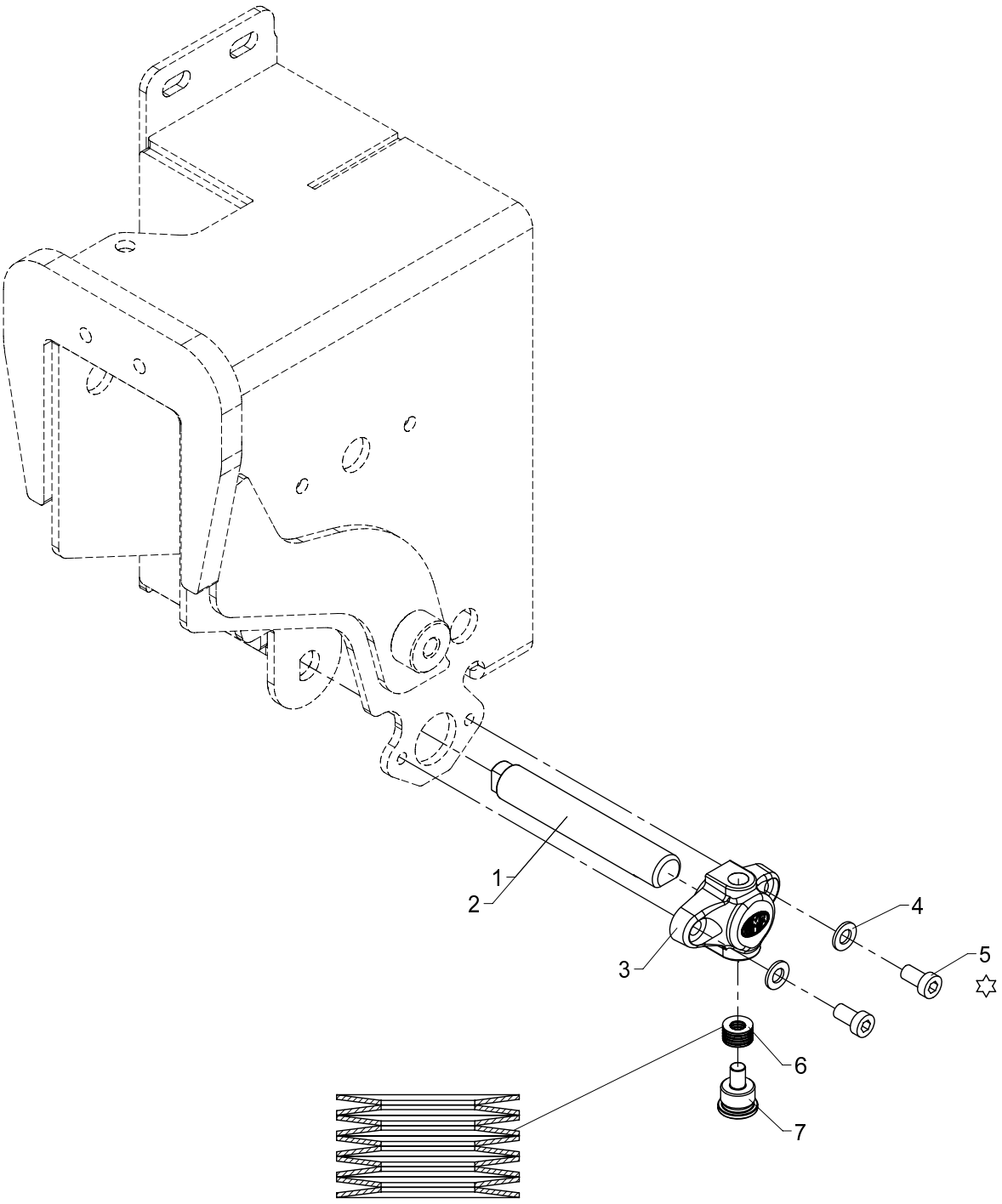

✡ Loctite 243

Detection, stabilizer down (CYL/CYBEL)

534 02 130

From loader 1060001
To loader

Created 18-11-2009
Modified

Pos	Qty.	Part no.	Description	Remarks
		6342020	Detection, legs down CYL/CYBEL	
		6346020	Detection, legs down CYL/CYBEL	
1	1	6341981	Pin for guide roller	1300/1730
2	1	6345981	Pin for guide roller	1800/2430
3	1	64575	Housing	
4	2	31147	Washer, stainless	8 mm
5	2	32478	Screw	M8 x 15
6	10	33496	Disc spring washer	
7	1	6341979	Pin	

15/105 - 17/117 SL & DL Parts

Internal ref. 63 40 520

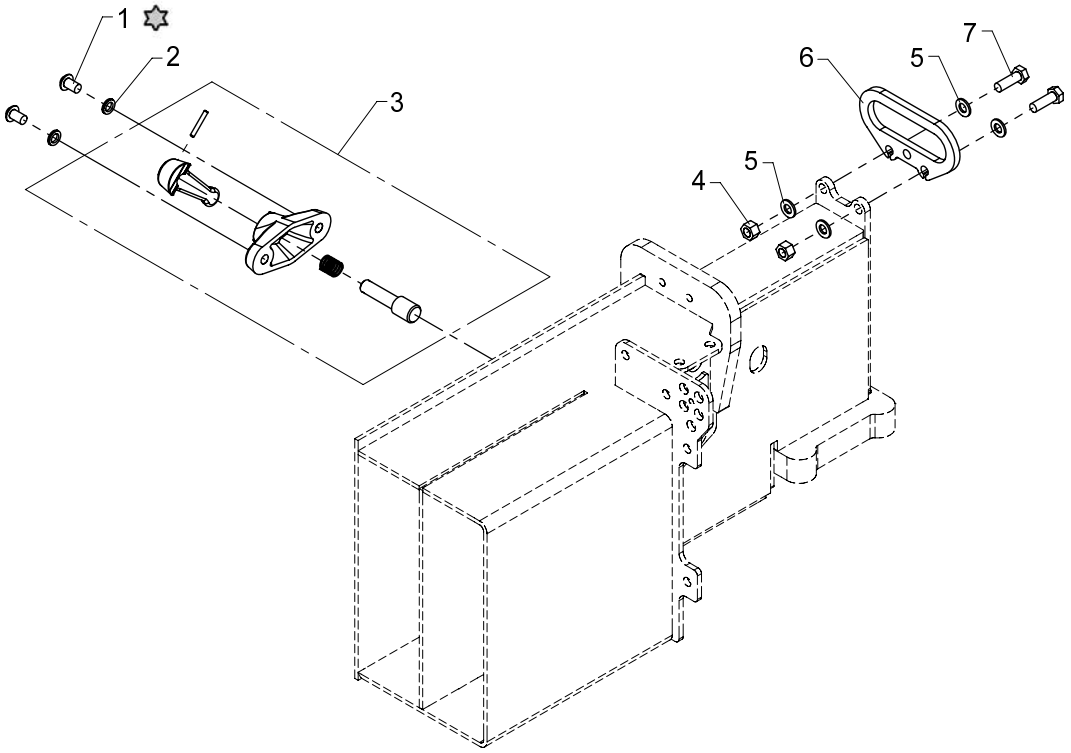

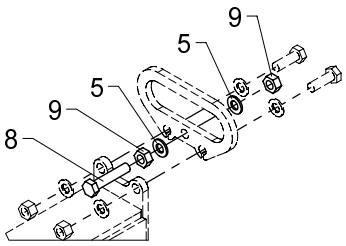

Kun til A = 4600

Loctite 243

Stabilizer lock and lever

534 02 140

From loader 1060001
To loader

Created 08-01-2010
Modified

Pos	Qty.	Part no.	Description	Remarks
		6340520	Stabilizer lock + handle	
1	2	31081	Screw	M10 x 16
2	2	30933	Nordlock washer	
3	1	63451	Stabilizer lock	
4	2	30888	Lock nut	M10
5	6	31565	Washer, stainless	10 mm
6	1	6306169	Lever, stabilizer beam	
7	2	30156	Set screw, stainless	M10 x 30
8	1	30159	Set screw	M10 x 50
9	2	31551	Nut, stainless	M10

15/105 - 17/117 SL & DL Parts

Internal ref. 63 41 810

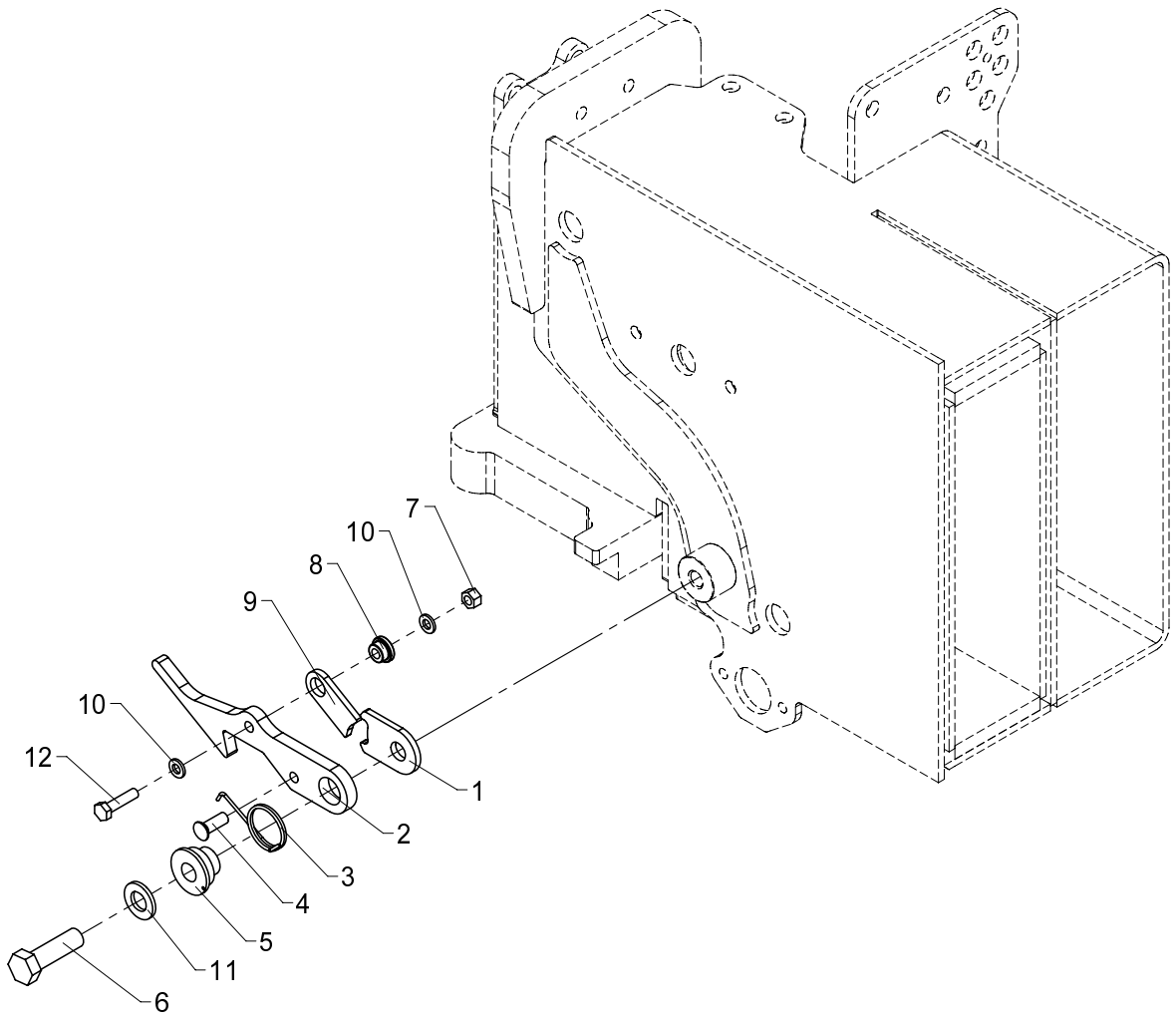

Safety lock

534 02 150

From loader 1060001
To loader

Created 11-11-2008
Modified 05-03-2010

Pos	Qty.	Part no.	Description	Remarks
1	1	6236044	Plate	
2	1	6245244	Hook	
3	1	33476	Spring	6247194
4	1	31290	Spike, galvanized	7 x 20
5	1	6245264	Bushing	
6	1	30179	Set screw	M12 x 40
7	1	30884	Lock nut, stainless	M6
8	1	63440	Washer	
9	1	6236054	Click	
10	2	32302	Face washer, stainless	6 mm
11	1	32338	Washer	12 mm
12	1	30114	Set screw, stainless	M6 x 25

15/105 - 17/117 SL & DL Parts

Internal ref. 63 42 810

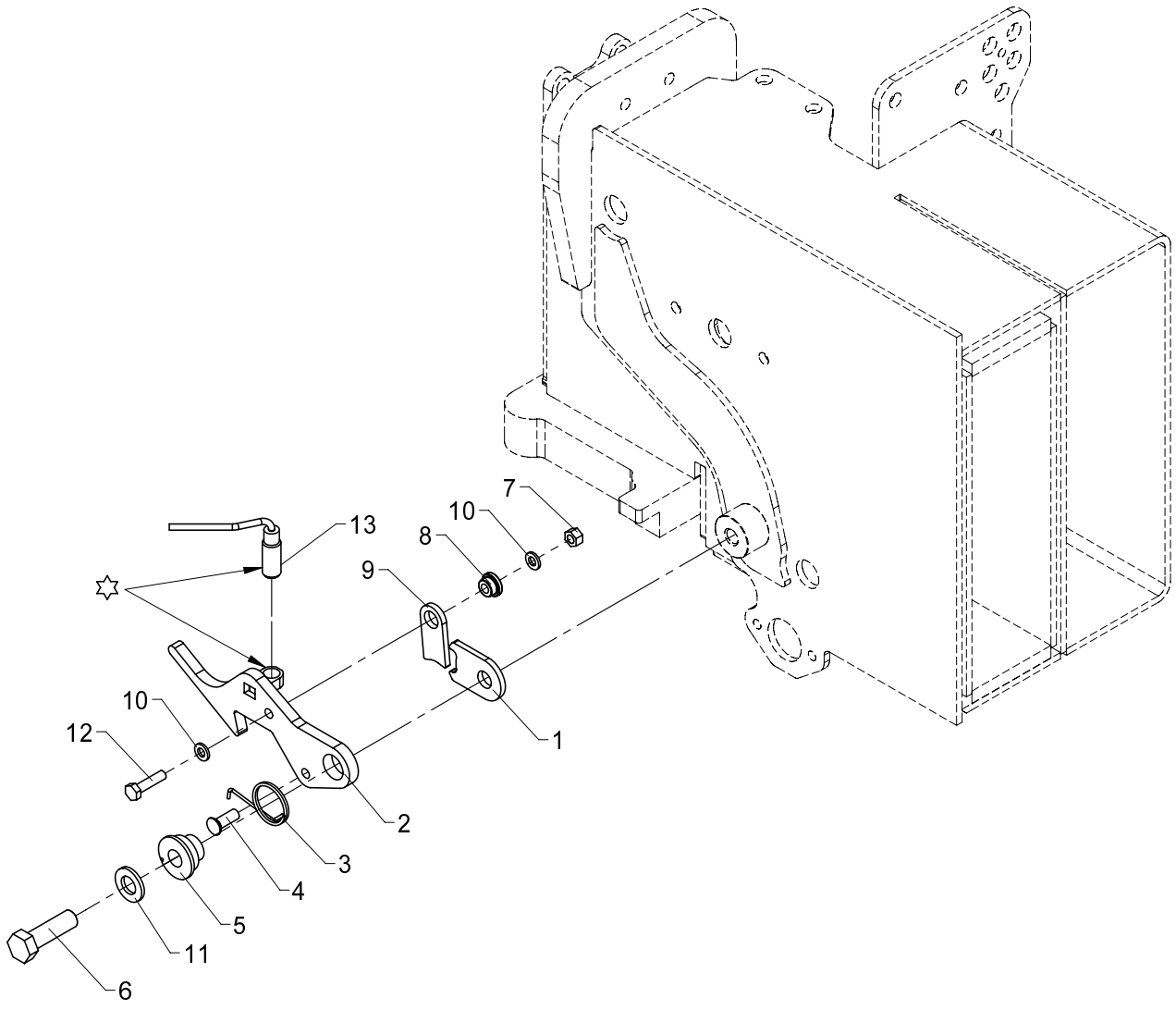

☆ Loctite 243

534 02 160

From loader 1060001
To loader

Created 08-01-2010
Modified 06-09-2010

Safety lock (CE, manual extension)

Pos	Qty.	Part no.	Description	Remarks
1	1	6236044	Plate	
2	1	6341091	Latch	
3	1	33476	Spring	6247194
4	1	31290	Spike, galvanized	7 x 20
5	1	6245264	Bushing	
6	1	30179	Set screw	M12 x 40
7	1	30884	Lock nut, stainless	M6
8	1	63440	Washer	
9	1	6236054	Click	
10	2	32302	Face washer, stainless	6 mm
11	1	32338	Washer	12 mm
12	1	30114	Set screw, stainless	M6 x 25
13	1	29294	Proximity switch f. stabilizer	

15/105 - 17/117 SL & DL Parts

Internal ref. 63 40 500

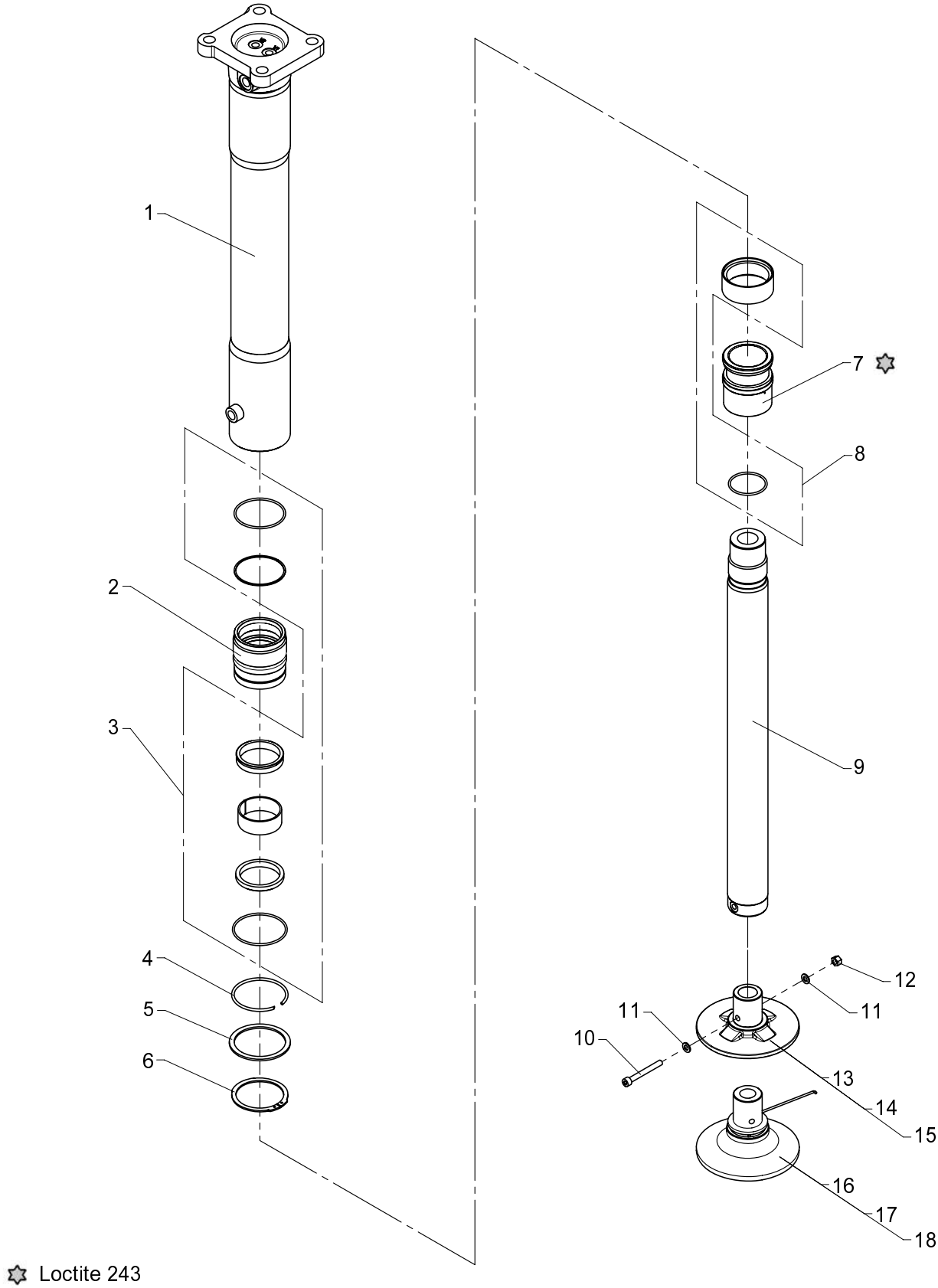

Loctite 243

Stabilizer cylinder, C80-520, type V

534 02 200

From loader 1060001
To loader

Created 21-11-2008
Modified 15-04-2010

Pos	Qty.	Part no.	Description	Remarks
		6340500	Stabilizer cylinder	
1	1	6340504	Cylinder pipe, fixed leg	
2	1	6340501	Guide	
3	1	6894110	Seal kit f. guide	
4	1	33400	Lock ring	
5	1	6340515	Back ring	
6	1	33143	Circlip	80U
7	1	6340516	Piston	
8	1	6894100	Seal kit f. piston	
9	1	6340503	Piston rod	
10	1	32428	Sockethead screw	MC8 x 70
11	2	31147	Washer, stainless	8 mm
12	1	30886	Lock nut, stainless	M8
13	1	6340506	Footplate, standard	
14	1	6340509	Footplate, 100 mm extension	
15	1	6340512	Footplate, 200 mm extension	
16	1	6342680	Footplate + ball joint std.	
17	1	6342690	Footplate + ball joint 100 mm	
18	1	6342700	Footplate + ball joint 200 mm	

15/105 - 17/117 SL & DL Parts

Internal ref. 63 40 510

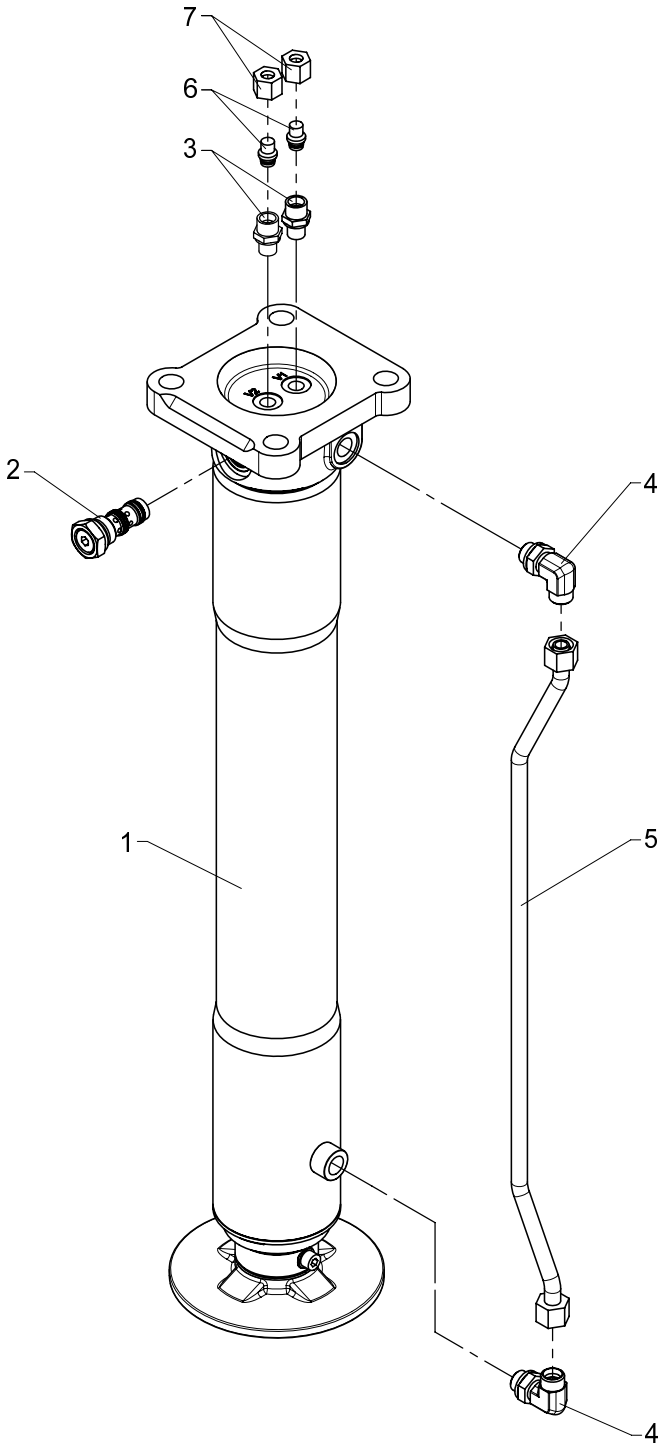

534 02 210

From loader 1060001
To loader

Created 11-11-2008
Modified

Stabilizer cylinder with check valve, C80-520, type V

Pos	Qty.	Part no.	Description	Remarks
1	1	6340500	Stabilizer cylinder	
2	1	58496	Cartridge	
3	2	25121	Connection	P-GEV 10 LR-WD
4	2	26897	Elbow connection	12 mm - 3/8"
5	1	6340514	Pipe, V	
6	2	25202	Blanking plug	VSD 10 L
7	2	25182	Coupling nut	M 10 L

15/105 - 17/117 SL & DL Parts

Internal ref. 63 40 830

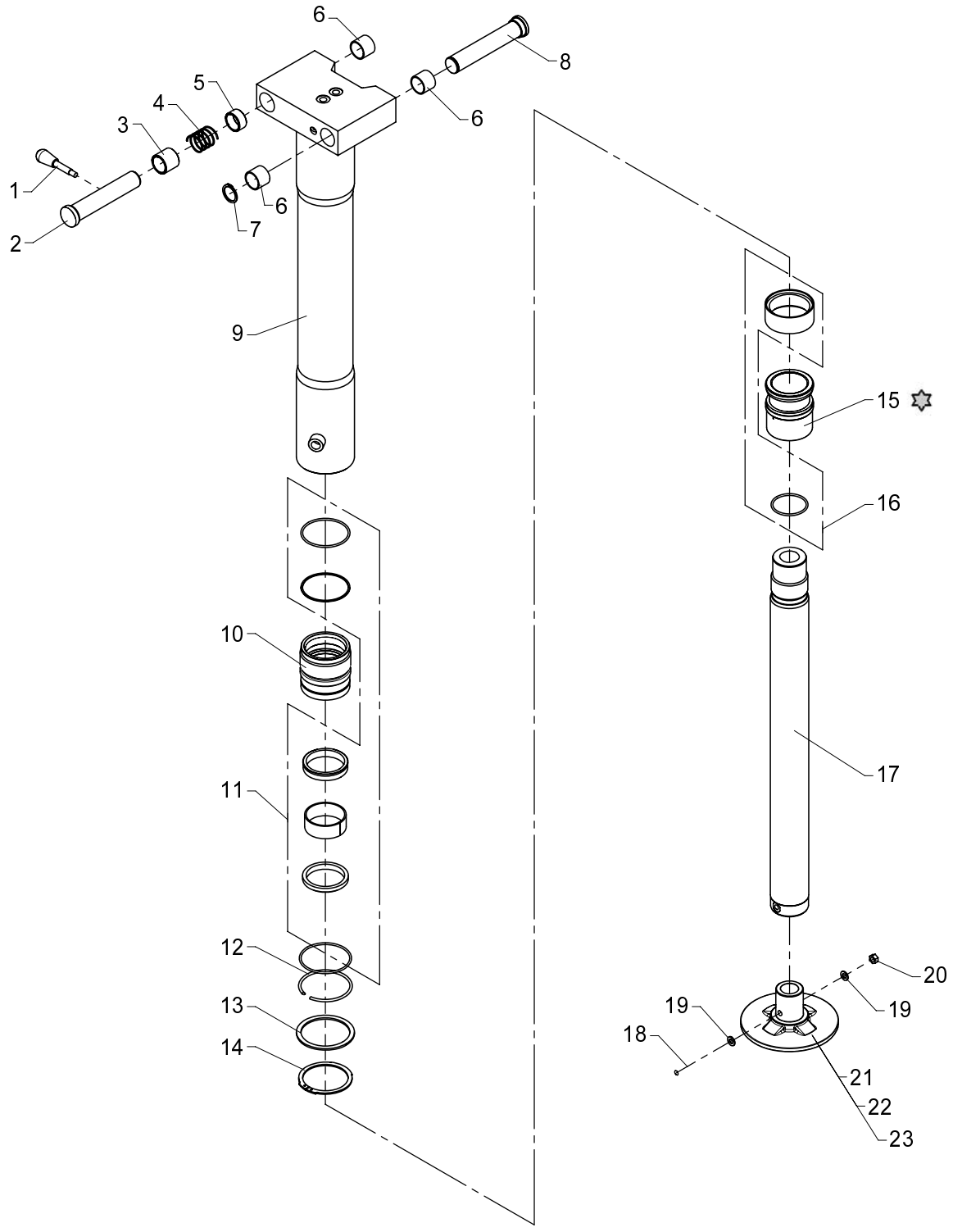

Loctite 243

Stabilizer cylinder C80-520, type R-20°

534 02 220

From loader 1060001
To loader 1060233

Created 12-11-2008
Modified 30-06-2009

Pos	Qty.	Part no.	Description	Remarks
		6340830	Stabilizer cylinder, type R	
1	1	64352	Lever with knob	
2	1	6340812	Pin	
3	1	6340824	Bushing	
4	1	33490	Compression spring	
5	1	6340811	Distance ring	
6	3	23417	Composite bearing	ø28/32 x 25
7	1	33122	Circlip	28U
8	1	6340813	Pin	
9	1	6340821	Cylinder pipe, R	
10	1	6340501	Guide	
11	1	6894110	Seal kit f. guide	
12	1	33400	Lock ring	
13	1	6340515	Back ring	
14	1	33143	Circlip	80U
15	1	6340516	Piston	
16	1	6894100	Seal kit f. piston	
17	1	6340503	Piston rod	
18	1	32428	Sockethead screw	MC8 x 70
19	2	31147	Washer, stainless	8 mm
20	1	30856	Nut, stainless	M8
21	1	6340506	Footplate, standard	
22	1	6340509	Footplate, 100 mm extension	
23	1	6340512	Footplate, 200 mm extension	

15/105 - 17/117 SL & DL Parts

Internal ref. 63 43 800

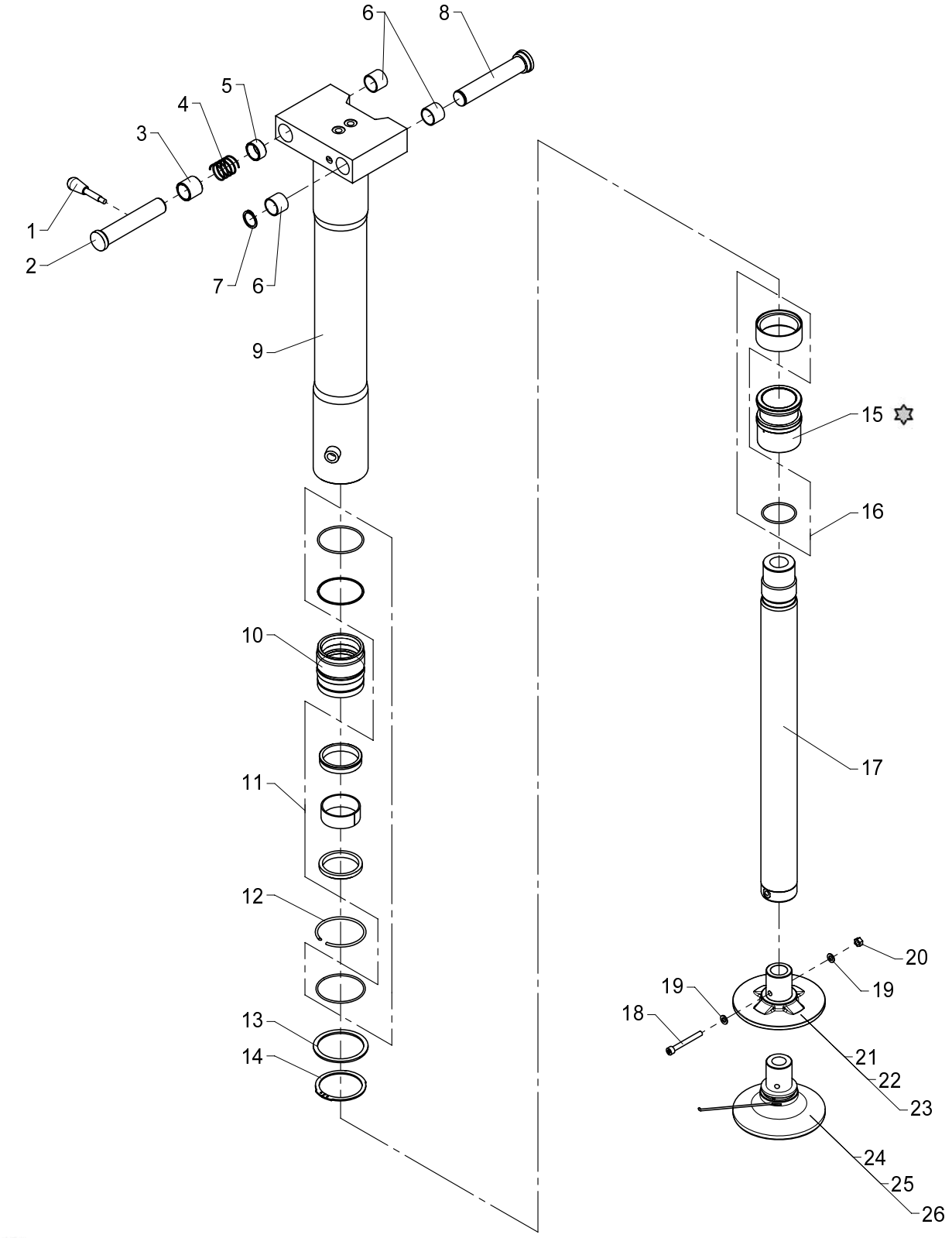

Loctite 243

Stabilizer cylinder C80-520, type R-60°

534 02 221

From loader 1060234
To loader

Created 30-06-2009
Modified

Pos	Qty.	Part no.	Description	Remarks
		6343800	Stab. cylinder, C80-520, typeR	
1	1	64352	Lever with knob	
2	1	6340812	Pin	
3	1	6340824	Bushing	
4	1	33490	Compression spring	
5	1	6340811	Distance ring	
6	3	23417	Composite bearing	ø28/32 x 25
7	1	33122	Circlip	28U
8	1	6340827	Pin	
9	1	6340821	Cylinder pipe, R	
10	1	6340501	Guide	
11	1	6894110	Seal kit f. guide	
12	1	33400	Lock ring	
13	1	6340515	Back ring	
14	1	33143	Circlip	80U
15	1	6340516	Piston	
16	1	6894100	Seal kit f. piston	
17	1	6340503	Piston rod	
18	1	32428	Sockethead screw	MC8 x 70
19	2	31147	Washer, stainless	8 mm
20	1	30856	Nut, stainless	M8
21	1	6340506	Footplate, standard	
22	1	6340509	Footplate, 100 mm extension	
23	1	6340512	Footplate, 200 mm extension	
24	1	6342680	Footplate + ball joint std.	
25	1	6342690	Footplate + ball joint 100 mm	
26	1	6342700	Footplate + ball joint 200 mm	

15/105 - 17/117 SL & DL Parts

Internal ref. 63 40 840

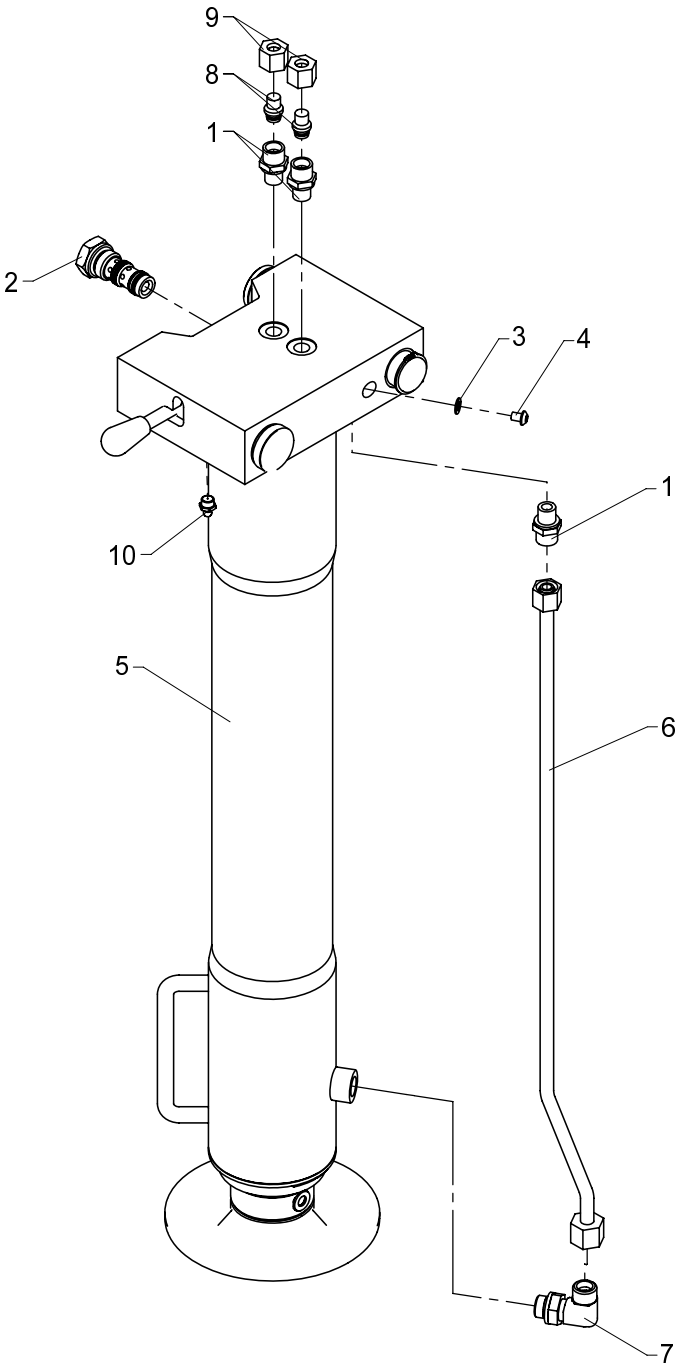

534 02 230

Stabilizer cylinder with check valve, type R-20°

From loader 1060001
To loader 1060233

Created 12-11-2008
Modified 30-06-2009

Pos	Qty.	Part no.	Description	Remarks
1	3	25121	Connection	P-GEV 10 LR-WD
2	1	58496	Cartridge	
3	1	21109	Seal washer	ø7,1 x 12 x 1
4	1	31778	Screw, stainless	M6 x 8
5	1	6340830	Stabilizer cylinder, type R	
6	1	6340823	Pipe, R	
7	1	26899	Elbow connection	10 mm - 3/8"
8	2	25202	Blanking plug	VSD 10 L
9	2	25182	Coupling nut	M 10 L
10	1	31318	Lubricator	1/8" RG

15/105 - 17/117 SL & DL Parts

Internal ref. 63 43 810

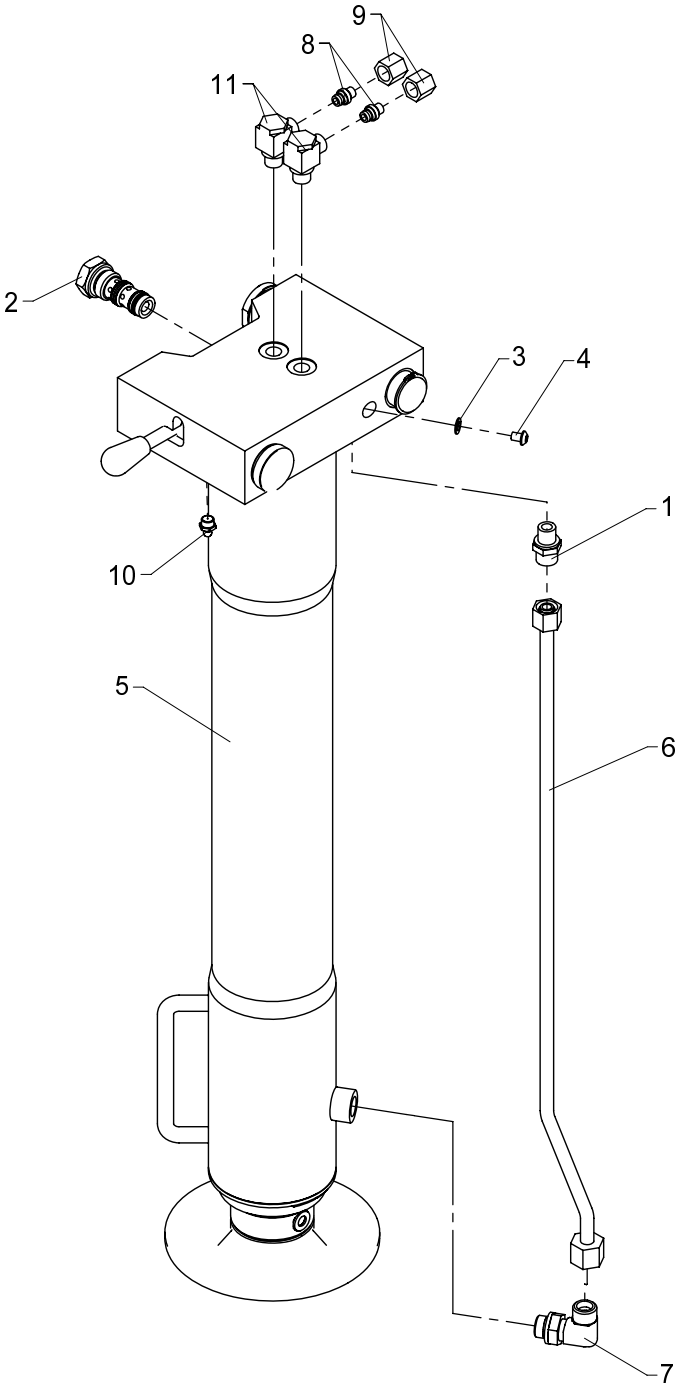

534 02 231

Stabilizer cylinder with check valve, type R-60°

From loader 1060234
To loader

Created 30-06-2009
Modified

Pos	Qty.	Part no.	Description	Remarks
1	1	25121	Connection	P-GEV 10 LR-WD
2	1	58496	Cartridge	
3	1	21109	Seal washer	ø7,1 x 12 x 1
4	1	31778	Screw, stainless	M6 x 8
5	1	6343800	Stab. cylinder, C80-520, typeR	
6	1	6340823	Pipe, R	
7	1	26899	Elbow connection	10 mm - 3/8"
8	2	26166	Blanking plug	VSD 8 L
9	2	25181	Coupling nut	M 8 L
10	1	31318	Lubricator	1/8" RG
11	2	25113	Banjo connection	RSWV 8 LR

15/105 - 17/117 SL & DL Parts

63 42 700
63 42 690
Internal ref. 63 42 680

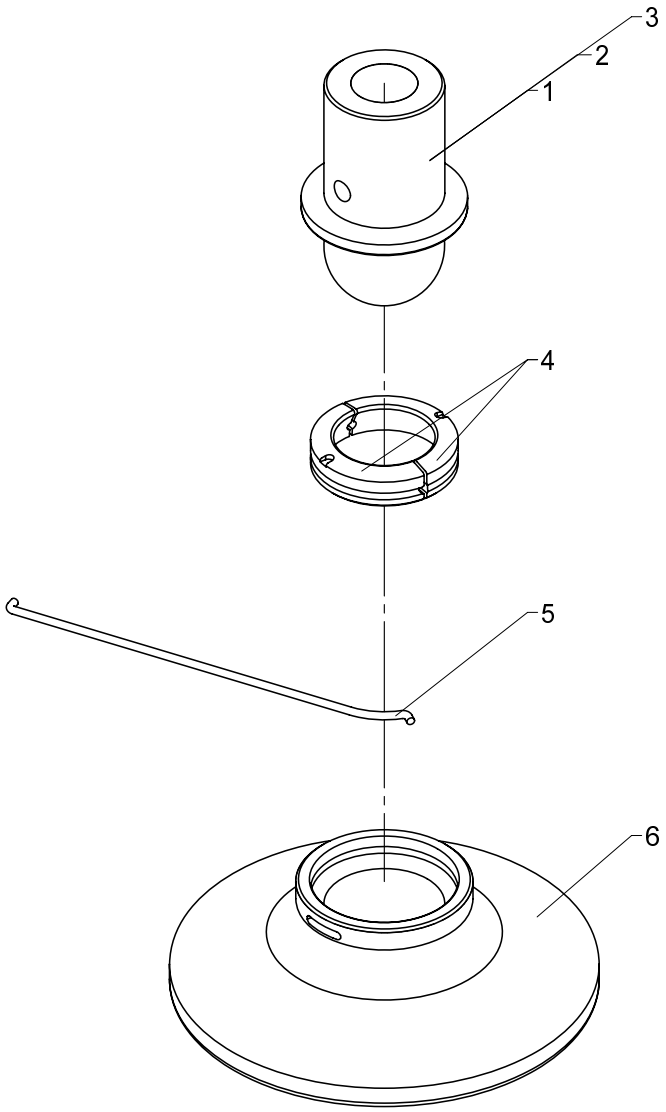

Mounting tool available, See sect. 533 25 060

534 02 235

Foot plate with ball joint, cpl. (ø160)

From loader 1060001
To loader
Created
Modified

Pos	Qty.	Part no.	Description	Remarks
		6342680	Footplate + ball joint std.	
		6342690	Footplate + ball joint 100 mm	
		6342700	Footplate + ball joint 200 mm	
1	1	6341517	Ball joint, std.	
2	1	6341518	Ball joint, (100mm ext)	
3	1	6341519	Ball joint, (200mm ext)	
4	2	6341516	Ball seat catch	
5	1	33926	Locking wire	
6	1	68025	Footplate ø 160 mm	

15/105 - 17/117 SL & DL Parts

Internal ref. 63 40 800

Patentanmeldt.
Patent pending.
Patentangemeldet.
La demande de brêvet a été déposée.
Solicitud de patente.

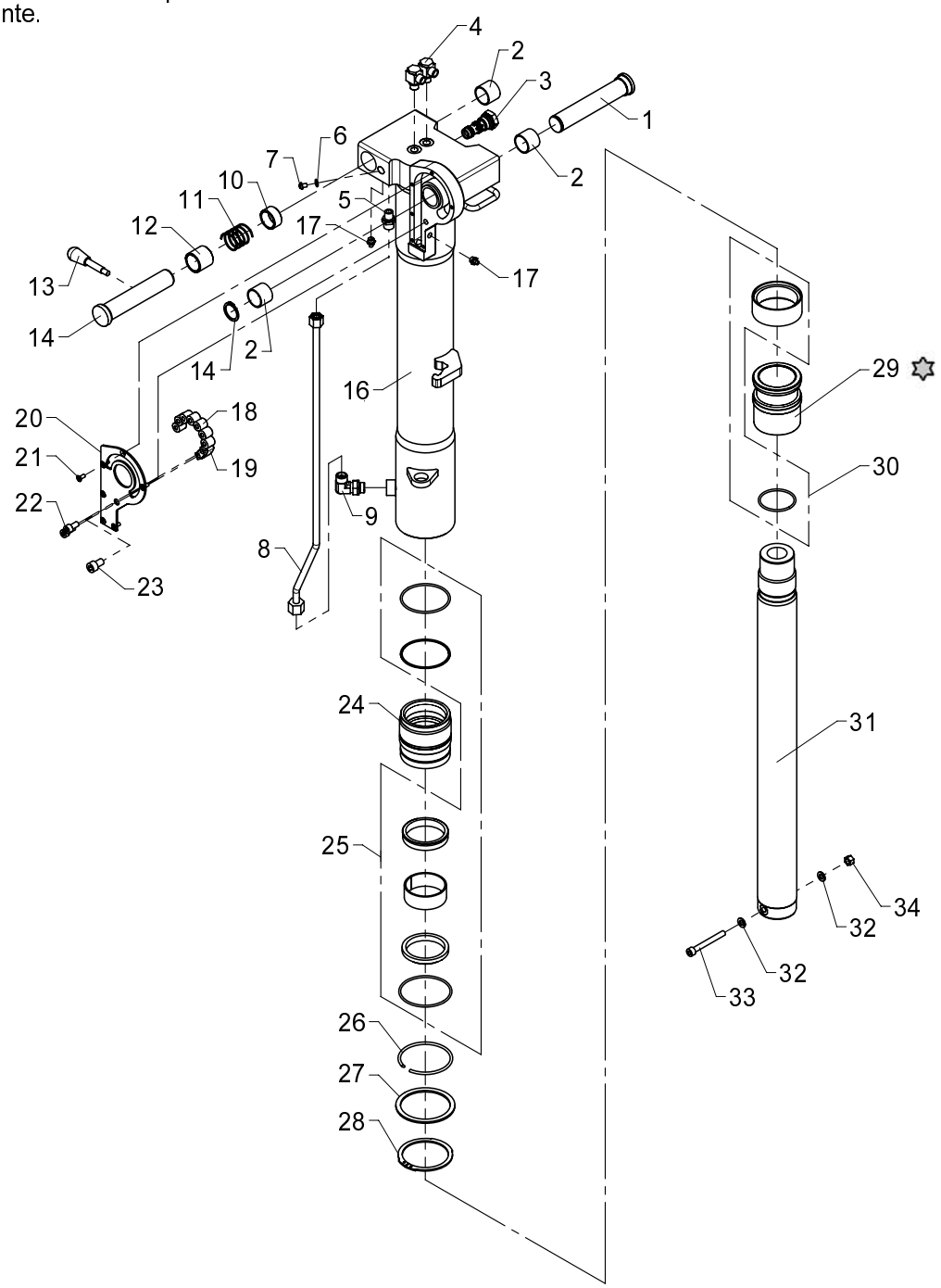

Loctite 243

534 02 240

From loader 1060001
To loader

Stabilizer cylinder, C80-520, type HR

Created 12-11-2008
Modified 15-09-2010

Pos	Qty.	Part no.	Description	Remarks
1	1	6340813	Pin	
2	3	23417	Composite bearing	ø28/32 x 25
3	1	58496	Cartridge	
4	2	25113	Banjo connection	RSWV 8 LR
5	1	25121	Connection	P-GEV 10 LR-WD
6	1	21109	Seal washer	ø7,1 x 12 x 1
7	1	31778	Screw, stainless	M6 x 8
8	1	6340825	Pipe	
9	1	26899	Elbow connection	12 mm - 3/8"
10	1	6340811	Distance ring	
11	1	33490	Compression spring	
12	1	6340824	Bushing	
13	1	64352	Lever with knob	
14	1	6340812	Pin	
14	1	33122	Circlip	28U
16	1	6340801	Cylinder pipe, HR	
17	2	31318	Lubricator	1/8" RG
18	7	23120	Cylindrical roller	RC 16 x 16 CD
19	1	6340808	Stop	
20	1	6340807	Cover	
21	6	32405	Sockethead screw	MK5 x 12
22	2	30449	Screw	MC8 x 16
23	1	30964	Screw	MC10 x 16
24	1	6340501	Guide	
25	1	6894110	Seal kit f. guide	
26	1	33400	Lock ring	
27	1	6340515	Back ring	
28	1	33143	Circlip	80U
29	1	6340516	Piston	
30	1	6894100	Seal kit f. piston	
31	1	6340503	Piston rod	
32	2	31147	Washer, stainless	
33	1	32428	Sockethead screw	MC8 x 70
34	1	30886	Lock nut, stainless	M8

534 02 245

15/105 - 17/117 SL & DL Parts

63 40 930
63 40 820
Internal ref. 63 40 810

Patentanmeldt.
Patent pending.
Patentangemeldet.
La demande de brêvet a été déposée.
Solicitud de patente.

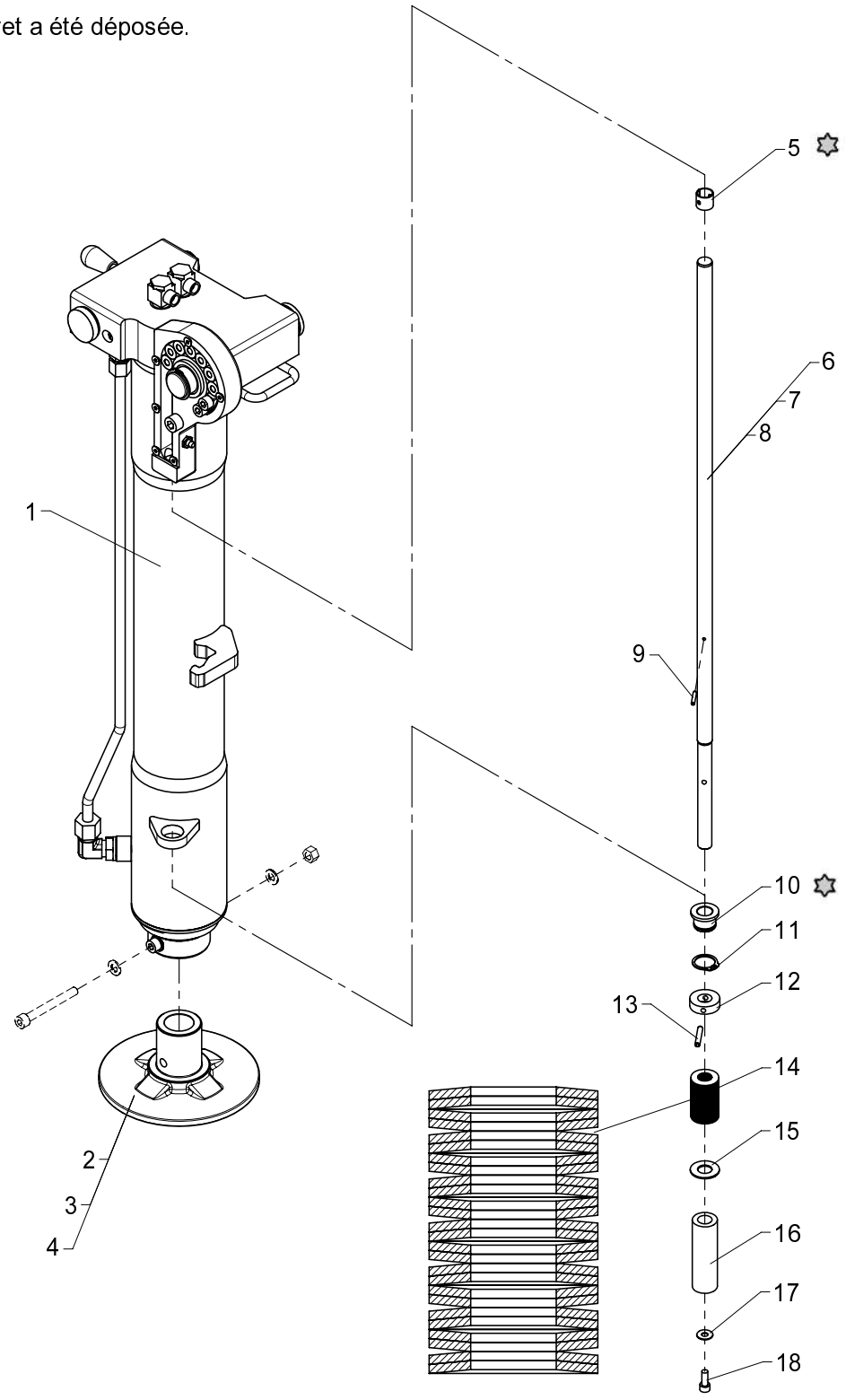

Loctite 601

Stabilizer cylinder incl. swing-up mechanism, type HR

Pos	Qty.	Part no.	Description	Remarks
		6340810	Stabilizer cylinder cpl. - std	
		6340820	Stabilizer cylinder,cpl.-100mm	
		6340930	Stabilizer cylinder,cpl.-200mm	
1	1	6340800	Stabilizer cylinder, type HR	
2	1	6340506	Footplate, standard	
3	1	6340509	Footplate, 100 mm extension	
4	1	6340512	Footplate, 200 mm extension	
5	1	23948	Bushing	PM 1515 DX
6	1	6340809	Compression rod, standard	
7	1	6340818	Compression rod, 100 mm	
8	1	6340819	Compression rod, 200 mm	
9	1	31202	Retaining pin	ø3 x 20
10	1	63597	Bushing	
11	1	33110	Circlip	22U
12	1	6340816	Washer	
13	1	31292	Retaining pin	ø4,5 x 30
14	26	33489	Disc spring	
15	1	31111	Washer	14 mm
16	1	6340815	Pipe	
17	1	32306	Washer	6 mm
18	1	30424	Screw	MC6 x 16

15/105 - 17/117 SL & DL Parts

Internal ref. 63 41 500

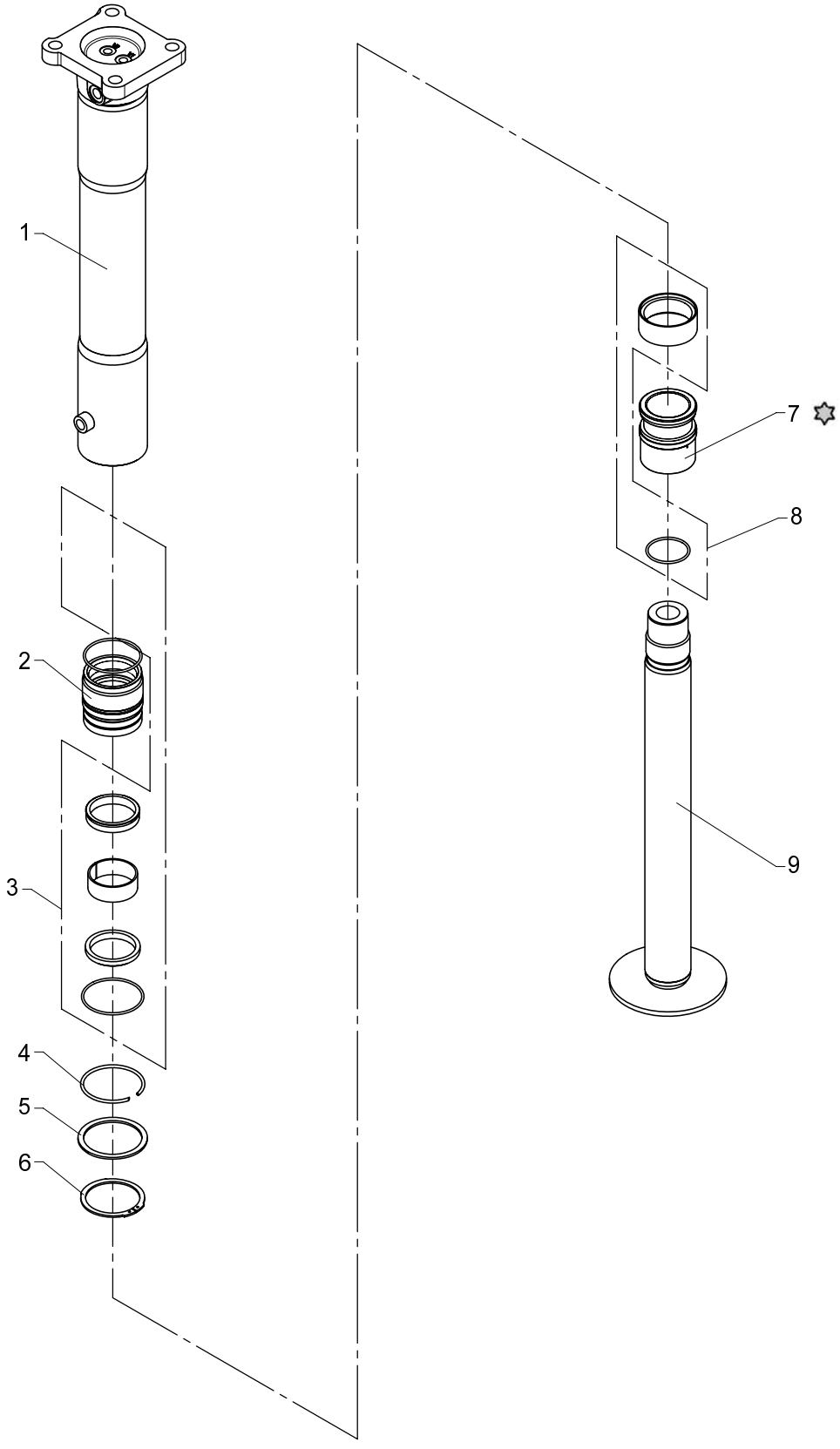

Loctite 243

Stabilizer cylinder, C80-440, type V

534 02 260

From loader 1060001
To loader

Created 12-11-2008
Modified

Pos	Qty.	Part no.	Description	Remarks
1	1	6340941	Cylinder tube, fixed leg	
2	1	6340501	Guide	
3	1	6894110	Seal kit f. guide	
4	1	33400	Lock ring	
5	1	6340515	Back ring	
6	1	33143	Circlip	80U
7	1	6340516	Piston	
8	1	6894100	Seal kit f. piston	
9	1	6340943	Piston rod	

15/105 - 17/117 SL & DL Parts

Internal ref. 63 41 510

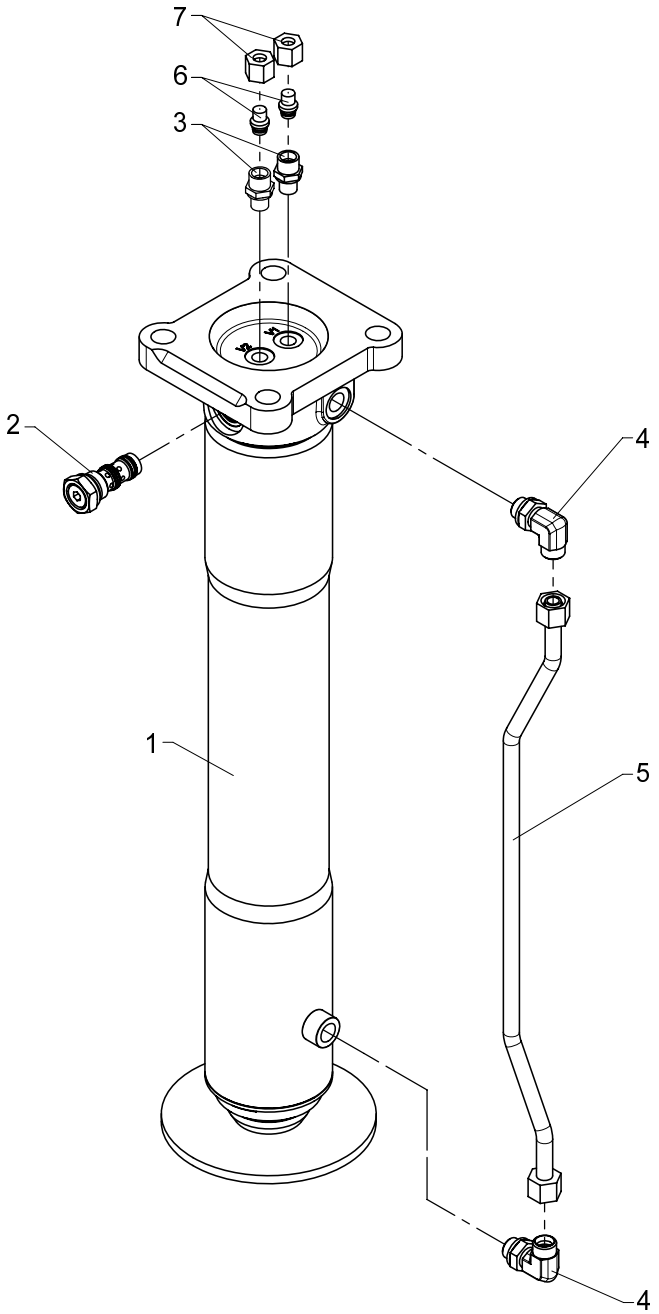

534 02 270

From loader 1060001
To loader

Created 12-11-2008
Modified

Stabilizer cylinder with check valve, C80-440, type V

Pos	Qty.	Part no.	Description	Remarks
1	1	6341500	Stabilizer cylinder	
2	1	58496	Cartridge	
3	2	25121	Connection	P-GEV 10 LR-WD
4	2	26897	Elbow connection	12 mm - 3/8"
5	1	6340945	Pipe	
6	2	25202	Blanking plug	VSD 10 L
7	2	25182	Coupling nut	M 10 L

15/105 - 17/117 SL & DL Parts

Internal ref. 63 44 210

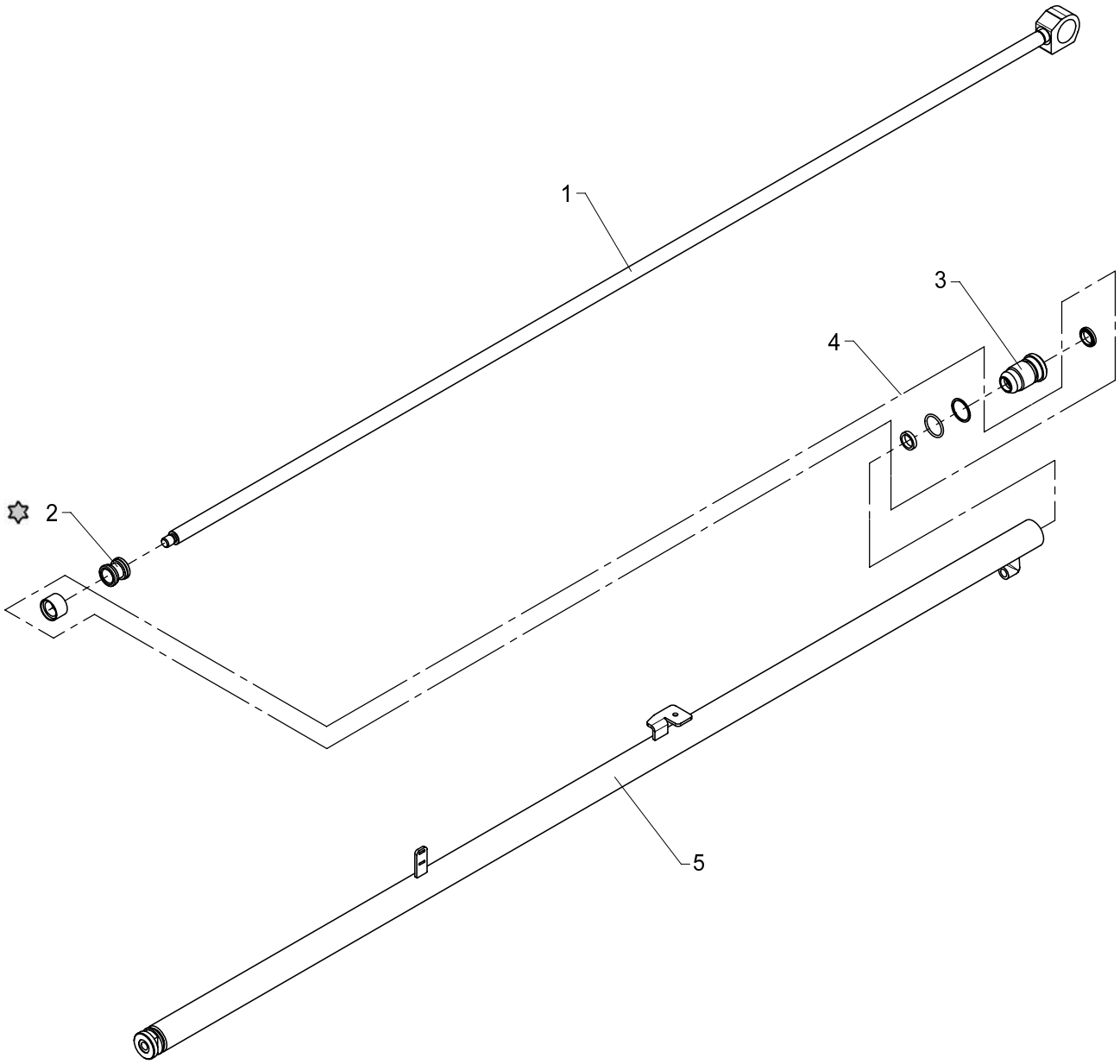

✡ Loctite 243

534 02 300

From loader 1060001
To loader

Created 12-11-2008
Modified 05-03-2010

Beam cylinder C32 - 1625

Pos	Qty.	Part no.	Description	Remarks
1	1	6344214	Piston rod	
2	1	6306242	Piston	
3	1	6043034	Guide	
4	1	6892290	Seal kit	
5	1	6344211	Cylinder pipe	

15/105 - 17/117 SL & DL Parts

Internal ref. 63 44 220

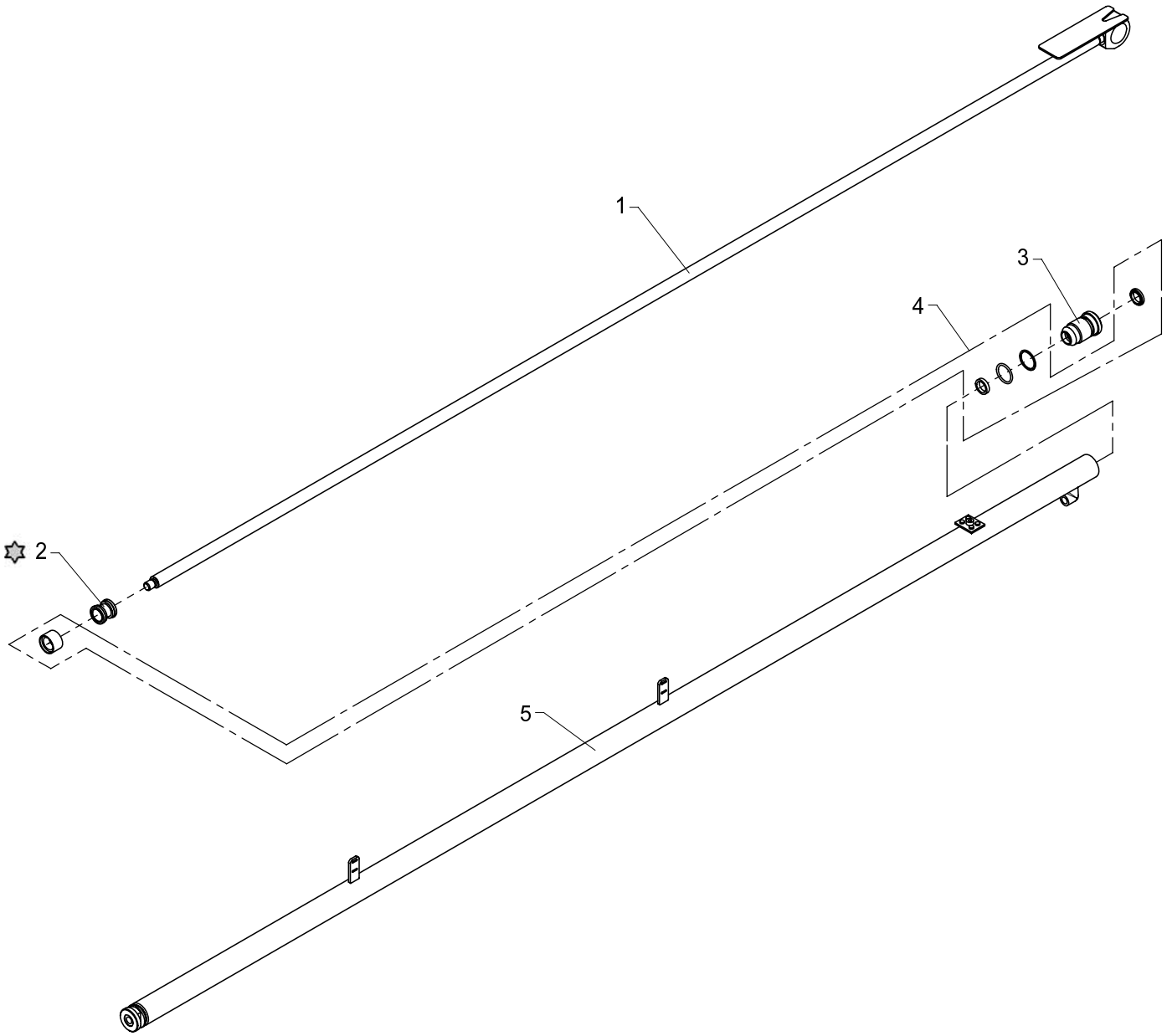

Loctite 243

534 02 310

From loader 1060001
To loader

Created 12-11-2008
Modified 05-03-2010

Beam cylinder C32 - 2065

Pos	Qty.	Part no.	Description	Remarks
1	1	6344223	Piston rod	
2	1	6306242	Piston	
3	1	6043034	Guide	
4	1	6892290	Seal kit	
5	1	6344221	Cylinder pipe	

15/105 - 17/117 SL & DL Parts

Internal ref. 63 40 790

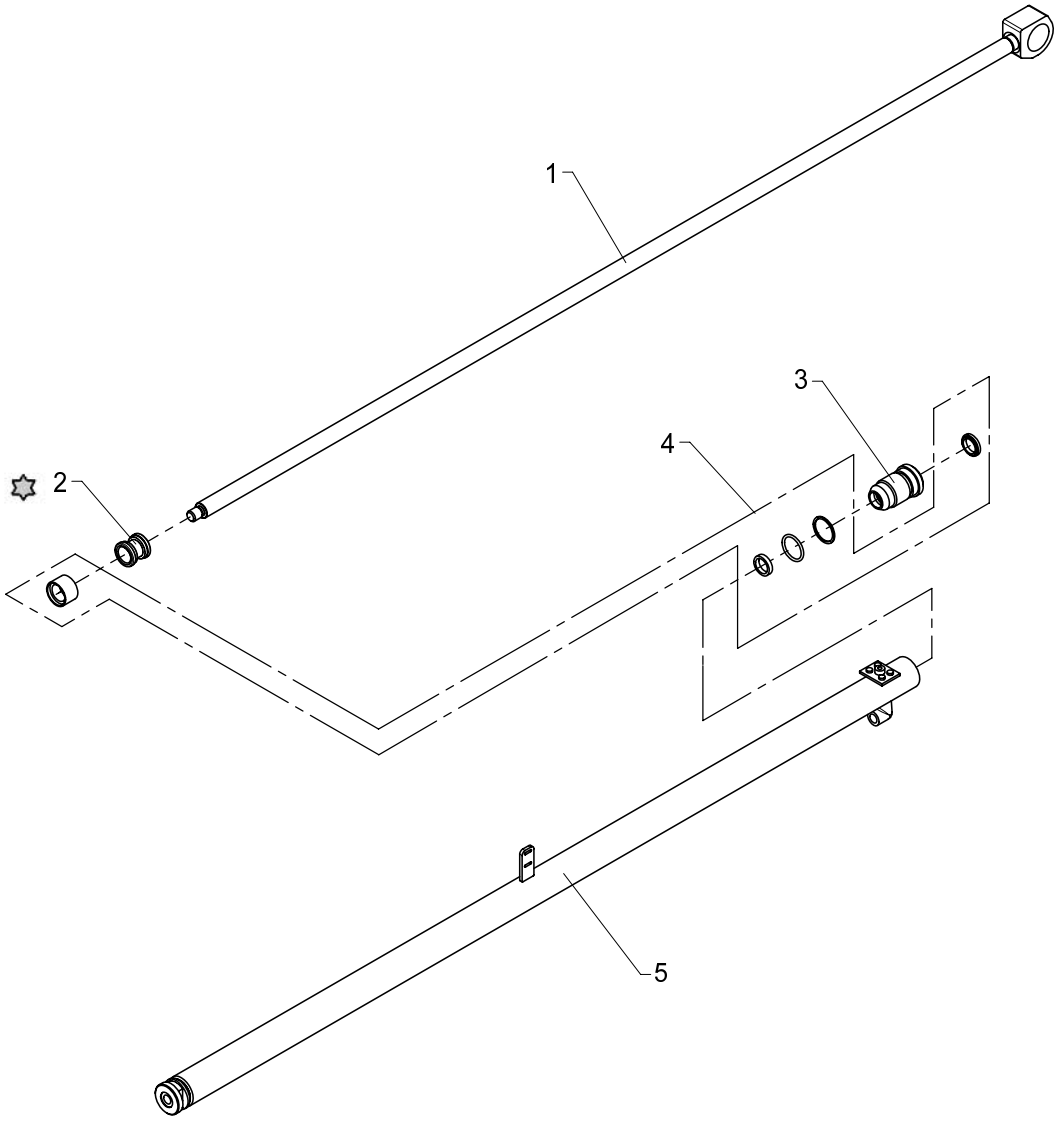

✡ Loctite 243

Beam cylinder C32 - 1137

534 02 320

From loader 1060001
To loader

Created 12-11-2008
Modified

Pos	Qty.	Part no.	Description	Remarks
1	1	6340792	Piston rod	
2	1	6306242	Piston	
3	1	6043034	Guide	
4	1	6892290	Seal kit	
5	1	6340791	Cylinder tube	

15/105 - 17/117 SL & DL Parts

Internal ref. 63 40 290

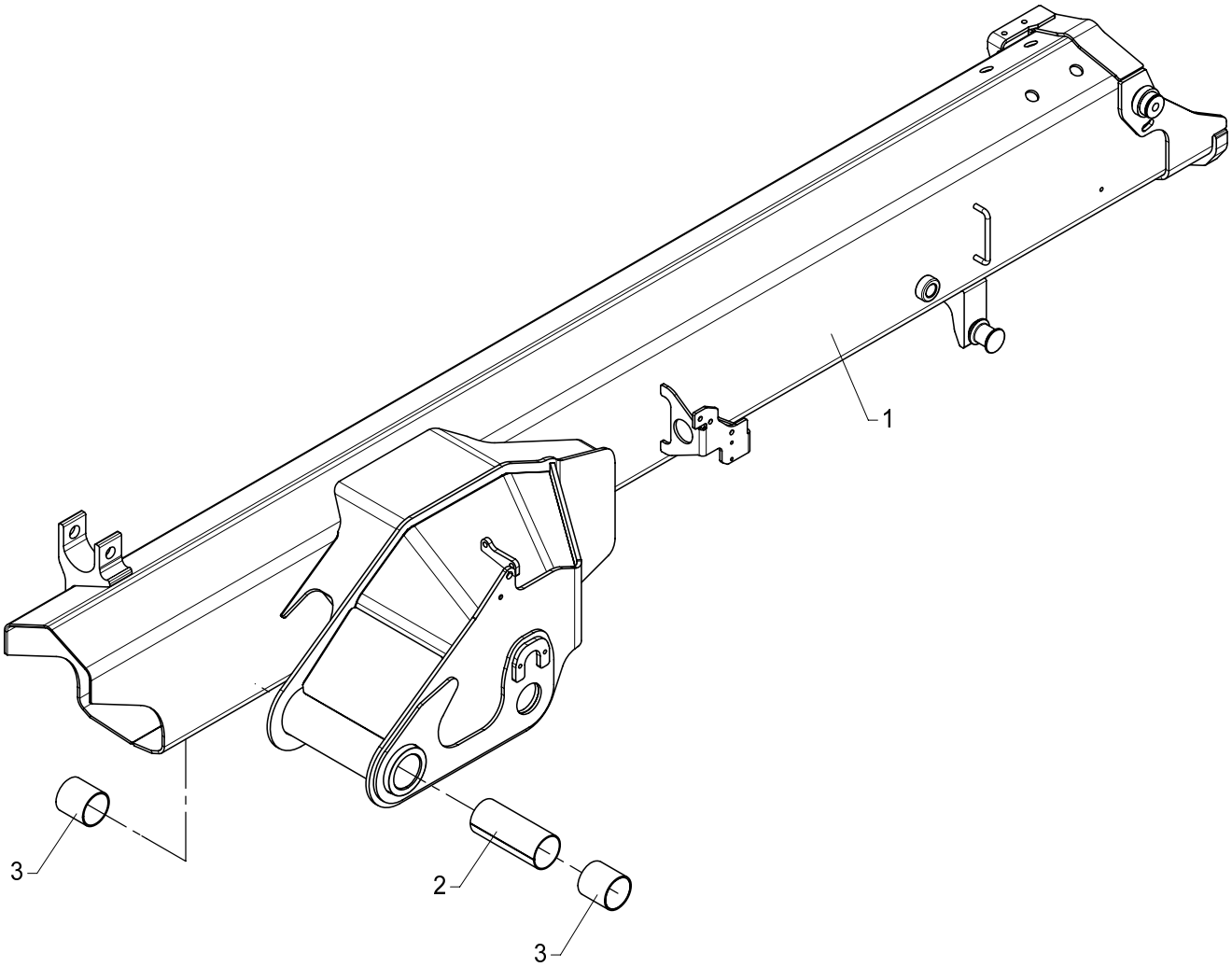

534 03 010

Jib, complete

From loader 1060001
To loader 1060386

Created 12-11-2008
Modified

Pos	Qty.	Part no.	Description	Remarks
1	1	6340280	Jib	6340281
2	1	63475	Plate	
3	2	23410	Composite bearing	ø55/60 x 60

15/105 - 17/117 SL & DL Parts

Internal ref. 63 40 290

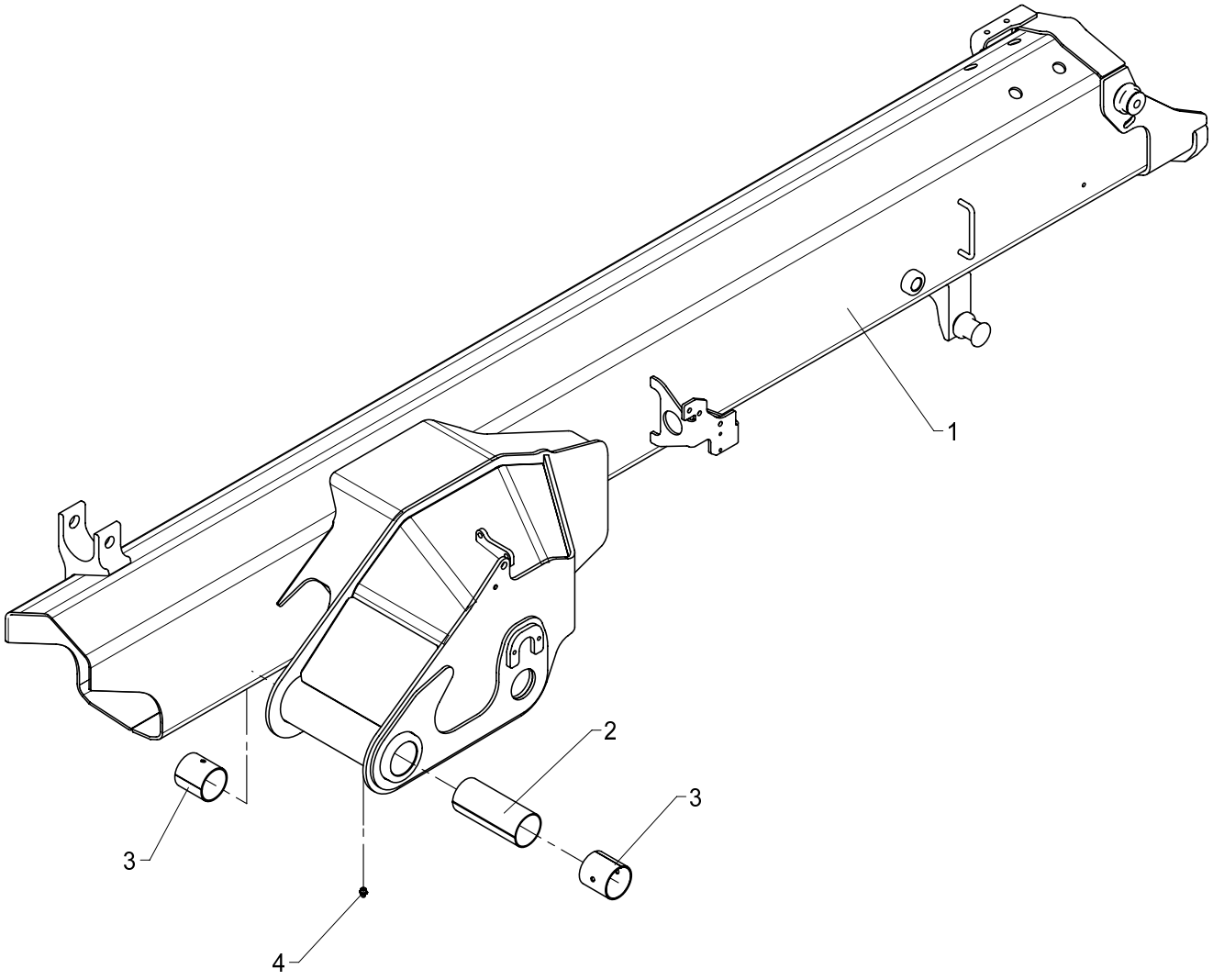

534 03 010 A

From loader 1060001
To loader

Created 15-07-2010
Modified

Jib, complete

Pos	Qty.	Part no.	Description	Remarks
1	1	6340280	Jib	6340281
2	1	63475	Plate	
3	2	23419	Bushing	PM 5560 DX
4	1	31318	Lubricator	1/8" RG

15/105 - 17/117 SL & DL Parts

Internal ref. 63 40 980

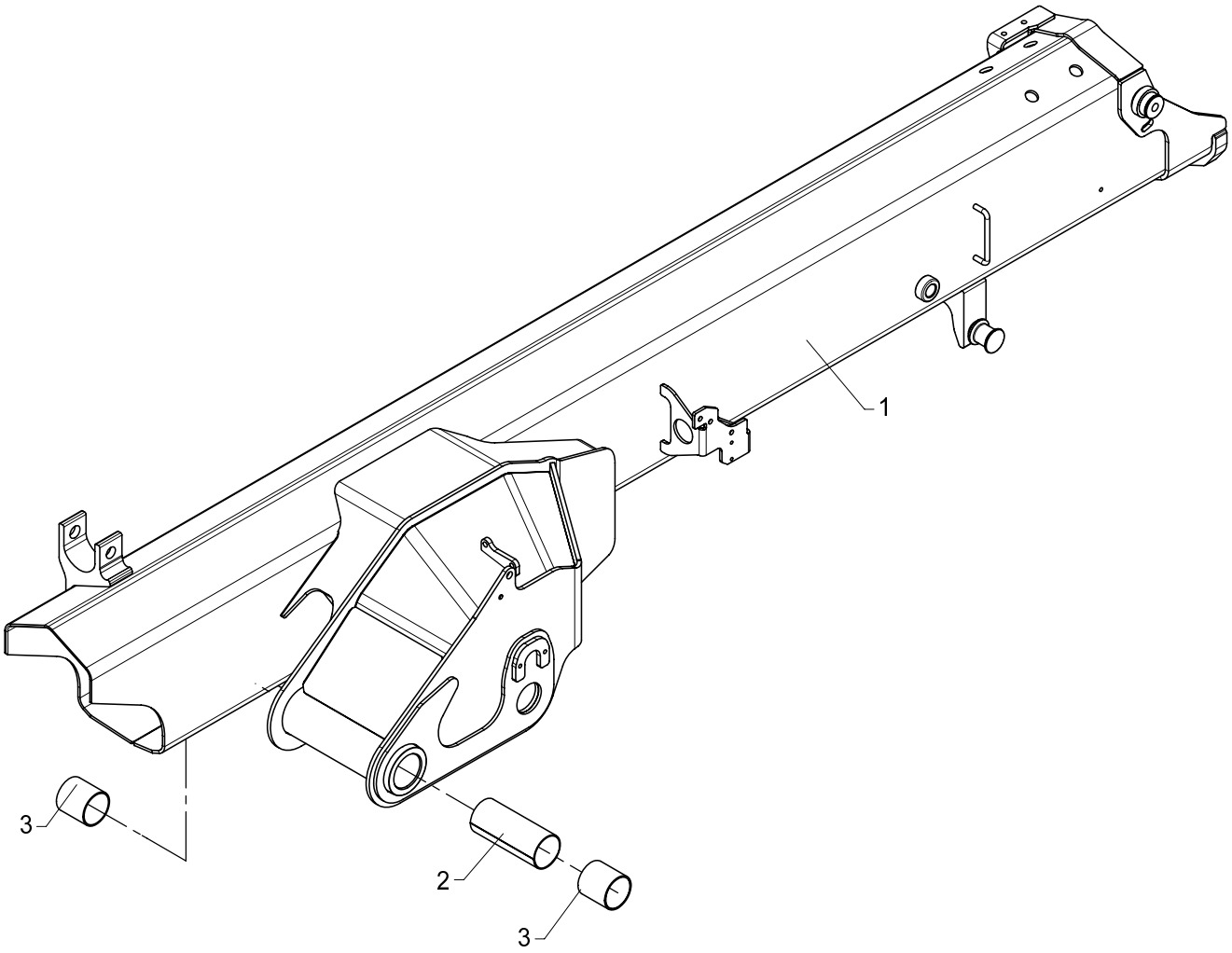

534 03 020

Jib, complete (winch)

From loader 1060001
To loader 1060386

Created 12-11-2008
Modified

Pos	Qty.	Part no.	Description	Remarks
1	1	6340970	Jib (winch)	6340971
2	1	63475	Plate	
3	2	23410	Composite bearing	ø55/60 x 60

15/105 - 17/117 SL & DL Parts

Internal ref. 63 40 980

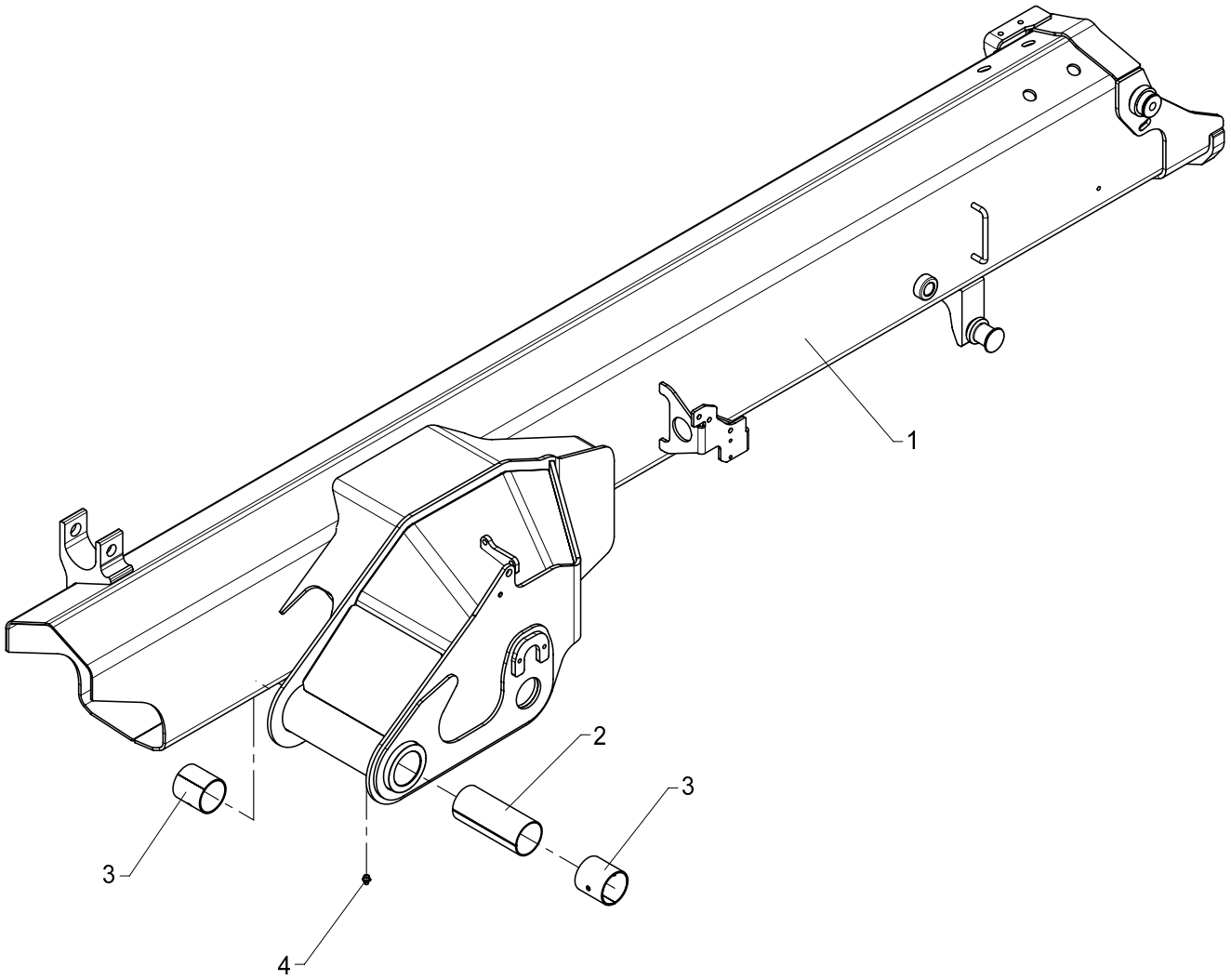

534 03 020 A

From loader 1060387
To loader

Created 15-07-2010
Modified

Jib, complete (winch)

Pos	Qty.	Part no.	Description	Remarks
1	1	6340970	Jib (winch)	6340971
2	1	63475	Plate	
3	2	23419	Bushing	PM 5560 DX
4	1	31318	Lubricator	1/8" RG

15/105 - 17/117 SL & DL Parts

Internal ref. 63 40 300

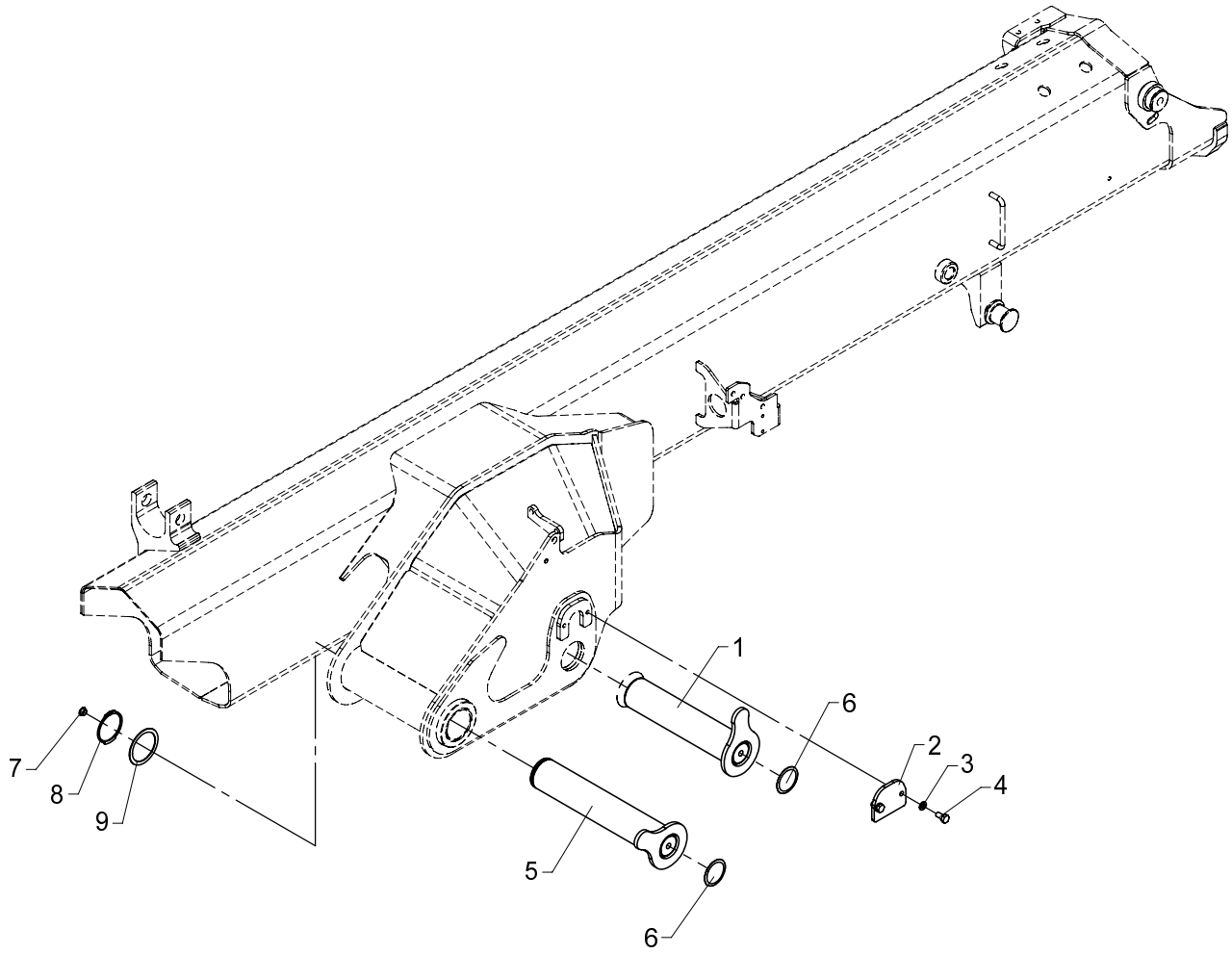

Fitting of jib and jib cylinder

534 03 030

From loader 1060001
To loader

Created 12-11-2008
Modified

Pos	Qty.	Part no.	Description	Remarks
1	1	6340206	Pin	
2	1	6340318	Lock plate	
3	2	31155	Spring washer	8 mm
4	2	30131	Set screw, stainless	M8 x 16
5	1	6340201	Pin	
6	2	63472	Plug	
7	1	64371	Plug	
8	1	33132	Circlip Din 471	55U
9	1	33277	Washer	PS 55 x 68 x 1,0

15/105 - 17/117 SL & DL Parts

Internal ref. 63 40 320

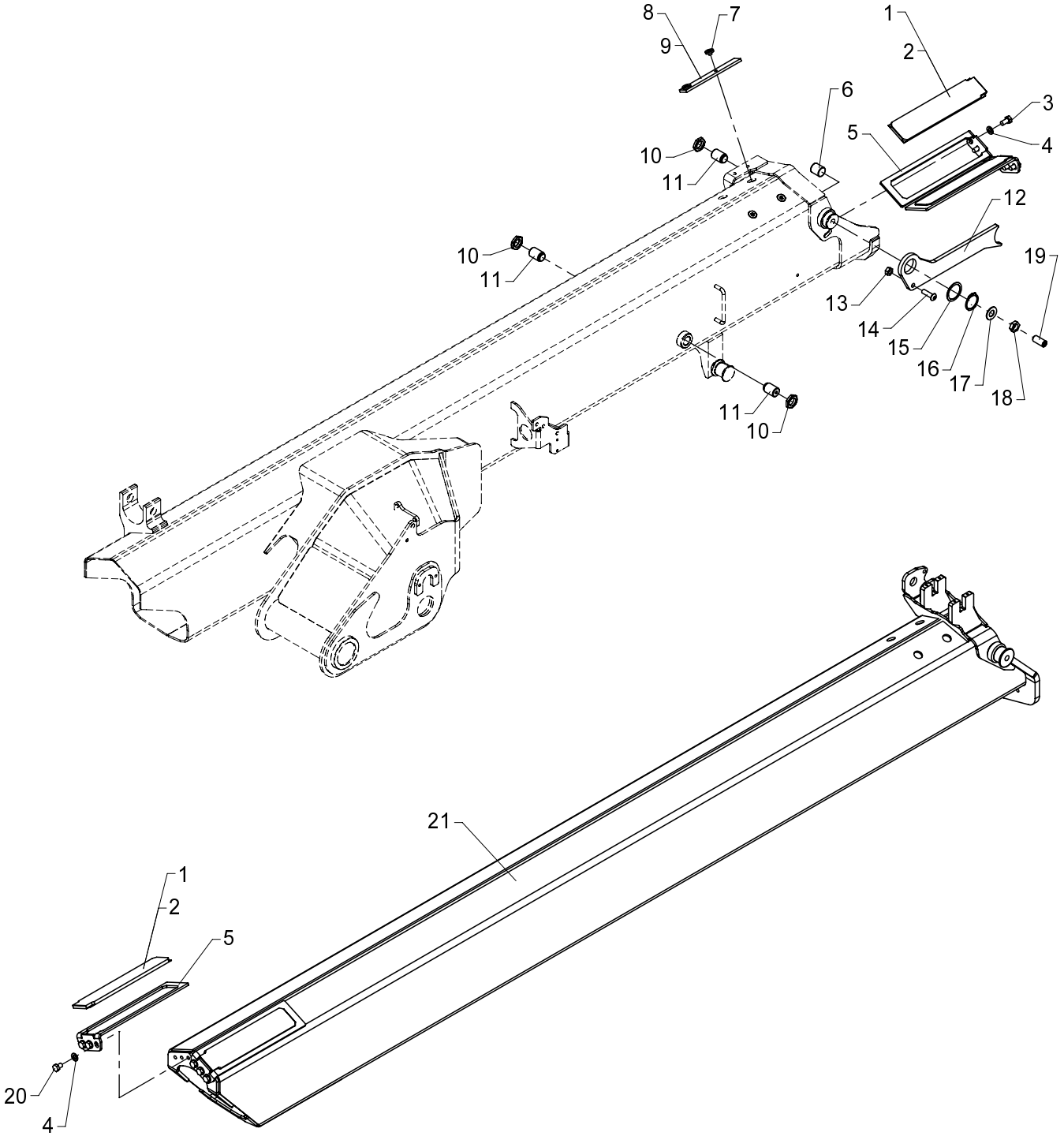

Jib extension I incl. fittings

534 03 100

From loader 1060001
To loader

Created 21-11-2008
Modified

Pos	Qty.	Part no.	Description	Remarks
1	4	63585	Slide block	8 mm
2	4	63586	Slide block	9 mm
3	6	31517	Set screw, stainless	M10 x 20
4	12	31177	Washer	10 mm
5	4	6300399	Bracket for slide block	
6	1	6340335	Guide	
7	4	31865	Torx screw M8 x 6 m	M8 x 6
8	2	6243004	Wear plate	6 mm
9	2	6244064	Wear plate	7 mm
10	3	32364	Counter nut	M24 x 2
11	3	6304409	Guide	
12	1	6340319	Stop	
13	1	30858	Nut	M10
14	1	31772	Screw	M10 x 35
15	1	31102	Washer	ø40 x 50 x 1,0
16	1	33121	Circlip	40U
17	1	31196	Washer	16 mm
18	1	30821	Counter nut	M16
19	1	30567	Pointed screw	MSP16 x 35
20	6	30152	Set screw	M10 x 14
21	1	6340321	Extension I	

15/105 - 17/117 SL & DL Parts

Internal ref. 63 40 660

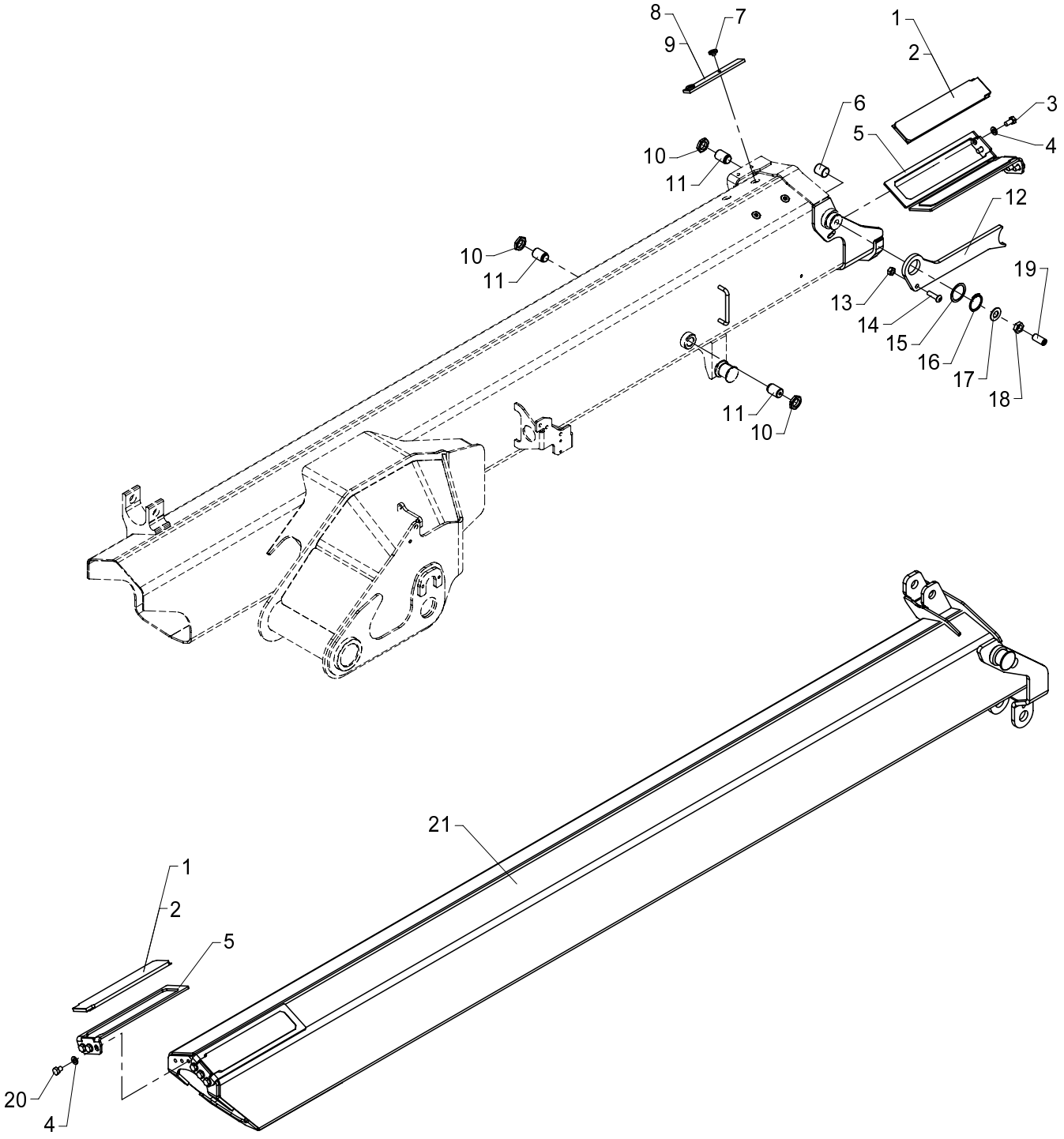

Jib extension K1 incl. fittings

534 03 105

From loader 1060001
To loader

Created 21-11-2008
Modified

Pos	Qty.	Part no.	Description	Remarks
1	4	63585	Slide block	8 mm
2	4	63586	Slide block	9 mm
3	6	31517	Set screw, stainless	M10 x 20
4	12	31177	Washer	10 mm
5	4	6300399	Bracket for slide block	
6	1	6340335	Guide	
7	4	31865	Torx screw M8 x 6 m	M8 x 6
8	2	6243004	Wear plate	6 mm
9	2	6244064	Wear plate	7 mm
10	3	32364	Counter nut	M24 x 2
11	3	6304409	Guide	
12	1	6340319	Stop	
13	1	30858	Nut	M10
14	1	31772	Screw	M10 x 35
15	1	31102	Washer	ø40 x 50 x 1,0
16	1	33121	Circlip	40U
17	1	31196	Washer	16 mm
18	1	30821	Counter nut	M16
19	1	30567	Pointed screw	MSP16 x 35
20	6	30152	Set screw	M10 x 14
21	1	6340661	Extension K1	

534 03 110

15/105 - 17/117 SL & DL Parts

Internal ref. 63 40 340

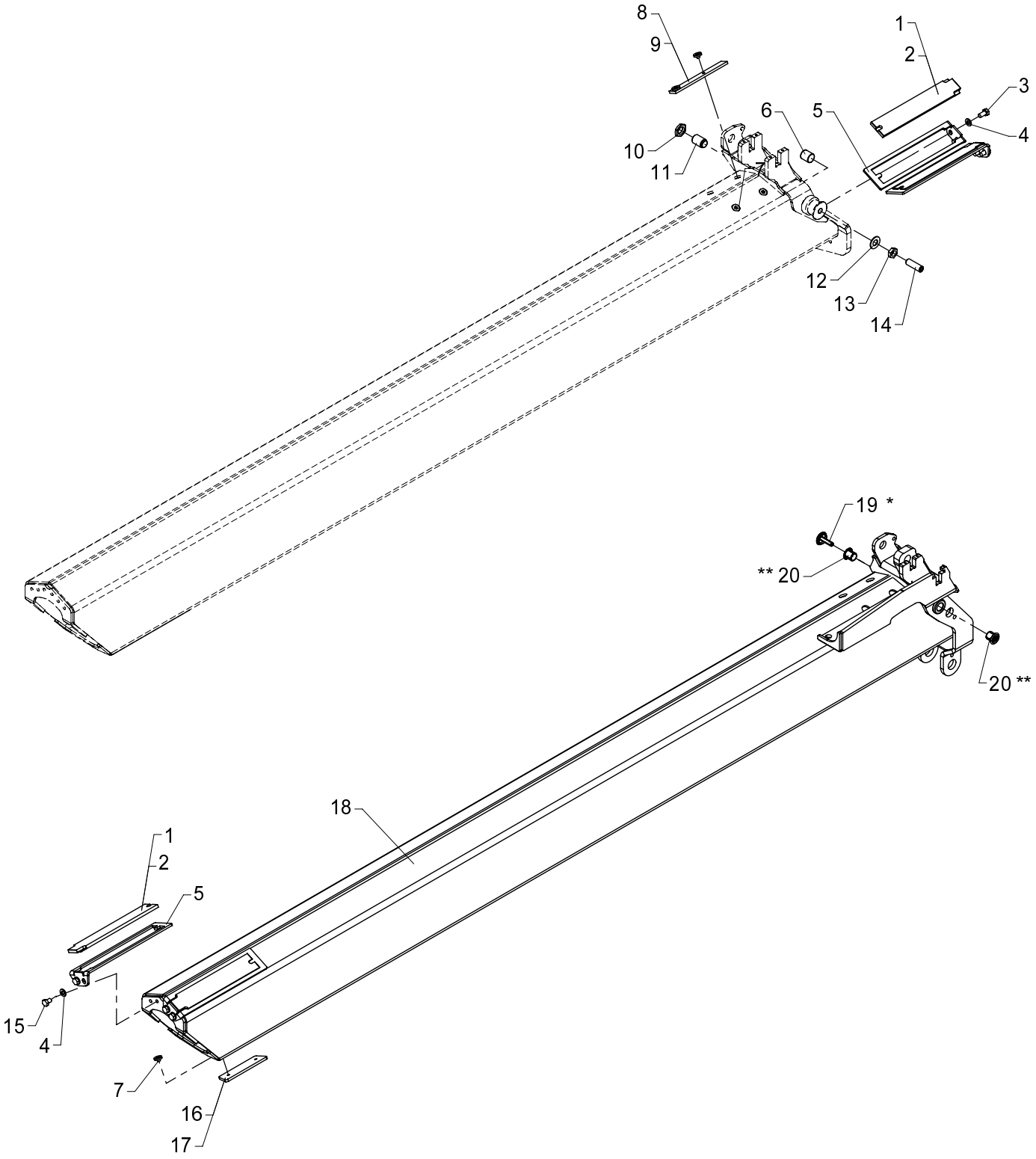

* Sættes kun i ved ingen ekstraventiler og indv. slangeføring.
** Sættes kun i når armen danner slutarm.

Jib extension K2 incl. fittings

534 03 110

From loader 1060001
To loader

Created 23-05-2006
Modified

Pos	Qty.	Part no.	Description	Remarks
		6340340	Jib extension K2 incl.fittings	
1	4	63588	Slide block	8 mm
2	4	63589	Slide block	9 mm
3	4	31517	Set screw, stainless	M10 x 20
4	8	31177	Washer	10 mm
5	4	6300368	Bracket for slide block	
6	1	6340335	Guide	
7	8	31865	Torx screw M8 x 6 m	M8 x 6
8	2	6243004	Wear plate	6 mm
9	2	6244064	Wear plate	7 mm
10	1	32364	Counter nut	M24 x 2
11	1	6304409	Guide	
12	1	31196	Washer	16 mm
13	1	30821	Counter nut	M16
14	1	32495	Pointed screw	MSP16 x 50
15	4	30152	Set screw	M10 x 14
16	2	6340377	Spacer	6 mm
17	2	6340378	Spacer	7 mm
18	1	6340341	Extension II	
19	1	63568	Plastic plug with logo	
20	2	63487	Plug	

534 03 120

15/105 - 17/117 SL & DL Parts

63 43 550
Internal ref. 63 40 360

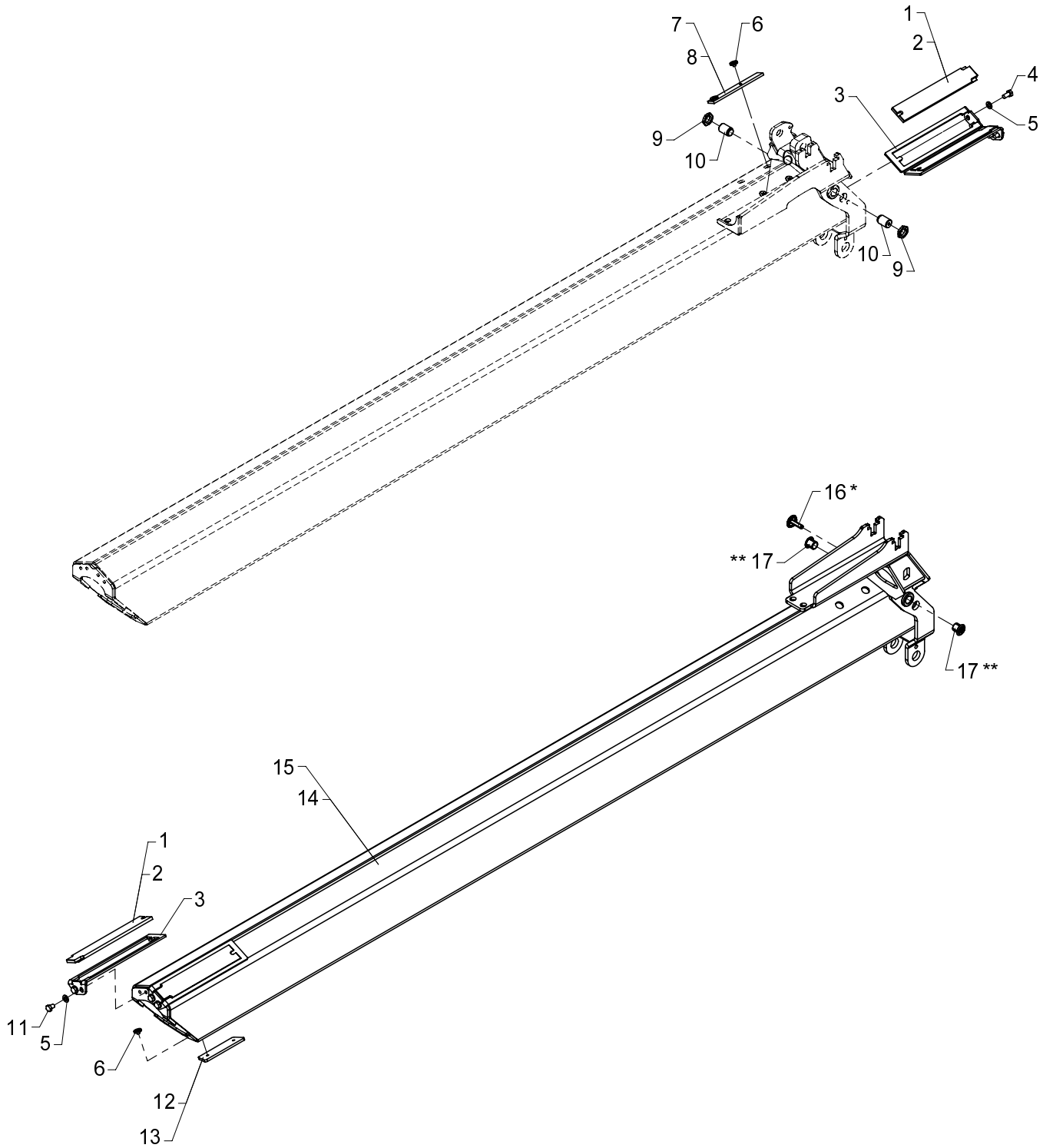

* Sættes kun i ved ingen ekstraventiler og indv. slangeføring.
** Sættes kun i når armen danner slutarm.

Jib extension K3 incl. fittings

534 03 120

From loader 1060001
To loader

Created 23-06-2006
Modified 22-03-2010

Pos	Qty.	Part no.	Description	Remarks
		6340360	Jib extension K3 incl.fittings	
		6343550	Jib extension K3i + fittings	
1	4	63588	Slide block	8 mm
2	4	63589	Slide block	9 mm
3	4	6300368	Bracket for slide block	
4	4	31517	Set screw, stainless	M10 x 20
5	8	31177	Washer	10 mm
6	8	31865	Torx screw M8 x 6 m	M8 x 6
7	2	6243004	Wear plate	6 mm
8	2	6244064	Wear plate	7 mm
9	2	32364	Counter nut	M24 x 2
10	2	6304409	Guide	
11	4	30152	Set screw	M10 x 14
12	2	6340377	Spacer	6 mm
13	2	6340378	Spacer	7 mm
14	1	6340361	Extension III	
15	1	6341361	Jib extension III-i	
16	1	63568	Plastic plug with logo	
17	2	63487	Plug	

534 03 130

15/105 - 17/117 SL & DL Parts

Internal ref. 63 40 380

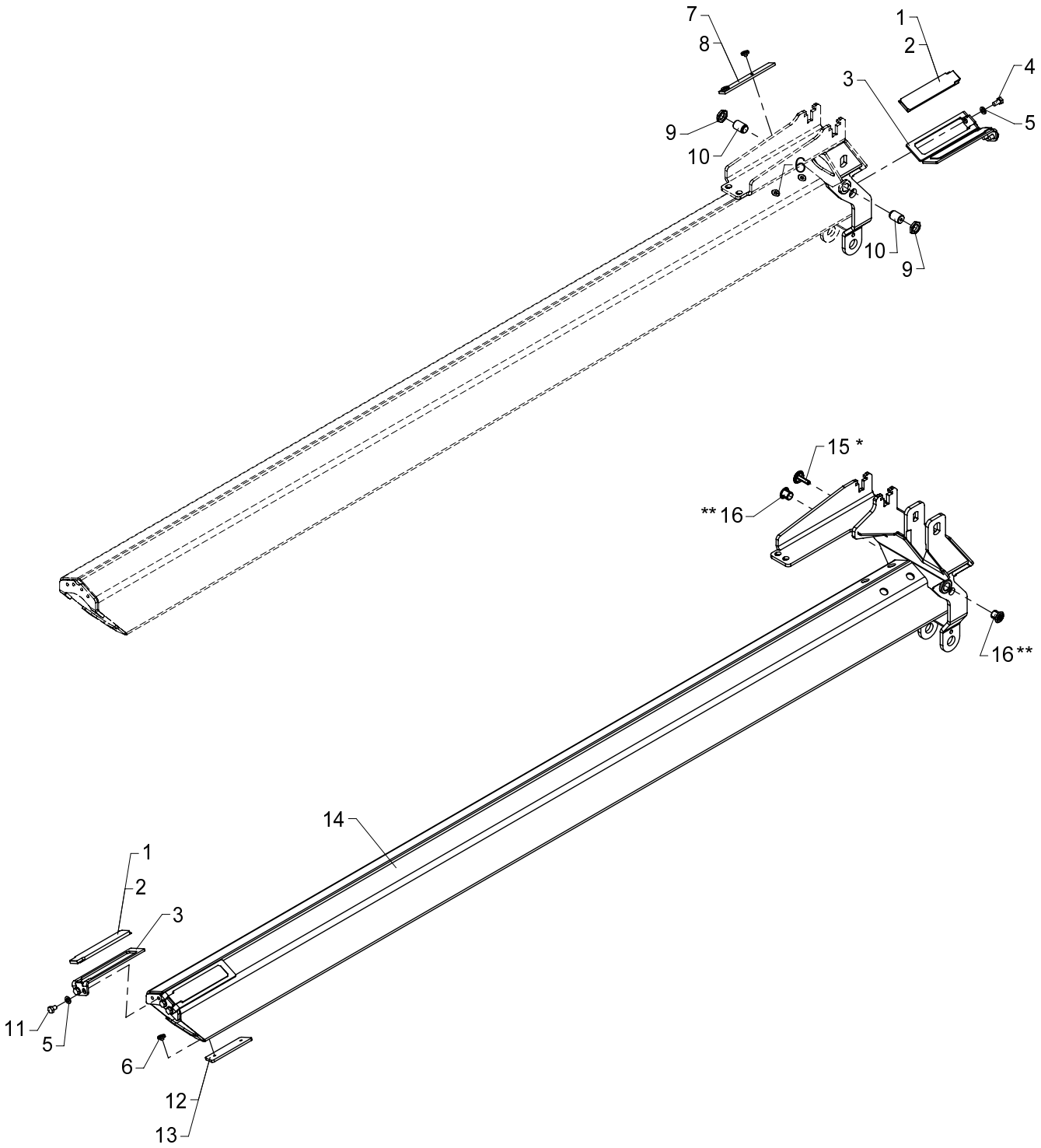

* Sættes kun i ved ingen ekstraventiler og indv. slangeføring.
** Sættes kun i når armen danner slutarm.

Jib extension K4 incl. fittings

534 03 130

From loader 1060001
To loader

Created 24-05-2006
Modified

Pos	Qty.	Part no.	Description	Remarks
		6340380	Jib extension K4 incl.fittings	
1	4	63591	Slide block	8 mm
2	4	63592	Slide block	9 mm
3	4	6340441	Bracket for slide block	
4	4	31517	Set screw, stainless	M10 x 20
5	8	31177	Washer	10 mm
6	8	31865	Torx screw M8 x 6 m	M8 x 6
7	2	6243004	Wear plate	6 mm
8	2	6244064	Wear plate	7 mm
9	2	32364	Counter nut	M24 x 2
10	2	6304409	Guide	
11	4	30152	Set screw	M10 x 14
12	2	6340377	Spacer	6 mm
13	2	6340378	Spacer	7 mm
14	1	6340381	Extension IV	
15	1	63568	Plastic plug with logo	
16	2	63487	Plug	

534 03 140

15/105 - 17/117 SL & DL Parts

Internal ref. 63 40 400

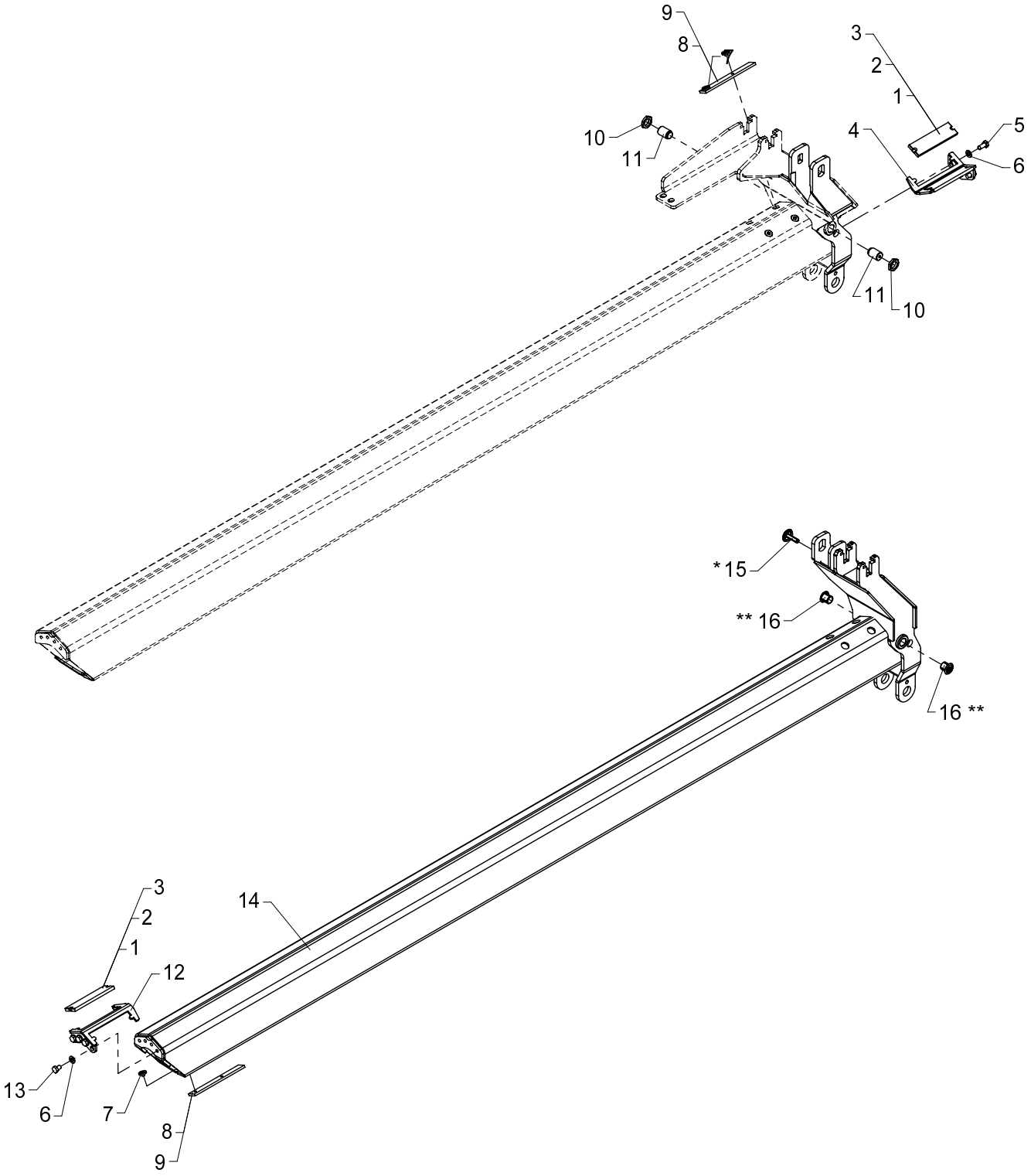

* Sættes kun i ved ingen ekstraventiler og indv. slangeføring.
** Sættes kun i når armen danner slutarm.

Jib extension K5 incl. fittings

534 03 140

From loader 1060001
To loader

Created 24-05-2006
Modified

Pos	Qty.	Part no.	Description	Remarks
		6340400	Jib extension K5 incl.fittings	
1	4	63573	Slide block	8 mm
2	4	63574	Slide block	9 mm
3	4	63575	Side block	10 mm
4	1	6340442	Bracket for slide block	
5	3	31517	Set screw, stainless	M10 x 20
6	7	31177	Washer	10 mm
7	8	31865	Torx screw M8 x 6 m	M8 x 6
8	4	6243004	Wear plate	6 mm
9	4	6244064	Wear plate	7 mm
10	2	32364	Counter nut	M24 x 2
11	2	6304409	Guide	
12	1	6340445	Bracket for slide block	
13	4	30152	Set screw	M10 x 14
14	1	6340401	Extension V	
15	1	63568	Plastic plug with logo	
16	2	63487	Plug	

534 03 150

15/105 - 17/117 SL & DL Parts

Internal ref. 63 40 420

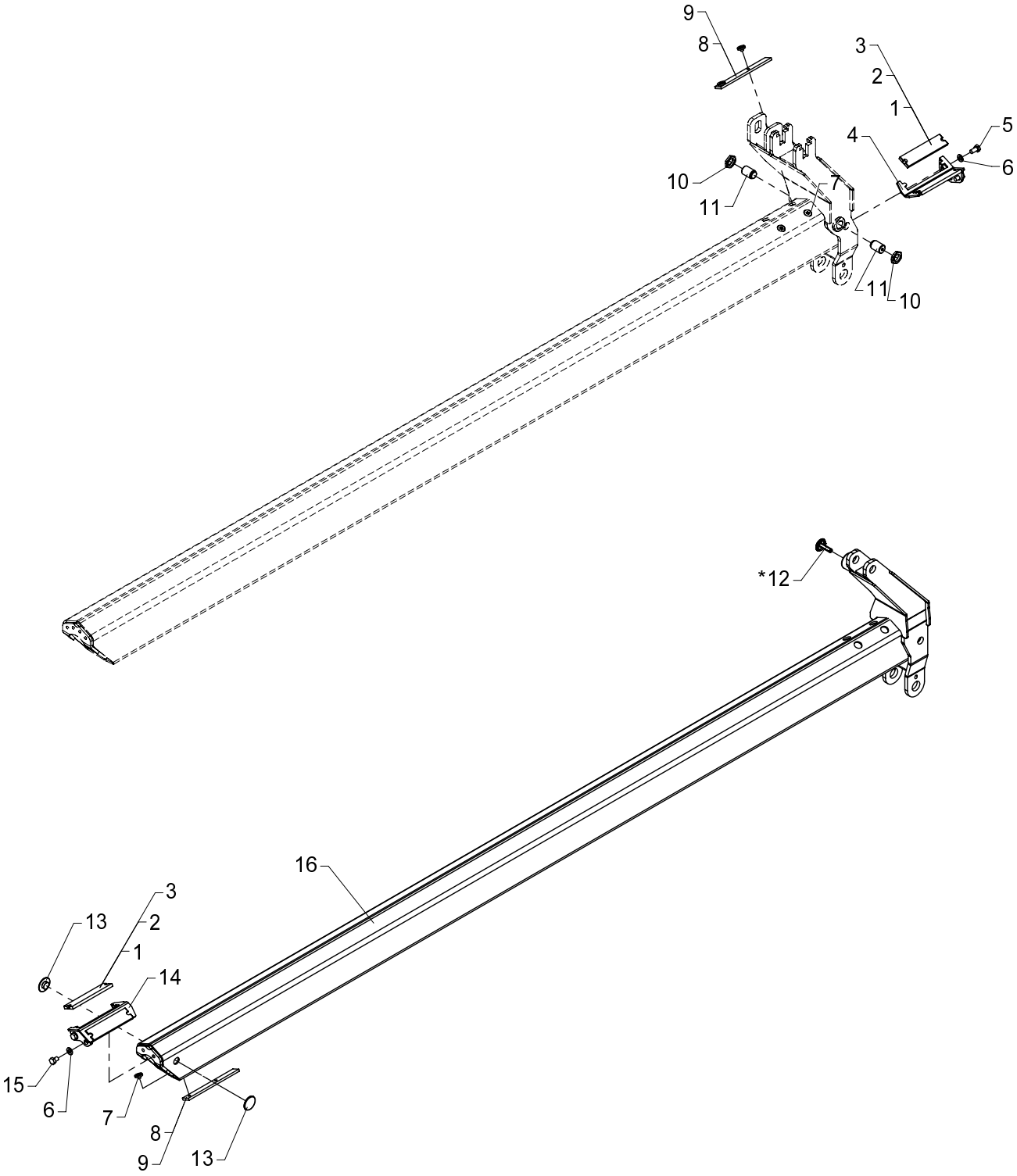

* Sættes kun i ved ingen ekstraventiler og indv. slangeføring.

Jib extension K6 incl. fittings

534 03 150

From loader 1060001
To loader

Created 18-05-2006
Modified

Pos	Qty.	Part no.	Description	Remarks
1	4	63570	Slide block	8 mm
2	4	63571	Slide block	9 mm
3	4	63572	Slide block	10 mm
4	1	6340447	Bracket for slide block	
5	3	31517	Set screw, stainless	M10 x 20
6	5	31177	Washer	10 mm
7	8	31865	Torx screw M8 x 6 m	M8 x 6
8	4	6243004	Wear plate	6 mm
9	4	6244064	Wear plate	7 mm
10	2	32364	Counter nut	M24 x 2
11	2	6304409	Guide	
12	1	63568	Plastic plug with logo	
13	2	6381484	Guide	
14	1	6340451	Bracket for slide block	
15	2	30152	Set screw	M10 x 14
16	1	6340421	Extension VI	

15/105 - 17/117 SL & DL Parts

Internal ref. 63 44 910

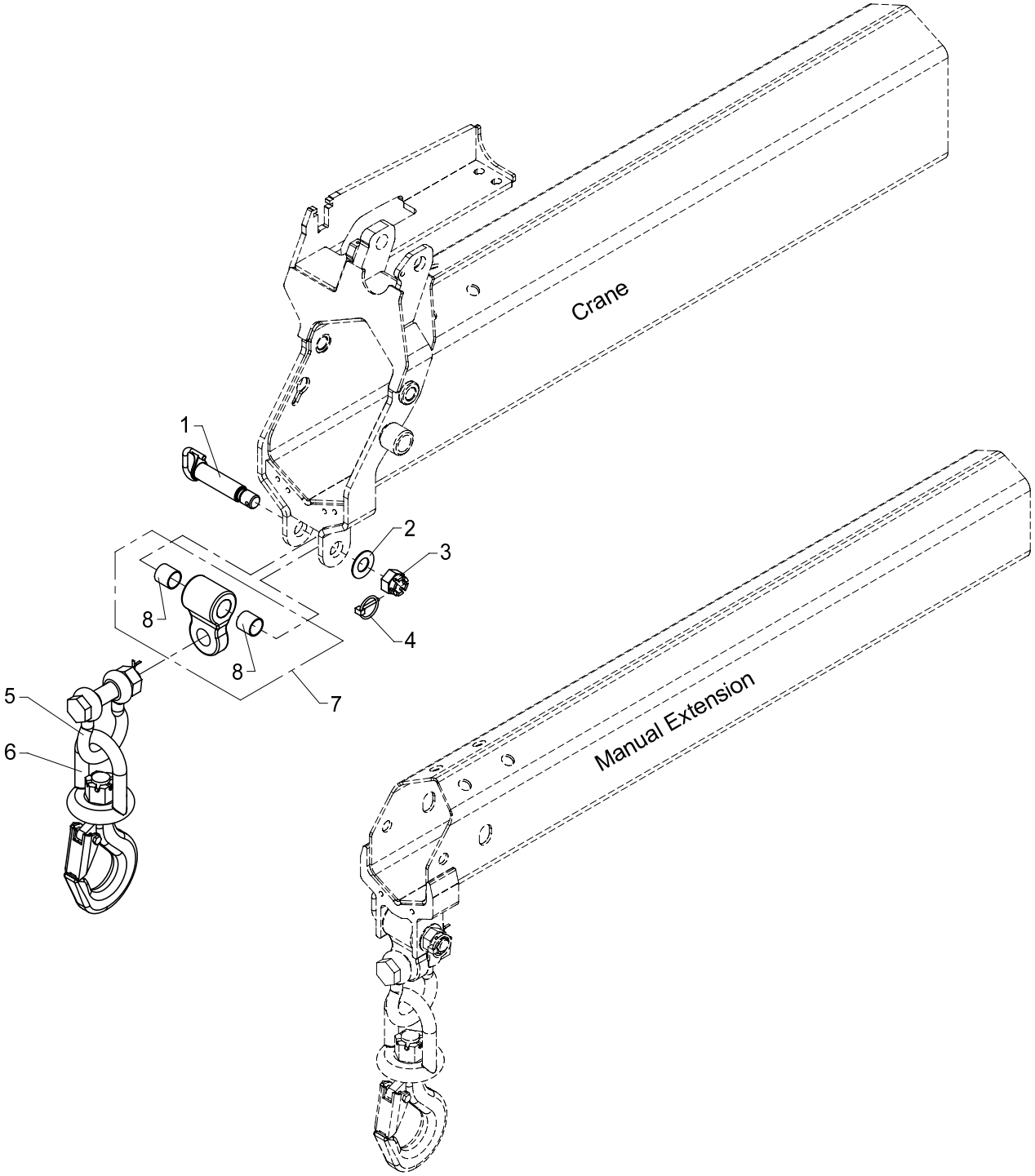

534 03 290

From loader 1060001
To loader

Created 03-06-2009
Modified 02-03-2010

Hook suspension

Pos	Qty.	Part no.	Description	Remarks
1	1	6304067	Pin for suspension	
2	1	31128	Washer	24 mm
3	1	30837	Nut	M24
4	1	31967	Ring split	ø4,5 x 40
5	1	62118	Shackle	
6	1	63282	Hook, SWL 8 t. black	
7	1	6292853	Hook suspension	
8	2	23945	Composite bearing	ø28/32 x 30

15/105 - 17/117 SL & DL Parts

Internal ref. 63 40 540

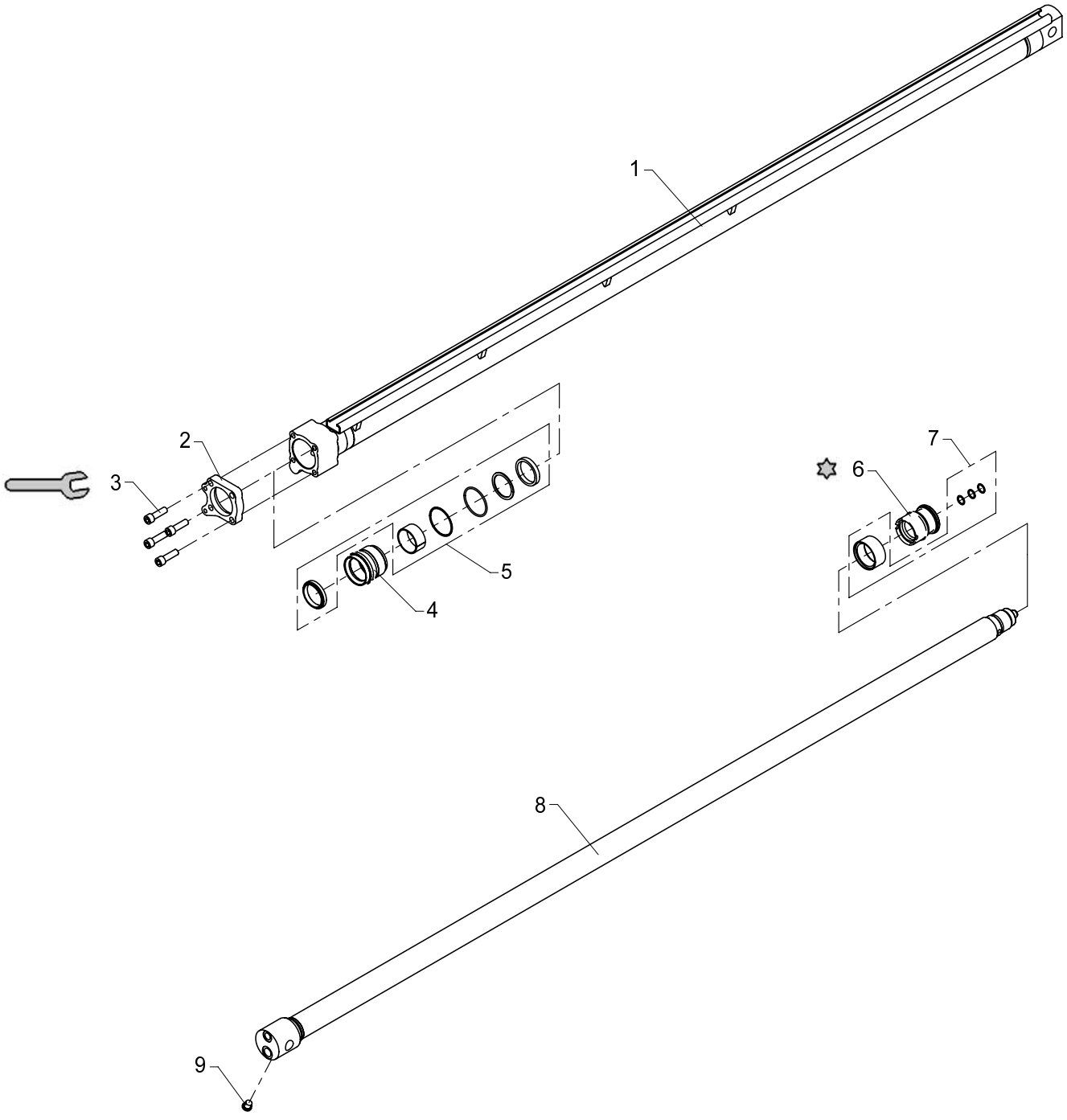

140 Nm

Loctite 243

Extension cylinder I (C63/50 x 1935)

534 03 300

From loader 1060001
To loader

Created 09-06-2009
Modified

Pos	Qty.	Part no.	Description	Remarks
1	1	6340545	Cylinder pipe	
2	1	6340553	Mounting flange	
3	4	30475	Screw	MC12 x 40
4	1	6340551	Guide	
5	1	6894130	Seal kit f. guide	
6	1	6340552	Piston	
7	1	6894120	Seal kit f. piston	
8	1	6340541	Piston rod	
9	1	25197	Plug	VS-R-1/4 WD

15/105 - 17/117 SL & DL Parts

Internal ref. 63 40 560

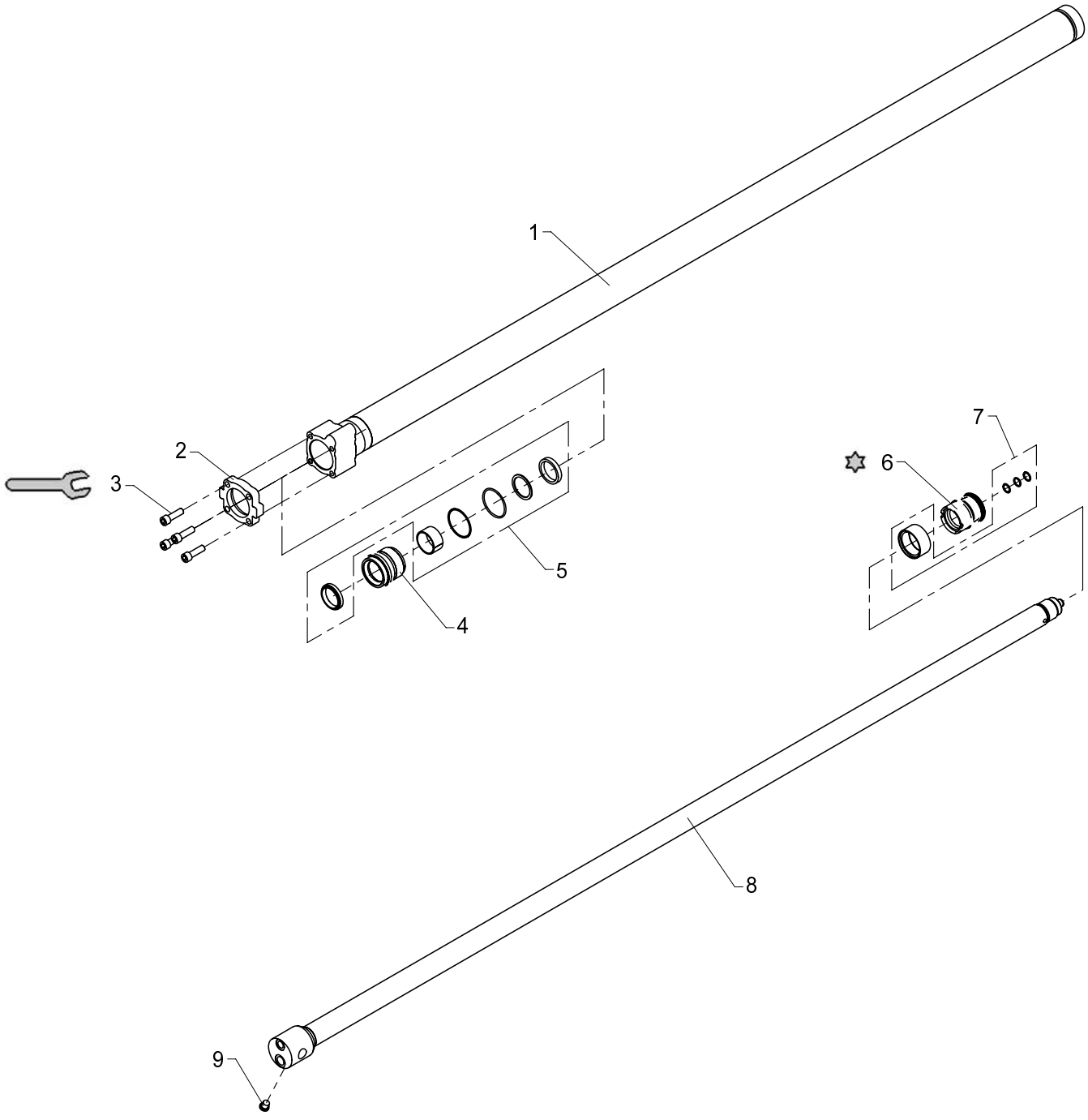

140 Nm

Loctite 243

Extension cylinder II (C63/45 x 2000)

534 03 310

From loader 1060001
To loader

Created 09-06-2009
Modified

Pos	Qty.	Part no.	Description	Remarks
1	1	6340565	Cylinder pipe	
2	1	6340567	Mounting flange	
3	4	30475	Screw	MC12 x 40
4	1	6340554	Guide	
5	1	6894140	Seal kit f. guide	
6	1	6340552	Piston	
7	1	6894120	Seal kit f. piston	
8	1	6340561	Piston rod	
9	1	25197	Plug	VS-R-1/4 WD

534 03 320

15/105 - 17/117 SL & DL Parts

Internal ref. 63 40 570

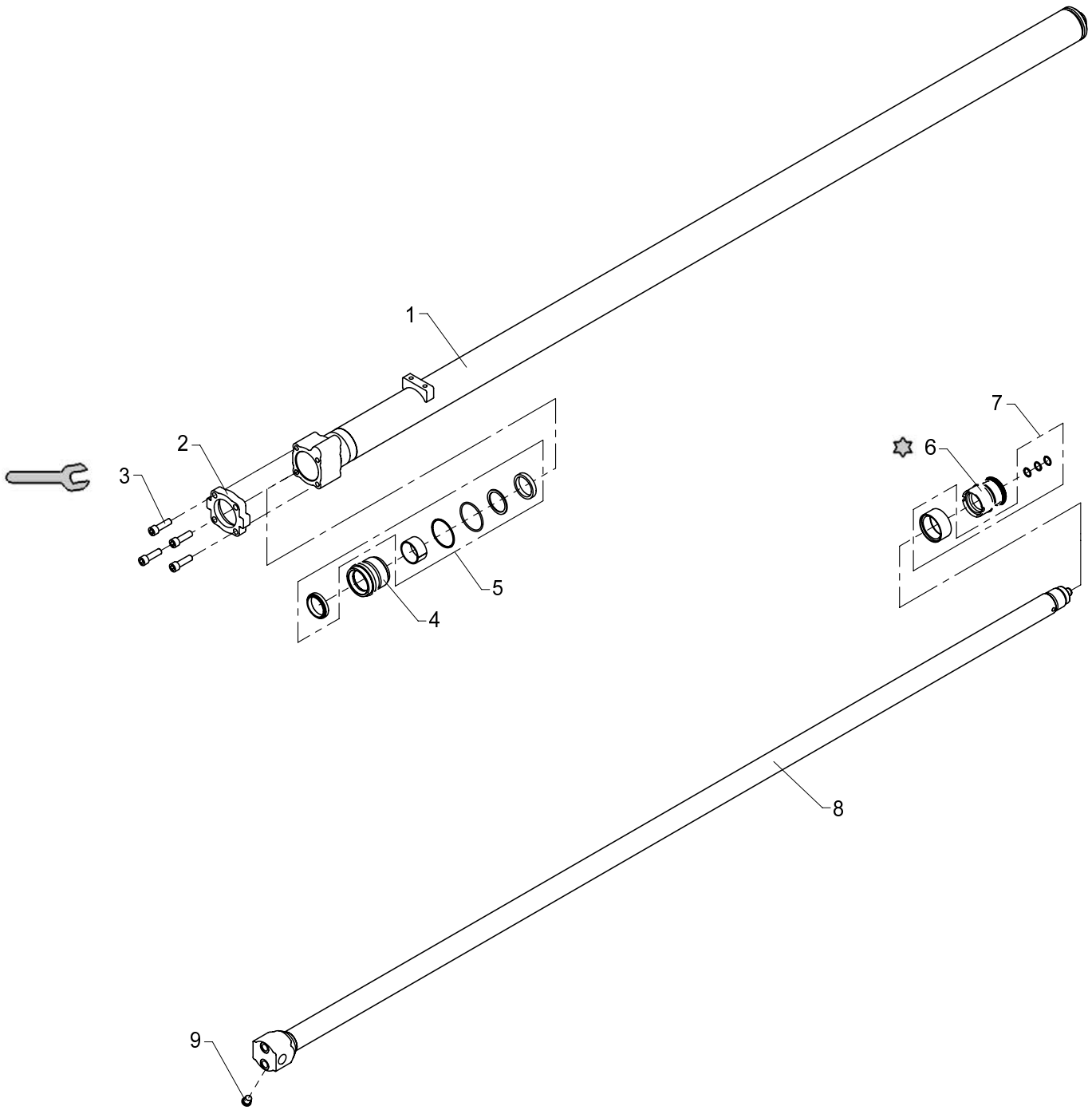

140 Nm

Loctite 243

Extension cylinder III (C63/45 x 2100)

534 03 320

From loader 1060001
To loader

Created 09-06-2009
Modified

Pos	Qty.	Part no.	Description	Remarks
1	1	6340575	Cylinder pipe	
2	1	6340567	Mounting flange	
3	4	30475	Screw	MC12 x 40
4	1	6340554	Guide	
5	1	6894140	Seal kit f. guide	
6	1	6340552	Piston	
7	1	6894120	Seal kit f. piston	
8	1	6340571	Piston rod	
9	1	25197	Plug	VS-R-1/4 WD

15/105 - 17/117 SL & DL Parts

Internal ref. 63 40 580

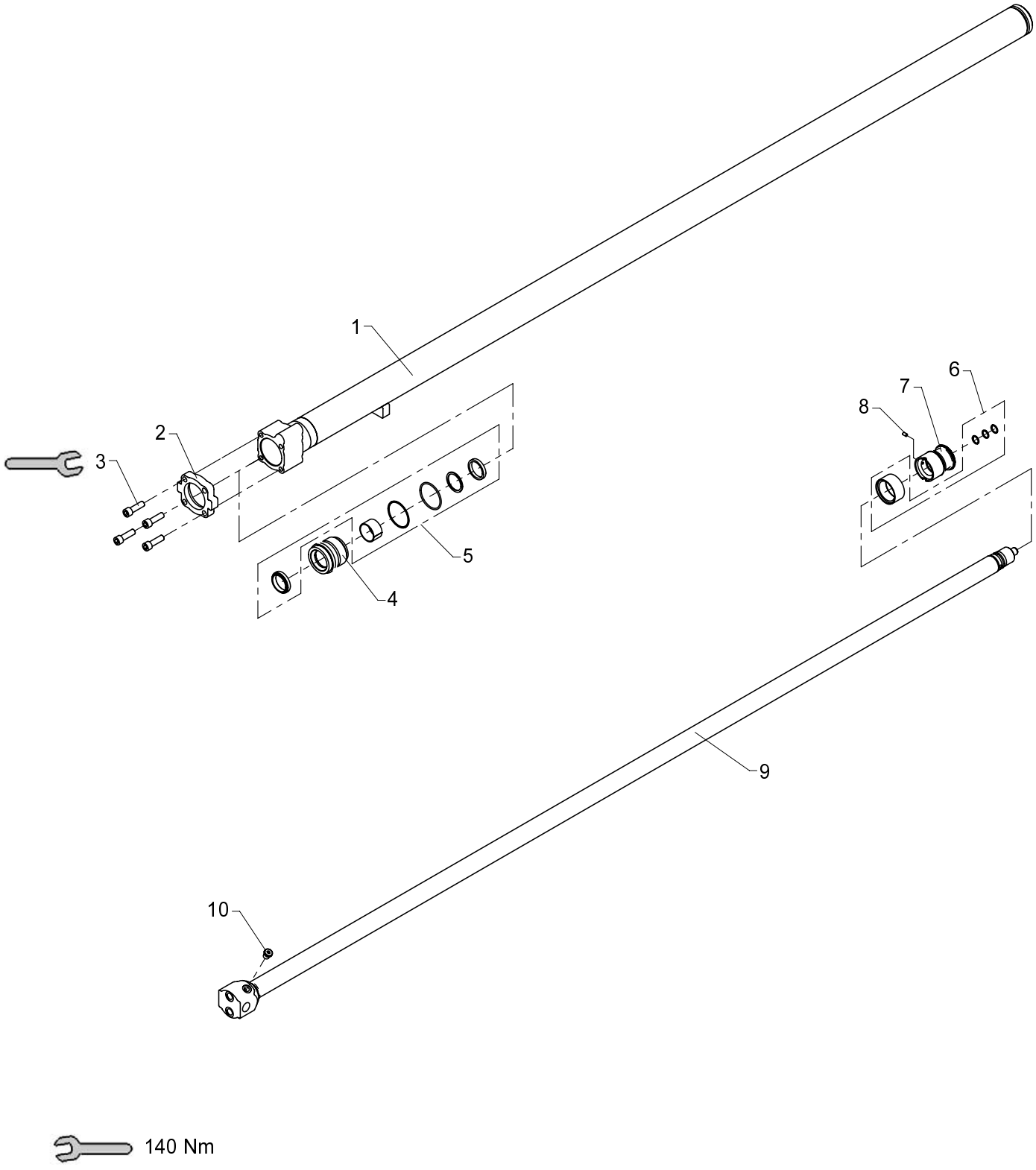

Extension cylinder IV (C60/40 x 2200)

534 03 330

From loader 1060001
To loader

Created 09-06-2009
Modified

Pos	Qty.	Part no.	Description	Remarks
1	1	6340585	Cylinder pipe	
2	1	6340567	Mounting flange	
3	4	30475	Screw	MC12 x 40
4	1	6340555	Guide	
5	1	6894150	Seal kit, guide	
6	1	6893790	Seal kit, piston	
7	1	6306741	Piston	
8	1	30556	Pointed screw	MSP6 x 10
9	1	6340581	Piston rod	
10	1	25197	Plug	VS-R-1/4 WD

534 03 340

15/105 - 17/117 SL & DL Parts

Internal ref. 63 40 590

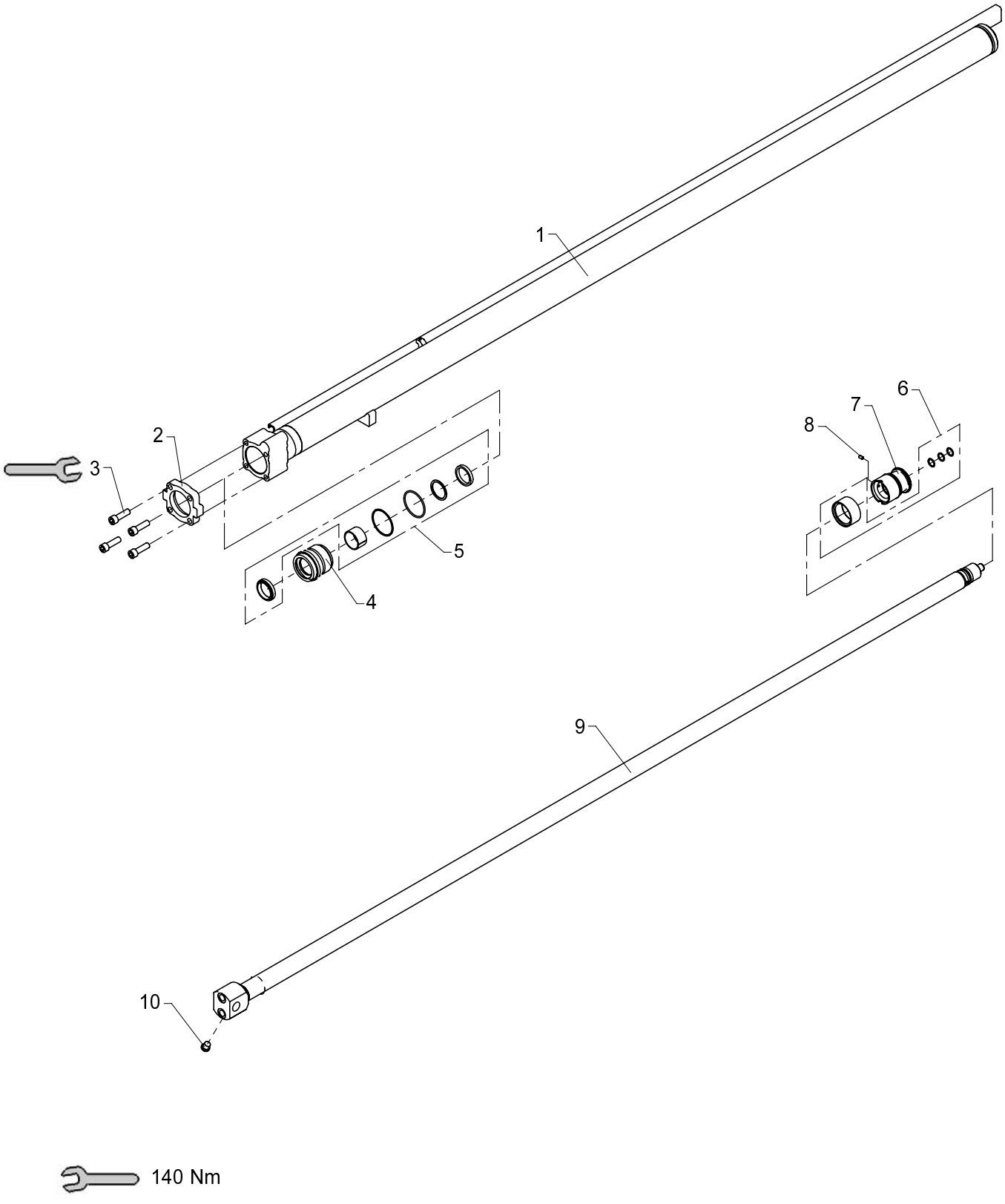

Extension cylinder V (C60/40 x 2150)

534 03 340

From loader 1060001
To loader

Created 09-06-2009
Modified

Pos	Qty.	Part no.	Description	Remarks
1	1	6340595	Cylinder pipe	
2	1	6340567	Mounting flange	
3	4	30475	Screw	MC12 x 40
4	1	6340555	Guide	
5	1	6894150	Seal kit, guide	
6	1	6893790	Seal kit, piston	
7	1	6306741	Piston	
8	1	30556	Pointed screw	MSP6 x 10
9	1	6340591	Piston rod	
10	1	25197	Plug	VS-R-1/4 WD

534 03 350

15/105 - 17/117 SL & DL Parts

Internal ref. 63 40 600

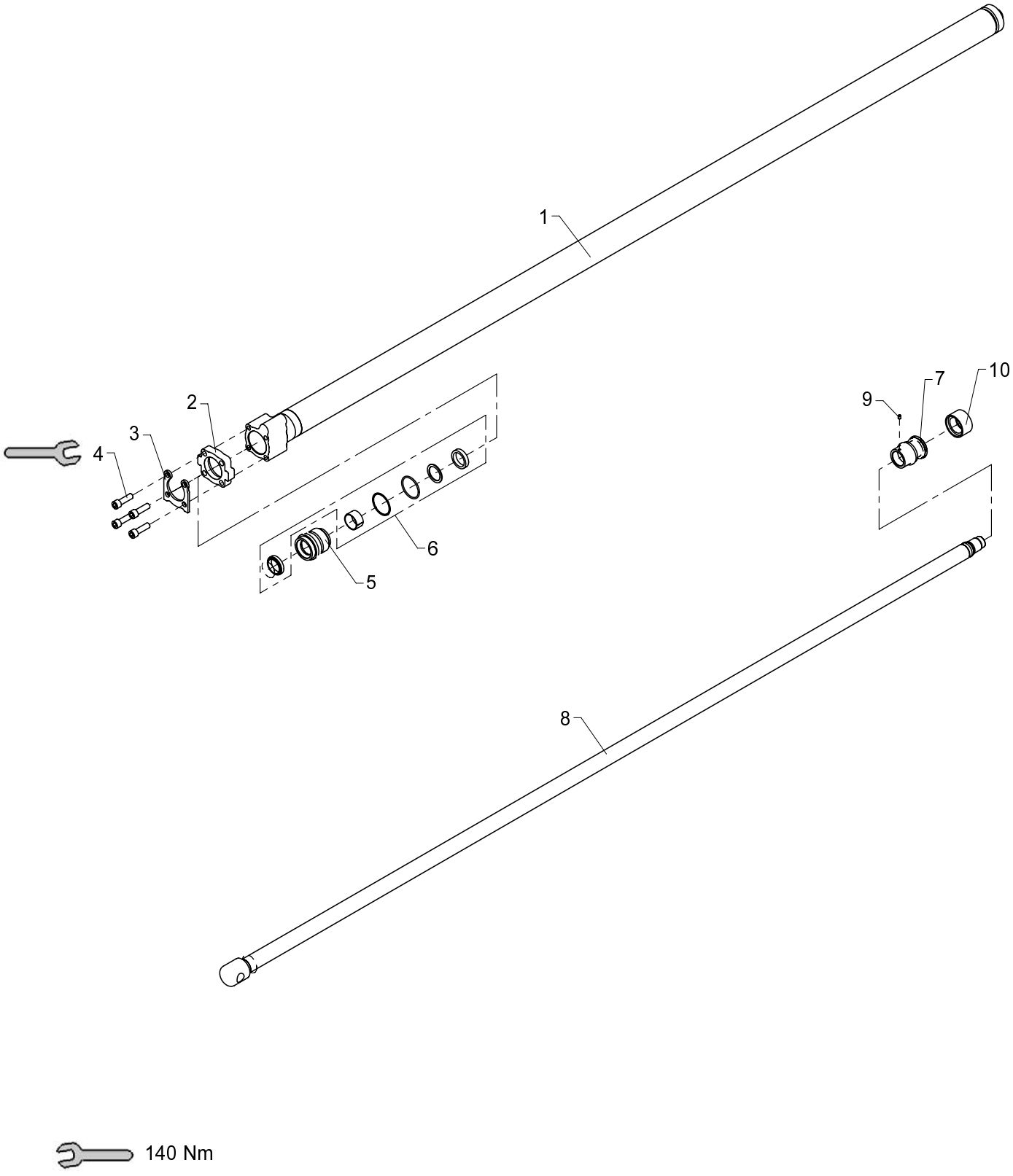

140 Nm

Extension cylinder VI (C55/35S x 2200)

534 03 350

From loader 1060001
To loader

Created 09-06-2009
Modified 11-12-2009

Pos	Qty.	Part no.	Description	Remarks
1	1	6340605	Cylinder pipe	
2	1	6340613	Mounting flange	
3	1	6340528	Safety device	
4	4	30475	Screw	MC12 x 40
5	1	6340611	Guide	
6	1	6894160	Seal kit, guide	
7	1	6340612	Piston	
8	1	6340601	Piston rod	
9	1	30903	Screw	MSP6 x 8
10	1	20776	Seal	MD 55 X 39 X 18

15/105 - 17/117 SL & DL Parts

63 41 730
Internal ref. 63 40 330

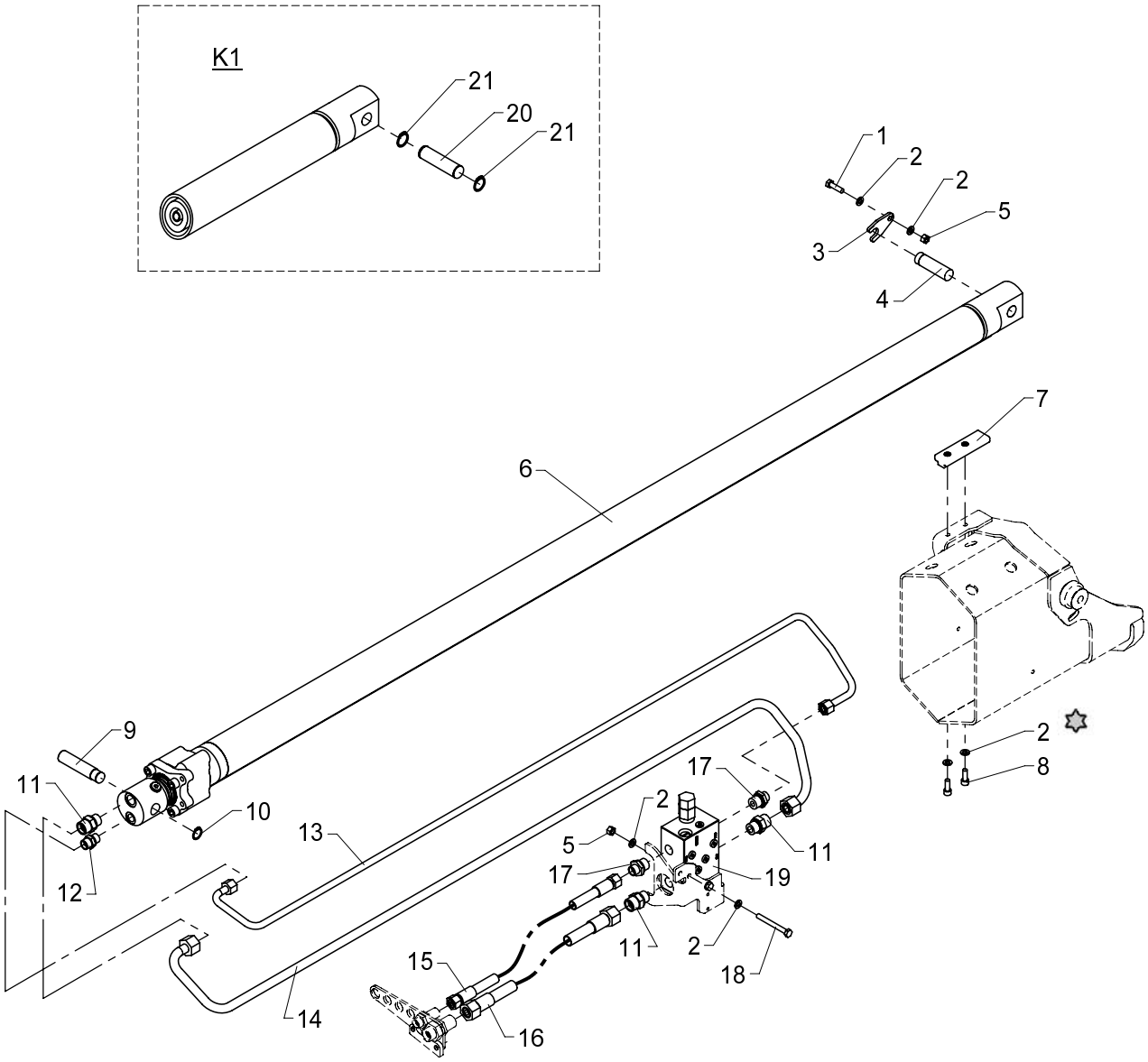

Loctite 243

Extension cylinder I incl. fittings

534 03 500

From loader 1060001
To loader

Created 12-11-2008
Modified

Pos	Qty.	Part no.	Description	Remarks
		6340330	Extension cylinder I +fittings	
		6341730	Extension cylinder I +fittings	
1	1	30135	Set screw, stainless	M8 x 30
2	8	31147	Washer, stainless	8 mm
3	1	6340337	Lock plate	
4	1	6340522	Pin	
5	3	30886	Lock nut, stainless	M8
6	1	6340540	Extension cylinder I	
7	1	63689	Slide block with bushing	
8	2	30460	Sockethead screw	MC8 x 22
9	1	6340521	Pin	
10	1	33108	Circlip	20U
11	3	26334	Connection	P-GEV 16 SR-WD
12	1	25127	Connection	P-GEV 12 LR-WD
13	1	6340642	Pipe K1 retract	
14	1	6340641	Pipe CI	
15	1	56383	Hose	3/8" x 650 mm L/L
16	1	56384	Hose	1/2" x 680 mm L/L
17	2	25108	Connection	GES 12 LR 1/2-WD
18	2	30812	Steel bolt, stainless	M8 x 75
19	1	59044	Load holding valve	
20	1	6304229	Pin	K1
21	2	33110	Circlip	K1

15/105 - 17/117 SL & DL Parts

Internal ref. 63 40 350

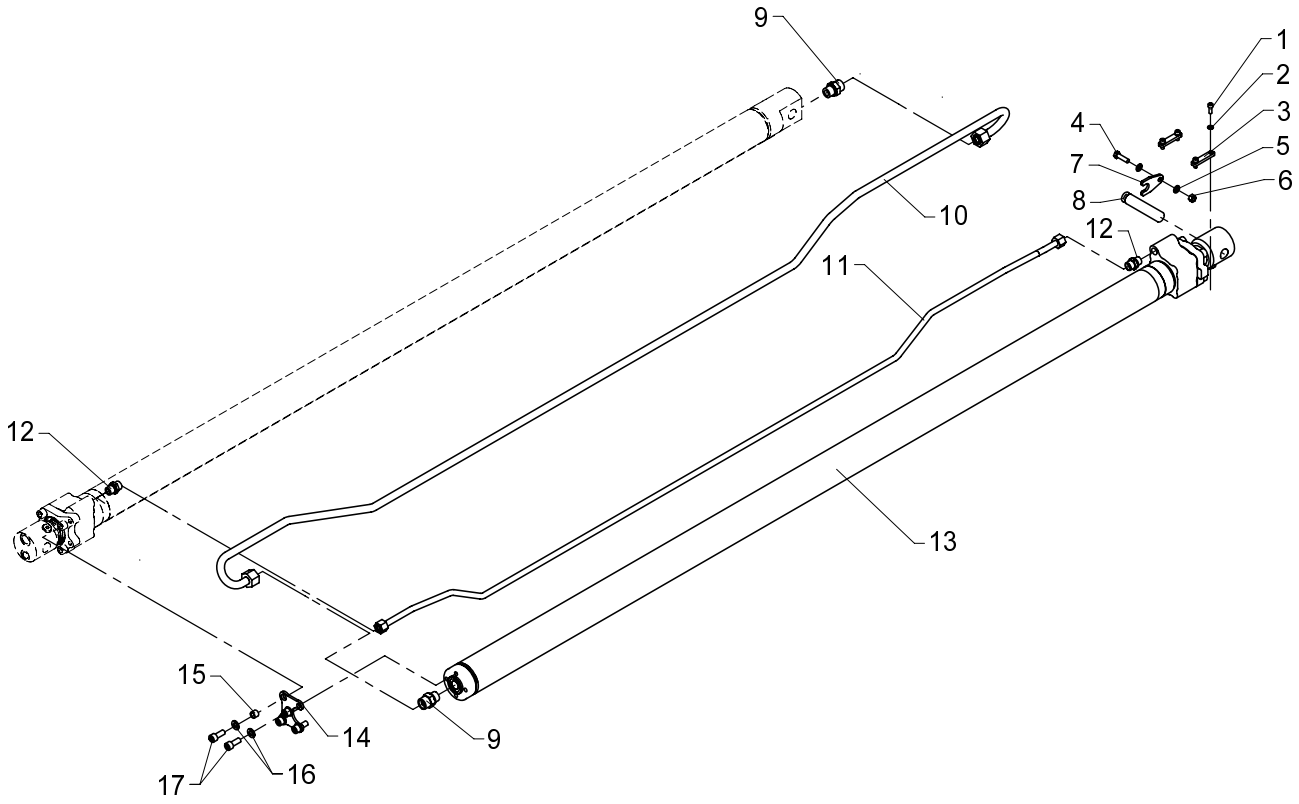

Extension cylinder II incl. fittings

534 03 510

From loader 1060001
To loader

Created 12-11-2008
Modified

Pos	Qty.	Part no.	Description	Remarks
1	4	31539	Screw, stainless	MC6 x 16
2	4	31154	Spring washer, stainless	6 mm
3	2	6340336	Lock plate	
4	1	30135	Set screw, stainless	M8 x 30
5	2	31147	Washer, stainless	8 mm
6	1	30886	Lock nut, stainless	M8
7	1	6340337	Lock plate	
8	1	6340523	Pin	
9	2	26334	Connection	P-GEV 16 SR-WD
10	1	6340643	Pipe K2 extend	
11	1	6340644	Pipe K2 retract	
12	2	25127	Connection	P-GEV 12 LR-WD
13	1	6340560	Extension cylinder II	
14	1	6340524	Connecting plate	
15	2	6302369	Spacer	
16	5	31177	Washer	10 mm
17	5	30453	Screw	MC10 x 25

15/105 - 17/117 SL & DL Parts

Internal ref. 63 40 370

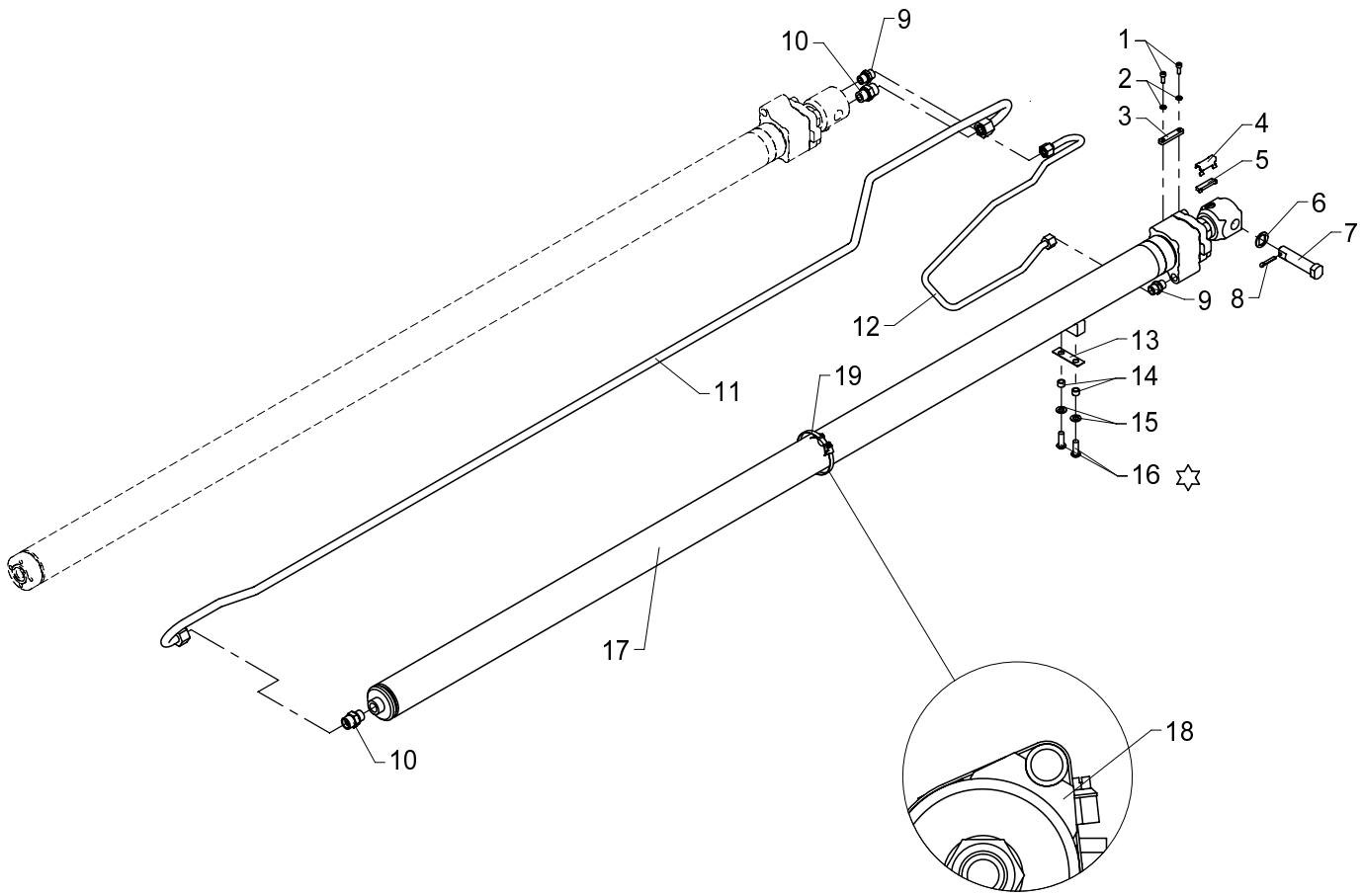

✡ Loctite 243

Extension cylinder III incl. fittings

534 03 520

From loader 1060001
To loader

Created 12-11-2008
Modified

Pos	Qty.	Part no.	Description	Remarks
1	2	31539	Screw, stainless	MC6 x 16
2	2	31154	Spring washer, stainless	6 mm
3	1	6340336	Lock plate	
4	1	31920	Clip, stainless, 10mm	
5	1	6340317	Lock plate (10 mm)	
6	1	6340526	Spacer	
7	1	6344525	Pin	
8	1	31634	Split pin	ø5 x 32
9	2	25127	Connection	P-GEV 12 LR-WD
10	2	26334	Connection	P-GEV 16 SR-WD
11	1	6340645	Pipe K3 extend	
12	1	6340646	Pipe K3 retract	
13	1	6304279	Shim	
14	2	6300799	Spacer	
15	2	31177	Washer	10 mm
16	2	30649	Screw	M10 x 30
17	1	6340570	Extension cylinder III	
18	1	64409	Clamp	
19	1	31406	Clip	

15/105 - 17/117 SL & DL Parts

Internal ref. 63 40 390

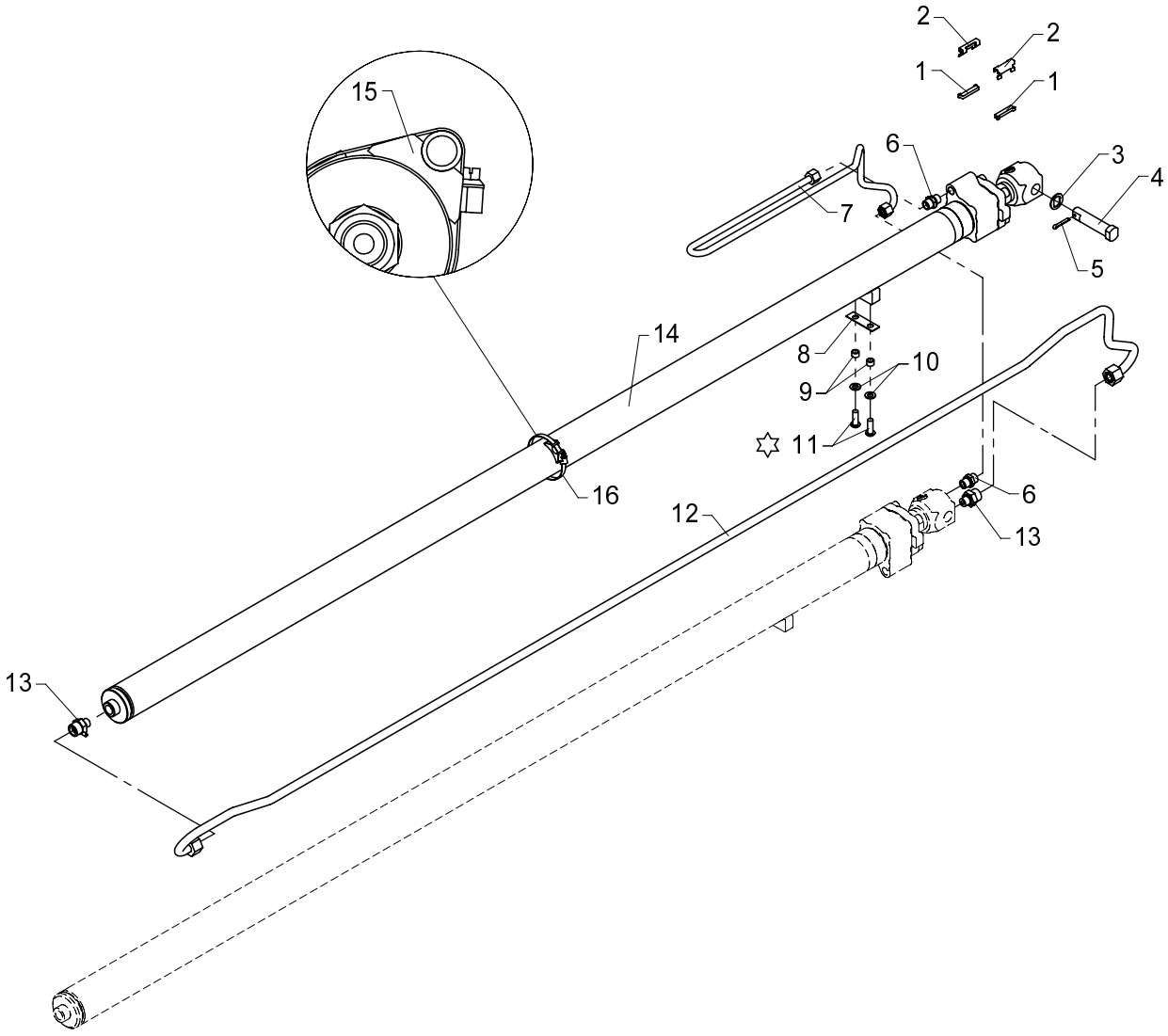

✡ Loctite 243

Extension cylinder IV incl. fittings

534 03 530

From loader 1060001
To loader

Created 12-11-2008
Modified

Pos	Qty.	Part no.	Description	Remarks
1	2	6340316	Lock plate (8mm)	
2	2	31919	Clip, stainless, 8 mm	
3	1	6340526	Spacer	
4	1	6344525	Pin	
5	1	31634	Split pin	ø5 x 32
6	2	25127	Connection	P-GEV 12 LR-WD
7	1	6340648	Pipe K4 retract	
8	1	6304279	Shim	
9	2	6300799	Spacer	
10	2	31177	Washer	10 mm
11	2	30649	Screw	M10 x 30
12	1	6340647	Pipe K4 extend	
13	2	26368	Straight connection	P-GEV 16 SR 3/8-WD
14	1	6340580	Extension cylinder IV	
15	1	64409	Clamp	
16	1	31406	Clip	

15/105 - 17/117 SL & DL Parts

Internal ref. 63 40 410

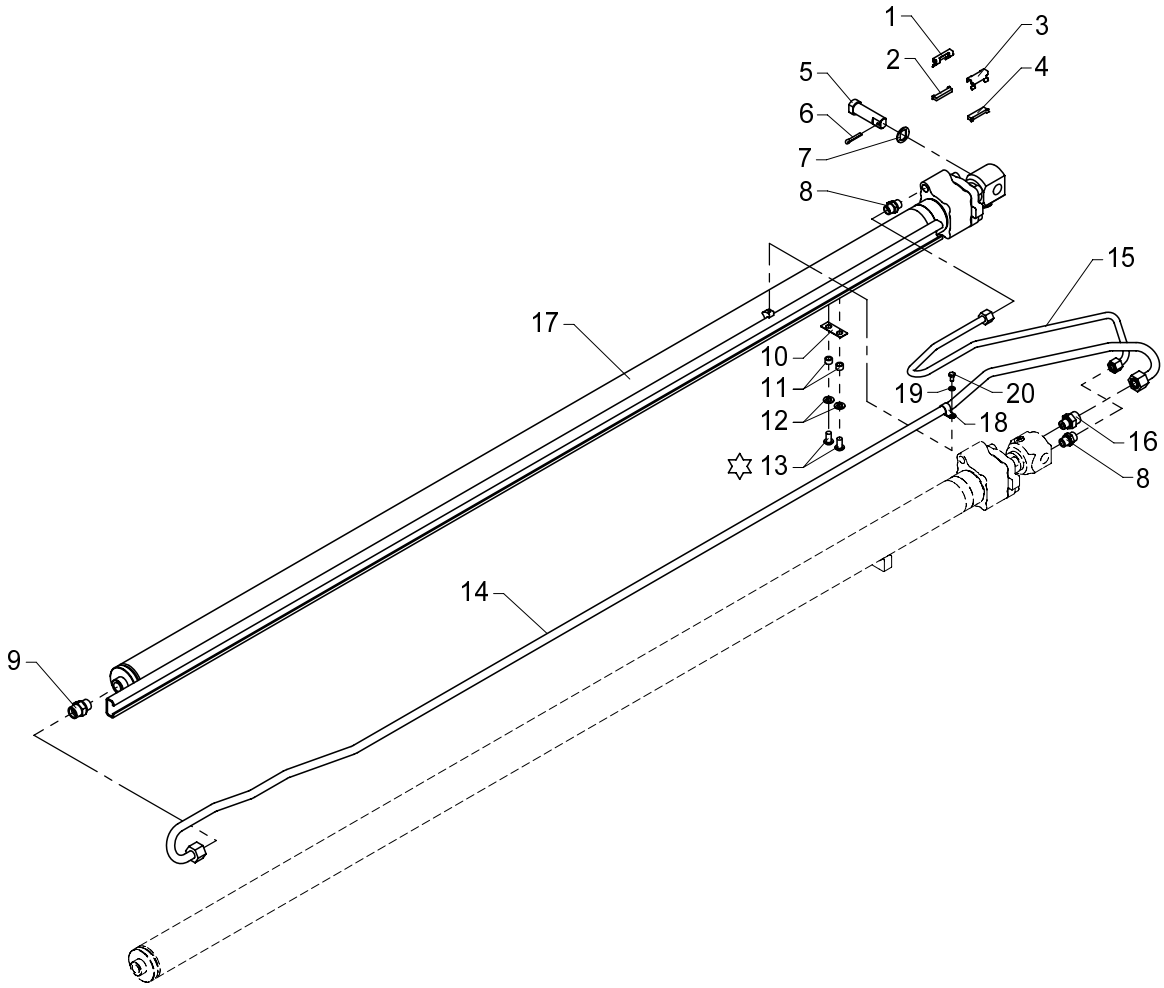

✡ Loctite 243

Extension cylinder V incl. fittings

534 03 540

From loader 1060001
To loader

Created 12-11-2008
Modified

Pos	Qty.	Part no.	Description	Remarks
1	1	31919	Clip, stainless, 8 mm	
2	1	6340316	Lock plate (8mm)	
3	1	31920	Clip, stainless, 10mm	
4	1	6340317	Lock plate (10 mm)	
5	1	6340525	Pin	
6	1	31634	Split pin	ø5 x 32
7	1	6340526	Spacer	
8	2	25127	Connection	P-GEV 12 LR-WD
9	1	26334	Connection	P-GEV 16 SR-WD
10	1	6340527	Shim	
11	2	6300799	Spacer	
12	2	31177	Washer	10 mm
13	2	30926	Steel bolt	M10 x 20
14	1	6340649	Pipe K5 extend	
15	1	6340651	Pipe K5 retract	
16	1	26368	Straight connection	P-GEV 16 SR 3/8-WD
17	1	6340590	Extension cylinder V	
18	1	33493	Clamp	
19	1	32302	Face washer, stainless	6 mm
20	1	30111	Set screw, stainless	M6 x 12

15/105 - 17/117 SL & DL Parts

Internal ref. 63 40 430

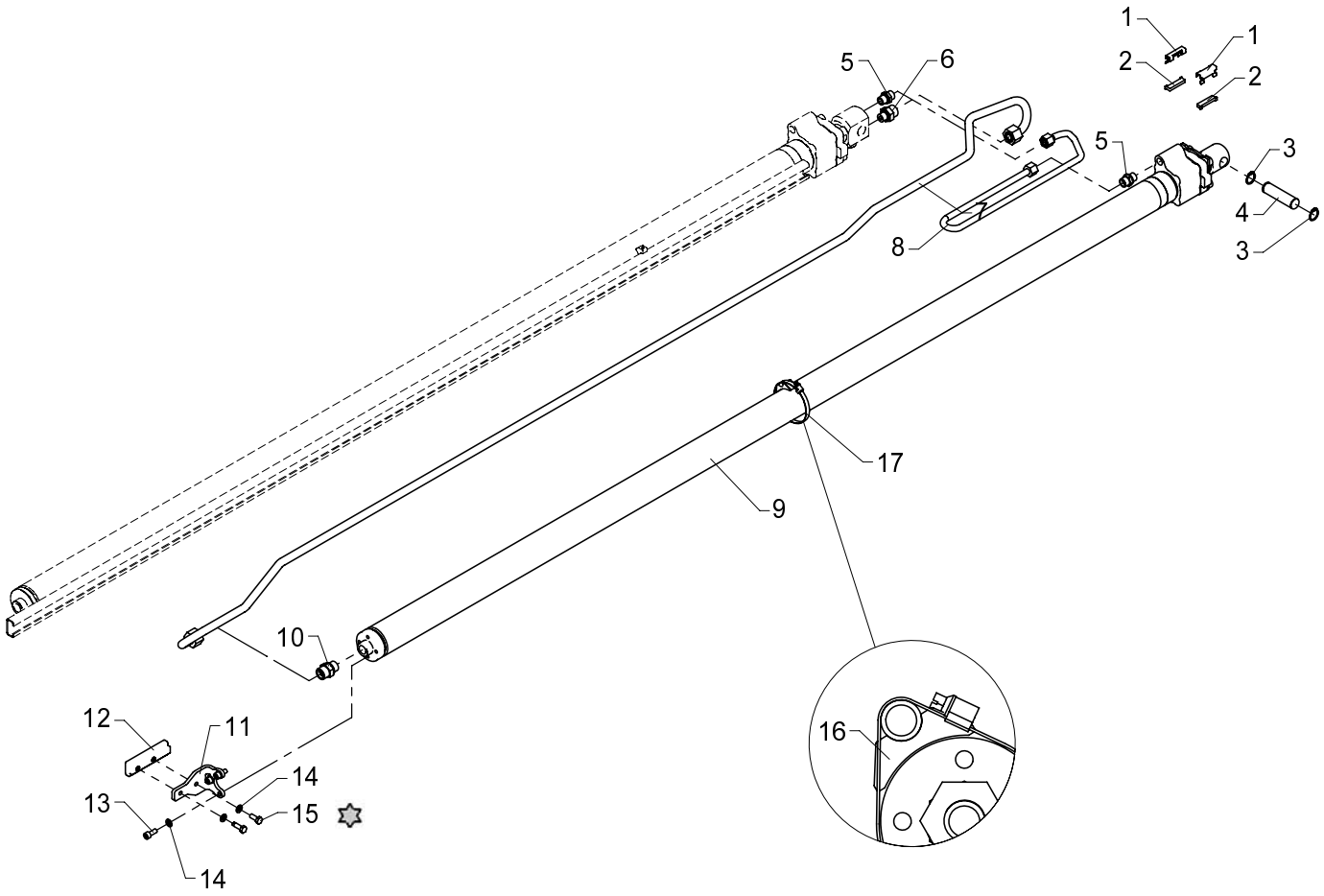

Loctite 243

Extension cylinder VI incl. fittings

534 03 550

From loader 1060001
To loader

Created 12-11-2008
Modified

Pos	Qty.	Part no.	Description	Remarks
1	2	31920	Clip, stainless, 10mm	
2	2	6340317	Lock plate (10 mm)	
3	2	33110	Circlip	22U
4	1	6304229	Pin	
5	2	25127	Connection	P-GEV 12 LR-WD
6	1	26368	Straight connection	P-GEV 16 SR 3/8-WD
7	1	6340652	Pipe K6 extend	
8	1	6340653	Pipe K6 retract	
9	1	6340600	Extension cylinder VI	
10	1	26334	Connection	P-GEV 16 SR-WD
11	1	6340529	Bracket for slide block (C6)	
12	1	63689	Slide block with bushing	
13	3	30438	Screw	MC8 x 20
14	5	31147	Washer, stainless	8 mm
15	2	30132	Set screw, stainless	M8 x 20
16	1	64409	Clamp	
17	1	31406	Clip	

15/105 - 17/117 SL & DL Parts

Internal ref. 63 40 670

K2

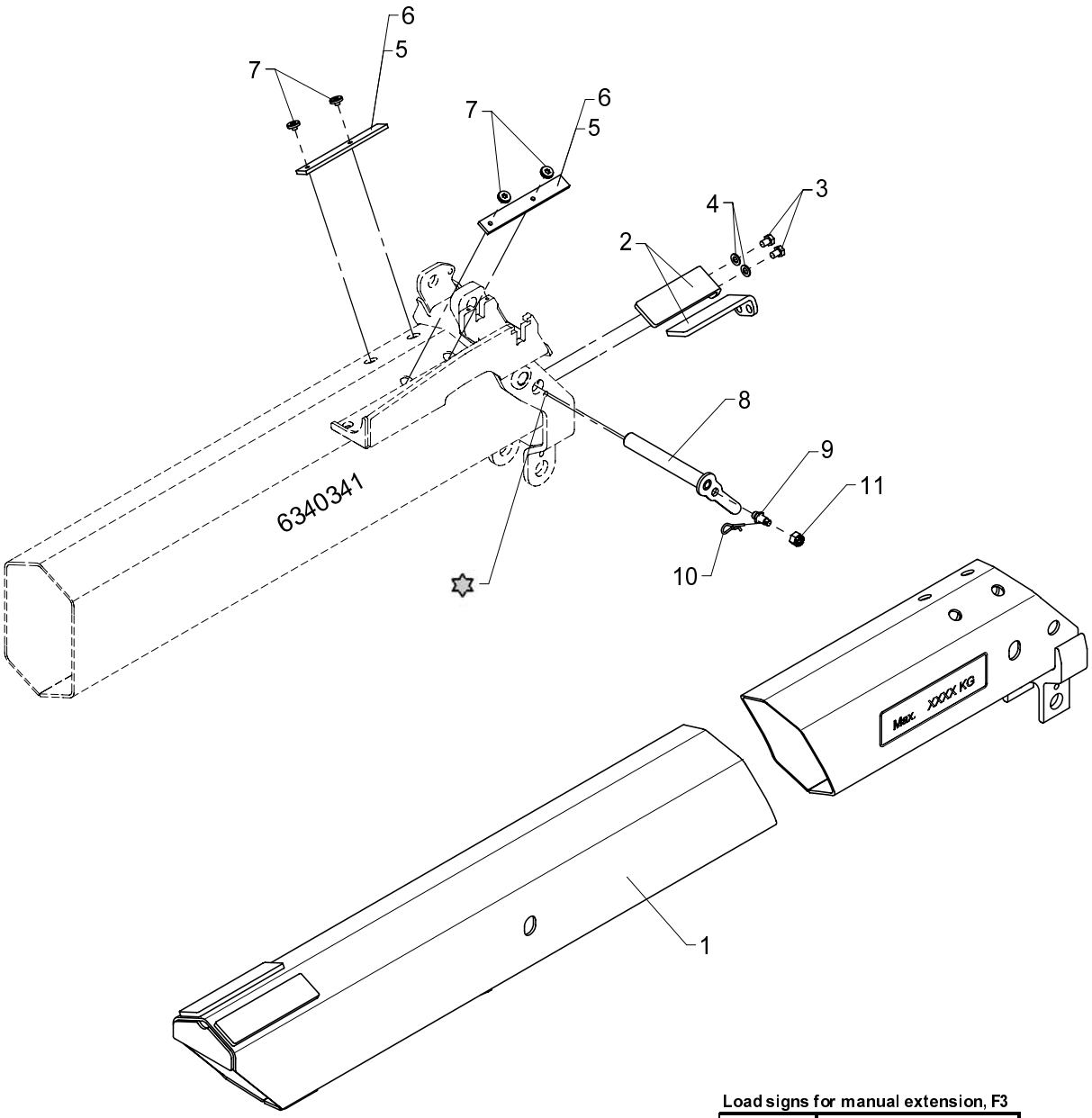

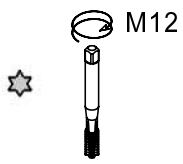

Load signs for manual extension, F3

Hydraulic extensions		Manual extensions		
K2	Std.	**F3**	F4	F5
	HDL	**65578**		
		66525		
K3	Std.	F4	F5	F6
	HDL			
K4	Std.	F5	F6	F7
	HDL			
K5	Std.	F6	F7	
	HDL			
K6	Std.	F7		
	HDL			

Manual extension, F3

534 03 720

From loader 1060001
To loader

Created 27-11-2008
Modified

Pos	Qty.	Part no.	Description	Remarks
		6340670	Manual extension F3	
1	1	6340671	Manual extension F3	
2	2	6340689	Shim	
3	4	30152	Set screw	M10 x 14
4	4	31177	Washer	10 mm
5	2	6243004	Wear plate	6 mm
6	2	6244064	Wear plate	7 mm
7	4	31865	Torx screw M8 x 6 m	M8 x 6
8	1	6340677	Pin	
9	1	6340359	Lock pin	
10	1	33379	Spring	
11	1	32127	Nut	M12

15/105 - 17/117 SL & DL Parts

Internal ref. 63 40 680

K3

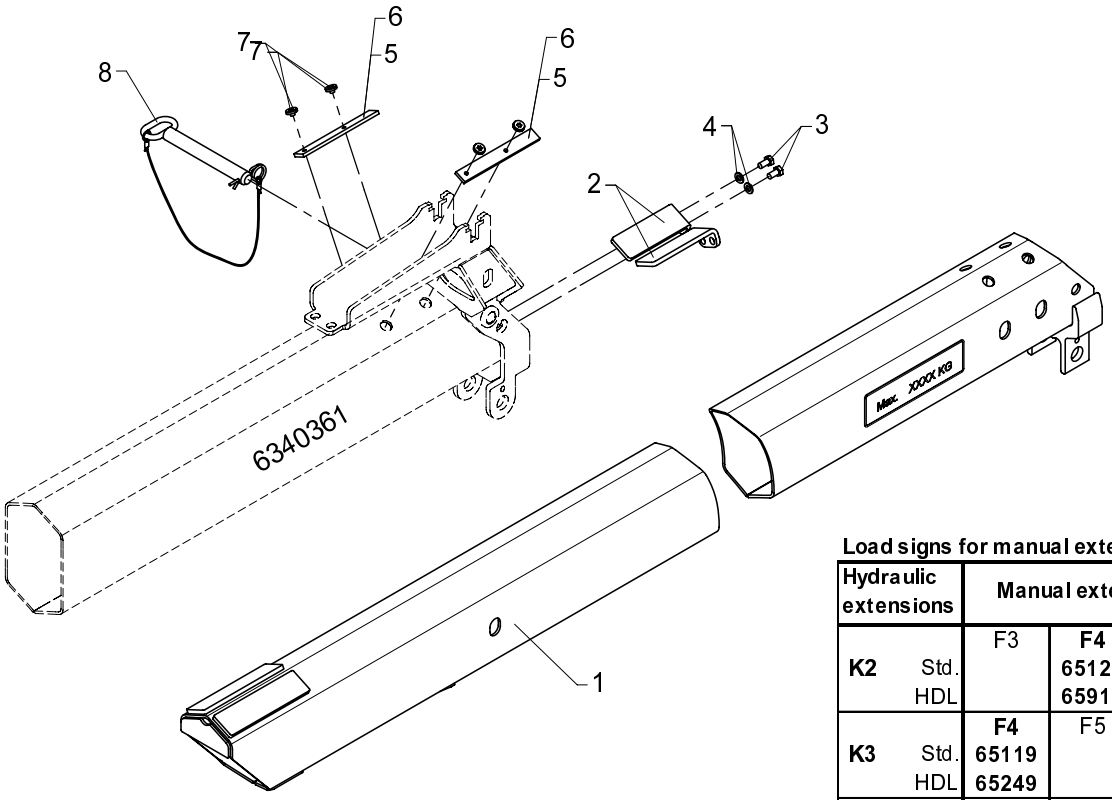

Load signs for manual extension, F4

Hydraulic extensions		Manual extensions		
K2	Std.	F3	**F4**	F5
	HDL		**65120**	
			65916	
K3	Std.	**F4**	F5	F6
	HDL	**65119**		
		65249		
K4	Std.	F5	F6	F7
	HDL			
K5	Std.	F6	F7	
	HDL			
K6	Std.	F7		
	HDL			

F3

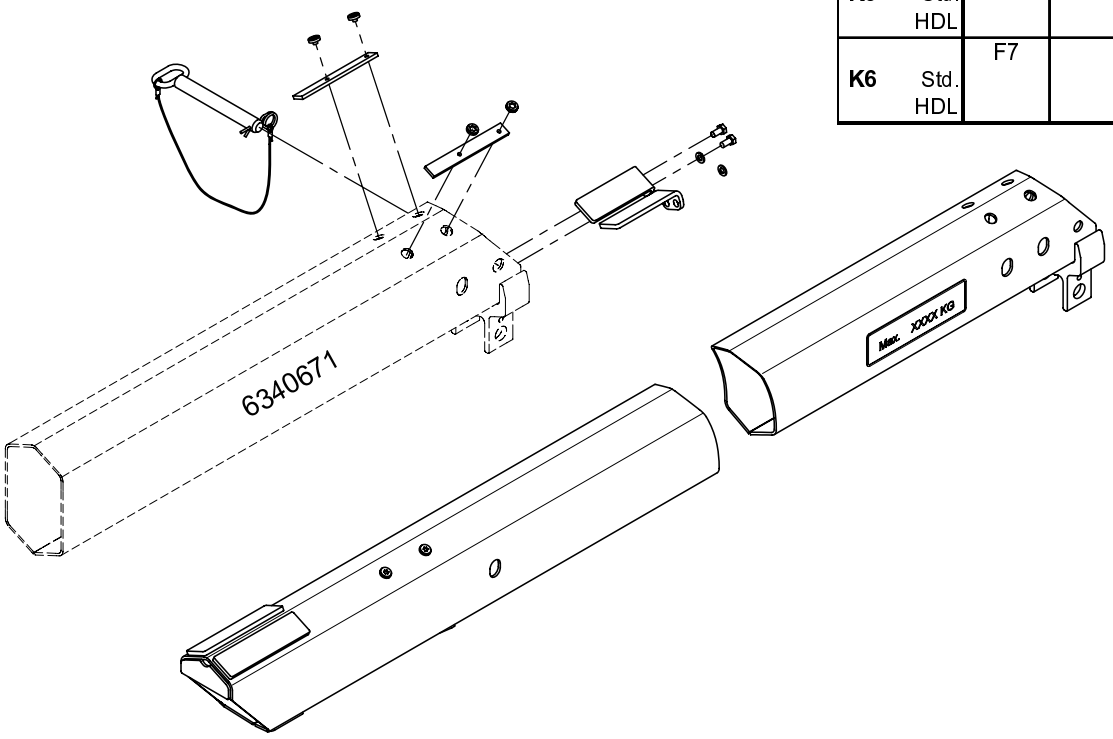

Manual extension, F4

534 03 730

From loader 1060001
To loader

Created 27-11-2008
Modified

Pos	Qty.	Part no.	Description	Remarks
		6340680	Manual extension F4	
1	1	6340681	Manual extension F4	
2	2	6340689	Shim	
3	4	30154	Set screw	M10 x 20
4	4	31177	Washer	10 mm
5	2	6243004	Wear plate	6 mm
6	2	6244064	Wear plate	7 mm
7	4	31865	Torx screw M8 x 6 m	M8 x 6
8	1	6092454	Lock pin with chain	

15/105 - 17/117 SL & DL Parts

Internal ref. 63 40 690

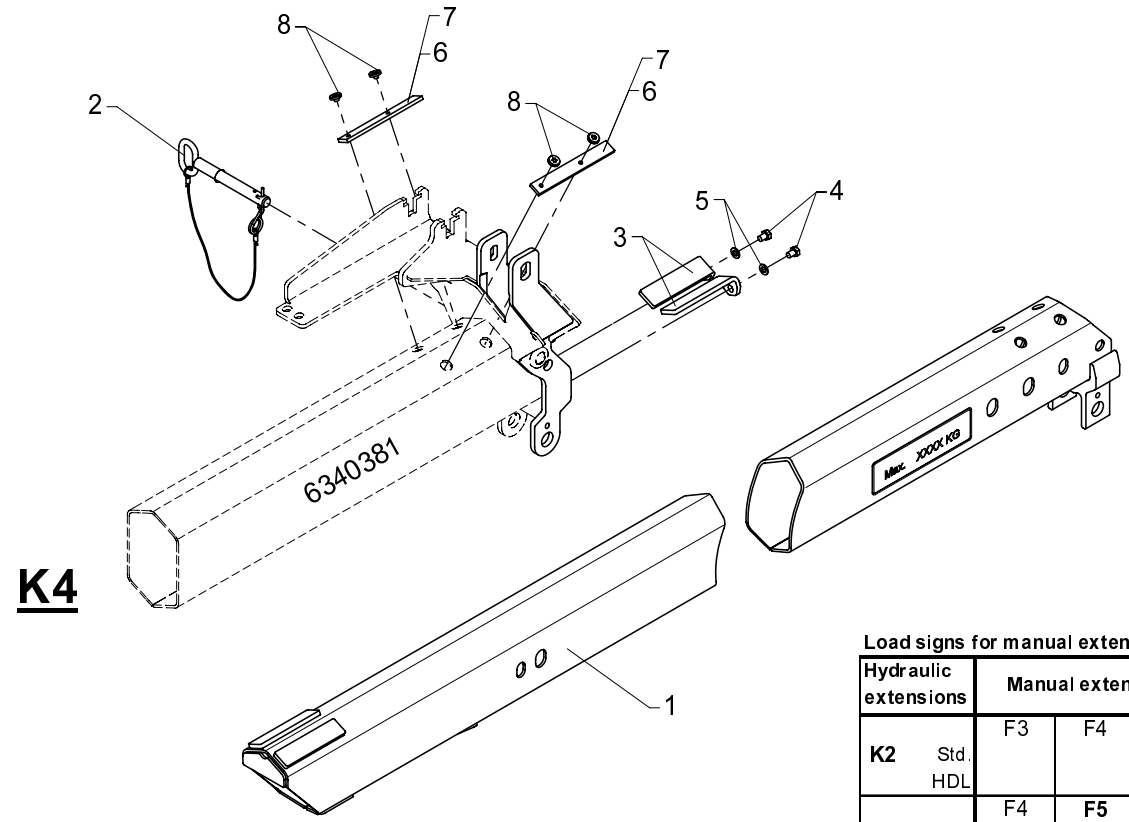

K4

Load signs for manual extension, F5

Hydraulic extensions		Manual extensions		
K2	Std.	F3	F4	**F5 66595 65491**
	HDL			
K3	Std.	F4	**F5 65118 65491**	F6
	HDL			
K4	Std.	**F5 65915 66460**	F6	F7
	HDL			
K5	Std.	F6	F7	
	HDL			
K6	Std.	F7		
	HDL			

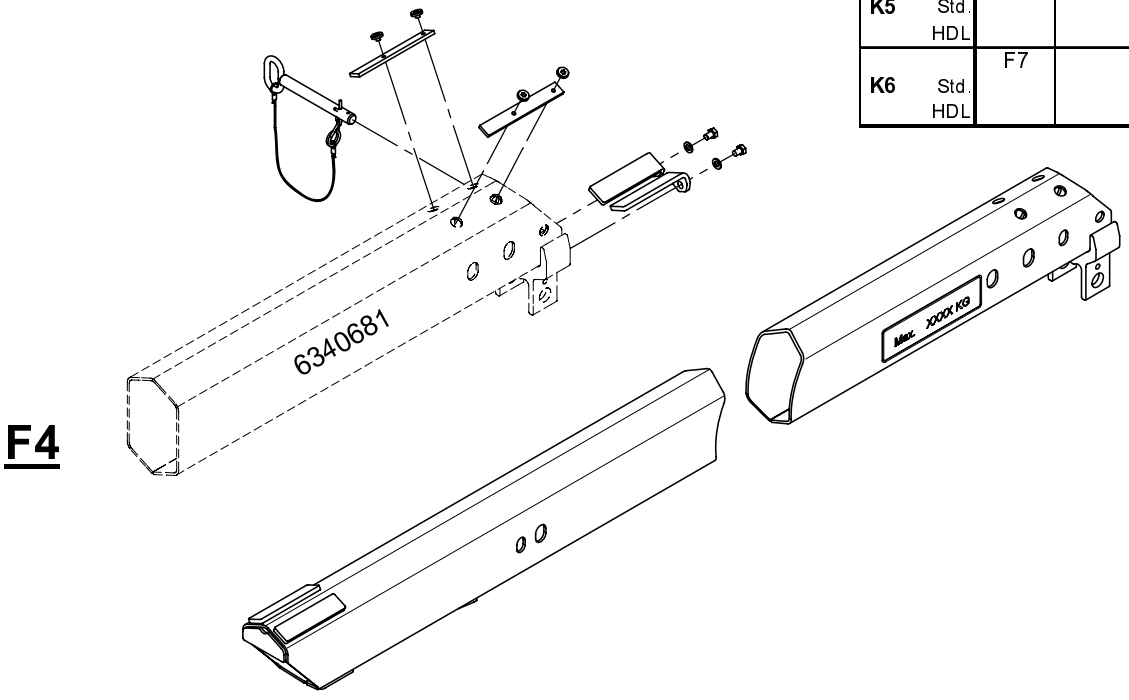

F4

Manual extension, F5

534 03 740

From loader 1060001
To loader

Created 27-11-2008
Modified

Pos	Qty.	Part no.	Description	Remarks
		6340690	Manual extension F5	
1	1	6340691	Manual extension F5	
2	1	6340397	Lock pin with lock spring	
3	2	6340699	Shim	
4	2	30152	Set screw	M10 x 14
5	2	31177	Washer	10 mm
6	2	6243004	Wear plate	6 mm
7	2	6244064	Wear plate	7 mm
8	4	31865	Torx screw M8 x 6 m	M8 x 6

15/105 - 17/117 SL & DL Parts

Internal ref. 63 40 700

K5

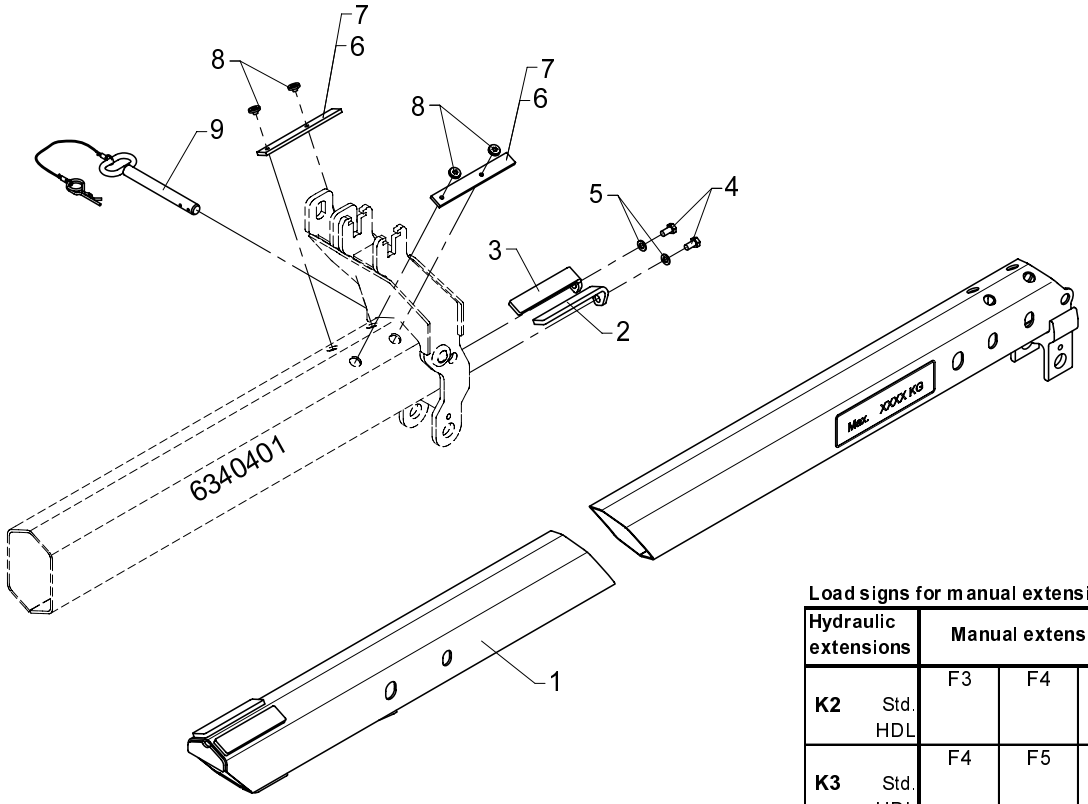

Load signs for manual extension, F6

Hydraulic extensions		Manual extensions		
K2	Std.	F3	F4	F5
	HDL			
K3	Std.	F4	F5	**F6 65117 65552**
	HDL			
K4	Std.	F5	**F6 65490 65146**	F7
	HDL			
K5	Std.	**F6 65563 65146**	F7	
	HDL			
K6	Std.	F7		
	HDL			

F5

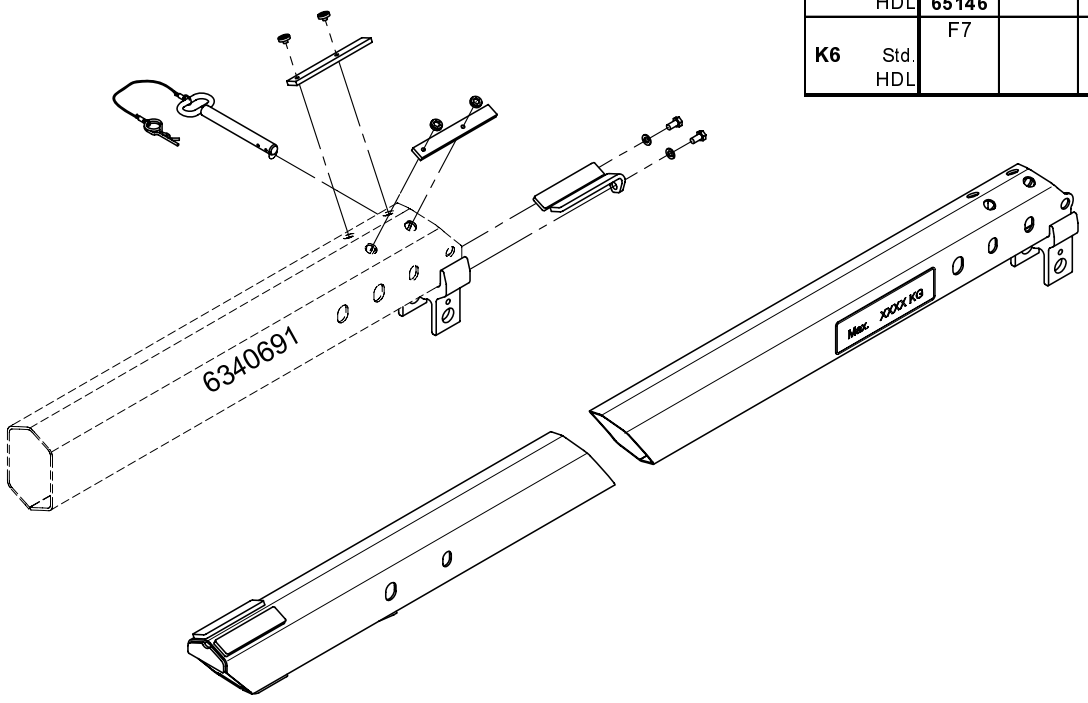

Manual extension, F6

534 03 750

From loader 1060001
To loader

Created 28-11-2008
Modified 16-03-2010

Pos	Qty.	Part no.	Description	Remarks
		6340700	Manual extension F6	
1	1	6340701	Manual extension F6	
2	1	6340708	Shim, right	
3	1	6340709	Shim, left	
4	2	30154	Set screw	M10 x 20
5	2	31177	Washer	10 mm
6	2	6243004	Wear plate	6 mm
7	2	6244064	Wear plate	7 mm
8	4	31865	Torx screw M8 x 6 m	M8 x 6
9	1	6340397	Lock pin with lock spring	

15/105 - 17/117 SL & DL Parts

Internal ref. 63 40 710

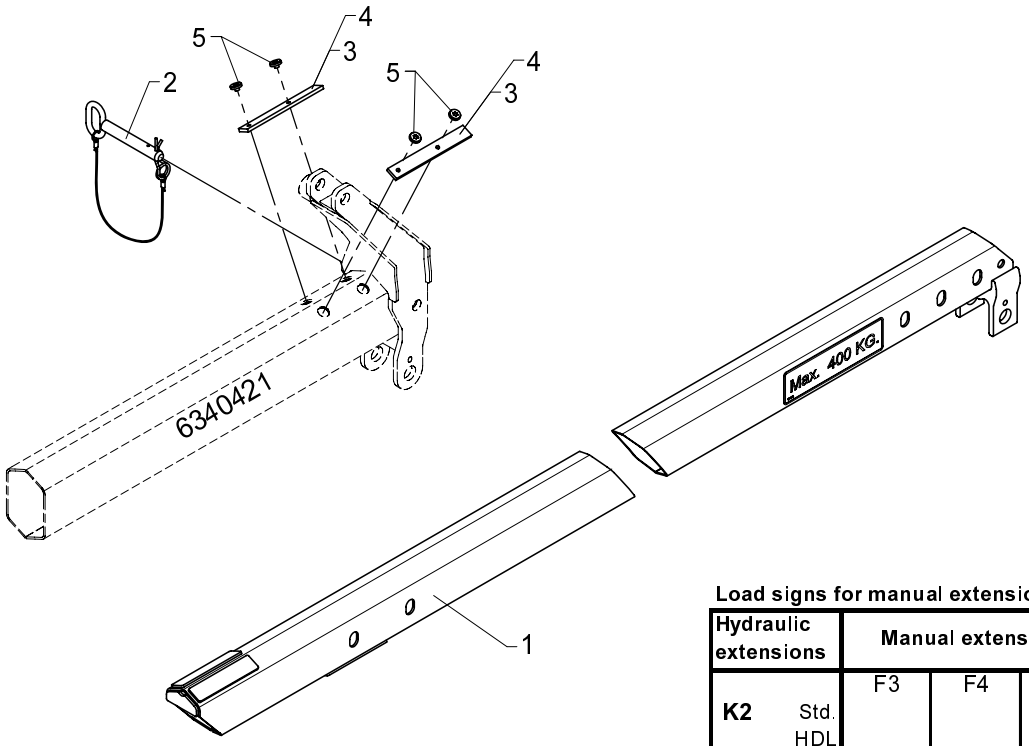

K6

Load signs for manual extension, F7

Hydraulic extensions		Manual extensions		
K2	Std.	F3	F4	F5
	HDL			
K3	Std.	F4	F5	F6
	HDL			
K4	Std.	F5	F6	**F7 65115**
	HDL			**65115**
K5	Std.	F6	**F7 65965**	
	HDL		**65115**	
K6	Std.	**F7 65114**		
	HDL	**65115**		

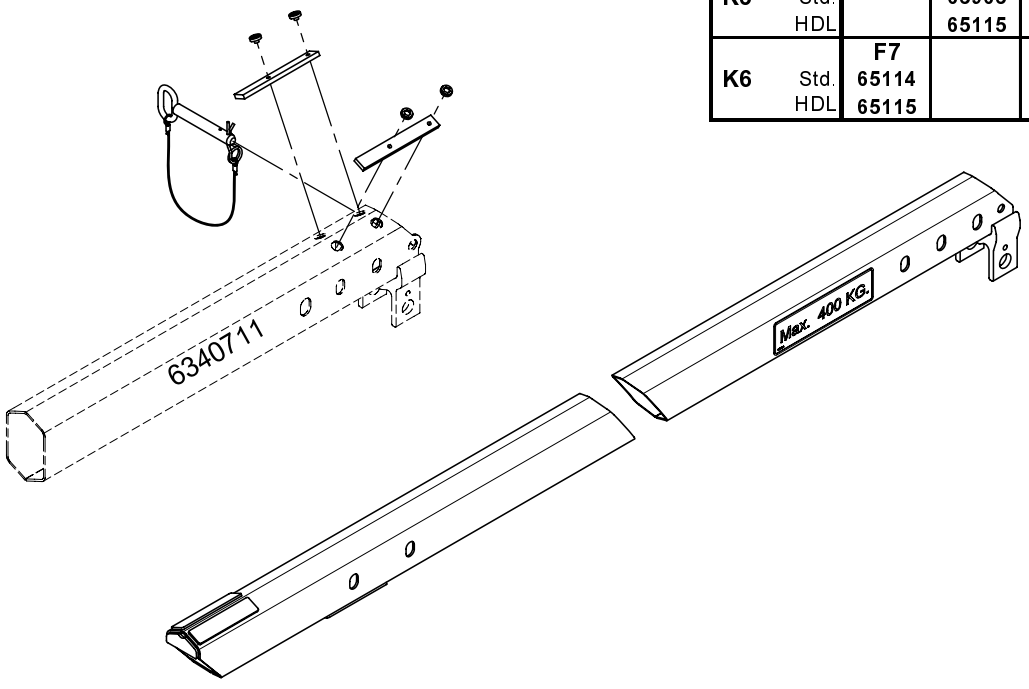

F6

534 03 760

From loader 1060001
To loader

Created 28-11-2008
Modified 16-04-2009

Manual extension, F7

Pos	Qty.	Part no.	Description	Remarks
		6340710	Manual extension F7	
1	1	6340711	Manual extension F7	
2	1	6301166	Lock pin with split pin	
3	2	6243004	Wear plate	6 mm
4	2	6244064	Wear plate	7 mm
5	4	31865	Torx screw M8 x 6 m	M8 x 6

15/105 - 17/117 SL & DL Parts

63 40 940
Internal ref. 63 40 950

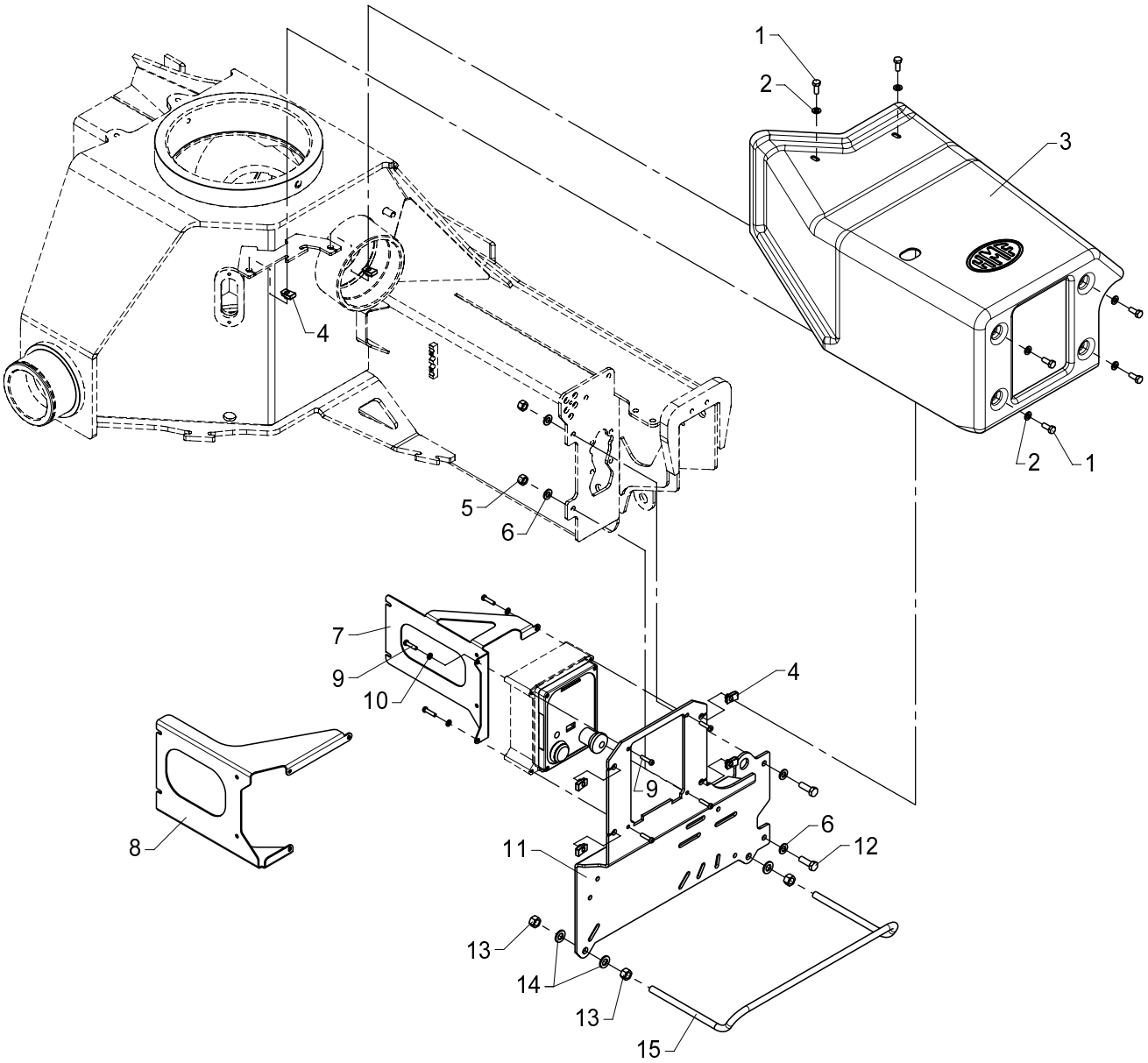

534 05 010

From loader 1060001
To loader

Created 28-11-2006
Modified

Valve brackets

Pos	Qty.	Part no.	Description	Remarks
		6340950	Valve brackets	
		6340940	Valve brackets	
1	6	30132	Set screw, stainless	M8 x 20
2	6	31147	Washer, stainless	8 mm
3	1	64407	Shield	
4	6	31069	Clip	M8 1,5 - 5,5 mm.
5	2	31564	Lock nut, stainless	M10
6	4	31565	Washer, stainless	10 mm
7	1	6340242	Mounting fittings	
8	1	6340243	Mounitng bracket	
9	7	30340	Screw, stainless	6,0 x 25
10	3	32302	Face washer, stainless	6 mm
11	1	6340241	Valve bracket	
12	2	30156	Set screw, stainless	M10 x 30
13	4	30860	Nut, stainless	M12
14	4	32338	Washer	12 mm
15	1	6239973	Clamp	

15/105 - 17/117 SL & DL Parts

63 41 780
Internal ref. 63 41 920

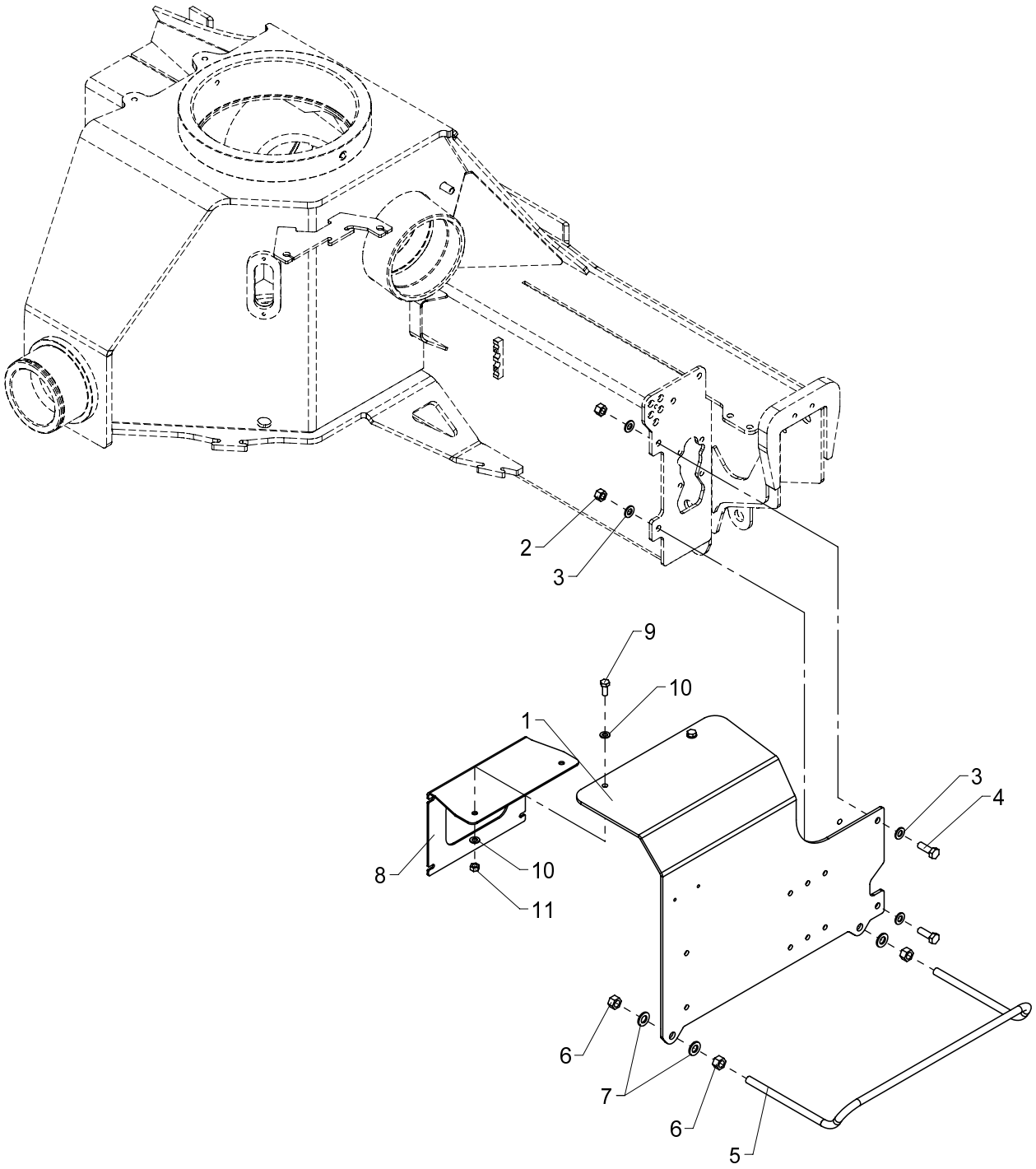

Valve brackets (excl. CE)

Pos	Qty.	Part no.	Description	Remarks
		6341920	Valve brackets, std.(no CE)	
		6341780	Valve brackets, RC (no CE)	
1	1	6340275	Valve bracket (excl. CE)	
2	2	31564	Lock nut, stainless	M10
3	4	31565	Washer, stainless	10 mm
4	2	30156	Set screw, stainless	M10 x 30
5	1	6239973	Clamp	
6	4	30860	Nut, stainless	M12
7	4	32338	Washer	12 mm
8	1	6340277	Mounting fittings	
9	2	30132	Set screw, stainless	M8 x 20
10	4	31147	Washer, stainless	8 mm
11	2	30856	Nut, stainless	M8

15/105 - 17/117 SL & DL Parts

Internal ref. 63 40 650

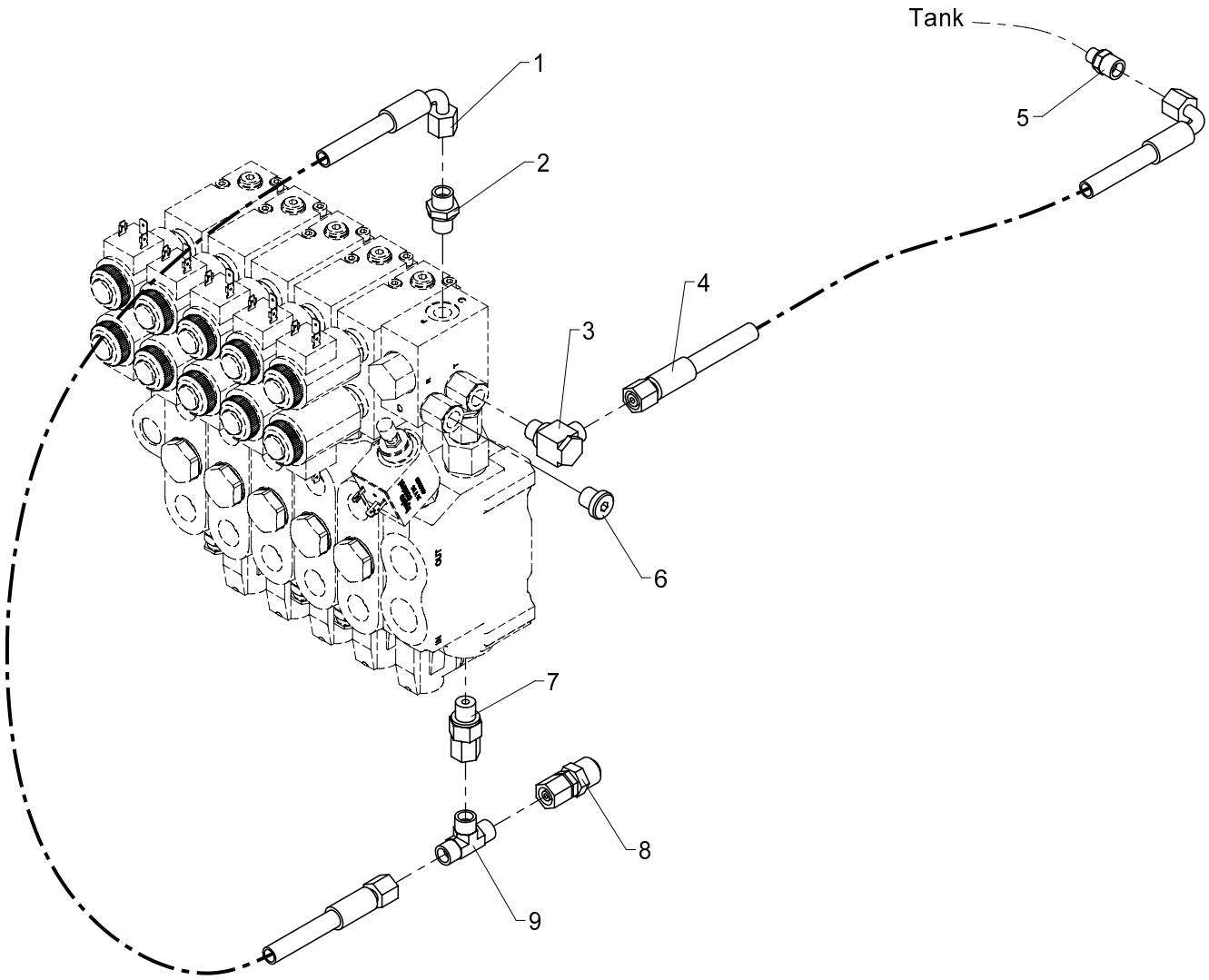

534 05 110

From loader 1060001
To loader

Created 19-11-2008
Modified

NEM-RC kit

Pos	Qty.	Part no.	Description	Remarks
1	1	62526	Hose	1/4 X 550 M14 X 1.5 L/90
2	1	25109	Connection	GES 8 LR-WD
3	1	25113	Banjo connection	RSWV 8 LR
4	1	62540	Hose	1/4 X 2150 M14X1.5 L/90
5	1	25584	Connection	GES 8 LR 1-8 - 25584
6	1	25197	Plug	VS-R-1/4 WD
7	1	26104	Connection	EGESD 8 LR-WD
8	1	26148	Connection	
9	1	25114	T-connection	TV 8 L

15/105 - 17/117 SL & DL Parts

Internal ref. 63 41 680

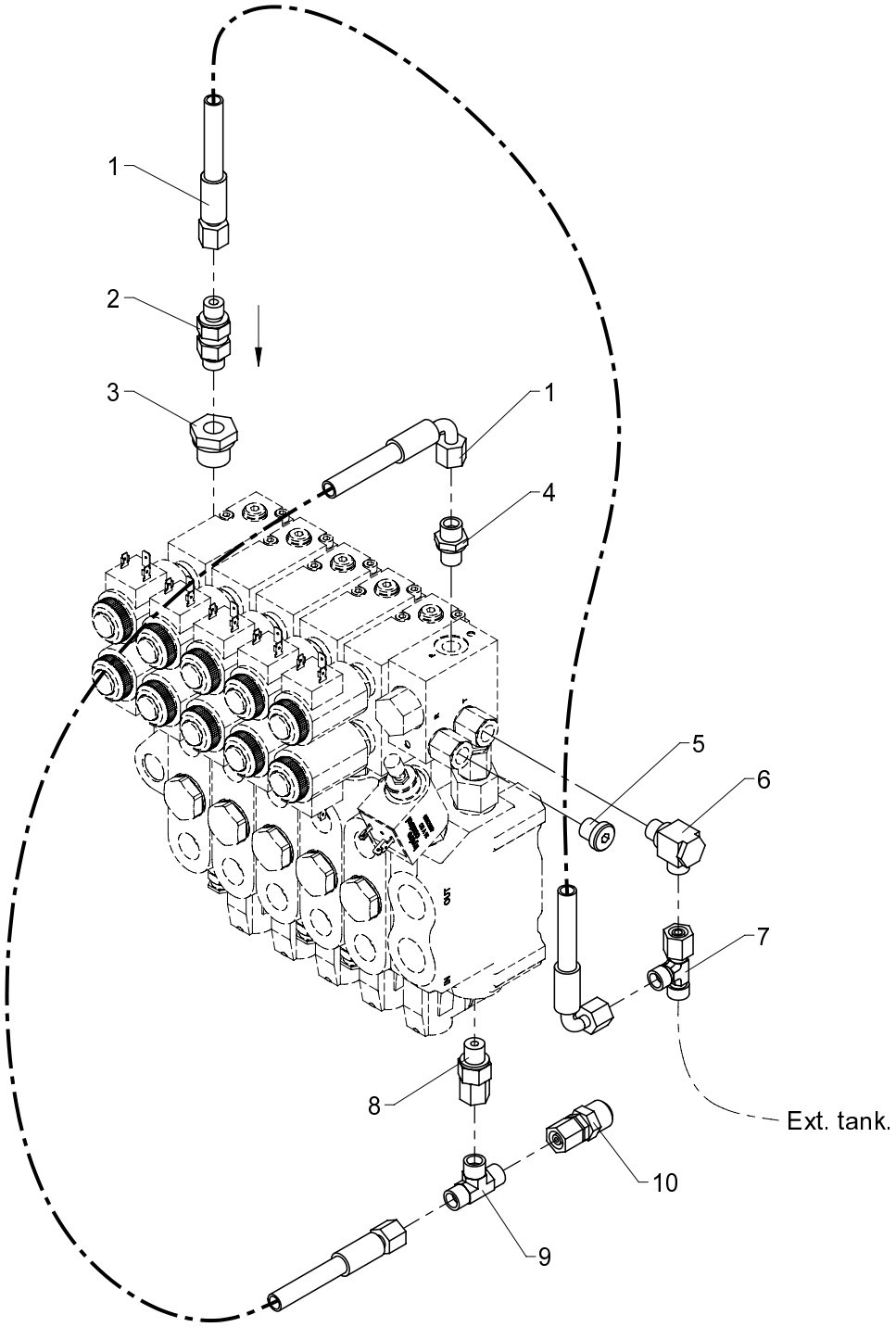

NEM-RC kit (for external tank)

534 05 115

From loader 1060001
To loader

Created 19-11-2008
Modified

Pos	Qty.	Part no.	Description	Remarks
1	2	62526	Hose	1/4 X 550 M14 X 1.5 L/90
2	1	60425	Check valve	RVZ 8 LR-WD
3	1	25180	Reducing connection	RED-R 1/2-WD/R 1/4
4	1	25109	Connection	GES 8 LR-WD
5	1	25197	Plug	VS-R-1/4 WD
6	1	25113	Banjo connection	RSWV 8 LR
7	1	25249	Connection	ELSD 8 L
8	1	26104	Connection	EGESD 8 LR-WD
9	1	25114	T-connection	TV 8 L
10	1	26148	Connection	

15/105 - 17/117 SL & DL Parts

Internal ref. 63 44 870

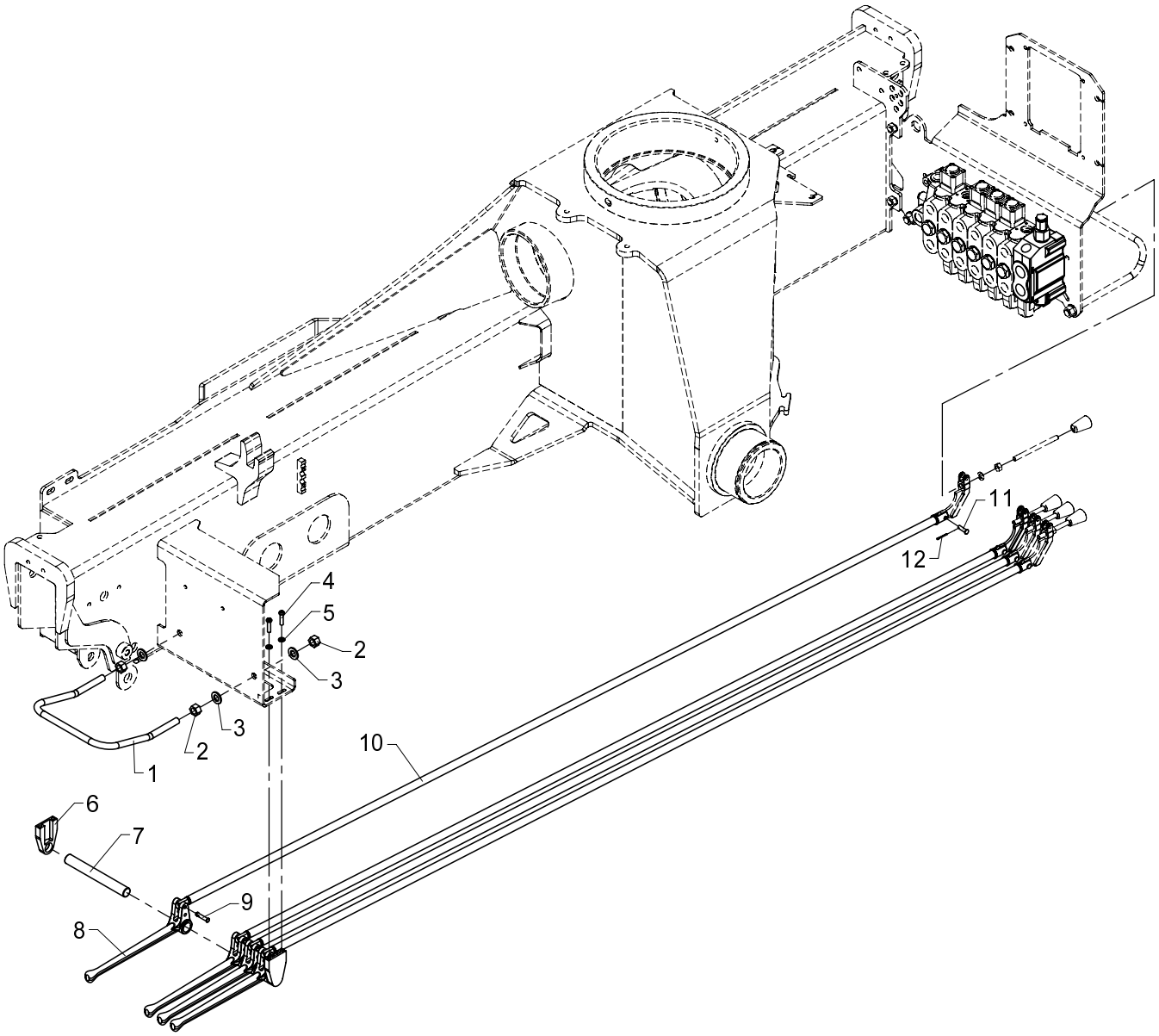

Dual control, 4 functions

534 05 120

From loader 1060001
To loader

Created 12-11-2008
Modified

Pos	Qty.	Part no.	Description	Remarks
1	1	6340247	Safety guard	
2	4	30860	Nut, stainless	M12
3	4	32338	Washer	12 mm
4	4	30340	Screw, stainless	6,0 x 25
5	4	32302	Face washer, stainless	6 mm
6	2	63564	Bracket for pin	
7	1	6340248	Pin	
8	4	63443	Lever for dual controls	
9	4	63468	Split pin with spring lock	
10	4	6340246	Connecting rod	
11	4	31271	Cotter bolt	ø6 x 21
12	4	31601	Split pin, stainless	ø1,6 x 20

15/105 - 17/117 SL & DL Parts

Internal ref. 63 44 770

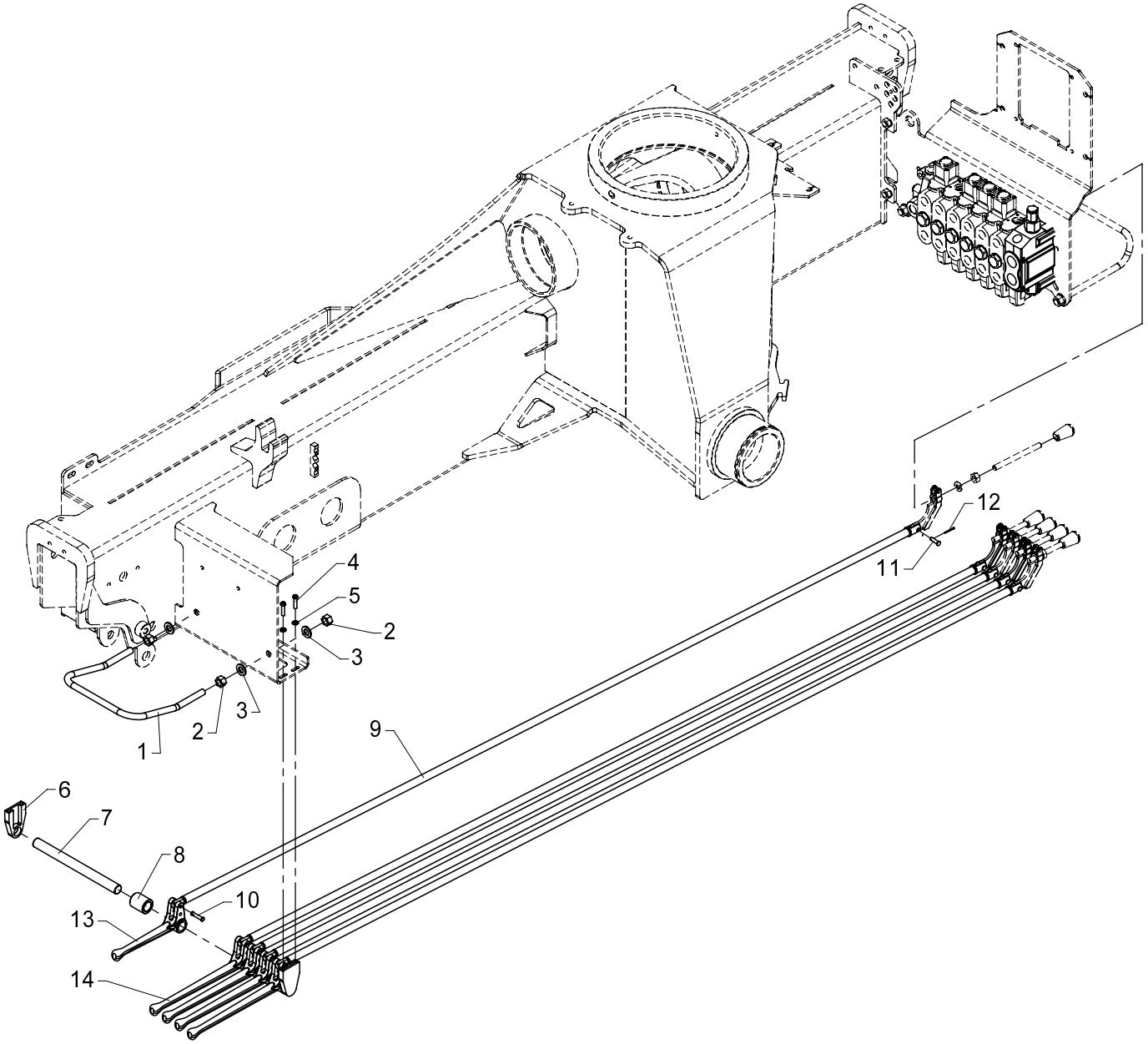

Dual control, 5 functions

534 05 130

From loader 1060001
To loader

Created 12-11-2008
Modified

Pos	Qty.	Part no.	Description	Remarks
1	1	6340247	Safety guard	
2	4	30860	Nut, stainless	M12
3	4	32338	Washer	12 mm
4	4	30340	Screw, stainless	6,0 x 25
5	4	32302	Face washer, stainless	6 mm
6	2	63564	Bracket for pin	
7	1	6340249	Pin	
8	1	63598	Bushing	
9	5	6340246	Connecting rod	
10	5	63468	Split pin with spring lock	
11	5	31271	Cotter bolt	ø6 x 21
12	5	31601	Split pin, stainless	ø1,6 x 20
13	1	63444	Lever for dual controls	
14	4	63443	Lever for dual controls	

534 05 140

15/105 - 17/117 SL & DL Parts

Internal ref. 63 44 880

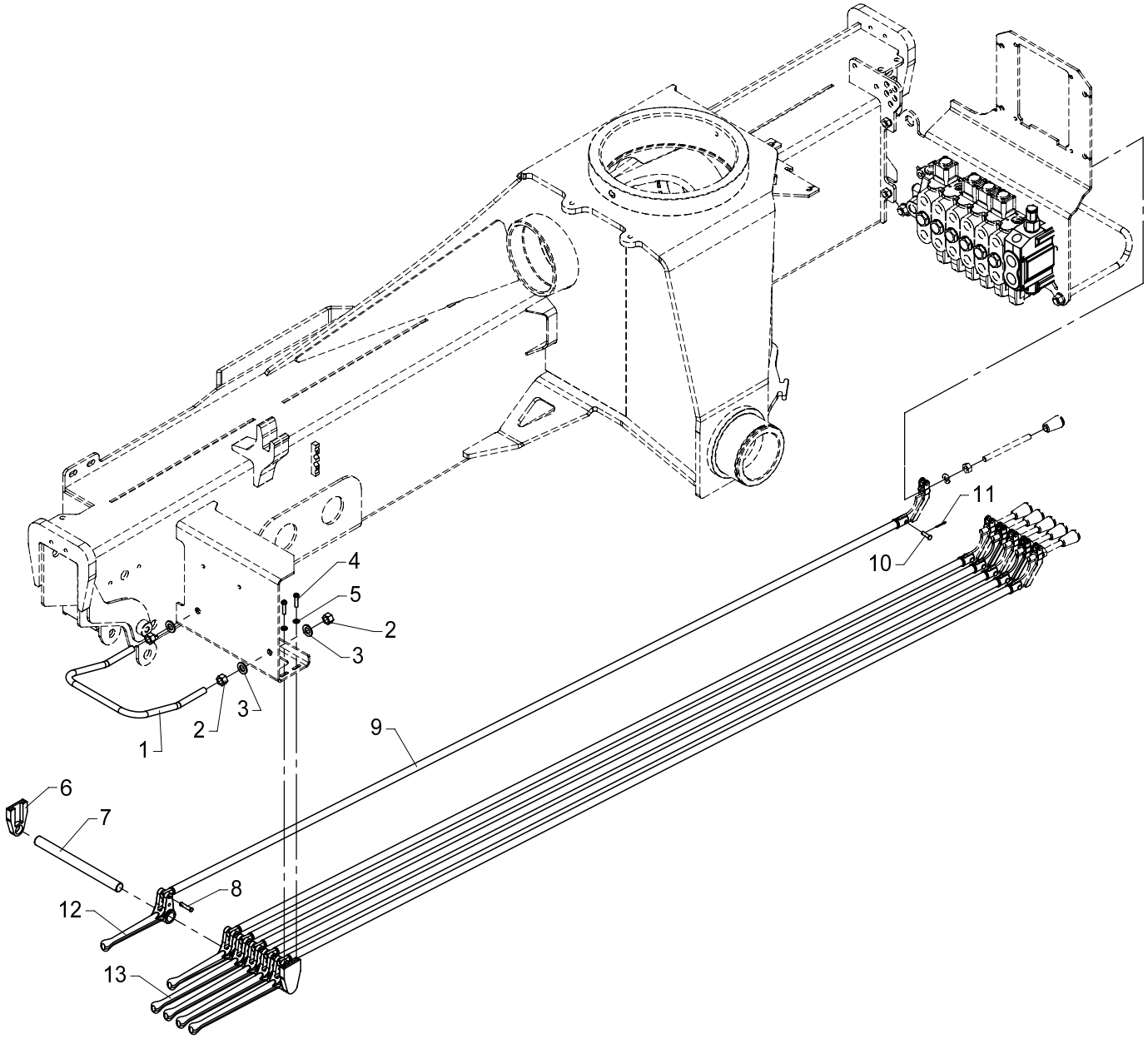

Dual control, 6 functions

534 05 140

From loader 1060001
To loader

Created 12-11-2008
Modified

Pos	Qty.	Part no.	Description	Remarks
1	1	6340247	Safety guard	
2	4	30860	Nut, stainless	M12
3	4	32338	Washer	12 mm
4	4	30340	Screw, stainless	6,0 x 25
5	4	32302	Face washer, stainless	6 mm
6	2	63564	Bracket for pin	
7	1	6340249	Pin	
8	6	63468	Split pin with spring lock	
9	6	6340246	Connecting rod	
10	6	31271	Cotter bolt	ø6 x 21
11	6	31601	Split pin, stainless	ø1,6 x 20
12	2	63444	Lever for dual controls	
13	4	63443	Lever for dual controls	

15/105 - 17/117 SL & DL Parts

Internal ref. 63 41 260

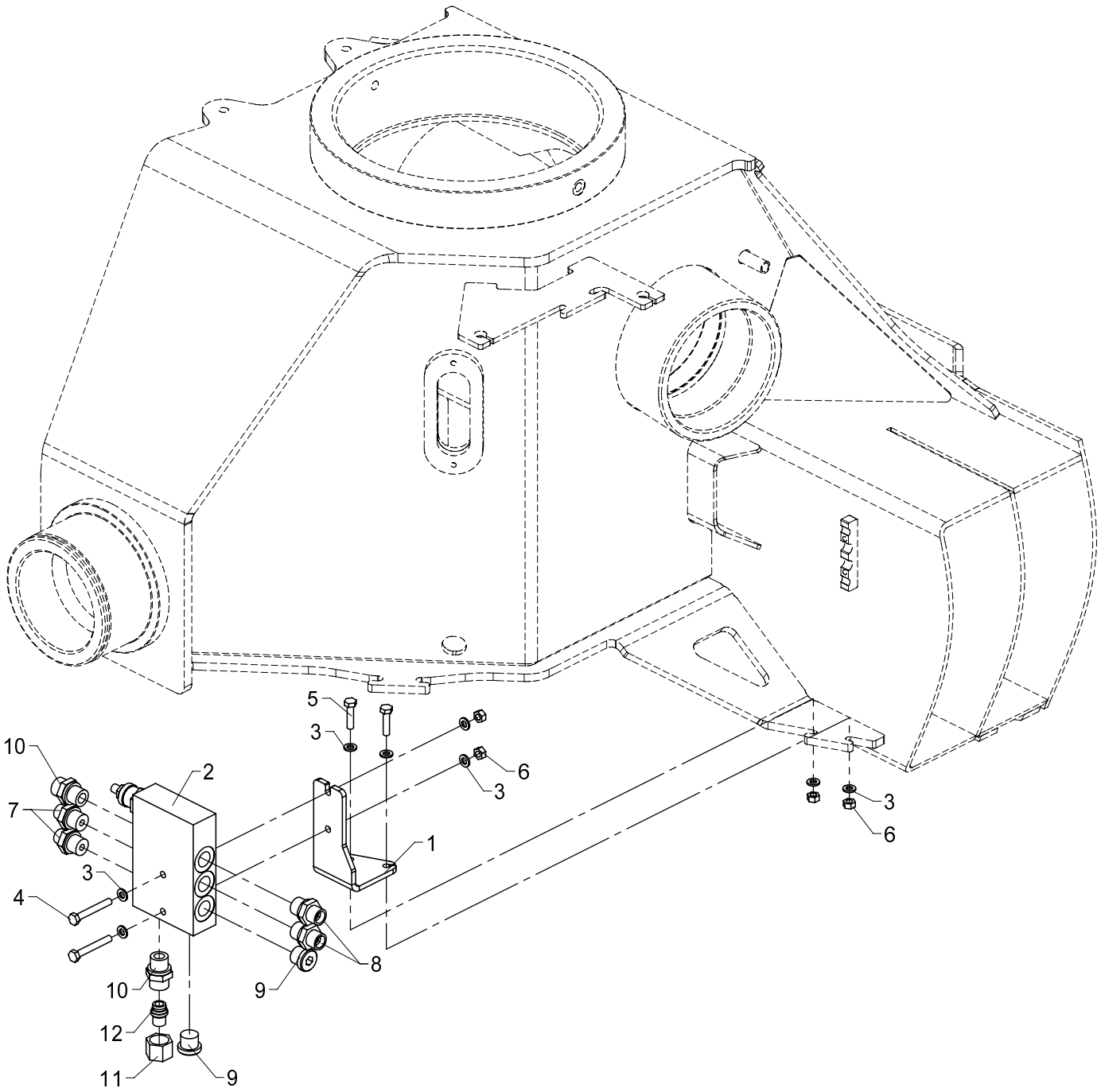

534 05 190

From loader 1060001
To loader

Created 20-11-2008
Modified

Counter-balance valve

Pos	Qty.	Part no.	Description	Remarks
1	1	6340273	Bracket (counter-balance valve	
2	1	50521	Counter-balance valve	
3	8	32302	Face washer, stainless	6 mm
4	2	30118	Steel pin, stainless	M6 x 45
5	2	30114	Set screw, stainless	M6 x 25
6	4	30854	Nut, stainless	M6
7	2	25244	Connection	GES 8 LR 3/8-WD
8	2	25253	Connection	P-GEV 10 LR 3/8-WD
9	2	25277	Plug	VS-R-3/8 WD
10	2	25127	Connection	P-GEV 12 LR-WD
11	1	25183	Coupling nut	M 12 L
12	1	26180	Blanking plug	VSD 12 L

15/105 - 17/117 SL & DL Parts

63 40 600
Internal ref. 63 41 210

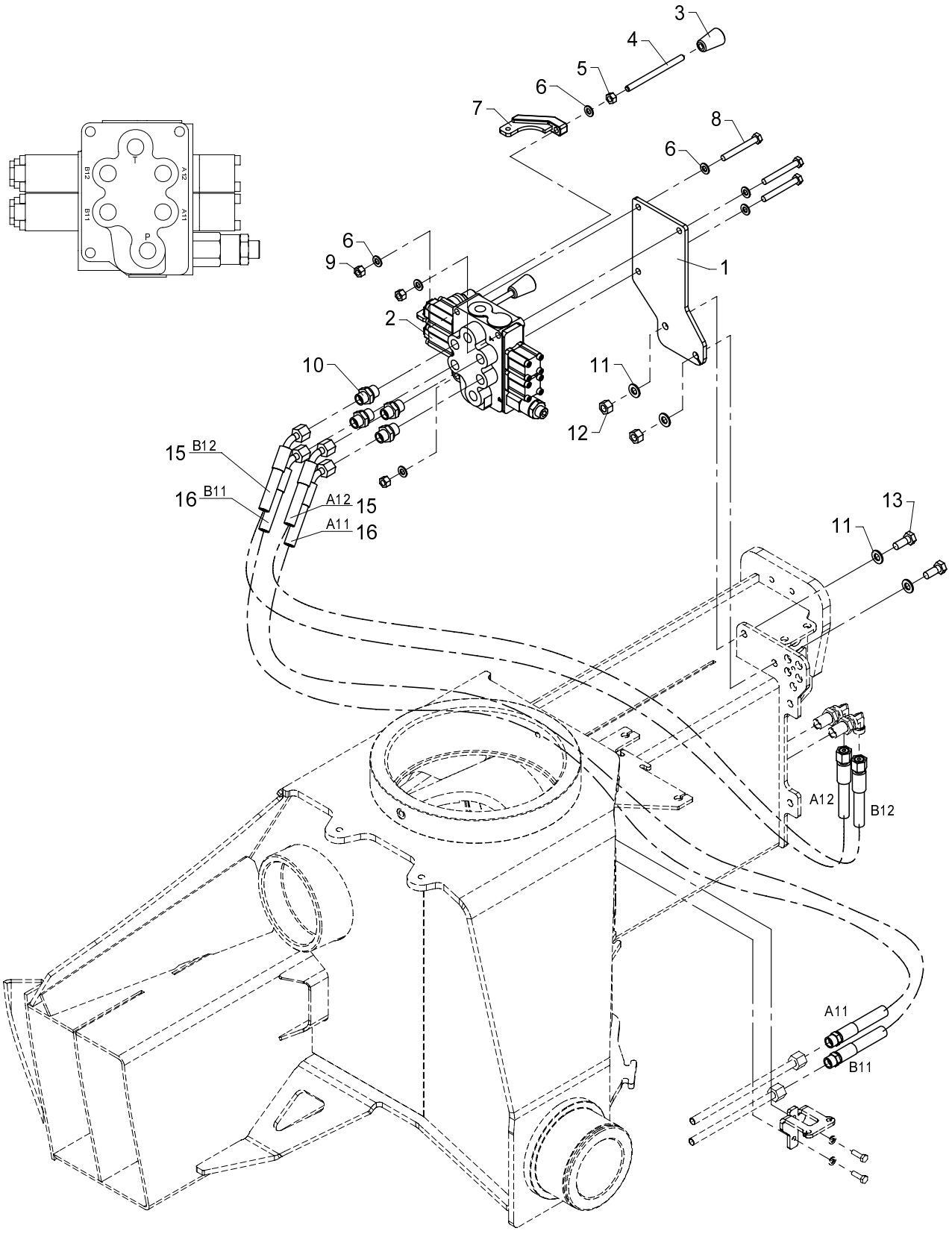

534 05 200

From loader 1060001
To loader

Created 20-11-2008
Modified 01-02-2010

Valve bracket, cpl. 2 fcts.

Pos	Qty.	Part no.	Description	Remarks
		6341210	Valve bracket, compl. 2 functs	
		6340600	Extension cylinder VI	
1	1	6340254	Valve bracket (2 functions)	
2	1	55225	Stabilizer valve	
3	2	59224	Knob for lever	
4	2	1330187	Control lever, long, straight	
5	2	30856	Nut, stainless	M8
6	8	31147	Washer, stainless	8 mm
7	2	63450	Adapter for dual controls	
8	3	30259	Steel bolt, stainless	M8 x 65
9	3	30886	Lock nut, stainless	M8
10	4	25253	Connection	P-GEV 10 LR 3/8-WD
11	4	31565	Washer, stainless	10 mm
12	2	31564	Lock nut, stainless	M10
13	2	31513	Set screw, stainless	M10 x 25
14	1	6341600	Hose kit, 2 functions	
15	2	56393	Hose	5/16"x950mm L/V 10Let / vinkel 45
16	2	56394	Hose	5/16"x600mm S/V 10L studs / vinke

15/105 - 17/117 SL & DL Parts

Internal ref. 63 41 060

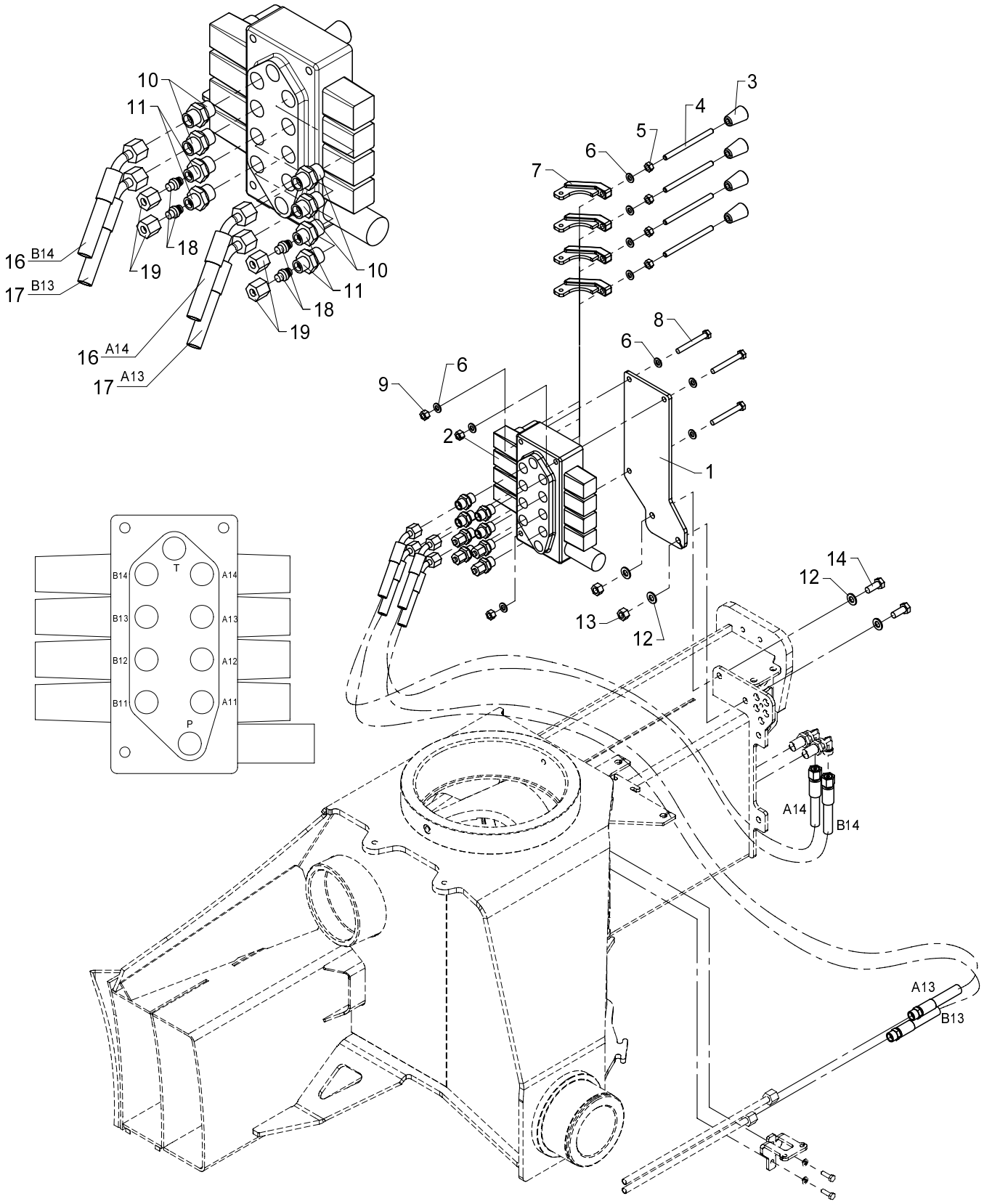

534 05 205

From loader 1060001
To loader

Created
Modified 01-02-2010

Valve bracket, cpl., 2 fcts. + 2 available fcts.

Pos	Qty.	Part no.	Description	Remarks
1	1	6340255	Valve bracket (4 functions)	
2	1	55226	Stabilizer valve	
3	4	59224	Knob for lever	
4	4	1330187	Control lever, long, straight	
5	4	30856	Nut, stainless	M8
6	10	31147	Washer, stainless	8 mm
7	4	63450	Adapter for dual controls	
8	3	30259	Steel bolt, stainless	M8 x 65
9	3	30886	Lock nut, stainless	M8
10	4	25253	Connection	P-GEV 10 LR 3/8-WD
11	4	25244	Connection	GES 8 LR 3/8-WD
12	4	31565	Washer, stainless	10 mm
13	2	31564	Lock nut, stainless	M10
14	2	31513	Set screw, stainless	M10 x 25
15	1	6341600	Hose kit, 2 functions	
16	2	56393	Hose	5/16"x950mm L/V
17	2	56394	Hose	5/16"x600mm S/V
18	4	26166	Blanking plug	VSD 8 L
19	4	25181	Coupling nut	M 8 L

15/105 - 17/117 SL & DL Parts

63 41 610
Internal ref. 63 41 220

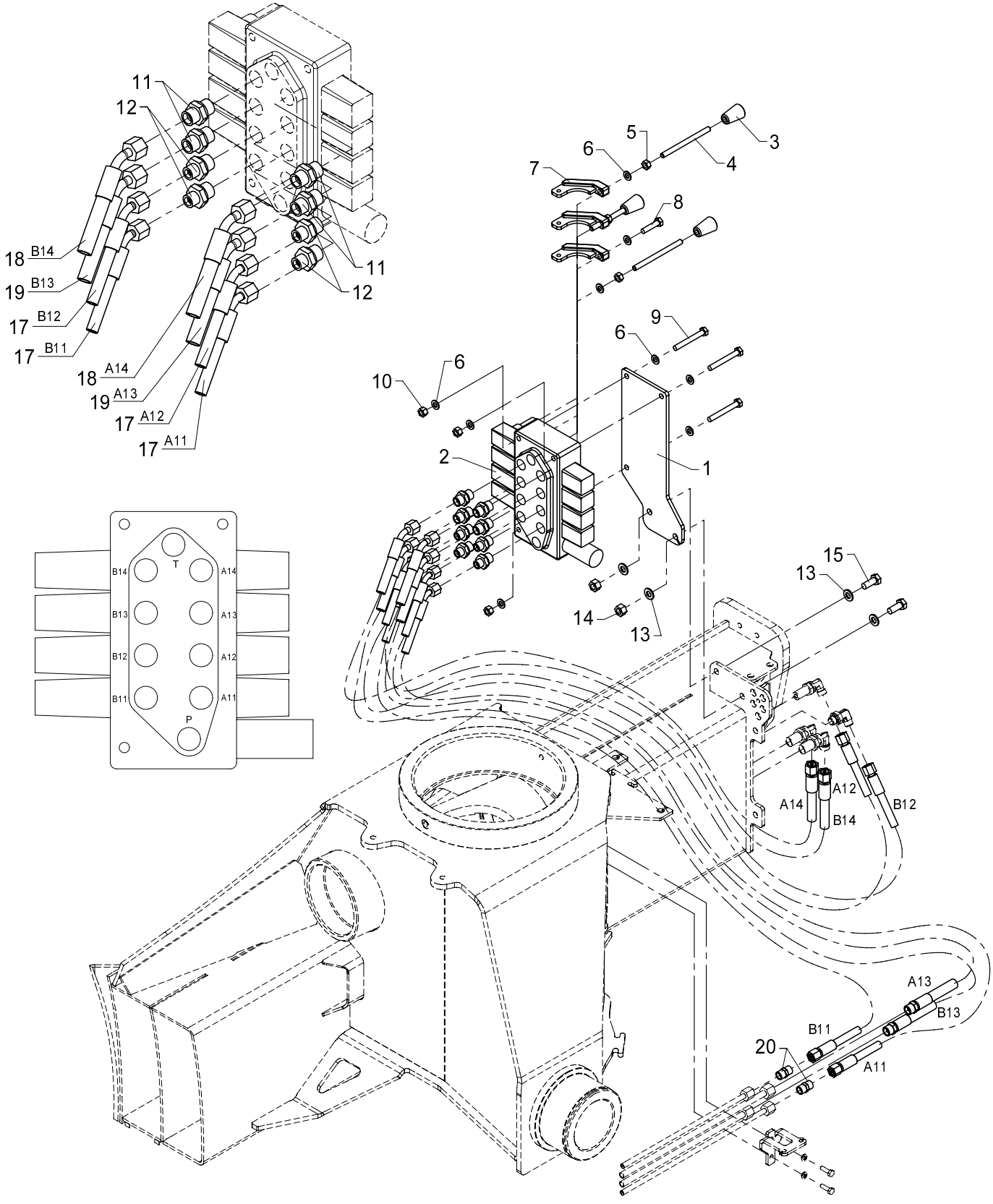

534 05 210

From loader 1060001
To loader

Valve bracket, cpl. 4 fcts.

Created 20-11-2008
Modified 01-02-2010

Pos	Qty.	Part no.	Description	Remarks
		6341220	Valve bracket, cpl., 4 funct.	
		6341610	Hose kit, 4 functions	
1	1	6340255	Valve bracket (4 functions)	
2	1	55226	Stabilizer valve	
3	3	59224	Knob for lever	
4	3	1330187	Control lever, long, straight	
5	3	30856	Nut, stainless	M8
6	10	31147	Washer, stainless	8 mm
7	3	63450	Adapter for dual controls	
8	1	30136	Steel bolt, stainless	M8 x 35
9	3	30259	Steel bolt, stainless	M8 x 65
10	3	30886	Lock nut, stainless	M8
11	4	25253	Connection	P-GEV 10 LR 3/8-WD
12	4	25244	Connection	GES 8 LR 3/8-WD
13	4	31565	Washer, stainless	10 mm
14	2	31564	Lock nut, stainless	M10
15	2	31513	Set screw, stainless	M10 x 25
16	1	6341610	Hose kit, 4 functions	
17	4	56381	Hose	1/4"x600mm L/V 8Let / vinkel 45 gr.
18	2	56393	Hose	5/16"x950mm L/V 10Let / vinkel 45
19	2	56394	Hose	5/16"x600mm S/V 10L studs / vinke
20	2	25246	Double connection	GS 8 L

534 05 220

15/105 - 17/117 SL & DL Parts

63 41 620
Internal ref. 63 41 250

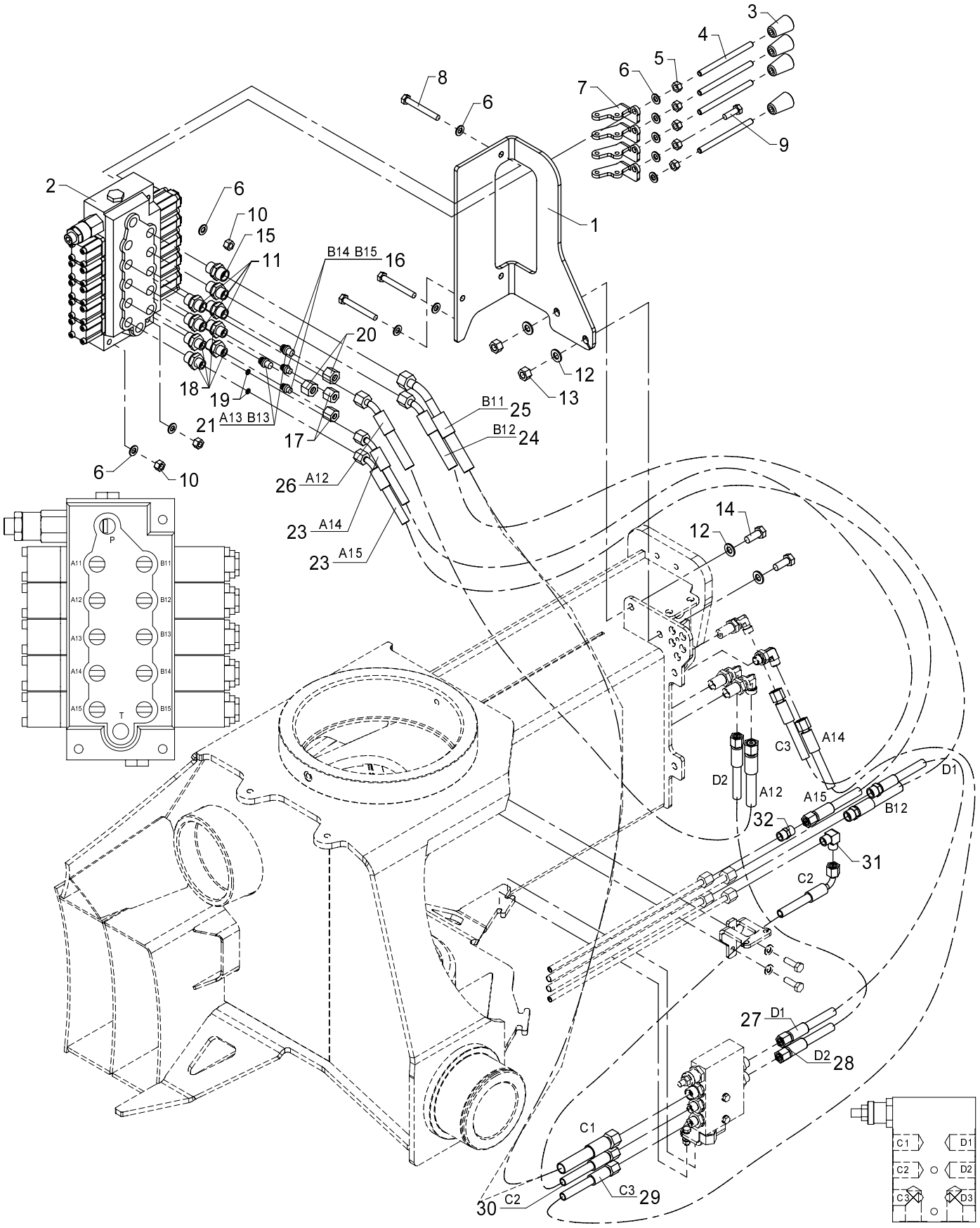

534 05 220

From loader 1060001
To loader

Valve bracket, cpl. 4 fcts. + 4 available

Created 20-11-2008
Modified 11-01-2010

Pos	Qty.	Part no.	Description	Remarks
		6341250	Valve br., cpl.4fcts.+4 avail.	
		6341620	Hose kit, 4 fcts + 4 available	
1	1	6340271	Valve bracket (4 + 4 fcts.)	
2	1	55277	Valve block, complete	
3	4	59224	Knob for lever	
4	4	1330187	Control lever, long, straight	
5	5	30856	Nut, stainless	M8
6	11	31147	Washer, stainless	8 mm
7	4	6340229	Adapter	
8	3	30259	Steel bolt, stainless	M8 x 65
9	1	30134	Set screw, stainless	M8 x 25
10	3	30886	Lock nut, stainless	M8
11	4	25253	Connection	P-GEV 10 LR 3/8-WD
12	4	31565	Washer, stainless	10 mm
13	2	31564	Lock nut, stainless	M10
14	2	31513	Set screw, stainless	M10 x 25
15	1	25127	Connection	P-GEV 12 LR-WD
16	2	26166	Blanking plug	VSD 8 L
17	2	25181	Coupling nut	M 8 L
18	4	25244	Connection	GES 8 LR 3/8-WD
19	2	60963	Washer	
20	2	25182	Coupling nut	M 10 L
21	2	25202	Blanking plug	VSD 10 L
22	1	6341620	Hose kit, 4 fcts + 4 available	
23	2	56381	Hose	1/4"x600mm L/V 8Let / vinkel 45 gr.
24	1	56394	Hose	5/16"x600mm S/V 10L studs / vinke
25	1	56511	Hose	3/8 X 900 mm 45/L 12Let
26	1	56393	Hose	5/16"x950mm L/V 10Let / vinkel 45
27	1	56460	Hose	1/4" x 550mm L/S-10mm
28	1	56510	Hose	1/4 X 600 mm L/L 10Let
29	1	62569	Hose	1/4 X 800 M14 X 1.5 L/L
30	1	62525	Hose	1/4 X 400 M14 X 1.5 L/90
31	1	25247	Elbow connection	WV 8 L
32	1	25246	Double connection	GS 8 L

534 05 230

15/105 - 17/117 SL & DL Parts

63 41 520
63 41 620
Internal ref. 63 41 230

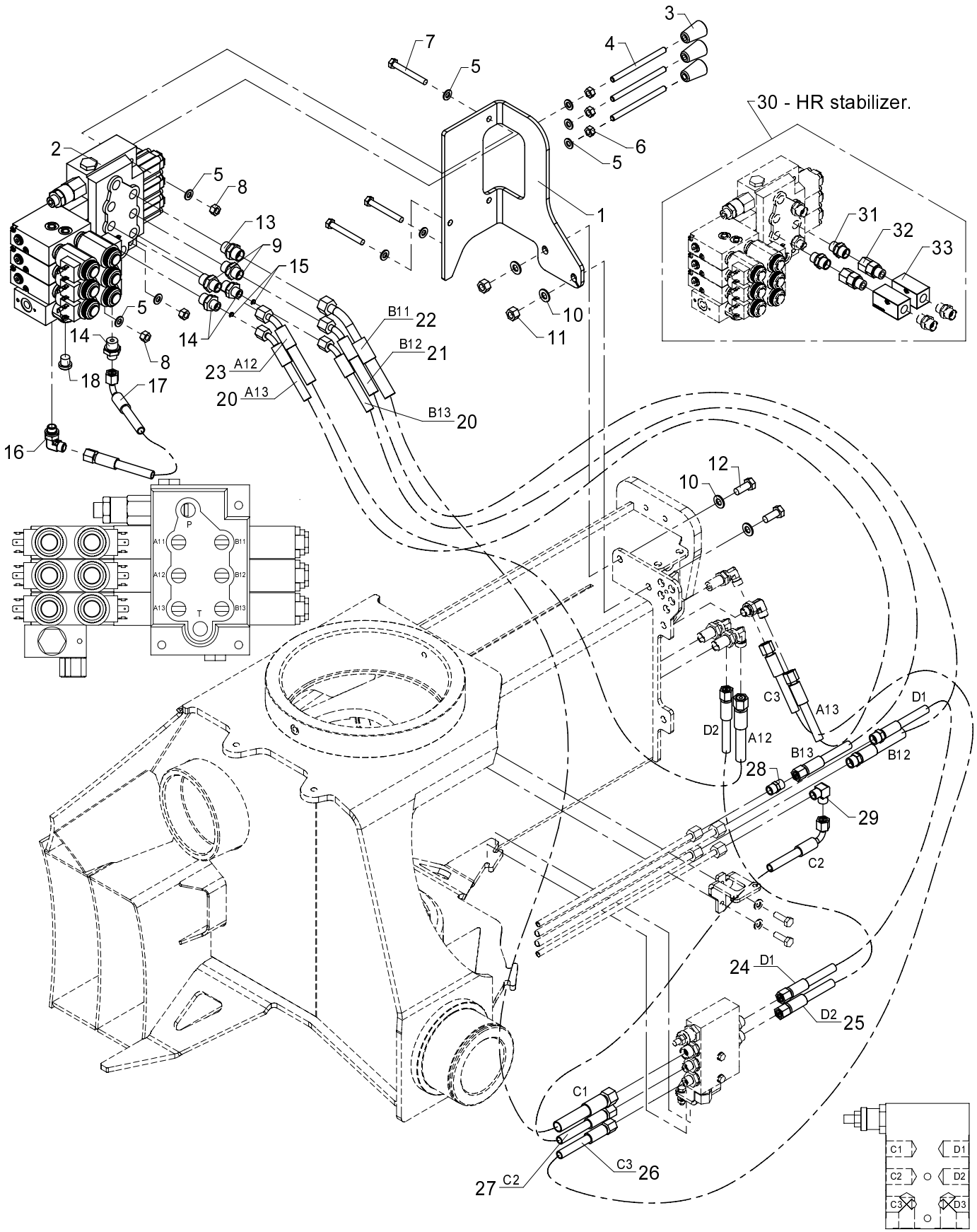

534 05 230

From loader 1060001
To loader

Valve bracket, cpl. 4 fcts. - RC

Created 20-11-2008
Modified 23-11-2010

Pos	Qty.	Part no.	Description	Remarks
		6341230		
1	1	6340272	Valve bracket (4 fcts. RC)	
2	1	55276	Valve block, complete	
3	3	59224	Knob for lever	
4	3	1330187	Control lever, long, straight	
5	9	31147	Washer, stainless	8 mm
6	3	30856	Nut, stainless	M8
7	3	30259	Steel bolt, stainless	M8 x 65
8	3	30886	Lock nut, stainless	M8
9	2	25253	Connection	P-GEV 10 LR 3/8-WD
10	4	31565	Washer, stainless	10 mm
11	2	31564	Lock nut, stainless	M10
12	2	31513	Set screw, stainless	M10 x 25
13	1	25127	Connection	P-GEV 12 LR-WD
14	3	25244	Connection	GES 8 LR 3/8-WD
15	2	60963	Washer	
16	1	26898	Elbow connection	8 mm - 1/4"
17	1	56531	Hose	1/4 X 200 M14 X 1.5 L/90
18	1	25197	Plug	VS-R-1/4 WD
19	1	6341620	Hose kit, 4 fcts + 4 available	
20	2	56381	Hose	1/4"x600mm L/V 8Let / vinkel 45 gr.
21	1	56394	Hose	5/16"x600mm S/V 10L studs / vinke
22	1	56511	Hose	3/8 X 900 mm 45/L 12Let
23	1	56393	Hose	5/16"x950mm L/V 10Let / vinkel 45
24	1	56460	Hose	1/4" x 550mm L/S-10mm
25	1	56510	Hose	1/4 X 600 mm L/L 10Let
26	1	62569	Hose	1/4 X 800 M14 X 1.5 L/L
27	1	62525	Hose	1/4 X 400 M14 X 1.5 L/90
28	1	25246	Double connection	P-GV 8 L
29	1	25247	Elbow connection	WV 8 L
30	1	6341520		
31	2	25127	Connection	P-GEV 12 LR-WD
32	2	25240	Connection	EGESD 12 LR-WD
33	2	49187		

534 05 235

15/105 - 17/117 SL & DL Parts

63 41 520
63 41 620
Internal ref. 63 41 720

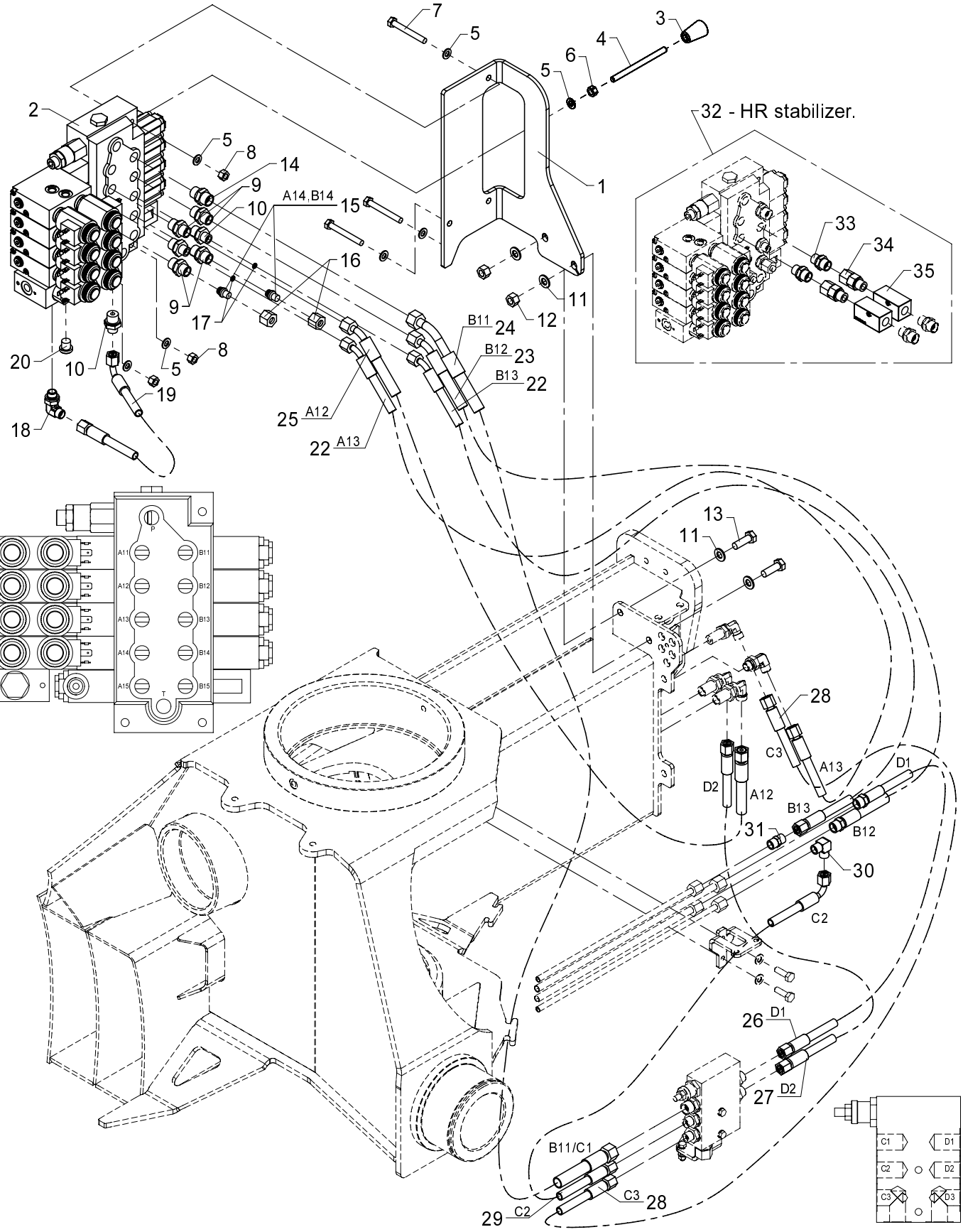

534 05 235

From loader 1060001
To loader

Valve bracket, cpl. 4 fcts. + 2 available fcts. - RC

Created 11-12-2008
Modified 23-11-2010

Pos	Qty.	Part no.	Description	Remarks
		6341720		
1	1	6340271	Valve bracket (4 + 4 fcts.)	
2	1	55282	Valve block, complete	
3	4	59224	Knob for lever	
4	4	1330187	Control lever, long, straight	
5	11	31147	Washer, stainless	8 mm
6	5	30856	Nut, stainless	M8
7	3	30259	Steel bolt, stainless	M8 x 65
8	3	30886	Lock nut, stainless	M8
9	4	25253	Connection	P-GEV 10 LR 3/8-WD
10	3	25244	Connection	GES 8 LR 3/8-WD
11	4	31565	Washer, stainless	10 mm
12	2	31564	Lock nut, stainless	M10
13	2	30156	Set screw, stainless	M10 x 30
14	1	25127	Connection	P-GEV 12 LR-WD
15	2	25202	Blanking plug	VSD 10 L
16	2	25182	Coupling nut	M 10 L
17	2	60963	Washer	
18	1	26898	Elbow connection	8 mm - 1/4"
19	1	56531	Hose	1/4X200 M14X1.5 L/90
20	1	25197	Plug	VS-R-1/4 WD
21	1	6341620	Hose kit, 4 fcts + 4 available	
22	2	56381	Hose	1/4"x600mm L/V
23	1	56394	Hose	5/16"x600mm S/V
24	1	56511	Hose	3/8"x900mm V/O 10L
25	1	56393	Hose	5/16"x950mm L/V
26	1	56460	Hose	1/4" x 550mm L/S-10mm
27	1	56510	Hose	1/4 X 600 mm L/L 10Let
28	1	62569	Hose	1/4 X 800 M14 X 1.5 L/L
29	1	62525	Hose	1/4 X 400 M14 X 1.5 L/90
30	1	25247	Elbow connection	WV 8 L
31	1	25246	Double connection	GS 8 L
32	1	6341520		
33	2	25127	Connection	P-GEV 12 LR-WD
34	2	25240	Connection	EGESD 12 LR-WD
35	2	49187		

15/105 - 17/117 SL & DL Parts

63 41 520
63 41 620
Internal ref. 63 41 270

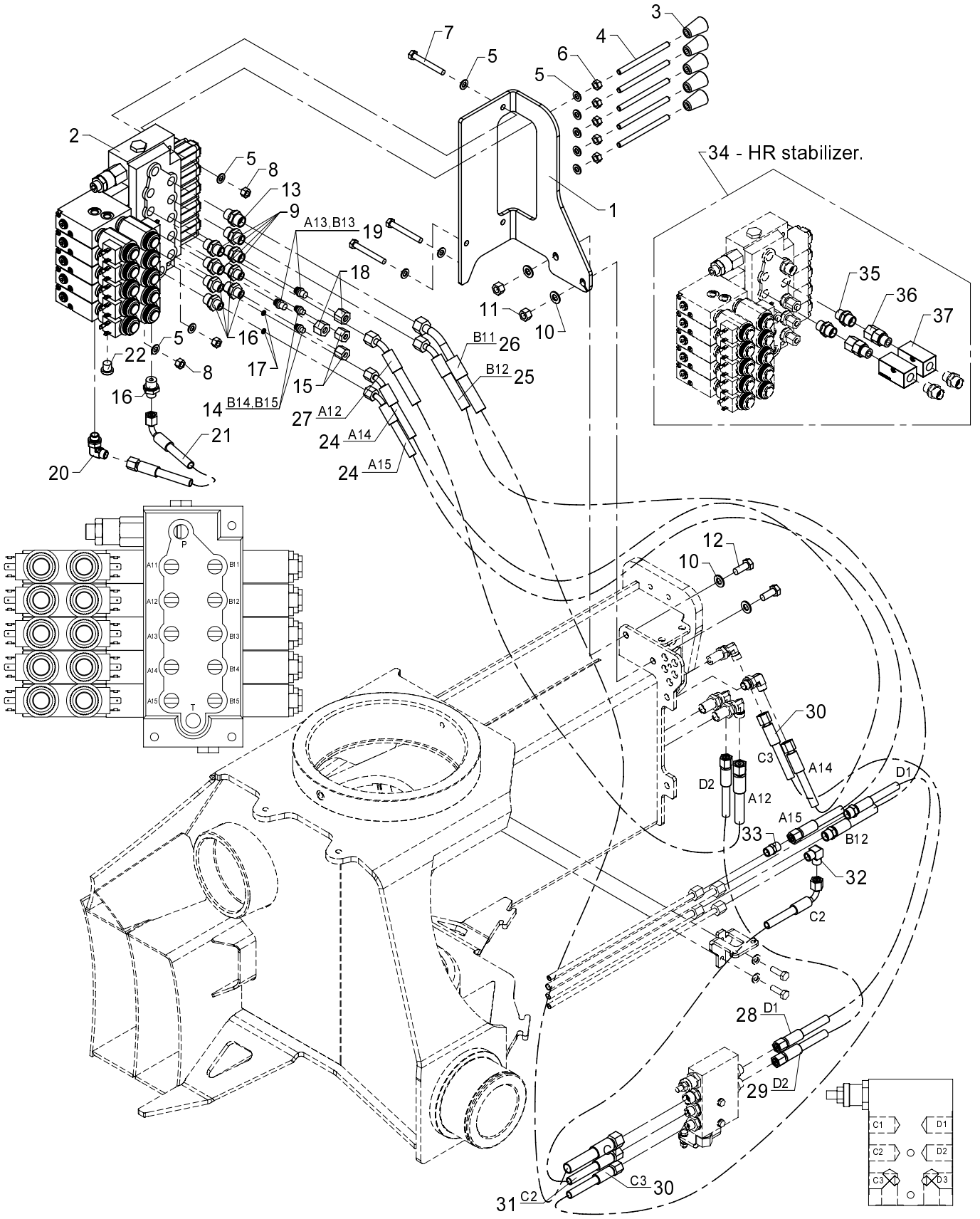

534 05 240

From loader 1060001
To loader

Valve bracket, cpl. 4 fcts. + 4 available - RC

Created 20-11-2008
Modified 24-11-2010

Pos	Qty.	Part no.	Description	Remarks
		6341270		
1	1	6340271	Valve bracket (4 + 4 fcts.)	
2	1	55275	Valve block, complete	
3	5	59224	Knob for lever	
4	5	1330187	Control lever, long, straight	
5	11	31147	Washer, stainless	8 mm
6	5	30856	Nut, stainless	M8
7	3	30259	Steel bolt, stainless	M8 x 65
8	3	30886	Lock nut, stainless	M8
9	4	25253	Connection	P-GEV 10 LR 3/8-WD
10	4	31565	Washer, stainless	10 mm
11	2	31564	Lock nut, stainless	M10
12	2	31513	Set screw, stainless	M10 x 25
13	1	25127	Connection	P-GEV 12 LR-WD
14	2	26166	Blanking plug	VSD 8 L
15	2	25181	Coupling nut	M 8 L
16	5	25244	Connection	GES 8 LR 3/8-WD
17	2	60963	Washer	
18	2	25182	Coupling nut	M 10 L
19	2	25202	Blanking plug	VSD 10 L
20	1	26898	Elbow connection	8 mm - 1/4"
21	1	56531	Hose	1/4X200 M14X1.5 L/90
22	1	25197	Plug	VS-R-1/4 WD
23	1	6341620	Hose kit, 4 fcts + 4 available	
24	2	56381	Hose	1/4"x600mm L/V 8Let / vinkel 45 gr.
25	1	56394	Hose	5/16"x600mm S/V 10L studs / vinke
26	1	56511	Hose	3/8 X 900 mm 45/L 12Let
27	1	56393	Hose	5/16"x950mm L/V 10Let / vinkel 45
28	1	56460	Hose	1/4" x 550mm L/S-10mm
29	1	56510	Hose	1/4 X 600 mm L/L 10Let
30	1	62569	Hose	1/4 X 800 M14 X 1.5 L/L
31	1	62525	Hose	1/4 X 400 M14 X 1.5 L/90
32	1	25247	Elbow connection	WV 8 L
33	1	25246	Double connection	P-GV 8 L
34	1	6341520		
35	2	25127	Connection	P-GEV 12 LR-WD
36	2	25240	Connection	EGESD 12 LR-WD
37	2	49187		

15/105 - 17/117 SL & DL Parts

Internal ref. 63 41 710

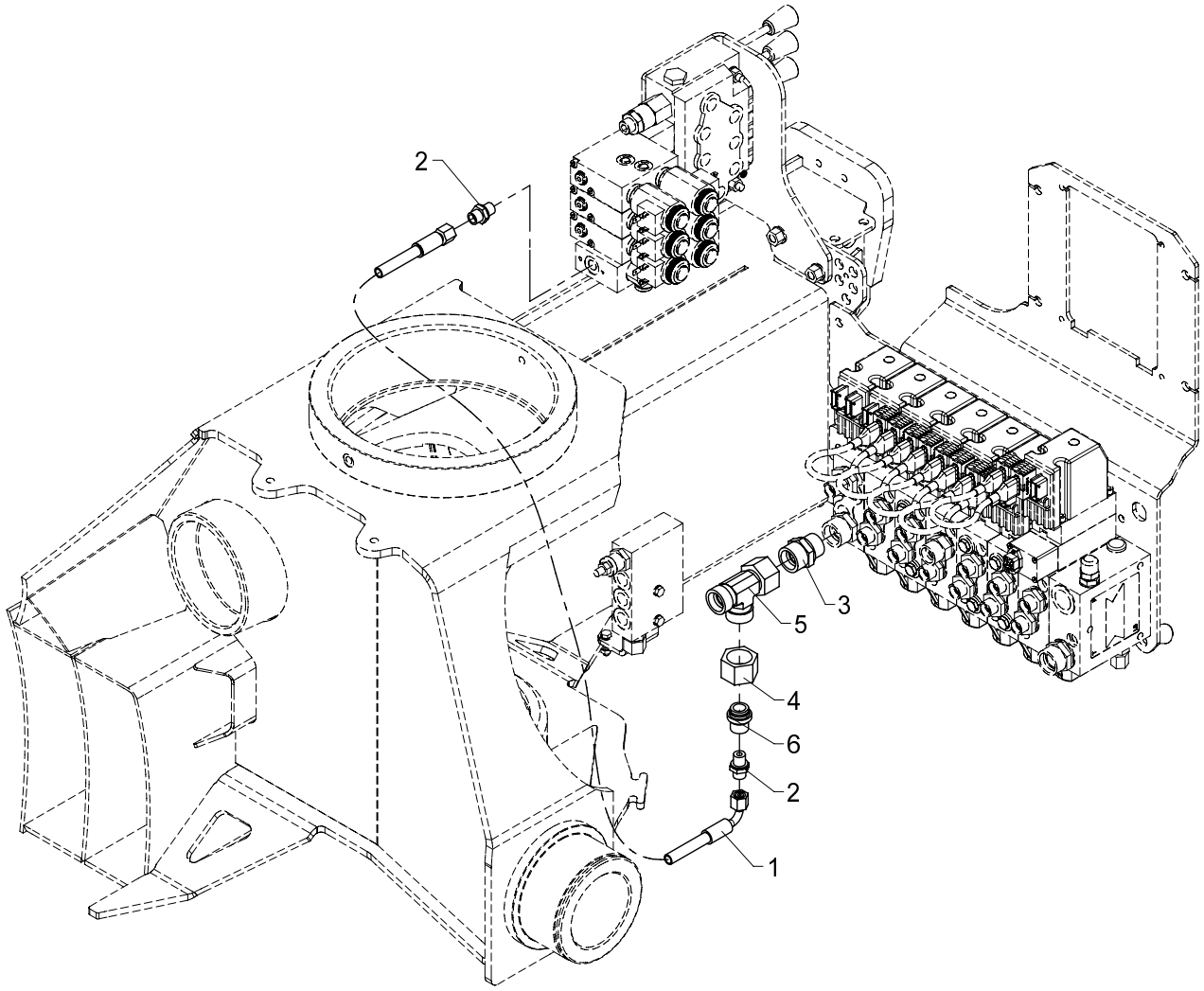

Pilot controlled oil supply for NEM/stabilizer valve block

From loader 1060001
To loader
Created
Modified 18-08-2009

Pos	Qty.	Part no.	Description	Remarks
1	1	56520	Hose	1/4 X 900 M14X1.5 L/90 (350 bar)
2	2	25109	Connection	GES 8 LR-WD
3	1	26197	Connection	P-GEV 20 SR-WD
4	1	26109	Coupling nut	M 20 S
5	1	26362	Connection	ELSD 20 S
6	1	25585	Plug	VSD 20 S

15/105 - 17/117 SL & DL Parts

Internal ref. 63 44 790

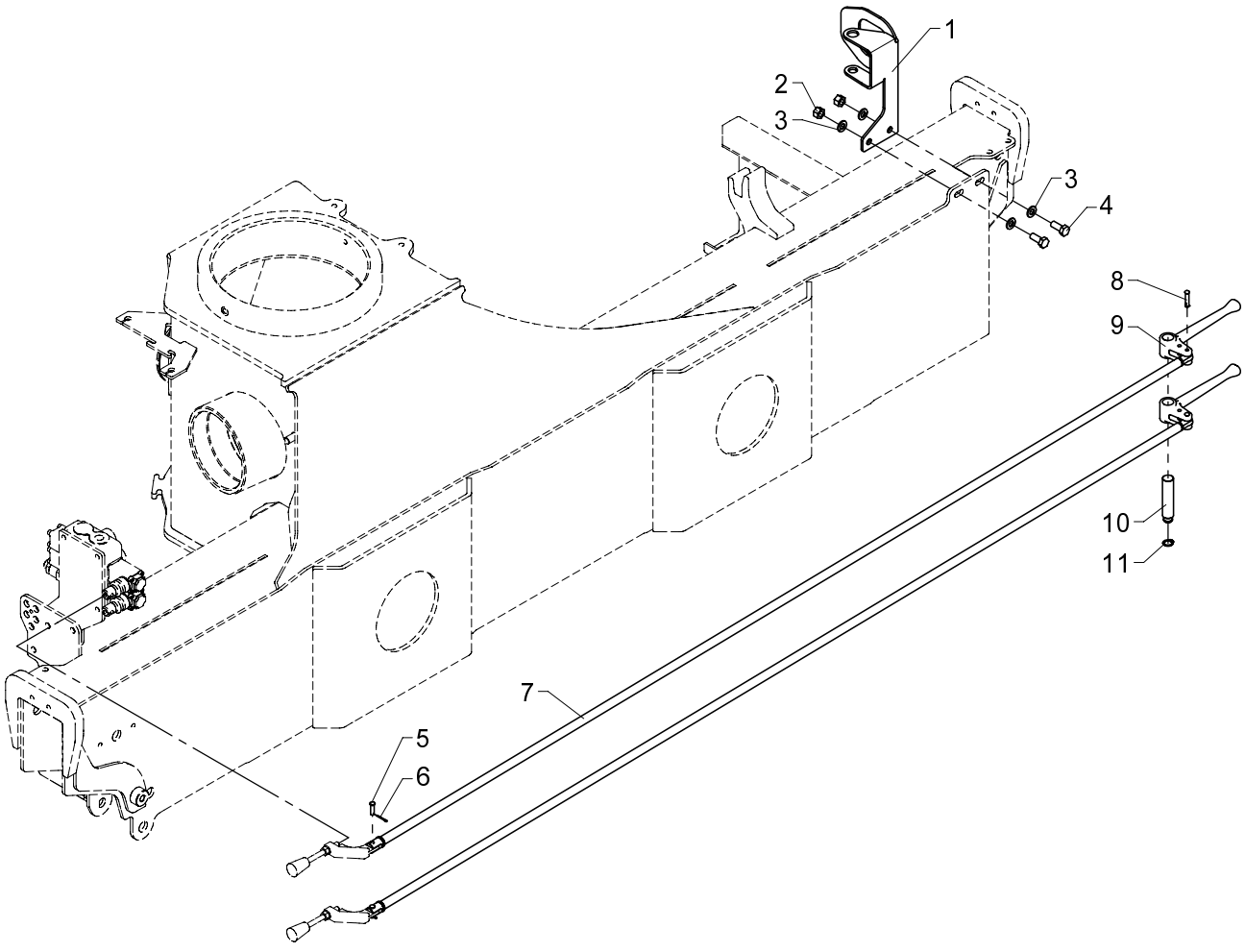

Dual control, 2 fcts. std.

534 05 270

From loader 1060001
To loader

Created 13-11-2008
Modified

Pos	Qty.	Part no.	Description	Remarks
1	1	6340256	Bracket for dual control	
2	2	31564	Lock nut, stainless	M10
3	4	31565	Washer, stainless	10 mm
4	2	31513	Set screw, stainless	M10 x 25
5	2	31271	Cotter bolt	ø6 x 21
6	2	31601	Split pin, stainless	ø1,6 x 20
7	2	6340263	Connecting rod	
8	2	63468	Split pin with spring lock	
9	2	63444	Lever for dual controls	
10	1	6340261	Pin (2 functions)	
11	1	33104	Circlip	15U

15/105 - 17/117 SL & DL Parts

Internal ref. 63 44 850

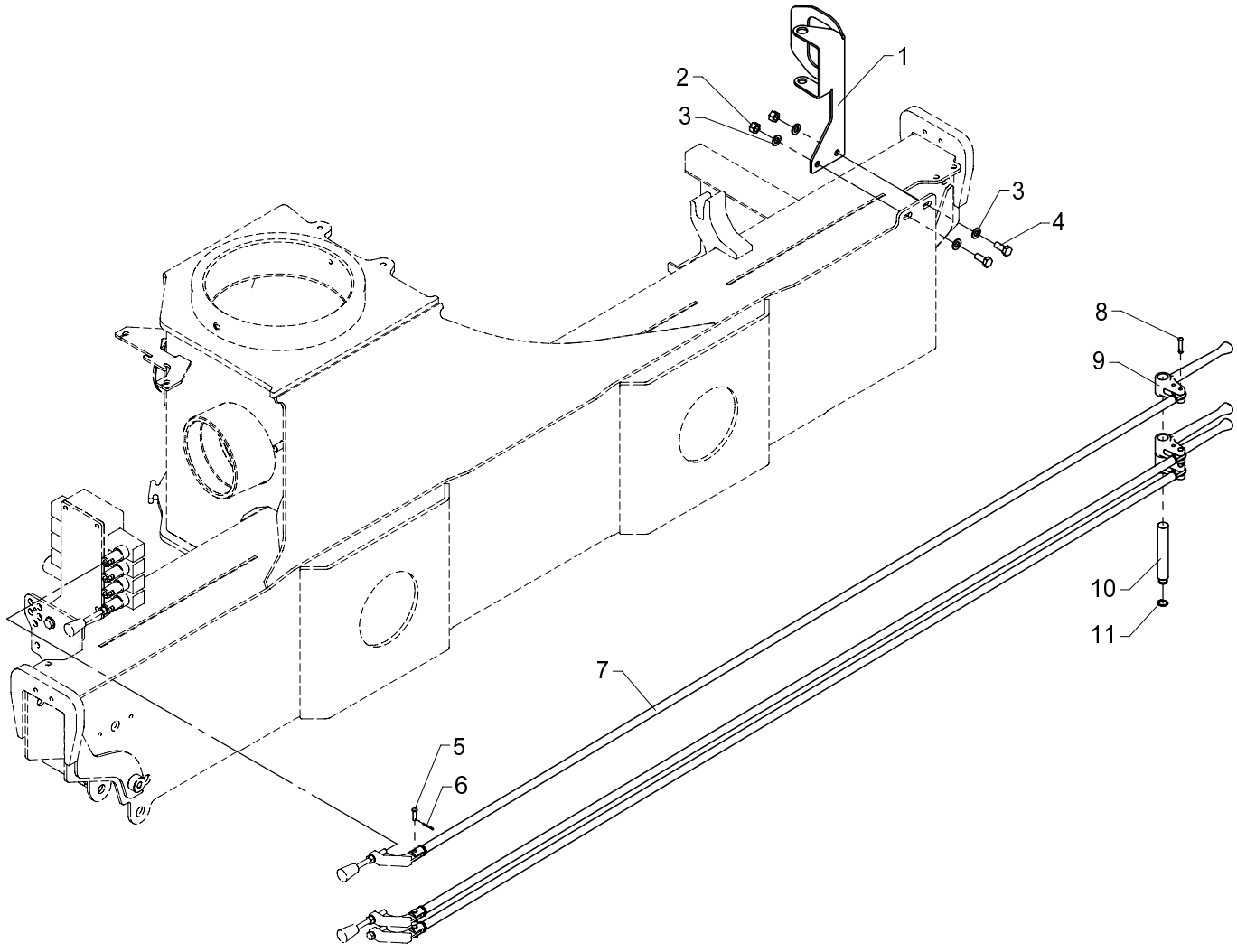

Dual control, 4 fcts. std.

534 05 280

From loader 1060001
To loader

Created 13-11-2008
Modified

Pos	Qty.	Part no.	Description	Remarks
1	1	6340257	Bracket for dual control	
2	2	31564	Lock nut, stainless	M10
3	4	31565	Washer, stainless	10 mm
4	2	31513	Set screw, stainless	M10 x 25
5	3	31271	Cotter bolt	ø6 x 21
6	3	31601	Split pin, stainless	ø1,6 x 20
7	3	6340263	Connecting rod	
8	3	63468	Split pin with spring lock	
9	3	63444	Lever for dual controls	
10	1	6340262	Pin (4 functions)	
11	1	33104	Circlip	15U

15/105 - 17/117 SL & DL Parts

Internal ref. 63 44 860

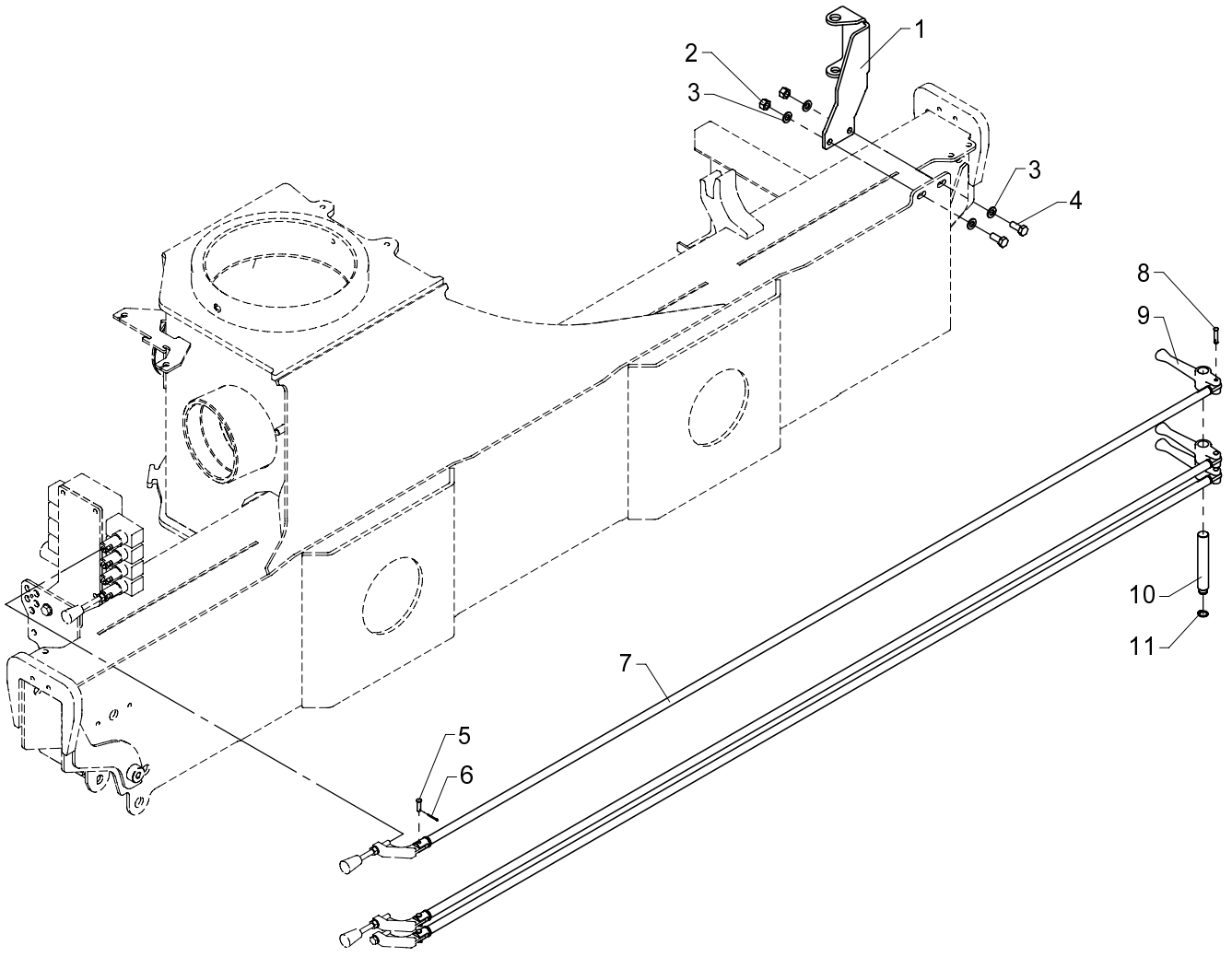

534 05 290

From loader 1060001
To loader

Created 13-11-2008
Modified

Dual control, 4 fcts., hydr. swing-up stabilizer legs

Pos	Qty.	Part no.	Description	Remarks
1	1	6340259	Bracket for dual control	
2	2	31564	Lock nut, stainless	M10
3	4	31565	Washer, stainless	10 mm
4	2	31513	Set screw, stainless	M10 x 25
5	3	31271	Cotter bolt	ø6 x 21
6	3	31601	Split pin, stainless	ø1,6 x 20
7	3	6340263	Connecting rod	
8	3	63468	Split pin with spring lock	
9	3	63483	Lever for dual control	
10	1	6340262	Pin (4 functions)	
11	1	33104	Circlip	15U

15/105 - 17/117 SL & DL Parts

Internal ref. 63 45 870

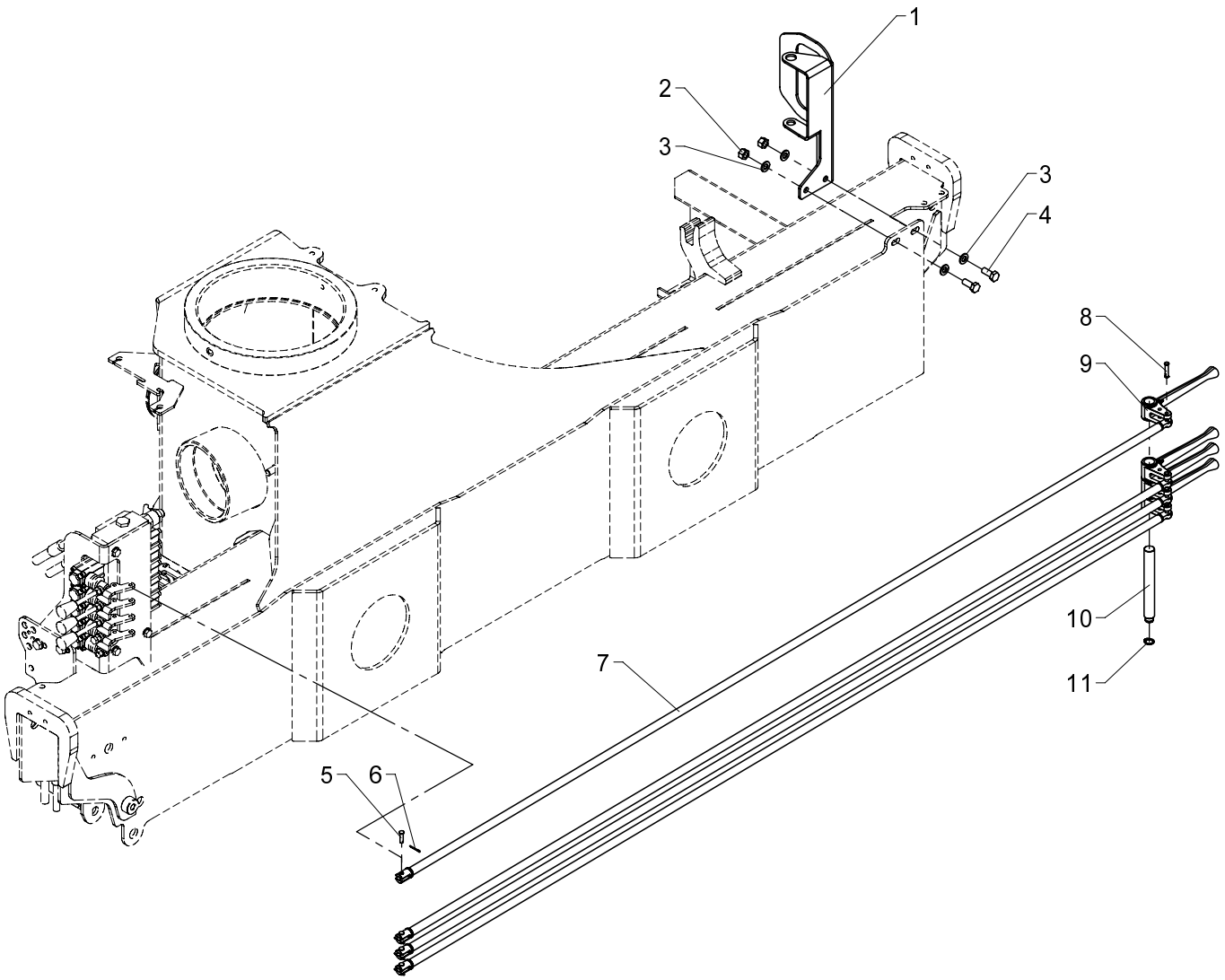

534 05 300

From loader 1060001
To loader

Created 13-11-2008
Modified

Dual control.4 fcts. + 4 available functions (std.)

Pos	Qty.	Part no.	Description	Remarks
1	1	6340258	Bracket, dual control (4 + 4)	
2	2	31564	Lock nut, stainless	M10
3	4	31565	Washer, stainless	10 mm
4	2	31513	Set screw, stainless	M10 x 25
5	4	31271	Cotter bolt	ø6 x 21
6	4	31601	Split pin, stainless	ø1,6 x 20
7	4	6340263	Connecting rod	
8	4	63468	Split pin with spring lock	
9	4	63444	Lever for dual controls	
10	1	6340264	Pin(4 fcts.+4 available fcts.)	
11	1	33104	Circlip	15U

15/105 - 17/117 SL & DL Parts

Internal ref. 63 45 880

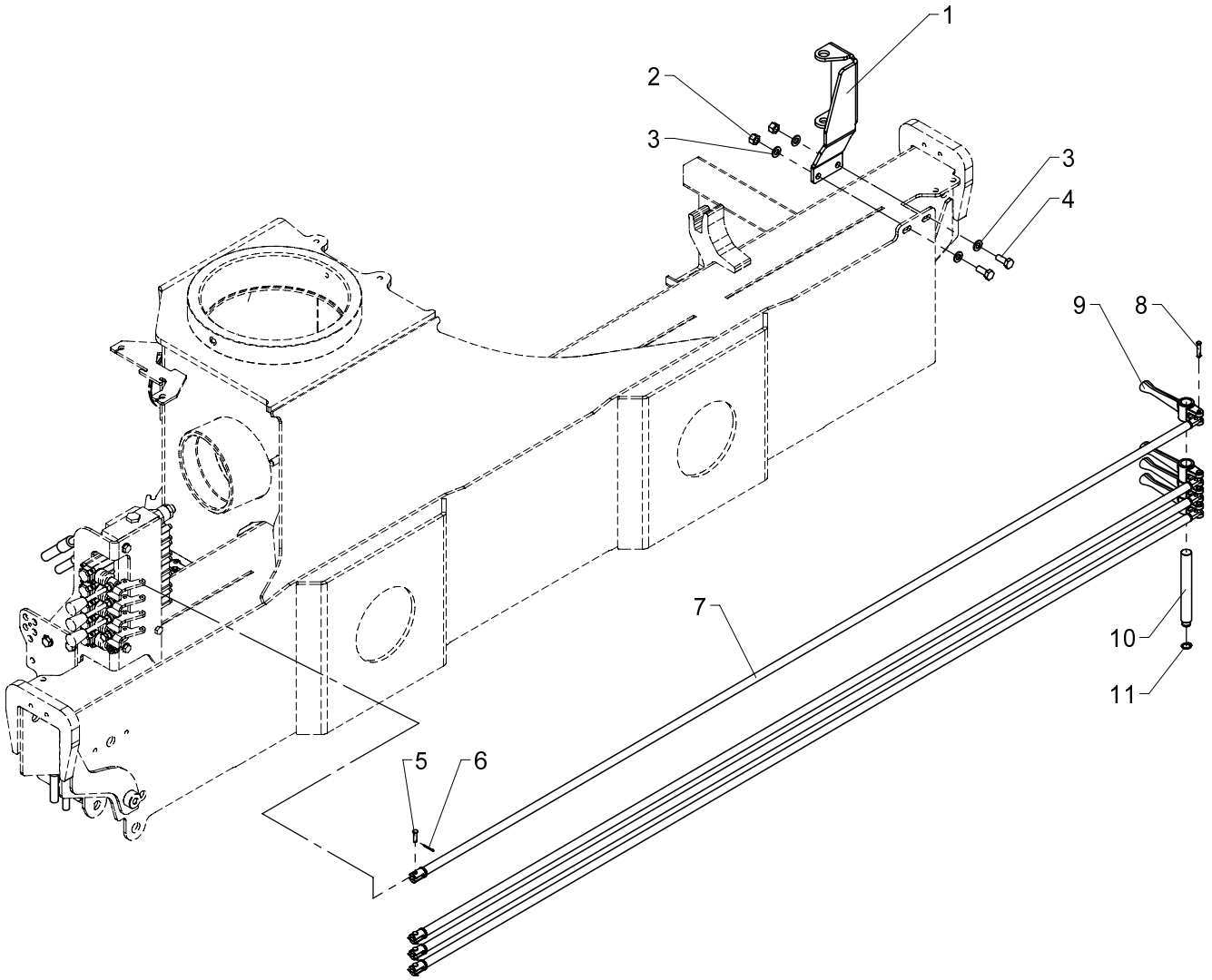

534 05 310

From loader 1060001
To loader

Created 13-11-2008
Modified

Dual control, 4 fcts. + 4 available fcts. (hydr. swing-up stabilizer legs)

Pos	Qty.	Part no.	Description	Remarks
1	1	6340269	Bracket for dual control	
2	2	31564	Lock nut, stainless	M10
3	4	31565	Washer, stainless	10 mm
4	2	31513	Set screw, stainless	M10 x 25
5	4	31271	Cotter bolt	ø6 x 21
6	4	31601	Split pin, stainless	ø1,6 x 20
7	4	6340263	Connecting rod	
8	4	63468	Split pin with spring lock	
9	4	63483	Lever for dual control	
10	1	6340264	Pin(4 fcts.+4 available fcts.)	
11	1	33104	Circlip	15U

15/105 - 17/117 SL & DL Parts

Internal ref. 63 40 640

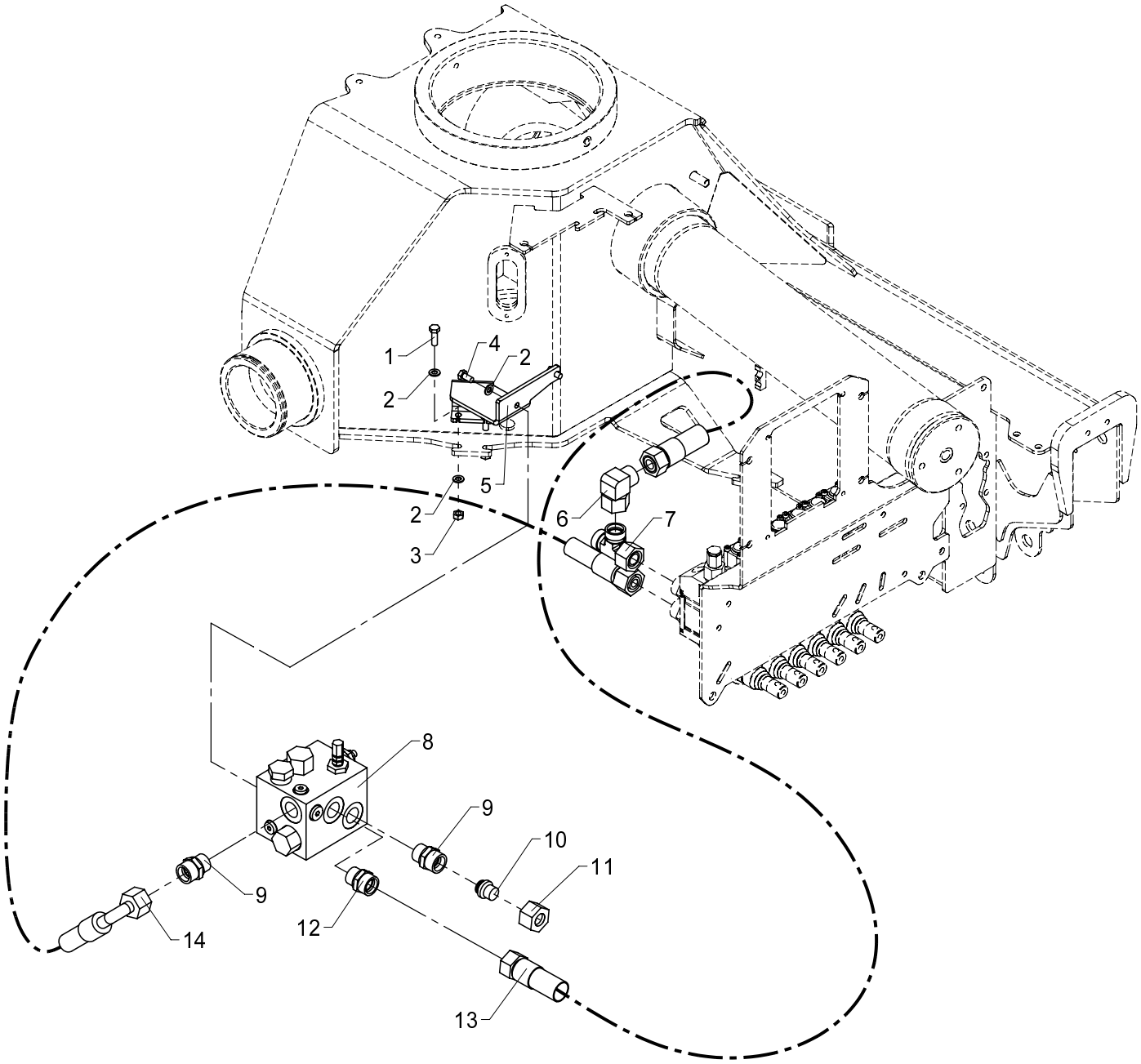

Kit for HDL-2 (std.)

534 05 350

From loader 1060001
To loader

Created 20-11-2008
Modified

Pos	Qty.	Part no.	Description	Remarks
1	2	30134	Set screw, stainless	M8 x 25
2	6	31147	Washer, stainless	8 mm
3	2	30856	Nut, stainless	M8
4	2	30131	Set screw, stainless	M8 x 16
5	1	6340848	Bracket (HDL-2)	
6	1	25209	Elbow connection	EWSD 22 L
7	1	26149	Connection	ELSD 22 L
8	1	59018	HDL-2 valve	
9	2	26197	Connection	P-GEV 20 SR-WD
10	1	26361	Blanking plug	VSD 20 S
11	1	26109	Coupling nut	M 20 S
12	1	25169	Connection	P-GEV 22 LR-WD
13	1	62559	Hose	
14	1	62668	Hose	

534 05 400

15/105 - 17/117 SL & DL Parts

63 43 250
63 46 450
63 43 090
63 43 080
Internal ref. 63 43 010

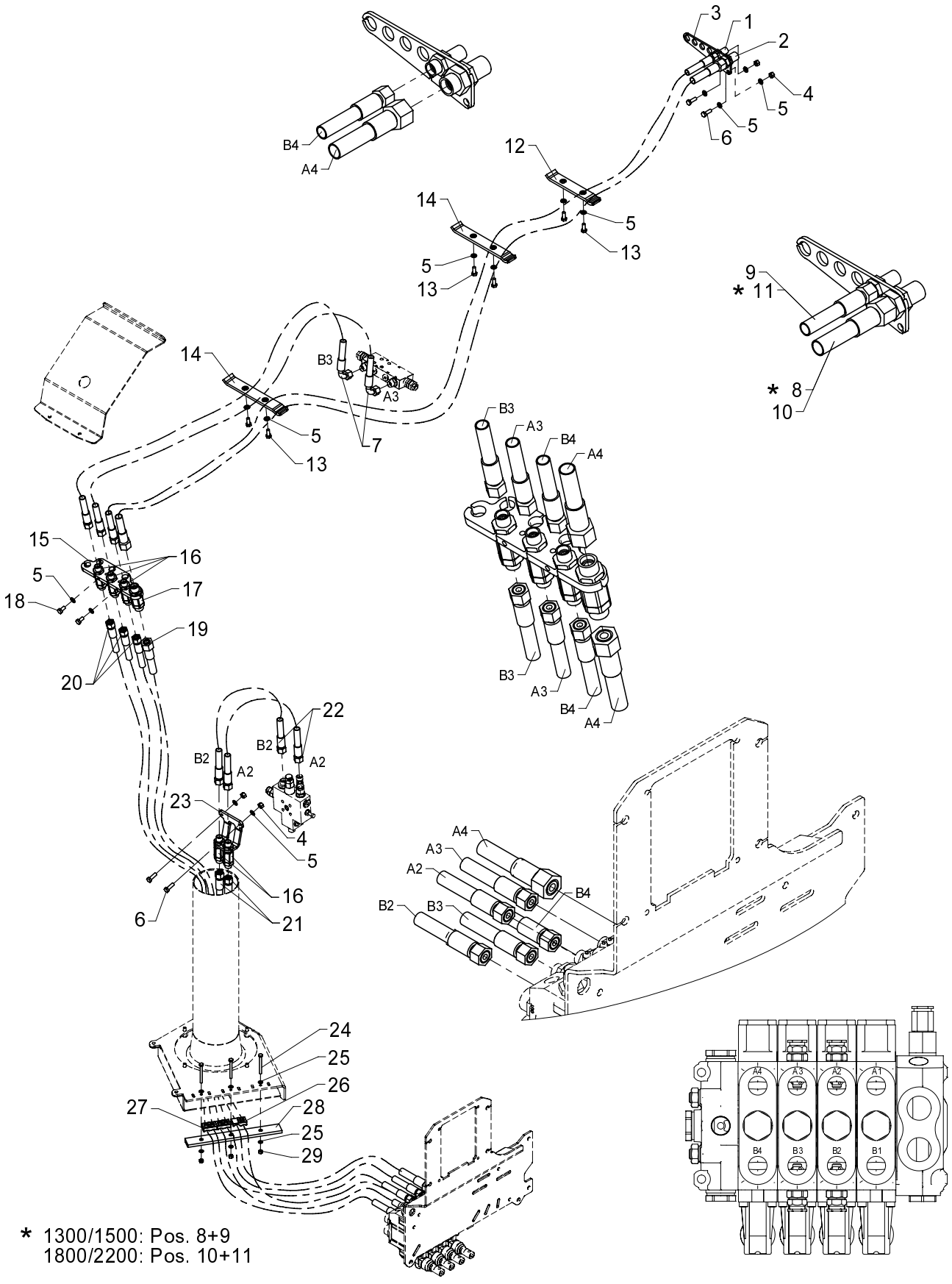

* 1300/1500: Pos. 8+9
1800/2200: Pos. 10+11

534 05 400

From loader 1060001
To loader

Hose kit, loader functions, std.

Created 24-11-2008
Modified 09-03-2009

Pos	Qty.	Part no.	Description	Remarks
		6343010	Hose kit, column, std.	
		6343080	Hose kit, boom cylinder	
		6343090	Hose kit, main boom, std.	
		6346450	Hose kit, main boom, std.V	
		6343250	Clamp kit, std.	
1	1	25201	Bulkhead connection	GSS 12 L
2	1	26335	Bulkhead connection	P-GSV 16 S
3	1	6340315	Bracket, bulkhead connections	
4	4	30886	Lock nut, stainless	M8
5	14	31147	Washer, stainless	8 mm
6	4	30134	Set screw, stainless	M8 x 25
7	2	0017690	Hose	
8	1	56382	Hose	1/2 X 3400 mm L/L
9	1	0017600	Hose	
10	1	56529	Hose	1/2 X 3500 mm L/L
11	1	0017770	Hose	
12	1	6340211	Clamp, complete	
13	6	30132	Set screw, stainless	M8 x 20
14	2	6340213	Clamp, complete	
15	1	6340252	Bracket for swivel coupling	
16	5	58478	Swivel coupling	M18 x 1,5 12L
17	1	58479	Swivel coupling	M24 x 1,5 16L
18	2	30131	Set screw, stainless	M8 x 16
19	1	62846	Hose	1/2 X 2750 M24X1.5 L/L
20	3	0015130	Hose	
21	2	0015120	Hose	
22	2	0015500	Hose	
23	1	6340251	Clamp for swivel coupling	
24	3	31956	Set screw, stainless	M6 x 60
25	6	32302	Face washer, stainless	6 mm
26	1	63562	Clamp	
27	2	63561	Clamp	
28	1	6340238	Clamp, complete	
29	3	30884	Lock nut, stainless	M6

534 05 410

63 43 260
63 43 080
63 46 470
63 43 110
Internal ref. 63 43 040

15/105 - 17/117 SL & DL Parts

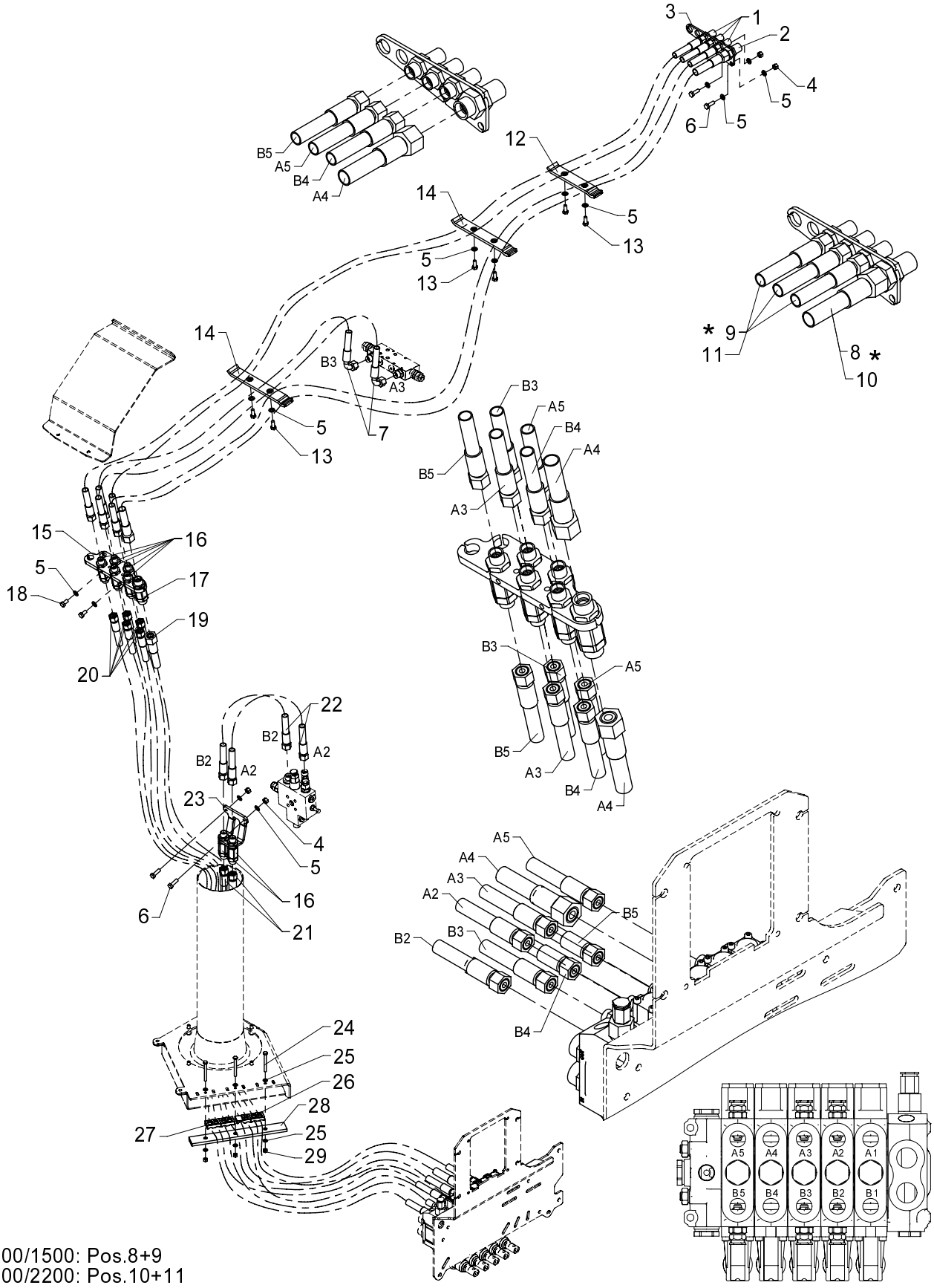

* 1300/1500: Pos.8+9
1800/2200: Pos.10+11

534 05 410

From loader 1060001
To loader

Created 24-11-2008
Modified 05-11-2009

Hose kit, loader functions, 1 EXV.

Pos	Qty.	Part no.	Description	Remarks
		6343040	Hose kit, column, 1 EXV	
		6343110	Hose kit, main boom, 1 EXV	
		6346470	Hose kit, main boom, 1 EXV	
		6343080	Hose kit, boom cylinder	
		6343260	Clamp, 1 EXV	
1	3	25201	Bulkhead connection	GSS 12 L
2	1	26335	Bulkhead connection	P-GSV 16 S
3	1	6340315	Bracket, bulkhead connections	
4	4	30886	Lock nut, stainless	M8
5	14	31147	Washer, stainless	8 mm
6	4	30134	Set screw, stainless	M8 x 25
7	2	0017690	Hose	
8	1	56382	Hose	1/2 X 3400 mm L/L
9	3	0017600	Hose	
10	1	56529	Hose	1/2 X 3500 mm L/L
11	3	0017770	Hose	
12	1	6340211	Clamp, complete	
13	6	30132	Set screw, stainless	M8 x 20
14	2	6340213	Clamp, complete	
15	1	6340252	Bracket for swivel coupling	
16	7	58478	Swivel coupling	M18 x 1,5 12L
17	1	58479	Swivel coupling	M24 x 1,5 16L
18	2	30131	Set screw, stainless	M8 x 16
19	1	62846	Hose	1/2 X 2750 M24X1.5 L/L
20	5	0015130	Hose	
21	2	0015120	Hose	
22	2	0015500	Hose	
23	1	6340251	Clamp for swivel coupling	
24	3	31956	Set screw, stainless	M6 x 60
25	6	32302	Face washer, stainless	6 mm
26	1	63562	Clamp	
27	3	63561	Clamp	
28	1	6340238	Clamp, complete	
29	3	30884	Lock nut, stainless	M6

534 05 420

15/105 - 17/117 SL & DL Parts

63 43 270
63 43 080
63 46 480
63 43 120
Internal ref. 63 43 050

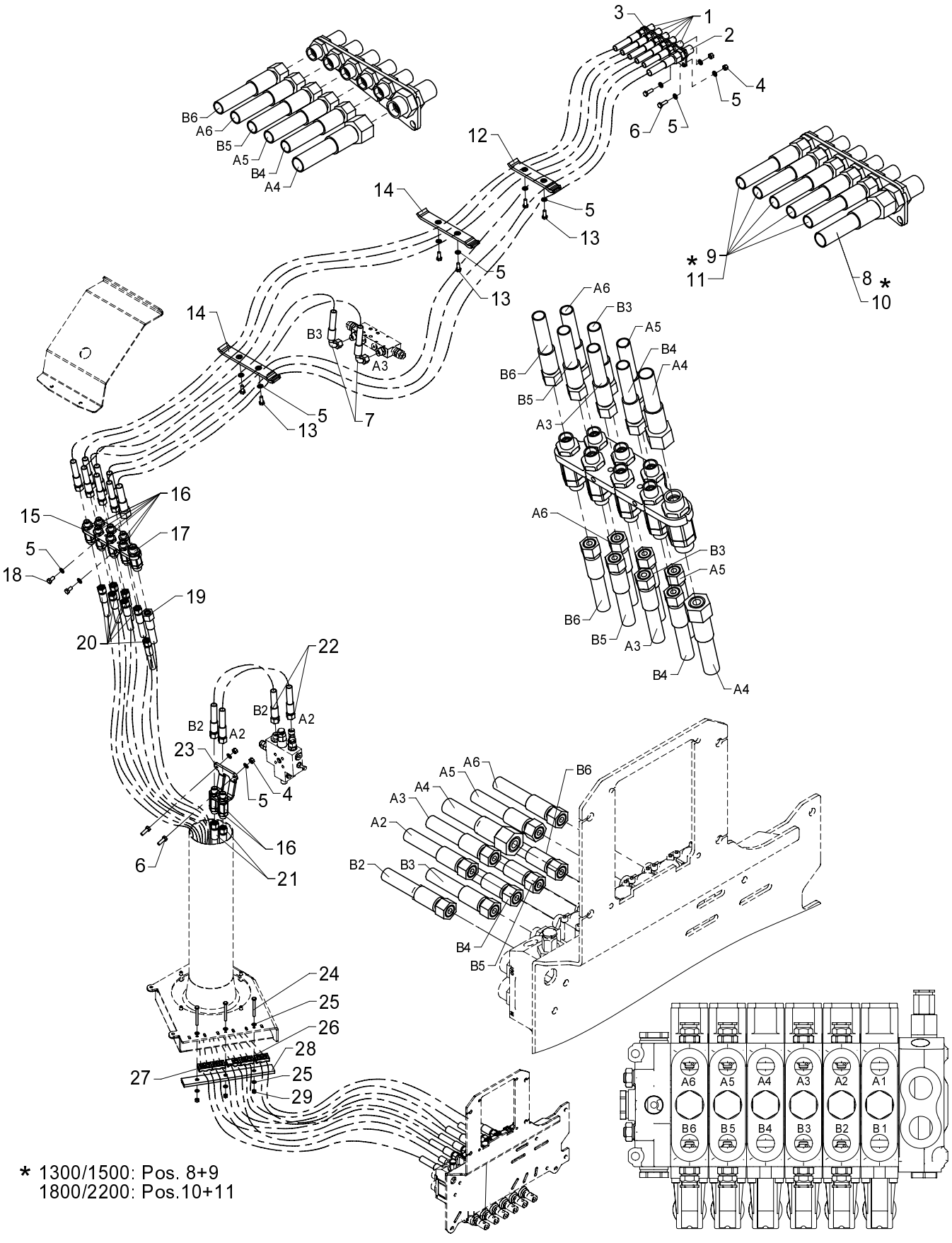

* 1300/1500: Pos. 8+9
1800/2200: Pos.10+11

Hose kit, loader functions, 2 EXV.

534 05 420

From loader 1060001
To loader

Created 24-11-2008
Modified 09-03-2009

Pos	Qty.	Part no.	Description	Remarks
		6343050	Hose kit, column, 2 EXV	
		6343120	Hose kit, main boom, 2 EXV	
		6346480	Hose kit, main boom, 2 EXV	
		6343080	Hose kit, boom cylinder	
		6343270	Clamp, 2 EXV	
1	5	25201	Bulkhead connection	GSS 12 L
2	1	26335	Bulkhead connection	P-GSV 16 S
3	1	6340315	Bracket, bulkhead connections	
4	4	30886	Lock nut, stainless	M8
5	14	31147	Washer, stainless	8 mm
6	4	30134	Set screw, stainless	M8 x 25
7	2	0017690	Hose	
8	1	56382	Hose	1/2 X 3400 mm L/L
9	5	0017600	Hose	
10	1	56529	Hose	1/2 X 3500 mm L/L
11	5	0017770	Hose	
12	1	6340211	Clamp, complete	
13	6	30132	Set screw, stainless	M8 x 20
14	2	6340213	Clamp, complete	
15	1	6340252	Bracket for swivel coupling	
16	9	58478	Swivel coupling	M18 x 1,5 12L
17	1	58479	Swivel coupling	M24 x 1,5 16L
18	2	30131	Set screw, stainless	M8 x 16
19	1	62846	Hose	1/2 X 2750 M24X1.5 L/L
20	7	0015130	Hose	
21	2	0015120	Hose	
22	2	0015500	Hose	
23	1	6340251	Clamp for swivel coupling	
24	3	31956	Set screw, stainless	M6 x 60
25	6	32302	Face washer, stainless	6 mm
26	1	63562	Clamp	
27	4	63561	Clamp	
28	1	6340238	Clamp, complete	
29	3	30884	Lock nut, stainless	M6

534 05 430

15/105 - 17/117 SL & DL Parts

63 43 290
63 46 460
63 43 100
63 43 080
Internal ref. 63 43 020

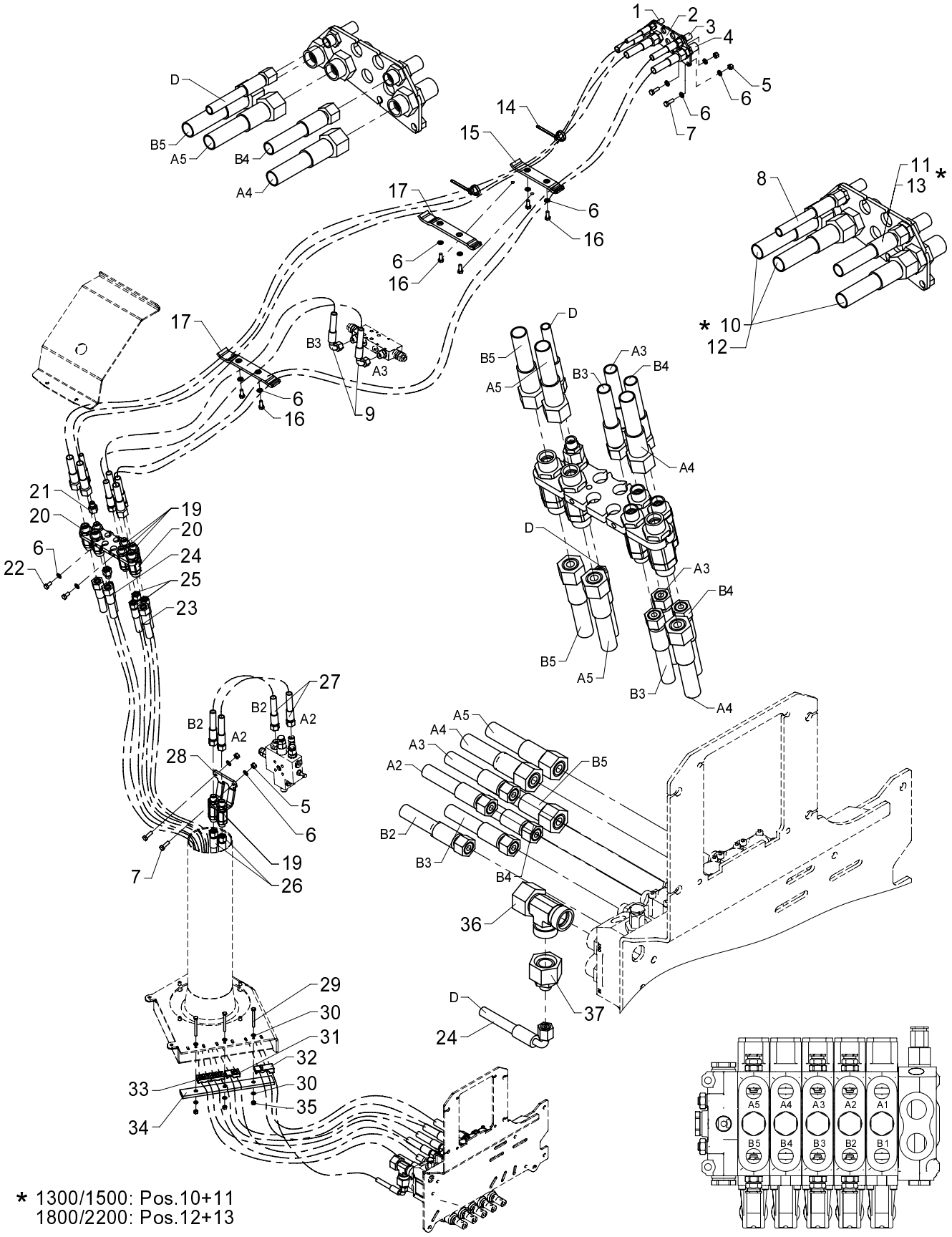

* 1300/1500: Pos.10+11
1800/2200: Pos.12+13

534 05 430

From loader 1060001
To loader

Created 24-11-2008
Modified

Hose kit, loader functions, std./winch

Pos	Qty.	Part no.	Description	Remarks
		6343020	Hose kit, column, winch	
		6343080	Hose kit, boom cylinder	
		6343100	Hose kit, main boom, winch	
		6346460	Hose kit, main boom, winch	
		6343290	Clamp, winch	
1	1	25261	Bulkhead connection	P-GSV 8 L
2	1	6340986	Bracket, bulkhead connections	
3	1	25201	Bulkhead connection	GSS 12 L
4	3	26335	Bulkhead connection	P-GSV 16 S
5	4	30886	Lock nut, stainless	M8
6	14	31147	Washer, stainless	8 mm
7	4	30134	Set screw, stainless	M8 x 25
8	1	62539	Hose	1/4 X 3430 M14 X 1.5 L/L
9	2	0017690	Hose	
10	3	56382	Hose	1/2 X 3400 mm L/L
11	1	0017600	Hose	
12	3	56529	Hose	1/2 X 3500 mm L/L
13	1	0017770	Hose	
14	2	27275	Clip	7,6 x 390mm
15	1	6340211	Clamp, complete	
16	6	30132	Set screw, stainless	M8 x 20
17	2	6340217	Clamp, complete	
18	1	6340253	Bracket for swivel coupling	
19	6	58478	Swivel coupling	M18 x 1,5 12L
20	3	58479	Swivel coupling	M24 x 1,5 16L
21	2	26101	Reducing connection	REDSDN 12/8 L
22	2	30131	Set screw, stainless	M8 x 16
23	3	62846	Hose	1/2 X 2750 M24X1.5 L/L
24	1	56024	Hose	1/4X2800 M14X1.5 L/90
25	3	0015130	Hose	
26	2	0015120	Hose	
27	2	0015500	Hose	
28	1	6340251	Clamp for swivel coupling	
29	3	31956	Set screw, stainless	M6 x 60
30	6	32302	Face washer, stainless	6 mm
31	1	63562	Clamp	
32	1	63563	Clamp	
33	2	63561	Clamp	
34	1	6340238	Clamp, complete	
35	3	30884	Lock nut, stainless	M6
36	1	26149	Connection	ELSD 22 L

534 05 430

15/105 - 17/117 SL & DL Parts

63 43 290
63 46 460
63 43 100
63 43 080
Internal ref. 63 43 020

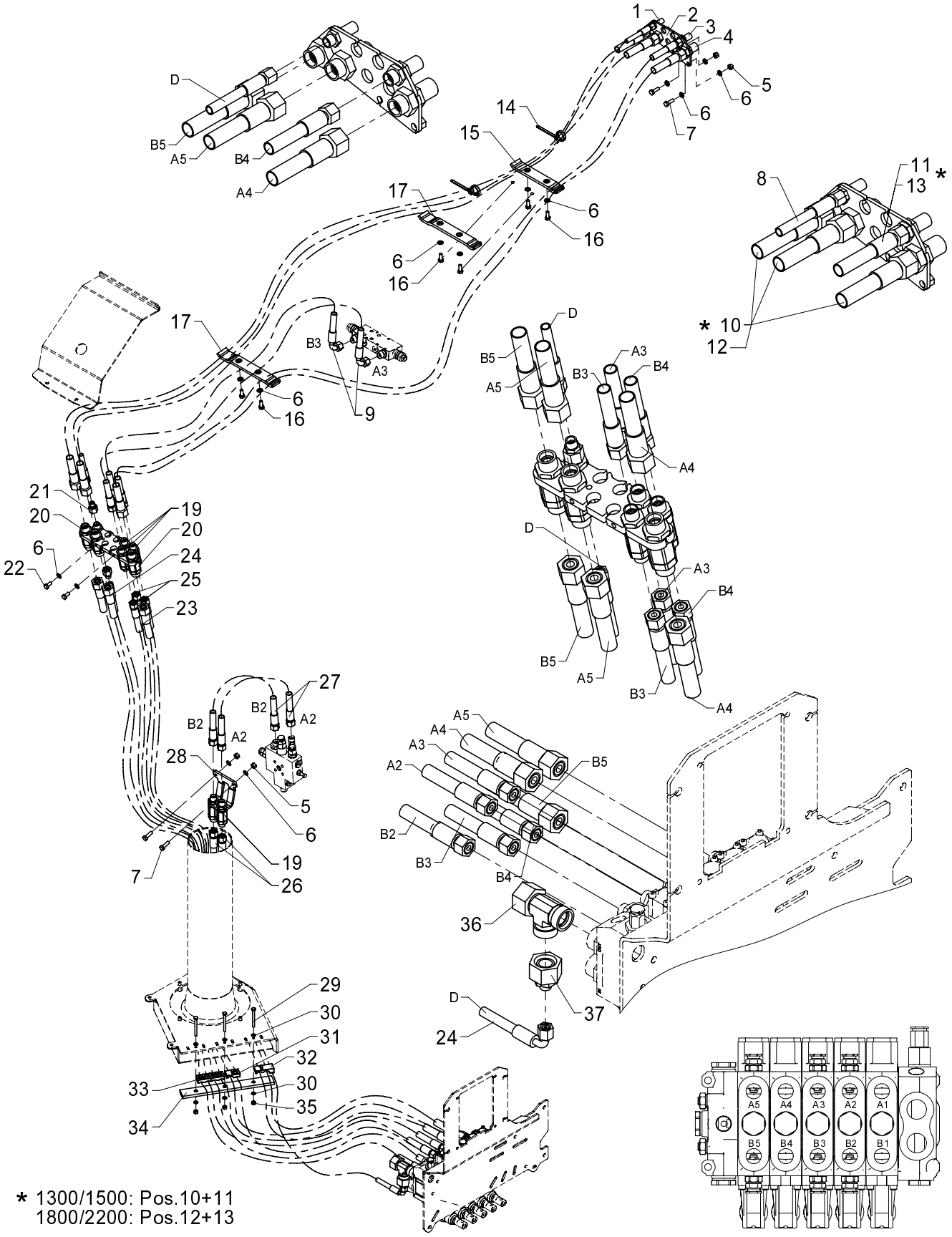

* 1300/1500: Pos.10+11
1800/2200: Pos.12+13

Hose kit, loader functions, std./winch

534 05 430

From loader 1060001
To loader

Created 24-11-2008
Modified

Pos	Qty.	Part no.	Description	Remarks
37	1	25286	Reducing connection	REDSDN 22/8 L

534 05 440

15/105 - 17/117 SL & DL Parts

63 43 290
63 43 080
63 46 490
63 43 130
Internal ref. 63 43 030

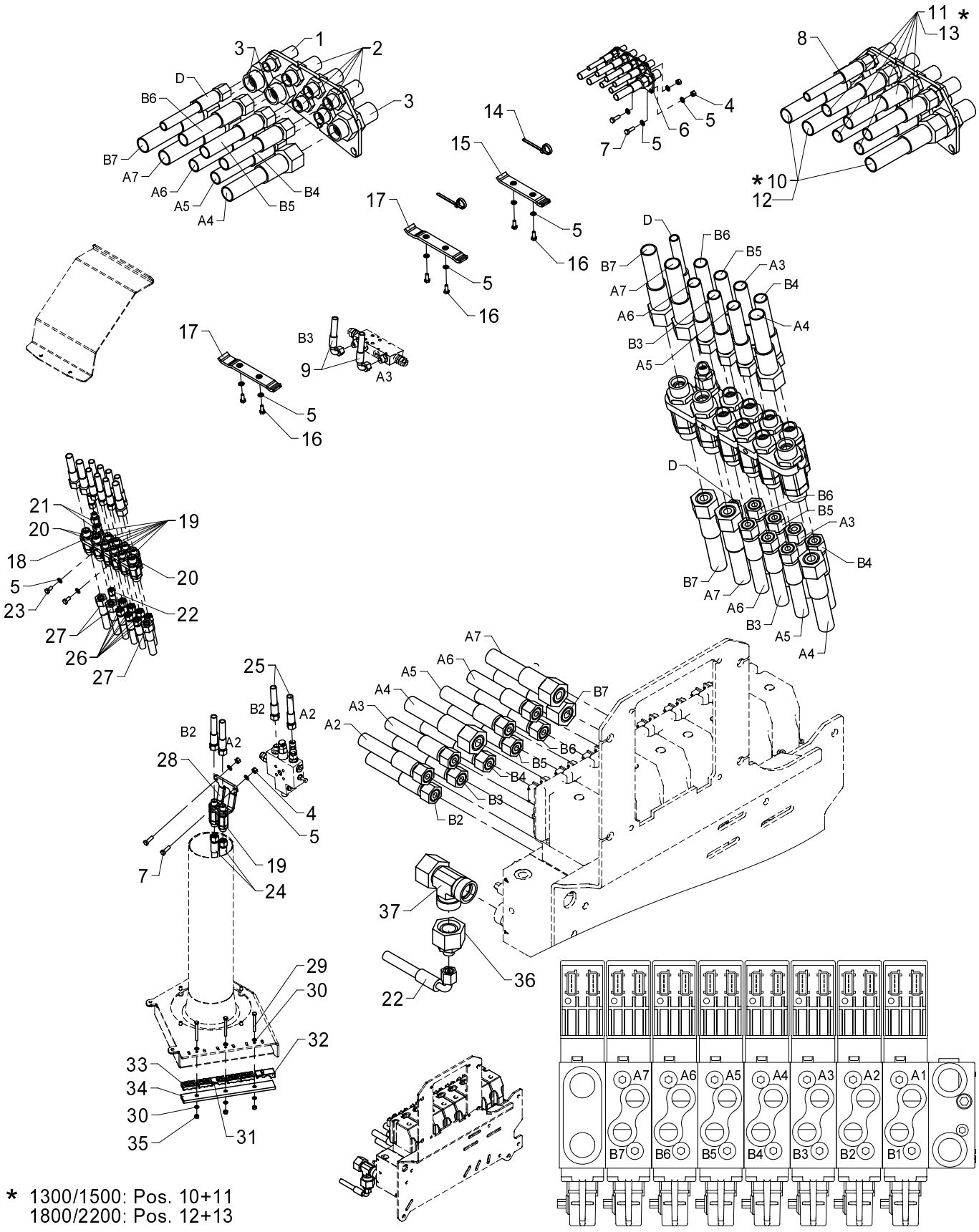

* 1300/1500: Pos. 10+11
1800/2200: Pos. 12+13

534 05 440

From loader 1060001
To loader

Hose kit, loader functions, 2 EXV/winch

Created 24-11-2008
Modified 09-03-2009

Pos	Qty.	Part no.	Description	Remarks
		6343030	Hose kit, column, 2 EXV/winch	
		6343130	Hose kit, main boom, 2 EXV/win	
		6346490	Hose kit, main boom, 2 EXV	
		6343080	Hose kit, boom cylinder	
		6343290	Clamp, winch	
1	1	25261	Bulkhead connection	P-GSV 8 L
2	5	25201	Bulkhead connection	GSS 12 L
3	3	26335	Bulkhead connection	P-GSV 16 S
4	4	30886	Lock nut, stainless	M8
5	14	31147	Washer, stainless	8 mm
6	1	6340986	Bracket, bulkhead connections	
7	4	30134	Set screw, stainless	M8 x 25
8	1	62539	Hose	1/4 X 3430 M14 X 1.5 L/L
9	2	0017690	Hose	
10	3	56382	Hose	1/2 X 3400 mm L/L
11	5	0017600	Hose	
12	3	56529	Hose	1/2 X 3500 mm L/L
13	5	0017770	Hose	
14	2	27275	Clip	7,6 x 390mm
15	1	6340211	Clamp, complete	
16	6	30132	Set screw, stainless	M8 x 20
17	2	6340217	Clamp, complete	
18	1	6340253	Bracket for swivel coupling	
19	10	58478	Swivel coupling	M18 x 1,5 12L
20	3	58479	Swivel coupling	M24 x 1,5 16L
21	2	26101	Reducing connection	REDSDN 12/8 L
22	1	56024	Hose	1/4X2800 M14X1.5 L/90
23	2	30131	Set screw, stainless	M8 x 16
24	2	0015120	Hose	
25	2	0015500	Hose	
26	7	0015130	Hose	
27	3	62846	Hose	1/2 X 2750 M24X1.5 L/L
28	1	6340251	Clamp for swivel coupling	
29	3	31956	Set screw, stainless	M6 x 60
30	6	32302	Face washer, stainless	6 mm
31	1	63562	Clamp	
32	1	63563	Clamp	
33	4	63561	Clamp	
34	1	6340238	Clamp, complete	
35	3	30884	Lock nut, stainless	M6
36	1	25286	Reducing connection	REDSDN 22/8 L

15/105 - 17/117 SL & DL Parts

534 05 440

63 43 290
63 43 080
63 46 490
63 43 130
Internal ref. 63 43 030

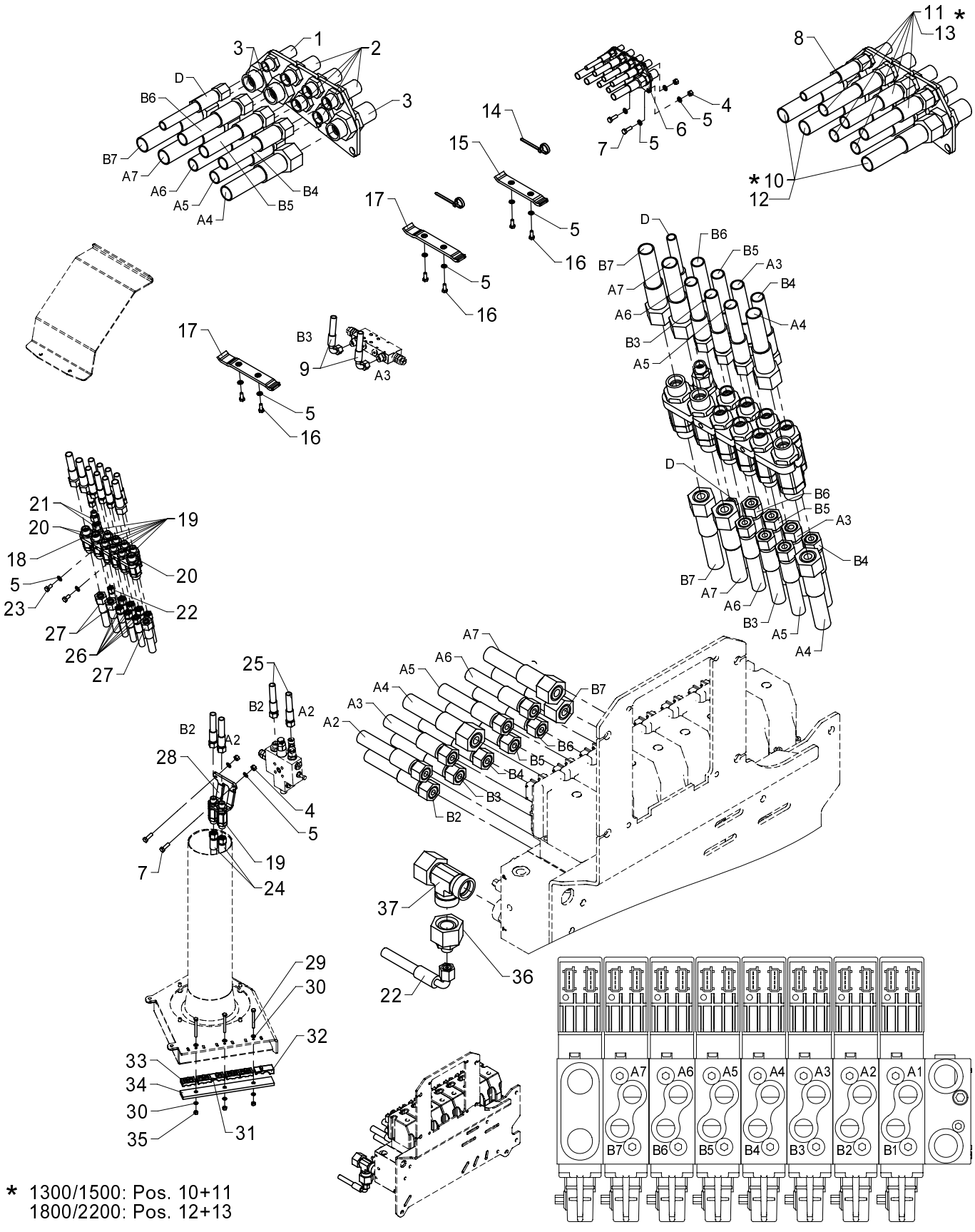

* 1300/1500: Pos. 10+11
1800/2200: Pos. 12+13

534 05 440

From loader 1060001
To loader

Created 24-11-2008
Modified 09-03-2009

Hose kit, loader functions, 2 EXV/winch

Pos	Qty.	Part no.	Description	Remarks
37	1	26149	Connection	ELSD 22 L

534 05 450

15/105 - 17/117 SL & DL Parts

63 46 480
63 43 120
Internal ref. 63 41 750

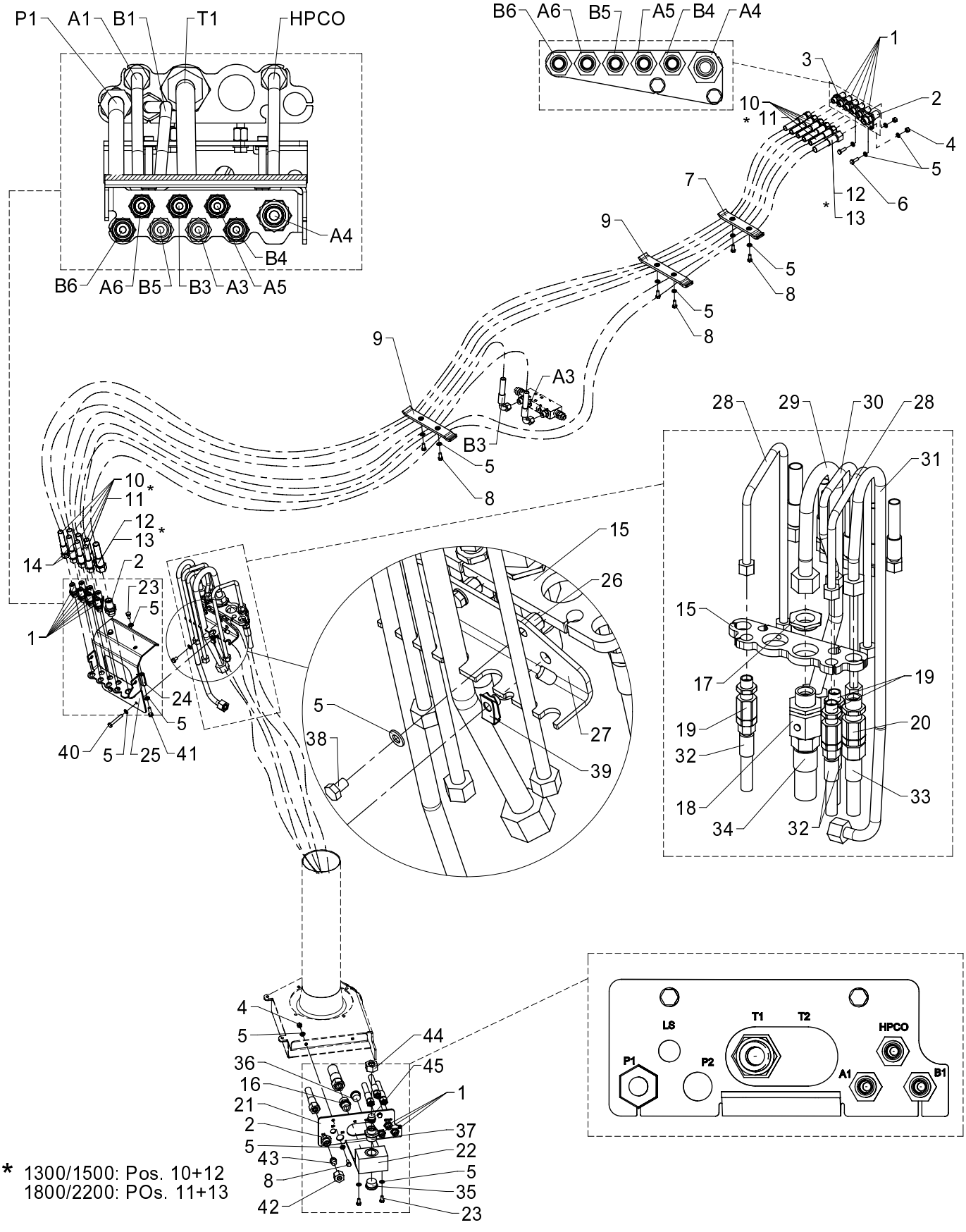

* 1300/1500: Pos. 10+12
1800/2200: POs. 11+13

534 05 450

From loader 1060001
To loader

Hose kit, loader functions, TS (1-circuit fixed)

Created 24-11-2008
Modified 27-10-2009

Pos	Qty.	Part no.	Description	Remarks
		6341750	Hose kit, loader functions, TS	
		6343120	Hose kit, main boom, 2 EXV	
		6346480	Hose kit, main boom, 2 EXV	
1	15	25201	Bulkhead connection	GSS 12 L
2	3	26335	Bulkhead connection	P-GSV 16 S
3	1	6340315	Bracket, bulkhead connections	
4	4	30886	Lock nut, stainless	M8
5	24	31147	Washer, stainless	8 mm
6	2	30134	Set screw, stainless	M8 x 25
7	1	6340211	Clamp, complete	
8	8	30132	Set screw, stainless	M8 x 20
9	2	6340213	Clamp, complete	
10	5	0017600	Hose	
11	5	0017770	Hose	
12	1	56382	Hose	1/2 X 3400 mm L/L
13	1	56529	Hose	1/2 X 3500 mm L/L
14	2	0017690	Hose	
15	1	6340221	Bracket for swivel couplingTS	
16	1	26197	Connection	P-GEV 20 SR-WD
17	1	6340839	Nut	
18	1	59823	Swivel coupling	M30 x 2 20S
19	3	58478	Swivel coupling	M18 x 1,5 12L
20	1	58479	Swivel coupling	M24 x 1,5 16L
21	1	6340842	Plate (TS)	
22	1	6340844	Connecting block	
23	4	30131	Set screw, stainless	M8 x 16
24	2	6340222	Spacer	
25	1	6340224	Bracket (TS)	
26	2	6340223	Spacer	
27	1	6340225	Clamp	
28	2	6340837	Pipe (slewing - TS)	
29	1	6340833	Pipe (T1 - TS)	
30	1	6340836	Pipe (HPCO - TS)	
31	1	6340831	Pipe (P1 - TS)	
32	3	0017240	Hose	
33	1	56519	Hose	
34	1	56518	Hose	
35	1	26321	Plug	VS-R 1" WD
36	1	26355	Plug	VS-R-3/4 WD
37	1	26122	Connection	P-GEV 22 LR 1-WD
38	2	30130	Set screw, stainless	M8 x 12

534 05 450

15/105 - 17/117 SL & DL Parts

63 46 480
63 43 120
Internal ref. 63 41 750

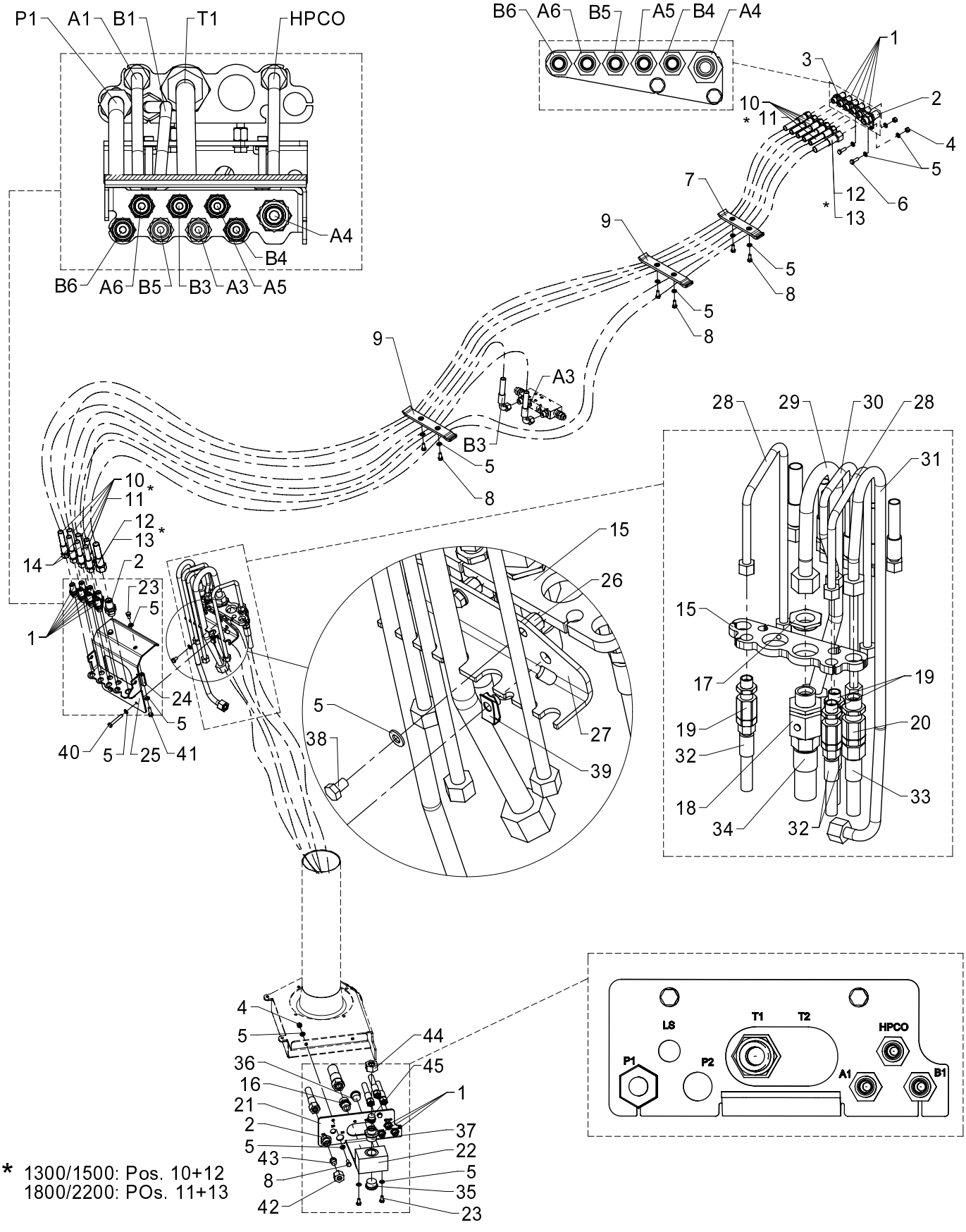

534 05 450

From loader 1060001
To loader

Hose kit, loader functions, TS (1-circuit fixed)

Created 24-11-2008
Modified 27-10-2009

Pos	Qty.	Part no.	Description	Remarks
39	2	31069	Clip	M8 1,5 - 5,5 mm.
40	2	30140	Steel bolt, stainless	M8 x 55
41	2	30135	Set screw, stainless	M8 x 30
42	1	26338	Coupling nut	M 16 S
43	1	26343	Blanking plug	VSD 16 S
44	1	25186	Coupling nut	M 22 L
45	1	26301	Blanking plug	VSD 22 L

534 05 455

15/105 - 17/117 SL & DL Parts

63 43 480
63 43 120
Internal ref. 63 41 690

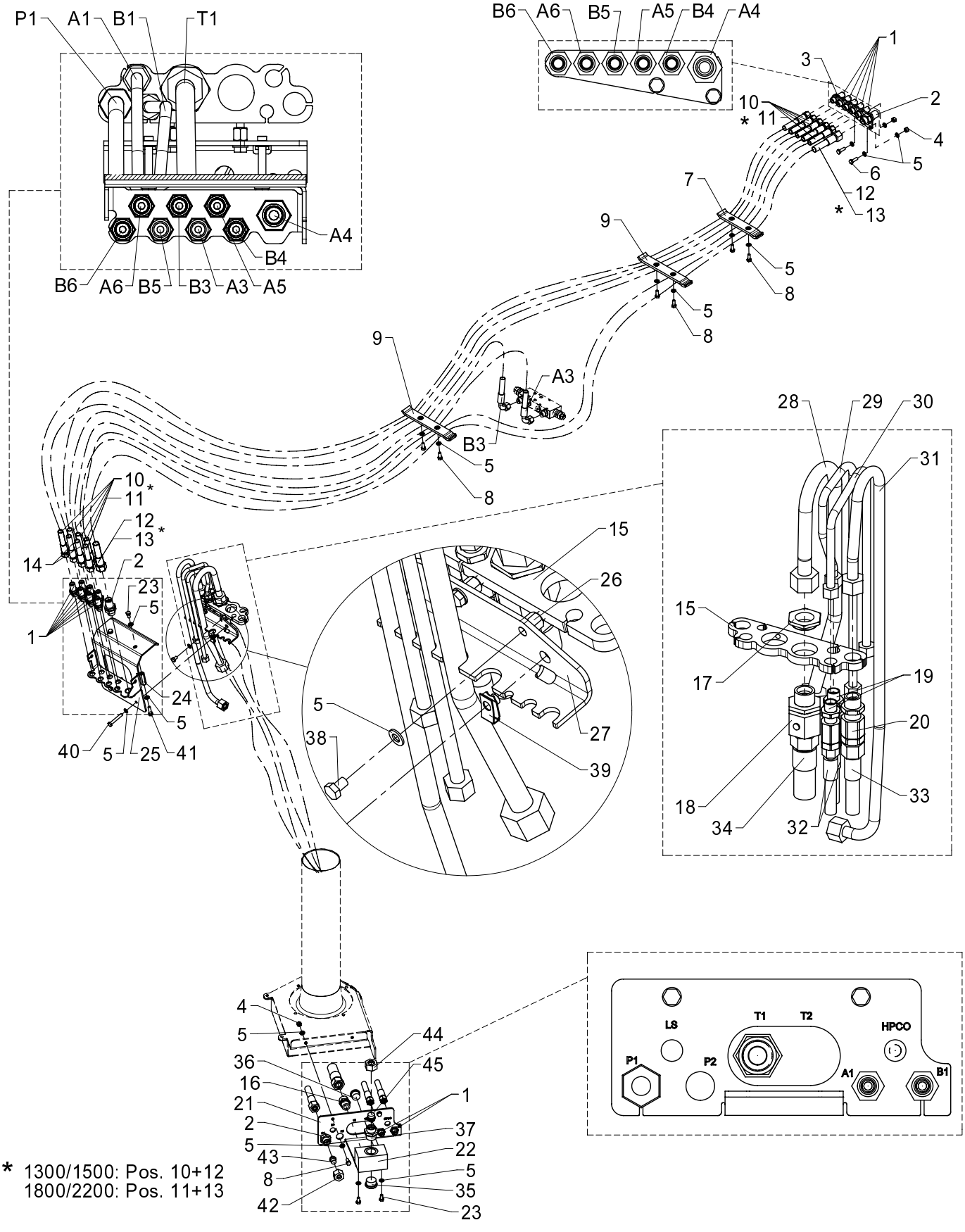

* 1300/1500: Pos. 10+12
1800/2200: Pos. 11+13

534 05 455

From loader 1060001
To loader
Created
Modified

Hose kit, loader functions TS (HC, 1 circuit, fixed flow, excl. CE)

Pos	Qty.	Part no.	Description	Remarks
		6341690	Hose kit, loader fcts.TS	
		6343120	Hose kit, main boom, 2 EXV	
		6343480	Hose kit, main boom, 2 EXV	
1	14	25201	Bulkhead connection	GSS 12 L
2	3	26335	Bulkhead connection	P-GSV 16 S
3	1	6340315	Bracket, bulkhead connections	
4	4	30886	Lock nut, stainless	M8
5	24	31147	Washer, stainless	8 mm
6	2	30134	Set screw, stainless	M8 x 25
7	1	6340211	Clamp, complete	
8	8	30132	Set screw, stainless	M8 x 20
9	2	6340213	Clamp, complete	
10	5	0017600	Hose	
11	5	0017770	Hose	
12	1	56382	Hose	1/2 X 3400 mm L/L
13	1	56529	Hose	1/2 X 3500 mm L/L
14	2	0017690	Hose	
15	1	6340221	Bracket for swivel couplingTS	
16	1	26197	Connection	P-GEV 20 SR-WD
17	1	6340839	Nut	
18	1	59823	Swivel coupling	M30 x 2 20S
19	2	58478	Swivel coupling	M18 x 1,5 12L
20	1	58479	Swivel coupling	M24 x 1,5 16L
21	1	6340842	Plate (TS)	
22	1	6340844	Connecting block	
23	4	30131	Set screw, stainless	M8 x 16
24	2	6340222	Spacer	
25	1	6340224	Bracket (TS)	
26	2	6340223	Spacer	
27	1	6340225	Clamp	
28	1	6340833	Pipe (T1 - TS)	
29	1	6340836	Pipe (HPCO - TS)	
30	1	6340837	Pipe (slewing - TS)	
31	1	6340831	Pipe (P1 - TS)	
32	2	0017240	Hose	
33	1	56519	Hose	
34	1	56518	Hose	
35	1	26321	Plug	VS-R 1" WD
36	1	26355	Plug	VS-R-3/4 WD
37	1	26122	Connection	P-GEV 22 LR 1-WD
38	2	30130	Set screw, stainless	M8 x 12

534 05 455

15/105 - 17/117 SL & DL Parts

63 43 480
63 43 120
Internal ref. 63 41 690

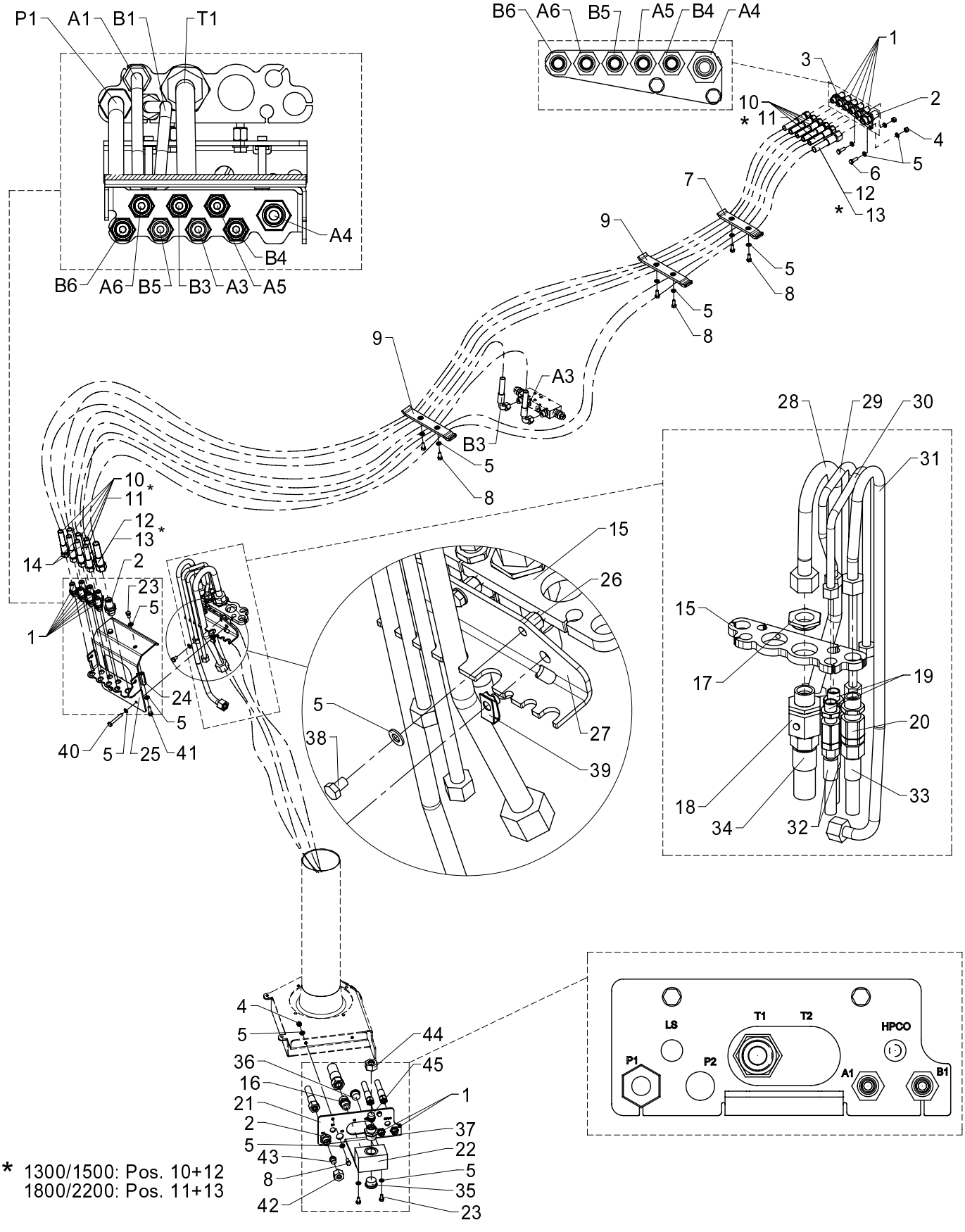

* 1300/1500: Pos. 10+12
1800/2200: Pos. 11+13

534 05 455

From loader 1060001
To loader
Created
Modified

Hose kit, loader functions TS (HC, 1 circuit, fixed flow, excl. CE)

Pos	Qty.	Part no.	Description	Remarks
39	2	31069	Clip	M8 1,5 - 5,5 mm.
40	2	30140	Steel bolt, stainless	M8 x 55
41	2	30135	Set screw, stainless	M8 x 30
42	1	26338	Coupling nut	M 16 S
43	1	26343	Blanking plug	VSD 16 S
44	1	25186	Coupling nut	M 22 L
45	1	26301	Blanking plug	VSD 22 L

534 05 460

15/105 - 17/117 SL & DL Parts

63 46 480
63 43 120
Internal ref. 63 41 760

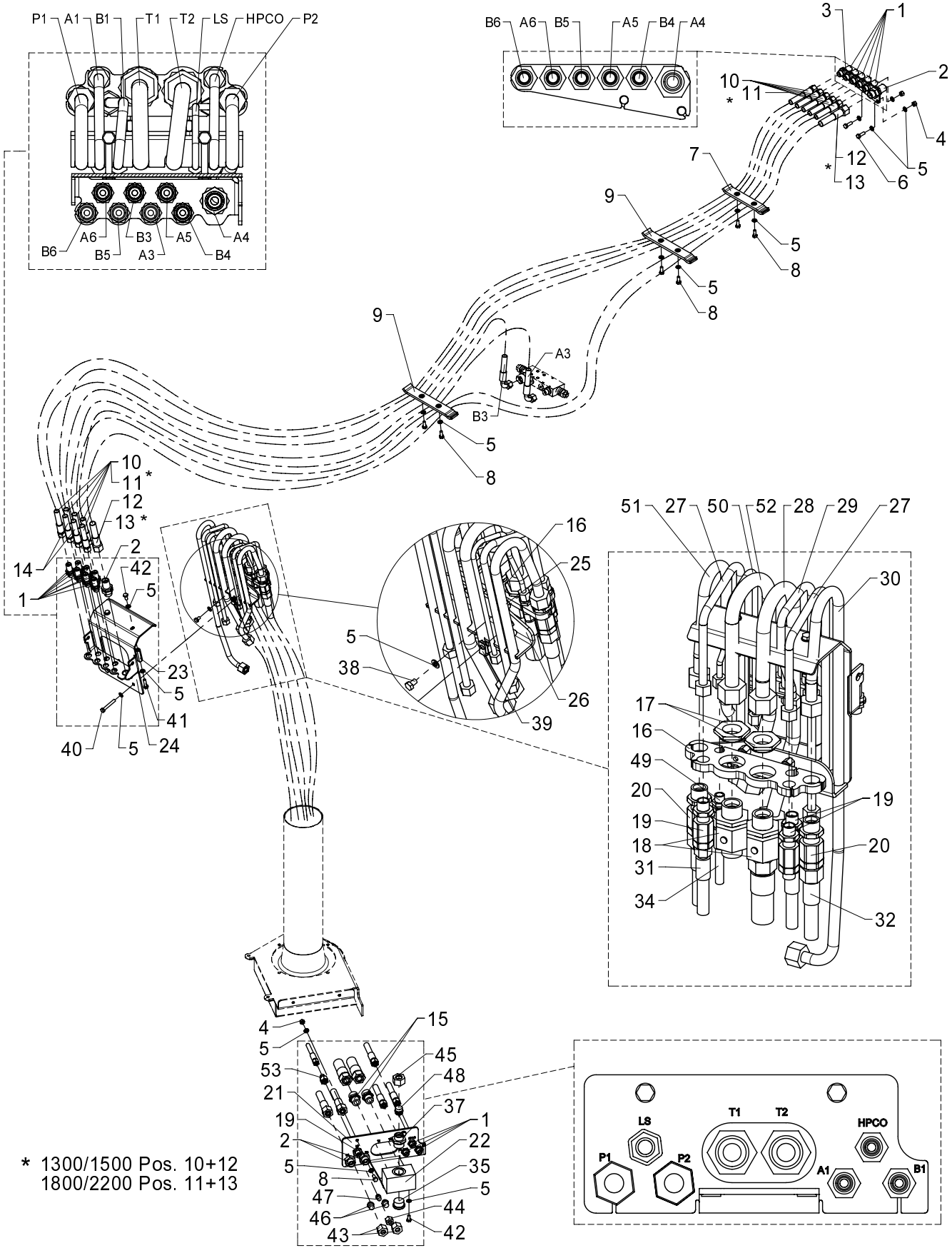

534 05 460

From loader 1060001
To loader

Created
Modified 27-10-2009

Hose kit, loader functions, TS (1-circuit variable)

Pos	Qty.	Part no.	Description	Remarks
		6341760	Hose kit, loader fcts.TS/1circ	
		6343120	Hose kit, main boom, 2 EXV	
		6346480	Hose kit, main boom, 2 EXV	
1	15	25201	Bulkhead connection	GSS 12 L
2	5	26335	Bulkhead connection	P-GSV 16 S
3	1	6340315	Bracket, bulkhead connections	
4	4	30886	Lock nut, stainless	M8
5	24	31147	Washer, stainless	8 mm
6	2	30134	Set screw, stainless	M8 x 25
7	1	6340211	Clamp, complete	
8	8	30132	Set screw, stainless	M8 x 20
9	2	6340213	Clamp, complete	
10	5	0017600	Hose	
11	5	0017770	Hose	
12	1	56382	Hose	1/2 X 3400 mm L/L
13	1	56529	Hose	1/2 X 3500 mm L/L
14	2	0017690	Hose	
15	3	26197	Connection	P-GEV 20 SR-WD
16	1	6340221	Bracket for swivel couplingTS	
17	2	6340839	Nut	
18	2	59823	Swivel coupling	M30 x 2 20S
19	4	58478	Swivel coupling	M18 x 1,5 12L
20	2	58479	Swivel coupling	M24 x 1,5 16L
21	1	6340842	Plate (TS)	
22	1	6340844	Connecting block	
23	2	6340222	Spacer	
24	1	6340224	Bracket (TS)	
25	2	6340223	Spacer	
26	1	6340225	Clamp	
27	2	6340837	Pipe (slewing - TS)	
28	1	6340833	Pipe (T1 - TS)	
29	1	6340836	Pipe (HPCO - TS)	
30	1	6340831	Pipe (P1 - TS)	
31	3	0017240	Hose	
32	2	56519	Hose	
33	2	56518	Hose	
34	1	56517	Hose	
35	1	26321	Plug	VS-R 1" WD
36	1	26355	Plug	VS-R-3/4 WD
37	1	26122	Connection	P-GEV 22 LR 1-WD
38	2	30130	Set screw, stainless	M8 x 12

534 05 460

15/105 - 17/117 SL & DL Parts

63 46 480
63 43 120
Internal ref. 63 41 760

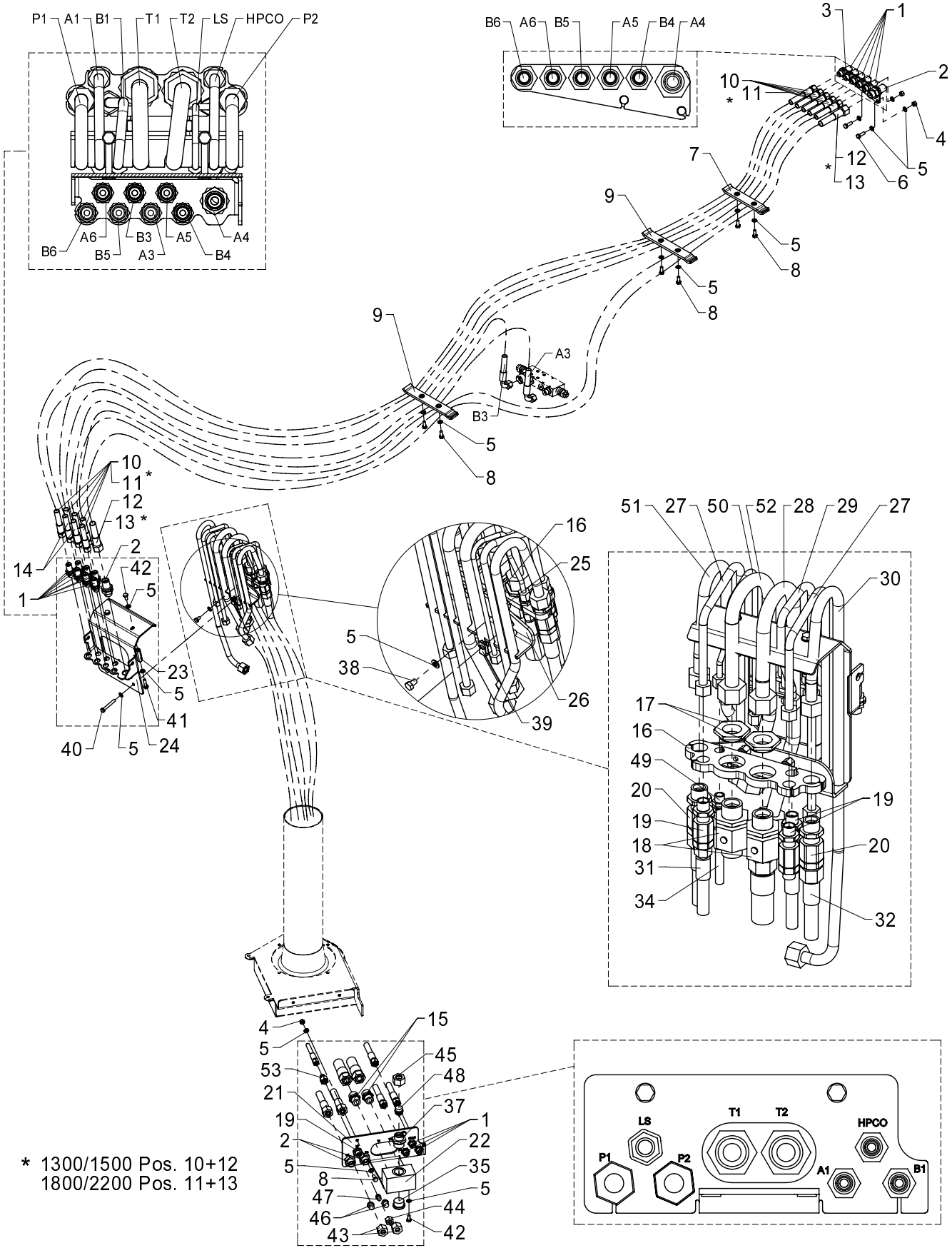

* 1300/1500 Pos. 10+12
1800/2200 Pos. 11+13

Hose kit, loader functions, TS (1-circuit variable)

534 05 460

From loader 1060001
To loader

Created
Modified 27-10-2009

Pos	Qty.	Part no.	Description	Remarks
39	2	31069	Clip	M8 1,5 - 5,5 mm.
40	2	30140	Steel bolt, stainless	M8 x 55
41	2	30135	Set screw, stainless	M8 x 30
42	4	30131	Set screw, stainless	M8 x 16
43	2	26338	Coupling nut	M 16 S
44	1	25183	Coupling nut	M 12 L
45	1	25186	Coupling nut	M 22 L
46	2	26343	Blanking plug	VSD 16 S
47	1	26180	Blanking plug	VSD 12 L
48	1	26301	Blanking plug	VSD 22 L
49	1	25261	Bulkhead connection	P-GSV 8 L
50	1	6340835	Pipe (LS - TS)	
51	1	6340832	Pipe (P2 - TS)	
52	1	6340834	Pipe (T2 - TS)	
53	1	26101	Reducing connection	REDSDN 12/8 L

534 05 470

15/105 - 17/117 SL & DL Parts

63 43 120
Internal ref. 63 41 770

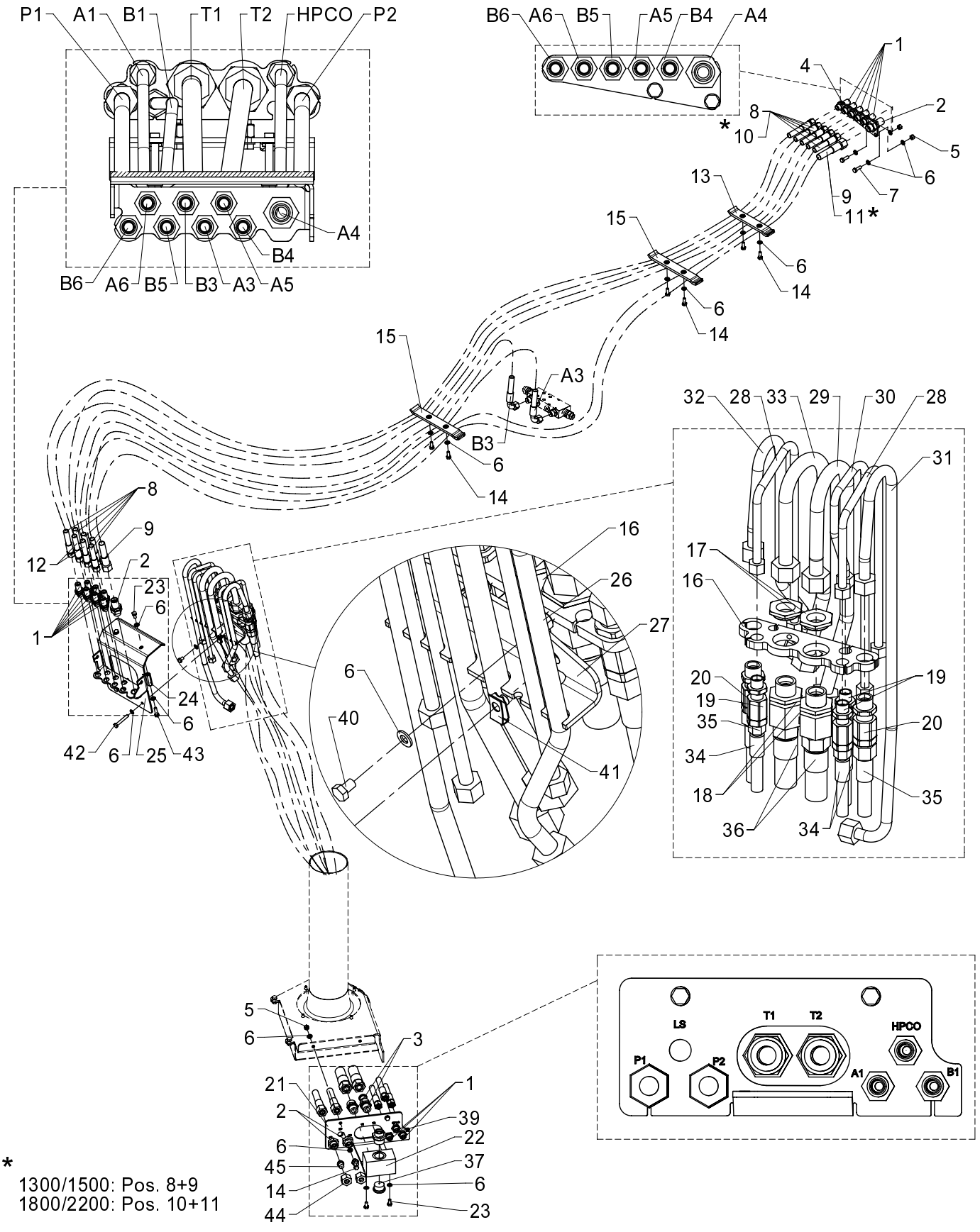

*
1300/1500: Pos. 8+9
1800/2200: Pos. 10+11

534 05 470

From loader 1060001
To loader

Hose kit, loader functions, TS (2-circuits, fixed)

Created 07-05-2009
Modified 27-10-2009

Pos	Qty.	Part no.	Description	Remarks
		6341770	Hose kit, TS 2 circuits	
		6343120	Hose kit, main boom, 2 EXV	
1	15	25201	Bulkhead connection	GSS 12 L
2	4	26335	Bulkhead connection	P-GSV 16 S
3	2	26197	Connection	P-GEV 20 SR-WD
4	1	6340315	Bracket, bulkhead connections	
5	4	30886	Lock nut, stainless	M8
6	24	31147	Washer, stainless	8 mm
7	2	30134	Set screw, stainless	M8 x 25
8	5	0017600	Hose	
9	1	56382	Hose	1/2 X 3400 mm L/L
10	5	0017770	Hose	
11	1	56529	Hose	1/2 X 3500 mm L/L
12	2	0017690	Hose	
13	1	6340211	Clamp, complete	
14	8	30132	Set screw, stainless	M8 x 20
15	2	6340213	Clamp, complete	
16	1	6340221	Bracket for swivel couplingTS	
17	2	6340839	Nut	
18	2	59823	Swivel coupling	M30 x 2 20S
19	3	58478	Swivel coupling	M18 x 1,5 12L
20	2	58479	Swivel coupling	M24 x 1,5 16L
21	1	6340842	Plate (TS)	
22	1	6340844	Connecting block	
23	4	30131	Set screw, stainless	M8 x 16
24	2	6340222	Spacer	
25	1	6340224	Bracket (TS)	
26	2	6340223	Spacer	
27	1	6340225	Clamp	
28	2	6340837	Pipe (slewing - TS)	
29	1	6340833	Pipe (T1 - TS)	
30	1	6340836	Pipe (HPCO - TS)	
31	1	6340831	Pipe (P1 - TS)	
32	1	6340832	Pipe (P2 - TS)	
33	1	6340834	Pipe (T2 - TS)	
34	3	0017240	Hose	
35	2	56519	Hose	
36	2	56518	Hose	
37	1	26321	Plug	VS-R 1" WD
38	1	25103	Plug	VS-R-1/2 WD
39	1	26122	Connection	P-GEV 22 LR 1-WD

15/105 - 17/117 SL & DL Parts

63 43 120
Internal ref. 63 41 770

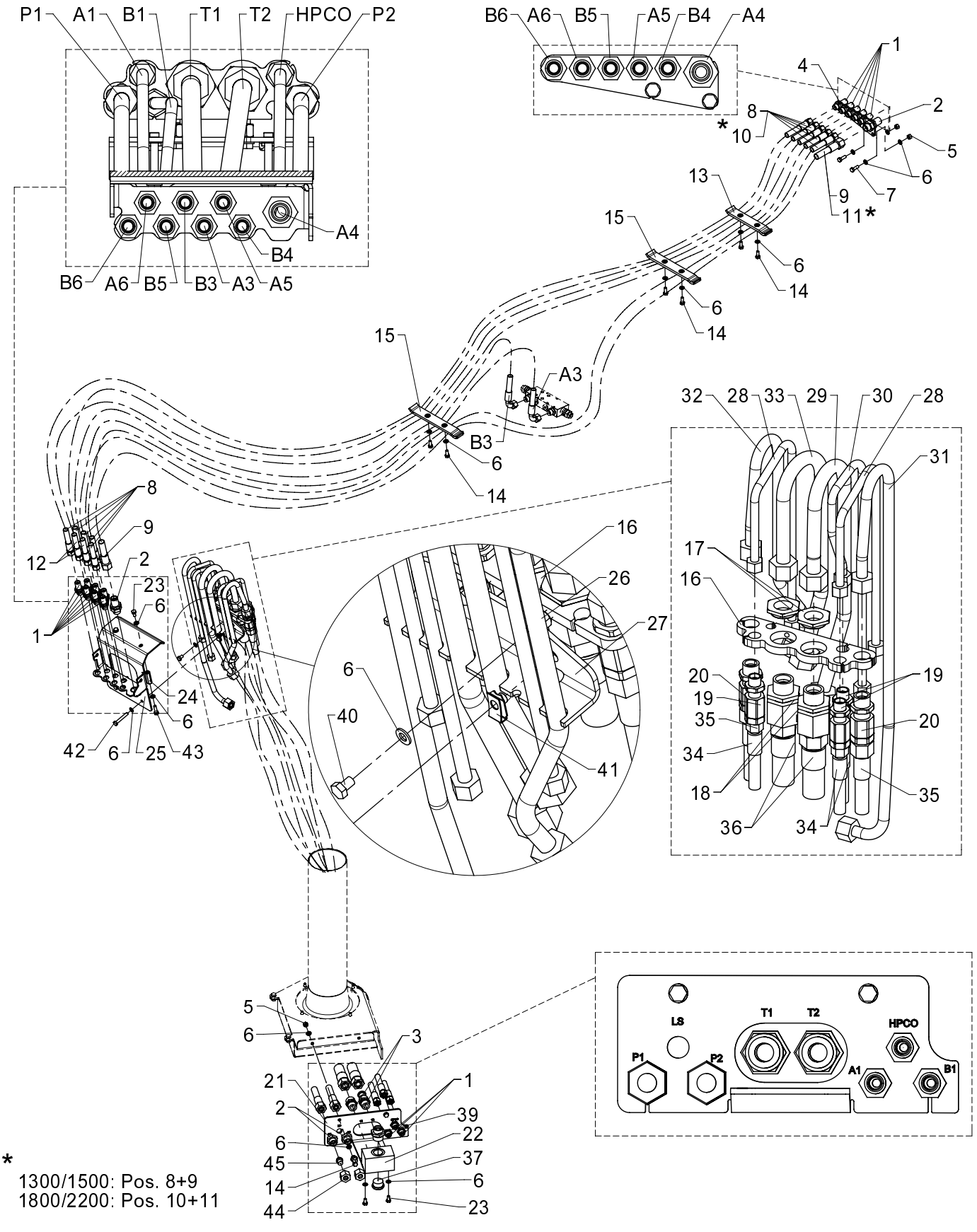

*
1300/1500: Pos. 8+9
1800/2200: Pos. 10+11

Hose kit, loader functions, TS (2-circuits, fixed)

534 05 470

From loader 1060001
To loader

Created 07-05-2009
Modified 27-10-2009

Pos	Qty.	Part no.	Description	Remarks
40	2	30130	Set screw, stainless	M8 x 12
41	2	31069	Clip	M8 1,5 - 5,5 mm.
42	2	30140	Steel bolt, stainless	M8 x 55
43	2	30135	Set screw, stainless	M8 x 30
44	2	26338	Coupling nut	M 16 S
45	2	26343	Blanking plug	VSD 16 S

15/105 - 17/117 SL & DL Parts

Internal ref. 63 40 310

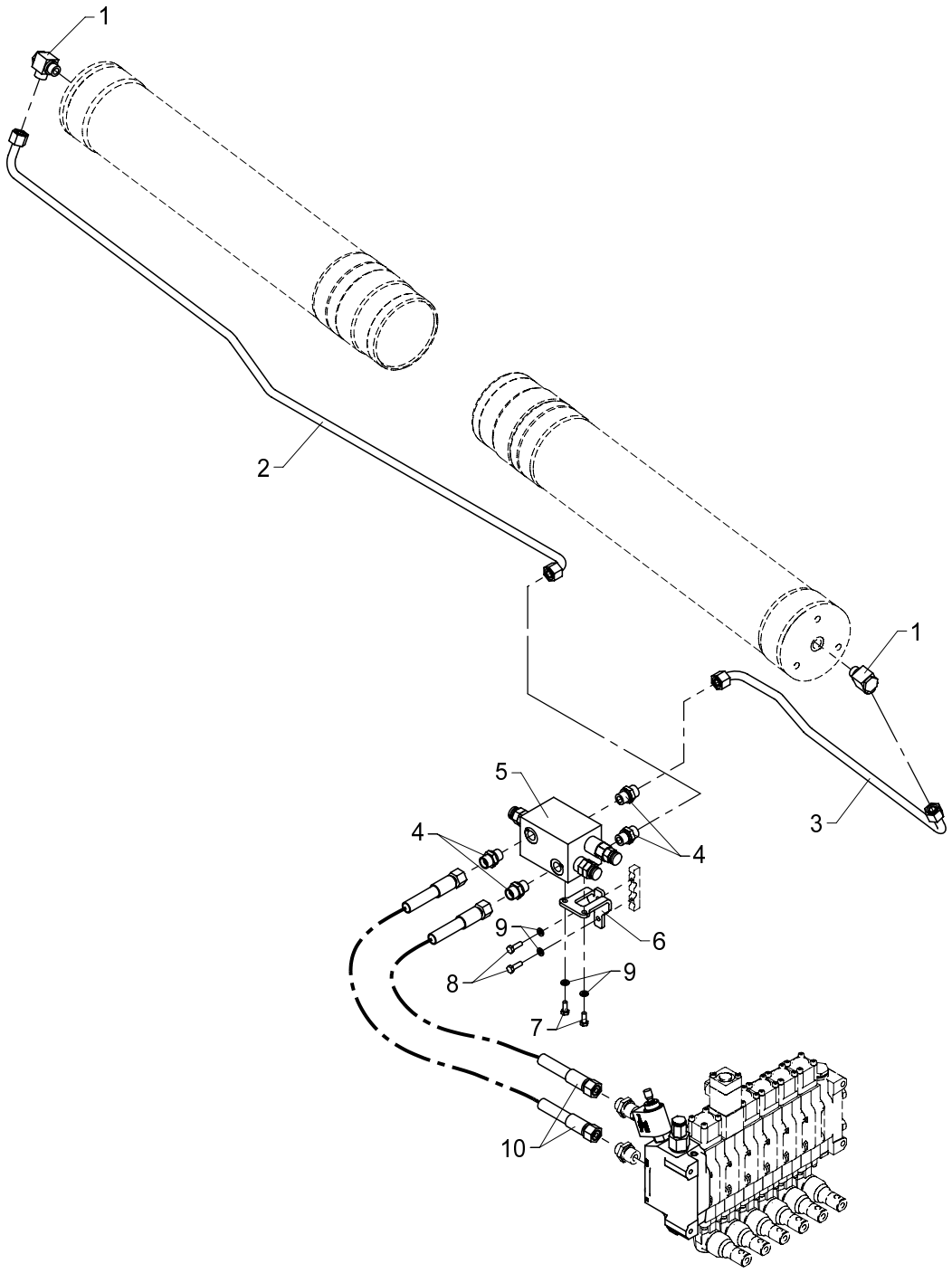

534 05 500

From loader 1060001
To loader

Created 13-11-2008
Modified

Hydraulic system, slewing

Pos	Qty.	Part no.	Description	Remarks
1	2	25130	Banjo connection	RSWV 12 LR
2	1	6340279	Pipe	
3	1	6340278	Pipe	
4	4	25127	Connection	P-GEV 12 LR-WD
5	1	55262	Load-holding valve	
6	1	6340237	Bracket for load-holding valve	
7	2	30112	Set screw, stainless	M6 x 16
8	2	30113	Set screw, stainless	M6 x 20
9	4	32302	Face washer, stainless	6 mm
10	2	0017970	Hose	

15/105 - 17/117 SL & DL Parts

Internal ref. 63 41 190

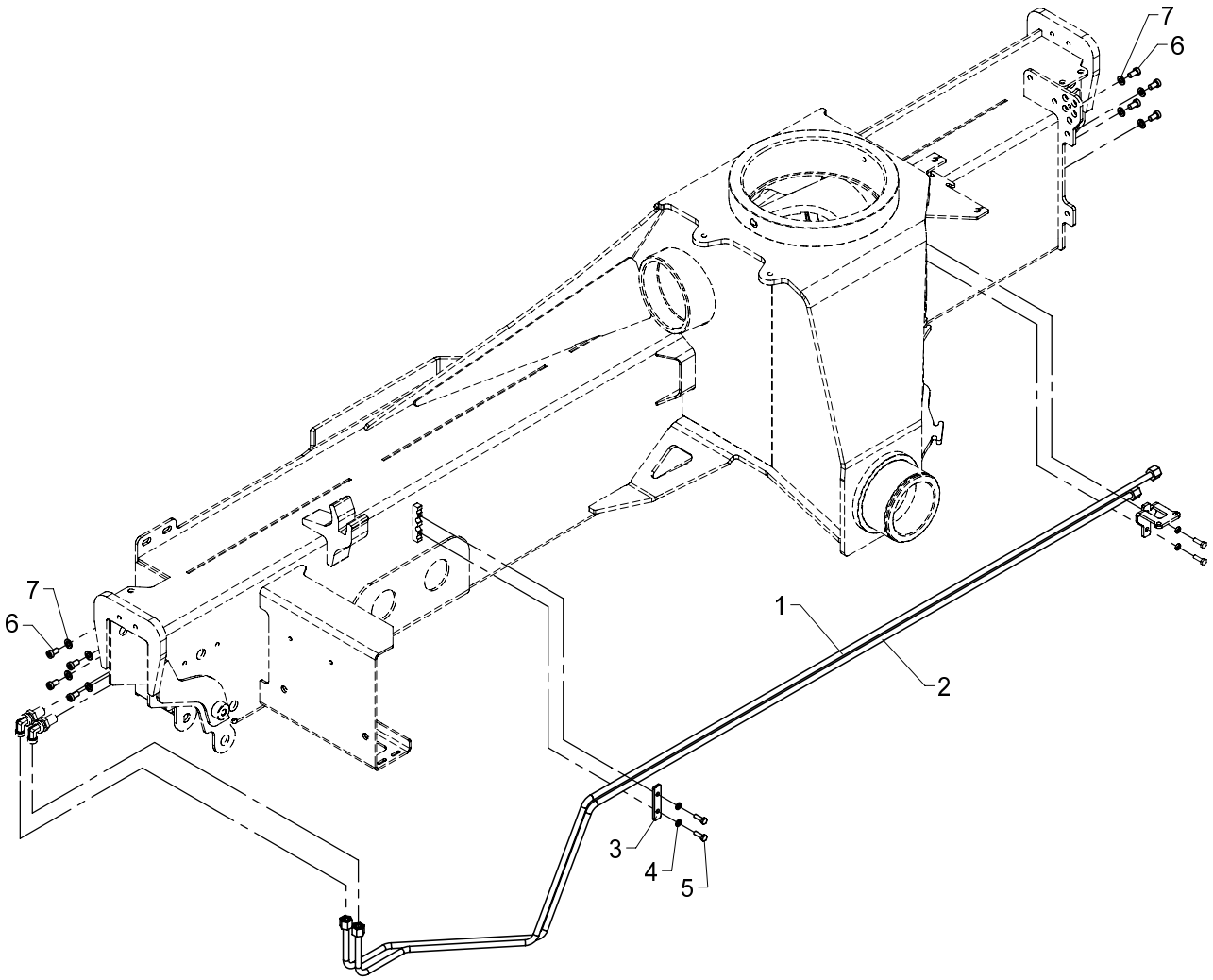

534 05 700

From loader 1060001
To loader

Created 13-11-2008
Modified

Hydr. syst., stabilizers, manual extension

Pos	Qty.	Part no.	Description	Remarks
		6341190	Hydr. syst. stabilizers, 2 fct	
1	1	6340265	Pipe, stabilizers	
2	1	6340266	Pipe, stabilizers	
3	1	6340236	Plate	
4	2	32302	Face washer, stainless	6 mm
5	2	30113	Set screw, stainless	M6 x 20
6	8	32478	Screw	M8 x 15
7	8	31147	Washer, stainless	8 mm

15/105 - 17/117 SL & DL Parts

Internal ref. 63 41 200

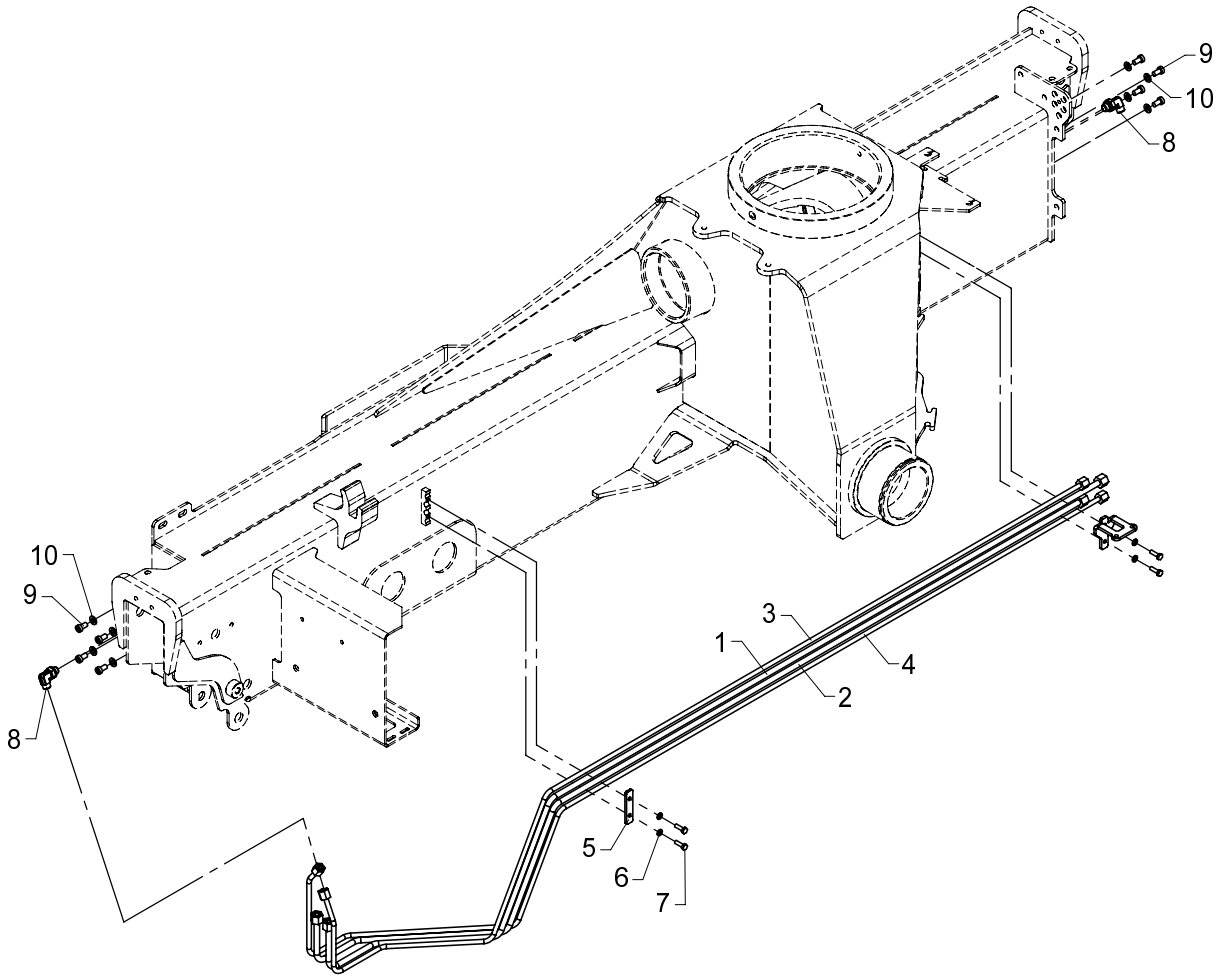

Hydr. syst., stabilizers, hydr. extension

534 05 710

From loader 1060001
To loader

Created 13-11-2008
Modified

Pos	Qty.	Part no.	Description	Remarks
		6341200	Hydr. syst. stabilizers,4func.	
1	1	6340265	Pipe, stabilizers	
2	1	6340266	Pipe, stabilizers	
3	1	6340267	Pipe, stabilizers	
4	1	6340268	Pipe, stabilizers	
5	1	6340236	Plate	
6	2	32302	Face washer, stainless	6 mm
7	2	30113	Set screw, stainless	M6 x 20
8	2	26898	Elbow connection	8 mm - 1/4"
9	8	32478	Screw	M8 x 15
10	8	31147	Washer, stainless	8 mm

15/105 - 17/117 SL & DL Parts

Internal ref. 63 40 850

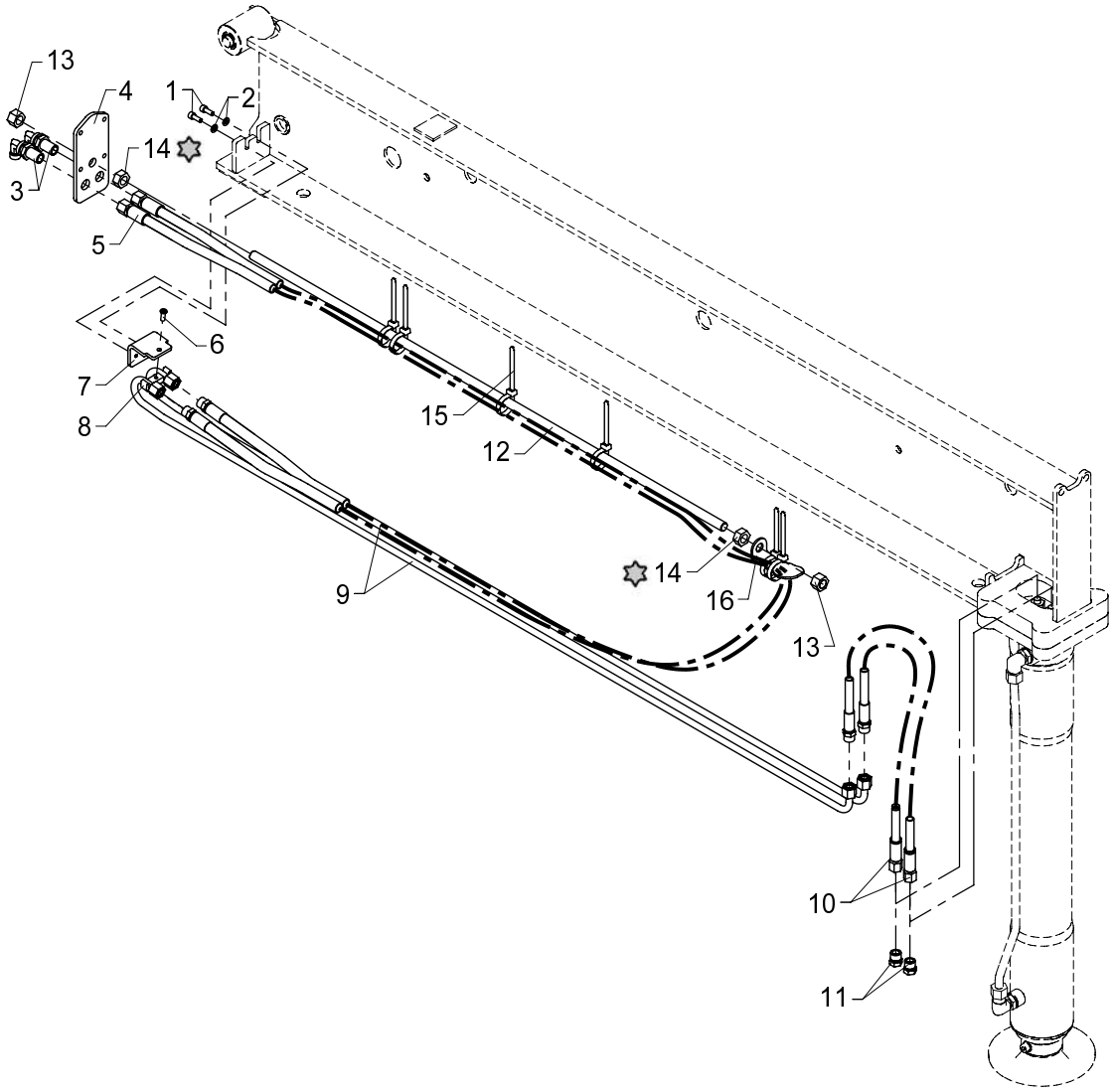

Loctite 270

534 05 750

From loader 1060001
To loader

Hydraulic system, SV + SR-20° - 4600, manual extension

Created 24-11-2008
Modified 02-11-2009

Pos	Qty.	Part no.	Description	Remarks
1	2	31539	Screw, stainless	MC6 x 16
2	2	32302	Face washer, stainless	6 mm
3	2	26894	Elbow connection	10mm - 90 gr.
4	1	6344095	End plate	
5	1	56279	Hose	
6	1	32490	Screw	MCL6 x 16
7	1	6344109	Clamp	
8	1	6306097	Clamp	
9	2	6340798	Pipe	
10	2	56460	Hose	1/4" x 550 mm L/S - 10
11	2	25635	Screw	VSK 10L
12	1	31262	Threaded pin	
13	2	32317	Lock nut	M14
14	2	32145	Nut, stainless	M14
15	6	27275	Clip	7,6 x 390mm
16	1	6344107	Clamp	

15/105 - 17/117 SL & DL Parts

Internal ref. 63 43 850

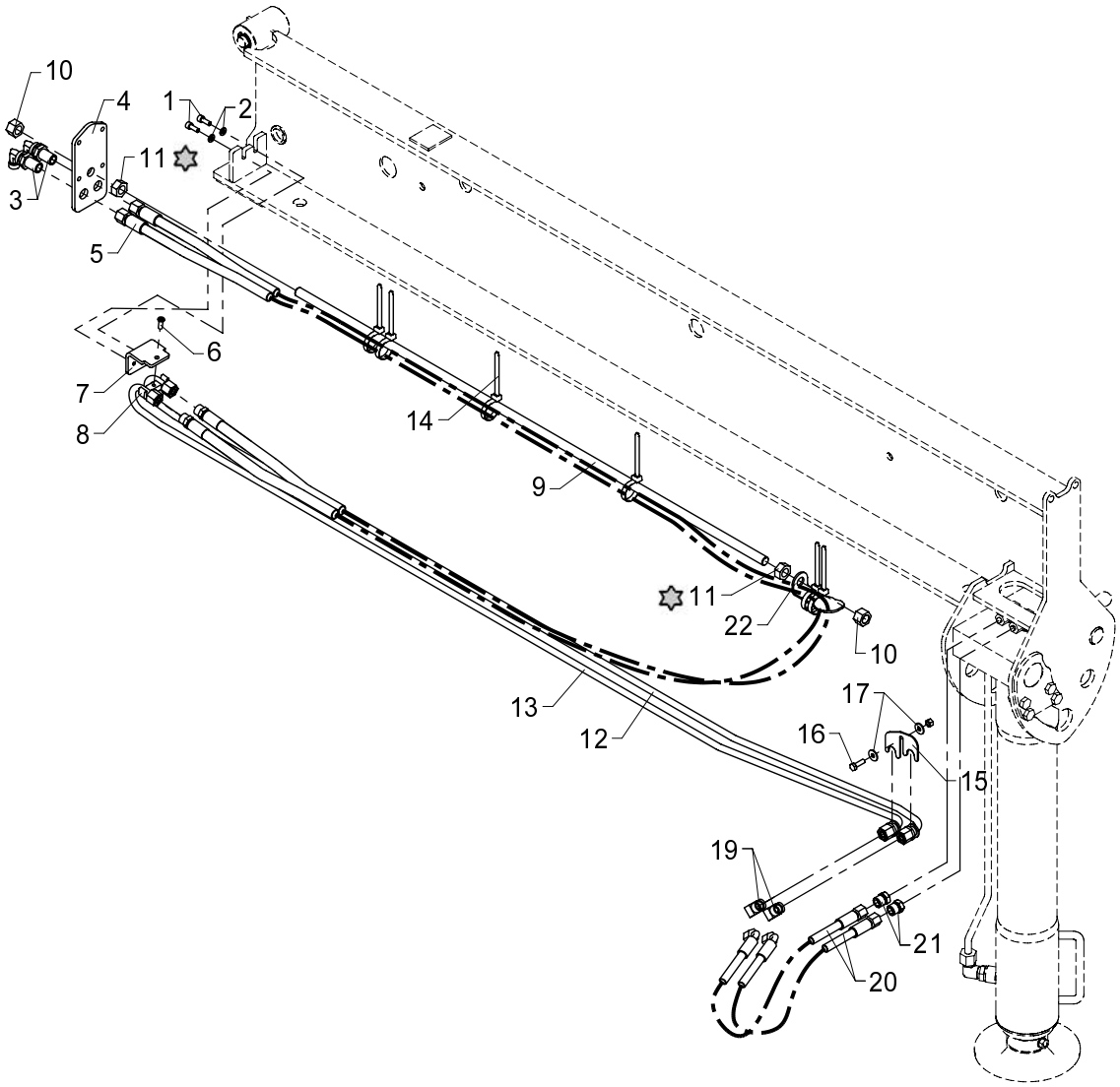

Loctite 270

534 05 755

From loader 1060001
To loader

Created 07-07-2009
Modified

Hydraulic system, SR-60°, 4600, manual extension

Pos	Qty.	Part no.	Description	Remarks
1	2	31539	Screw, stainless	MC6 x 16
2	2	32302	Face washer, stainless	6 mm
3	2	26894	Elbow connection	10mm - 90 gr.
4	1	6344095	End plate	
5	1	56279	Hose	
6	1	32490	Screw	MCL6 x 16
7	1	6344109	Clamp	
8	1	6306097	Clamp	
9	1	31262	Threaded pin	
10	2	32317	Lock nut	M14
11	2	32145	Nut, stainless	M14
12	1	6340797	Pipe	
13	1	6340796	Pipe	
14	6	27275	Clip	
15	1	6306164	Bracket	
16	1	30113	Set screw, stainless	M6 x 20
17	2	31134	Washer, stainless	6 mm
18	1	30884	Lock nut, stainless	M6
19	2	25125	Elbow connection	WV 10 L
20	2	56363	Hose	1/4" x 450 L/V
21	2	25635	Screw	VSK 10L
22	1	6344107	Clamp	

534 05 760

15/105 - 17/117 SL & DL Parts

Internal ref. 63 40 860

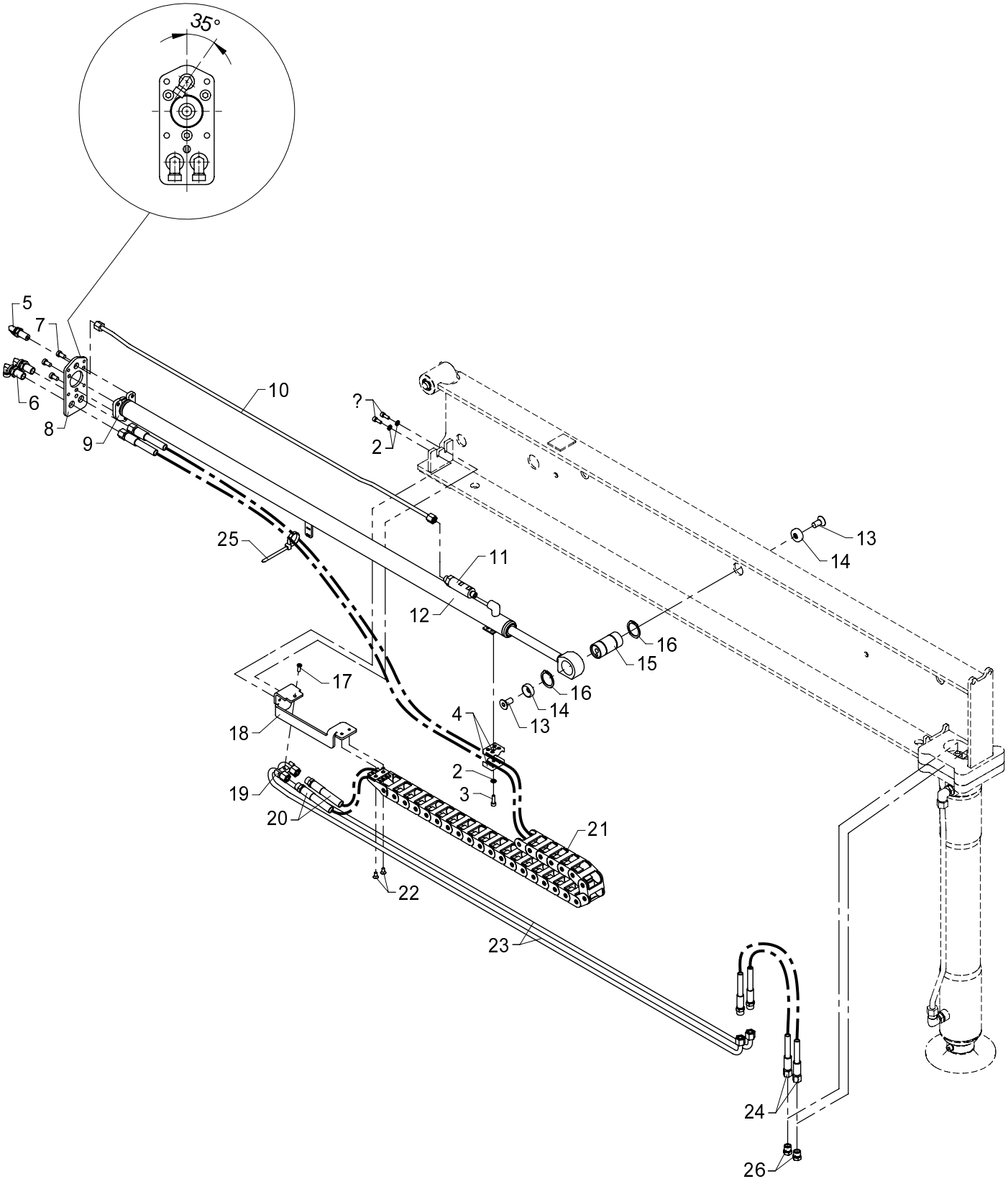

534 05 760

From loader 1060001
To loader
Created
Modified

Hydraulic system, SV + SR-20° - 4600, hydr. extension

Pos	Qty.	Part no.	Description	Remarks
1	2	31539	Screw, stainless	MC6 x 16
2	3	32302	Face washer, stainless	6 mm
3	1	30427	Screw	MC6 x 20
4	2	64408	Clamp	
5	1	26864	Elbow connection	WSS 8L
6	2	26894	Elbow connection	10mm - 90 gr.
7	3	32478	Screw	M8 x 15
8	1	6344097	End plate	
9	1	6344098	Bracket	
10	1	6340799	Pipe, extension cylinder	
11	1	55228	Counter-balance valve	
12	1	6340790	Beam cylinder	
13	2	30586	Countersunk screw	MK12 x 25
14	2	6306241	Mounting plate	
15	1	6340118	Pin	Serie 1300/1500
16	2	33117	Circlip	35U
17	1	32490	Screw	MCL6 x 16
18	1	6344096	Clamp	
19	1	6306097	Clamp	
20	2	56364	Hose	5/16" x 2300 mm L/S - 10
21	1	28718	Nylon drag chain (26 links)	
22	2	30542	Counter-sunk screw	MK6 x 12
23	2	6340798	Pipe	
24	2	56460	Hose	1/4" x 550 mm L/S - 10
25	1	27275	Clip	7,6 x 390mm
26	2	25635	Screw	VSK 10L

534 05 770

15/105 - 17/117 SL & DL Parts

Internal ref. 63 40 870

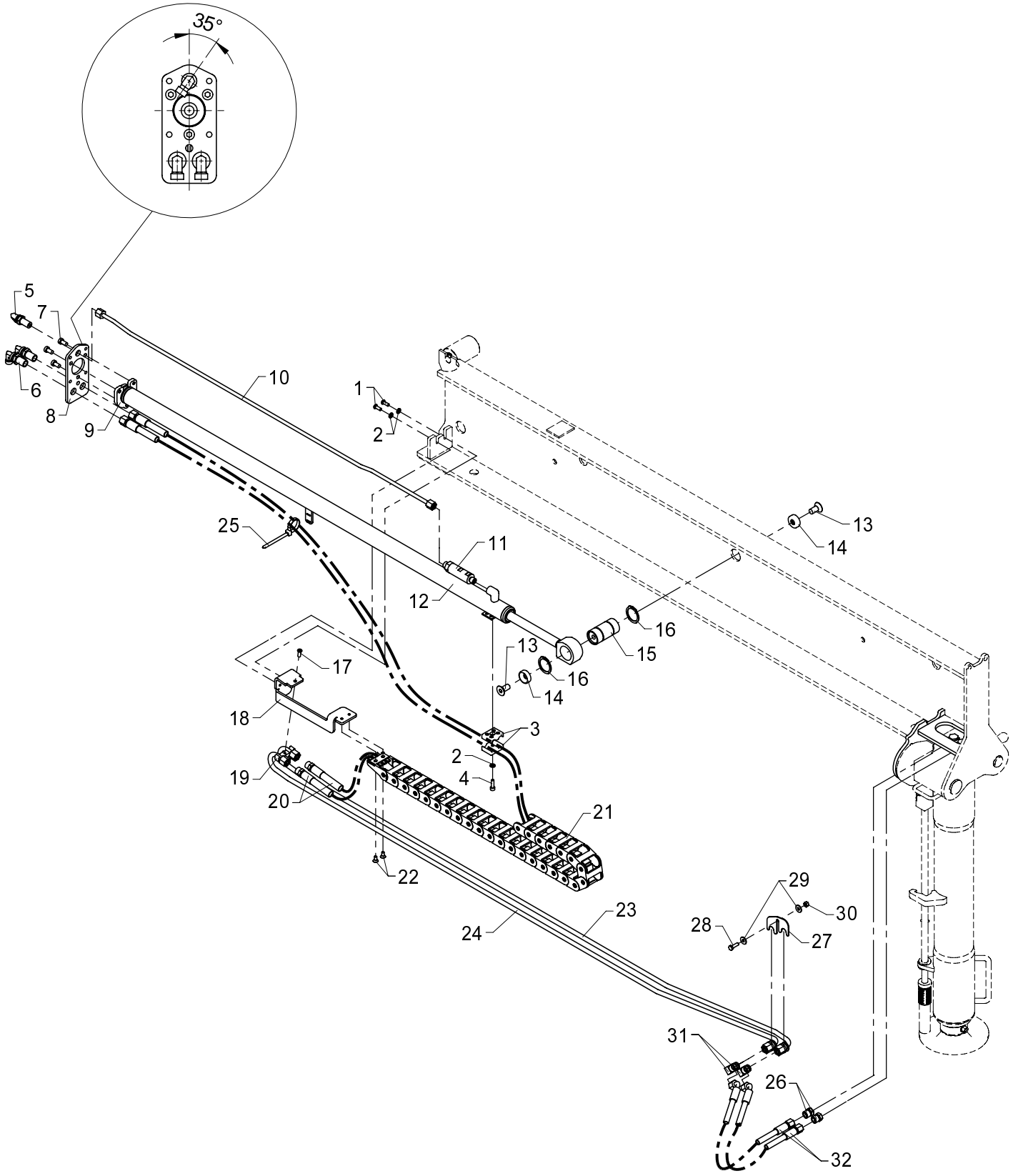

534 05 770

From loader 1060001
To loader
Created
Modified

Hydraulic system, SH + SR-60° - 4600, hydr. extension

Pos	Qty.	Part no.	Description	Remarks
1	2	31539	Screw, stainless	MC6 x 16
2	3	32302	Face washer, stainless	6 mm
3	2	64408	Clamp	
4	1	30427	Screw	MC6 x 20
5	1	26864	Elbow connection	WSS 8L
6	2	26894	Elbow connection	10mm - 90 gr.
7	3	32478	Screw	M8 x 15
8	1	6344097	End plate	
9	1	6344098	Bracket	
10	1	6340799	Pipe, extension cylinder	
11	1	55228	Counter-balance valve	
12	1	6340790	Beam cylinder	
13	2	30586	Countersunk screw	MK12 x 25
14	2	6306241	Mounting plate	
15	1	6340118	Pin	Serie 1300/1500
16	2	33117	Circlip	35U
17	1	32490	Screw	MCL6 x 16
18	1	6344096	Clamp	
19	1	6306097	Clamp	
20	2	56364	Hose	5/16" x 2300 mm L/S - 10
21	1	28718	Nylon drag chain (26 links)	
22	2	30542	Counter-sunk screw	MK6 x 12
23	1	6340797	Pipe	
24	1	6340796	Pipe	
25	1	27275	Clip	7,6 x 390mm
26	2	25635	Screw	VSK 10L
27	1	6306164	Bracket	
28	1	30113	Set screw, stainless	M6 x 20
29	2	31134	Washer, stainless	6 mm
30	1	30884	Lock nut, stainless	M6
31	2	25125	Elbow connection	WV 10 L
32	2	56363	Hose	1/4" x 450 L/V

534 05 780

15/105 - 17/117 SL & DL Parts

Internal ref. 63 44 520

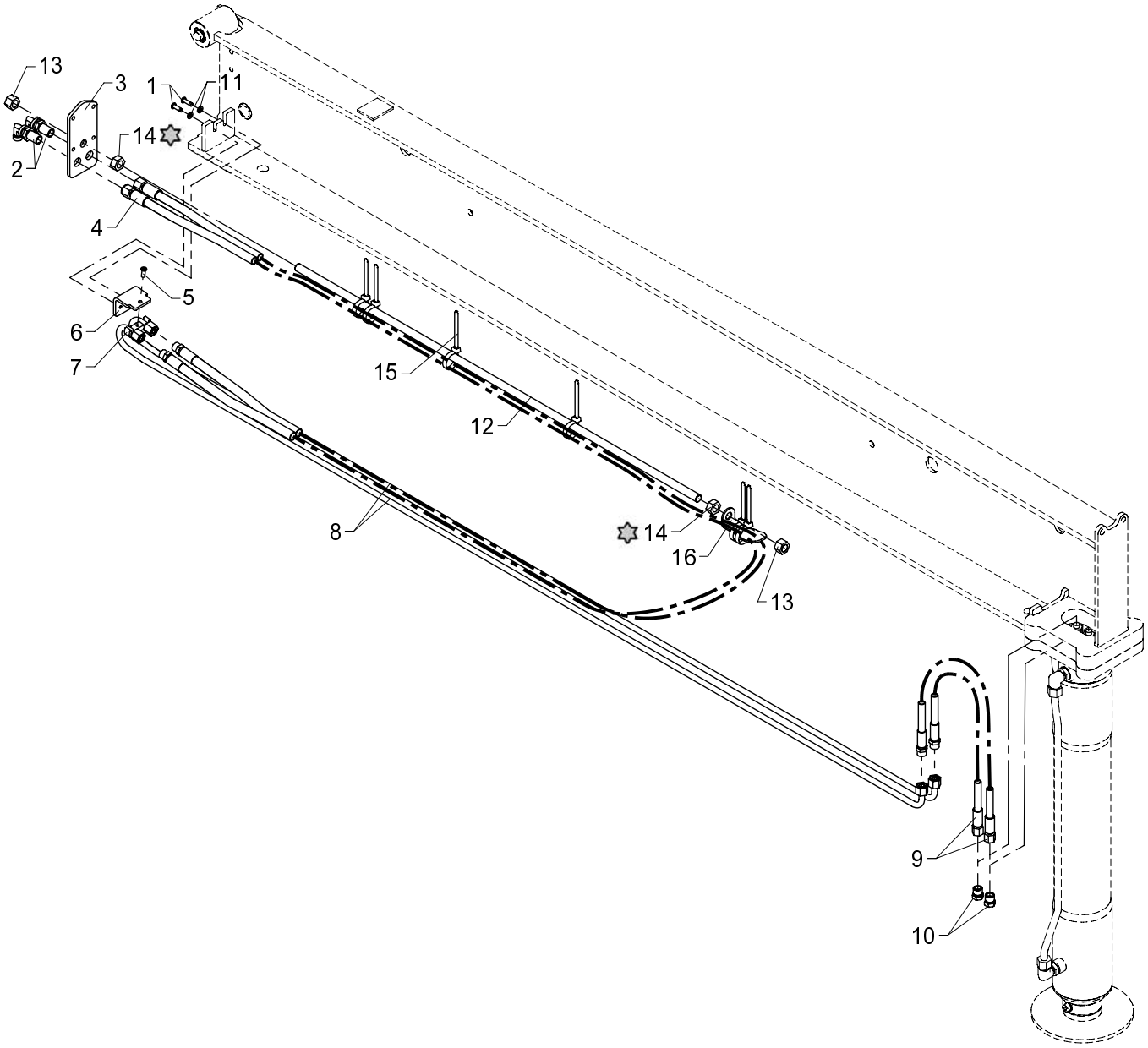

Loctite 270

534 05 780

From loader 1060001
To loader

Hydraulic system, SV + SR-20° - 5570, manual extension

Created 27-02-2007
Modified 02-11-2009

Pos	Qty.	Part no.	Description	Remarks
1	2	31539	Screw, stainless	MC6 x 16
2	2	26894	Elbow connection	10mm - 90 gr.
3	1	6344095	End plate	
4	1	56279	Hose	
5	1	32490	Screw	MCL6 x 16
6	1	6344109	Clamp	
7	1	6306097	Clamp	
8	2	6344218	Pipe	
9	2	56460	Hose	1/4" x 550 mm L/S - 10
10	2	25635	Screw	VSK 10L
11	2	32302	Face washer, stainless	6 mm
12	1	31262	Threaded pin	
13	2	32317	Lock nut	M14
14	2	32145	Nut, stainless	M14
15	6	27275	Clip	
16	1	6344107	Clamp	

534 05 785

15/105 - 17/117 SL & DL Parts

Internal ref. 63 45 520

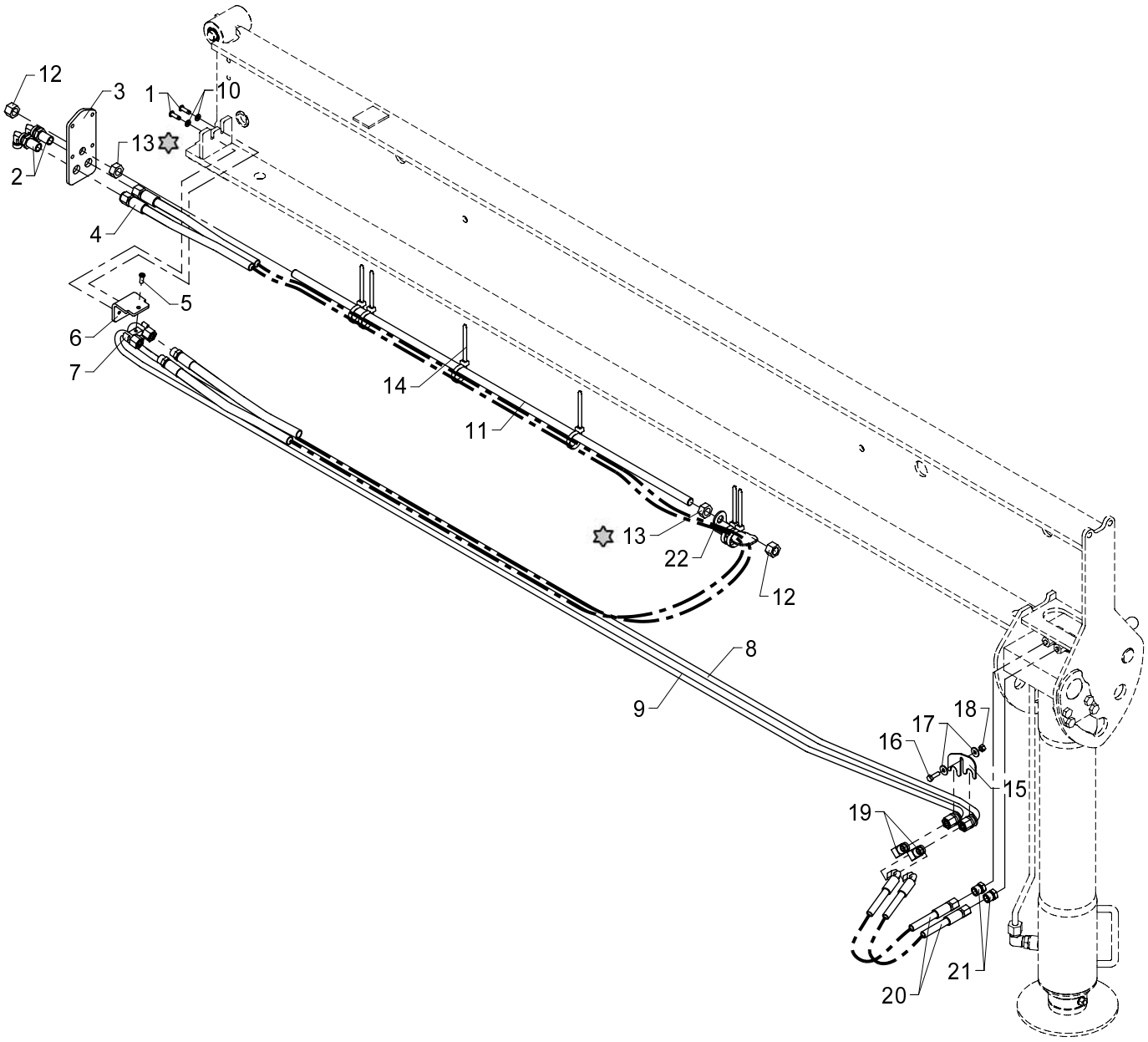

Loctite 270

534 05 785

From loader 1060001
To loader

Created 07-07-2009
Modified

Hydraulic system, SR-60°, 5570, manual extension

Pos	Qty.	Part no.	Description	Remarks
1	2	31539	Screw, stainless	MC6 x 16
2	2	26894	Elbow connection	10mm - 90 gr.
3	1	6344095	End plate	
4	1	56279	Hose	
5	1	32490	Screw	MCL6 x 16
6	1	6344109	Clamp	
7	1	6306097	Clamp	
8	1	6344234	Pipe	
9	1	6344233	Pipe	
10	2	32302	Face washer, stainless	6 mm
11	1	31262	Threaded pin	
12	2	32317	Lock nut	M14
13	2	32145	Nut, stainless	M14
14	6	27275	Clip	
15	1	6306164	Bracket	
16	1	30113	Set screw, stainless	M6 x 20
17	2	31134	Washer, stainless	6 mm
18	1	30884	Lock nut, stainless	M6
19	2	25125	Elbow connection	WV 10 L
20	2	56363	Hose	1/4" x 450 L/V
21	2	25635	Screw	VSK 10L
22	1	6344107	Clamp	

15/105 - 17/117 SL & DL Parts

63 44 530
Internal ref. 63 40 880

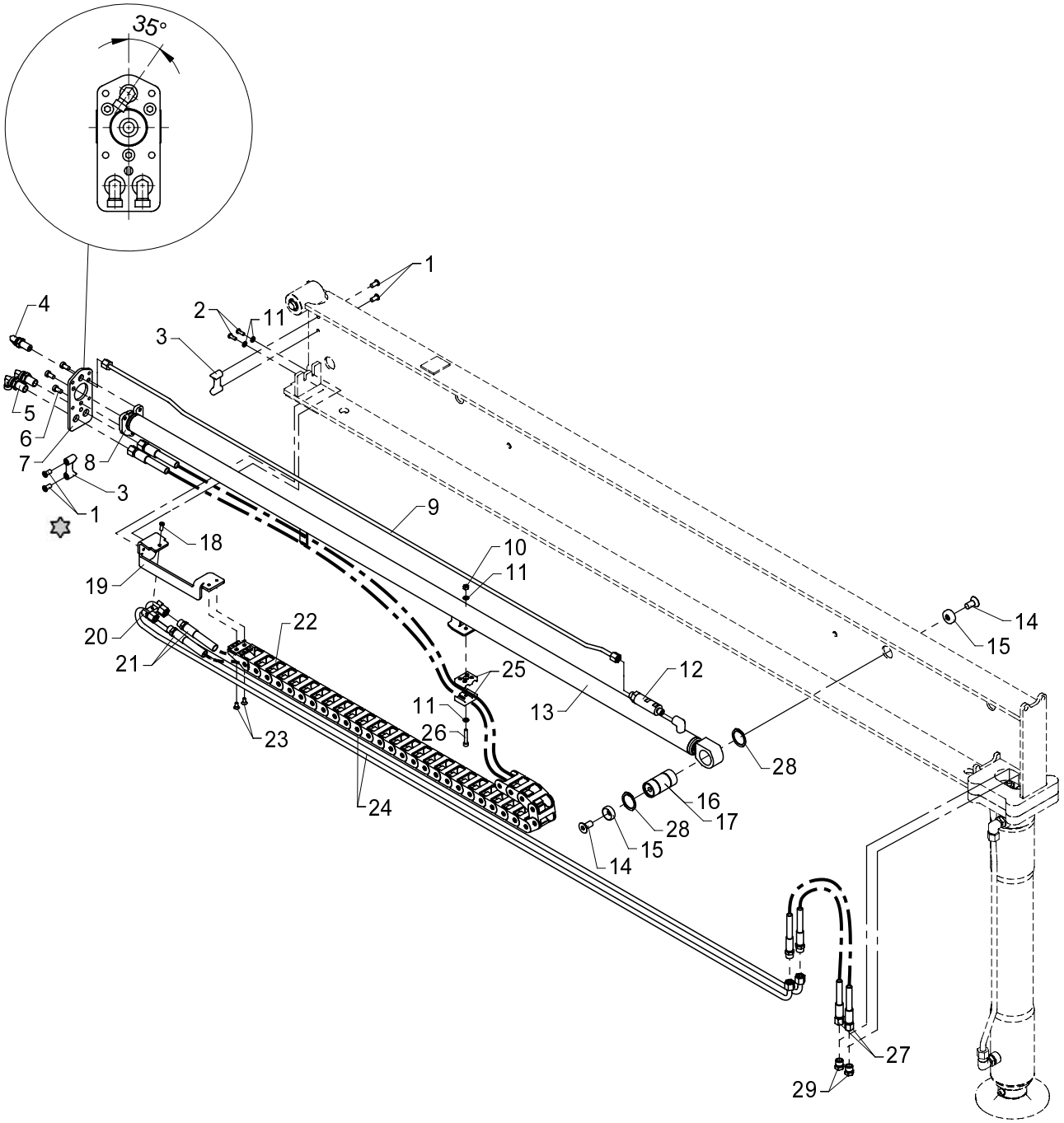

Loctite 243

534 05 790

From loader 1060001
To loader

Created 15-01-2010
Modified

Hydraulic system, SV + SR-20° - 5570, hydr. extension

Pos	Qty.	Part no.	Description	Remarks
		6340880	Hydraulic system, SV-SR - 5570	
		6344530	Hydraulic system, SV-SR - 5570	
1	4	32481	Screw	MCL8 x 16
2	2	32222	Button head screw	M6 x 16
3	2	63556	Guide	
4	1	26864	Elbow connection	WSS 8L
5	2	26894	Elbow connection	10mm - 90 gr.
6	3	32478	Screw	M8 x 15
7	1	6344097	End plate	
8	1	6344098	Bracket	
9	1	6344219	Pipe	
10	1	30884	Lock nut, stainless	M6
11	4	32302	Face washer, stainless	6 mm
12	1	55228	Counter-balance valve	
13	1	6344210	Beam cylinder	
14	2	30586	Countersunk screw	MK12 x 25
15	2	6306241	Mounting plate	
16	1	6340118	Pin	Serie 1300/1500
17	1	6344118	Pin	Serie 1800/2200
18	1	32490	Screw	MCL6 x 16
19	1	6344096	Clamp	
20	1	6306097	Clamp	
21	2	56364	Hose	5/16" x 2300 mm L/S - 10
22	1	28886	Nylon drag chain	
23	2	30542	Counter-sunk screw	MK6 x 12
24	2	6344218	Pipe	
25	1	64408	Clamp	
26	1	30959	Screw	MC6 x 35
27	2	56460	Hose	1/4" x 550 mm L/S - 10
28	2	33117	Circlip	35U
29	2	25635	Screw	VSK 10L

15/105 - 17/117 SL & DL Parts

63 46 530
Internal ref. 63 42 540

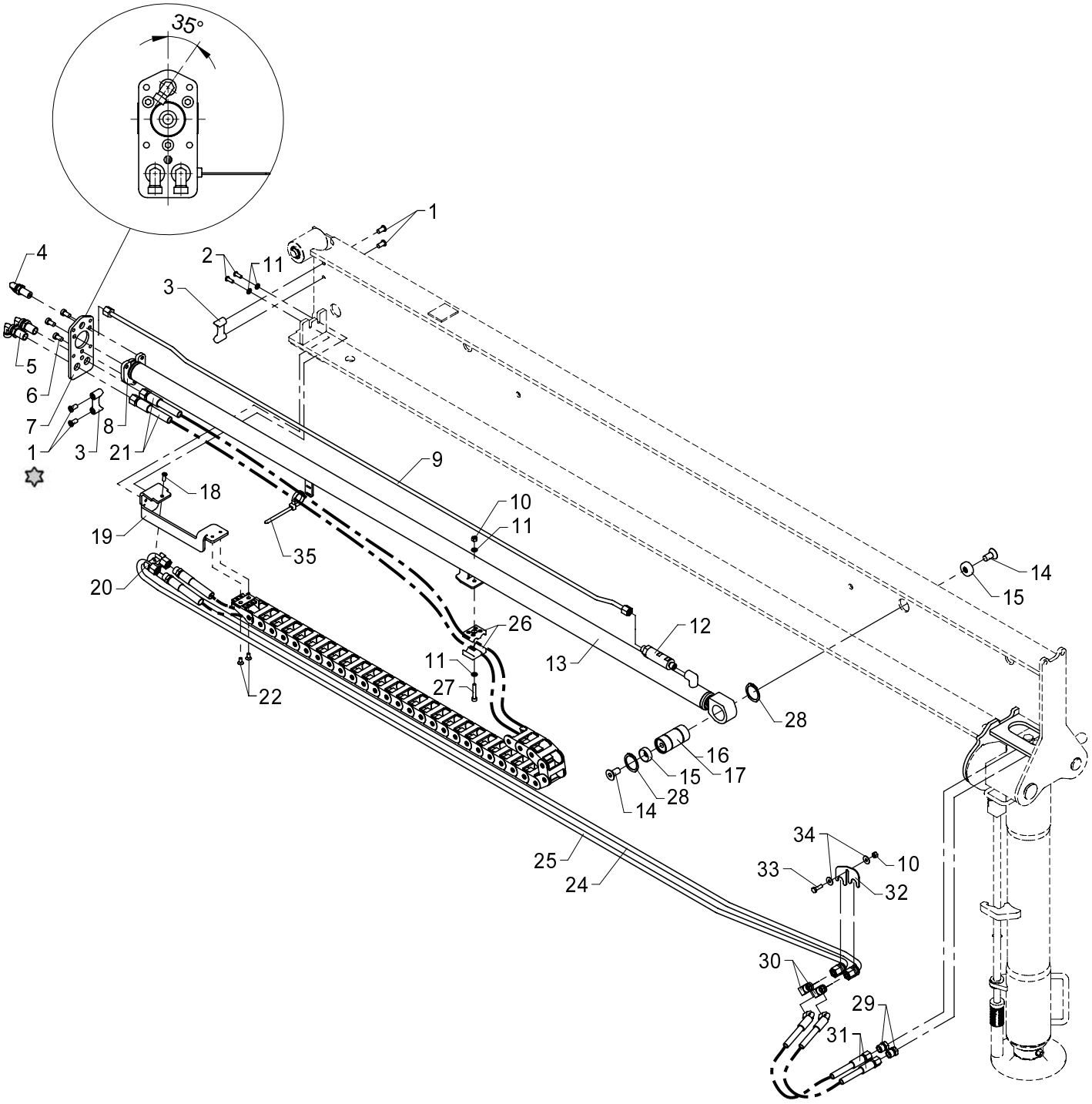

Loctite 243

534 05 800

From loader 1060001
To loader

Created 15-01-2010
Modified

Hydraulic system, SH + SR-60° - 5570, hydr. extension

Pos	Qty.	Part no.	Description	Remarks
		6342540	Hydraulic system, SH - 5570	
		6346530	Hydraulic system, SH - 5570	
1	4	32481	Screw	MCL8 x 16
2	2	32222	Button head screw	M6 x 16
3	2	63556	Guide	
4	1	26864	Elbow connection	WSS 8L
5	2	26894	Elbow connection	10mm - 90 gr.
6	3	32478	Screw	M8 x 15
7	1	6344097	End plate	
8	1	6344098	Bracket	
9	1	6344219	Pipe	
10	2	30884	Lock nut, stainless	M6
11	4	32302	Face washer, stainless	6 mm
12	1	55228	Counter-balance valve	
13	1	6344210	Beam cylinder	
14	2	30586	Countersunk screw	MK12 x 25
15	2	6306241	Mounting plate	
16	1	6340118	Pin	Serie 1300/1500
17	1	6344118	Pin	Serie 1800/2200
18	1	32490	Screw	MCL6 x 16
19	1	6344096	Clamp	
20	1	6306097	Clamp	
21	2	56364	Hose	5/16" x 2300 mm L/S - 10
22	2	30542	Counter-sunk screw	MK6 x 12
23	1	28886	Nylon drag chain	
24	1	6344234	Pipe	
25	1	6344233	Pipe	
26	1	64408	Clamp	
27	1	30959	Screw	MC6 x 35
28	2	33117	Circlip	35U
29	2	25635	Screw	VSK 10L
30	2	25125	Elbow connection	WV 10 L
31	2	56363	Hose	1/4" x 450 L/V
32	1	6306164	Bracket	
33	1	30113	Set screw, stainless	M6 x 20
34	2	31134	Washer, stainless	6 mm
35	1	27275	Clip	

15/105 - 17/117 SL & DL Parts

Internal ref. 63 44 550

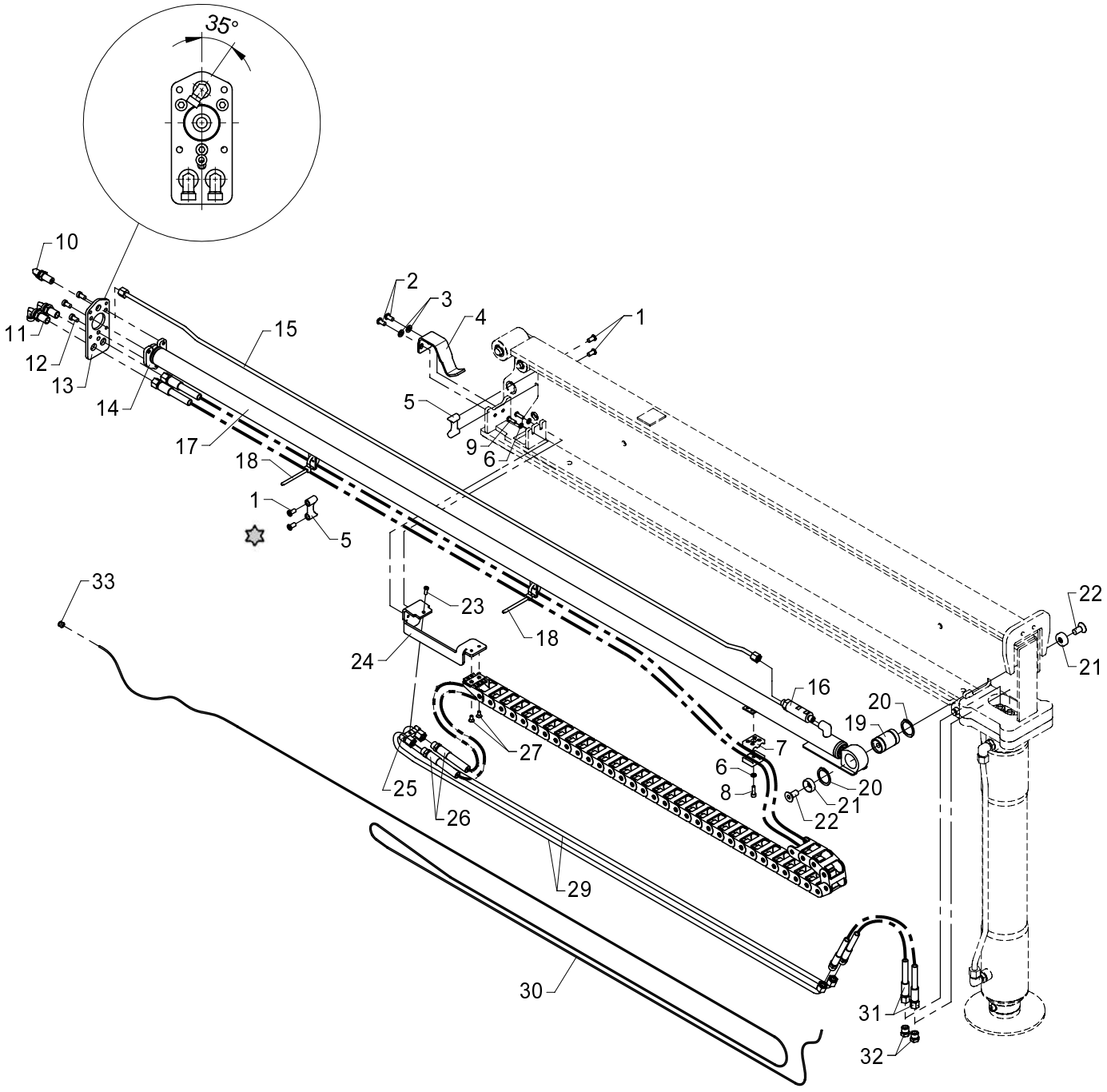

Loctite 243

534 05 810

From loader 1060001
To loader

Created 06-03-2007
Modified

Hydraulic system, DV + DR-20° - 6450, hydr. extension

Pos	Qty.	Part no.	Description	Remarks
1	4	32481	Screw	MCL8 x 16
2	2	30925	Round-head screw	M8 x 16
3	2	31147	Washer, stainless	8 mm
4	1	6306099	Spring holder	
5	2	63556	Guide	
6	3	32302	Face washer, stainless	6 mm
7	2	64408	Clamp	
8	1	30427	Screw	MC6 x 20
9	2	32491	Round-head screw	M6 x 20
10	1	26864	Elbow connection	WSS 8L
11	2	26894	Elbow connection	10mm - 90 gr.
12	3	32478	Screw	M8 x 15
13	1	6344097	End plate	
14	1	6344098	Bracket	
15	1	6344229	Pipe	
16	1	55228	Counter-balance valve	
17	1	6344220	Beam cylinder	
18	2	27275	Clip	
19	1	6340119	Pin	
20	2	33117	Circlip	35U
21	2	6306241	Mounting plate	
22	2	30586	Countersunk screw	MK12 x 25
23	1	32490	Screw	MCL6 x 16
24	1	6344096	Clamp	
25	1	6306097	Clamp	
26	2	56365	Hose	5/16" x 3340 mm L/S - 10
27	2	30542	Counter-sunk screw	MK6 x 12
28	1	28887	Nylon drag chain	
29	2	6344228	Pipe	
30	1	27215	Wire 2 x 1.5	9,5 M
31	2	56366	Hose	1/4" x 260 mm L/S - 10
32	2	25635	Screw	VSK 10L
33	1	42659	Cable lead-in 6mm	

15/105 - 17/117 SL & DL Parts

Internal ref. 63 42 560

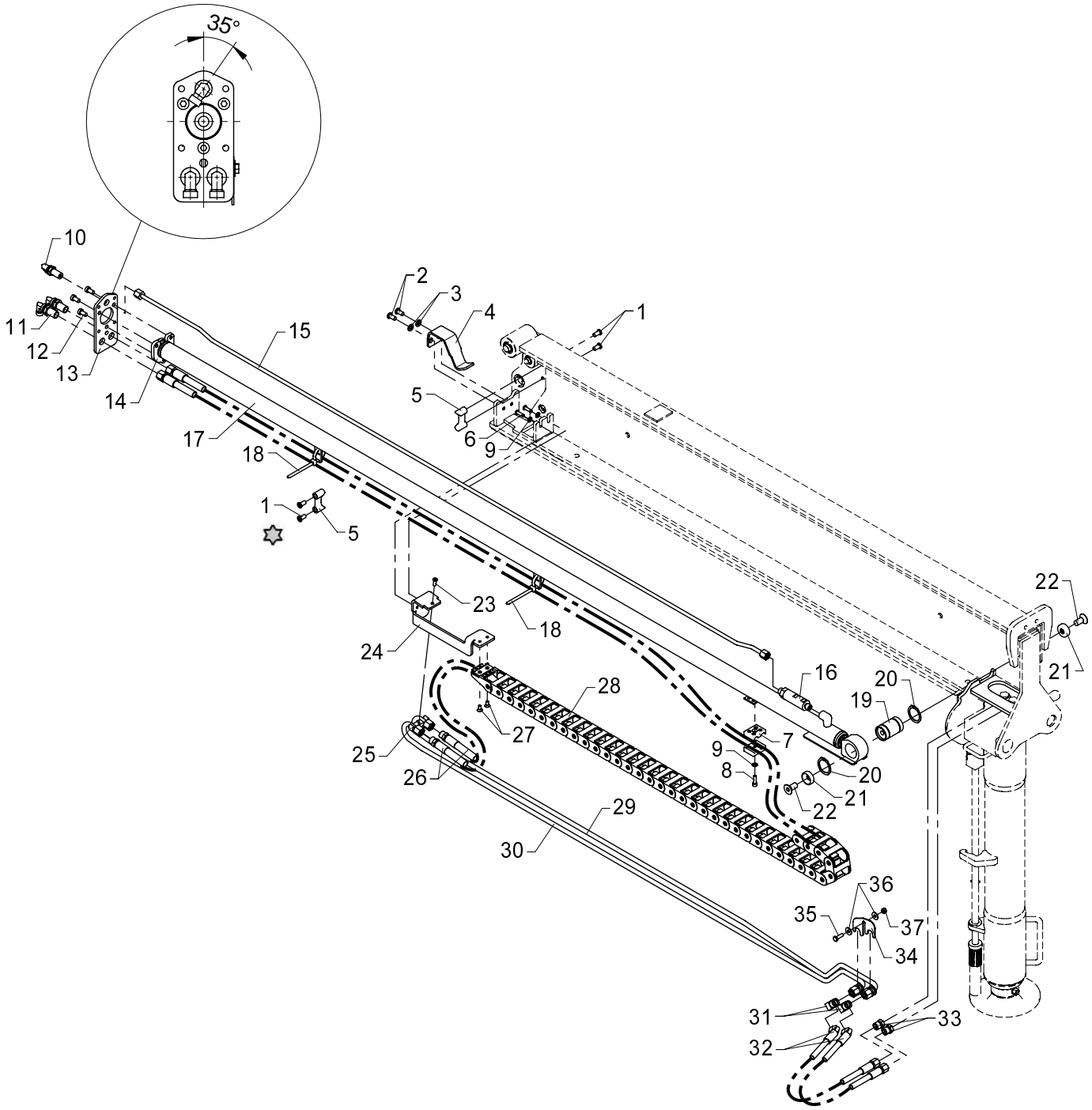

Loctite 243

534 05 820

From loader 1060001
To loader

Hydraulic system, DH + DR-60° - 6450, hydr. extension

Created 15-05-2009
Modified 06-07-2009

Pos	Qty.	Part no.	Description	Remarks
1	4	32481	Screw	MCL8 x 16
2	2	30925	Round-head screw	M8 x 16
3	2	31147	Washer, stainless	8 mm
4	1	6306099	Spring holder	
5	2	63556	Guide	
6	2	32491	Round-head screw	M6 x 20
7	2	64408	Clamp	
8	1	30427	Screw	MC6 x 20
9	3	32302	Face washer, stainless	6 mm
10	1	26864	Elbow connection	WSS 8L
11	2	26894	Elbow connection	10mm - 90 gr.
12	3	32478	Screw	M8 x 15
13	1	6344097	End plate	
14	1	6344098	Bracket	
15	1	6344229	Pipe	
16	1	55228	Counter-balance valve	
17	1	6344220	Beam cylinder	
18	2	27275	Clip	
19	1	6340119	Pin	
20	2	33117	Circlip	35U
21	2	6306241	Mounting plate	
22	2	30586	Countersunk screw	MK12 x 25
23	1	32490	Screw	MCL6 x 16
24	1	6344096	Clamp	
25	1	6306097	Clamp	
26	2	56365	Hose	5/16" x 3340 mm L/S - 10
27	2	30542	Counter-sunk screw	MK6 x 12
28	1	28887	Nylon drag chain	
29	1	6344236	Pipe	
30	1	6344235	Pipe, stabilizers	
31	2	25125	Elbow connection	WV 10 L
32	2	56363	Hose	1/4" x 450 L/V
33	2	25635	Screw	VSK 10L
34	1	6306164	Bracket	
35	1	30113	Set screw, stainless	M6 x 20
36	2	31134	Washer, stainless	6 mm
37	1	30884	Lock nut, stainless	M6

15/105 - 17/117 SL & DL Parts

Internal ref. 63 42 410

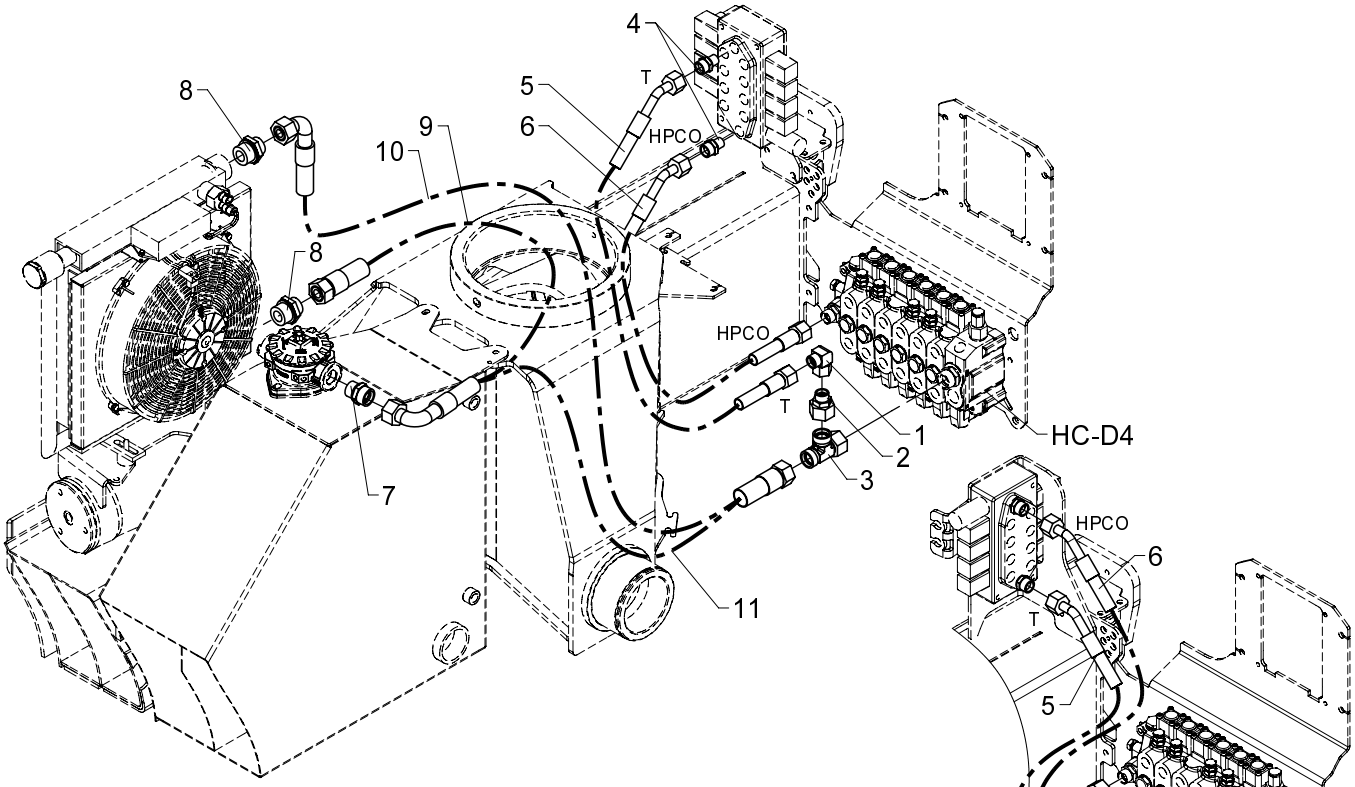

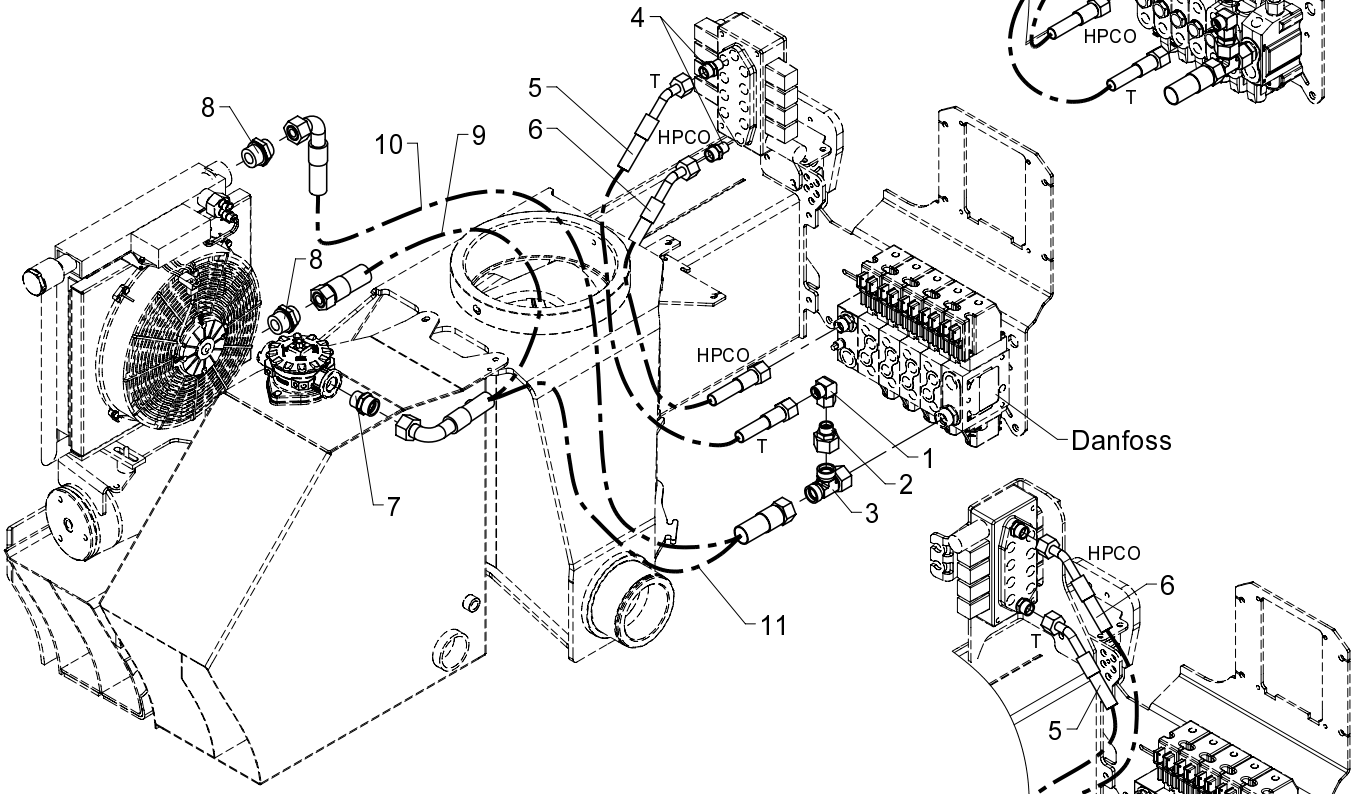

534 06 020

From loader 1060001
To loader

Created 02-06-2008
Modified

Hydr. syst. pump + return hoses

Pos	Qty.	Part no.	Description	Remarks
		6342410	Pump+return hoses-Hydrocontrol	
1	1	25284	Elbow connection	EWSD 15 L
2	1	25298	Connection	REDSDN 22/15 L
3	1	26149	Connection	ELSD 22 L
4	2	25273	Connection	GES 15 LR 3-8 A3L
5	1	56503	Hose	1/2" x 1000mm v45/o
6	1	56504	Hose	1/2" x 750mm v45/o
7	1	25169	Connection	P-GEV 22 LR-WD
8	2	26122	Connection	P-GEV 22 LR 1-WD
9	1	56501	Hose	Til køler/tank
10	1	56502	Hose	Til køler
11	1	56395	Hose	Til tank

15/105 - 17/117 SL & DL Parts

Internal ref. 63 42 420

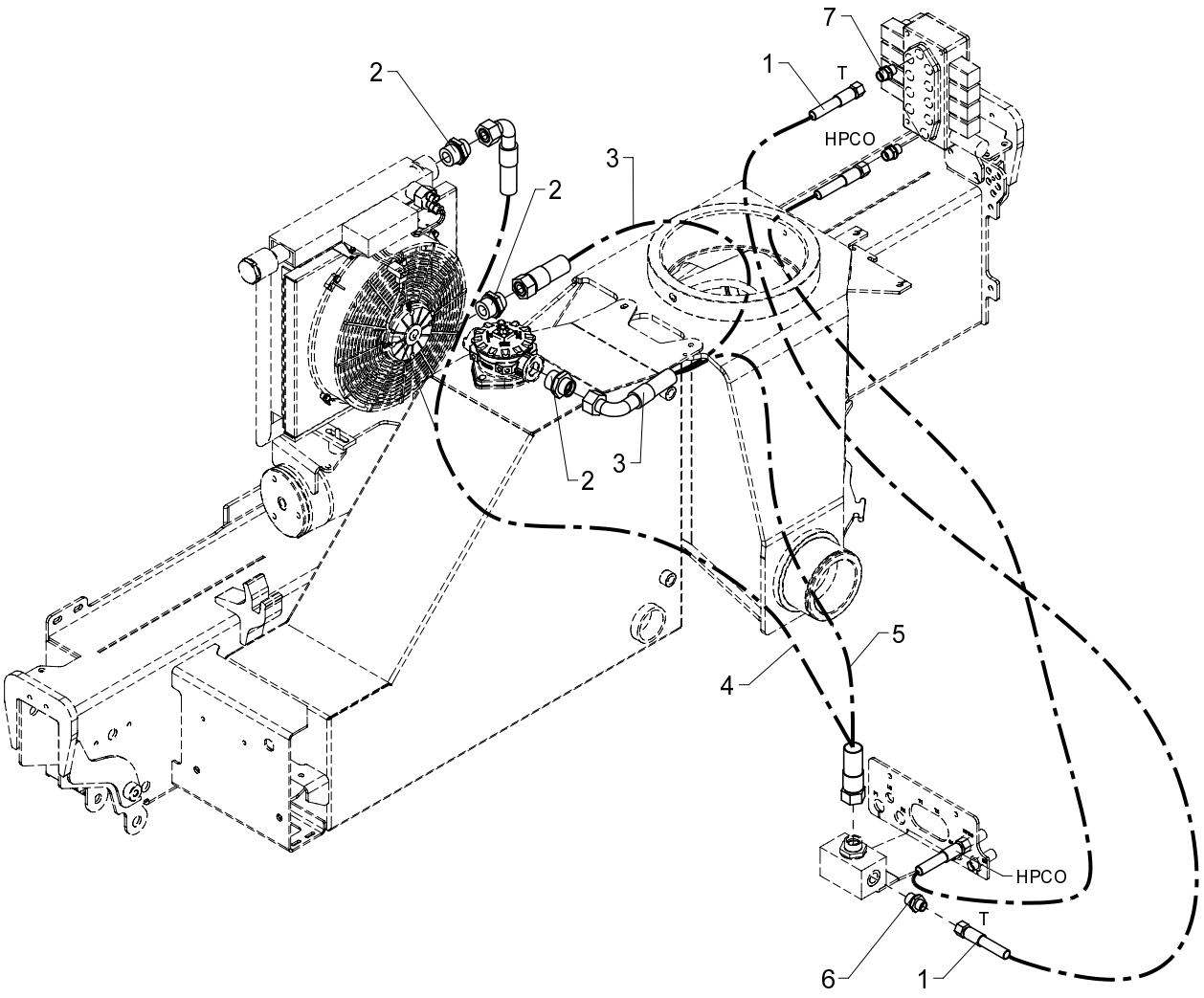

534 06 030

From loader 1060001
To loader

Created 24-11-2008
Modified 12-03-2009

Hydr. syst. pump + return hoses (TS)

Pos	Qty.	Part no.	Description	Remarks
1	2	0015500	Hose	
2	3	26122	Connection	P-GEV 22 LR 1-WD
3	1	56501	Hose	Til køler/tank
4	1	56502	Hose	Til køler
5	1	56395	Hose	Til tank
6	1	25108	Connection	GES 12 LR 1/2-WD
7	2	25127	Connection	P-GEV 12 LR-WD

15/105 - 17/117 SL & DL Parts

Internal ref. 63 42 400

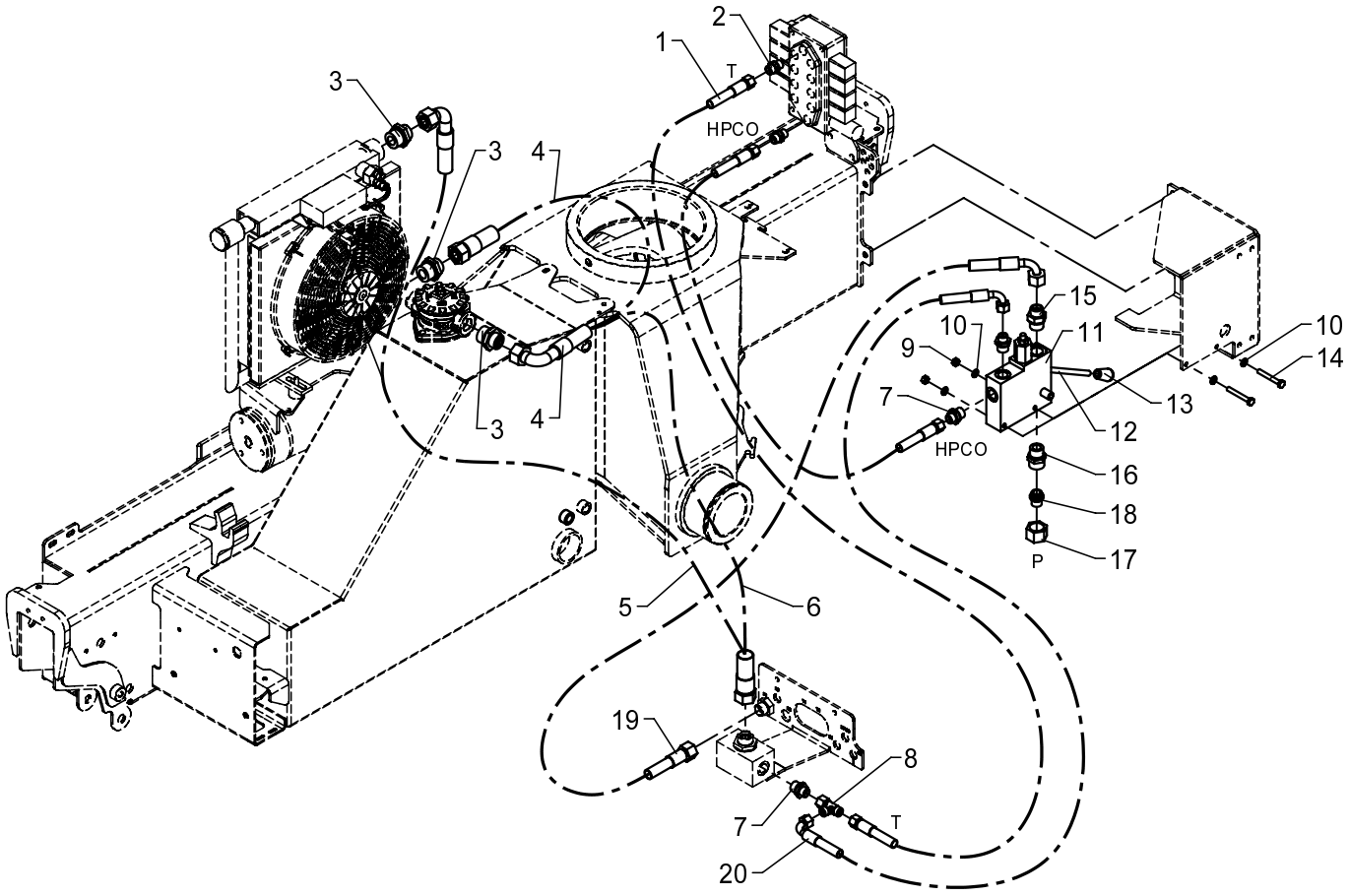

From loader 1060001
To loader

Hydraulic system, pump and return hoses (TS, excl. CE)

Created 16-06-2009
Modified

Pos	Qty.	Part no.	Description	Remarks
1	2	0015500	Hose	
2	2	25127	Connection	P-GEV 12 LR-WD
3	3	26122	Connection	P-GEV 22 LR 1-WD
4	1	56501	Hose	Til køler/tank
5	1	56502	Hose	Til køler
6	1	56395	Hose	Til tank
7	3	25108	Connection	GES 12 LR 1/2-WD
8	1	25270	Connection	ELSD 12 L
9	2	30856	Nut, stainless	M8
10	4	31147	Washer, stainless	8 mm
11	1	55292	Change-over valve+flowcontrol	
12	1	6340907	Lever	
13	1	64411	Knob for lever	
14	2	30141	Set screw, stainless	M8 x 60
15	1	26390	Connection	P-GEV 16 SR 3/4-WD
16	1	26197	Connection	P-GEV 20 SR-WD
17	1	26109	Coupling nut	M 20 S
18	1	26361	Blanking plug	VSD 20 S
19	1	56416	Hose	1/2 X 850 M24 X 1.5 L/90
20	1	0017460	Hose	

15/105 - 17/117 SL & DL Parts

Internal ref. 63 41 580

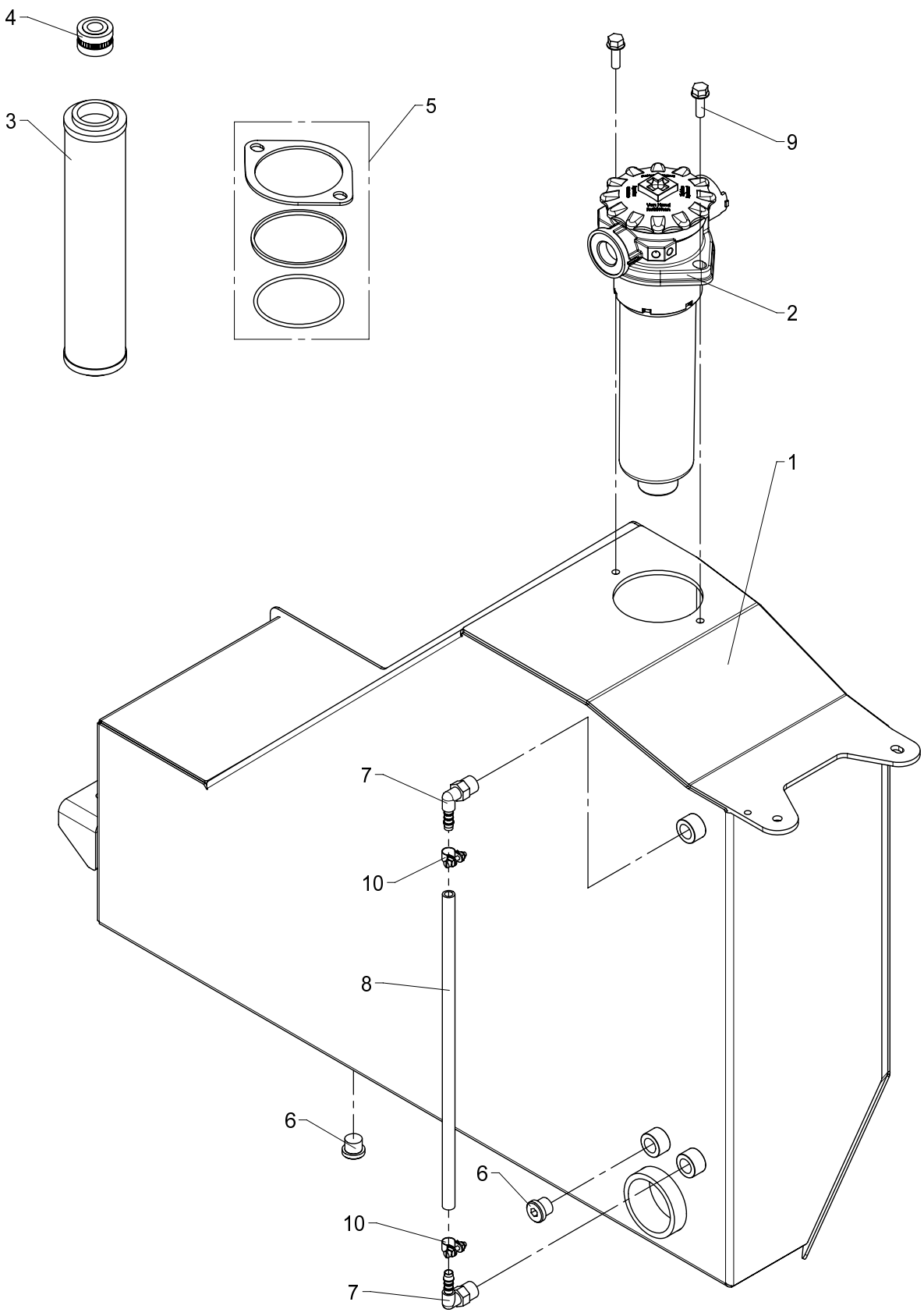

Tank, cpl.

534 06 070

From loader 1060001
To loader

Created 24-11-2008
Modified

Pos	Qty.	Part no.	Description	Remarks
1	1	6340531	Tank	
2	1	49405	Return filter	
3	1	49406	Filter	
4	1	49407	Air filter	
5	1	49418	Seal kit	
6	2	25277	Plug	VS-R-3/8 WD
7	2	64500	Elbow	WES 8/R-3/8"
8	1	62511	Plastic hose	
9	2	30996	Screw	M8 x 25
10	2	31452	Clamp	

15/105 - 17/117 SL & DL Parts

Internal ref. 63 40 530

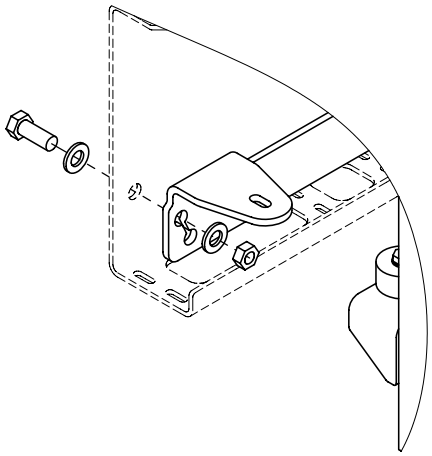

Placering af monteringsbeslag 6340537
1300K/1730K

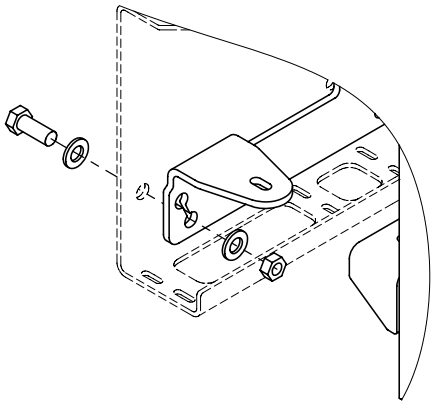

Placering af monteringsbeslag 6340537
1800K/2430K

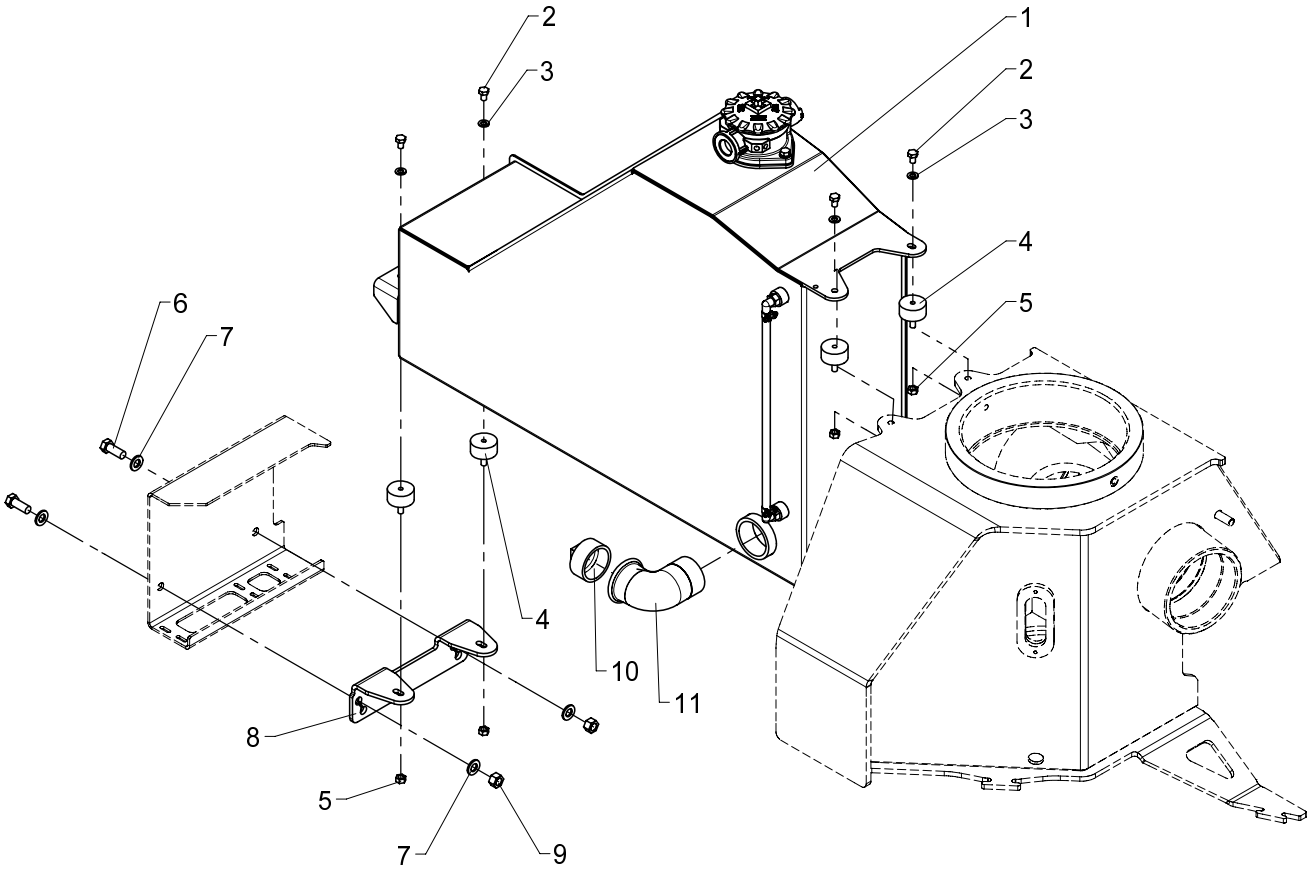

Tank incl. fittings

534 06 080

From loader 1060001
To loader

Created 24-11-2008
Modified

Pos	Qty.	Part no.	Description	Remarks
1	1	6341580	Tank with fittings	
2	4	30130	Set screw, stainless	M8 x 12
3	4	31147	Washer, stainless	8 mm
4	4	62000	Torsion balancer	
5	4	30856	Nut, stainless	M8
6	2	30177	Set screw	M12 x 30
7	4	32338	Washer	12 mm
8	1	6340537	Mounting fittings	
9	2	30860	Nut, stainless	M12
10	1	25398	Plug	
11	1	25430	Elbow	

15/105 - 17/117 SL & DL Parts

Internal ref. 63 42 110

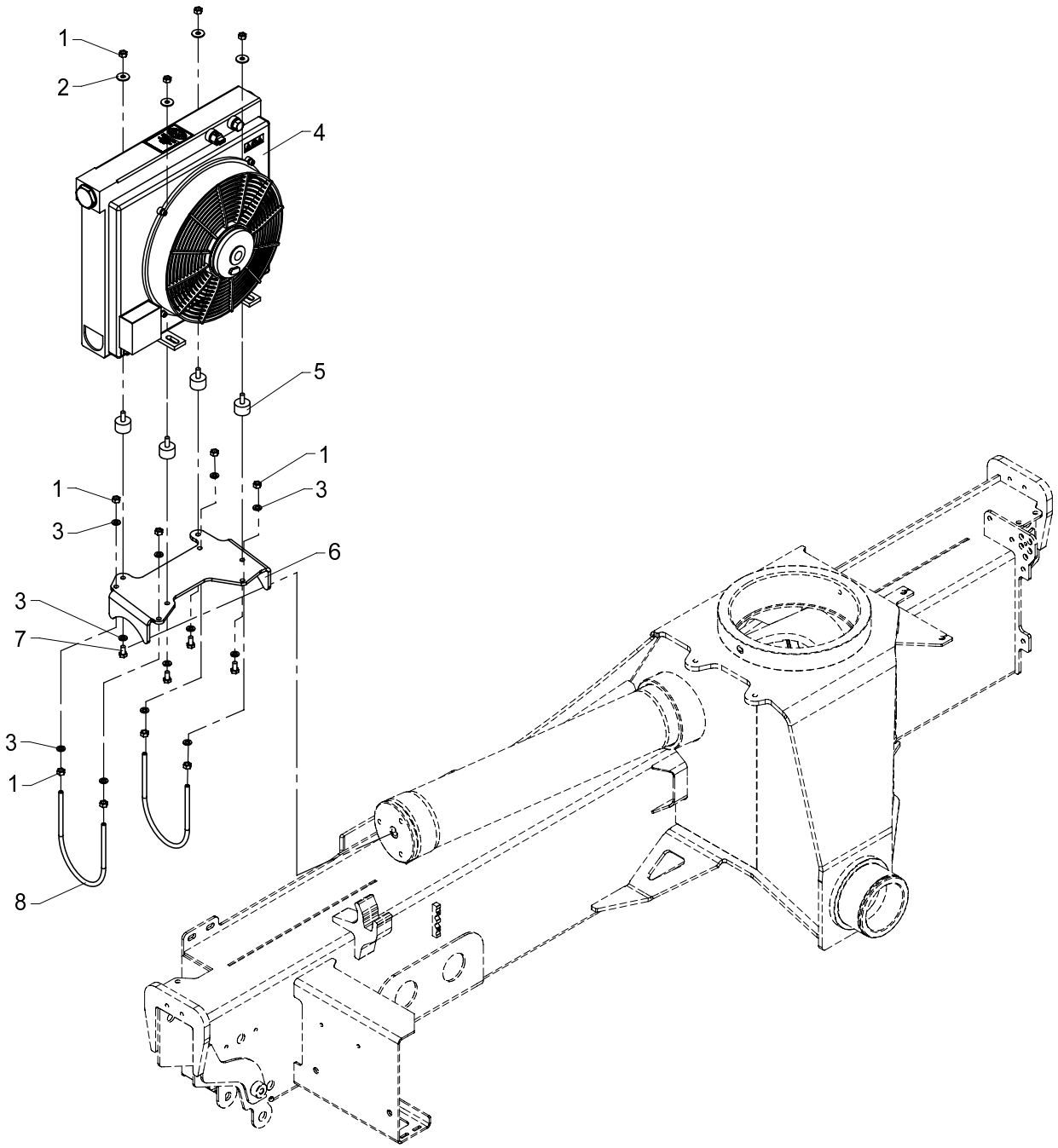

Oil cooler

534 06 100

From loader 1060001
To loader

Created 10-08-2007
Modified

Pos	Qty.	Part no.	Description	Remarks
1	12	30856	Nut, stainless	M8
2	4	31136	Washer, stainless	8 mm
3	12	31147	Washer, stainless	8 mm
4	1	50260	Oil cooler, 24 V + Smartdrive	
5	4	44263	Torsion balancer	
6	1	6340047	Cooler bracket	
7	4	30131	Set screw, stainless	M8 x 16
8	2	6340458	Clamp	

15/105 - 17/117 SL & DL Parts

Internal ref. 63 40 550

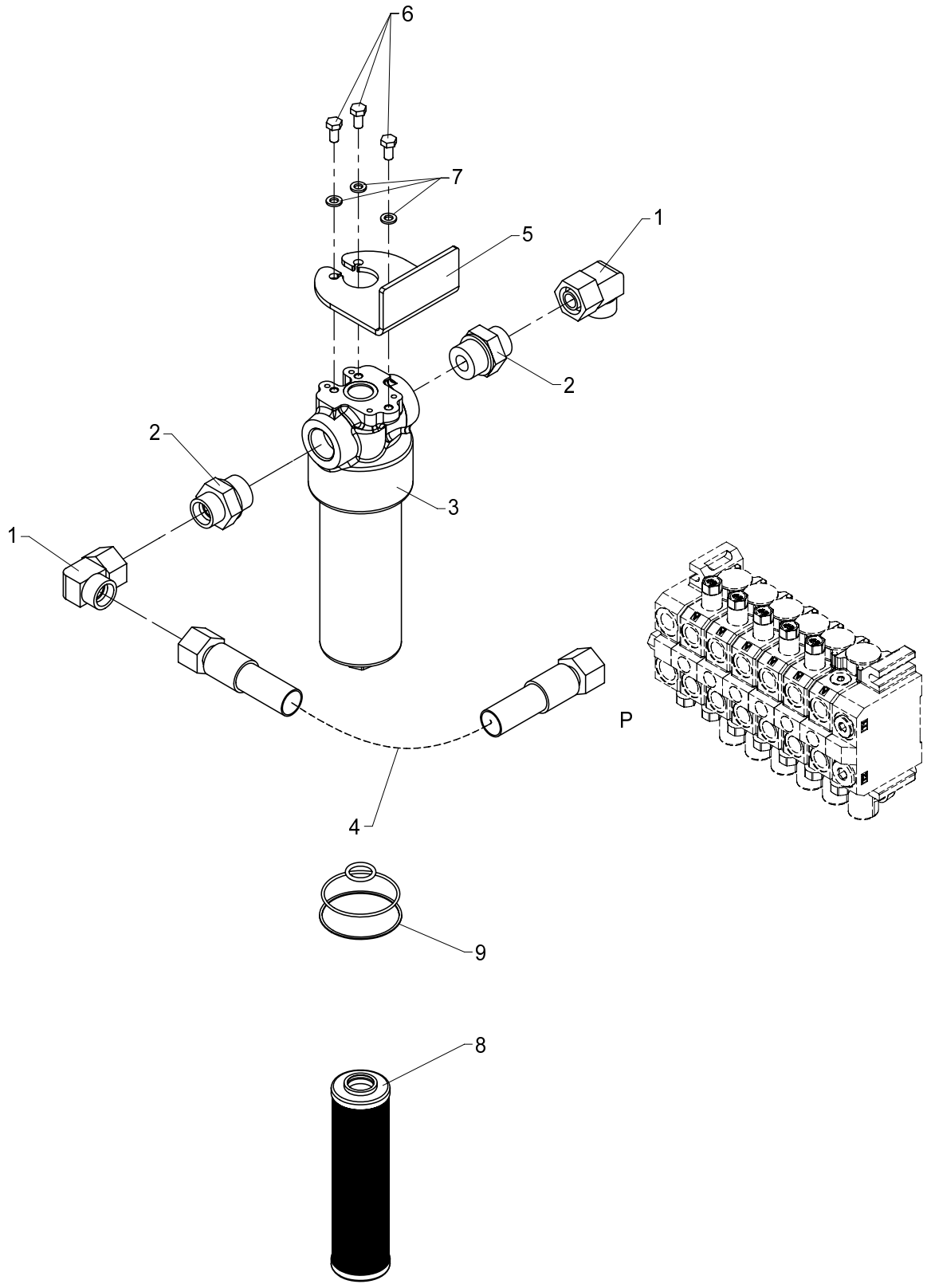

534 06 120

From loader 1060001
To loader

Created 24-11-2008
Modified

High-pressure filter

Pos	Qty.	Part no.	Description	Remarks
1	2	26198	Elbow connection	EWVD 20 S-SV
2	2	26851	Connection	GES 20 SR 1-WD
3	1	49401	High pressure filter	
4	1	62626	Hose	
5	1	6882974	Bracket, high pressure filter	
6	3	30131	Set screw, stainless	M8 x 16
7	3	31155	Spring washer	8 mm
8	1	49402	Filter	
9	1	49417	Seal kit	

15/105 - 17/117 SL & DL Parts

66 51 390
66 51 360
Internal ref. 66 51 330

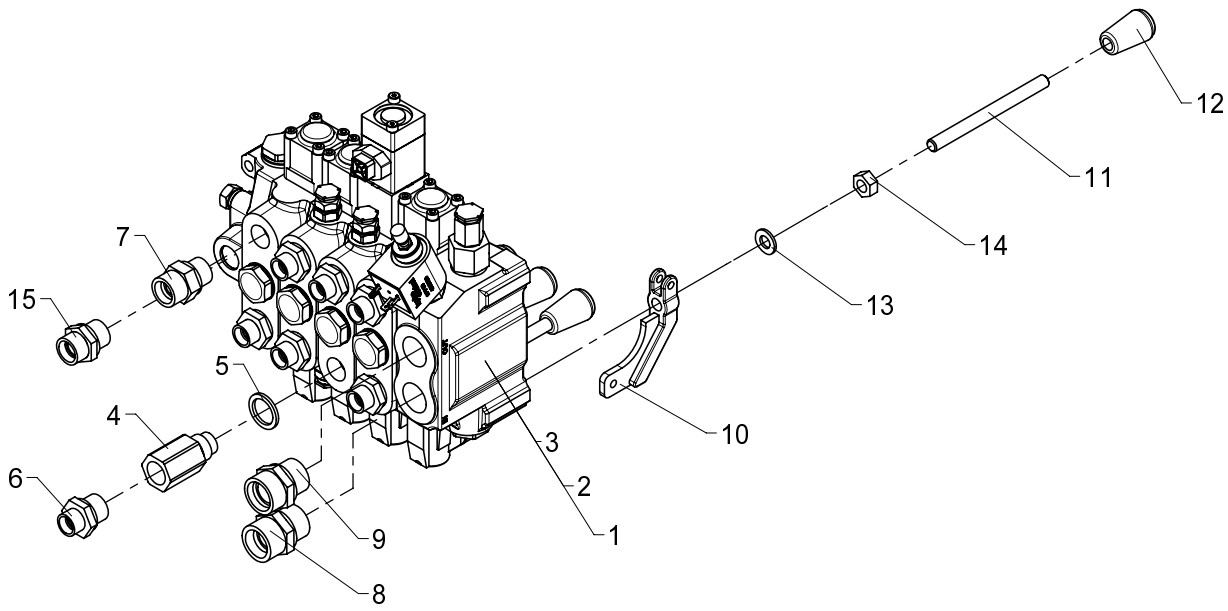

534 06 200

From loader 1060001
To loader

Created 19-11-2008
Modified 12-03-2009

Valve block, 4 sects. HC-D4

Pos	Qty.	Part no.	Description	Remarks
		6651330	Valve block, 4 sect./HCD4-CE	
		6651360	Valve block, 4 sect./HCD4	
		6651390	Valve block, 4 sect./HCD4_2.1	
1	1	55256	Valve block, complete	6651330
2	1	55259	Valve block, complete	6651360
3	1	55274	Valve block, complete	6651390
4	1	60295	Flow-control valve	
5	1	21106	Seal washer	ø21,5 x 28,7 x 2,5
6	7	25108	Connection	GES 12 LR 1/2-WD
7	1	26334	Connection	P-GEV 16 SR-WD
8	1	26197	Connection	P-GEV 20 SR-WD
9	1	25169	Connection	P-GEV 22 LR-WD
10	4	63499	Adapter	
11	4	6340245	Control valve lever	
12	4	64411	Knob for lever	
13	4	31565	Washer, stainless	10 mm
14	4	30858	Nut	M10
15	1	25143	Connection	P-GEV 15 LR-WD

15/105 - 17/117 SL & DL Parts

66 51 400
66 51 370
Internal ref. 66 51 340

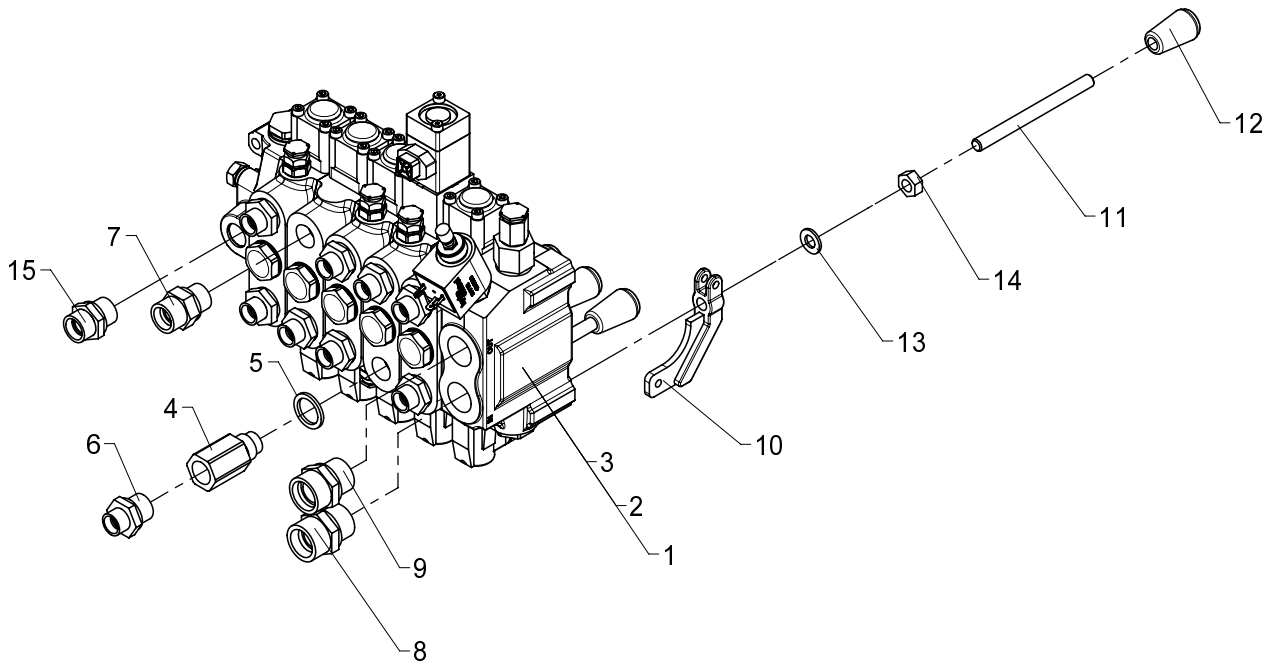

534 06 210

From loader 1060001
To loader

Created 19-11-2008
Modified 12-03-2009

Valve block, 5 sects. HC-D4

Pos	Qty.	Part no.	Description	Remarks
		6651340	Valve block, 5 sect./HCD4-CE	
		6651370	Valve block, 5 sect./HCD4	
		6651400	Valve block,5 sect./HCD4-CE2.1	
1	1	55257	Valve block, complete	6651340
2	1	55260	Valve block, complete	6651370
3	1	55272	Valve block, complete	6651400
4	1	60295	Flow-control valve	
5	1	21106	Seal washer	ø21,5 x 28,7 x 2,5
6	9	25108	Connection	GES 12 LR 1/2-WD
7	1	26334	Connection	P-GEV 16 SR-WD
8	1	26197	Connection	P-GEV 20 SR-WD
9	1	25169	Connection	P-GEV 22 LR-WD
10	5	63499	Adapter	
11	5	6340245	Control valve lever	
12	5	64411	Knob for lever	
13	5	31565	Washer, stainless	10 mm
14	5	30858	Nut	M10
15	1	25143	Connection	P-GEV 15 LR-WD

15/105 - 17/117 SL & DL Parts

66 51 380
66 51 350
Internal ref. 66 51 320

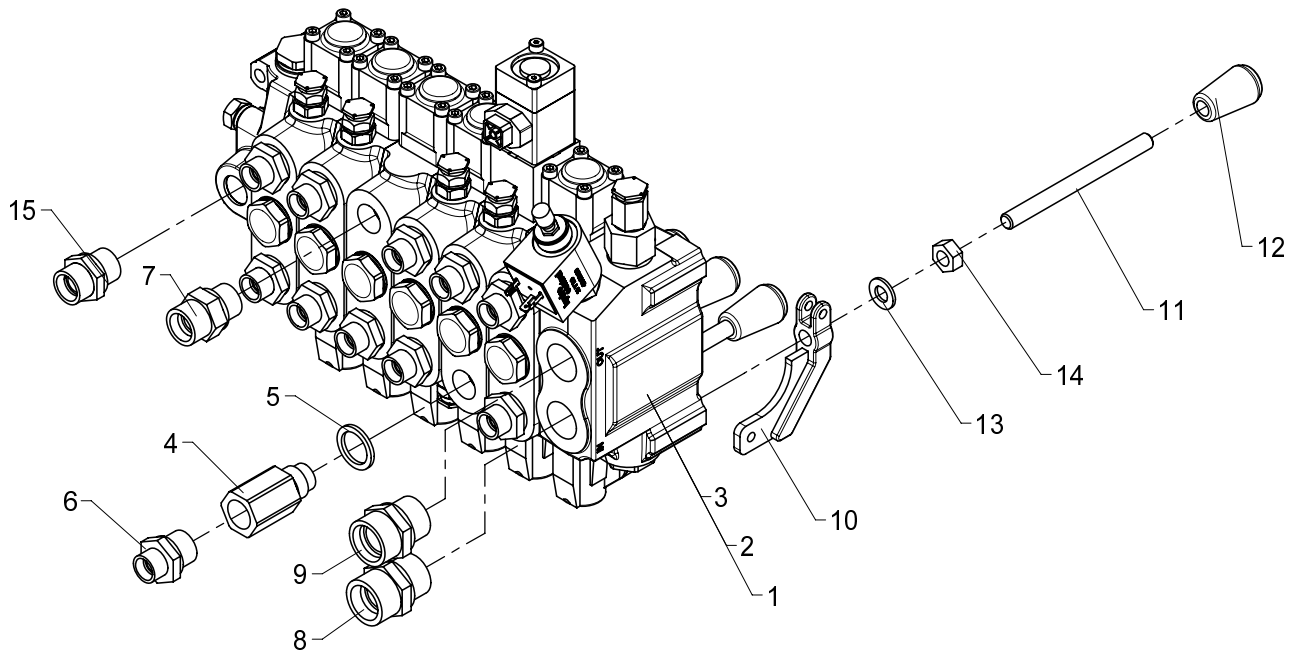

Valve block, 6 sects. HC-D4

534 06 220

From loader 1060001
To loader

Created 19-11-2008
Modified 12-03-2009

Pos	Qty.	Part no.	Description	Remarks
		6651320	Valve block, 6 sect./HCD4-CE	
		6651350	Valve block, 6 sect./HCD4	
		6651380	Valve block,6 sect./HCD4-CE2.1	
1	1	55255	Valve block, complete	6651320
2	1	55258	Valve block, complete	6651350
3	1	55273	Valve block, complete	6651380
4	1	60295	Flow-control valve	
5	1	21106	Seal washer	ø21,5 x 28,7 x 2,5
6	11	25108	Connection	GES 12 LR 1/2-WD
7	1	26334	Connection	P-GEV 16 SR-WD
8	1	26197	Connection	P-GEV 20 SR-WD
9	1	25169	Connection	P-GEV 22 LR-WD
10	6	63499	Adapter	
11	6	6340245	Control valve lever	
12	6	64411	Knob for lever	
13	6	31565	Washer, stainless	10 mm
14	6	30858	Nut	M10
15	1	25143	Connection	P-GEV 15 LR-WD

15/105 - 17/117 SL & DL Parts

Internal ref. 66 51 420

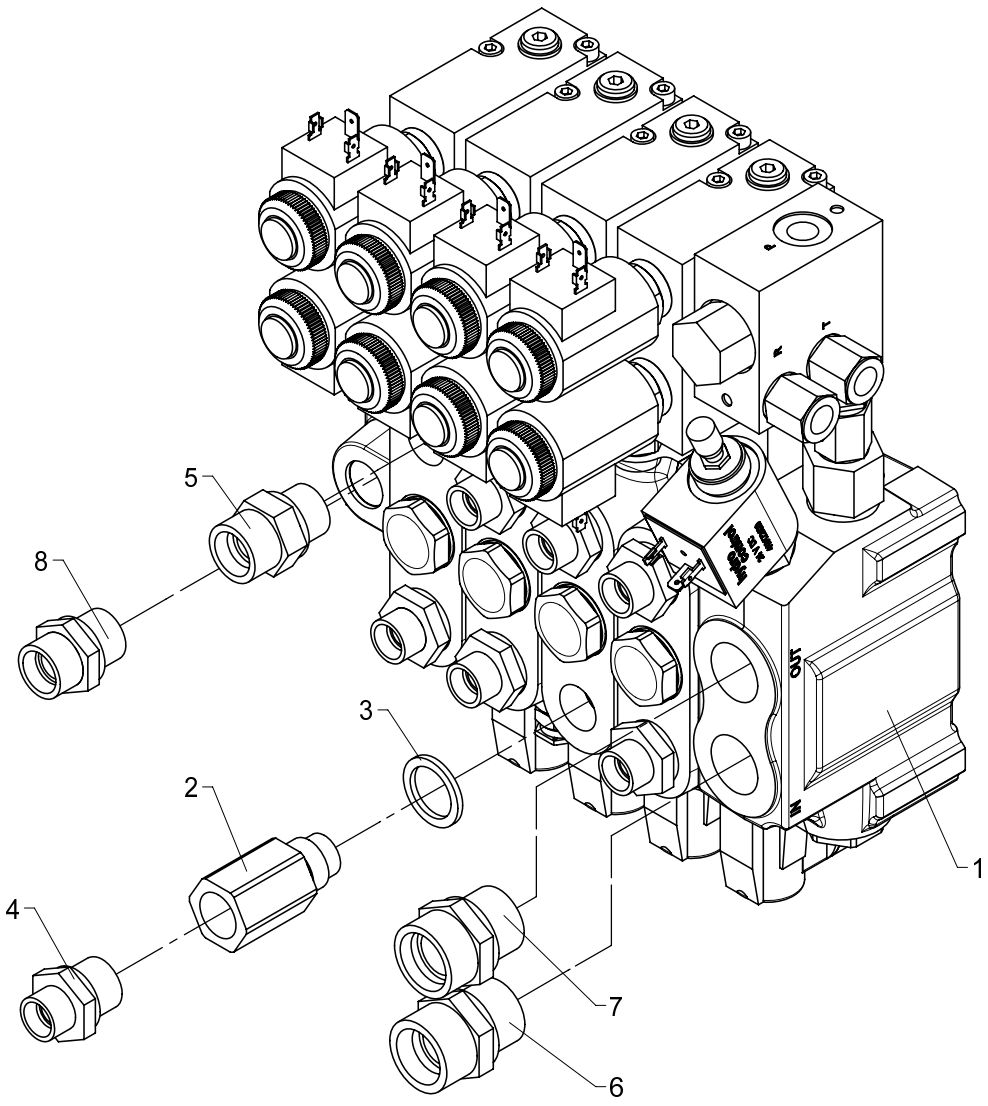

534 06 230

From loader 1060001
To loader

Created 20-11-2008
Modified 12-03-2009

Valve block, 4 sects. HC-D4 NEM

Pos	Qty.	Part no.	Description	Remarks
1	1	55266	Valve block, cpl. with NEM	
2	1	60295	Flow-control valve	
3	1	21106	Seal washer	ø21,5 x 28,7 x 2,5
4	7	25108	Connection	GES 12 LR 1/2-WD
5	1	26334	Connection	P-GEV 16 SR-WD
6	1	26197	Connection	P-GEV 20 SR-WD
7	1	25169	Connection	P-GEV 22 LR-WD
8	1	25143	Connection	P-GEV 15 LR-WD

15/105 - 17/117 SL & DL Parts

Internal ref. 66 51 430

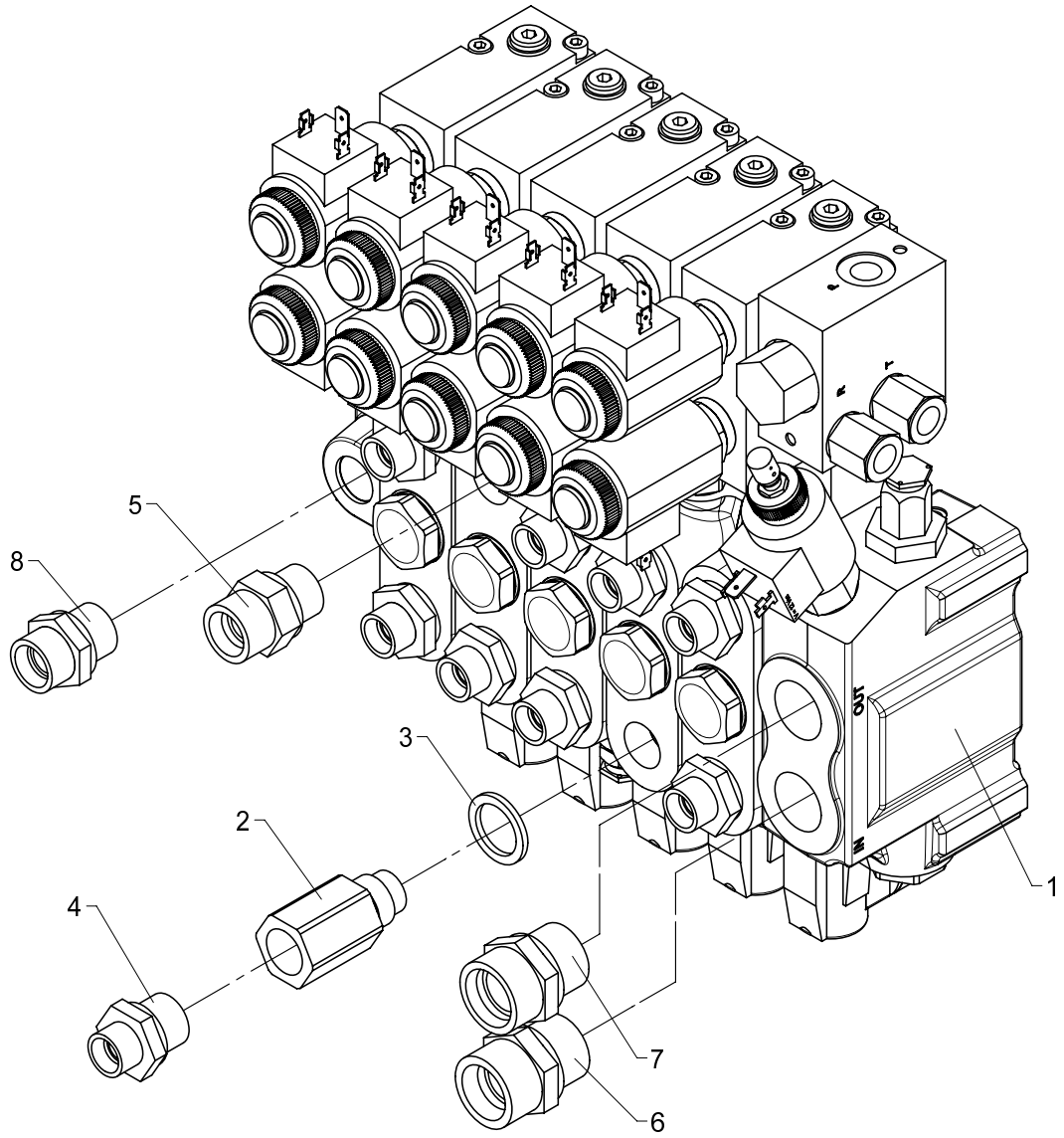

534 06 240

From loader 1060001
To loader

Created 20-11-2008
Modified 12-03-2009

Valve block, 5 sects. HC-D4 NEM

Pos	Qty.	Part no.	Description	Remarks
1	1	55267	Valve block, cpl. with NEM	
2	1	60295	Flow-control valve	
3	1	21106	Seal washer	ø21,5 x 28,7 x 2,5
4	9	25108	Connection	GES 12 LR 1/2-WD
5	1	26334	Connection	P-GEV 16 SR-WD
6	1	26197	Connection	P-GEV 20 SR-WD
7	1	25169	Connection	P-GEV 22 LR-WD
8	1	25143	Connection	P-GEV 15 LR-WD

15/105 - 17/117 SL & DL Parts

Internal ref. 66 51 410

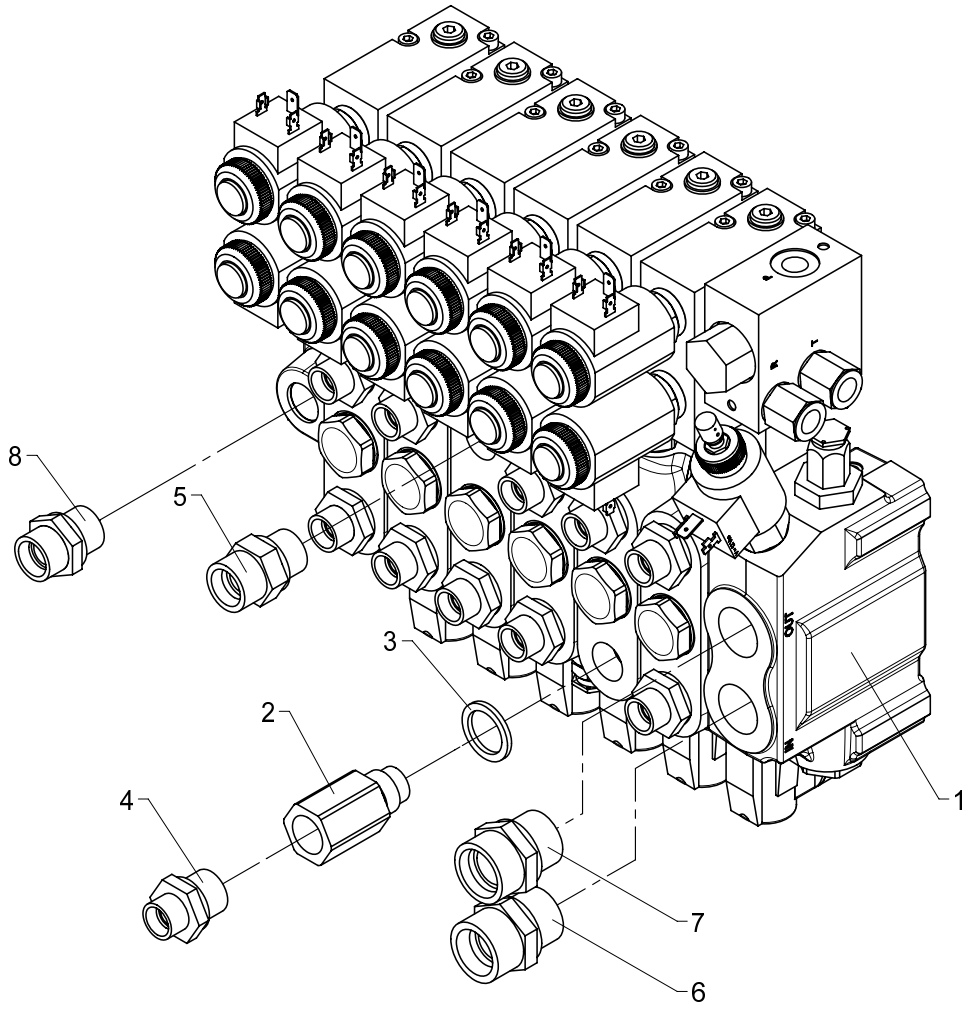

534 06 250

From loader 1060001
To loader

Created 20-11-2008
Modified 13-03-2009

Valve block, 6 sects. HC-D4 NEM

Pos	Qty.	Part no.	Description	Remarks
1	1	55265	Valve block, cpl. with NEM	
2	1	60295	Flow-control valve	
3	1	21106	Seal washer	ø21,5 x 28,7 x 2,5
4	11	25108	Connection	GES 12 LR 1/2-WD
5	1	26334	Connection	P-GEV 16 SR-WD
6	1	26197	Connection	P-GEV 20 SR-WD
7	1	25169	Connection	P-GEV 22 LR-WD
8	1	25143	Connection	P-GEV 15 LR-WD

15/105 - 17/117 SL & DL Parts

Internal ref. 66 51 440

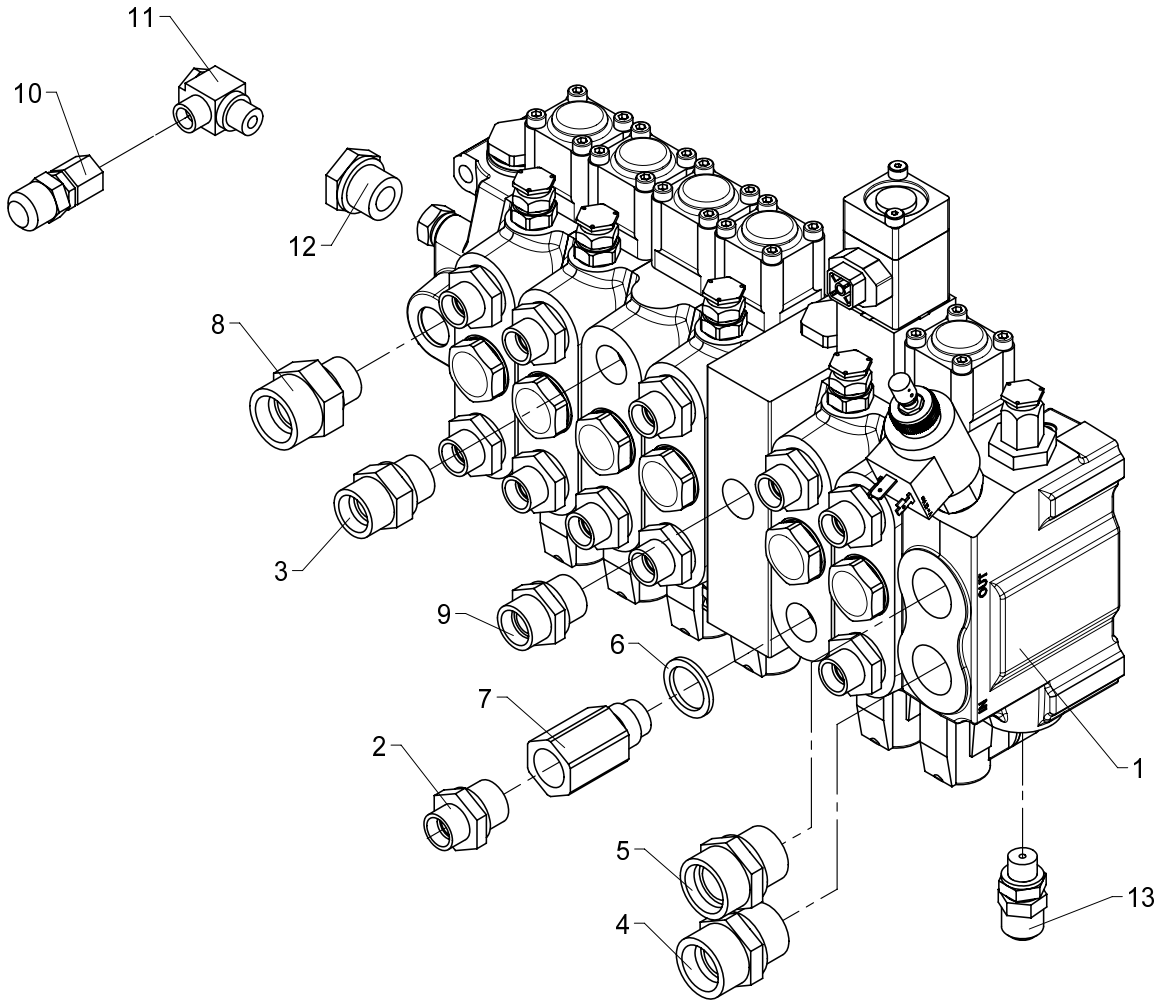

Valve block, 6 sect./HCD4/2+4 CE

534 06 260

From loader 1060001
To loader

Created
Modified

Pos	Qty.	Part no.	Description	Remarks
1	1	55290	Valve black, dual circuit	
2	11	25108	Connection	GES 12 LR 1/2-WD
3	1	26334	Connection	P-GEV 16 SR-WD
4	1	26197	Connection	P-GEV 20 SR-WD
5	1	25169	Connection	P-GEV 22 LR-WD
6	1	21106	Seal washer	ø21,5 x 28,7 x 2,5
7	1	60295	Flow-control valve	
8	1	26221	Connection	P-GEV 20 SR 1/2-WD
9	1	25143	Connection	P-GEV 15 LR-WD
10	1	26148	Connection	
11	1	25113	Banjo connection	RSWV 8 LR
12	1	25180	Reducing connection	RED-R 1/2-WD/R 1/4
13	1	26103	Pressure-gauge connect.	

15/105 - 17/117 SL & DL Parts

Internal ref. 66 51 450

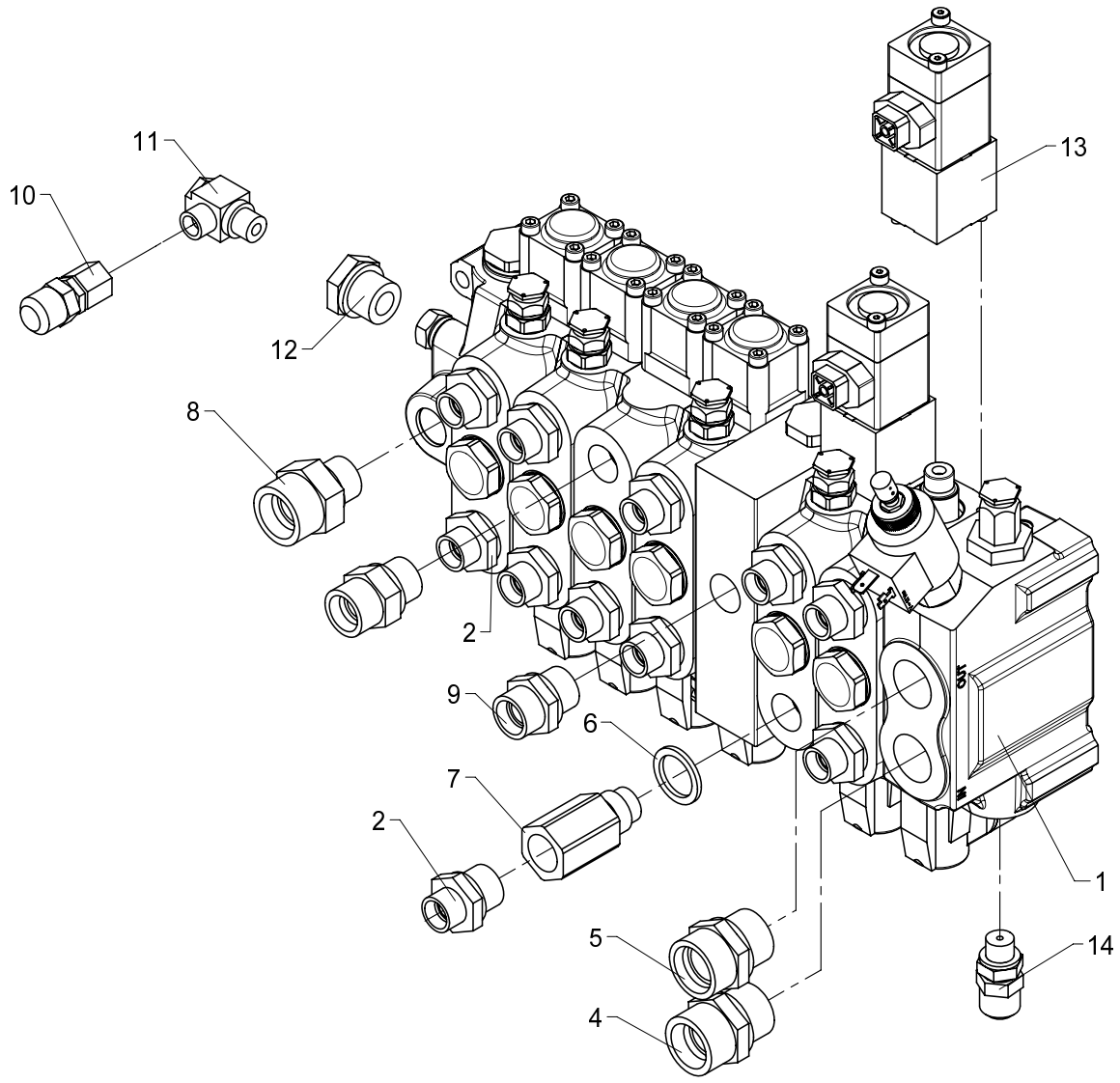

534 06 270

From loader 1060001
To loader
Created
Modified

Valve block, 6 sect./HCD4/2+4 CE2.1

Pos	Qty.	Part no.	Description	Remarks
1	1	55290	Valve black, dual circuit	
2	11	25108	Connection	GES 12 LR 1/2-WD
3	1	26334	Connection	P-GEV 16 SR-WD
4	1	26197	Connection	P-GEV 20 SR-WD
5	1	25169	Connection	P-GEV 22 LR-WD
6	1	21106	Seal washer	ø21,5 x 28,7 x 2,5
7	1	60295	Flow-control valve	
8	1	26221	Connection	P-GEV 20 SR 1/2-WD
9	1	25143	Connection	P-GEV 15 LR-WD
10	1	26148	Connection	
11	1	25113	Banjo connection	RSWV 8 LR
12	1	25180	Reducing connection	RED-R 1/2-WD/R 1/4
13	1	55371	Spool sensor	
14	1	26103	Pressure-gauge connect.	

534 06 280

15/105 - 17/117 SL & DL Parts

66 51 560
66 51 550
Internal ref. 66 51 540

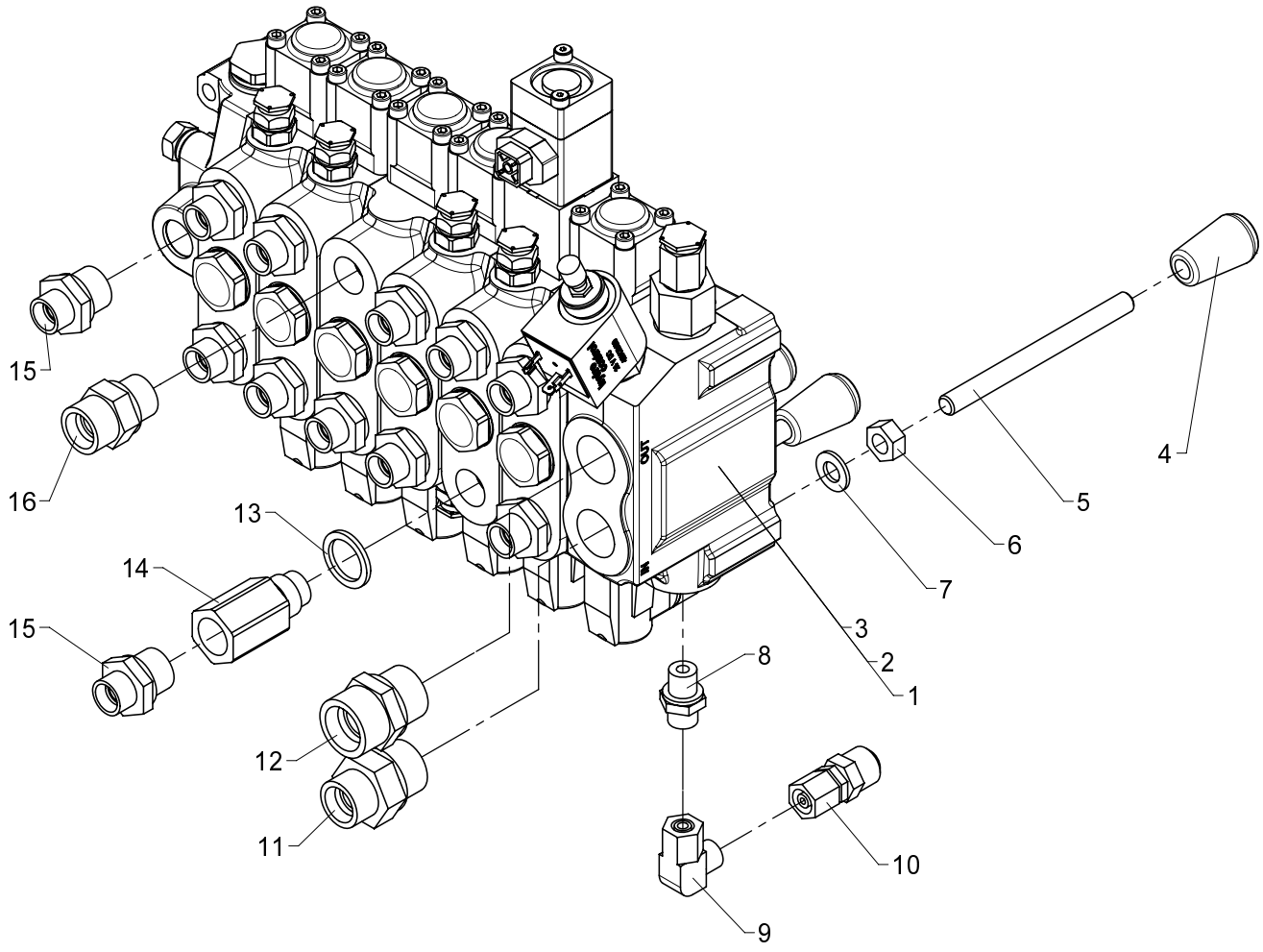

Valve block, 6 sect. HC-D4

534 06 280

From loader 1060001
To loader

Created 20-11-2008
Modified

Pos	Qty.	Part no.	Description	Remarks
		6651540	Valve block, 6 sect./HCD4-CE	
		6651550	Valve block, 6 sect./HCD4	
		6651560	Valve bl., 6 sec./HCD4-CE2.1	
1	1	55255	Valve block, complete	
2	1	55258	Valve block, complete	
3	1	55273	Valve block, complete	
4	6	64411	Knob for lever	
5	6	6340245	Control valve lever	
6	6	30858	Nut	M10
7	6	31565	Washer, stainless	10 mm
8	1	25109	Connection	GES 8 LR-WD
9	1	26170	Elbow connection	EWSD 8 L
10	1	26148	Connection	
11	1	26390	Connection	P-GEV 16 SR 3/4-WD
12	1	26197	Connection	P-GEV 20 SR-WD
13	1	21106	Seal washer	ø21,5 x 28,7 x 2,5
14	1	60295	Flow-control valve	
15	12	25108	Connection	GES 12 LR 1/2-WD
16	1	26334	Connection	P-GEV 16 SR-WD

15/105 - 17/117 SL & DL Parts

Internal ref. 66 51 570

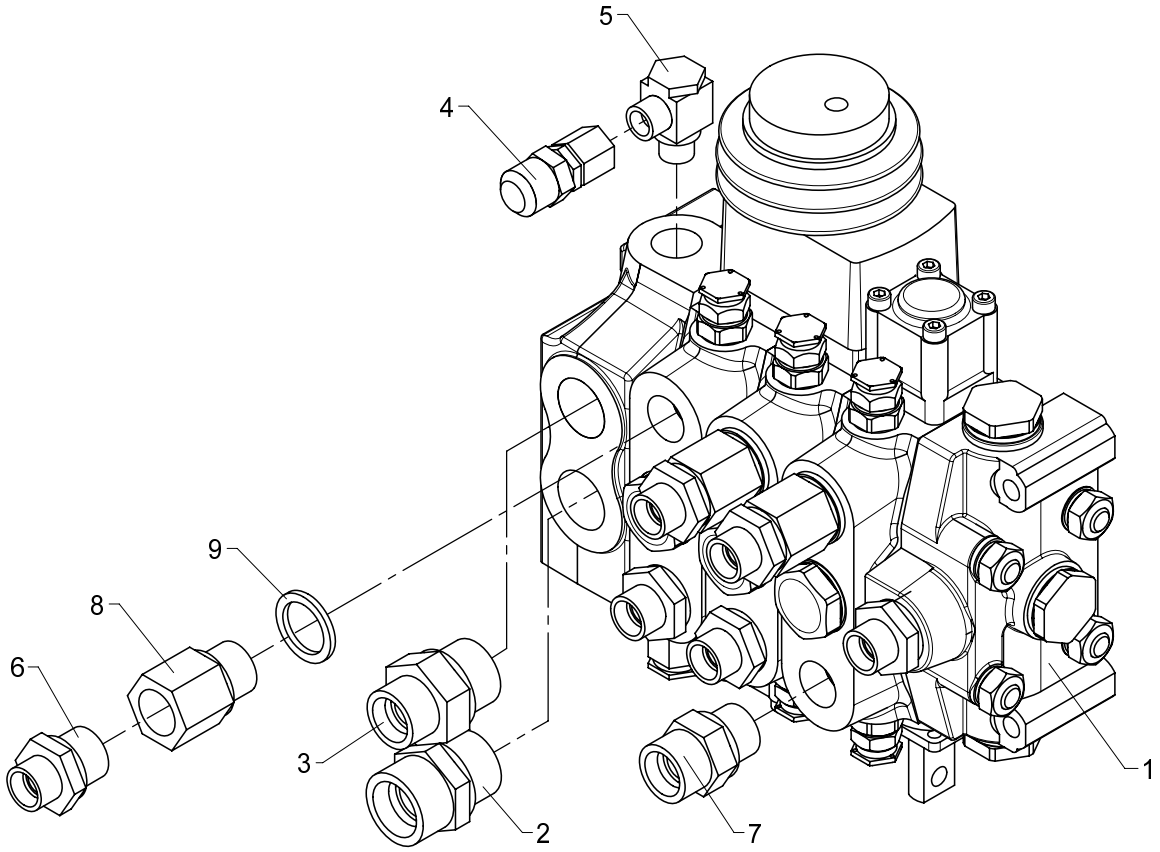

534 06 290

From loader 1060001
To loader
Created
Modified

Valve block left, 3 sects. HC-D4 TS

Pos	Qty.	Part no.	Description	Remarks
1	1	55280	Valve	
2	1	26197	Connection	P-GEV 20 SR-WD
3	1	26390	Connection	P-GEV 16 SR 3/4-WD
4	1	26148	Connection	
5	1	25113	Banjo connection	RSWV 8 LR
6	6	25108	Connection	GES 12 LR 1/2-WD
7	1	26334	Connection	P-GEV 16 SR-WD
8	3	26922	Reducing nipple	1/2 BSP x 1/" BSP
9	3	21106	Seal washer	ø21,5 x 28,7 x 2,5

15/105 - 17/117 SL & DL Parts

Internal ref. 66 51 580

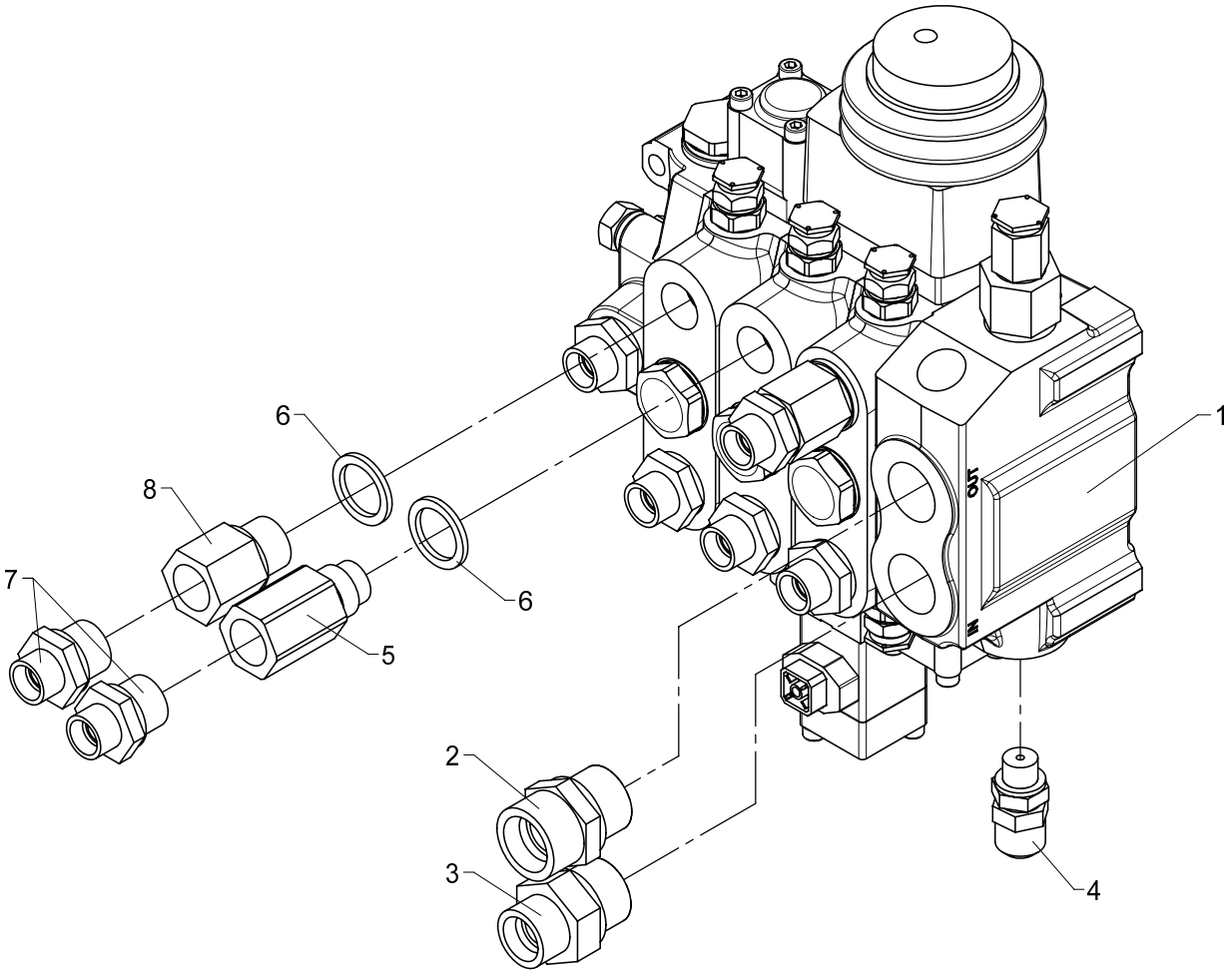

534 06 300

From loader 1060001
To loader
Created
Modified

Valve block right, 3 sects. HC-D4 TS

Pos	Qty.	Part no.	Description	Remarks
1	1	55279	Valve	
2	1	26197	Connection	P-GEV 20 SR-WD
3	1	26390	Connection	P-GEV 16 SR 3/4-WD
4	1	26103	Pressure-gauge connect.	
5	1	60295	Flow-control valve	
6	3	21106	Seal washer	ø21,5 x 28,7 x 2,5
7	7	25108	Connection	GES 12 LR 1/2-WD
8	2	26922	Reducing nipple	1/2 BSP x 1/" BSP

15/105 - 17/117 SL & DL Parts

66 50 570
66 50 560
66 50 430
Internal ref. 66 50 420

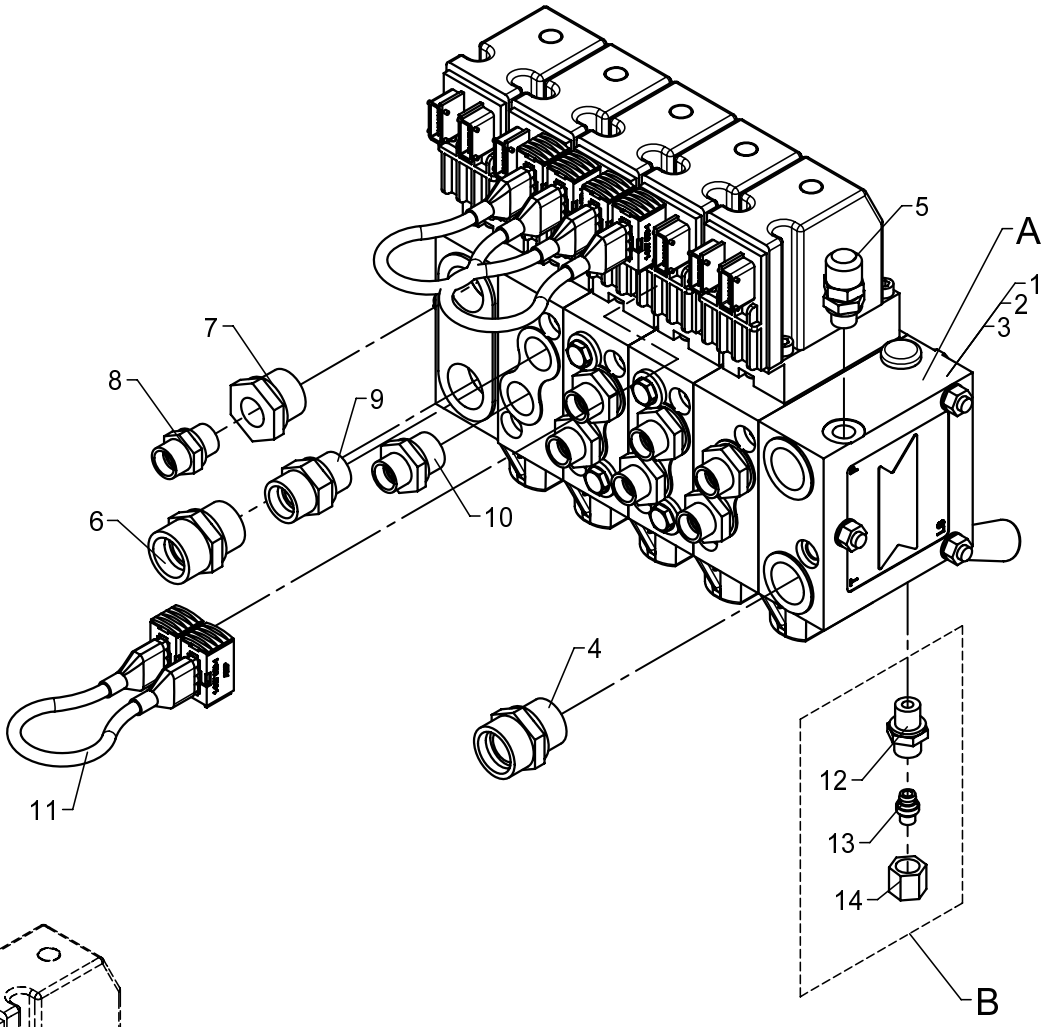

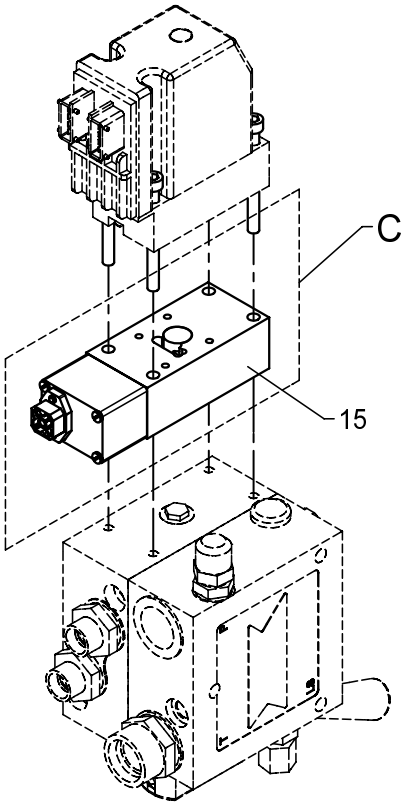

	A	B	C
66 50 420	63 301	X	
66 50 430	63 302		
66 50 560	63 301	X	X
66 50 570	63 319		

534 06 310

From loader 1060001
To loader

Control valves, Danfoss, 4 sections, fixed/variable flow (std./QOPS)

Created 08-01-2010
Modified

Pos	Qty.	Part no.	Description	Remarks
		6650420	Valve block, 4 sect. variable	
		6650430	Valve block, 4 sect., fixed	
		6650560	Valve block, 4 sect.,var. QOPS	
		6650570	Valve block, 4 sect. fixedQOPS	
1	1	63301	Valve block	
2	1	63302	Valve block	
3	1	63319	Valve block	
4	1	25169	Connection	P-GEV 22 LR-WD
5	1	26103	Pressure-gauge connect.	
6	1	26197	Connection	P-GEV 20 SR-WD
7	1	26319	Reducing connection	RED-R 3/4-WD/R 3/8
8	1	25127	Connection	P-GEV 12 LR-WD
9	1	26334	Connection	P-GEV 16 SR-WD
10	7	25108	Connection	GES 12 LR 1/2-WD
11	3	62296	Cable	
12	1	25109	Connection	GES 8 LR-WD
13	1	26166	Blanking plug	VSD 8 L
14	1	25181	Coupling nut	M 8 L
15	1	59676	Sensor	

15/105 - 17/117 SL & DL Parts

66 50 590
66 50 580
66 50 450
Internal ref. 66 50 440

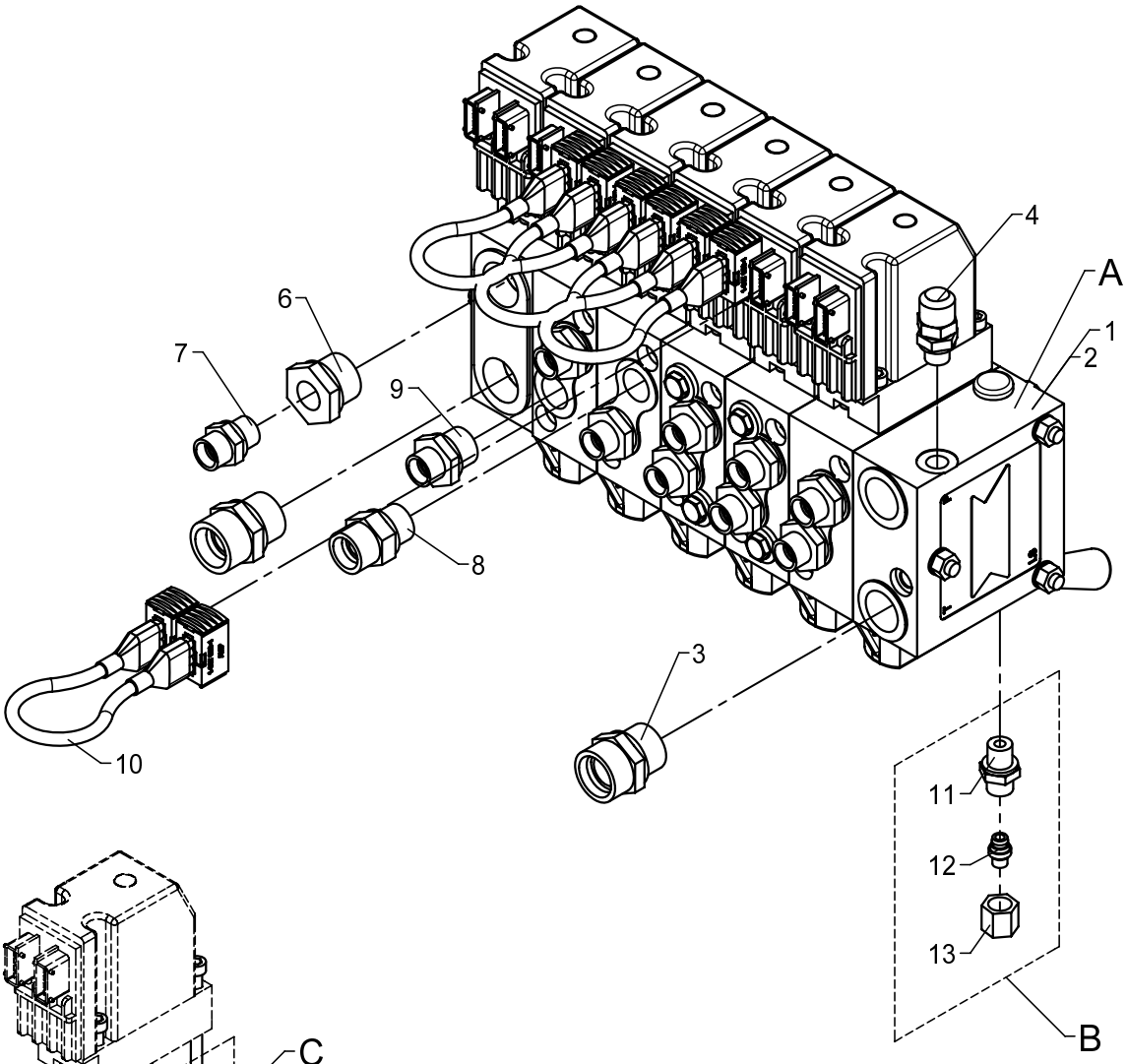

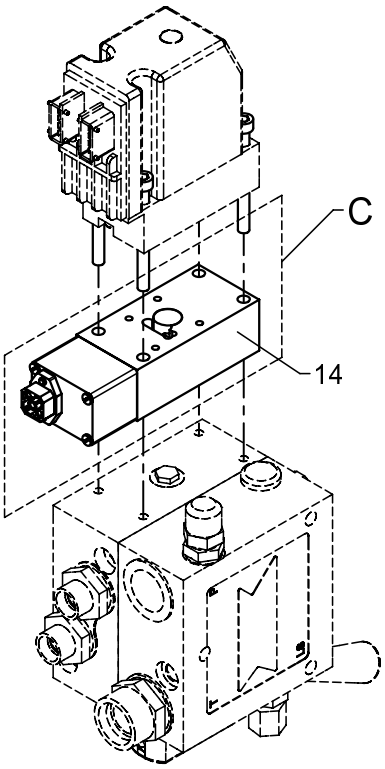

	A	B	C
66 50 440	63 303	X	
66 50 450	63 304		
66 50 580	63 303	X	X
66 50 590	63 304		X

Control valves, Danfoss, 5 sections, fixed/variable flow with rotator (std./QOPS)

Pos	Qty.	Part no.	Description	Remarks
		6650440	Valve block, 5 sect., variable	
		6650450	Valve block, 5 sect., fixed	
		6650580	Valve block, 5 sect.,var. QOPS	
		6650590	Valve block, 5 sect.,fix. QOPS	
1	1	63303	Valve block	
2	1	63304	Valve block	
3	1	25169	Connection	P-GEV 22 LR-WD
4	1	26103	Pressure-gauge connect.	
5	1	26197	Connection	P-GEV 20 SR-WD
6	1	26319	Reducing connection	RED-R 3/4-WD/R 3/8
7	1	25127	Connection	P-GEV 12 LR-WD
8	1	26334	Connection	P-GEV 16 SR-WD
9	9	25108	Connection	GES 12 LR 1/2-WD
10	4	62296	Cable	
11	1	25109	Connection	GES 8 LR-WD
12	1	26166	Blanking plug	VSD 8 L
13	1	25181	Coupling nut	M 8 L
14	1	59676	Sensor	

15/105 - 17/117 SL & DL Parts

66 50 610
66 50 600
66 50 470
Internal ref. 66 50 460

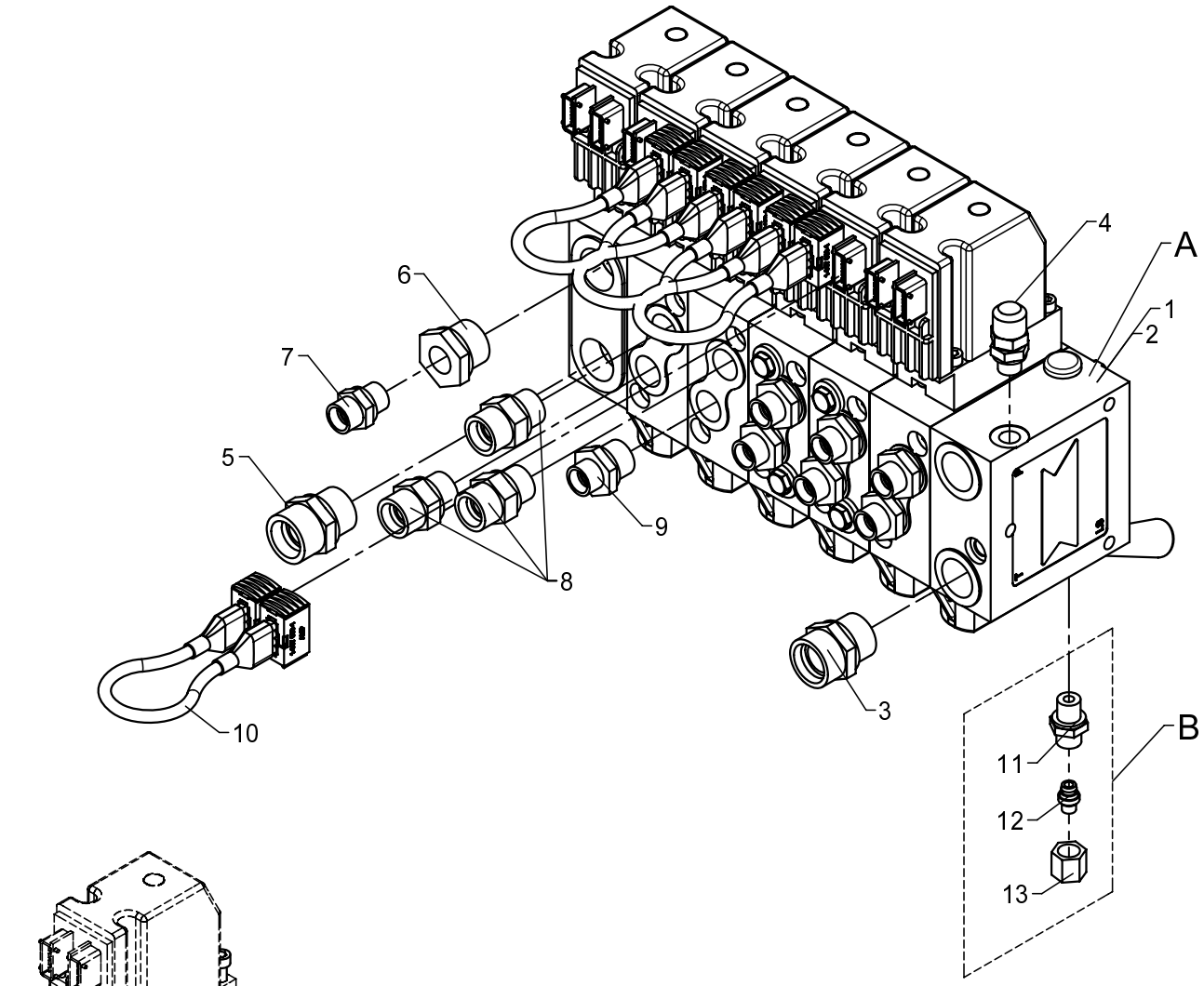

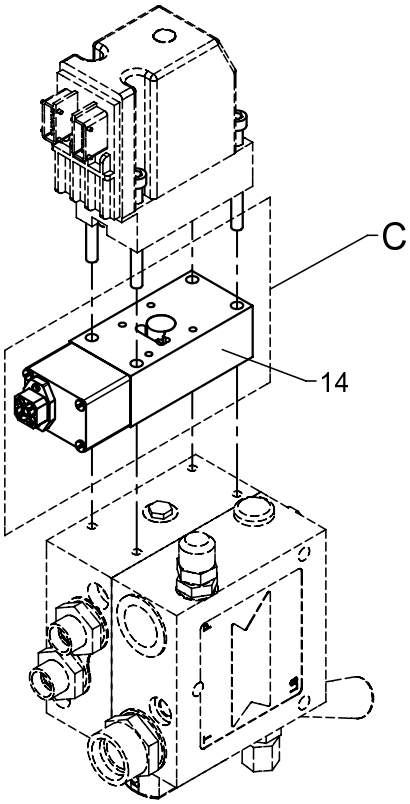

	A	B	C
66 50 460	63 305	X	
66 50 470	63 306		
66 50 600	63 305	X	X
66 50 610	63 306		X

Control valves, Danfoss, 5 sections, fixed/variable flow with winch (std./QOPS)

Pos	Qty.	Part no.	Description	Remarks
		6650460	Valve block, 5 sect., variable	
		6650470	Valve block, 5 sect., fixed	
		6650600	Valve block, 5 sect.,var.QOPS	
		6650610	Valve block, 5 sect.,fixedQOPS	
1	1	63305	Valve block	
2	1	63306	Valve block	
3	1	25169	Connection	P-GEV 22 LR-WD
4	1	26103	Pressure-gauge connect.	
5	1	26197	Connection	P-GEV 20 SR-WD
6	1	26319	Reducing connection	RED-R 3/4-WD/R 3/8
7	1	25127	Connection	P-GEV 12 LR-WD
8	3	26334	Connection	P-GEV 16 SR-WD
9	7	25108	Connection	GES 12 LR 1/2-WD
10	4	62296	Cable	
11	1	25109	Connection	GES 8 LR-WD
12	1	26166	Blanking plug	VSD 8 L
13	1	25181	Coupling nut	M 8 L
14	1	59676	Sensor	

15/105 - 17/117 SL & DL Parts

66 50 550
66 50 540
66 50 410
Internal ref. 66 50 400

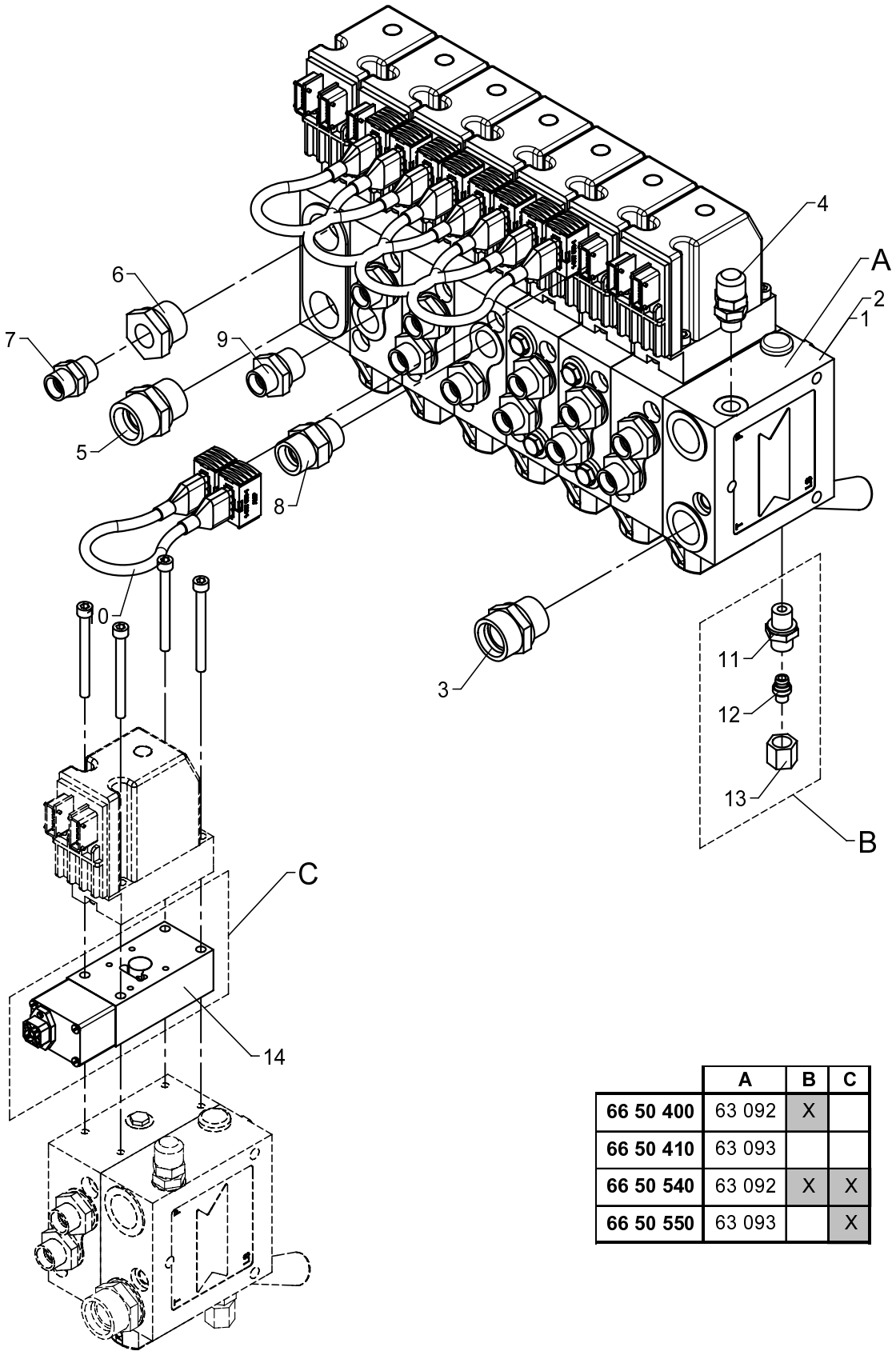

	A	B	C
66 50 400	63 092	X	
66 50 410	63 093		
66 50 540	63 092	X	X
66 50 550	63 093		X

From loader 1060001
To loader
Created
Modified

Control valves, Danfoss, 6 sections, fixed/variable flow with rotator and grab

Pos	Qty.	Part no.	Description	Remarks
		6650400	Valve block, 6 sect., variable	
		6650410	Valve block, 6 sect., fixed	
		6650540	Valve block, 6 sect.,var.QOPS	
		6650550	Valve block, 6 sect.,fix.QOPS	
1	1	63092	Valve block	
2	1	63093	Valve block	
3	1	25169	Connection	P-GEV 22 LR-WD
4	1	26103	Pressure-gauge connect.	
5	1	26197	Connection	P-GEV 20 SR-WD
6	1	26319	Reducing connection	RED-R 3/4-WD/R 3/8
7	1	25127	Connection	P-GEV 12 LR-WD
8	1	26334	Connection	P-GEV 16 SR-WD
9	11	25108	Connection	GES 12 LR 1/2-WD
10	5	62296	Cable	
11	1	25109	Connection	GES 8 LR-WD
12	1	26166	Blanking plug	VSD 8 L
13	1	25181	Coupling nut	M 8 L
14	1	59676	Sensor	

15/105 - 17/117 SL & DL Parts

66 50 630
66 50 620
66 50 490
Internal ref. 66 50 480

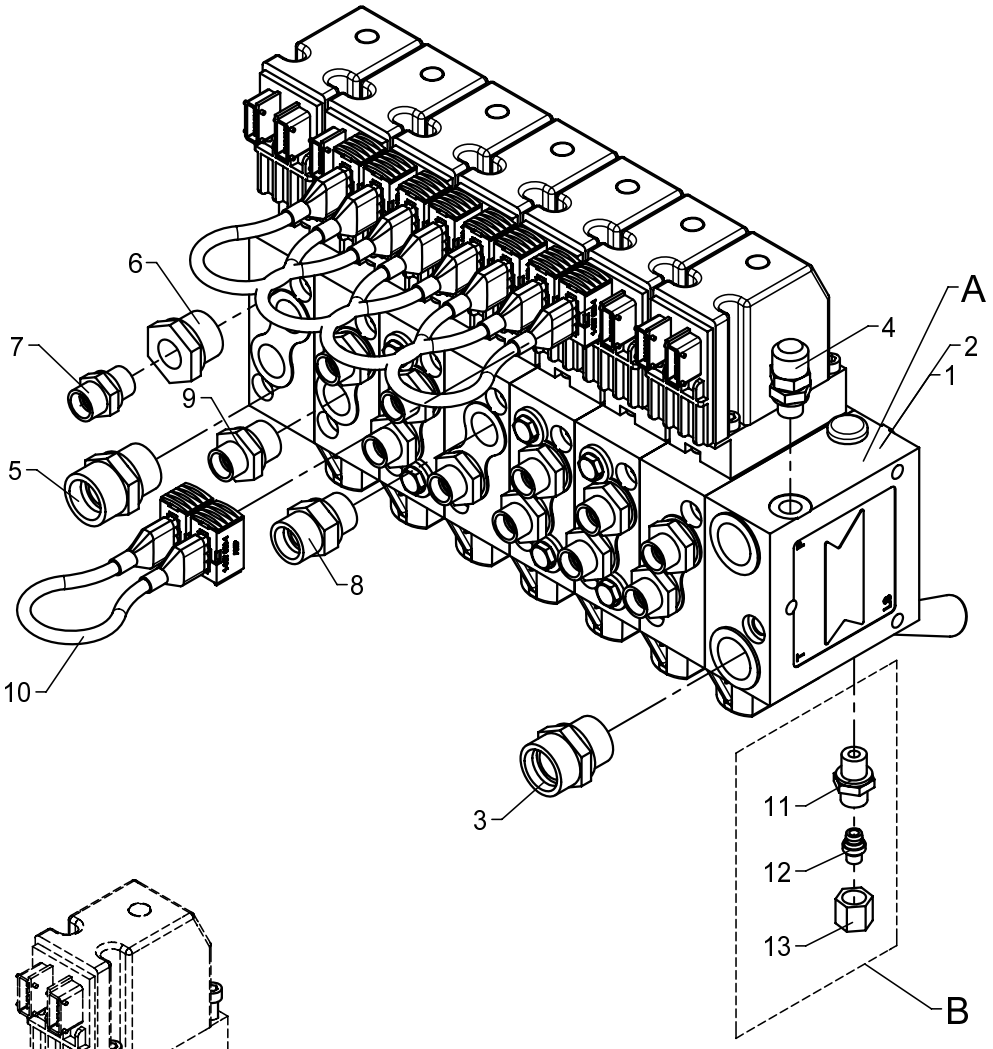

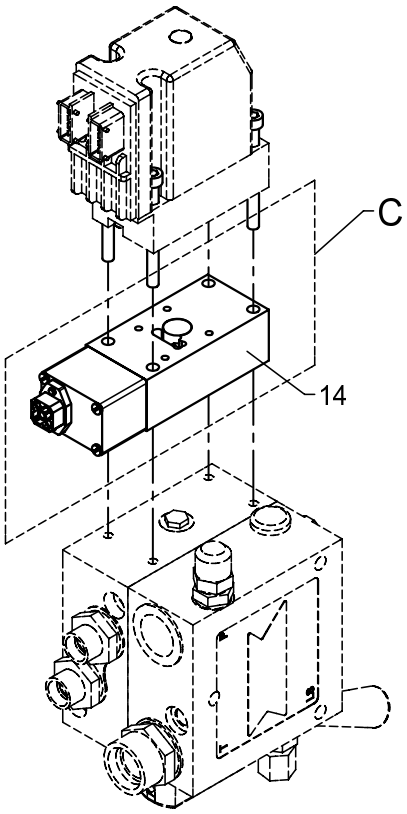

	A	B	C
66 50 480	63 307	X	
66 50 490	63 308		
66 50 620	63 307	X	X
66 50 630	63 308		X

534 06 350

From loader 1060001
To loader

Control valves, Danfoss, 6 sections, fixed/variable flow with Fly-Jib (std./QOPS)

Created 08-01-2010
Modified

Pos	Qty.	Part no.	Description	Remarks
		6650480	Valve block, 6 sect., variable	
		6650490	Valve block, 6 sect., fixed	
		6650620	Valve block, 6 sect.,var. QOPS	
		6650630	Valve block, 6 sect.,fix.QOPS	
1	1	63307	Valve block	
2	1	63308	Valve block	
3	1	25169	Connection	P-GEV 22 LR-WD
4	1	26103	Pressure-gauge connect.	
5	1	26197	Connection	P-GEV 20 SR-WD
6	1	26319	Reducing connection	RED-R 3/4-WD/R 3/8
7	1	25127	Connection	P-GEV 12 LR-WD
8	1	26334	Connection	P-GEV 16 SR-WD
9	11	25108	Connection	GES 12 LR 1/2-WD
10	5	62296	Cable	
11	1	25109	Connection	GES 8 LR-WD
12	1	26166	Blanking plug	VSD 8 L
13	1	25181	Coupling nut	M 8 L
14	1	59676	Sensor	

15/105 - 17/117 SL & DL Parts

66 50 650
66 50 640
66 50 510
Internal ref. 66 50 500

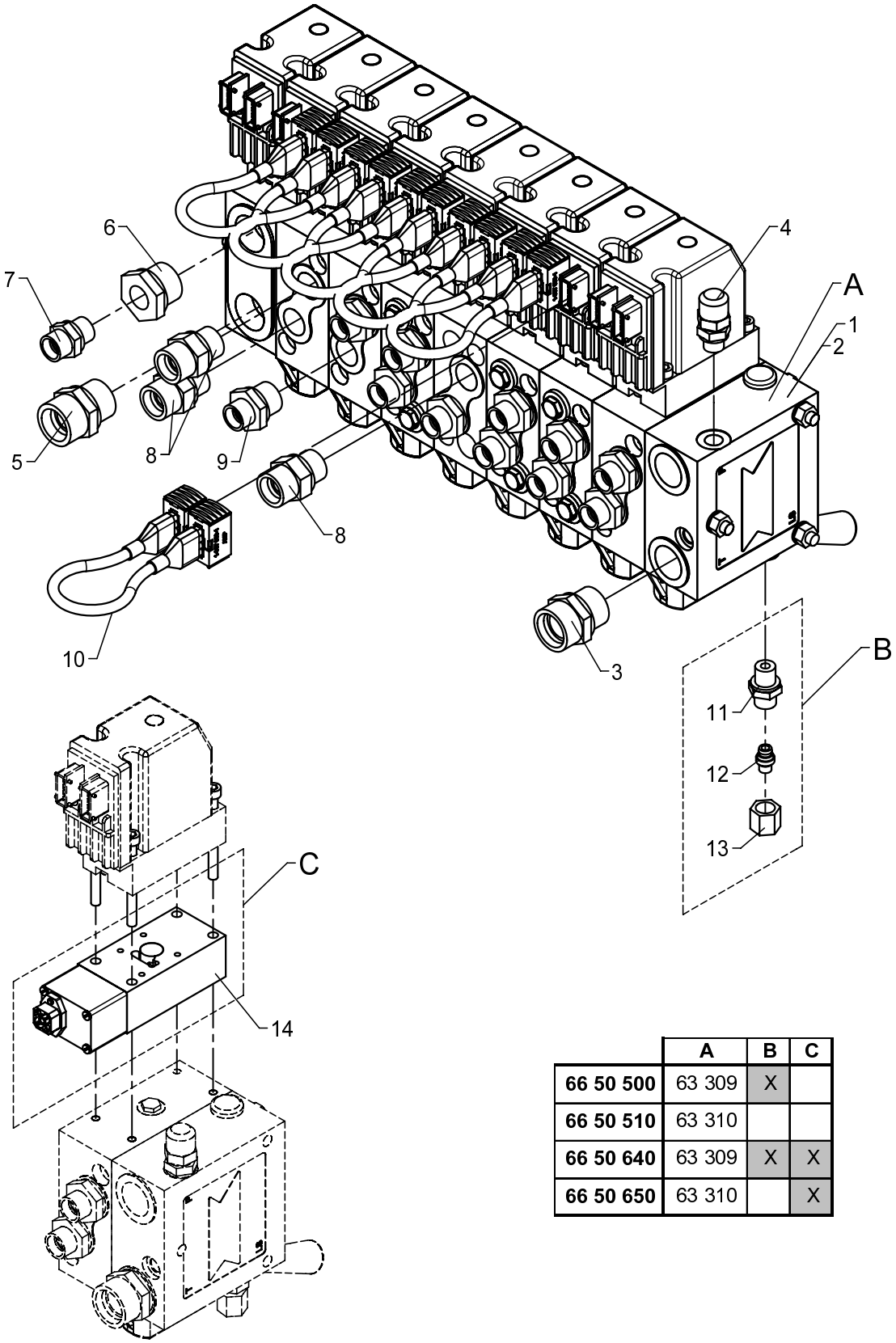

	A	B	C
66 50 500	63 309	X	
66 50 510	63 310		
66 50 640	63 309	X	X
66 50 650	63 310		X

534 06 360

From loader 1060001
To loader

Control valves, Danfoss, 7 sections, fixed/variable flow with winch and Fly-Jib

Created 08-01-2010
Modified

Pos	Qty.	Part no.	Description	Remarks
		6650500	Valve block, 7 sect., variable	
		6650510	Valve block, 7 sect., fixed	
		6650640	Valve block, 7 sect.,var.QOPS	
		6650650	Valve block, 7 sect.,fix.QOPS	
1	1	63309	Valve block	
2	1	63310	Valve block	
3	1	25169	Connection	P-GEV 22 LR-WD
4	1	26103	Pressure-gauge connect.	
5	1	26197	Connection	P-GEV 20 SR-WD
6	1	26319	Reducing connection	RED-R 3/4-WD/R 3/8
7	1	25127	Connection	P-GEV 12 LR-WD
8	3	26334	Connection	P-GEV 16 SR-WD
9	11	25108	Connection	GES 12 LR 1/2-WD
10	6	62296	Cable	
11	1	25109	Connection	GES 8 LR-WD
12	1	26166	Blanking plug	VSD 8 L
13	1	25181	Coupling nut	M 8 L
14	1	59676	Sensor	

534 06 370

15/105 - 17/117 SL & DL Parts

66 50 670
66 50 660
66 50 530
Internal ref. 66 50 520

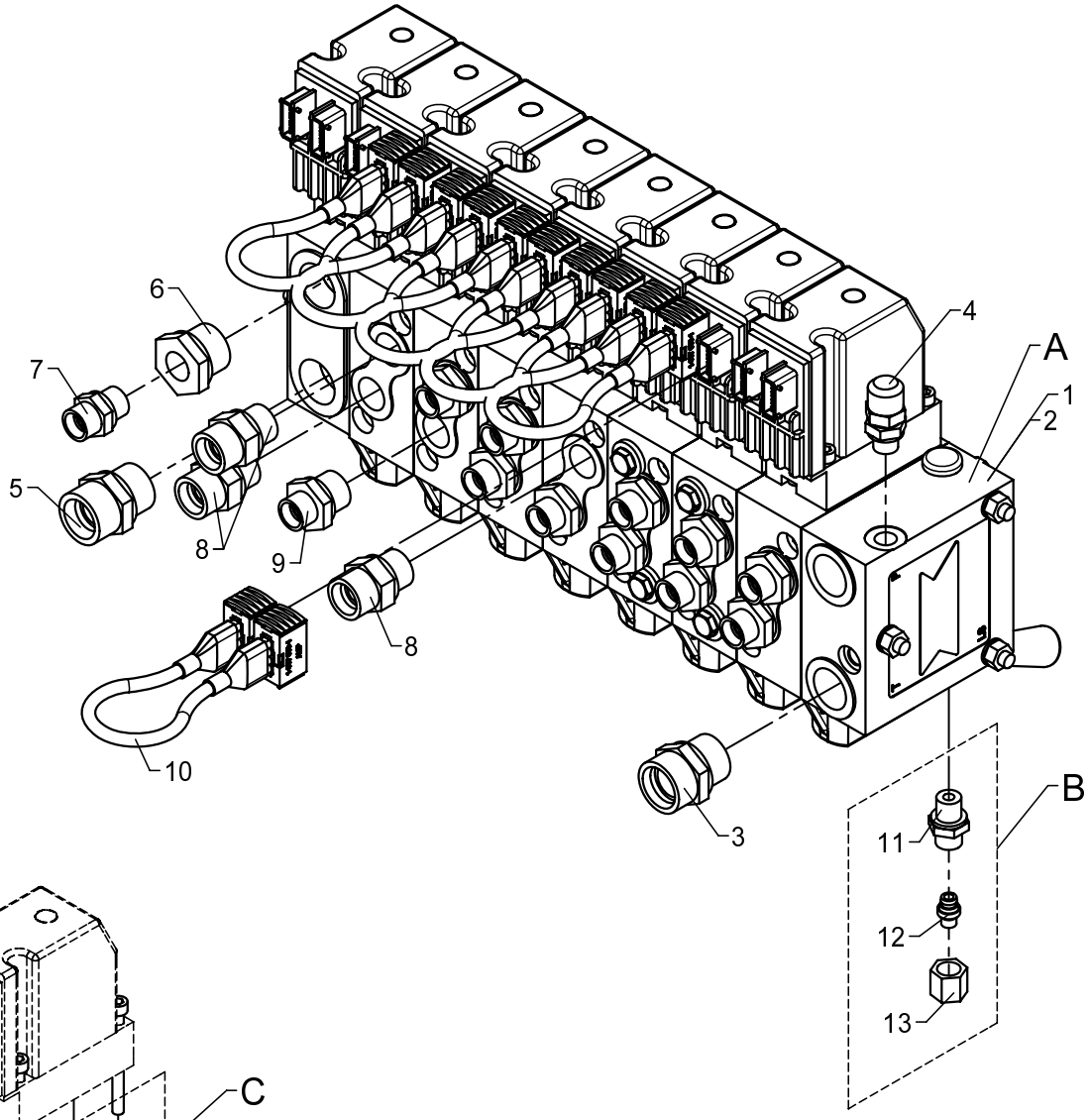

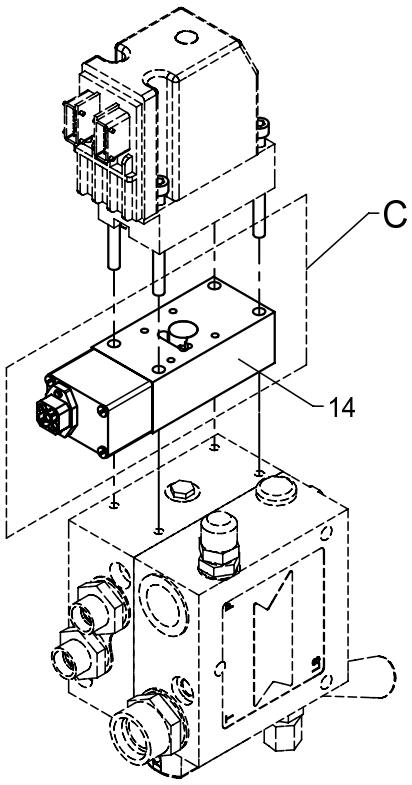

	A	B	C
66 50 520	63 311	X	
66 50 530	63 312		
66 50 660	63 311	X	X
66 50 670	63 312		X

From loader 1060001
To loader

Control valves, Danfoss, 7 sections, fixed/variable flow with rotator, grab and winch

Created 11-01-2010
Modified

Pos	Qty.	Part no.	Description	Remarks
		6650520	Valve block, 7 sect., variable	
		6650530	Valve block, 7 sect., fixed	
		6650660	Valve block, 7 sect.,var.QOPS	
		6650670	Valve block, 7 sect.,fix.QOPS	
1	1	63311	Valve block	
2	1	63312	Valve block	
3	1	25169	Connection	P-GEV 22 LR-WD
4	1	26103	Pressure-gauge connect.	
5	1	26197	Connection	P-GEV 20 SR-WD
6	1	26319	Reducing connection	RED-R 3/4-WD/R 3/8
7	1	25127	Connection	P-GEV 12 LR-WD
8	3	26334	Connection	P-GEV 16 SR-WD
9	11	25108	Connection	GES 12 LR 1/2-WD
10	6	62296	Cable	
11	1	25109	Connection	GES 8 LR-WD
12	1	26166	Blanking plug	VSD 8 L
13	1	25181	Coupling nut	M 8 L
14	1	59676	Sensor	

15/105 - 17/117 SL & DL Parts

Internal ref. 66 51 610

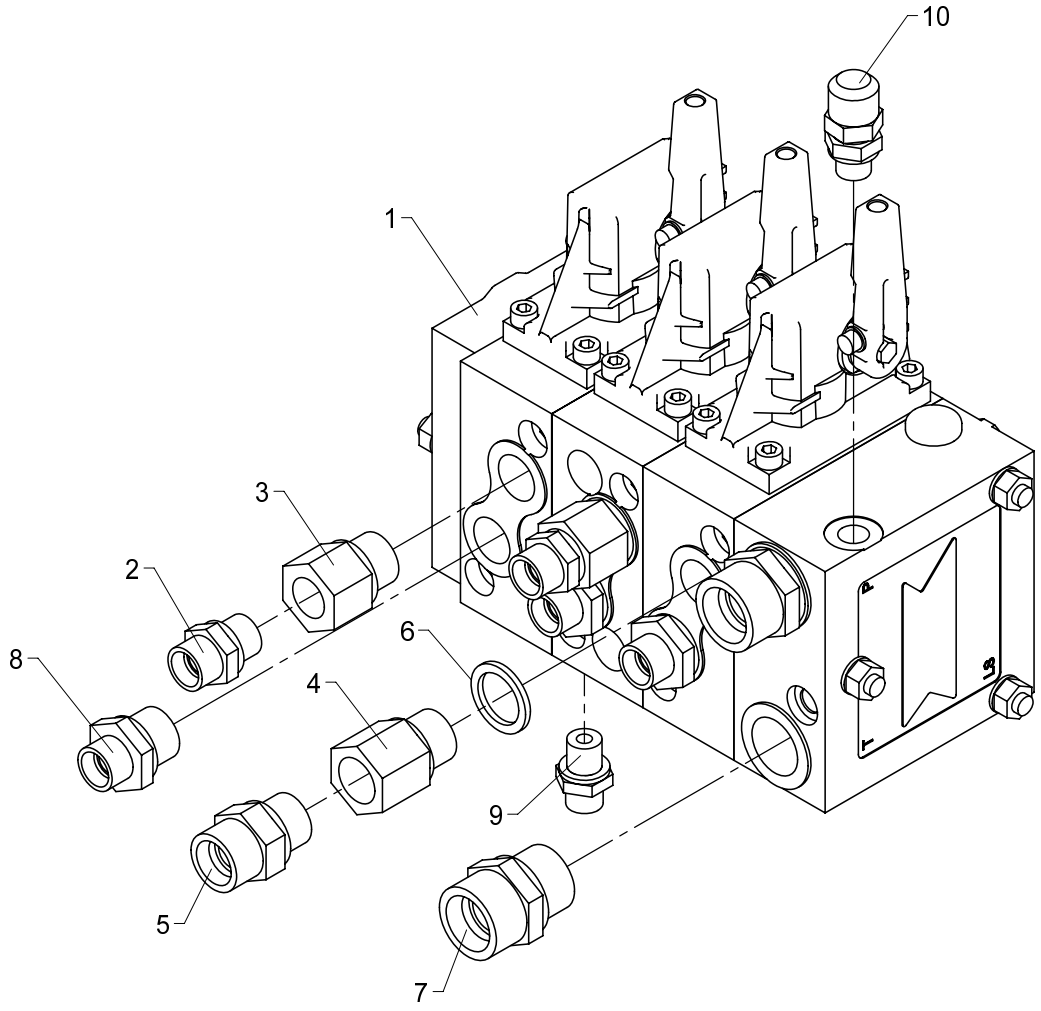

534 06 450

From loader 1060001
To loader

Created 08-01-2010
Modified

Control valve, Danfoss, 3 sections, 1 circuit, fixed flow, left

Pos	Qty.	Part no.	Description	Remarks
1	1	63391	Valve block	Manuel + V
2	2	25127	Connection	P-GEV 12 LR-WD
3	2	25243	Reducing connection	RED-R 1/2-WD/R 3/8
4	1	26922	Reducing nipple	
5	1	26334	Connection	P-GEV 16 SR-WD
6	1	21106	Seal washer	ø21,5 x 28,7 x 2,5
7	2	26197	Connection	P-GEV 20 SR-WD
8	3	25108	Connection	GES 12 LR 1/2-WD
9	1	25109	Connection	GES 8 LR-WD
10	1	26103	Pressure-gauge connect.	

15/105 - 17/117 SL & DL Parts

Internal ref. 66 51 620

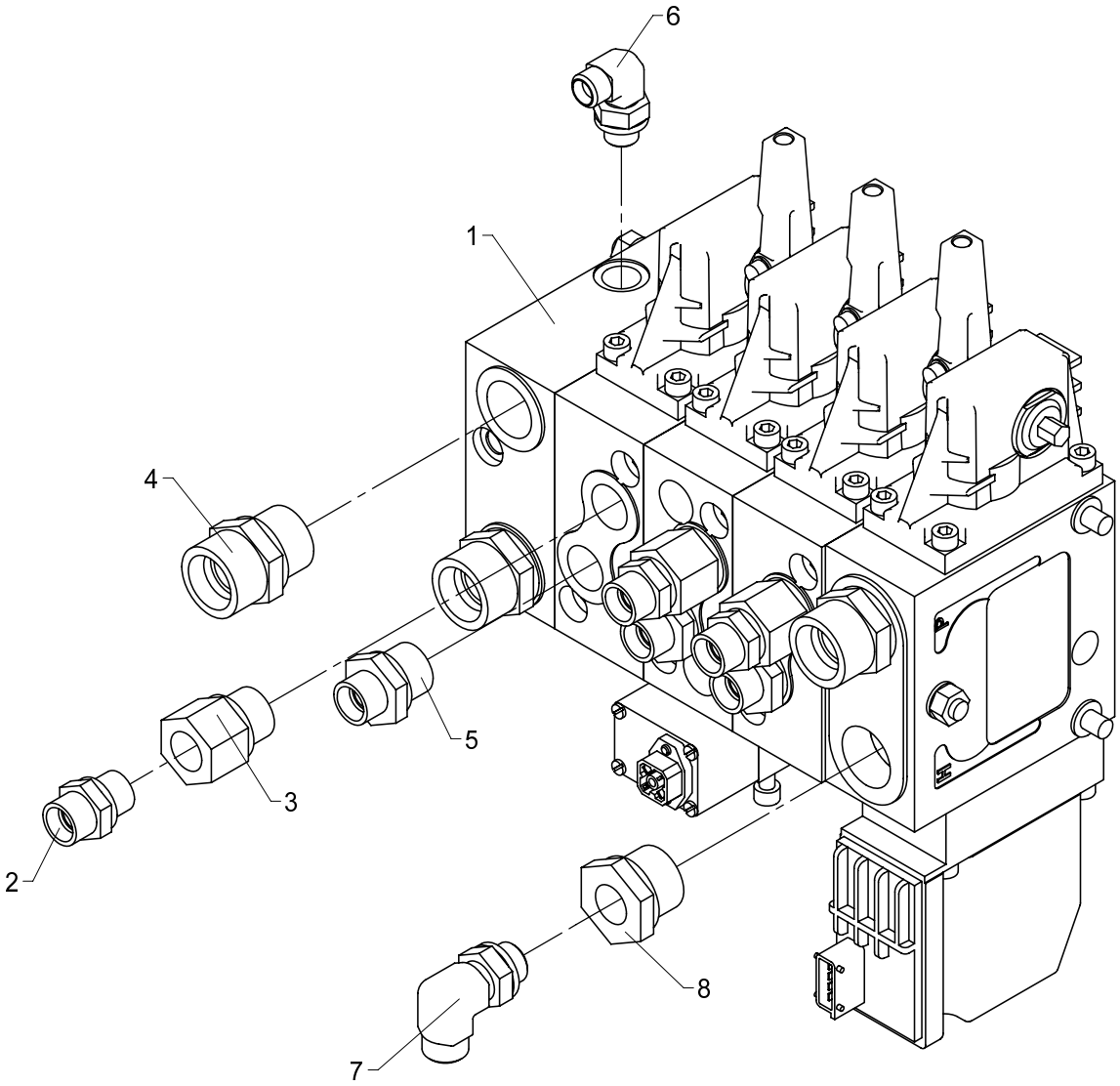

534 06 460

From loader 1060001
To loader

Created 08-01-2010
Modified

Control valve, Danfoss, 3 sections, 1 circuit, fixed flow, right

Pos	Qty.	Part no.	Description	Remarks
1	1	63392	Valve block	Manuel F
2	3	25127	Connection	P-GEV 12 LR-WD
3	3	25243	Reducing connection	RED-R 1/2-WD/R 3/8
4	3	26197	Connection	P-GEV 20 SR-WD
5	3	25108	Connection	GES 12 LR 1/2-WD
6	1	26898	Elbow connection	8 mm - 1/4"
7	1	26897	Elbow connection	12 mm - 3/8"
8	1	26319	Reducing connection	RED-R 3/4-WD/R 3/8

15/105 - 17/117 SL & DL Parts

Internal ref. 66 51 590

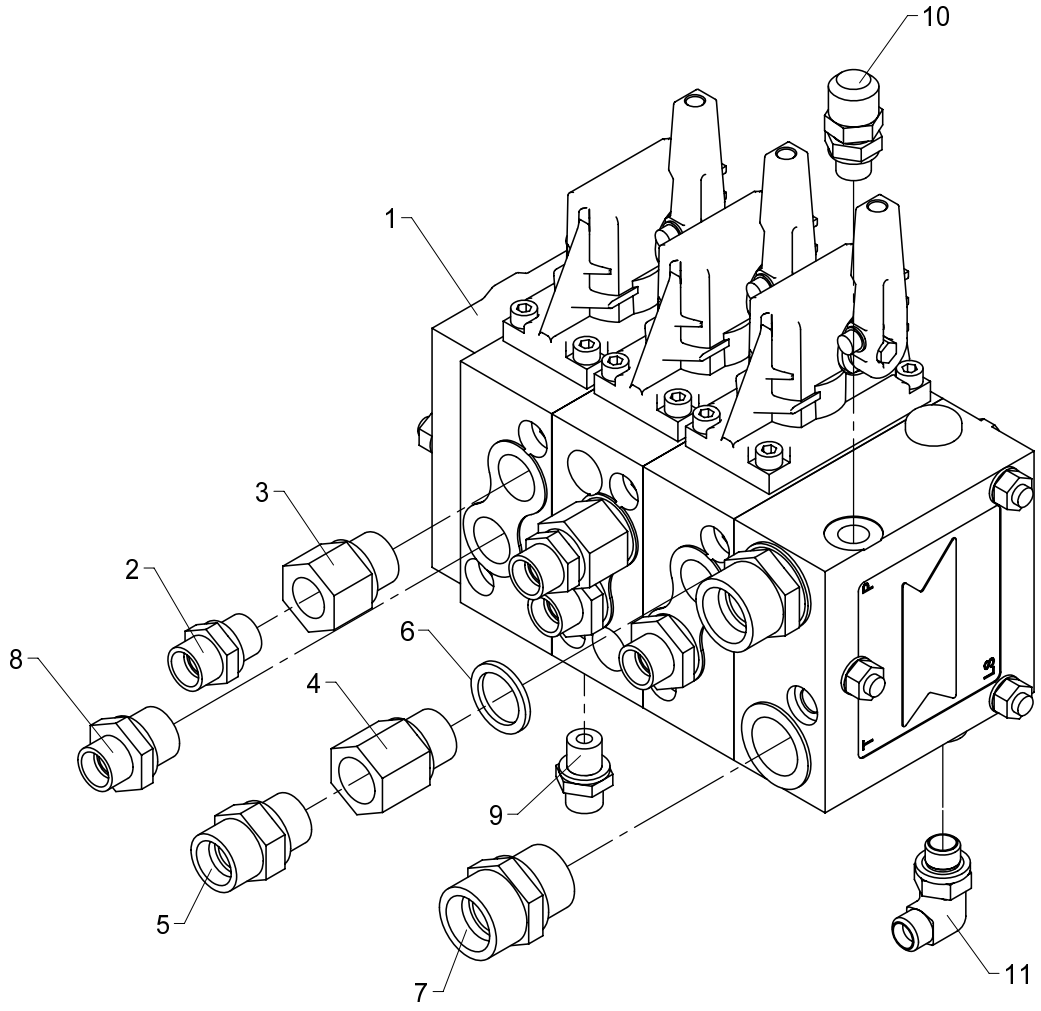

534 06 470

From loader 1060001
To loader

Created 08-01-2010
Modified

Control valve, Danfoss, 3 sections, 1 circuit, variable flow, left

Pos	Qty.	Part no.	Description	Remarks
1	1	63393	Valve block	Manuel + V
2	2	25127	Connection	P-GEV 12 LR-WD
3	2	25243	Reducing connection	RED-R 1/2-WD/R 3/8
4	1	26922	Reducing nipple	
5	1	26334	Connection	P-GEV 16 SR-WD
6	1	21106	Seal washer	ø21,5 x 28,7 x 2,5
7	2	26197	Connection	P-GEV 20 SR-WD
8	3	25108	Connection	GES 12 LR 1/2-WD
9	1	25109	Connection	GES 8 LR-WD
10	1	26103	Pressure-gauge connect.	
11	1	26898	Elbow connection	8 mm - 1/4"

15/105 - 17/117 SL & DL Parts

Internal ref. 66 51 600

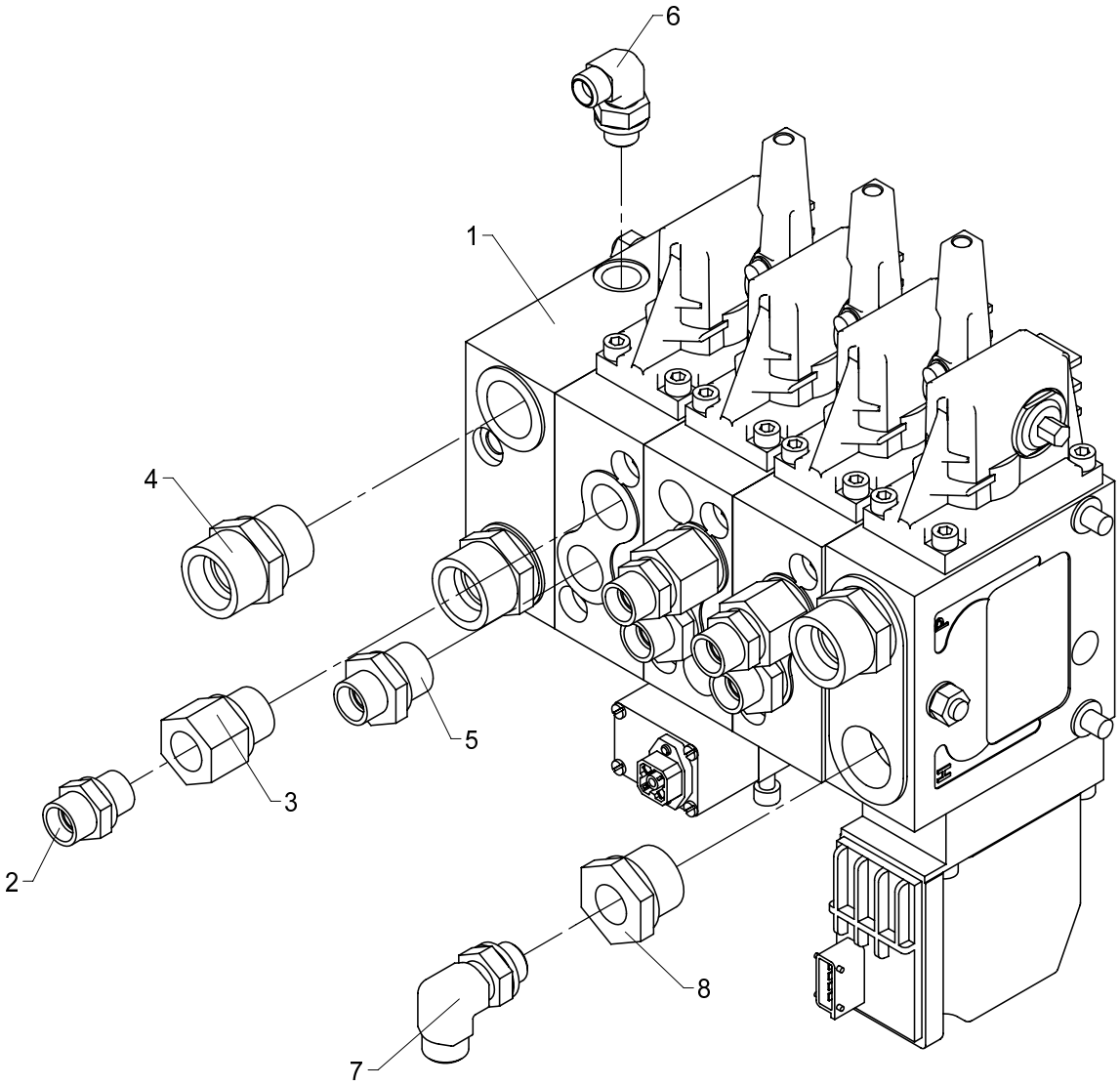

534 06 480

From loader 1060001
To loader

Created 08-01-2010
Modified

Control valve, Danfoss, 3 sections, 1 circuit, variable flow, right

Pos	Qty.	Part no.	Description	Remarks
1	1	63394	Valve block	Manuel F
2	3	25127	Connection	P-GEV 12 LR-WD
3	3	25243	Reducing connection	RED-R 1/2-WD/R 3/8
4	3	26197	Connection	P-GEV 20 SR-WD
5	3	25108	Connection	GES 12 LR 1/2-WD
6	1	26898	Elbow connection	8 mm - 1/4"
7	1	26897	Elbow connection	12 mm - 3/8"
8	1	26319	Reducing connection	RED-R 3/4-WD/R 3/8

15/105 - 17/117 SL & DL Parts

Internal ref. 99 99 540

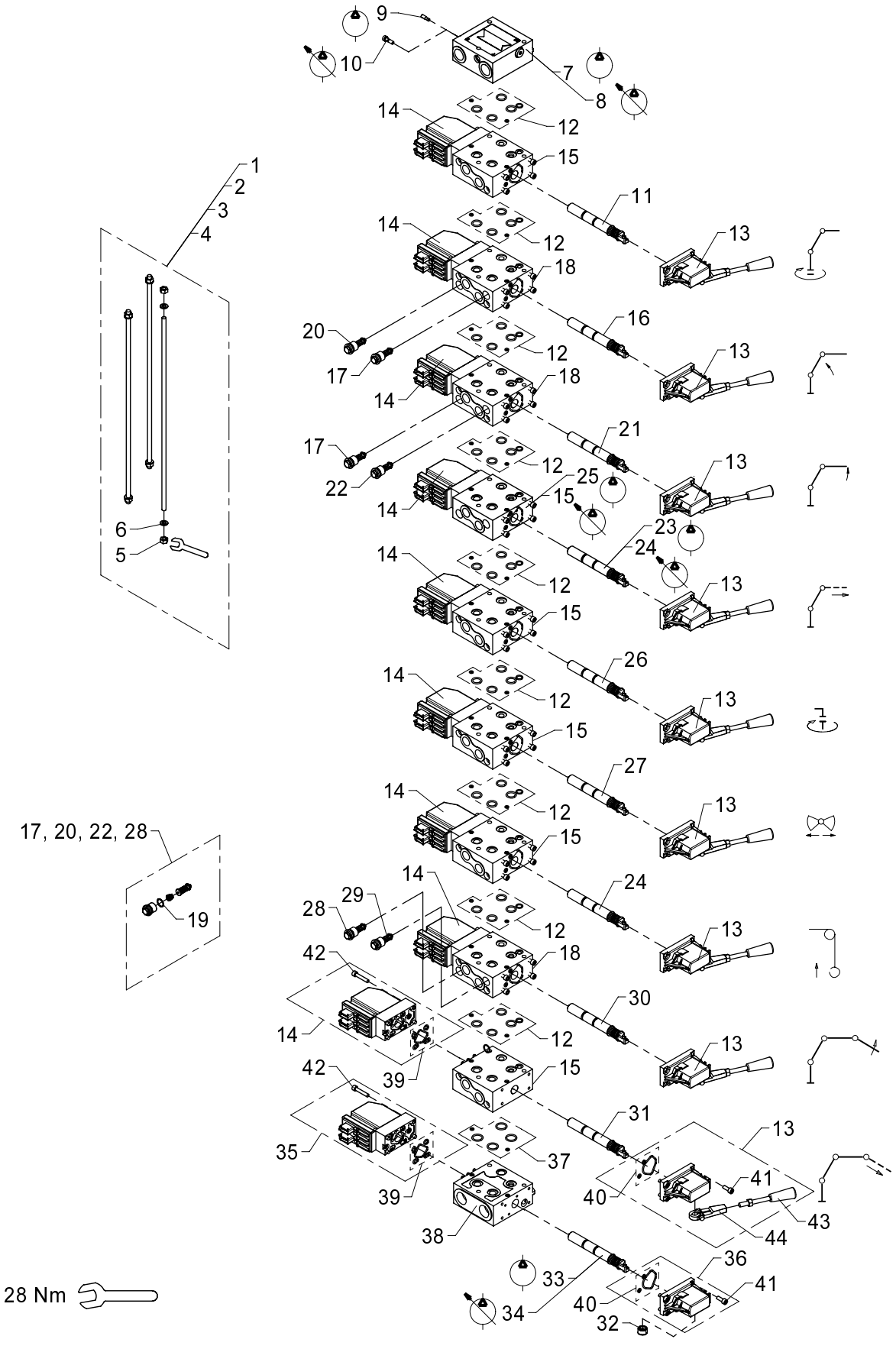

534 06 490

From loader 1060001
To loader
Created
Modified

Danfoss control valve PVG32, 4-7 sections

Pos	Qty.	Part no.	Description	Remarks
1		58965	Connecting kit, 4 sections	
2		58966	Connecting kit, 5 sections	
3		58967	Connecting kit, 6 sections	
4		58968	Connecting kit, 7 sections	
5		30856	Nut, stainless	M8
6		62044	Washer	
7		58955	Inlet section, OC	Fast pumpe
8		58956	Inlet section, CC	Variabel pumpe
9		58941	Open centre kit	
10		62065	Closed center kit	
11		62207	Spool	
12		62237	Seal kit	
13		58907	Lever module inkl. lever	
14		62295	Electric activation	
15		62225	Basic module	
16		62033	Spool	
17		58931	Port-relief valve	350 bar
18		62227	Basic module	
19		62052	O-ring	
20		62274	Port-relief valve	125 bar
21		62209	Spool	
22		62286	Port-relief valve	250 bar
23		61963	Spool	Fast pumpe
24		62055	Spool	Variabel pumpe
25		62224	Basic module	
26		58902	Spool	
27		62070	Spool	
28		62283	Port-relief valve	320 bar
29		62278	Port-relief valve	190 bar
30		61964	Spool	
31		58903	Spool	
32		64416	Cover for sealing	
33		58959	Spool, OC	Fast pumpe
34		58960	Spool, CC	Variabel pumpe
35		58962	Electric activation	
36		58919	Lever module	
37		58925	Seal kit	
38		58958	PVSK valve section	
39		62240	Seal kit	
40		62239	Seal kit	
41		30424	Screw	MC6 x 16

15/105 - 17/117 SL & DL Parts

Internal ref. 99 99 540

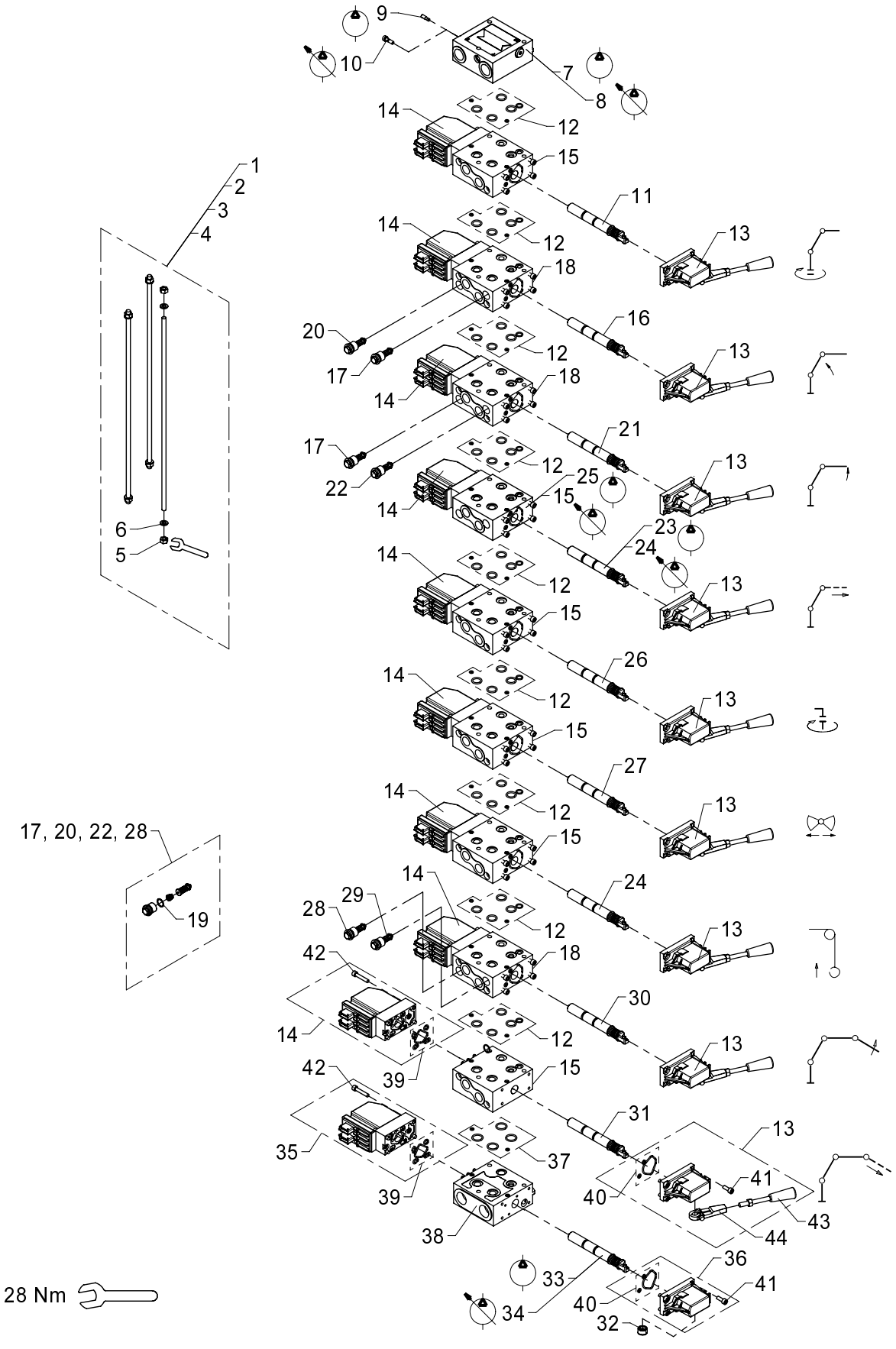

Danfoss control valve PVG32, 4-7 sections

From loader 1060001
To loader
Created
Modified

Pos	Qty.	Part no.	Description	Remarks
42		62241	Screw	
43		62062	Lever	
44		59682	Foot for lever	

15/105 - 17/117 SL & DL Parts

Internal ref. 99 99 560

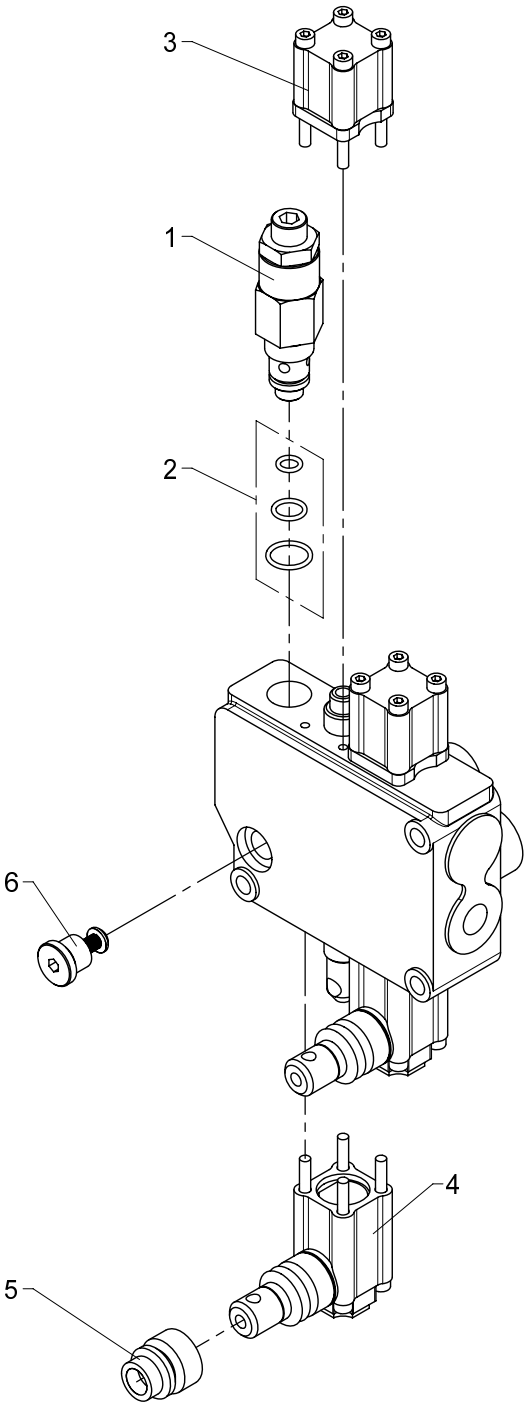

534 06 493

From loader 1060001
To loader
Created
Modified

HC - M50 stabilizer valve section

Pos	Qty.	Part no.	Description	Remarks
1		55343	Main relief valve 190 bar	
2		55314	Seal kit cpl.	
3		55332	Return spring kit	
4		55334	Hand lever kit	
5		55389	Rubber bellows (M50)	
6		55339	Check valve kit	

15/105 - 17/117 SL & DL Parts

Internal ref. 99 99 570

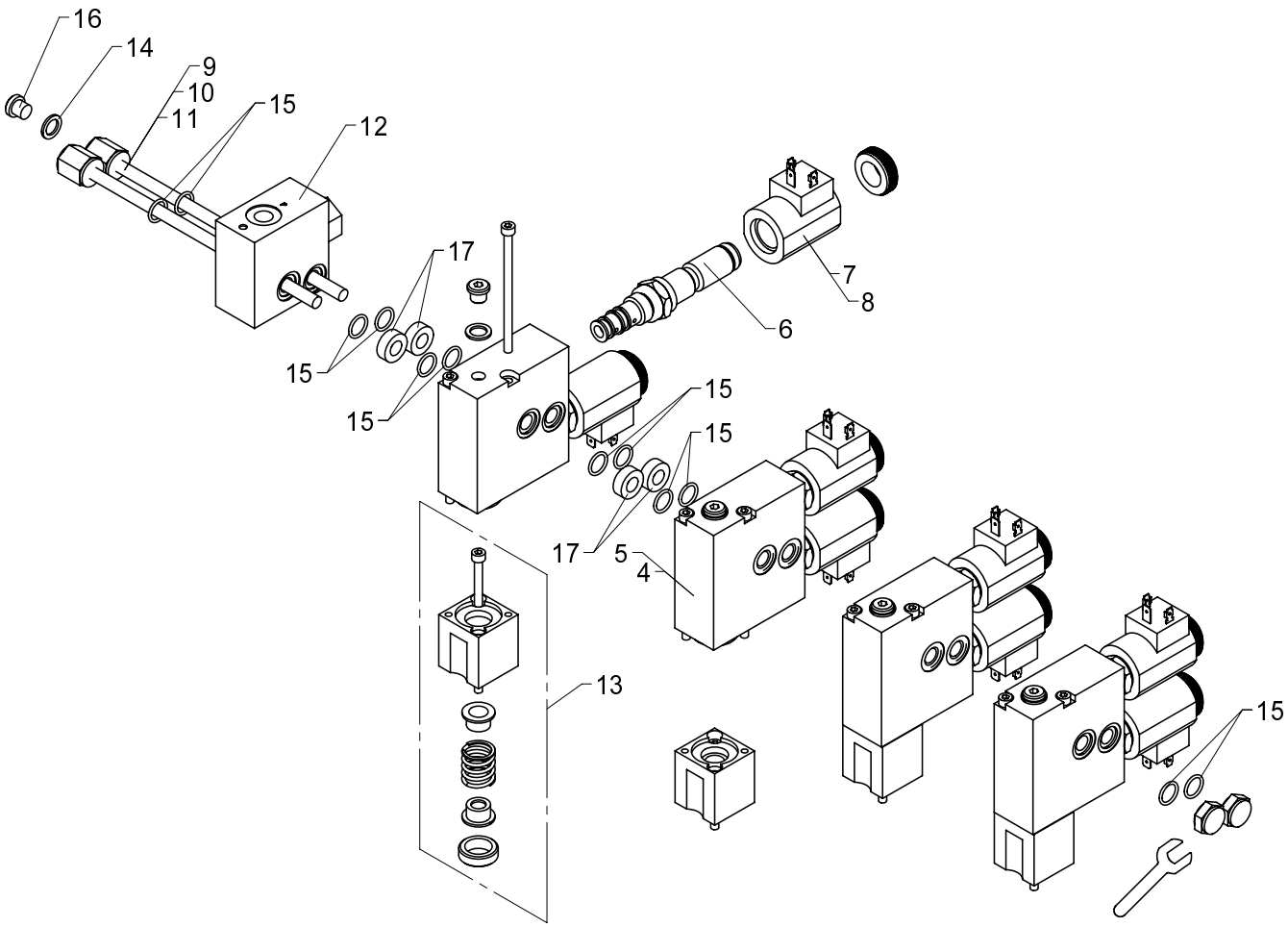

HC-D4 electro-hydraulic NEM-kit, NEM radio remote control

From loader 1060001
To loader

Created 28-05-2009
Modified 29-10-2010

Pos	Qty.	Part no.	Description	Remarks
1		55360	El-hydr. NEM-kit, 4x24V, right	HC-D4, 4 sekt.
2		55361	El-hydr. NEM-kit, 5x24V, right	HC-D4, 5 sekt.
3		55362	El-hydr. NEM-kit, 6x24V, right	HC-D4, 6 sekt.
4		55324	Electro-hydr.module 12V	
5		55322	Electro-hydr. module 24V	
6		55320	Cartridge	
7		55323	Solenoid 12V	
8		55321	Solenoid, 24V	
9		55307	Tie rod kit NEM 4+PR	
10		55312	Tie rod kit NEM 5+PR	
11		55313	Tie rod kit NEM 6+PR	
12		55325	Pressure reducing valve	
13		55306	Intermediate spring centering	
14		21115	Seal washer	ø10,7 x 16 x 1,5
15		20115	O-ring	OR 12,42 x 1,78
16		25187	Plug	VS-R-1/8 WD
17		55363	Shim between modules	

534 06 497

15/105 - 17/117 SL & DL Parts

Internal ref. 99 99 575

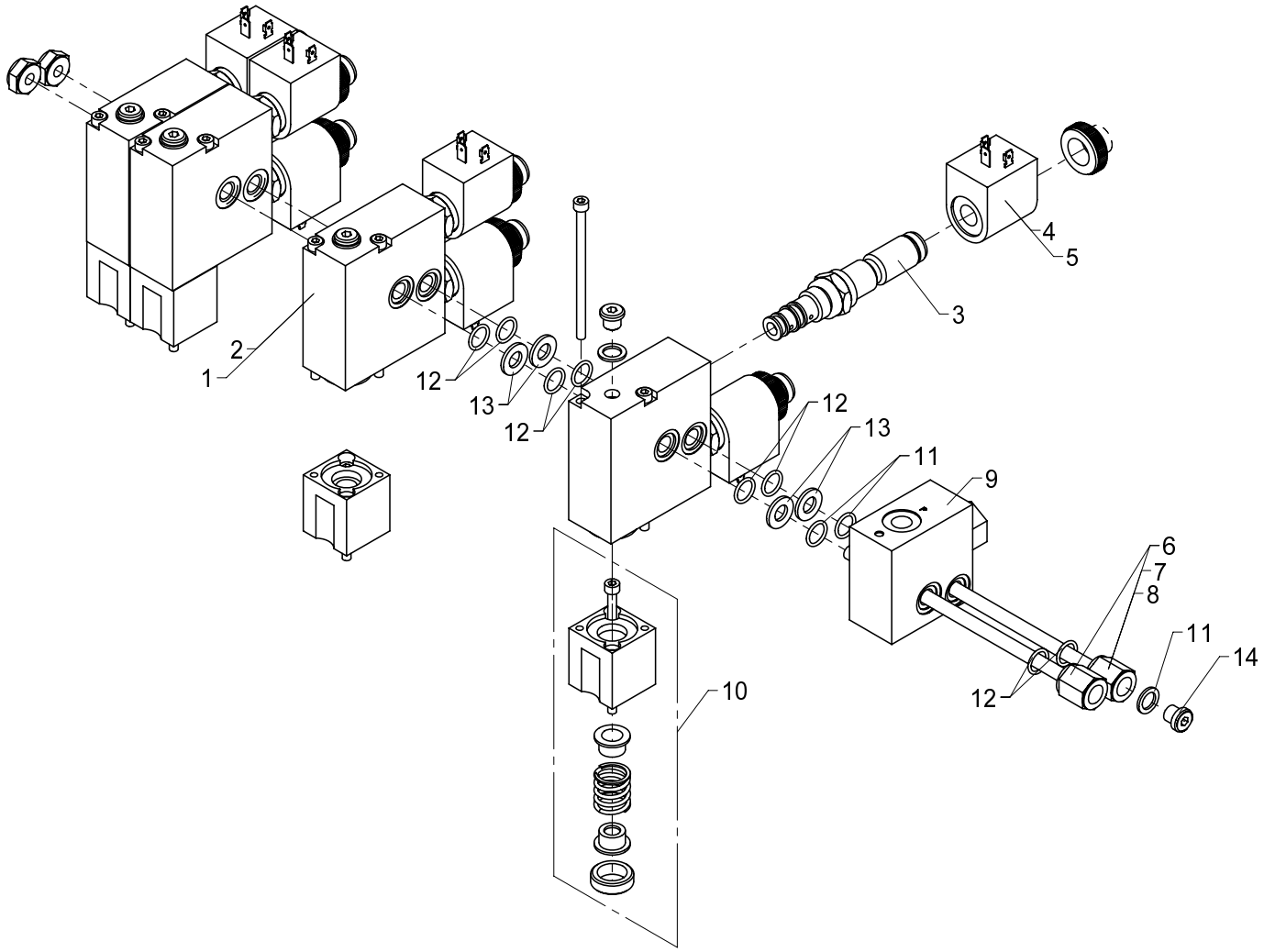

534 06 497

From loader 1060001
To loader

HC - M50 electro-hydraulic NEM-kit NEM radio remote control

Created 07-09-2009
Modified 04-03-2010

Pos	Qty.	Part no.	Description	Remarks
1	3	55373	Electro-hydr.module 12V	
2	1	55372	Electro-hydr.module 24V	
3	1	55503	Cartridge	
4	1	55344	Solenoid, 12V	
5	1	55345	Solenoid, 26V	
6	1	55501	Stay bolt kit	3 sekt.
7	1	55328	Kit of stay bolts	4 sekt.
8	1	55327	Kit of stay bolts	5 sekt.
9	1	55325	Pressure reducing valve	
10	1	55319	Spring kit, electric activatio	
11	1	21115	Seal washer	ø10,7 x 16 x 1,5
12	6	20115	O-ring	OR 12,42 x 1,78
13	4	55317	Centering shim	
14	1	25187	Plug	VS-R-1/8 WD

15/105 - 17/117 SL & DL Parts

Internal ref. 99 99 550

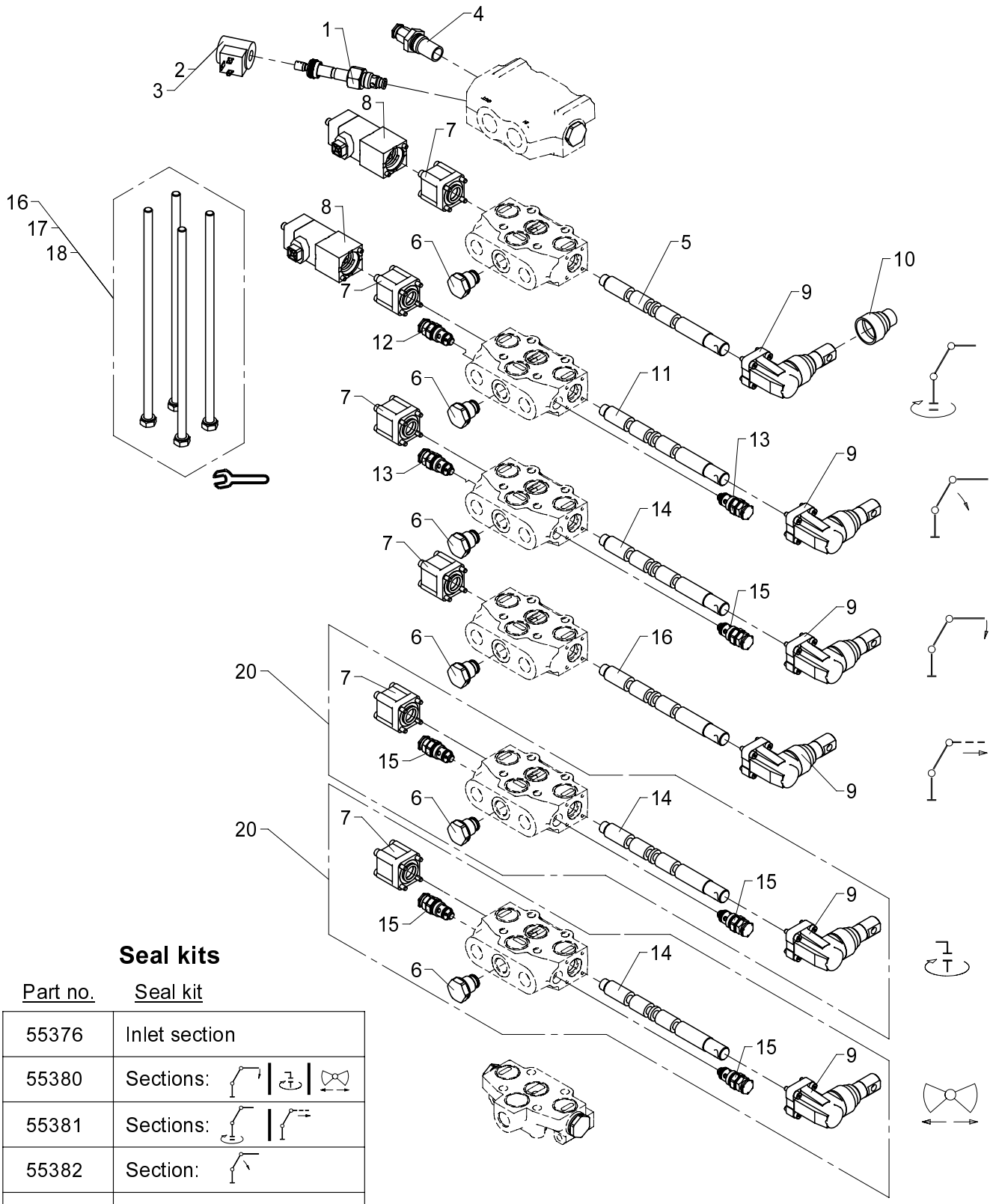

Seal kits

Part no.	Seal kit
55376	Inlet section
55380	Sections:
55381	Sections:
55382	Section:
55386	Relief valve (55375)
55387	Between each section

HC-D4 valve block, 4-6 sections

534 06 499

From loader 1060001
To loader

Created
Modified

Pos	Qty.	Part no.	Description	Remarks
1	1	55346	Cartridge	
2	1	55344	Solenoid, 12V	
3	1	55345	Solenoid, 26V	
4	1	55375	Main relief valve 300 bar	
5	1	55367	Spool	
6	6	55379	Check valve	
7	6	55378	Spring center device	
8	2	55371	Spool sensor	
9	6	55377	Hand lever kit	
10	1	55340	Rubber bellows (HC-D4)	
11	1	55364	Spool	
12	1	55383	Relief valve	100 bar
13	2	55385	Relief valve	325 bar
14	3	55395	Spool, extension	
15	5	55384	Relief valve	200 bar
16	1	55388	Spool	
17	1	55397	Kit of stay bolts	4 sektioner
18	1	55398	Kit of stay bolts	5 sektioner
19	1	55399	Kit of stay bolts	6 sektioner
20	1	55510	Valve section, compl. HC-D4	

15/105 & 17/117 SL & DL Parts

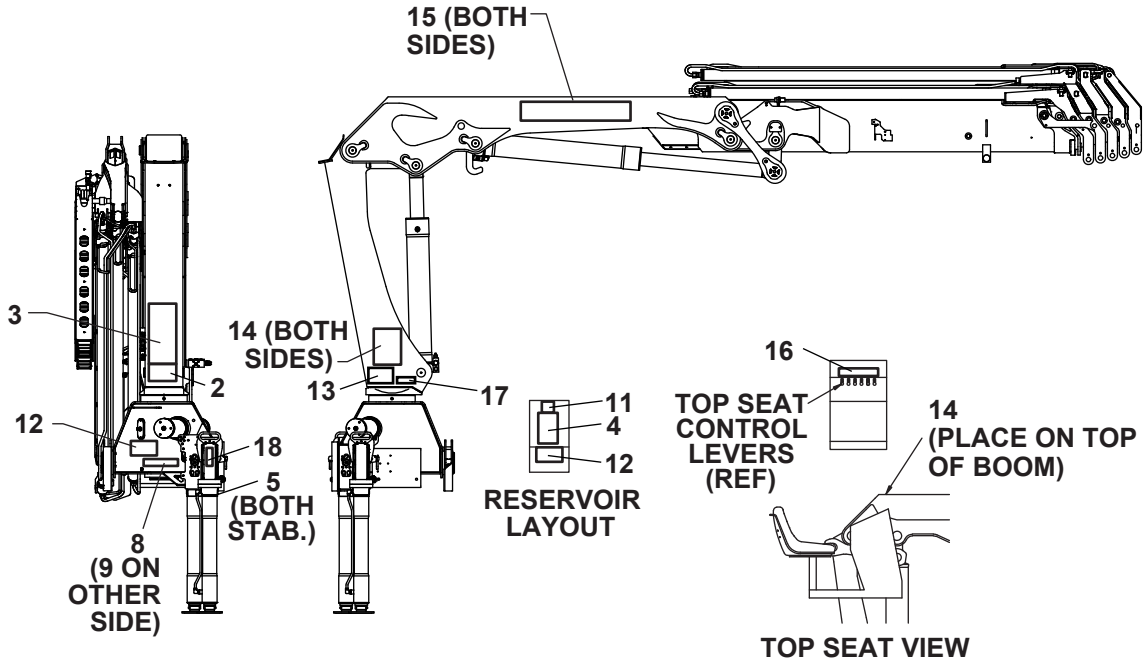

15/105 & 17/117 Standard labels

From loader
To loader

Created 4-30-2009
Modified

Pos	Qty.	Part no.	Description
1	1	95720380	DECAL KIT - COMMON
2	1	70397055	DECAL-GREASE, 15 TM
3	1	70396918	DECAL-DANGER LARGE (PART OF #1)
4	1	70396919	DECAL-DANGER SMALL (PART OF #1)
5	2	70392864	DECAL-DANGER STAB STAND CLEAR (PART OF #1)
6	4	70392865	DECAL-DANGER ELEC HAZARD LG (PART OF #1)
7	4	70392868	DECAL-DANGER CR LOADLINE (PART OF #1)
8	1	66642	DECAL-CONTROLS, SS
9	1	66646	DECAL-CONTROLS, CS
10	2	70392891	DECAL-DANGER DRIVELINE (PART OF #1)
11	1	70394189	DECAL-MOBILOIL RESERVOIR (PART OF #1)
12	2	70391583	DECAL-SET UP/STOW INSTR. (PART OF #1)
13	1	70029119	PLACARD-SERIAL NO.
14	2REF	70397552	DECAL-CP 15/105SL K1
	2REF	70397553	DECAL-CP 15/105SL K2
	2REF	70397553	DECAL-CP 15/105SL K3
	2REF	70397555	DECAL-CP 15/105SL K4
	2REF	70397556	DECAL-CP 15/105SL K5
	2REF	70397557	DECAL-CP 15/105SL K6
	2REF	70397565	DECAL-CP 17/117SL K1
	2REF	70397566	DECAL-CP 17/117SL K2
	2REF	70397567	DECAL-CP 17/117SL K3
	2REF	70397568	DECAL-CP 17/117SL K4
	2REF	70397569	DECAL-CP 17/117SL K5
	2REF	70397570	DECAL-CP 17/117SL K6
	2REF	70397520	DECAL-CP 15/105DL K1
	2REF	70397547	DECAL-CP 15/105DL K2
	2REF	70397548	DECAL-CP 15/105DL K3
	2REF	70397549	DECAL-CP 15/105DL K4
	2REF	70397550	DECAL-CP 15/105DL K5
	2REF	70397551	DECAL-CP 15/105DL K6
	2REF	70397559	DECAL-CP 17/117DL K1
	2REF	70397560	DECAL-CP 17/117DL K2
	2REF	70397561	DECAL-CP 17/117DL K3
	2REF	70397562	DECAL-CP 17/117DL K4
	2REF	70397563	DECAL-CP 17/117DL K5
	2REF	70397564	DECAL-CP 17/117DL K6
15	2REF	70397545	DECAL-ID 15/105 SERIES
	2REF	70397558	DECAL-ID 17/117 SERIES
16	1REF		DECAL-CTRL CHAIR MT
17	1	70396021	DECAL-MADE IN DENMARK (PART OF #1)
18	2REF	66638	DECAL-CONTROL PD STAB

Decal Placement (If not shown on crane)	
ITEM	LOCATION:
6,7	One on all four sides of carrier vehicle
9	On curbside control handles.
10	At or near driveline.

REFERENCE: DECAL PLACEMENT DRAWING 99904647

15/105 - 17/117 SL & DL Parts

Internal ref. 99 99 000

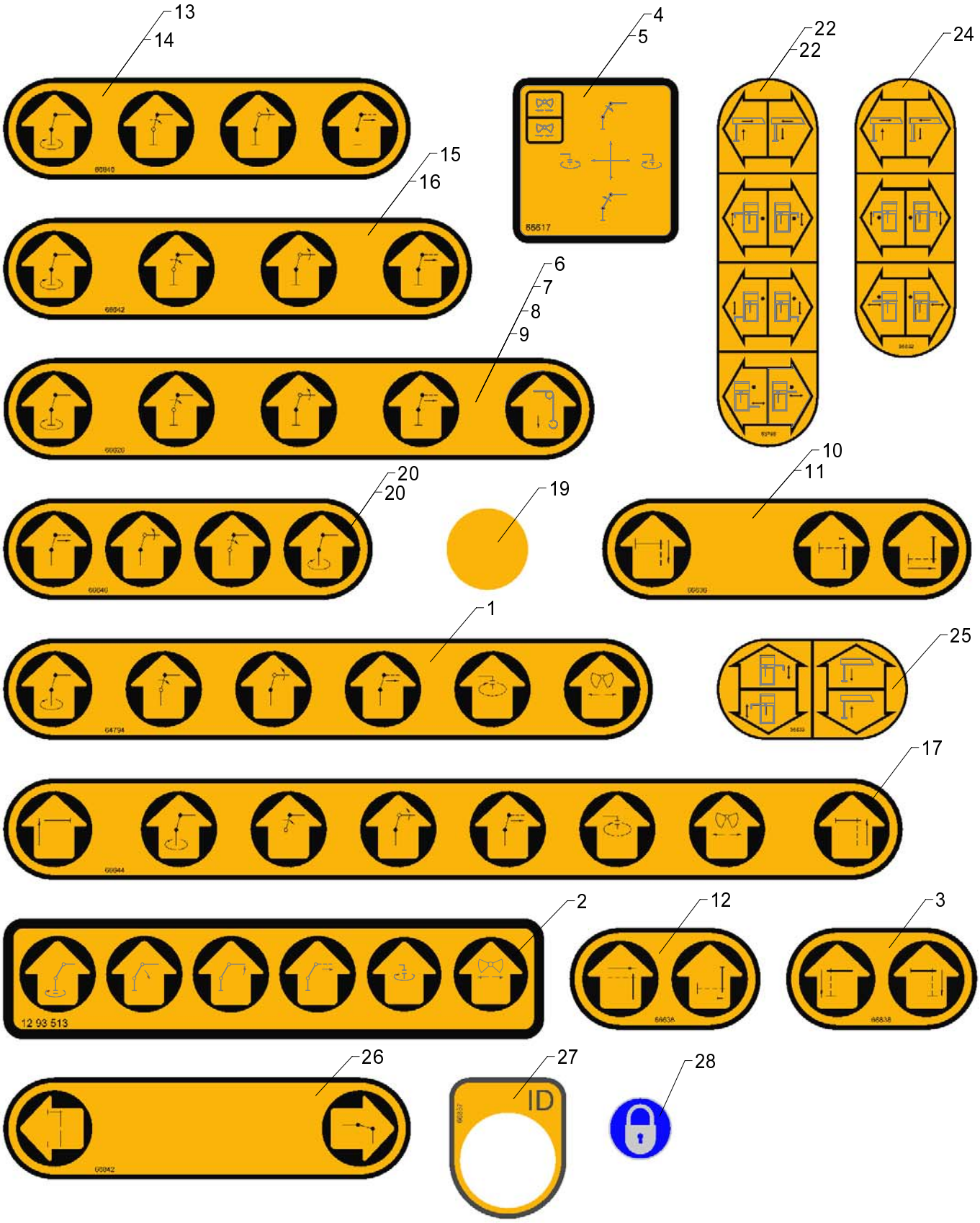

Operating labels

From loader 1060001
To loader
Created
Modified

Pos	Qty.	Part no.	Description	Remarks
1	1	64794	Operating label	
2	1	65763	Label, 680 Series	12 93 513
3	1	66838	Operating label	
4	1	66617	Operating label right	
5	1	66618	Operating label left	
6	1	66626	Operating label	
7	1	66627	Operating label	
8	1	66628	Operating label	
9	1	66629	Operating label	
10	1	66636	Stab. operation, valve bl.side	
11	1	66637	Stab. operation,dual ctrl side	
12	1	66638	Stab. operation, (HC-M50-2fcts	
13	1	66640	Stab. operation, (HC-4-4 fcts.	
14	1	66641	Operating label, (HC-4-6fcts.)	
15	1	66642	Operating label, (PVG 32-4fcts	
16	1	66643	Operating label, (PVG 32-6fcts	
17	1	66644	Operat. label, (HS,6fcts.+stab	
18	1	66840	Operating label	
19	1	66645	Label	
20	1	66646	Label,dual control (HC-4-4fcts	
21	1	66647	Label,dual control (HC-4-6fcts	
22	1	66798	Operating label,dual ctrl side	
23	1	66799	Operating label,valve bl. side	
24	1	66832	Label, emergency operation	
25	1	66833	Operating label	
26	1	66842	Operating label	
27	1	66837	Operating label	
28	1	66459	Label "LOCKING DEVICE CLOSED"	

534 07 100

15/105 - 17/117 SL & DL Parts

Internal ref. 66 68 580

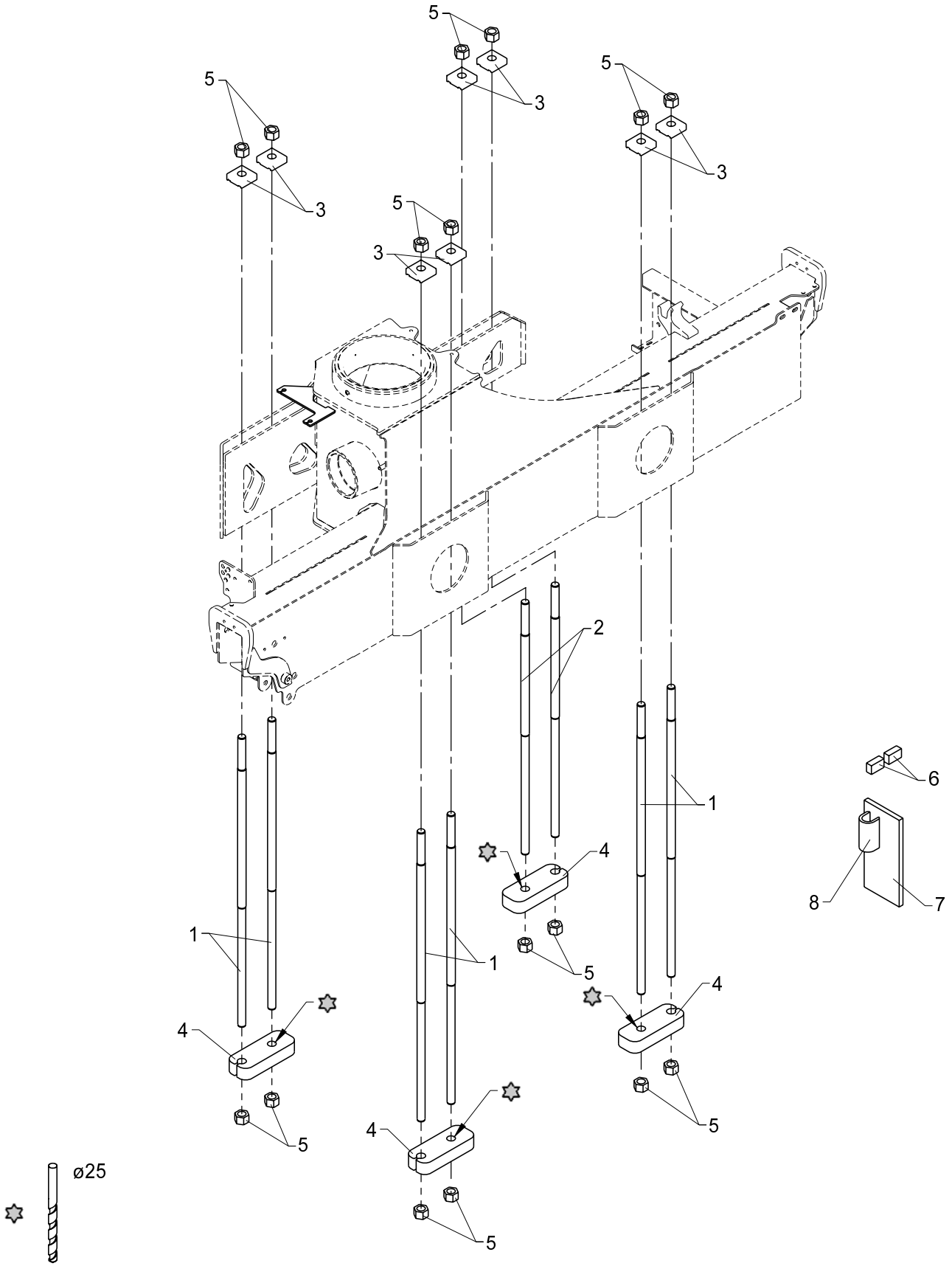

Mounting kit (8 M24 x 2 pins)

534 07 100

From loader 1060001
To loader

Created 24-11-2008
Modified

Pos	Qty.	Part no.	Description	Remarks
1	6	32916	Mounting bolt	
2	2	32917	Mounting bolt	
3	8	6340496	Mounting plate	
4	4	6887384	Clamp	
5	16	31051	Lock nut	M24 x 2
6	6	6644084	Stop block	
7	4	6659924	Spacer	
8	4	6659914	U-section	

15/105 - 17/117 SL & DL Parts

Internal ref. 66 68 590

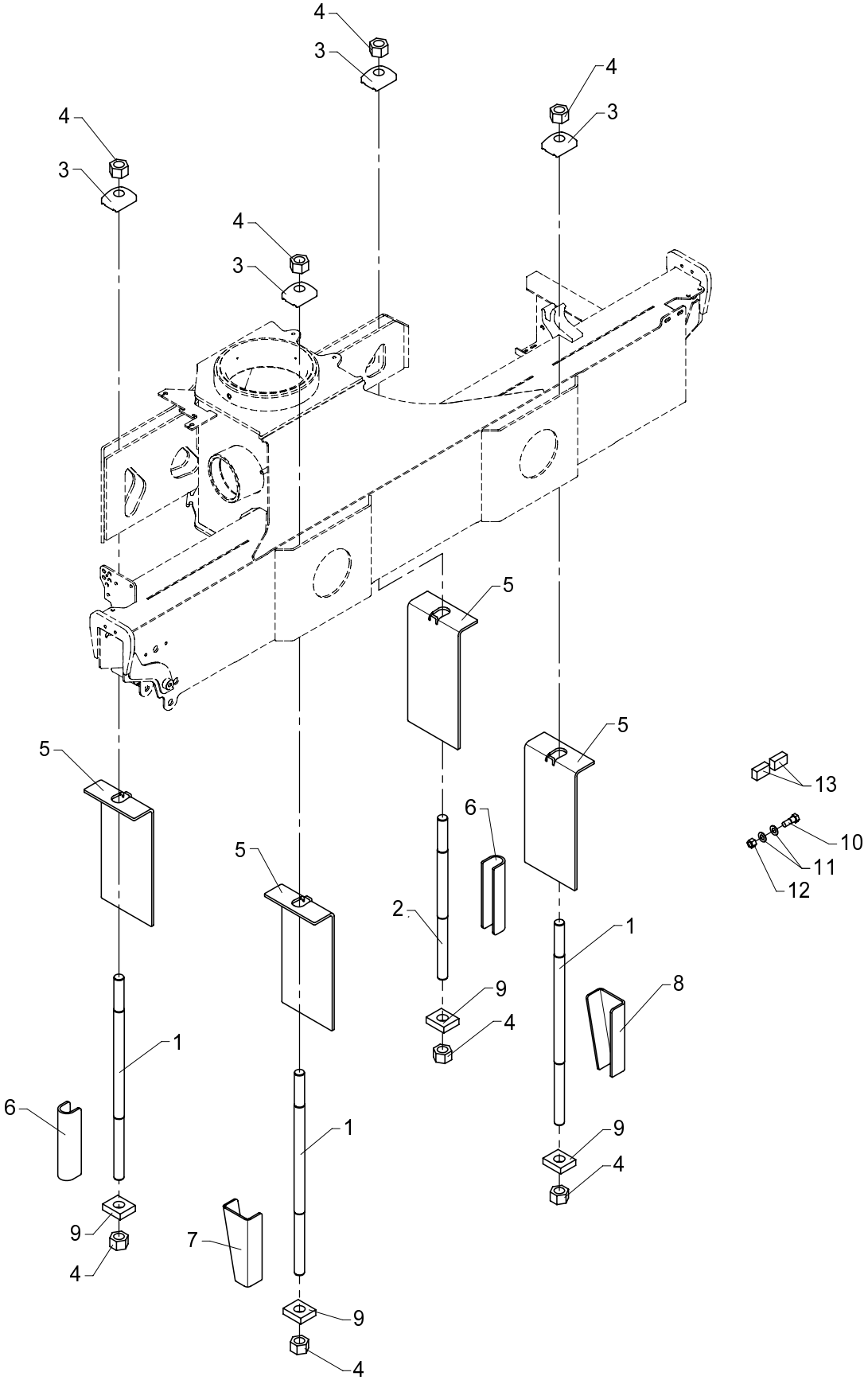

Mounting kit (4 M30 x 2 pins)

534 07 110

From loader 1060001
To loader

Created 13-11-2008
Modified

Pos	Qty.	Part no.	Description	Remarks
1	3	32918	Mounting bolt	
2	1	32919	Mounting bolt	
3	4	6340497	Mounting plate	
4	8	31086	Lock nut	M30 x 2
5	4	6881704	Mounting plate	
6	2	6887354	U-section	
7	1	6881684	Plate, left	
8	1	6881694	Plate, right	
9	4	6658094	Washer	
10	24	31497	Steel bolt	M14 x 40
11	48	31111	Washer	14 mm
12	24	30891	Lock nut	M14
13	6	6644084	Stop block	

15/105 - 17/117 SL & DL Parts

Internal ref. 63 42 720

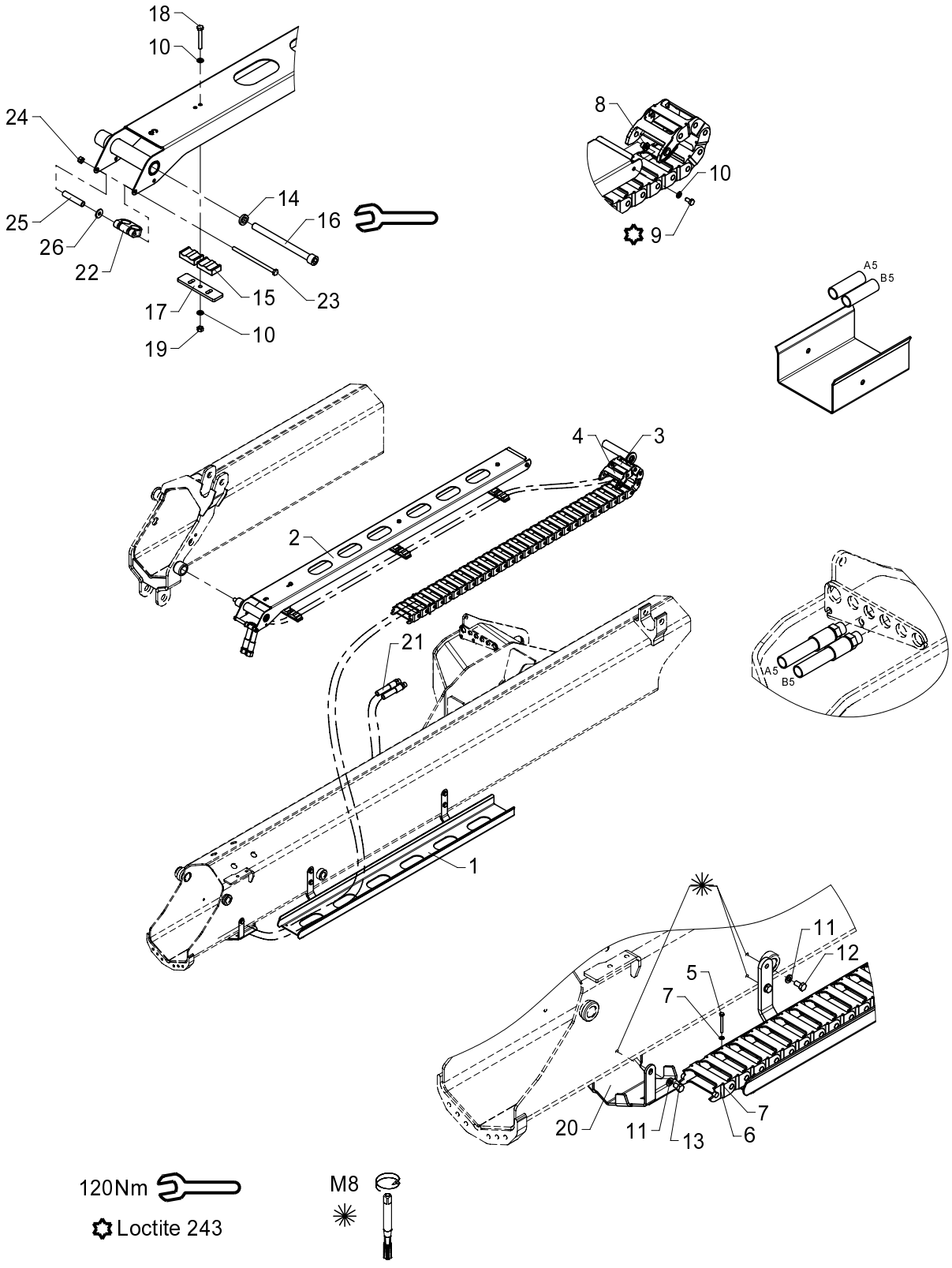

534 09 100

From loader 1060001
To loader

Created 16-03-2009
Modified 05-11-2010

Hose guides, K1-1EXV.

Pos	Qty.	Part no.	Description	Remarks
1	1	6340721	Guide (jib)	
2	1	6340748	Guide (extension K3)	
3	1	28713	Nylon drag chain, 34 links	
4	1	63400	End link for nylon drag chain	
5	2	30128	Set screw	M4 x 40
6	2	30857	Lock nut	M4
7	4	31188	Washer, stainless	4 mm
8	2	6340719	Nut	
9	2	30111	Set screw, stainless	M6 x 12
10	8	32302	Face washer, stainless	6 mm
11	6	31147	Washer, stainless	8 mm
12	4	30131	Set screw, stainless	M8 x 16
13	2	30130	Set screw, stainless	M8 x 12
14	1	6340717	Washer	
15	6	63561	Clamp	
16	1	32488	Screw	MC12 x 150
17	3	6340769	Adaptor	
18	3	30118	Steel pin, stainless	M6 x 45
19	3	30854	Nut, stainless	M6
20	1	6340299	Protective guard	Serie 1300/1500
21	2	56566		3/8 X 4690 mm L/L
22	1	68028		
23	1	30167	Steel bolt	M6 x 110
24	1	30884	Lock nut, stainless	M6
25	1	6340724		
26	1	31134	Washer, stainless	

534 09 110

15/105 - 17/117 SL & DL Parts

63 46 730
Internal ref. 63 42 730

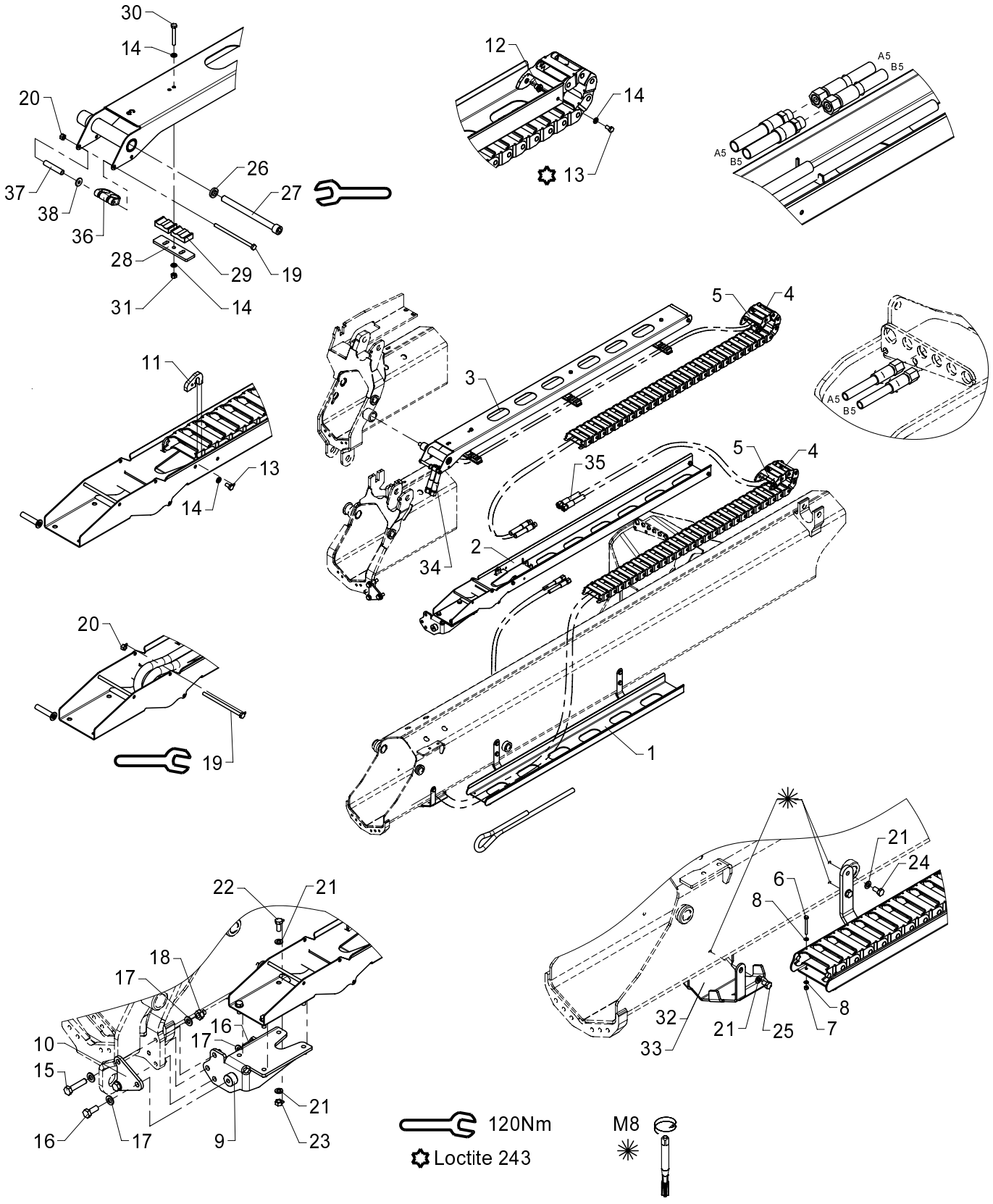

Hose guides, K2-1EXV.

534 09 110

From loader 1060001
To loader

Created 16-03-2009
Modified 05-11-2010

Pos	Qty.	Part no.	Description	Remarks
		6342730	Hose guide, K2-1 EXV	
		6346730	Hose guide, K2-1 EXV	
1	1	6340721	Guide (jib)	
2	1	6340731	Guide (Extension I)	
3	1	6340748	Guide (extension K3)	
4	2	28712	Nylon drag chain, 31 links	
5	2	63400	End link for nylon drag chain	
6	2	30128	Set screw	M4 x 40
7	2	30857	Lock nut	M4
8	4	31188	Washer, stainless	4 mm
9	1	6340725	Mounting bracket	
10	1	6340729	Plate	
11	1	6340718	Bracket	
12	4	6340719	Nut	
13	5	30111	Set screw, stainless	M6 x 12
14	11	32302	Face washer, stainless	6 mm
15	2	30377	Set screw	M10 x 45
16	2	31513	Set screw, stainless	M10 x 25
17	6	31565	Washer, stainless	10 mm
18	2	30858	Nut	M10
19	2	30167	Steel bolt	M6 x 60
20	2	30884	Lock nut, stainless	M6
21	14	31147	Washer, stainless	8 mm
22	4	30132	Set screw, stainless	M8 x 20
23	4	30856	Nut, stainless	M8
24	4	30131	Set screw, stainless	M8 x 16
25	2	30130	Set screw, stainless	M8 x 12
26	1	6340717	Washer	
27	1	32488	Screw	MC12 x 150
28	3	6340769	Adaptor	
29	6	63561	Clamp	
30	3	30118	Steel pin, stainless	M6 x 45
31	3	30854	Nut, stainless	M6
32	1	6340299	Protective guard	Serie 1300/1500
33	1	6344299	Protective guard	Serie 1800/2200
34	2	56568	Hose	
35	2	56569	Hose	
36	1	68028		
37	1	6340724		
38	1	31134	Washer, stainless	

15/105 - 17/117 SL & DL Parts

63 46 740
Internal ref. 63 42 740

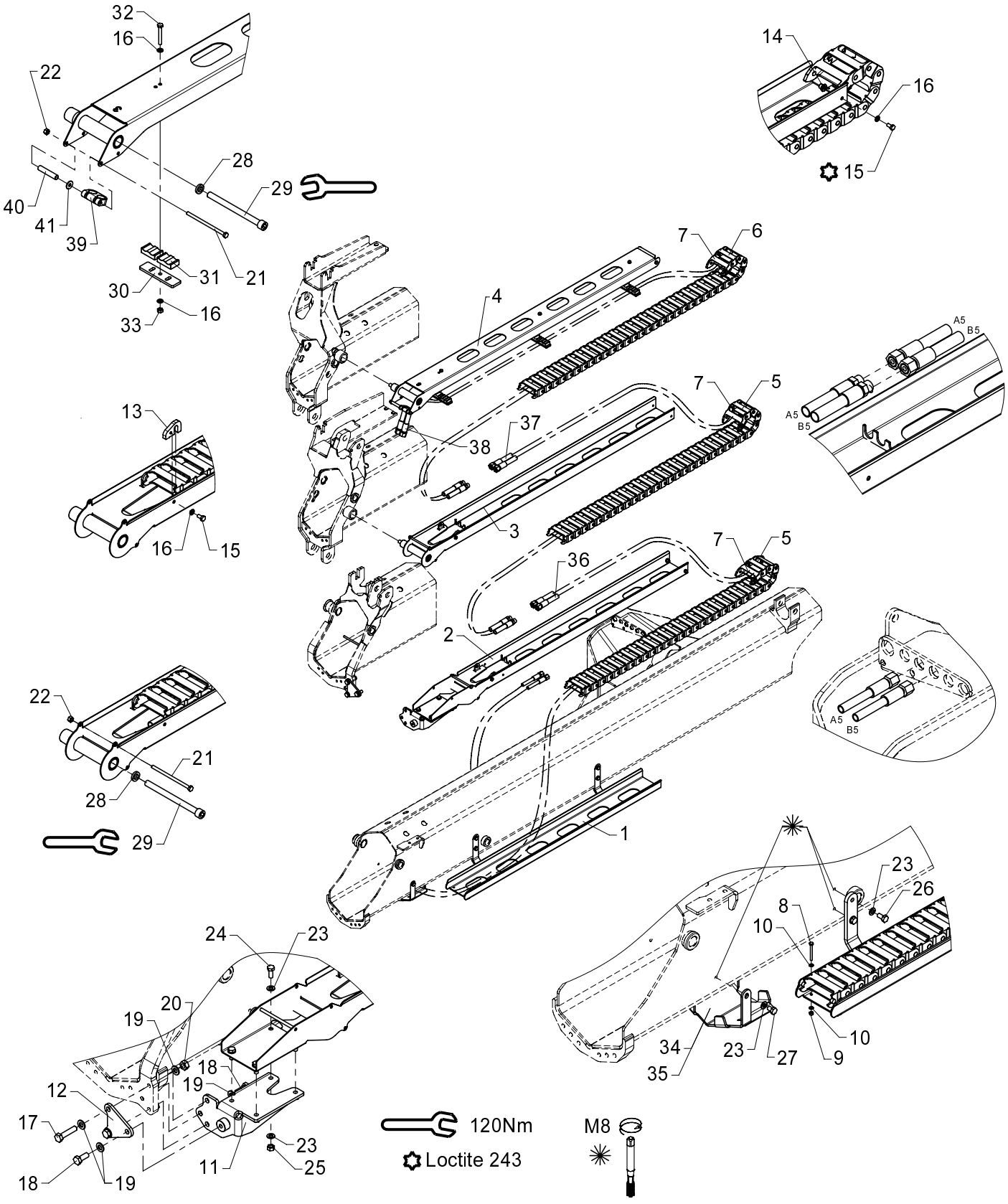

Hose guides, K3-1 EXV.

534 09 120

From loader 1060001
To loader

Created 16-03-2009
Modified 08-11-2010

Pos	Qty.	Part no.	Description	Remarks
		6342740	Hose guide, K3-1 EXV	
		6346740	Hose guide, K3-1 EXV	
1	1	6340721	Guide (jib)	
2	1	6340731	Guide (Extension I)	
3	1	6340741	Guide (Extension II)	
4	1	6340748	Guide (extension K3)	
5	2	28712	Nylon drag chain, 31 links	
6	1	28713	Nylon drag chain, 34 links	
7	3	63400	End link for nylon drag chain	
8	2	30128	Set screw	M4 x 40
9	2	30857	Lock nut	M4
10	4	31188	Washer, stainless	4 mm
11	1	6340725	Mounting bracket	
12	1	6340729	Plate	
13	2	6340718	Bracket	
14	6	6340719	Nut	
15	8	30111	Set screw, stainless	M6 x 12
16	14	32302	Face washer, stainless	6 mm
17	2	30377	Set screw	M10 x 45
18	2	31513	Set screw, stainless	M10 x 25
19	6	31565	Washer, stainless	10 mm
20	2	30858	Nut	M10
21	3	30167	Steel bolt	M6 x 60
22	3	30884	Lock nut, stainless	M6
23	14	31147	Washer, stainless	8 mm
24	4	30132	Set screw, stainless	M8 x 20
25	4	30856	Nut, stainless	M8
26	4	30131	Set screw, stainless	M8 x 16
27	2	30130	Set screw, stainless	M8 x 12
28	2	6340717	Washer	
29	2	32488	Screw	MC12 x 150
30	3	6340769	Adaptor	
31	6	63561	Clamp	
32	3	30118	Steel pin, stainless	M6 x 45
33	3	30854	Nut, stainless	M6
34	1	6340299	Protective guard	Serie 1300/1500
35	1	6344299	Protective guard	Serie 1800/2200
36	2	56569	Hose	
37	2	56564	Hose	3/8 X 2900 mm L/S
38	2	56565	Hose	3/8 x 3420 mm L/S 12L
39	1	68028		

534 09 120

15/105 - 17/117 SL & DL Parts

63 46 740
Internal ref. 63 42 740

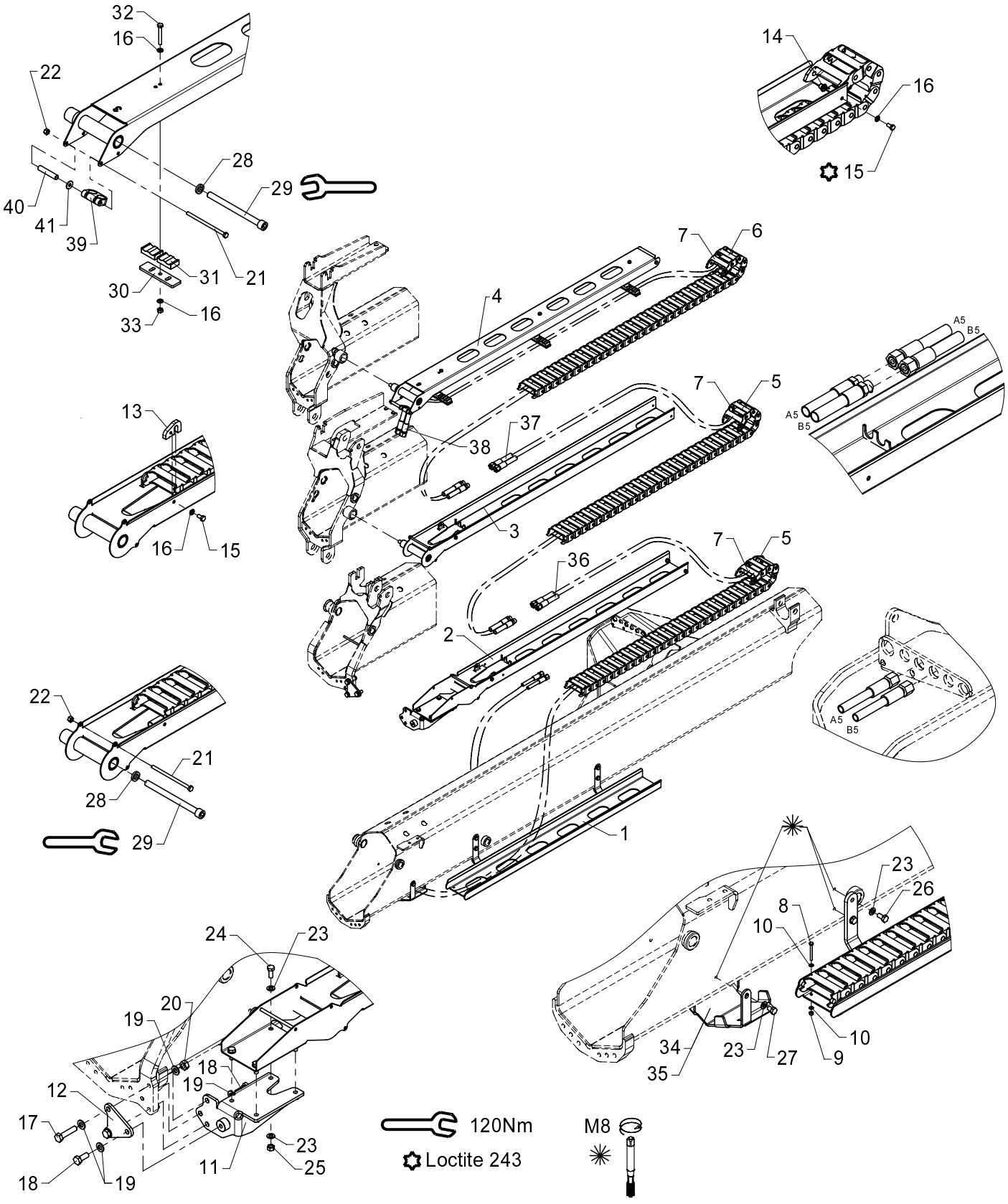

534 09 120

From loader 1060001
To loader

Created 16-03-2009
Modified 08-11-2010

Hose guides, K3-1 EXV.

Pos	Qty.	Part no.	Description	Remarks
40	1	6340724		
41	1	31134	Washer, stainless	

534 09 130

15/105 - 17/117 SL & DL Parts

63 46 750
Internal ref. 63 42 750

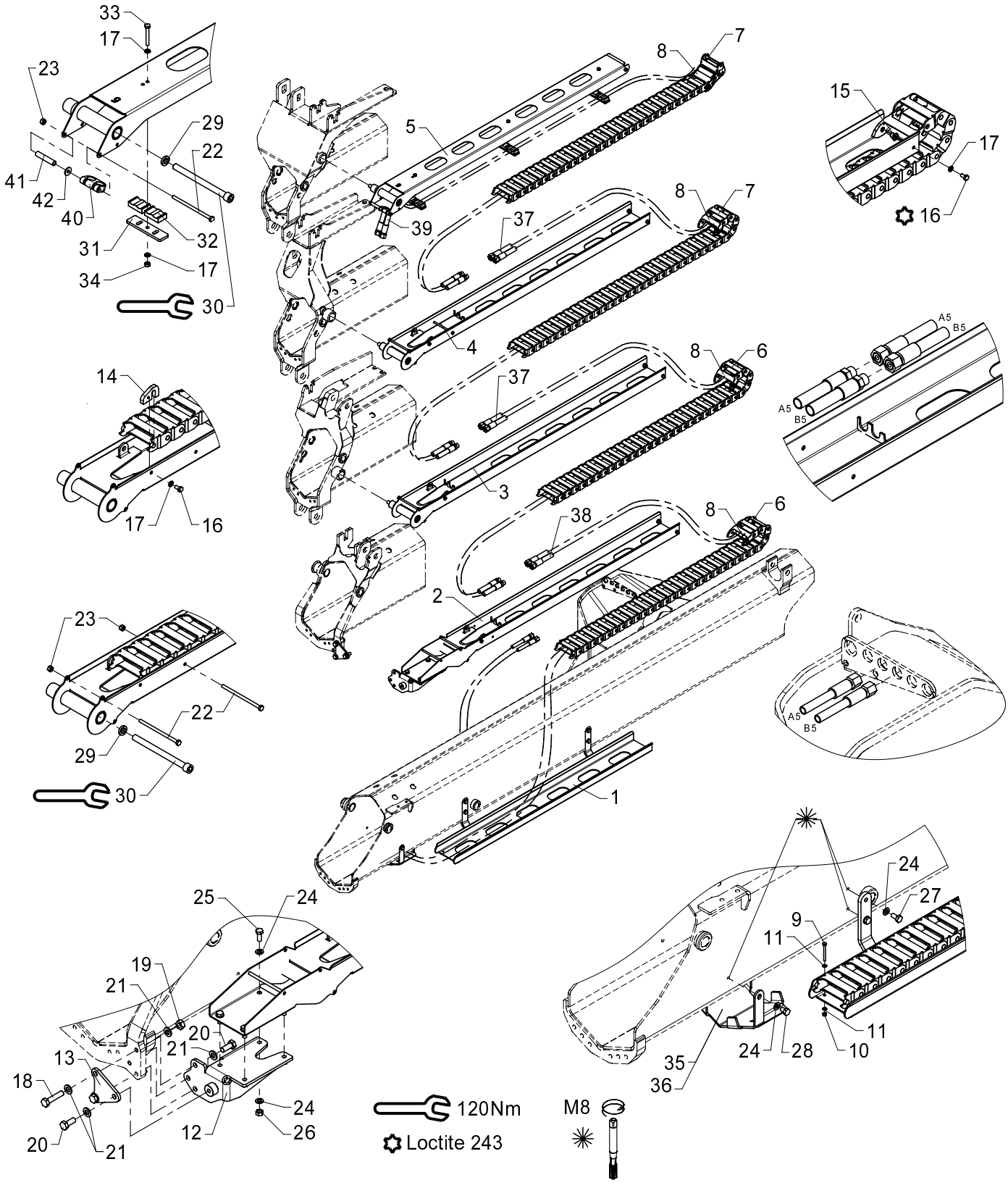

Hose guides, K4-1 EXV.

534 09 130

From loader 1060001
To loader

Created 16-03-2009
Modified 08-11-2010

Pos	Qty.	Part no.	Description	Remarks
		6342750	Hose guides, K4-1 EXV	
		6346750	Hose guides, K4-1 EXV	
1	1	6340721	Guide (jib)	
2	1	6340731	Guide (Extension I)	
3	1	6340741	Guide (Extension II)	
4	1	6340751	Guide (Extension III)	
5	1	6340758	Guide (extension K5)	
6	2	28712	Nylon drag chain, 31 links	
7	2	28713	Nylon drag chain, 34 links	
8	4	63400	End link for nylon drag chain	
9	2	30128	Set screw	M4 x 40
10	2	30857	Lock nut	M4
11	4	31188	Washer, stainless	4 mm
12	1	6340725	Mounting bracket	
13	1	6340729	Plate	
14	3	6340718	Bracket	
15	8	6340719	Nut	
16	11	30111	Set screw, stainless	M6 x 12
17	17	32302	Face washer, stainless	6 mm
18	2	30377	Set screw	M10 x 45
19	2	30858	Nut	M10
20	2	31513	Set screw, stainless	M10 x 25
21	6	31565	Washer, stainless	10 mm
22	5	30167	Steel bolt	M6 x 60
23	5	30884	Lock nut, stainless	M6
24	14	31147	Washer, stainless	8 mm
25	4	30132	Set screw, stainless	M8 x 20
26	4	30856	Nut, stainless	M8
27	4	30131	Set screw, stainless	M8 x 16
28	2	30130	Set screw, stainless	M8 x 12
29	3	6340717	Washer	
30	3	32488	Screw	MC12 x 150
31	3	6340769	Adaptor	
32	6	63561	Clamp	
33	3	30118	Steel pin, stainless	M6 x 45
34	3	30854	Nut, stainless	M6
35	1	6340299	Protective guard	Serie 1300/1500
36	1	6344299	Protective guard	Serie 1800/2200
37	4	56564	Hose	3/8 X 2900 mm L/S
38	2	56569	Hose	
39	2	56565	Hose	3/8 x 3420 mm L/S 12L

534 09 130

15/105 - 17/117 SL & DL Parts

63 46 750
Internal ref. 63 42 750

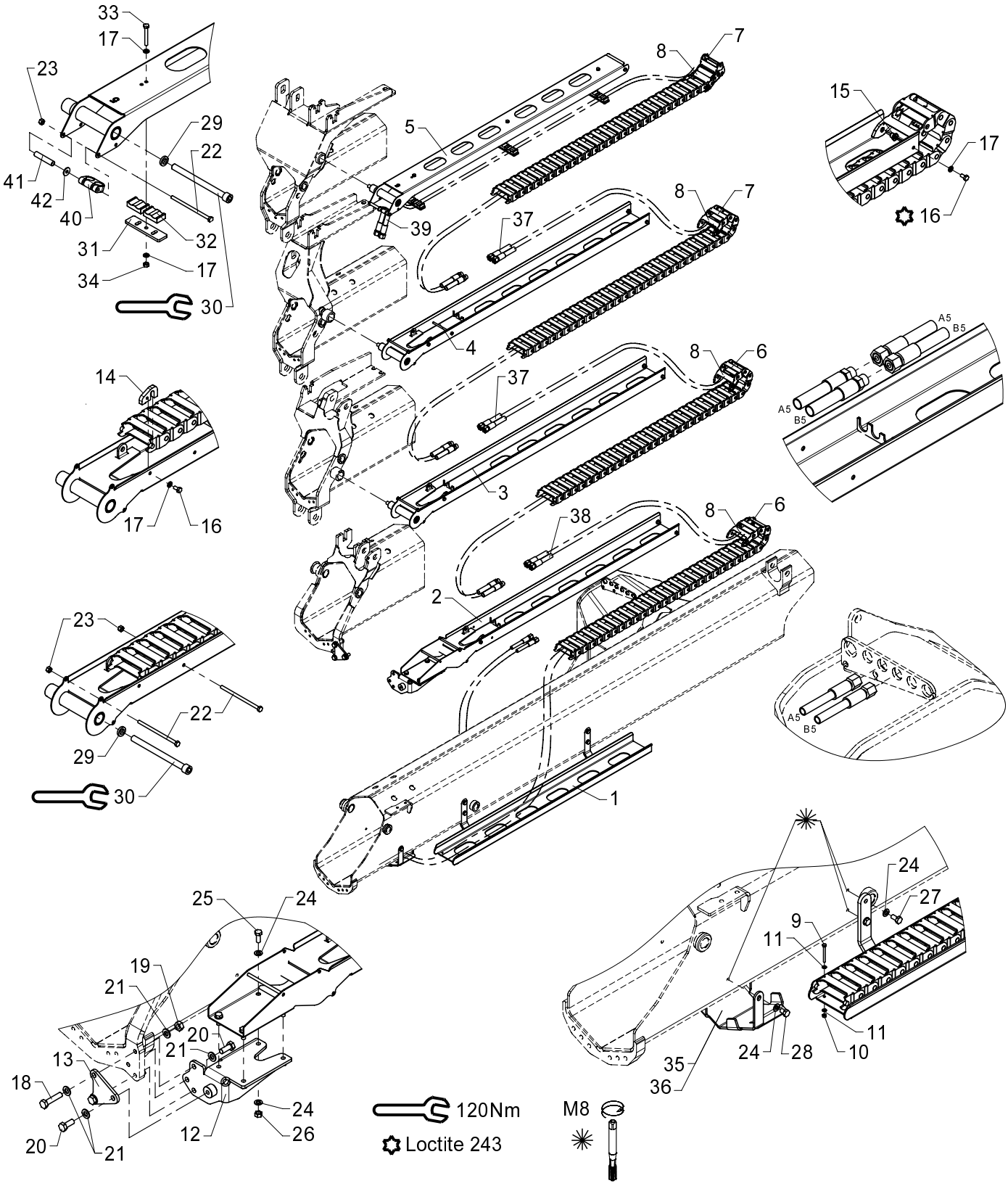

534 09 130

From loader 1060001
To loader

Created 16-03-2009
Modified 08-11-2010

Hose guides, K4-1 EXV.

Pos	Qty.	Part no.	Description	Remarks
40	1	68028		
41	1	6340724		
42	1	31134	Washer, stainless	

534 09 140

15/105 - 17/117 SL & DL Parts

63 46 760
Internal ref. 63 42 760

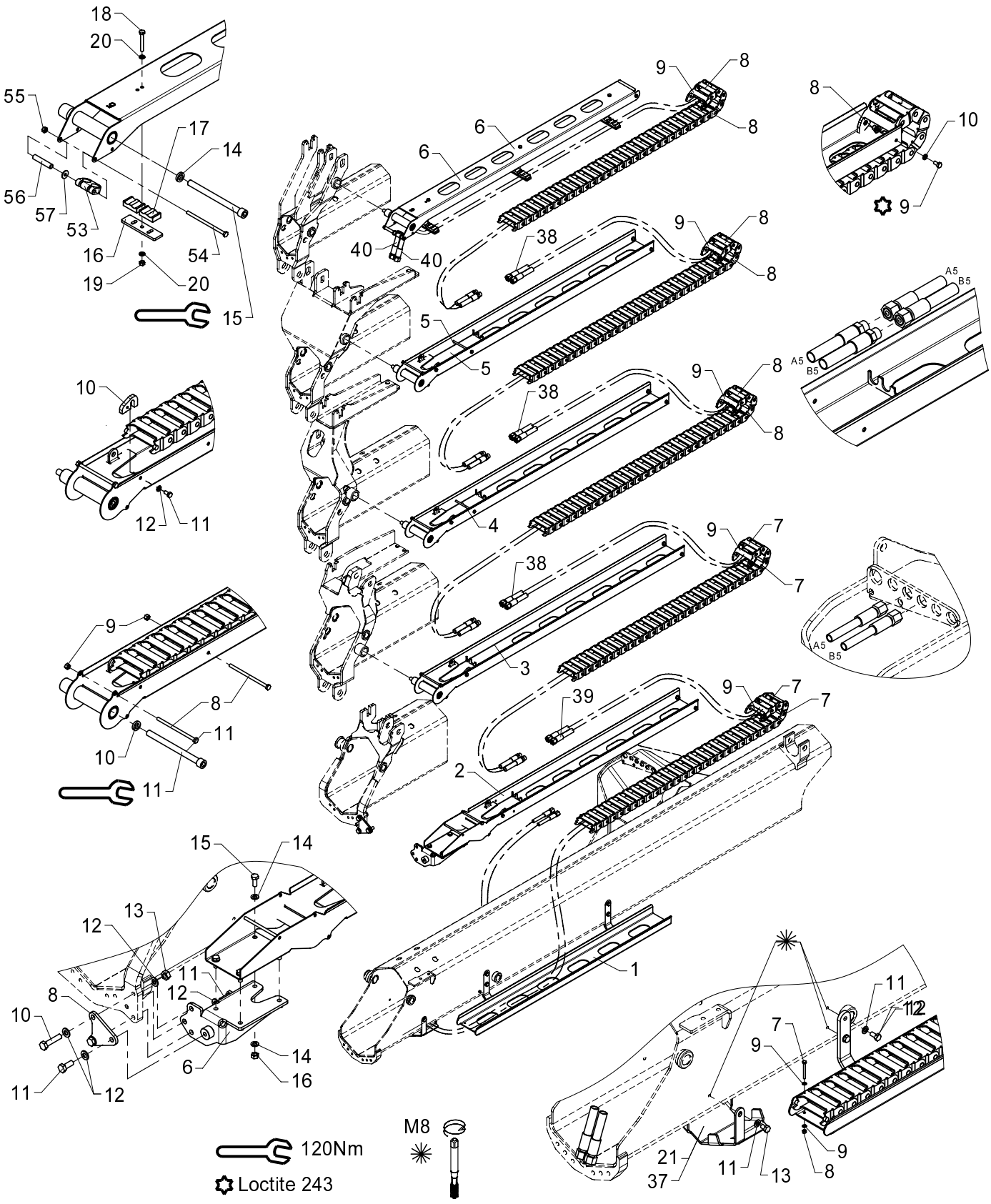

Hose guides, K5-1 EXV.

534 09 140

From loader 1060001
To loader

Created 17-03-2009
Modified 08-11-2010

Pos	Qty.	Part no.	Description	Remarks
		6342760	Hose guides, K5-1 EXV	
		6346760	Hose guides, K5-1 EXV	
1	1	6340721	Guide (jib)	
2	1	6340731	Guide (Extension I)	
3	1	6340741	Guide (Extension II)	
4	1	6340751	Guide (Extension III)	
5	1	6340755	Guide (Extension IV)	
6	1	6340758	Guide (extension K5)	
7	2	28712	Nylon drag chain, 31 links	
8	3	28713	Nylon drag chain, 34 links	
9	5	63400	End link for nylon drag chain	
10	2	30128	Set screw	M4 x 40
11	2	30857	Lock nut	M4
12	4	31188	Washer, stainless	4 mm
13	1	6340725	Mounting bracket	
14	1	6340729	Plate	
14	4	6340718	Bracket	
16	10	6340719	Nut	
17	14	30111	Set screw, stainless	M6 x 12
18	20	32302	Face washer, stainless	6 mm
19	2	30377	Set screw	M10 x 45
20	2	31513	Set screw, stainless	M10 x 25
21	6	31565	Washer, stainless	10 mm
22	2	30858	Nut	M10
23	7	30167	Steel bolt	M6 x 60
24	7	30884	Lock nut, stainless	M6
25	14	31147	Washer, stainless	8 mm
26	4	30132	Set screw, stainless	M8 x 20
27	4	30856	Nut, stainless	M8
28	4	30131	Set screw, stainless	M8 x 16
29	2	30130	Set screw, stainless	M8 x 12
30	4	6340717	Washer	
31	4	32488	Screw	MC12 x 150
32	3	6340769	Adaptor	
33	6	63561	Clamp	
34	3	30118	Steel pin, stainless	M6 x 45
35	3	30854	Nut, stainless	M6
36	1	6340299	Protective guard	Serie 1300/1500
37	1	6344299	Protective guard	Serie 1800/2200
38	6	56564	Hose	3/8 X 2900 mm L/S
39	2	56569	Hose	3/8 X 4070 mm L/L

534 09 140

15/105 - 17/117 SL & DL Parts

63 46 760
Internal ref. 63 42 760

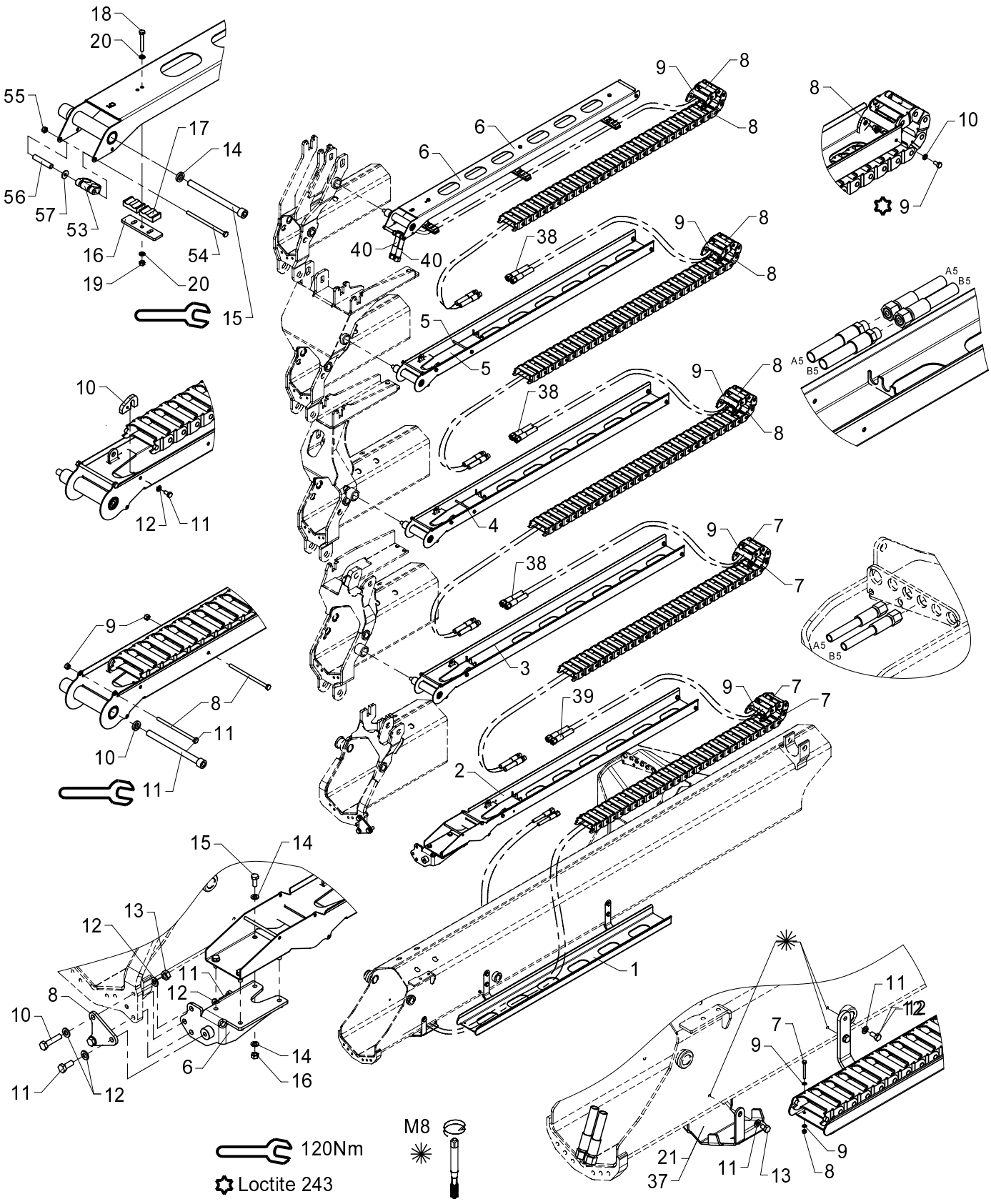

534 09 140

From loader 1060001
To loader

Created 17-03-2009
Modified 08-11-2010

Hose guides, K5-1 EXV.

Pos	Qty.	Part no.	Description	Remarks
40	2	56565	Hose	3/8 x 3420 mm L/S 12L
41	1	68028		
42	1	6340724		
43	1	31134	Washer, stainless	

534 09 150

15/105 - 17/117 SL & DL Parts

63 46 770
Internal ref. 63 42 770

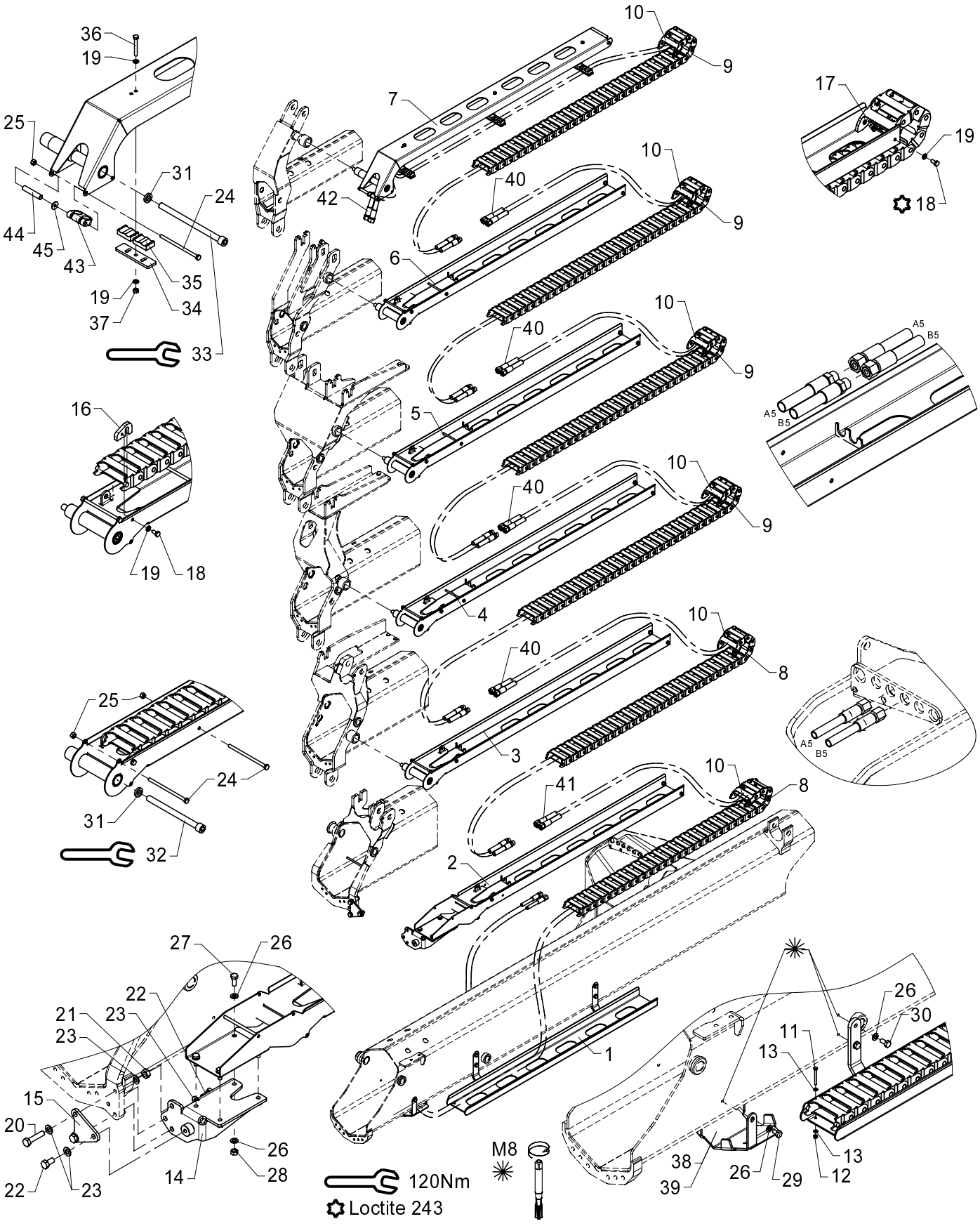

Hose guides, K6-1 EXV.

534 09 150

From loader 1060001
To loader

Created 17-03-2009
Modified 09-11-2010

Pos	Qty.	Part no.	Description	Remarks
		6342770	Hose guides, K6-1 EXV	
		6346770	Hose guides, K6-1 EXV	
1	1	6340721	Guide (jib)	
2	1	6340731	Guide (Extension I)	
3	1	6340741	Guide (Extension II)	
4	1	6340751	Guide (Extension III)	
5	1	6340755	Guide (Extension IV)	
6	1	6340761	Guide (Extension V)	
7	1	6340765	Guide (Extension VI)	
8	2	28712	Nylon drag chain, 31 links	
9	4	28713	Nylon drag chain, 34 links	
10	6	63400	End link for nylon drag chain	
11	2	30128	Set screw	M4 x 40
12	2	30857	Lock nut	M4
13	4	31188	Washer, stainless	4 mm
14	1	6340725	Mounting bracket	
15	1	6340729	Plate	
16	5	6340718	Bracket	
17	12	6340719	Nut	
18	17	30111	Set screw, stainless	M6 x 12
19	23	32302	Face washer, stainless	6 mm
20	2	30377	Set screw	M10 x 45
21	2	30858	Nut	M10
22	2	31517	Set screw, stainless	M10 x 20
23	6	31565	Washer, stainless	10 mm
24	9	30167	Steel bolt	M6 x 60
25	9	30884	Lock nut, stainless	M6
26	14	31147	Washer, stainless	8 mm
27	4	30132	Set screw, stainless	M8 x 20
28	4	30856	Nut, stainless	M8
29	2	30130	Set screw, stainless	M8 x 12
30	4	30131	Set screw, stainless	M8 x 16
31	5	6340717	Washer	
32	4	32488	Screw	MC12 x 150
33	1	32489	Screw	MC12 x 180
34	3	6340769	Adaptor	
35	6	63561	Clamp	
36	3	30118	Steel pin, stainless	M6 x 45
37	3	30854	Nut, stainless	M6
38	1	6340299	Protective guard	Serie 1300/1500
39	1	6344299	Protective guard	Serie 1800/2200

534 09 150

15/105 - 17/117 SL & DL Parts

63 46 770
Internal ref. 63 42 770

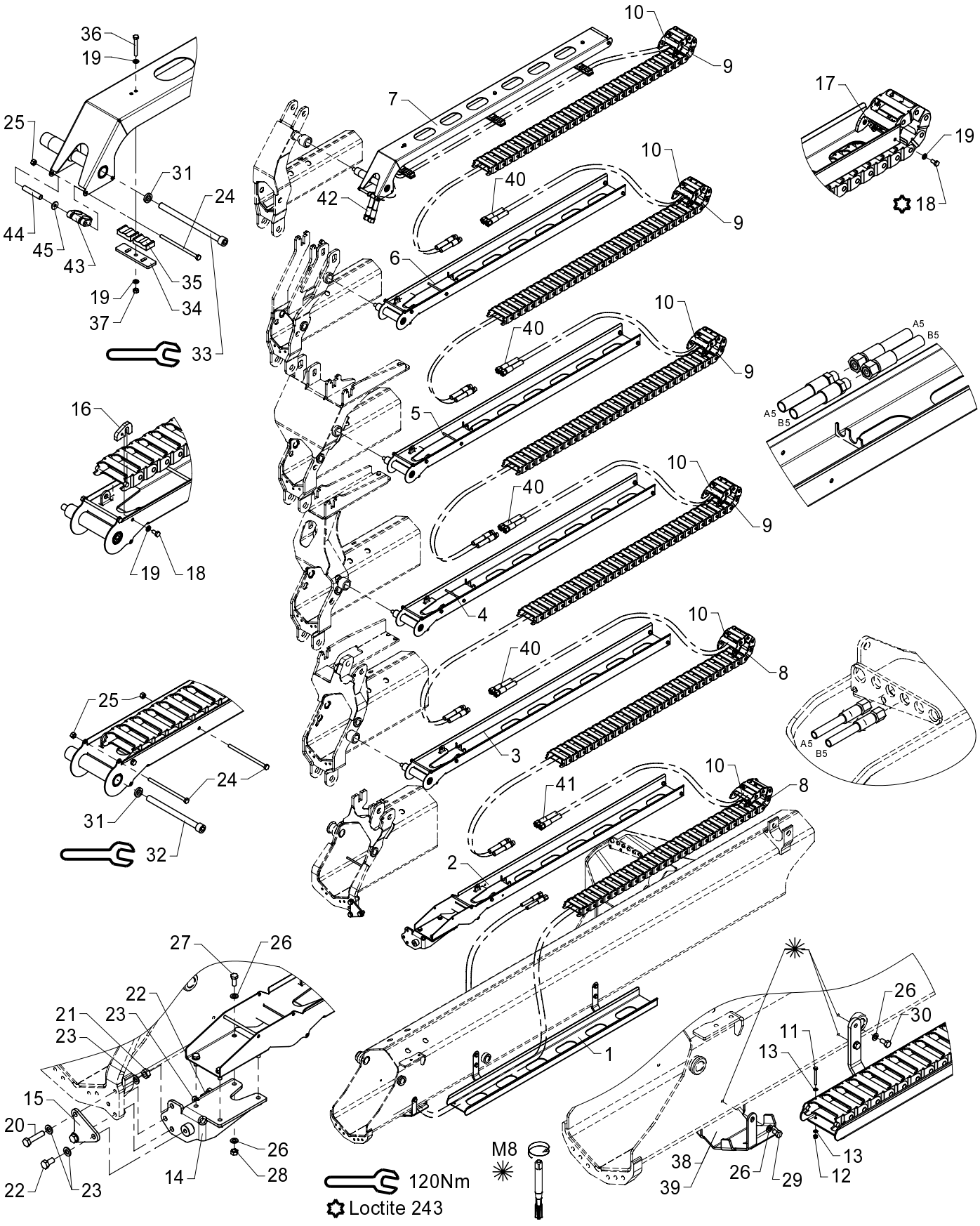

534 09 150

From loader 1060001
To loader

Hose guides, K6-1 EXV.

Created 17-03-2009
Modified 09-11-2010

Pos	Qty.	Part no.	Description	Remarks
40	8	56564	Hose	3/8 X 2900 mm L/S
41	2	56569	Hose	3/8 X 4070 mm L/L
42	2	56565	Hose	3/8 x 3420 mm L/S 12L
43	1	68028		
44	1	6340724		
45	1	31134	Washer, stainless	

15/105 - 17/117 SL & DL Parts

Internal ref. 63 40 720

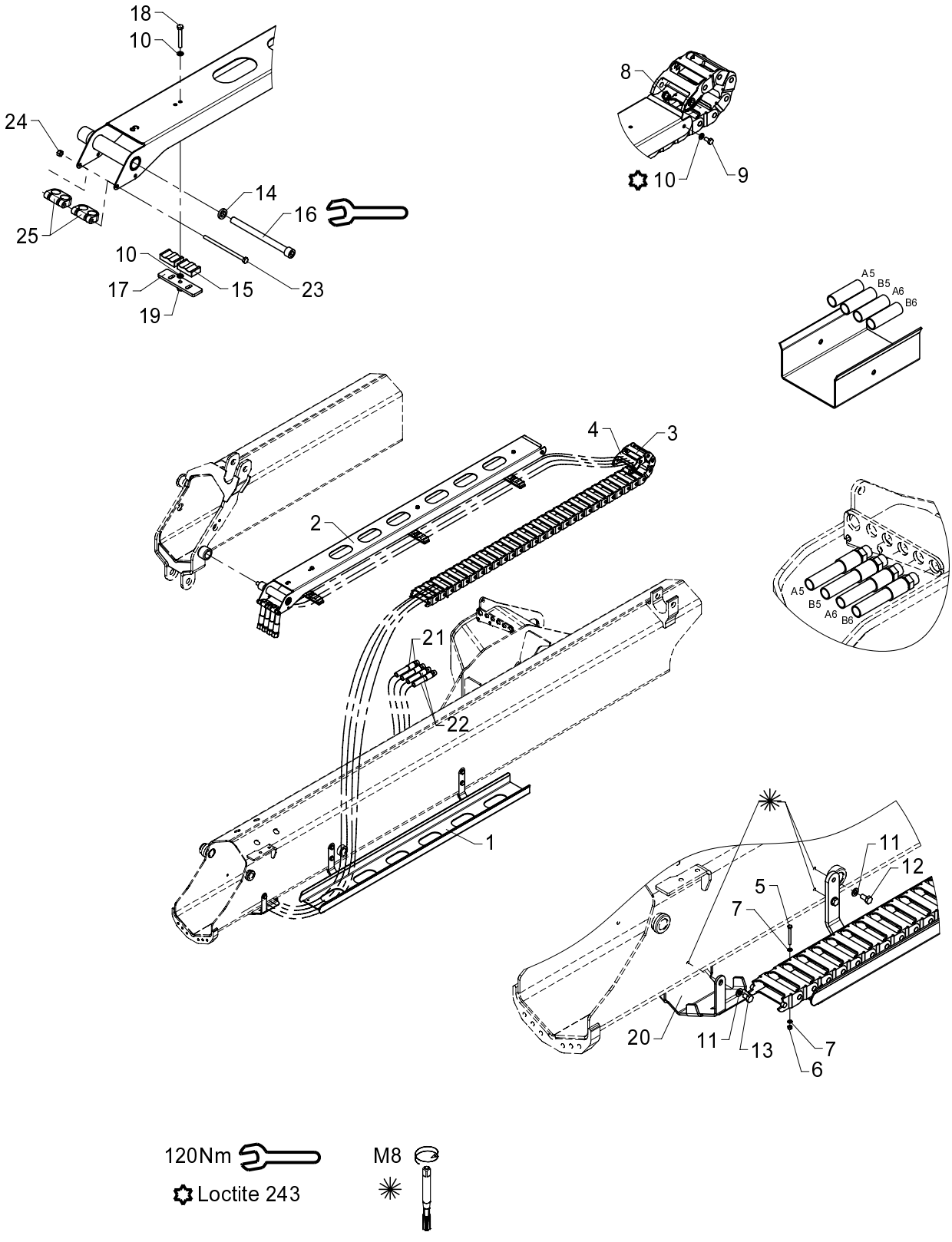

534 09 200

From loader 1060001
To loader

Created 17-03-2009
Modified 12-11-2010

Hose guides, K1-2 EXV.

Pos	Qty.	Part no.	Description	Remarks
1	1	6340721	Guide (jib)	
2	1	6340748	Guide (extension K3)	
3	1	28713	Nylon drag chain, 34 links	
4	1	63400	End link for nylon drag chain	
5	2	30128	Set screw	M4 x 40
6	2	30857	Lock nut	M4
7	4	31188	Washer, stainless	4 mm
8	2	6340719	Nut	
9	2	30111	Set screw, stainless	M6 x 12
10	8	32302	Face washer, stainless	6 mm
11	6	31147	Washer, stainless	8 mm
12	4	30131	Set screw, stainless	M8 x 16
13	2	30130	Set screw, stainless	M8 x 12
14	1	6340717	Washer	
15	6	63561	Clamp	
16	1	32488	Screw	MC12 x 150
17	3	6340769	Adaptor	
18	3	30118	Steel pin, stainless	M6 x 45
19	3	30854	Nut, stainless	M6
20	1	6340299	Protective guard	Serie 1300/1500
21	2	56566	Hose	3/8 X 4690 mm L/L
22	2	56567	Hose	3/8 X 4790 mm L/L
23	1	30167	Steel bolt	M6 x 60
24	1	30884	Lock nut, stainless	M6
25	2	68028		

534 09 210

15/105 - 17/117 SL & DL Parts

63 45 730
Internal ref. 63 40 730

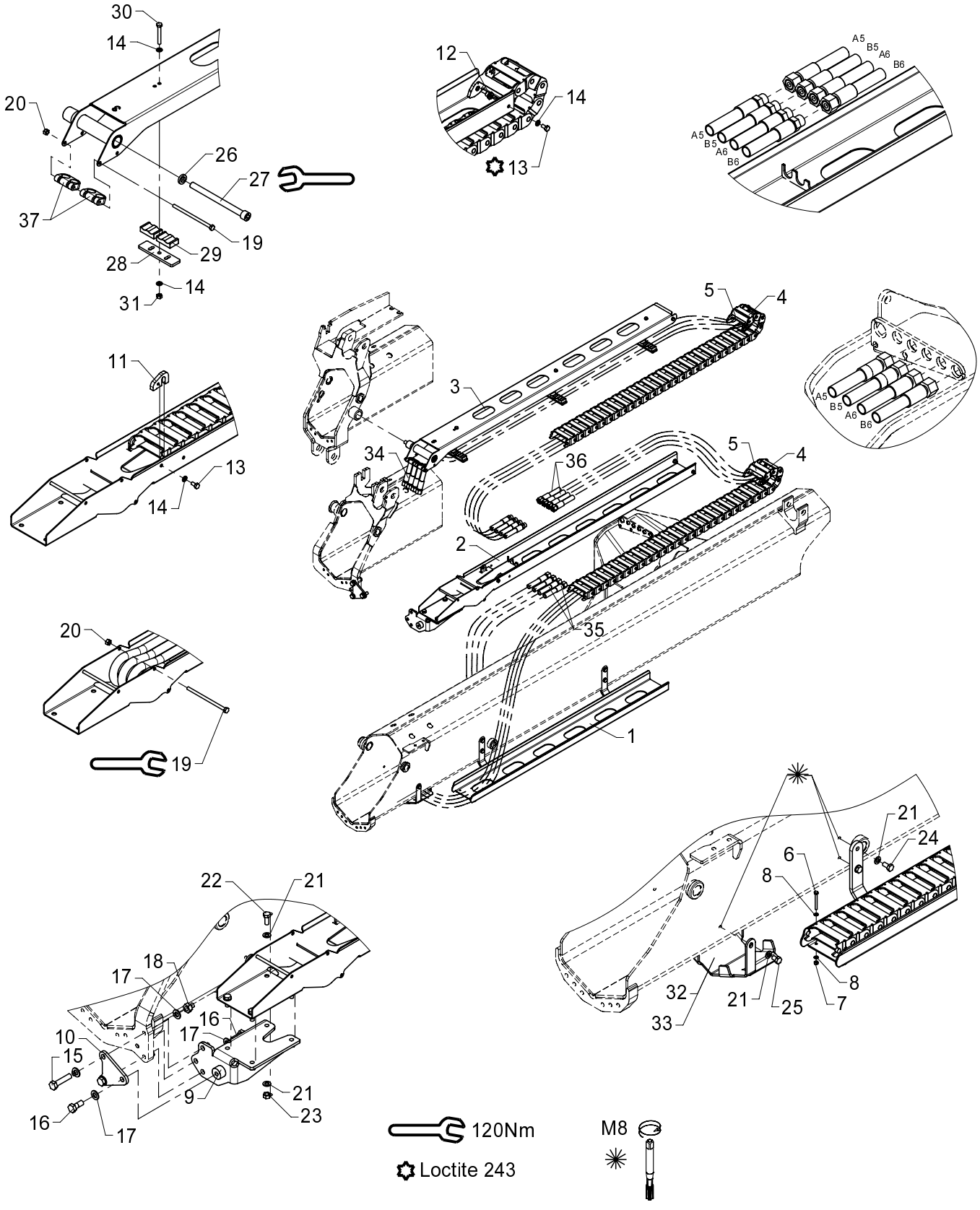

Hose guides, K2-2 EXV.

534 09 210

From loader 1060001
To loader

Created 17-03-2009
Modified 15-11-2010

Pos	Qty.	Part no.	Description	Remarks
		6340730	Hose guide, K2-1 EXV	
		6345730	Hose guide, K2-2 EXV	
1	1	6340721	Guide (jib)	
2	1	6340731	Guide (Extension I)	
3	1	6340748	Guide (extension K3)	
4	2	28712	Nylon drag chain, 31 links	
5	2	63400	End link for nylon drag chain	
6	2	30128	Set screw	M4 x 40
7	2	30857	Lock nut	M4
8	4	31188	Washer, stainless	4 mm
9	1	6340725	Mounting bracket	
10	1	6340729	Plate	
11	1	6340718	Bracket	
12	4	6340719	Nut	
13	5	30111	Set screw, stainless	M6 x 12
14	11	32302	Face washer, stainless	6 mm
15	2	30377	Set screw	M10 x 45
16	2	31513	Set screw, stainless	M10 x 25
17	6	31565	Washer, stainless	10 mm
18	2	30858	Nut	M10
19	2	30167	Steel bolt	M6 x 60
20	2	30884	Lock nut, stainless	M6
21	14	31147	Washer, stainless	8 mm
22	4	30132	Set screw, stainless	M8 x 20
23	4	30856	Nut, stainless	M8
24	4	30131	Set screw, stainless	M8 x 16
25	2	30130	Set screw, stainless	M8 x 12
26	1	6340717	Washer	
27	1	32488	Screw	MC12 x 150
28	3	6340769	Adaptor	
29	6	63561	Clamp	
30	3	30118	Steel pin, stainless	M6 x 45
31	3	30854	Nut, stainless	M6
32	1	6340299	Protective guard	Serie 1300/1500
33	1	6344299	Protective guard	Serie 1800/2200
34	4	56568	Hose	
35	2	56563	Hose	3/8 X 4170 mm L/L
36	2	56569	Hose	
37	2	68028		

15/105 - 17/117 SL & DL Parts

63 45 740
Internal ref. 63 40 740

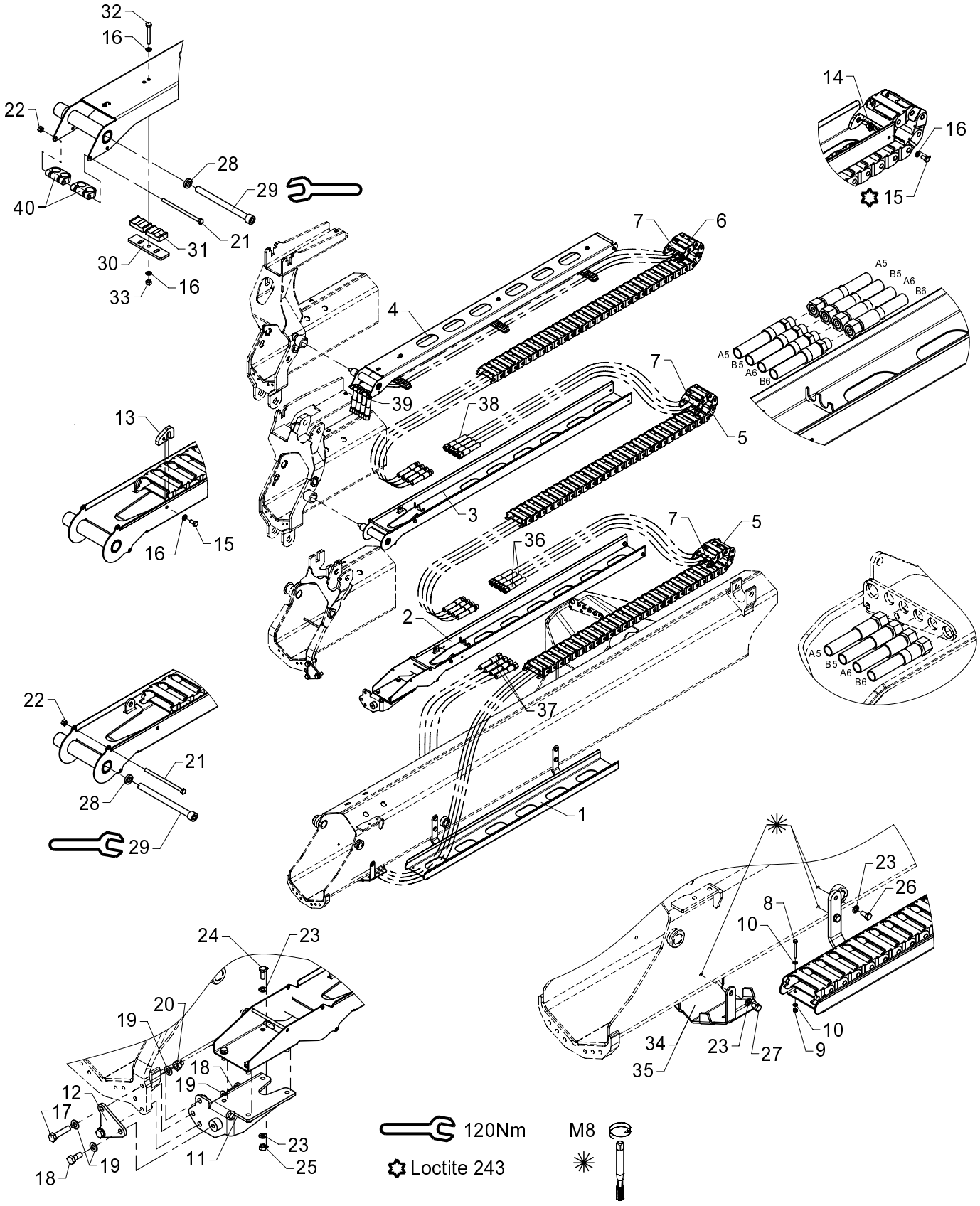

Hose guides, K3-2 EXV.

534 09 220

From loader 1060001
To loader

Created 17-03-2009
Modified 15-11-2010

Pos	Qty.	Part no.	Description	Remarks
		6340740	Hose guide, K3-2 EXV	
		6345740	Hose guides, K3-2 EXV	
1	1	6340721	Guide (jib)	
2	1	6340731	Guide (Extension I)	
3	1	6340741	Guide (Extension II)	
4	1	6340748	Guide (extension K3)	
5	2	28712	Nylon drag chain, 31 links	
6	1	28713	Nylon drag chain, 34 links	
7	3	63400	End link for nylon drag chain	
8	2	30128	Set screw	M4 x 40
9	2	30857	Lock nut	M4
10	4	31188	Washer, stainless	4 mm
11	1	6340725	Mounting bracket	
12	1	6340729	Plate	
13	2	6340718	Bracket	
14	6	6340719	Nut	
15	8	30111	Set screw, stainless	M6 x 12
16	14	32302	Face washer, stainless	6 mm
17	2	30377	Set screw	M10 x 45
18	2	31513	Set screw, stainless	M10 x 25
19	6	31565	Washer, stainless	10 mm
20	2	30858	Nut	M10
21	3	30167	Steel bolt	M6 x 60
22	3	30884	Lock nut, stainless	M6
23	14	31147	Washer, stainless	8 mm
24	4	30132	Set screw, stainless	M8 x 20
25	4	30856	Nut, stainless	M8
26	4	30131	Set screw, stainless	M8 x 16
27	2	30130	Set screw, stainless	M8 x 12
28	2	6340717	Washer	
29	2	32488	Screw	MC12 x 150
30	3	6340769	Adaptor	
31	6	63561	Clamp	
32	3	30118	Steel pin, stainless	M6 x 45
33	3	30854	Nut, stainless	M6
34	1	6340299	Protective guard	Serie 1300/1500
35	1	6344299	Protective guard	Serie 1800/2200
36	2	56569	Hose	
37	2	56563	Hose	3/8 X 4170 mm L/L
38	4	56564	Hose	3/8 X 2900 mm L/S
39	4	56565	Hose	3/8 x 3420 mm L/S 12L

15/105 - 17/117 SL & DL Parts

63 45 740
Internal ref. 63 40 740

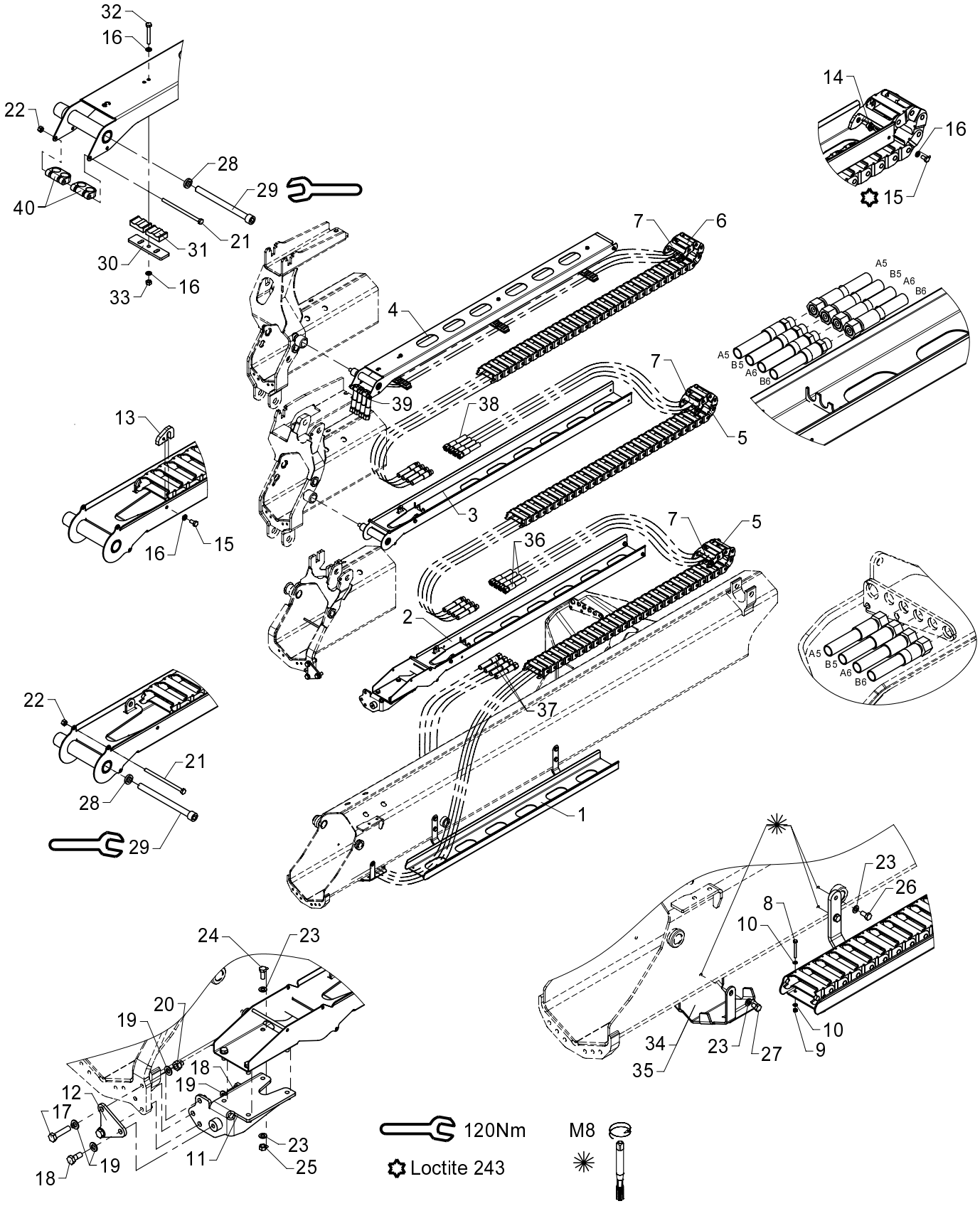

534 09 220

From loader 1060001
To loader

Created 17-03-2009
Modified 15-11-2010

Hose guides, K3-2 EXV.

Pos	Qty.	Part no.	Description	Remarks
40	2	68028		

15/105 - 17/117 SL & DL Parts

63 45 750
Internal ref. 63 40 750

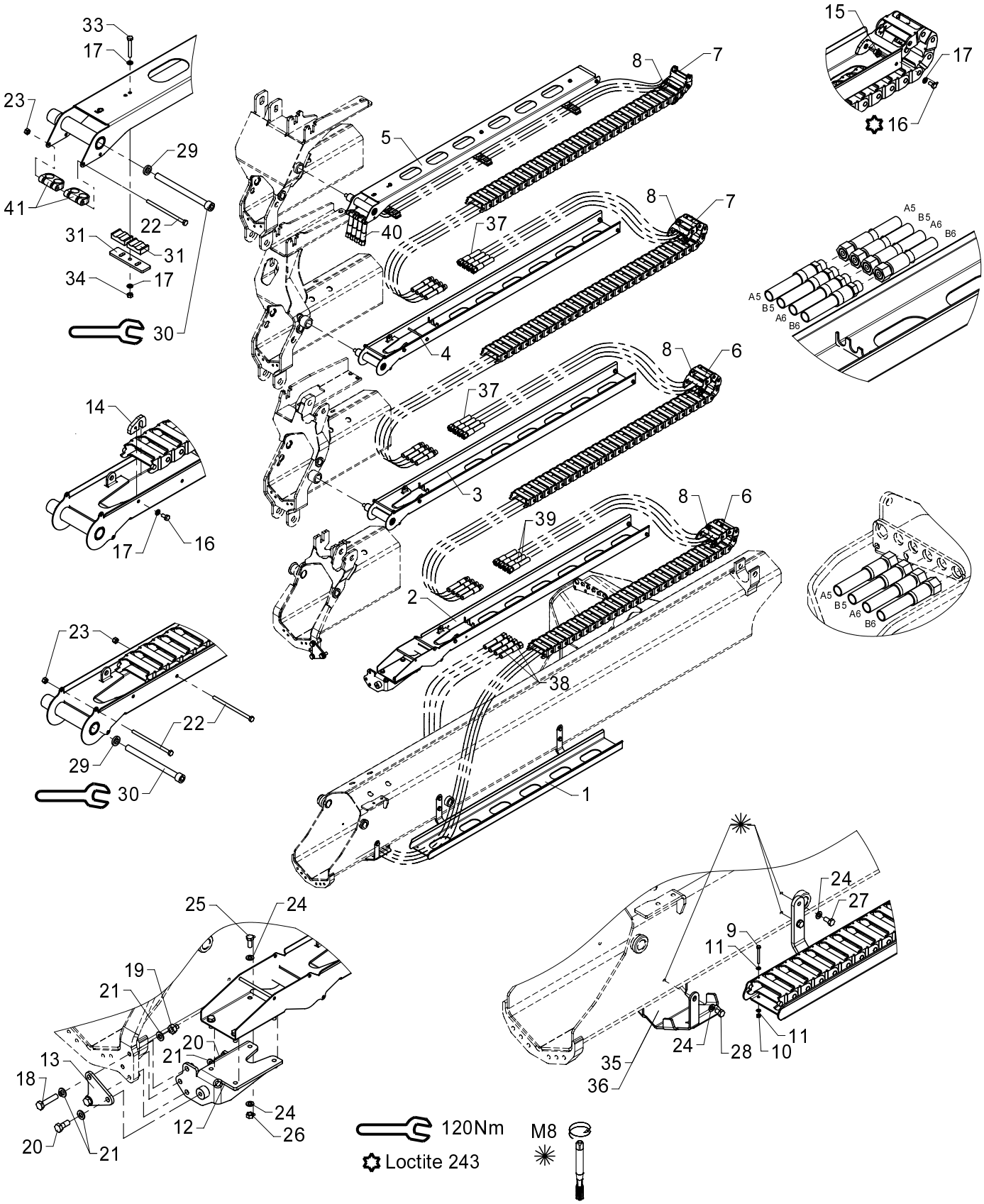

Hose guides, K4-2 EXV.

534 09 230

From loader 1060001
To loader

Created 17-03-2009
Modified 16-11-2010

Pos	Qty.	Part no.	Description	Remarks
		6340750	Hose guides, K4-2 EXV	
		6345750	Hose guides, K4-2 EXV	
1	1	6340721	Guide (jib)	
2	1	6340731	Guide (Extension I)	
3	1	6340741	Guide (Extension II)	
4	1	6340751	Guide (Extension III)	
5	1	6340758	Guide (extension K5)	
6	2	28712	Nylon drag chain, 31 links	
7	2	28713	Nylon drag chain, 34 links	
8	4	63400	End link for nylon drag chain	
9	2	30128	Set screw	M4 x 40
10	2	30857	Lock nut	M4
11	4	31188	Washer, stainless	4 mm
12	1	6340725	Mounting bracket	
13	1	6340729	Plate	
14	3	6340718	Bracket	
15	8	6340719	Nut	
16	11	30111	Set screw, stainless	M6 x 12
17	17	32302	Face washer, stainless	6 mm
18	2	30377	Set screw	M10 x 45
19	2	30858	Nut	M10
20	2	31513	Set screw, stainless	M10 x 25
21	6	31565	Washer, stainless	10 mm
22	5	30167	Steel bolt	M6 x 60
23	5	30884	Lock nut, stainless	M6
24	14	31147	Washer, stainless	8 mm
25	4	30132	Set screw, stainless	M8 x 20
26	4	30856	Nut, stainless	M8
27	4	30131	Set screw, stainless	M8 x 16
28	2	30130	Set screw, stainless	M8 x 12
29	3	6340717	Washer	
30	3	32488	Screw	MC12 x 150
31	3	6340769	Adaptor	
31	6	63561	Clamp	
33	3	30118	Steel pin, stainless	M6 x 45
34	3	30854	Nut, stainless	M6
35	1	6340299	Protective guard	Serie 1300/1500
36	1	6344299	Protective guard	Serie 1800/2200
37	8	56564	Hose	3/8 X 2900 mm L/S
38	2	56563	Hose	3/8 X 4170 mm L/L
39	2	56569	Hose	

15/105 - 17/117 SL & DL Parts

63 45 750
Internal ref. 63 40 750

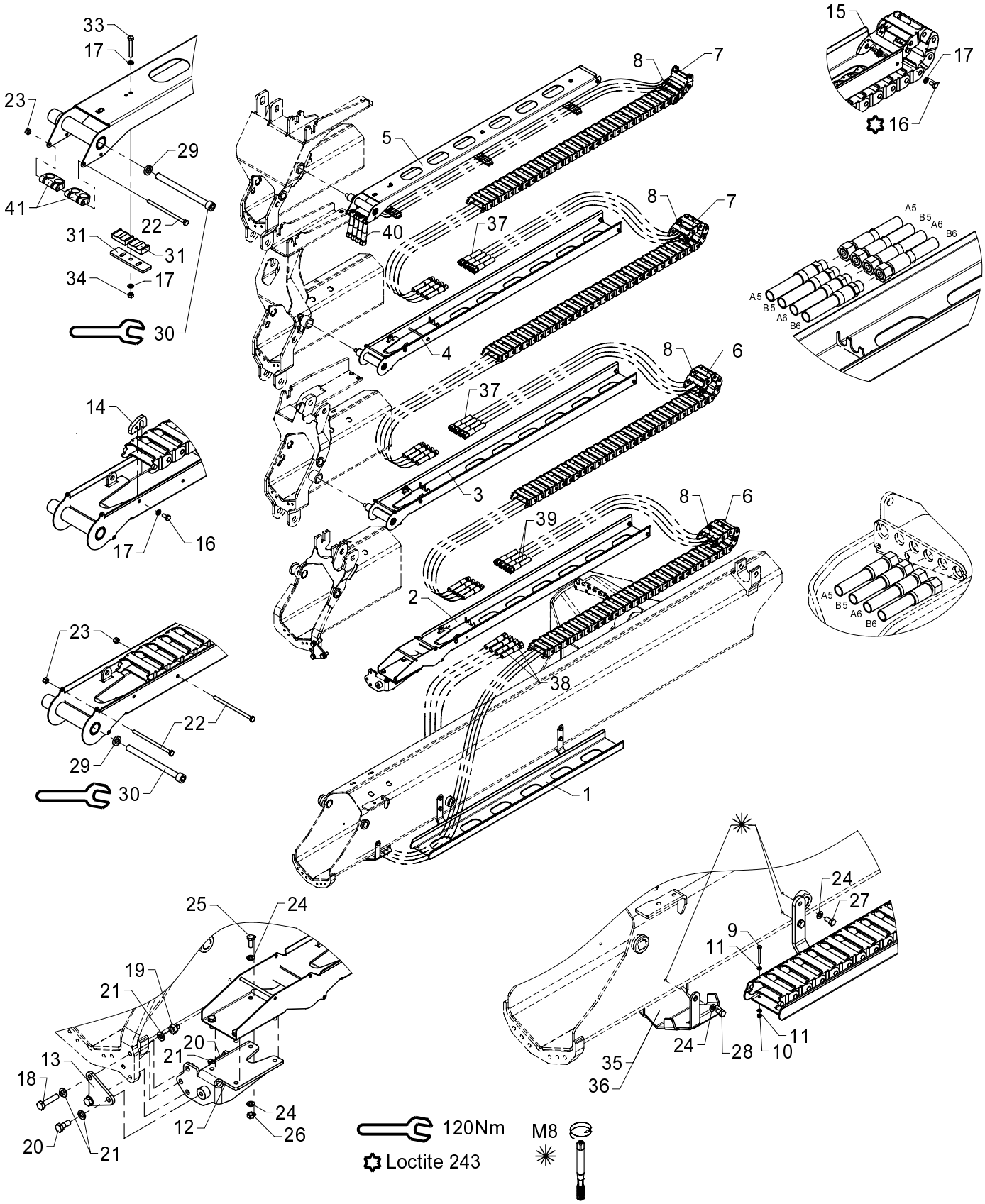

534 09 230

From loader 1060001
To loader

Created 17-03-2009
Modified 16-11-2010

Hose guides, K4-2 EXV.

Pos	Qty.	Part no.	Description	Remarks
40	4	56565	Hose	3/8 x 3420 mm L/S 12L
41	2	68028		

534 09 240

15/105 - 17/117 SL & DL Parts

63 45 760
Internal ref. 63 40 760

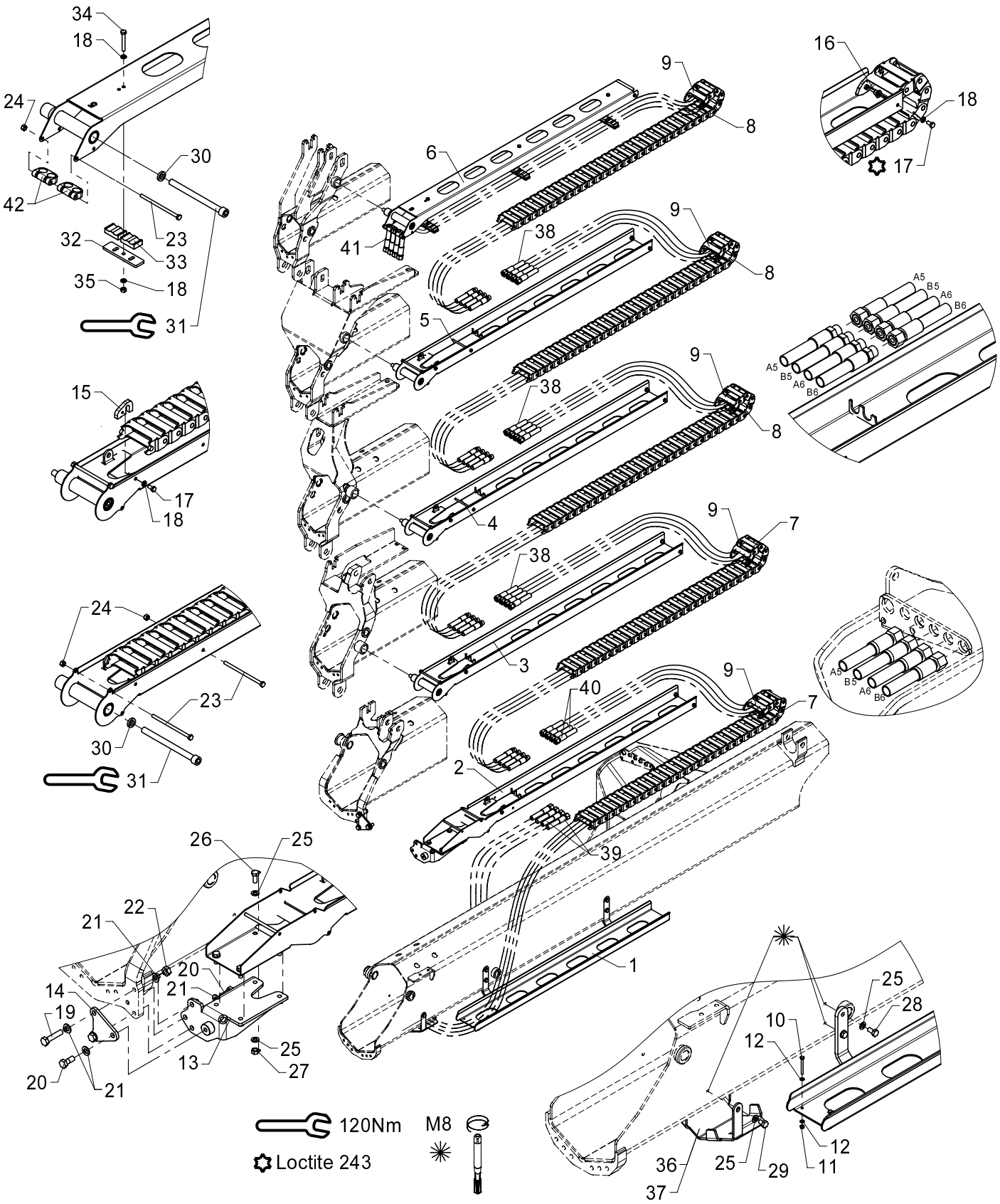

Hose guides, K5-2 EXV.

534 09 240

From loader 1060001
To loader

Created 19-03-2009
Modified 17-11-2010

Pos	Qty.	Part no.	Description	Remarks
		6340760	Hose guides, K5-2 EXV	
		6345760	Hose guides, K5-2 EXV	
1	1	6340721	Guide (jib)	
2	1	6340731	Guide (Extension I)	
3	1	6340741	Guide (Extension II)	
4	1	6340751	Guide (Extension III)	
5	1	6340755	Guide (Extension IV)	
6	1	6340758	Guide (extension K5)	
7	2	28712	Nylon drag chain, 31 links	
8	3	28713	Nylon drag chain, 34 links	
9	5	63400	End link for nylon drag chain	
10	2	30128	Set screw	M4 x 40
11	2	30857	Lock nut	M4
12	4	31188	Washer, stainless	4 mm
13	1	6340725	Mounting bracket	
14	1	6340729	Plate	
15	4	6340718	Bracket	
16	10	6340719	Nut	
17	14	30111	Set screw, stainless	M6 x 12
18	20	32302	Face washer, stainless	6 mm
19	2	30377	Set screw	M10 x 45
20	2	31513	Set screw, stainless	M10 x 25
21	6	31565	Washer, stainless	10 mm
22	2	30858	Nut	M10
23	7	30167	Steel bolt	M6 x 60
24	7	30884	Lock nut, stainless	M6
25	14	31147	Washer, stainless	8 mm
26	4	30132	Set screw, stainless	M8 x 20
27	4	30856	Nut, stainless	M8
28	4	30131	Set screw, stainless	M8 x 16
29	2	30130	Set screw, stainless	M8 x 12
30	4	6340717	Washer	
31	4	32488	Screw	MC12 x 150
32	3	6340769	Adaptor	
33	6	63561	Clamp	
34	3	30118	Steel pin, stainless	M6 x 45
35	3	30854	Nut, stainless	M6
36	1	6340299	Protective guard	Serie 1300/1500
37	1	6344299	Protective guard	Serie 1800/2200
38	12	56564	Hose	3/8 X 2900 mm L/S
39	2	56563	Hose	3/8 X 4170 mm L/L

534 09 240

15/105 - 17/117 SL & DL Parts

63 45 760
Internal ref. 63 40 760

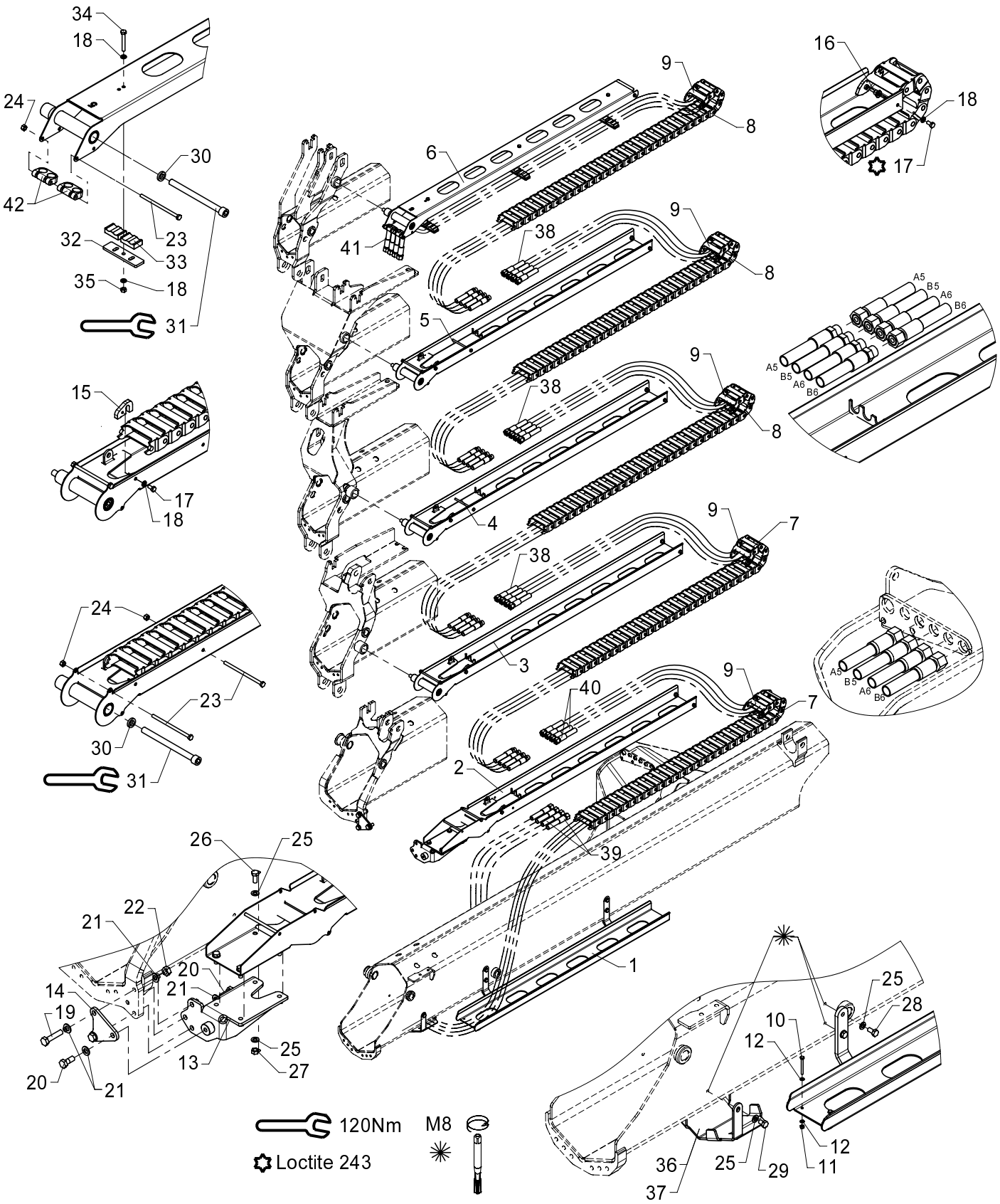

534 09 240

From loader 1060001
To loader

Created 19-03-2009
Modified 17-11-2010

Hose guides, K5-2 EXV.

Pos	Qty.	Part no.	Description	Remarks
40	2	56569	Hose	
41	4	56565	Hose	3/8 x 3420 mm L/S 12L
42	2	68028		

534 09 250

15/105 - 17/117 SL & DL Parts

63 45 770
Internal ref. 63 40 770

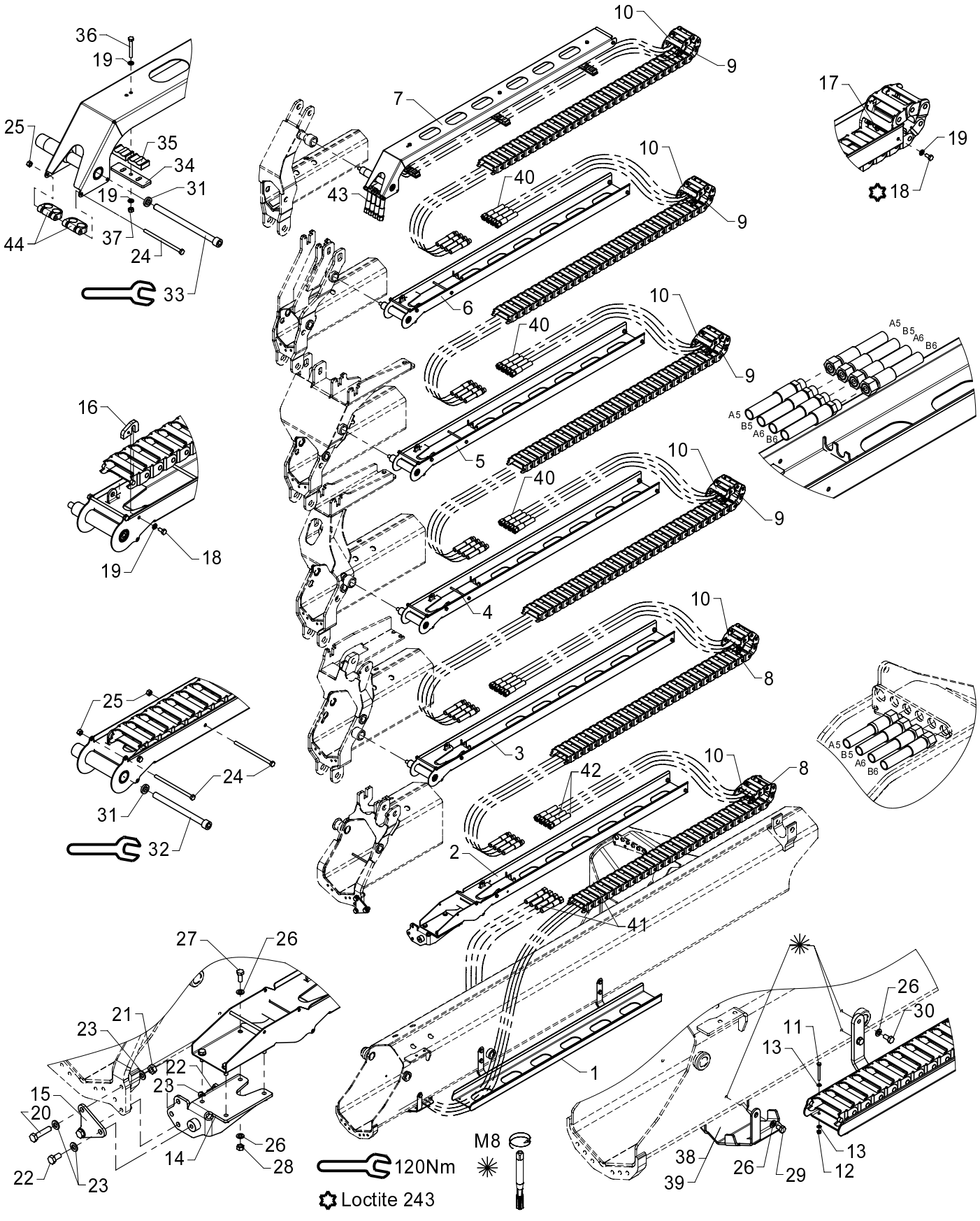

534 09 250

From loader 1060001
To loader

Created 19-03-2009
Modified 17-11-2010

Hose guides, K6-2 EXV.

Pos	Qty.	Part no.	Description	Remarks
		6340770	Hose guides, K6-2 EXV	
		6345770	Hose guides, K6-2 EXV	
1	1	6340721	Guide (jib)	
2	1	6340731	Guide (Extension I)	
3	1	6340741	Guide (Extension II)	
4	1	6340751	Guide (Extension III)	
5	1	6340755	Guide (Extension IV)	
6	1	6340761	Guide (Extension V)	
7	1	6340765	Guide (Extension VI)	
8	2	28712	Nylon drag chain, 31 links	
9	4	28713	Nylon drag chain, 34 links	
10	6	63400	End link for nylon drag chain	
11	2	30128	Set screw	M4 x 40
12	2	30857	Lock nut	M4
13	4	31188	Washer, stainless	4 mm
14	1	6340725	Mounting bracket	
15	1	6340729	Plate	
16	5	6340718	Bracket	
17	12	6340719	Nut	
18	17	30111	Set screw, stainless	M6 x 12
19	23	32302	Face washer, stainless	6 mm
20	2	30377	Set screw	M10 x 45
21	2	30858	Nut	M10
22	2	31517	Set screw, stainless	M10 x 20
23	6	31565	Washer, stainless	10 mm
24	9	30167	Steel bolt	M6 x 60
25	9	30884	Lock nut, stainless	M6
26	14	31147	Washer, stainless	8 mm
27	4	30132	Set screw, stainless	M8 x 20
28	4	30856	Nut, stainless	M8
29	2	30130	Set screw, stainless	M8 x 12
30	4	30131	Set screw, stainless	M8 x 16
31	5	6340717	Washer	
32	4	32488	Screw	MC12 x 150
33	1	32489	Screw	MC12 x 180
34	3	6340769	Adaptor	
35	6	63561	Clamp	
36	3	30118	Steel pin, stainless	M6 x 45
37	3	30854	Nut, stainless	M6
38	1	6340299	Protective guard	Serie 1300/1500
39	1	6344299	Protective guard	Serie 1800/2200

534 09 250

15/105 - 17/117 SL & DL Parts

63 45 770
Internal ref. 63 40 770

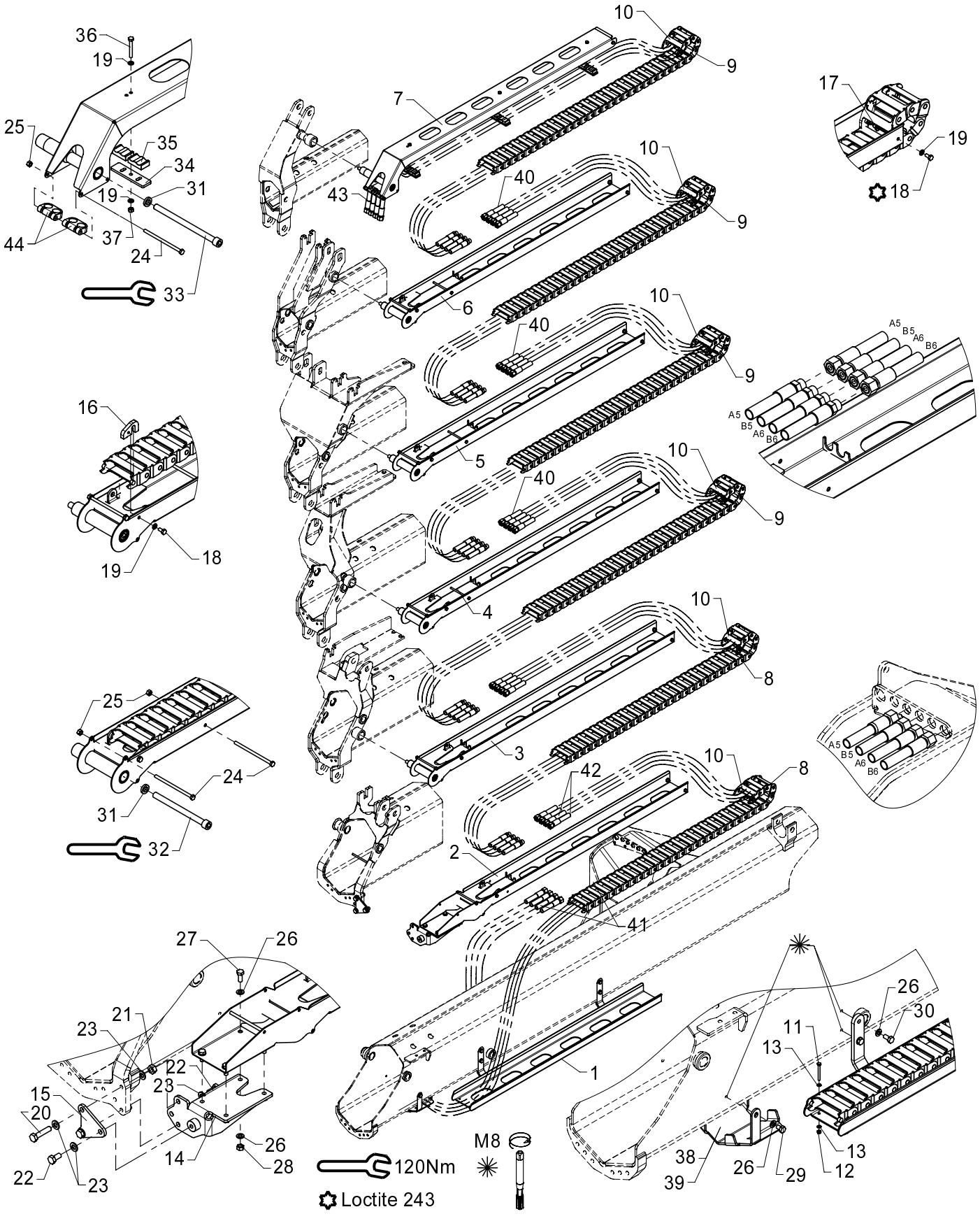

534 09 250

From loader 1060001
To loader

Created 19-03-2009
Modified 17-11-2010

Hose guides, K6-2 EXV.

Pos	Qty.	Part no.	Description	Remarks
40	16	56564	Hose	3/8 X 2900 mm L/S
41	2	56563	Hose	3/8 X 4170 mm L/L
42	2	56569	Hose	
43	4	56565	Hose	3/8 x 3420 mm L/S 12L
44	2	68028		

15/105 - 17/117 SL & DL Parts

Internal ref. 63 40 900

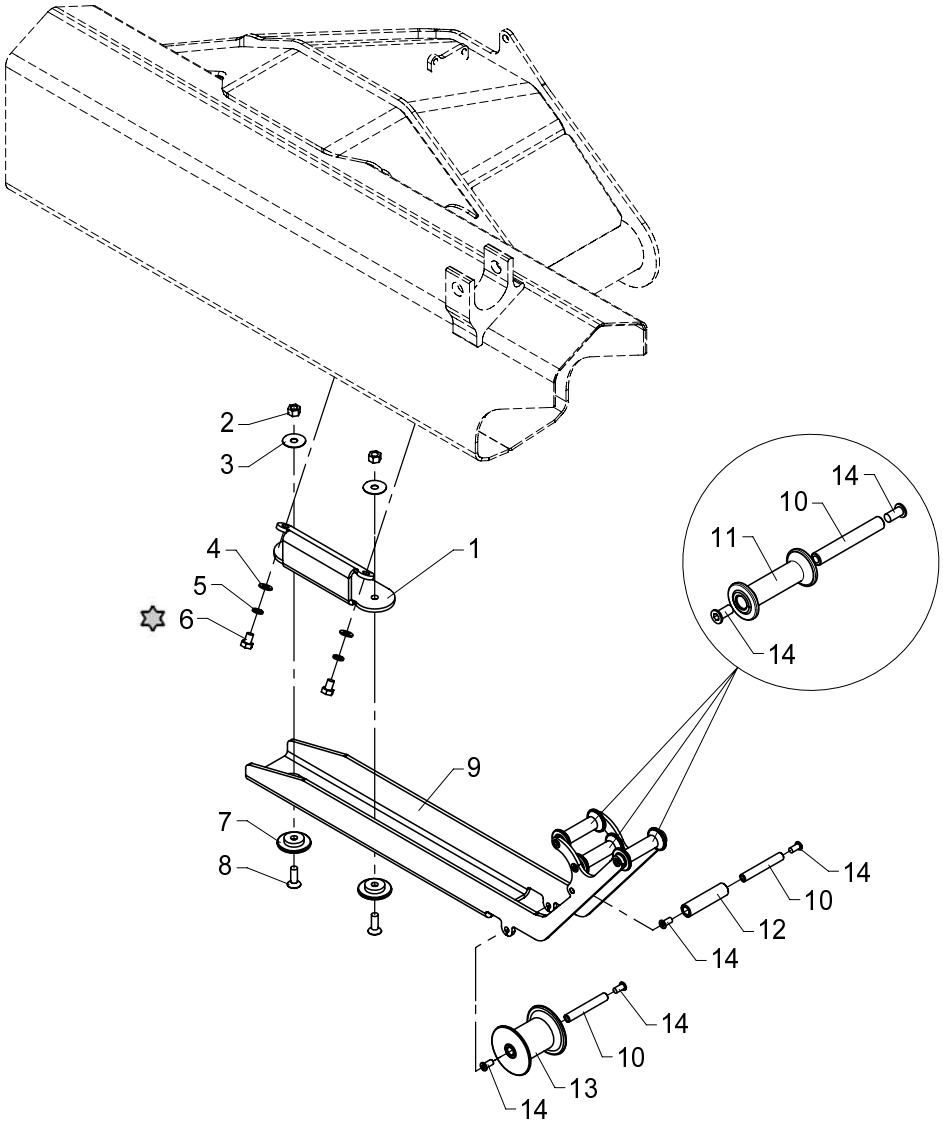

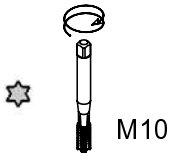

Bracket for hose reel, cpl. (jib)

534 09 280

From loader 1060001
To loader

Created 24-04-2007
Modified

Pos	Qty.	Part no.	Description	Remarks
1	1	6340623	Bracket	
2	2	30888	Lock nut	M10
3	2	31141	Washer	10 mm
4	2	31565	Washer, stainless	10 mm
5	2	31156	Spring washer	10 mm
6	2	30152	Set screw	M10 x 14
7	2	6340624	Guide shoe	
8	2	30581	Counter-sunk screw	MK10 x 30
9	1	6340625	Bracket for guide roller	
10	5	6301042	Pin	
11	3	63579	Guide roller	
12	1	63578	Guide roller	
13	1	63547	Guide roller	
14	10	32481	Screw	MCL8 x 16

15/105 - 17/117 SL & DL Parts

Internal ref. 63 42 910

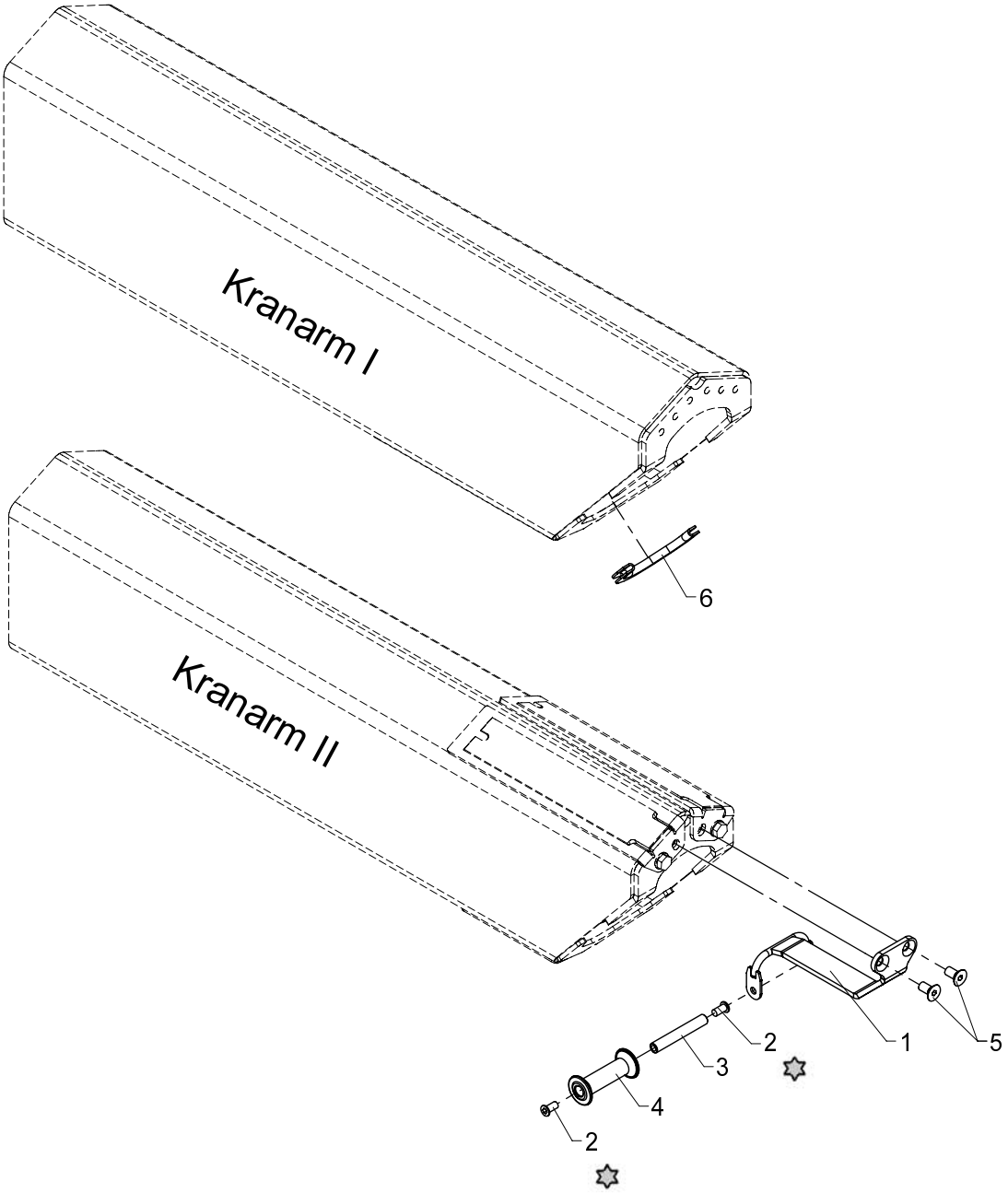

✡ Loctite 243

534 09 290

From loader 1060001
To loader

Created 24-04-2007
Modified

Attachment for hose reel, cpl. (extension 2)

Pos	Qty.	Part no.	Description	Remarks
1	1	6340635	Roller bracket (ext. 2)	
2	2	32481	Screw	MCL8 x 16
3	1	6301042	Pin	
4	1	63579	Guide roller	
5	2	30545	Countersunk screw	MK10 x 20
6	1	46596	Rubber protection	190 mm

15/105 - 17/117 SL & DL Parts

Internal ref. 63 42 920

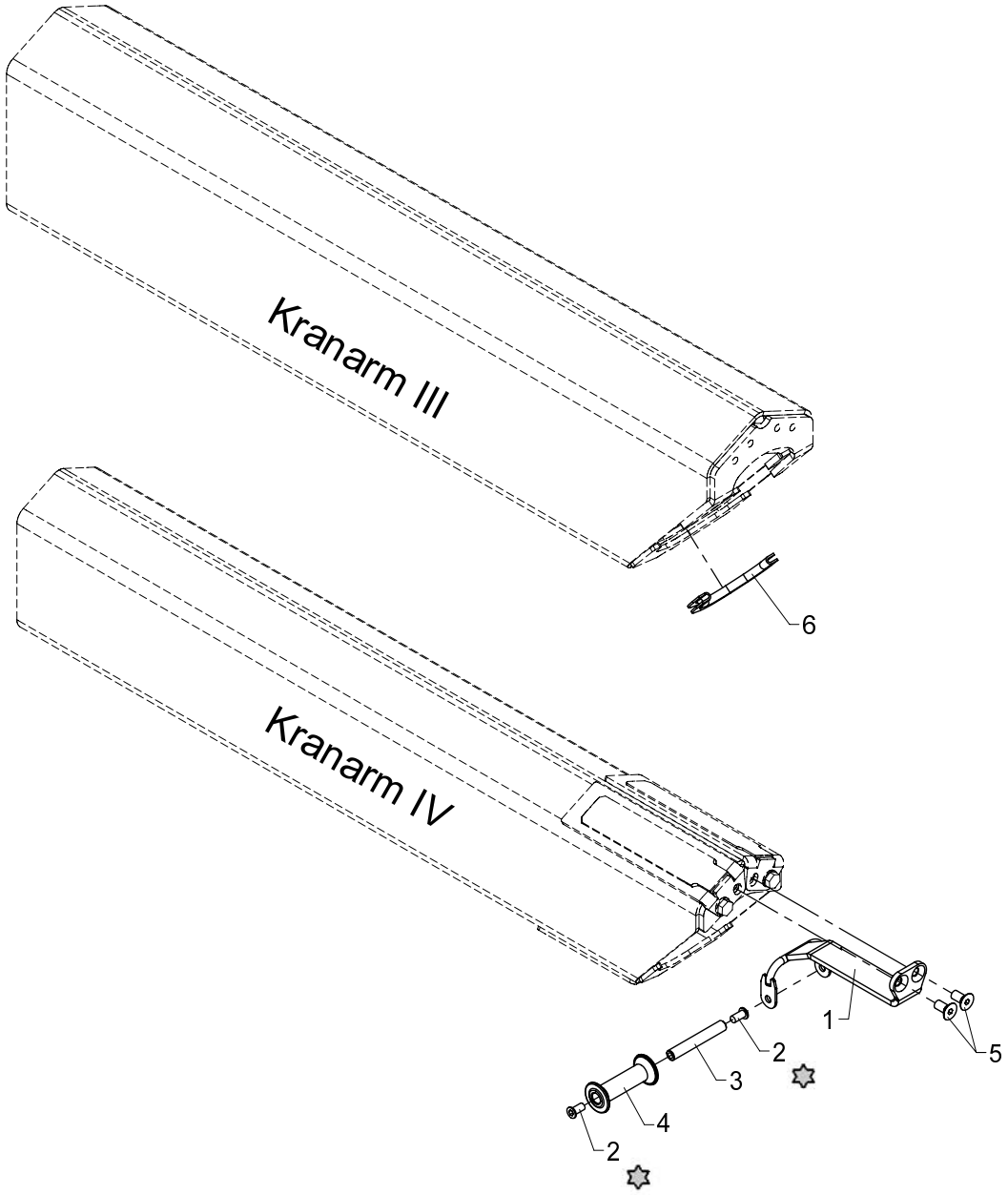

✡ Loctite 243

534 09 300

From loader 1060001
To loader

Created 24-04-2007
Modified

Attachment for hose reel, cpl. (extension 4)

Pos	Qty.	Part no.	Description	Remarks
1	1	6340627	Roller bracket (Extension 4)	
2	2	32481	Screw	MCL8 x 16
3	1	6301042	Pin	
4	1	63579	Guide roller	
5	2	30545	Countersunk screw	MK10 x 20
6	1	46596	Rubber protection	190 mm

534 09 310

15/105 - 17/117 SL & DL Parts

63 42 930
Internal ref. 63 40 920

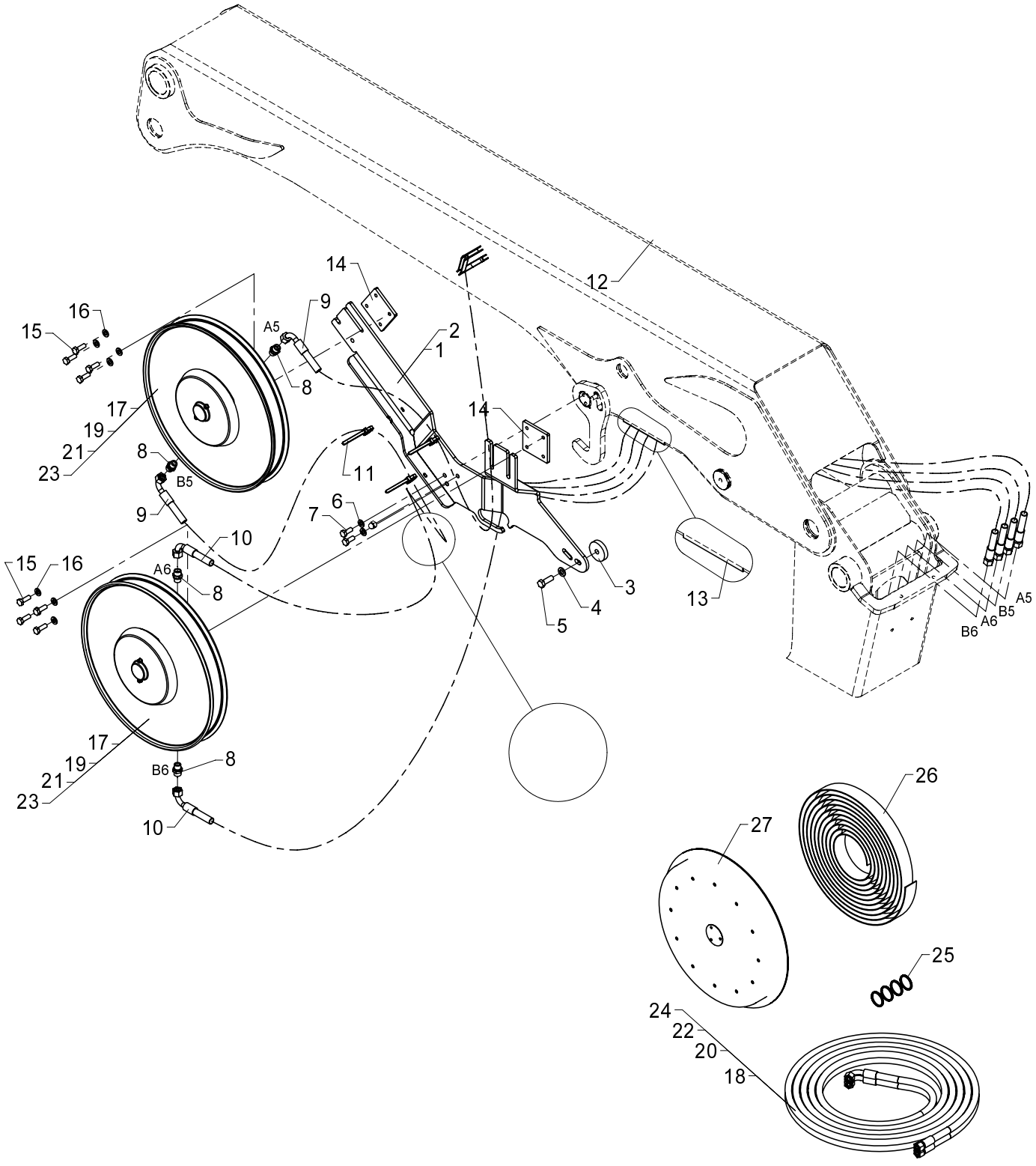

534 09 310

From loader 1060001
To loader

Created 23-04-2007
Modified

Hydr. system, hose reels, 2 EXV.

Pos	Qty.	Part no.	Description	Remarks
		6340920	Hydr.system, hose reels 2EXV	
		6342930	Hydr.system, hose reels 2EXV	
1	1	6340621	Bracket for hose reel	2 Ledarm
2	1	6340622	Bracket for hose reel	1 Ledarm
3	1	6340617	Shim	
4	1	31131	Washer	12 mm
5	1	31524	Set screw	M12 x 35
6	2	31177	Washer	10 mm
7	2	31513	Set screw, stainless	M10 x 25
8	4	25127	Connection	P-GEV 12 LR-WD
9	2	0017540	Hose	
10	2	0015020	Hose	
11	3	27275	Clip	7,6 x 390mm
12	1	46587	Rubber protection	150 mm
13	1	46587	Rubber protection	210 mm
14	2	6352024	Threaded plate	
15	8	30156	Set screw, stainless	M10 x 30
16	8	31565	Washer, stainless	10 mm
17	2	56371	Hose reel	K1, K2, K3
18	1	56375	Double hose	(Til 56371)
19	2	56372	Hose reel	K4
20	1	56376	Double hose	(Til 56372)
21	2	56373	Hose reel	K5
22	1	56377	Double hose	(Til 56373)
23	2	56374	Hose reel	K6
24	1	56378	Double hose	(Til 56374)
25	1	56340	Seal kit	56371-56372-56373-56374
26	1	56345	Spring	56371-56372-56373-56374
27	1	56486	Spring housing	56371-56372-56373-56374

15/105 - 17/117 SL & DL Parts

Internal ref. 63 40 910

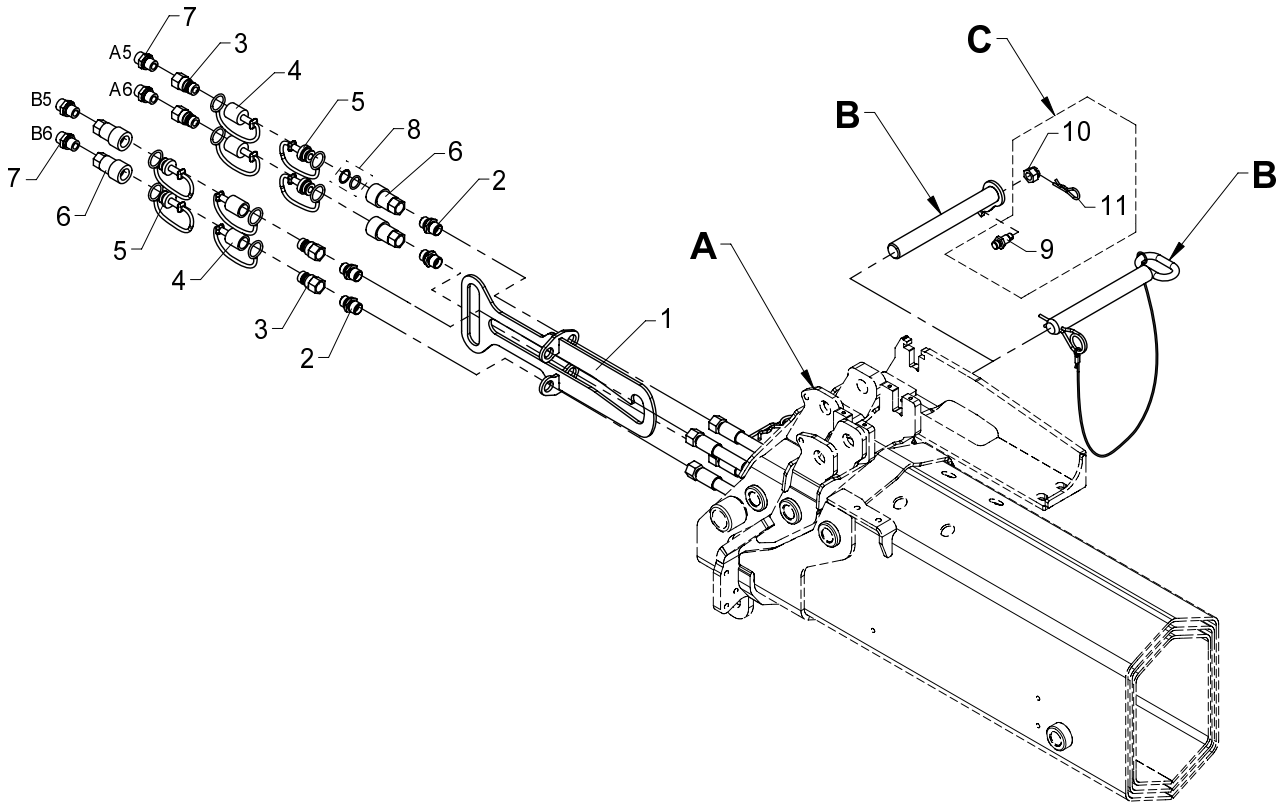

1300K/1310K/1420K/1430K/
1500K/1510K/1720K/1730K

A	B	C
K1	63 40 657	X
K2	63 40 677	X
K3	60 92 454	
K4	63 40 397	
K5	63 40 397	
K6	63 01 166	

1800K/1810K/2020K/2030K/
2200K/2210K/2420K/2430K

A	B	C
K2	63 40 657	X
K3	63 40 657	X
K4	60 92 454	
K5	63 40 397	
K6	63 40 397	

534 09 320

From loader 1060001
To loader

Kit, quick-release coupling for internal hose routing, 2 EXV.

Created 12-01-2010
Modified 07-09-2009

Pos	Qty.	Part no.	Description	Remarks
		6340910	Quick-release coupl. int, 2EXV	
1	1	6340631	Bracket	
2	4	6661444	Socket	
3	4	60620	Quick-release coupling,M	3/8"
4	4	60622	Dust cap, F	3/8"
5	4	60621	Dust cap, M	3/8"
6	4	60619	Quick-release coupling,F	3/8"
7	4	25127	Connection	P-GEV 12 LR-WD
8	1	60635	Seal kit	
9	1	6340359	Lock pin	
10	1	32127	Nut	M12
11	1	33379	Spring	
12	1	6340657	Pin	
13	1	6340677	Pin	
14	1	6092454	Lock pin with chain	
15	1	6301166	Lock pin with split pin	
16	1	6340397	Lock pin with lock spring	

534 09 330

15/105 - 17/117 SL & DL Parts

63 40 630
Internal ref. 63 40 620

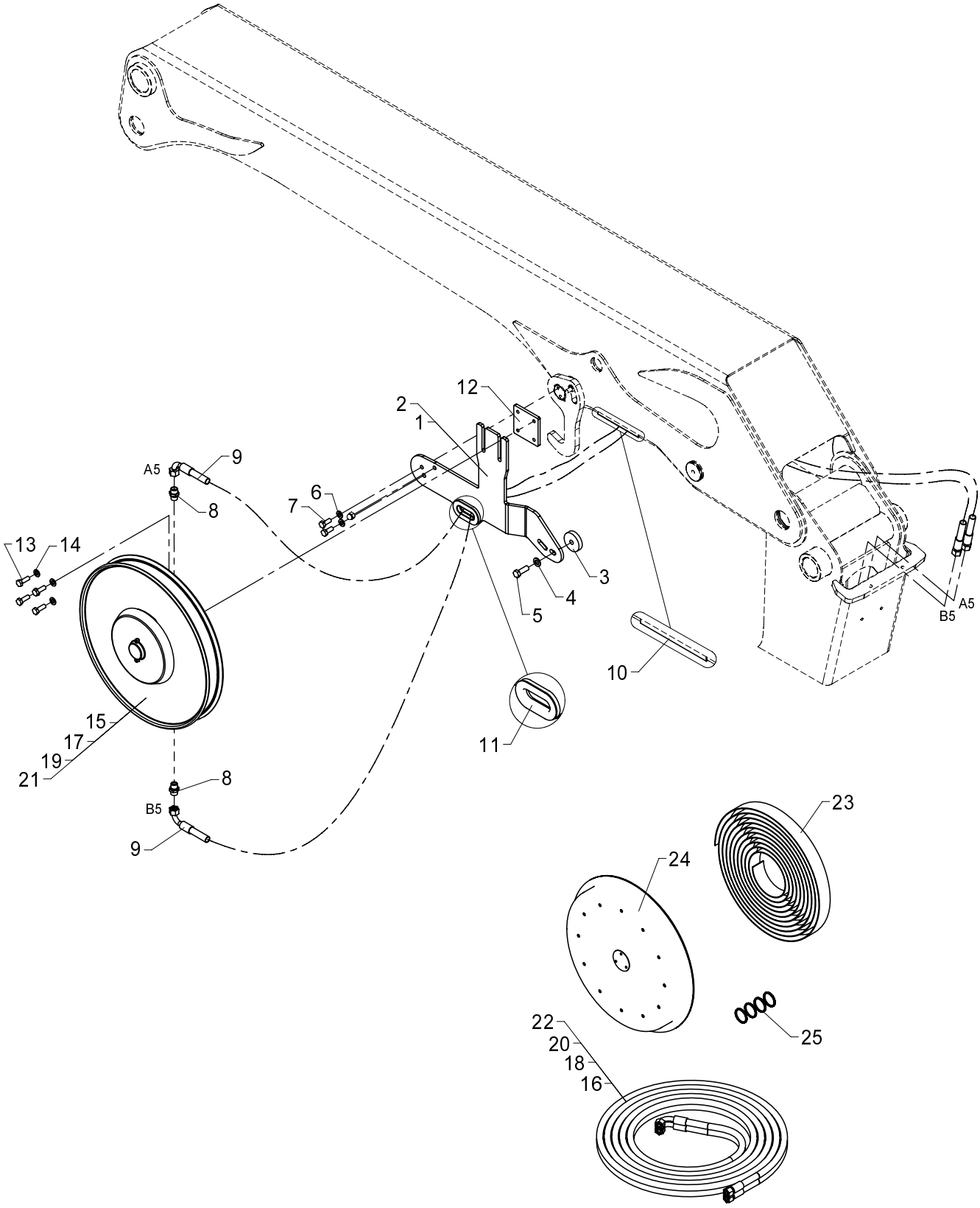

Hydr. system, hose reels, 1 EXV.

534 09 330

From loader 1060001
To loader

Created 12-01-2010
Modified

Pos	Qty.	Part no.	Description	Remarks
		6340620	Hydr. syst. hose reels, 1 EXV	
		6340630	Hydr. syst. hose reels, 1 EXV	
1	1	6340618	Bracket for hose reel (1EXV)	2 Ledarm
2	1	6340619	Bracket for hose reel (1EXV)	1 ledarm
3	1	6340617	Shim	
4	1	31131	Washer	12 mm
5	1	31524	Set screw	M12 x 35
6	2	31177	Washer	10 mm
7	2	31513	Set screw, stainless	M10 x 25
8	2	25127	Connection	P-GEV 12 LR-WD
9	2	0015020	Hose	
10	1	46587	Rubber protection	175 mm
11	1	46587	Rubber protection	150 mm
12	1	6352024	Threaded plate	
13	4	30156	Set screw, stainless	M10 x 30
14	4	31565	Washer, stainless	10 mm
15	1	56371	Hose reel	K1, K2, K3
16	1	56375	Double hose	(Til 56371)
17	1	56372	Hose reel	K4
18	1	56376	Double hose	(Til 56372)
19	1	56373	Hose reel	K5
20	1	56377	Double hose	(Til 56373)
21	1	56374	Hose reel	K6
22	1	56378	Double hose	(Til 56374)
23	1	56345	Spring	56371 - 53372 - 56373 - 56374
24	1	56486	Spring housing	56371 - 53372 - 56373 - 56374
25	1	56340	Seal kit	56371 - 53372 - 56373 - 56374

15/105 - 17/117 SL & DL Parts

Internal ref. 63 40 610

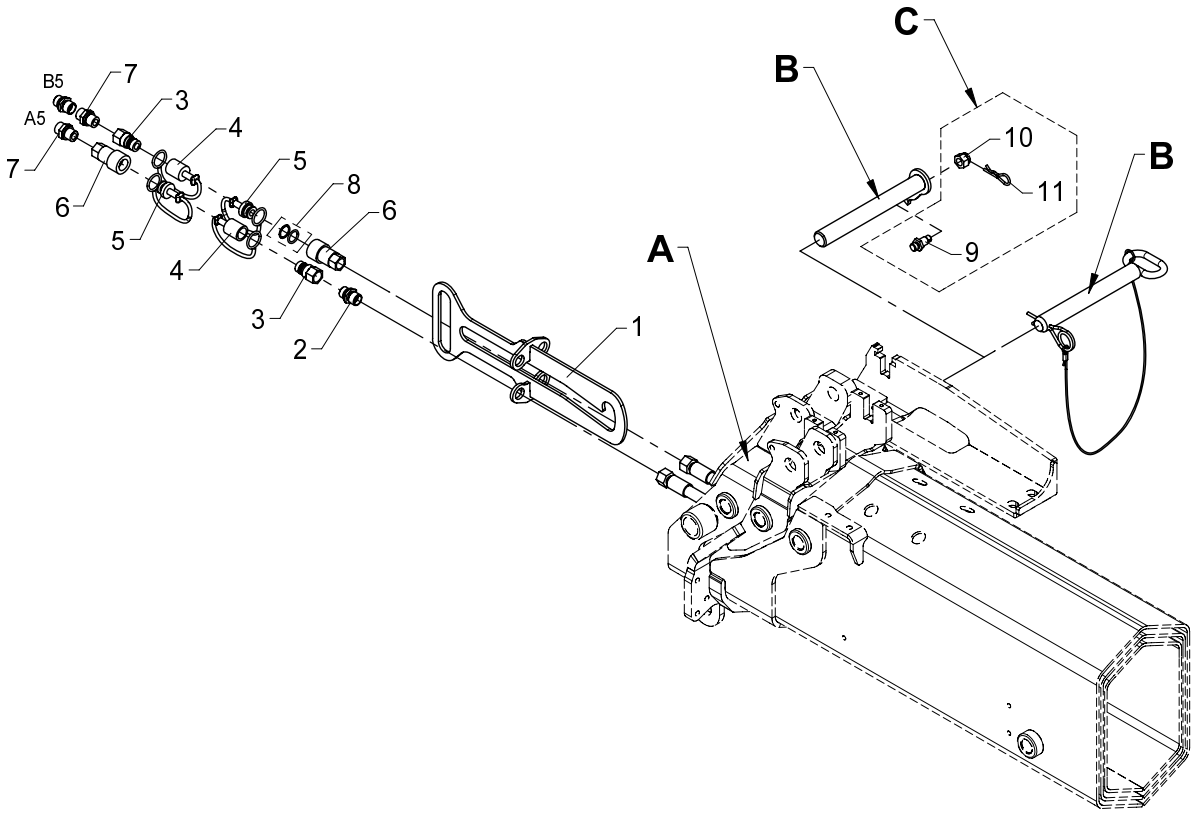

1300K/1310K/1420K/1430K/ 1500K/1510K/1720K/1730K

A	B	C
K1	63 40 657	X
K2	63 40 677	X
K3	60 92 454	
K4	63 40 397	
K5	63 40 397	
K6	63 01 166	

1800K/1810K/2020K/2030K/ 2200K/2210K/2420K/2430K

A	B	C
K2	63 40 657	X
K3	63 40 657	X
K4	60 92 454	
K5	63 40 397	
K6	63 40 397	

534 09 340

From loader 1060001
To loader

Created 23-04-2009
Modified

Kit, quick-release coupling for internal hose routing, 1 EXV.

Pos	Qty.	Part no.	Description	Remarks
		6340610	Kit, quick-release coupl.,1EXV	
1	1	6340631	Bracket	
2	2	6661444	Socket	
3	2	60620	Quick-release coupling,M	3/8"
4	2	60622	Dust cap, F	3/8"
5	2	60621	Dust cap, M	3/8"
6	2	60619	Quick-release coupling,F	3/8"
7	2	25127	Connection	P-GEV 12 LR-WD
8	1	60635	Seal kit	
9	1	6340359	Lock pin	
10	1	32127	Nut	M12
11	1	33379	Spring	
12	1	6340657	Pin	
13	1	6340677	Pin	
14	1	6092454	Lock pin with chain	
15	1	6301166	Lock pin with split pin	
16	1	6340397	Lock pin with lock spring	

15/105 - 17/117 SL & DL Parts

Internal ref. 63 42 950

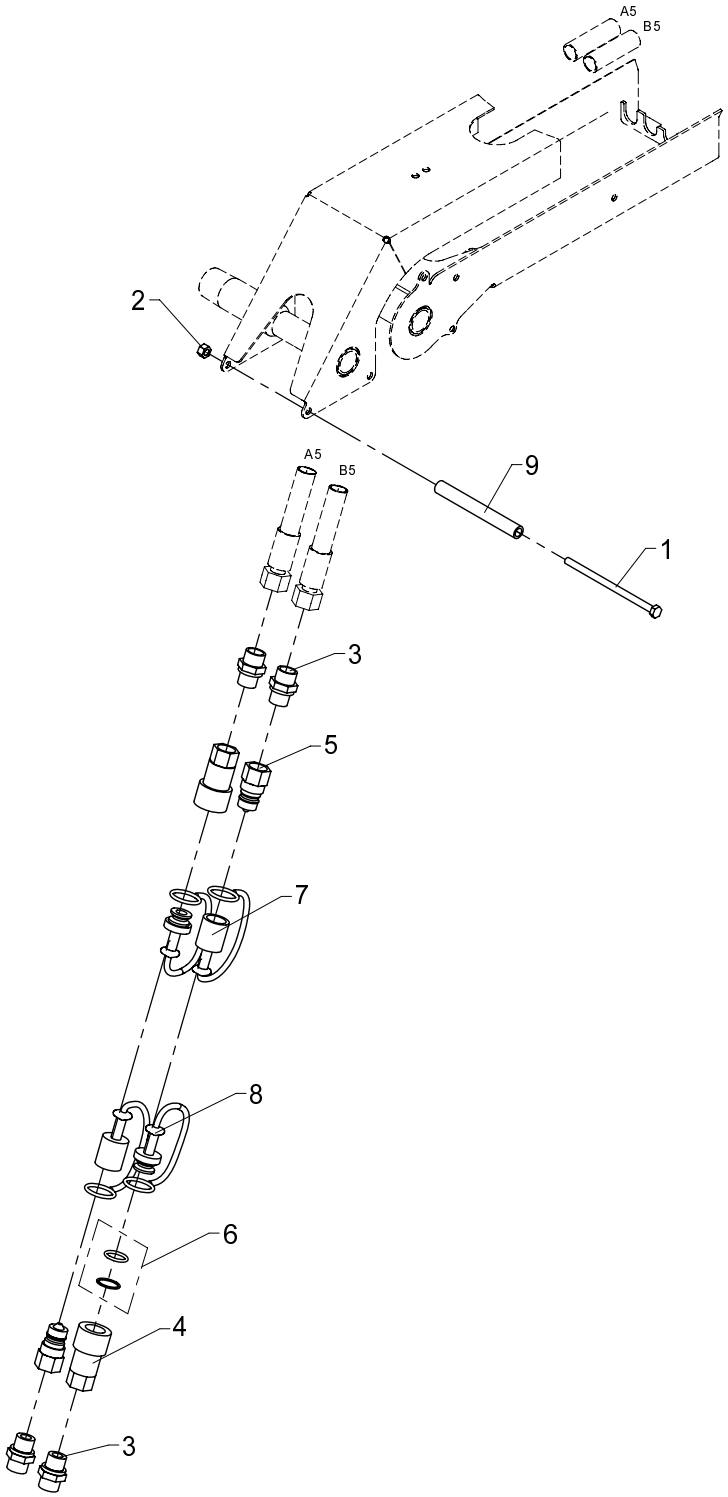

534 09 390

From loader 1060001
To loader

Created 23-09-2009
Modified

Quick-release coupling for 1 extra valve

Pos	Qty.	Part no.	Description	Remarks
1	1	30167	Steel bolt	M6 x 60
2	1	30884	Lock nut, stainless	M6
3	4	25127	Connection	P-GEV 12 LR-WD
4	2	60619	Quick-release coupling,F	3/8"
5	2	60620	Quick-release coupling,M	3/8"
6	1	60635	Seal kit	
7	2	60622	Dust cap, F	3/8"
8	2	60621	Dust cap, M	3/8"
9	1	62511	Plastic hose	100 mm

15/105 - 17/117 SL & DL Parts

Internal ref. 63 42 960

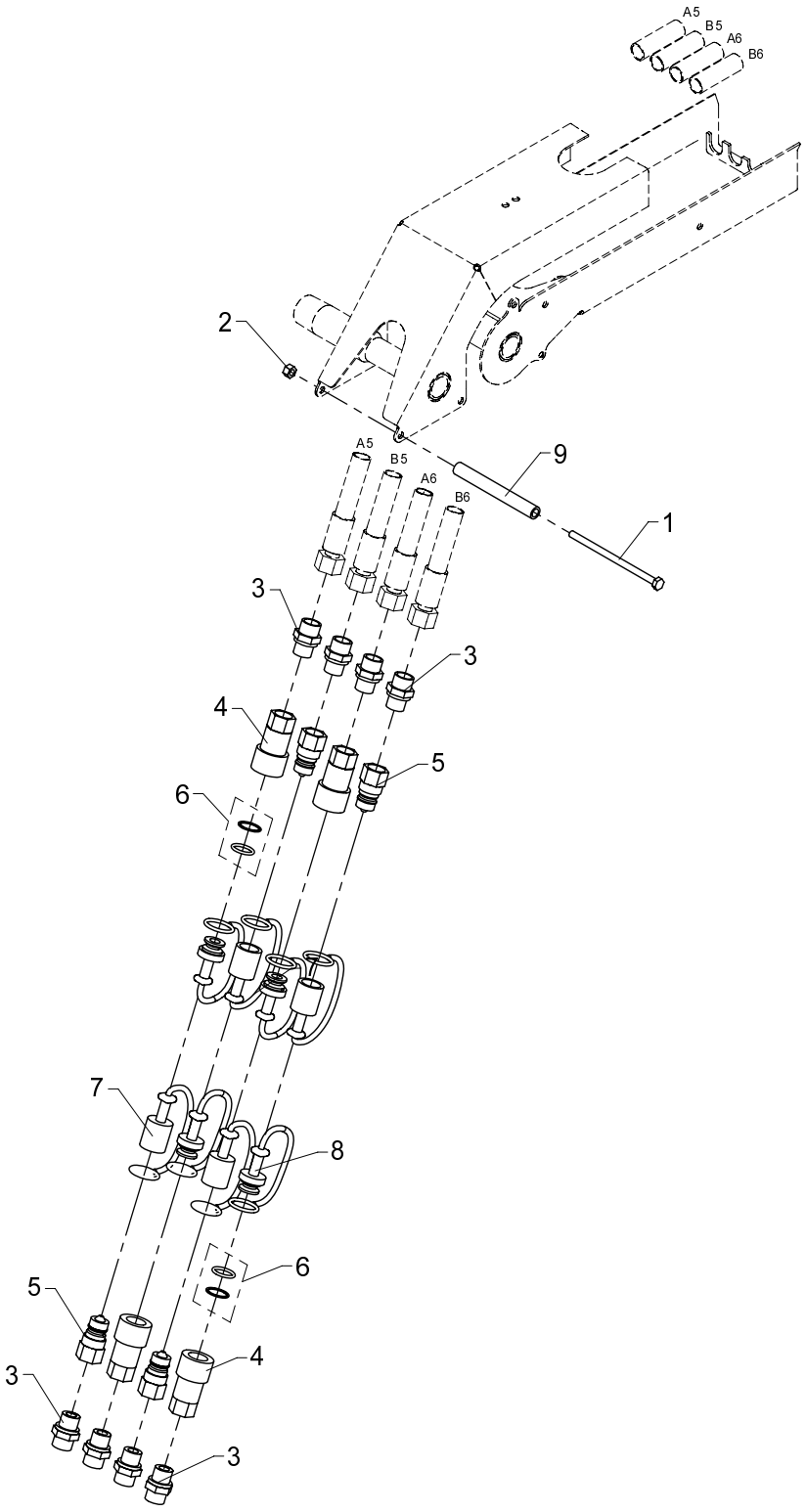

534 09 400

From loader 1060001
To loader

Created 23-09-2009
Modified

Quick-release coupling for 2 extra valves

Pos	Qty.	Part no.	Description	Remarks
1	1	30167	Steel bolt	M6 x 60
2	1	30884	Lock nut, stainless	M6
3	8	25127	Connection	P-GEV 12 LR-WD
4	4	60619	Quick-release coupling,F	3/8"
5	4	60620	Quick-release coupling,M	3/8"
6	2	60635	Seal kit	
7	4	60622	Dust cap, F	3/8"
8	4	60621	Dust cap, M	3/8"
9	1	62511	Plastic hose	100 mm

15/105 - 17/117 SL & DL Parts

Internal ref. 63 42 970

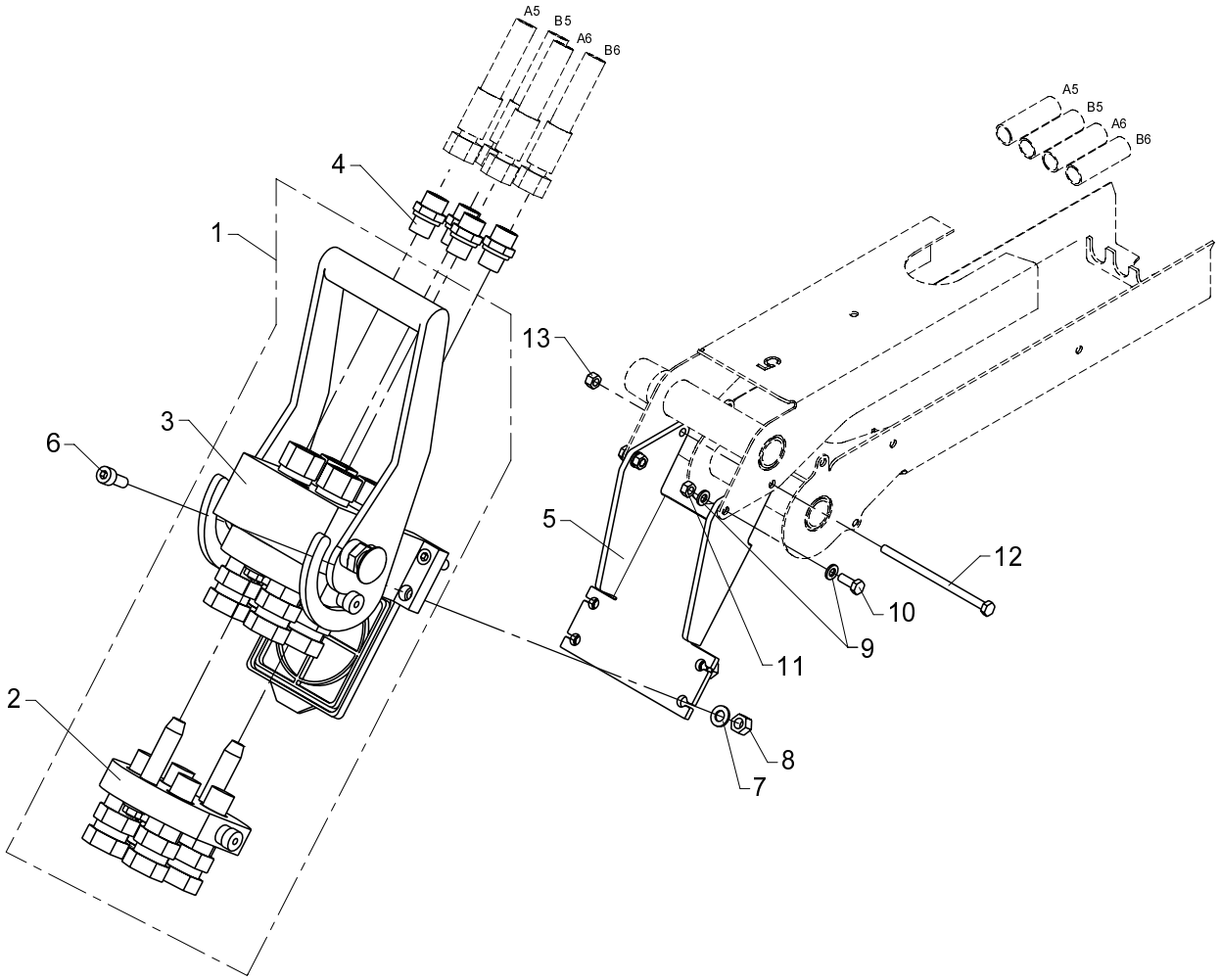

Multi-coupling for 2 extra valves K1-K5

534 09 410

From loader 1060001
To loader

Created 12-01-2010
Modified

Pos	Qty.	Part no.	Description	Remarks
1	1	58430	Multifaster coupling	1/2"
2	1	58431	Multifaster coupling	
3	1	58432	Multifaster coupling	
4	4	25127	Connection	P-GEV 12 LR-WD
5	1	6340771	Adapter	
6	4	30438	Screw	MC8 x 20
7	4	31147	Washer, stainless	8 mm
8	4	30886	Lock nut, stainless	M8
9	4	32302	Face washer, stainless	6 mm
10	2	30112	Set screw, stainless	M6 x 16
11	2	30854	Nut, stainless	M6
12	1	30167	Steel bolt	M6 x 60
13	1	30884	Lock nut, stainless	M6

15/105 - 17/117 SL & DL Parts

Internal ref. 63 42 980

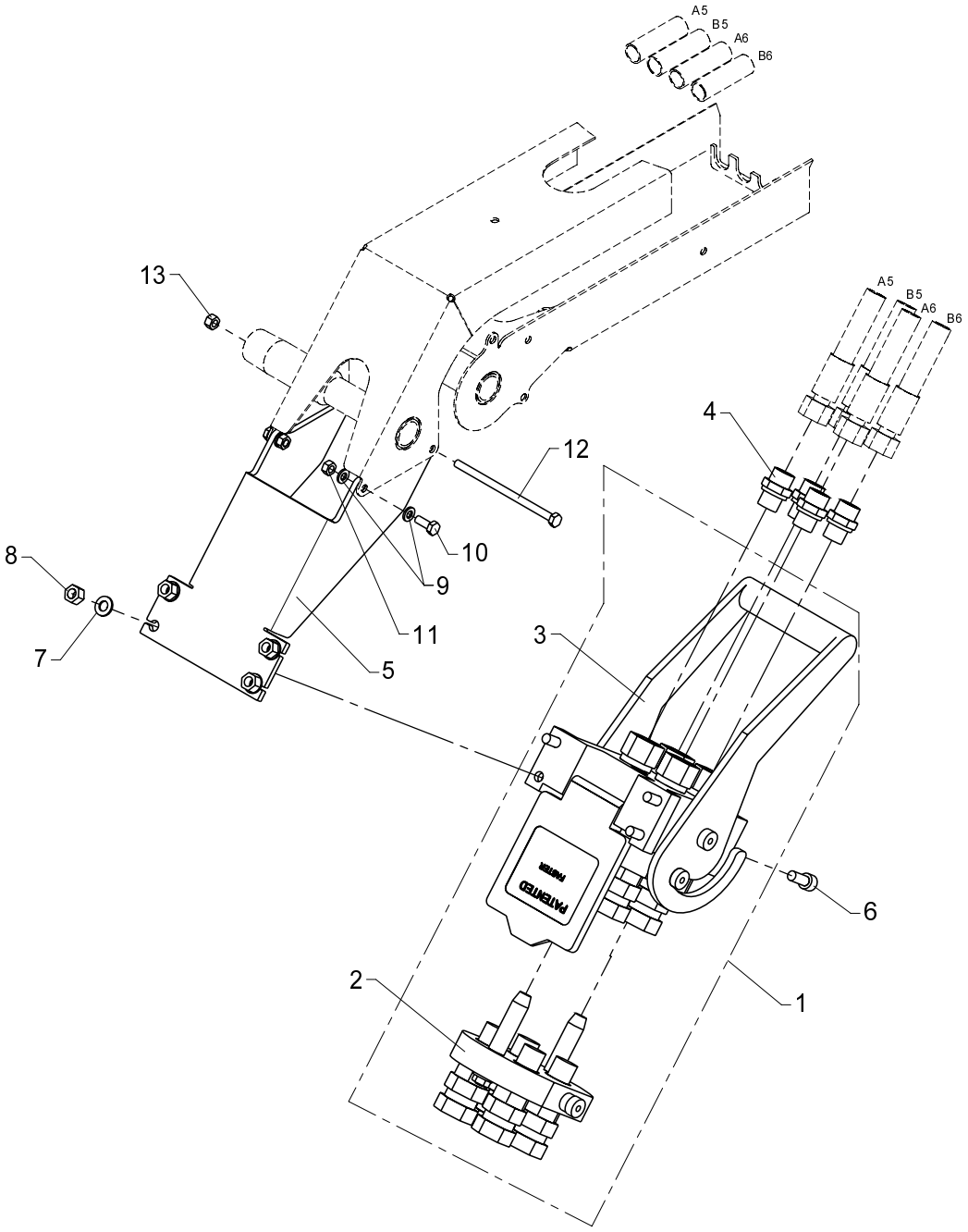

534 09 420

From loader 1060001
To loader

Created 12-01-2010
Modified

Multi-coupling for 2 extra valves K6

Pos	Qty.	Part no.	Description	Remarks
1	1	58430	Multifaster coupling	1/2"
2	1	58431	Multifaster coupling	
3	1	58432	Multifaster coupling	
4	4	25127	Connection	P-GEV 12 LR-WD
5	1	6340772	Adapter	
6	4	30438	Screw	MC8 x 20
7	4	31147	Washer, stainless	8 mm
8	4	30886	Lock nut, stainless	M8
9	4	32302	Face washer, stainless	6 mm
10	2	30112	Set screw, stainless	M6 x 16
11	2	30854	Nut, stainless	M6
12	1	30167	Steel bolt	M6 x 60
13	1	30884	Lock nut, stainless	M6

15/105 - 17/117 SL & DL Parts

Internal ref. 63 42 870

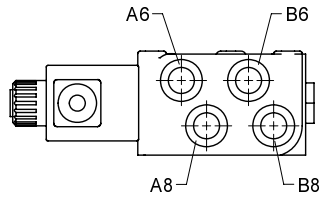

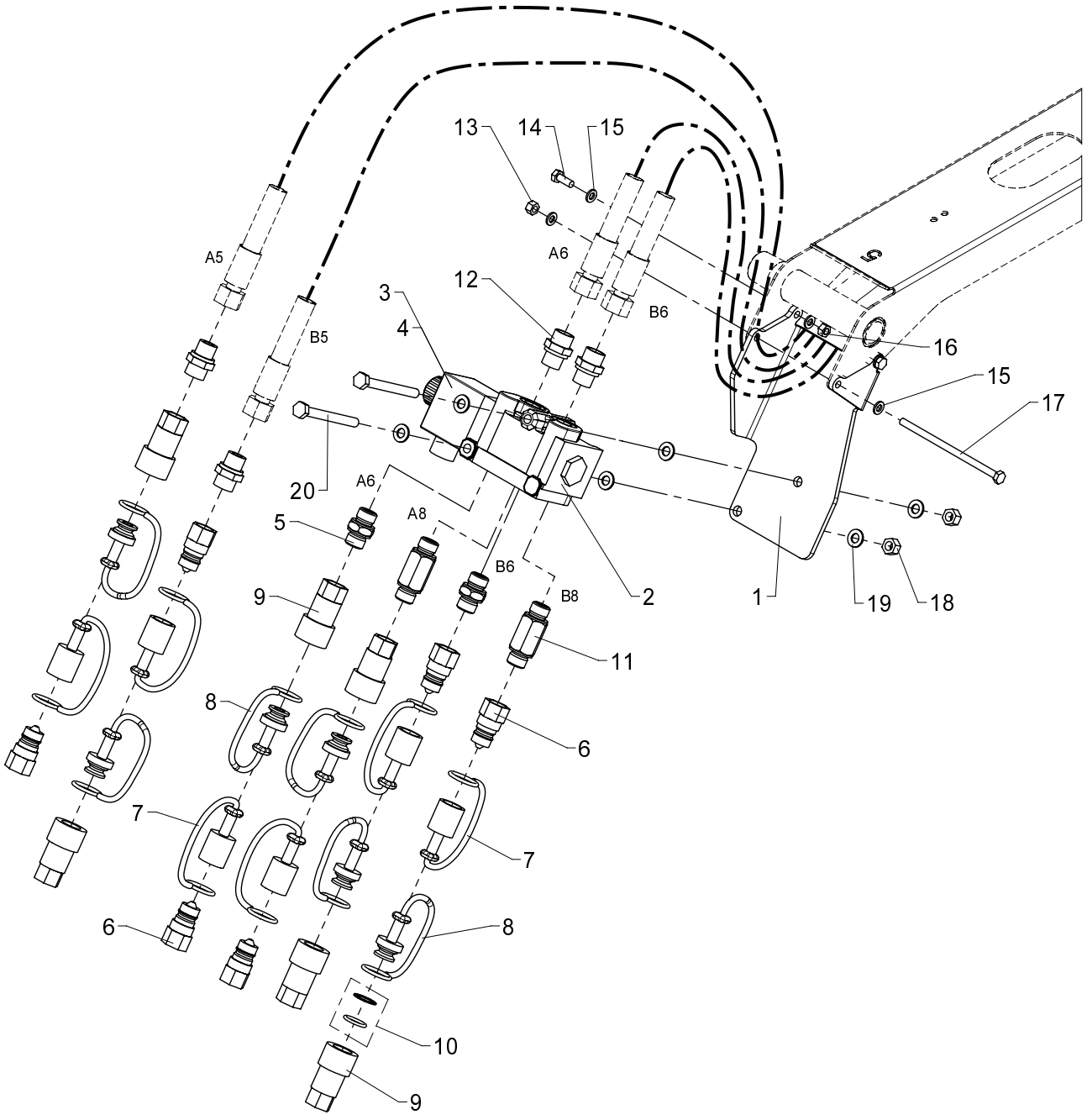

Kit for 3 extra valves (K1-K5)

534 09 460

From loader 1060001
To loader

Created 15-12-2008
Modified 31-08-2009

Pos	Qty.	Part no.	Description	Remarks
1	1	6340773	Adaptor	
2	1	59062	Change-over valve	
3	1	59063	Solenoid 24 V	
4	1	59078	Solenoid 12V	
5	2	6340775	Connection	
6	6	60620	Quick-release coupling,M	3/8"
7	6	60622	Dust cap, F	3/8"
8	6	60621	Dust cap, M	3/8"
9	6	60619	Quick-release coupling,F	3/8"
10	1	60635	Seal kit	
11	2	6340776	Connection	
12	4	25127	Connection	P-GEV 12 LR-WD
13	1	30884	Lock nut, stainless	M6
14	2	30112	Set screw, stainless	M6 x 16
15	6	32302	Face washer, stainless	6 mm
16	2	30854	Nut, stainless	M6
17	1	32107	Steel bolt, stainless	M6 x 120
18	2	30886	Lock nut, stainless	M8
19	6	31147	Washer, stainless	8 mm
20	2	30143	Steel bolt, stainless	M8 x 80

15/105 - 17/117 SL & DL Parts

Internal ref. 63 42 880

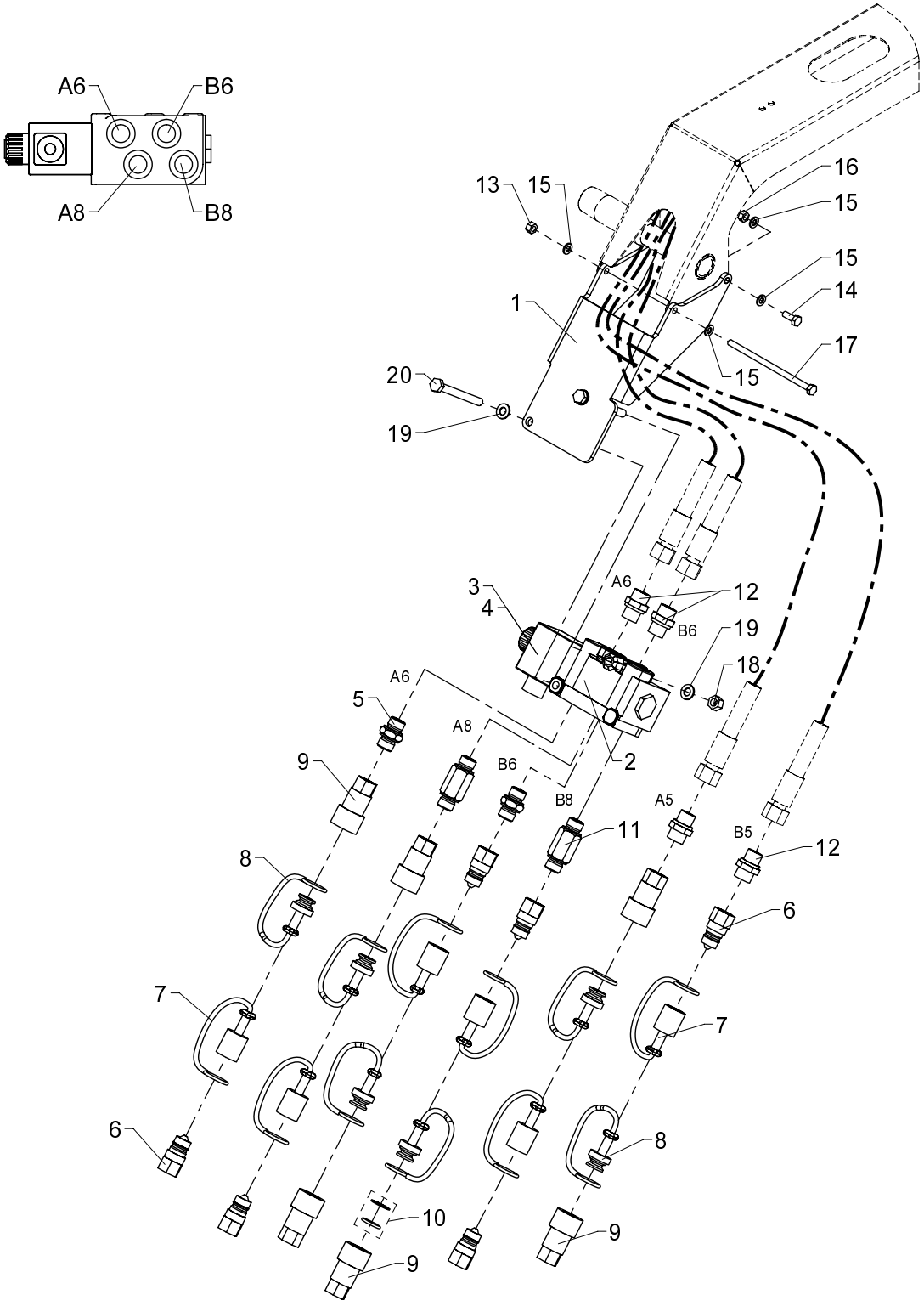

534 09 470

From loader 1060001
To loader

Created 11-03-2009
Modified 31-08-2009

Kit for 3 extra valves (K6)

Pos	Qty.	Part no.	Description	Remarks
1	1	6340774	Adapter (change-over valve K6)	
2	1	59062	Change-over valve	
3	1	59063	Solenoid 24 V	
4	1	59078	Solenoid 12V	
5	2	6340775	Connection	
6	6	60620	Quick-release coupling,M	3/8"
7	6	60622	Dust cap, F	3/8"
8	6	60621	Dust cap, M	3/8"
9	6	60619	Quick-release coupling,F	3/8"
10	1	60635	Seal kit	
11	2	6340776	Connection	
12	4	25127	Connection	P-GEV 12 LR-WD
13	1	30884	Lock nut, stainless	M6
14	2	30112	Set screw, stainless	M6 x 16
15	6	32302	Face washer, stainless	6 mm
16	2	30854	Nut, stainless	M6
17	1	32107	Steel bolt, stainless	M6 x 120
18	2	30886	Lock nut, stainless	M8
19	4	31147	Washer, stainless	8 mm
20	2	30143	Steel bolt, stainless	M8 x 80

15/105 - 17/117 SL & DL Parts

63 44 750
Internal ref. 63 40 470

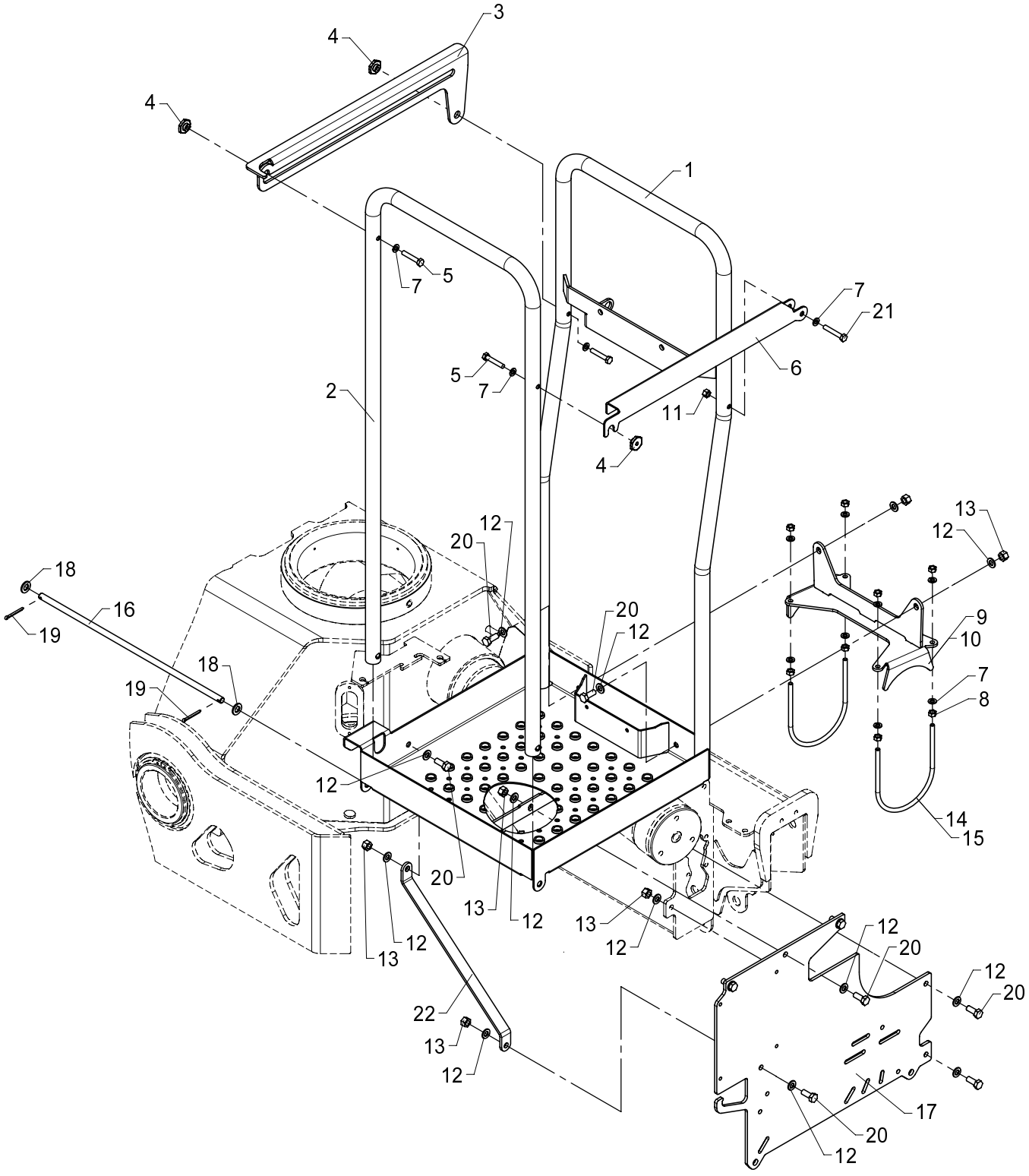

534 10 010

From loader 1060001
To loader

Stand-up controls, standard

Created 02-12-2008
Modified 22-12-2009

Pos	Qty.	Part no.	Description	Remarks
		6340470	Stand-up controls (standard)	1300K/1500K
		6344750	Stand-up controls (standard)	1800K/2200K
1	1	6340461	Platform	
2	1	6340471	Safety guard	
3	1	6340474	Railing	
4	3	6340475	Nut	
5	3	31511	Set screw, stainless	M8 x 45
6	1	6340473	Railing	
7	12	31147	Washer, stainless	8 mm
8	8	30856	Nut, stainless	M8
9	1	6340455	Mounting bracket	1300K/1500K
10	1	6344455	Mounting bracket	1800K/2200K
11	1	30886	Lock nut, stainless	M8
12	18	31565	Washer, stainless	10 mm
13	9	31564	Lock nut, stainless	M10
14	2	6340458	Clamp	1300K/1500K
15	2	6344458	Clamp	1800K/2200K
16	1	6340472	Pin	
17	1	6340459	Valve bracket	
18	2	32338	Washer	12 mm
19	2	31638	Split pin	ø4 x 40
20	9	31513	Set screw, stainless	M10 x 25
21	1	30139	Steel bolt, stainless	M8 x 50
22	1	6340469	Reinforcement plate	

15/105 - 17/117 SL & DL Parts

Internal ref. 63 41 450

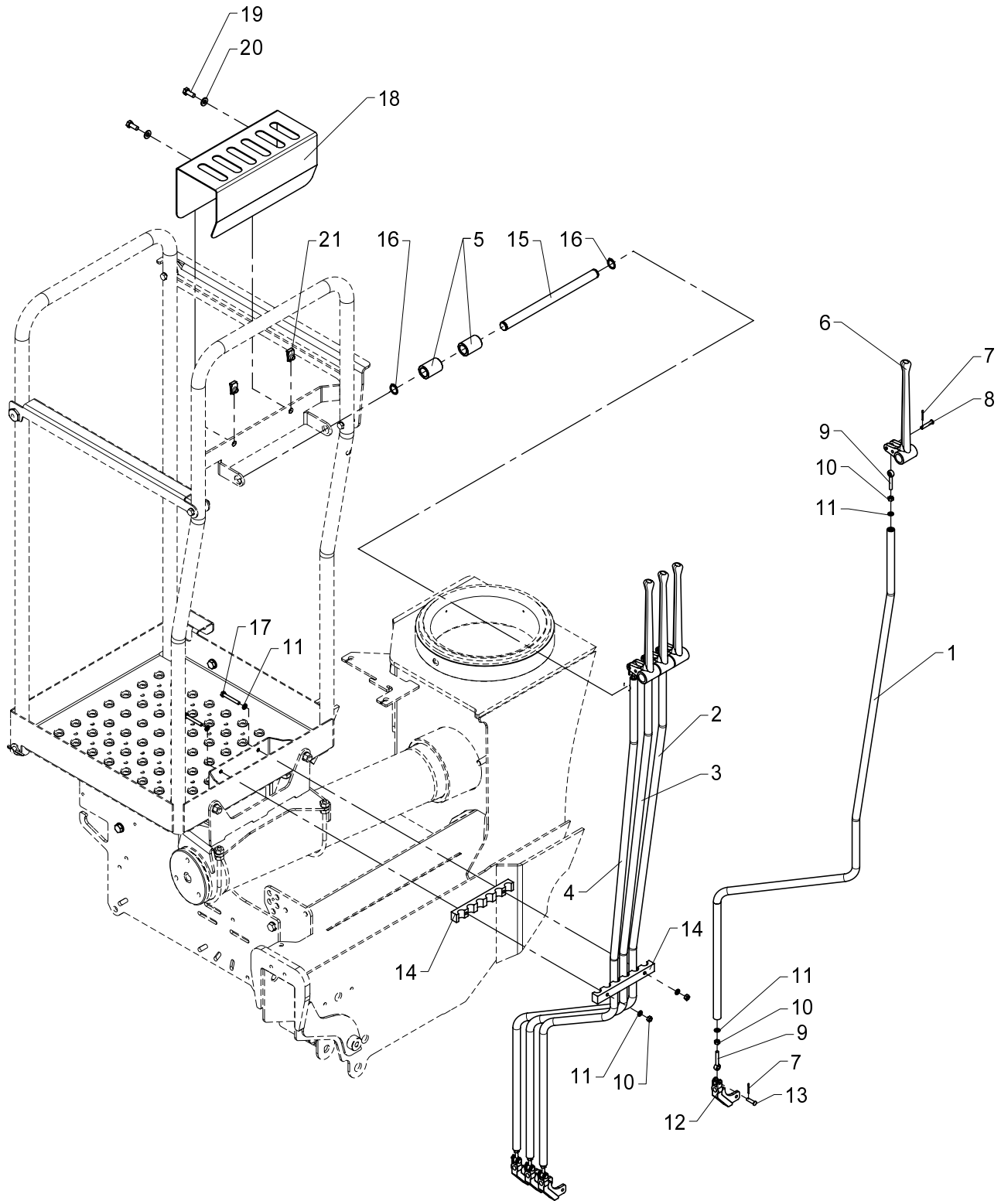

Rod control, HS std. - 4 functions

534 10 020

From loader 1060001
To loader

Created 11-02-2008
Modified

Pos	Qty.	Part no.	Description	Remarks
		6341450	Rod control, 4 functions	
1	1	6340481	Connecting rod (slew)	
2	1	6340482	Connecting rod (boom)	
3	1	6340483	Connecting rod (jib)	
4	1	6340484	Connecting rod (extension)	
5	2	64040	Nylon bushing	
6	4	63423	Lever for dual controls	
7	8	31601	Split pin, stainless	ø1,6 x 20
8	4	31274	Cotter bolt	ø6 x 30
9	8	32114	Pin	M6 x 40
10	10	30854	Nut, stainless	M6
11	12	32302	Face washer, stainless	6 mm
12	4	63499	Adapter	
13	4	31271	Cotter bolt	ø6 x 21
14	2	63599	Guide	
15	1	6660954	Pin for 5 levers	
16	2	33107	Circlip	19U
17	2	30118	Steel pin, stainless	M6 x 45
18	1	6340477	Protection	
19	2	30132	Set screw, stainless	M8 x 20
20	2	31754	Washer	8,4 x 18 x 2
21	2	31069	Clip	M8 1,5 - 5,5 mm.

534 10 030

15/105 - 17/117 SL & DL Parts

Internal ref. 63 41 460

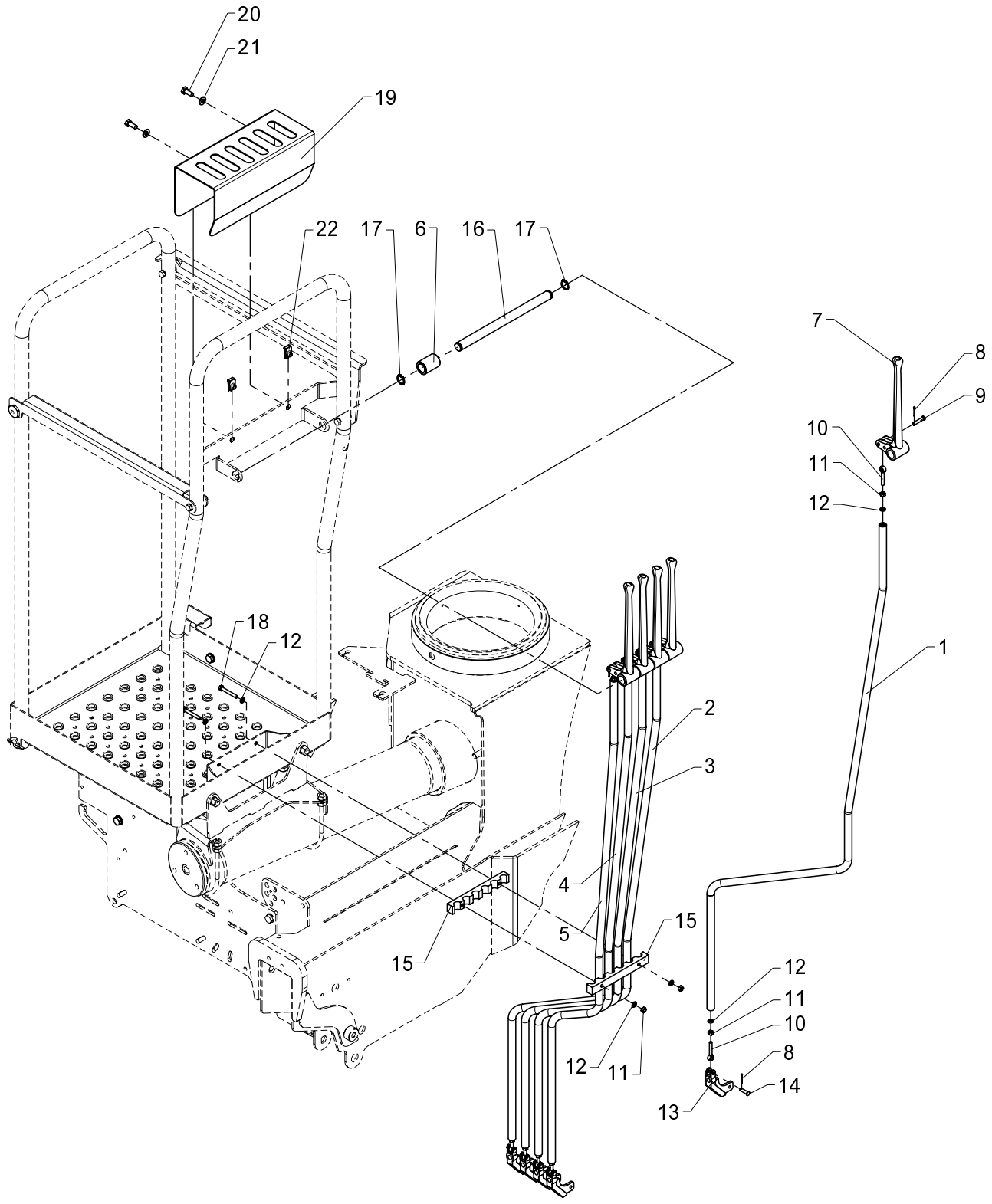

Rod control, HS std. - 5 functions

534 10 030

From loader 1060001
To loader

Created 11-02-2008
Modified

Pos	Qty.	Part no.	Description	Remarks
		6341460	Rod control	
1	1	6340481	Connecting rod (slew)	
2	1	6340482	Connecting rod (boom)	
3	1	6340483	Connecting rod (jib)	
4	1	6340484	Connecting rod (extension)	
5	1	6340485	Connecting rod (1 EXV)	
6	1	64040	Nylon bushing	
7	5	63423	Lever for dual controls	
8	10	31601	Split pin, stainless	ø1,6 x 20
9	5	31274	Cotter bolt	ø6 x 30
10	10	32114	Pin	M6 x 40
11	12	30854	Nut, stainless	M6
12	14	32302	Face washer, stainless	6 mm
13	5	63499	Adapter	
14	5	31271	Cotter bolt	ø6 x 21
15	2	63599	Guide	
16	1	6660954	Pin for 5 levers	
17	2	33107	Circlip	19U
18	2	30118	Steel pin, stainless	M6 x 45
19	1	6340477	Protection	
20	2	30132	Set screw, stainless	M8 x 20
21	2	31754	Washer	8,4 x 18 x 2
22	2	31069	Clip	M8 1,5 - 5,5 mm.

15/105 - 17/117 SL & DL Parts

Internal ref. 63 40 480

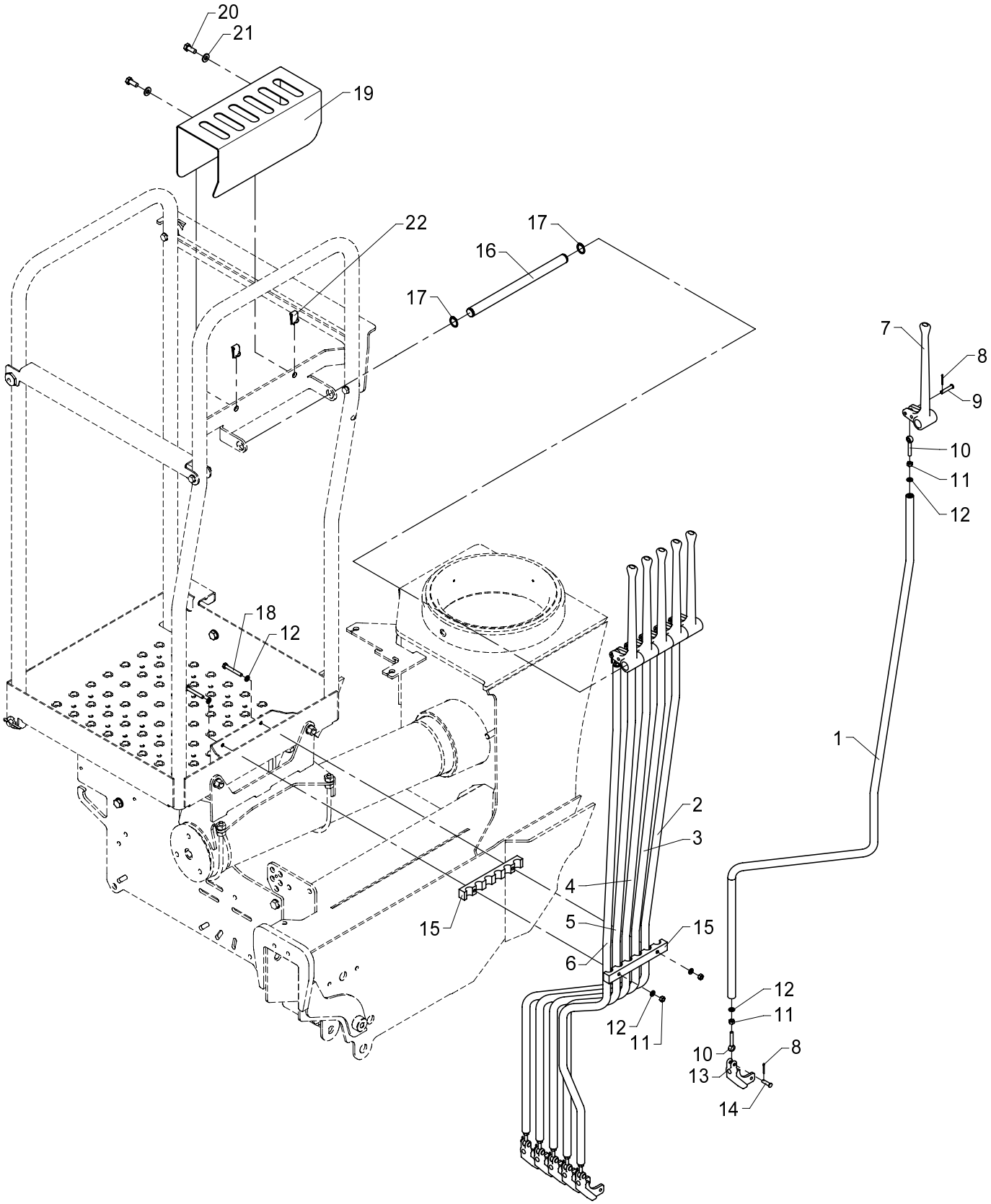

Rod control, HS std. - 6 functions

534 10 040

From loader 1060001
To loader

Created 16-04-2007
Modified

Pos	Qty.	Part no.	Description	Remarks
		6340480	Rod control 6 functions	
1	1	6340481	Connecting rod (slew)	
2	1	6340482	Connecting rod (boom)	
3	1	6340483	Connecting rod (jib)	
4	1	6340484	Connecting rod (extension)	
5	1	6340485	Connecting rod (1 EXV)	
6	1	6340486	Connecting rod (2 EXV)	
7	6	63423	Lever for dual controls	
8	12	31601	Split pin, stainless	ø1,6 x 20
9	6	31274	Cotter bolt	ø6 x 30
10	12	32114	Pin	M6 x 40
11	14	30854	Nut, stainless	M6
12	16	32302	Face washer, stainless	6 mm
13	6	63499	Adapter	
14	6	31271	Cotter bolt	ø6 x 21
15	2	63599	Guide	
16	1	6660954	Pin for 5 levers	
17	2	33107	Circlip	19U
18	2	30118	Steel pin, stainless	M6 x 45
19	1	6340477	Protection	
20	2	30132	Set screw, stainless	M8 x 20
21	2	31754	Washer	8,4 x 18 x 2
22	2	31069	Clip	M8 1,5 - 5,5 mm.

15/105 - 17/117 SL & DL Parts

Internal ref. 63 40 490

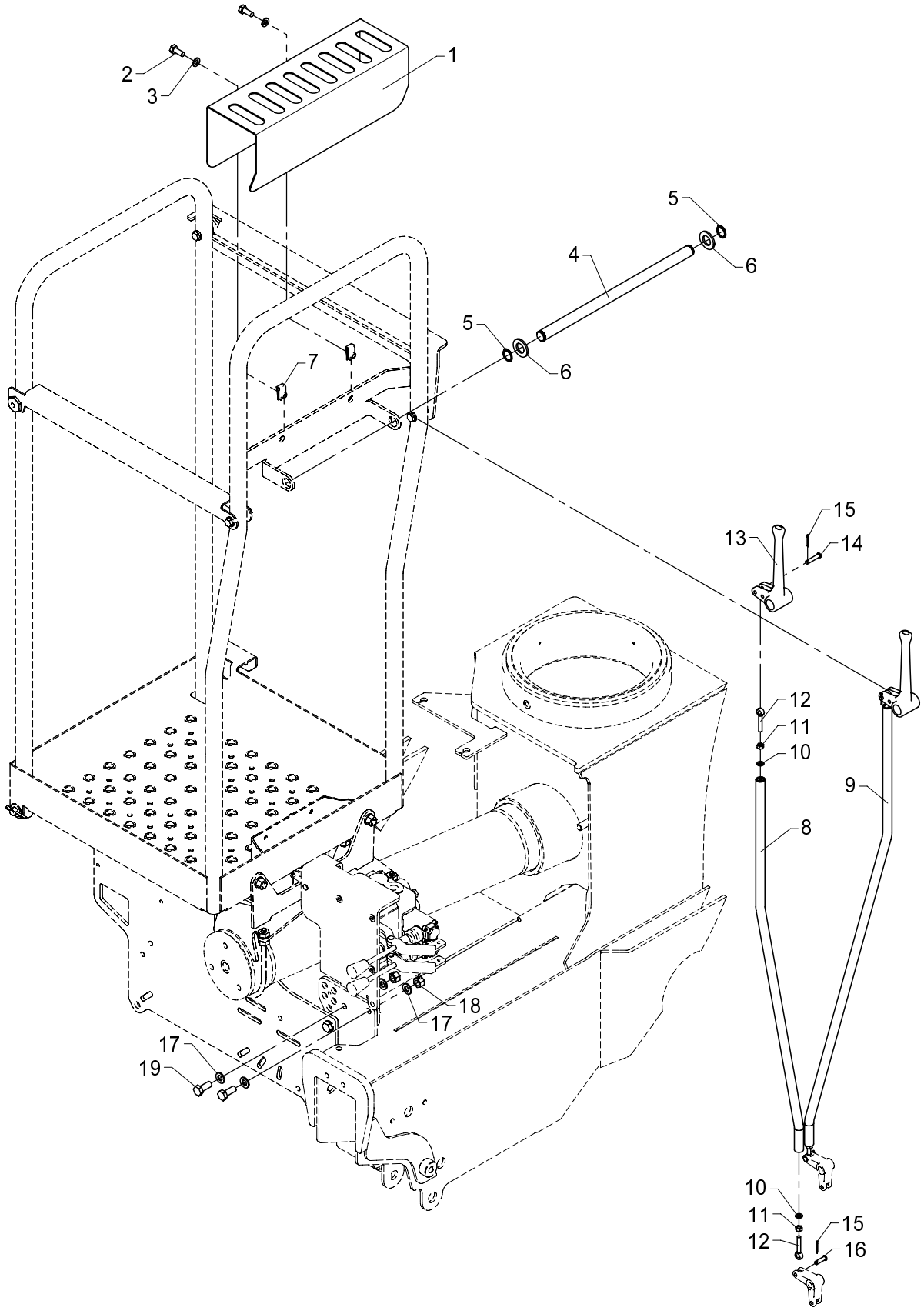

534 10 060

From loader 1060001
To loader

Created 12-01-2010
Modified

Stabilizer operation, HS std. - 2/4 fcts.

Pos	Qty.	Part no.	Description	Remarks
1	1	6340478	Protection	
2	2	30132	Set screw, stainless	M8 x 20
3	2	31147	Washer, stainless	8 mm
4	1	6340476	Pin	
5	2	33107	Circlip	19U
6	2	31132	Washer	18 mm
7	2	31069	Clip	M8 1,5 - 5,5 mm.
8	1	6340487	Connecting rod, (stab.right)	
9	1	6340488	Connecting rod, (stab.left)	
10	4	32302	Face washer, stainless	6 mm
11	4	30854	Nut, stainless	M6
12	4	32114	Pin	M6 x 40
13	2	63422	Lever for dual controls	
14	2	31274	Cotter bolt	ø6 x 30
15	4	31601	Split pin, stainless	ø1,6 x 20
16	2	31271	Cotter bolt	ø6 x 21
17	4	31177	Washer	10 mm
18	2	31564	Lock nut, stainless	M10
19	2	31513	Set screw, stainless	M10 x 25

15/105 - 17/117 SL & DL Parts

63 41 660
Internal ref. 63 41 650

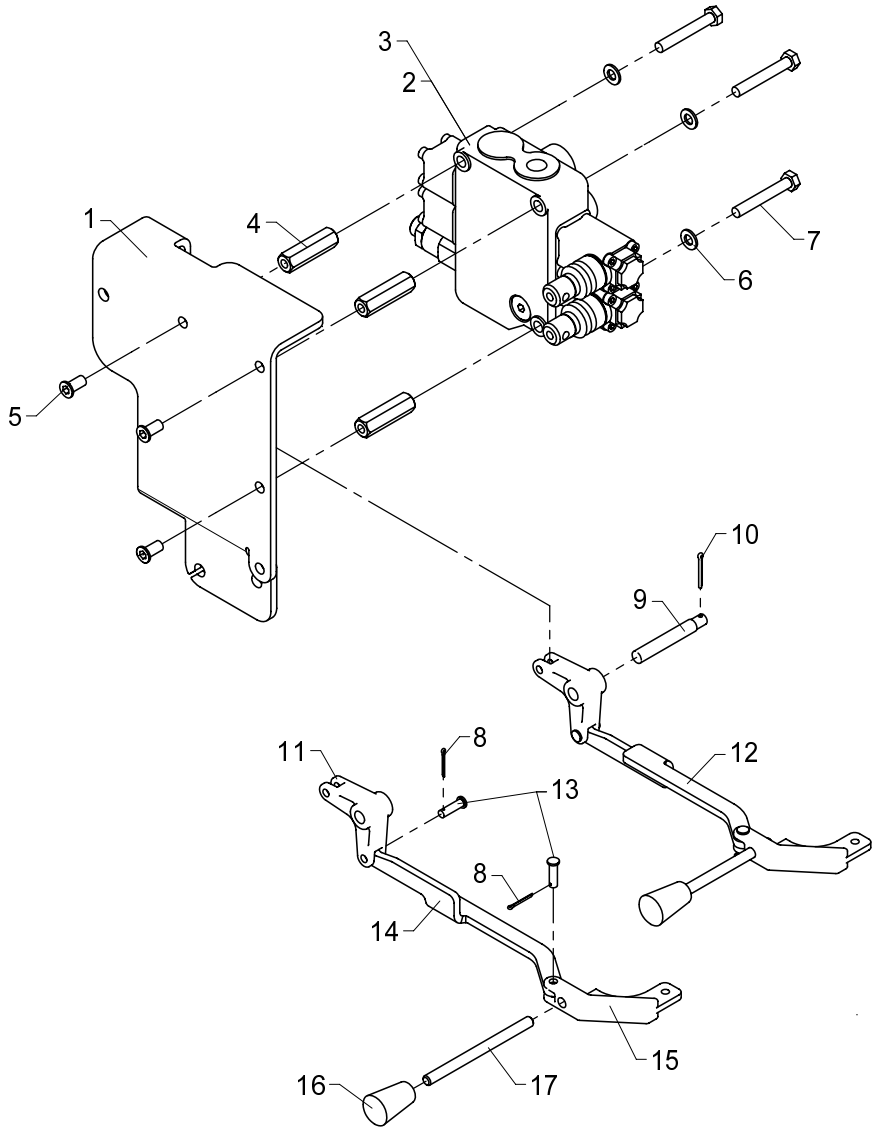

534 10 070

From loader 1060001
To loader

Created 12-01-2010
Modified

Valve bracket - HS 2 fcts./4 fcts. (oper. from HS)

Pos	Qty.	Part no.	Description	Remarks
		6341650	Valve bracket, HS 2 functions	
		6341660	Valve bracket, HS 4 functions	
1	1	6340492	Valve bracket (HS)	
2	1	55225	Stabilizer valve	HC-M50/2 PB 48926
3	1	55226	Stabilizer valve	HC-M50/4 PB-4 sekt 48925
4	3	6340222	Spacer	
5	3	32481	Screw	MCL8 x 16
6	3	31147	Washer, stainless	8 mm
7	3	30140	Steel bolt, stainless	M8 x 55
8	4	31601	Split pin, stainless	ø1,6 x 20
9	1	6340493	Pin	
10	1	31607	Split pin	ø2,5 x 25
11	2	63479	Bracket	
12	1	6340491	Link	
13	4	31271	Cotter bolt	ø6 x 21
14	1	6340489	Link	
15	2	63478	Adapter	
16	2	59224	Knob for lever	
17	2	1330187	Control lever, long, straight	

15/105 - 17/117 SL & DL Parts

Internal ref. 63 42 490

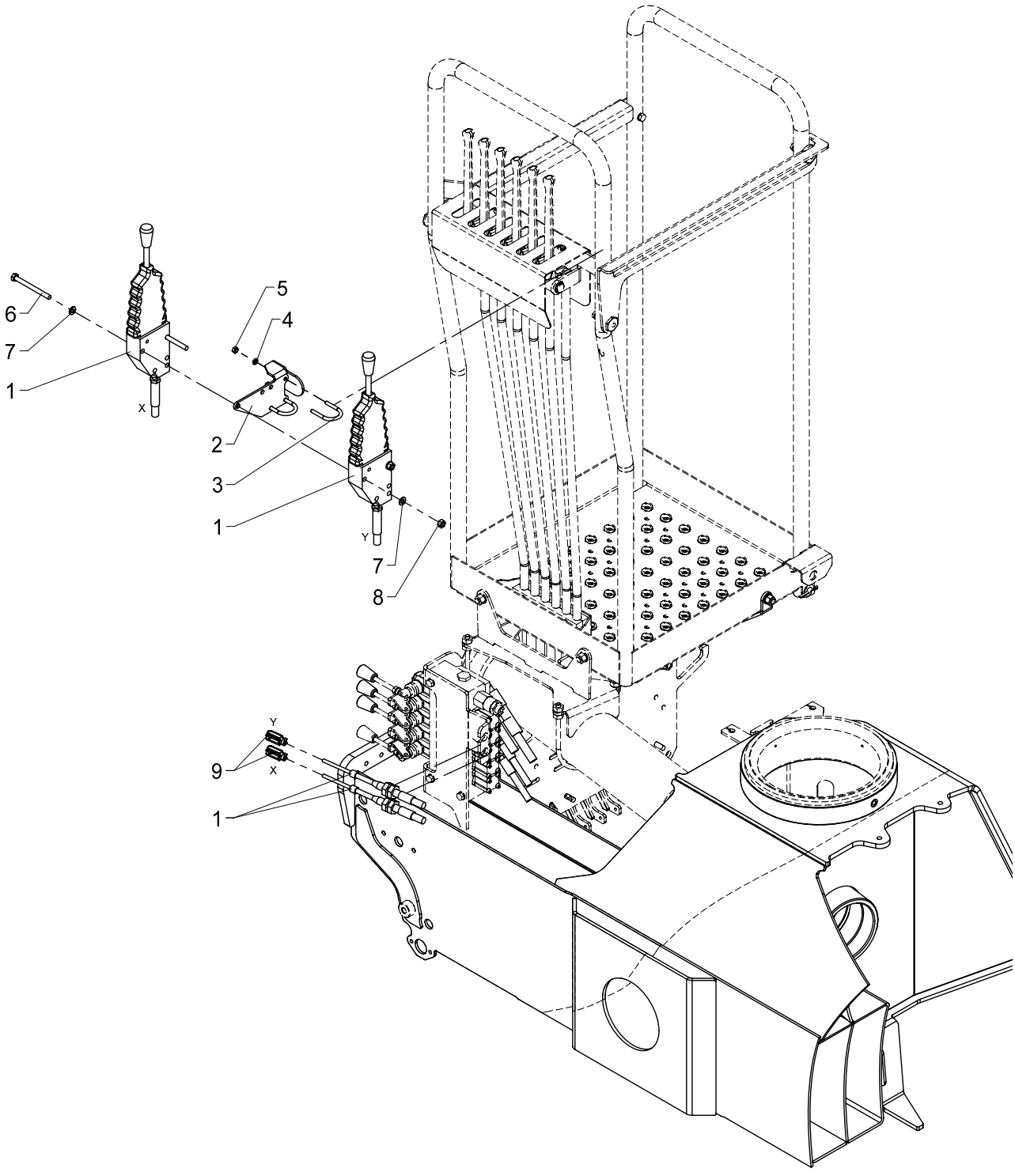

534 10 090

From loader 1060001
To loader

Created 12-01-2010
Modified

Stabilizer operation, HS std. - 4 fcts. + 4 available fcts.

Pos	Qty.	Part no.	Description	Remarks
1	2	48465	Push-pull cable incl. lever	1500 mm
2	1	6340499	Fittings	
3	2	6340903	Clamp	
4	4	32302	Face washer, stainless	6 mm
5	4	30854	Nut, stainless	M6
6	2	30144	Steel bolt, stainless	M8 x 90
7	4	31147	Washer, stainless	8 mm
8	2	30856	Nut, stainless	M8
9	2	48414	Clevis	

15/105 - 17/117 SL & DL Parts

63 45 470
Internal ref. 63 41 470

Montage med clips 31068

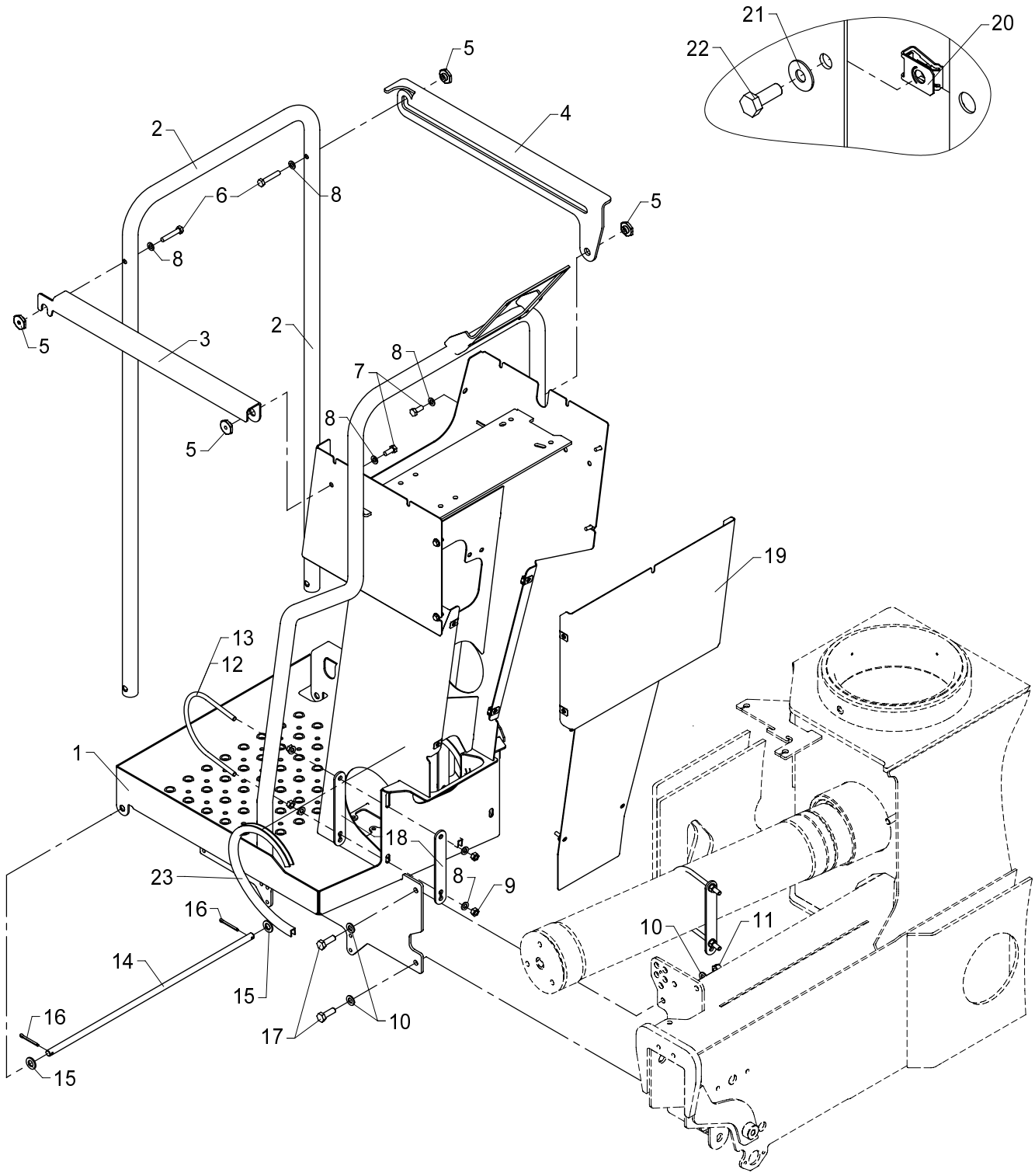

Stand-up controls, direct valve control

534 10 200

From loader 1060001
To loader

Created 12-01-2010
Modified

Pos	Qty.	Part no.	Description	Remarks
		6341470	Stand-up control - direct ctrl	
		6345470	Stand-up control - direct ctrl	
1	1	6340851	Platform	
2	1	6340865	Safety guard	
3	1	6340867	Railing	
4	1	6340868	Railing	
5	4	6340475	Nut	
6	2	31511	Set screw, stainless	M8 x 45
7	2	30132	Set screw, stainless	M8 x 20
8	12	31147	Washer, stainless	8 mm
9	8	30856	Nut, stainless	M8
10	4	31565	Washer, stainless	10 mm
11	2	31564	Lock nut, stainless	M10
12	2	6340878	Clamp	Serie 1300/1500
13	2	6344878	Clamp	Serie 1800/2200
14	1	6340866	Pin	
15	2	32338	Washer	12 mm
16	2	31638	Split pin	ø4 x 40
17	2	30156	Set screw, stainless	M10 x 30
18	4	6340864	Division plate	
19	1	6340869	End plate	
20	8	31068	Clip	M6 0,5 - 4,0 mm.
21	8	32306	Washer	6 mm
22	8	30112	Set screw, stainless	M6 x 16
23	2	22122	PVC protection	410 mm

15/105 - 17/117 SL & DL Parts

Internal ref. 63 41 480

Montage med clips 31068

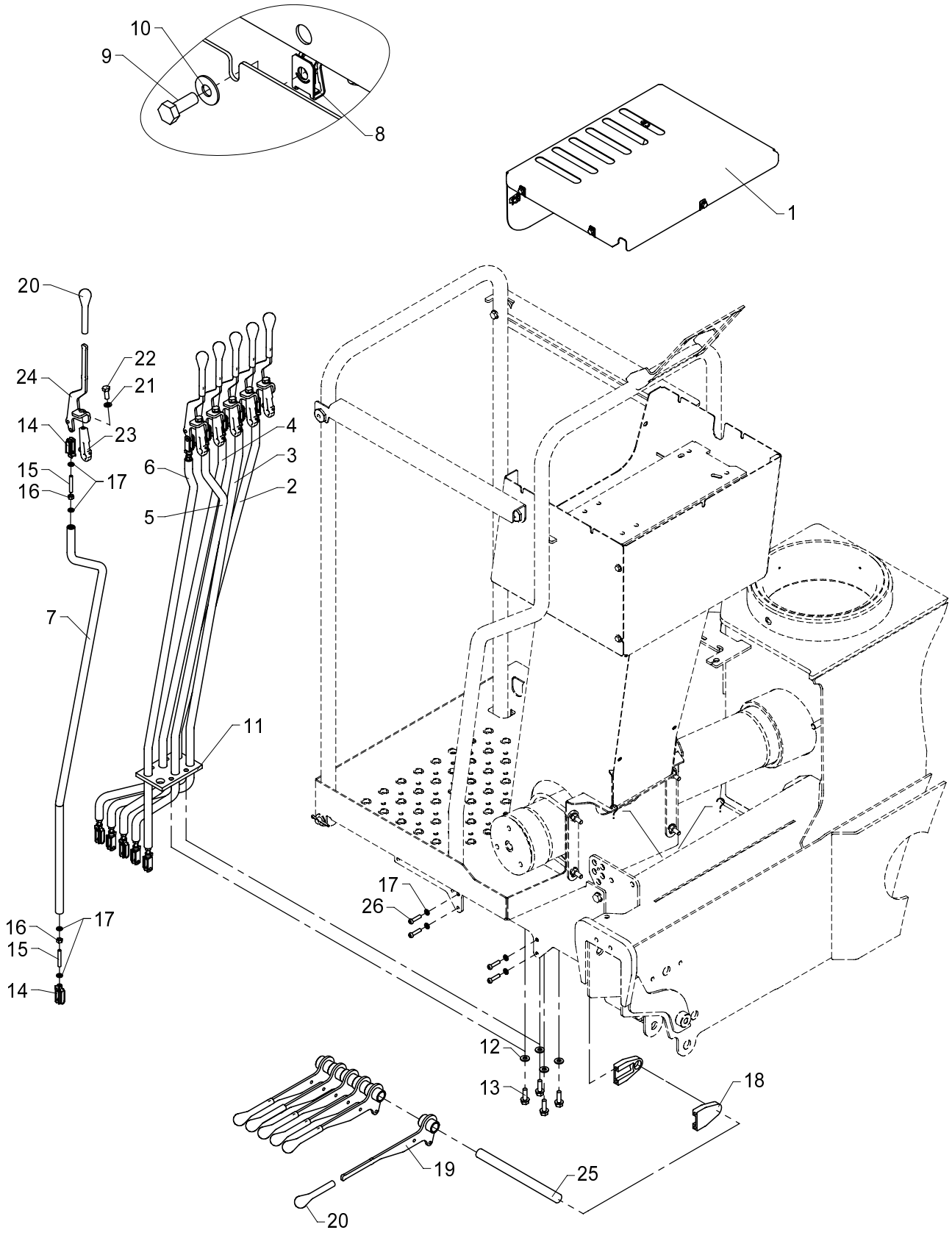

Rod control, HS, direct valve control (Danfoss)

534 10 210

From loader 1060001
To loader

Created 12-01-2010
Modified

Pos	Qty.	Part no.	Description	Remarks
1	1	6340871	Protection plate	
2	1	6340891	Connecting rod (slew)	
3	1	6340892	Connecting rod (boom)	
4	1	6340893	Connecting rod (jib)	
5	1	6340894	Connecting rod (extension)	
6	1	6340895	Connecting rod (EXV1)	
7	1	6340896	Connecting rod (EXV2)	
8	7	31068	Clip	M6 0,5 - 4,0 mm.
9	7	30112	Set screw, stainless	M6 x 16
10	7	32306	Washer	6 mm
11	1	64412	Guide	
12	4	31754	Washer	8,4 x 18 x 2
13	4	30996	Screw	M8 x 25
14	12	48414	Clevis	
15	12	31007	Pointed screw	MSP6 x 40
16	12	30854	Nut, stainless	M6
17	28	32302	Face washer, stainless	6 mm
18	2	63564	Bracket for pin	
19	6	6340875	Lever	
20	12	48406	Knob	
21	6	31155	Spring washer	8 mm
22	6	30132	Set screw, stainless	M8 x 20
23	6	59682	Foot for lever	
24	6	6306159	Control lever	
25	1	6340249	Pin	
26	4	30340	Screw, stainless	6,0 x 25

15/105 - 17/117 SL & DL Parts

Internal ref. 63 41 550

Montage med clips 31068

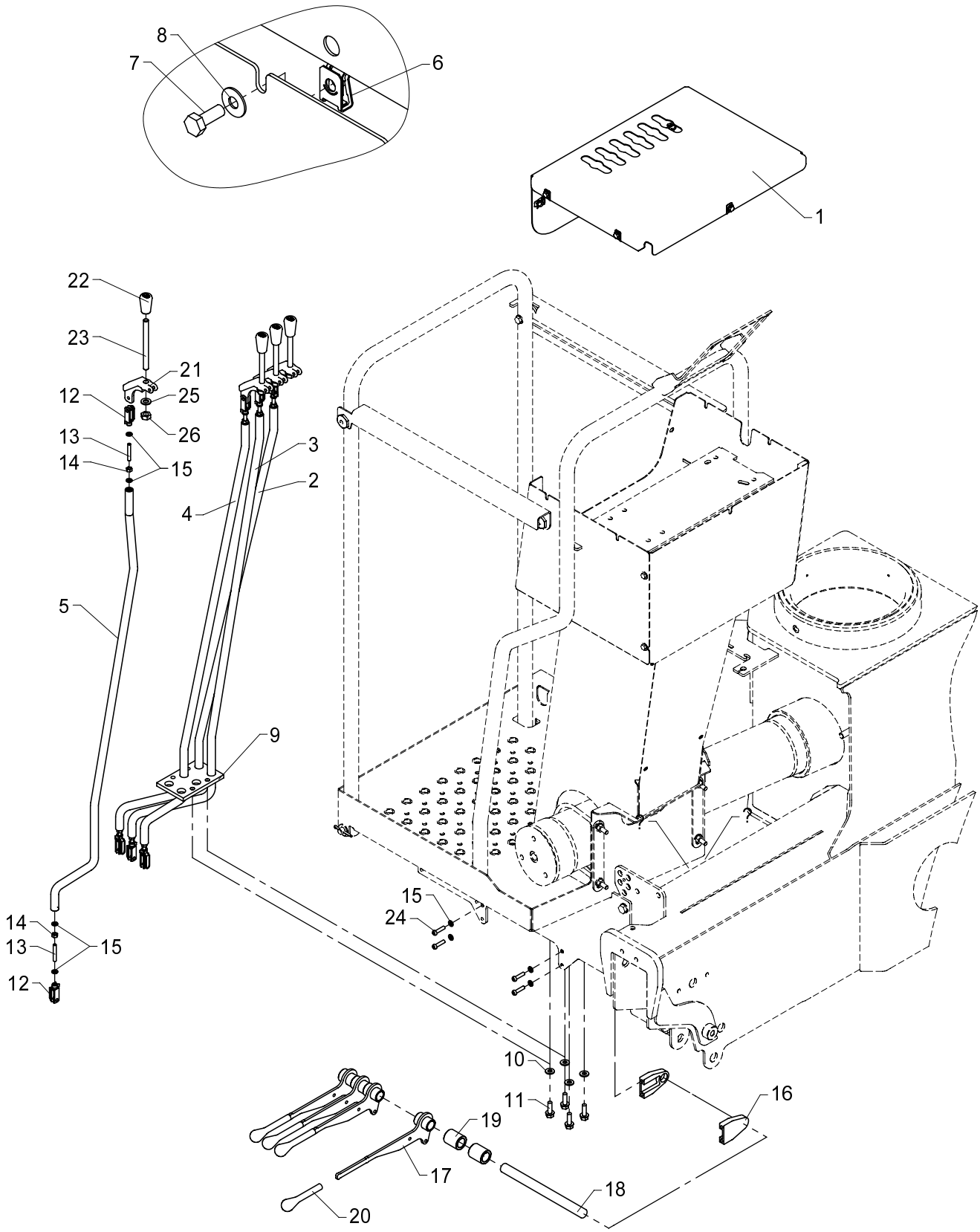

Rod control, HS, direct valve control (Hydrocontrol) - 4 fcts.

534 10 220

From loader 1060001
To loader

Created 12-01-2010
Modified

Pos	Qty.	Part no.	Description	Remarks
1	1	6340872	Protection plate	
2	1	6340881	Connecting rod (slew-HC)	
3	1	6340882	Connecting rod (boom-HC)	
4	1	6340883	Connecting rod (jib-HC)	
5	1	6340884	Connecting rod (extension-HC)	
6	7	31068	Clip	M6 0,5 - 4,0 mm.
7	7	30112	Set screw, stainless	M6 x 16
8	7	32306	Washer	6 mm
9	1	64412	Guide	
10	4	31754	Washer	8,4 x 18 x 2
11	4	30996	Screw	M8 x 25
12	8	48414	Clevis	
13	8	31007	Pointed screw	MSP6 x 40
14	8	30854	Nut, stainless	M6
15	20	32302	Face washer, stainless	6 mm
16	2	63564	Bracket for pin	
17	4	6340875	Lever	
18	1	6340249	Pin	
19	2	63598	Bushing	ø30/20x35
20	4	48406	Knob	
21	4	63499	Adapter	
22	4	64411	Knob for lever	
23	4	6340245	Control valve lever	
24	4	30340	Screw, stainless	6,0 x 25
25	4	31177	Washer	10 mm
26	4	30858	Nut	M10

15/105 - 17/117 SL & DL Parts

Internal ref. 63 41 560

Montage med clips 31068

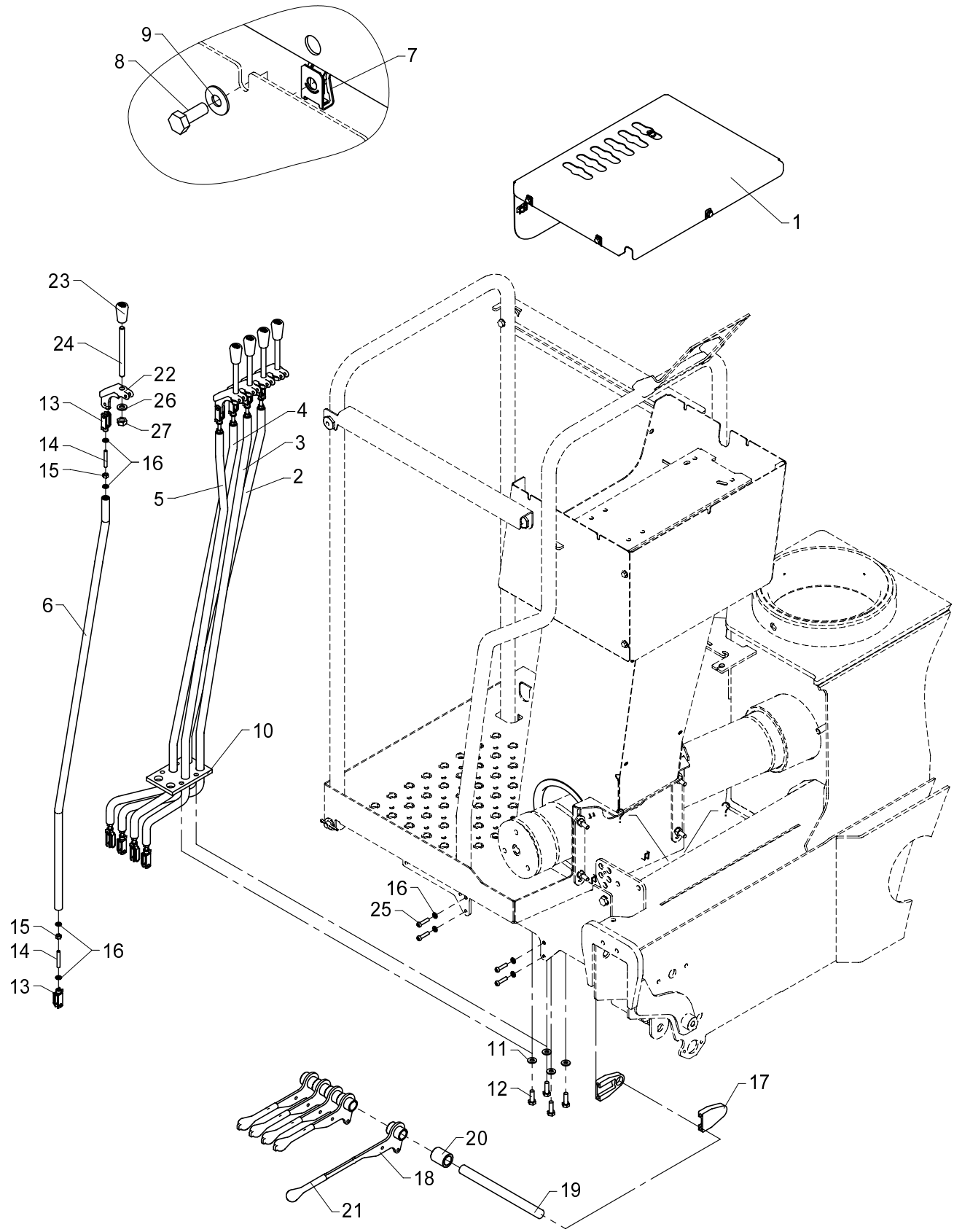

534 10 230

From loader 1060001
To loader

Created 12-01-2010
Modified

Rod control, HS, direct valve control (Hydrocontrol) - 5 fcts.

Pos	Qty.	Part no.	Description	Remarks
1	1	6340872	Protection plate	
2	1	6340881	Connecting rod (slew-HC)	
3	1	6340882	Connecting rod (boom-HC)	
4	1	6340883	Connecting rod (jib-HC)	
5	1	6340884	Connecting rod (extension-HC)	
6	1	6340885	Connecting rod (EXV1-HC)	
7	7	31068	Clip	M6 0,5 - 4,0 mm.
8	7	30112	Set screw, stainless	M6 x 16
9	7	32306	Washer	6 mm
10	1	64412	Guide	
11	4	31754	Washer	8,4 x 18 x 2
12	4	30996	Screw	M8 x 25
13	10	48414	Clevis	
14	10	31007	Pointed screw	MSP6 x 40
15	10	30854	Nut, stainless	M6
16	24	32302	Face washer, stainless	6 mm
17	2	63564	Bracket for pin	
18	5	6340875	Lever	
19	1	6340249	Pin	
20	1	63598	Bushing	ø30/20x35
21	5	48406	Knob	
22	5	63499	Adapter	
23	5	64411	Knob for lever	
24	5	6340245	Control valve lever	
25	4	30340	Screw, stainless	6,0 x 25
26	5	31177	Washer	10 mm
27	5	30858	Nut	M10

15/105 - 17/117 SL & DL Parts

63 41 590
Internal ref. 63 41 490

Montage med clips 31068

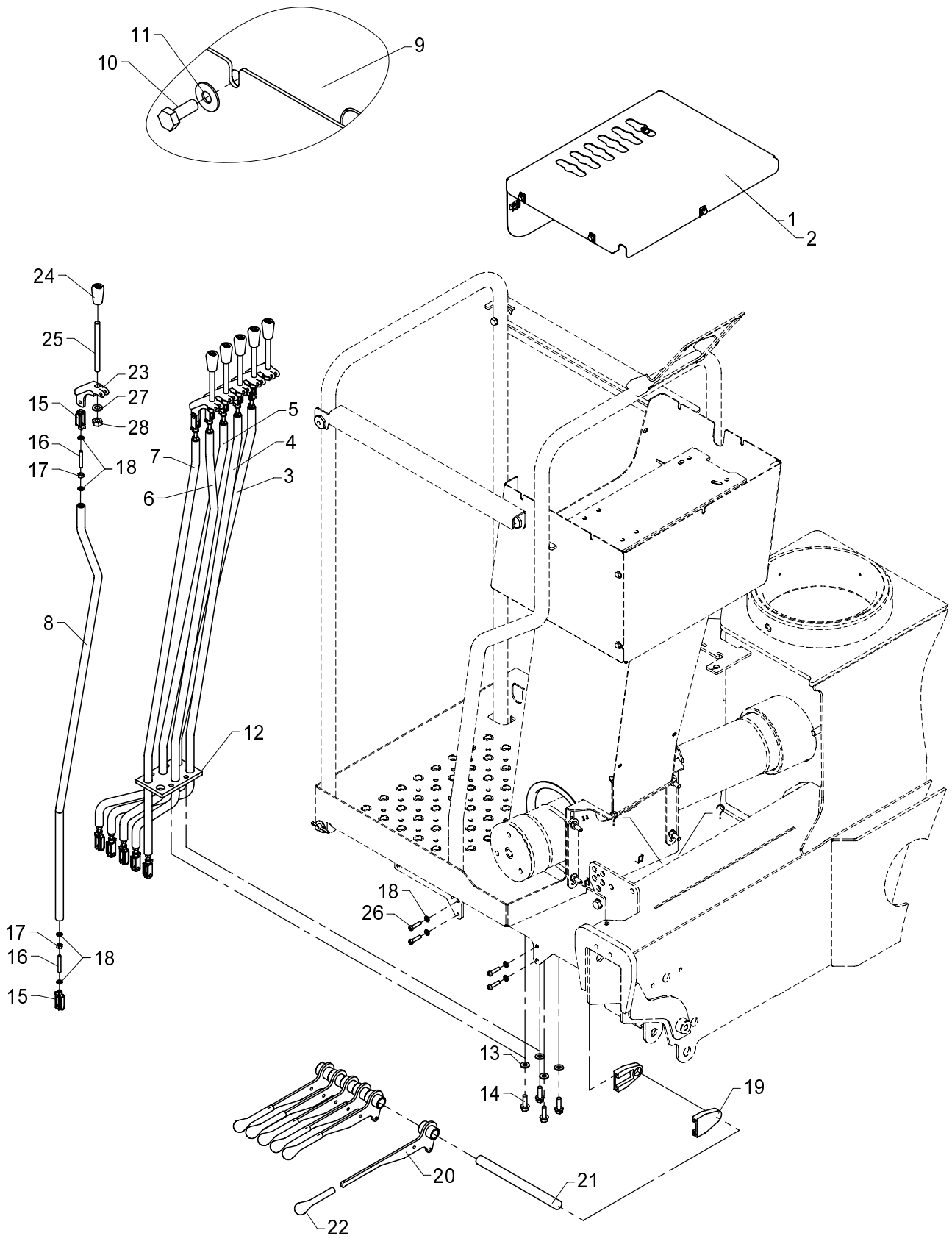

From loader 1060001
To loader

Rod control, HS, direct valve control (Hydrocontrol) - 6 fcts.

Created 12-01-2010
Modified

Pos	Qty.	Part no.	Description	Remarks
		6341490	Rod control, HS 6 functions	
		6341590	Rod control, 6 functions	
1	1	6340872	Protection plate	
2	1	6340873	Protection plate (HC-2circuits	
3	1	6340881	Connecting rod (slew-HC)	
4	1	6340882	Connecting rod (boom-HC)	
5	1	6340883	Connecting rod (jib-HC)	
6	1	6340884	Connecting rod (extension-HC)	
7	1	6340885	Connecting rod (EXV1-HC)	
8	1	6340886	Connecting rod (EXV2-HC)	
9	7	31068	Clip	M6 0,5 - 4,0 mm.
10	7	30112	Set screw, stainless	M6 x 16
11	7	32306	Washer	6 mm
12	1	64412	Guide	
13	4	31754	Washer	8,4 x 18 x 2
14	4	30996	Screw	M8 x 25
15	12	48414	Clevis	
16	12	31007	Pointed screw	MSP6 x 40
17	12	30854	Nut, stainless	M6
18	28	32302	Face washer, stainless	6 mm
19	2	63564	Bracket for pin	
20	6	6340875	Lever	
21	1	6340249	Pin	
22	6	48406	Knob	
23	6	63499	Adapter	
24	6	64411	Knob for lever	
25	6	6340245	Control valve lever	
26	4	30340	Screw, stainless	6,0 x 25
27	6	31177	Washer	10 mm
28	6	30858	Nut	M10

15/105 - 17/117 SL & DL Parts

Internal ref. 63 42 480

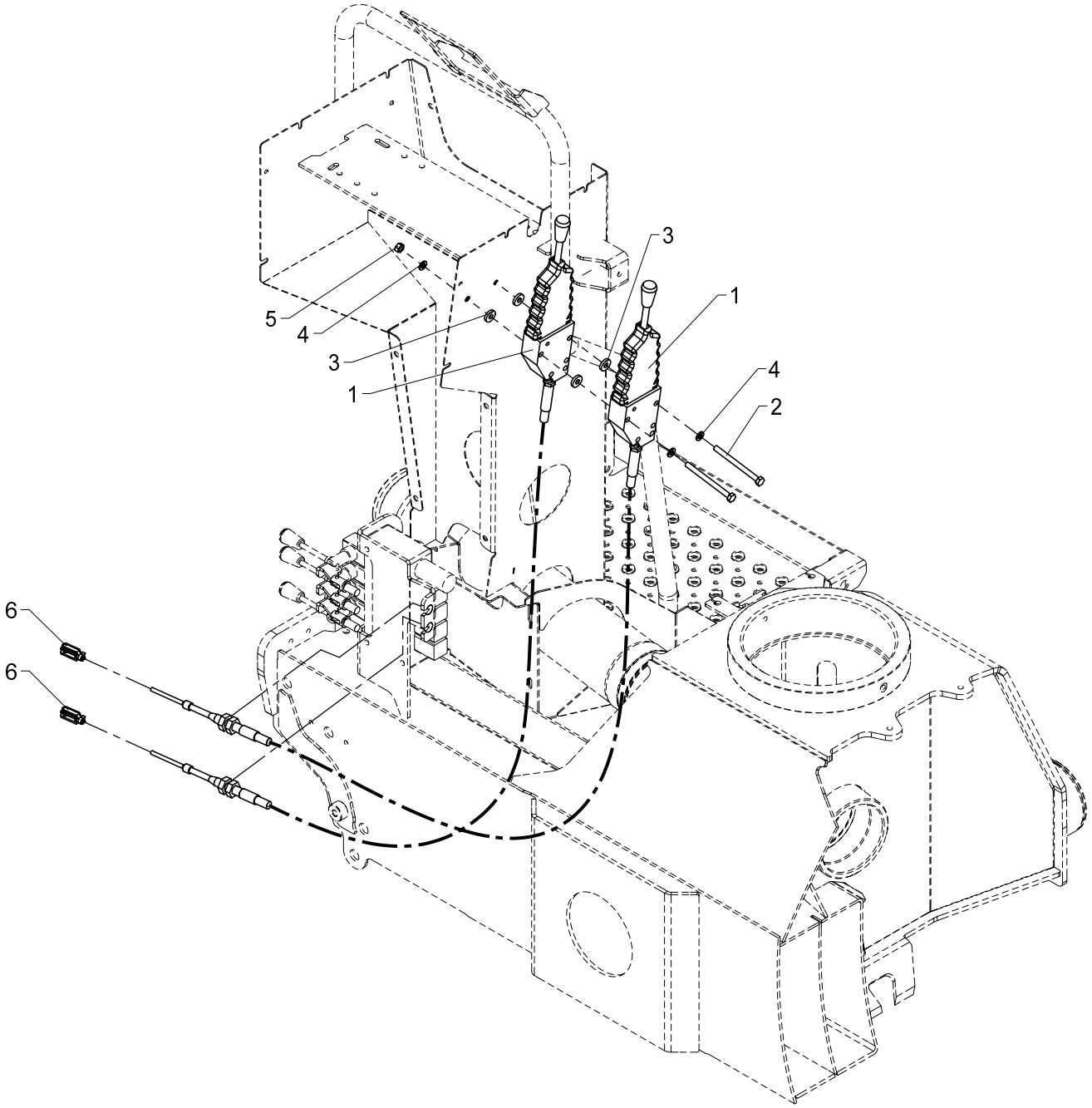

534 10 250

From loader 1060001
To loader

Created 15-04-2009
Modified

Stabilizer operation, HS, direct valve control

Pos	Qty.	Part no.	Description	Remarks
1	2	48465	Push-pull cable incl. lever	1500 mm
2	2	30145	Steel bolt, stainless	M8 x 100
3	4	31755	Washer	8 mm
4	4	31147	Washer, stainless	8 mm
5	2	30856	Nut, stainless	M8
6	2	48414	Clevis	

15/105 - 17/117 SL & DL Parts

Internal ref. 63 43 890

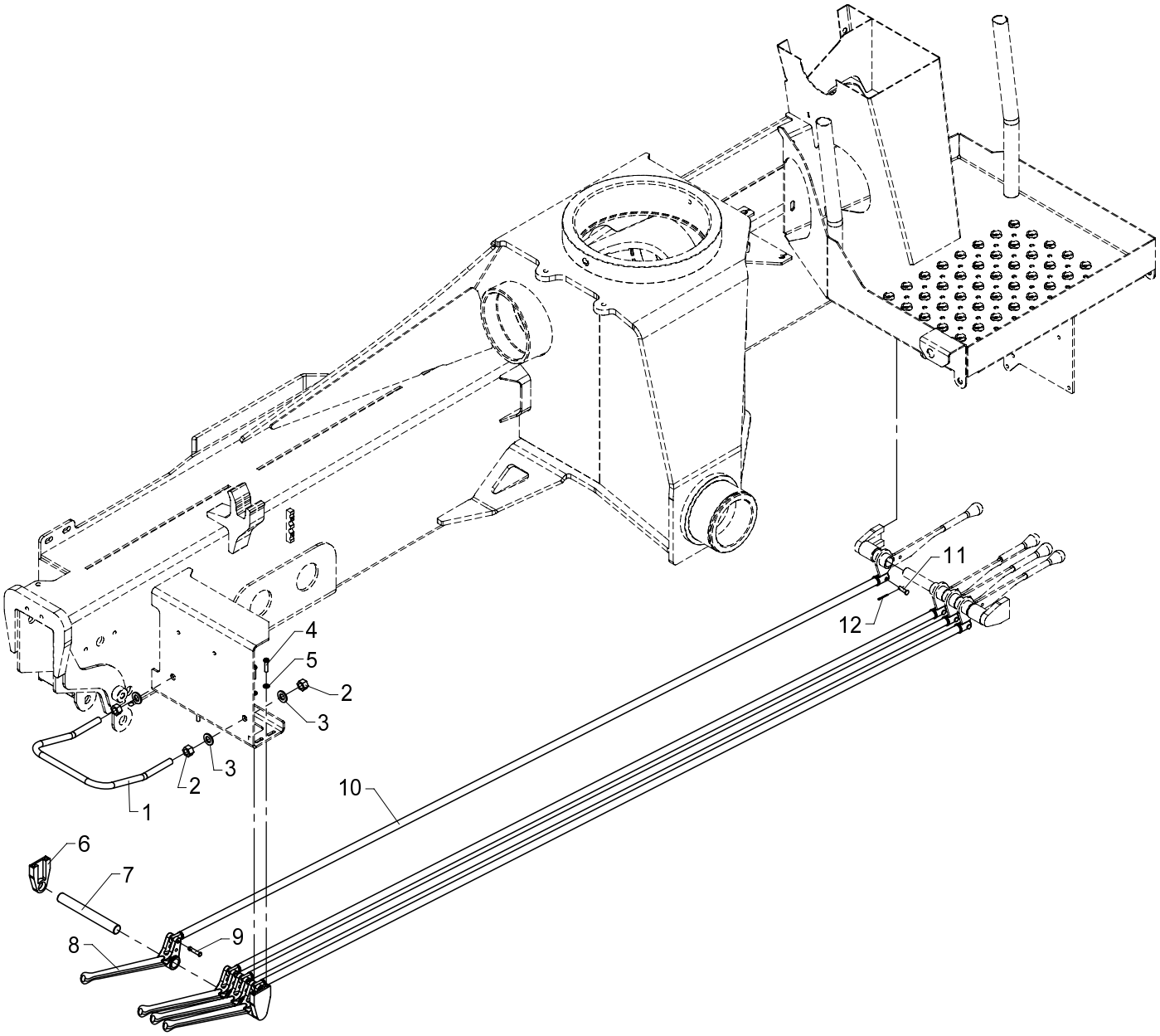

534 10 300

From loader 1060001
To loader

Created 12-01-2010
Modified

Dual control, HS, direct valve control - 4 fcts.

Pos	Qty.	Part no.	Description	Remarks
1	1	6340247	Safety guard	
2	4	30860	Nut, stainless	M12
3	4	32338	Washer	12 mm
4	4	30340	Screw, stainless	6,0 x 25
5	4	32302	Face washer, stainless	6 mm
6	2	63564	Bracket for pin	
7	1	6340248	Pin	
8	4	63443	Lever for dual controls	
9	4	63468	Split pin with spring lock	
10	4	6340889	Connecting rod	
11	4	31271	Cotter bolt	ø6 x 21
12	4	31601	Split pin, stainless	ø1,6 x 20

15/105 - 17/117 SL & DL Parts

Internal ref. 63 43 900

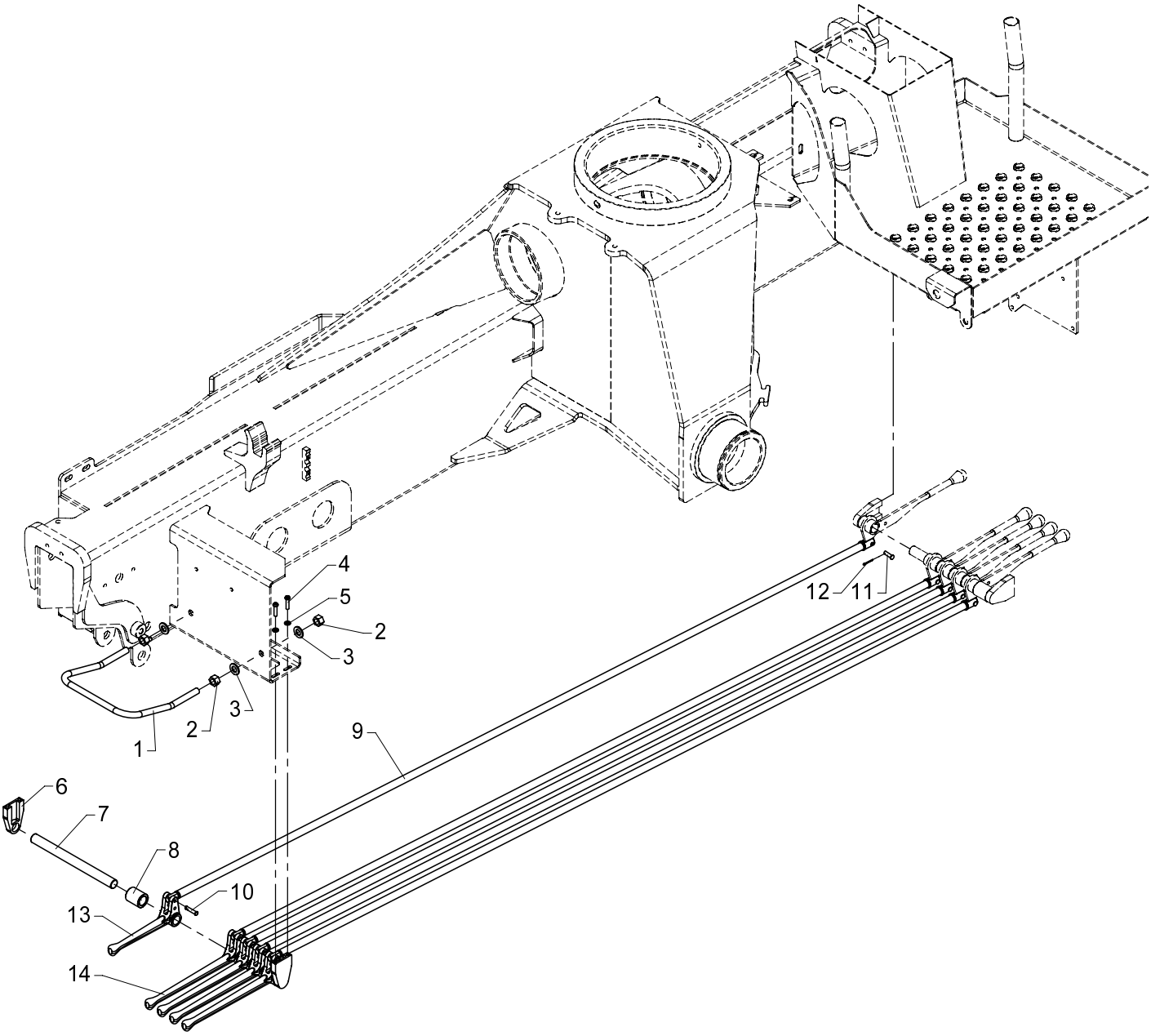

534 10 310

From loader 1060001
To loader

Created 12-01-2010
Modified

Dual control, HS, direct valve control - 5 fcts.

Pos	Qty.	Part no.	Description	Remarks
1	1	6340247	Safety guard	
2	4	30860	Nut, stainless	M12
3	4	32338	Washer	12 mm
4	4	30340	Screw, stainless	6,0 x 25
5	4	32302	Face washer, stainless	6 mm
6	2	63564	Bracket for pin	
7	1	6340249	Pin	
8	1	63598	Bushing	
9	5	6340889	Connecting rod	
10	5	63468	Split pin with spring lock	
11	5	31271	Cotter bolt	ø6 x 21
12	5	31601	Split pin, stainless	ø1,6 x 20
13	1	63444	Lever for dual controls	
14	4	63443	Lever for dual controls	

15/105 - 17/117 SL & DL Parts

Internal ref. 63 43 910

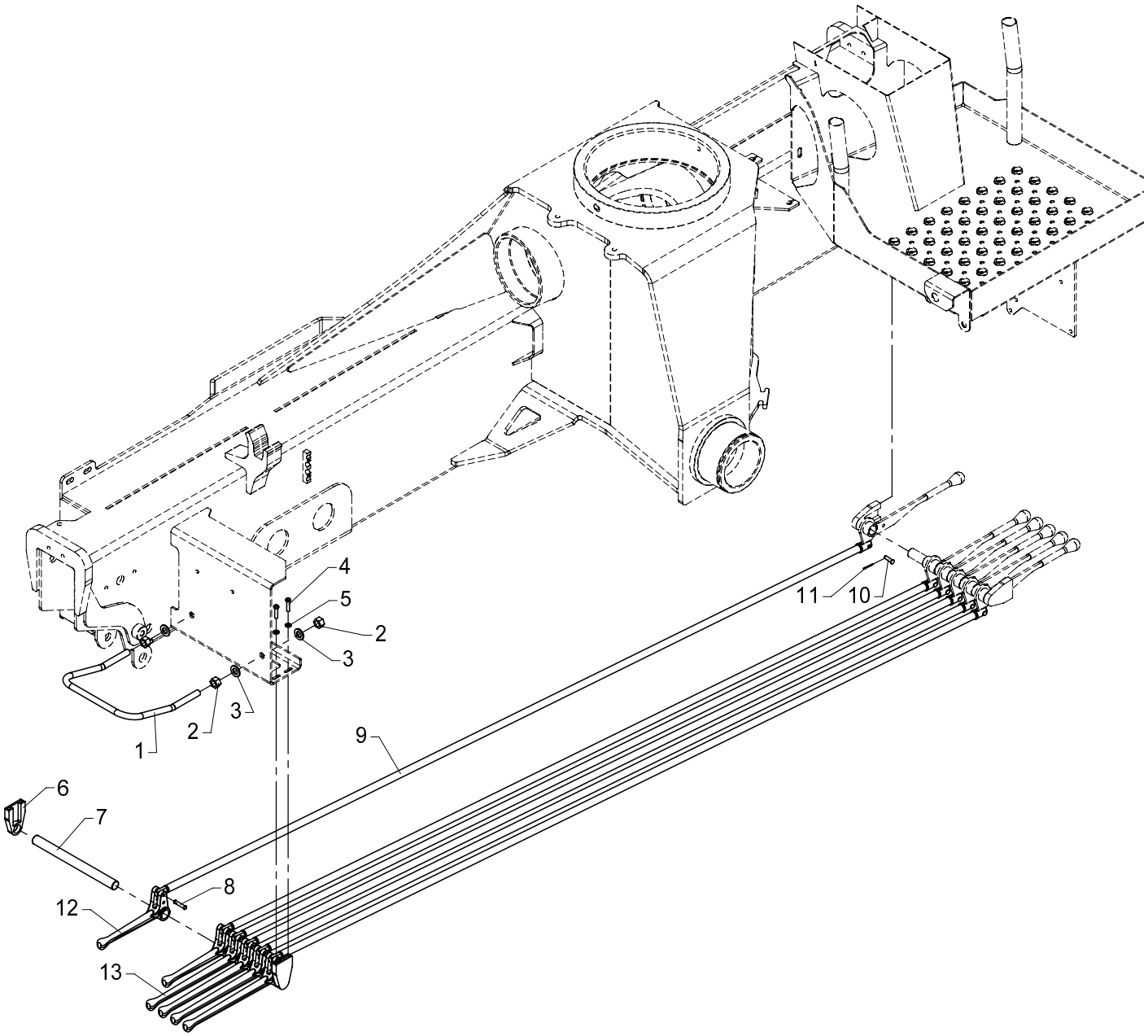

534 10 320

From loader 1060001
To loader

Created 12-01-2010
Modified

Dual control, HS, direct valve control - 6 fcts.

Pos	Qty.	Part no.	Description	Remarks
1	1	6340247	Safety guard	
2	4	30860	Nut, stainless	M12
3	4	32338	Washer	12 mm
4	4	30340	Screw, stainless	6,0 x 25
5	4	32302	Face washer, stainless	6 mm
6	2	63564	Bracket for pin	
7	1	6340249	Pin	
8	6	63468	Split pin with spring lock	
9	6	6340889	Connecting rod	
10	6	31271	Cotter bolt	ø6 x 21
11	6	31601	Split pin, stainless	ø1,6 x 20
12	2	63444	Lever for dual controls	
13	4	63443	Lever for dual controls	

15/105 - 17/117 SL & DL Parts

63 41 640
Internal ref. 63 41 280

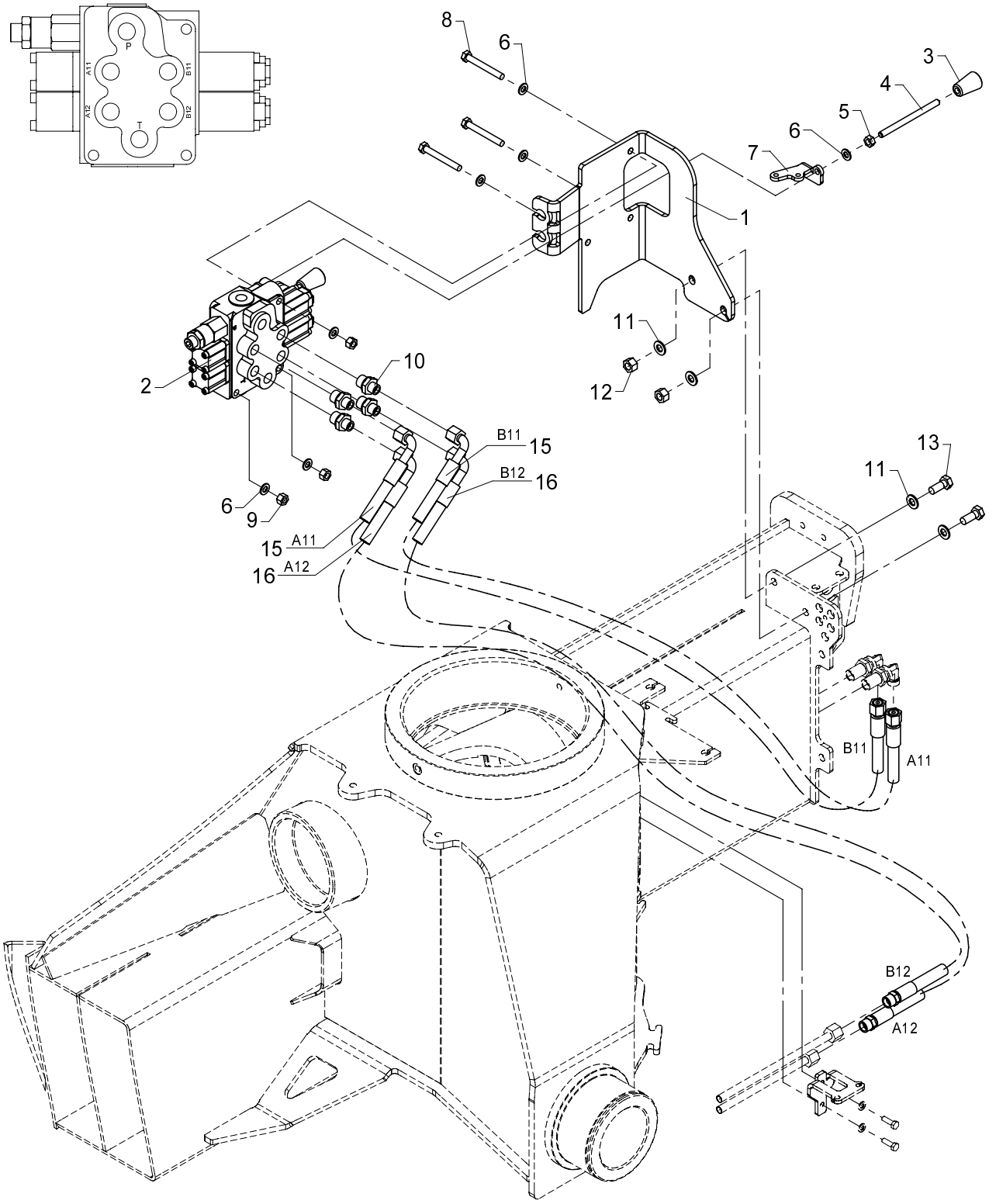

534 10 350

From loader 1060001
To loader
Created
Modified 01-02-2010

Valve bracket, cpl., direct valve control - 2 fcts.

Pos	Qty.	Part no.	Description	Remarks
		6341280	Valve bracket, cpl. 2 fcts.HS	
		6341640	Hose kit, 2 functions, HS	
1	1	6340227	Valve bracket (TS - 2 fcts.)	
2	1	55225	Stabilizer valve	
3	2	59224	Knob for lever	
4	2	1330187	Control lever, long, straight	
5	2	30856	Nut, stainless	M8
6	8	31147	Washer, stainless	8 mm
7	2	6340229	Adapter	
8	3	30259	Steel bolt, stainless	M8 x 65
9	3	30886	Lock nut, stainless	M8
10	4	25244	Connection	GES 8 LR 3/8-WD
11	4	31565	Washer, stainless	10 mm
12	2	31564	Lock nut, stainless	M10
13	2	31513	Set screw, stainless	M10 x 25
14	1	6341640	Hose kit, 2 functions, HS	
15	2	56515	Hose	5/16 X 1250 mm 90/L 10Let
16	2	56516	Hose	5/16 X 600 mm 90/S

534 10 360

15/105 - 17/117 SL & DL Parts

63 41 630
Internal ref. 63 41 300

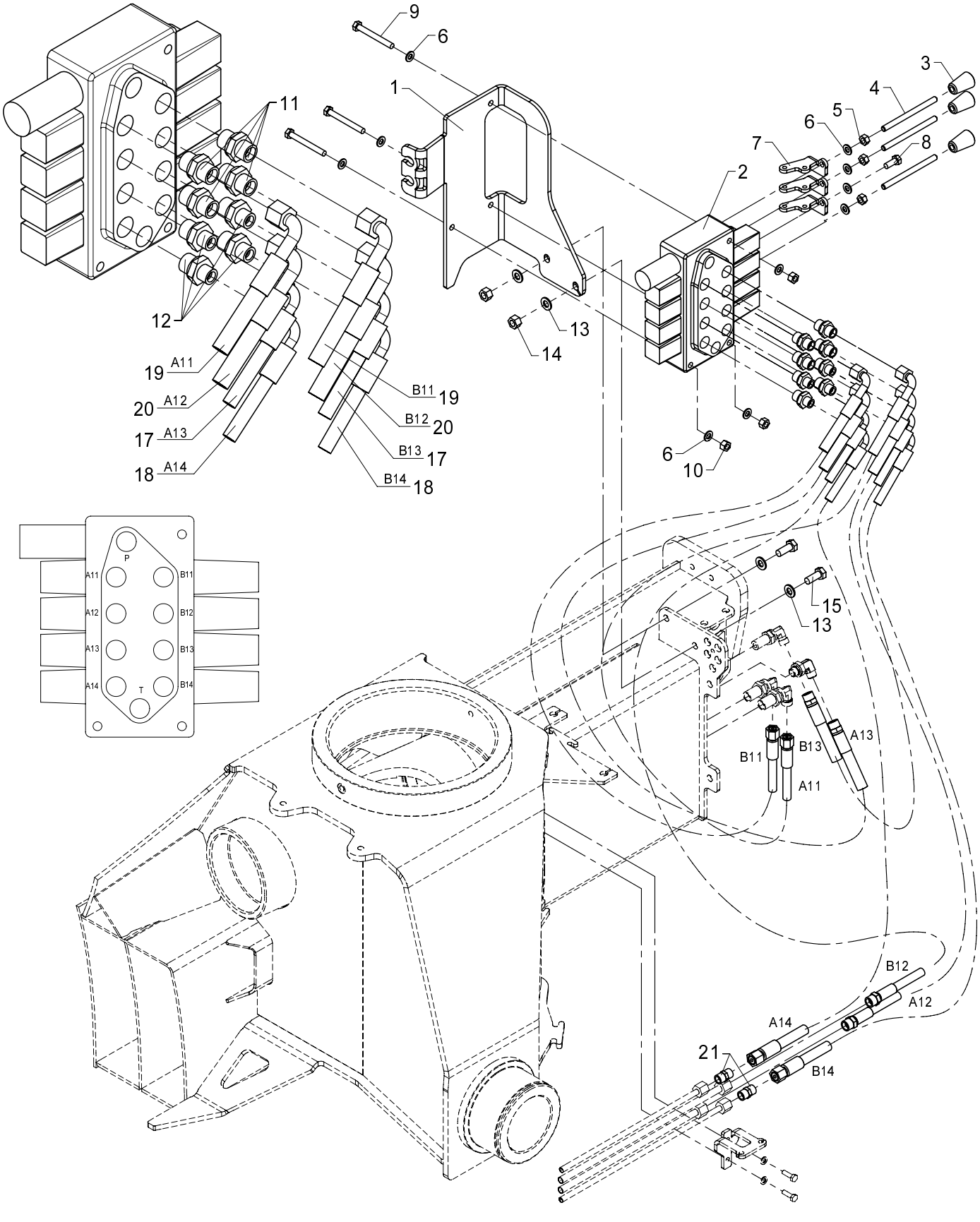

534 10 360

From loader 1060001
To loader
Created
Modified 01-02-2010

Valve bracket, cpl., direct valve control - 4 fcts.

Pos	Qty.	Part no.	Description	Remarks
		6341300	Valve bracket, cpl. 4 fcts.HS	
		6341630	Hose kit, 4 functions, HS	
1	1	6340228	Valve bracket (TS - 4 fcts.)	
2	1	55281	Stabilizer valve	
3	3	59224	Knob for lever	
4	3	1330187	Control lever, long, straight	
5	3	30856	Nut, stainless	M8
6	10	31147	Washer, stainless	8 mm
7	3	6340229	Adapter	
8	1	30132	Set screw, stainless	M8 x 20
9	3	30142	Steel bolt, stainless	M8 x 70
10	3	30886	Lock nut, stainless	M8
11	4	25253	Connection	P-GEV 10 LR 3/8-WD
12	4	25244	Connection	GES 8 LR 3/8-WD
13	4	31565	Washer, stainless	10 mm
14	2	31564	Lock nut, stainless	M10
15	2	31513	Set screw, stainless	M10 x 25
16	1	6341630	Hose kit, 4 functions, HS	
17	2	62620	Hose	1/4 X 1100 M14X1.5 L/90
18	2	62525	Hose	1/4 X 400 M14 X 1.5 L/90
19	2	56515	Hose	5/16 X 1250 mm 90/L 10Let
20	2	56516	Hose	5/16 X 600 mm 90/S
21	2	25246	Double connection	P-GV 8 L

15/105 - 17/117 SL & DL Parts

63 41 670
Internal ref. 63 41 320

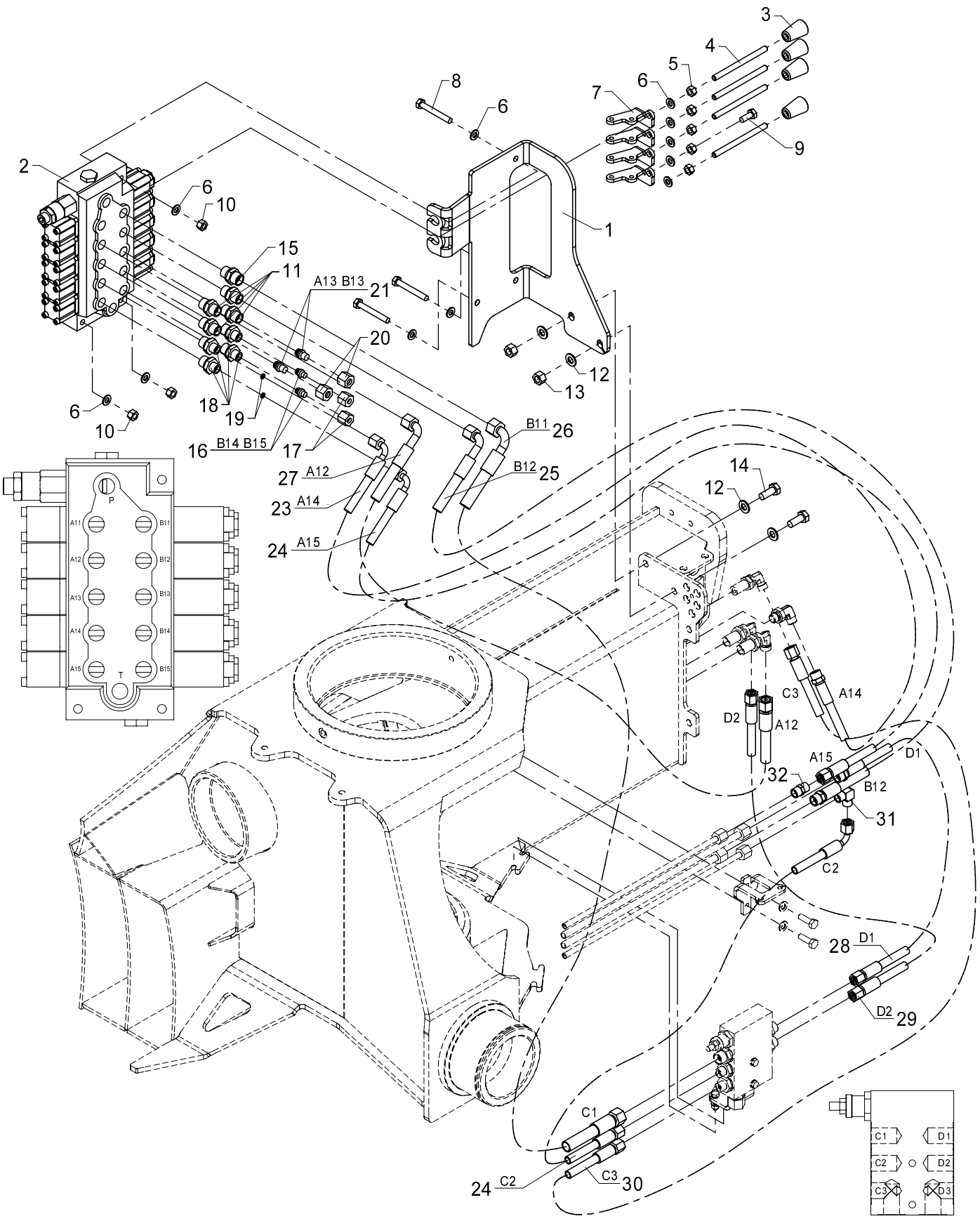

534 10 370

From loader 1060001
To loader
Created
Modified 14-05-2009

Valve bracket, cpl., direct valve control - 4 fcts. + 4 available fcts.

Pos	Qty.	Part no.	Description	Remarks
		6341320	Valve br., cpl.4fcts.+4 avail.	
		6341670	Hose kit, 4 fcts + 4 avail.,HS	
1	1	6340226	Valve bracket (TS - 4 fcts.)	
2	1	55277	Valve block, complete	
3	4	59224	Knob for lever	
4	4	1330187	Control lever, long, straight	
5	5	30856	Nut, stainless	M8
6	11	31147	Washer, stainless	8 mm
7	4	6340229	Adapter	
8	3	30141	Set screw, stainless	M8 x 60
9	1	30132	Set screw, stainless	M8 x 20
10	3	30886	Lock nut, stainless	M8
11	4	25253	Connection	P-GEV 10 LR 3/8-WD
12	4	31565	Washer, stainless	10 mm
13	2	31564	Lock nut, stainless	M10
14	2	31513	Set screw, stainless	M10 x 25
15	1	25127	Connection	P-GEV 12 LR-WD
16	2	26166	Blanking plug	VSD 8 L
17	2	25181	Coupling nut	M 8 L
18	4	25244	Connection	GES 8 LR 3/8-WD
19	2	60963	Washer	
20	2	25182	Coupling nut	M 10 L
21	2	25202	Blanking plug	VSD 10 L
22	1	6341670	Hose kit, 4 fcts + 4 avail.,HS	
23	1	62620	Hose	1/4 X 1100 M14X1.5 L/90
24	2	62525	Hose	1/4 X 400 M14 X 1.5 L/90
25	1	56516	Hose	5/16 X 600 mm 90/S
26	1	0017300	Hose	
27	1	56515	Hose	5/16 X 1250 mm 90/L 10Let
28	1	56460	Hose	1/4" x 550mm L/S-10mm
29	1	56510	Hose	1/4 X 600 mm L/L 10Let
30	1	62569	Hose	1/4 X 800 M14 X 1.5 L/L
31	1	25247	Elbow connection	WV 8 L
32	1	25246	Double connection	P-GV 8 L

15/105 - 17/117 SL & DL Parts

Internal ref. 63 41 390

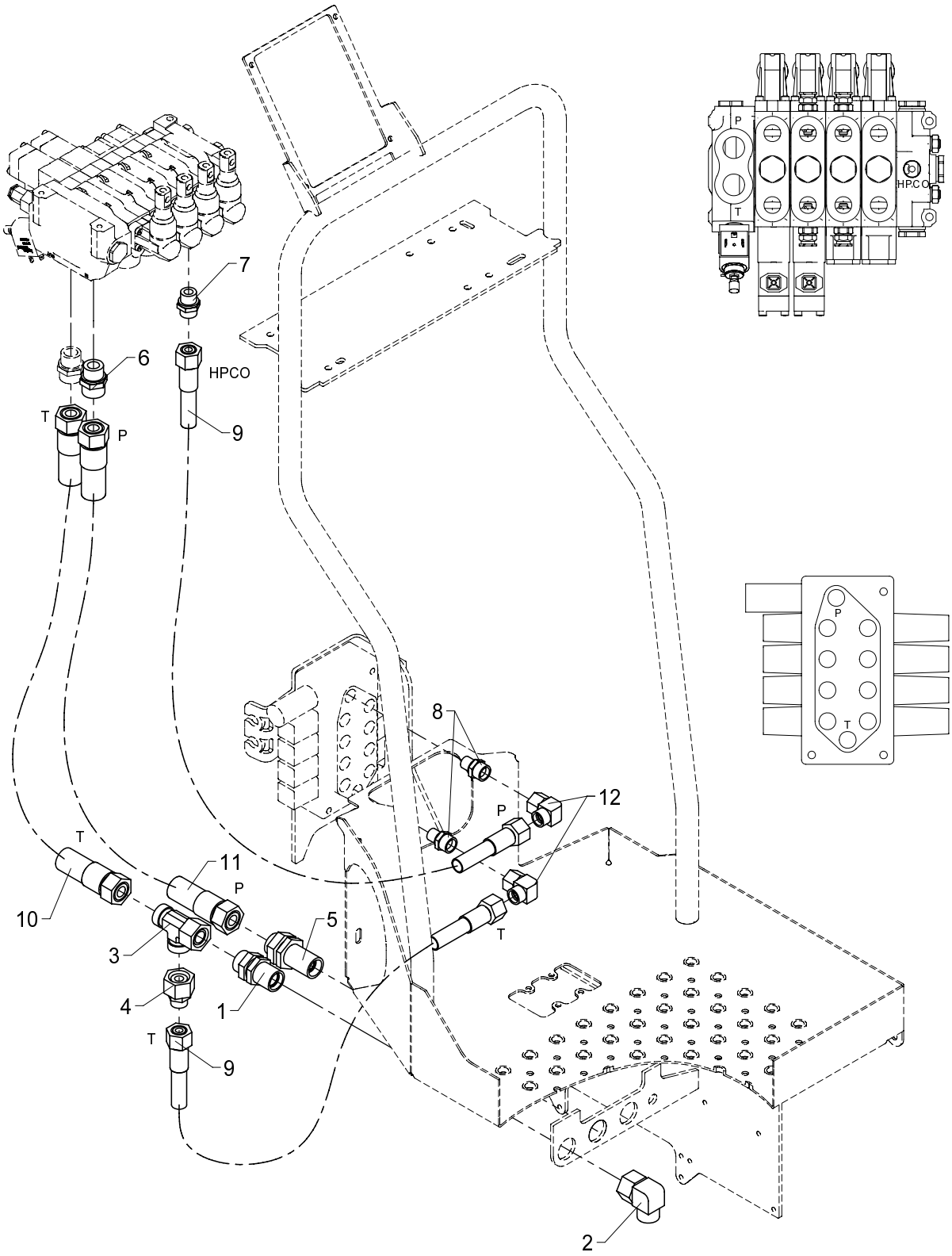

From loader 1060001
To loader

Pump and return hoses - HC - 1-circuit - HS direct valve control

Created 12-01-2010
Modified

Pos	Qty.	Part no.	Description	Remarks
1	1	25266	Bulkhead connection	P-GSV 22 L
2	1	25209	Elbow connection	EWSD 22 L
3	1	26149	Connection	ELSD 22 L
4	1	25298	Connection	REDSDN 22/15 L
5	1	26369	Bulkhead connection	GSS 12 L
6	1	26197	Connection	P-GEV 20 SR-WD
7	1	25143	Connection	P-GEV 15 LR-WD
8	2	25273	Connection	GES 15 LR 3-8 A3L
9	2	56509	Hose	1/2 X 1100 mm L/L M22
10	1	62574	Hose	3/4 X 1300 M30 X 2 L/L
11	1	56456	Hose	5/8 x 1400 mm 20S O/O
12	2	25284	Elbow connection	EWSD 15 L

15/105 - 17/117 SL & DL Parts

Internal ref. 63 41 400

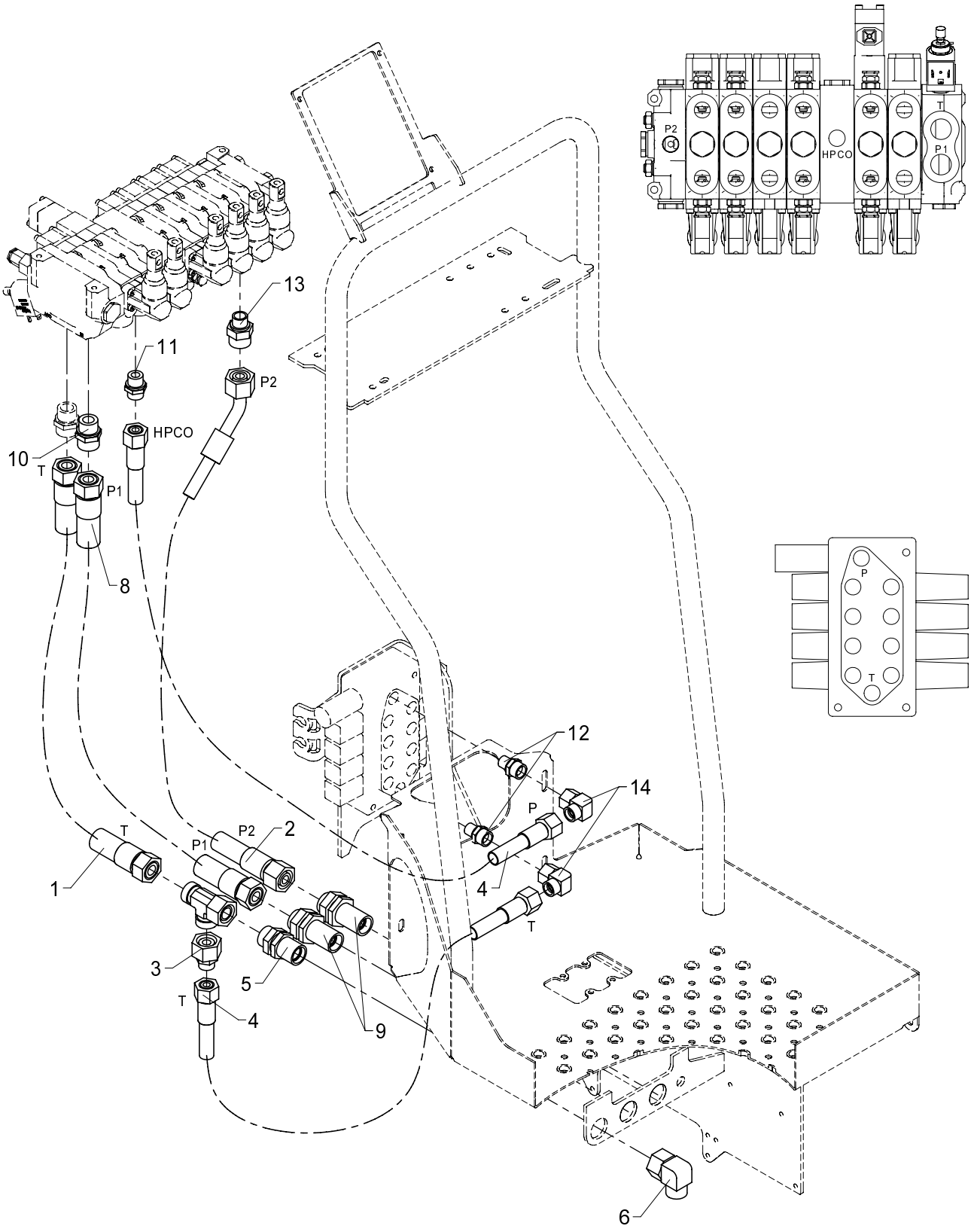

From loader 1060001
To loader

Pump and return hoses - HC - 2-circuit - HS direct valve control

Created 12-01-2010
Modified

Pos	Qty.	Part no.	Description	Remarks
1	1	62574	Hose	3/4 X 1300 M30 X 2 L/L
2	1	56523	Hose	5/8 X 1400 mm L/45 20Svær
3	1	25298	Connection	REDSDN 22/15 L
4	2	56509	Hose	1/2 X 1100 mm L/L M22
5	1	25266	Bulkhead connection	P-GSV 22 L
6	1	25209	Elbow connection	EWSD 22 L
7	1	26149	Connection	ELSD 22 L
8	1	56456	Hose	5/8 x 1400 mm 20S O/O
9	2	26369	Bulkhead connection	GSS 12 L
10	1	26197	Connection	P-GEV 20 SR-WD
11	1	25143	Connection	P-GEV 15 LR-WD
12	2	25273	Connection	GES 15 LR 3-8 A3L
13	1	26221	Connection	P-GEV 20 SR 1/2-WD
14	2	25284	Elbow connection	EWSD 15 L

15/105 - 17/117 SL & DL Parts

Internal ref. 63 41 420

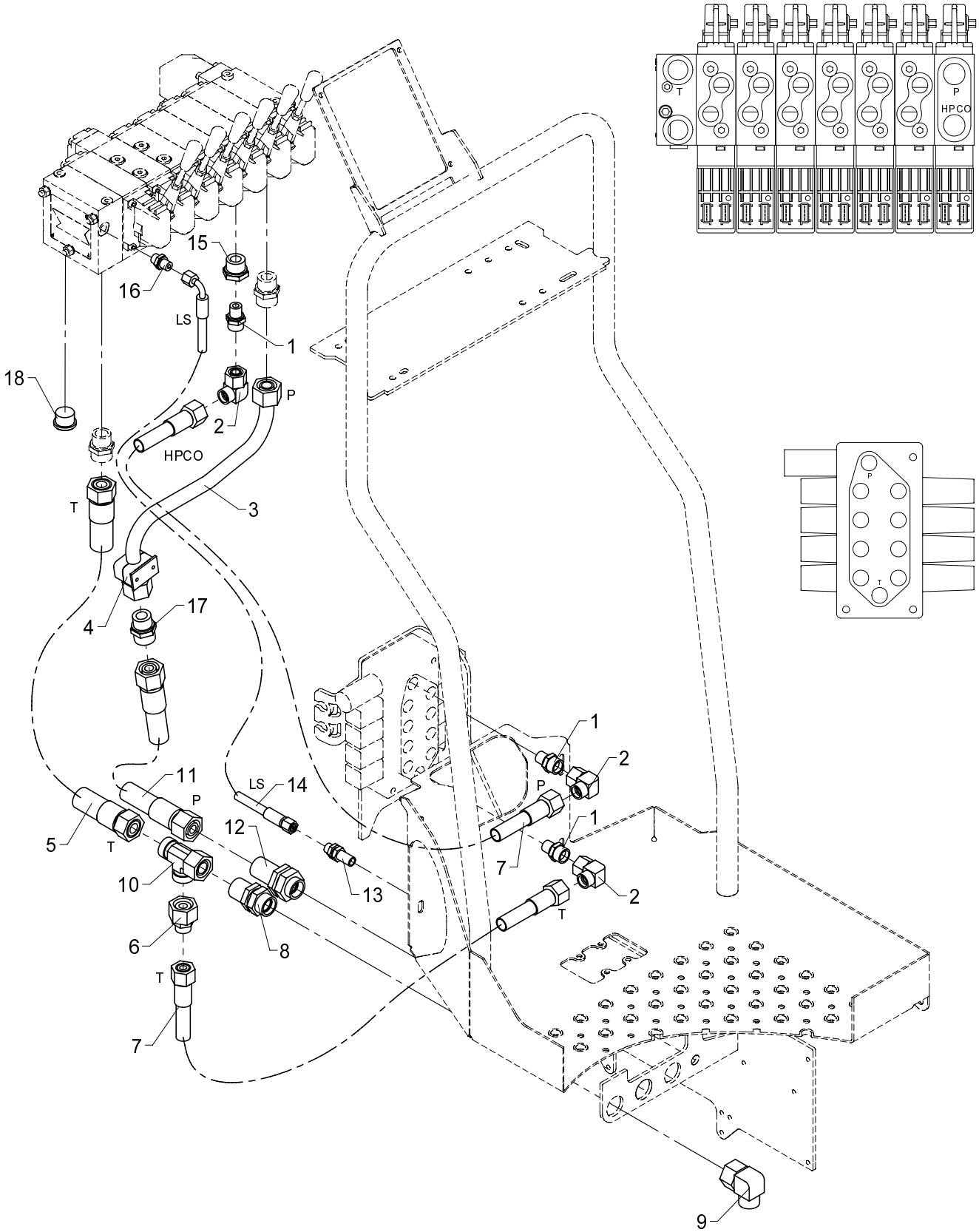

From loader 1060001
To loader

Pump and return hoses - Danfoss - HS - direct valve control

Created 12-01-2010
Modified

Pos	Qty.	Part no.	Description	Remarks
1	3	25273	Connection	GES 15 LR 3-8 A3L
2	3	25284	Elbow connection	EWSD 15 L
3	1	6340879	Connection pipe	
4	1	31830	Clamp	
5	1	62574	Hose	3/4 X 1300 M30 X 2 L/L
6	1	25298	Connection	REDSDN 22/15 L
7	2	56509	Hose	1/2 X 1100 mm L/L M22
8	1	25266	Bulkhead connection	P-GSV 22 L
9	1	25209	Elbow connection	EWSD 22 L
10	1	26149	Connection	ELSD 22 L
11	1	56457	Hose	5/8 x 1200 mm 20S O/O
12	1	26369	Bulkhead connection	GSS 12 L
13	1	25261	Bulkhead connection	P-GSV 8 L
14	1	56506	Hose	1/4 X 1530 mm M14x1,5 L/90
15	1	26319	Reducing connection	RED-R 3/4-WD/R 3/8
16	1	25109	Connection	GES 8 LR-WD
17	1	26197	Connection	P-GEV 20 SR-WD
18	1	26355	Plug	VS-R-3/4 WD

15/105 - 17/117 SL & DL Parts

Internal ref. 63 42 640

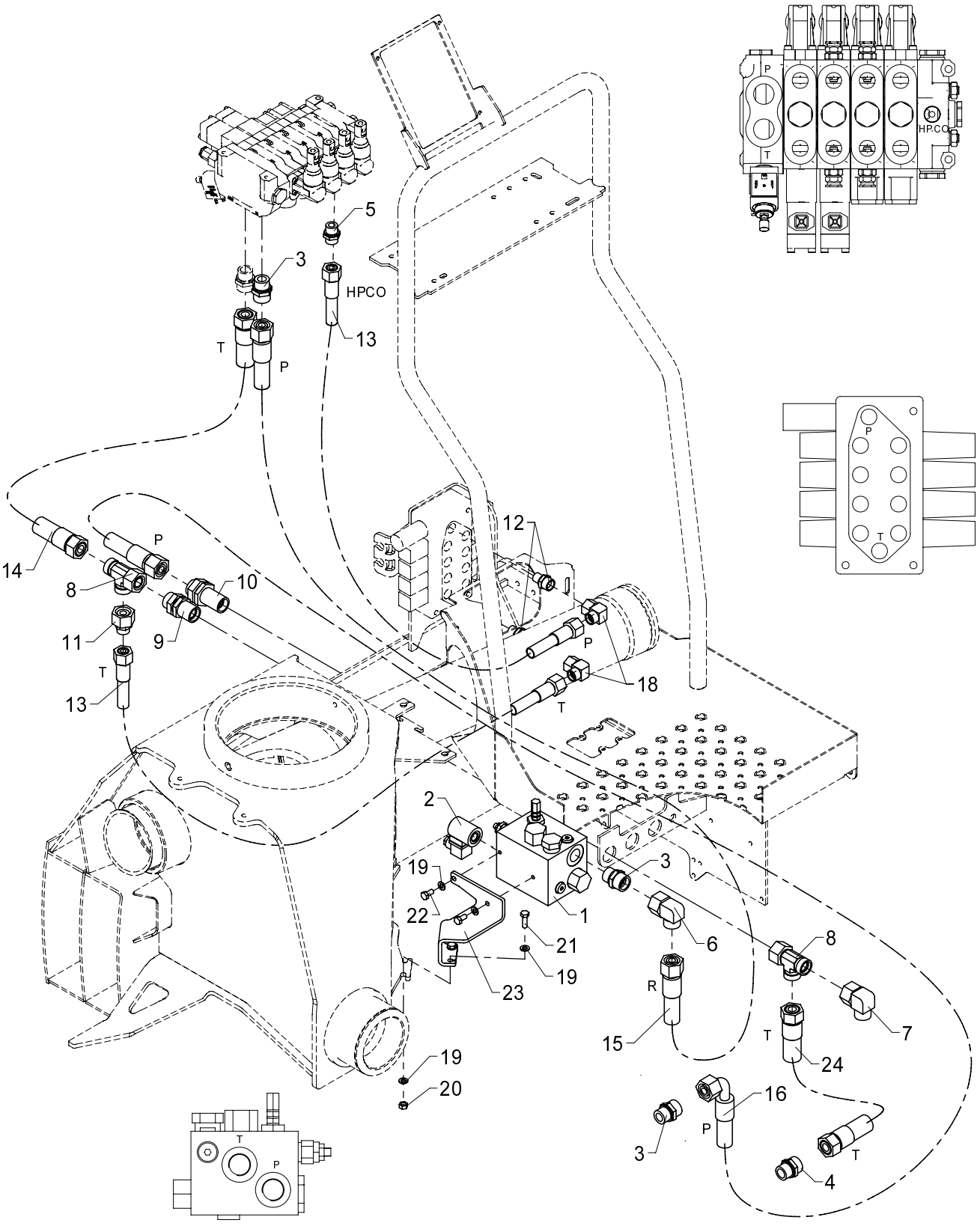

Kit for HDL - HS direct valve control

534 10 485

From loader 1060001
To loader

Created 12-01-2010
Modified

Pos	Qty.	Part no.	Description	Remarks
		6342640	Kit for HDL - HS10	
1	1	59018	HDL-2 valve	
2	1	59904	Solenoid	
3	3	26197	Connection	P-GEV 20 SR-WD
4	1	25169	Connection	P-GEV 22 LR-WD
5	1	26198	Elbow connection	EWVD 20 S-SV
6	2	26149	Connection	ELSD 22 L
7	1	25266	Bulkhead connection	P-GSV 22 L
8	1	25209	Elbow connection	EWSD 22 L
9	1	25298	Connection	REDSDN 22/15 L
10	1	26369	Bulkhead connection	GSS 20 S
11	1	25143	Connection	P-GEV 15 LR-WD
12	2	25273	Connection	GES 15 LR 3-8 A3L
13	2	56509	Hose	1/2 X 1100 mm L/L M22
14	1	62574	Hose	3/4 X 1300 M30 X 2 L/L
15	1	62626	Hose	5/8 X 1600 M30X2L/L SS
16	1	62668	Hose	5/8 X 650 M30X2 L/90 SS
17	1	62559	Hose	3/4 X 550 M30 X 2 L/L
18	2	25284	Elbow connection	EWSD 15 L
19	6	31147	Washer, stainless	8 mm
20	2	30856	Nut, stainless	M8
21	2	30134	Set screw, stainless	M8 x 25
22	2	30131	Set screw, stainless	M8 x 16
23	1	6340848	Bracket (HDL-2)	

15/105 - 17/117 SL & DL Parts

63 46 410
63 45 410
Internal ref. 63 41 410

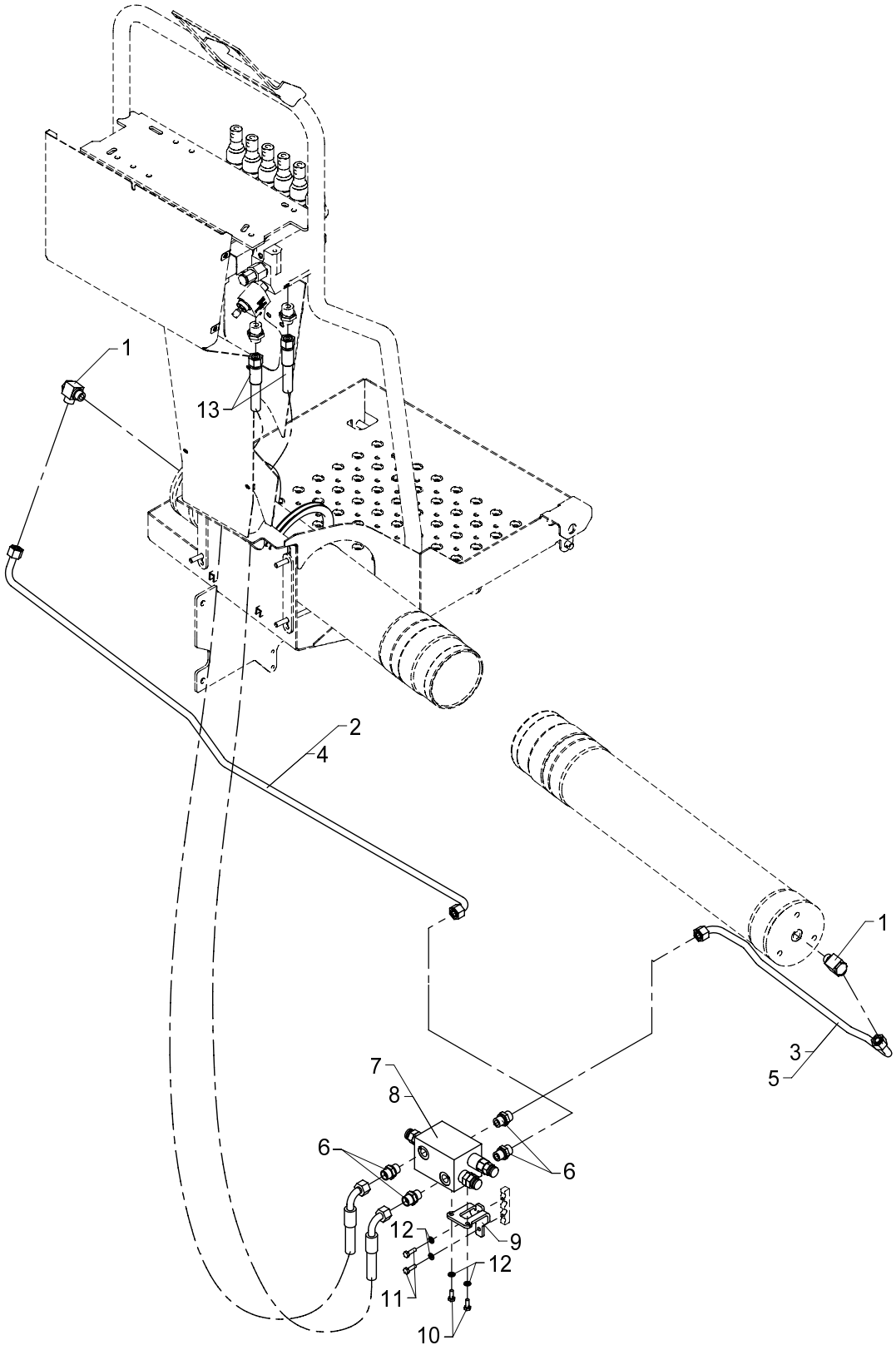

From loader 1060001
To loader

Hydraulic system, slewing, HS, direct valve control

Created 12-01-2010
Modified

Pos	Qty.	Part no.	Description	Remarks
		6341410	Hydraulic system, slewing HS10	
		6345410	Hydraulic system, slewing HS10	
		6346410	Hydraulic system, slewing HS10	
1	2	25130	Banjo connection	RSWV 12 LR
2	1	6340279	Pipe	1300/1730
3	1	6340278	Pipe	1300/1730
4	1	6344279	Pipe	1800/2430
5	1	6344278	Pipe	1800/2430
6	4	25127	Connection	P-GEV 12 LR-WD
7	1	55262	Load-holding valve	1300/2030
8	1	55261	Load-holding valve	2200/2430
9	1	6340237	Bracket for load-holding valve	
10	2	30112	Set screw, stainless	M6 x 16
11	2	30113	Set screw, stainless	M6 x 20
12	4	32302	Face washer, stainless	6 mm
13	2	0017310	Hose	

15/105 - 17/117 SL & DL Parts

Internal ref. 63 41 360

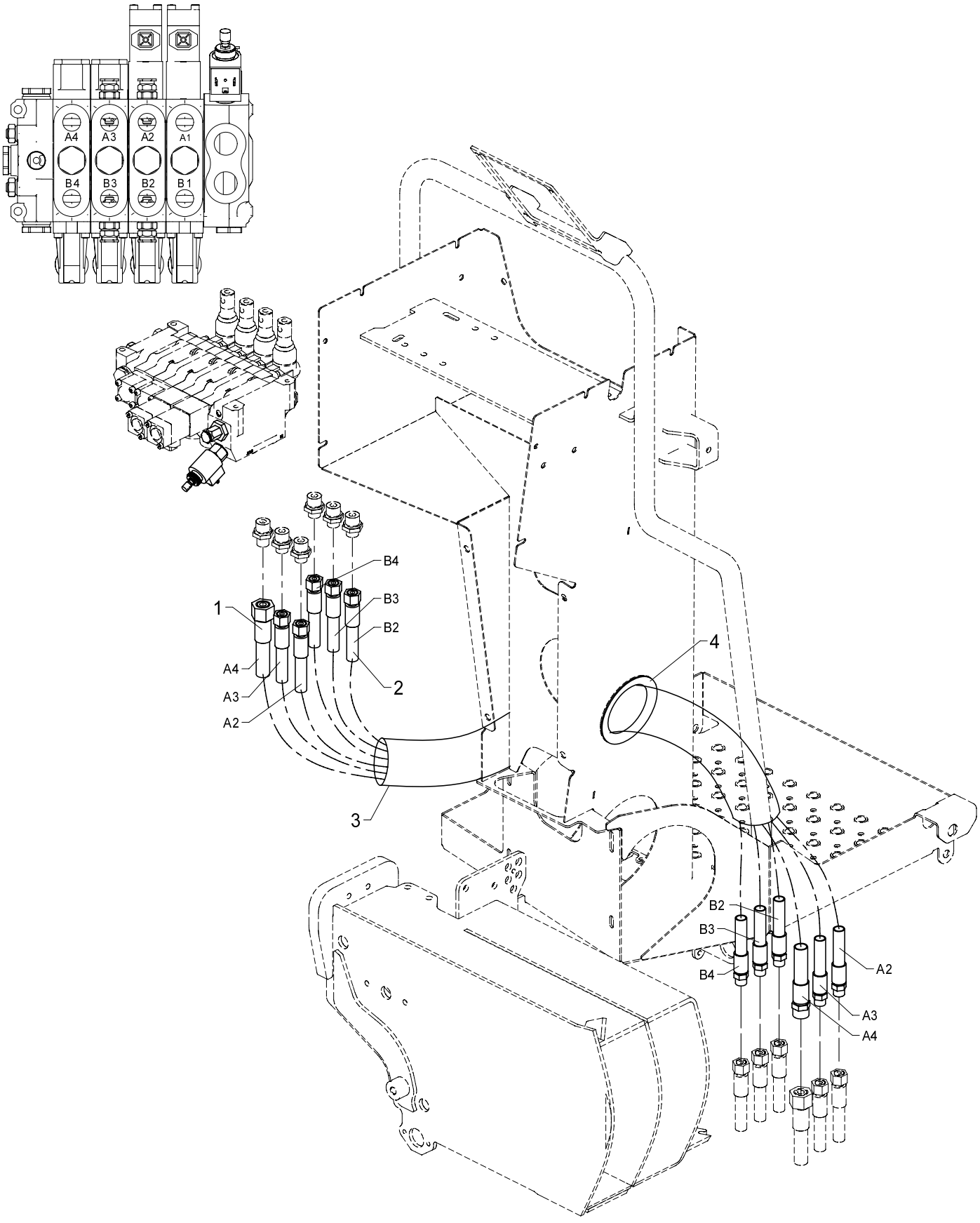

534 10 500

From loader 1060001
To loader

Created 12-01-2010
Modified

Hose kit, 4 fcts. Hydrocontrol

Pos	Qty.	Part no.	Description	Remarks
1	1	56505	Hose	1/2 X 1000 mm L/S
2	5	0015180	Hose	
3	1	62634	Protective cover	
4	1	22122	PVC protection	320 mm

15/105 - 17/117 SL & DL Parts

Internal ref. 63 41 370

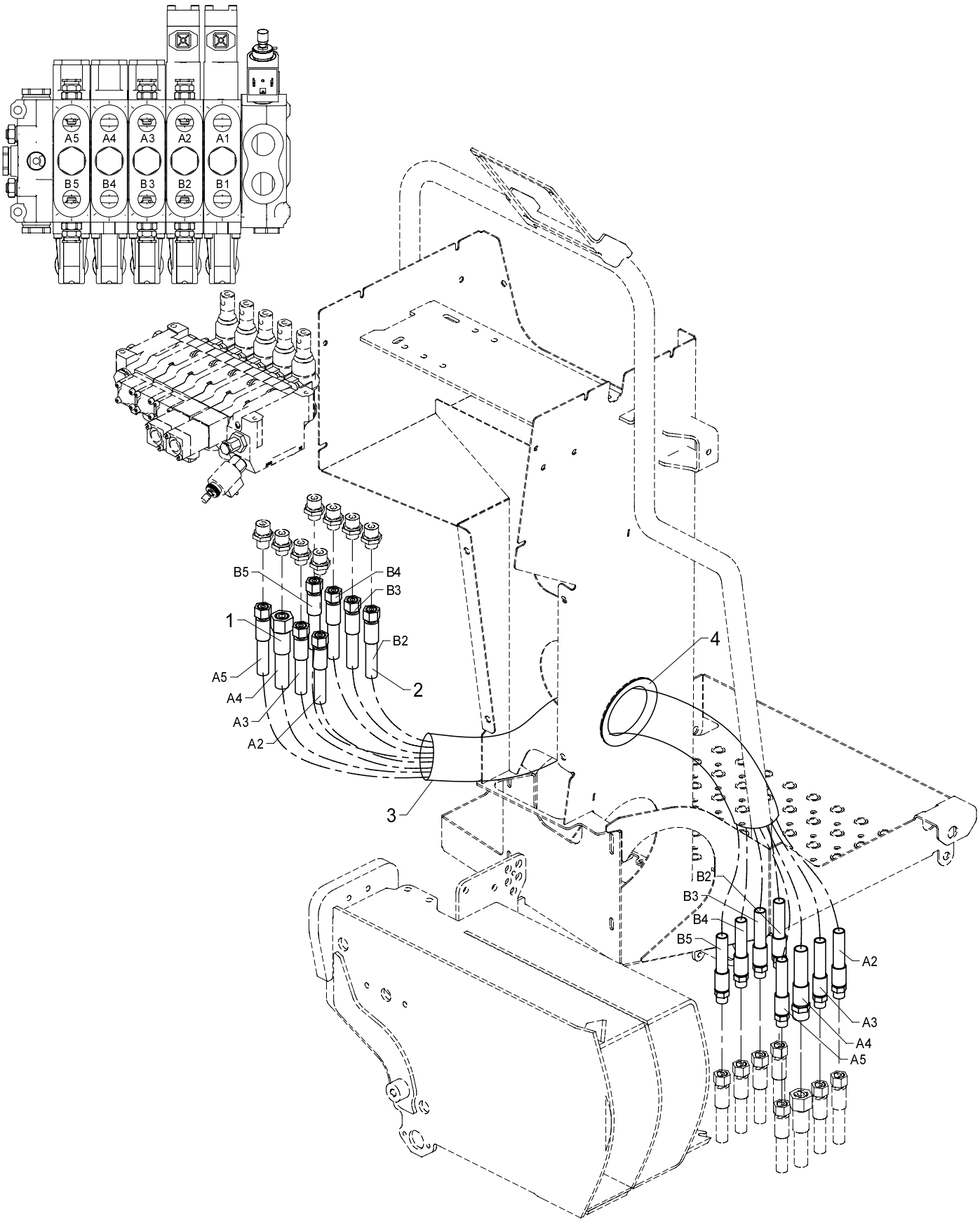

534 10 510

From loader 1060001
To loader

Created 12-01-2010
Modified

Hose kit, 5 fcts. Hydrocontrol

Pos	Qty.	Part no.	Description	Remarks
1	1	56505	Hose	1/2 X 1000 mm L/S
2	7	0015180	Hose	
3	1	62634	Protective cover	
4	1	22122	PVC protection	320 mm

15/105 - 17/117 SL & DL Parts

Internal ref. 63 41 380

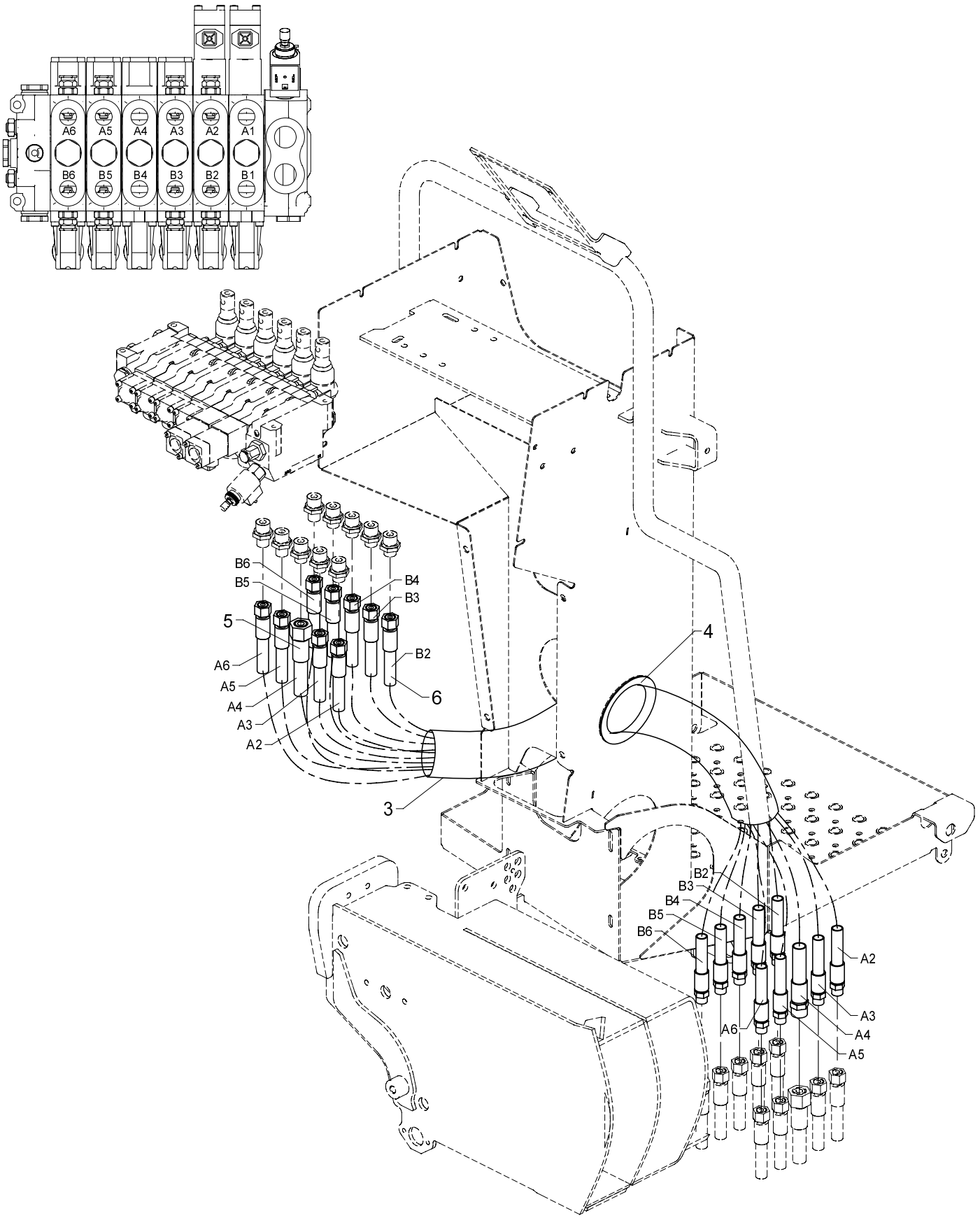

534 10 520

From loader 1060001
To loader

Created 12-01-2010
Modified

Hose kit, HS dir. valve ctrl. (HC 6 fcts.)

Pos	Qty.	Part no.	Description	Remarks
1	1	56505	Hose	1/2 X 1000 mm L/S
2	9	0015180	Hose	
3	1	62634	Protective cover	
4	1	22122	PVC protection	320 mm

15/105 - 17/117 SL & DL Parts

63 41 440
Internal ref. 63 41 430

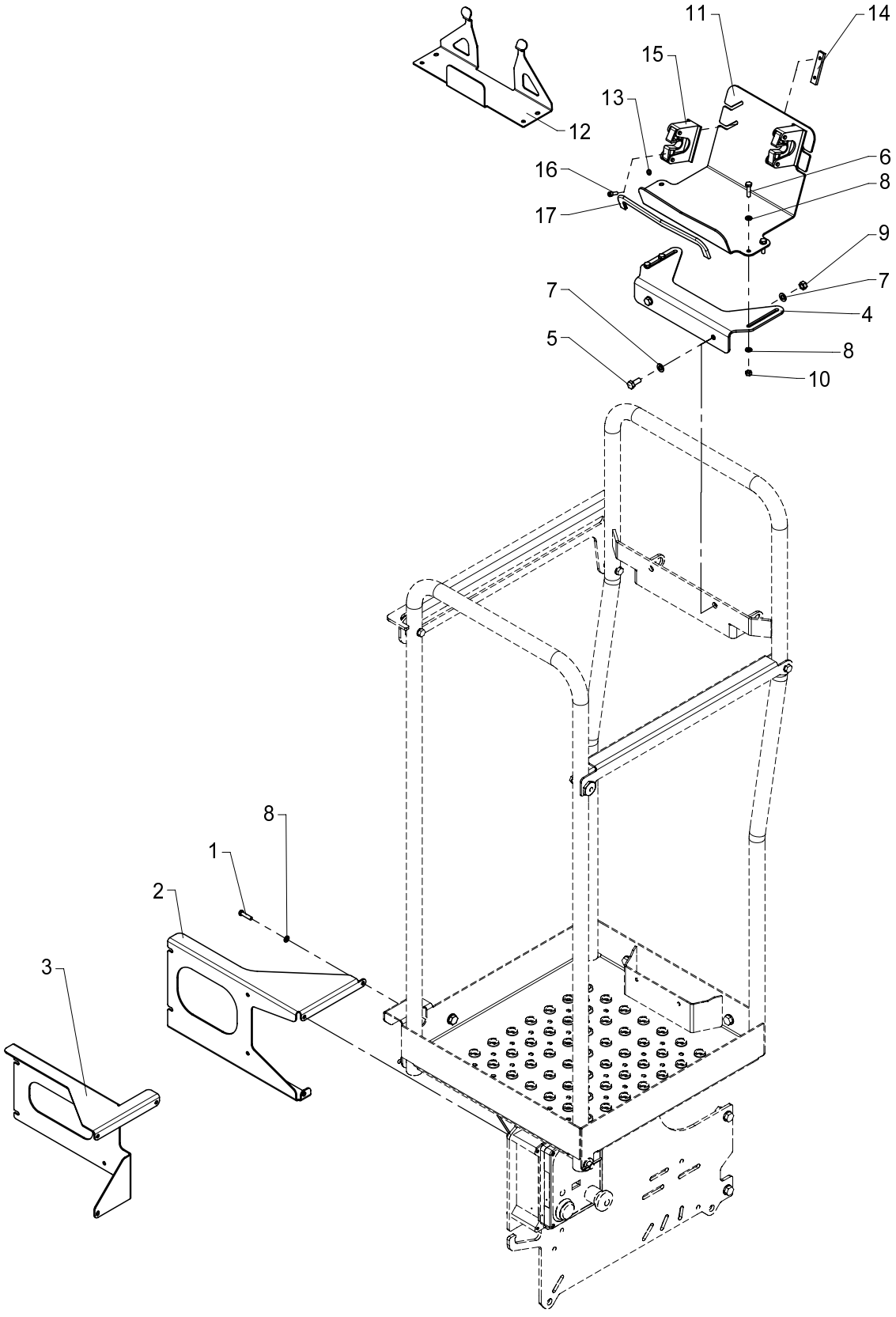

534 10 800

From loader 1060001
To loader

Created 24-02-2009
Modified

Mounting fittings, HSRC

Pos	Qty.	Part no.	Description	Remarks
		6341430	Fittings, HSRC (Scanreco)	
		6341440	Fittings, HSRC (Hetronic)	
1	4	30340	Screw, stainless	6,0 x 25
2	1	6340494	Mounting bracket (RC 400 - HS)	
3	1	6340495	Mounting bracket,Scanreco/Hetr	
4	1	6340498	Fitting	
5	2	30132	Set screw, stainless	M8 x 20
6	4	30114	Set screw, stainless	M6 x 25
7	4	31147	Washer, stainless	8 mm
8	12	32302	Face washer, stainless	6 mm
9	2	30856	Nut, stainless	M8
10	4	30854	Nut, stainless	M6
11	1	6340901	Bracket, Scanreco RC box	
12	1	6340902	Bracket(HETR.remote ctrl. box)	
13	4	31189	Washer	5 mm
14	2	8507104	Threaded plate	
15	2	46453	Bracket	
16	4	30433	Screw	MC5 x 16
17	1	46596	Rubber protection	0,3 m.

15/105 - 17/117 SL & DL Parts

63 44 990
63 44 760
63 41 990
Internal ref. 63 41 980

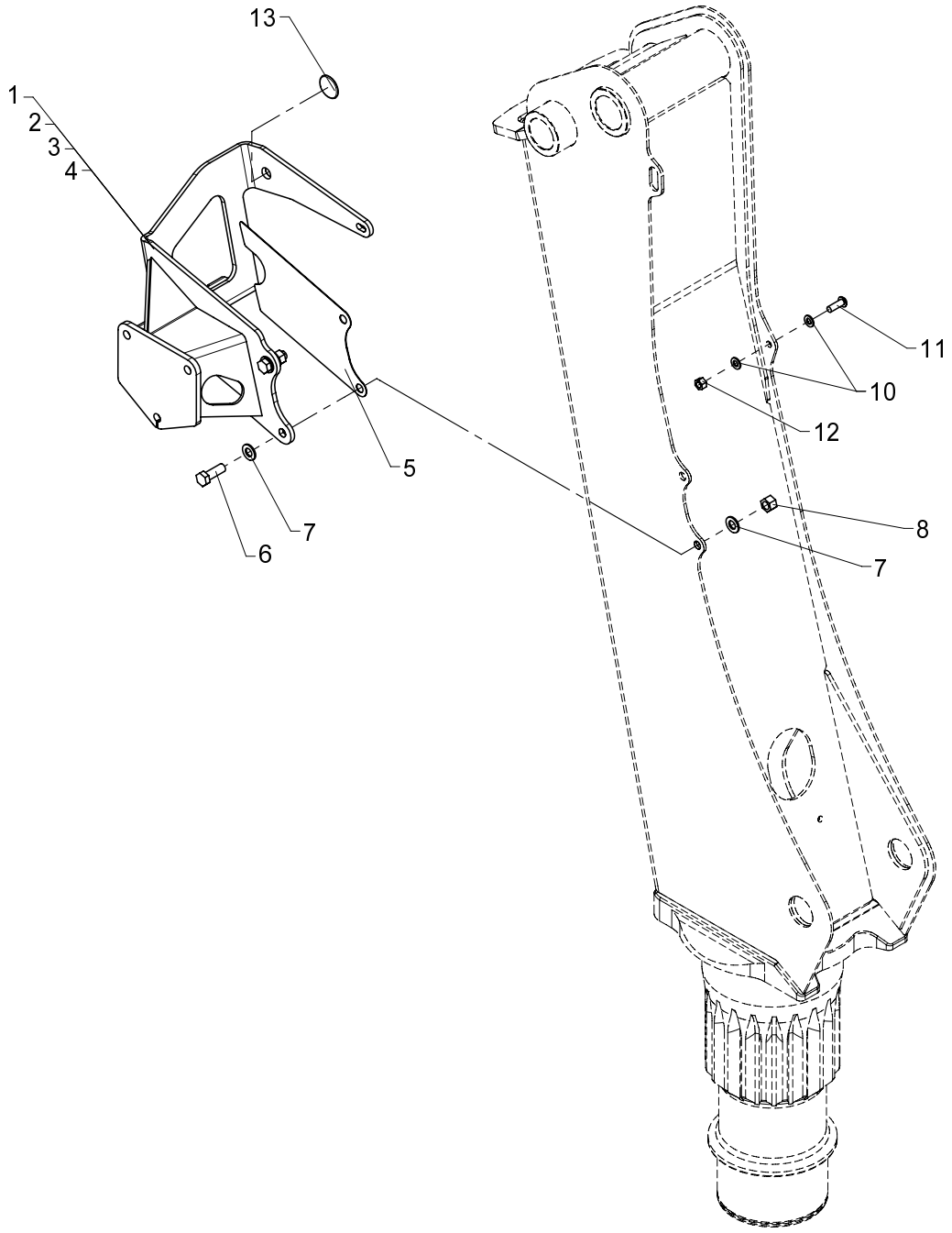

534 11 010

From loader 1060001
To loader

Created 24-02-2009
Modified 17-06-2010

Mounting fittings, TS

Pos	Qty.	Part no.	Description	Remarks
		6341980	Fittings, TS 1300/1500	
		6341990	Fittings, TS 1310/1510	
		6344760	Fittings, TS, 1800/2200	
		6344990	Fittings, TS, 1810/2210	
1	1	6340081	Bracket	1300/1500
2	1	6340085	Bracket	1310/1510
3	1	6344081	Bracket	1800/2200
4	1	6344085	Bracket	1810/2210
5	1	6340087	Division plate	
6	2	30207	Set screw	M14 x 40
7	4	31178	Washer	14 mm
8	2	30891	Lock nut	M14
10	2	31177	Washer	10 mm
11	1	30649	Screw	M10 x 30
12	1	30888	Lock nut	M10
13	1	6381484	Guide	

15/105 - 17/117 SL & DL Parts

Internal ref. 63 41 950

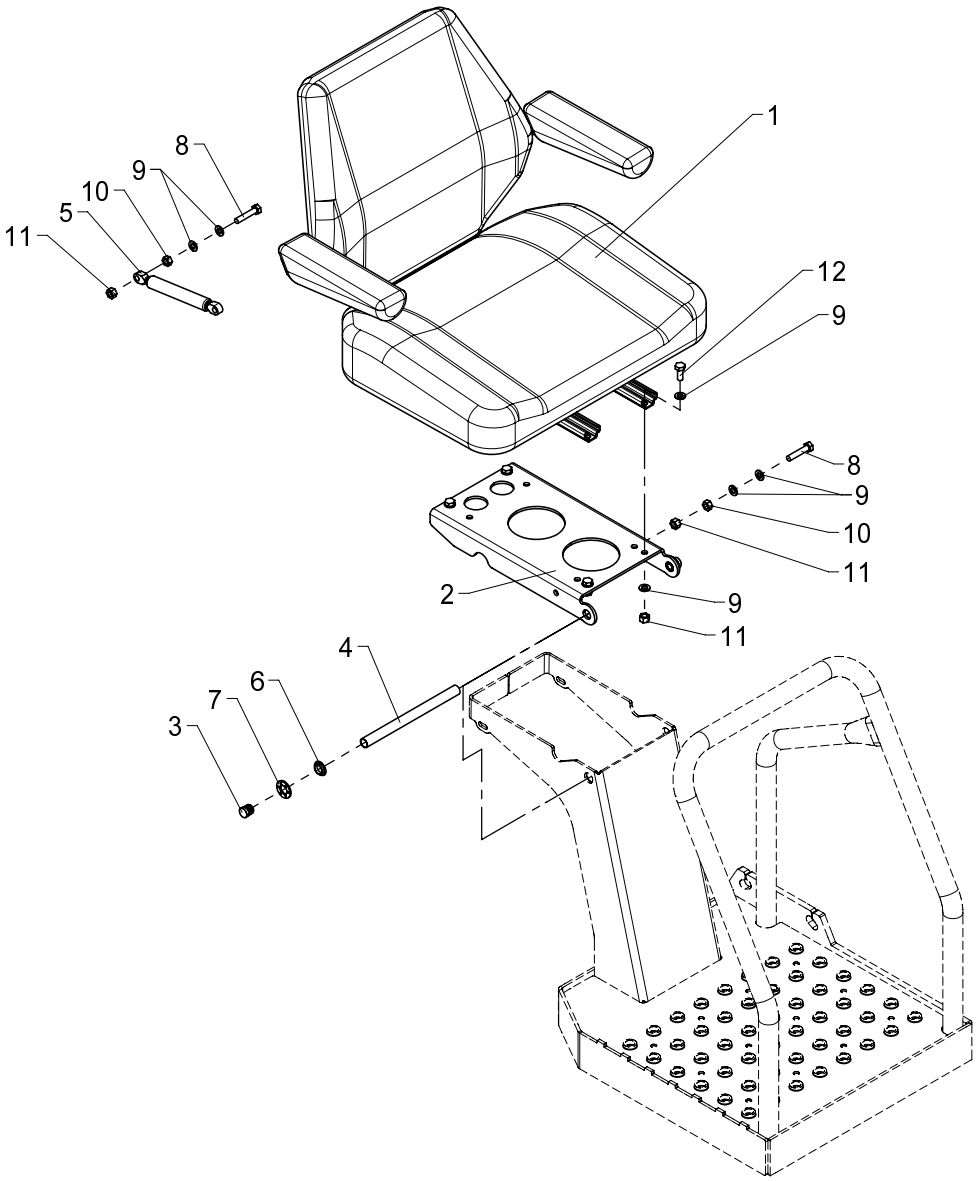

534 11 020

From loader 1060001
To loader

Created 24-02-2009
Modified

Seat, cpl.

Pos	Qty.	Part no.	Description	Remarks
1	1	24134	Seat	
2	1	6306638	Plate, seat	
3	2	64520	Stopper	
4	1	6306649	Pin	
5	1	48460	Gas spring	
6	2	23416	Composite bearing	BB 1504,5
7	2	32279	Clamping ring sleeve	15 mm
8	2	30137	Set screw, stainless	M8 x 40
9	12	31147	Washer, stainless	8 mm
10	2	30856	Nut, stainless	M8
11	6	30886	Lock nut, stainless	M8
12	4	30132	Set screw, stainless	M8 x 20

15/105 - 17/117 SL & DL Parts

Internal ref. 63 41 940

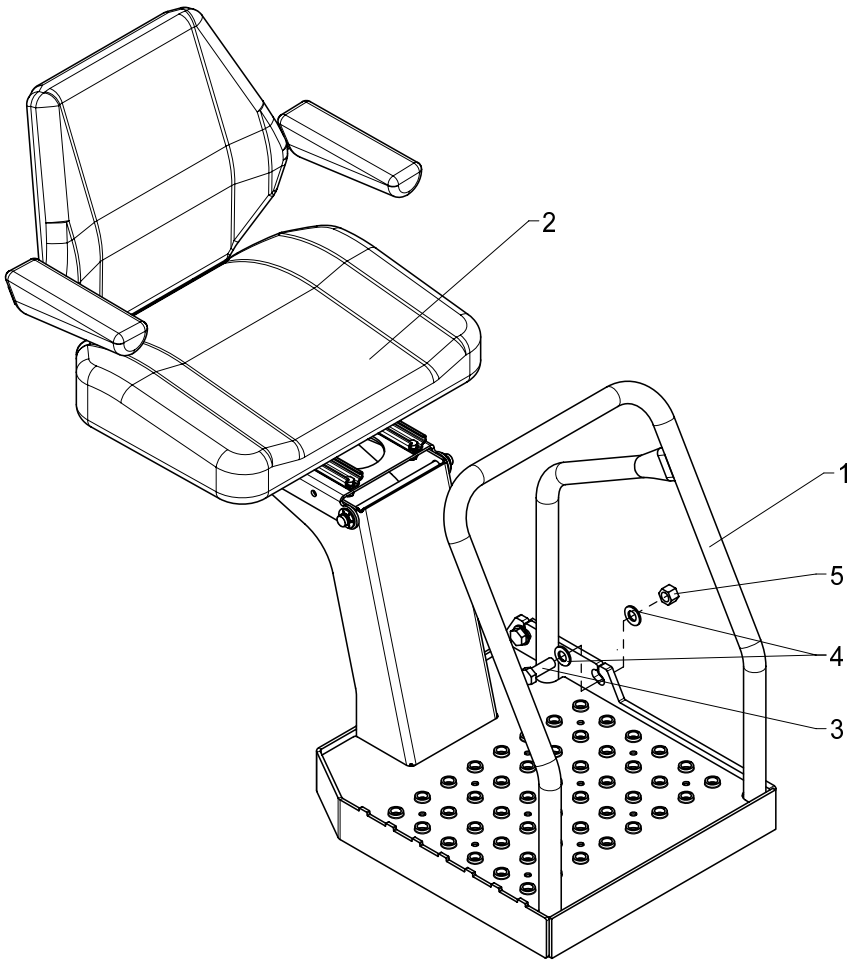

534 11 030

From loader 1060001
To loader

Created 24-02-2009
Modified

Top seat (RC), cpl.

Pos	Qty.	Part no.	Description	Remarks
1	1	6340911	Platform, (TSRC)	
2	1	6341950	Seat, complete	
3	3	32248	Set screw	M14 x 40
4	6	31178	Washer	14 mm
5	3	32317	Lock nut	M14

15/105 - 17/117 SL & DL Parts

63 41 970
Internal ref. 63 41 960

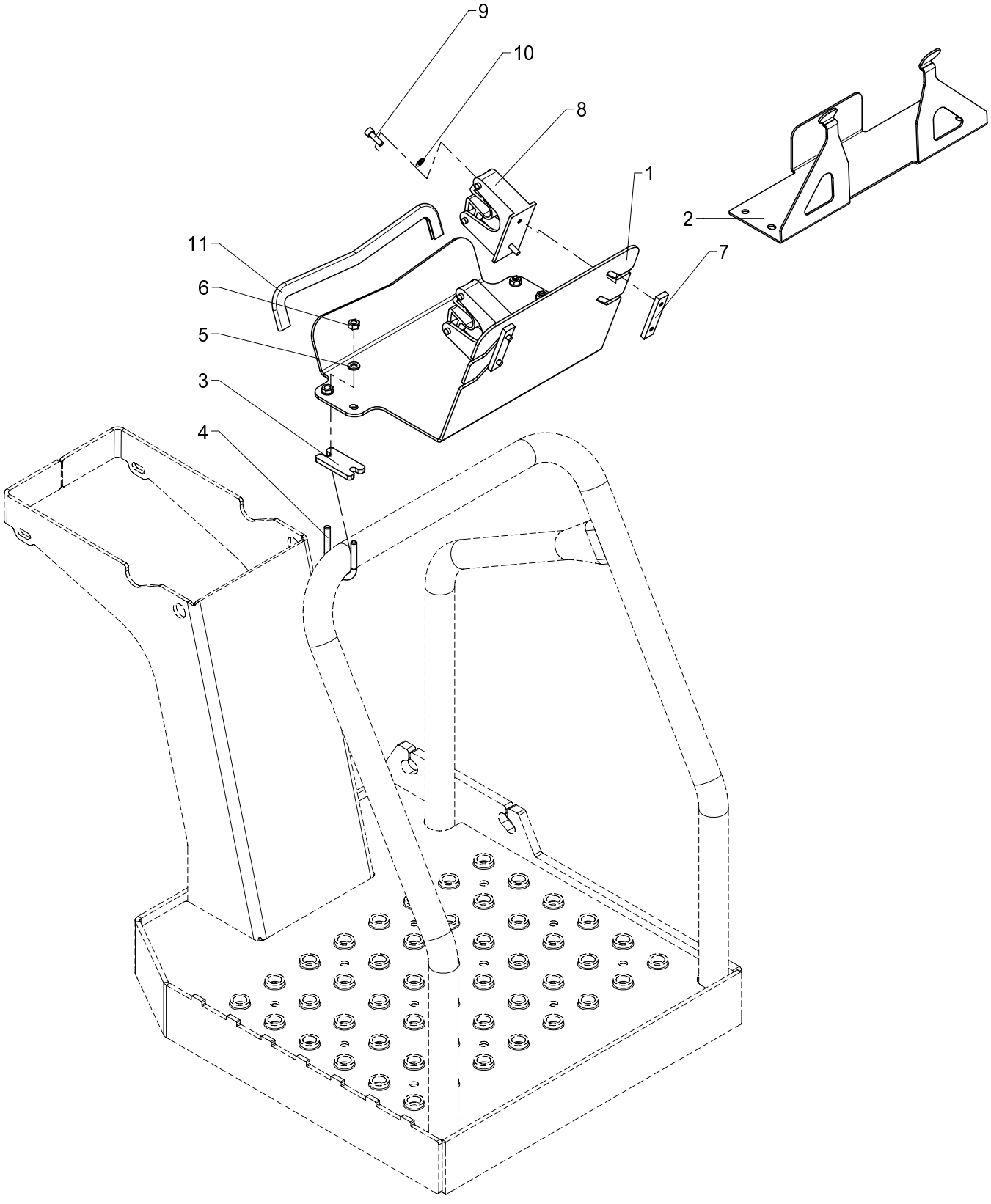

534 11 040

From loader 1060001
To loader

Created 24-02-2009
Modified

Mounting fittings, TS RC

Pos	Qty.	Part no.	Description	Remarks
		6341960	Fittings, TS RC (SR)	
		6341970	Fittings, TS RC (HETR)	
1	1	6340901	Bracket, Scanreco RC box	
2	1	6340902	Bracket(HETR.remote ctrl. box)	
3	2	6340904	Division plate	
4	2	6340903	Clamp	
5	4	32302	Face washer, stainless	6 mm
6	4	30854	Nut, stainless	M6
7	2	8507104	Threaded plate	
8	2	46453	Bracket	
9	4	30433	Screw	MC5 x 16
10	4	31189	Washer	5 mm
11	1	46596	Rubber protection	0,3 m.

15/105 - 17/117 SL & DL Parts

Internal ref. 63 41 900

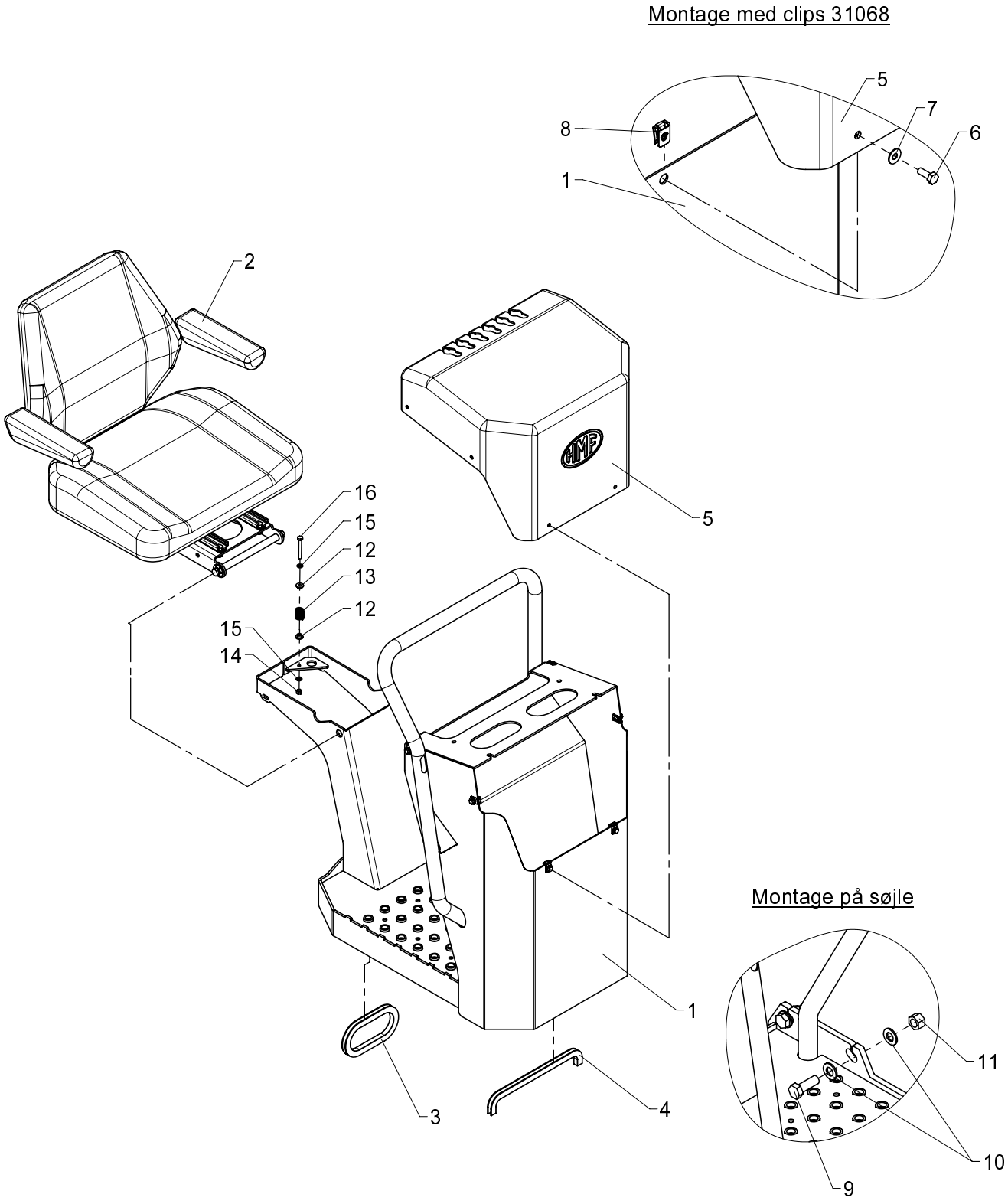

Top seat (HC linear), cpl.

534 11 050

From loader 1060001
To loader

Created 24-02-2009
Modified

Pos	Qty.	Part no.	Description	Remarks
1	1	6340921	Platform (TS)	
2	1	6341950	Seat, complete	
3	3	46587	Rubber protection	370 mm
4	1	46587	Rubber protection	300 mm
5	1	42163	Protection	
6	6	30112	Set screw, stainless	M6 x 16
7	6	32306	Washer	6 mm
8	6	31068	Clip	M6 0,5 - 4,0 mm.
9	3	32248	Set screw	M14 x 40
10	6	31178	Washer	14 mm
11	3	32317	Lock nut	M14
12	2	64382	Nylon bushing	
13	1	33367	Spring	6884924
14	1	30884	Lock nut, stainless	M6
15	2	32302	Face washer, stainless	6 mm
16	1	30119	Steel pin, stainless	M6 x 50

15/105 - 17/117 SL & DL Parts

Internal ref. 63 41 880

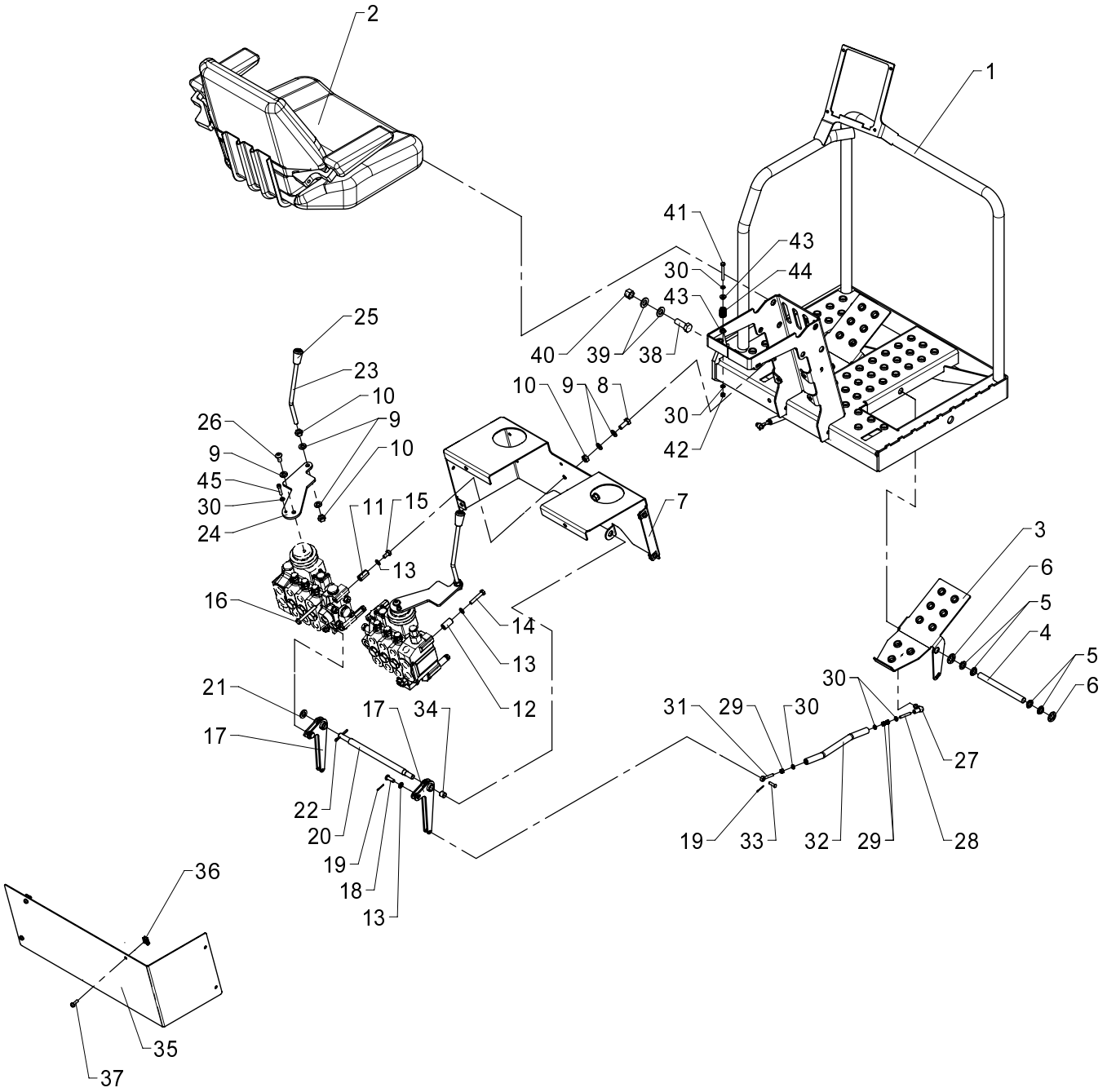

Top seat (HC X), cpl.

534 11 060

From loader 1060001
To loader

Created 12-01-2010
Modified

Pos	Qty.	Part no.	Description	Remarks
1	1	6306621	Platform (TS)	
2	1	6341950	Seat, complete	
3	2	6306632	Foot lever	
4	2	6306633	Pin	
5	8	23416	Composite bearing	BB 1504,5
6	4	32279	Clamping ring sleeve	15 mm
7	1	6341031	Valve bracket	
8	4	31513	Set screw, stainless	M10 x 25
9	14	31565	Washer, stainless	10 mm
10	8	31551	Nut, stainless	M10
11	4	6341034	Spacer	
12	4	6341035	Spacer	
13	8	31147	Washer, stainless	8 mm
14	4	31511	Set screw, stainless	M8 x 45
15	2	30131	Set screw, stainless	M8 x 16
16	2	32250	Set screw	M8 x 65
17	2	6341036	Bracket	
18	2	31276	Cotter bolt	ø8 x 23
19	4	31601	Split pin, stainless	ø1,6 x 20
20	1	6341033	Pin	
21	1	32338	Washer	12 mm
22	1	31638	Split pin	ø4 x 40
23	2	6341039	Control lever	
24	2	6341041	Guide plate	
25	2	64411	Knob for lever	
26	2	30926	Steel bolt	M10 x 20
27	2	24105	Toggle joint	
28	2	31007	Pointed screw	MSP6 x 40
29	6	30854	Nut, stainless	M6
30	10	32302	Face washer, stainless	6 mm
31	2	32114	Pin	M6 x 40
32	2	6341042	Connecting rod	
33	2	31271	Cotter bolt	ø6 x 21
34	4	23456	Composite bearing	ø12/14 x 12
35	1	6341032	Protection	
36	5	31068	Clip	M6 0,5 - 4,0 mm.
37	5	32480	Screw	M6 x 18
38	3	32248	Set screw	M14 x 40
39	6	31178	Washer	14 mm
40	3	32317	Lock nut	M14
41	1	30119	Steel pin, stainless	M6 x 50

15/105 - 17/117 SL & DL Parts

Internal ref. 63 41 880

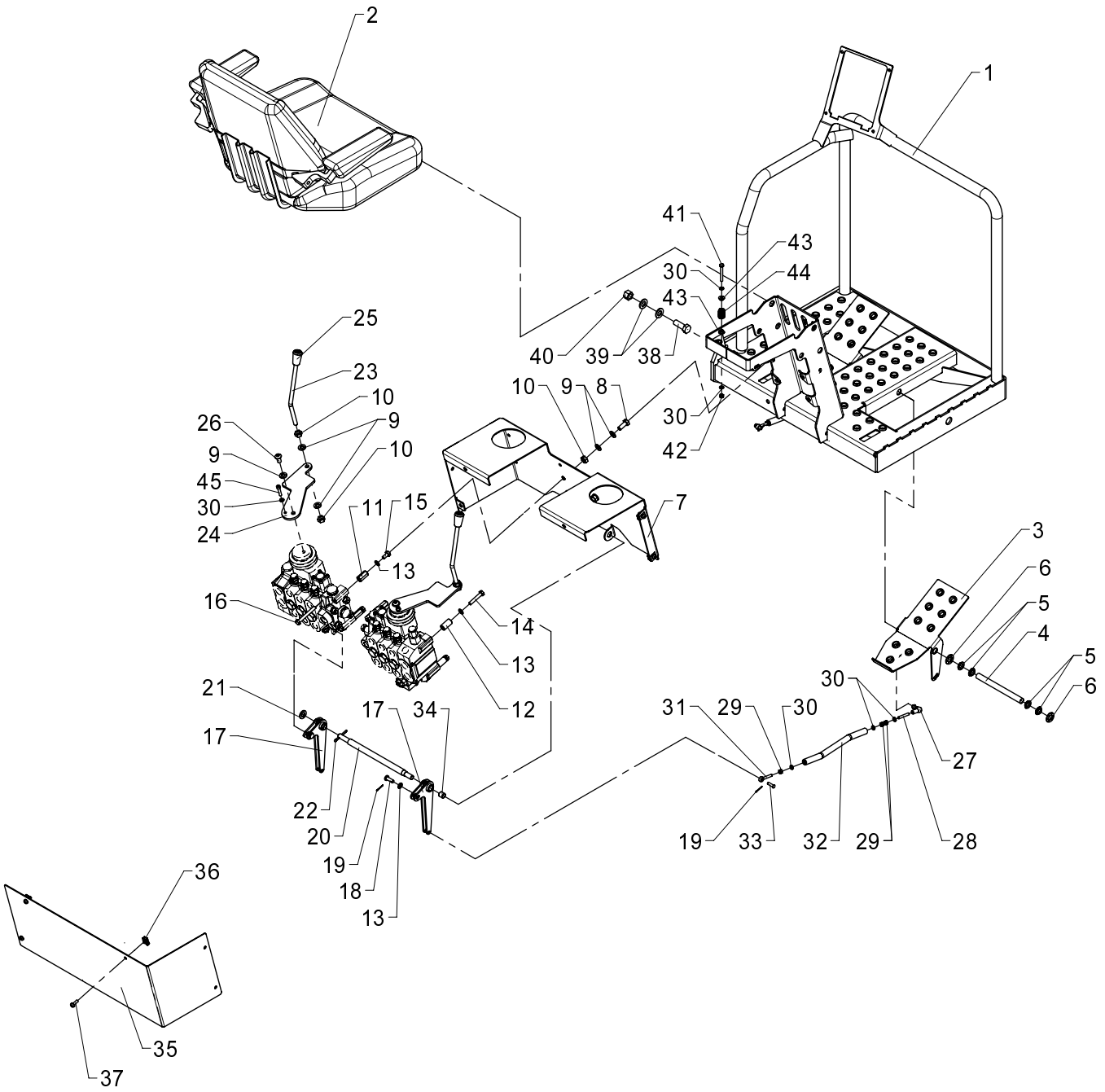

Top seat (HC X), cpl.

534 11 060

From loader 1060001
To loader

Created 12-01-2010
Modified

Pos	Qty.	Part no.	Description	Remarks
42	1	30884	Lock nut, stainless	M6
43	2	64382	Nylon bushing	
44	1	33367	Spring	6884924
45	2	30961	Screw	MC6 x 30

15/105 - 17/117 SL & DL Parts

Internal ref. 63 41 890

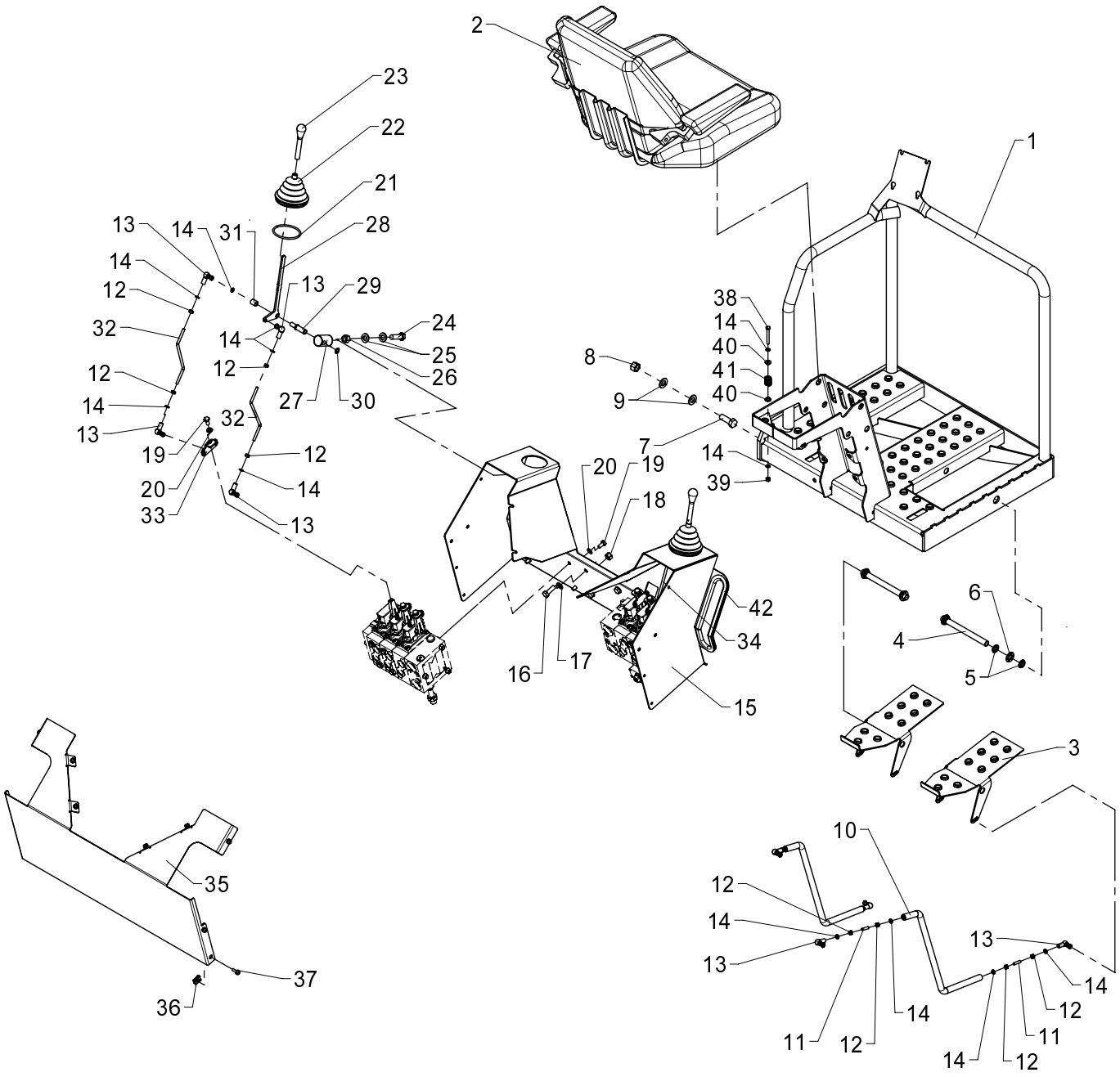

Top seat (Danfoss X), cpl.

534 11 070

From loader 1060001
To loader

Created 12-01-2010
Modified

Pos	Qty.	Part no.	Description	Remarks
1	1	6306621	Platform (TS)	
2	1	6341950	Seat, complete	
3	2	6306632	Foot lever	
4	2	6306633	Pin	
5	8	23416	Composite bearing	BB 1504,5
6	4	32279	Clamping ring sleeve	15 mm
7	3	32248	Set screw	M14 x 40
8	3	32317	Lock nut	M14
9	6	31178	Washer	14 mm
10	2	6306645	Connecting rod	
11	4	30560	Pointed screw	MSP6 x 25
12	16	30854	Nut, stainless	M6
13	12	24105	Toggle joint	
14	23	32302	Face washer, stainless	6 mm
15	1	6341051	Valve bracket	
16	4	30156	Set screw, stainless	M10 x 30
17	8	31565	Washer, stainless	10 mm
18	4	31564	Lock nut, stainless	M10
19	14	30131	Set screw, stainless	M8 x 16
20	14	31147	Washer, stainless	8 mm
21	2	20268	O-ring	OR 70 x 4
22	2	64390	Bellows	
23	2	48406	Knob	
24	2	31533	Set screw, stainless	M12 x 40
25	4	32338	Washer	12 mm
26	2	30890	Lock nut	M12
27	2	64064	Universal joint	
28	2	6306648	Control lever	
29	2	6306647	Pin	
30	2	33102	Circlip	12U
31	2	6302048	Spacer	
32	2	6306652	Threaded pin	
33	6	6306646	Adapter, Danfoss	
34	2	6306653	Threaded pin	
35	1	6341054	Protection	
36	10	31068	Clip	M6 0,5 - 4,0 mm.
37	10	32480	Screw	M6 x 18
38	1	30119	Steel pin, stainless	M6 x 50
39	1	30884	Lock nut, stainless	M6
40	2	64382	Nylon bushing	
41	1	33367	Spring	6884924

15/105 - 17/117 SL & DL Parts

Internal ref. 63 41 890

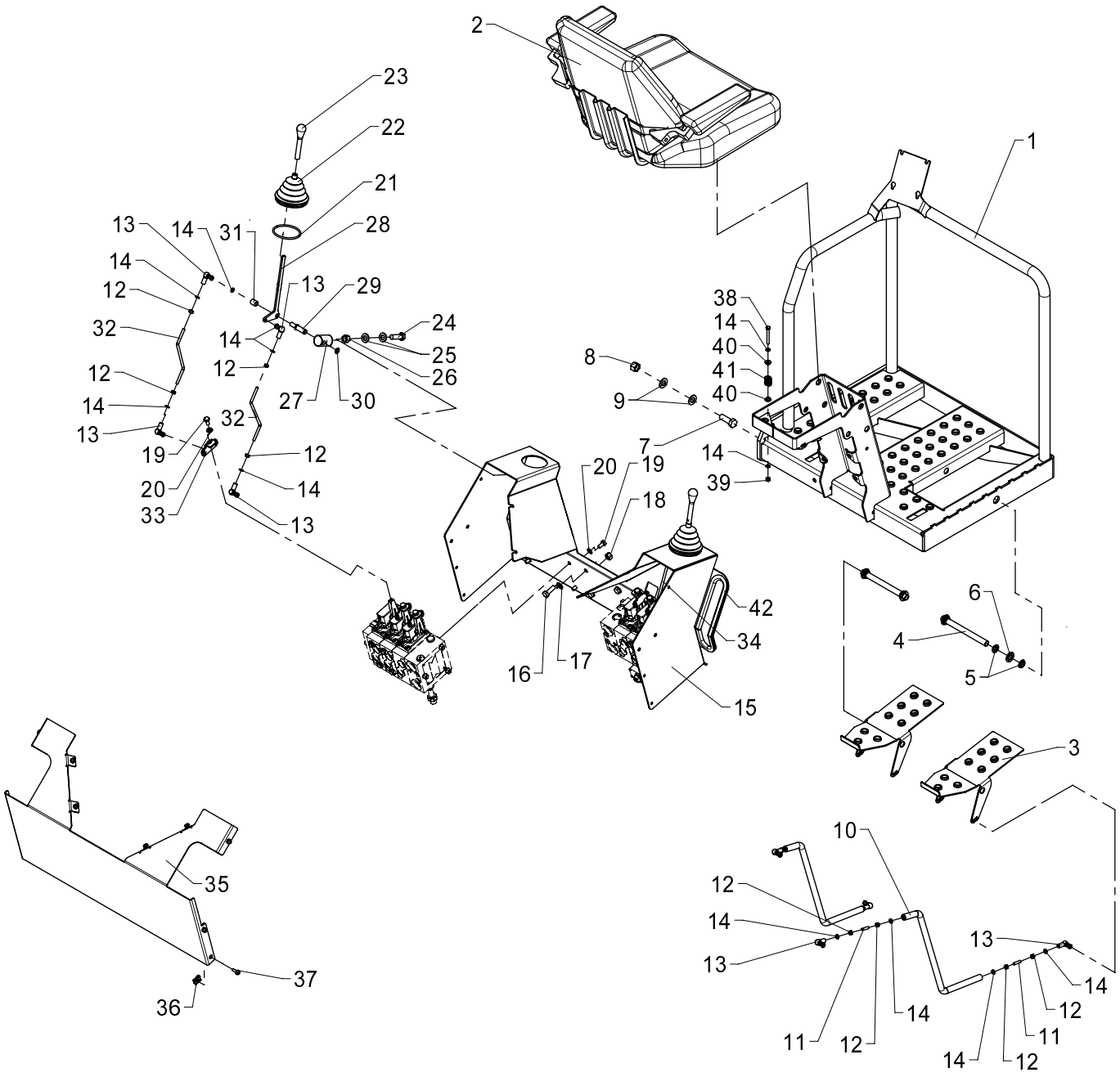

Top seat (Danfoss X), cpl.

534 11 070

From loader 1060001
To loader

Created 12-01-2010
Modified

Pos	Qty.	Part no.	Description	Remarks
42	2	46596	Rubber protection	L = 510

15/105 - 17/117 SL & DL Parts

Internal ref. 63 41 870

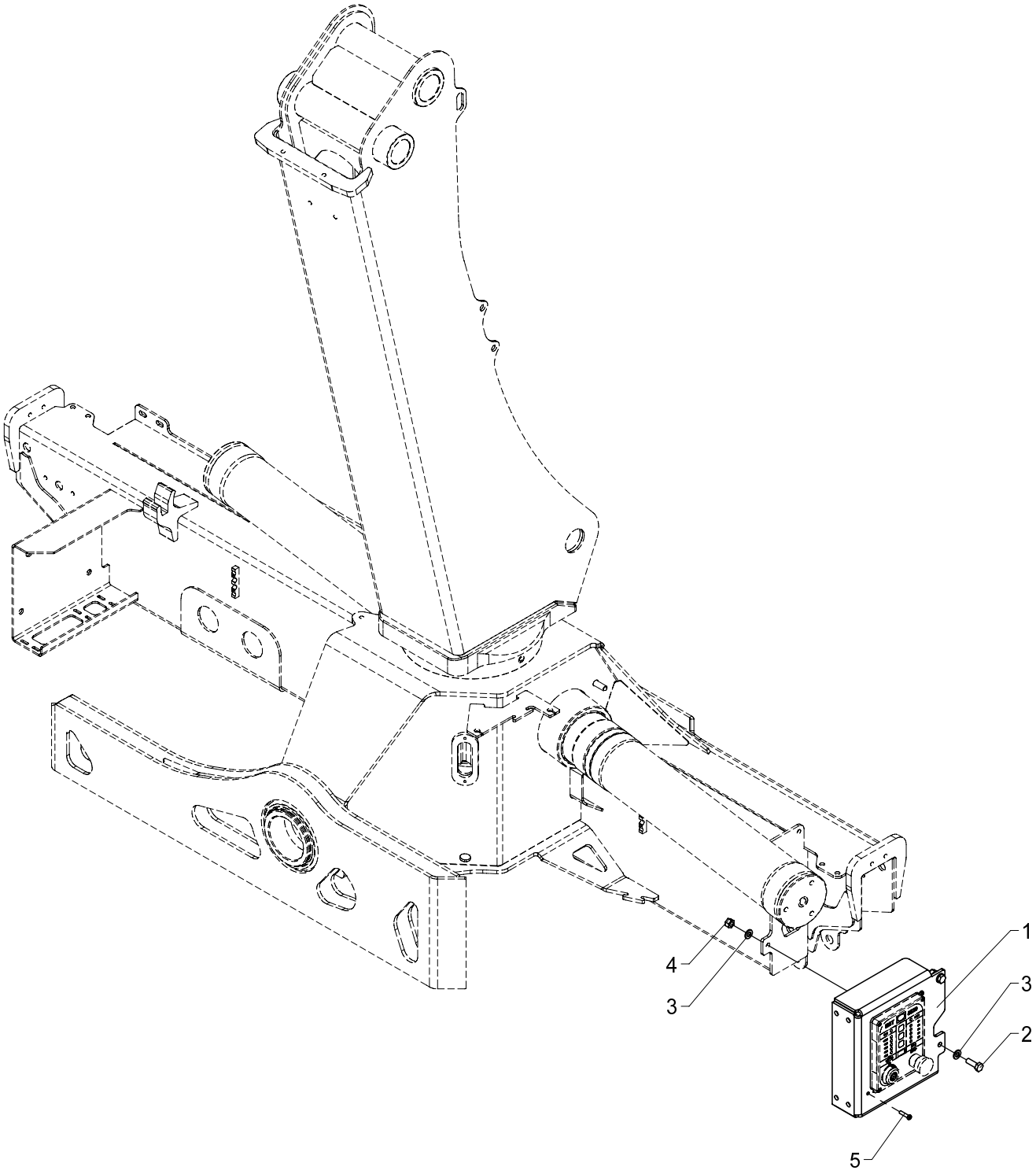

Bracket, complete (ECT 5320 - TS)

534 11 080

From loader 1060001
To loader

Created 24-02-2009
Modified

Pos	Qty.	Part no.	Description	Remarks
1	1	6340909	Bracket, (ECT5320 - TS)	
2	2	30156	Set screw, stainless	M10 x 30
3	4	31177	Washer	10 mm
4	2	31564	Lock nut, stainless	M10
5	3	30340	Screw, stainless	6,0 x 25

15/105 - 17/117 SL & DL Parts

Internal ref. 63 41 860

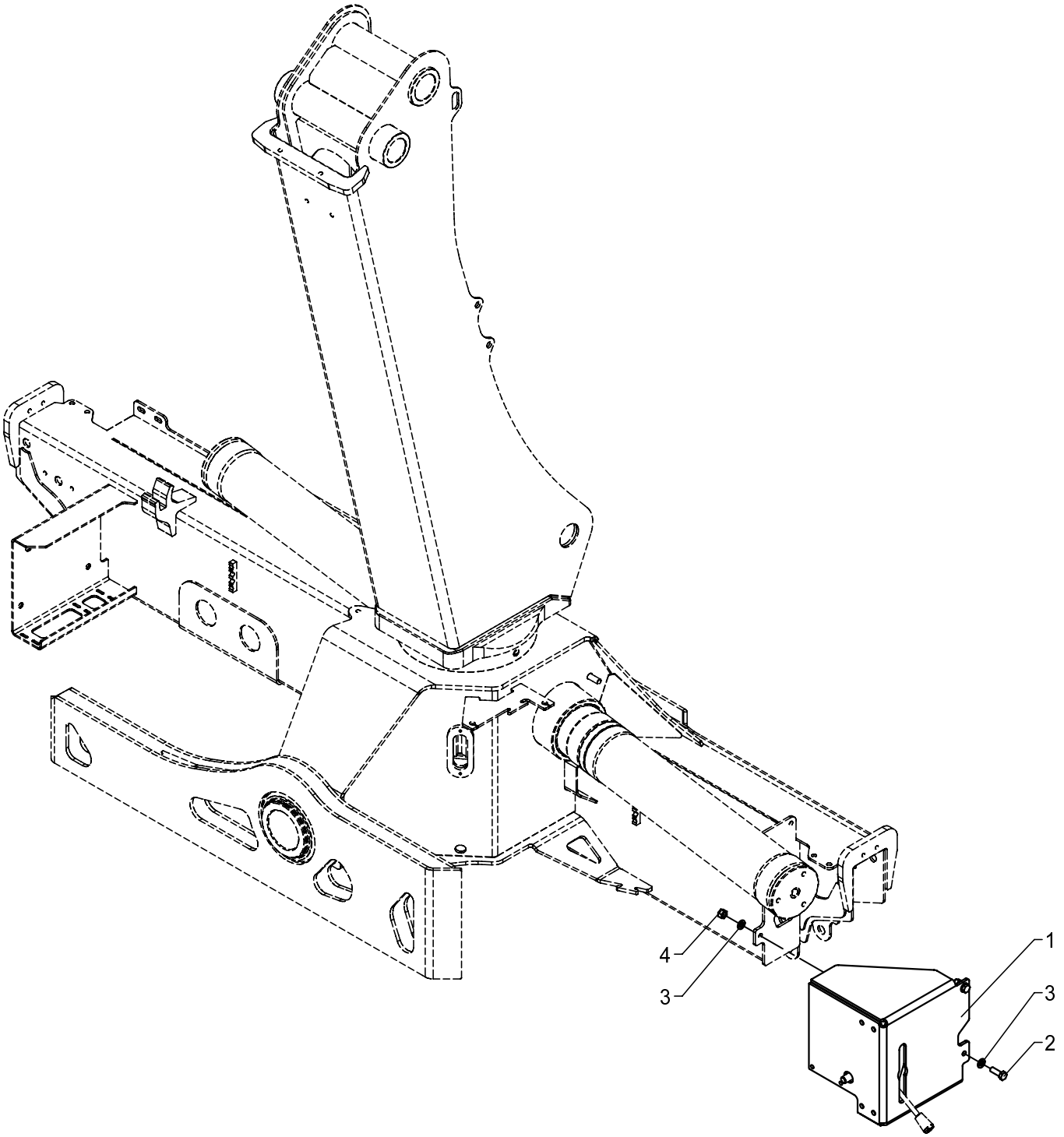

534 11 085

From loader 1060001
To loader

Created 16-06-2009
Modified

Bracket, complete (change-over valve, TS, excl. CE)

Pos	Qty.	Part no.	Description	Remarks
1	1	6340908	Bracket	
2	2	30156	Set screw, stainless	M10 x 30
3	4	31177	Washer	10 mm
4	2	31564	Lock nut, stainless	M10

15/105 - 17/117 SL & DL Parts

63 45 540
Internal ref. 63 41 540

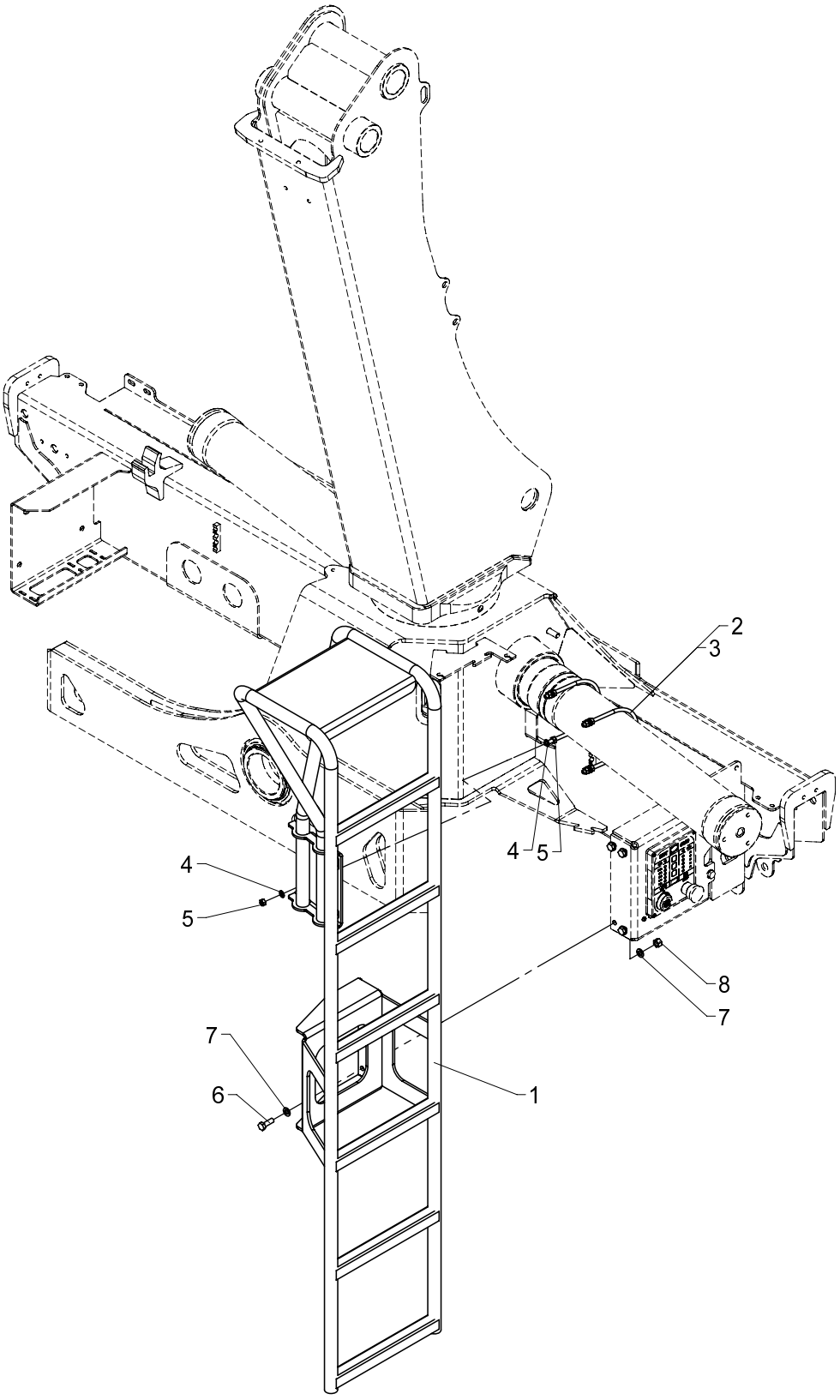

534 11 090

From loader 1060001
To loader

Created 25-02-2009
Modified

Ladder for TS, cpl.

Pos	Qty.	Part no.	Description	Remarks
		6341540	Ladder, TS, cpl. (1300-1730)	
		6345540	Ladder, TS, cpl. (1800-2430)	
1	1	6340931	Ladder (TS)	
2	2	6340878	Clamp	1300/1730
3	2	6344878	Clamp	1800/2430
4	8	31147	Washer, stainless	8 mm
5	8	30856	Nut, stainless	M8
6	4	30156	Set screw, stainless	M10 x 30
7	8	31565	Washer, stainless	10 mm
8	4	31564	Lock nut, stainless	M10

15/105 - 17/117 SL & DL Parts

Internal ref. 63 42 590

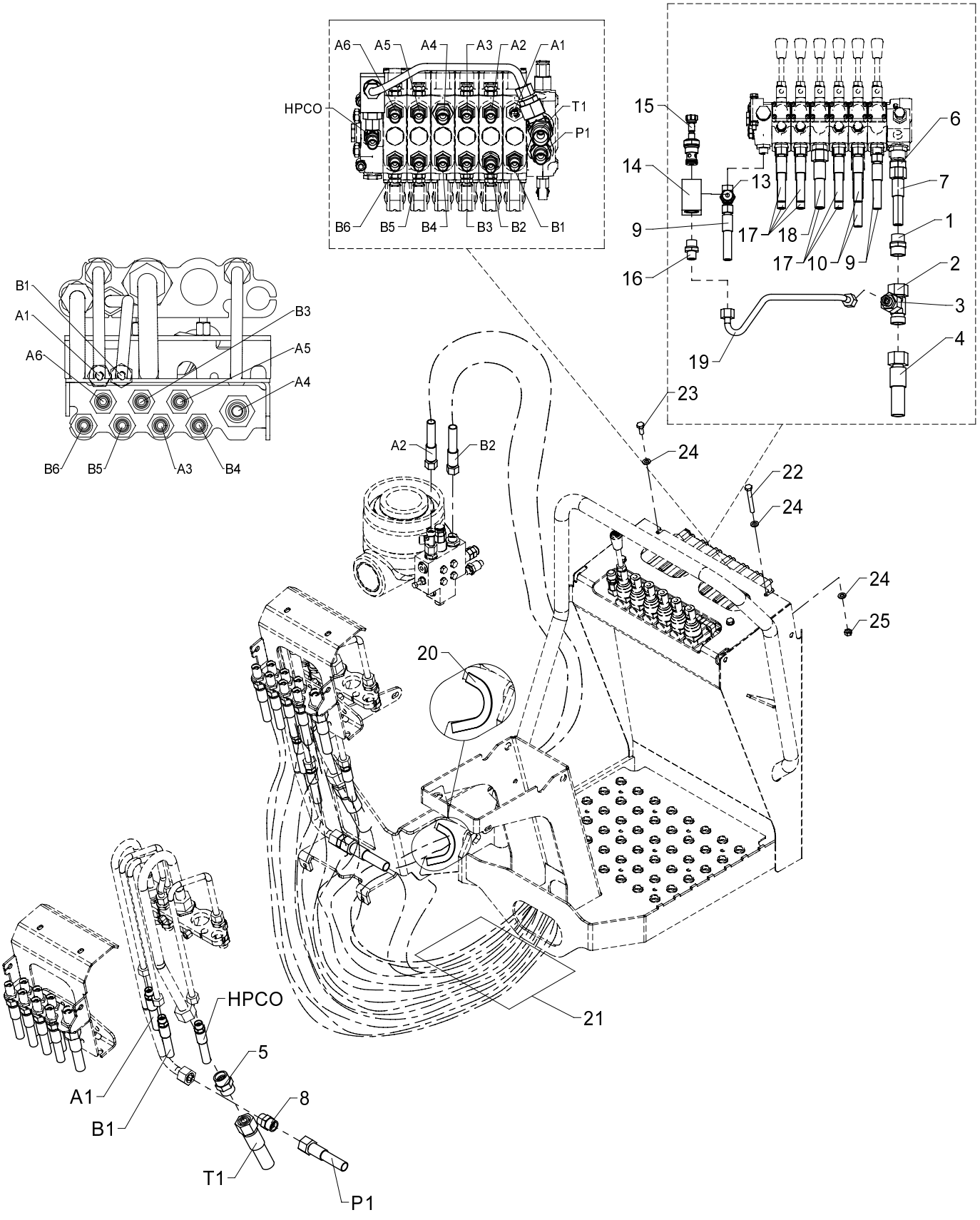

Hose kit, 6 fcts., (TSHC linear)

534 11 100

From loader 1060001
To loader

Created 12-01-2010
Modified

Pos	Qty.	Part no.	Description	Remarks
1	1	26197	Connection	P-GEV 20 SR-WD
2	1	26362	Connection	ELSD 20 S
3	1	26873	Reducing connection	REDSDN 20/12 S
4	1	62626	Hose	
5	1	26140	Double connection	GS 20 S
6	1	26390	Connection	P-GEV 16 SR 3/4-WD
7	1	62696	Hose	
8	1	26145	Double connection	GS 16 S
9	3	0017200	Hose	
10	1	26106	Connection	P-MAV 8 LR
11	2	0017520	Hose	
12	1	25270	Connection	ELSD 12 L
13	1	26388	Connection	EGESD 12 LR 1/2-WD
14	1	59939	Valve housing	
15	1	59617	Cartridge	
16	1	25194	Straight connection	GES 12 SR 1-2-WD
17	7	0015370	Hose	
18	1	62676	Hose	
19	1	6340838	Pipe	
20	2	46587	Rubber protection	130 mm
21	1	59500	Protective cover	
22	2	30259	Steel bolt, stainless	M8 x 65
23	2	30132	Set screw, stainless	M8 x 20
24	6	31147	Washer, stainless	8 mm
25	2	30856	Nut, stainless	M8

15/105 - 17/117 SL & DL Parts

Internal ref. 63 42 580

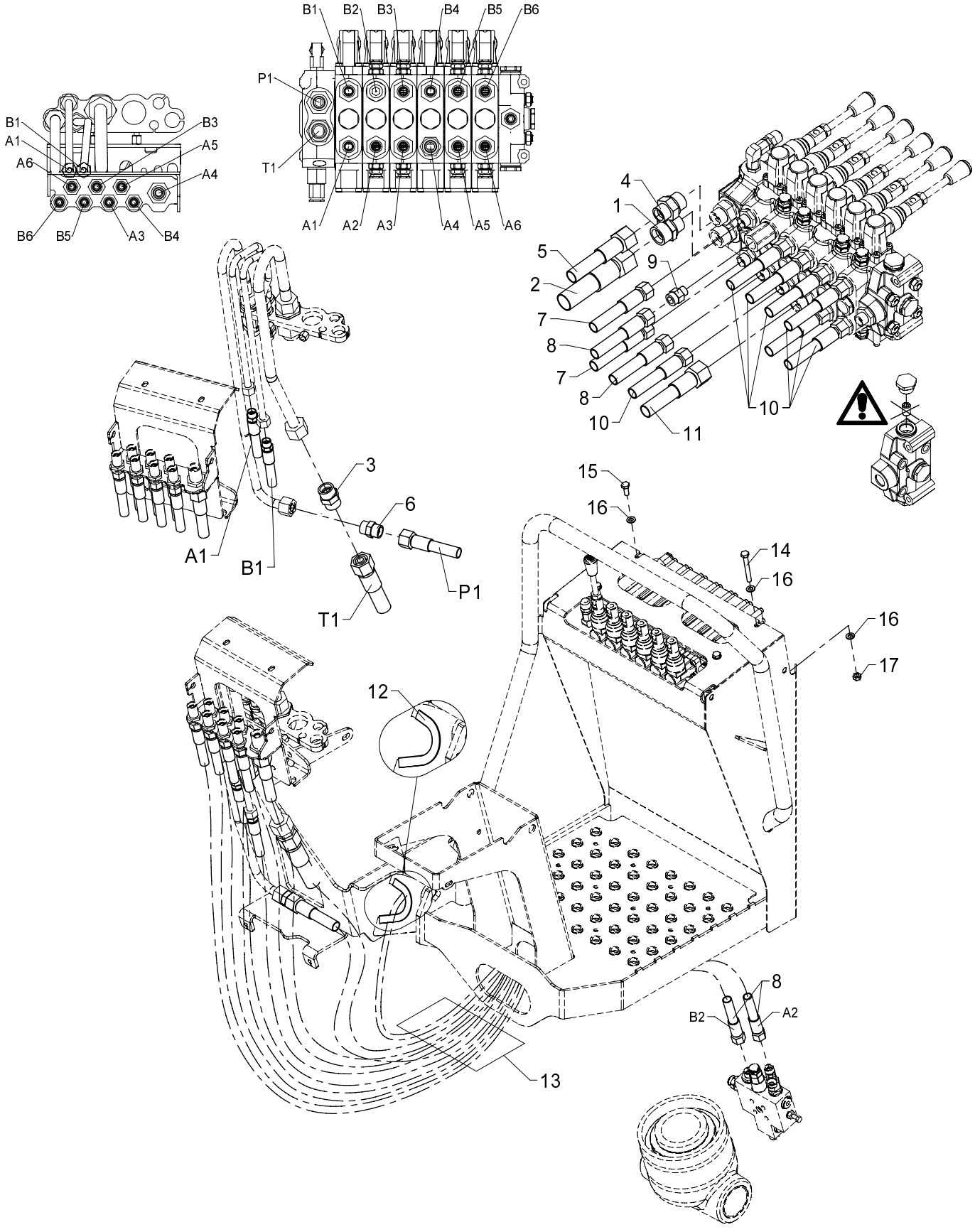

Hose kit, 6 functions (TSHC, linear, excl. CE)

534 11 105

From loader 1060001
To loader

Created 12-01-2010
Modified

Pos	Qty.	Part no.	Description	Remarks
1	1	26197	Connection	P-GEV 20 SR-WD
2	1	62626	Hose	
3	1	26140	Double connection	GS 20 S
4	1	26390	Connection	P-GEV 16 SR 3/4-WD
5	1	62696	Hose	
6	1	26145	Double connection	GS 16 S
7	2	0017200	Hose	
8	2	0017520	Hose	
9	1	26106	Connection	P-MAV 8 LR
10	7	0015370	Hose	
11	1	62676	Hose	
12	2	46587	Rubber protection	130 mm
13	1	59500	Protective cover	
14	2	30259	Steel bolt, stainless	M8 x 65
15	2	30132	Set screw, stainless	M8 x 20
16	6	31147	Washer, stainless	8 mm
17	2	30856	Nut, stainless	M8

15/105 - 17/117 SL & DL Parts

Internal ref. 63 42 600

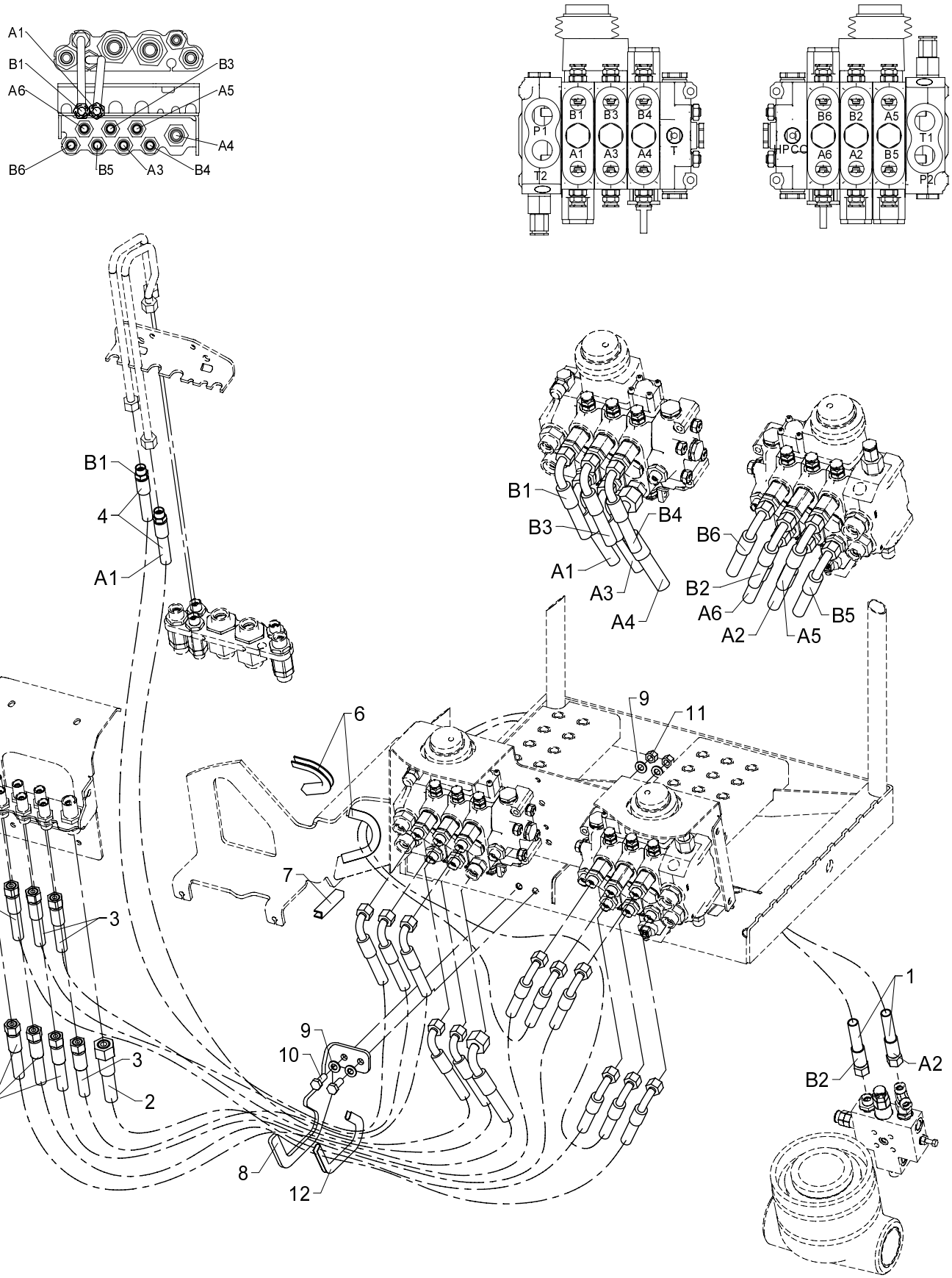

534 11 110

From loader 1060001
To loader

Created 12-01-2010
Modified

Hose kit, loader functions (TS HC joystick)

Pos	Qty.	Part no.	Description	Remarks
1	2	0017540	Hose	
2	1	62686	Hose	1/2 X 1100 M24X1.5 L/90
3	3	0017120	Hose	
4	2	0017010	Hose	
5	4	0015030	Hose	
6	2	46587	Rubber protection	130 mm
7	1	46587	Rubber protection	75 mm
8	1	6341043	Hose clamp	
9	4	31565	Washer, stainless	10 mm
10	2	30155	Set screw	M10 x 25
11	2	31564	Lock nut, stainless	M10
12	1	46596	Rubber protection	250 mm

15/105 - 17/117 SL & DL Parts

Internal ref. 63 42 430

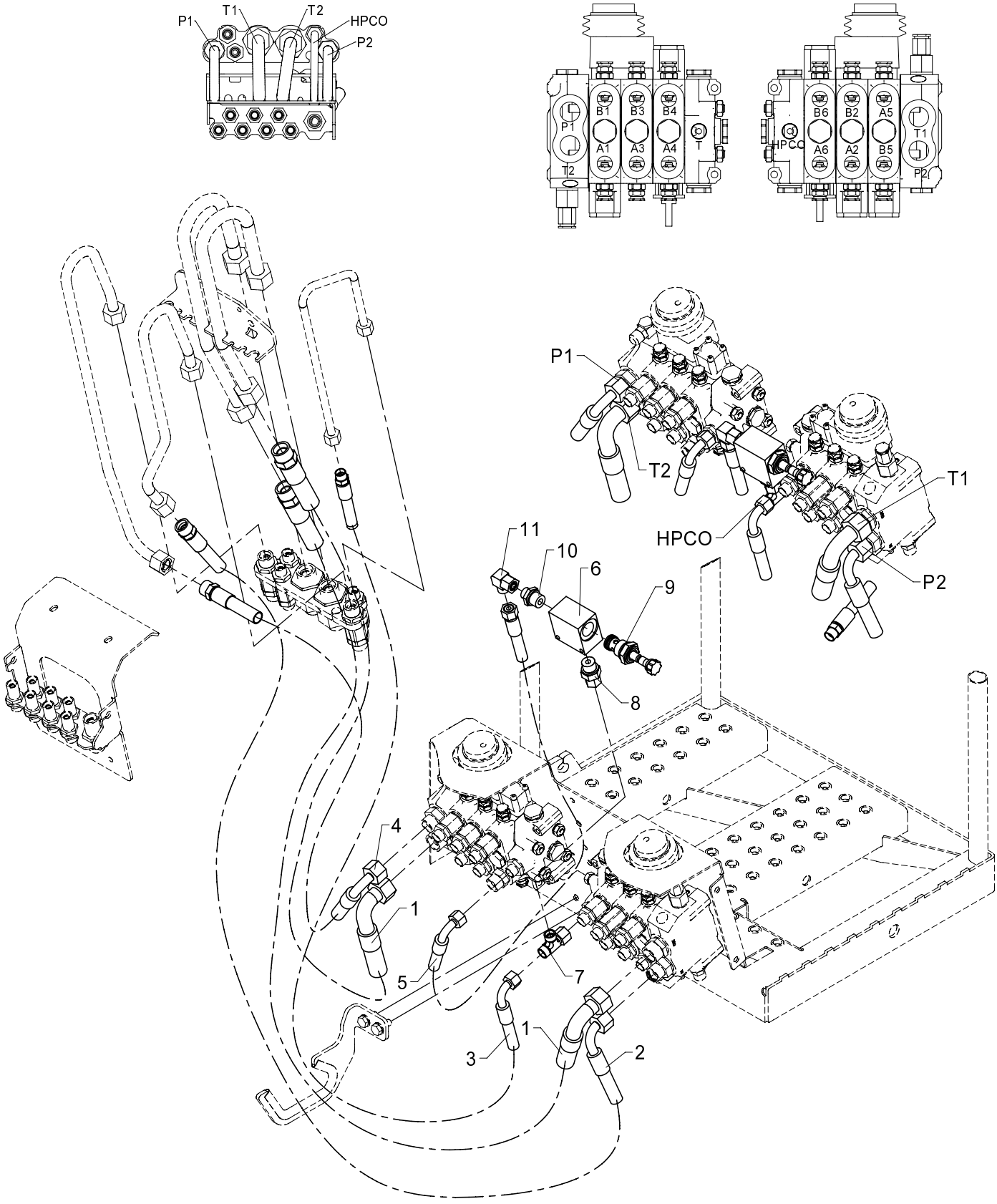

534 11 120

From loader 1060001
To loader

Created 12-01-2010
Modified

Hose kit for pump and tank, (TS HC joystick)

Pos	Qty.	Part no.	Description	Remarks
1	2	56527	Hose	3/4 X 1200 mm M30x2 S/90 20S
2	1	56526	Hose	1/2 X 1100 mm S/90 16S
3	1	0017010	Hose	
4	1	56525	Hose	1/2 X 750 mm M24x1,5 S/90 16S
5	1	0017710	Hose	
6	1	59939	Valve housing	
7	1	25270	Connection	ELSD 12 L
8	1	26388	Connection	EGESD 12 LR 1/2-WD
9	1	59617	Cartridge	
10	1	25108	Connection	GES 12 LR 1/2-WD
11	1	25242	Elbow connection	EWSD 12 L

15/105 - 17/117 SL & DL Parts

Internal ref. 63 42 620

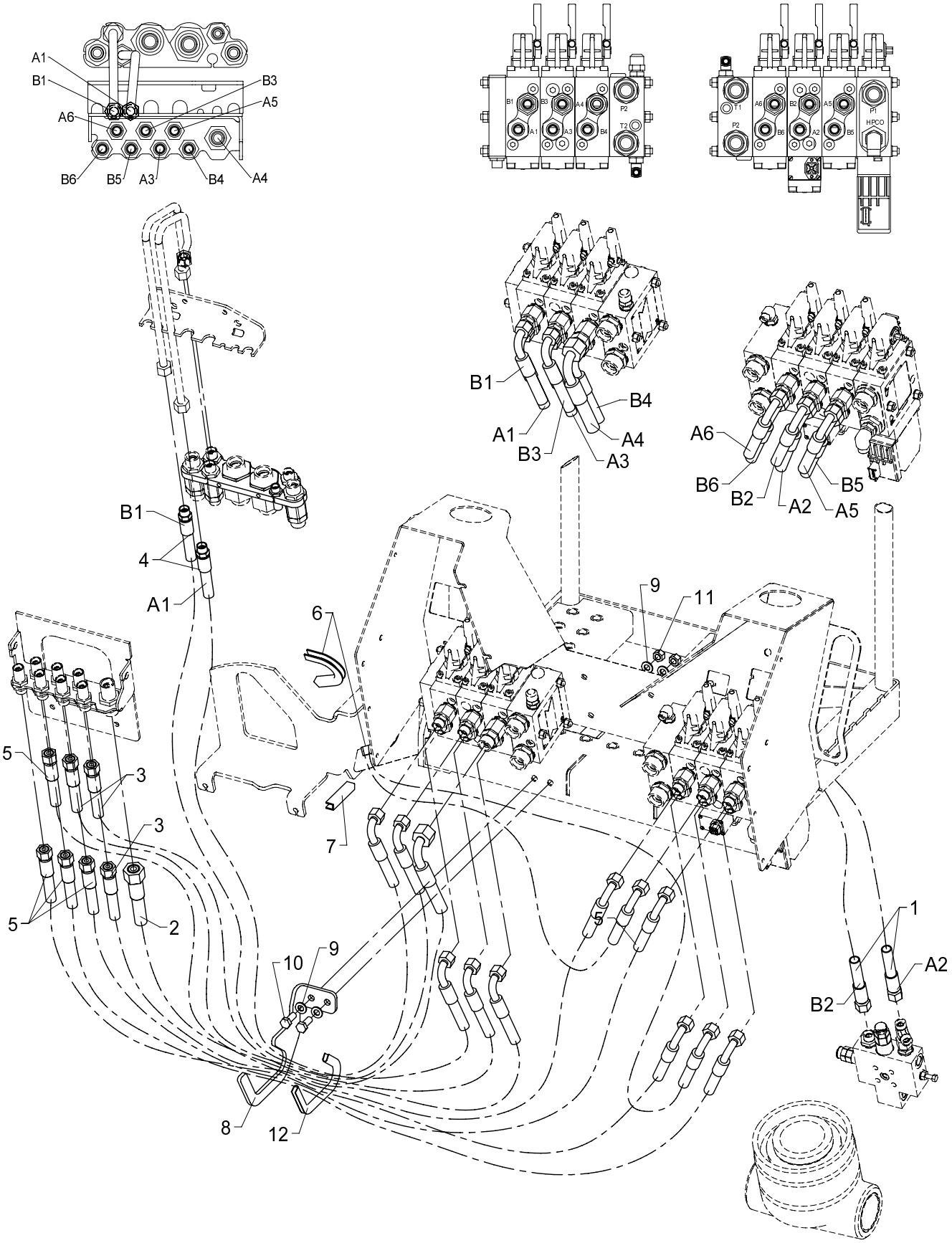

534 11 130

From loader 1060001
To loader

Created 12-01-2010
Modified

Hose kit, loader functions (TS Danfoss 1 circuit, fixed and variable flow)

Pos	Qty.	Part no.	Description	Remarks
1	2	0017540	Hose	
2	1	62686	Hose	1/2 X 1100 M24X1.5 L/90
3	3	0017120	Hose	
4	2	0017010	Hose	
5	4	0015030	Hose	
6	2	46587	Rubber protection	130 mm
7	1	46587	Rubber protection	75 mm
8	1	6341043	Hose clamp	
9	4	31565	Washer, stainless	10 mm
10	2	30155	Set screw	M10 x 25
11	2	31564	Lock nut, stainless	M10
12	1	46596	Rubber protection	250 mm

15/105 - 17/117 SL & DL Parts

Internal ref. 63 42 670

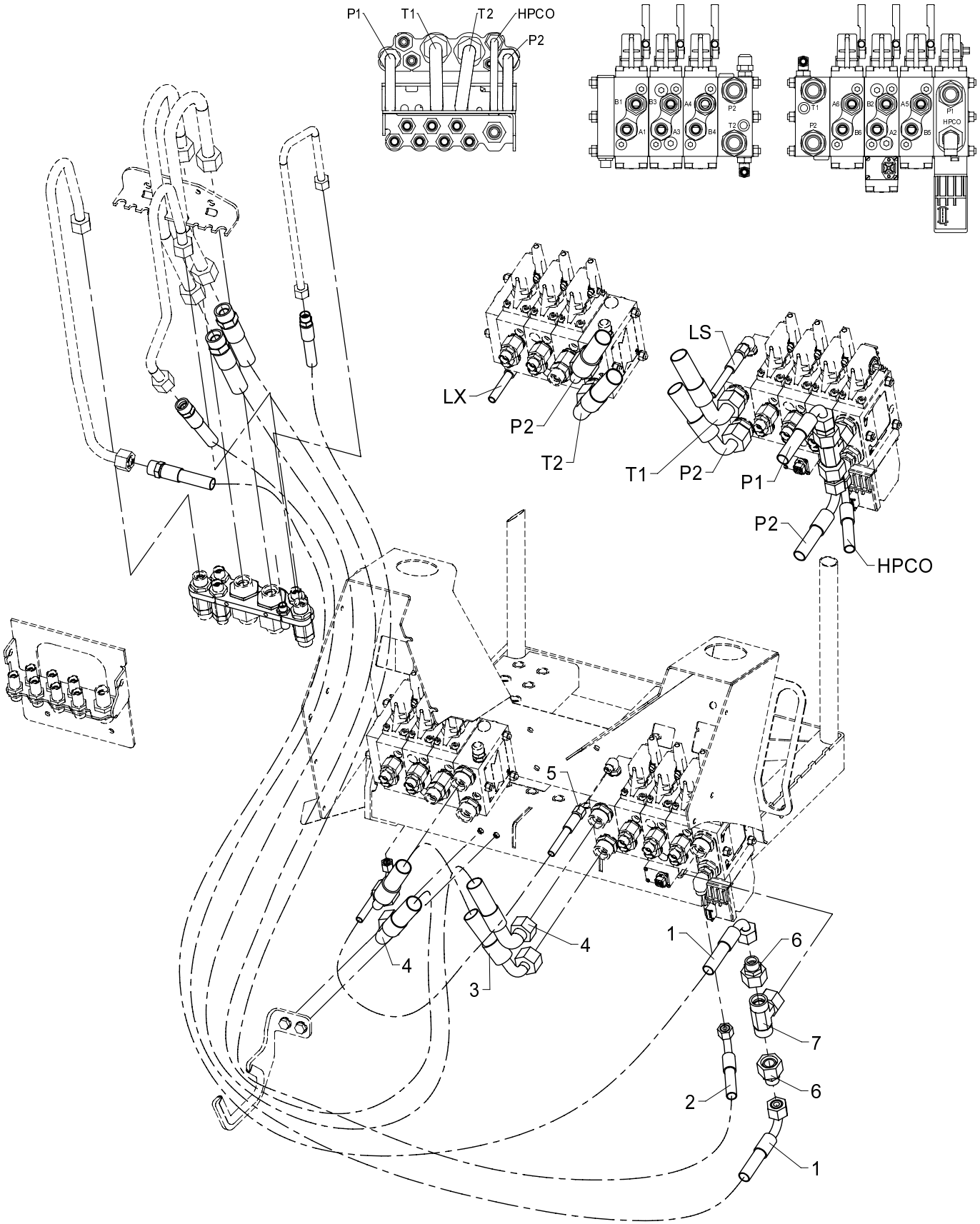

534 11 140

From loader 1060001
To loader

Created 01-06-2009
Modified

Hose kit for pump and tank (TS, Danfoss 1 circuit, fixed flow)

Pos	Qty.	Part no.	Description	Remarks
1	2	56526	Hose	1/2 X 1100 mm S/90 16S
2	1	0017370	Hose	
3	1	56369	Hose	5/8 X 500 M30X2 90/90 SS
4	2	56527	Hose	3/4 X 1200 mm M30x2 S/90 20S
5	1	56520	Hose	1/4 X 900 M14X1.5 L/90 (350 bar)
6	2	26306	Reducing connection	REDSDN 20/16 S
7	1	26360	Connection	ETVD 20 S

15/105 - 17/117 SL & DL Parts

Internal ref. 63 42 660

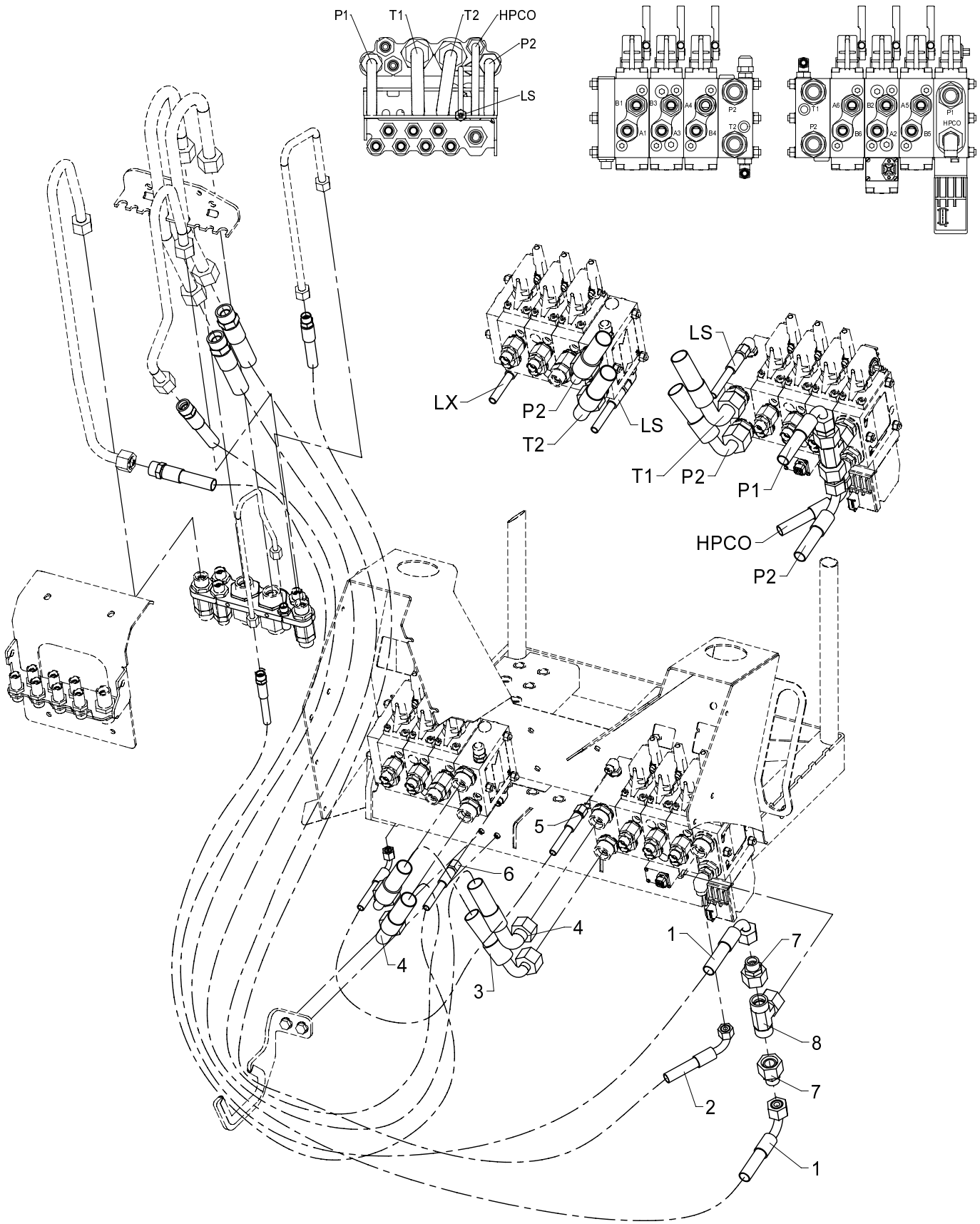

534 11 150

From loader 1060001
To loader

Hose kit for pump and tank (TS, Danfoss 1 circuit, variable flow)

Created 01-06-2009
Modified 13-08-2009

Pos	Qty.	Part no.	Description	Remarks
1	2	56526	Hose	1/2 X 1100 mm S/90 16S
2	1	0017370	Hose	
3	1	56369	Hose	5/8 X 500 M30X2 90/90 SS
4	2	56527	Hose	3/4 X 1200 mm M30x2 S/90 20S
5	1	56520	Hose	1/4 X 900 M14X1.5 L/90 (350 bar)
6	1	56528	Hose	1/4 X 1000 mm S/L 8Let
7	2	26306	Reducing connection	REDSDN 20/16 S
8	1	26360	Connection	ETVD 20 S

15/105 - 17/117 SL & DL Parts

Internal ref. 63 42 500

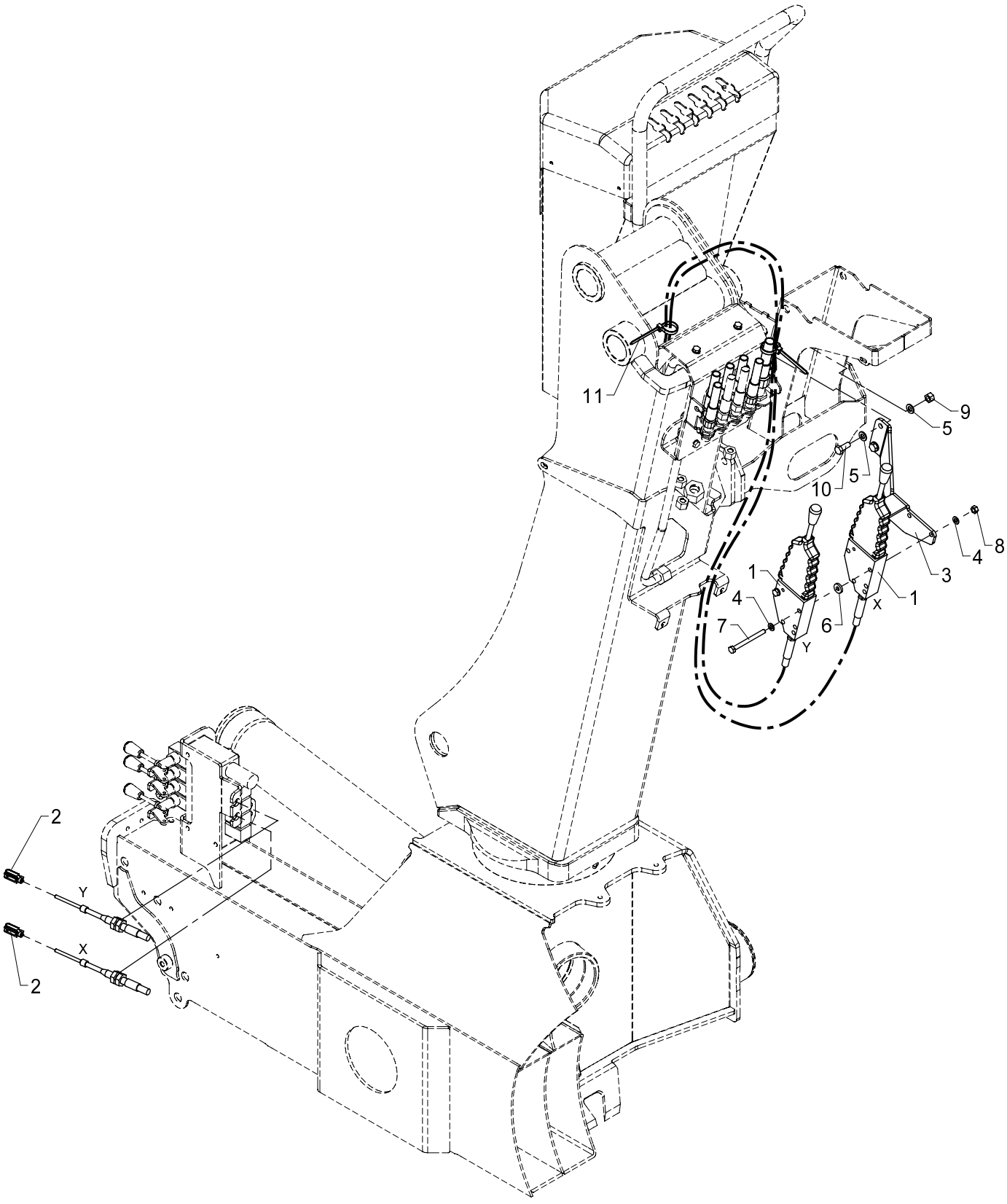

Stabilizer operation (TS HC linear)

534 11 180

From loader 1060001
To loader

Created 12-01-2010
Modified

Pos	Qty.	Part no.	Description	Remarks
1	2	48482	Push-pull cable incl. lever	
2	2	48414	Clevis	
3	1	6340905	Fittings (TS stabilizer oper.)	
4	4	31147	Washer, stainless	8 mm
5	4	31565	Washer, stainless	10 mm
6	2	31755	Washer	
7	2	30144	Steel bolt, stainless	M8 x 90
8	2	30856	Nut, stainless	M8
9	2	31564	Lock nut, stainless	M10
10	2	31513	Set screw, stainless	M10 x 25
11	2	27275	Clip	

15/105 - 17/117 SL & DL Parts

Internal ref. 63 42 510

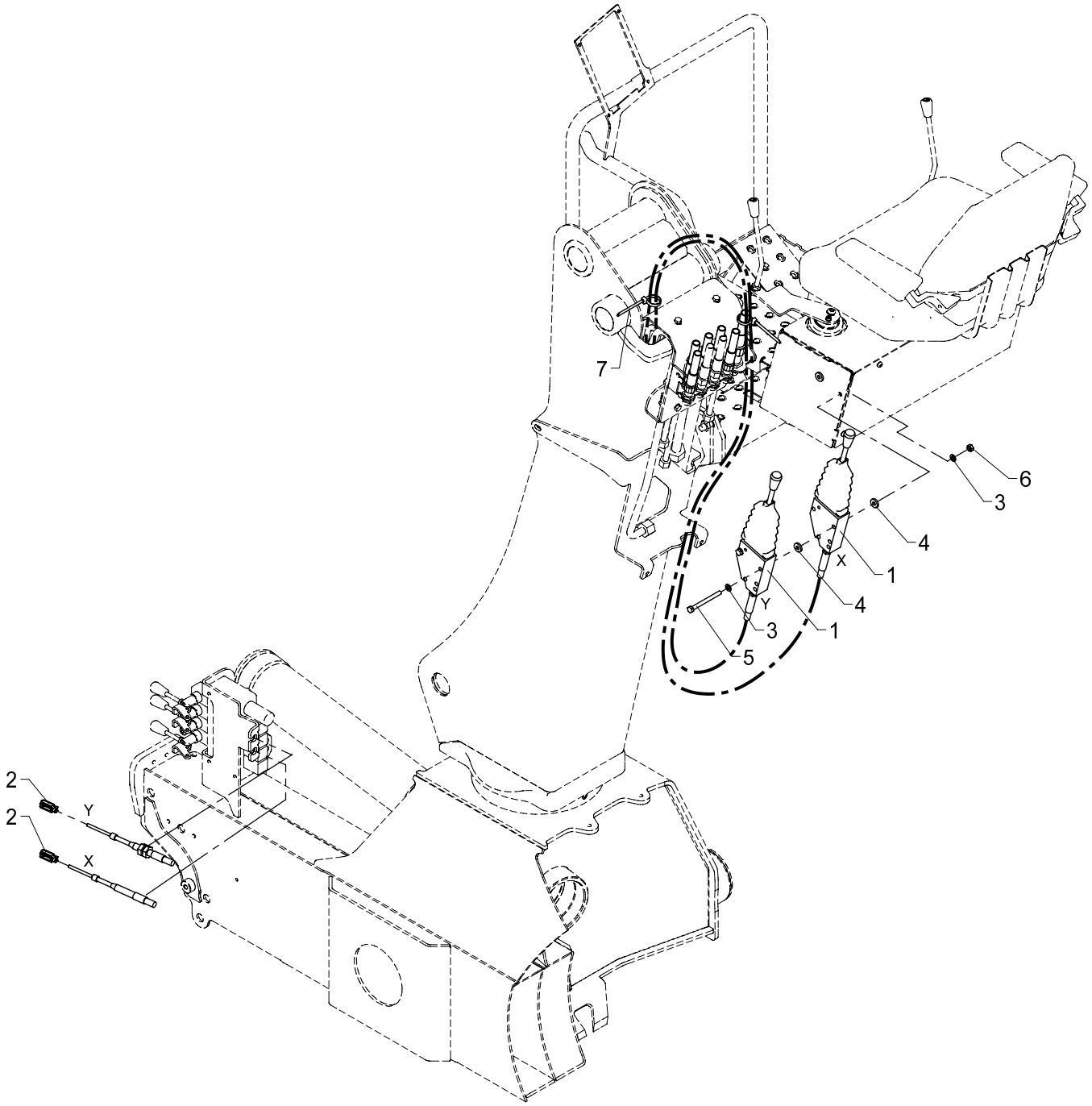

Stabilizer operation (TS joystick)

534 11 190

From loader 1060001
To loader

Created 16-04-2009
Modified

Pos	Qty.	Part no.	Description	Remarks
1	2	48482	Push-pull cable incl. lever	
2	2	48414	Clevis	
3	4	31147	Washer, stainless	8 mm
4	4	31755	Washer	
5	2	30144	Steel bolt, stainless	M8 x 90
6	2	30856	Nut, stainless	M8
7	2	27275	Clip	

15/105 - 17/117 SL & DL Parts

63 45 080
63 41 080
Internal ref. 63 41 070

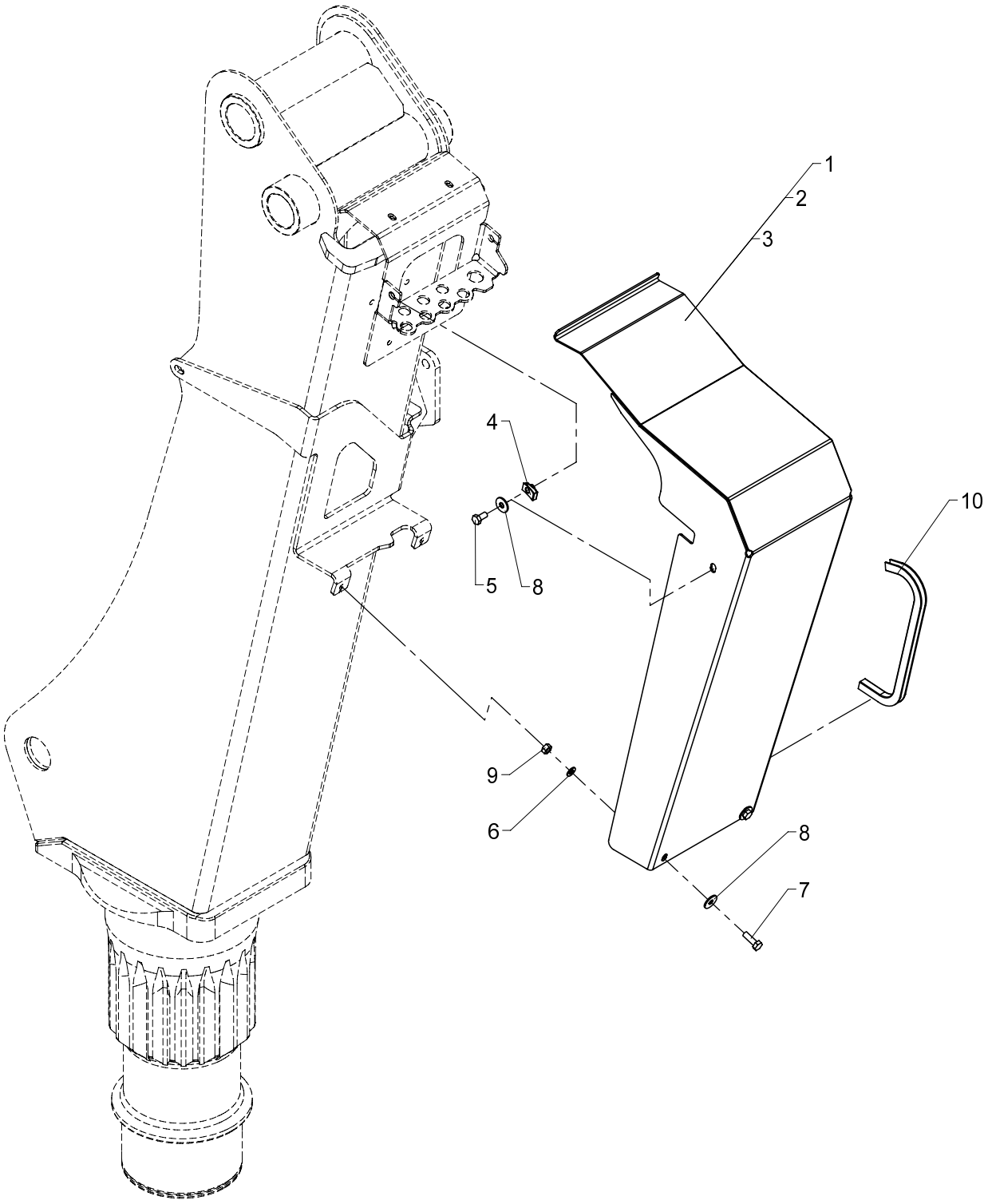

534 11 200

From loader 1060001
To loader

Created 24-02-2009
Modified

Hose shield (TS), cpl.

Pos	Qty.	Part no.	Description	Remarks
		6341070	Hose shield (TS), cpl.	
		6341080	Hose shield (TS), cpl.	
		6345080	Hose shield (TS), cpl.	
1	1	6340078	Hose shield (TS)	1310/1510/1810/2210
2	1	6340088	Hose shield (TS)	1300/1500
3	1	6344088	Hose shield (TS)	1800/2200
4	2	31069	Clip	M8 1,5 - 5,5 mm.
5	2	30131	Set screw, stainless	M8 x 16
6	2	31147	Washer, stainless	8 mm
7	2	30134	Set screw, stainless	M8 x 25
8	4	31136	Washer, stainless	
9	2	30856	Nut, stainless	M8
10	1	22122	PVC protection	360 mm

15/105 - 17/117 SL & DL Parts

Internal ref. 63 42 360

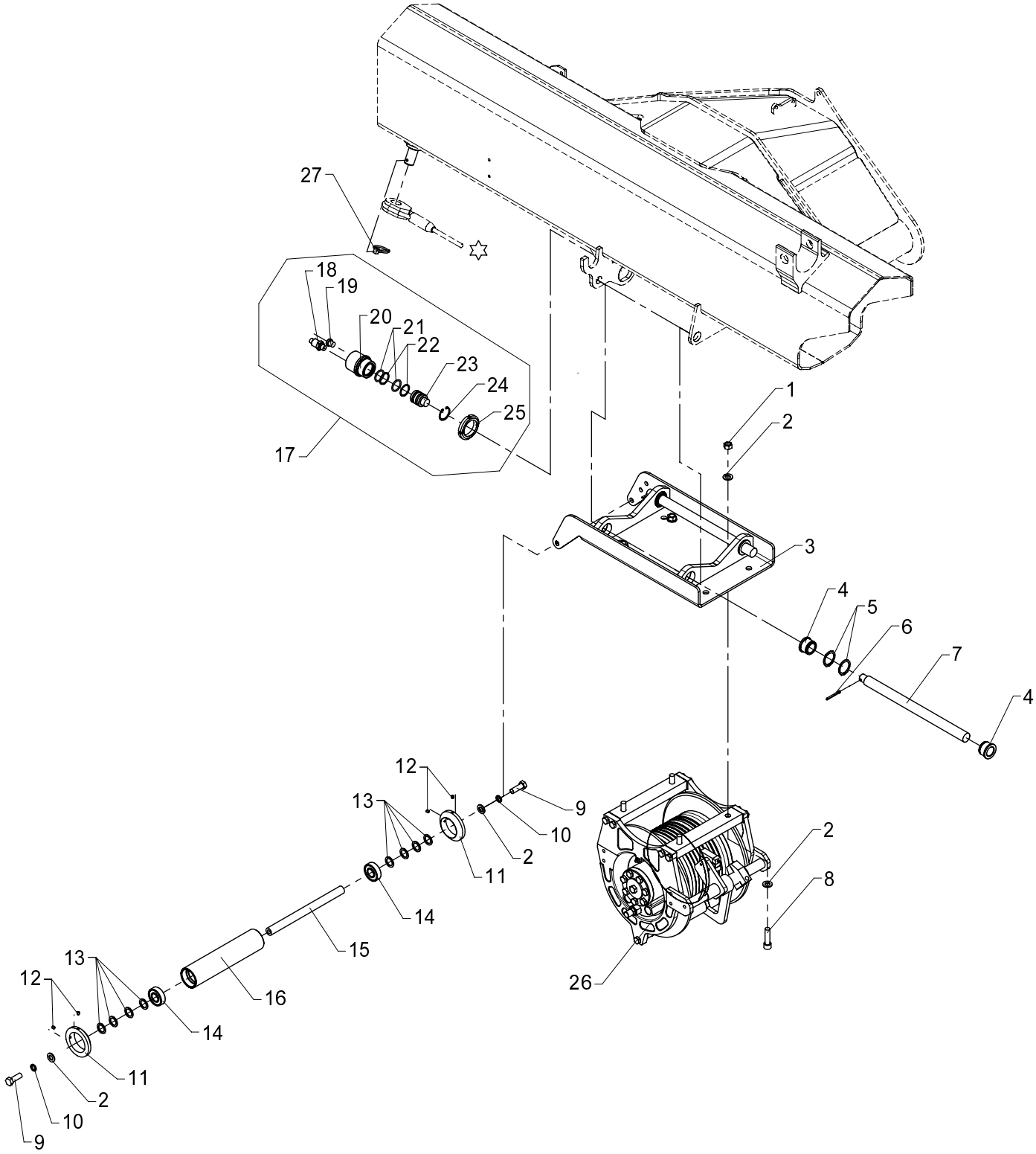

☆ 63 193 WIRE ROPE

534 13 020

From loader 1060001
To loader

Created 21-08-2007
Modified

Winch. 1.5 tm, mounting fittings and weighing cell

Pos	Qty.	Part no.	Description	Remarks
		6342360	Winch1.5t, fittings/weigh.cell	
1	4	32372	Nut	M12
2	10	31131	Washer	12 mm
3	1	6340977	Winch bracket	
4	4	63485	Slide bearing	
5	4	33117	Circlip	35U
6	2	31638	Split pin	ø4 x 40
7	2	6340987	Pin	
8	4	30428	Sockethead screw	MC12 x 45
9	2	30178	Set screw	M12 x 35
10	2	31158	Spring washer	12 mm
11	2	6886764	Guide roller	
12	4	31548	Pointed screw, stainless	MSP6 x 6
13	8	33227	Back ring	SS 20 x 28 x 2
14	2	23178	Ball bearing	
15	1	6371254	Pin	
16	1	6290984	Guide roller	
17	1	6342350	Weighing cell, complete	
18	1	28850	Pressure transducer	
19	1	25197	Plug	VS-R-1/4 WD
20	1	6340988	Housing	
21	2	20175	O-ring	OR 26,2 x 3
22	2	20898	Back ring	STR 27 x 32 x 1,3
23	1	6340989	Piston	
24	1	33103	Circlip	34 I
25	1	23163	Nut	M45 x 1,5
26	1	58284	Winch	
27	1	33386	Ring split	ø6 x 45

15/105 - 17/117 SL & DL Parts

Internal ref. 63 42 340

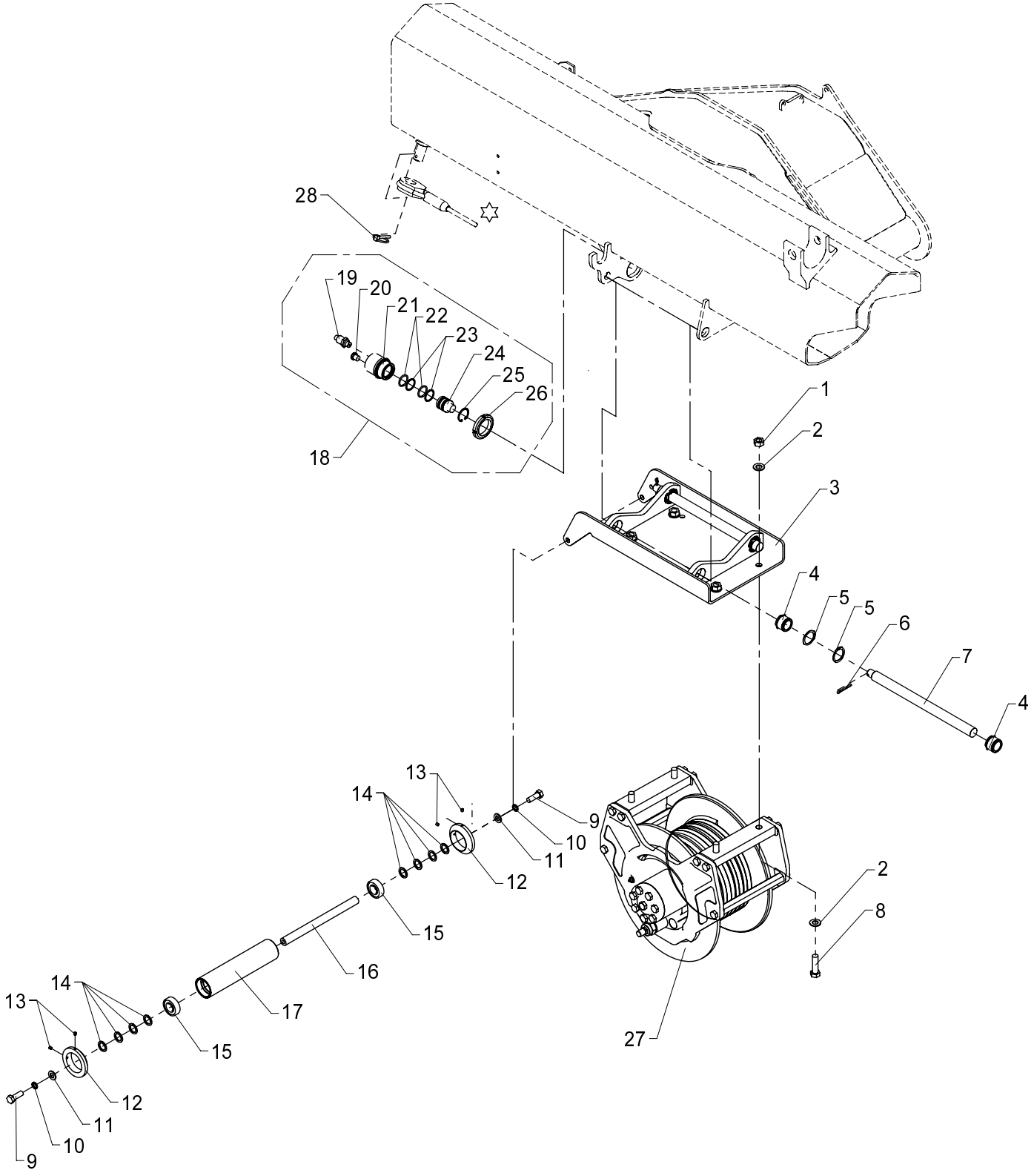

☆ 63 193

534 13 030

From loader 1060001
To loader

Created 25-06-2007
Modified

Winch. 2.5 tm, mounting fittings and weighing cell

Pos	Qty.	Part no.	Description	Remarks
		6342340	Winch2.5t, fittings/weigh.cell	
1	4	30862	Nut	M14
2	8	31178	Washer	14 mm
3	1	6340977	Winch bracket	
4	4	63485	Slide bearing	
5	4	33117	Circlip	35U
6	2	31638	Split pin	ø4 x 40
7	2	6340987	Pin	
8	4	30210	Steel bolt	M14 x 50
9	2	30178	Set screw	M12 x 35
10	2	31158	Spring washer	12 mm
11	2	31131	Washer	12 mm
12	2	6886764	Guide roller	
13	4	31548	Pointed screw, stainless	MSP6 x 6
14	8	33227	Back ring	SS 20 x 28 x 2
15	2	23178	Ball bearing	
16	1	6371254	Pin	
17	1	6290984	Guide roller	
18	1	6342350	Weighing cell, complete	
19	1	28850	Pressure transducer	
20	1	25197	Plug	VS-R-1/4 WD
21	1	6340988	Housing	
22	2	20175	O-ring	OR 26,2 x 3
23	2	20898	Back ring	STR 27 x 32 x 1,3
24	1	6340989	Piston	
25	1	33103	Circlip	34 I
26	1	23163	Nut	M45 x 1,5
27	1	58285	Winch	
28	1	33386	Ring split	ø6 x 45

15/105 - 17/117 SL & DL Parts

Internal ref. 63 42 300

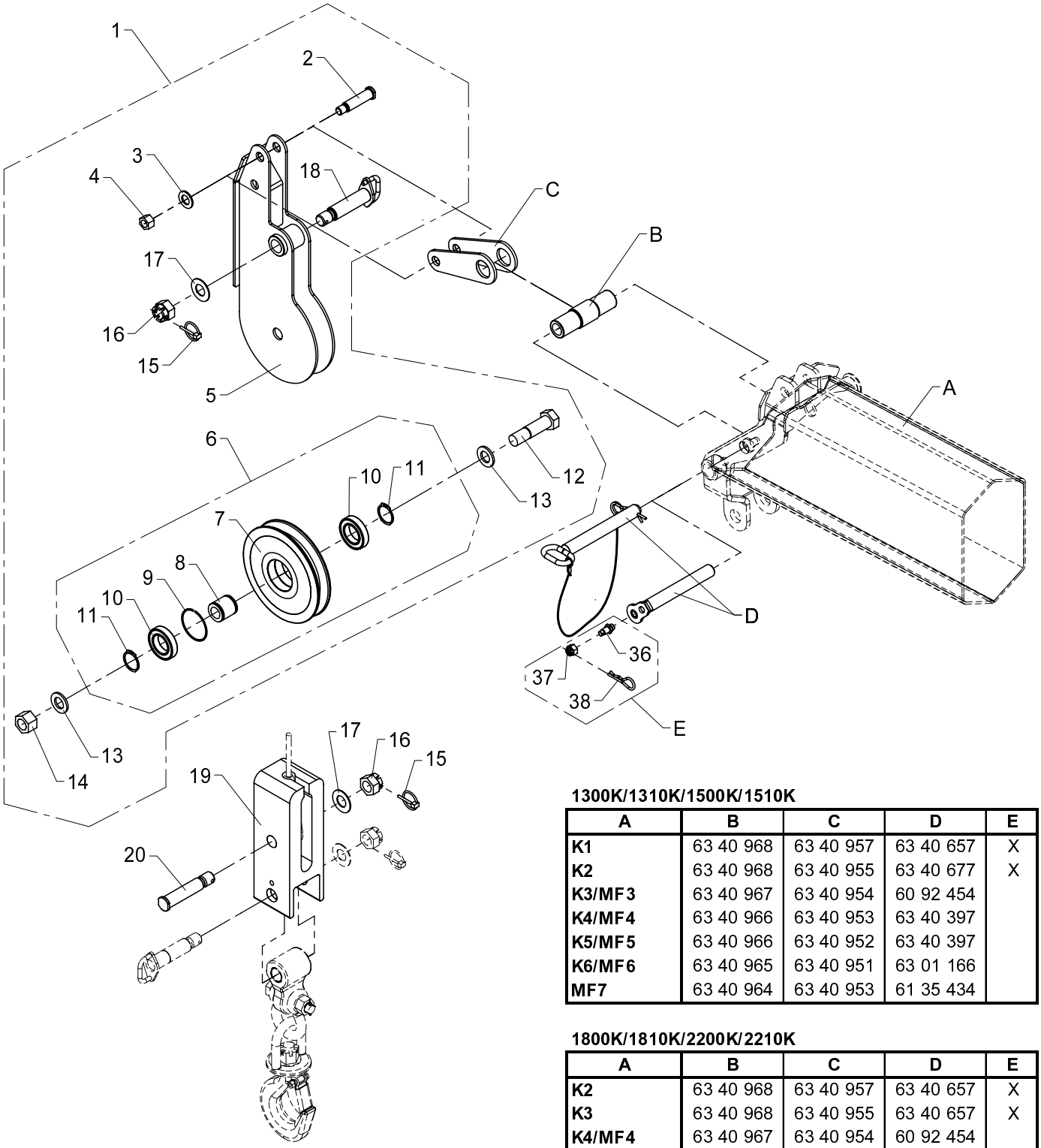

1300K/1310K/1500K/1510K

A	B	C	D	E
K1	63 40 968	63 40 957	63 40 657	X
K2	63 40 968	63 40 955	63 40 677	X
K3/MF3	63 40 967	63 40 954	60 92 454	
K4/MF4	63 40 966	63 40 953	63 40 397	
K5/MF5	63 40 966	63 40 952	63 40 397	
K6/MF6	63 40 965	63 40 951	63 01 166	
MF7	63 40 964	63 40 953	61 35 434	

1800K/1810K/2200K/2210K

A	B	C	D	E
K2	63 40 968	63 40 957	63 40 657	X
K3	63 40 968	63 40 955	63 40 657	X
K4/MF4	63 40 967	63 40 954	60 92 454	
K5/MF5	63 40 966	63 40 952	63 40 397	
K6/MF6	63 40 966	63 40 951	63 40 397	
K7	63 40 965	63 40 951	63 44 727	X
MF7	63 40 965	63 40 951	63 01 166	
K8/MF8	63 40 964	63 40 952	61 35 434	
MF9	---	63 40 956	61 35 434	

534 13 040

From loader 1060001
To loader

Wire pulley, single snatch block

Created 26-06-2007
Modified 15-04-2009

Pos	Qty.	Part no.	Description	Remarks
1	1	6342310	Wire sheave	
2	1	6340982	Pin	
3	1	31179	Washer	20 mm
4	1	30892	Lock nut	M16
5	1	6340991	Wire pulley	
6	1	6342290	Wire sheave with bearing	
7	1	63484	Wire sheave	
8	1	6887304	Hub	
9	1	23904	Spring ring	BR 68
10	2	23150	Ball bearing	
11	2	33121	Circlip	40U
12	1	32476	Steel bolt	M24 x 95
13	2	31133	Washer	24 mm
14	1	30897	Lock nut	M24
15	2	31967	Ring split	ø4,5 x 40
16	2	30837	Nut	M24
17	2	31128	Washer	24 mm
18	2	6304067	Pin for suspension	
19	1	6340958	Counterweight	
20	1	6340959	Pin	
21	2	6340957	Link	
22	2	6340955	Link	
23	2	6340954	Link	
24	2	6340953	Link	
25	2	6340952	Link	
26	2	6340951	Link	
27	2	6340956	Link	
28	1	6340968	Hub	
29	1	6340967	Hub	
30	1	6340966	Hub	
31	1	6340965	Hub	
32	1	6340964	Hub	
33	1	6340657	Pin	
34	1	6340677	Pin	
35	1	6344727	Pin	
36	1	6340359	Lock pin	
37	1	32127	Nut	M12
38	1	33399	Lock spring	
39	1	6092454	Lock pin with chain	
40	1	6340397	Lock pin with lock spring	
41	1	6301166	Lock pin with split pin	

15/105 - 17/117 SL & DL Parts

Internal ref. 63 42 300

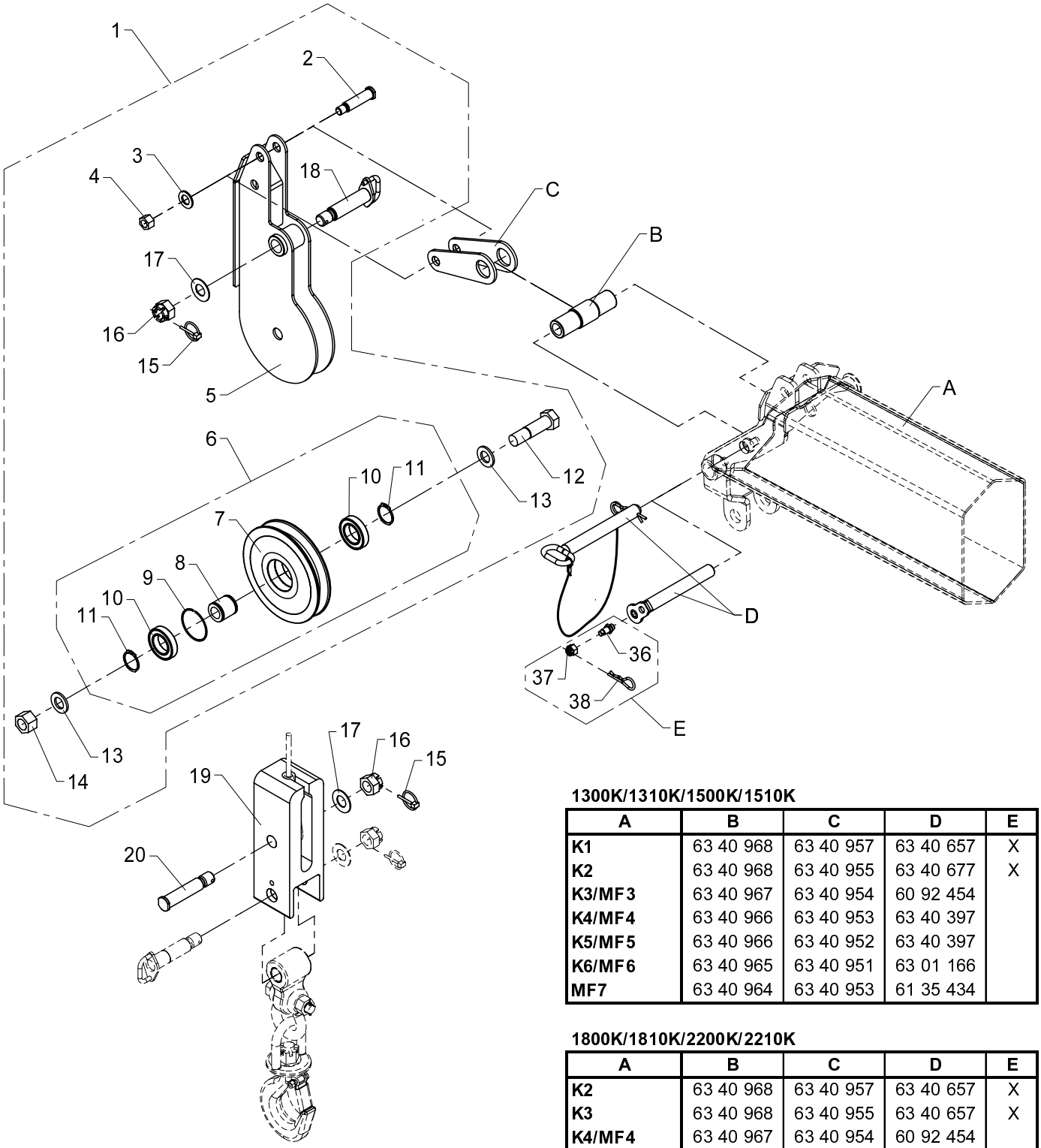

1300K/1310K/1500K/1510K

A	B	C	D	E
K1	63 40 968	63 40 957	63 40 657	X
K2	63 40 968	63 40 955	63 40 677	X
K3/MF3	63 40 967	63 40 954	60 92 454	
K4/MF4	63 40 966	63 40 953	63 40 397	
K5/MF5	63 40 966	63 40 952	63 40 397	
K6/MF6	63 40 965	63 40 951	63 01 166	
MF7	63 40 964	63 40 953	61 35 434	

1800K/1810K/2200K/2210K

A	B	C	D	E
K2	63 40 968	63 40 957	63 40 657	X
K3	63 40 968	63 40 955	63 40 657	X
K4/MF4	63 40 967	63 40 954	60 92 454	
K5/MF5	63 40 966	63 40 952	63 40 397	
K6/MF6	63 40 966	63 40 951	63 40 397	
K7	63 40 965	63 40 951	63 44 727	X
MF7	63 40 965	63 40 951	63 01 166	
K8/MF8	63 40 964	63 40 952	61 35 434	
MF9	---	63 40 956	61 35 434	

534 13 040

From loader 1060001
To loader

Created 26-06-2007
Modified 15-04-2009

Wire pulley, single snatch block

Pos	Qty.	Part no.	Description	Remarks
42	1	6135434	Lock pin	

15/105 - 17/117 SL & DL Parts

63 42 320
Internal ref. 63 42 280

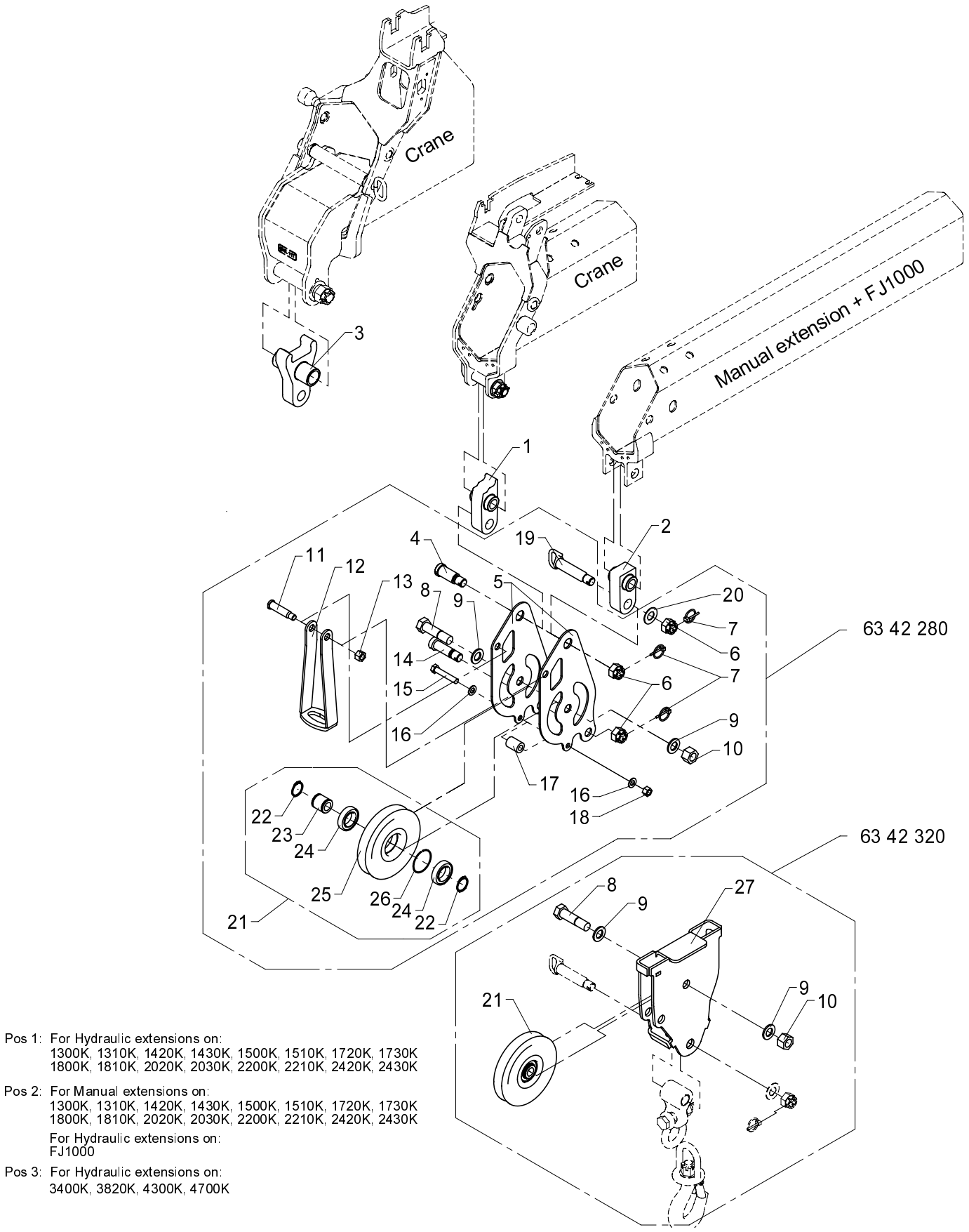

Pos 1: For Hydraulic extensions on:
1300K, 1310K, 1420K, 1430K, 1500K, 1510K, 1720K, 1730K
1800K, 1810K, 2020K, 2030K, 2200K, 2210K, 2420K, 2430K

Pos 2: For Manual extensions on:
1300K, 1310K, 1420K, 1430K, 1500K, 1510K, 1720K, 1730K
1800K, 1810K, 2020K, 2030K, 2200K, 2210K, 2420K, 2430K
For Hydraulic extensions on:
FJ1000

Pos 3: For Hydraulic extensions on:
3400K, 3820K, 4300K, 4700K

534 13 050

From loader 1060001
To loader

Created 13-01-2010
Modified 03-09-2010

Wire pulley, double snatch block

Pos	Qty.	Part no.	Description	Remarks
		6342280	Wire sheave	
		6342320	Snatch block	
1	1	6304414	Wire pulley	Til kranarme
2	1	6340995	Wire pulley	Til man. forlængerarme
3	1	6302615	Wire pulley	
4	1	6256324	Pin	
5	2	6340981	Side plate	
6	3	30837	Nut	M24
7	3	31967	Ring split	ø4,5 x 40
8	2	32476	Steel bolt	M24 x 95
9	4	31133	Washer	24 mm
10	2	30897	Lock nut	M24
11	1	6340982	Pin	
12	1	6340983	Wire safety device	
13	1	30892	Lock nut	M16
14	1	6300558	Pin	
15	1	30214	Steel bolt	M14 x 80
16	2	31178	Washer	
17	1	6885504	Distance pipe	
18	1	30891	Lock nut	M14
19	1	6304067	Pin for suspension	
20	1	31128	Washer	24 mm
21	2	6342290	Wire sheave with bearing	
22	2	33121	Circlip	40U
23	1	6887304	Hub	
24	2	23150	Ball bearing	
25	1	63484	Wire sheave	
26	1	23904	Spring ring	BR 68
27	1	6340997	Snatch block	

15/105 - 17/117 SL & DL Parts

Internal ref. 63 04 410

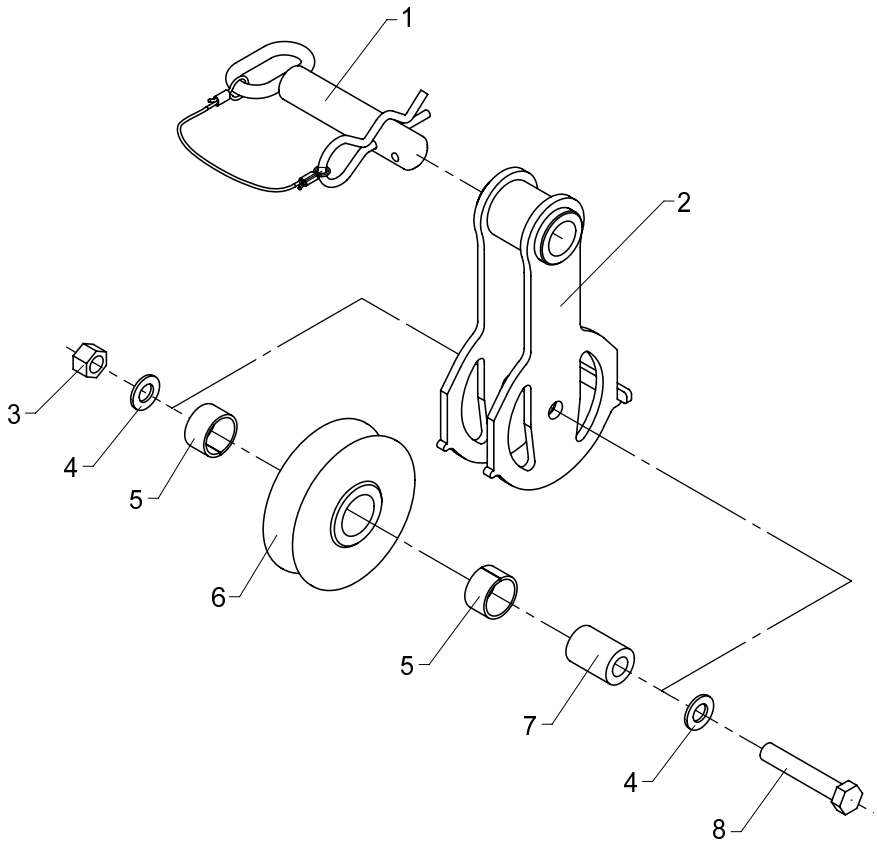

534 13 060

From loader 1060001
To loader

Created 24-02-2009
Modified

Wire roller guide

Pos	Qty.	Part no.	Description	Remarks
1	1	6304266	Lock pin with split pin	
2	1	6304411	Suspension for roller guide	
3	1	30891	Lock nut	M14
4	2	31178	Washer	14 mm
5	2	23302	Bushing	MB 3020 DU
6	1	63513	Wire roller guide	
7	1	6885504	Distance pipe	
8	1	30214	Steel bolt	M14 x 80

15/105 - 17/117 SL & DL Parts

Internal ref. 63 42 370

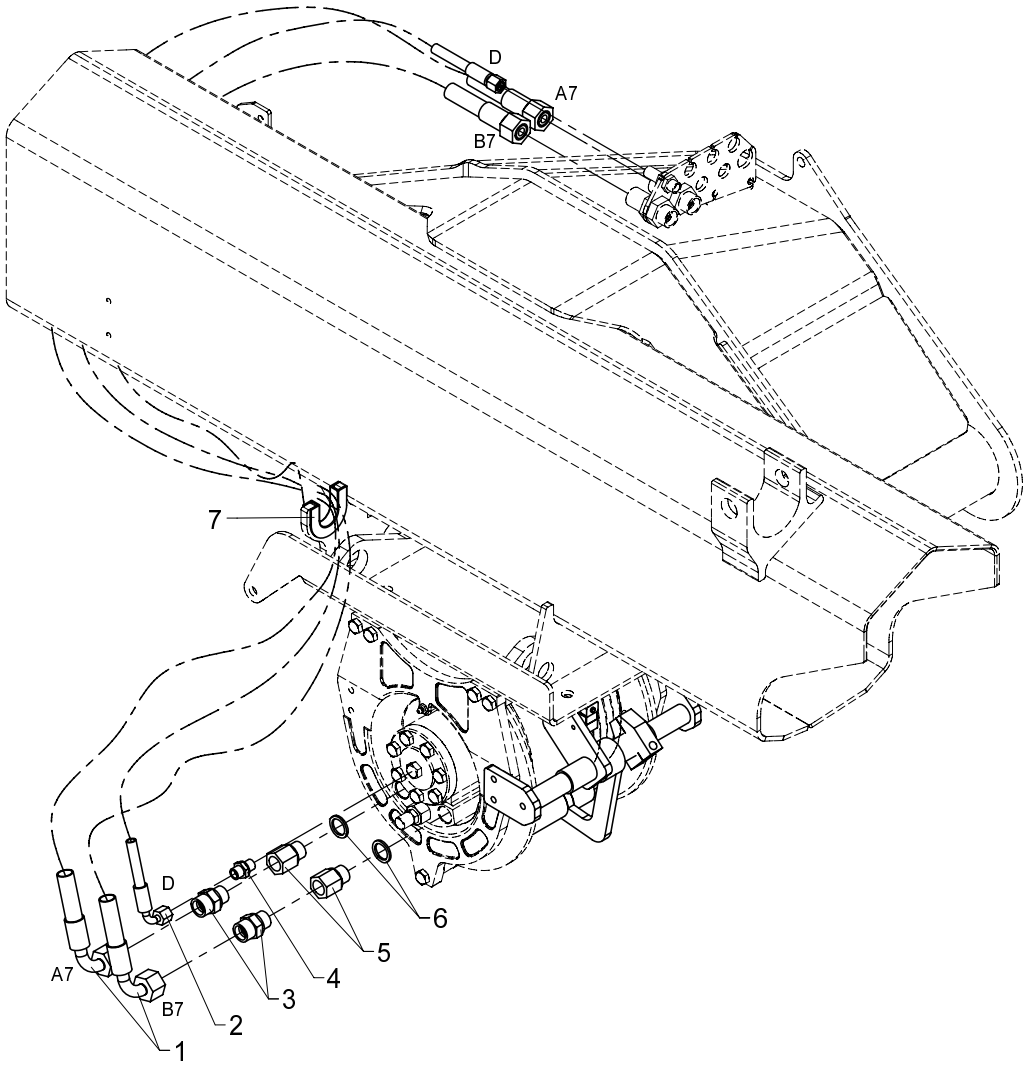

534 13 100

From loader 1060001
To loader

Created 24-02-2009
Modified 11-03-2009

Hydraulic system, winch

Pos	Qty.	Part no.	Description	Remarks
1	2	62687	Hose	1/2 X 1600 M24X1.5 L/90
2	1	62501	Hose	1/4X1600M14X1.5L/90RUSTF
3	2	26334	Connection	P-GEV 16 SR-WD
4	1	25109	Connection	GES 8 LR-WD
5	2	26922	Reducing nipple	1/2 BSP x 1/" BSP
6	2	21106	Seal washer	ø21,5 x 28,7 x 2,5
7	1	47347	Rubber protection	110 mm

15/105 - 17/117 SL & DL Parts

Internal ref. 63 42 380

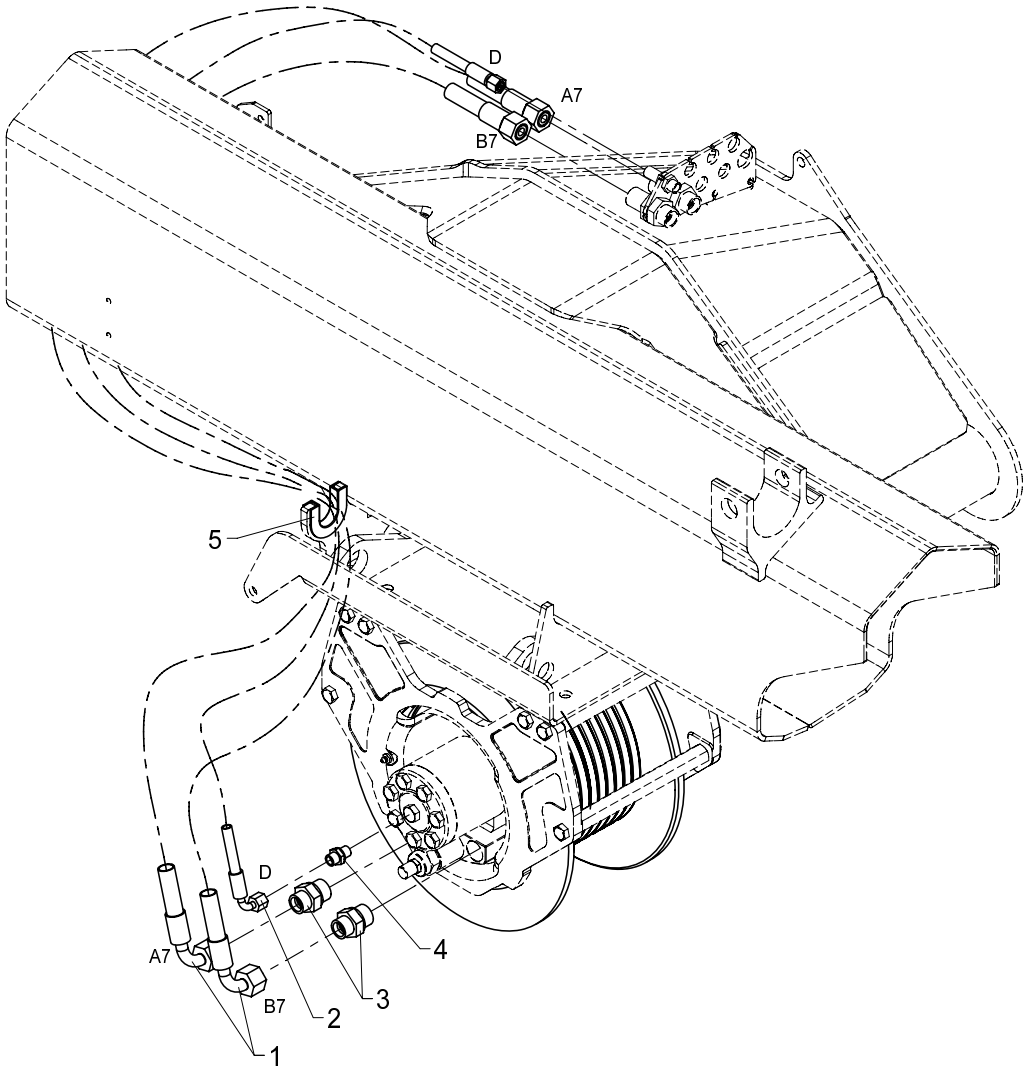

Hydraulic system, P15E

From loader 1060001
To loader

Created 25-02-2009
Modified 21-10-2010

Pos	Qty.	Part no.	Description	Remarks
1	2	62682	Hose	1/2" x 1700
2	1	62501	Hose	1/4X1600M14X1.5L/90RUSTF
3	2	26390	Connection	P-GEV 16 SR 3/4-WD
4	1	25109	Connection	GES 8 LR-WD
5	1	47347	Rubber protection	110 mm

15/105 - 17/117 SL & DL Parts

63 45 340
Internal ref. 63 41 340

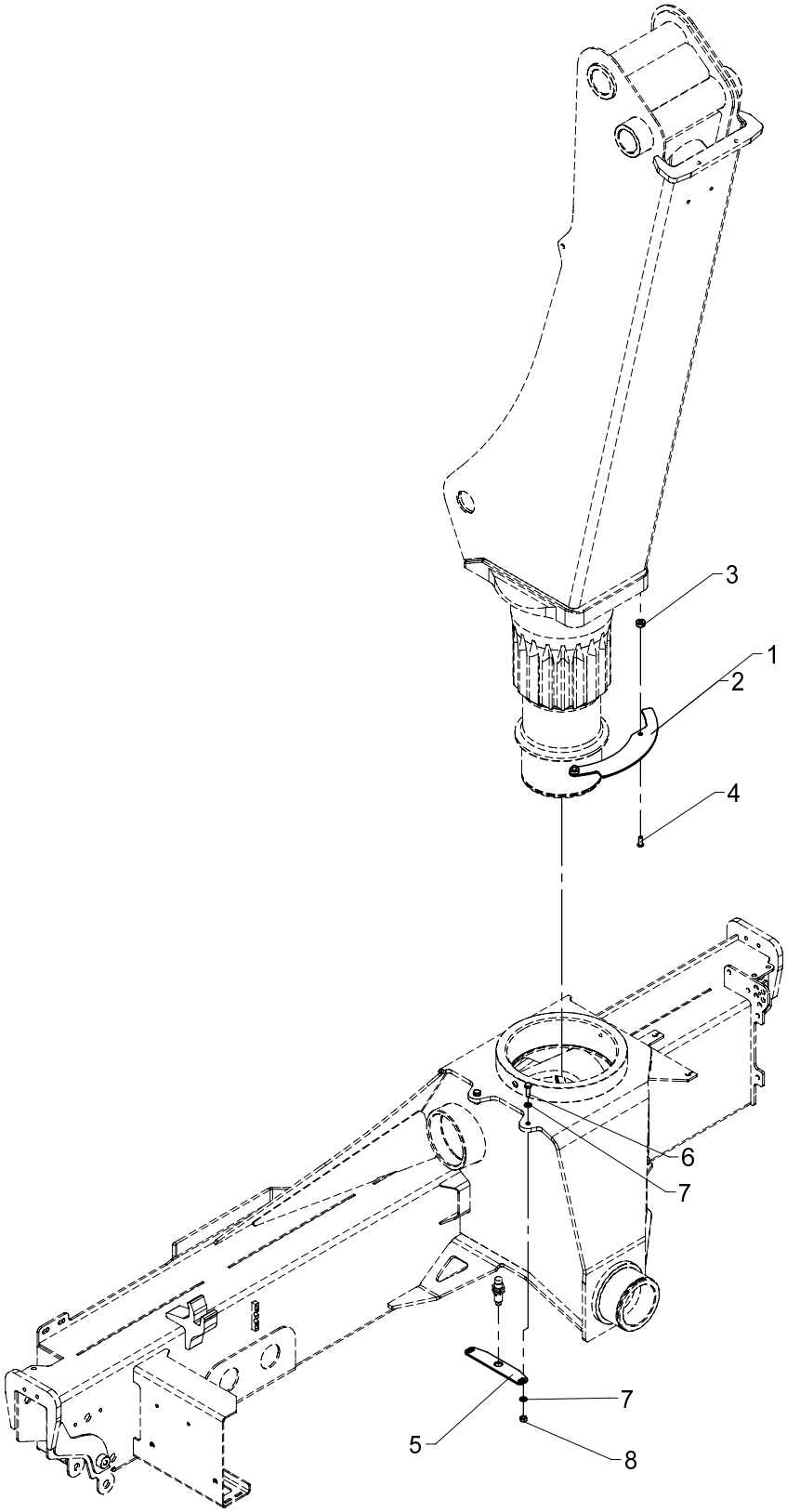

Cam disc kit (Stand-up controls)

534 16 010

From loader 1060001
To loader

Created 13-01-2010
Modified

Pos	Qty.	Part no.	Description	Remarks
		6341340	Cam disc kit (stand-up ctrls)	
		6345340	Cam disc kit (stand-up ctrls)	
1	1	6341998	Cam disc (stand-up controls)	1300K/1500K
2	1	6345998	Cam disc (stand-up controls)	1800K/2200K
3	2	6871754	Spacer	
4	2	32486	Screw	MCL8 x 20
5	1	6341997	Sensor fittings (cam disc)	
6	2	30134	Set screw, stainless	M8 x 25
7	4	31147	Washer, stainless	8 mm
8	2	30856	Nut, stainless	M8

15/105 - 17/117 SL & DL Parts

63 45 330
Internal ref. 63 41 330

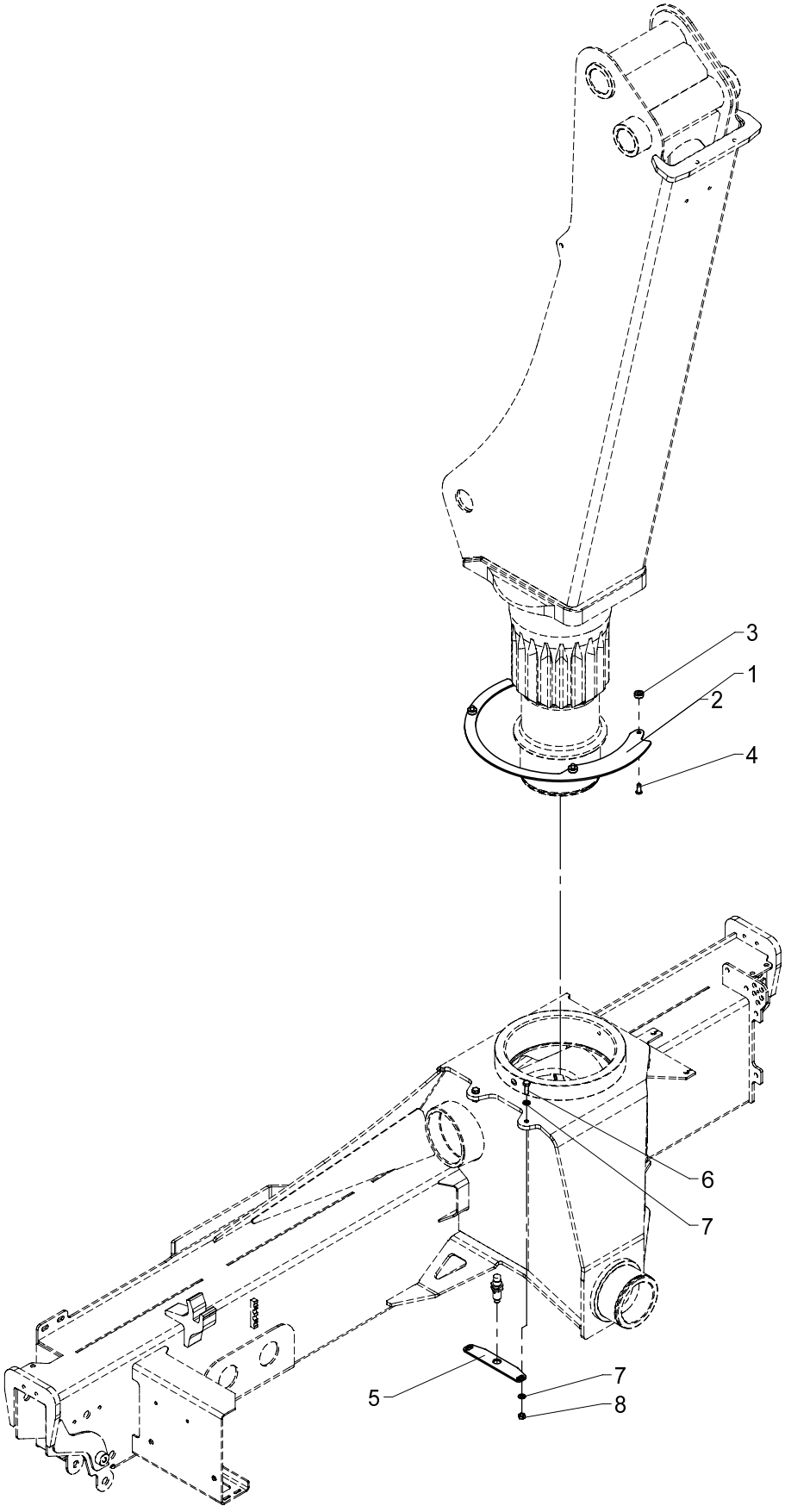

Cam disc kit (2-stage LMB)

534 16 020

From loader 1060001
To loader

Created 13-01-2010
Modified

Pos	Qty.	Part no.	Description	Remarks
		6341330	Cam disc kit (2-stage LMB)	
		6345330	Cam disc kit (2-stage LMB)	
1	1	6341999	Cam disc (2 stage LMB)	1300K/1500K
2	1	6345999	Cam disc (2 stage LMB)	1800K/2200K
3	3	6871754	Spacer	
4	3	32486	Screw	MCL8 x 20
5	1	6341997	Sensor fittings (cam disc)	
6	2	30134	Set screw, stainless	M8 x 25
7	4	31147	Washer, stainless	8 mm
8	2	30856	Nut, stainless	M8

15/105 - 17/117 SL & DL Parts

63 45 840
Internal ref. 63 41 840

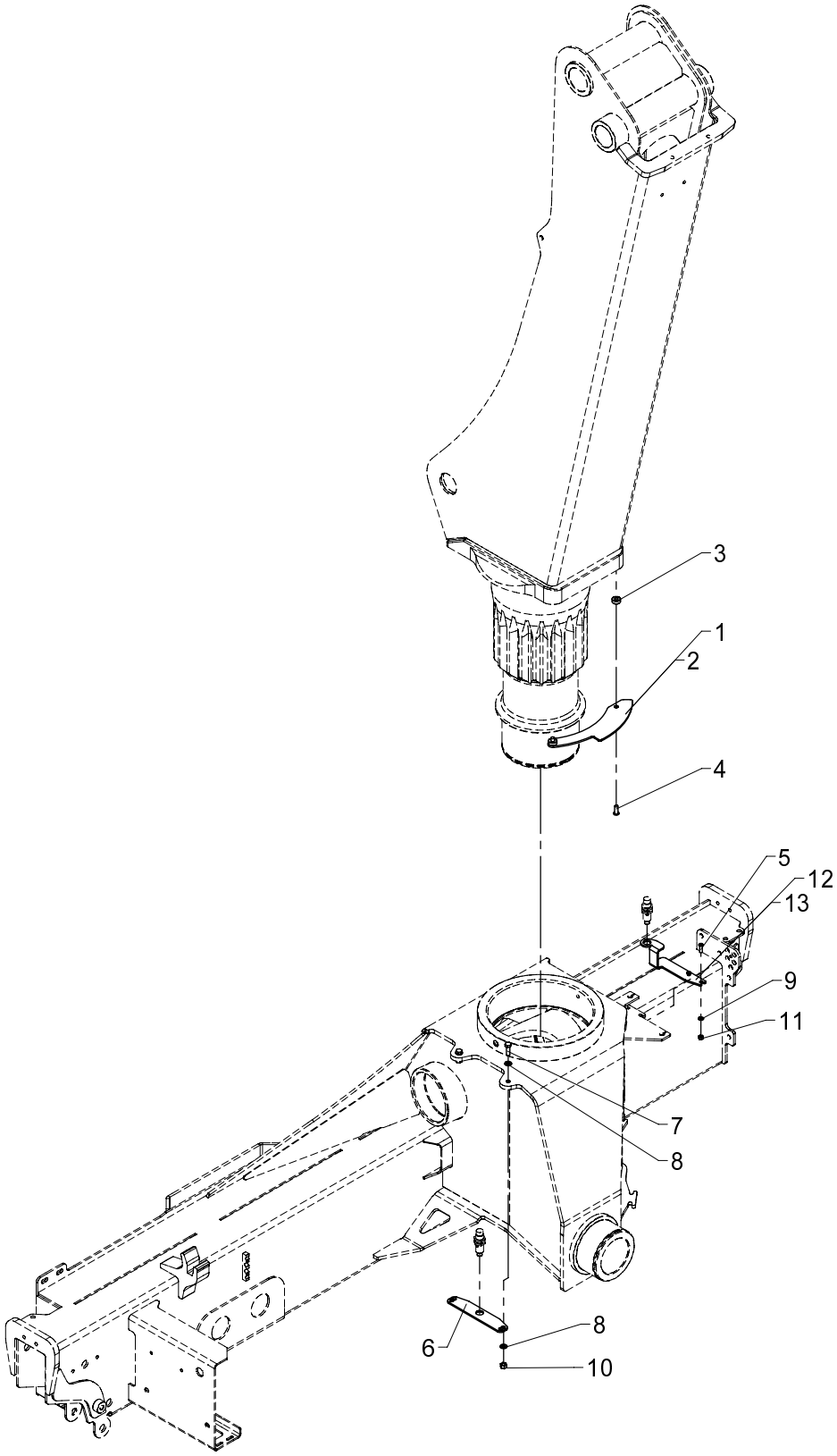

Cam disc kit (QOPS, std.), cpl.

534 16 030

From loader 1060001
To loader

Created 13-01-2010
Modified

Pos	Qty.	Part no.	Description	Remarks
		6341840	Cam disc kit (QOPS, std.)	
		6345840	Cam disc kit (QOPS, std.)	
1	1	6341996	Cam disc (QOPS, std.)	1300K/1500K
2	1	6345996	Cam dis (QOPS, std.)	1800K/2200K
3	2	6871754	Spacer	
4	2	32486	Screw	MCL8 x 20
5	2	32483	Screw	MCL6 x 20
6	1	6341997	Sensor fittings (cam disc)	
7	2	30134	Set screw, stainless	M8 x 25
8	4	31147	Washer, stainless	8 mm
9	2	32302	Face washer, stainless	6 mm
10	2	30886	Lock nut, stainless	M8
11	2	30884	Lock nut, stainless	M6
12	1	6341995	Sensor fittings (QOPS)	1300K/1500K
13	1	6345995	Sensor fittings (QOPS)	1800K/2200K

15/105 - 17/117 SL & DL Parts

63 45 850
Internal ref. 63 41 850

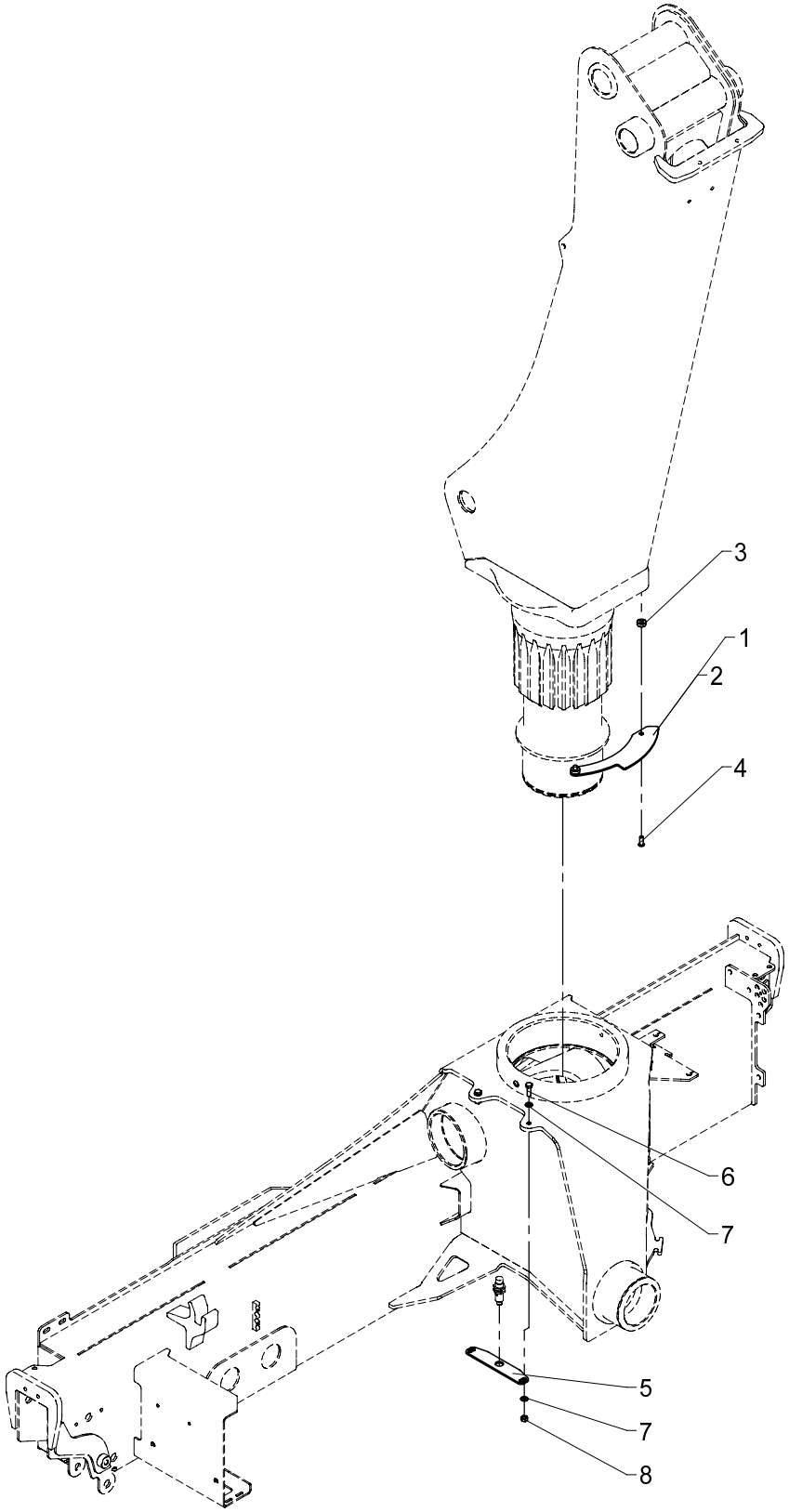

534 16 040

From loader 1060001
To loader

Created 13-01-2010
Modified

Cam disc kit (QOPS, RC), cpl.

Pos	Qty.	Part no.	Description	Remarks
		6341850	Cam disc kit (QOPS, RC)	
		6345850	Cam disc kit (QOPS, RC)	
1	1	6341996	Cam disc (QOPS, std.)	1300K/1500K
2	1	6345996	Cam dis (QOPS, std.)	1800K/2200K
3	2	6871754	Spacer	
4	2	32486	Screw	MCL8 x 20
5	1	6341997	Sensor fittings (cam disc)	
6	2	30134	Set screw, stainless	M8 x 25
7	4	31147	Washer, stainless	8 mm
8	2	30856	Nut, stainless	M8

15/105 - 17/117 SL & DL Parts

63 45 790
Internal ref. 63 41 790

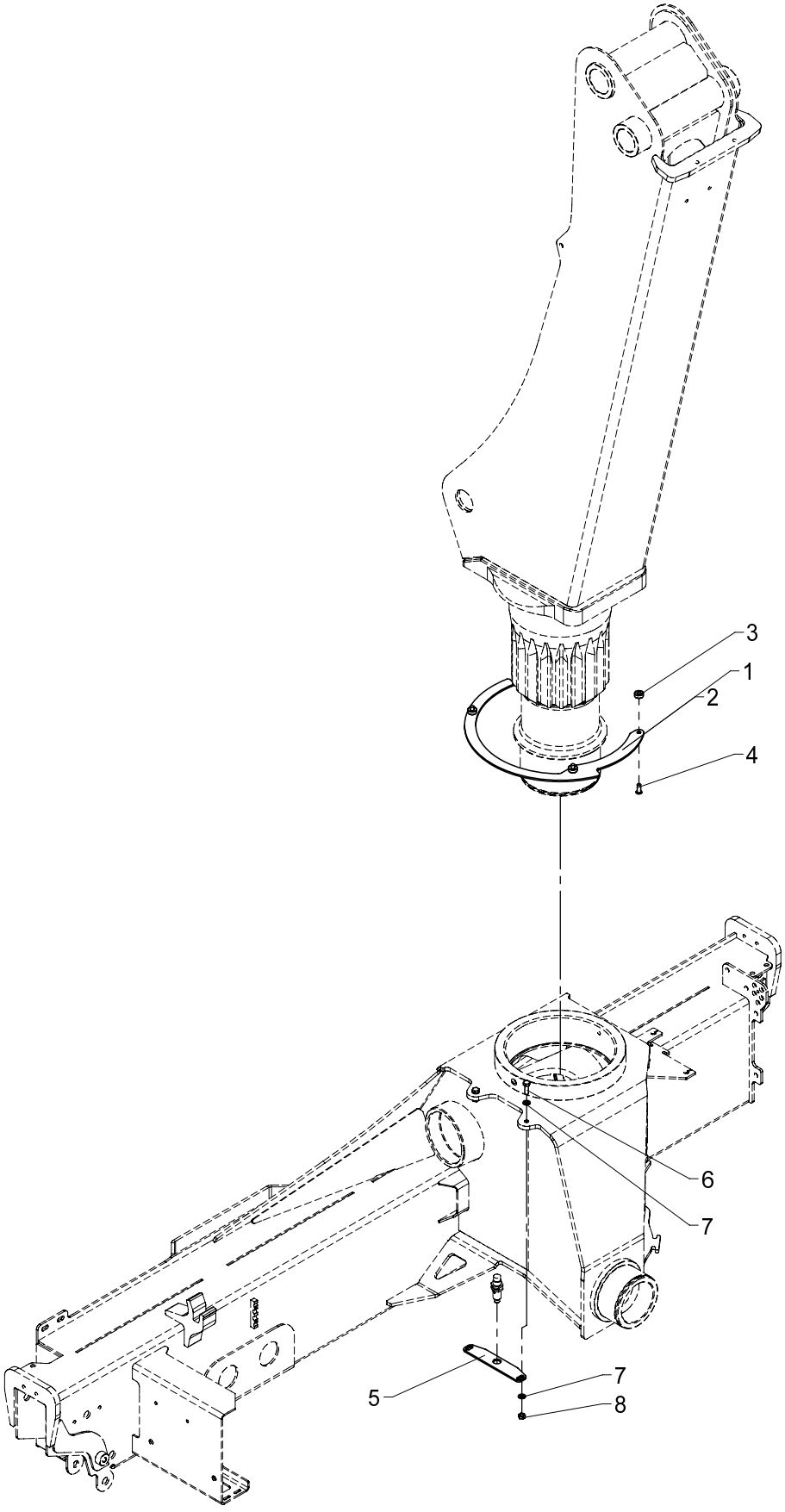

Cam disc kit (HS + 2-stage LMB)

534 16 050

From loader 1060001
To loader

Created 13-01-2010
Modified

Pos	Qty.	Part no.	Description	Remarks
		6341790	Cam disc kit (HS+2-stage LMB)	
		6345790	Cam disc kit (HS+2-stage LMB)	
1	1	6341994	Cam disc (HS+2-stage LMB)	1300/1310/1500/1510
2	1	6345994	Cam disc (HS+2-stage LMB)	1800/1810/2200/2210
3	3	6871754	Spacer	
4	3	32486	Screw	MCL8 x 20
5	1	6341997	Sensor fittings (cam disc)	
6	2	30134	Set screw, stainless	M8 x 25
7	4	31147	Washer, stainless	8 mm
8	2	30856	Nut, stainless	M8

15/105 - 17/117 SL & DL Parts

Internal ref. 63 40 780

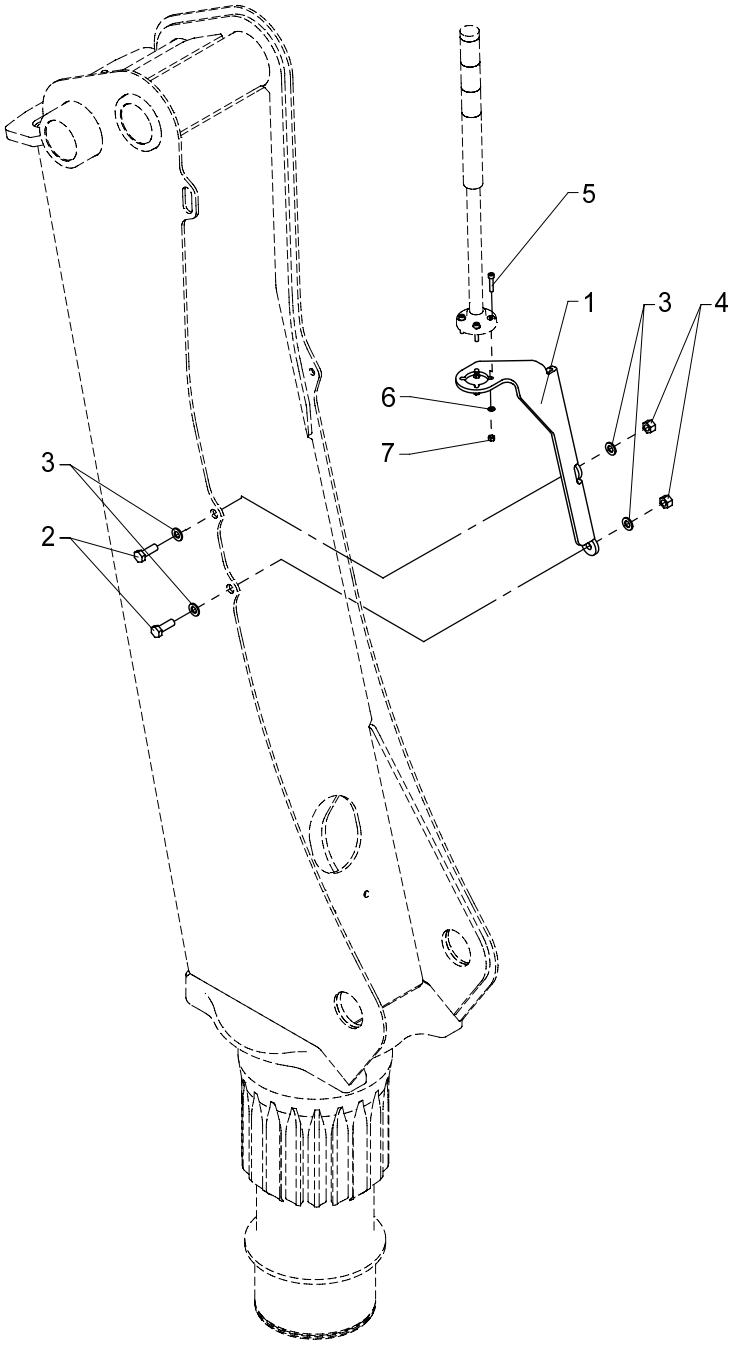

534 16 060

From loader 1060001
To loader

Created 04-01-2010
Modified

Mounting fittings, light tower

Pos	Qty.	Part no.	Description	Remarks
1	1	6340069	Bracket (light tower)	
2	2	30156	Set screw, stainless	M10 x 30
3	4	31565	Washer, stainless	10 mm
4	2	31564	Lock nut, stainless	M10
5	4	30481	Screw	
6	4	32308	Washer	5 mm
7	4	30859	Lock nut, stainless	M5

15/105 - 17/117 SL & DL Parts

63 42 890
Internal ref. 63 40 890

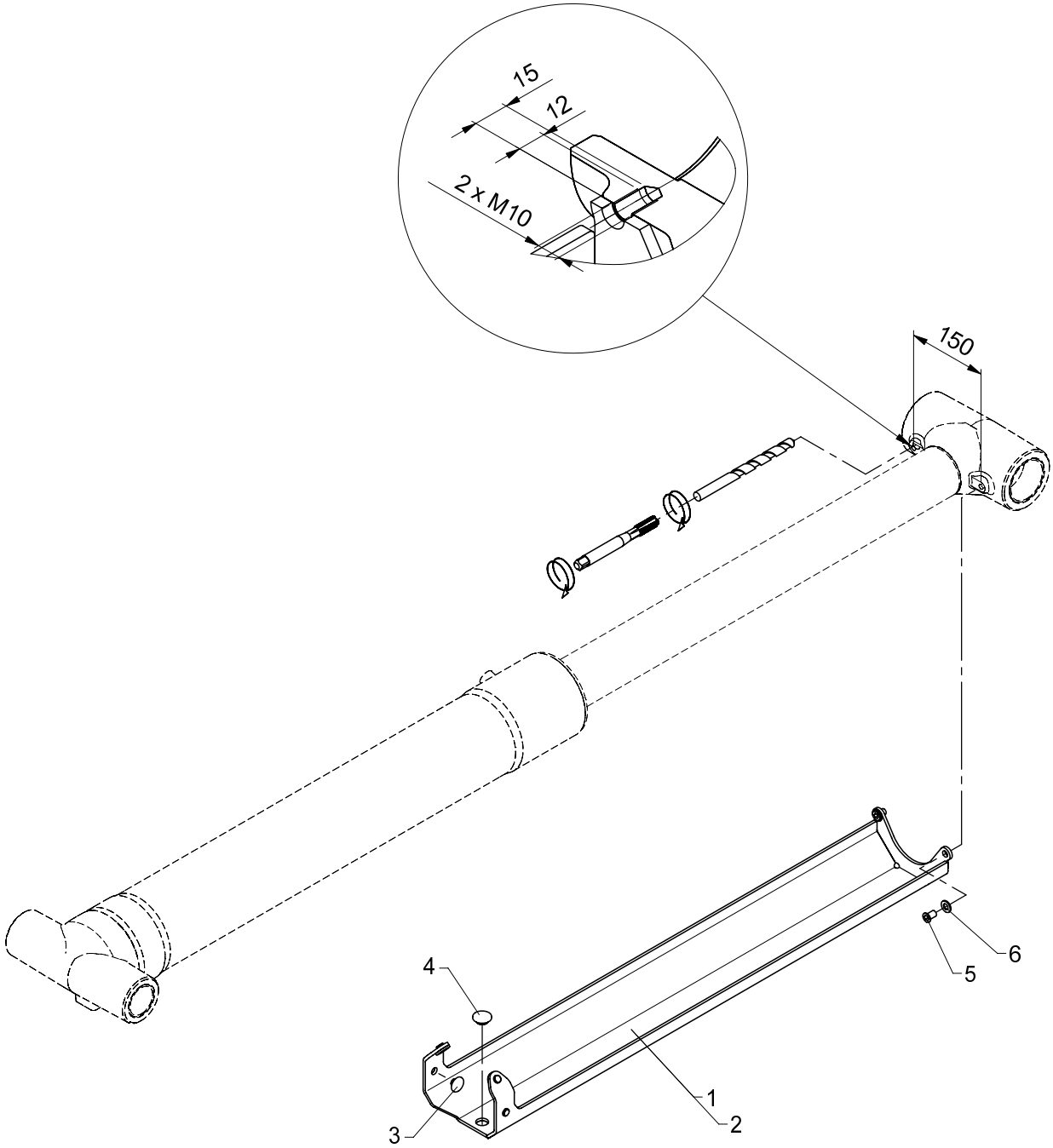

534 16 090

From loader 1060001
To loader

Created 13-01-2010
Modified

Protective guard, jib cylinder, cpl.

Pos	Qty.	Part no.	Description	Remarks
		6340890	Protective guard, jib cylinder	
		6342890	Protective guard, jib cylinder	
1	1	6340159	Protective guard	Serie 1300
2	1	6342159	Protective guard	Serie 1500
3	4	63569	Guide shoe	
4	1	63429	Guide	ø30 x 3 mm
5	2	32423	Sockethead screw	MC10 x 16
6	2	31565	Washer, stainless	10 mm

15/105 - 17/117 SL & DL Parts

Internal ref. 63 41 050

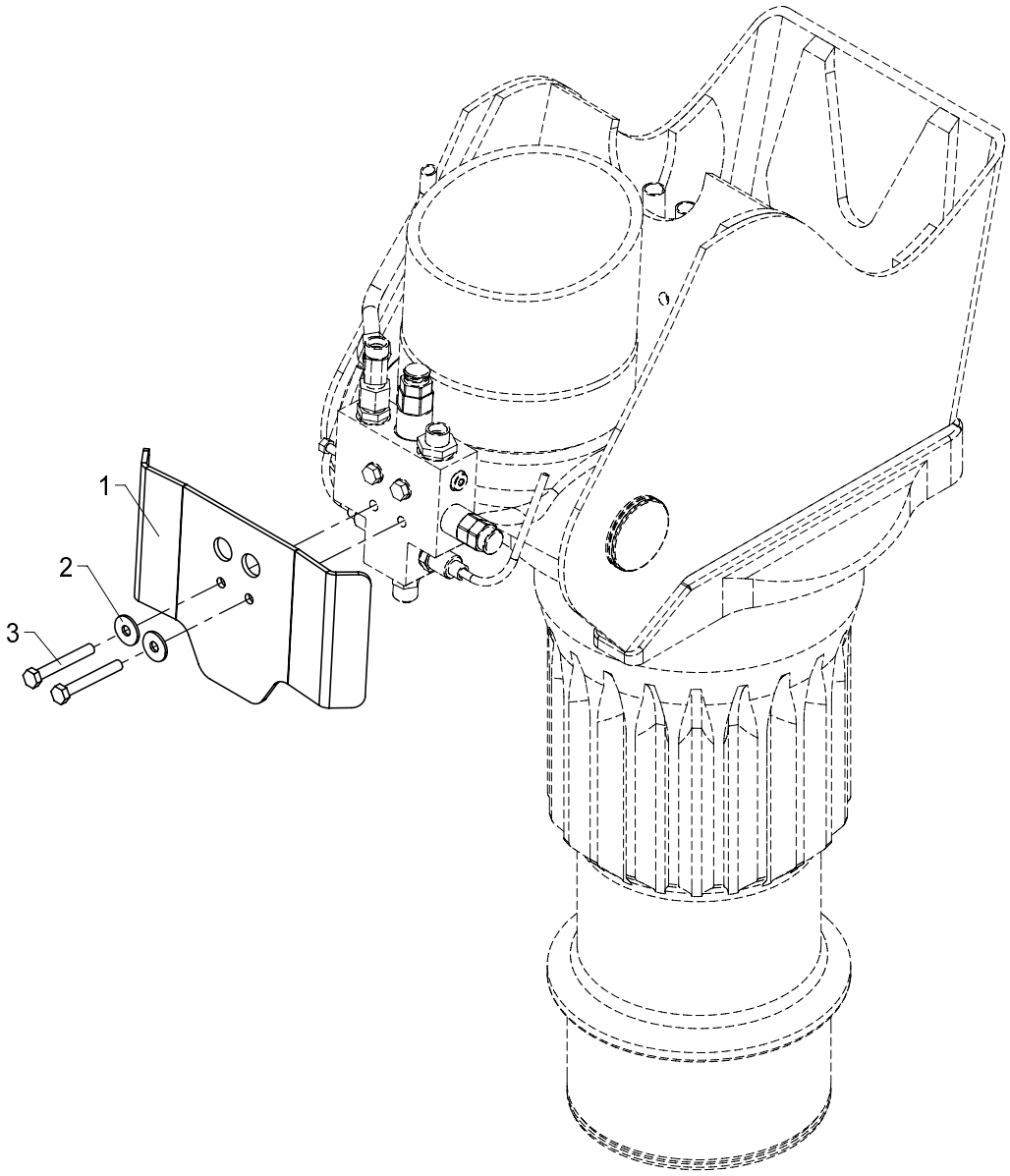

534 16 100

From loader 1060001
To loader

Created 13-01-2010
Modified

Protective guard (LHV boom), cpl.

Pos	Qty.	Part no.	Description	Remarks
1	1	6340949	Protective guard (LHV boom)	
2	2	31136	Washer, stainless	8 mm
3	2	30141	Set screw, stainless	M8 x 60

15/105 - 17/117 SL & DL Parts

Internal ref. 70 04 120

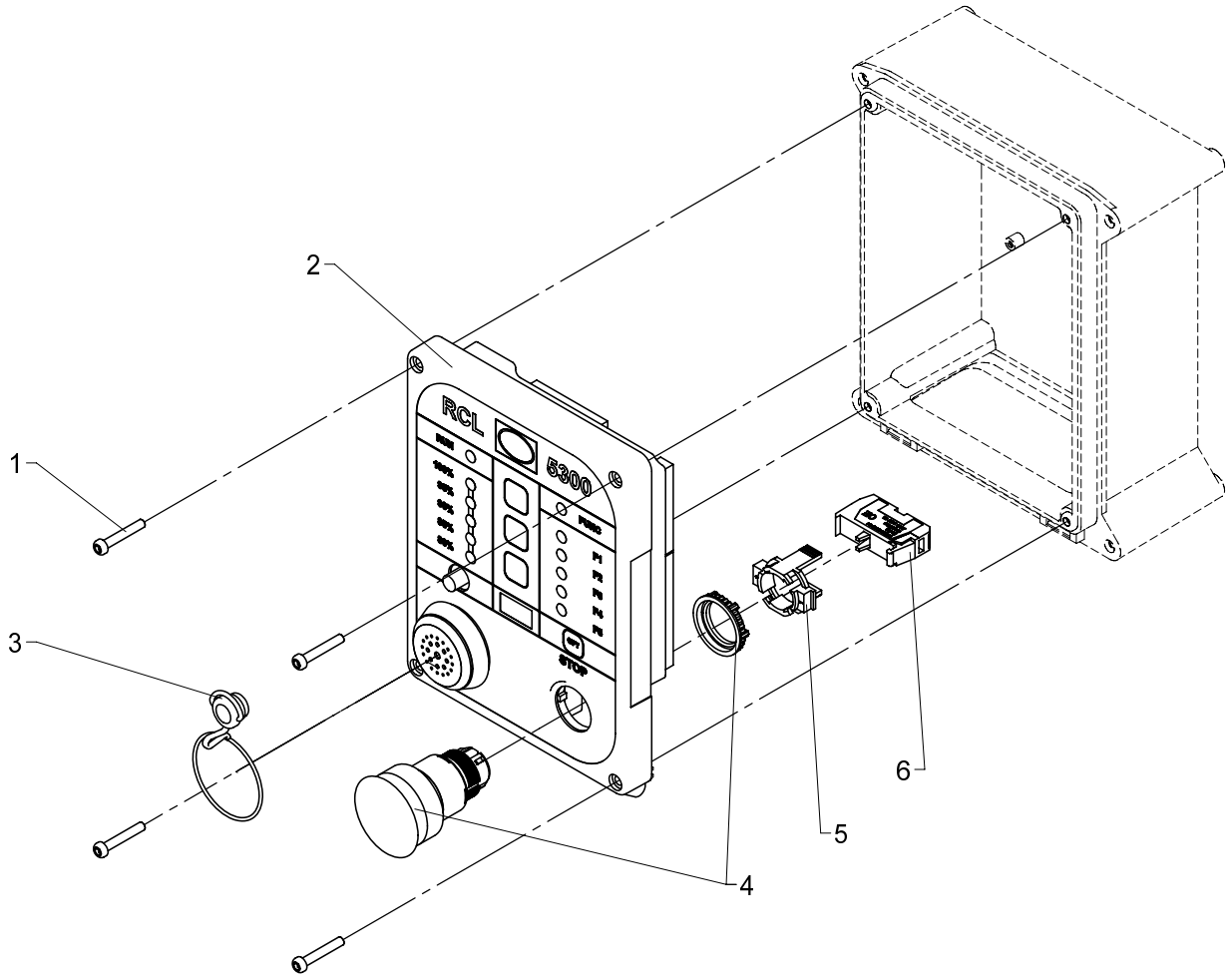

RCL 5300

Pos	Qty.	Part no.	Description	Remarks
1	4	30347	Screw, stainless	4,0 x 25
2	1	29301	Front complete, RCL 5300	
3	1	29306	Plug	
4	1	29196	Stop button	
5	1	29198	Attachment, stop button	
6	1	29197	Switch element, stop button	

15/105 - 17/117 SL & DL Parts

Internal ref. 70 03 920

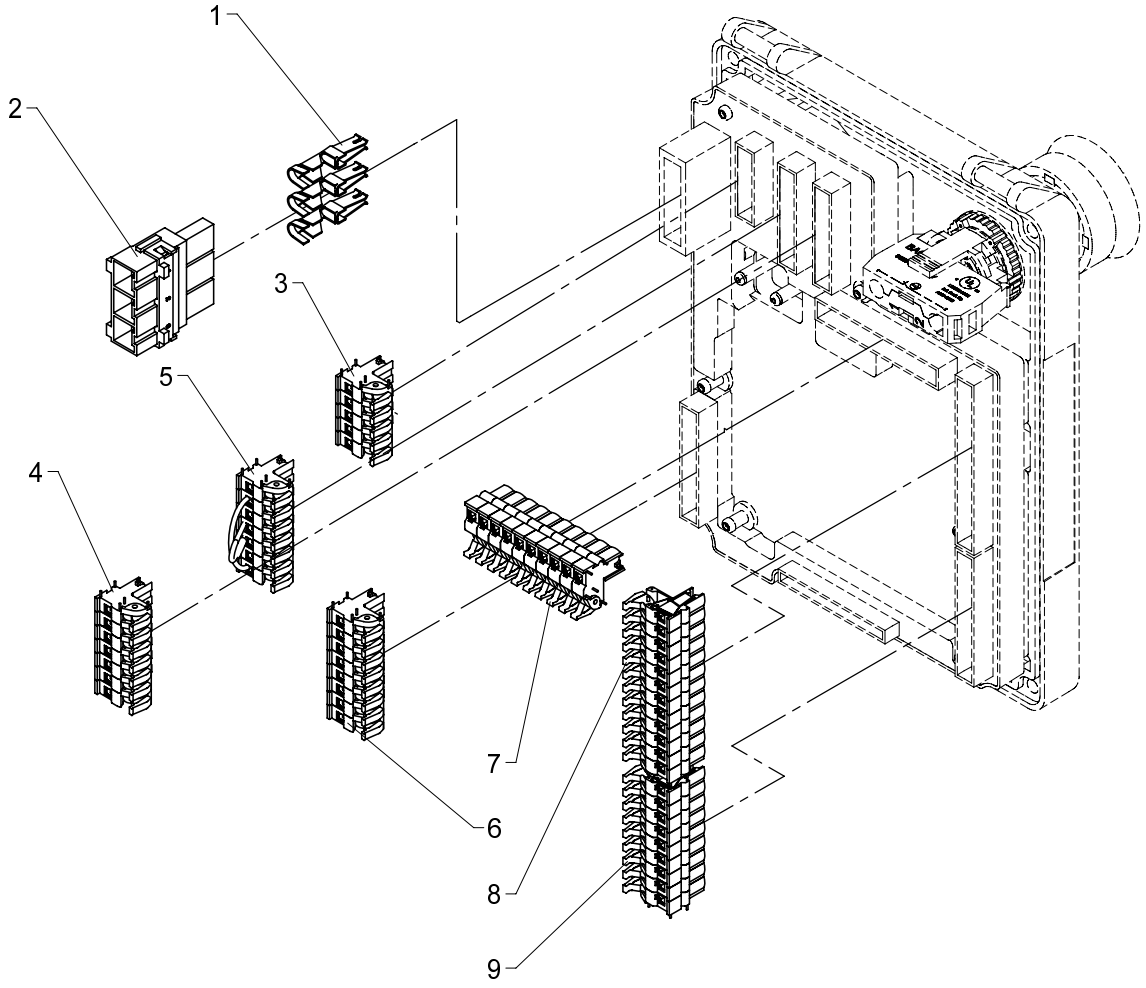

Plugs in RCL

534 20 015

From loader 1060001
To loader

Created 16-04-2008
Modified 13-03-2009

Pos	Qty.	Part no.	Description	Remarks
1	3	29316	Pin	
2	1	29315	Plug, 3-polar for RCL 53XX	
3	1	29317	Plug, 5-polar for RCL 53XX	
4	1	29318	Plug, 7-polar for RCL 53XX	
5	1	29340	CAN termination/RCL53xx	
6	1	29319	Plug, 8-polar for RCL 53XX	
7	1	29321	Plug, 10-polar for RCL 53XX	
8	1	29322	Plug, 12-polar for RCL 53XX	
9	1	29320	Plug, 9-polar for RCL 53XX	

15/105 - 17/117 SL & DL Parts

Internal ref. 70 04 380

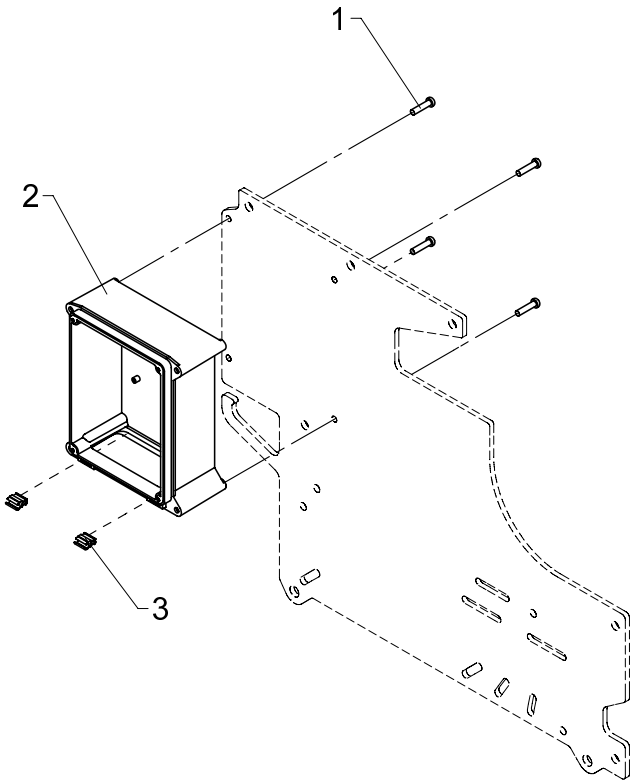

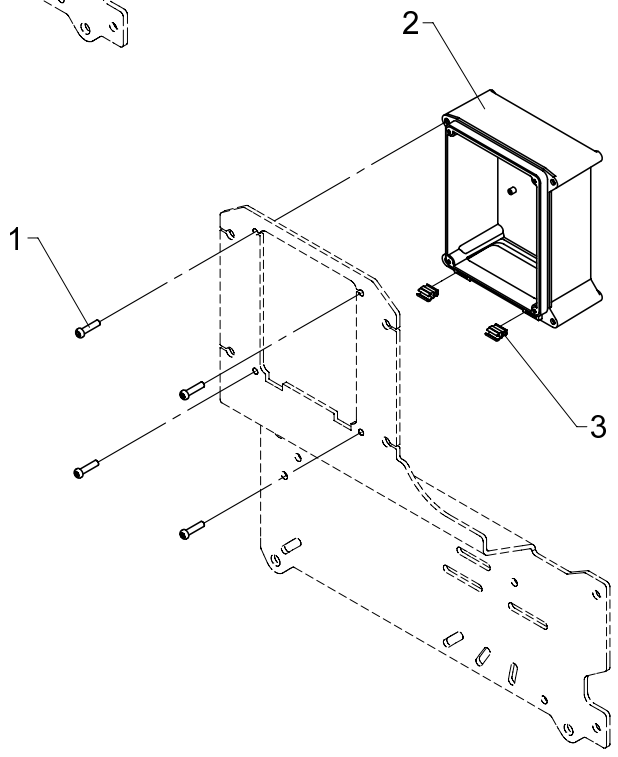

534 20 030

From loader 1060001
To loader

Created 12-03-2009
Modified 13-03-2009

Bottom for RCL box, no RC

Pos	Qty.	Part no.	Description	Remarks
1	4	30340	Screw, stainless	6,0 x 25
2	1	29304	Bottom f. RCL-box incl. hinge	
3	2	29305	Hinge	

15/105 - 17/117 SL & DL Parts

Internal ref. 70 03 020

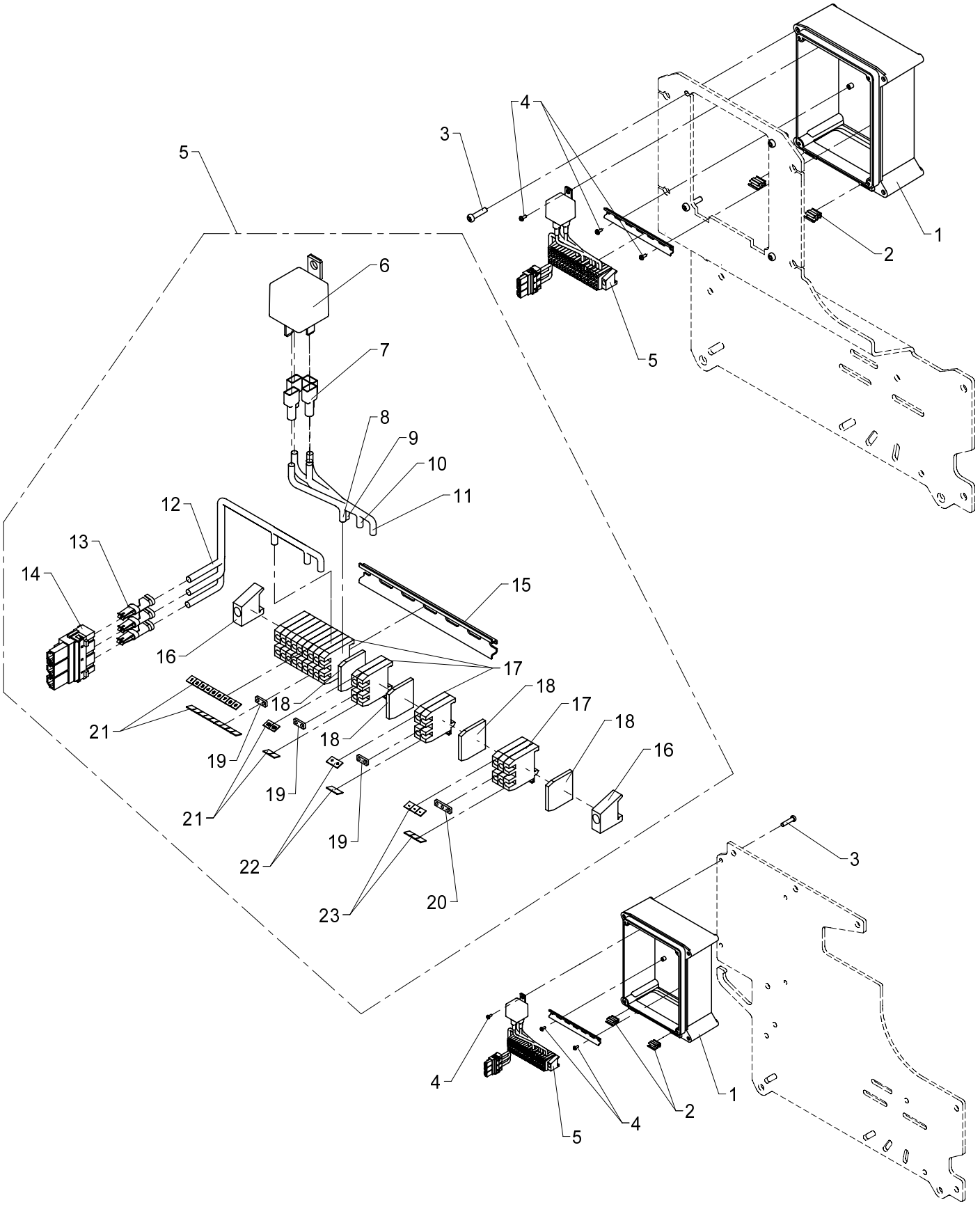

24 V bottom for RCL box with RC

534 20 050

From loader 1060001
To loader

Created 13-03-2009
Modified 04-05-2010

Pos	Qty.	Part no.	Description	Remarks
1	1	29304	Bottom f. RCL-box incl. hinge	
2	2	29305	Hinge	
3	4	30340	Screw, stainless	6,0 x 25
4	3	30361	Screw, stainless	3,0 x 8
5	1	29213	Terminal block for RC 24V	
6	1	27342	Relay, 24V	
7	4	27429	Clamp	
8	1	27205	Wire, 1 x 1.5mm2	10 cm
9	1	27204	Wire, 1 x1.5mm2	10 cm
10	1	27206	Wire, 1 x 1.5mm2	10 cm
11	1	27208	Wire 1 x 1.5 mm2	10 cm
12	1	27211	Wire 1 x 2.5 mm2	20 cm
13	3	29316	Pin	
14	1	29315	Plug, 3-polar for RCL 53XX	
15	1	28013	Guide rail	120 mm.
16	2	28012	End angle	
17	16	28010	Terminal	
18	4	28011	End plate	
19	3	28075	Fish plate	
20	1	28014	Fish plate	
21	4	28019	Labels nos. 1-10	
22	2	28220	Labels, "+"	
23	2	28211	Labels, "-"	

15/105 - 17/117 SL & DL Parts

Internal ref. 70 04 390

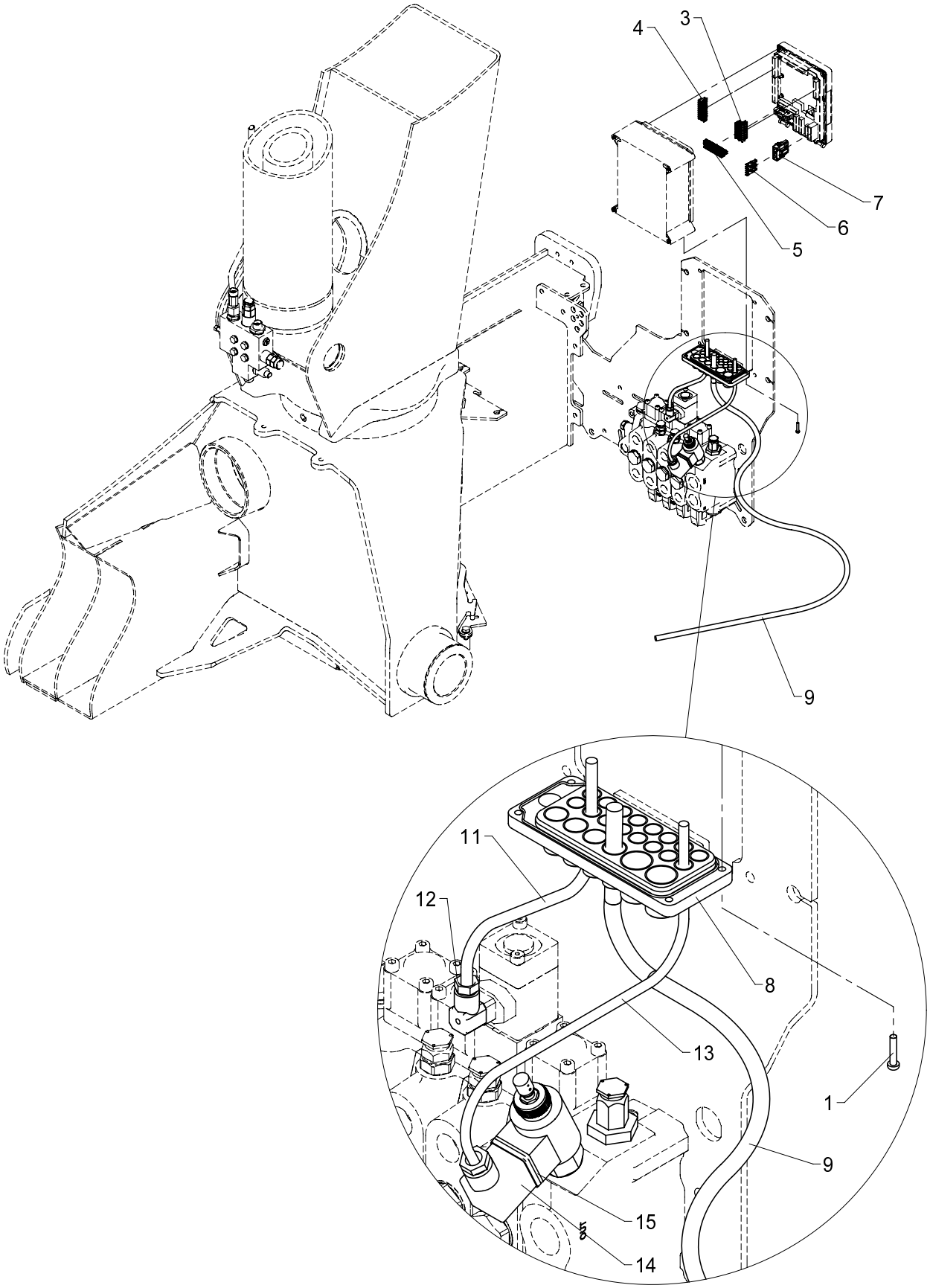

534 20 080

From loader 1060001
To loader

Created 01-05-2009
Modified 17-03-2010

Wiring, base, standard

Pos	Qty.	Part no.	Description	Remarks
1	4	30346	Screw, stainless	4,0 x 20
2	1	28719	Wiring, standard	
3	1	29319	Plug, 8-polar for RCL 53XX	
4	1	29320	Plug, 9-polar for RCL 53XX	
5	1	29321	Plug, 10-polar for RCL 53XX	
6	3	29316	Pin	
7	1	29315	Plug, 3-polar for RCL 53XX	
8	1	29307	Cable lead-in	
9	1	28278	Cable 4 x 2.5	3,5 m
11	1	28252	Cable	1,3 m
12	1	28257	Plug, spool sensor	
13	1	28249	Cable 2 x 0.75	1,3 m
14	1	28258	Plug, solenoid valve	
15	1	28840	Seal	

15/105 - 17/117 SL & DL Parts

Internal ref. 70 04 400

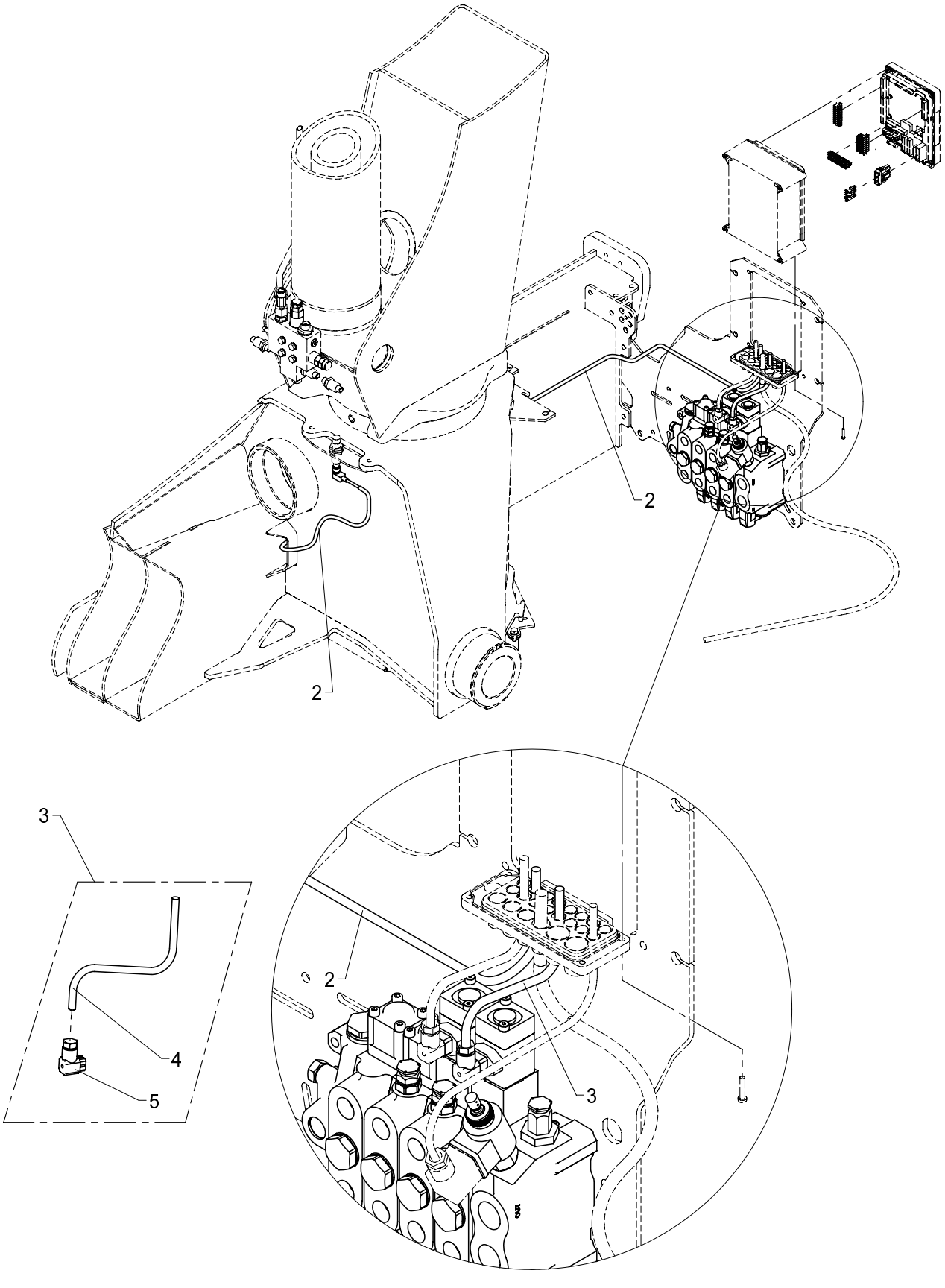

534 20 085

From loader 1060001
To loader

Created 01-05-2009
Modified 03-05-2010

Base, standard incl. 2-stage LMB

Pos	Qty.	Part no.	Description	Remarks
1	1	7004390	Standard base	
2	1	28077	Cable with plug	
3	1	28294	Cable, spool sensor	
4	1	28252	Cable	1,3 m
5	1	28257	Plug, spool sensor	

15/105 - 17/117 SL & DL Parts

Internal ref. 70 04 440

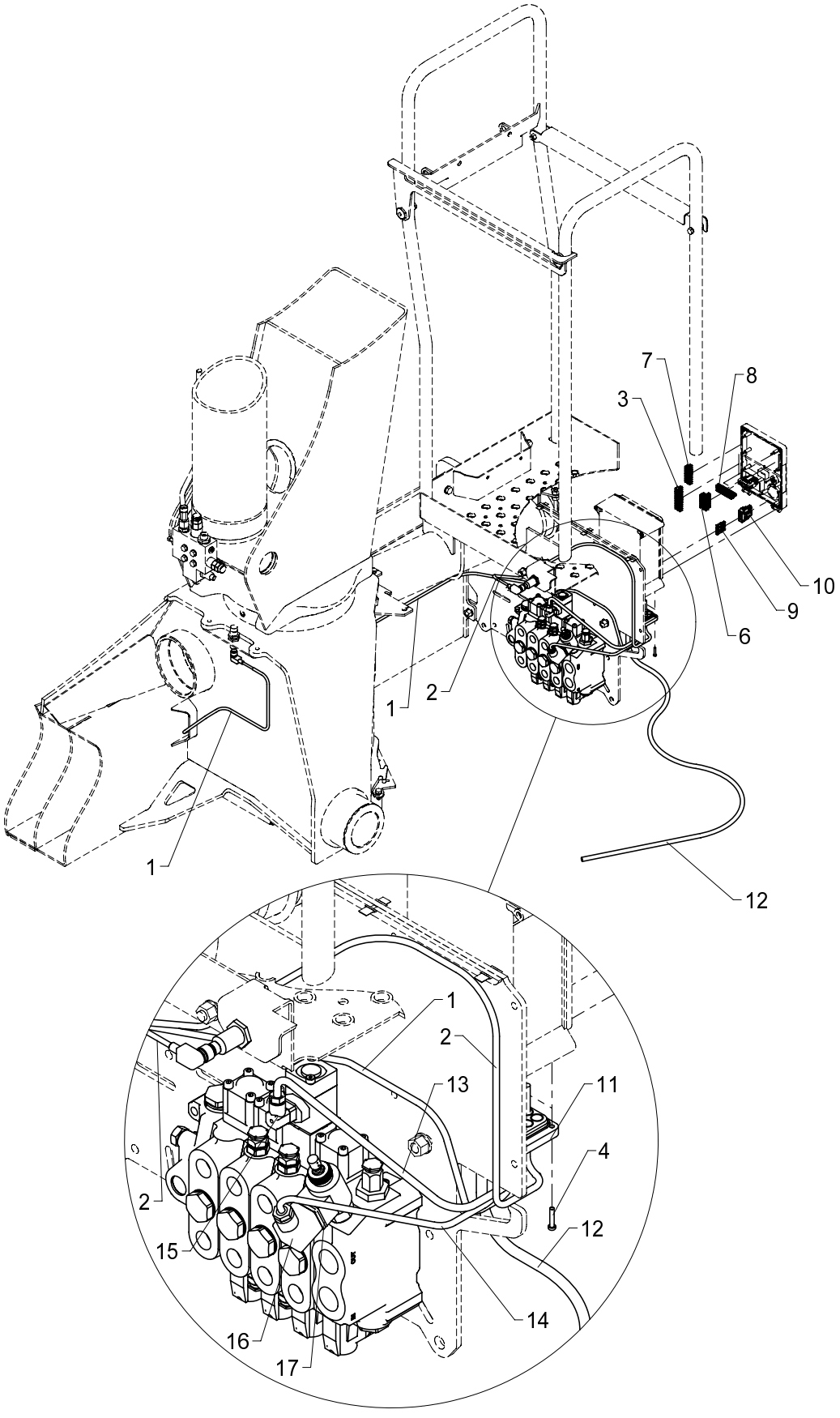

534 20 090

From loader 1060001
To loader

Base, warning over stand-up controls (HS)

Created 01-05-2009
Modified 17-03-2010

Pos	Qty.	Part no.	Description	Remarks
1	1	28077	Cable with plug	
2	1	28117	Cable with plug	
3	1	29322	Plug, 12-polar for RCL 53XX	
4	4	30346	Screw, stainless	4,0 x 20
5	1	28719	Wiring, standard	
6	1	29319	Plug, 8-polar for RCL 53XX	
7	1	29320	Plug, 9-polar for RCL 53XX	
8	1	29321	Plug, 10-polar for RCL 53XX	
9	3	29316	Pin	
10	1	29315	Plug, 3-polar for RCL 53XX	
11	1	29307	Cable lead-in	
12	1	28278	Cable 4 x 2.5	3,5 m
13	1	28252	Cable	1,3 m
14	1	28265	Cable, dump valve, 1.35 m	1,3 m
15	1	28257	Plug, spool sensor	
16	1	28258	Plug, solenoid valve	
17	1	28840	Seal	

15/105 - 17/117 SL & DL Parts

Internal ref. 70 04 430

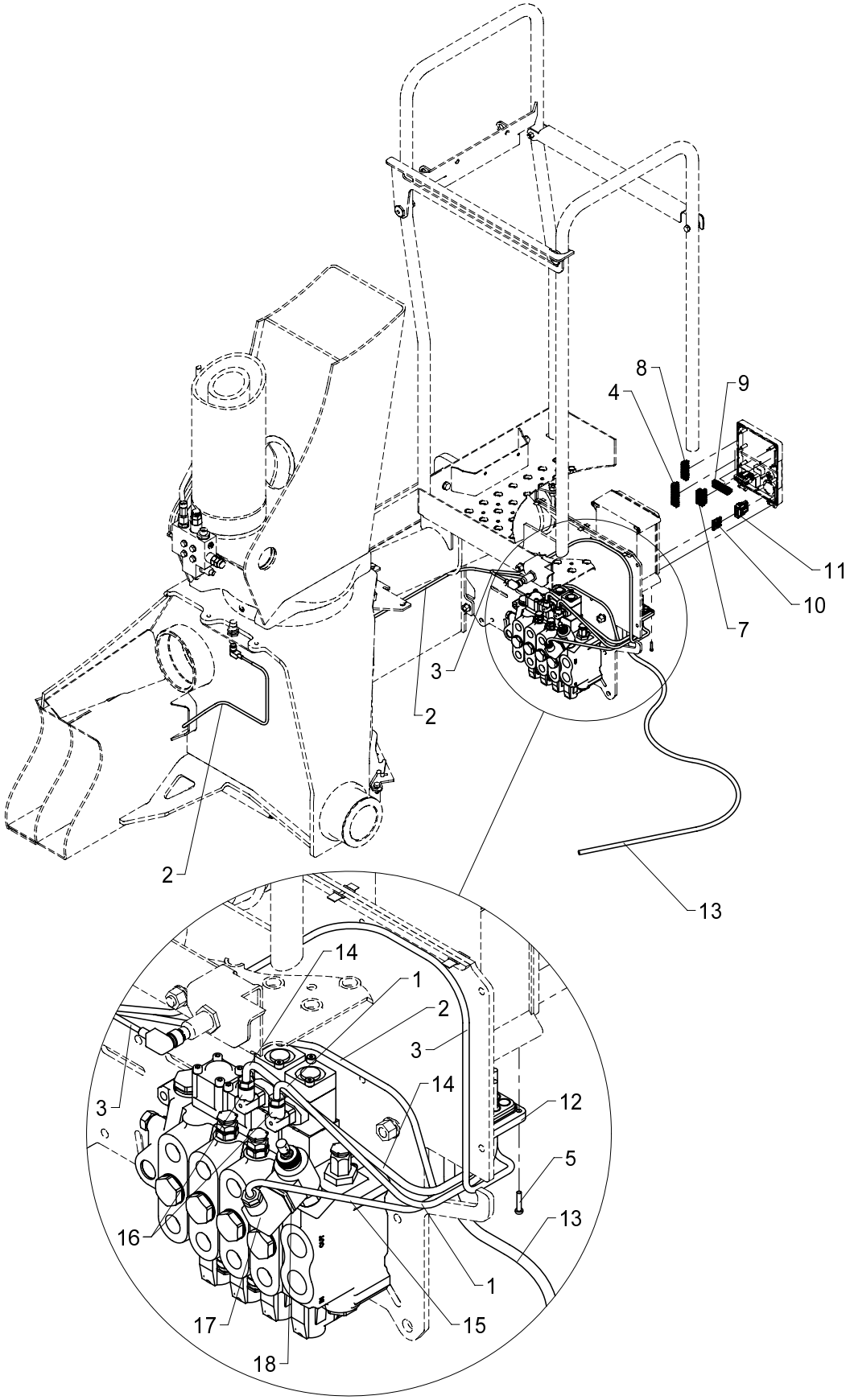

534 20 095

From loader 1060001
To loader

Created 01-05-2009
Modified 17-03-2010

Base, electronic slewing limitation (HS)

Pos	Qty.	Part no.	Description	Remarks
1	1	28294	Cable, spool sensor	
2	1	28077	Cable with plug	
3	1	28117	Cable with plug	
4	1	29322	Plug, 12-polar for RCL 53XX	
5	4	30346	Screw, stainless	4,0 x 20
6	1	28719	Wiring, standard	
7	1	29319	Plug, 8-polar for RCL 53XX	
8	1	29320	Plug, 9-polar for RCL 53XX	
9	1	29321	Plug, 10-polar for RCL 53XX	
10	3	29316	Pin	
11	1	29315	Plug, 3-polar for RCL 53XX	
12	1	29307	Cable lead-in	
13	1	28278	Cable 4 x 2.5	3,5 m
14	1	28252	Cable	1,3 m
15	1	28265	Cable, dump valve, 1.35 m	1,3 m
16	2	28257	Plug, spool sensor	
17	1	28258	Plug, solenoid valve	
18	1	28840	Seal	

15/105 - 17/117 SL & DL Parts

Internal ref. 70 04 450

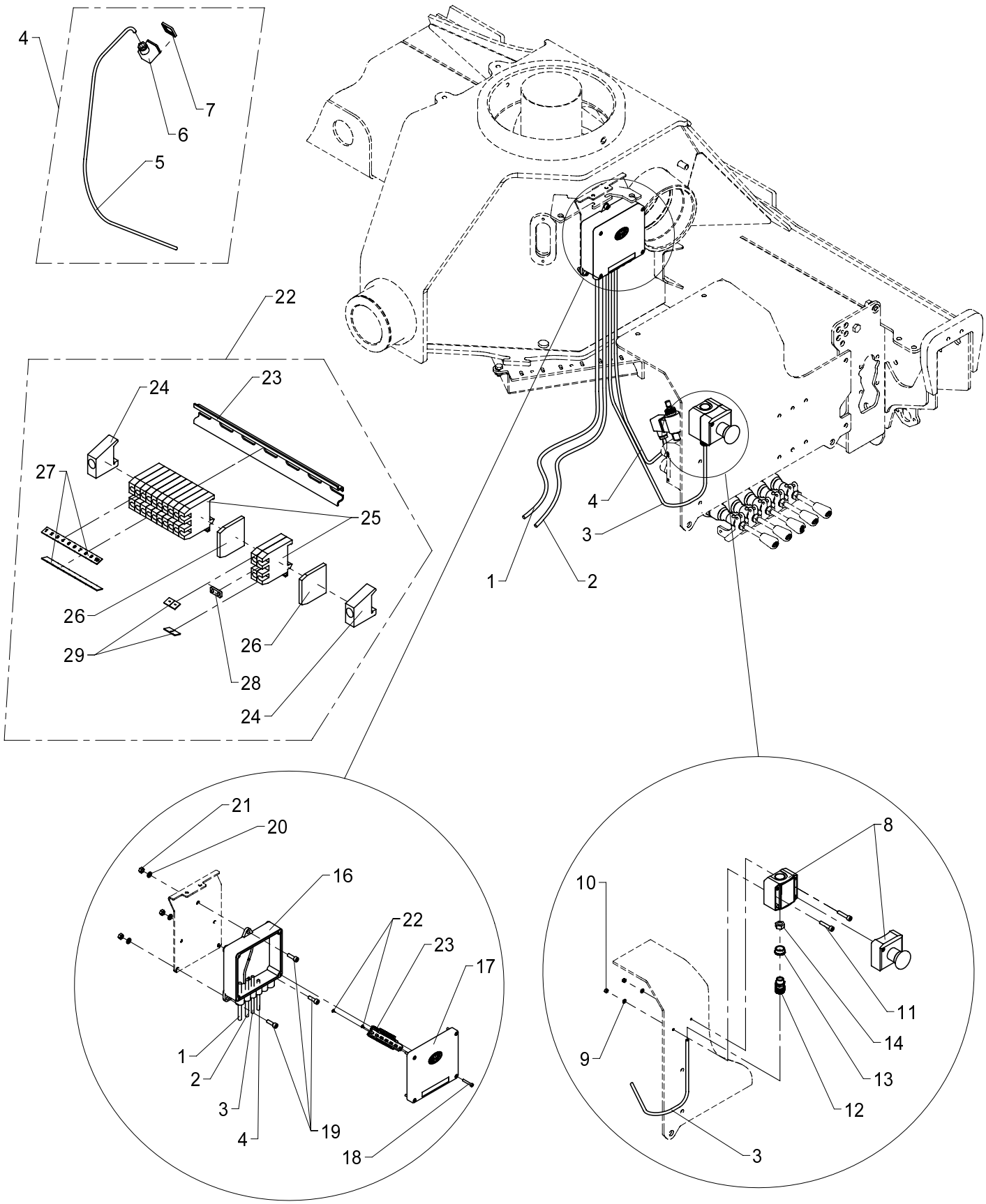

534 20 100

From loader 1060001
To loader

Created 10-03-2009
Modified 24-06-2010

Wiring, base, NEMRC excl. CE

Pos	Qty.	Part no.	Description	Remarks
1	1	28232	Cable 7 x 0.75	3,5 m
2	1	28278	Cable 4 x 2.5	3,5 m
3	1	28148	Cable	1,6 m
4	1	28265	Cable, dump valve, 1.35 m	
5	1	28249	Cable 2 x 0.75	1,35 m
6	1	28258	Plug, solenoid valve	
7	1	28840	Seal	
8	1	28992	Emergency stop box	
9	2	31188	Washer, stainless	4 mm
10	2	30857	Lock nut	M4
11	2	32406	Sockethead screw	MC4 x 12
12	1	28246	Bushing	
13	1	27866	Socket	
14	1	28081	Plastic nut	PG13,5
15	1	29313	Bottom f. Fly-Jib box	
16	1	29314	Cover for Fly-Jib box	
17	4	30347	Screw, stainless	4,0 x 25
18	3	30427	Screw	MC6 x 20
19	3	32302	Face washer, stainless	6 mm
20	3	30854	Nut, stainless	M6
21	2	28693	Screw	Ø2.9 x 6.5
22	1	29229	Terminal block for stabilizers	
23	1	28013	Guide rail	130 mm.
24	2	28012	End angle	
25	12	28010	Terminal	
26	2	28011	End plate	
27	2	28019	Labels nos. 1-10	
28	1	28075	Fish plate	
29	2	28211	Labels, "-"	

15/105 - 17/117 SL & DL Parts

Internal ref. 70 04 410

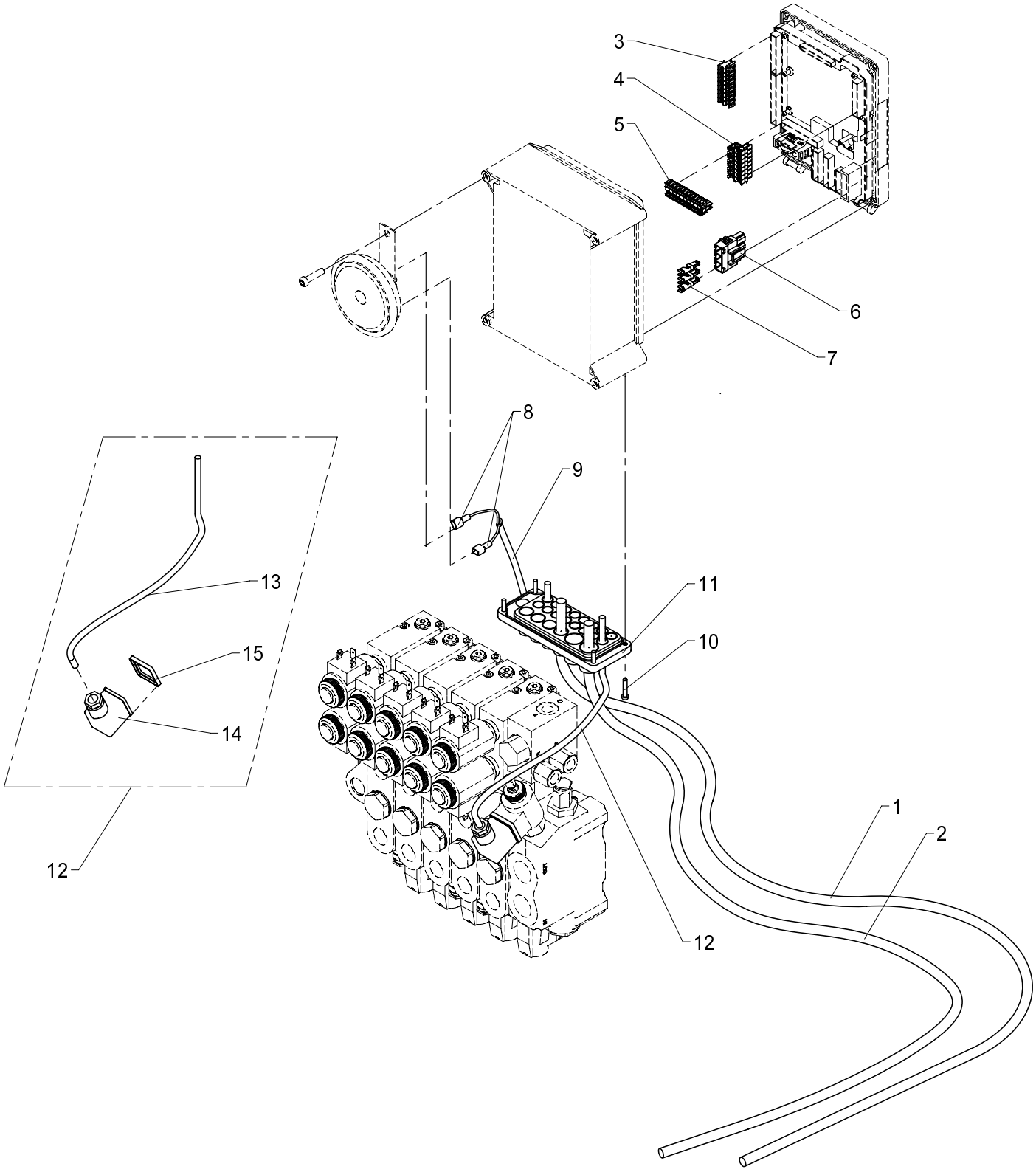

534 20 105

From loader 1060001
To loader

Created 01-05-2009
Modified 29-04-2010

Base, NEMRC incl. CE

Pos	Qty.	Part no.	Description	Remarks
1	1	28278	Cable 4 x 2.5	3,5 m
2	1	28232	Cable 7 x 0.75	3,5 m
3	1	29320	Plug, 9-polar for RCL 53XX	
4	1	29319	Plug, 8-polar for RCL 53XX	
5	1	29321	Plug, 10-polar for RCL 53XX	
6	1	29315	Plug, 3-polar for RCL 53XX	
7	3	29316	Pin	
8	2	27429	Clamp	
9	1	28249	Cable 2 x 0.75	0,5
10	4	30346	Screw, stainless	4,0 x 20
11	1	29307	Cable lead-in	
12	1	28265	Cable, dump valve, 1.35 m	
13	1	28249	Cable 2 x 0.75	1,4m
14	1	28258	Plug, solenoid valve	
15	1	28840	Seal	

15/105 - 17/117 SL & DL Parts

Internal ref. 70 04 420

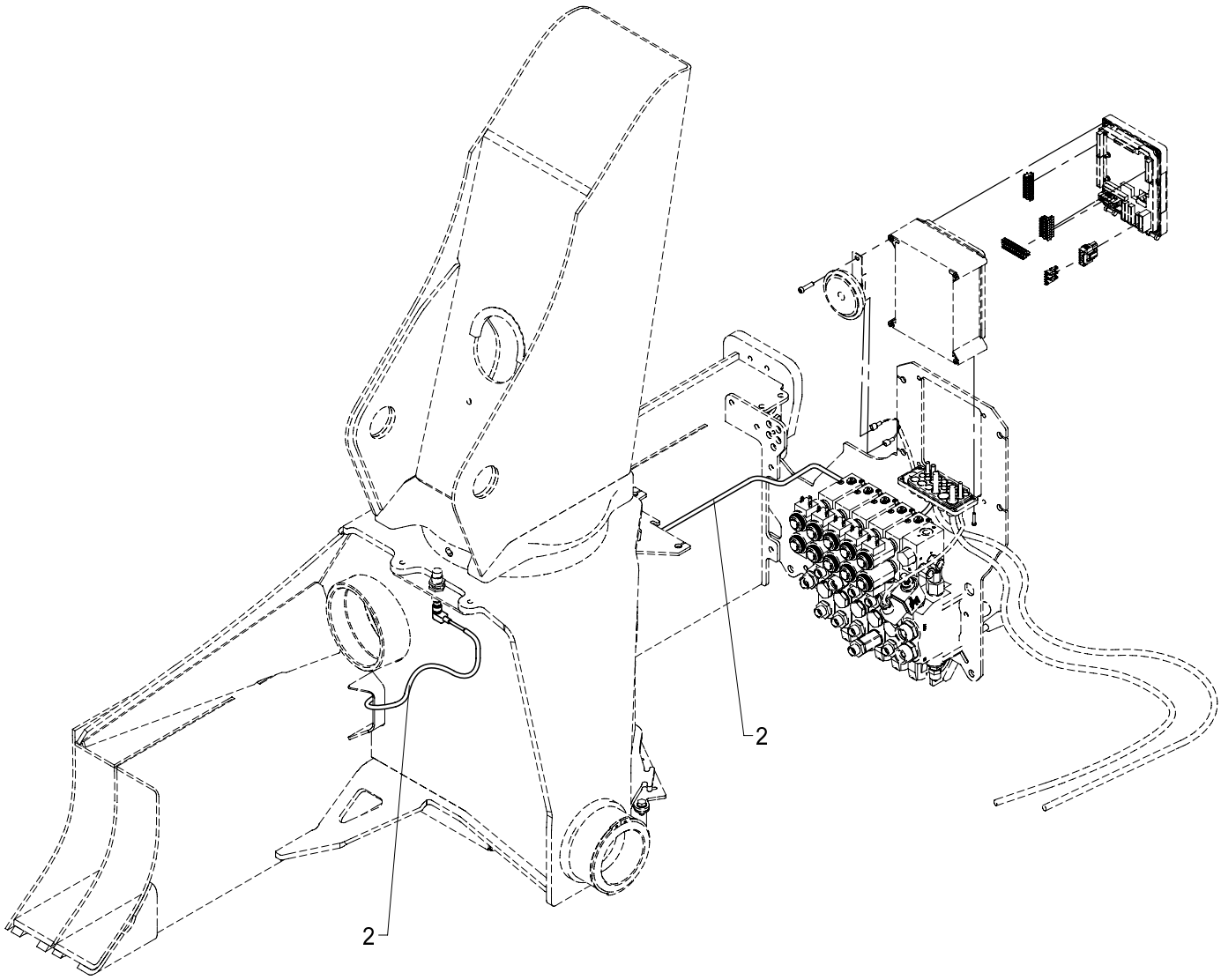

Base, NEMRC + 2-stage LMB

534 20 110

From loader 1060001
To loader

Created 01-05-2009
Modified

Pos	Qty.	Part no.	Description	Remarks
1	1	7004410	Base, NEMRC incl. CE	
2	1	28077	Cable with plug	

15/105 - 17/117 SL & DL Parts

Internal ref. 70 04 460

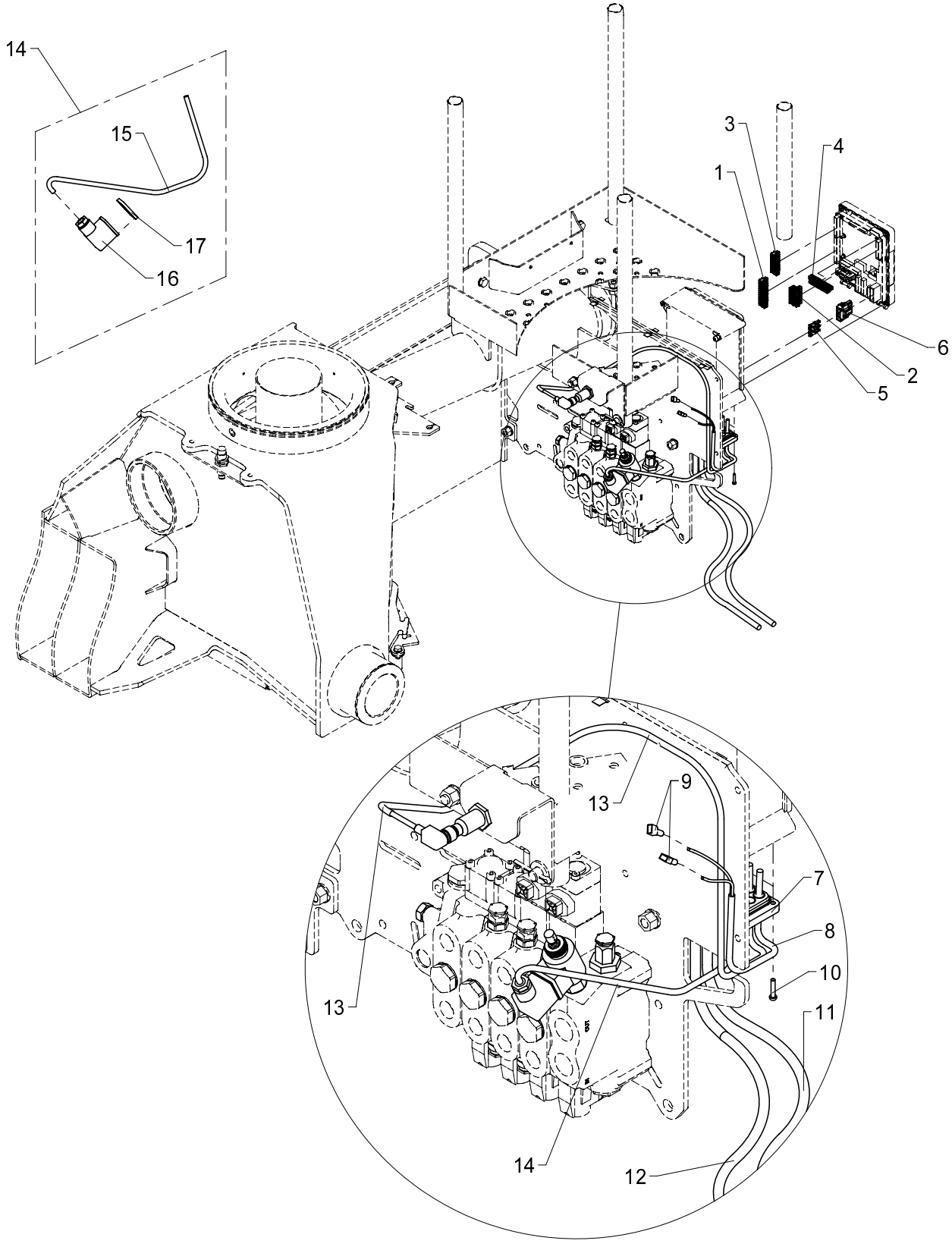

534 20 112

From loader 1060001
To loader

Base, HS - NEMRC

Created 01-05-2009
Modified 27-04-2010

Pos	Qty.	Part no.	Description	Remarks
1	1	29322	Plug, 12-polar for RCL 53XX	
2	1	29319	Plug, 8-polar for RCL 53XX	
3	1	29320	Plug, 9-polar for RCL 53XX	
4	1	29321	Plug, 10-polar for RCL 53XX	
5	3	29316	Pin	
6	1	29315	Plug, 3-polar for RCL 53XX	
7	1	29307	Cable lead-in	
8	1	28249	Cable 2 x 0.75	0,5 m
9	2	27429	Clamp	
10	4	30346	Screw, stainless	4,0 x 20
11	1	28278	Cable 4 x 2.5	3,5 m
12	1	28232	Cable 7 x 0.75	3,5 m
13	1	28117	Cable with plug	
14	1	28265	Cable, dump valve, 1.35 m	
15	1	28249	Cable 2 x 0.75	0,5 m
16	1	28258	Plug, solenoid valve	
17	1	28840	Seal	

15/105 - 17/117 SL & DL Parts

70 04 670
Internal ref. 70 03 670

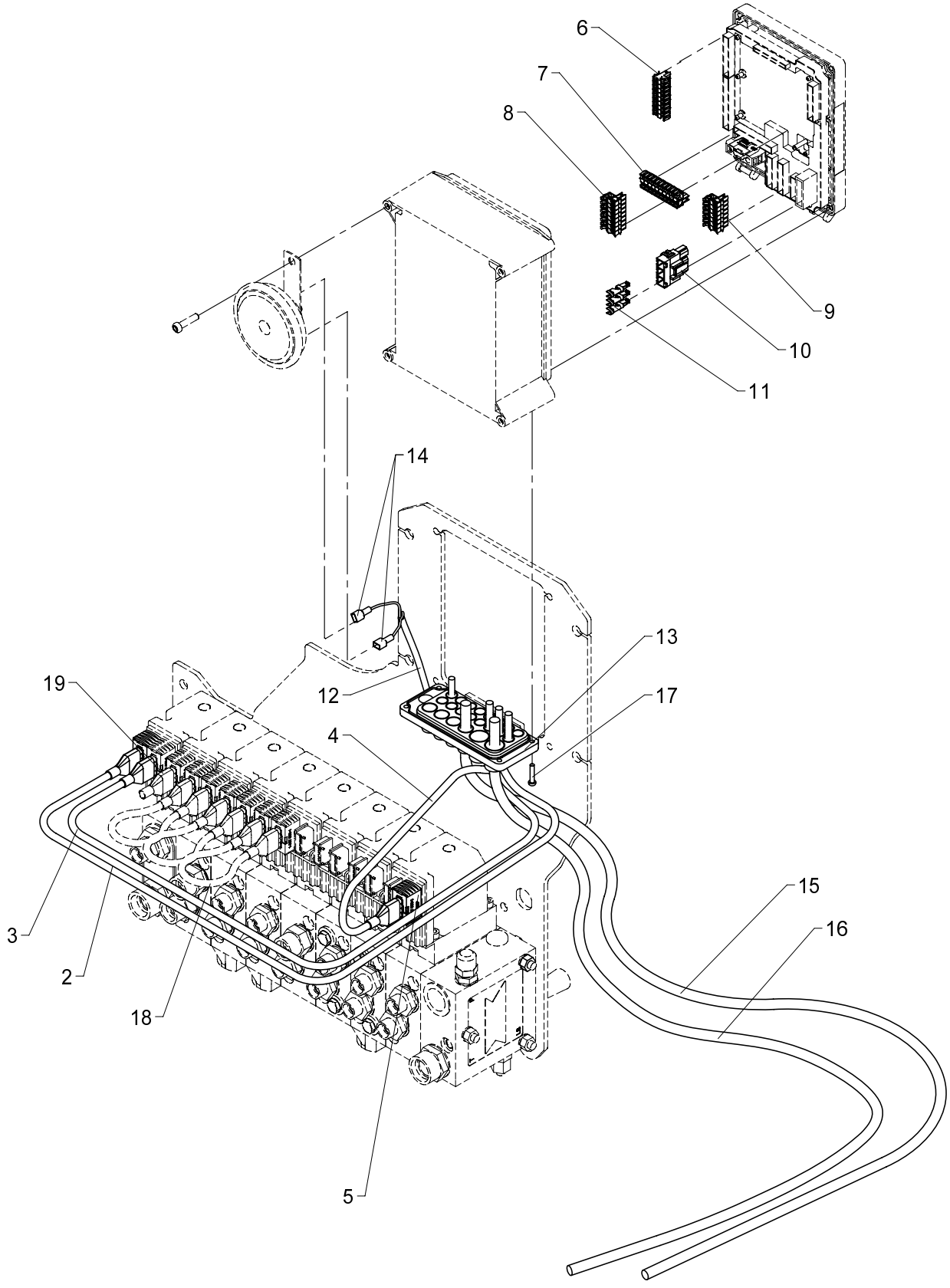

Base, RC

534 20 115

From loader 1060001
To loader

Created 01-05-2009
Modified 29-06-2010

Pos	Qty.	Part no.	Description	Remarks
1	1	28722	Wiring, RC base	
2	1	58952	Cable, AMP black	
3	1	58951	Cable, AMP grey	
4	1	28263	CAN BUS cable	1,3 m
5	1	58953	Plug, AMP grey	
6	1	29320	Plug, 9-polar for RCL 53XX	
7	1	29321	Plug, 10-polar for RCL 53XX	
8	1	29319	Plug, 8-polar for RCL 53XX	
9	1	29318	Plug, 7-polar for RCL 53XX	
10	1	29315	Plug, 3-polar for RCL 53XX	
11	3	29316	Pin	
12	1	28249	Cable 2 x 0.75	0,5 m
13	1	29307	Cable lead-in	
14	2	27429	Clamp	
15	1	28278	Cable 4 x 2.5	3,5 m
16	1	28232	Cable 7 x 0.75	3,5 m
17	4	30346	Screw, stainless	4,0 x 20
18	3	62296	Cable	
19	1	62297	Termination	

15/105 - 17/117 SL & DL Parts

70 04 680
Internal ref. 70 03 680

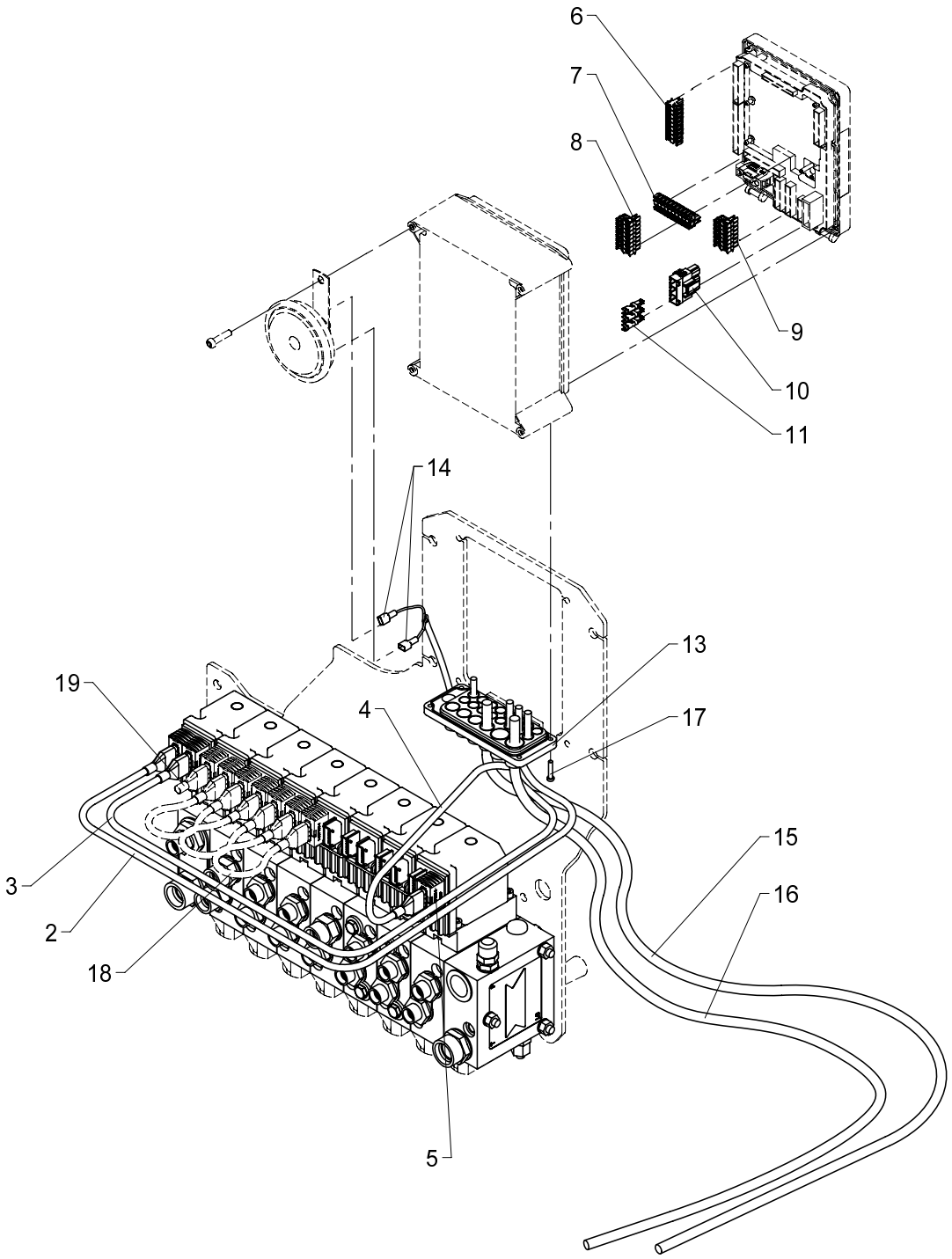

Base, HS - RC

534 20 130

From loader 1060001
To loader

Created 29-06-2010
Modified

Pos	Qty.	Part no.	Description	Remarks
1	1	28722	Wiring, RC base	
2	1	58952	Cable, AMP black	
3	1	58951	Cable, AMP grey	
4	1	28263	CAN BUS cable	1,3 m
5	1	58953	Plug, AMP grey	
6	1	29320	Plug, 9-polar for RCL 53XX	
7	1	29321	Plug, 10-polar for RCL 53XX	
8	1	29319	Plug, 8-polar for RCL 53XX	
9	1	29318	Plug, 7-polar for RCL 53XX	
10	1	29315	Plug, 3-polar for RCL 53XX	
11	3	29316	Pin	
12	1	28249	Cable 2 x 0.75	0,5 m
13	1	29307	Cable lead-in	
14	2	27429	Clamp	
15	1	28278	Cable 4 x 2.5	3,5 m
16	1	28232	Cable 7 x 0.75	3,5 m
17	4	30346	Screw, stainless	4,0 x 20
18	3	62296	Cable	
19	1	62297	Termination	

15/105 - 17/117 SL & DL Parts

Internal ref. 70 04 700

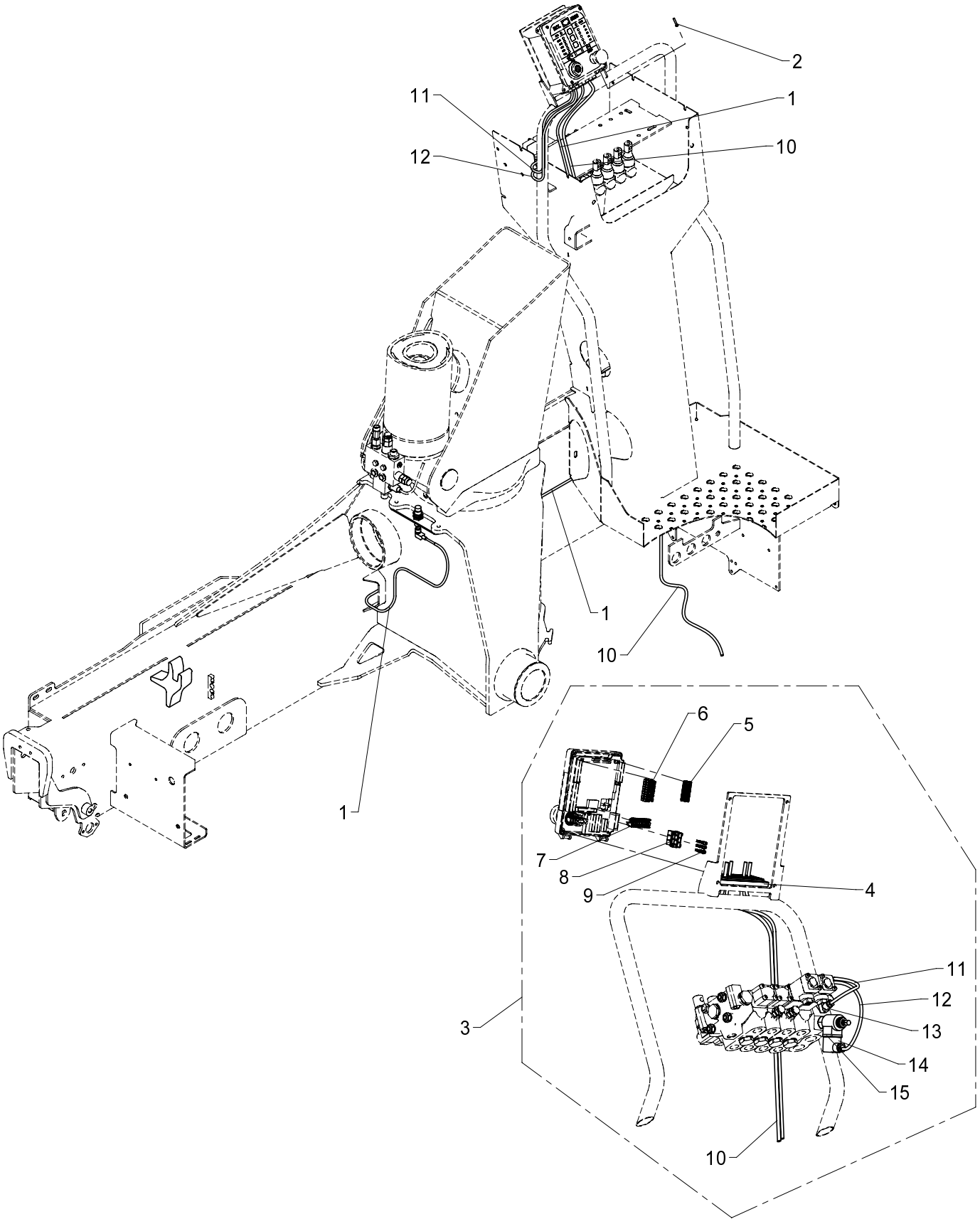

534 20 140

From loader 1060001
To loader

Created 22-03-2010
Modified 03-05-2010

Base, warning over stand-up controls (HS10)

Pos	Qty.	Part no.	Description	Remarks
1	1	28077	Cable with plug	
2	4	30346	Screw, stainless	4,0 x 20
3	1	28719	Wiring, standard	
4	1	29307	Cable lead-in	
5	1	29319	Plug, 8-polar for RCL 53XX	
6	1	29320	Plug, 9-polar for RCL 53XX	
7	1	29321	Plug, 10-polar for RCL 53XX	
8	1	29315	Plug, 3-polar for RCL 53XX	
9	3	29316	Pin	
10	1	28278	Cable 4 x 2.5	3,5 m
11	1	28252	Cable	1,3 m
12	1	28249	Cable 2 x 0.75	1,3 m
13	1	28257	Plug, spool sensor	
14	1	28258	Plug, solenoid valve	
15	1	28840	Seal	

15/105 - 17/117 SL & DL Parts

Internal ref. 70 04 720

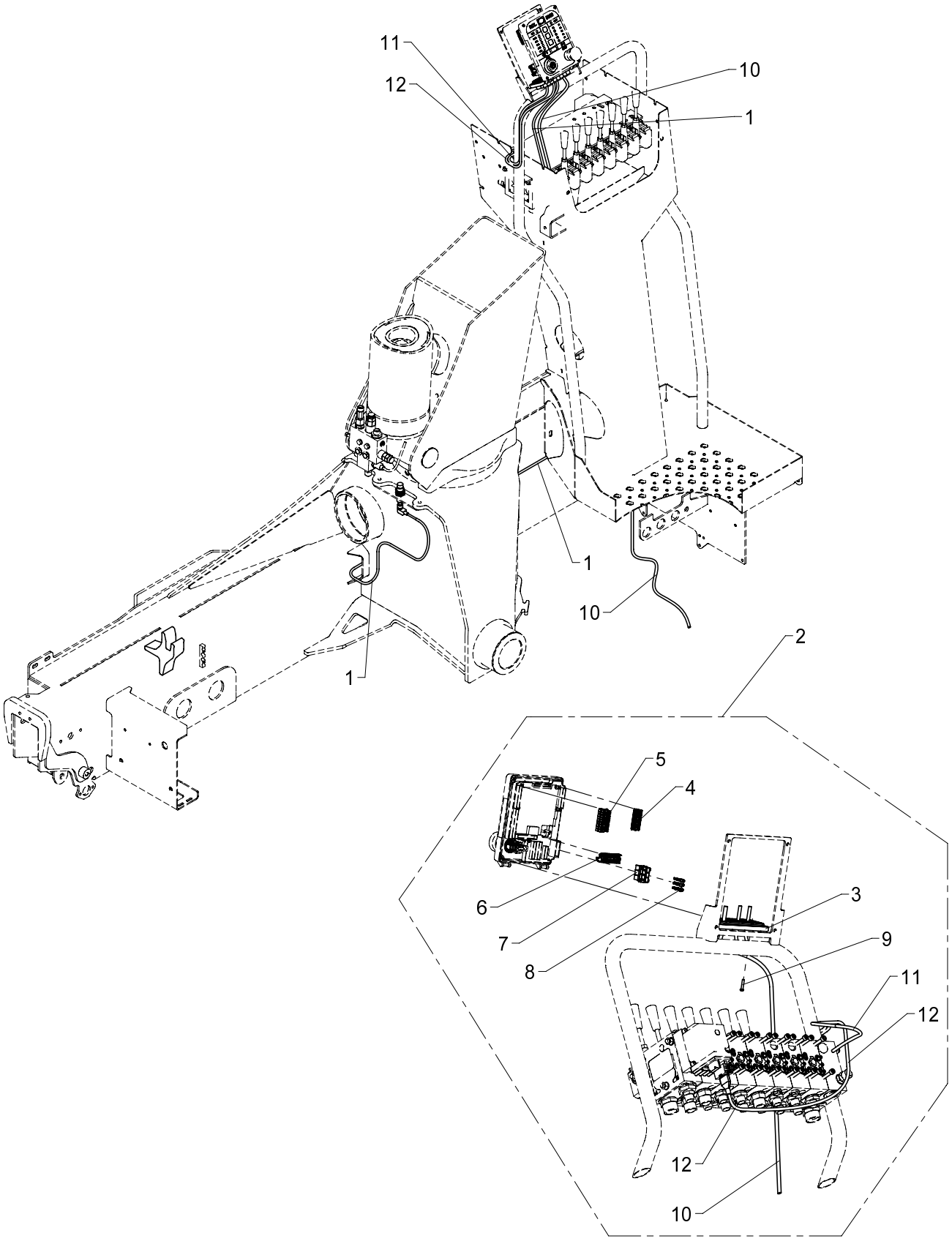

Base, warning over stand-up controls (HS10), variable flow pump

Pos	Qty.	Part no.	Description	Remarks
1	1	28077	Cable with plug	
2	1	7004730	Wiring, base HS, variable pump	
3	1	29307	Cable lead-in	
4	1	29319	Plug, 8-polar for RCL 53XX	
5	1	29320	Plug, 9-polar for RCL 53XX	
6	1	29321	Plug, 10-polar for RCL 53XX	
7	1	29315	Plug, 3-polar for RCL 53XX	
8	3	29316	Pin	
9	4	30346	Screw, stainless	4,0 x 20
10	1	28278	Cable 4 x 2.5	3,5 m
11	1	28267	Cable, sensor	1,3 m
12	1	58951	Cable, AMP grey	

15/105 - 17/117 SL & DL Parts

Internal ref. 70 04 690

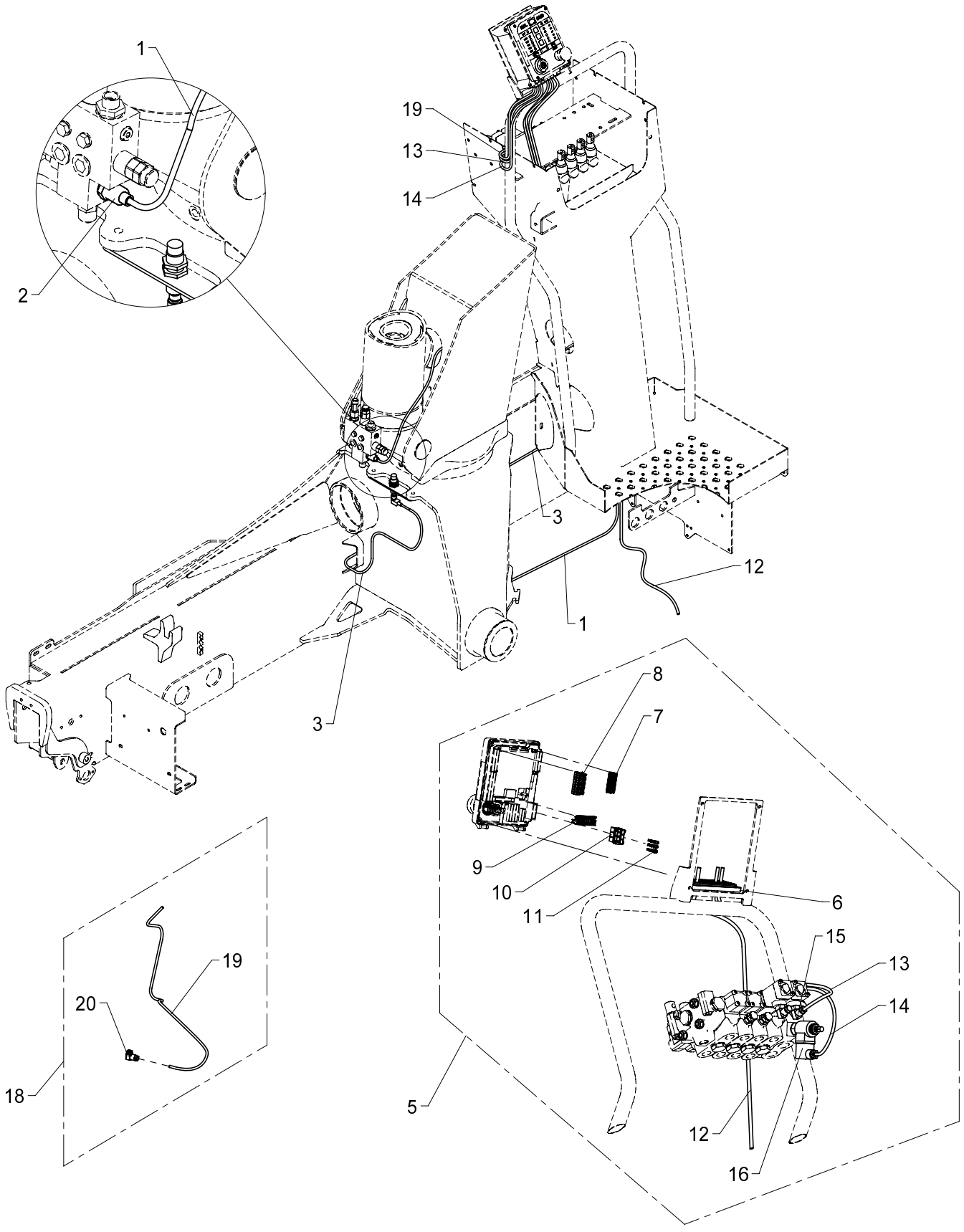

534 20 150

From loader 1060001
To loader
Created
Modified

Base, electronic slewing limitation (HS10)

Pos	Qty.	Part no.	Description	Remarks
1	1	29224	Cable with socket, 5 m	
2	1	28850	Pressure transducer	
3	1	28077	Cable with plug	
4	4	30346	Screw, stainless	4,0 x 20
5	1	28719	Wiring, standard	
6	1	29307	Cable lead-in	
7	1	29319	Plug, 8-polar for RCL 53XX	
8	1	29320	Plug, 9-polar for RCL 53XX	
9	1	29321	Plug, 10-polar for RCL 53XX	
10	1	29315	Plug, 3-polar for RCL 53XX	
11	3	29316	Pin	
12	1	28278	Cable 4 x 2.5	3,5 m
13	1	28252	Cable	1,3 m
14	1	28249	Cable 2 x 0.75	1,3 m
15	1	28257	Plug, spool sensor	
16	1	28258	Plug, solenoid valve	
17	1	28840	Seal	
18	1	28294	Cable, spool sensor	1,3 m
19	1	28252	Cable	1,3 m
20	1	28257	Plug, spool sensor	

15/105 - 17/117 SL & DL Parts

Internal ref. 70 04 710

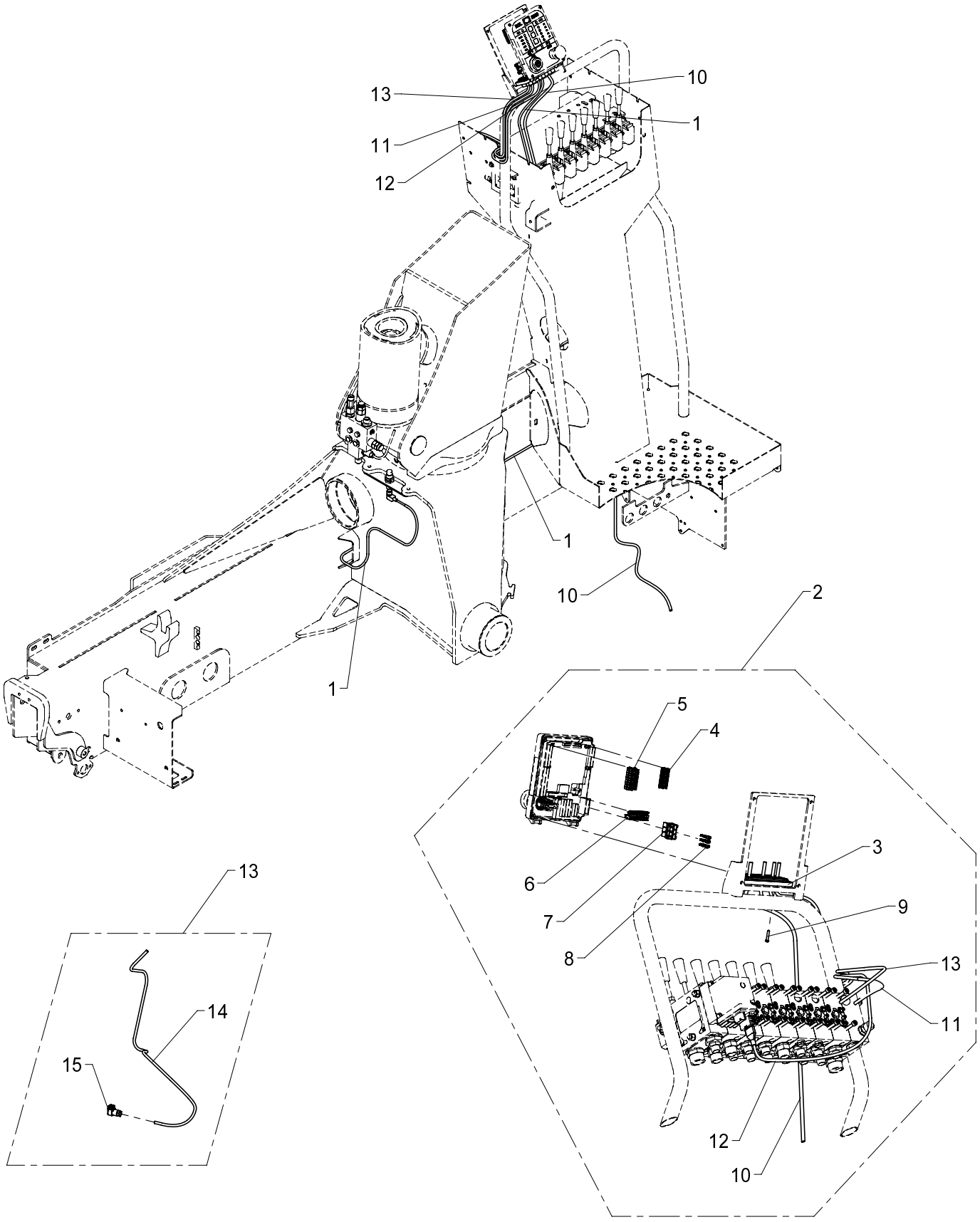

534 20 155

From loader 1060001
To loader
Created
Modified

Base, electronic slewing limitation (HS10), variable flow pump

Pos	Qty.	Part no.	Description	Remarks
1	1	28077	Cable with plug	
2	1	7004730	Wiring, base HS, variable pump	
3	1	29307	Cable lead-in	
4	1	29319	Plug, 8-polar for RCL 53XX	
5	1	29320	Plug, 9-polar for RCL 53XX	
6	1	29321	Plug, 10-polar for RCL 53XX	
7	1	29315	Plug, 3-polar for RCL 53XX	
8	3	29316	Pin	
9	4	30346	Screw, stainless	4,0 x 20
10	1	28278	Cable 4 x 2.5	3,5 m
11	1	28267	Cable, sensor	1,3 m
12	1	58951	Cable, AMP grey	
13	1	28294	Cable, spool sensor	1,3 m
14	1	28252	Cable	1,3 m
15	1	28257	Plug, spool sensor	

15/105 - 17/117 SL & DL Parts

Internal ref. 70 05 110

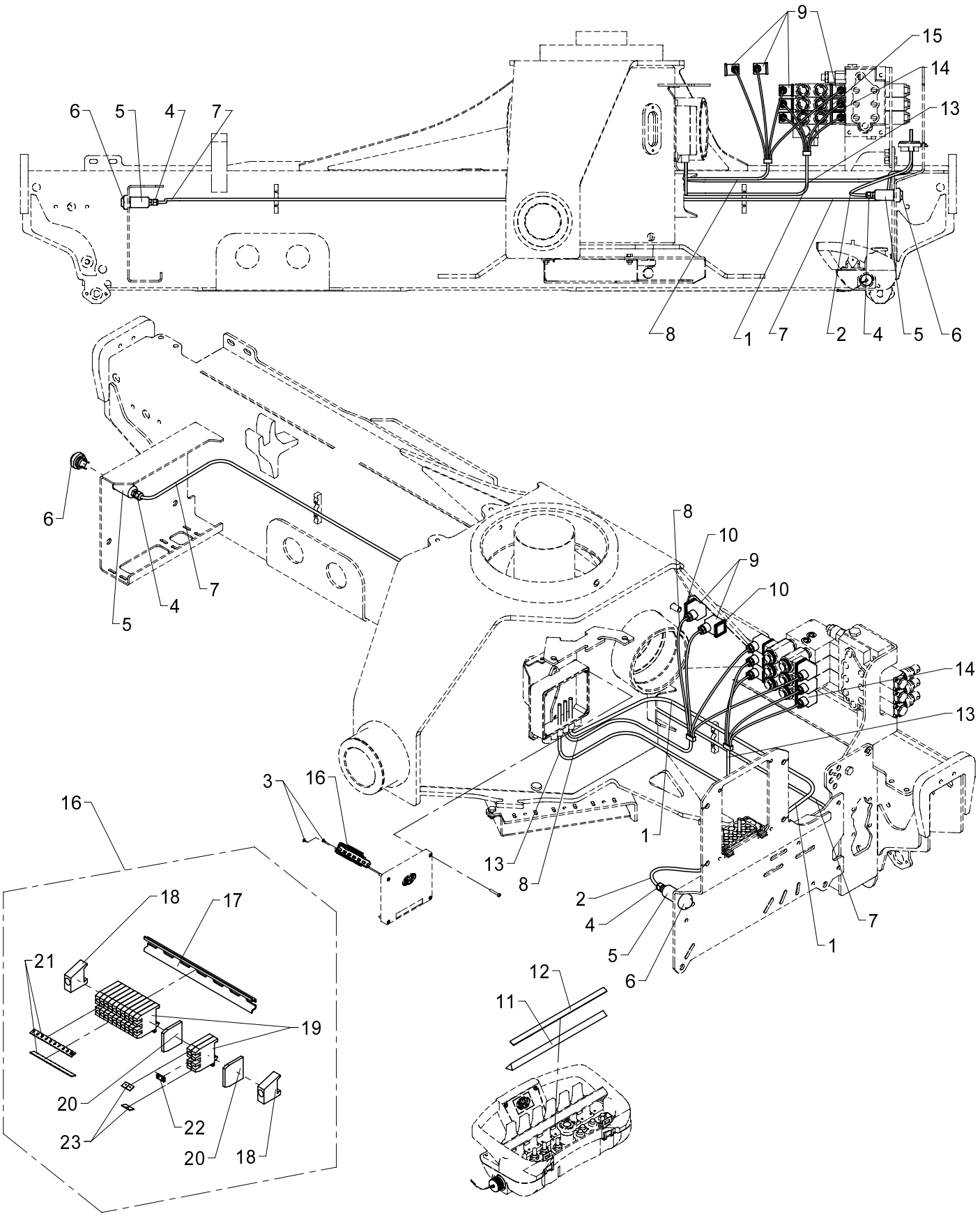

534 20 180

From loader 1060001
To loader

Stabilizer control via RC, 4 functions

Created 19-03-2010
Modified 28-04-2010

Pos	Qty.	Part no.	Description	Remarks
1	1	28249	Cable 2 x 0.75	1,5 m
2	1	28249	Cable 2 x 0.75	0,45 m
3	2	28693	Screw	Ø2.9 x 6.5
4	2	28459	Connection	M12 x 1,5
5	2	64574	Housing	
6	2	27333	Push button	
7	1	28249	Cable 2 x 0.75	3,5 m
8	1	28391	Cable	
9	4	28258	Plug, solenoid valve	
10	4	28840	Seal	
11	1	63512	Rail for label	
12	1	66454	Operating label	
13	1	28392	Cable	
14	4	28258	Plug, solenoid valve	
15	4	28840	Seal	
16	1	29229	Terminal block for stabilizers	
17	1	28013	Guide rail	130 mm.
18	2	28012	End angle	
19	12	28010	Terminal	
20	2	28011	End plate	
21	2	28019	Labels nos. 1-10	
22	1	28075	Fish plate	
23	2	28211	Labels, "-"	

15/105 - 17/117 SL & DL Parts

Internal ref. 70 05 120

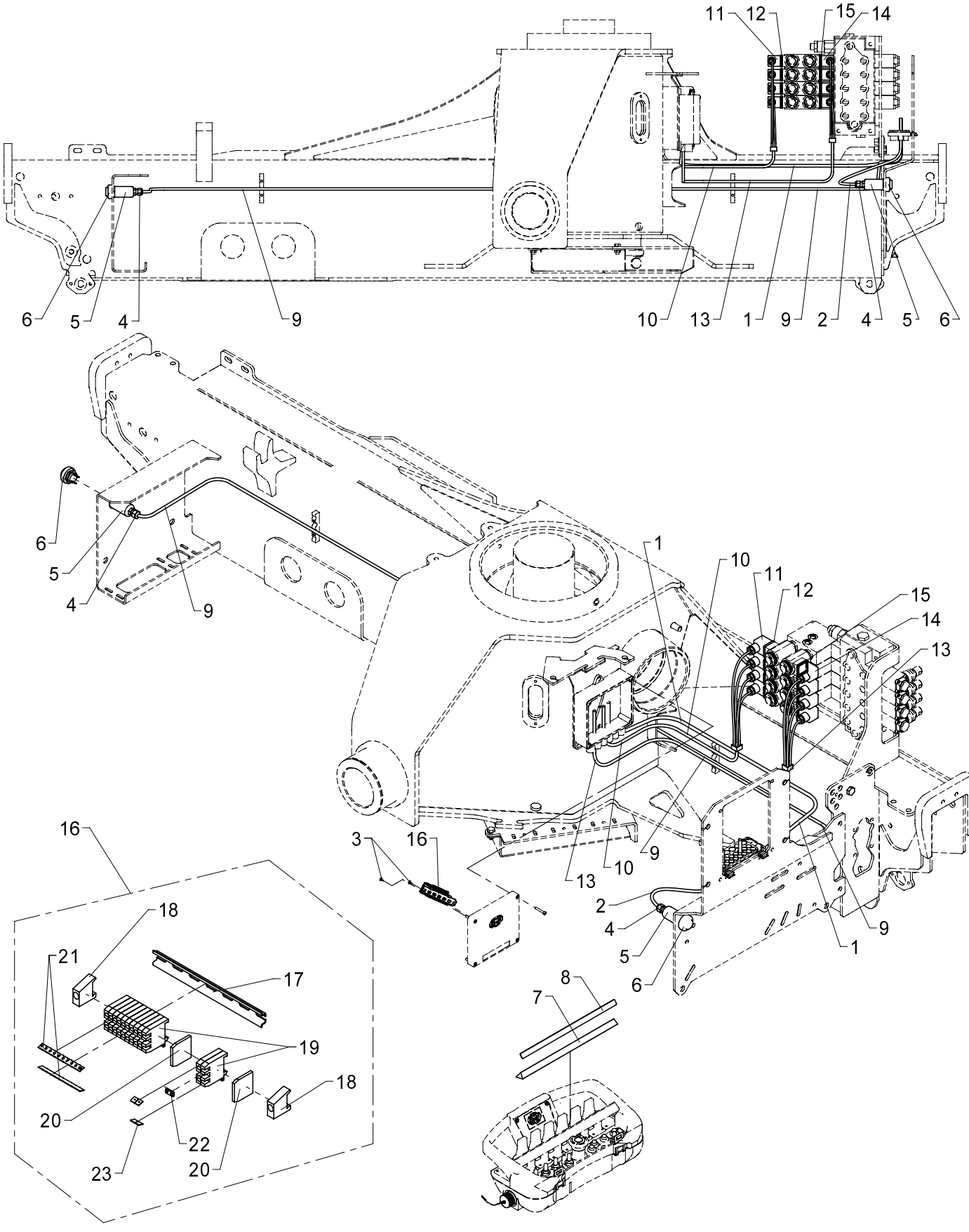

Stabilizer control via RC, 4+2 functions

534 20 190

From loader 1060001
To loader

Created 19-03-2010
Modified 28-04-2010

Pos	Qty.	Part no.	Description	Remarks
1	1	28249	Cable 2 x 0.75	1,5 m
2	1	28249	Cable 2 x 0.75	0,45 m
3	2	28693	Screw	Ø2.9 x 6.5
4	2	28459	Connection	M12 x 1,5
5	2	64574	Housing	
6	2	27333	Push button	
7	1	63512	Rail for label	
8	1	66454	Operating label	
9	1	28249	Cable 2 x 0.75	3,5 m
10	1	28391	Cable	
11	4	28258	Plug, solenoid valve	
12	4	28840	Seal	
13	1	28392	Cable	
14	4	28258	Plug, solenoid valve	
15	4	28840	Seal	
16	1	29229	Terminal block for stabilizers	
17	1	28013	Guide rail	130 mm.
18	2	28012	End angle	
19	12	28010	Terminal	
20	2	28011	End plate	
21	2	28019	Labels nos. 1-10	
22	1	28075	Fish plate	
23	2	28211	Labels, "-"	

15/105 - 17/117 SL & DL Parts

Internal ref. 70 05 130

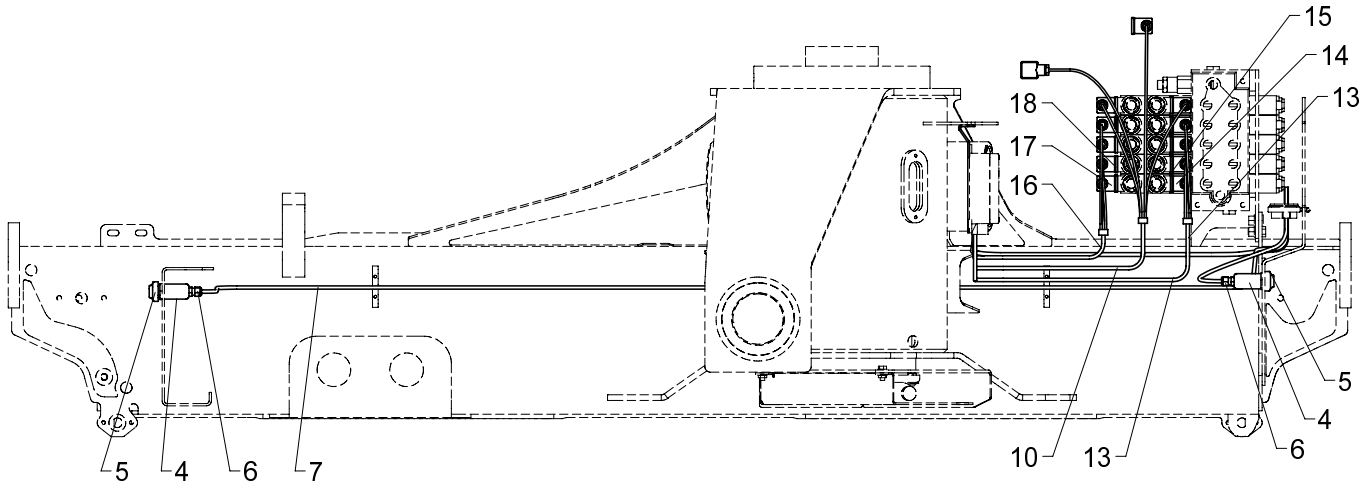

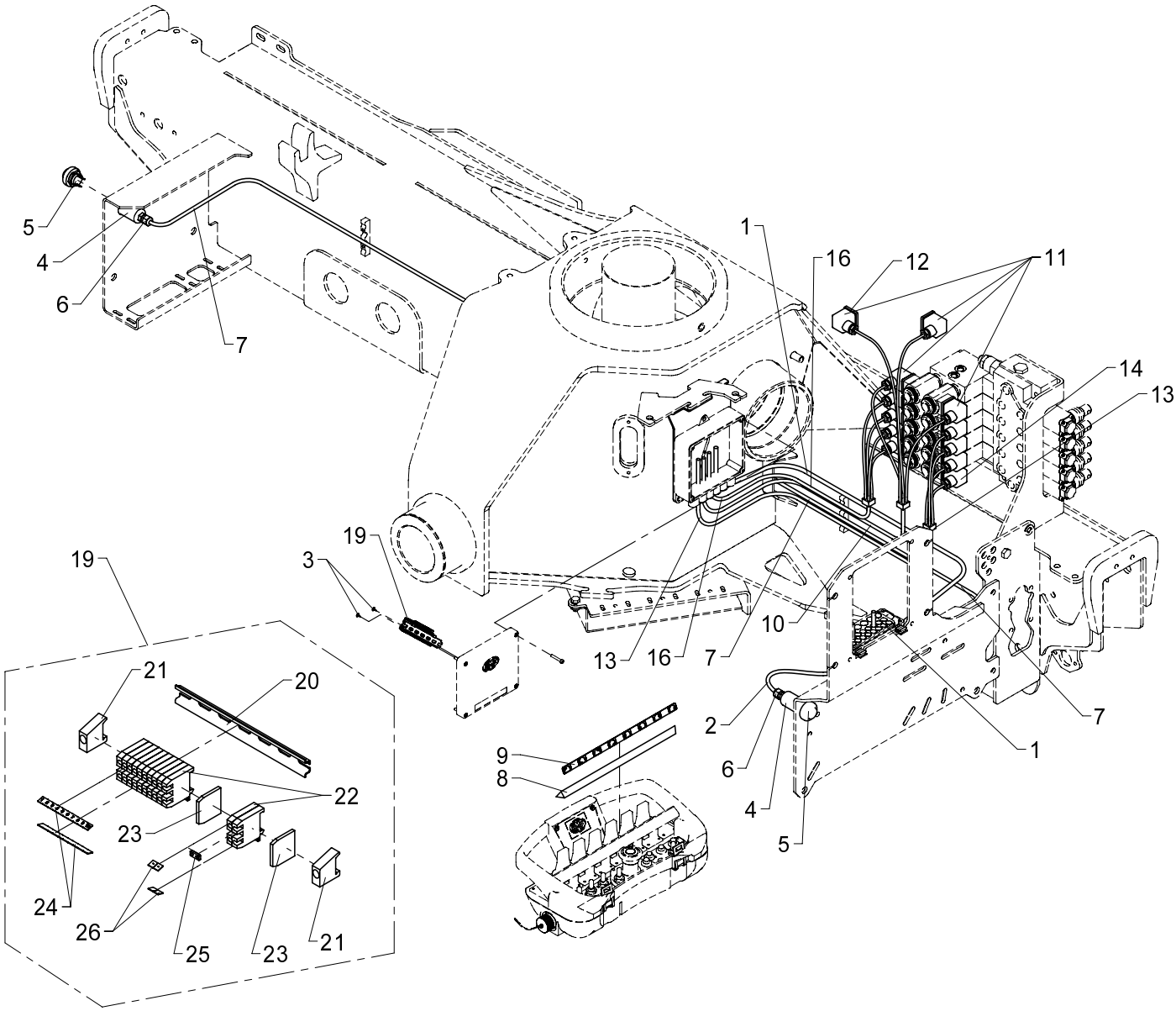

Stabilizer control via RC, 4+4 functions

534 20 195

From loader 1060001
To loader

Created 19-03-2010
Modified 28-04-2010

Pos	Qty.	Part no.	Description	Remarks
1	1	28249	Cable 2 x 0.75	1,5 m
2	1	28249	Cable 2 x 0.75	0,45 m
3	2	28693	Screw	Ø2.9 x 6.5
4	2	64574	Housing	
5	2	27333	Push button	
6	2	28459	Connection	M12 x 1,5
7	1	28249	Cable 2 x 0.75	3,5 m
8	1	63512	Rail for label	
9	1	66454	Operating label	
10	1	28391	Cable	
11	4	28258	Plug, solenoid valve	
12	4	28840	Seal	
13	1	28392	Cable	
14	4	28258	Plug, solenoid valve	
15	4	28840	Seal	
16	1	28393	Cable	
17	4	28258	Plug, solenoid valve	
18	4	28840	Seal	
19	1	29229	Terminal block for stabilizers	
20	1	28013	Guide rail	130 mm.
21	2	28012	End angle	
22	12	28010	Terminal	
23	2	28011	End plate	
24	2	28019	Labels nos. 1-10	
25	1	28075	Fish plate	
26	2	28211	Labels, "-"	

15/105 - 17/117 SL & DL Parts

Internal ref. 70 04 360

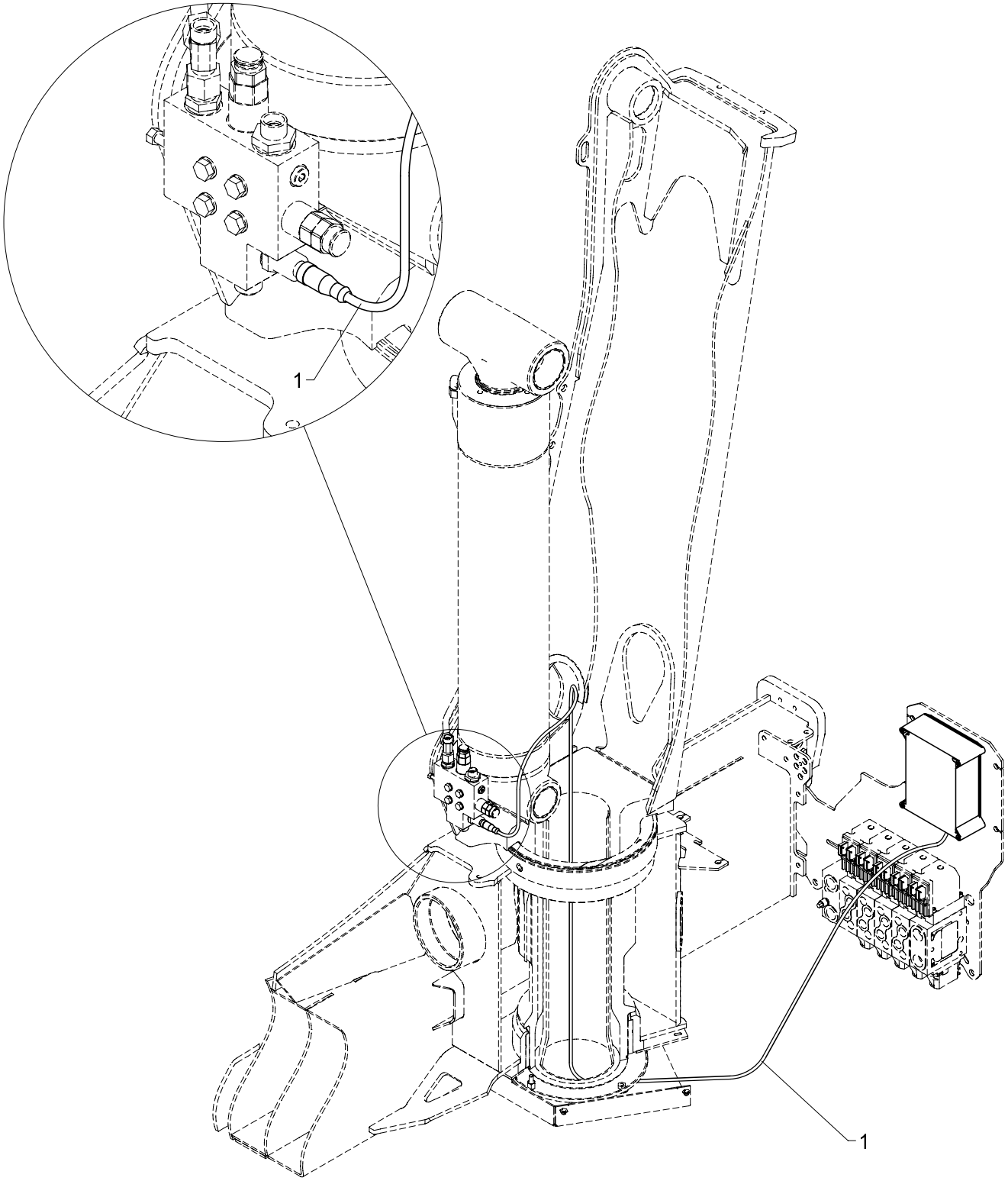

534 20 205

From loader 1060001
To loader

Created 01-05-2009
Modified 13-05-2009

Column, std. + HS

Pos	Qty.	Part no.	Description	Remarks
1	1	29224	Cable with socket, 5 m	

15/105 - 17/117 SL & DL Parts

Internal ref. 70 04 660

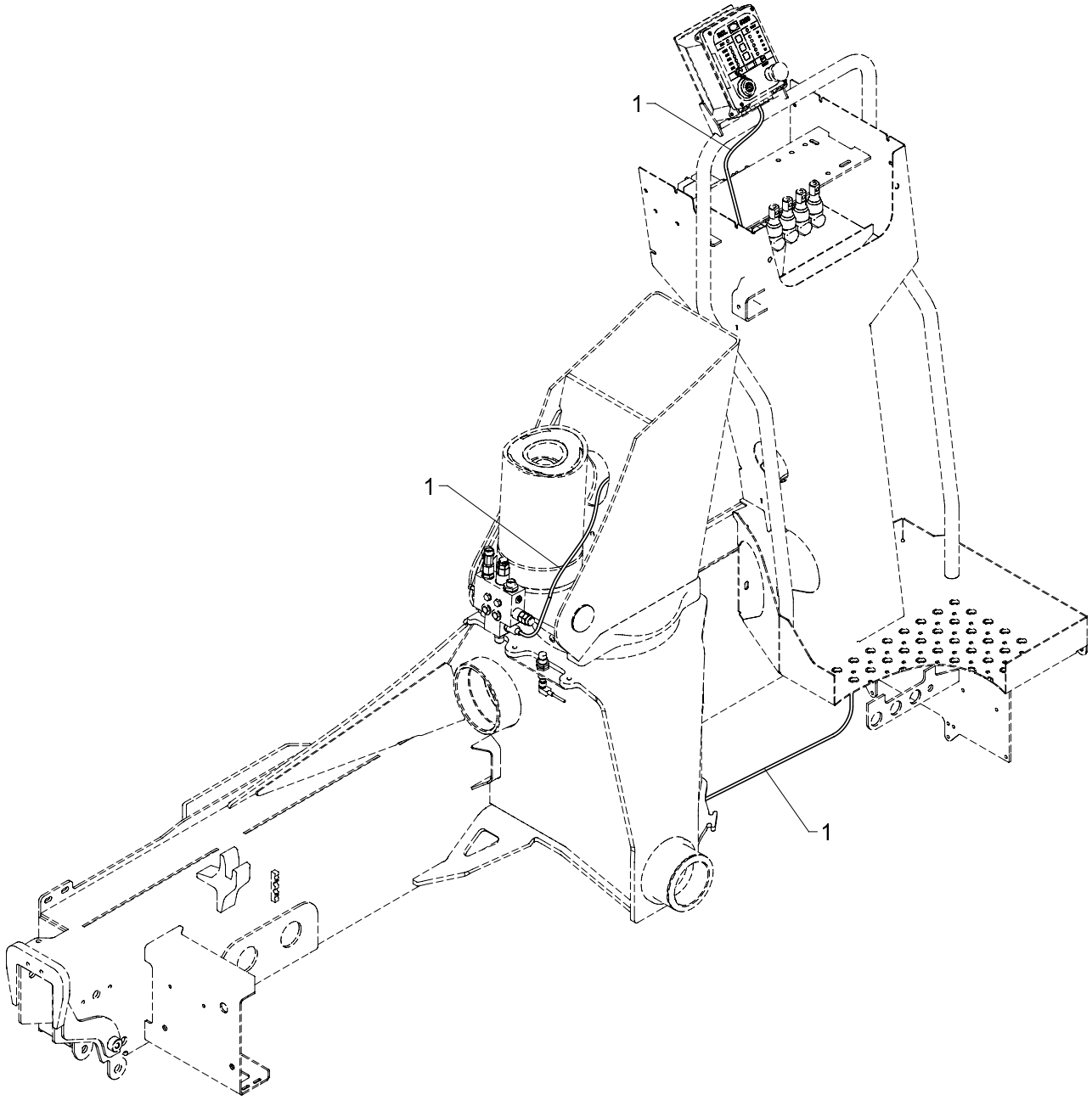

Column, HS10

534 20 207

From loader 1060001
To loader

Created 01-05-2009
Modified

Pos	Qty.	Part no.	Description	Remarks
1	1	29224	Cable with socket, 5 m	

15/105 - 17/117 SL & DL Parts

Internal ref. 70 04 780

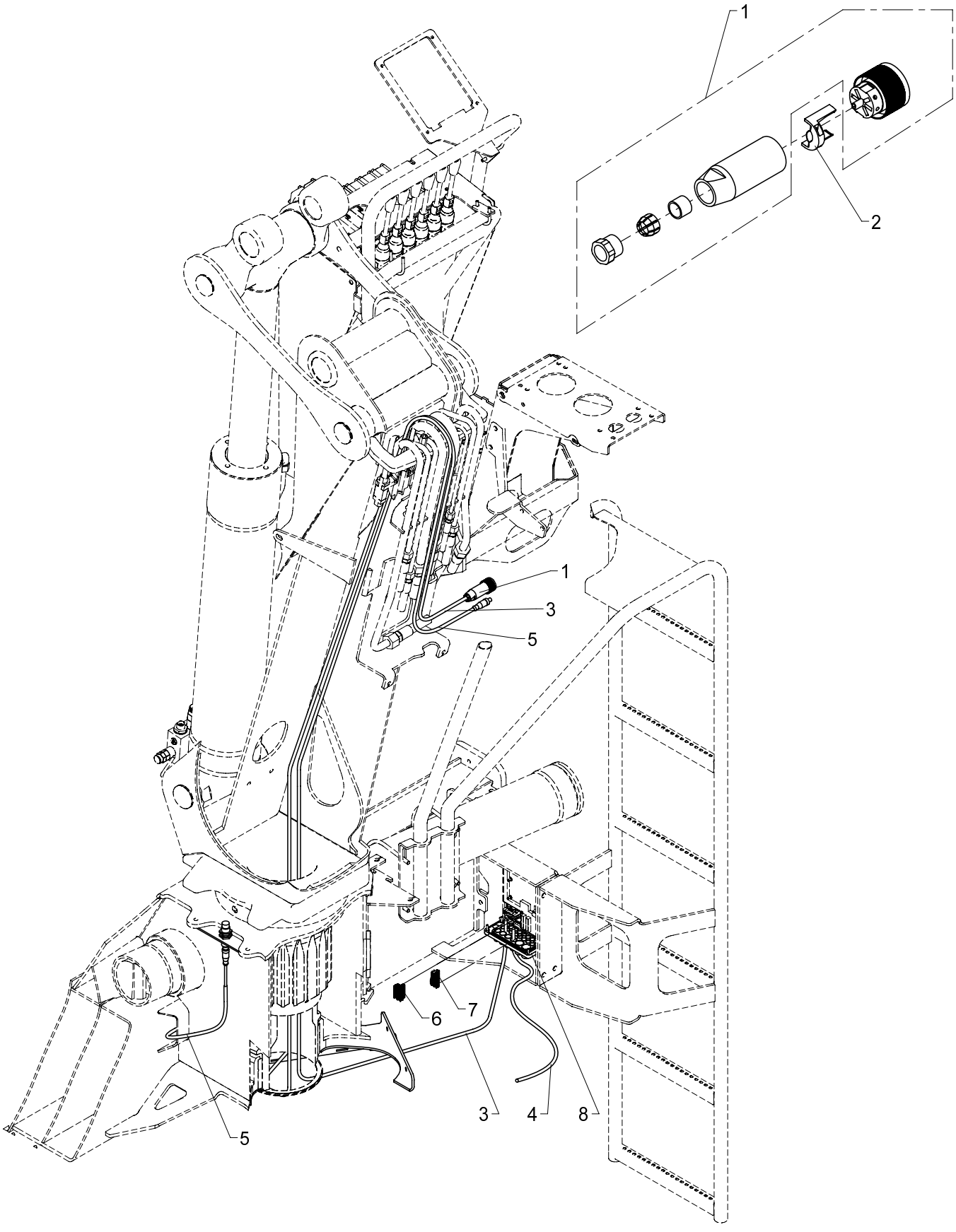

534 20 215

From loader 1060001
To loader

Created 24-06-2010
Modified

Column, TS incl. CE

Pos	Qty.	Part no.	Description	Remarks
1	1	29231	Socket for cable	
2	1	29236	Cable clamp	
3	1	28263	CAN BUS cable	6 m
4	1	28278	Cable 4 x 2.5	3,5 m
5	1	29235	Extension cable, 5 m	
6	1	29318	Plug, 7-polar for RCL 53XX	
7	1	29340	CAN termination/RCL53xx	
8	1	29307	Cable lead-in	

15/105 - 17/117 SL & DL Parts

Internal ref. 70 04 370

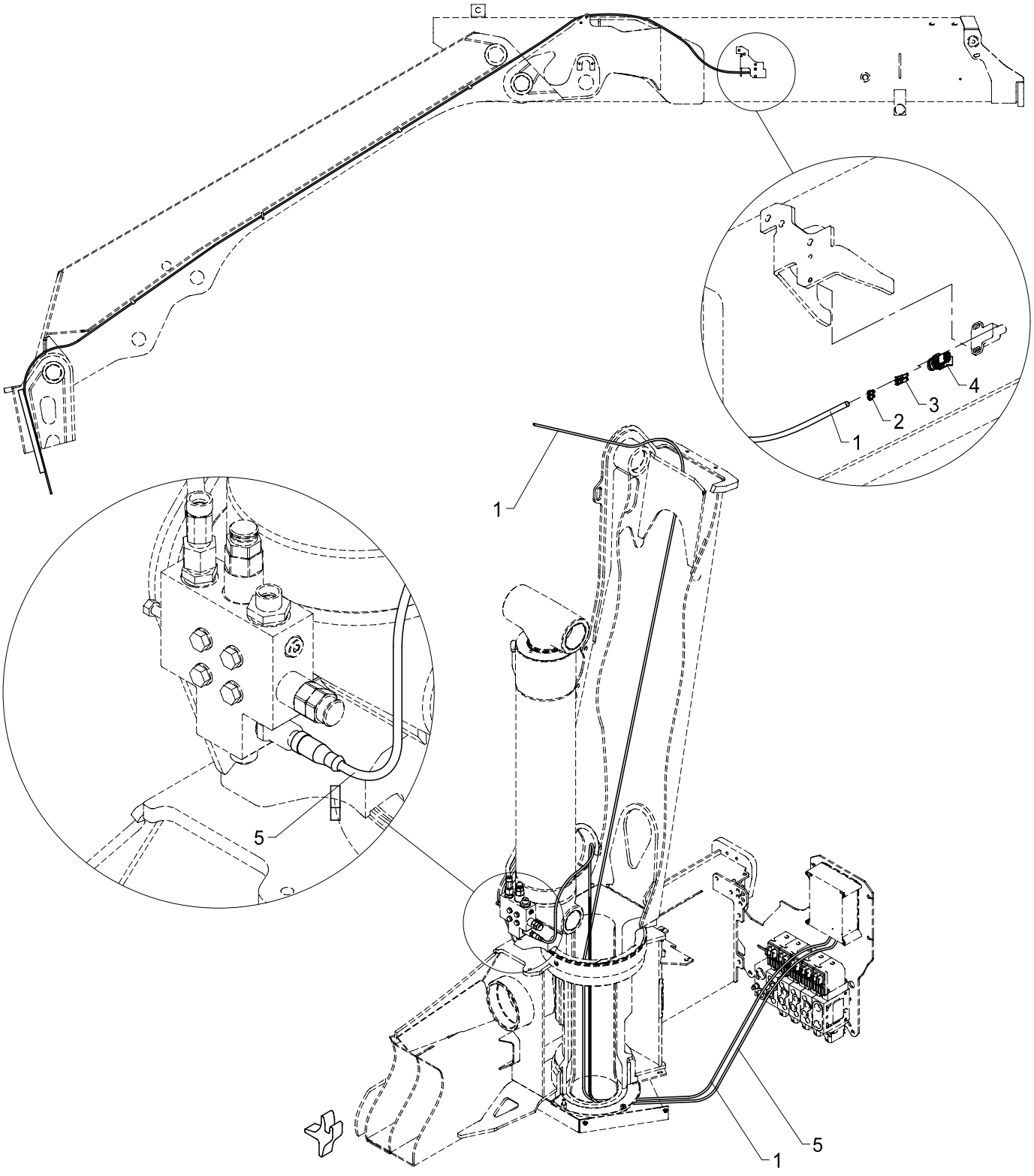

534 20 220

From loader 1060001
To loader

Created 01-05-2009
Modified 31-03-2010

Column NEMRC

Pos	Qty.	Part no.	Description	Remarks
1	1	28249	Cable 2 x 0.75	9,0 m
2	2	28845	Cable lead-in	
3	2	28844	Socket, AMP	
4	1	28843	Bipolar socket, AMP	
5	1	29224	Cable with socket, 5 m	

15/105 - 17/117 SL & DL Parts

Internal ref. 70 03 660

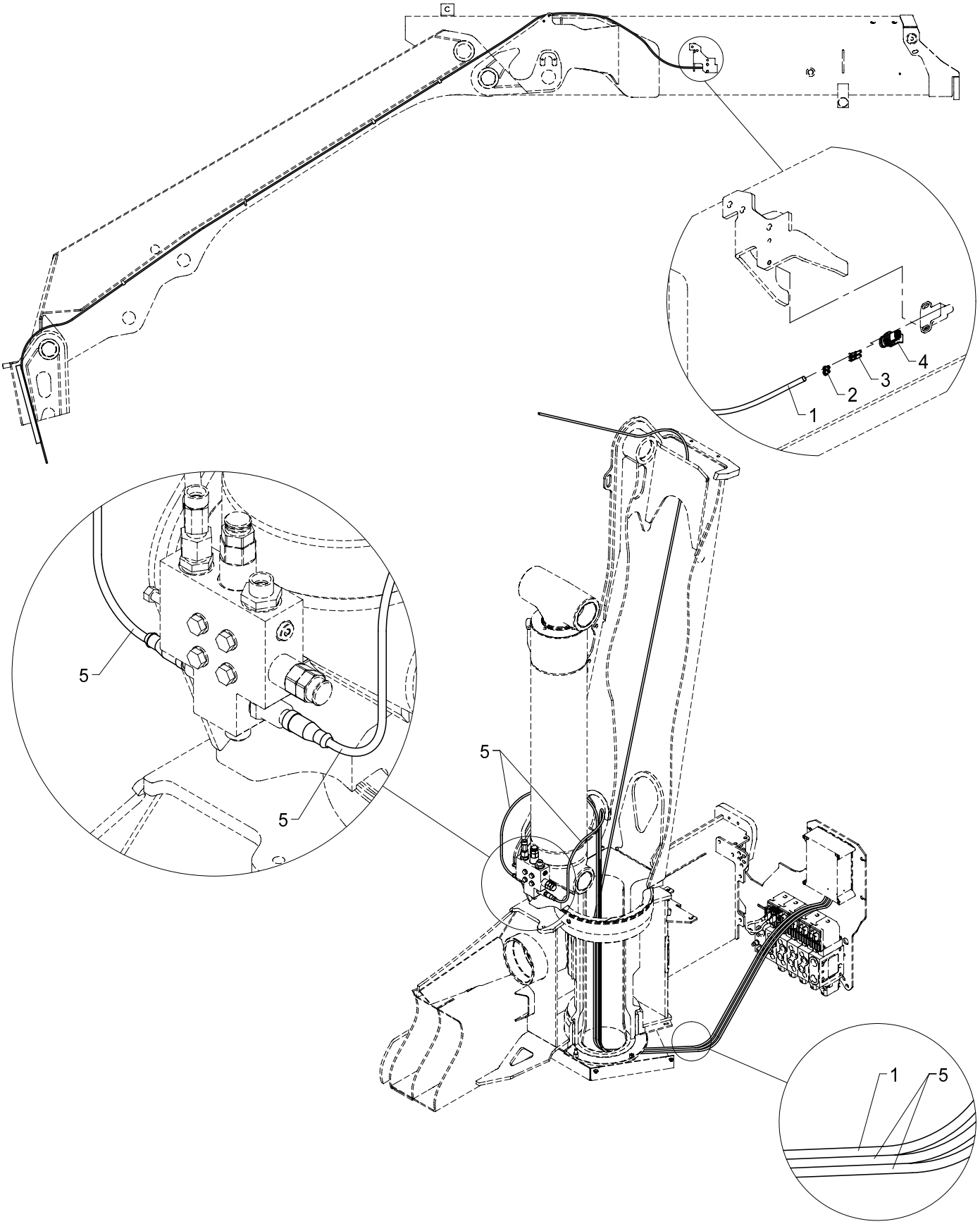

534 20 225

From loader 1060001
To loader

Created 31-03-2010
Modified 31-03-2010

Wiring, column, RC

Pos	Qty.	Part no.	Description	Remarks
1	1	28249	Cable 2 x 0.75	9,0 m
2	2	28845	Cable lead-in	
3	2	28844	Socket, AMP	
4	1	28843	Bipolar socket, AMP	
5	2	29224	Cable with socket, 5 m	5,0 m

15/105 - 17/117 SL & DL Parts

Internal ref. 70 03 620

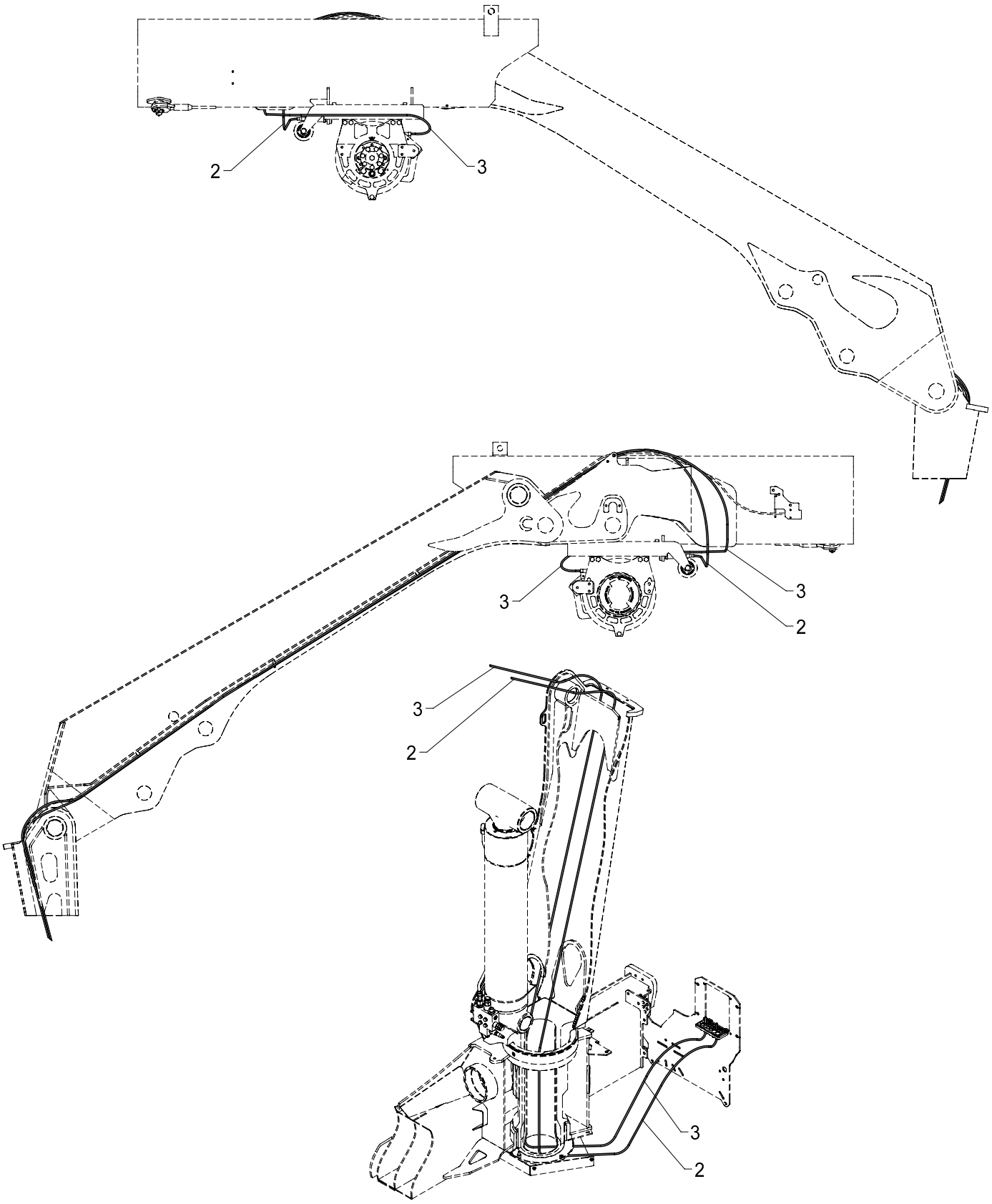

534 20 230

From loader 1060001
To loader

Created 24-06-2010
Modified

Column, RC + winch

Pos	Qty.	Part no.	Description	Remarks
1	1	7003660	Wiring, column, RC	
2	1	28730	Cable + socket, 10 m	
3	1	28249	Cable 2 x 0.75	10 m

534 20 235

15/105 - 17/117 SL & DL Parts

Internal ref. 70 03 630

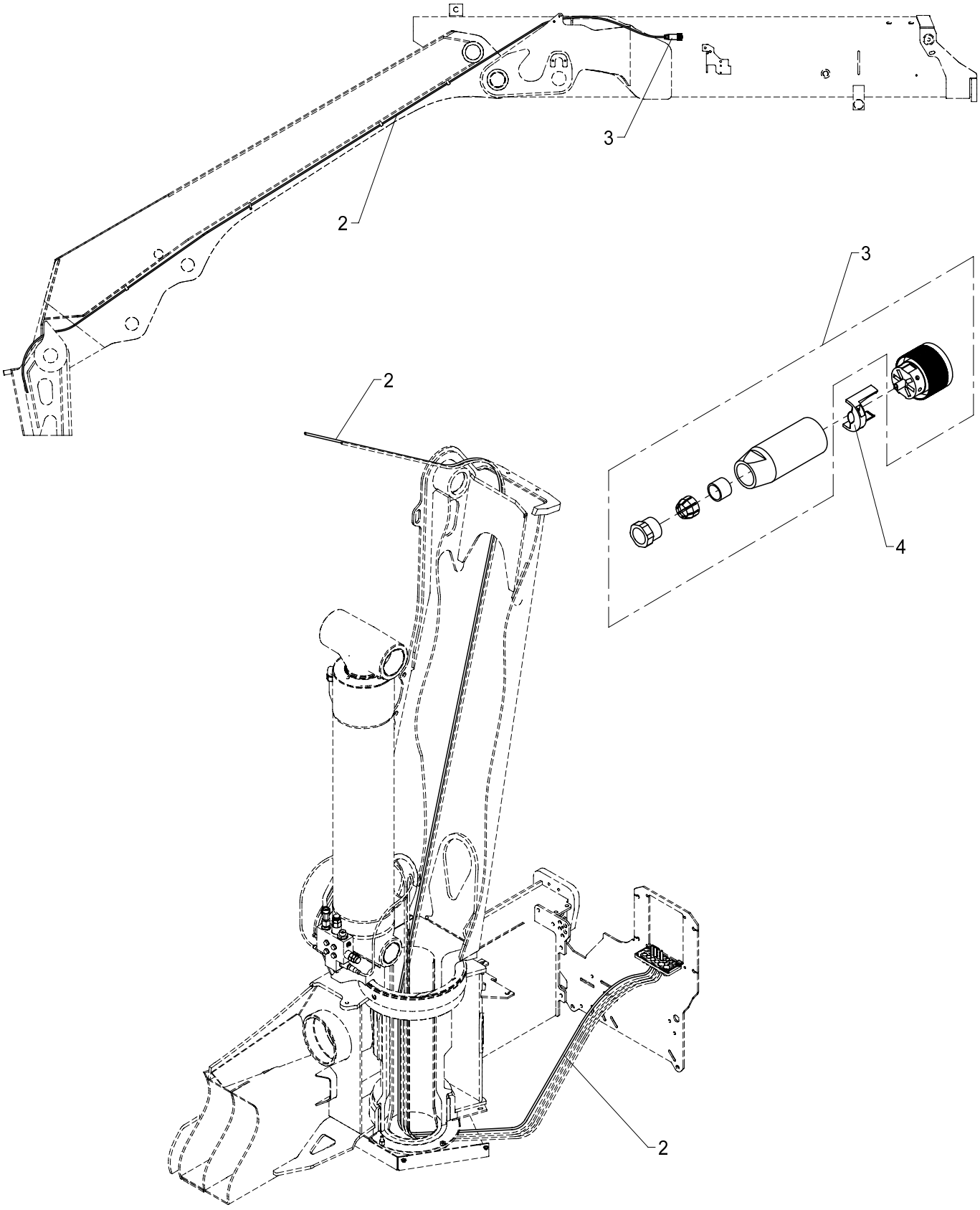

534 20 235

From loader 1060001
To loader

Created 31-03-2010
Modified 24-06-2010

Column, RC + Fly-Jib

Pos	Qty.	Part no.	Description	Remarks
1	1	7003660	Wiring, column, RC	
2	1	28263	CAN BUS cable	9 m
3	1	29231	Socket for cable	
4	1	29236	Cable clamp	

15/105 - 17/117 SL & DL Parts

Internal ref. 70 03 640

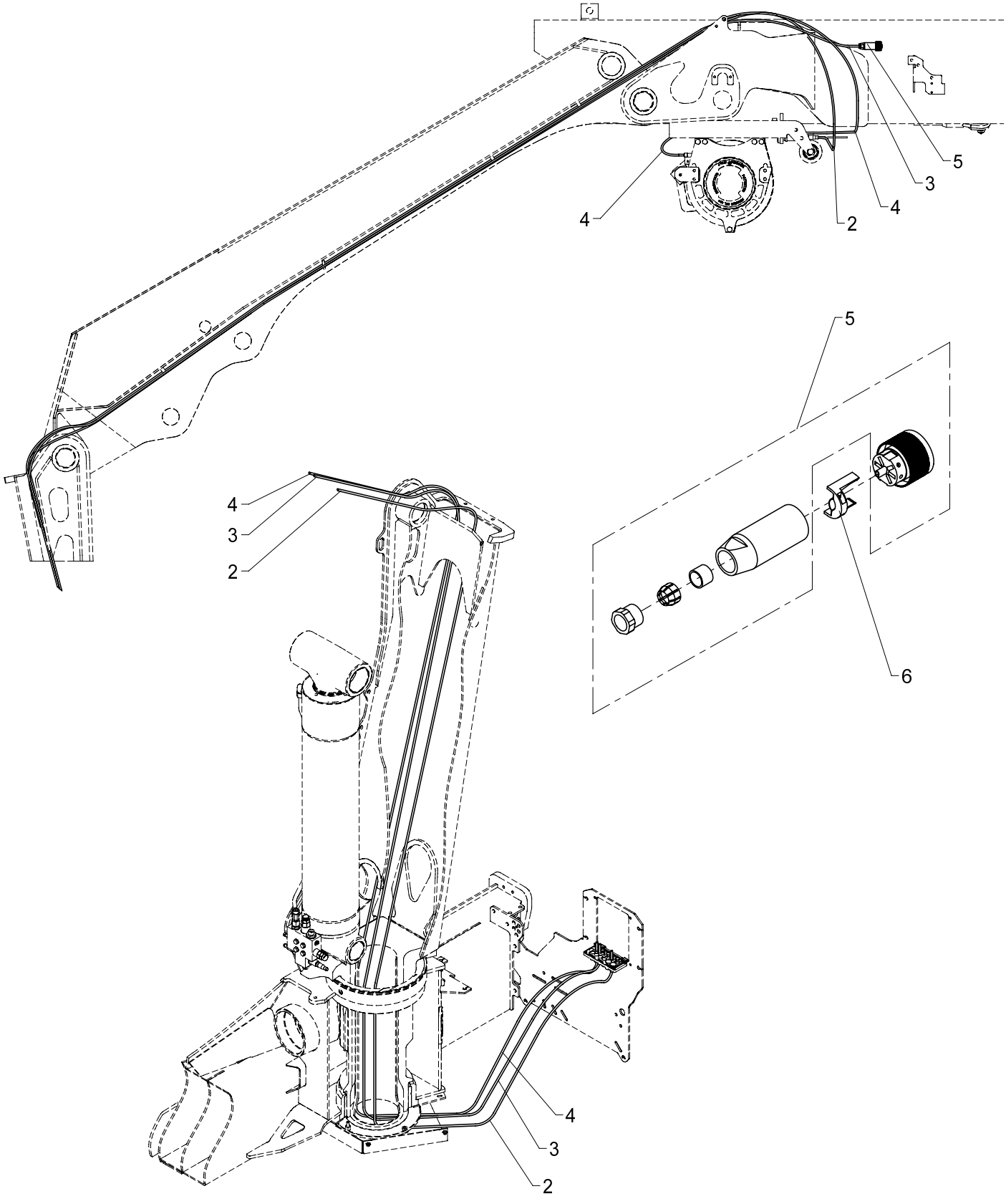

Column, RC + winch + fly-jib

534 20 240

From loader 1060001
To loader

Created 24-06-2010
Modified

Pos	Qty.	Part no.	Description	Remarks
1	1	7003660	Wiring, column, RC	
2	1	28730	Cable + socket, 10 m	
3	1	28263	CAN BUS cable	9,0 m
4	1	28249	Cable 2 x 0.75	10 m
5	1	29231	Socket for cable	
6	1	29236	Cable clamp	

15/105 - 17/117 SL & DL Parts

Internal ref. 70 04 350

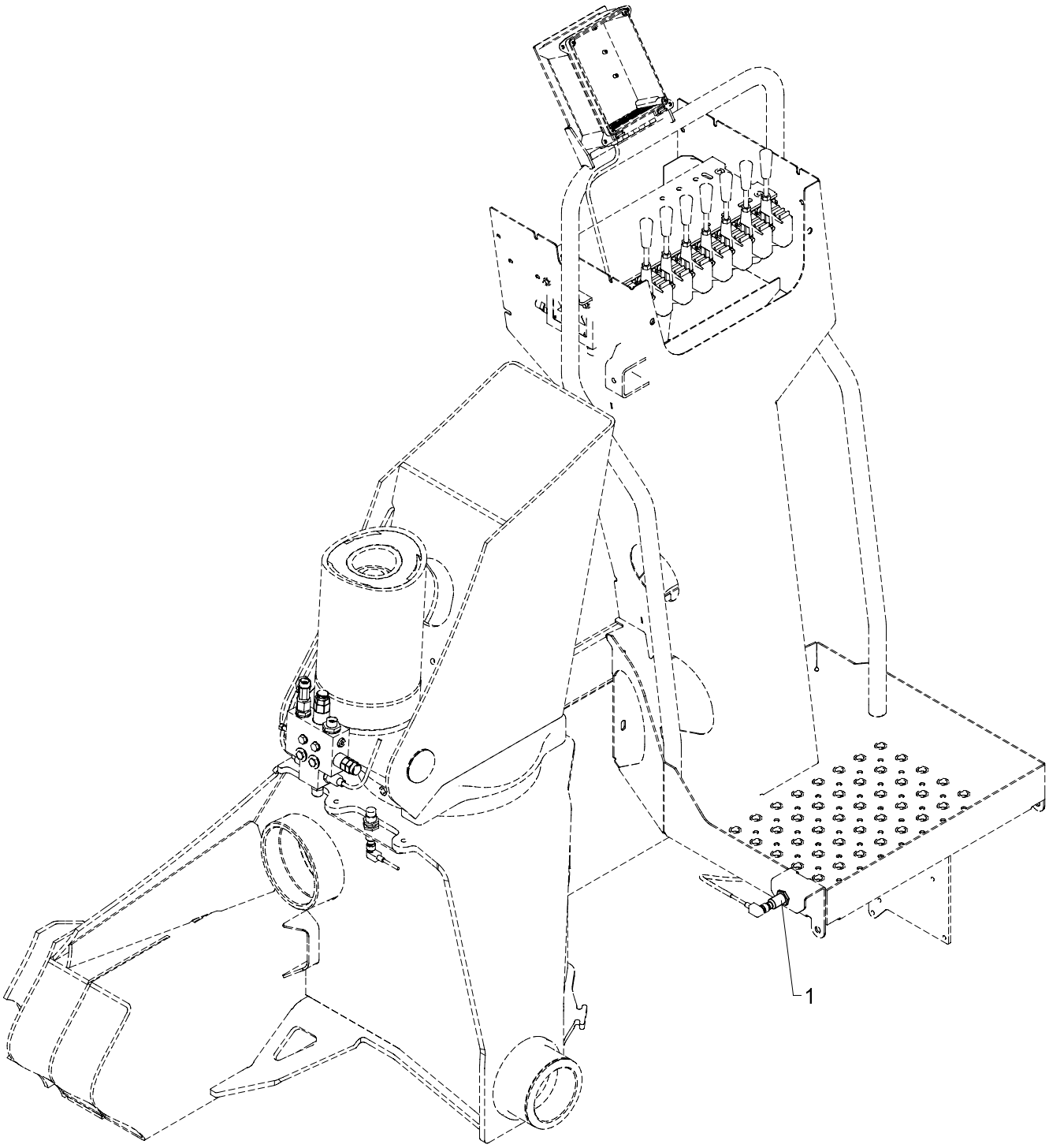

HS10 sensor on platform

534 20 270

From loader 1060001
To loader

Created 01-05-2009
Modified

Pos	Qty.	Part no.	Description	Remarks
1	1	28210	Proximity switch	

534 20 295

15/105 - 17/117 SL & DL Parts

Internal ref. 70 04 800

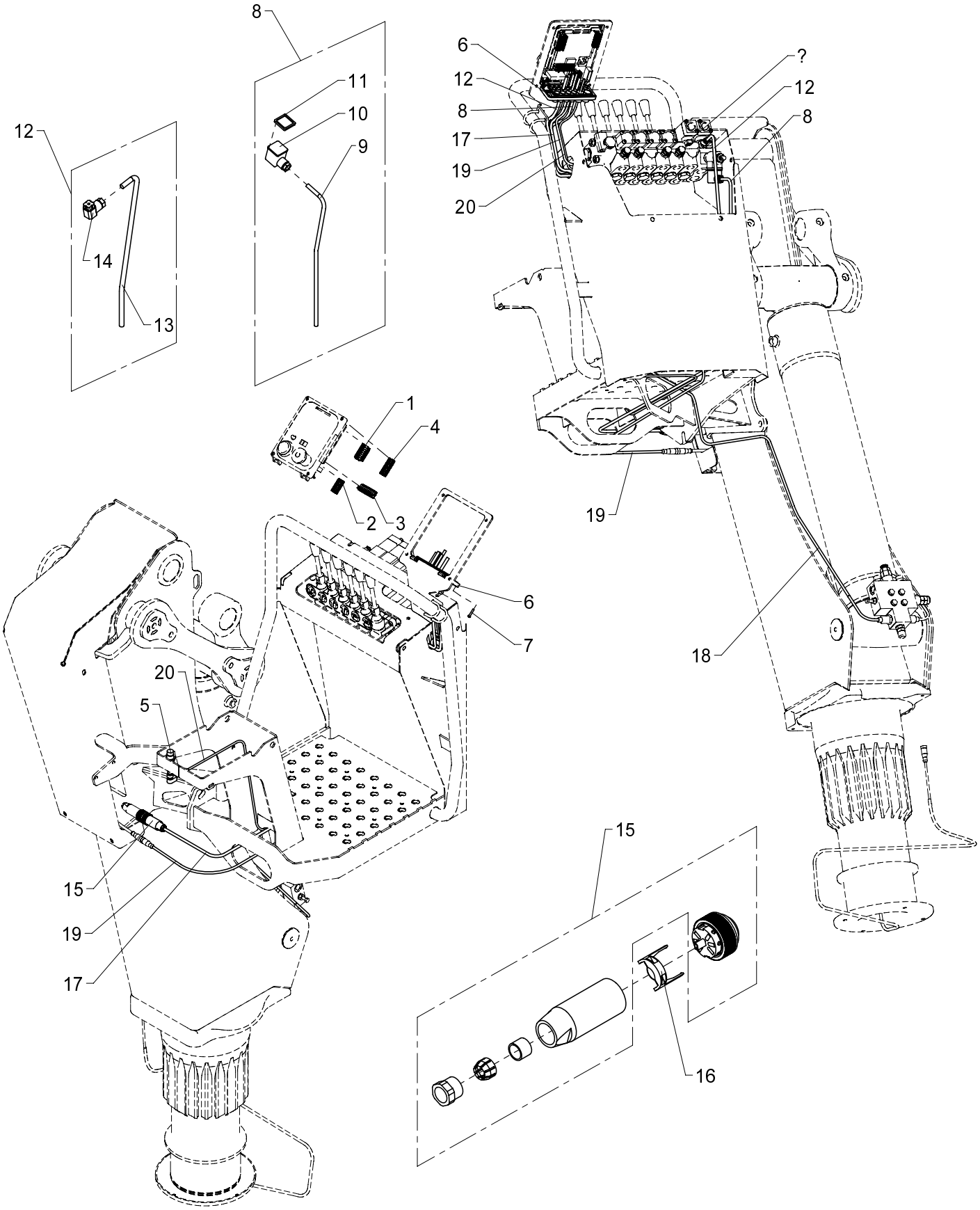

TS platform, 1-circuit fixed flow pump

534 20 295

From loader 1060001
To loader

Created 31-03-2010
Modified 16-06-2010

Pos	Qty.	Part no.	Description	Remarks
1	1	29319	Plug, 8-polar for RCL 53XX	
2	1	29318	Plug, 7-polar for RCL 53XX	
3	1	29321	Plug, 10-polar for RCL 53XX	
4	1	29320	Plug, 9-polar for RCL 53XX	
5	1	28210	Proximity switch	
6	1	29307	Cable lead-in	
7	4	30346	Screw, stainless	4,0 x 20
8	1	28265	Cable, dump valve, 1.35 m	
9	1	28249	Cable 2 x 0.75	1,4 m
10	1	28258	Plug, solenoid valve	
11	1	28840	Seal	
12	1	28294	Cable, spool sensor	1,3 m
13	1	28252	Cable	1,3 m
14	1	28257	Plug, spool sensor	
15	1	29230	Plug	
16	1	29236	Cable clamp	
17	1	28263	CAN BUS cable	2,5 m
18	1	29224	Cable with socket, 5 m	
19	1	29223	Cable with socket, 2 m	
20	1	28117	Cable with plug	

15/105 - 17/117 SL & DL Parts

Internal ref. 70 04 820

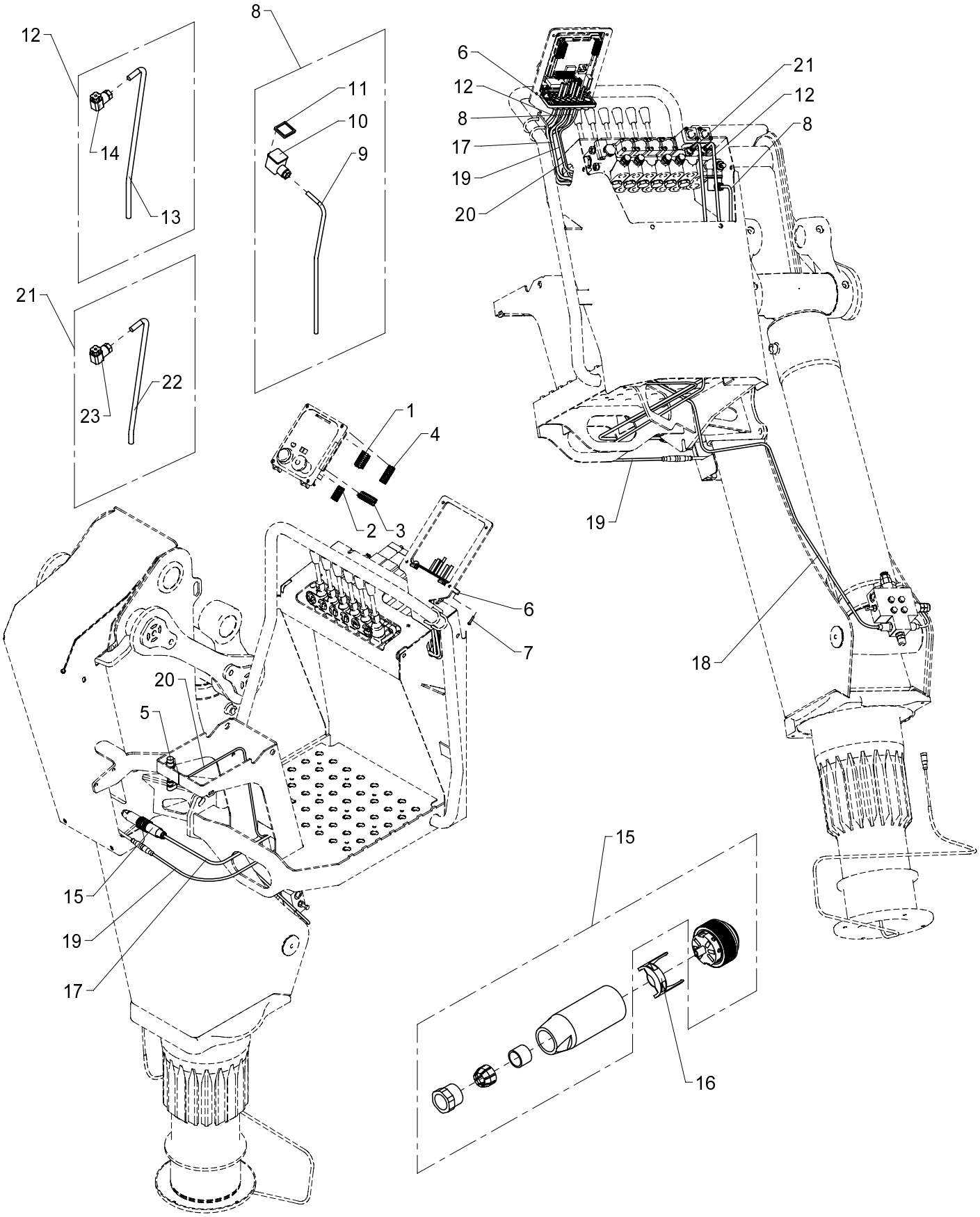

534 20 300

From loader 1060001
To loader

Created 06-04-2010
Modified 16-06-2010

TS platform, 1-circuit fixed flow pump, 2-stage LMB

Pos	Qty.	Part no.	Description	Remarks
1	1	29319	Plug, 8-polar for RCL 53XX	
2	1	29318	Plug, 7-polar for RCL 53XX	
3	1	29321	Plug, 10-polar for RCL 53XX	
4	1	29320	Plug, 9-polar for RCL 53XX	
5	1	28210	Proximity switch	
6	1	29307	Cable lead-in	
7	4	30346	Screw, stainless	4,0 x 20
8	1	28265	Cable, dump valve, 1.35 m	
9	1	28249	Cable 2 x 0.75	1,4 m
10	1	28258	Plug, solenoid valve	
11	1	28840	Seal	
12	1	28294	Cable, spool sensor	1,3 m
13	1	28252	Cable	1,3 m
14	1	28257	Plug, spool sensor	
15	1	29230	Plug	
16	1	29236	Cable clamp	
17	1	28263	CAN BUS cable	2,5 m
18	1	29224	Cable with socket, 5 m	
19	1	29223	Cable with socket, 2 m	
20	1	28117	Cable with plug	
21	1	28267	Cable, sensor	1,3 m
22	1	28252	Cable	1,3 m
23	1	28257	Plug, spool sensor	

534 20 305

15/105 - 17/117 SL & DL Parts

Internal ref. 70 04 830

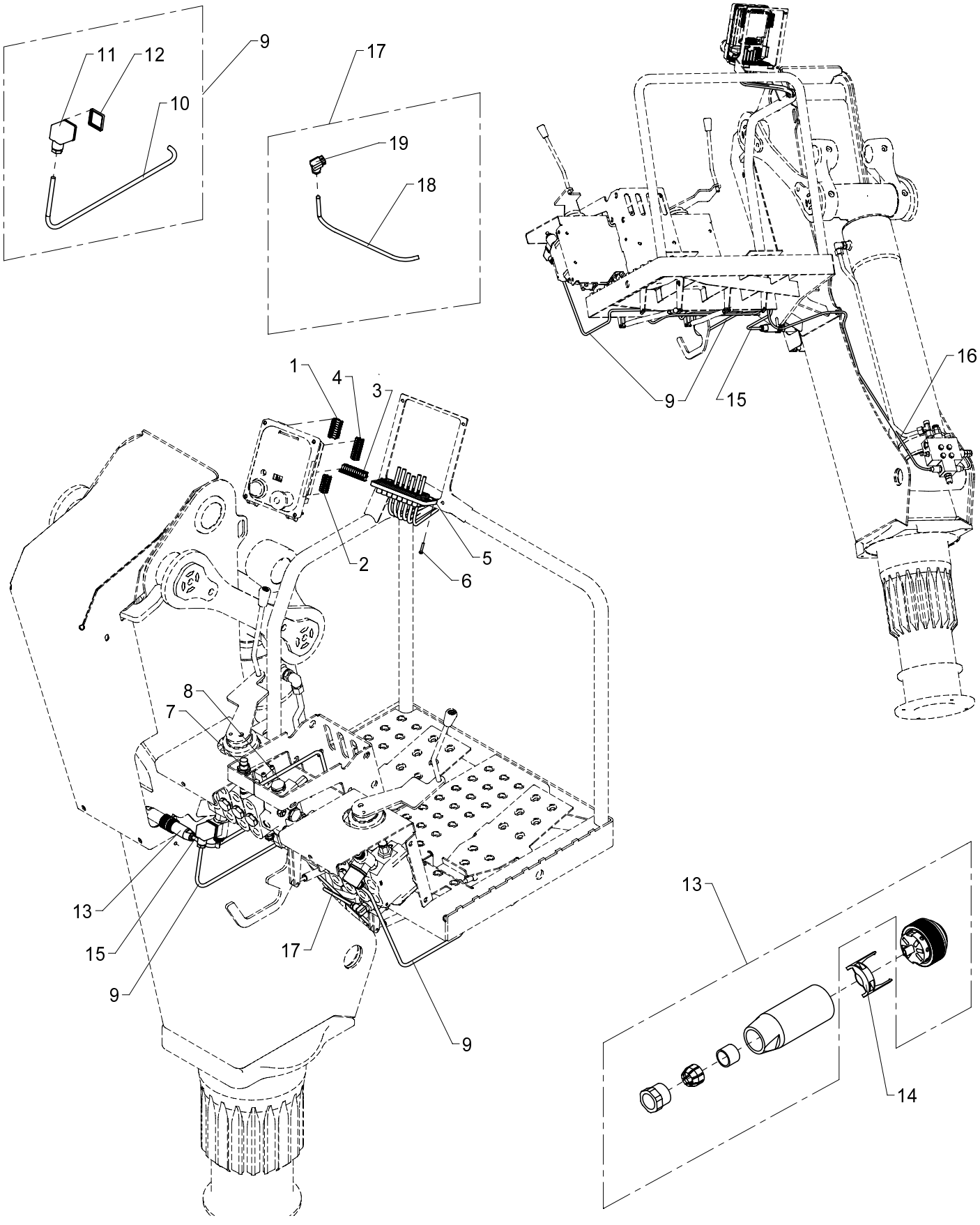

TS platform, 2-circuit fixed flow pump, CE basic system

Pos	Qty.	Part no.	Description	Remarks
1	1	29319	Plug, 8-polar for RCL 53XX	
2	1	29318	Plug, 7-polar for RCL 53XX	
3	1	29322	Plug, 12-polar for RCL 53XX	
4	1	29320	Plug, 9-polar for RCL 53XX	
5	1	29307	Cable lead-in	
6	4	30346	Screw, stainless	4,0 x 20
7	1	28210	Proximity switch	
8	1	28117	Cable with plug	
9	2	28286	Cable, dump valve	
10	2	28249	Cable 2 x 0.75	3 m
11	2	28258	Plug, solenoid valve	
12	2	28840	Seal	
13	1	29230	Plug	
14	1	29236	Cable clamp	
15	1	28263	CAN BUS cable	2 m
16	1	29224	Cable with socket, 5 m	
17	1	28819	Cable, spool sensor	
18	1	28252	Cable	3 m
19	1	28257	Plug, spool sensor	

15/105 - 17/117 SL & DL Parts

Internal ref. 63 40 110

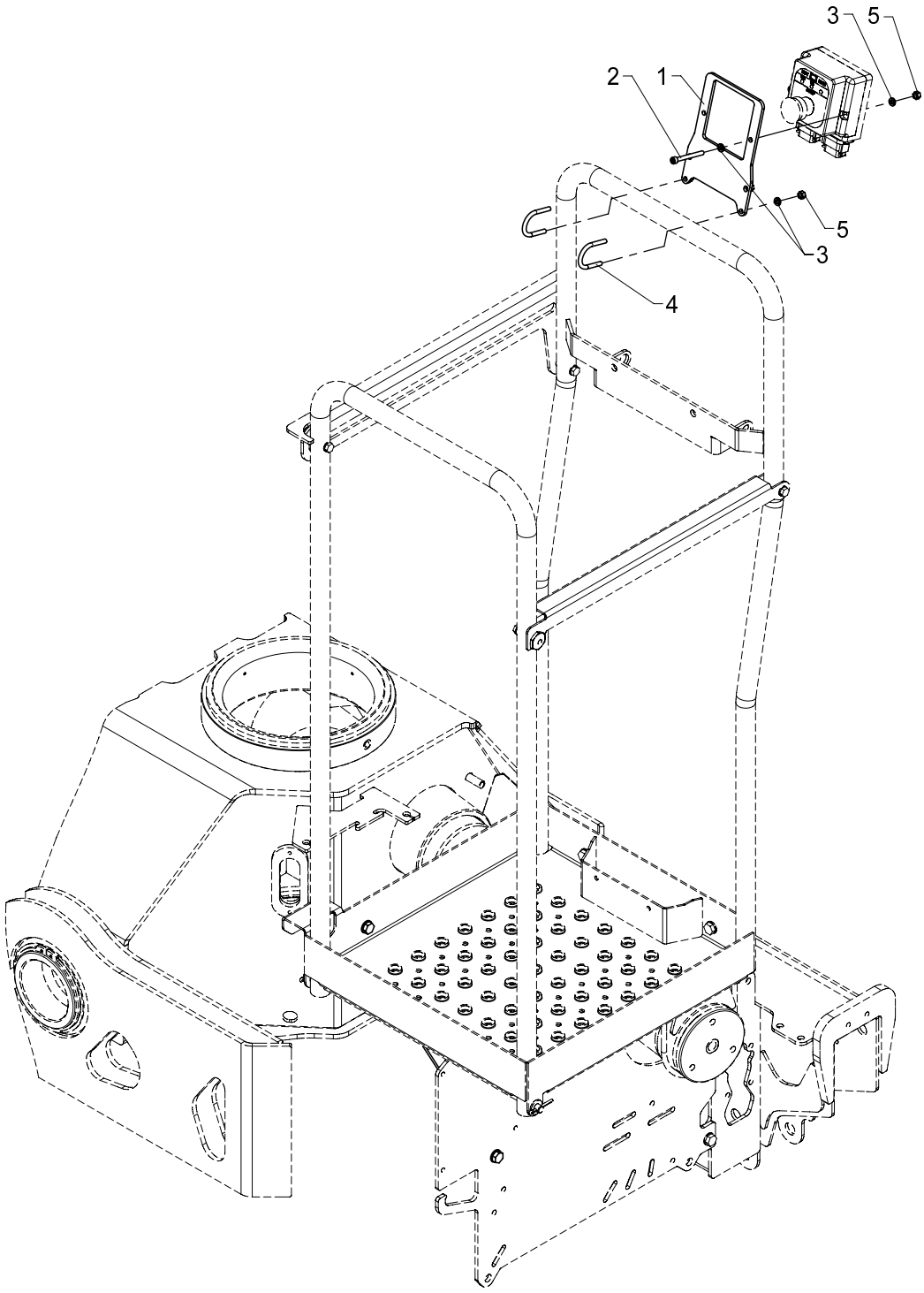

534 20 320

From loader 1060001
To loader

Created 25-02-2009
Modified 19-05-2010

Mounting fittings for ECT 5310

Pos	Qty.	Part no.	Description	Remarks
1	1	6340468	Mounting fittings (ECT 5310)	
2	2	30441	Screw	MC6 x 60
3	8	32302	Face washer, stainless	6 mm
4	2	6340903	Clamp	
5	6	30884	Lock nut, stainless	M6

15/105 - 17/117 SL & DL Parts

Internal ref. 63 40 130

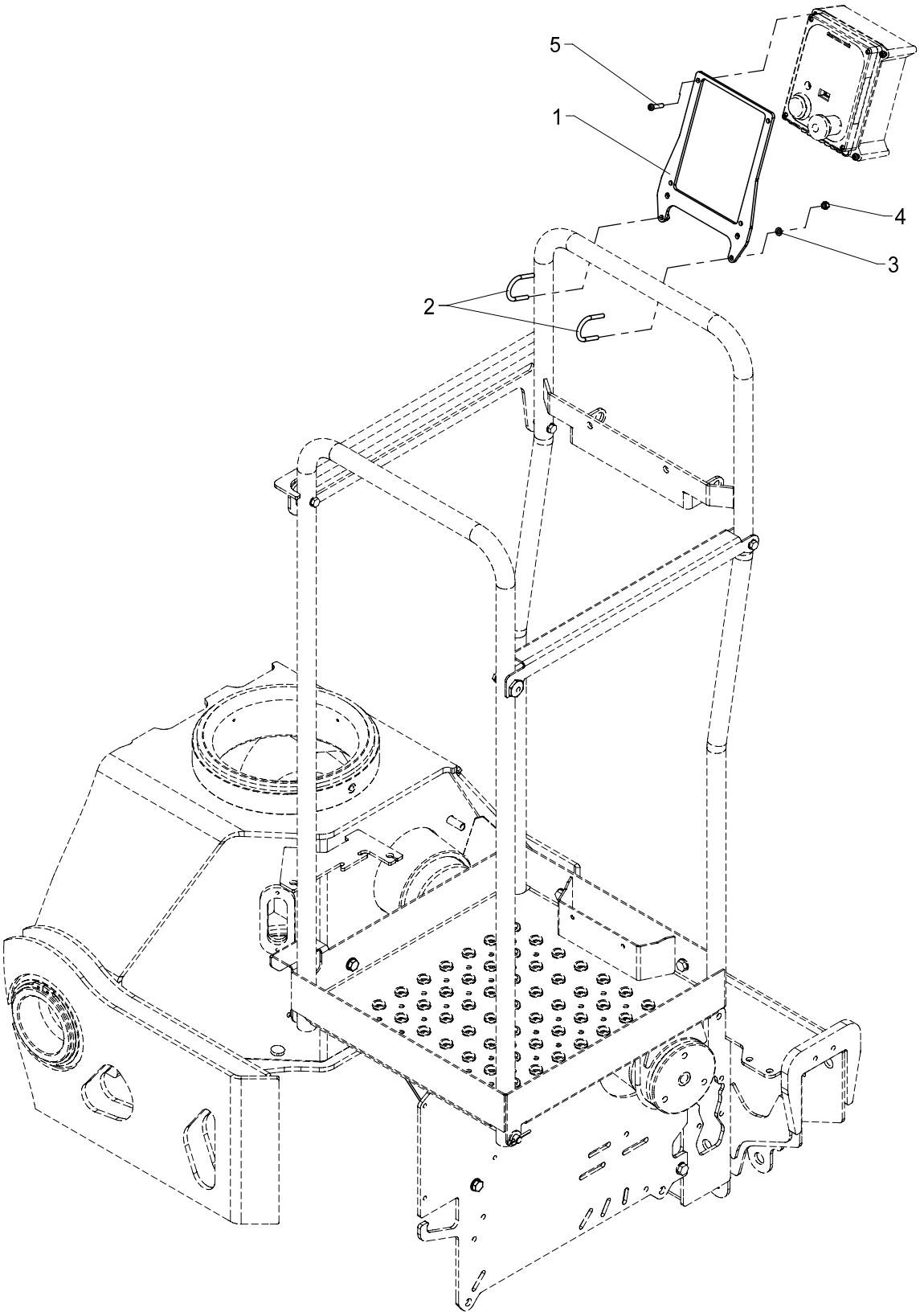

534 20 325

From loader 1060001
To loader

Created 25-02-2009
Modified 19-05-2010

Mounting fittings for ECT 5320 (HS std.)

Pos	Qty.	Part no.	Description	Remarks
1	1	6340479	Bracket for ECT 5320	
2	2	6340903	Clamp	
3	4	32302	Face washer, stainless	6 mm
4	4	30884	Lock nut, stainless	M6
5	4	30340	Screw, stainless	6,0 x 25

15/105 - 17/117 SL & DL Parts

Internal ref. 63 42 130

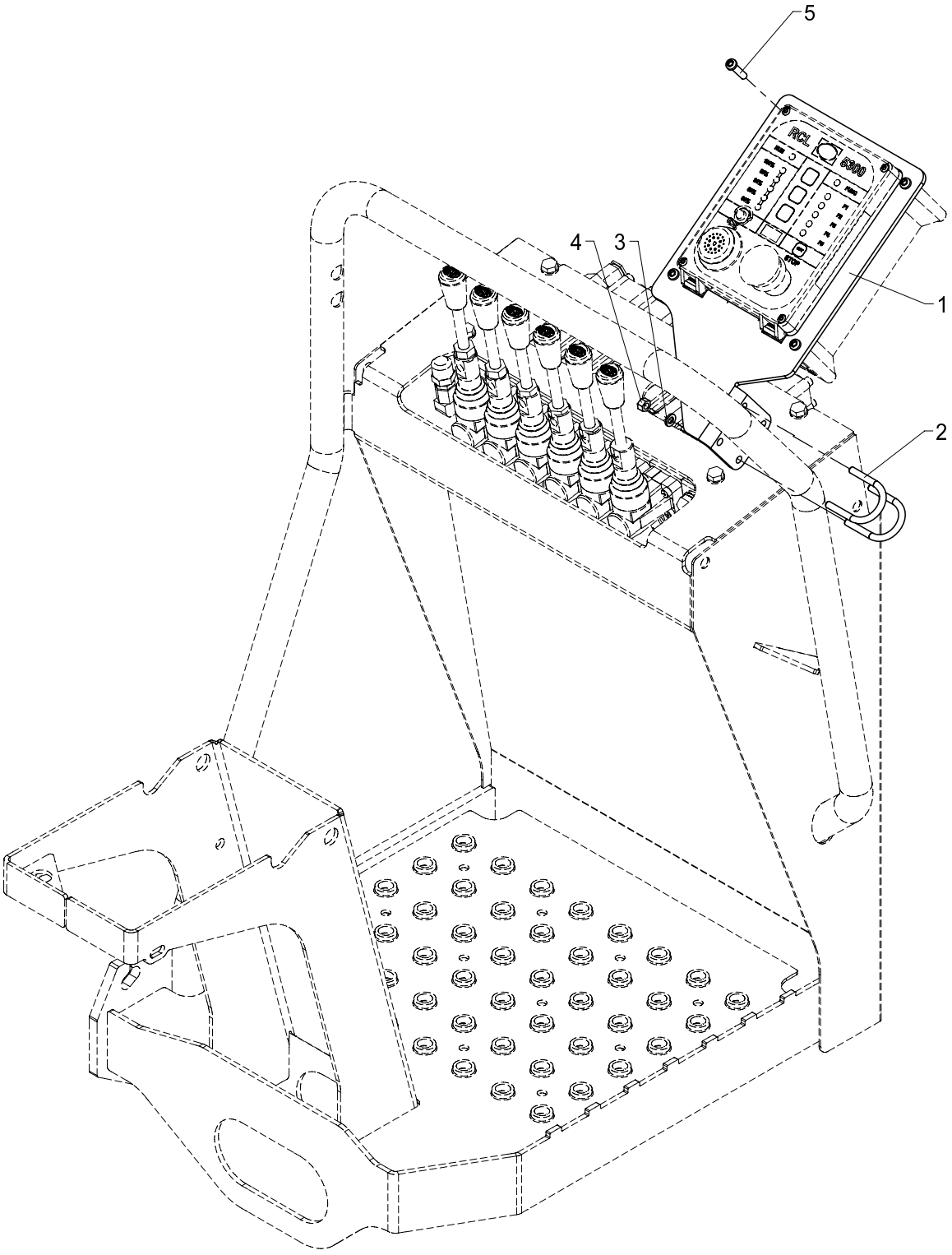

534 20 330

From loader 1060001
To loader

Created
Modified 19-05-2010

Mounting fittings RCL 5300 (TSRC linear)

Pos	Qty.	Part no.	Description	Remarks
1	1	6340906	Fittings for RCL 5300 (TS)	
2	2	6340903	Clamp	
3	4	32302	Face washer, stainless	6 mm
4	4	30884	Lock nut, stainless	M6
5	4	30340	Screw, stainless	6,0 x 25

15/105 - 17/117 SL & DL Parts

Internal ref. 70 03 060

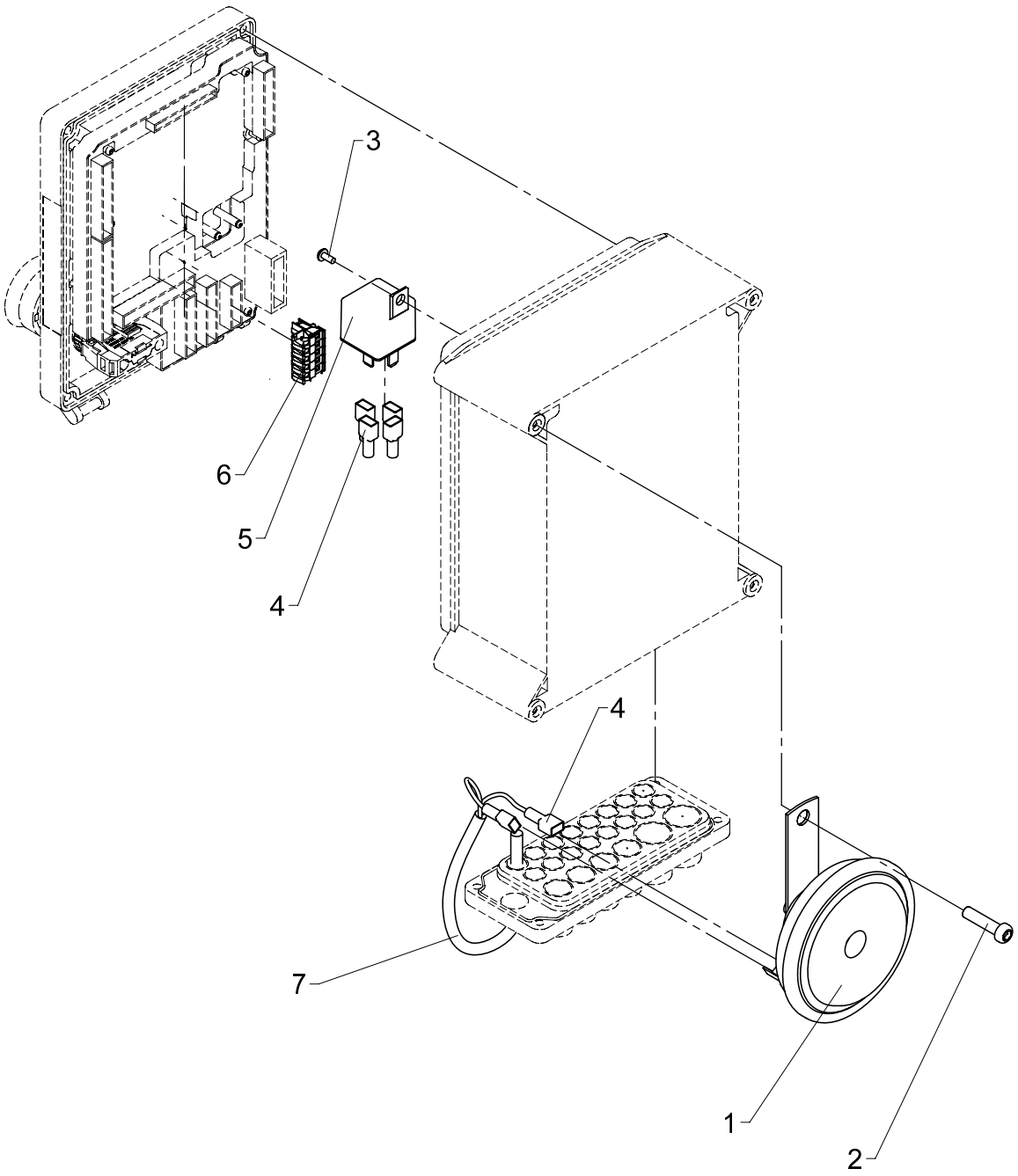

534 20 350

From loader 1060001
To loader

Created 01-05-2009
Modified

Horn, no RC

Pos	Qty.	Part no.	Description	Remarks
1	1	28971	Horn, 24 V, 2.5 Amp.	
2	1	30340	Screw, stainless	6,0 x 25
3	1	30361	Screw, stainless	3,0 x 8
4	6	27429	Clamp	
5	1	27342	Relay, 24V	
6	1	29317	Plug, 5-polar for RCL 53XX	
7	1	28249	Cable 2 x 0.75	0,8 m

15/105 - 17/117 SL & DL Parts

Internal ref. 70 03 050

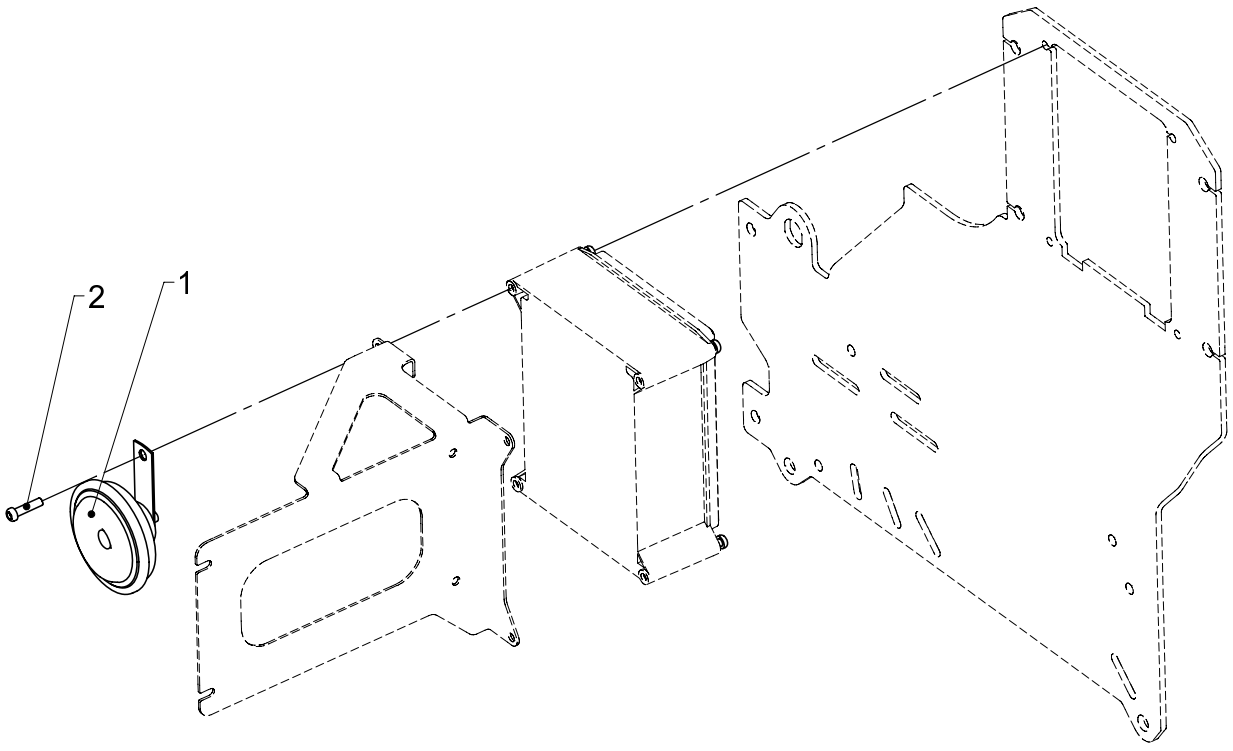

Horn, RC

534 20 360

From loader 1060001
To loader

Created 01-05-2009
Modified

Pos	Qty.	Part no.	Description	Remarks
1	1	28971	Horn, 24 V, 2.5 Amp.	
2	1	30340	Screw, stainless	6,0 x 25

15/105 - 17/117 SL & DL Parts

Internal ref. 70 04 140

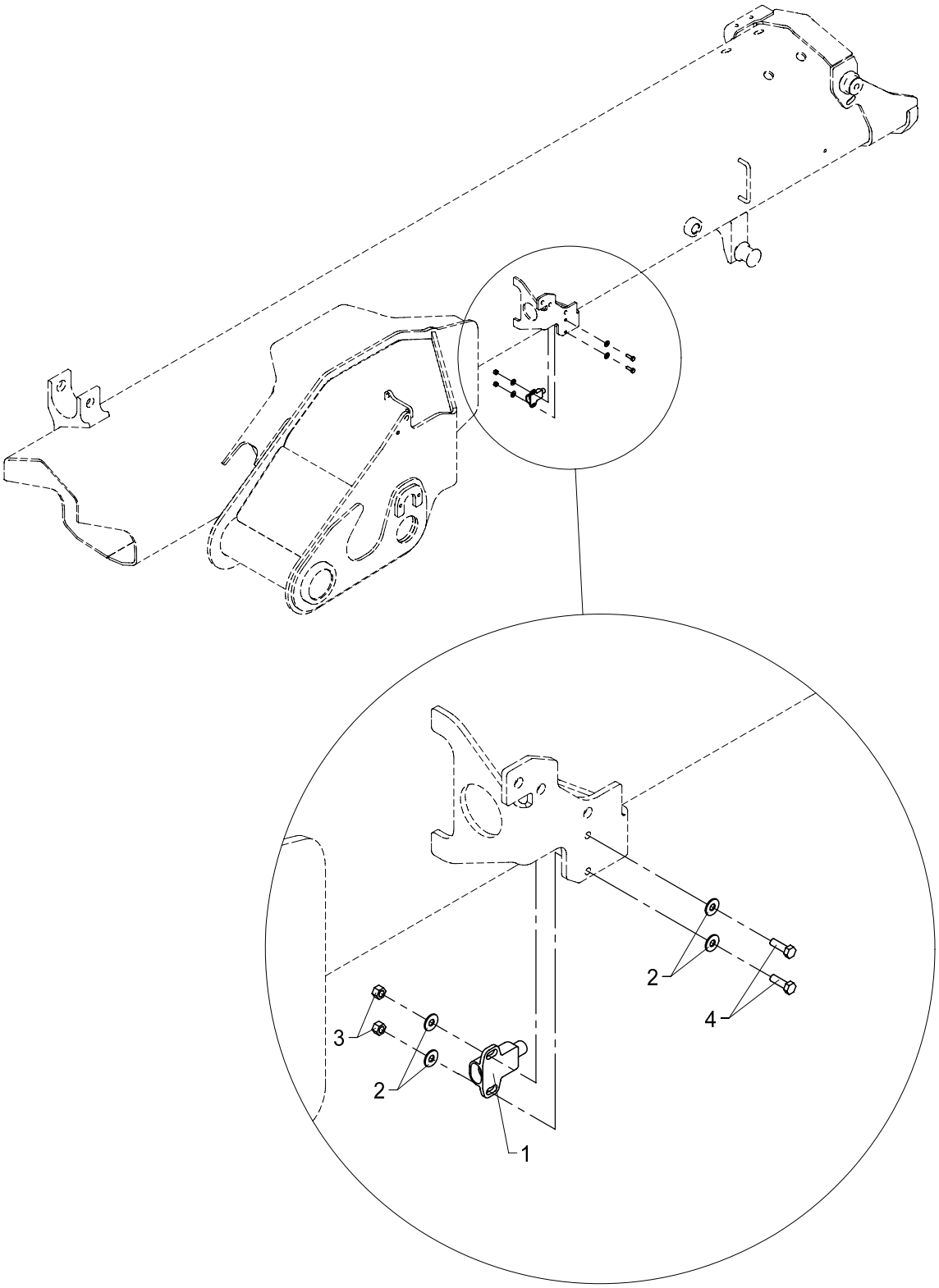

534 20 370

From loader 1060001
To loader

Created 01-05-2009
Modified 13-05-2009

Horizontal sensor + screws

Pos	Qty.	Part no.	Description	Remarks
1	1	29103	Mercury switch	
2	4	32308	Washer	5 mm
3	2	30859	Lock nut, stainless	M5
4	2	30121	Set screw	M5 x 16

534 20 390

15/105 - 17/117 SL & DL Parts

70 04 220
70 04 340
70 03 030
Internal ref. 70 05 310

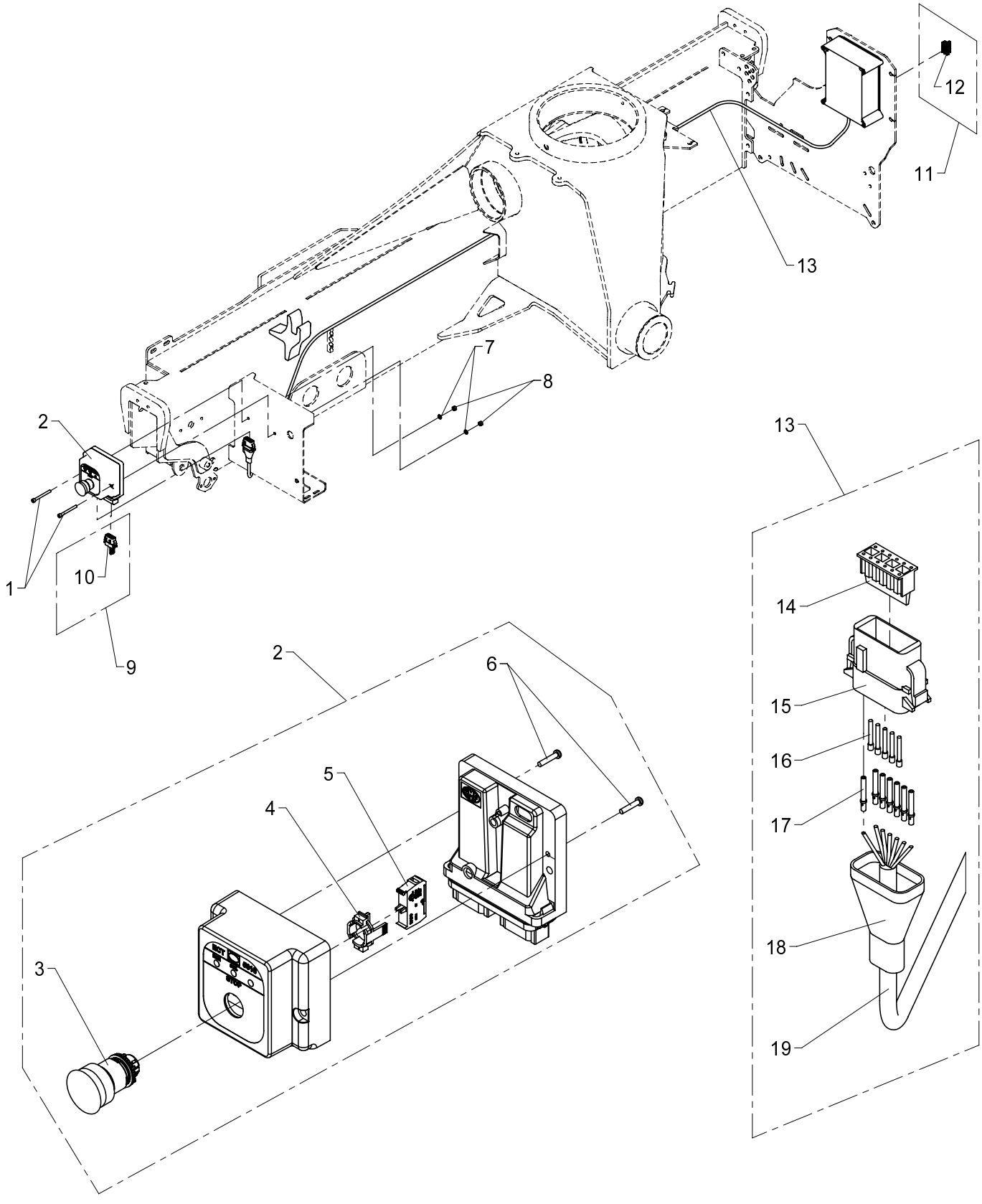

534 20 390

From loader 1060001
To loader

Created 01-05-2009
Modified 17-03-2010

ECT 5310 on the side of the dual controls

Pos	Qty.	Part no.	Description	Remarks
1	2	30441	Screw	MC6 x 60
2	1	29335	ECT5310 external stop button	
3	1	29196	Stop button	
4	1	29198	Attachment, stop button	
5	1	29197	Switch element, stop button	
6	2	30346	Screw, stainless	4,0 x 20
7	2	32302	Face washer, stainless	6 mm
8	2	30884	Lock nut, stainless	M6
9	1	7004220	CAN termination ECT5310	
10	1	29342	CAN termination ECT	
11	1	7004340	Plug, 7-polar for RCL	
12	1	29318	Plug, 7-polar for RCL 53XX	
13	1	7003030	3.5 m CAN+STOP cable ECT5310	
14	1	29328	Lock for plug for ECT5310	
15	1	29326	Plug, type A for ECT5310	
16	5	29339	Sealing for plug for ECT5310	
17	7	29329	Pin for plug for ECT5310	
18	1	28566	Insulation, black	10 cm
19	1	28263	CAN BUS cable	3,5 m

15/105 - 17/117 SL & DL Parts

Internal ref. 70 05 320

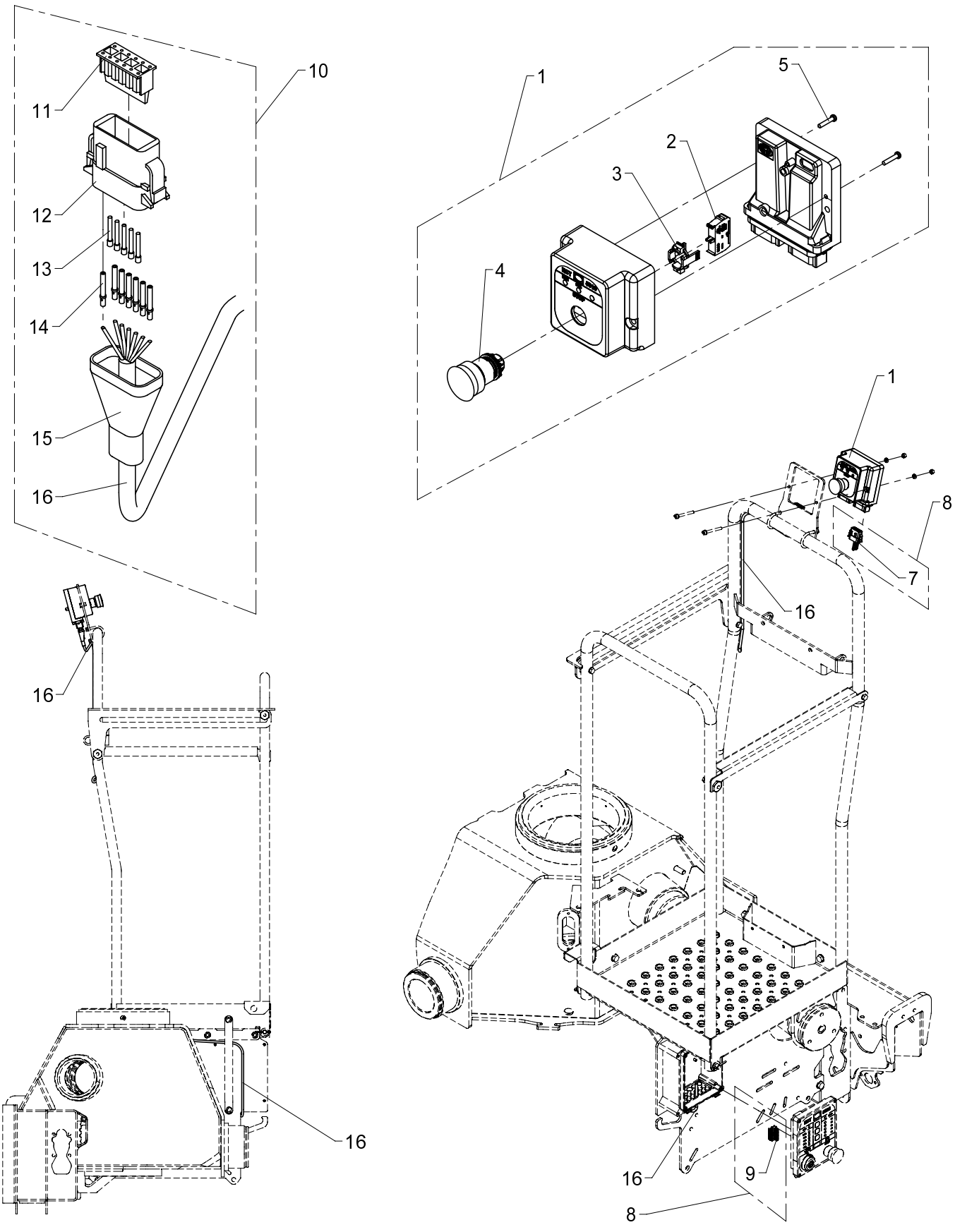

ECT 5310 on stand-up platform (HS)

534 20 420

From loader 1060001
To loader

Created 21-04-2010
Modified

Pos	Qty.	Part no.	Description	Remarks
1	1	29335	ECT5310 external stop button	
2	1	29197	Switch element, stop button	
3	1	29198	Attachment, stop button	
4	1	29196	Stop button	
5	2	30346	Screw, stainless	4,0 x 20
6	1	7004220	CAN termination ECT5310	
7	1	29342	CAN termination ECT	
8	1	7004340	Plug, 7-polar for RCL	
9	1	29318	Plug, 7-polar for RCL 53XX	
10	1	7003030	3.5 m CAN+STOP cable ECT5310	
11	1	29328	Lock for plug for ECT5310	
12	1	29326	Plug, type A for ECT5310	
13	5	29339	Sealing for plug for ECT5310	
14	7	29329	Pin for plug for ECT5310	
15	1	28566	Insulation, black	10 cm
16	1	28263	CAN BUS cable	3,5 m

15/105 - 17/117 SL & DL Parts

Internal ref. 70 05 330

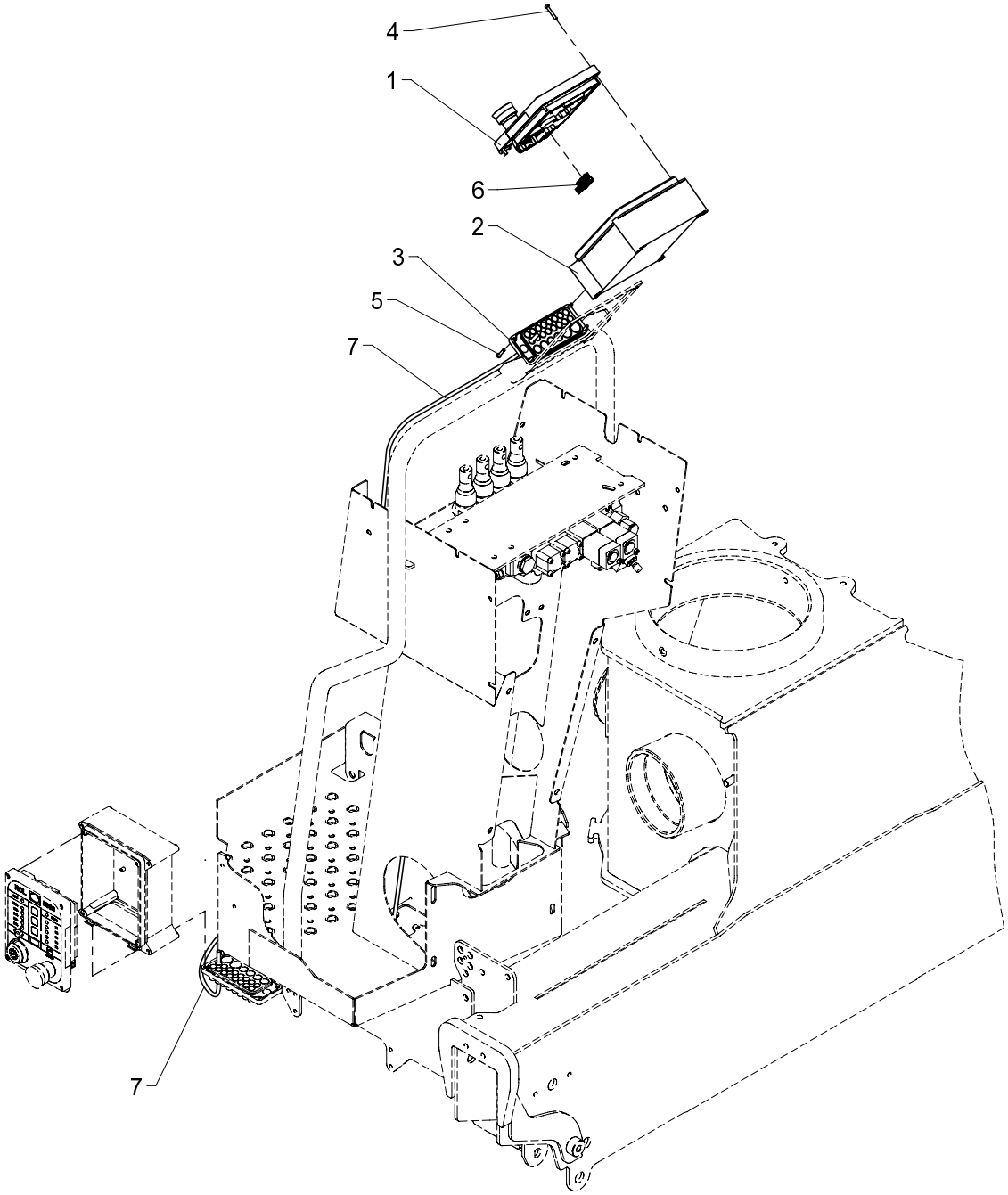

ECT 5320 on stand-up platform (HS)

534 20 430

From loader 1060001
To loader

Created 01-05-2009
Modified 13-05-2009

Pos	Qty.	Part no.	Description	Remarks
1	1	29303	Front complete, ECT5320	
2	1	29304	Bottom f. RCL-box incl. hinge	
3	1	29307	Cable lead-in	
4	4	30347	Screw, stainless	4,0 x 25
5	4	30346	Screw, stainless	4,0 x 20
6	1	29318	Plug, 7-polar for RCL 53XX	
7	1	28263	CAN BUS cable	3 m

15/105 - 17/117 SL & DL Parts

70 04 340
Internal ref. 70 03 250

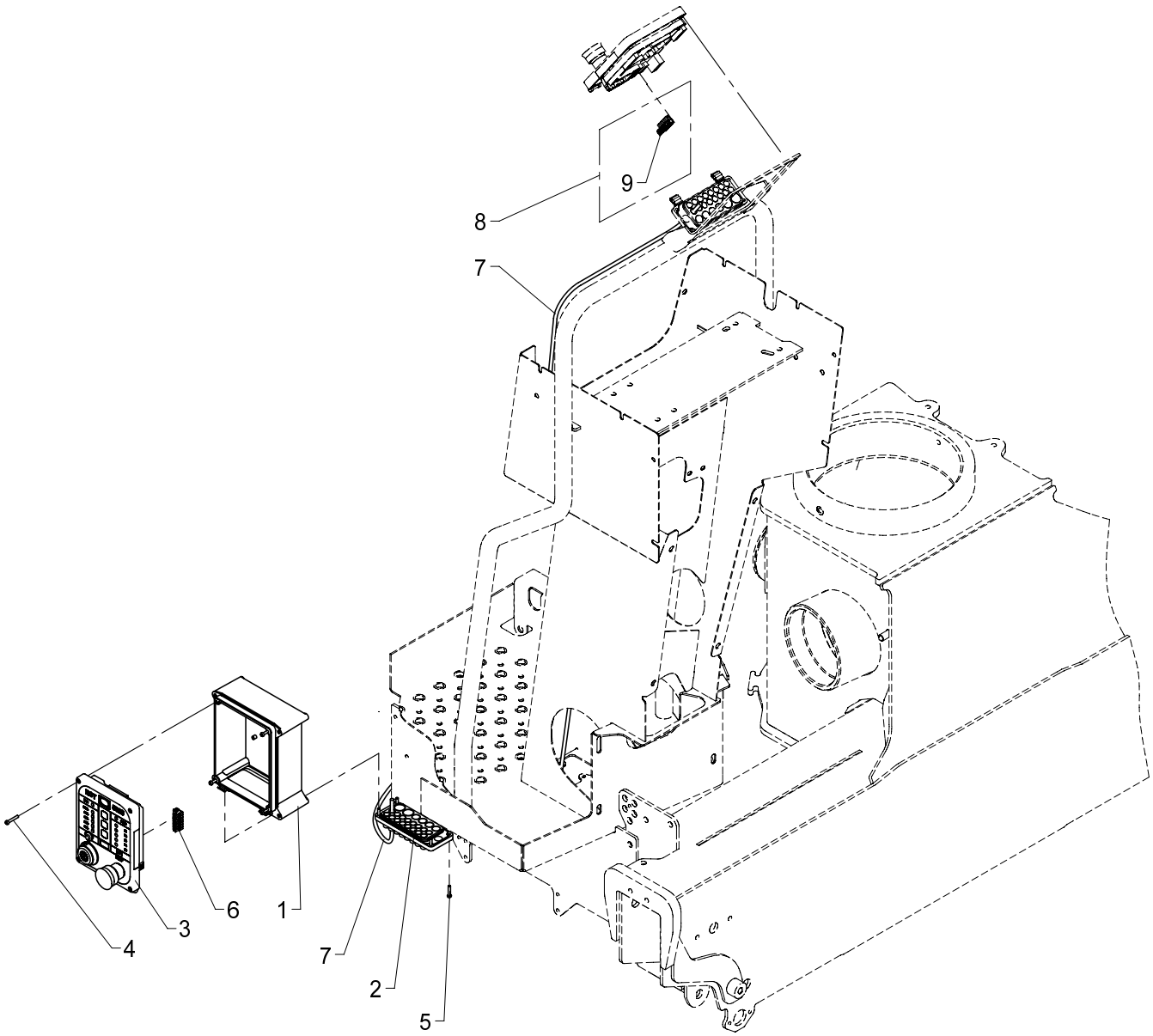

534 20 440

From loader 1060001
To loader

Created 29-06-2010
Modified

ECT 5320 compl. + 3.5m cable

Pos	Qty.	Part no.	Description	Remarks
1	1	29304	Bottom f. RCL-box incl. hinge	
2	1	29307	Cable lead-in	
3	1	29303	Front complete, ECT5320	
4	4	30347	Screw, stainless	4,0 x 25
5	4	30346	Screw, stainless	4,0 x 20
6	1	29318	Plug, 7-polar for RCL 53XX	
7	1	28263	CAN BUS cable	3,5 m
8	1	7004340	Plug, 7-polar for RCL	
9	1	29318	Plug, 7-polar for RCL 53XX	

15/105 - 17/117 SL & DL Parts

Internal ref. 70 04 770

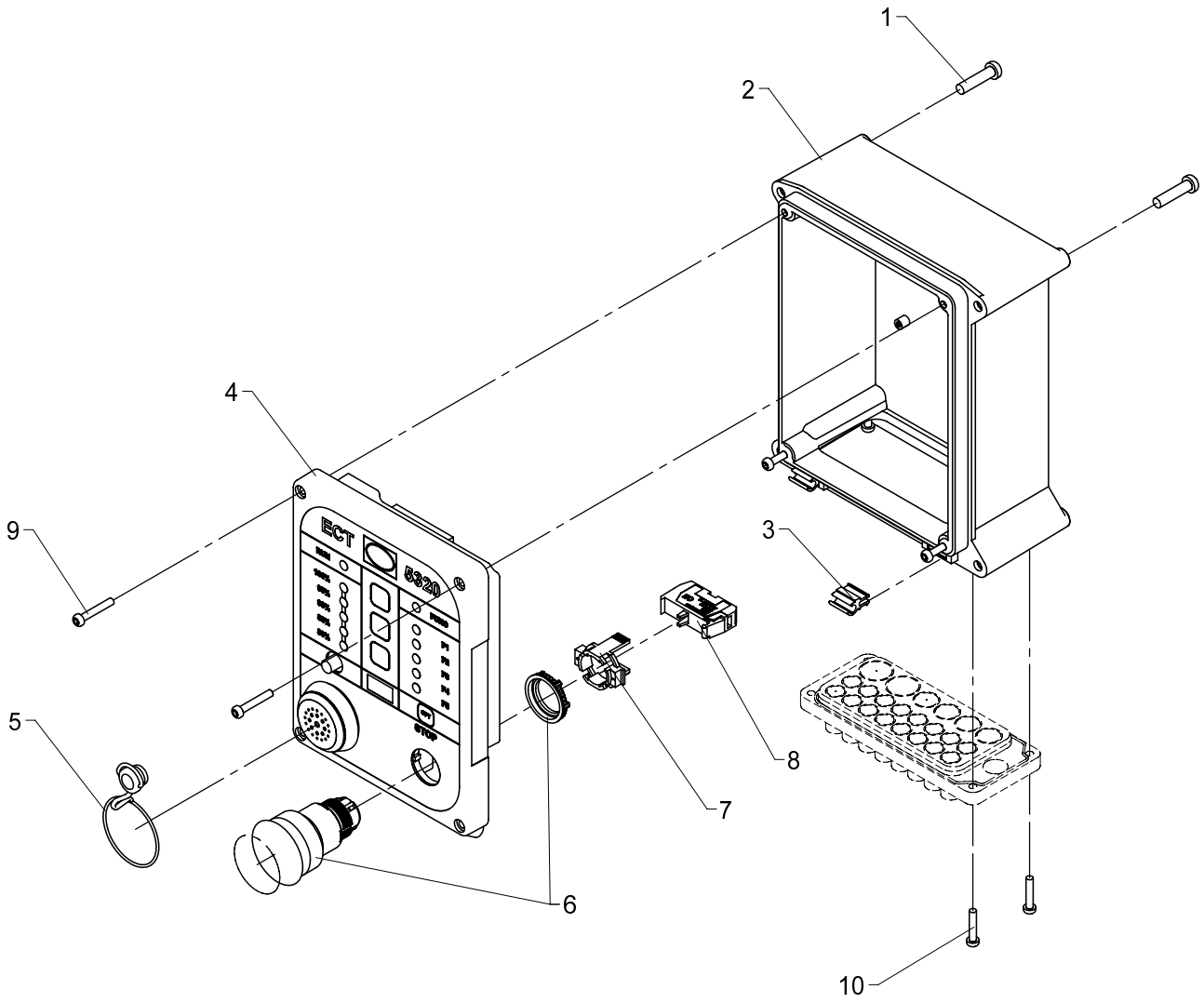

ECT 5320 in the valve block side, TS

534 20 450

From loader 1060001
To loader

Created 06-04-2010
Modified

Pos	Qty.	Part no.	Description	Remarks
1	4	30340	Screw, stainless	6,0 x 25
2	1	29304	Bottom f. RCL-box incl. hinge	
3	1	29305	Hinge	
4	1	29303	Front complete, ECT5320	
5	1	29306	Plug	
6	1	29196	Stop button	
7	1	29198	Attachment, stop button	
8	1	29197	Switch element, stop button	
9	4	30347	Screw, stainless	4,0 x 25
10	4	30346	Screw, stainless	4,0 x 20

15/105 - 17/117 SL & DL Parts

Internal ref. 70 04 500

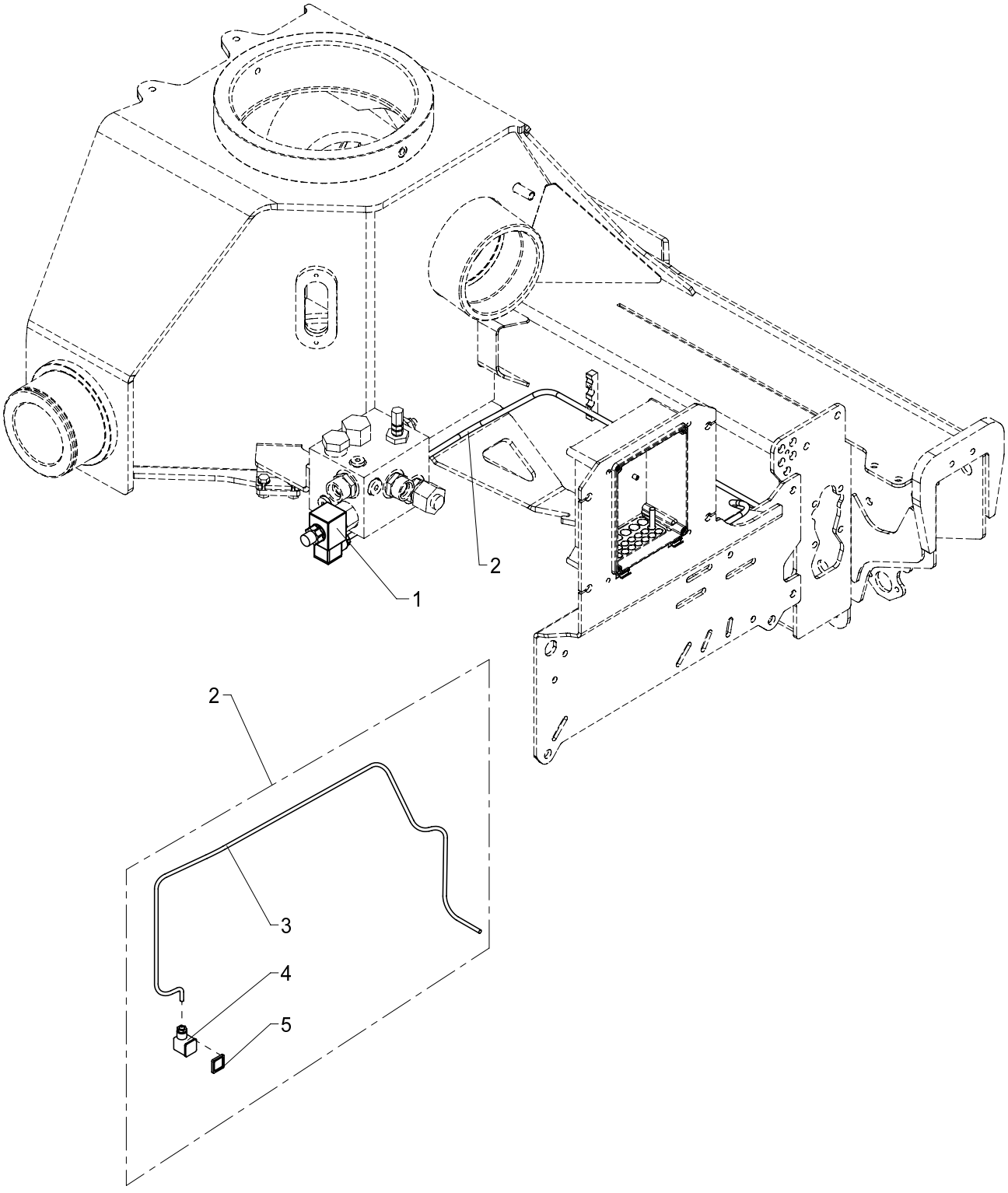

534 20 540

From loader 1060001
To loader

Created 21-04-2010
Modified

HDL without RC

Pos	Qty.	Part no.	Description	Remarks
1	1	61778	Solenoid	
2	1	28265	Cable, dump valve, 1.35 m	
3	1	28249	Cable 2 x 0.75	
4	1	28258	Plug, solenoid valve	
5	1	28840	Seal	

15/105 - 17/117 SL & DL Parts

Internal ref. 63 41 830

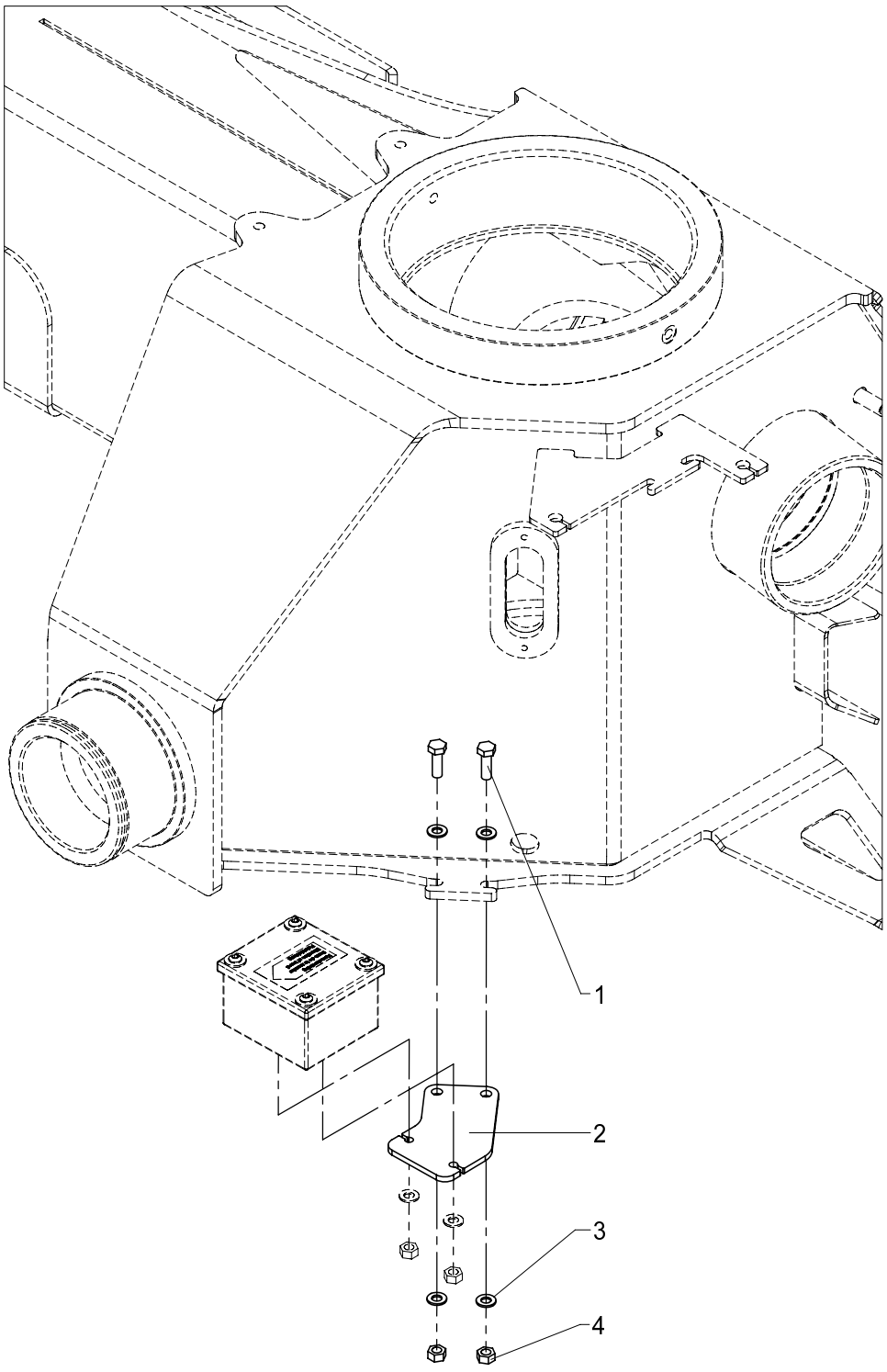

534 20 565

From loader 1060001
To loader

Created 25-02-2009
Modified

Mounting fittings for EVS

Pos	Qty.	Part no.	Description	Remarks
1	2	30134	Set screw, stainless	M8 x 25
2	1	6340274	Mounting fittings (AIC 5062)	
3	4	31147	Washer, stainless	8 mm
4	2	30856	Nut, stainless	M8

15/105 - 17/117 SL & DL Parts

Internal ref. 70 04 130

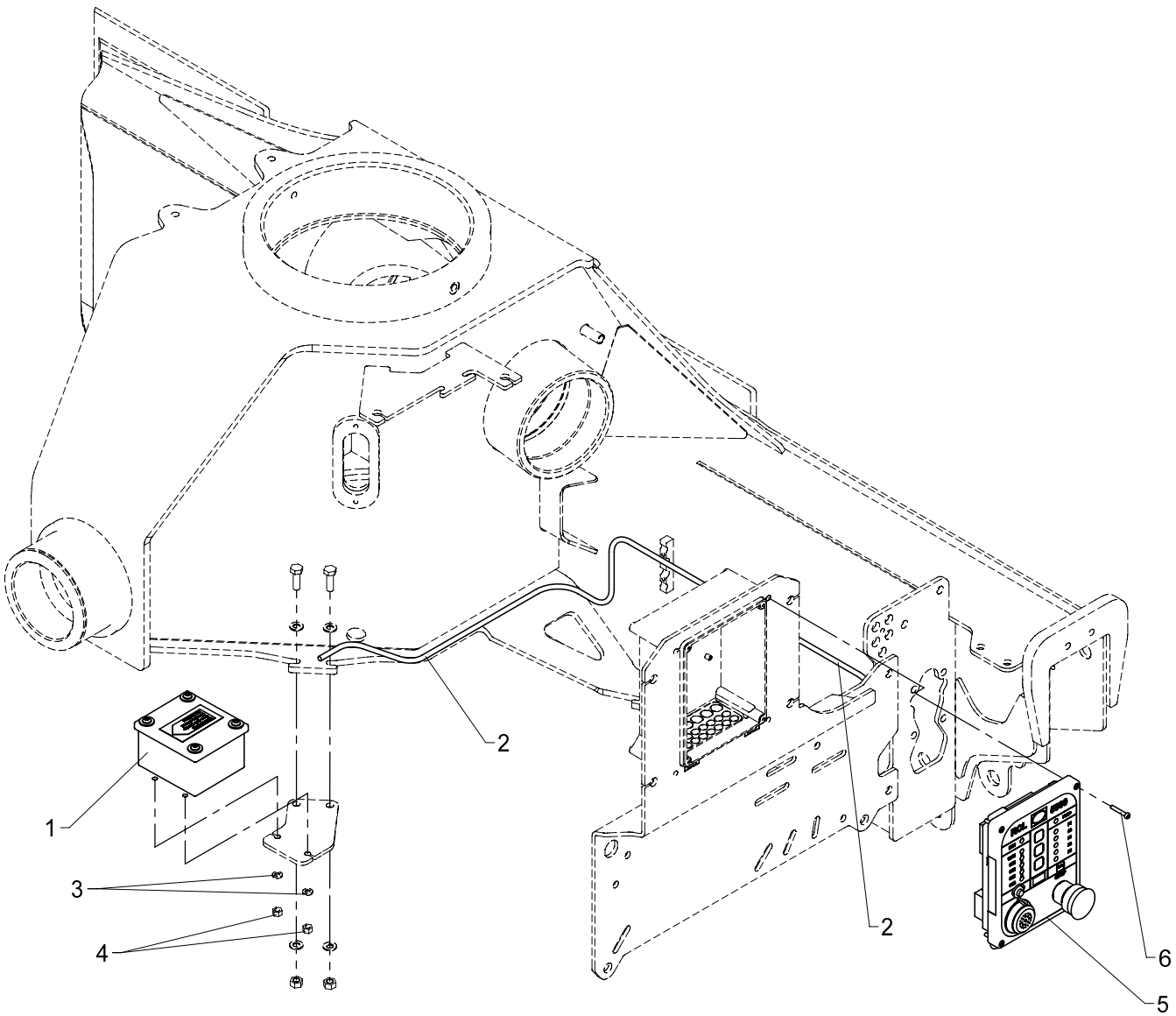

EVS

Pos	Qty.	Part no.	Description	Remarks
1	1	28726	AIC 5062 for RCL 5300	250 Kbaud
2	1	28263	CAN BUS cable	3,5 m
3	2	32302	Face washer, stainless	6 mm
4	2	30884	Lock nut, stainless	M6
5	1	29301	Front complete, RCL 5300	
6	4	30347	Screw, stainless	4,0 x 25

15/105 - 17/117 SL & DL Parts

Internal ref. 70 04 910

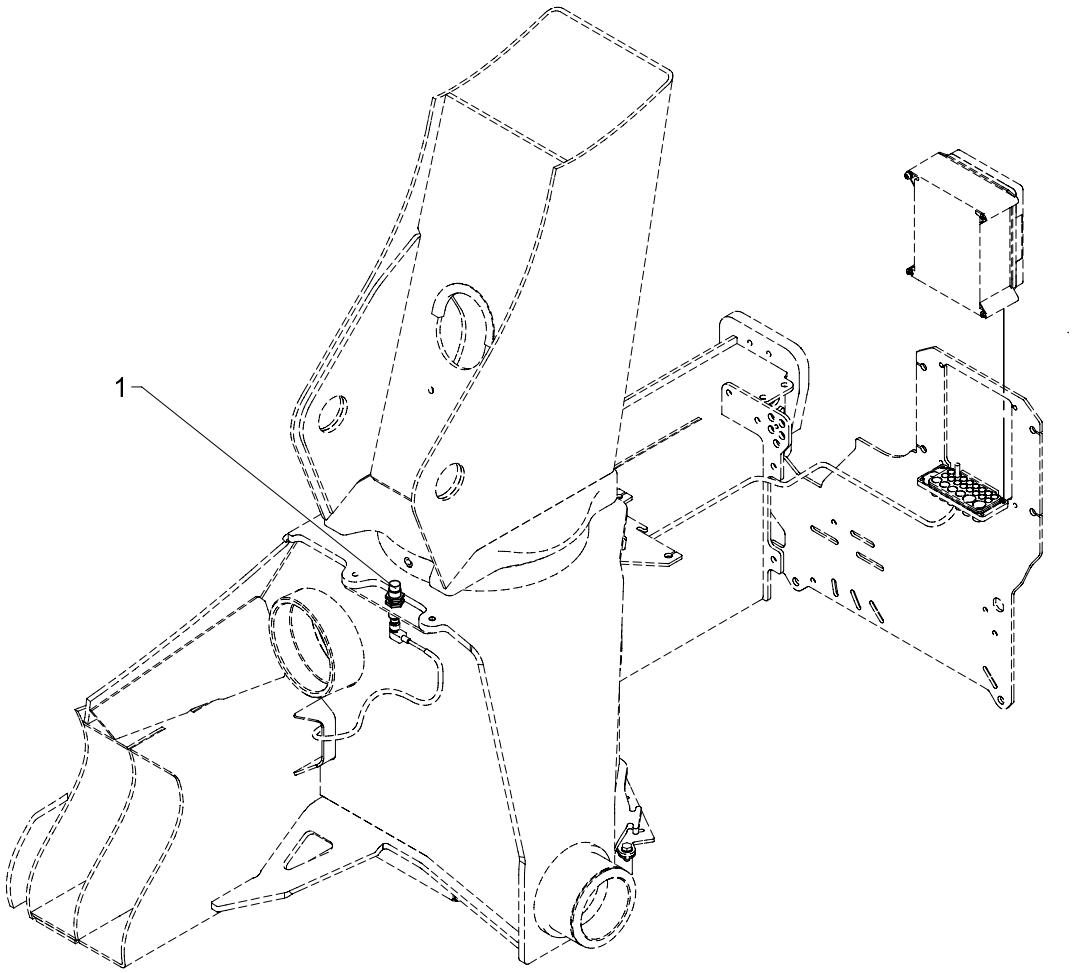

Slewing, electric parts

534 20 610

From loader 1060001
To loader

Created 01-05-2009
Modified

Pos	Qty.	Part no.	Description	Remarks
1	1	28210	Proximity switch	

15/105 - 17/117 SL & DL Parts

Internal ref. 70 04 170

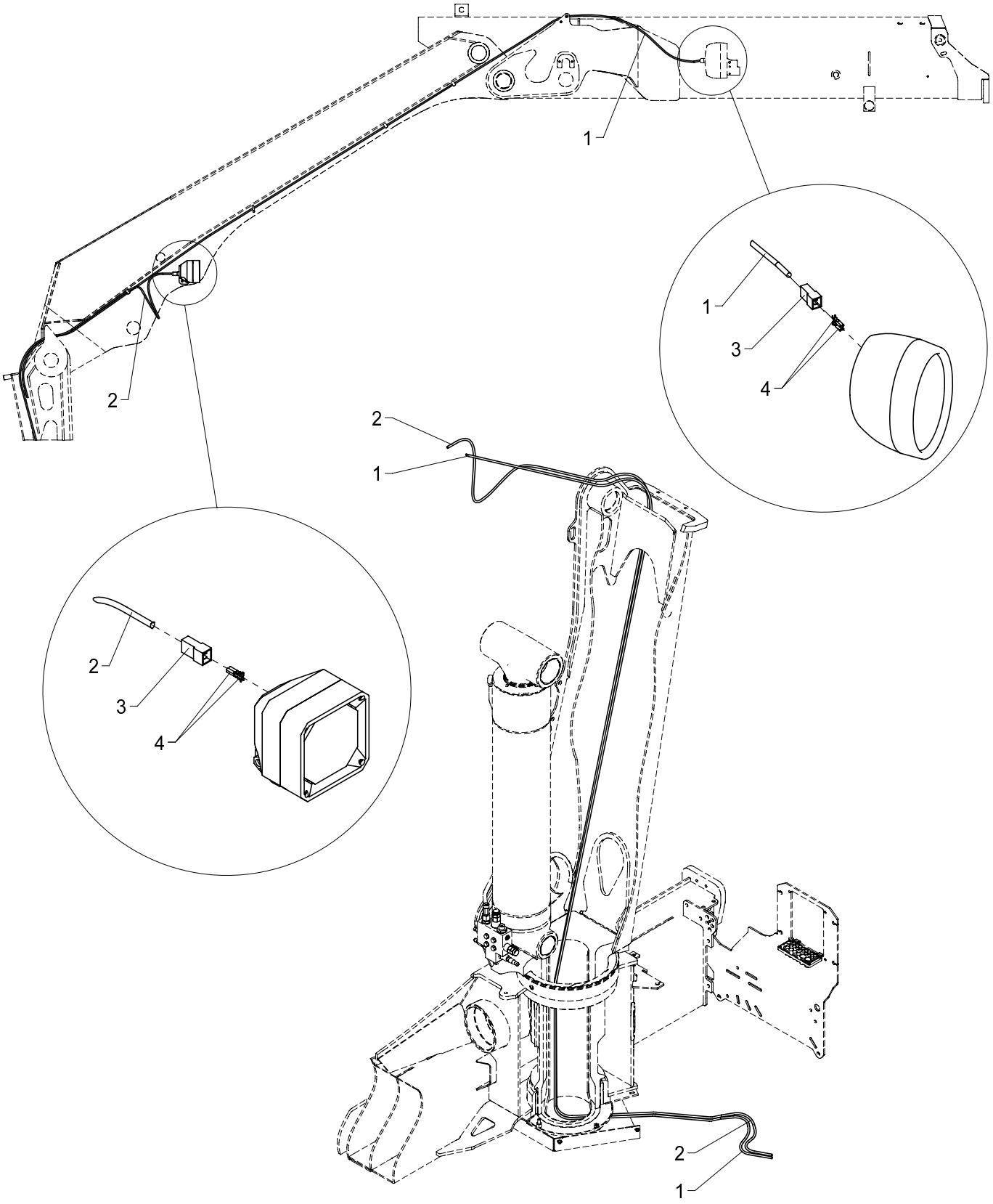

Spotlight, main boom + jib (cable)

534 20 625

From loader 1060001
To loader

Created 01-05-2009
Modified 25-06-2010

Pos	Qty.	Part no.	Description	Remarks
1	1	27215	Wire 2 x 1.5	9 m
2	1	27215	Wire 2 x 1.5	7 m
3	2	27447	Multisocket - male	
4	4	27422	Plug	

15/105 - 17/117 SL & DL Parts

Internal ref. 63 41 820

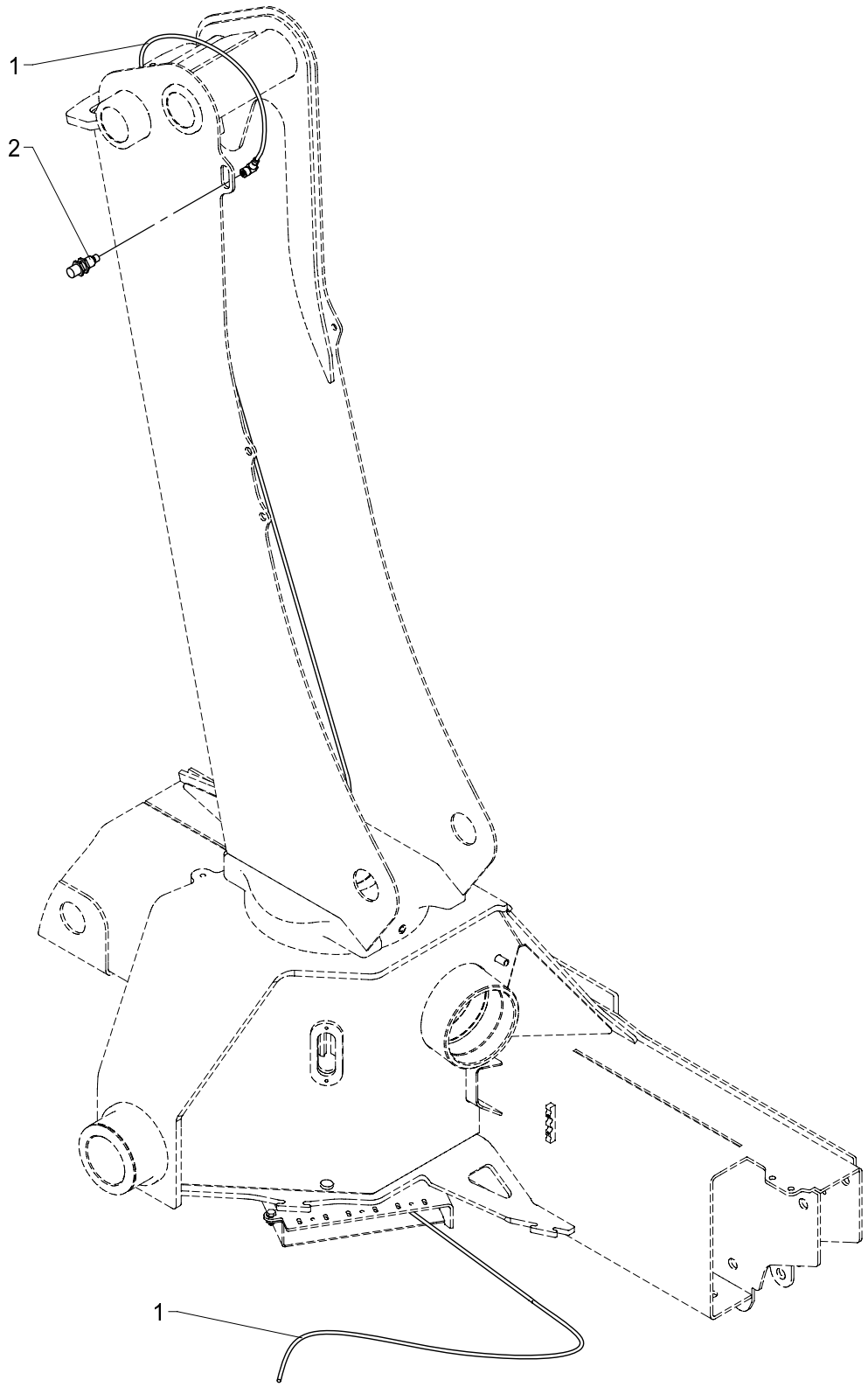

534 20 650

From loader 1060001
To loader

Created 01-05-2009
Modified 14-05-2009

Height indicateur

Pos	Qty.	Part no.	Description	Remarks
1	1	28902	Cable with plug, 10 m.	
2	1	29124	Proximity switch	

15/105 - 17/117 SL & DL Parts

Internal ref. 70 05 230

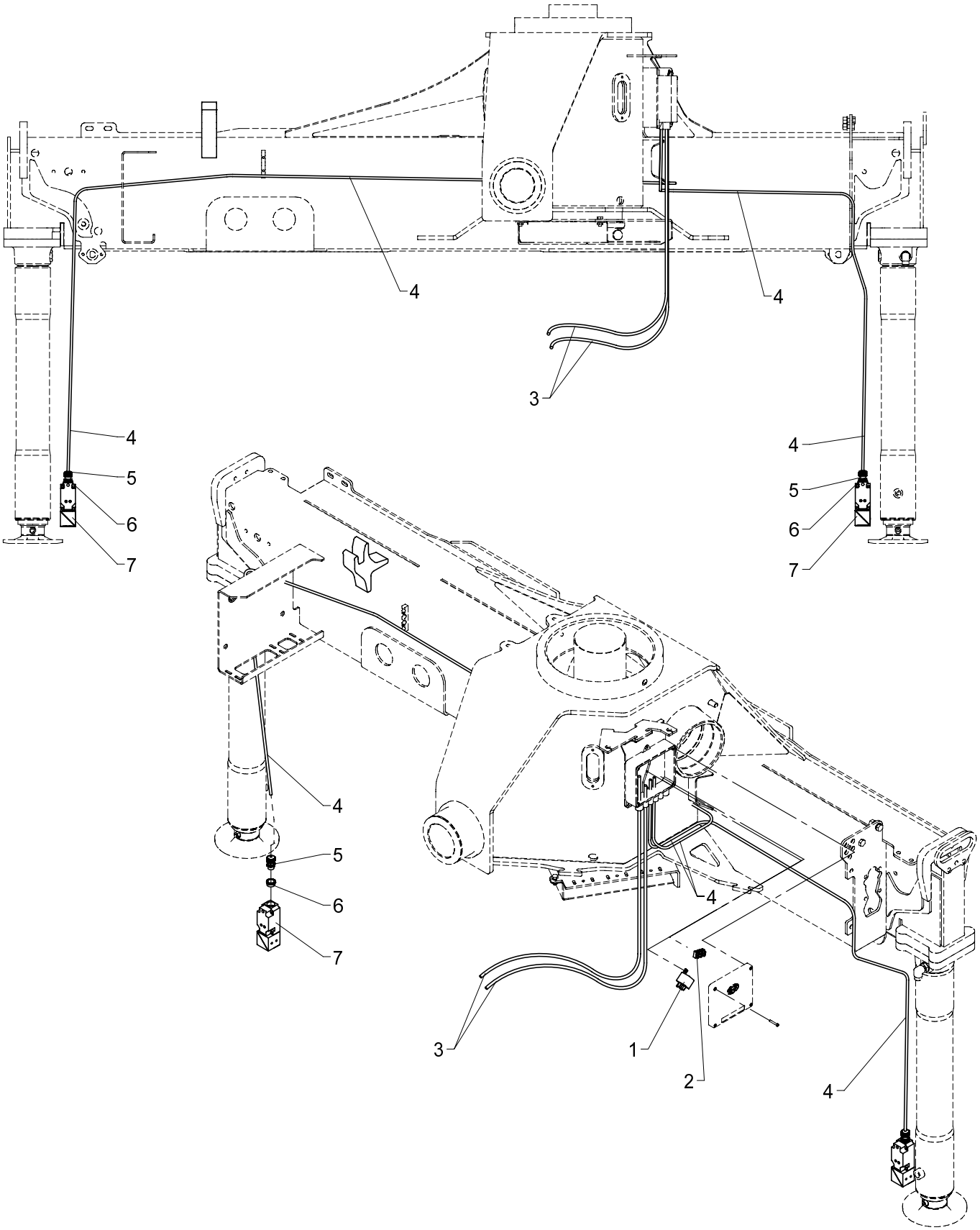

534 20 655

From loader 1060001
To loader

Created 22-03-2010
Modified

CYBEW, Transport alarm - stabilizer leg and beam

Pos	Qty.	Part no.	Description	Remarks
1	1	27342	Relay, 24V	
2	1	27281	Terminal block	
3	2	27215	Wire 2 x 1.5	6m
4	2	28262	Cable 4 x 0.75	5 m
5	2	28246	Bushing	
6	2	27866	Socket	
7	2	27598	Proximity switch	

15/105 - 17/117 SL & DL Parts

Internal ref. 70 05 260

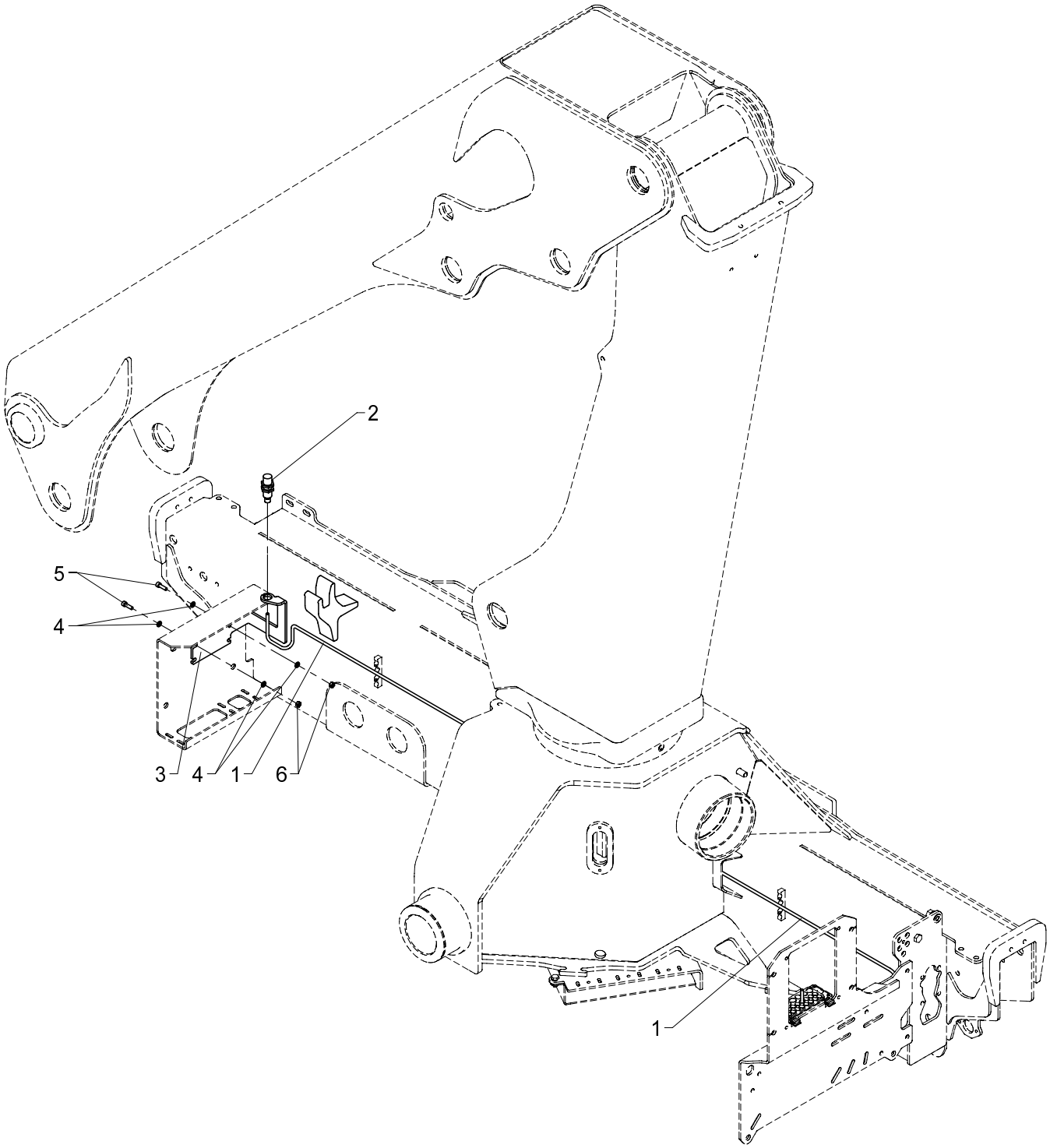

534 20 670

From loader 1060001
To loader

Created 01-05-2009
Modified 20-08-2010

PAW, transport alarm - stowing of loader

Pos	Qty.	Part no.	Description	Remarks
1	1	28902	Cable with plug, 10 m.	
2	1	29124	Proximity switch	
3	1	6340947	Mounting fittings, trans.alarm	
4	4	32302	Face washer, stainless	6 mm
5	2	30427	Screw	MC6 x 20
6	2	30854	Nut, stainless	M6

15/105 - 17/117 SL & DL Parts

534 20 755

70 04 330
70 04 320
70 04 310
70 04 300
Internal ref. 70 04 290

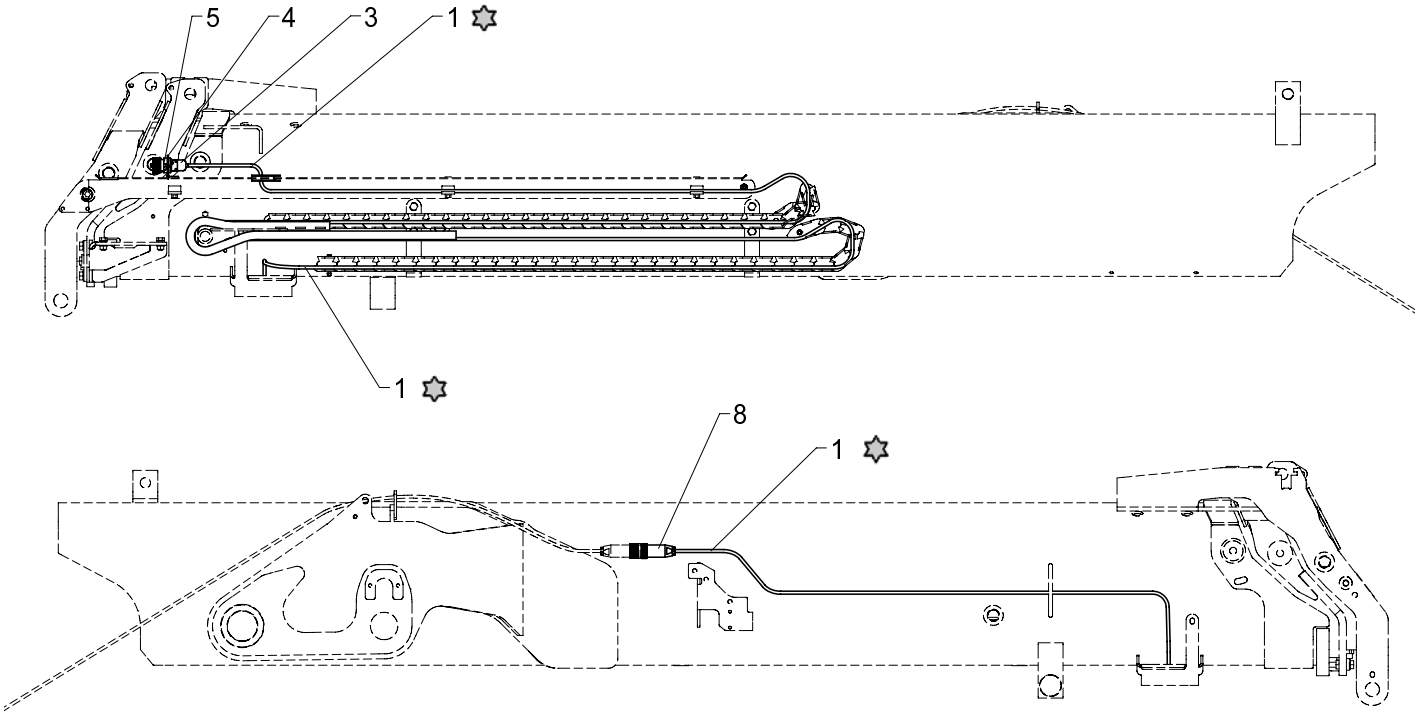

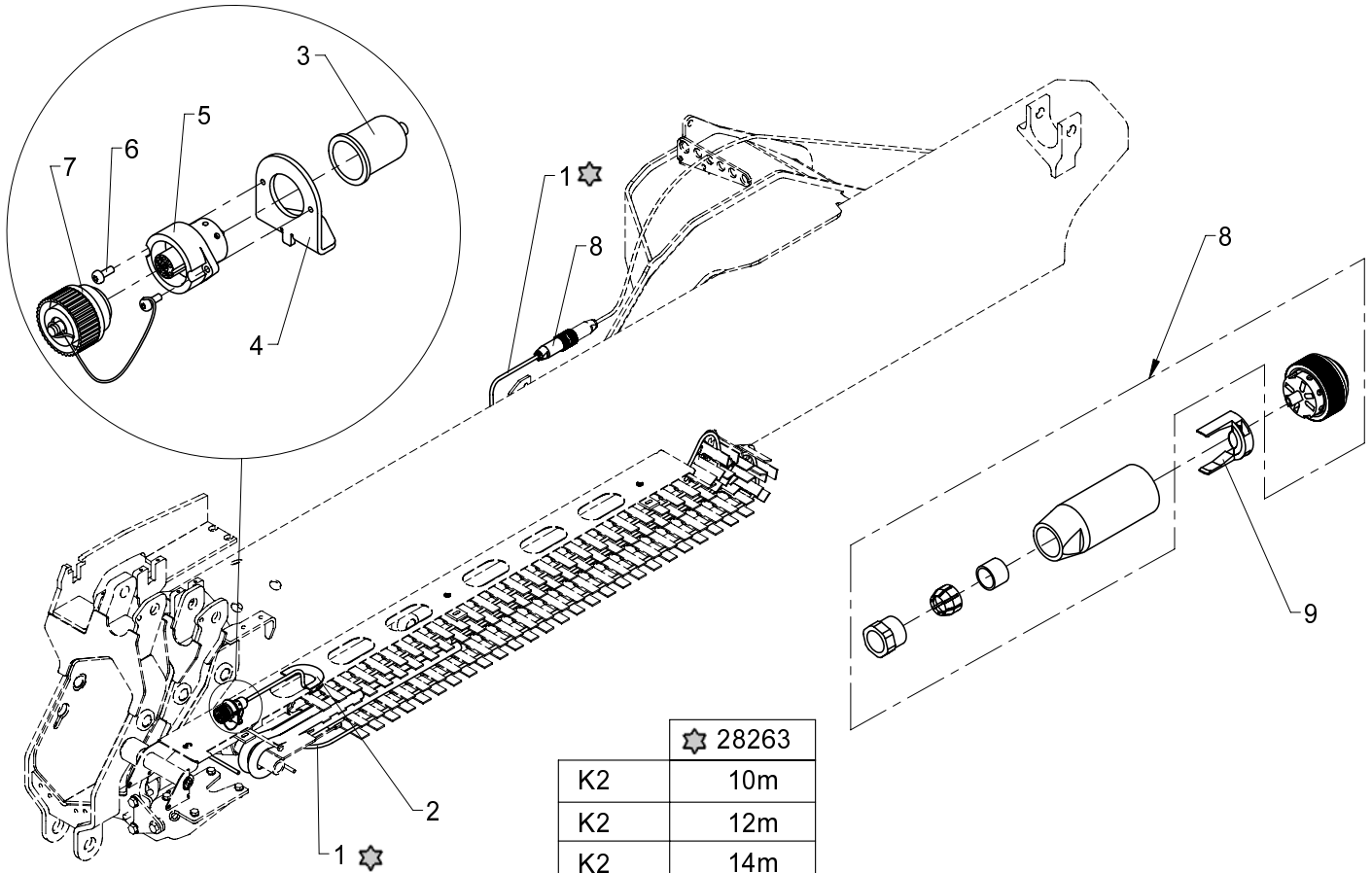

	28263
K2	10m
K2	12m
K2	14m
K2	16m
K2	19m

Fly-Jib supply, K2

534 20 755

From loader 1060001
To loader

Created 06-04-2010
Modified 06-07-2010

Pos	Qty.	Part no.	Description	Remarks
		7004290	Electric cable, FJ K2	
		7004300	Electric cable, FJ K3	
		7004310	Electric cable, FJ K4	
		7004320	Electric cable, FJ K5	
		7004330	Electric cable, FJ K6	
1	1	28263	CAN BUS cable	
2	1	22122	PVC protection	
3	1	29233	Protection	
4	1	6340779	Adapter	
5	1	29232	Socket, 7-polar, 10 A	
6	2	31030	Screw	M3 x 8
7	1	58103	Cover	
8	1	29230	Plug	
9	1	29236	Cable clamp	

15/105 - 17/117 SL & DL Parts

Internal ref. 63 41 740

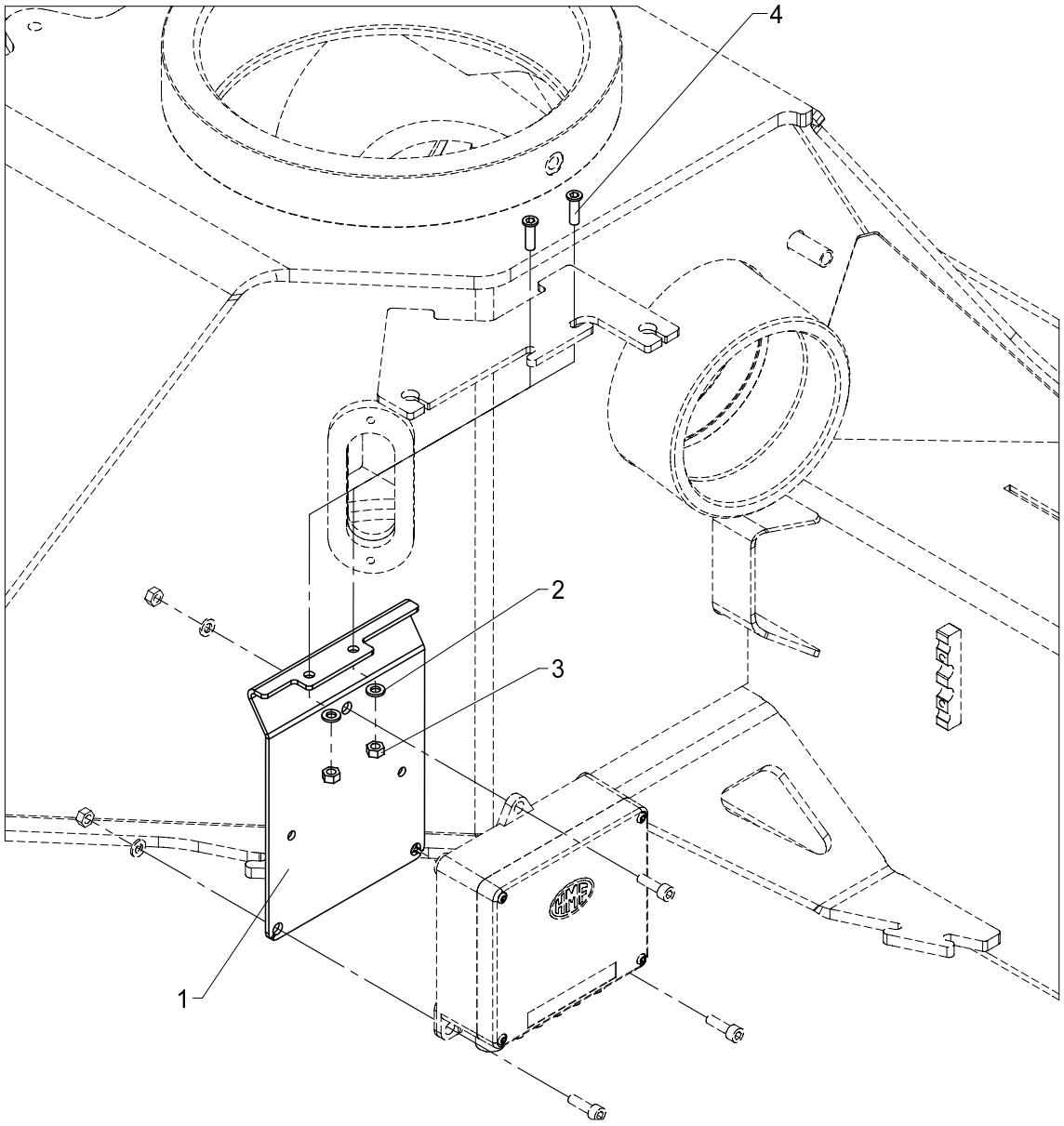

534 20 810

From loader 1060001
To loader

Created 04-03-2009
Modified 22-07-2010

Mounting fittings for junction box (FJC 5330)

Pos	Qty.	Part no.	Description	Remarks
1	1	6340899	Mounting fittings (FJC 5330)	
2	2	32302	Face washer, stainless	6 mm
3	2	30854	Nut, stainless	M6
4	2	32483	Screw	MCL6 x 20

15/105 - 17/117 SL & DL Parts

Internal ref. 70 05 250

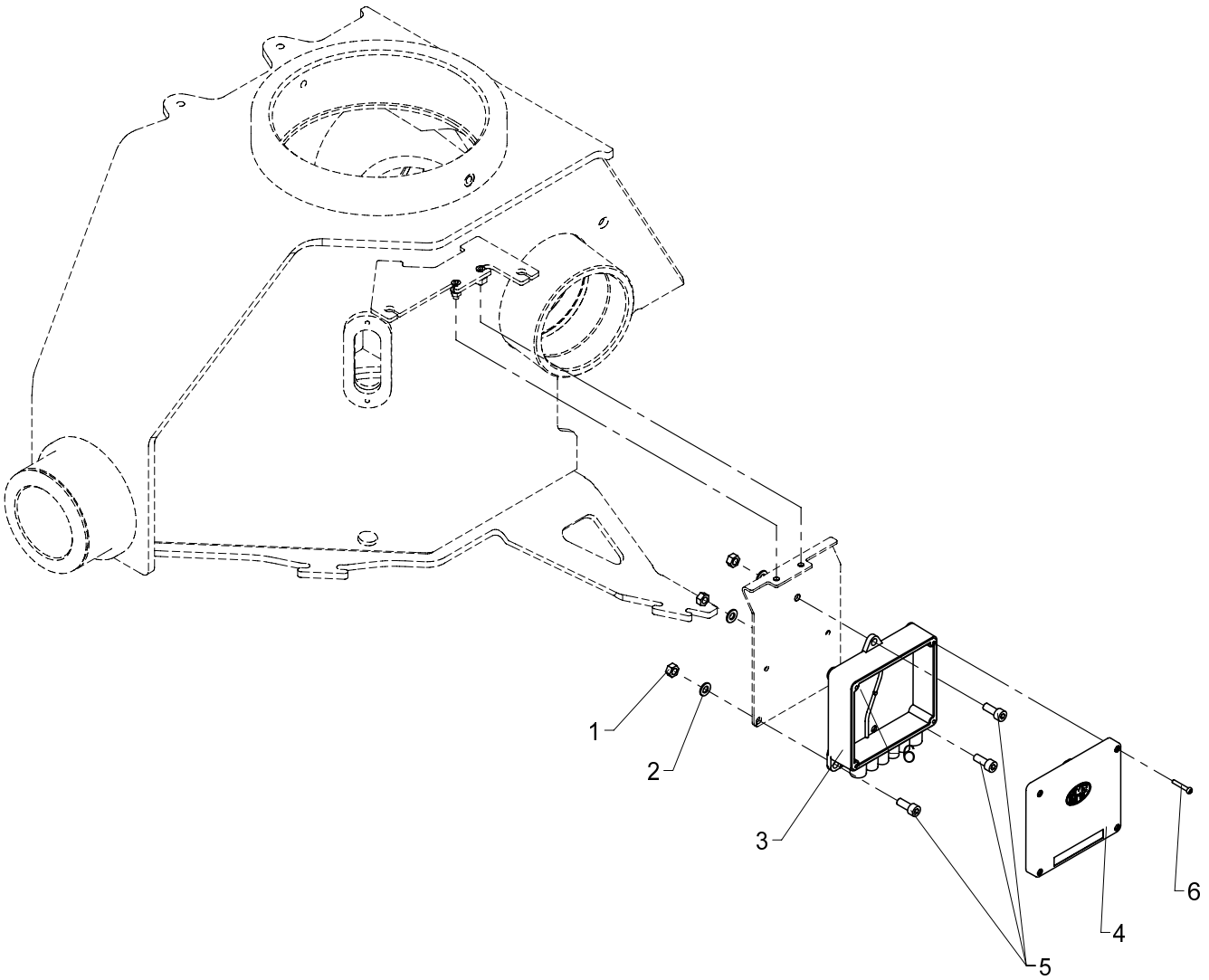

534 20 811

From loader 1060001
To loader

Created 01-05-2009
Modified

Junction box, various electric parts

Pos	Qty.	Part no.	Description	Remarks
1	3	30856	Nut, stainless	M8
2	3	31147	Washer, stainless	
3	1	29313	Bottom f. Fly-Jib box	
4	1	29314	Cover for Fly-Jib box	
5	3	30438	Screw	MC8 x 20
6	4	30347	Screw, stainless	4,0 x 25

15/105 - 17/117 SL & DL Parts

Internal ref. 70 04 630

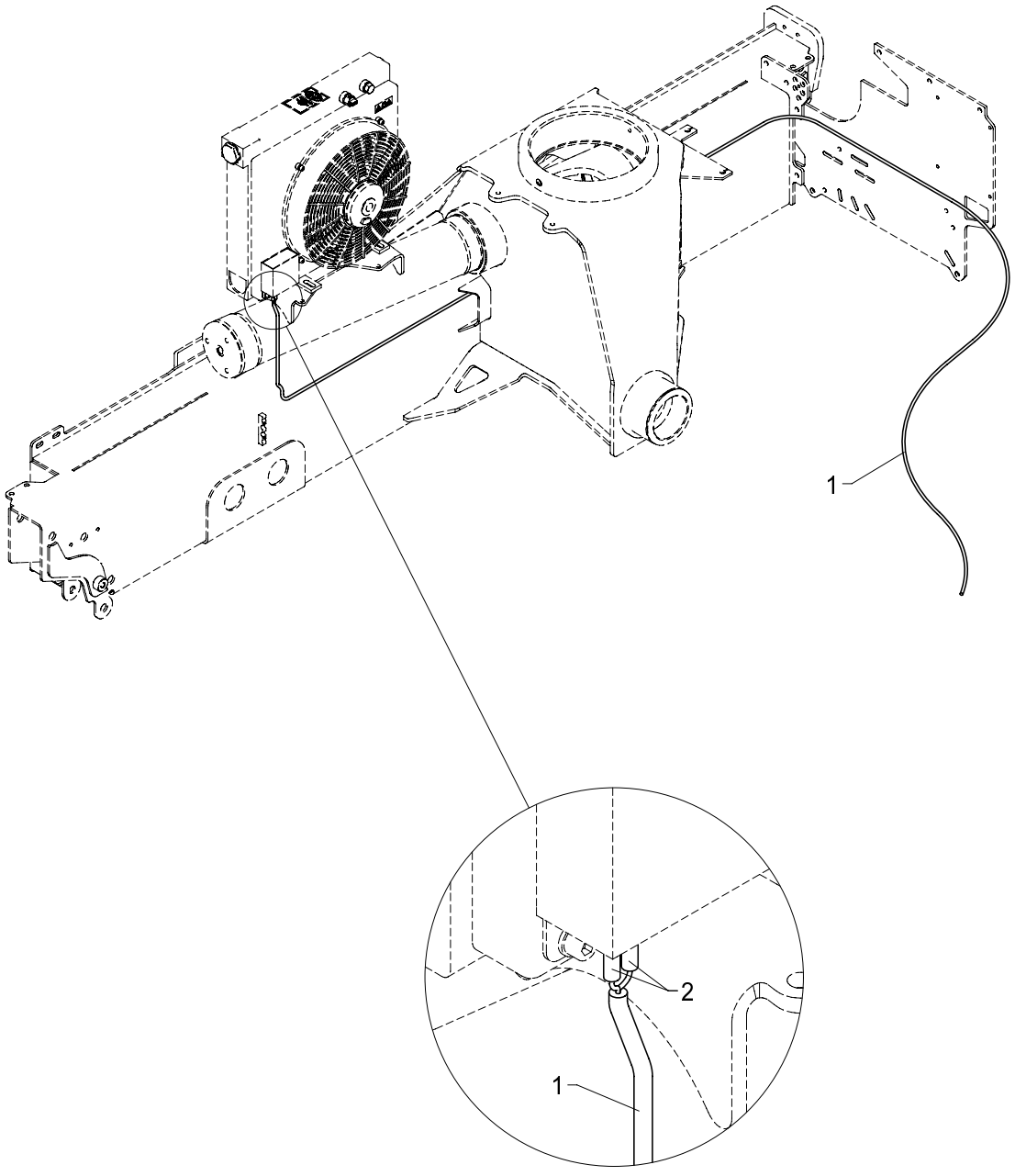

534 20 820

From loader 1060001
To loader
Created
Modified

Oil cooler supply

Pos	Qty.	Part no.	Description	Remarks
1	1	27215	Wire 2 x 1.5	5,0 m
2	2	27429	Clamp	

15/105 - 17/117 SL & DL Parts

Internal ref. 70 05 560

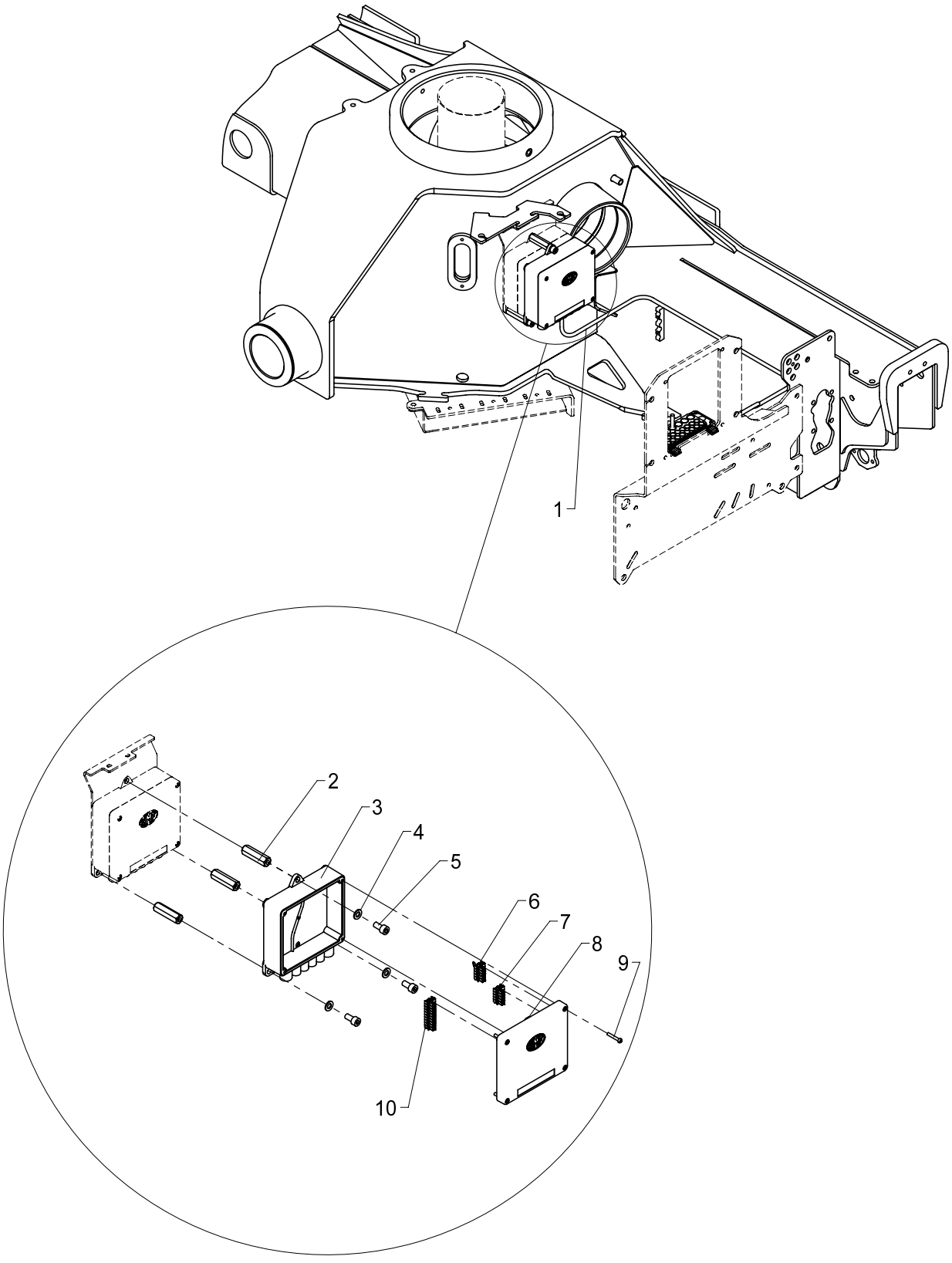

534 20 830

From loader 1060001
To loader
Created
Modified

Winch module

Pos	Qty.	Part no.	Description	Remarks
1	1	28263	CAN BUS cable	1,5 m
2	3	6340222	Spacer	
3	1	29313	Bottom f. Fly-Jib box	
4	3	31147	Washer, stainless	
5	3	30449	Screw	MC8 x 16
6	1	29341	CAN termination FJC	
7	1	29317	Plug, 5-polar for RCL 53XX	
8	1	29333	WIC5333 Controller WINCH	
9	4	30347	Screw, stainless	4,0 x 25
10	1	29321	Plug, 10-polar for RCL 53XX	

15/105 - 17/117 SL & DL Parts

70 04 200
Internal ref. 70 03 300

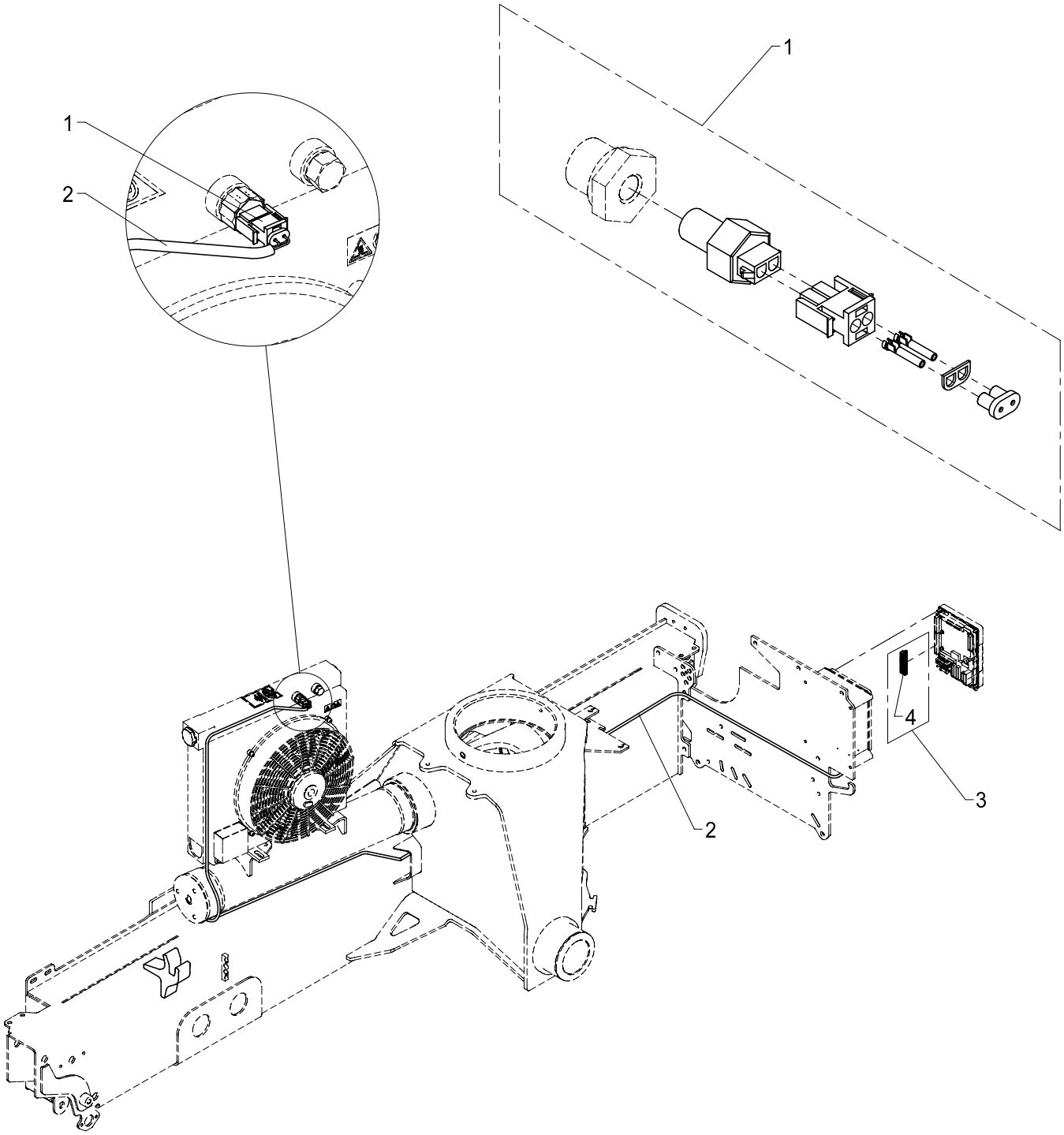

534 20 840

From loader 1060001
To loader

Created 16-03-2010
Modified 16-03-2010

Temperature monitoring for oil cooler

Pos	Qty.	Part no.	Description	Remarks
1	1	50290	Temperature sensor, oil cooler	
2	1	28249	Cable 2 x 0.75	3,0 m.
3	1	7004200	12 polar plug in RCL	
4	1	29322	Plug, 12-polar for RCL 53XX	

15/105 - 17/117 SL & DL Parts

Internal ref. 70 05 300

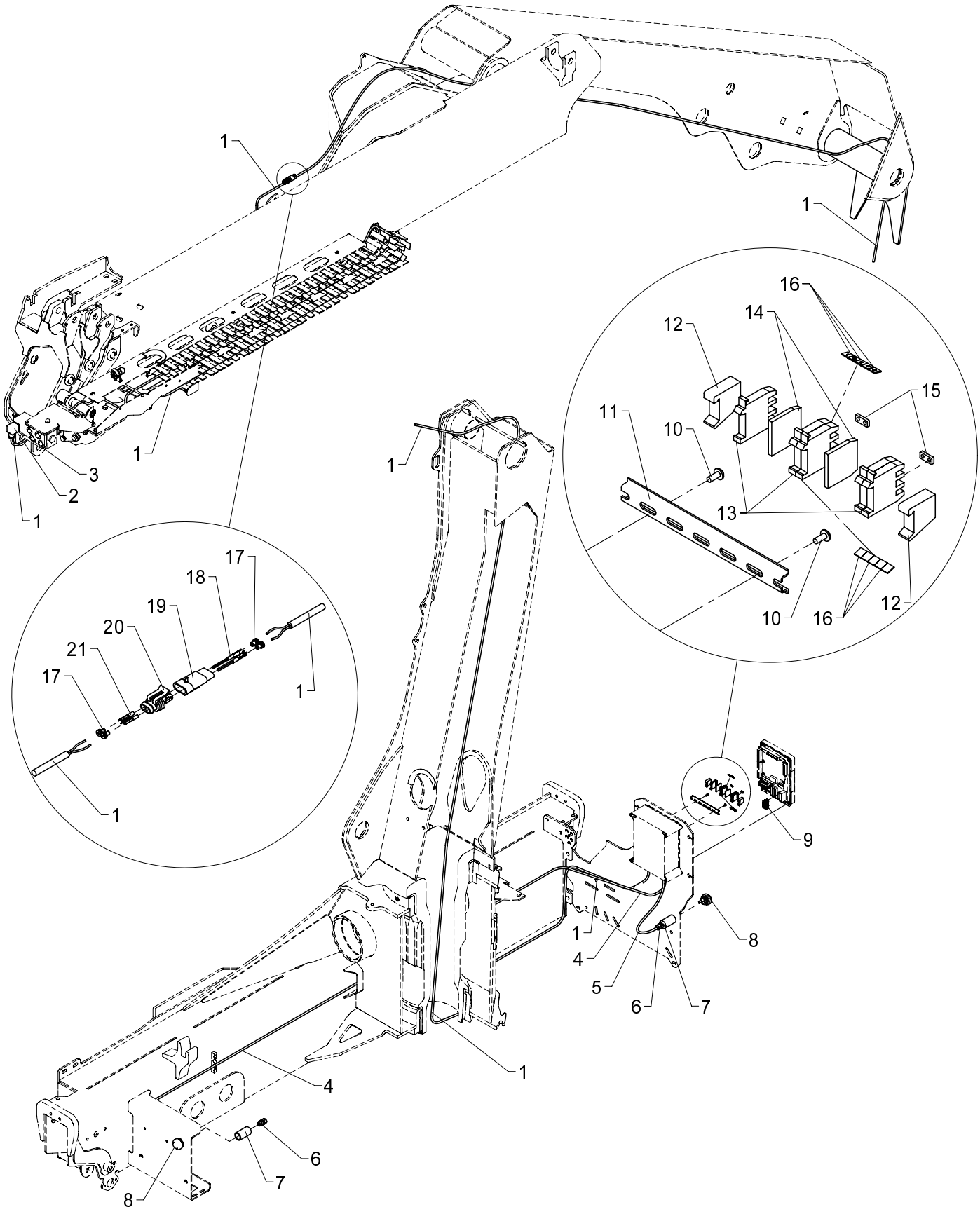

3rd extra valve, std. with CE

534 20 855

From loader 1060001
To loader

Created 21-04-2010
Modified

Pos	Qty.	Part no.	Description	Remarks
1	1	28148	Cable	25 m
2	1	28258	Plug, solenoid valve	
3	1	28840	Seal	
4	1	28148	Cable	3,5 m
5	1	28148	Cable	0,5 m
6	2	28459	Connection	M12 x 1,5
7	2	64574	Housing	
8	2	27333	Push button	
9	1	29317	Plug, 5-polar for RCL 53XX	
10	2	30361	Screw, stainless	3,0 x 8
11	1	28013	Guide rail	120 mm.
12	2	28012	End angle	
13	5	28010	Terminal	
14	2	28011	End plate	
15	2	28075	Fish plate	
16	2	28019	Labels nos. 1-10	
17	4	29159	Cable lead-in, AMP	
18	2	29161	Plug, AMP	
19	1	29160	Socket, 2-polar, AMP	
20	1	28843	Bipolar socket, AMP	
21	2	28844	Socket, AMP	

534 20 860

15/105 - 17/117 SL & DL Parts

Internal ref. 70 05 240

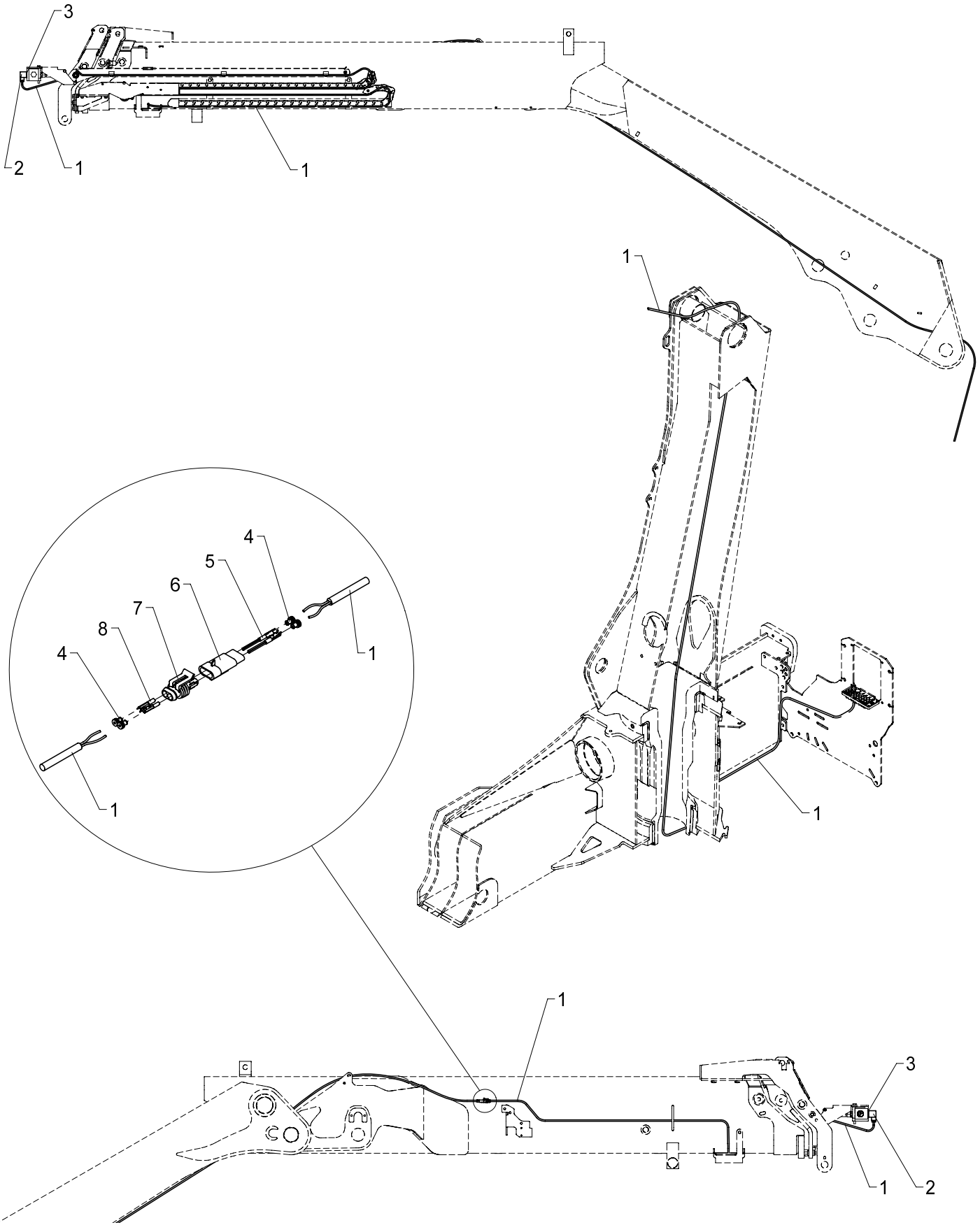

534 20 860

From loader 1060001
To loader

3rd extra valve

Created 19-03-2010
Modified 27-04-2010

Pos	Qty.	Part no.	Description	Remarks
1	1	28148	Cable	25 m
2	1	28258	Plug, solenoid valve	
3	1	28840	Seal	
4	4	29159	Cable lead-in, AMP	
5	2	29161	Plug, AMP	
6	1	29160	Socket, 2-polar, AMP	
7	1	28843	Bipolar socket, AMP	
8	2	28844	Socket, AMP	

15/105 - 17/117 SL & DL Parts

Internal ref. 63 42 260

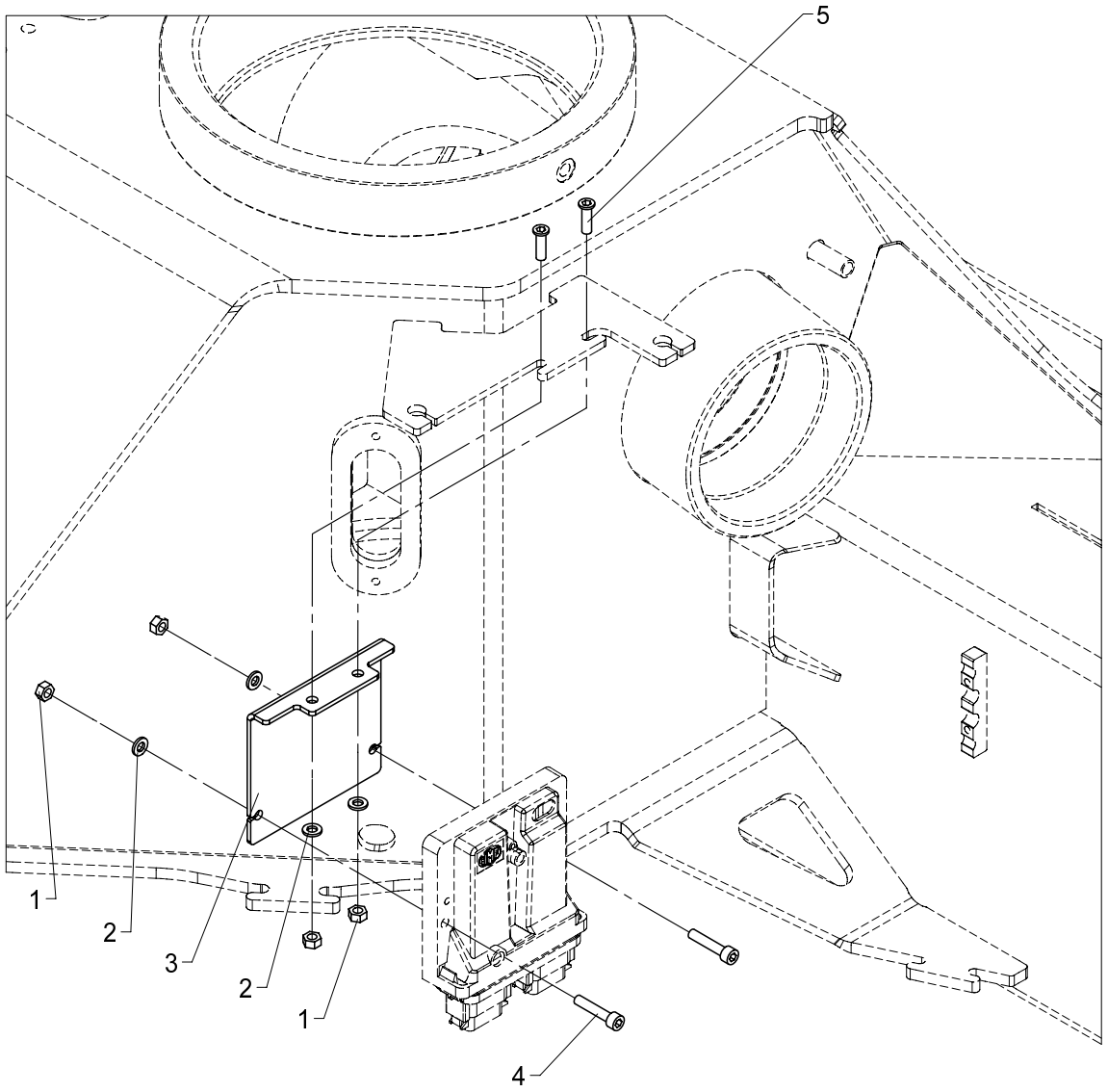

Mounting fittings, light tower

534 20 865

From loader 1060001
To loader

Created 25-02-2009
Modified 19-03-2010

Pos	Qty.	Part no.	Description	Remarks
1	4	30854	Nut, stainless	M6
2	4	32302	Face washer, stainless	6 mm
3	1	6340969	Mounting fittings(light tower)	
4	2	30961	Screw	MC6 x 30
5	2	32483	Screw	MCL6 x 20

534 20 870

15/105 - 17/117 SL & DL Parts

Internal ref. 70 04 920

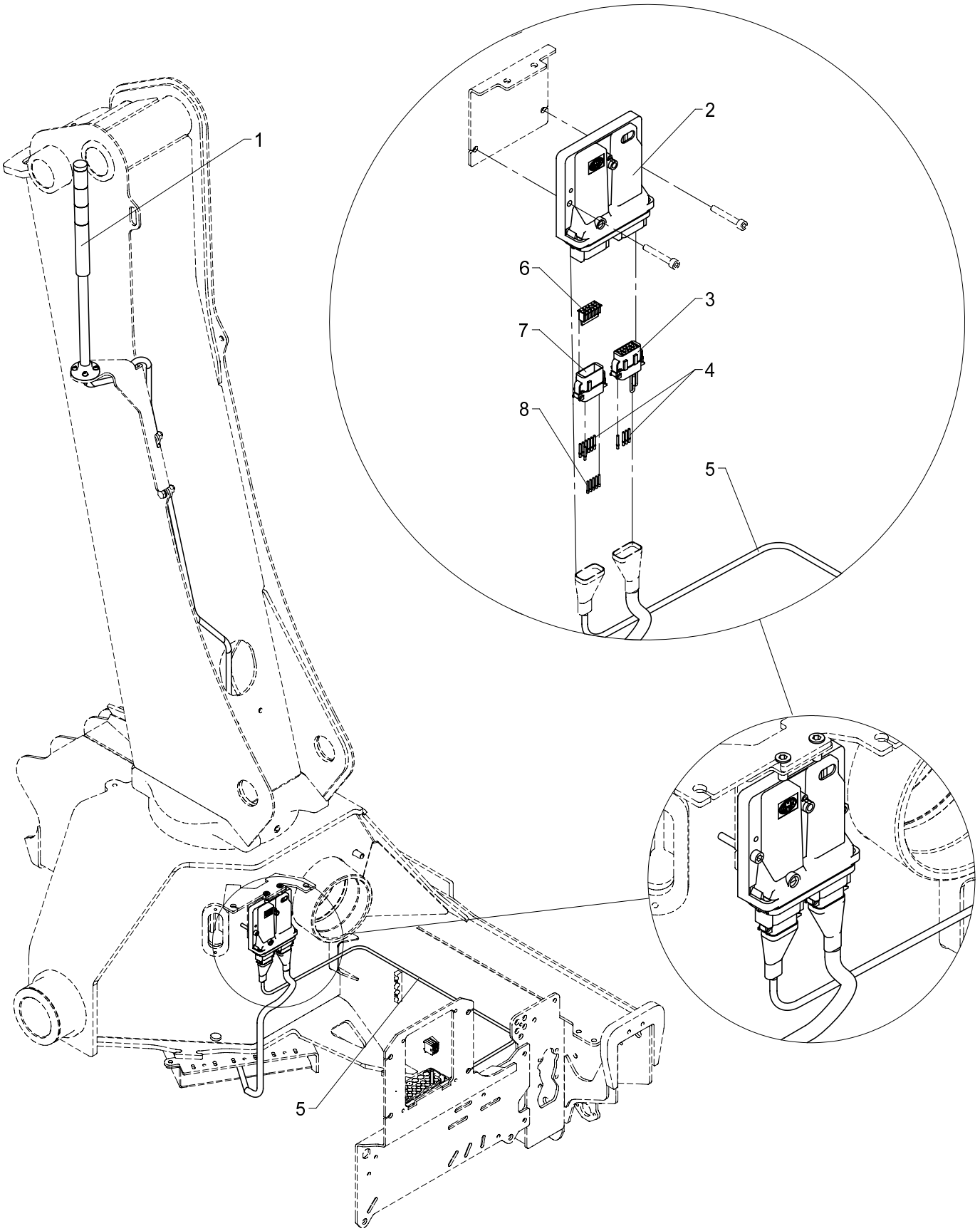

534 20 870

From loader 1060001
To loader

Created 01-05-2009
Modified 18-03-2010

Light tower incl. CIO 5374

Pos	Qty.	Part no.	Description	Remarks
1	1	29195	Light tower incl. foot + cable	
2	1	29345	CIO5374 controller excl. cable	
3	1	29342	CAN termination ECT	
4	11	29329	Pin for plug for ECT5310	
5	1	28263	CAN BUS cable	2 m
6	1	29328	Lock for plug for ECT5310	
7	1	29326	Plug, type A for ECT5310	
8	5	29339	Sealing for plug for ECT5310	

15/105 - 17/117 SL & DL Parts

Internal ref. 70 04 190

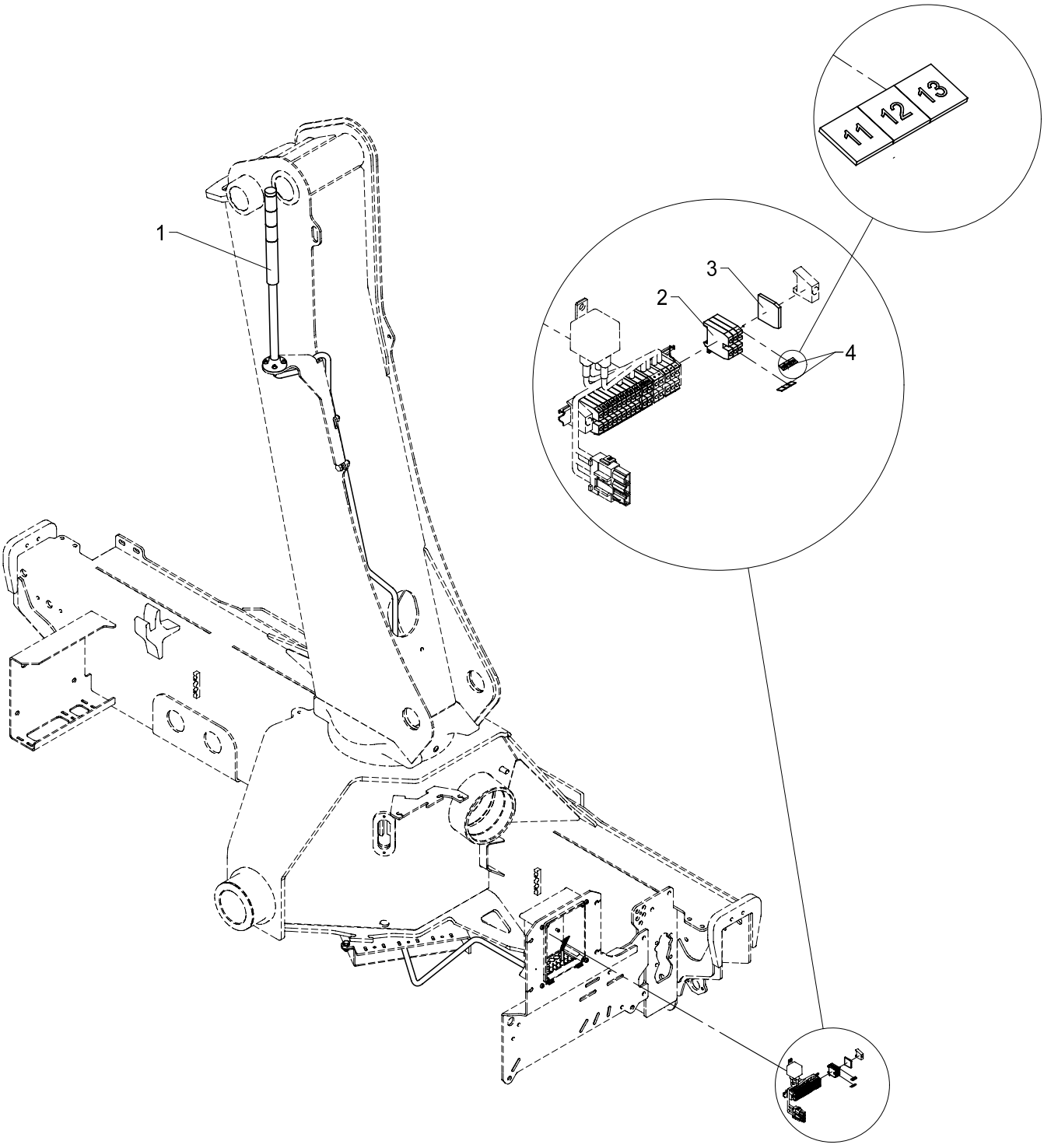

534 20 880

From loader 1060001
To loader

Created 07-04-2010
Modified

Light tower via Scanreco

Pos	Qty.	Part no.	Description	Remarks
1	1	29195	Light tower incl. foot + cable	
2	3	28010	Terminal	
3	1	28011	End plate	
4	2	28020	Labels nos. 11-20	

15/105 - 17/117 SL & DL Parts

Internal ref. 63 40 220

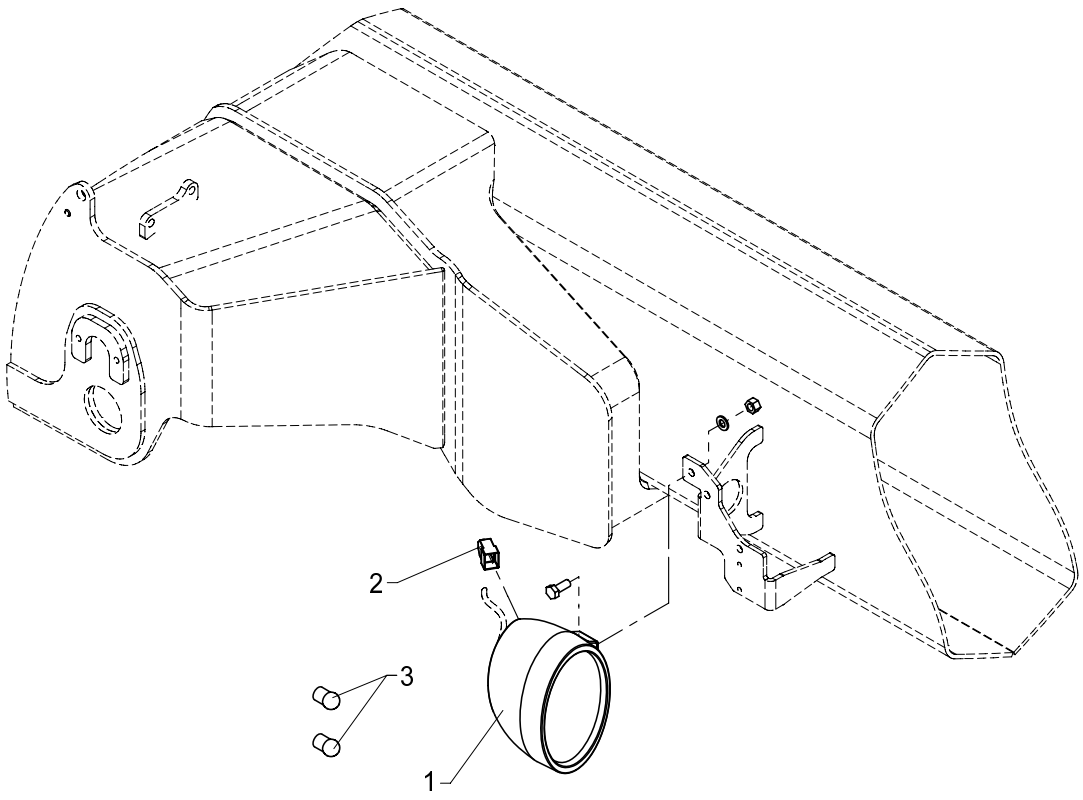

534 20 900

From loader 1060001
To loader

Created 05-09-2006
Modified 21-04-2010

Spotlight, jib

Pos	Qty.	Part no.	Description	Remarks
1	1	28308	Working lamp, Twinpower 2x70W	
2	1	29182	Cable lead-in	
3	2	27828	Bulb 24V, 70W	

15/105 - 17/117 SL & DL Parts

Internal ref. 70 04 160

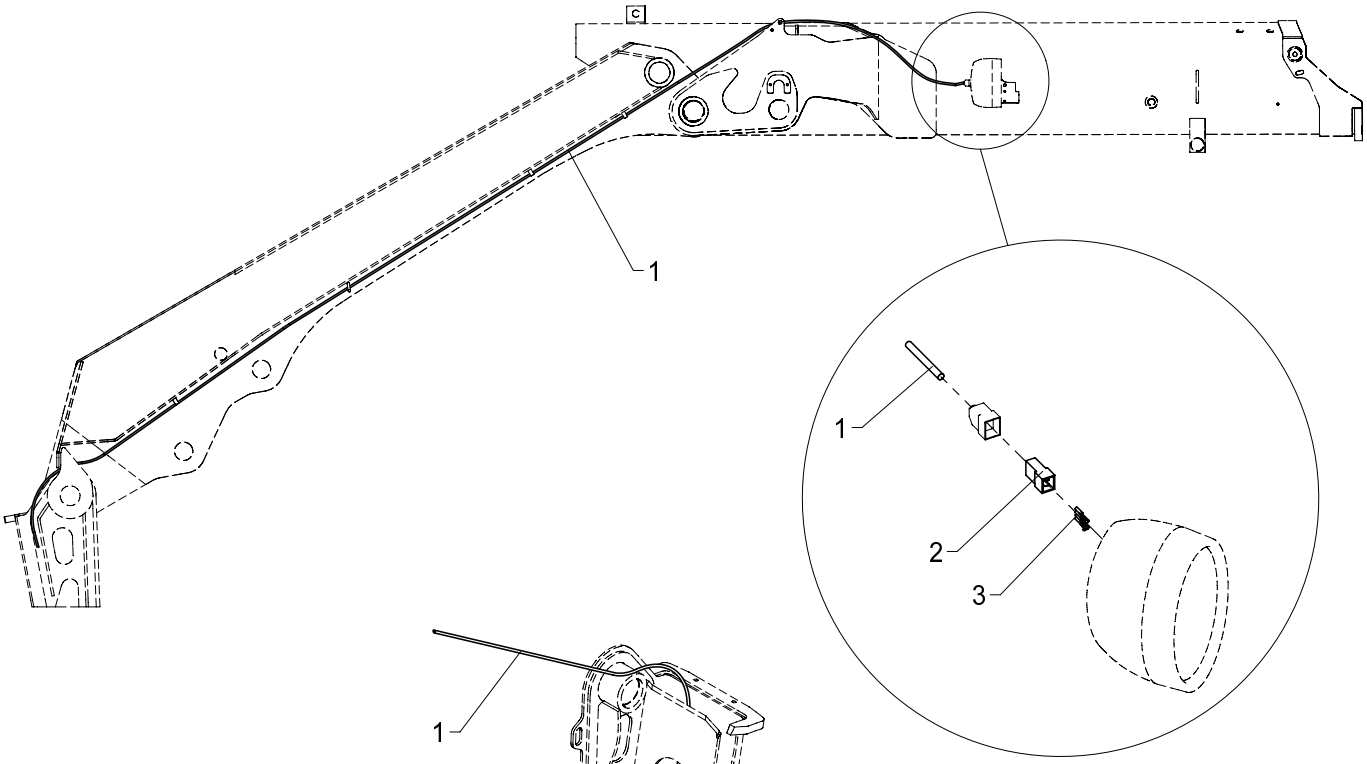

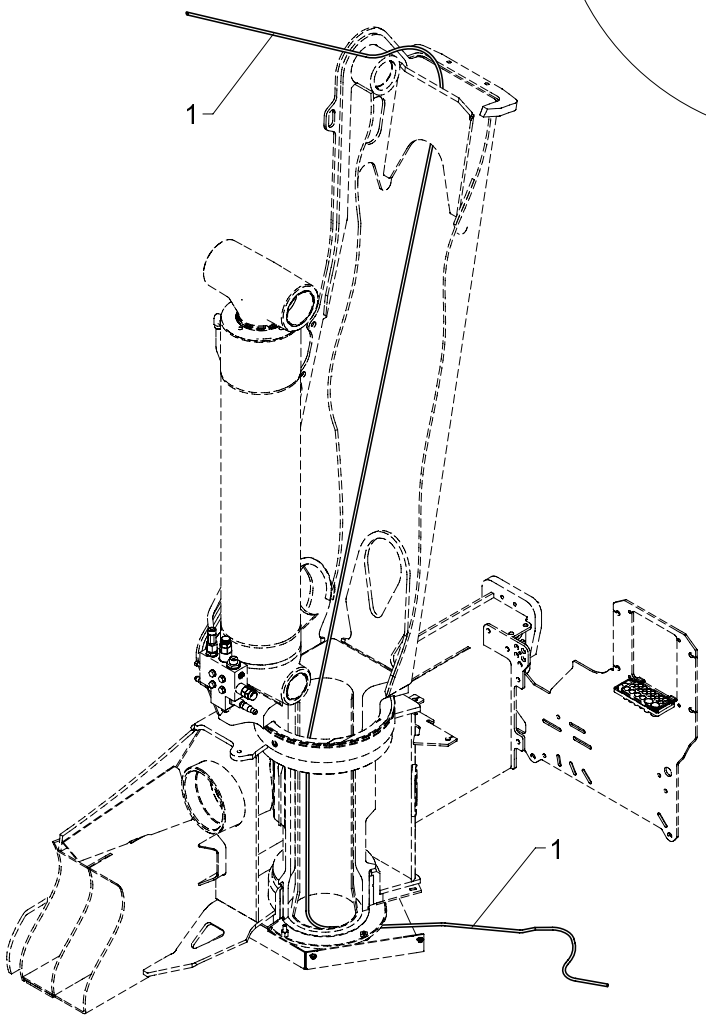

534 20 905

From loader 1060001
To loader

Created 19-03-2010
Modified 21-04-2010

Spotlight, jib (cable)

Pos	Qty.	Part no.	Description	Remarks
1	1	27215	Wire 2 x 1.5	9,0 m
2	1	27447	Multisocket - male	
3	2	27422	Plug	

15/105 - 17/117 SL & DL Parts

Internal ref. 63 40 120

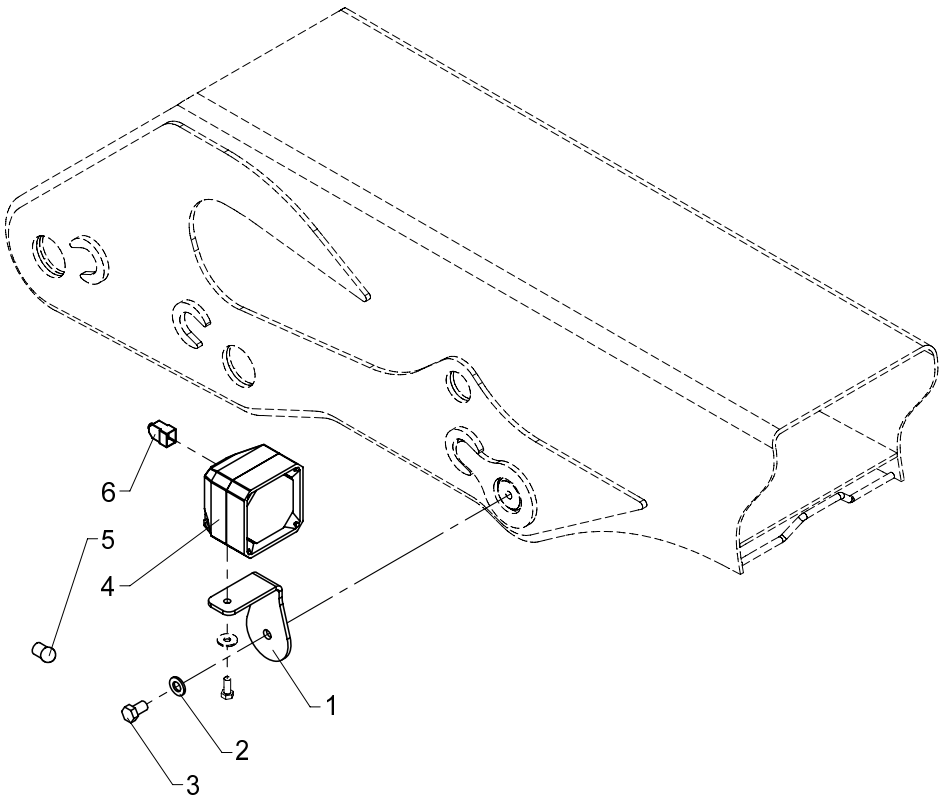

534 20 910

From loader 1060001
To loader

Created 11-03-2009
Modified 27-04-2010

Spotlight, main boom

Pos	Qty.	Part no.	Description	Remarks
1	1	6340219	Fittings	
2	1	32338	Washer	12 mm
3	1	30175	Set screw	M12 x 20
4	1	27138	Spotlight	
5	1	27828	Bulb 24V, 70W	
6	1	29182	Cable lead-in	

15/105 - 17/117 SL & DL Parts

Internal ref. 70 04 150

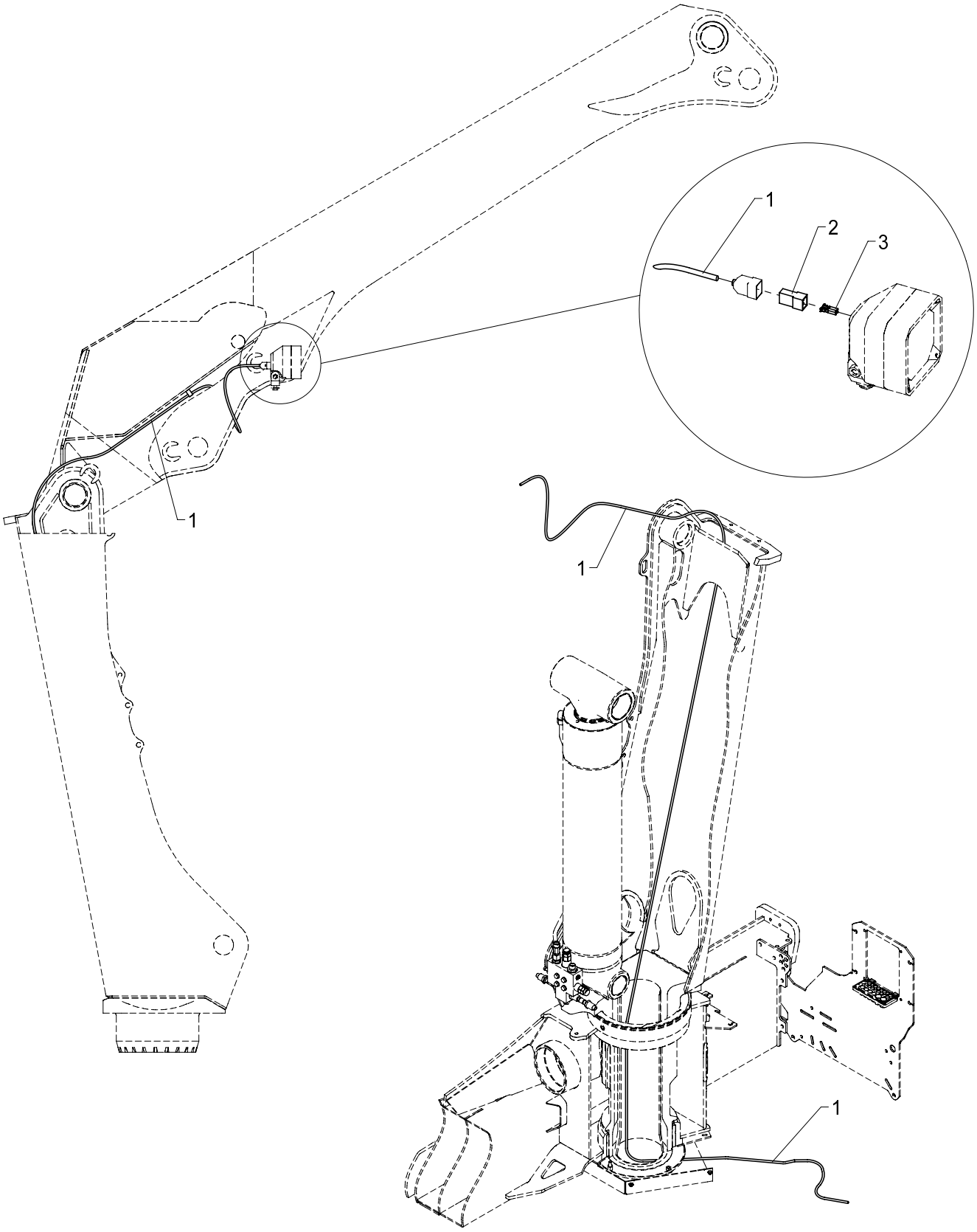

534 20 915

From loader 1060001
To loader

Created 01-05-2009
Modified 27-04-2010

Spotlight, main boom (cable)

Pos	Qty.	Part no.	Description	Remarks
1	1	27215	Wire 2 x 1.5	7,0 m
2	1	27447	Multisocket - male	
3	2	27422	Plug	

15/105 - 17/117 SL & DL Parts

Internal ref. 70 05 270

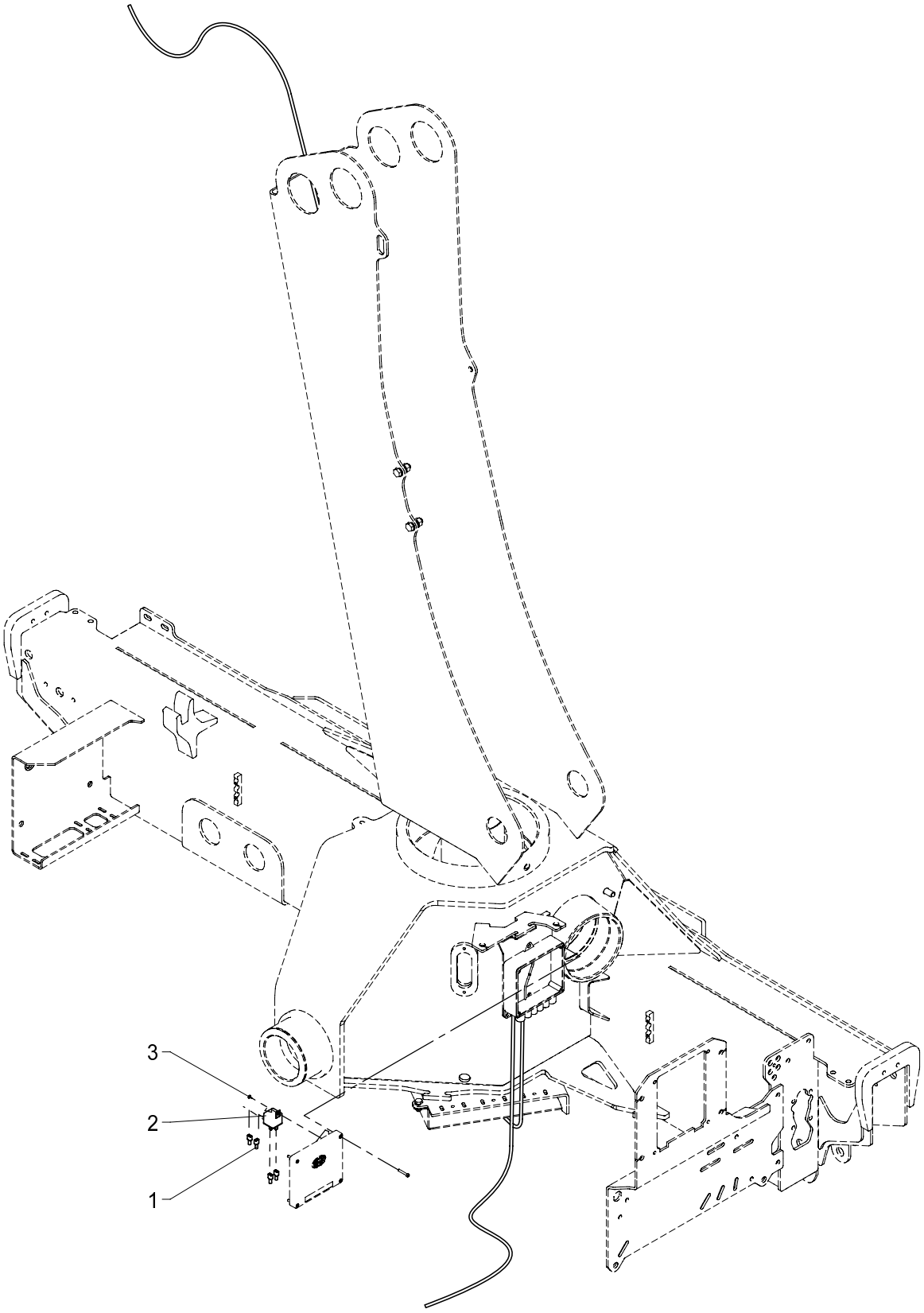

534 20 940

From loader 1060001
To loader

Created 01-05-2009
Modified

Spotlight via RC

Pos	Qty.	Part no.	Description	Remarks
1	4	27429	Clamp	
2	1	27342	Relay, 24V	
3	1	28693	Screw	Ø2.9 x 6.5

15/105 - 17/117 SL & DL Parts

Internal ref. 70 04 490

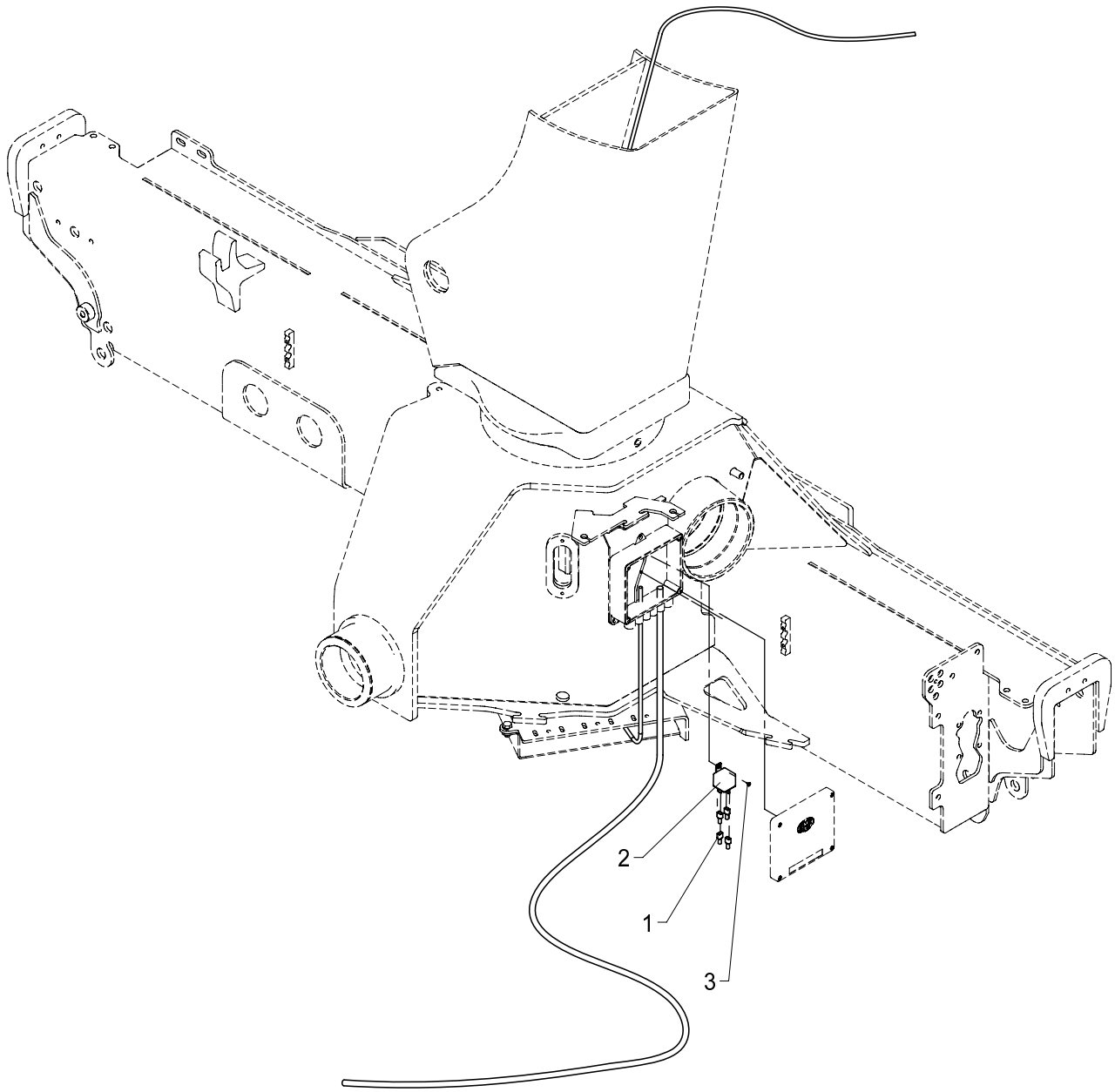

Spotlight via RC, 24V, NEMRC excl. CE

534 20 950

From loader 1060001
To loader

Created 19-03-2010
Modified

Pos	Qty.	Part no.	Description	Remarks
1	4	27429	Clamp	
2	1	27342	Relay, 24V	
3	1	28693	Screw	Ø2.9 x 6.5

15/105 - 17/117 SL & DL Parts

Internal ref. 70 05 460

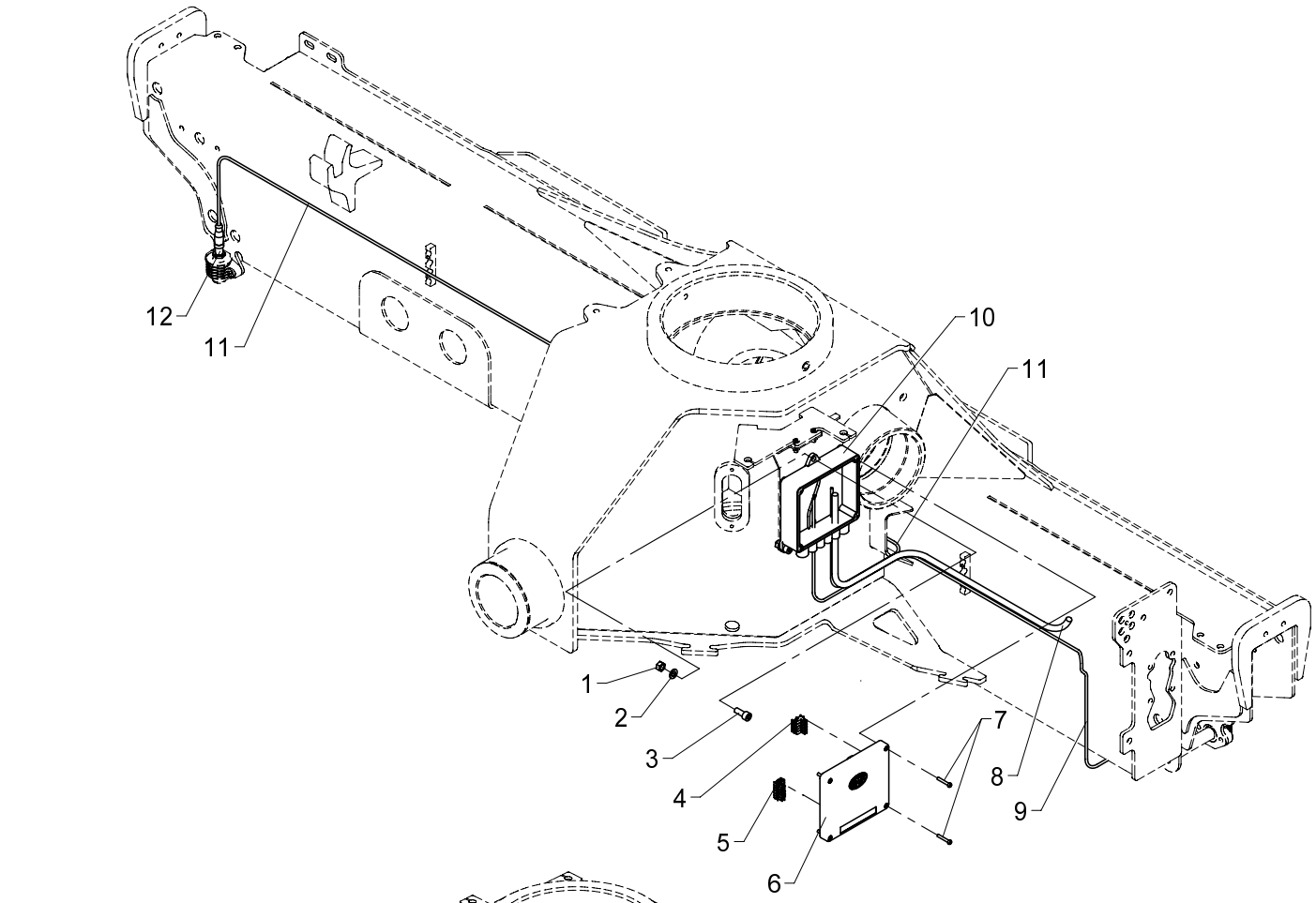

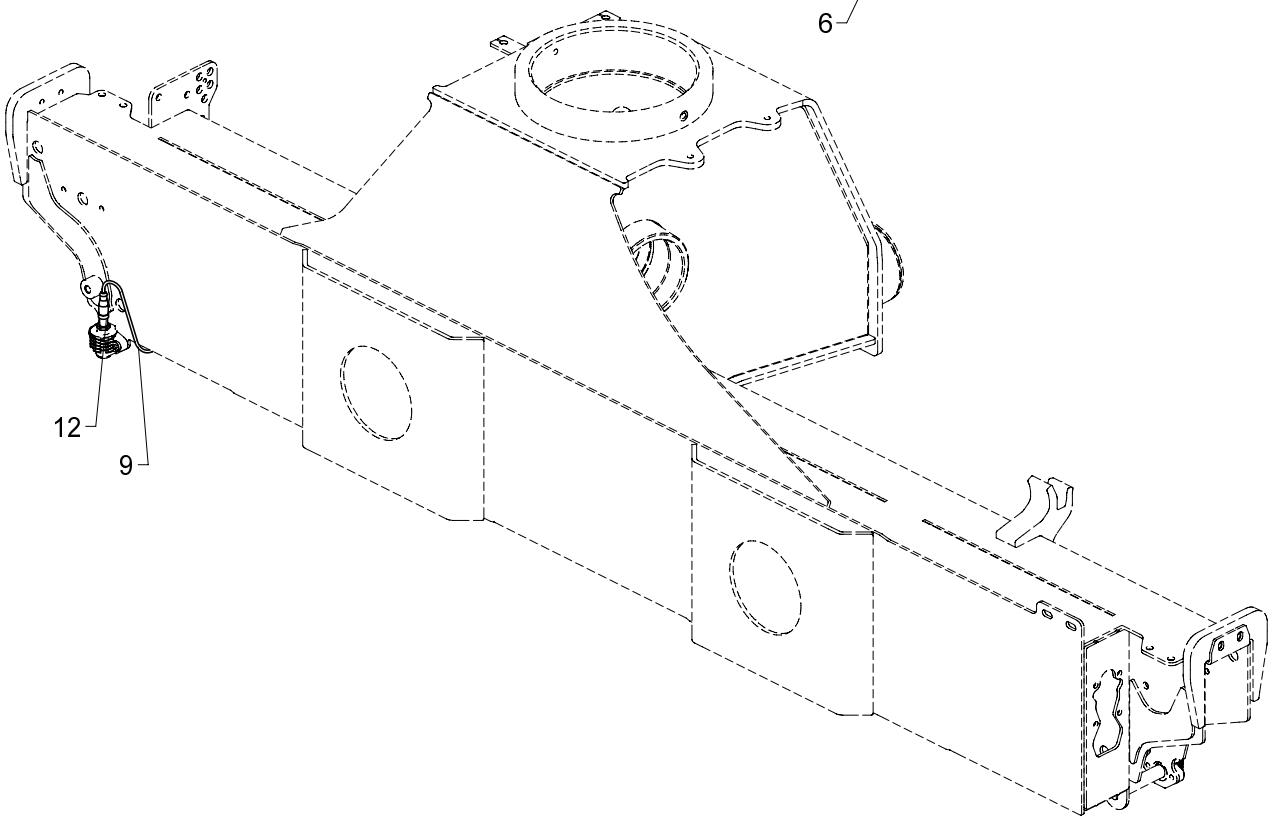

CYL, 12-23

534 20 970

From loader 1060001
To loader

Created 05-02-2010
Modified 22-07-2010

Pos	Qty.	Part no.	Description	Remarks
1	3	30856	Nut, stainless	M8
2	3	31147	Washer, stainless	
3	3	30438	Screw	MC8 x 20
4	1	29317	Plug, 5-polar for RCL 53XX	
5	1	29324	Plug, 6-polar for RCL 53XX	
6	1	29346	CIO5376 controller cover cpl.	
7	4	30347	Screw, stainless	4,0 x 25
8	1	28263	CAN BUS cable	1.5 m
9	1	29223	Cable with socket, 2 m	
10	1	29313	Bottom f. Fly-Jib box	
11	1	29224	Cable with socket, 5 m	
12	2	29257	Proximity switch M12x44, 4mm	

534 20 975

15/105 - 17/117 SL & DL Parts

Internal ref. 70 05 470

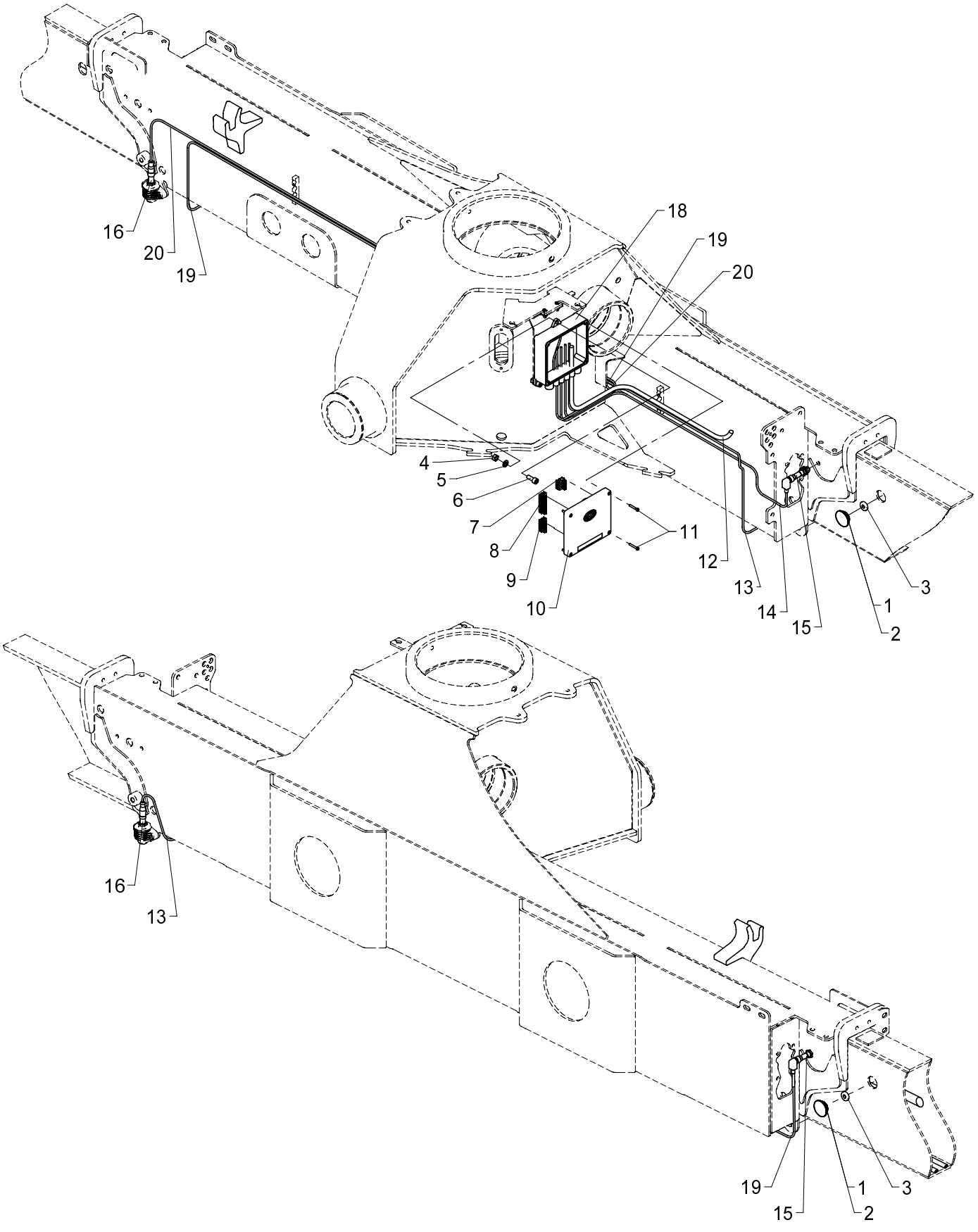

534 20 975

From loader 1060001
To loader

CYBEL, single extension, 12-23

Created 05-02-2010
Modified 22-07-2010

Pos	Qty.	Part no.	Description	Remarks
1	2	64424	Slide block	2 mm
2	2	63681	Slide block	3 mm
3	2	29262	Solenoid Ø22x5	
4	3	30856	Nut, stainless	M8
5	3	31147	Washer, stainless	
6	3	30438	Screw	MC8 x 20
7	1	29317	Plug, 5-polar for RCL 53XX	
8	1	29321	Plug, 10-polar for RCL 53XX	
9	1	29324	Plug, 6-polar for RCL 53XX	
10	1	29346	CIO5376 controller cover cpl.	
11	4	30347	Screw, stainless	4,0 x 25
12	1	28263	CAN BUS cable	1.5 m
13	1	29223	Cable with socket, 2 m	
14	1	28117	Cable with plug	
15	2	29259	Magnet proximity switch M12	
16	2	29257	Proximity switch M12x44, 4mm	
17	1	29224	Cable with socket, 5 m	
18	1	29313	Bottom f. Fly-Jib box	
19	1	28077	Cable with plug	
20	1	29224	Cable with socket, 5 m	

534 20 980

15/105 - 17/117 SL & DL Parts

Internal ref. 70 05 480

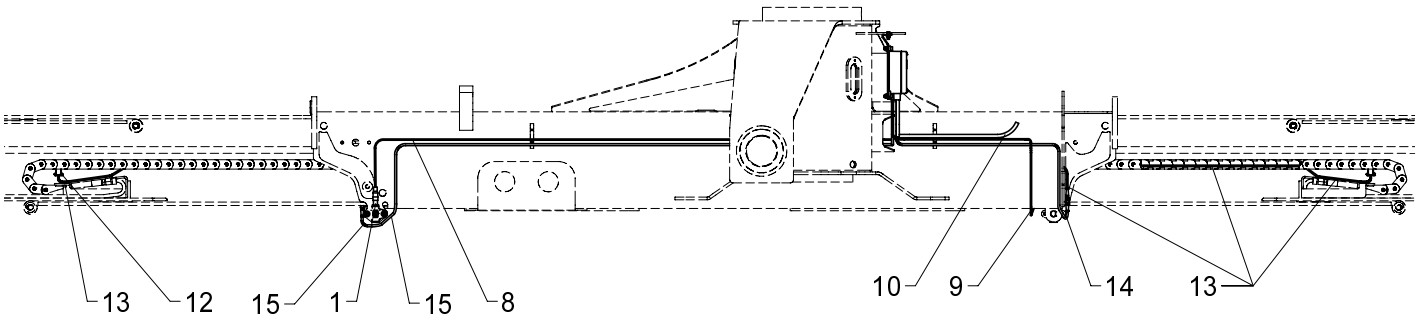

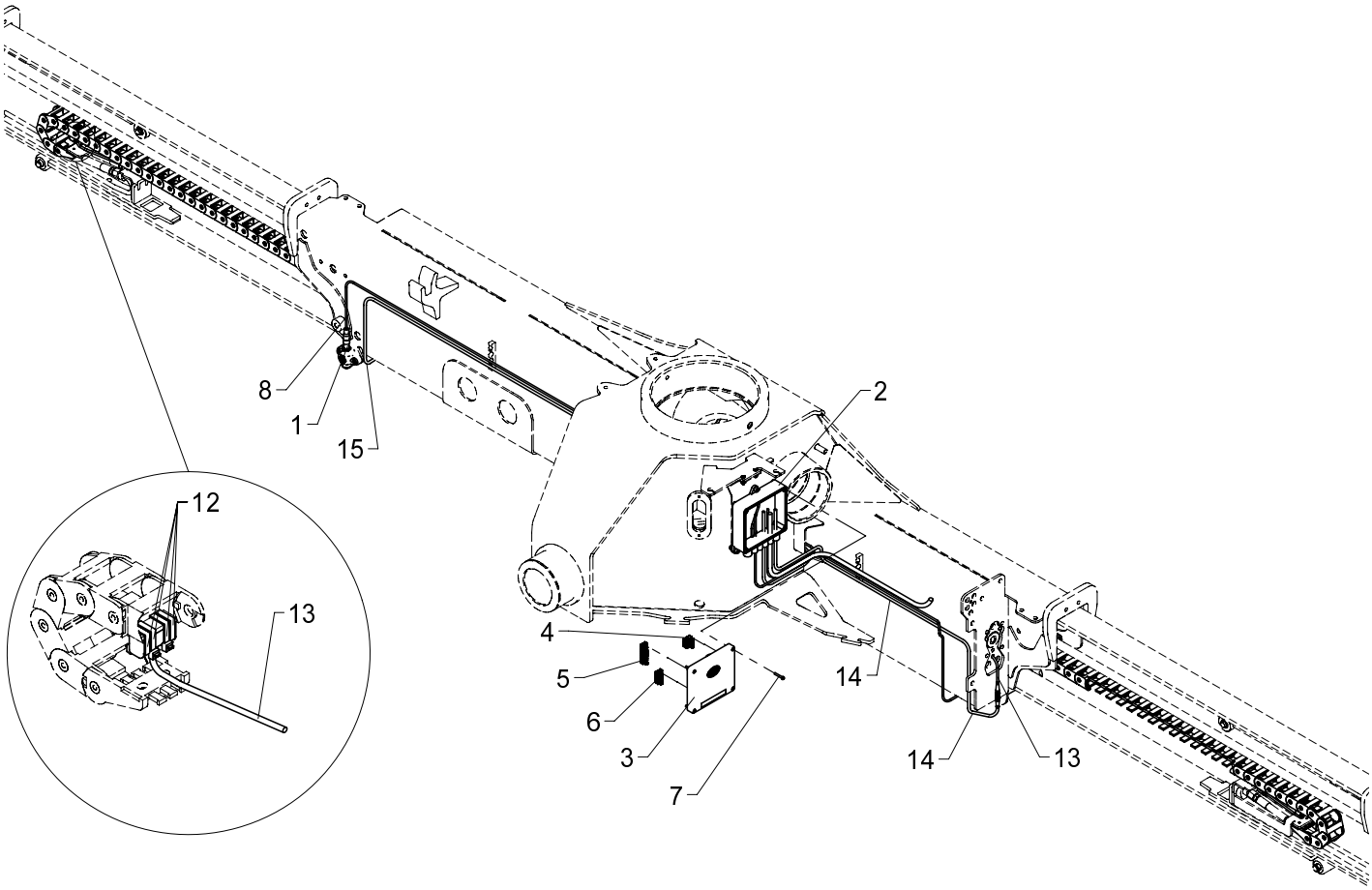

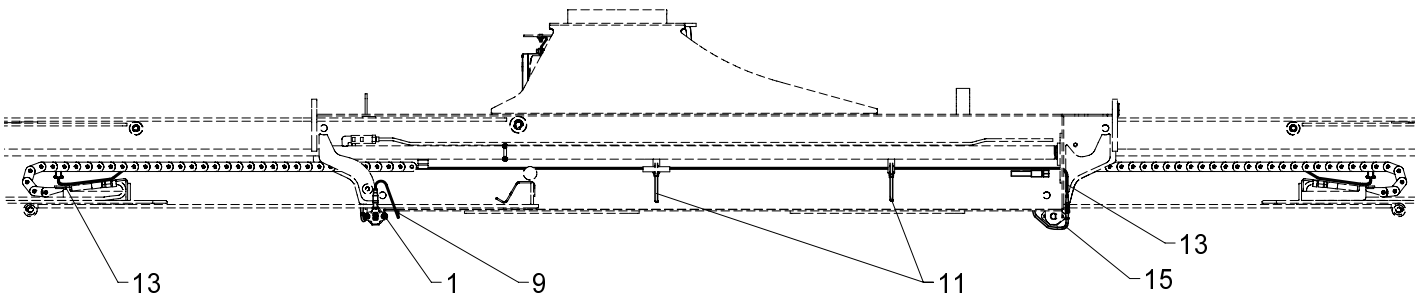

CYBEL double extension 12-23

534 20 980

From loader 1060001
To loader

Created 07-04-2010
Modified

Pos	Qty.	Part no.	Description	Remarks
1	2	29257	Proximity switch M12x44, 4mm	
2	1	29313	Bottom f. Fly-Jib box	
3	1	29346	CIO5376 controller cover cpl.	
4	1	29317	Plug, 5-polar for RCL 53XX	
5	1	29321	Plug, 10-polar for RCL 53XX	
6	1	29324	Plug, 6-polar for RCL 53XX	
7	4	30347	Screw, stainless	4,0 x 25
8	1	29224	Cable with socket, 5 m	
9	1	29223	Cable with socket, 2 m	
10	1	28263	CAN BUS cable	
11	2	27275	Clip	
12	8	27274	Clip	
13	2	29253	Tilt sensor, nylon drag chain	
14	1	29265	Cable 2 m, M8 socket	
15	1	29264	Cable 5 m, M8 socket	

15/105 - 17/117 SL & DL Parts

Internal ref. 70 04 990

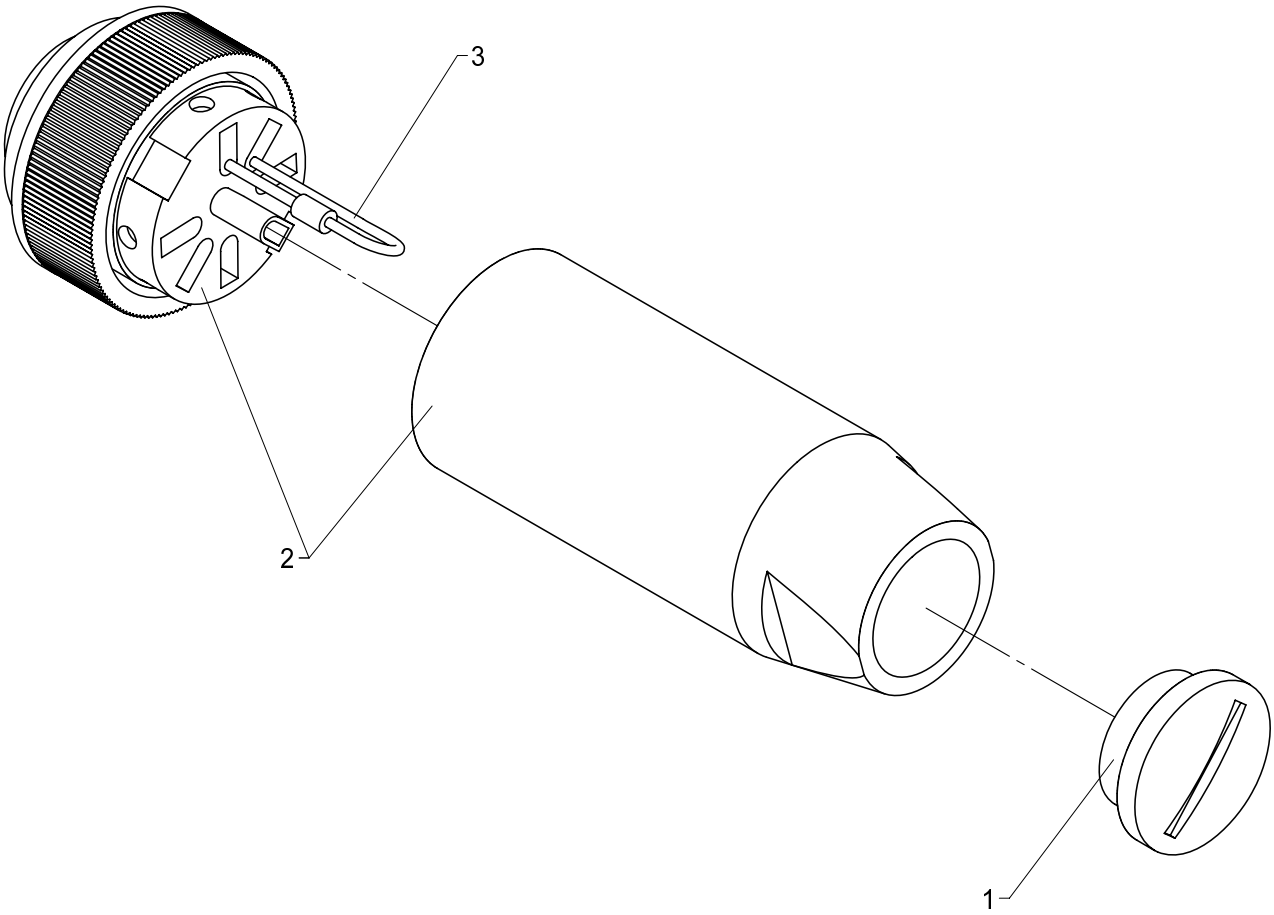

534 20 990

From loader 1060001
To loader

Created 01-05-2009
Modified 22-03-2010

CAN termination, Fly-Jib

Pos	Qty.	Part no.	Description	Remarks
1	1	28247	Safety plug	
2	1	29230	Plug	
3	1	28737	Resistance 120R, 0,33 W	

15/105 - 17/117 SL & DL Parts

Internal ref. 99 99 500

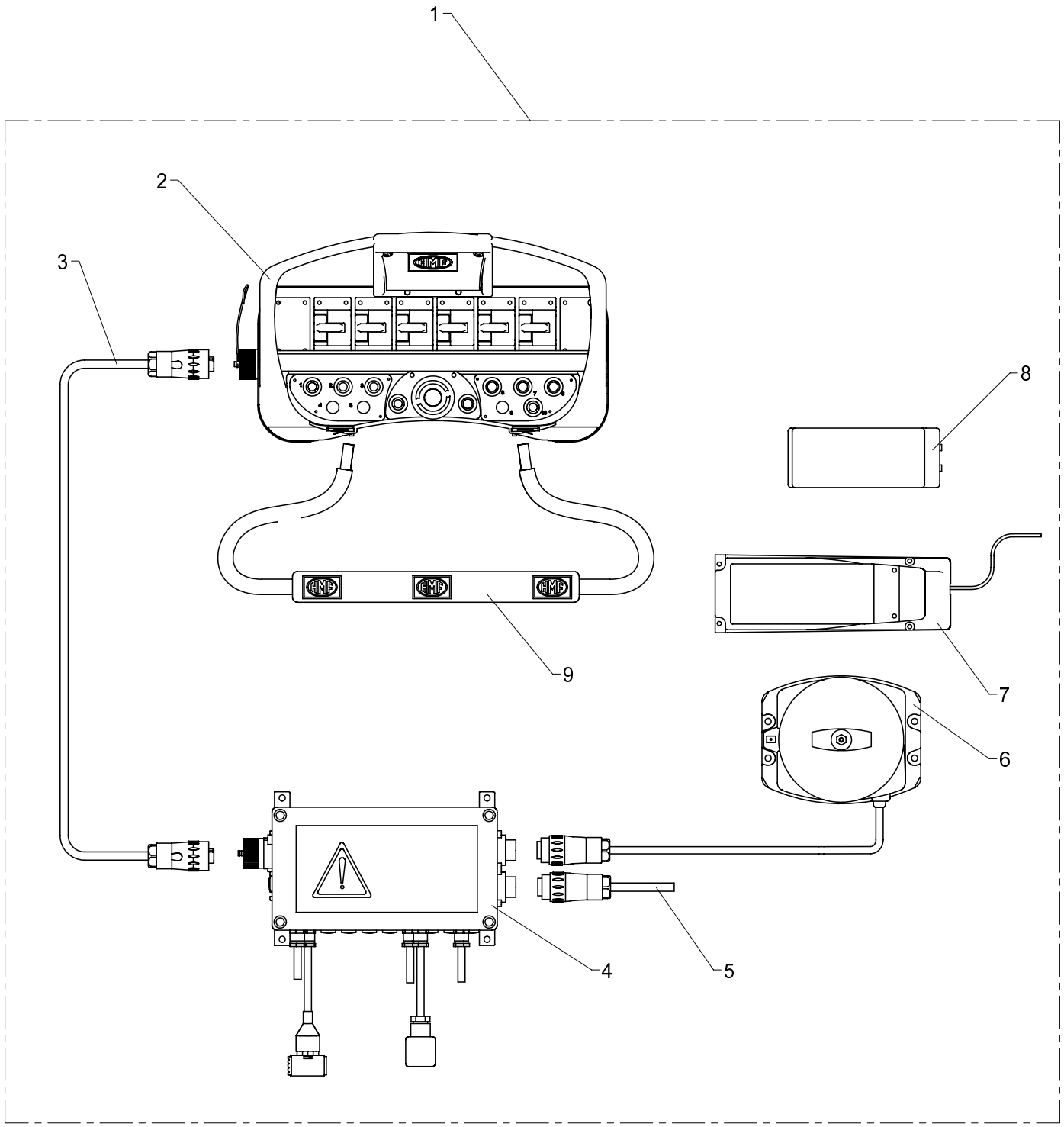

Radio remote control RC 400-CAN, complete

534 21 010

From loader 1060001
To loader

Created
Modified

Pos	Qty.	Part no.	Description	Remarks
1	1	57264	Radio remote control, cpl.	
2	1	57277	Remote control box, 6, linear	RC 400-CAN komplet
3	1	58140	Control cable	
4	1	57270	Electronic box, Scanreco	
5	1	58126	Cable	
6	1	57278	Radio receiver	
7	1	58128	Battery charger, complete	
8	1	58129	Battery	
9	1	58114	Carrying strap	

534 21 020

15/105 - 17/117 SL & DL Parts

Internal ref. 99 99 510

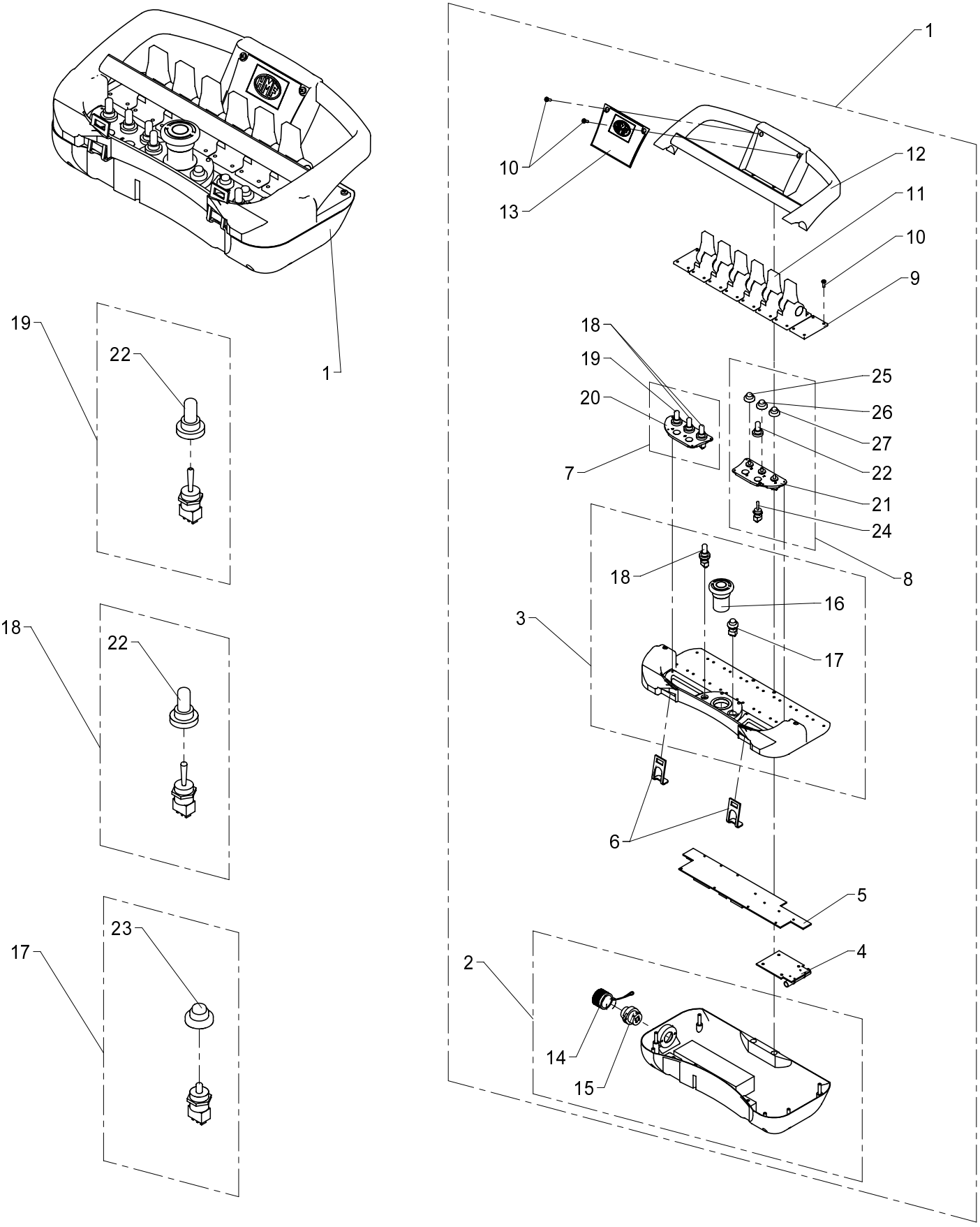

534 21 020

From loader 1060001
To loader
Created
Modified

Remote control box, 6 linear functions

Pos	Qty.	Part no.	Description	Remarks
1	1	57277	Remote control box, 6, linear	RC 400-CAN komplet
2	1	58152	Bottom part	
3	1	58157	Top part	
4	1	57280	Electronic circuit card	
5	1	57213	Printed card	
6	2	57163	Bracket for neck strap	
7	1	58145	Switch panel	
8	1	58191	Switch plate, right	
9	2	58151	Cover	
10	34	57174	Screw	Ø2.9 x 6.5
11	6	58148	Control lever, linear	
12	1	57288	Protective frame	
13	1	57279	Display cover + HMF logo	
14	1	58104	Cover	
15	1	58121	Plug	180/260 4polet
16	1	57289	Stop button, complete	
17	1	58144	Switch with cover	1 - 0
18	3	58143	Switch with cover	(1) - 0 - (1)
19	1	58142	Switch with cover	1 - 0 - 1
20	1	57182	Cover plate, excl. holes	
21	1	58161	Switch panel	14
22	5	58166	Cover	
23	1	58167	Cover	
24	2	57186	Switch excl. cover	1 - 0 - (1)
25	1	57176	Rubber cover green	
26	1	57177	Rubber cover yellow	
27	1	57178	Rubber cover red	

534 21 030

15/105 - 17/117 SL & DL Parts

Internal ref. 99 99 520

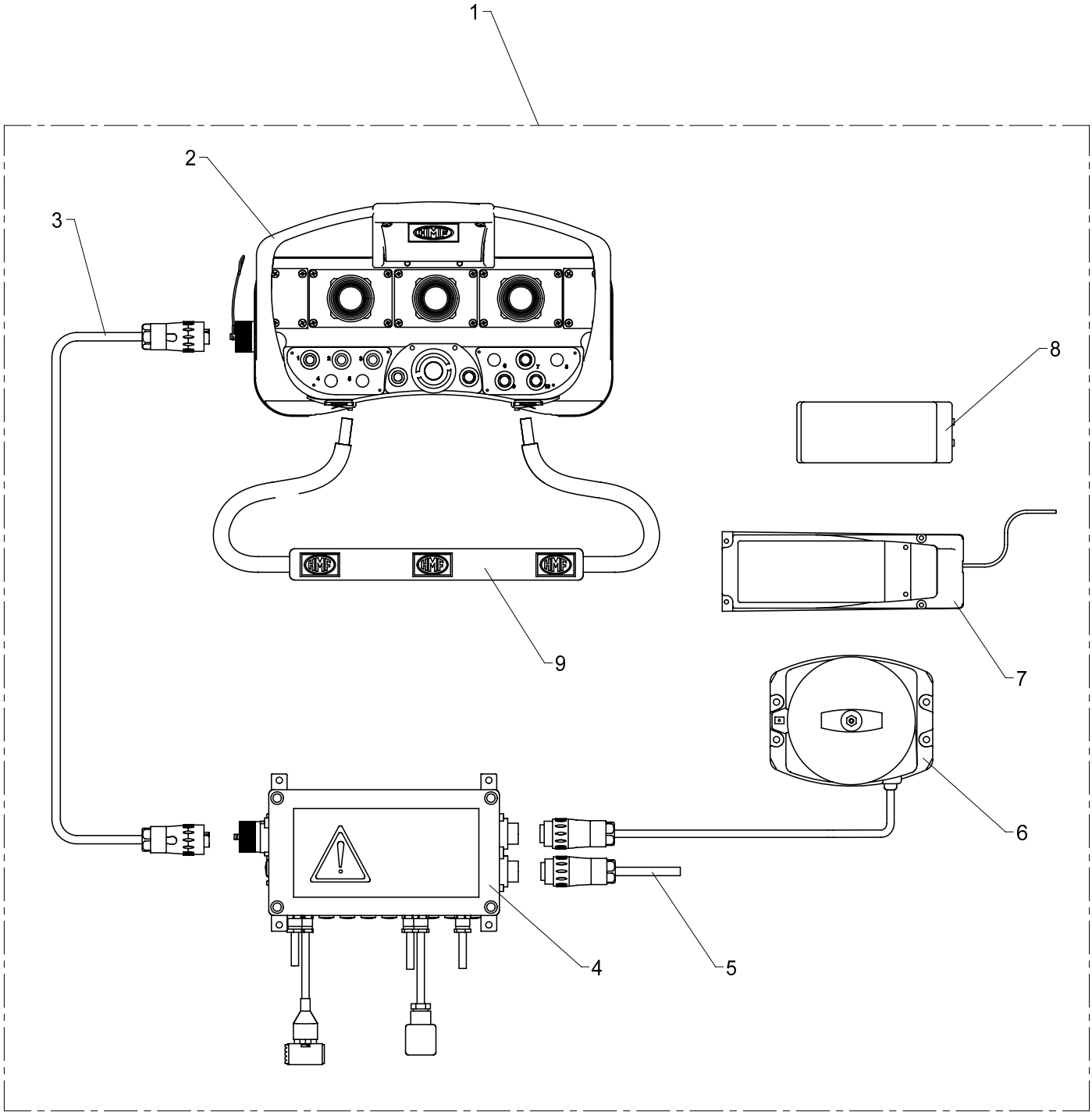

534 21 030

From loader 1060001
To loader
Created
Modified

Radio remote control RC 400-CAN, 6 joysticks

Pos	Qty.	Part no.	Description	Remarks
1	1	57265	Radio rem.ctrlRC400CAN6fct3joy	
2	1	57281	Remote control box 3x2 prop.	
3	1	58140	Control cable	
4	1	57270	Electronic box, Scanreco	
5	1	58126	Cable	
6	1	57278	Radio receiver	
7	1	58128	Battery charger, complete	
8	1	58129	Battery	
9	1	58114	Carrying strap	

15/105 - 17/117 SL & DL Parts

Internal ref. 99 99 530

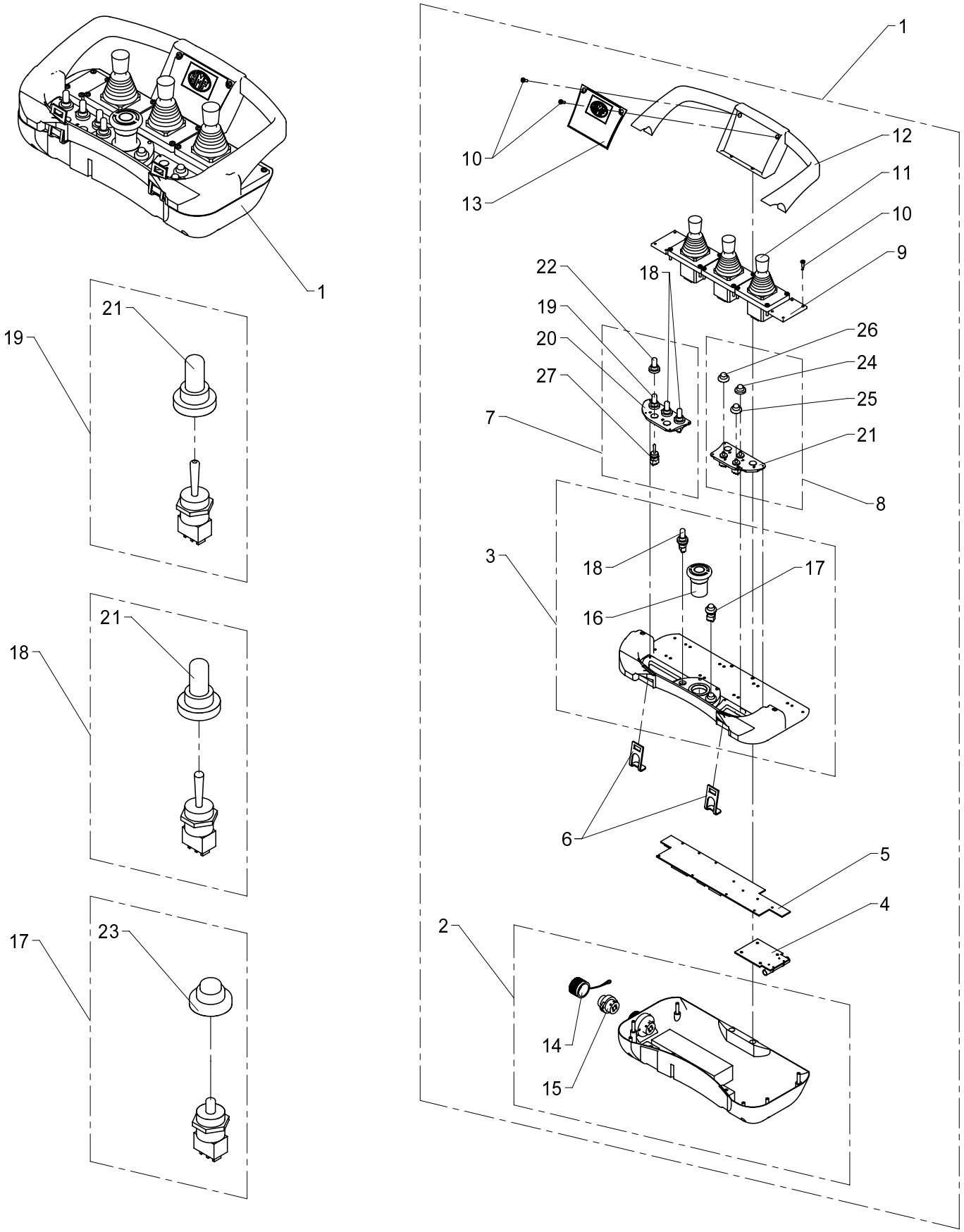

534 21 040

From loader 1060001
To loader
Created
Modified

Remote control box, 3x2 proportional

Pos	Qty.	Part no.	Description	Remarks
1	1	57281	Remote control box 3x2 prop.	RC 400-CAN komplet
2	1	58152	Bottom part	RC 400-CAN komplet
3	1	58171	Top part	RC 400-CAN komplet
4	1	57280	Electronic circuit card	
5	1	57212	Printed card	
6	2	57163	Bracket for neck strap	
7	1	57283	Switch panel	
8	1	58196	Switch plate, right joystick	
9	2	58151	Cover	
10	10	57174	Screw	Ø2.9 x 6.5
11	3	58173	Joy stick, 2 funct.	
12	1	57282	Protective frame for joystick	
13	1	57279	Display cover + HMF logo	
14	1	58104	Cover	
15	1	58121	Plug	180/260 4polet
16	1	57289	Stop button, complete	
17	1	58144	Switch with cover	1 - 0
18	3	58143	Switch with cover	(1) - 0 - (1)
19	1	58142	Switch with cover	1 - 0 - 1
20	1	57182	Cover plate, excl. holes	
21	1	58161	Switch panel	14
22	4	58166	Cover	
23	1	58167	Cover	
24	1	57177	Rubber cover yellow	
25	1	57178	Rubber cover red	
26	1	57176	Rubber cover green	
27	1	57186	Switch excl. cover	1 - 0 - (1)

15/105 - 17/117 SL & DL Parts

Internal ref. 82 00 010

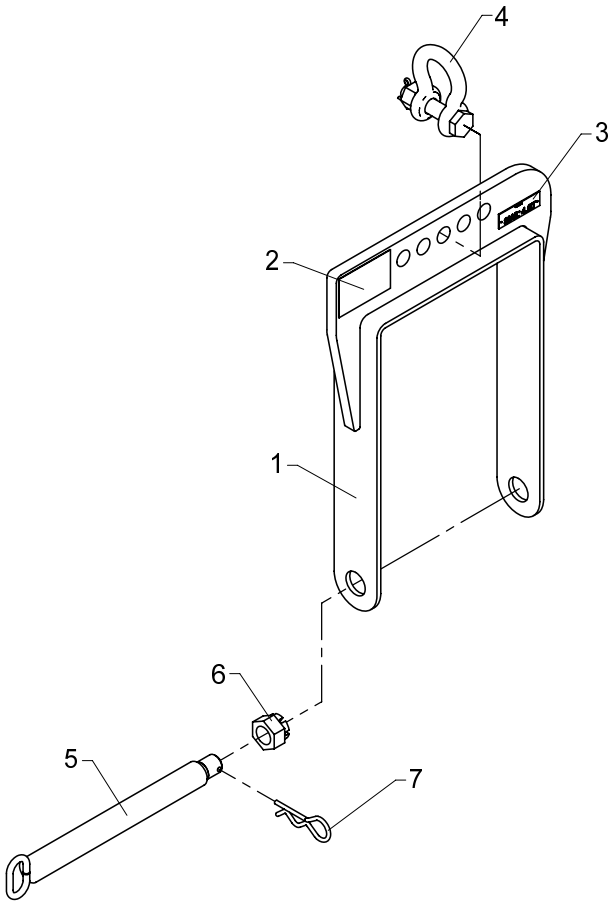

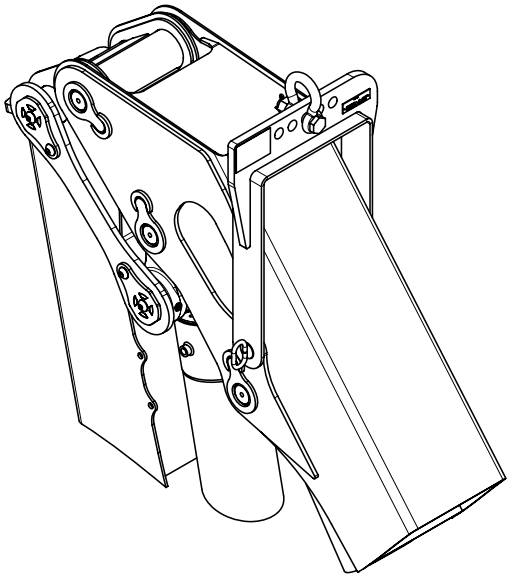

534 25 010

From loader 1060001
To loader

Created 25-02-2009
Modified

Lifting yoke, cpl.

Pos	Qty.	Part no.	Description	Remarks
1	1	8200011	Lifting yoke	
2	1	64797	Type plate, incl. CE	
3	1	64835	Brass label SWL 4.0 t	
4	1	62117	Shackle	
5	1	8200015	Pin	
6	1	30839	Nut	M30
7	1	33383	Lock spring	

15/105 - 17/117 SL & DL Parts

Internal ref. 82 00 000

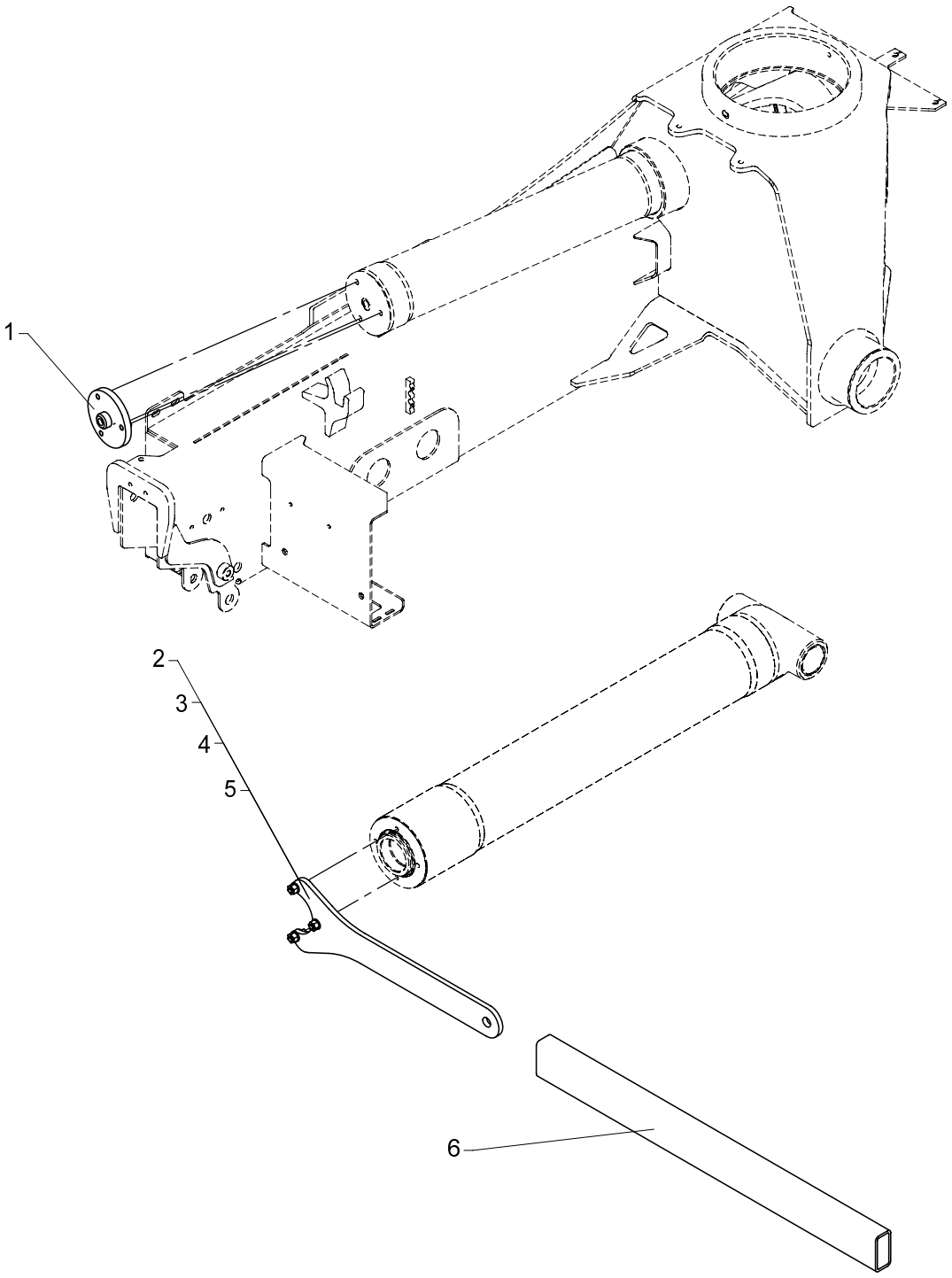

Hydraulic accessories

Pos	Qty.	Part no.	Description	Remarks
1	1	8200001	Mounting tool,slewing cylinder	
2	1	8200045	Spanner wrench (DC 110 - Ø8)	Cylinder ø125
3	1	8200046	Spanner wrench (DC 120 - Ø10	Cylinder ø140
4	1	8200047	Spanner wrench (DC 130 - Ø10	Cylinder ø150 + ø160
5	1	8200048	Spanner wrench (DC 150 - Ø10	Cylinder ø180
6	1	8200037	Square tube	

15/105 - 17/117 SL & DL Parts

Internal ref. 82 00 050

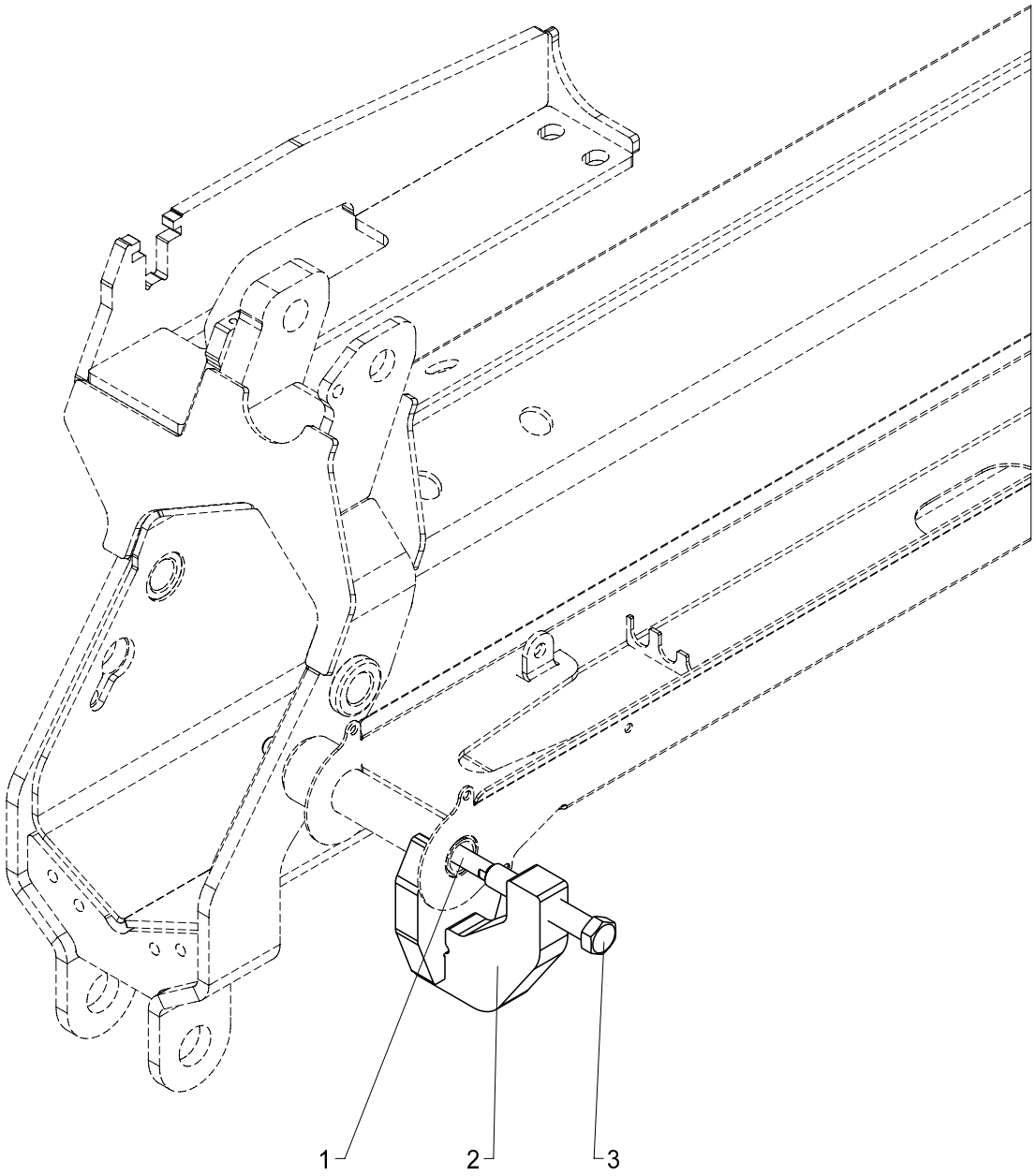

Dismounting tools, cpl.(EXV)

534 25 030

From loader 1060001
To loader

Created 11-03-2009
Modified

Pos	Qty.	Part no.	Description	Remarks
1	1	8200054	Rod	
2	1	8200051	Dismounting tool	
3	1	8200055	Pin	

15/105 - 17/117 SL & DL Parts

Internal ref. 82 00 030

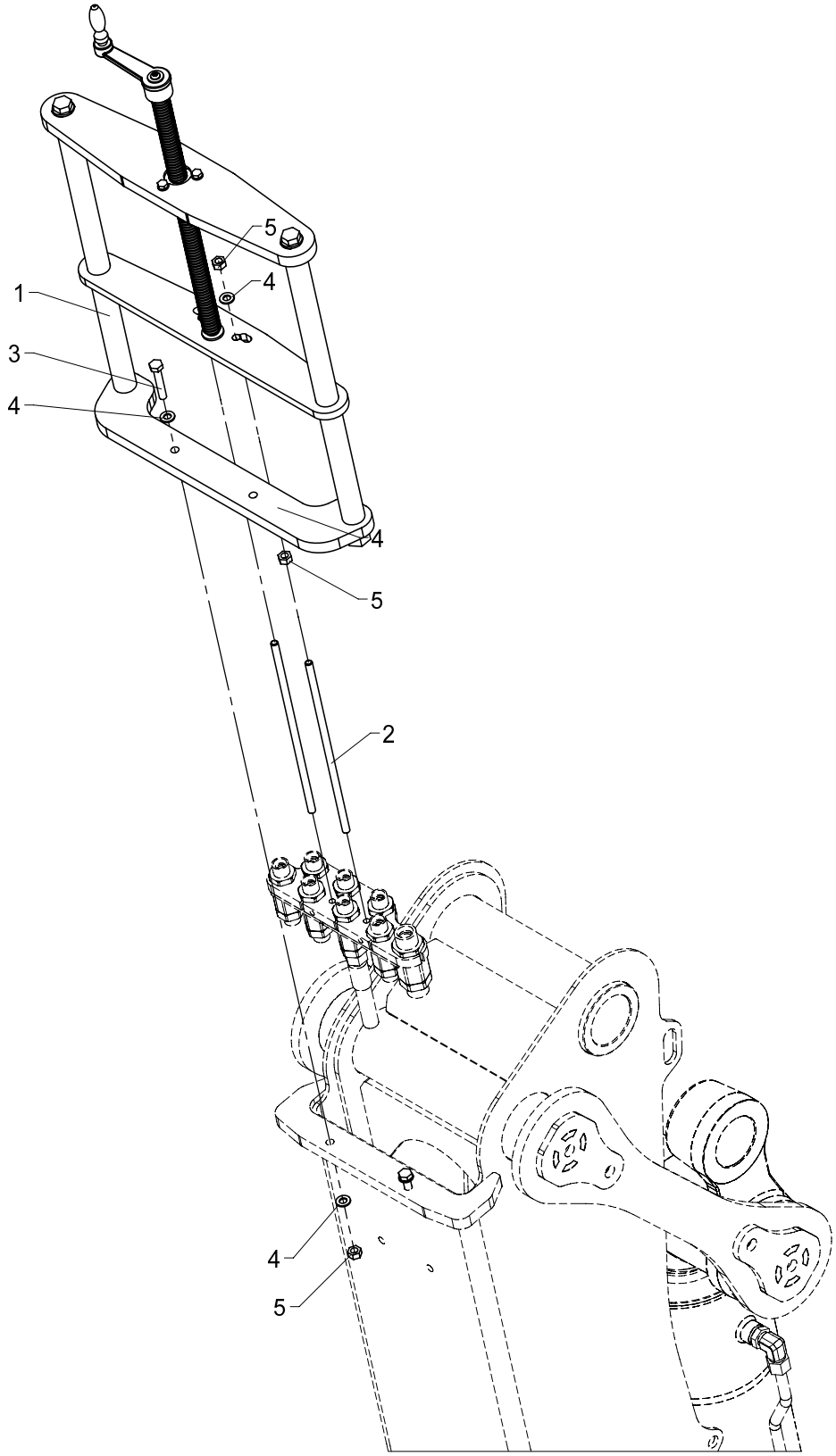

534 25 040

From loader 1060001
To loader

Created 05-03-2009
Modified

Lifting tools cpl. (Change of hoses inside the column)

Pos	Qty.	Part no.	Description	Remarks
1	1	8200020	Lifting tool (change of hoses	
2	2	8200035	Threaded pin	
3	2	30138	Steel bolt, stainless	M8 x 45
4	8	31147	Washer, stainless	8 mm
5	6	30856	Nut, stainless	M8

15/105 - 17/117 SL & DL Parts

Internal ref. 82 00 090

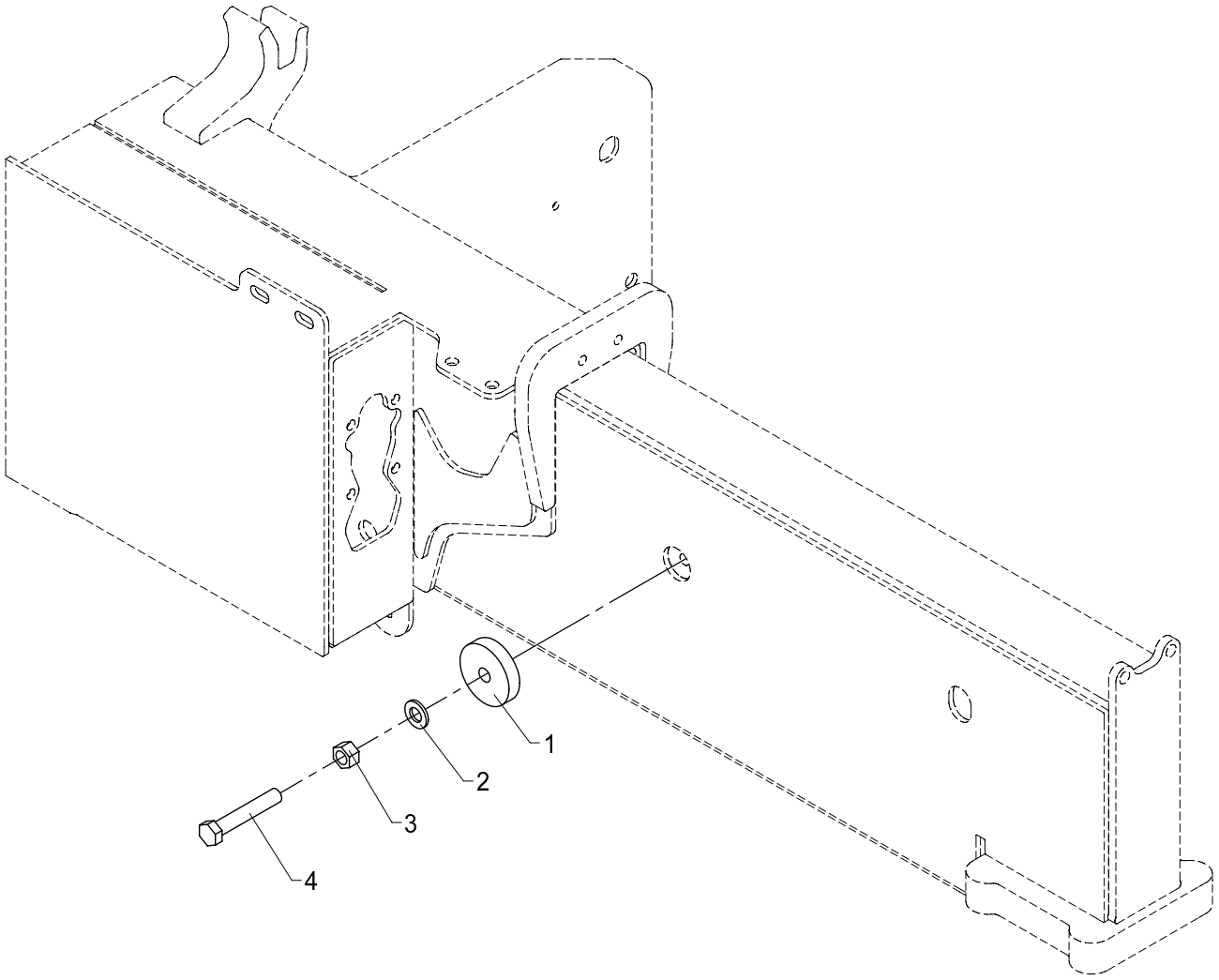

534 25 050

From loader 1060001
To loader

Created 13-01-2010
Modified

Holding kit (pin in hydr. extension)

Pos	Qty.	Part no.	Description	Remarks
1	1	6340617	Shim	
2	1	31131	Washer	12 mm
3	1	30860	Nut, stainless	M12
4	1	30190	Set screw	M12 x 70

15/105 - 17/117 SL & DL Parts

Internal ref. 82 00 100

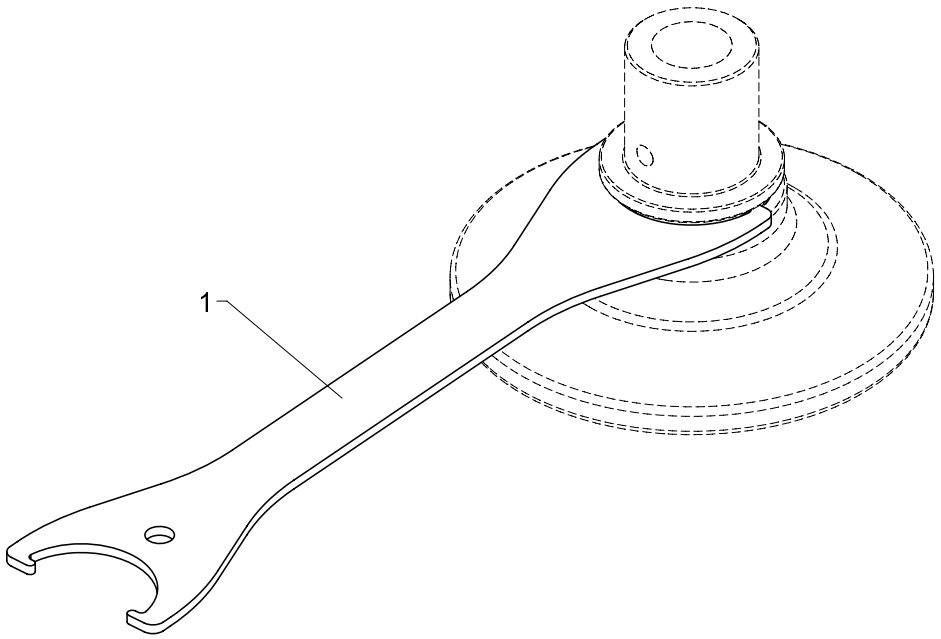

534 25 060

From loader 1060001
To loader
Created
Modified

Spanner wrench, footplate + ball joint

Pos	Qty.	Part no.	Description	Remarks
1	1	8200058	Spanner wrench (DC 50 - Ø4)	