An Oshkosh Corporation Company

CAS80R

60-85 CFM HYDRAULIC-DRIVEN ROTARY SCREW AIR COMPRESSOR

INSTALLATION, OPERATION, MAINTENANCE & PARTS MANUAL

NOTE

This publication contains the latest information available at the time of preparation. Every effort has been made to ensure accuracy. IMT reserves the right to make design change modifications or improvements without prior notification.

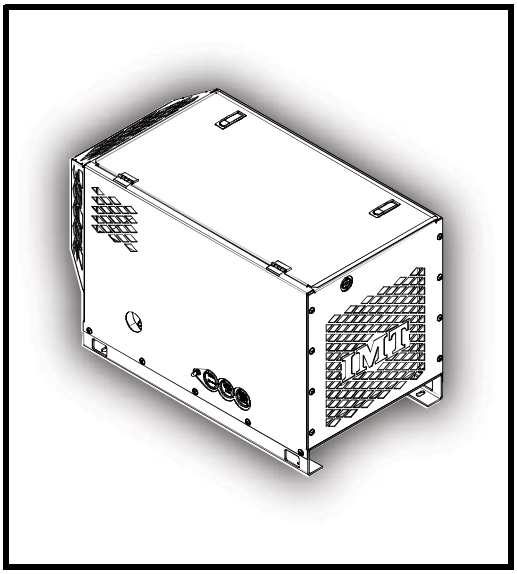

Read this manual before installing, operating or servicing this equipment. Failure to comply with the operation and maintenance instructions in this manual WILL VOID THE EQUIPMENT WARRANTY.

NOTE

Use only IMT Premium Synthetic Oil and Genuine IMT Parts. Inspect and replace damaged components before operation. Substituting non-IMT Oil or non-genuine IMT filter components WILL VOID THE COMPRESSOR WARRANTY!

NOTE

Making unauthorized modifications to the system components WILL VOID THE WARRANTY!

Always inform Iowa Mold Tooling Co., Inc., before beginning any changes to the hydraulic-driven system.

KEEP THE MANUAL WITH THE VEHICLE

Iowa Mold Tooling Co., Inc.

500 Highway 18 West
Garner, Iowa 50438
Phone: 641.923.3711
Fax: 641.923.6063
www.imt.com

©2016 Iowa Mold Tooling Co., Inc.
All rights reserved.

PART NUMBER:
99905932

Revision 0
Effective Date:
FEBRUARY 2016
Sub-revision June 2019

NOTICE TO CUSTOMER

This manual is the final version and some of the information and specifications are subject to change without notice.

TABLE OF CONTENTS

TABLE OF CONTENTS I

SECTION 1: SAFETY 1

1.1 GENERAL INFORMATION 1
1.2 SUMMARY OF DANGERS, WARNINGS, CAUTIONS AND NOTES 1
1.2.1 DANGERS 1
1.2.2 WARNINGS 1
1.2.3 CAUTIONS 2
1.2..4 NOTES 2
1.2.5 SAFETY DECALS 3
1.3 DISPOSING OF MACHINE FLUIDS 3

SECTION 2: SPECIFICATIONS 5

TABLE 2A: SPECIFICATIONS 5
TABLE 2B: PRIME LUBRICANT CHARACTERISTICS 6
TABLE 2C: BOLT AND TORQUE SPECIFICATIONS 6

SECTION 3: INSTALLATION 7

3.1 MACHINE PACKAGE RECEIPT/INSPECTION 7
3.2 GENERAL INSTRUCTIONS 7
3.3 DETERMINING THE IMT UNIT MOUNTING LOCATION 7
3.4 HYDRAULIC SYSTEM REQUIREMENTS 8
3.5 VENTILATION REQUIREMENTS 8
3.6 HYDRAULIC REQUIREMENTS 9
3.6.1 HYDRAULIC OIL REQUIREMENTS 10
3.7 HYDRAULIC LINE SIZING 10
TABLE 3A - OIL SELECTION GUIDE 10
3.7.1 SUCTION LINE SIZING 11
TABLE 3B - SIZING FOR SUCTION HOSE 11
3.7.2 RETURN LINE SIZING 11
TABLE 3C - RETURN LINE SIZING 11
3.7.3 PRESSURE LINE SIZING 11
TABLE 3D - PRESSURE LINE SIZING 11
3.8 HYDRAULIC SYSTEM FILTRATION 11

Continued on next page...

SECTION 3: INSTALLATION (CONTINUED)

3.9 HYDRAULIC OIL RESERVOIR 11
3.9.1 DETERMINING RESERVOIR SIZE 11
3.9.2 DETERMINING RESERVOIR SHAPE 11
3.9.3 MANDATORY RESERVOIR FEATURES 11
3.9.4 RECOMMENDED OPTIONS 13
3.9.5 FEATURES TO AVOID 13
3.10 INSTALLATION 13
3.10.1 MACHINE LOCATION 13
3.10.2 CLEARANCE 14
3.10.3 MOUNTING 14
3.10.4 SERVICE CONNECTIONS 14
3.10.5 ELECTRICAL CONNECTIONS 14
3.10.6 HYDRAULIC SUPPLY CIRCUIT 14
3.10.7 ROUTING 14

SECTION 4: OPERATION 17

4.1 GENERAL INFORMATION 17
4.2 PURPOSE OF CONTROLS 17
4.3 INITIAL START-UP PROCEDURE 19
4.4 ROUTINE START-UP PROCEDURE 19
4.5 COLD WEATHER START-UP PROCEDURE 20
4.6 ROUTINE SHUTDOWN PROCEDURE 20
4.7 OPERATING CONDITIONS 20

SECTION 5: MAINTENANCE 23

5.1 GENERAL INFORMATION 23
5.2 MACHINE MAINTENANCE SCHEDULE 24
5.3 REPLACEMENT PARTS 24
5.4 PARTS REPLACEMENT AND ADJUSTMENT PROCEDURES 24
TABLE 5A ROUTINE MAINTENANCE SCHEDULE 25
5.4.1 SERVICING THE FUSES AND CIRCUIT BREAKER 26
5.4.2 SAFETY SHUTDOWN SYSTEMS 26
5.4.2.1 TESTING THE GAUGES' SHUTDOWN FEATURE 26
5.4.2.2 PRESSURE RELIEF VALVE 27
5.4.3 LONG TERM STORAGE 27

SECTION 6: TROUBLESHOOTING 29

6.1 GENERAL INFORMATION 29
6.2 TROUBLESHOOTING GUIDE 30

SECTION 7: ILLUSTRATED PARTS LIST 33

7.1 PARTS ORDERING PROCEDURE 33
TABLE 7A:RECOMMENDED SPARE PARTS LIST 34
TABLE 7B: MAINTENANCE TRACKING LOG 35
7.2A COMPRESSOR ASSEMBLY AND REPLACEMENT PARTS 36
7.2B COMPRESSOR AND MOUNTING PARTS 38
7.3A HYDRAULIC MOTOR AND DRIVE - OPEN CENTER 39
7.3B CLOSED CENTER AND HYDRAULIC THERMAL VALVE 39
7.4 COOLING SYSTEM 12V DC / 24V DC 40
7.5 CONTROL SYSTEM 41
7.6 FRAME AND CANOPY - OVERALL ASSEMBLY 42
7.6A FRAME AND CANOPY - FRONT SIDE PANEL 43
7.6B FRAME AND CANOPY - ACCESS DOOR 43
7.6C FRAME AND CANOPY - ROOF PANEL 43
7.6D FRAME AND CANOPY - BACK SIDE PANEL 44
7.6E FRAME AND CANOPY - COMPRESSOR SIDE PANEL 44
7.6F FRAME AND CANOPY - HYDRAULIC DRIVE FRAME 45
7.7A CONTROL MANIFOLD - 12V DC / 24V DC OPEN CENTER 46
7.7B HYDRAULIC THERMAL VALVE - 12V DC / 24V DC 47
7.8 THERMAL CONTROL 48
7.9 DECAL LOCATIONS (PART 1 OF 2) 49
7.9 DECAL LOCATIONS (PART 2 OF 2) 50
7.10 WIRING DIAGRAM 51
7.11 SCHEMATIC - HYDRAULIC OIL FLOW OPEN CENTER 52
7.12 SCHEMATIC - HYDRAULIC OIL FLOW OPEN CENTER, COLD WEATHER 53
7.13 SCHEMATIC - COMPRESSOR OIL / AIR FLOW (PART 1 OF 2) 54
7.13 SCHEMATIC - COMPRESSOR OIL / AIR FLOW (PART 2 OF 2) 55
7.14 HOSE AND TUBING - OPEN CENTER SYSTEM 56
7.15 HOSE AND TUBING - OPEN CENTER, COLD WEATHER SYSTEM 58

BLANK PAGE

SECTION 1: SAFETY

1.1 GENERAL INFORMATION

The products provided by IMT are designed and manufactured for safe operation and maintenance. But it is ultimately the responsibility of the users and maintainers for safe use of this equipment. Part of this responsibility is to read and be familiar with the contents of this manual before operation or performing maintenance actions.

1.2 ⚠SUMMARY OF DANGERS, WARNINGS, CAUTIONS AND NOTES

These boxed inserts are placed throughout this manual in the sections where they apply. This subsection is a general summary of their contents.

1.2.1 ⚠DANGERS

⚠ DANGER
Identifies actions or conditions which will cause death, severe injury, or equipment damage or destructive malfunctions.

- Keep tools or other conductive objects away from live electrical parts.
- Never touch electrical wires or components while the machine is operating. They can be sources of electrical shock.

1.2.2 ⚠WARNINGS

⚠ WARNING
Identifies actions or conditions which may cause death, severe injury, or equipment damage or destructive malfunctions.

- **DO NOT EVER** use this compressor as a breathing air source. IMT disclaims any and all liabilities for damage or loss due to fatalities, personal injuries resulting from the use of an IMT compressor to supply breathing air.
- **DO NOT** perform any modifications to this equipment without prior factory approval.
- **DO NOT** operate the compressor or any of its systems if there is a known unsafe condition. Disable the equipment by disconnecting it from its power source. Install a lock-out tag to identify the equipment as inoperable to other personnel.
- **DO NOT** operate the compressor with any by-pass or other safety systems disconnected or rendered inoperative.
- **DO NOT** operate the equipment while you are under the influence of alcohol or drugs.
- **DO NOT** operate the equipment while you are feeling ill.
- **DO NOT** attempt to service the equipment while it is operating.
- Before performing maintenance, or replacing parts, relieve the entire system pressure by opening a service valve which will vent all pressure to the atmosphere: remove all electrical power.
- **DO NOT** use the compressor for purposes other than for which it is intended. High pressure air can cause serious and even fatal injuries.
- **DO NOT** operate the compressor outside of its specified pressure and speed ratings. (See **Section 2: Specifications** or refer to the equipment data plate.)
- **DO NOT** use flammable solvents or cleaners for cleaning the compressor or its parts.
- **DO NOT** operate the compressor in areas where flammable, toxic, or

corrosive fumes, or other damaging substance can be ingested by the compressor intakes.

- Keep arms, hands, hair and other body parts, and clothing away from fans, drive shafts, and other moving parts.
- **DO NOT** wear jewelry, unbuttoned cuffs, ties, or loose-fitting clothing when you are working near moving/rotating parts.
- **ALWAYS** confine long hair when working near moving/rotating parts.
- **NEVER** operate the equipment while wearing a headset to listen to music or the radio.
- Wear personal protective equipment such as gloves, work shoes, and eye and hearing protection as required for the task at hand.
- **DO NOT** operate the compressor with any guards removed or damaged, or other safety devices inoperative.
- **DO NOT** operate the compressor in enclosed or confined spaces where ventilation is restricted or closed-off.
- **DO NOT** install shut-off valves between the compressor and the compressor receiver tank (sump).
- Ensure that hoses connected to service valves are fitted with correctly sized and rated flow limiting devices which comply with applicable codes. Pressurized broken or disconnected hoses can whip, causing injuries or damage.
- **DO NOT** use tools, hoses, or equipment that have maximum ratings below that of this compressor.
- Keep metal tools, and other conductive objects away from live electrical components.
- Before performing maintenance or repair operations on the compressor, ensure that all power has been removed and been locked out to prevent accidental application.
- **DO NOT** assume that because the compressor is in a STOPPED condition that hydraulic power has been removed.
- Use this compressor only to compress atmospheric air. Use of this equipment as a booster pump and/or to compress any other gaseous or aerosol substance constitutes improper use. It can also cause damage or injuries. Such misuse will also void the warranty.
- Install, operate, and maintain this equipment in full compliance with all applicable OSHA, other Federal, state, local codes, standards, and regulations.
- When lifting objects, be aware of proper lifting techniques to avoid injury.
- **ALWAYS** read and follow safety related precautions found on containers of hazardous substances.

1.2.3 ⚠ CAUTIONS

⚠ CAUTION

Identifies actions or conditions which will or can cause injuries, equipment damage or malfunctions.

- Check all safety devices for proper operation on a routine basis.
- Ensure that no tools, rags, or other objects are left on compressor drive systems or near intakes.
- Keep the equipment clean when performing maintenance or service actions. Cover openings to prevent contamination.
- **DO NOT** operate the compressor if cooling air is not available (fan/cooler not operating) or if lubricant levels are below their specified minimum levels.
- Ensure all plugs, hoses, connectors, covers, and other parts removed for maintenance actions are replaced before applying power to the compressor.
- Avoid touching hot surfaces and components.
- Ensure that electrical wiring, terminals; hoses and fittings are kept in serviceable condition through routine inspections and maintenance. Replace any damaged or worn components.

1.2.4 NOTES

NOTE

Additional information (or existing information) which should be brought to the attention of operators/maintainers affecting operation, maintenance, or warranty requirements.

IOWA MOLD TOOLING CO., INC.
(641) 923-3711 • www.imt.com

Note boxes are usually listed to convey and give focus to a distinct piece of information, which is not directly related to a safety issue, but is necessary to understand machine function and operation. Special note referrals in the manual may be contained in a box titled with an **IMPORTANT** banner, as shown below, and may also contain the WARNING symbol, should the information be linked to a safety issue:

⚠ IMPORTANT

Additional, CRUTIAL information (or existing information) which should be brought to the attention of operators/maintainers affecting operation, maintenance, or warranty requirements.

1.2.5 ⚠ SAFETY DECALS

Safety decals are placed onto, or located near, system components that can present a hazard to operators or service personnel. All pertinent decals listed in **Section 7.9, Decal Locations** are located near a component which is subject to respect in terms of safety precautions. Always heed the information noted on the safety decals.

⚠ WARNING

DO NOT REMOVE OR COVER ANY SAFETY DECAL. Replace any safety decal that becomes damaged or illegible.

1.3 ⚠ DISPOSING OF MACHINE FLUIDS

Always dispose of machine fluids under the guidance of all applicable local, regional and/or federal law.

IMT encourages recycling when allowed. For additional information, consult the container label of the fluid in question.

BLANK PAGE

SECTION 2: SPECIFICATIONS

TABLE 2A: SPECIFICATIONS	
GENERAL SYSTEM INFORMATION	**SPECIFICATION**
RATINGS	

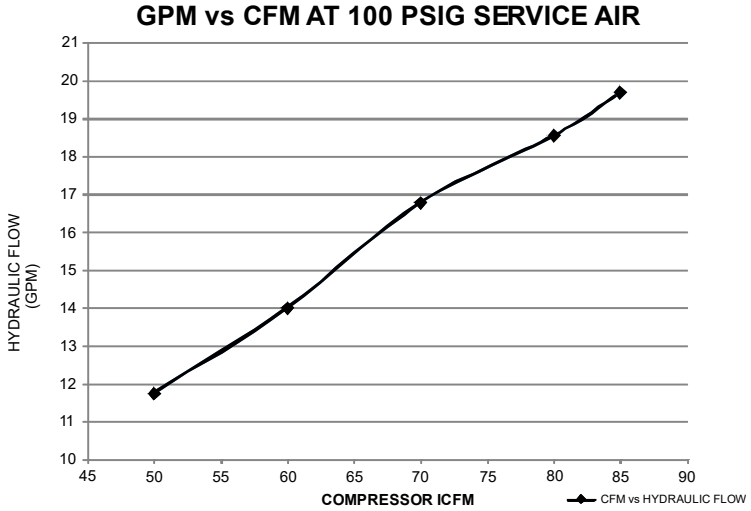

2440 PSIG MAX HYD PRESSURE @ COMPRESSOR @ 100 PSIG SERVICE AIR @ 85 CFM
2950 PSIG MAX HYD PRESSURE @ COMPRESSOR @ 150 PSIG SERVICE AIR @ 80 CFM

Ratings above are approximate and are based on 120°F Hydraulic Fluid Temperature.

Maximum compressor oil temperature	240°F
Maximum Hydraulic oil temperature	150°F
COMPRESSOR	
Type:	Encapsulated, Oil-injected, Rotary Screw
Compressor oil tank capacity:	5 U.S. Quarts (4.7L)
Compressor overheating protection:	Shut Down at 240°F
Air inlet system:	Dry-type, Single Stage Filter
Drive coupling:	Internal Spline
Hydraulic motor:	Gear Type
PACKAGE	
Main frame:	Formed Steel with Boltdown Provision
Electrical supply:	12V Standard; 24V Optional
Electrical connections:	4-pin Deutsch
Supply connections (customer hook-up):	Hydraulic: Oil In 3/4 in. 37° JIC
	Hydraulic: Oil Out 1 in. 37° JIC
	Electrical: 12V DC Positive and Ground (Standard) 24V DC Positive and Ground (Optional)
	Electrical: High Temp Shutdown
Enclosure:	Sheet Metal with Service Access
Cooler:	Hydraulic Oil Cooler/Radiator Core - Electric Fan
Dimensions:	39.5” L x 21” W x 25” H
Weight:	375 lbs.

TABLE 2B: PRIME LUBRICANT CHARACTERISTICS	
Viscosity	178 SUS at 100° F (38°C)
Flashpoint	457° F (236°C)
Pour Point	-49° F (-45°C)
Contains	Rust and Oxidation Inhibitors and Detergents

TABLE 2C: BOLT AND TORQUE SPECIFICATIONS

	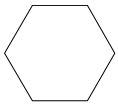 SAE 2	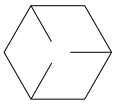 SAE 5	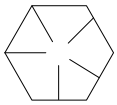 SAE 7	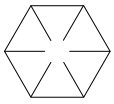 SAE 8	
	2	**5**	**7**	**8**	**SOCKET HEAD CAP SCREW**
I.D. Marks	No markings	3 lines	5 lines	6 lines	Allen head
Material	Low carbon S.S.	Medium -carbon, tempered	Medium - carbon, quenched & tempered	Medium carbon, quenched & tempered	High-carbon, quenched & tempered
Tensile strength (minimum)	74,000 psi	120,000 psi	133,000 psi	150,000 psi	160,000 psi

US BOLT TORQUE SPECIFICATIONS (Torque in foot-pounds)

		5	5	8	8	Socket head cap screw	Socket head cap screw
Bolt Diameter	**Thread per inch**	**Dry**	**Oiled**	**Dry**	**Oiled**	**Dry**	**Oiled**
1/4	20	8	6	12	9	14	11
5/16	18	17	13	25	18	29	23
3/8	16	30	23	45	35	49	39
1/2	13	75	55	110	80	113	90

SECTION 3: INSTALLATION

3.1 MACHINE PACKAGE RECEIPT/INSPECTION

Upon receipt of the machine package, inspect the exterior of the shipping crate for signs of shipping/transit damage. Any damage should be reported immediately to the shipping company. Open the lid and inspect the component parts and supports to ensure that there has been no internal movement of assemblies or components which may have caused damage. To install the IMT compressor system, refer to the following sections:

3.2 GENERAL INSTRUCTIONS

This section provides general guidance for locating and preparing the IMT compressor package for operation. Each installation is unique and can be affected by location, ventilation, and other factors such as electrical and hydraulic power supply availability and location.

⚠ WARNING

Install, operate, and maintain this equipment in full compliance with all applicable OSHA, other Federal, state, local codes, standards, and regulations.

⚠ WARNING

Before performing maintenance or repair operations on the compressor, ensure that all power has been removed and locked out to prevent accidental application.

DO NOT assume that because the compressor is in a STOPPED condition that power has been removed.

⚠ WARNING

DO NOT perform any modifications to this equipment without prior factory approval.

⚠ WARNING

DO NOT use plastic pipe, or incorrectly rated piping or hose. Incorrectly rated connection material can fail and cause injury or equipment damage.

⚠ WARNING

DO NOT operate the compressor in enclosed or confined spaces where ventilation is restricted or closed off.

3.3 DETERMINING THE IMT CAS80R UNIT MOUNTING LOCATION

When determining the location to mount the CAS80R unit, the following criteria must be taken into consideration:

- Refer to **Section 3.10**. The location must allow for the machine dimensions (***Figure 3-4***), and additional space requirements for minimum cooling, access and maintenance. Refer to ***Figure 3-4*** to determine the minimum space requirement.
- The mounting surface must be level and able to accommodate the four [4] mounting bolts of the base frame.
- The mounting surface must be able to support the unit's weight (375 lbs.).
- The external gauges must be easily visible to the operator.

It is recommended, for most installations, to mount the compressor on the driver's side of the vehicle. The unit should be situated in such a manner that the fan (rear) and hydraulic cooler (front) are not obstructed. Do not place the compressor in any location where it can intake exhaust fumes, dust or debris.

3.4 HYDRAULIC SYSTEM REQUIREMENTS

⚠ IMPORTANT

IMT highly recommends consulting a hydraulic supply expert for specifying the correct hydraulic pump size and type, oil reservoir size, hydraulic pressure relief, and other hydraulic supply components for your application.

NOTE

Hydraulic performance will derate at temperatures above 150 degrees F.

NOTE

IMT recommends a dedicated pump and hydraulic circuit.

The following criteria should be taken into consideration for the hydraulic system requirements:

- The hydraulic flow and pressure requirements of the air compressor.
- A continuous hydraulic load requirement is needed when the compressor is running.
- The duty cycle and ambient temperatures.
- Other hydraulic equipment which may share the same hydraulic supply system.

3.5 VENTILATION REQUIREMENTS

The variables involved with installing the hydraulic pump system make it impossible to recommend detailed specifics, as each customer is potentially different in regard to vehicle type, customer needs, etc. The following information is therefore given not as absolute instruction, but as good practice guideline

⚠ IMPORTANT

Operation of the hydraulic system will generate an amount of heat that will damage system components. For this reason the equipment package must have a proper ventilation system installed.

Machine placement will play an important factor in providing adequate and consistent cooling air for the system operation. In this regard, there are two types of mounting locations to consider: open-mounting and enclosed-mounting (***Figure 3-1***).

Open-mounting refers to machine placement location on the service body, whereby the machine is directly exposed to the environmental ambient. **Enclosed-mounting** refers to machine placement location within an enclosure located on the service body.

Open-mounting provides for the best cooling situation, allowing for maximum unrestricted air flow to interact with the heat displacement components. The mounted unit must have a minimum additional six inch (6") unobstructed clearance on all sides of the machine.

Although enclosed mounted-units provide a degree of shelter and security, this type of machine location is not recommended, due to its limiting effect on the air flow needed to cool an operating system. Should this mounting type be preferred, then provision should be made to maximize the machine's exposure to the air (i.e., a pull-out mounting

platform; removable enclosure walls, etc.). For enclosed-mountings, it is also recommended to install a safety switch on the access door that allows for compressor operation only when the door is open.

The unit must have a minimum additional six inch (6”) unobstructed clearance on all sides of the machine for operation.

⚠ IMPORTANT

DO NOT mount Hydraulic Reservoir in same enclosed space as the machine. Installing enclosed-mounting type without proper cooling air ducted to coolers is NOT RECOMMENDED.

Ideal ventilation regardless of the type of mounting installation of the unit, needs to provide adequate, unrestricted air flow through the unit. Additionally, the cooler must be exposed to, or provided with (ducted), cool ambient air, and an exhaust fan within the enclosed space to displace the heated air.

3.6 HYDRAULIC REQUIREMENTS

The hydraulic pump must be rated for 2,900 psi consistent operation, and 3,300 psi for pressure spikes.

⚠ IMPORTANT

The relief valve is set to 3,300 psi. The pump must be rated for this relief valve setting.

The compressor capacity will depend on hydraulic oil flow.

NOTE

The values depicted in TABLE 2A are referential only: Due to the variable relationship between CFM output and hydraulic flow, adjustments should be tested to achieve the desired CFM output in regard to flow, load and system efficiency.

NOTE

The information in this manual is in regard to a fixed displacement pump. For systems utilizing a variable displacement pump, consult a qualified hydraulic system specialist.

If the compressor is being installed on a truck that already has a functioning hydraulic system, check the specifications for that system to ensure that it meets minimum requirements.

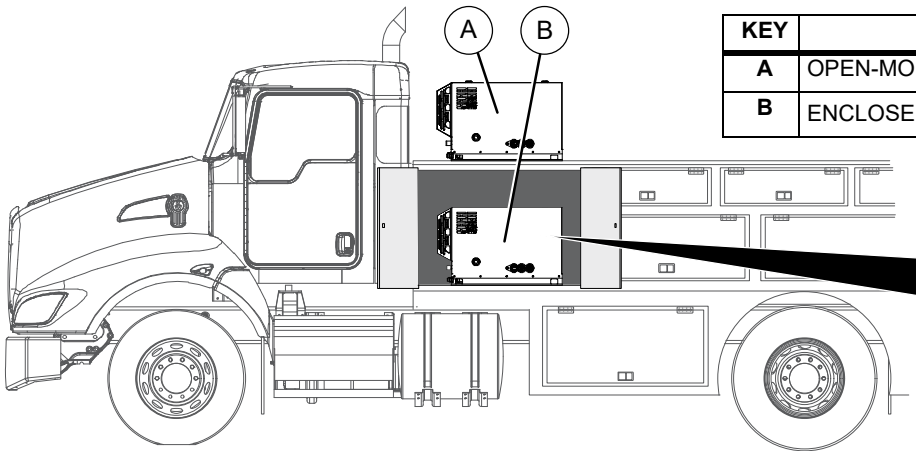

KEY	DESCRIPTION
A	OPEN-MOUNTING TYPE LOCATION
B	ENCLOSED-MOUNTING TYPE LOCATION

IMPORTANT

Fresh air ducting to the cooler(s) is required for enclosed unit mounting

Figure 3-1: Unit Mounting Types

3.6.1 HYDRAULIC OIL REQUIREMENTS

Depending upon situational, or seasonal, climate types, the viscosity of the oil can be affected by temperature conditions. For these particular cases, cold and/or extreme condition augmentations to the hydraulic system may be warranted. **TABLE 3B** shows a suggested approach to oil viscosity types, proportional to listed environmental conditions.

NOTE

This table should be used as guideline when choosing the hydraulic oil best suited for working condition. Consultation with a professional hydraulic system installer is strongly recommended to determine the optimal hydraulic oil type best matched for the operating conditions.

3.7 HYDRAULIC LINE SIZING

Industrial hydraulic system design guidelines generally call for the following maximum fluid velocities, which are then used to select line sizes for any particular GPM:

In regard to a particular hydraulic system GPM, line sizing selection for maximized fluid velocity is matched via industrial hydraulic system guidelines, that include:

- Suction @ 4 ft/sec
- Return @ 10 ft/sec
- Pressure @ 20 ft/sec

In cases where mobile hydraulics are to be added to a pre-built chassis, the above guidelines are not comprehensive due to the following factors:

- Extreme start-up temperature variations
- Long suction line
- Piggy-backing of motor case drain flow onto main return line

Pump failure, caused by cavitation of the circulating fluid; and motor seal breakdown due to excess return line pressure, can occur if proper allowances are not taken for the above factors when determining line sizing.

NOTE

Note that line size refers to the inside diameter of the hose.
For cold weather operation below 0°F, the next larger size hoses should be used.

TABLE 3A - OIL SELECTION GUIDE

EXTREME COLD CLIMATE		COLD CLIMATE		TEMPERATE CLIMATE	
-40 to 32°F		0 to 80°F		32 to 120°F	
No tank preheat	Tank and suction line preheat	Open-Mounted	Enclosed-Mounted	Open-Mounted	Enclosed-Mounted
I	AW 32	AW 22 II	AW 32	AW 32	AW 46

I A seasonal hydraulic oil change is recommended to get best component life. Recommended oils include:
Summer - When overnight temperatures do not go below 32°F (0°C), use AW 32.
Winter - When overnight temperatures is consistently below 32°F (0°C), use Texaco 5606H, PetroCanada Hydrex MV Arctic 15, Shell fluid 41, Mobil Aero HFA, Anderol Royco 78C.

II When possible, change to AW 32 during summer months.

IOWA MOLD TOOLING CO., INC.
(641) 923-3711 • www.imt.com

3.7.1 SUCTION LINE SIZING

Based on the 4 ft/sec fluid velocity condition, choose a suction hose size from **TABLE 3B.** Upsize the hose, if necessary.

Hose size recommendations for the IMT CAS80R are:

- Return line size: 1” (one inch)
- Pressure line size: 3/4” (0.75 inch)

TABLE 3B - SIZING FOR SUCTION HOSE	
Maximum Operating GPM	**Suction Hose Size**
8-13	1”
14-15	1-1/4”
16-22	1-1/2”

3.7.2 RETURN LINE SIZING

⚠ IMPORTANT

Failure to match the correct system return line sizing for the hydraulic system can cause rupture of the hydraulic motor’s shaft seal during cold start-ups.

Based on the 10 ft/sec fluid velocity condition, choose a suction hose size from **Table 3C**.

TABLE 3C - RETURN LINE SIZING	
Maximum GPM	**Return Line Size**
8-14	3/4”
15-22	1”

3.7.3 PRESSURE LINE SIZING

Based on the 20 ft/sec fluid velocity condition, choose a suction hose size from **TABLE 3D**.

TABLE 3D - PRESSURE LINE SIZING	
Maximum GPM	**Pressure Line Size**
8-12	1/2”
13-18	5/8”
19-22	3/4”

3.8 HYDRAULIC SYSTEM FILTRATION

IMT recommends using a 10 micron oil filter on the hydraulic oil return line. Flow rating of the filter must be equal to, or greater than, the maximum GPM at which the system will be operated.

⚠ IMPORTANT

Use only a filter that is specifically intended for hydraulic systems.

3.9 HYDRAULIC OIL RESERVOIR

3.9.1 DETERMINING RESERVOIR SIZE

In a conventional hydraulic system, minimum tank size, in gallons, should be equal to the maximum GPM flow rate, times two (x 2).

For the CAS80R, a minimum 35 gallon reservoir is recommended.

3.9.2 DETERMINING RESERVOIR SHAPE

The reservoir structure should be tall and narrow rather than shallow and broad (***Figure 3-3***). A tall, narrow tank is recommended because:

1. The oil level is well above suction line opening, avoiding the possibility of drawing air into the pump due to a vortex or “whirlpool” effect within the tank during operation flow.
2. Allows for better oil level tolerance level of the system if vehicle operates at an unusual (slightly off level) vehicle angle.
3. To keep return flow well below the surface so it does not break the surface and cause aeration (cavitation) of the oil.

3.9.3 MANDATORY RESERVOIR FEATURES

Refer to ***Figure 3-3***. The reservoir should incorporate the following design features:

- In terms of location of the reservoir tank within the hydraulic system, note that the

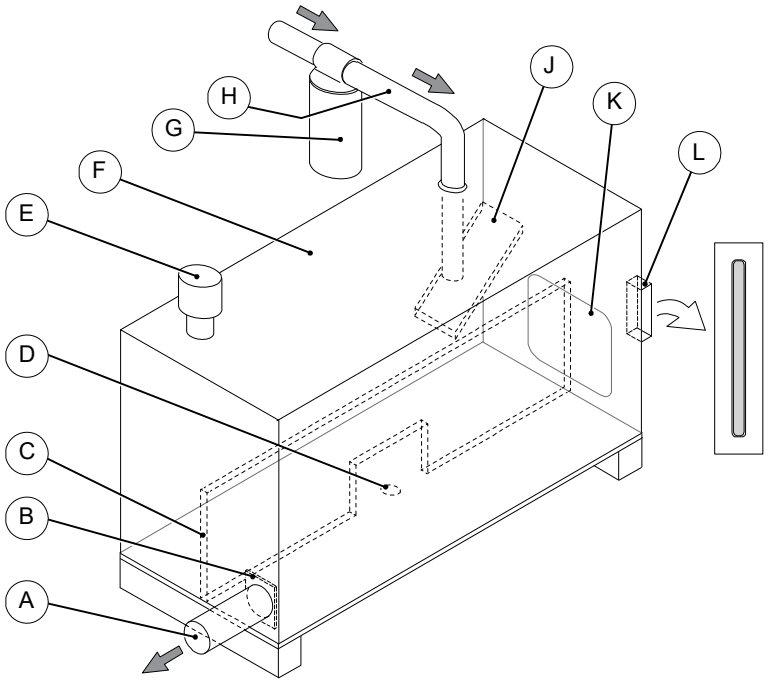

KEY	DESCRIPTION
A	SUCTION LINE
B	SUCTION LINE STRAINER
C	BAFFLE
D	DRAIN
E	FILL CAP / BREATHER [I]
F	HYDRAULIC RESERVOIR
G	FLUID FILER
H	RETURN LINE
J	DIFFUSER (SPLASH) PLATE
K	CLEANOUT ACCESS COVER
L	FLUID LEVEL SIGHT GLASS

[I] Breather cap is dessicant-filled to promote absorption of moisture.

Arrow indicates direction of hydraulic oil flow.

Figure 3-2: Unit Mounting Types

hydraulic pump's inlet line (suction line out *from* the reservoir *to* the pump) should be located near the bottom of the tank, well below the oil level. The suction line should protrude a minimum of two (2") inches into the reservoir to keep it away from potential contaminant surface buildup.

- A baffle or baffles should be included to prevent sloshing, or centrifugal motion of the oil; the goal is to break up direct flow of the oil from the return point to the suction point. This allows for the cooling action contact with the tanks' inner surfaces, and promote separation of any air or contaminants that interact with the flowing oil.

  An ideal baffle design would position several (but not too many) baffles to promote an 'S' shape flow within the reservoir, as viewed from above. The area of the end gaps should be at least twice the area of the suction line diameter.

- A drain port with plug, situated at the lowest point of the reservoir, is needed to assure complete draining. It should be installed using an adaptor or housing which does not protrude above the inner surface of the floor of the tank. It should be visible and accessible for removal, with sufficient space available for catching the waste oil.

- If the return line entrance to the tank is located near the top, it should be extended downward within the tank to minimize foaming and aeration of the circulating oil. This extends oil integrity, which in turn helps to maintain system performance and reliability.

- An inline filter on the return line is needed to protect the system against contaminants being introduced into the oil. The filter should be mounted externally from the reservoir in a location that allows for easy of service access.

- A breather and fill cap is needed at the oil fill port, which needs to be located above the system oil level. The breather cap acts to both filter air that is drawn into the reservoir as the oil level diminishes, and bleeds air out as the

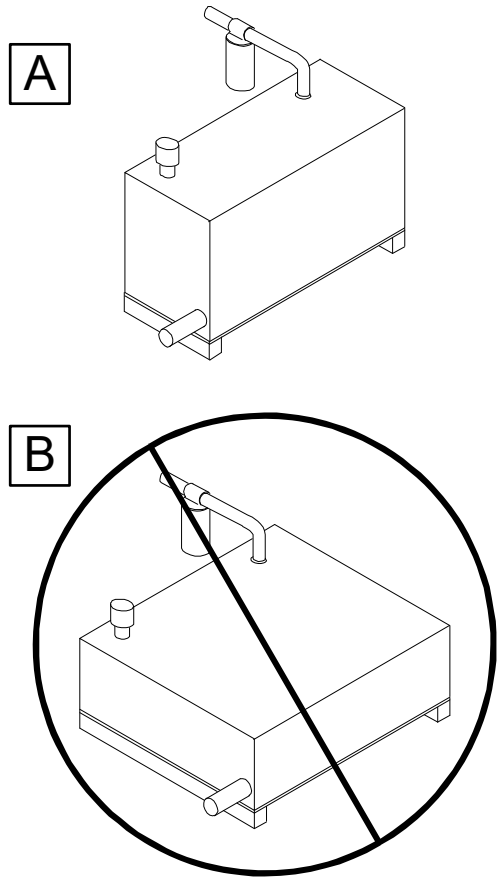

KEY	DESCRIPTION
A	**PREFERRED SHAPE:** TALL AND NARROW
B	**SHAPE TO AVOID:** BROAD AND SHALLOW

Figure 3-3: Reservoir Design Shape

level is regained. This maintains constant atmospheric pressure in the air volume within the reservoir.

- A sight-glass provides a direct visual indication of the oil level without having to open, or otherwise access, the reservoir.

3.9.4 RECOMMENDED OPTIONS

Although not essential for an adequately functioning reservoir, the following components will contribute to maximize the hydraulic system's efficiency and maintain a quality operational level.

- Magnetic drain plug: Attracts and concentrates ferrous contaminants at the drain plug source for easier accessibility and removal when cleaning tank interior.
- A temperature gauge: Located in approximation to, or built in to, the sight glass assembly allows for temperature reading at a glance.
- Filler port strainer: Prevents large contaminant particles from blending with system oil when adding new oil.
- Return line diffuser (splash) plate reduces velocity of oil flow before return oil stream merges with the main reservoir oil volume.
- A reservoir heater: For those systems that are exposed to cold climate ambients, having the ability to preheat the hydraulic oil prior to start up will make for easier startups, and reduce the strain of warming up the system under adverse cold conditions.

3.9.5 FEATURES TO AVOID

A strainer used to screen the suction line is not recommended for systems designed for mobile equipment use. Having equipment that likely experiences long suction lines, cold startups and non-tracked or infrequent maintenance practices may cause this strainer to potentially promote system strain (cavitation) than prolong fluid integrity through filtration.

A pressurized reservoir is not recommended for vehicles, as its complexity invites too much potential for loss of system reliability if it is not properly maintained.

3.10 INSTALLATION

3.10.1 MACHINE LOCATION

It is vital to locate the machine so that there is no restriction of cooling air through the enclosure (Refer to ***Figure 3-4***). Cooling air enters the enclosure at the right end when facing the instrument panel end of the machine, passes through the cooler and

exits through vents in the upper sides and the rear.

3.10.2 CLEARANCE

Refer to ***Figure 3-4***. Ensure that adequate surrounding clearance exists to allow for the canopy shroud to be re-positioned or removed for service access.

3.10.3 MOUNTING

Mounting surface or support should be adequate for the weight of the machine (375 lbs.), and should be level for normal operation. Mounting holes are located in the frame footing for four (4) 1/2" hold down bolts.

3.10.4 SERVICE CONNECTIONS

Refer to ***Figure 3-4***. Service connections are conveniently grouped at the lower rear section of the unit in the base frame.

3.10.5 ELECTRICAL CONNECTIONS

This system is offered with either 12V DC or 24V DC negative ground. Refer to **Section 7.10, Wiring Diagram.**

Wire #1 (10 gauge)	Battery (+) VDC supply
Wire #3 (12 gauge)	Ignition (+) VDC supply
Wire #2 (10 gauge)	Fan Circuit
Wire #4 (10 gauge)	Ground

3.10.6 HYDRAULIC SUPPLY CIRCUIT

It is recommended that the compressor unit possesses a separate pump/flow/return hydraulic circuit to other hydraulic equipment. This is to prevent the possibility of pressure/flow drops that may occur if other hydraulically-powered equipment is activated during compressor operation, which may in turn, cause the compressor to stall out. Alternatively, use of a diverter valve will permit hydraulics to power different equipment selectively.

3.10.7 ROUTING

Refer to **Section 7.11, Schematic Hydraulic Oil Flow**. Ensure that all supply hoses and electrical wiring are correctly specified, adequately supported, and do not touch or rest on any sharp edges. Wiring should be protected with split loom to prevent corrosion, and consequently, loss due to down time.

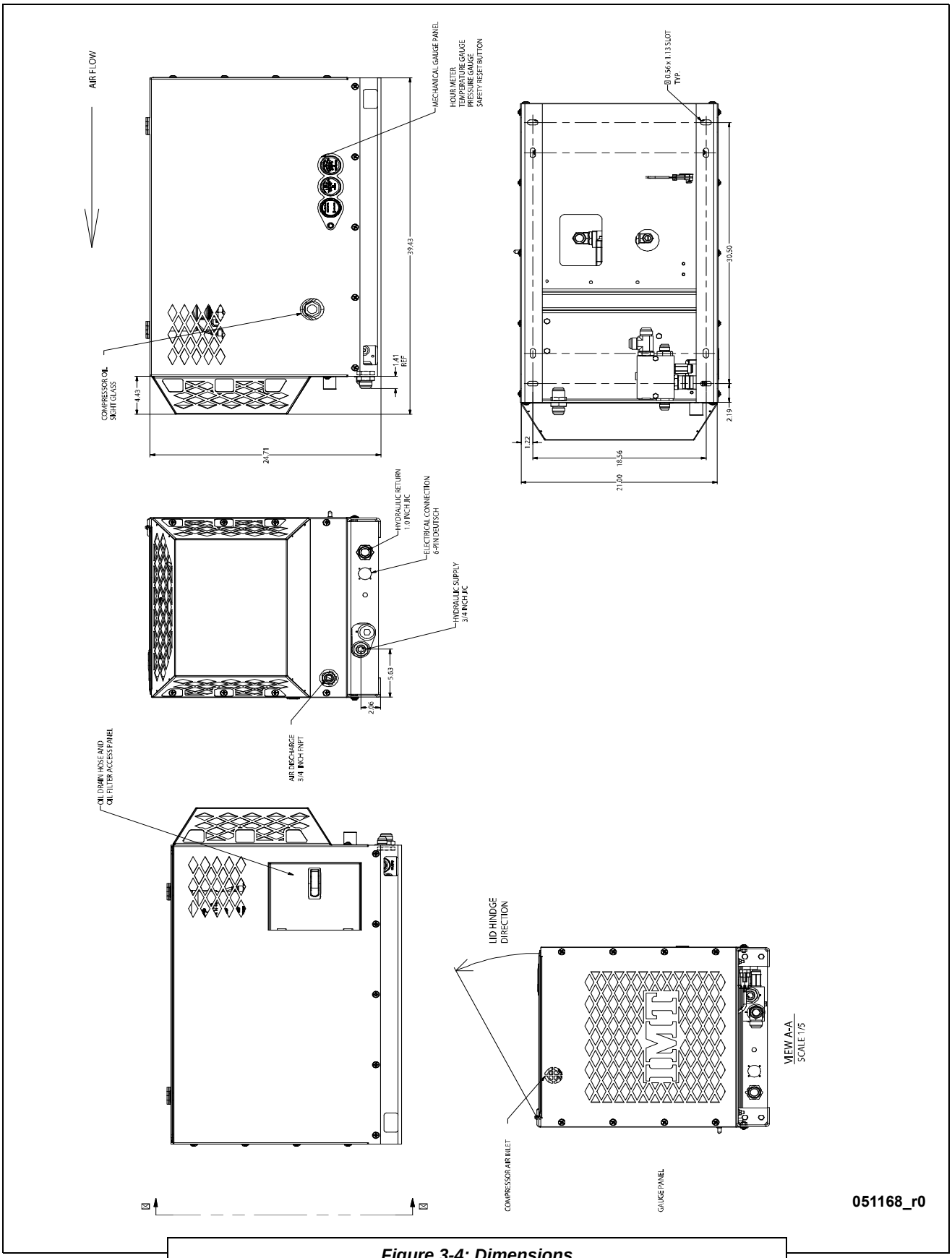

Figure 3-4: Dimensions

BLANK PAGE

SECTION 4: OPERATION

4.1 GENERAL INFORMATION

⚠ WARNING

Before starting, performing maintenance, or replacing parts, relieve the entire system pressure by opening a service valve which will vent all pressure to the atmosphere: remove all electrical power.

The IMT CAS80R Hydraulic compressor has a comprehensive array of controls and indicators (see ***Figure 4-1***). Understanding the correct operation of the system will help you to understand and recognize when it is operating optimally. The information in the Operation Section will help the operator to recognize and interpret the readings, which will call for service or indicate the beginning of a malfunction.

⚠ IMPORTANT

Before starting the IMT CAS80R compressor, read this section thoroughly and familiarize yourself with the controls and indicators - their purpose, location and use.

4.2 PURPOSE OF CONTROLS

CONTROL OR INDICATOR	PURPOSE
Discharge Air Pressure (Pressure Gauge)	Continuously monitors service line discharge air temperature. Will activate shut-down if over-pressure occurs.
Discharge Air Temperature (Temperature Gauge)	Continuously monitors service line discharge temperature. Will activate shutdown if over-temperature occurs.
Hour Meter Gauge (Operation Hours)	Indicates accumulated hours of operation for planning and logging service sched-ules.
Reset Button	To reset latch-in relay in event of over-pressure or over-temperature.
Oil Fill/Level Plug	To check/fill compressor oil level.
Minimum Pressure Check Valve	Maintains minimum operating pressure and prevents back flow when unloaded/ shutdown.
Pressure Regulator	Controls operating pressure.
Inlet Solenoid Valve	Opens/closes inlet valve in response to pressure regulator.
Air Inlet Valve	Opens/closes in response to air demand and acts as check valve upon unload/shut-down to prevent oil blow back into air filter.
Hydraulic Pressure Relief Valve	Relieves hydraulic pressure to return line in event of hydraulic over-pressure condi-tion.
Hydraulic Solenoid Valve	Responds to on/off switch to direct flow to compressor motor or to return line.
Air Pressure Relief Valve	Opens sump pressure to atmosphere in case of air over-pressure condition.

Continued on next page

4.2 PURPOSE OF CONTROLS

CONTROL OR INDICATOR	PURPOSE
Fault Reset	Fault button pops out if over temperature or over pressure condition is encountered. Button must be pressed to reset.

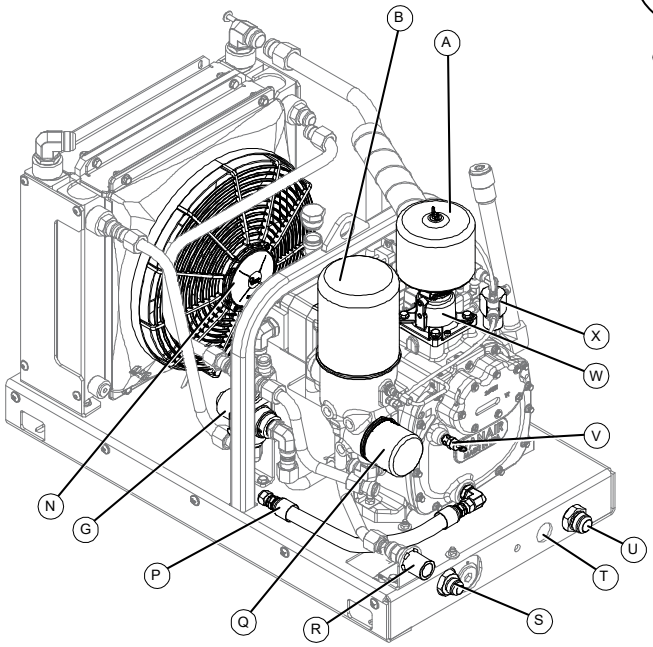

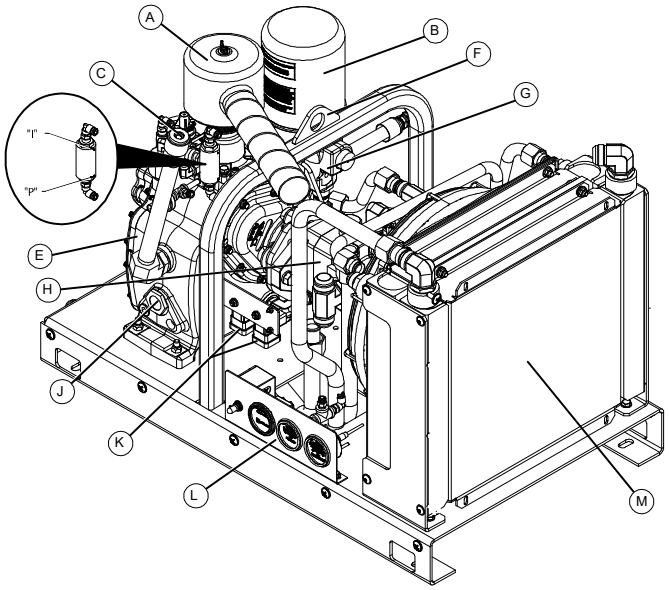

ITEM	DESCRIPTION
A	AIR FILTER HOUSING
B	COALESCER/SEPARATOR
C	COMPRESSOR OIL FILL PORT
D	BLOWDOWN VALVE
E	COMPRESSOR UNIT
F	LIFTING BAIL
G	THERMAL VALVE
H	HYDRAULIC MOTOR

ITEM	DESCRIPTION
J	COMPRESSOR OIL LEVEL SIGHT GLASS
K	CIRCUIT BREAKERS
L	INSTRUMENT PANEL
M	COOLER
N	COOLER FAN
P	COMPRESSOR OIL DRAIN
Q	COMPRESSOR OIL FILTER
R	SERVICE AIR DISCHARGE
S	HYDRAULIC SUPPLY (3/4” JIC)
T	ELECTRICAL CONNECTION LOCATION (4-PIN DEUTSCH)
U	HYDRAULIC RETURN (1” JIC)
V	PRESSURE RELIEF VALVE
W	AIR INLET VALVE
X	PRESSURE REGULATOR VALVE

Figure 4-1: Main Machine Component Locations

4.3 INITIAL START-UP PROCEDURE

⚠ WARNING

DO NOT remove caps, plugs and/or other components when compressor is running or pressurized. Stop compressor and de-pressurize system prior to maintenance of system. Relieve the entire system pressure by opening the air tank drain/vent valve, which will vent all pressure to the atmosphere.

Wear personal protective equipment such as gloves, work boots, and eye and hearing protection as required for the task at hand.

The compressor has been factory-tested and its air and hydraulic valves have been adjusted to their specified operating settings. Refer to procedure below for all unit checks to perform before initial start-up:

1. Position the compressor on a level surface so that proper amounts of liquid can be added if necessary.
2. Unit should be securely bolted down.

⚠ WARNING

Do not rely on hoses to hold the module in position.

3. Ensure all hose connections are tight, and wiring connections are correct and tight.
4. Check compressor oil level and add if necessary.
   - Check and refill oil to proper level.
5. Ensure hydraulic oil to pump inlet, and prime if necessary.
6. Make sure service valve on compressor is closed.
7. Engage hydraulic system (PTO or hydraulic supply), and allow hydraulic oil to circulate back to tank. Oil should quickly circulate to the hydraulic motor on the compressor, and start producing air.
8. Check for leaks.
9. Check pressure and temperature gauges. Readings should be within the operating ranges specified in **Table 2A** (found in **Section 2**, **Specifications**).

⚠ IMPORTANT

Pressure settings are pre-set at the factory—DO NOT manually attempt to adjust the pressure regulator. Consult the factory if pressure readings deviate from the specified pressure rating range.

10. Partially open service valve to load compressor and allow to warm up. Monitor the temperature gauge for ideal operating temperature, which should be between 165°F and 190°F.
11. Cycle compressor on/off with service valve to ensure proper operation.
12. Close the service valve.
13. Disengage hydraulic system; compressor ceases to produce air.
14. Make sure all foam is gone from sightglass prior to opening fill port.
15. Allow air to vent to atmosphere. Check compressor oil level and add if necessary. Check and correct any leaks, tighten any loose fittings and check drive belt tension.

4.4 ROUTINE START-UP PROCEDURE

1. Check compressor oil level and add if necessary.
2. Close the air service valve.
3. Engage hydraulic system (PTO or hydraulic supply). This will activate the compressor.
4. Allow machine to warm up for several minutes before operating.

4.5 COLD WEATHER START-UP PROCEDURE

When starting the CAS80R Hydraulic Driven Compressor in cold weather (temperatures below freezing), there is a chance that over-pressuring can occur if proper warm-up procedures are not followed. In a compressor package, it is normal for moisture to be present; the amount of moisture present will vary by use and ambient conditions. If the compressor is used in conditions that are subject to temperatures below freezing (32 degrees Fahrenheit), it is possible for the moisture to freeze within the compressor and compressor system lines.

For cold weather conditions, please follow the recommended cold weather start-up procedure;

In temperatures below 15 degrees Fahrenheit, IMT recommends the installation of a cold weather package.

NOTE

Cold weather package system must be installed at time of compressor package purchase/initial build.

1. To utilize the heating pad portion of the cold weather package, turn on seasonal switch for at least fifteen minutes. (Note: This can be done while driving to the job site.)
2. In all conditions below 32 degrees Fahrenheit, once at the job site, start the compressor with service valve partially open so that the unit is building between 100 PSIG and 125 PSIG on the air pressure gauge located on the compressor package.
3. Allow the system to run for at least 10-15 minutes under load to allow the oil time to warm up for proper lubrication of the compressor and to allow the moisture to be evacuated from the compressor and compressed air lines.
4. At this time, the compressor unit can be used as intended in accordance with the safety/operation section of this manual.
5. Immediately after shutting down the compressor system for extended periods, drain all FLR systems and air storage tanks to help minimize the potential for future system freeze-ups.
6. It is also recommended in cold weather applications, to drain all lines after each use.

NOTE

This start-up procedure may not work in extreme freeze-up conditions. For this condition, it is best to move the vehicle into a warm building overnight to thaw. Once the compressor system is thawed, follow the start-up procedure listed above. Allow the compressor to run at 180 degrees Fahrenheit according to the compressor package temperature gauge for at least 15 minutes prior to shutting system down.

4.6 ROUTINE SHUTDOWN PROCEDURE

⚠ WARNING

If the reset button on the instrument panel has been tripped, NEVER FORCE the button back into position, or hinder it in any way, in order to allow for machine operation. A tripped reset button indicates a problem that should be addressed and resolved before operation can continue.

1. Close service valve and allow compressor to unload and cool down (approximately five [5] minutes.).
2. Shut off hydraulic power supply.

4.7 OPERATING CONDITIONS

1 . Operate only in well ventilated areas.

IOWA MOLD TOOLING CO., INC.
(641) 923-3711 • www.imt.com

2. Ensure there are no obstructions of cooling air intakes and outlets around the unit.
3. Do not leave anything resting on top of the machine. Hot cooling air will generate high heat and must not be restricted.
4. Be sure to leave sufficient room around the unit for cooling air circulation. A minimum of ten (10) inches clearance is needed for the cooler intake and sides, and ten (10) inches for the rear of the unit. Heated air must be able to vent away from the intake.
5. Operate machine with top cover closed.
6. Refer to specifications for operating parameters.

BLANK PAGE

SECTION 5: MAINTENANCE

5.1 GENERAL INFORMATION

A good maintenance program is the key to long compressor life. This section contains a program that, when adhered to, should keep the compressor in top operating condition. However, it should be understood that these intervals are for normal operation in a good clean environment. More frequent inspections, oil changes and general maintenance should be carried out in dusty environments, high ambient temperatures or extended light load conditions.

Follow the prescribed periodic maintenance schedules given in this section as recommended. Failure to follow the prescribed periodic maintenance at the recommended intervals will impair the package safety, performance characteristics, shorten the package's life, and will negatively affect the warranty coverage of the package.

NOTE

It is important to keep in mind that operating the compressor package in a severe environment may require more frequent service intervals than prescribed in the periodic maintenance schedule.

Before starting the compressor system, inspect the machine package for any suspect condition that may cause a safety hazard or hamper operation. Replace damaged components with Genuine IMT Replacement Parts.

WARNING

Follow all applicable safety recommendations as outlined in *Section 1: Safety* of this manual.

WARNING

DO NOT remove caps, plugs and/or other components when compressor is running or pressurized. Stop compressor and de-pressurize system prior to maintenance of system. Relieve the entire system pressure by opening the air tank drain/vent valve, which will vent all pressure to the atmosphere.

Wear personal protective equipment such as gloves, work boots, and eye and hearing protection as required for the task at hand.

WARNING

DO NOT work on any electrical components unless the battery is disconnected.

WARNING

It is important that the compressor oil be of a recommended type and that it is inspected and replaced together with the oil and air filters, in accordance with this manual.

CAUTION

Always wear personal protective equipment such as gloves, work shoes, eye, and hearing protection as required for the task at hand.

CAUTION

Compressors and drive motors generate heat and create hot surfaces. Use caution when operating or servicing the compressor system. Some surfaces and components may be hot.

CAUTION

Use only original IMT equipment filters. Other filters may not have correct pressure rating or may have different thread.

CAUTION

Do not mix oils of different types.

IMPORTANT

Using replacement parts other than Genuine IMT Replacement Parts will void the warranty.

5.2 MACHINE MAINTENANCE SCHEDULE

Refer to **Table 5A: Routine Maintenance Schedule**. A routine maintenance schedule based on time and/or hours logged, is given in **Table 5A**. The intervals are determined from machine usage under typical operation conditions. However, the operator must be aware that operating conditions will vary depending on such things as specific customer requirements, environmental temperatures and cleanliness of the ambient air. With this in mind, the specifications given in **Table 5A** should be used as a guideline instead of a fixed agenda. A safe approach to routine maintenance would be to perform the given maintenance task more frequently under harsher conditions.

IMT provides a routine maintenance parts list in **Section 7**, **Table 7A**. Should a non-routine part need replacement or servicing, peruse the various parts list illustrations in **Section 7** to help determine the exact part and part number in question. Our parts and service departments are ready to assist in identifying and/or replacing non-routine parts.

5.3 REPLACEMENT PARTS

Replacement parts should be purchased through your local IMT representative or where the compressor system was purchased. If, for any reason, parts are not available in this manner, they can be purchased through IMT directly.

NOTE

For assistance when ordering new replacement parts, consult *Section 7.1, Parts Ordering Procedure*, and Table 7A: Recommended Spare Parts List.

Iowa Mold Tooling Co., Inc.

500 Highway 18 West

Garner, Iowa 50438

Phone: 641.923.3711

Fax: 641.923.2424

NOTE

If additional spare parts are being stored for future use, make certain that they are stored in proper containers that allow for protection against contamination, and kept in a clean area of moderate temperature reading. For information on storing the machine package for periods of non-use, consult *Section 5.5.7, Long Term Storage*.

5.4 PARTS REPLACEMENT AND ADJUSTMENT PROCEDURES

Most routine maintenance assistance can be found in the appropriate “Action to Take” column given for a specific routine maintenance item. This section is mainly concerned with non-routine maintenance items and procedures. For assistance with any procedure needed beyond what is presented in this manual, please contact the IMT Service Department.

TABLE 5A: ROUTINE MAINTENANCE SCHEDULE

Refer to Section 7, Table 7A, for Part and Kit Order Numbers

WARNING

Before performing maintenance: Shut down machine, relieve all system pressure and lock out all power, as per the Safety Section of this manual.
NOTE THAT THE SYSTEM CAN BE STARTED REMOTELY: Always clearly tag the start-up

MAINTENANCE INTERVALS Hourly or Calendar Period - whichever comes first

System maintenance personnel must be familiar with all Safety regulations set forth in the Safety Section of this manual before performing maintenance on this machine

NOTE:
If working in dusty or dirty conditions, reduce the recommended time intervals between servicing by half for engine and compressor oil change, and engine and compressor filter

KEY	TASK DESCRIPTION	After 8 Hours or Daily	After Initial 50 Hours	After 500 Hours or Annually	ACTION TO TAKE
1	**Before starting**, check compressor oil level.	•	•	•	***Figure 5-1***. Ensure vehicle is situated on a level surface before checking oil level. Add oil if necessary.
2	Check for any leaks or loose bolts.	•	•	•	Tighten if necessary.
3	**After starting,** check pressure gauge for correct operating pressure.	•	•	•	
4	Check for leaks. **WARNING!!!** When tightening hoses or fittings make sure unit it shut off. **WARNING!!!** Never use hand to check for leaks.	•	•	•	Visually note any leaks or evidence of leaks around the compressor unit and hose connections. Tighten any loose connection point where needed. Repair or replace any damaged part.
5	Change oil filter element		•	•	***Figure 5-1***. Always replace the oil and oil filter element at the same change interval.
6	Compressor oil change		•	•	***Figure 5-1***. Drain and refill air/oil compressor sump tank.
7	Inspect intake air filter.		•	•	***Figure 5-1***. Change if necessary.
8	Replace separator element			•	***Figure 5-1***. Replace.
9	Inspect exterior of front-mounted oil cooler.			•	Clean if necessary.

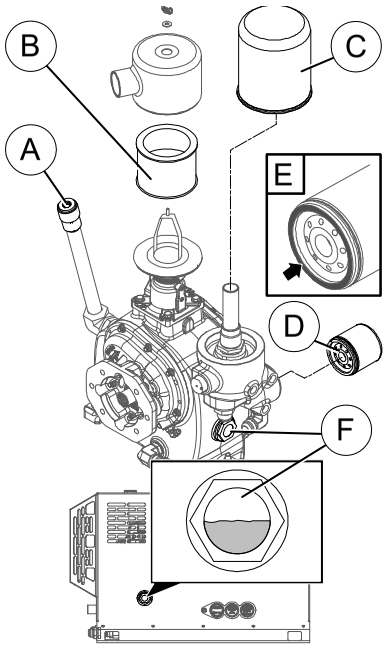

KEY	DESCRIPTION
A	COMPRESSOR (PLUGGED) FLUID FILL TUBE
B	AIR FILTER ELEMENT *I*
C	OIL COALESCER/SEPARATOR ELEMENT *I & II*
D	OIL FILTER *I & II*
E	FILTER SEAL RING *II*
F	COMPRESSOR FLUID LEVEL SIGHT GLASS *III*
Kit 1222	OIL CHANGE
Kit 1221	COMPLETE

For part order number consult **Table 7A** in **Section 7**.

I Coat the seal ring surface of a new filter with a light film of compressor oil before mounting in place.

III Fluid level should rest at approximately halfway through the sight glass, with the compressor on a level surface after system is completely blown down.

Figure 5-1: Checks and Routine Maintenance Items

⚠ DANGER

Adjustments should be made with compressor switched OFF since electrical terminals inside pressure regulator will be exposed, and opening the canopy exposes the belt drive system.

⚠ WARNING

Before performing maintenance:
Shut down machine, relieve all system pressure and lock out all power, as per the Safety Section of this manual.

NOTE THAT THE SYSTEM CAN BE STARTED REMOTELY:

Always clearly tag the start-up instrumentation against accidental system start-ups during maintenance.

NOTE

It may be necessary to change the compressor fluid and fluid filter more frequently if the compressor fluid has water contamination, or if the compressor system is operated in a dirty environment.

5.4.1 SERVICING THE FUSES AND CIRCUIT BREAKER

The fuses and circuit breaker can both be found on the inside of the control panel, accessed with the shroud removed. Consult ***Figure 5-2*** for the location of the fuses and circuit breaker. IMT recommends using a fuse removal tool, though pliers will suffice when removing the fuse.

⚠ WARNING

Before performing maintenance:
Shut down machine, relieve all system pressure and lock out all power, as per the Safety Section of this manual.

NOTE THAT THE SYSTEM CAN BE STARTED REMOTELY:

Always clearly tag the start-up instrumentation against accidental system start-ups during maintenance.

Access the fuse and breaker locations by opening the lid and locating the gauge panel (See ***Figure 5-2***).

5.4.2 SAFETY SHUTDOWN SYSTEMS

Protection for over-pressure and/or over-temperature is provided. If either condition should occur, the diverter valve should activate to divert hydraulic fluid back to the tank and the compressor will stop, the fault reset on the instrument panel will pop out and stay out until reset.

⚠ IMPORTANT

Reason for shutdown should be investigated before pressing reset.

⚠ WARNING

NEVER FORCE the reset button back into position, or hinder it in any way, in order to allow for machine operation. A tripped reset button indicates a problem that should be addressed and resolved before operation can continue.

5.4.2.1 TESTING THE GAUGES' SHUTDOWN FEATURE

Periodically (every 6 months or every 500 hours), the shutdown system should be tested as follows:

Refer to ***Figure 5-3***.

1. While compressor is operating, close service valve and allow compressor to unload (approximately two [2] minutes).
2. Touch across button contact [**B**] on gauge face to bezel [**A**] (surrounding the respective gauge) with an insulated screwdriver.

⚠ WARNING

Before making the contact connection [D] between the test contact [B] and the bezel [A], ensure that you are not touching the machine to allow for grounding—only the screwdriver should be making any connection with the machine, and at the contact points indicated.

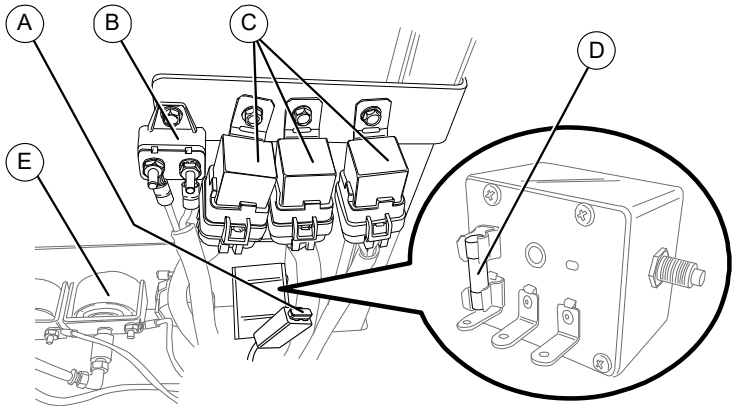

KEY	DESCRIPTION
A	FUSE (10A)
B	CIRCUIT BREAKER (30A for 12V), (20A for 24V)
C	RELAY (x3)
D	FUSE (14A)
E	BACKSIDE OF INSTRUMENT PANEL (REFERENCE)
F	LIFTING BAIL (REFERENCE)

Figure 5-2: Fuse and Breaker Locations

3. The reset button should pop out and the compressor should stop, indicating that the gauge shutdown contact is working.
4. Switch compressor OFF and press reset button to reactivate shutdown system.

5.4.2.2 PRESSURE RELIEF VALVE

Refer to ***Section 7.2*** for valve location. Although the pressure relief valve has a reset ring at the cap, **DO NOT** test the pressure relief valve by pulling on the reset ring. The pressure relief valve requires no safety testing.

5.4.3 LONG TERM STORAGE

Parts can wear out over time, regardless of the degree of usage. If storing the IMT CAS80R unit for long periods of time, depressurize the air tank and open the drain valve on the tank. Cover with a tarp or plastic to prevent the accumulation of dust, but leave the bottom open for air circulation. Whenever possible, store in a sheltered area to minimize exposure to the elements.

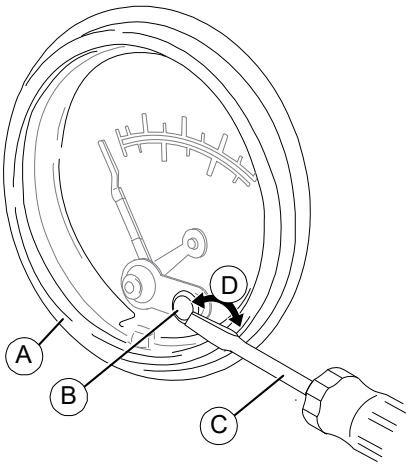

KEY	DESCRIPTION
A	GAUGE BEZEL
B	GAUGE TEST CONTACT
C	INSULATED SCREW DRIVER
D	SAFETY TEST CONTACT
Reset button should pop out, and compressor should stop.	

Figure 5-3: Safety Shutdown Test

BLANK PAGE

SECTION 6: TROUBLESHOOTING

6.1 GENERAL INFORMATION

The information contained in this section has been compiled from field report data and factory experience. It contains symptoms and usual causes for the most common types of problems that may occur; however, **DO NOT** assume that these are the only problems that may occur. All available data concerning the trouble should be systematically analyzed before undertaking any repairs or component replacement procedures.

A detailed visual inspection is worth performing for almost all problems, and may avoid unnecessary additional damage to the machine. The procedures which can be performed in the least amount of time and with the least amount of removal or disassembly of parts, should be performed first. Always remember to:

1. Check for loose wiring.
2. Check for damaged piping.
3. Check for parts damaged by heat or an electrical short circuit, usually noticeable by discoloration or a burnt odor.

Should the problem persist after making the recommended check, consult your nearest IMT representative or the IMT Service Department.

Iowa Mold Tooling Co., Inc.

500 Highway 18 West
Garner, Iowa 50438
Phone: 641.923.3711
Fax: 641.923.2424

⚠ WARNING

DO NOT operate the compressor or any of its systems if there is a known unsafe condition. Disable the equipment by disconnecting it from its power source.

NOTE THAT THE SYSTEM CAN BE STARTED REMOTELY:

Install a lock-out tag to identify the equipment as inoperable to other personnel to prevent accidental application.

⚠ WARNING

Before starting, performing maintenance, or replacing parts, relieve the entire system pressure by opening a service valve, which will vent all pressure to the atmosphere.

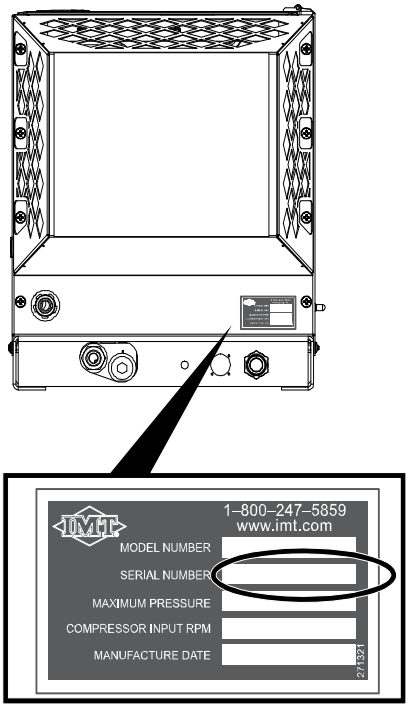

6-1: Machine Serial Plate /Serial Number Location

6.2 TROUBLESHOOTING GUIDE

MALFUNCTION/FAULT	POSSIBLE CAUSE	CORRECTIVE ACTION
Compressor shuts down air with demand present	Compressor discharge temperature switch is open	Cooling air flow is insufficient; clean cooler and check for proper ventilation.
		Low fluid sump level; add fluid.
		Fan not operating. Check ground and fan switch.
	Plugged oil filter	Replace oil filter.
	Dirty cooler core exterior	Clean cooler core.
	Contaminated cooler core	Remove and clean cooler core.
	Hydraulic pressure and flow incorrect	Adjust and reset.
Compressor will not build up pressure	Air demand is too great	Check service lines for leaks or open valves. Too much air demand.
	Dirty air filter	Check the filter and clean or change element if required.
	Pressure regulator out of adjustment	DO NOT ATTEMPT TO ADJUST. Contact the IMT Service Department for assistance.
	Defective pressure regulator	Replace pressure regulator.
	Motor does not speed up	Check hydraulic flow and pressure and adjust if necessary.
	Service valve wide open	Close service valve.
	Inlet stuck shut	Check oil level
Compressor over pres-sures	Pressure regulator out of adjustment	Contact factory service department.
	Defective pressure regulator	Replace pressure regulator; Contact factory service department.
	Leak in air control line	Check line and correct.
	Inlet valve stuck open	Free or replace valve.
	Restriction in control line	Dirt or ice present. Clean or free up.
	Defective safety valve	Replace safety valve.
	Plugged coalescer (air/oil separator)	Replace coalescer.

Continued on next page

IOWA MOLD TOOLING CO., INC.
(641) 923-3711 • www.imt.com

6.2 TROUBLESHOOTING GUIDE

MALFUNCTION/FAULT	POSSIBLE CAUSE	CORRECTIVE ACTION
Insufficient air delivery	Plugged air filter	Replace air filter.
	Plugged coalescer (air/oil separator)	Replace coalescer element.
	Motor speed to low	Check hydraulic flow and pressure and adjust if necessary.
	Inlet valve stuck closed.	Free or replace inlet valve. Order rebuild kit if necessary.
	Defective regulator	Replace regulator.
	Stuck minimum pressure valve	Free or replace valve.
Oil carryover	Oil level overfull	Drain to proper level.
	Plugged oil scavenge line	Remove and clean strainer thoroughly. **See Section 7.2A, P/N 271054.**
	Discharge pressure too low	Check minimum pressure valve and adjust. Replace if necessary.
	Defective coalescer	Replace coalescer element.
	Overspeeding	Readjust speed.
	Incorrect oil used	Drain and replace with proper oil.
Compressor overheating		Check oil level and fill to proper level.
		Reposition machine to assure proper air flow.
		Check ground connection and ensure proper connection.
		Check fan switch.
		Check circuit breaker.
		Check for short in wires.
		Check fan motor.
	Plugged oil filter	Replace oil filter.
	Cooler core plugged	Clean cooler core.
	Pressure set too high	Contact factory service department.
	Contaminated cooler core	Remove and clean cooler core.
	Unit running too fast	Check hydraulic flow and pressure and adjust if necessary.
	Thermal valve	Faulty valve; replace thermal valve.
	Incorrect oil used	Drain and replace with proper oil.

Continued on next page

6.2 TROUBLESHOOTING GUIDE

MALFUNCTION/FAULT	POSSIBLE CAUSE	CORRECTIVE ACTION
System retains pressure after shutdown	Blowdown valve stuck	Clean or replace blowdown valve.
	Leak back from air line	Check minimum pressure valve for leaks.
Compressor stalls	Insufficient hydraulic system pressure flow. This can occur if another hydraulically activated component is used off same pump system. Activating the secondary component may drop hydraulic supply system pressure/flow and leave insufficient for compressor. **NOTE:** Even a momentary drop in supply hydraulic supply pressure/flow may initiate compressor blowdown to commence.	Check setting on supply pressure system relief valve. Check to ensure adequate pressure/ flow. Check if other systems are activated off same supply.
	Hydraulic pressure relief valve set too low	Contact factory service department.
	Leak in seals on pressure relief valve.	Remove and check seals or fit new valve cartridge.
	Air pressure set too high for hydraulic system.	Contact IMT Service Department.
	Leak in solenoid valve cartridge (directional flow control valve) on manifold.	Remove and check seals or fit new valve cartridge.
	Check over-pressure or over-temperature	Adjust if necessary.

IOWA MOLD TOOLING CO., INC.
(641) 923-3711 • www.imt.com

SECTION 7: ILLUSTRATED PARTS LIST

7.1 PARTS ORDERING PROCEDURE

Part orders should be placed through the distributor from whom the unit was purchased. If, for any reason parts cannot be obtained in this manner, contact the factory directly at the address or phone numbers below.

When ordering parts, always indicate the **Serial Number** of the machine package. This can be obtained from the Bill of Lading for the machine package, or from the compressor unit serial number plate. See ***Figure 7-1*** for location of machine package serial plate. Consult **Table 7A: Recommended Spare Parts List** on the next page for a listing of replacement parts.

Iowa Mold Tooling Co., Inc.

500 Highway 18 West
Garner, Iowa 50438
Phone: 641.923.3711
Fax: 641.923.2424

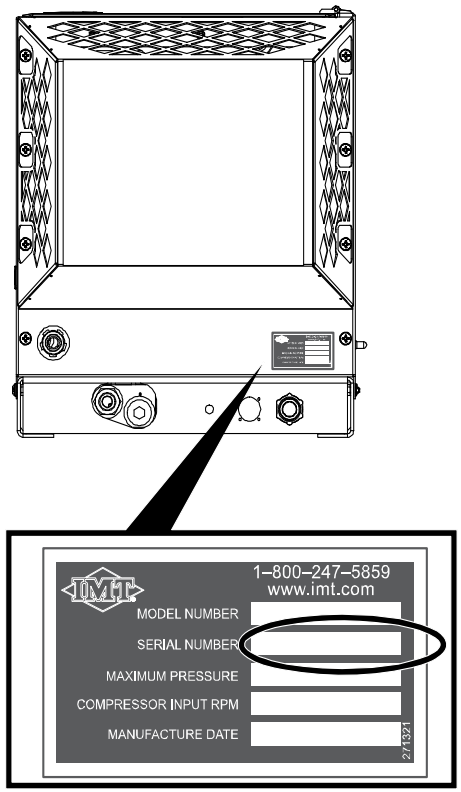

Figure 7-1: Machine Package Serial Number Plate / Serial Number Location

TABLE 7A: RECOMMENDED SPARE PARTS LIST				IDENTIFICATION REFERENCE	
KEY NO.	PART NUMBER	DESCRIPTION	QTY	SECTION	ITEM NO.
		ROUTINE/SCHEDULED MAINTENANCE ITEMS			
1	70048256	Filter, Oil Element Replacement	1	7.2A	34
2	70048257	Coalescer, Replacement Element	1	7.2A	33
3	70048258	Filter, Air Element Replacement	1	7.2A	17
4	89086222	Oil, Vanguard (1 Gallon Container)	1	-	-
		NON-ROUTINE MAINTENANCE ITEMS			
5		Kit, Hose and Tubing - Open Standard	1	-	-
6	91726611	Kit, Hose and Tubing - Cold Weather	1	-	-
7	73540545	Air Inlet Replacement	1	-	-
8	73744225	Kit, Minimum Pressure / Discharge Check Valve	1	-	-
9	77044730	Fuse, 10A (Red) ATC	1	Fig. 5-2	A
10	77041433	Fuse, 15A ATC	1	Fig. 5-2	D
11	77041357	Breaker, Circuit 30A (for 12V DC)	1	Fig. 5-2	B
12	77441500	Breaker, Circuit 20A (for 24V DC)	1	Fig. 5-2	B
13	77040596	Boot, Rubber Reset Switch Replacement	1	7.5	6
14	73744226 73744227	Oil Change (2 gal. oil, 1 oil filter, 1 coalescer Complete Change (2 gal. oil, 1 air filter, 1 oil filter, 1 coalescer)	1	-	-
PLEASE NOTE: WHEN ORDERING PARTS, ALWAYS INDICATE MACHINE SERIAL NUMBER.					

IMPORTANT

Use only approved oil and genuine IMT parts. Inspect damaged components before operation. Substituting non-approved oil will void the compressor warranty.

IMPORTANT

The above table listing contains items that require maintenance on a routine basis, and also those parts that may require maintenance over the course of the compressor package's performance schedule. Although this recommended list is pro-offered as a comprehensive guide to replacement parts, damage may occur to the machine beyond the scope of this listing. Should any part of the compressor package that is not listed in Table 7A become damaged or inoperable, use the various sub-sections in Section 7 to best locate and identify the damaged part(s).

IMPORTANT

If additional spare parts are being stored for future use, make certain that they are stored in proper containers that allow for protection against contamination, and kept in a clean area of moderate temperature reading. For information on storing the machine package for periods of non-use, consult *Section 5.4.3, Long Term Storage*.

NOTE

An optional heating package is offered for cold weather operation. Consult factory for details.

TABLE 7B: MAINTENANCE TRACKING LOG

DATE	DESCRIPTION OF MAINTENANCE	PART(S) REPLACED	DATE	DESCRIPTION OF MAINTENANCE	PART(S) REPLACED

7.2A COMPRESSOR ASSEMBLY AND REPLACEMENT PARTS

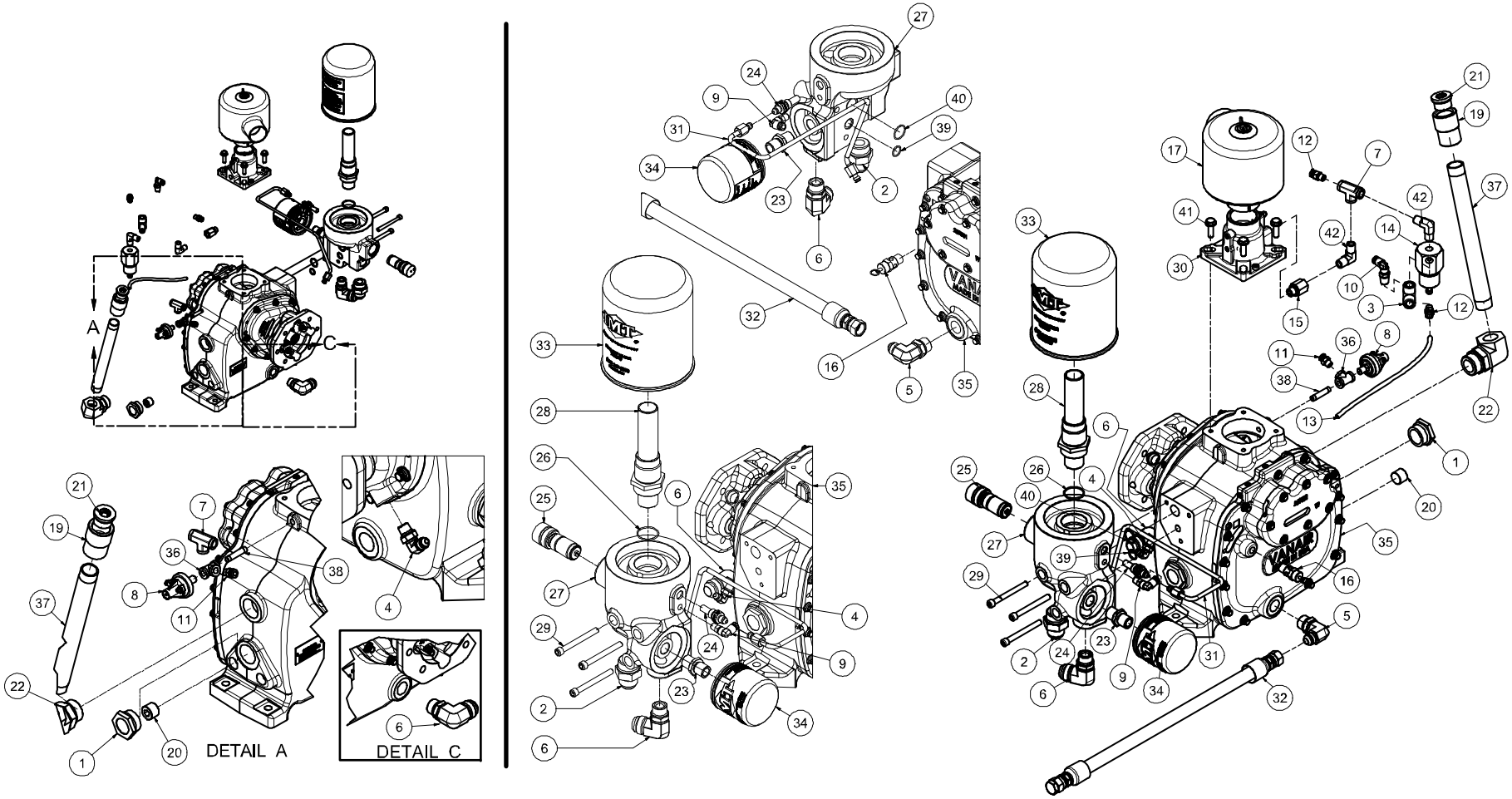

6180007ID_r0

7.2A COMPRESSOR ASSEMBLY AND REPLACEMENT PARTS

KEY NO.	DESCRIPTION	PART NUMBER	QTY	KEY NO.	DESCRIPTION	PART NUMBER	QTY
1	SIGHTGLASS, O-RING TMBD 1-5/16”		2	22	ELBOW, 90 DEG #16 MSAE x 3/4 FNPT		1
2	CONNECTOR, O-RING 1-3/16 x 3/4 JIC PARKER		1	23	CONNECTOR, OIL FILTER ENCAPS		1
3	TEE, MALE STREET 1/4 x 1/4 x 1/4		1	24	ORIFICE, STRAINER 0.030 #6 MSAE x #4 MJIC		1
4	ELBOW, 90 DEG #4 MJIC x #4 MSAE		1	25	VALVE, MIN PRESS INTERNAL PARTS VM180	73744225	1
5	ELBOW, 90 DEG #8 MJIC x #10 MSAE		1	26	O-RING, VITON 1/15 DIA x 1.176 ID		1
6	ELBOW, 90 DEG #12 MJIC x #10 MSAE		2	27	MANIFOLD, AIR/OIL VM180		1
7	TEE, PIPE STL 1/4-18		1	28	ADAPTER, AIR/OIL SEPARATOR M42 x M39		1
8	SWITCH, PRESSURE N.C. 10 PSI	77041959	1	29	CAPSCREW, HX SOC 5/16-18 x 3		3
9	ELBOW, 1/4T x 1/8P PUSH-ON		1	30	VALVE INLET, 1.5” VMC RH38		1
10	ELBOW, 90 DEG PUSH-ON 1/4T x 1/4P		1	31	TUBE, SCAVANGE 0.25 COMPRESSOR		1
11	CONNECTOR, 1/8P x 1/4T PUSH-ON		1	32	HOSE, OIL DRAIN NEW ADHD		1
12	CONNECTOR, 1/4P X 1/4T PUSH-ON		2	33	SEPARATOR, AIR/OIL SPIN ON 106 CFM	70048257	1
13	TUBING, PLASTIC 1/4 WHITE		1	34	FILTER, OIL SMALL	70048256	1
14	VALVE, REGULATOR, 6:1	73540543	1	35	COMPRESSOR & PARTS VSE075GDSP347		1
15	ADAPTER, FEMALE PIPE x BSPP 1/4		1	36	TEE, PIPE GALV 1/8		1
16	VALVE, RELIEF 200 PSI 1/4 NPT MALE	73540432	1	37	NIPPLE, PIPE XS BLACK 3/4 x 10		1
17	FILTER, AIR UNDERHOOD	70048258	1	38	NIPPLE, PIPE GALV 1/8 x 1.5		1
18	CLAMP, HOSE #28		1	39	O-RING, VITON .691 OD x .070		1
19	ADAPTER, 3/4 NPT TO 1-1/16 SAE O-RING		1	40	O-RING, VITON .941 OD x .070		1
20	PLUG, PIPE 1/2 NPT HOLLOW HEX		1	41	SCREW, SER WASH 5/16-18 x 1		4
21	PLUG, SAE O-RING HOLLOW HEX #12		1	42	ELBOW, PIPE 1/4M x 1/4M		2

PLEASE NOTE: WHEN ORDERING PARTS, INDICATE MACHINE SERIAL NUMBER.

7.2B COMPRESSOR AND MOUNTING PARTS

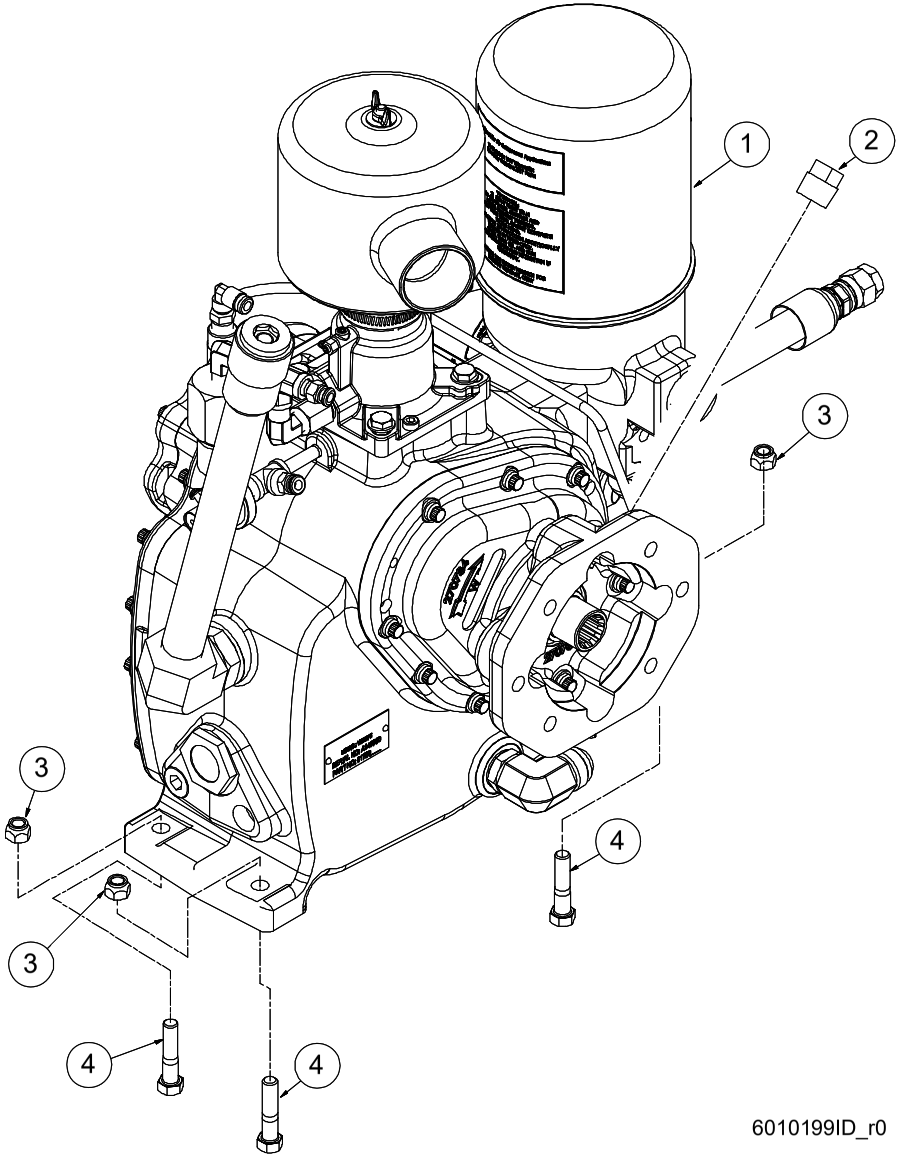

6010199ID_r0

KEY NO.	DESCRIPTION	PART NUMBER	QTY
1	AIREND & ATT, VSE075GD22	70734925	1
2	PLUG, PIPE 1/2		1
3	NUT, HEX LOCKING 3/8-16		3
4	CAPSCREW, HEX GR 9 3/8-16 x 1 3/4		3

PLEASE NOTE: WHEN ORDERING PARTS, INDICATE MACHINE SERIAL NUMBER.

7.3A HYDRAULIC MOTOR AND DRIVE - OPEN CENTER

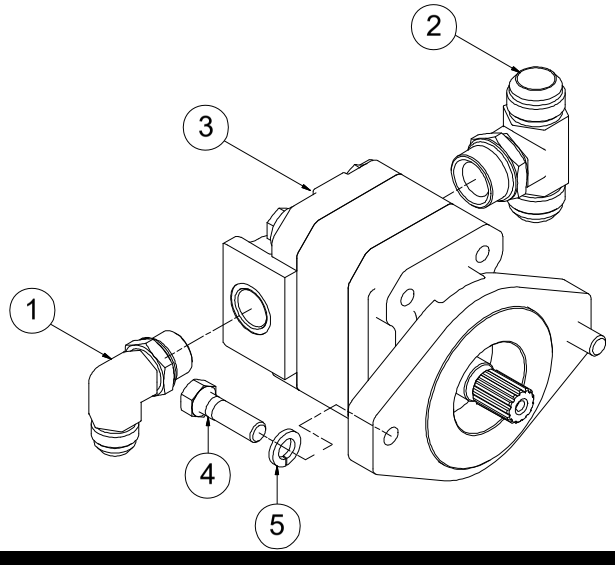

6100079ID_r1

KEY NO.	DESCRIPTION	PART NUMBER	QTY
1	ELBOW, 90 DEG #12 MJIC x #12 MSAE		1
2	TEE, JIC/JIC/SAE #16		1
3	MOTOR, HYD. PERMCO M124 13 TOOTH SPLINE	73511367	1
4	CAPSCREW, HEX GR8 1/2-13 1.75		2
5	WASHER, LOCK 1/2		2

PLEASE NOTE: WHEN ORDERING PARTS, INDICATE MACHINE SERIAL NUMBER.

7.3B CLOSED CENTER AND HYDRAULIC THERMAL VALVE

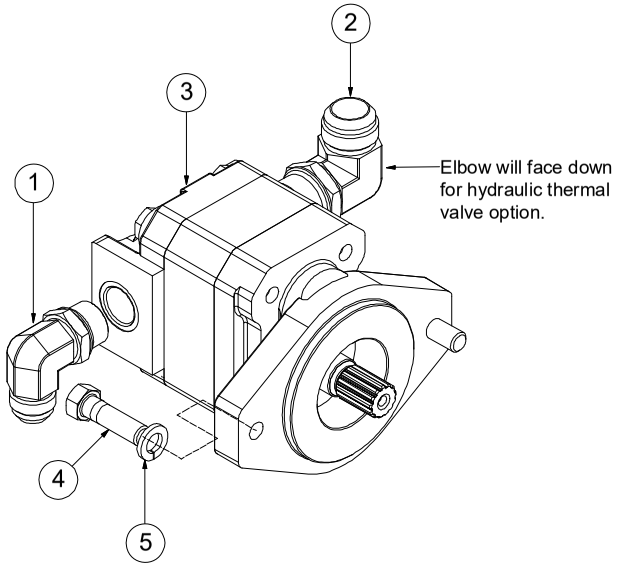

6100120ID_r0

KEY NO.	DESCRIPTION	PART NUMBER	QTY
1	ELBOW, 90 DEG #12 MJIC x #12 MSAE		1
2	ELBOW, 90 EG #15 MJIC x #16 MSAE		1
3	MOTOR, HYD. PERMCO M124 13 TOOTH SPLINE	73511367	1
4	CAPSCREW, HEX GR8 1/2-13 x 1.75		2
5	WASHER, LOCK 1/2		2

PLEASE NOTE: WHEN ORDERING PARTS, INDICATE MACHINE SERIAL NUMBER.

7.4 COOLING SYSTEM 12VDC / 24VDC

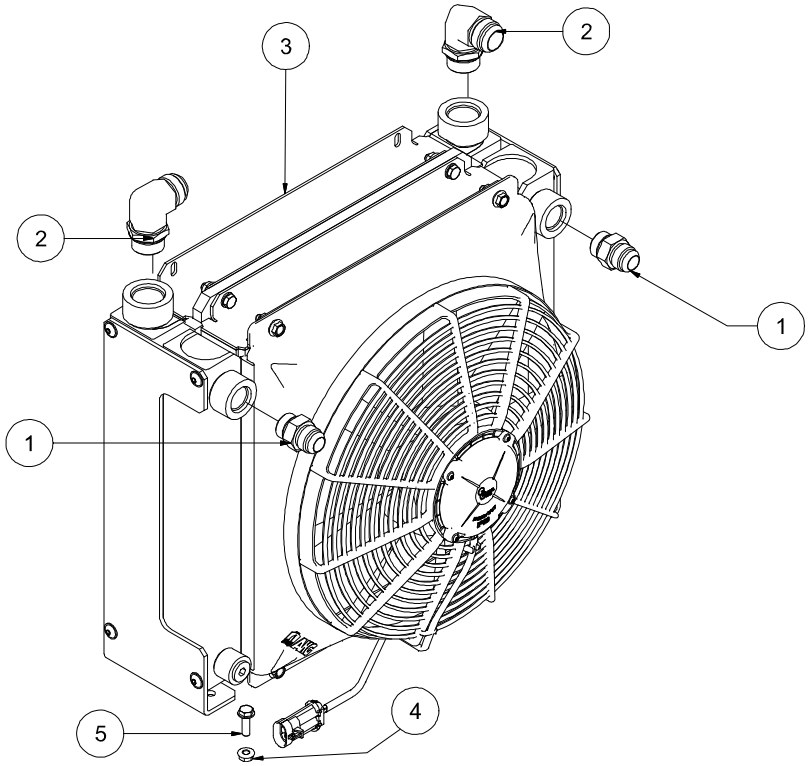

6020107ID_r1

KEY NO.	DESCRIPTION	PART NUMBER	QTY
1	CONNECTOR, #12 MSAE x #12 MJIC		2
2	ELBOW, 90 DEG. #16 MJIC x #16 MSAE		2
3A	COOLER, COMPR AND HYD WITH FAN (12V DC)	73052172	1
3B	COOLER, COMPR AND HYD WITH FAN (24V DC)	73052173	1
4	NUT, HEX FLANGE 5/16-18		4
5	SCREW, SER WASH 5/16-18 x 1		4

PLEASE NOTE: WHEN ORDERING PARTS, INDICATE MACHINE SERIAL NUMBER.

7.5 CONTROL SYSTEM

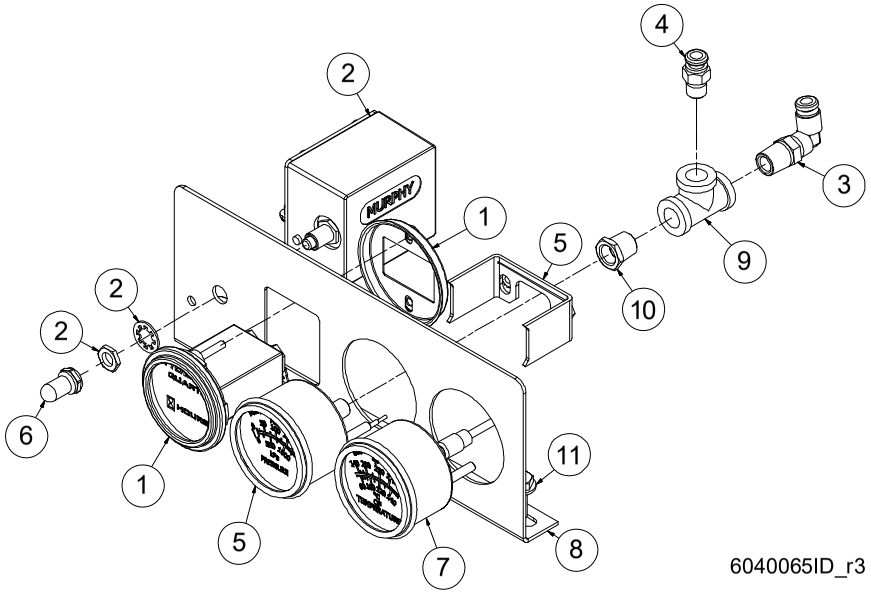

KEY NO.	DESCRIPTION	PART NUMBER	QTY
1	GAUGE, HOUR METER	77441491	1
2	SWITCH, HIGH TEMP. SHUTDOWN	70734663	1
3	ELBOW, 90 DEG. PUSH ON 1/4T x 1/4P		2
4	CONNECTOR, 1/4P x 1/4T PUSH ON		1
5	GAUGE, AIR PRESSURE w/SWITCH	70048247	1
6	BOOT, RUBBER RESET SWITCH	77040596	1
7	GAUGE, TEMP. MURPHY 6 1/2	71417172	1
8	PANEL, GAUGE IMT CAS80R	71416164	1
9	TEE, PIPE GALV 1/4		1
10	BUSHING, RED STEEL 1/4 x 1/8		1
11	SCREW, SER WASH 5/16-18 x 0.75		2
12	TERMINAL, RING #8 X 22-18 GA (NOT SHOWN)	8493000-022	1

PLEASE NOTE: WHEN ORDERING PARTS, INDICATE MACHINE SERIAL NUMBER.

7.6 FRAME AND CANOPY - OVERALL ASSEMBLY

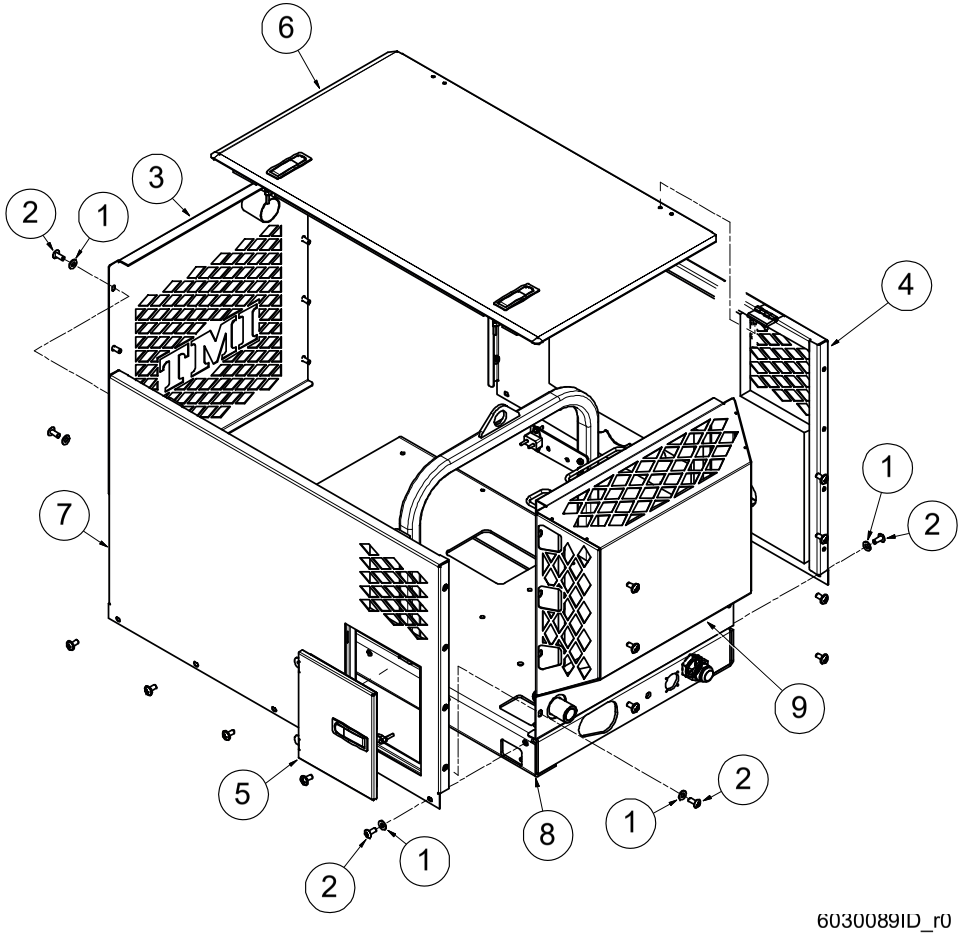

KEY NO.	DESCRIPTION	PART NUMBER	QTY
1	WASHER, NYLON 5/16-18		26
2	SCREW, TRUSS HD 5/16-18 x 3/4 SS		26
3	PANEL, END COOLER SIDE NEW IMT	71416165	1
4	PANEL, GAUGE SIDE	71416166	1
5	DOOR, ACCESS	71416167	1
6	PANEL, ROOF CANOPY CAS80R	71416168	1
7	PANEL, FRONT CAS80R	71416169	1
8	FRAME AND PARTS		1
9	PANEL, SOUND ATTEN.	71416170	1

PLEASE NOTE: WHEN ORDERING PARTS, INDICATE MACHINE SERIAL NUMBER.

7.6A FRAME AND CANOPY - FRONT SIDE PANEL

KEY NO.	DESCRIPTION	PART NUMBER	QTY
1	PANEL, GAUGE IMT	71416171	1
2	PANEL, 1” ACOUSTICAL FOAM 19.50 x 27.00	71416159	1
3	WASHER, FLAY METRIC M6		4
4	NUT, LOCK, M6 x 1.0 PITCH		4
5	HINGE, 2” x 2”, BLACK	71416172	2

PLEASE NOTE: WHEN ORDERING PARTS, INDICATE MACHINE SERIAL NUMBER.

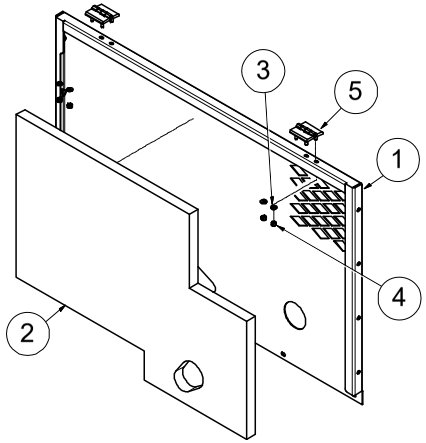

6030089ID-A_r0

7.6B FRAME AND CANOPY - ACCESS DOOR

KEY NO.	DESCRIPTION	PART NUMBER	QTY
1	LATCH, SENTRY PANEL	51724525	1
2	DOOR, ACCESS IMT CAS80R	71416173	1
3	PANEL, 1” ACOUSTICAL FOAM 7.00 x 8.50	71416174	1

PLEASE NOTE: WHEN ORDERING PARTS, INDICATE MACHINE SERIAL NUMBER.

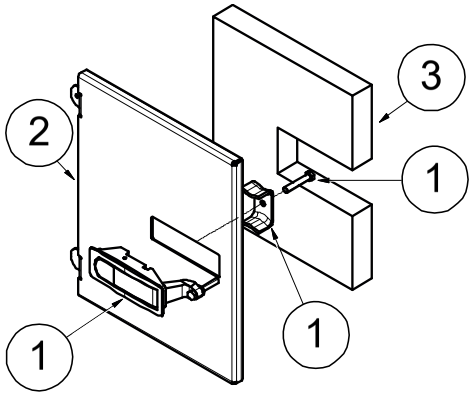

6030089ID-B_r0

7.6C FRAME AND CANOPY - ROOF PANEL

KEY NO.	DESCRIPTION	PART NUMBER	QTY
1	LATCH, SENTRY PANEL	51724525	2
2	PANEL, ROOF IMT	71416175	1
3	PANEL, ACOUSTICAL FOAM 18.00 x 30.00	71416176	1

PLEASE NOTE: WHEN ORDERING PARTS, INDICATE MACHINE SERIAL NUMBER.

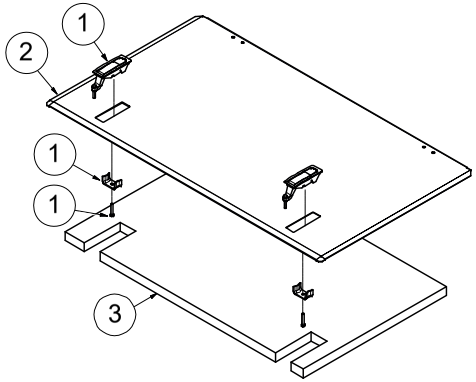

6030089ID-C_r0

7.6D FRAME AND CANOPY - BACK SIDE PANEL

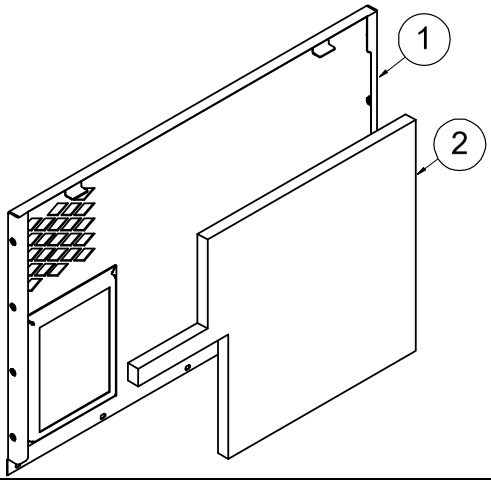

6030089ID-E_r0

KEY NO.	DESCRIPTION	PART NUMBER	QTY
1	PANEL, BACK SIDE	71416158	1
2	PANEL, 1” ACOUSTICAL FOAM 19.50 x 27.00	71416159	1

PLEASE NOTE: WHEN ORDERING PARTS, INDICATE MACHINE SERIAL NUMBER.

7.6E FRAME AND CANOPY - COMPRESSOR SIDE PANEL

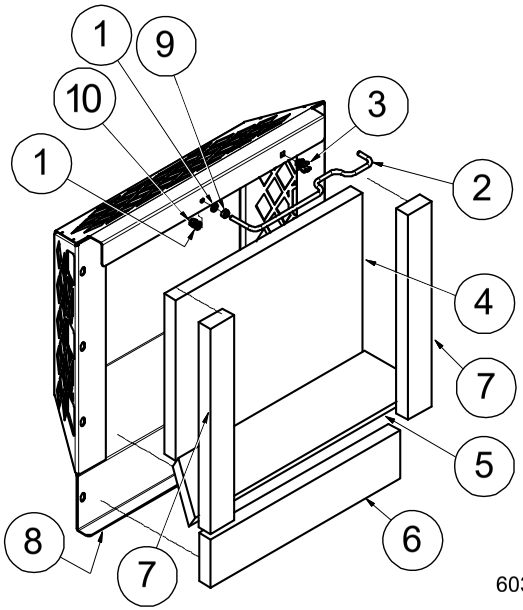

6030089ID-G_r0

KEY NO.	DESCRIPTION	PART NUMBER	QTY
1	WASHER, NYLON FLAT 1/4		2
2	ROD, ROOF SUPPORT NEW ADHD	71416179	1
3	CLIP, PROP ROD	72661754	1
4	PANEL, 1” ACOUSTICAL FOAM 11.75 x 15.75	71416160	1
5	PANEL, 1: ACOUSTICAL FOAM 3.75 x 15.69 x 19.43	71416161	1
6	PANEL, 1” ACOUSTICAL FOAM 3.50 x 16.00	71416162	1
7	PANEL, 1” ACOUSTICAL FOAM 2.00 x 15.00	71416163	2
8	PANEL, ASSY SOUND ATTENUATION COMPRESSOR SIDE	70734928	1
9	NUT, HEX 1/4-20		1
10	NUT, HEX LOCKING 1/4-20		1

PLEASE NOTE: WHEN ORDERING PARTS, INDICATE MACHINE SERIAL NUMBER.

7.6F FRAME AND CANOPY - HYDRAULIC DRIVE FRAME

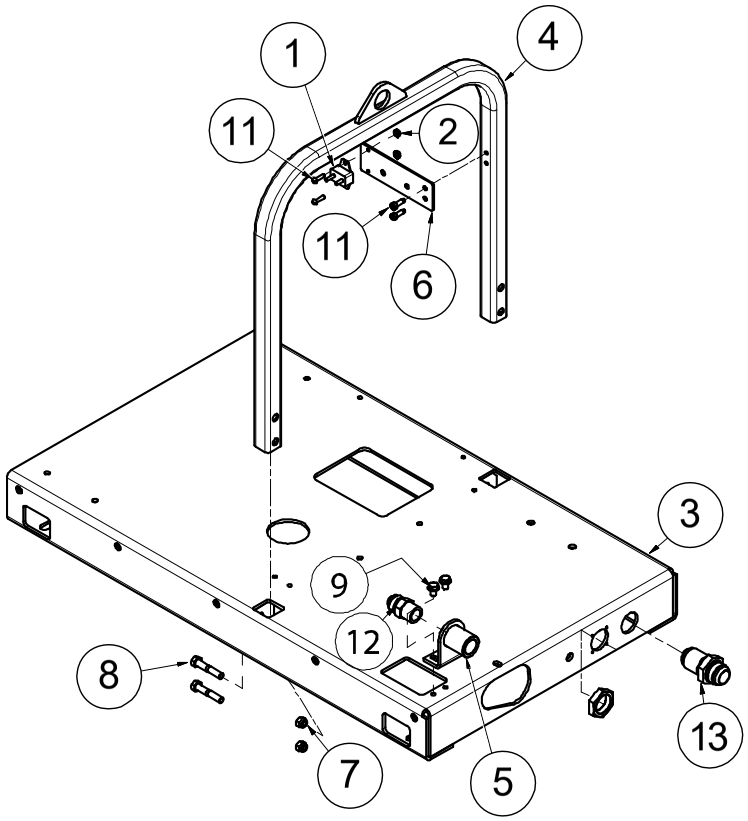

6030089ID-F_r0

KEY NO.	DESCRIPTION	PART NUMBER	QTY
1	BREAKER, CIRCUIT W/STUDS 30A (12V)	77041357	1
2	NUT, HEX #10-32 KEPS		2
3	FRAME, IMT CAS80R	71416177	1
4	BAIL, LIFTING IMT	70734926	1
5	BRACKET, SERV AIR ASSY	70734927	1
6	BRACKET, MOUNTING RELAY BREAKER IMT	71416178	1
7	NUT, HEX LOCKING 3/8-16		4
8	CAPSCREW, HEX GR8 3/8-16 x 2		4
9	SCREW, SER WASH 5/16-18 x 0.5		2
10	SCREW, ROUND HD #10-24 x 0.75		2
11	SCREW, HEX SELF THREAD 1/4 x 3/4		2
12	CONNECTOR, 37FL/MPT #12 x 3/4		1
13	BUKHEAD, MJIC x MJIC #16		1

PLEASE NOTE: WHEN ORDERING PARTS, INDICATE MACHINE SERIAL NUMBER.

7.7A CONTROL MANIFOLD - 12VDC / 24VDC OPEN CENTER

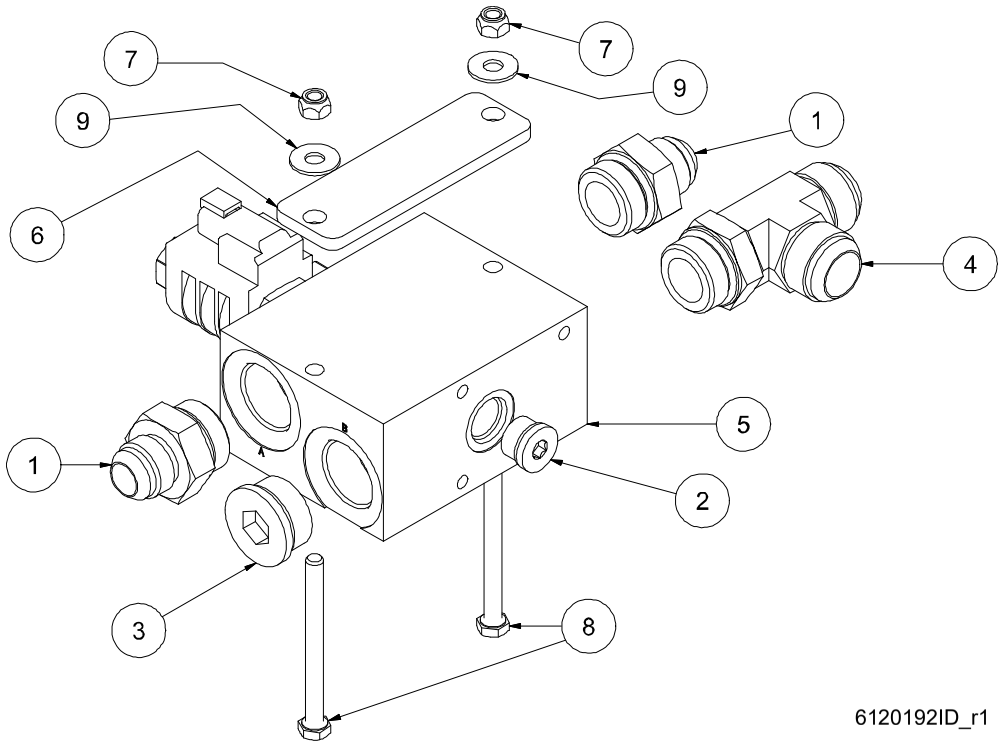

6120192ID_r1

KEY NO.	DESCRIPTION	PART NUMBER	QTY
1	CONNECTOR, #16 MSAE x #12 MJIC		2
2	PLUG, SAE O-RING HOLLOW HEX #8		1
3	PLUG, SAE O-RING HOLLOW HEX #16		1
4	TEE, RUN #16 MSAE x #16 MJIC		1
5	MANIFOLD, HYD OPEN CENTER 25 GPM 3000PSI COMPLETE	73540547	1
5A	BLOCK	71416181	1
5B	RELIEF	71416182	1
5C	SOLENOID	77041960	1
5D	12V COIL	77040655	1
5E	24V COIL	77040656	1
6	FLAT, SHIM HYDRAULIC MANIFOLD IMT		1
7	NUT, HEX LOCKING 5/16-18		2
8	CAPSCREW, HEX GR5 5/16-18 x 3.5		2
9	WASHER, FLAT 5/16		2

PLEASE NOTE: WHEN ORDERING PARTS, INDICATE MACHINE SERIAL NUMBER.

7.7B HYDRAULIC THERMAL VALVE - 12VDC / 24VDC

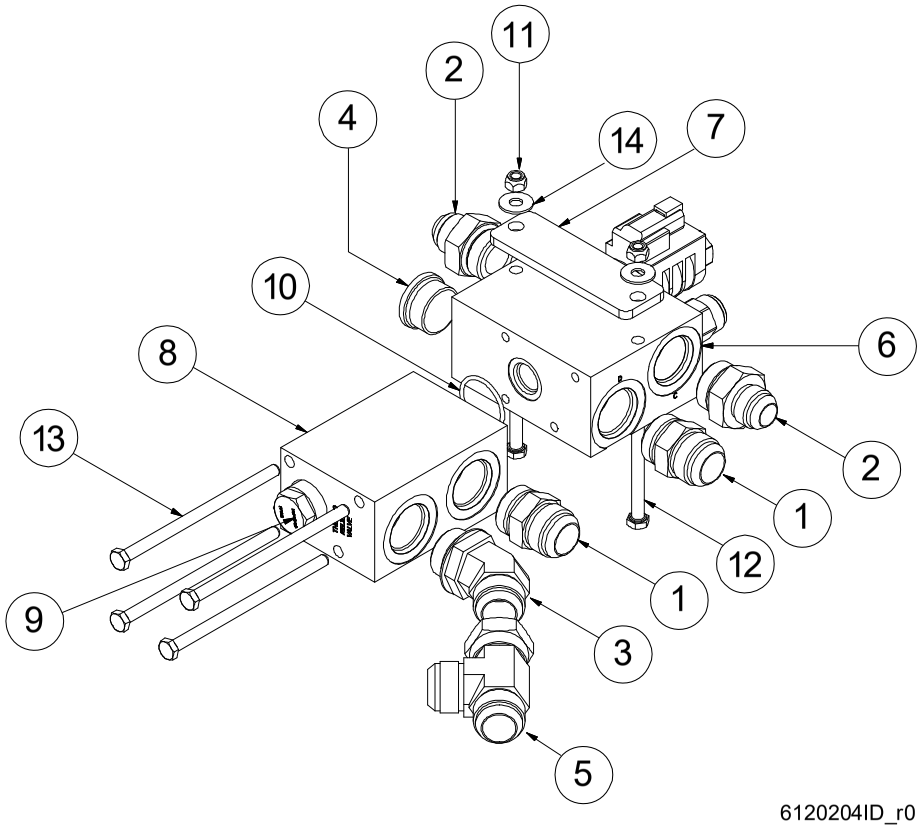

KEY NO.	DESCRIPTION	PART NUMBER	QTY
1	CONNECTOR, #16 MSAE x #16 MJIC		2
2	CONNECTOR, #16 MSAE x #12 MJIC		2
3	ELBOW, 45 DEG. 16 JMIC x 16 ORB		1
4	PLUG, SAE O-RING HOLLOW HEX #16		1
5	TEE, RUN SWIVEL #16		1
6	MANIFOLD, HYD OPEN CENTER 25 GPM 3000 PSI, COMPLETE		1
6A	BLOCK		1
6B	RELIEF		1
6C	SOLENOID		1
6D	12V COIL		1
6E	24V COIL		1
7	FLAT, SHIM HYDRAULIC MANIFOLD IMT		1
8	MANIFOLD, HYDRAULIC THERMAL RELIEF	71416183	1
9	VALVE, CARTRIDGE THERMAL RELIEF	73540548	1
10	O-RING, BUNA 3/32 x 1.362 ID PARKER 2-126		1
11	NUT, HEX LOCKING 5/16-18		2
12	CAPSCREW, HEX GR5 5/16-18 x 3.5		2
13	CAPSCREW, HEX GR5 5/16-18 x 5.5		4
14	WASHER, FLAT 5/16		2

PLEASE NOTE: WHEN ORDERING PARTS, INDICATE MACHINE SERIAL NUMBER.

7.8 THERMAL CONTROL

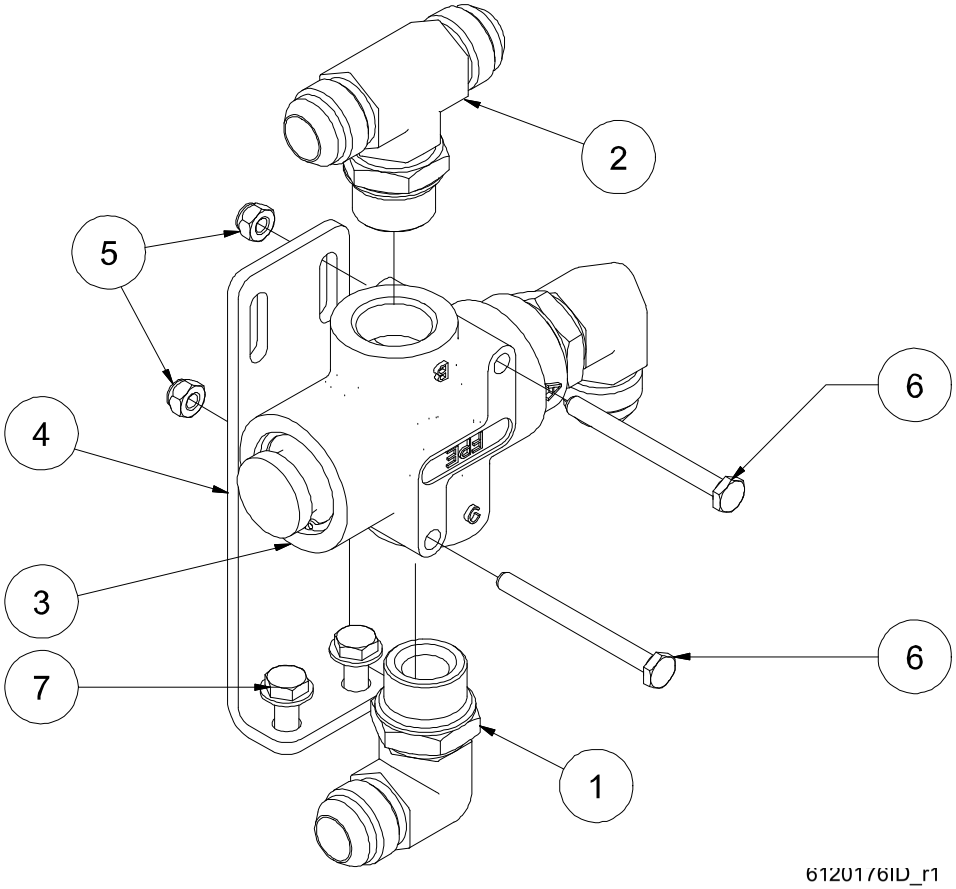

KEY NO.	DESCRIPTION	PART NUMBER	QTY
1	ELBOW, 90 DEG. #12 MJIC x #12 MSAE		1
2	TEE, JIC/JIC/SAE #12		1
3	VALVE, THERMAL 180 DEGREE ALUM BODY 3/4" SAE	73540546	1
4	BRACKET, SUPPORT THERMAL VALVE	71416180	1
5	NUT, HEX LOCKING 1/4-20		2
6	CAPSCREW, HEX GR5 1/4-20 x 2.75		2
7	SCREW, SER WASH 5/16-18 x 0.75		2

PLEASE NOTE: WHEN ORDERING PARTS, INDICATE MACHINE SERIAL NUMBER.

7.9 DECAL LOCATIONS (PART 1 OF 2)

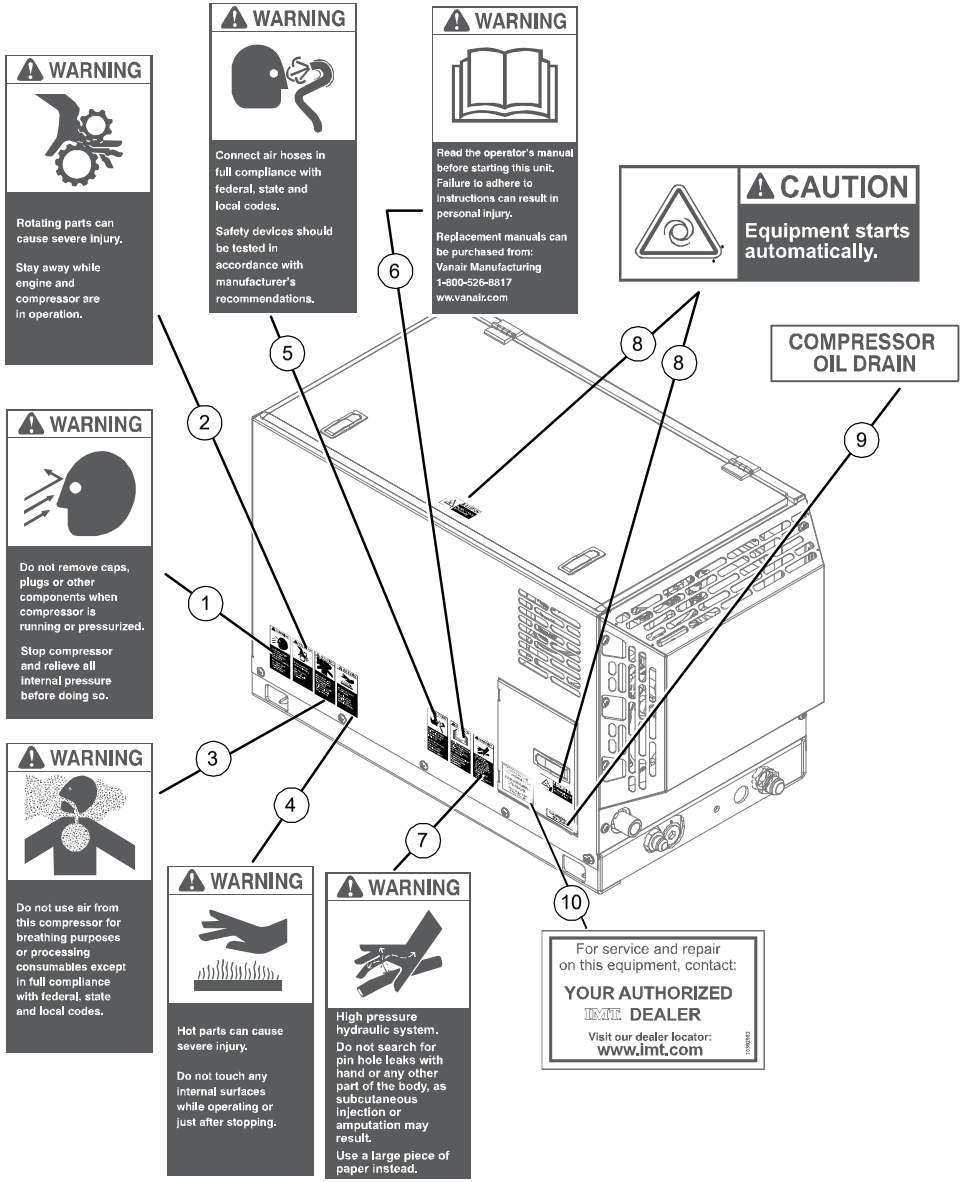

KEY NO.	DESCRIPTION	PART NUMBER	QTY
1	DECAL, CAP AND PLUG REMOVAL		1
2	DECAL, ROTATING PARTS		1
3	DECAL, DO NOT USE AIR		1
4	DECAL, HOT PARTS		1
5	DECAL, AIR HOSE		1
6	DECAL, READ MANUAL		1
7	DECAL, HIGH PRESSURE HYDRAULIC SYSTEM		1
8	DECAL, CAUTION AUTO START		2
9	DECAL, COMPRESSOR OIL DRAIN		1
10	DECAL, FOR SERVICE AND REPAIR		1

PLEASE NOTE: WHEN ORDERING PARTS, INDICATE MACHINE SERIAL NUMBER.

⚠ WARNING

DO NOT REMOVE OR COVER ANY SAFETY DECAL. Replace any safety decal that becomes damaged or illegible.

7.9 DECAL LOCATIONS (2 OF 2)

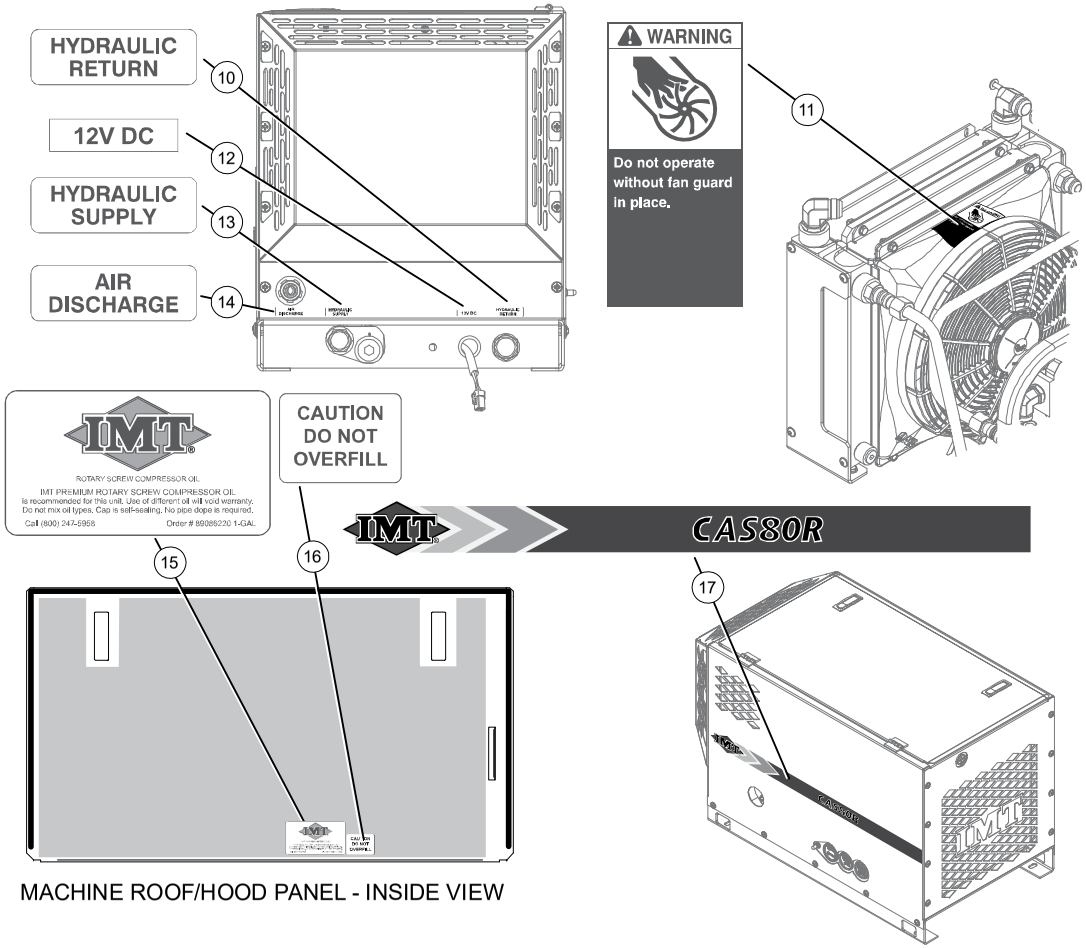

MACHINE ROOF/HOOD PANEL - INSIDE VIEW

KEY NO.	DESCRIPTION	PART NUMBER	QTY
10	DECAL, HYDRAULIC RETURN		1
11	DECAL, FAN GUARD		1
12	DECAL, 12V DC		1
13	DECAL HYDRAULIC SUPPLY		1
14	DECAL, AIR DISCHARGE		1
15	DECAL, IMT COMPRESSOR OIL		1
16	DECAL, CAUTION, DO NOT OVERFILL		1
17	DECAL, IMT CAS80R	70399880	1

PLEASE NOTE: WHEN ORDERING PARTS, INDICATE MACHINE SERIAL NUMBER.

⚠ WARNING

DO NOT REMOVE OR COVER ANY SAFETY DECAL. Replace any safety decal that becomes damaged or illegible.

7.10 WIRING DIAGRAM

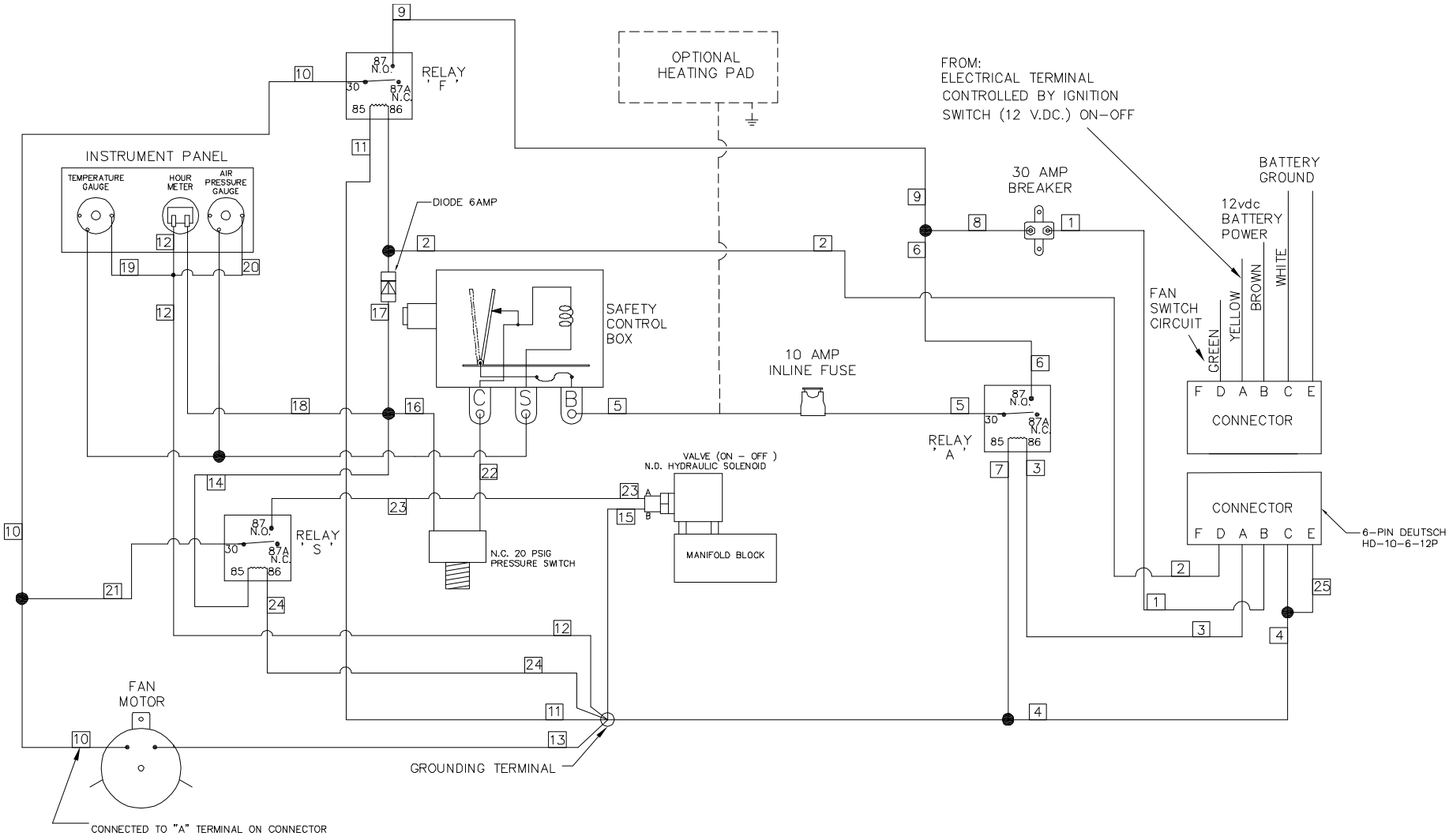

273632_r0

7.11 SCHEMATIC - HYDRAULIC OIL FLOW OPEN CENTER

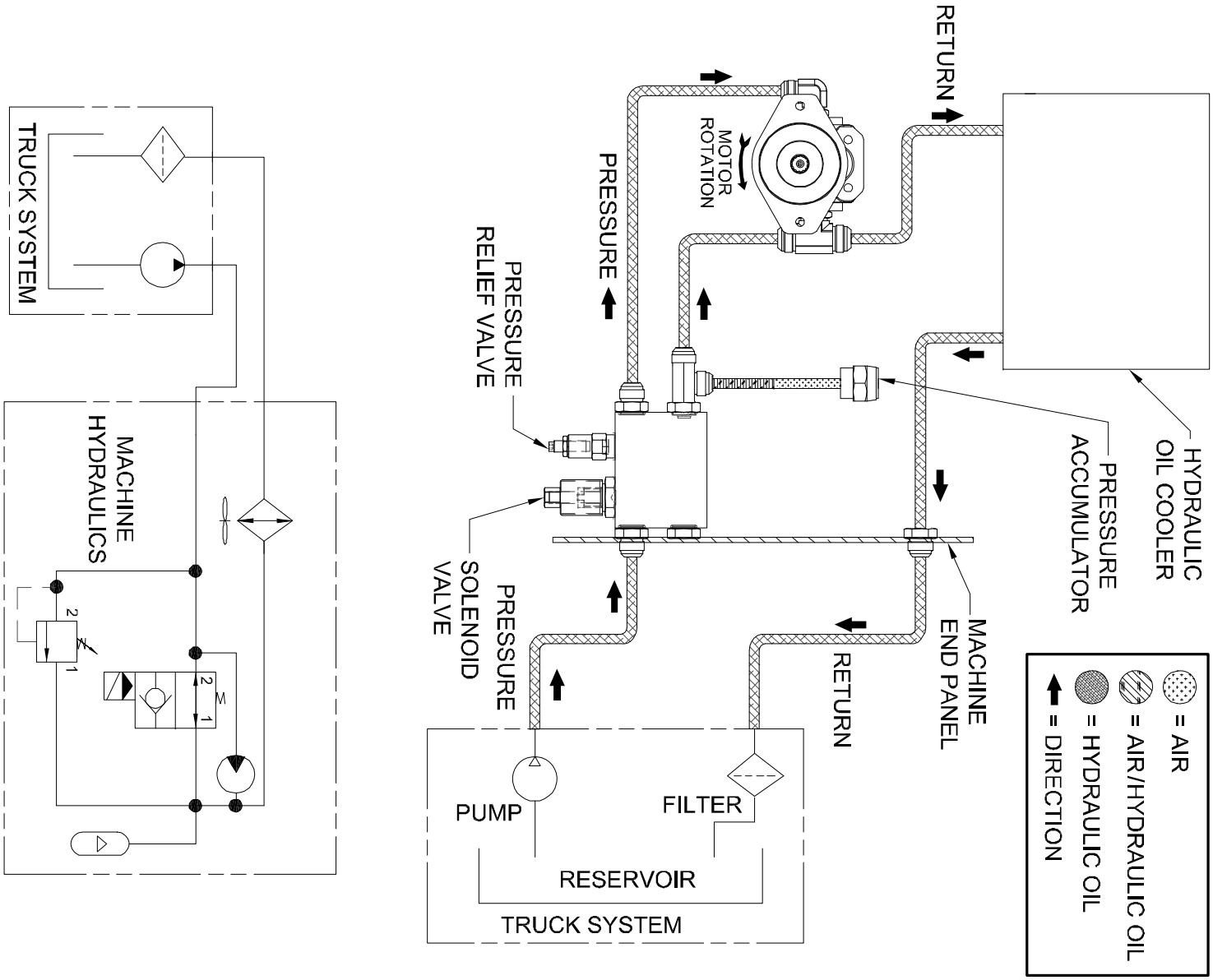

273630_r1

7.12 SCHEMATIC - HYDRAULIC OIL FLOW OPEN CENTER, COLD WEATHER

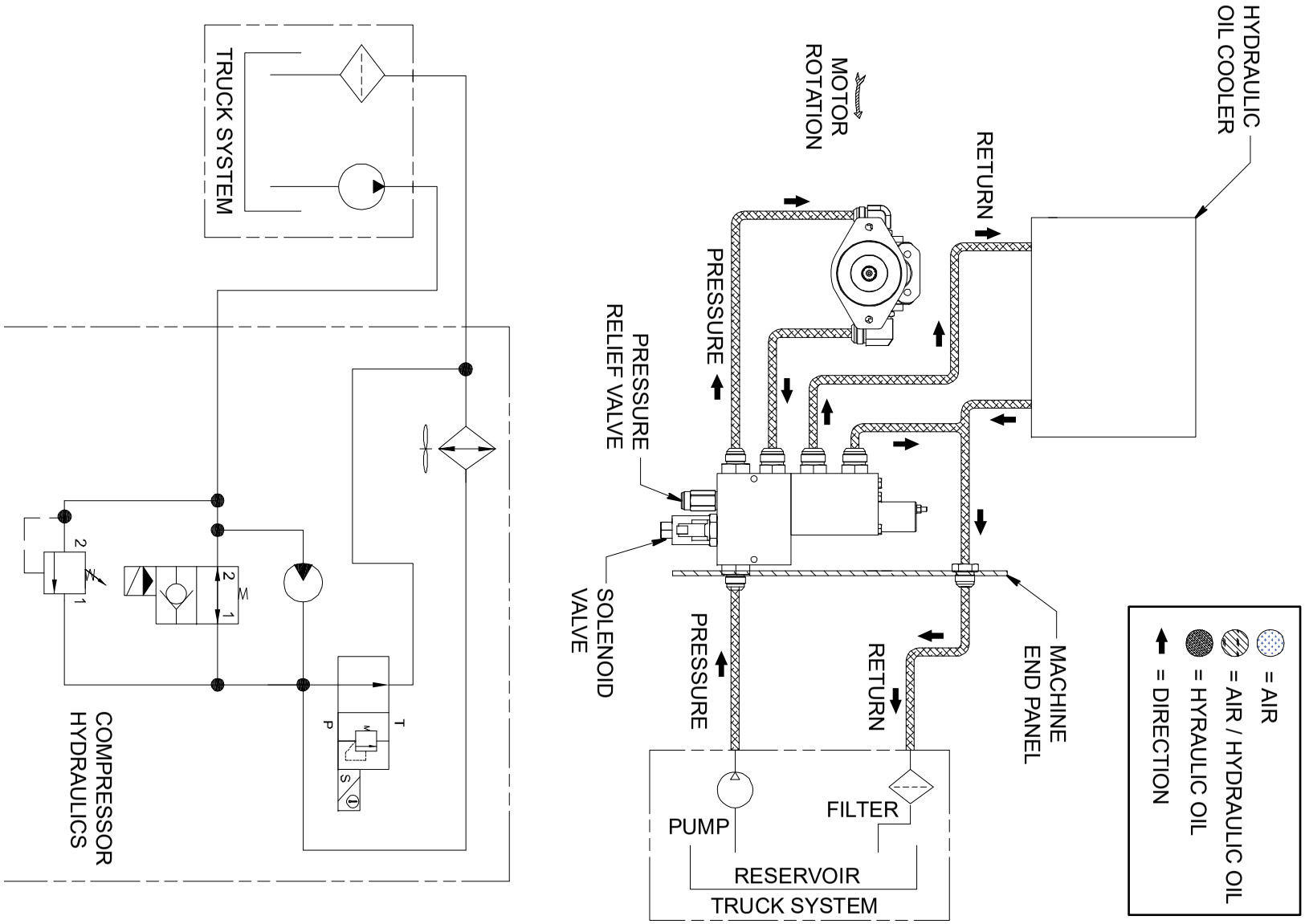

274602_r0

7.13 SCHEMATIC - COMPRESSOR OIL/AIR FLOW (1 OF 2)

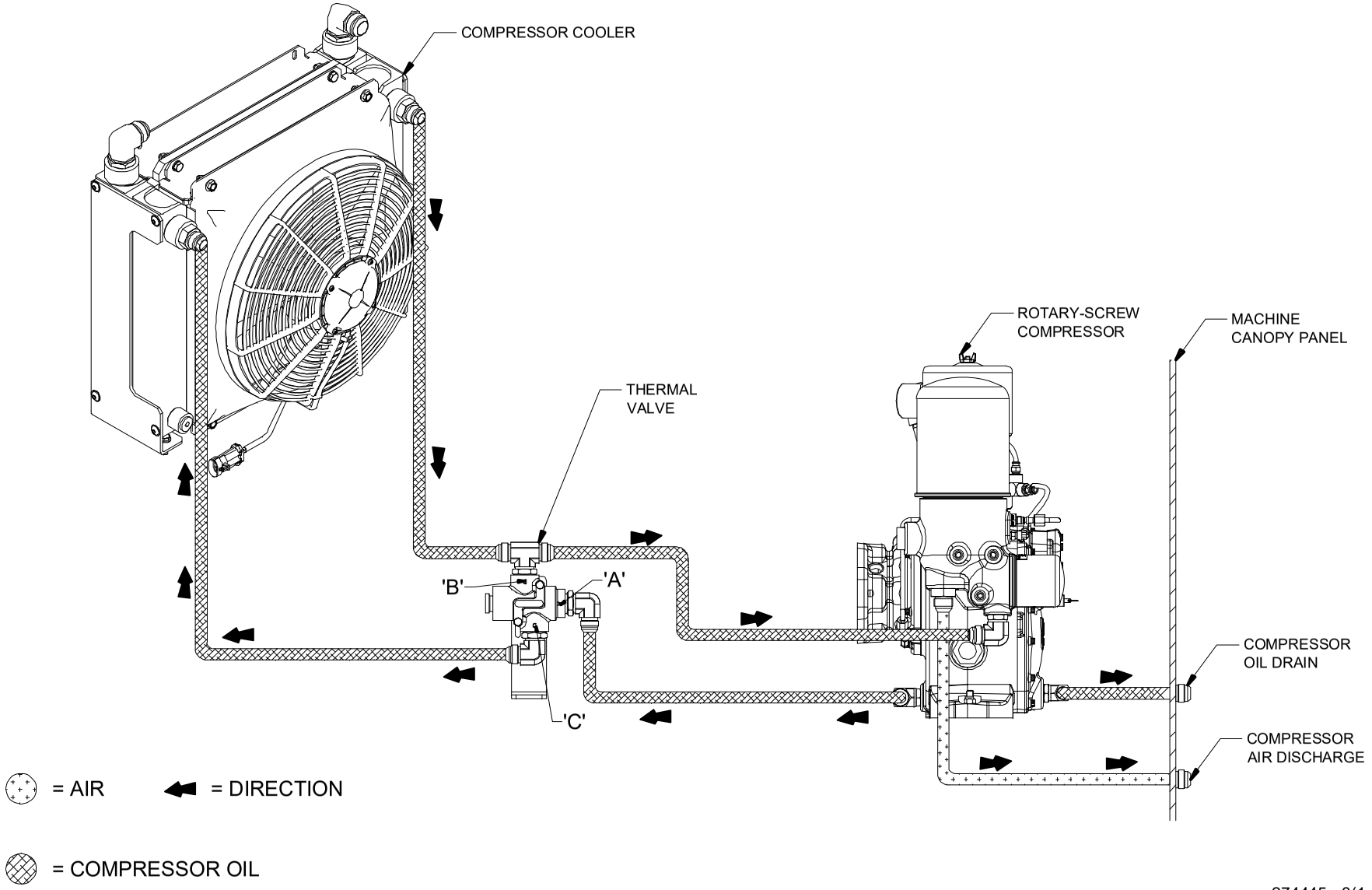

274445_r3(1 of 2)

7.13 SCHEMATIC - COMPRESSOR OIL/AIR FLOW (2 OF 2)

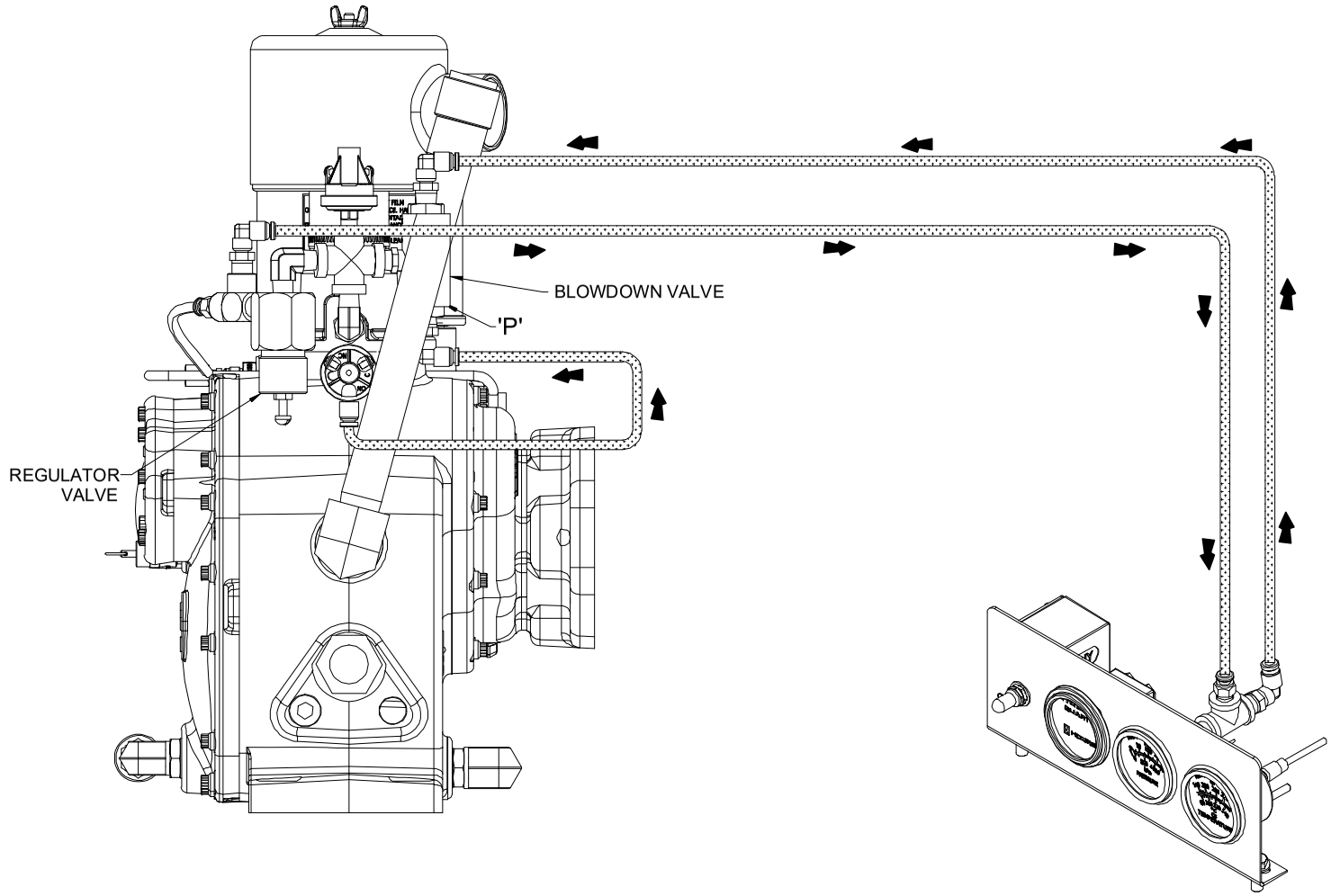

= AIR = DIRECTION

= COMPRESSOR OIL

274445_r3(2 of 2)

7.14 HOSE AND TUBING - OPEN CENTER SYSTEM

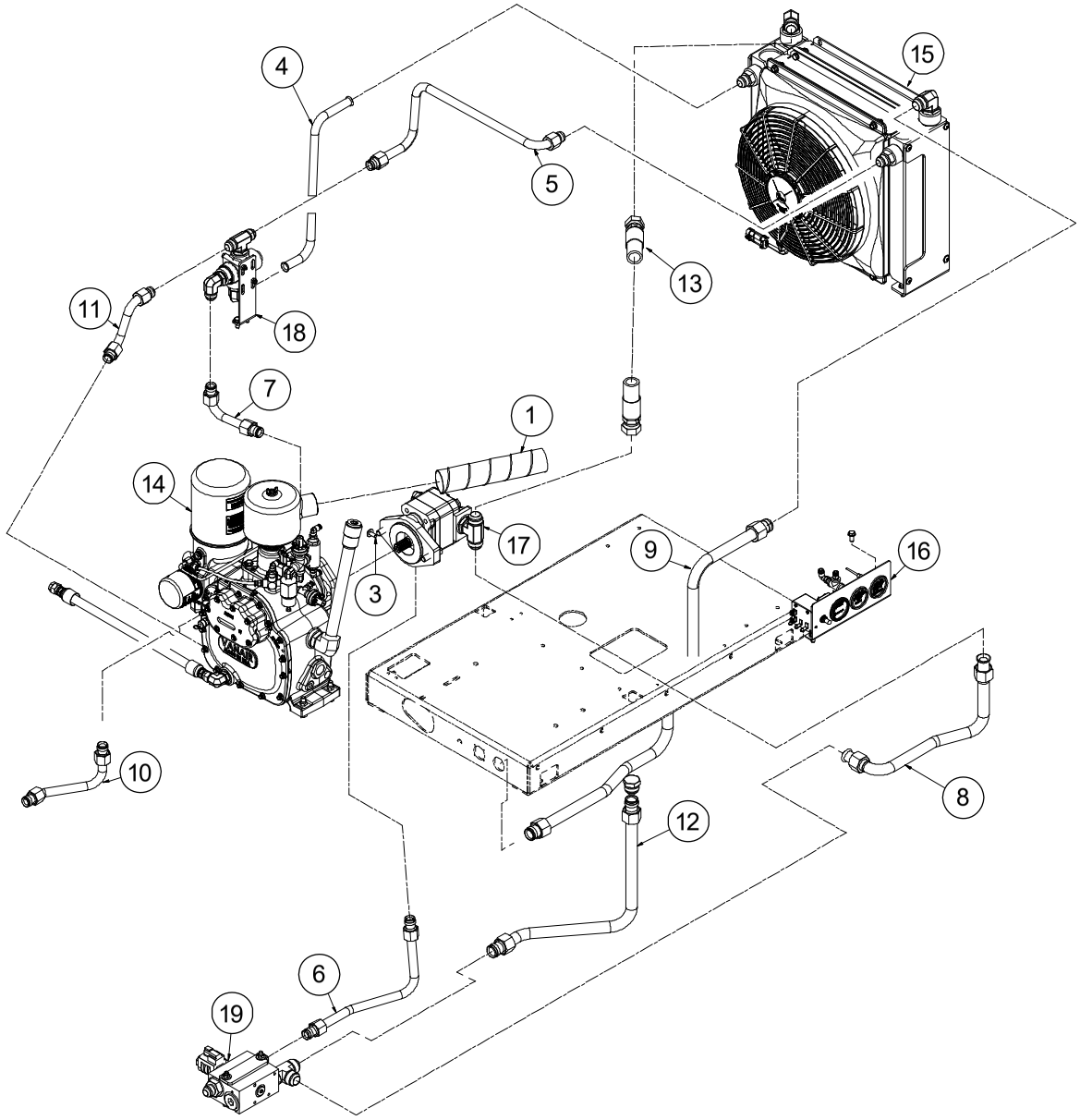

6130110ID_r1

7.14 HOSE AND TUBING - OPEN CENTER SYSTEM

KEY NO.	DESCRIPTION	PART NUMBER	QTY
1	HOSE, FLEX 2” I.D. x 10” LONG		1
2	WASHER, NYLON 5/16-18		1
3	SCREW, TRUSS HD 5/16-18 x 3/4 SS		1
4	TUBE, 3/4 THERMAL VALVE TO COMP COOLER IN	71416184	1
5	TUBE, 0.75 O.D. OIL COOLER TO THERMOVALVE	71416185	1
6	TUBE, 3/4 O.D. MANIFOLD TO MOTOR IN	71416186	1
7	TUBE, 3/4 O.D. COMP OIL PICK UP TO THERMAL	71416187	1
8	TUBE, MANIFOLD TO MOTOR RETURN	71416188	1
9	TUBE, 1.00 O.D. HYD COOLER RETURN TO BULKHEAD	71416189	1
10	TUBE, 3/4 AIR DISCHARGE	71416190	1
11	TUBE, 3/4 THERMAL VALVE TO OIL FILTER/INJECTION	71416191	1
12	TUBE, 1.00 O.D. TO ACCUMULATOR	71416192	1
13	HOSE, MOTOR TO HYD COOLER IN	71416193	1
14	COMPR & PARTS IMT CAS80R		1
15	COOLER COMPR. & HYD. WITH FAN		1
16	INSTR. PANEL IMT CAS80R		1
17	MOTOR AND DRIVE PARTS IMT CAS80R		1
18	COMPRESSOR THERMAL CONTROL IMT CAS80R		1
19	CONTROL MANIFOLD IMT CAS80R		1

PLEASE NOTE: WHEN ORDERING PARTS, INDICATE MACHINE SERIAL NUMBER.

7.15 HOSE AND TUBING - OPEN CENTER, COLD WEATHER SYSTEM

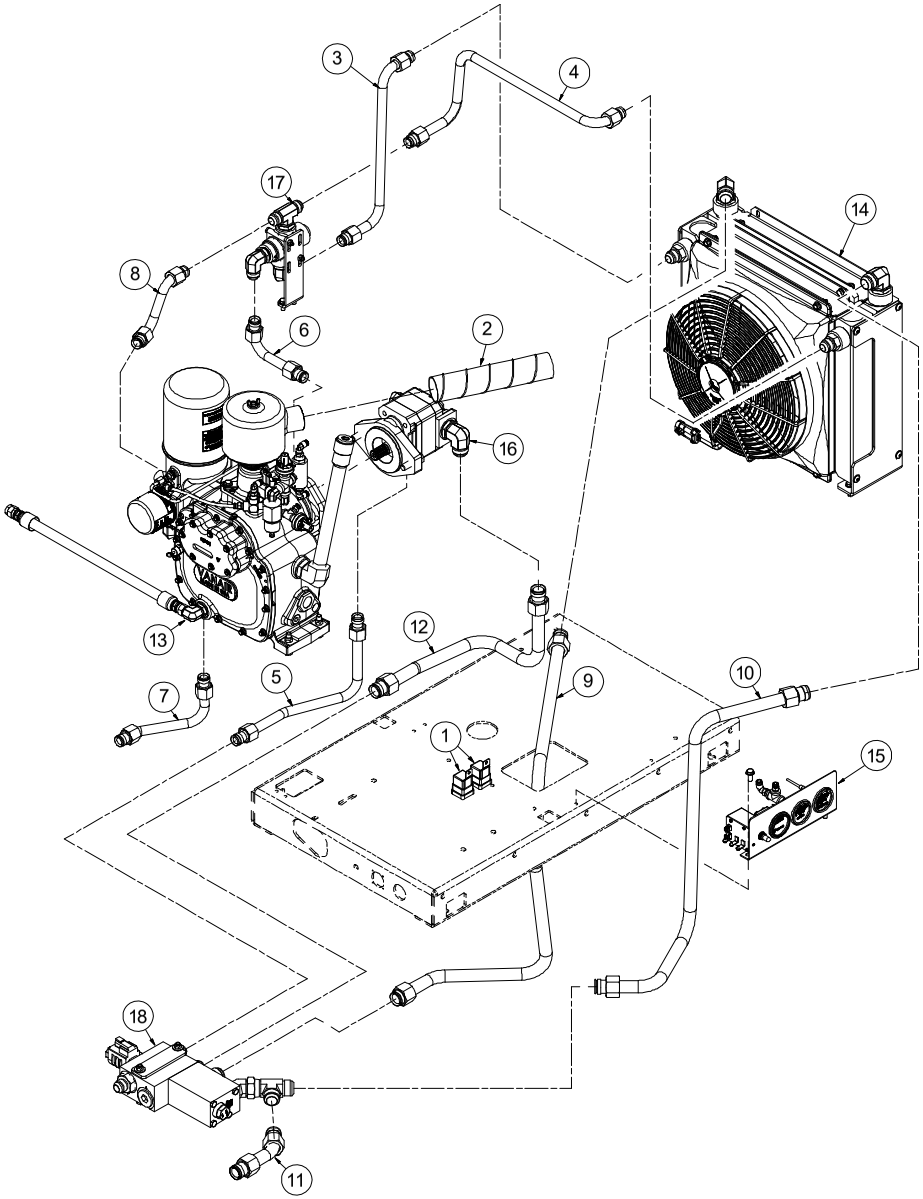

6130116ID_r1

7.15 HOSE AND TUBING - OPEN CENTER, COLD WEATHER SYSTEM

KEY NO.	DESCRIPTION	PART NUMBER	QTY
1	RELAY, NO/NC WEATHERPROOF W/RESISTOR		2
2	HOSE, FLEX 2” I.D. x 10” LONG		1
3	TUBE, 3/4 THERMAL VALVE TO COMP COOLER IN	71416184	1
4	TUBE, 0.75 O.D. OIL COOLER TO THERMOVALVE	71416185	1
5	TUBE, 3/4 O.D. MANIFOLD TO MOTOR IN	71416186	1
6	TUBE, 3/4 O.D. COMP OIL PICK UP TH THERMAL	71416187	1
7	TUBE, 3/4 AIR DISCHARGE	71416190	1
8	TUBE, 3/4 THERMAL VALVE TO OIL FILTER/INJECTION	71416191	1
9	TUBE, 1.00 O.D. THERMAL BLOCK TO COOLER	71417194	1
10	TUBE, 1.00 O.D. COOLER OUT TO RETURN	71416195	1
11	TUBE, 1.00 O.D. RETURN TEE TO BULKHEAD	71416196	1
12	TUBE, 1.00 O.D. MOTOR TO MANIFOLD	71417197	1
13	COMPR & PARTS IMT CAS80R		1
14	COOLER COMPR. & HYD. WITH FAN		1
15	INSTR. PANEL IMT CAS80R		1
16	MOTOR & DRIVE PARTS IMT CLOSED / COLD		1
17	COMPRESSOR THERMAL CONTROL IMT		1
18	THERMAL VALVE ASSY OPEN CENTER HYD		1

PLEASE NOTE: WHEN ORDERING PARTS, INDICATE MACHINE SERIAL NUMBER.

BLANK PAGE

BLANK PAGE

An Oshkosh Corporation Company

IOWA MOLD TOOLING CO., INC.

500 Highway18 West

Garner, Iowa 50438

Phone: 641-923-3711

Fax: 641-923-6063

www.imt.com

Printed in the U.S.A.

Specifications Subject to
Change Without Prior Notice

051168
051282
051283
051284
090079-OP_r0